San Joaquin Valley
AIR POLLUTION CONTROL DISTRICT

HEALTHY AIR LIVING™

California Energy Commission
DOCKETED
08-AFC-8A
TN # 69525
FEB. 14 2013

FEB 07 2013

Mr. Robert Worl
California Energy Commission
1516 Ninth St, MS-15
Sacramento, CA 95814-5512

Re: Notice of Preliminary Determination of Compliance (PDOC)
Facility # S-7616
Project # S-1121903

Dear Mr. Worl:

Enclosed for your review and comment is the District's evaluation of the Preliminary Determination of Compliance (PDOC) for Hydrogen Energy California, LLC's proposed installation of a power generation facility that uses integrated gasification combined cycle (IGCC), to produce a hydrogen-rich synthesis gas from a blend of coal or petroleum coke to power one combined-cycle combustion turbine generator. The facility will generate a total net output of up to a nominal 300 megawatts (MW) (up to a nominal 431 MW gross output) in a combined cycle power block; manufacture of up to 1 million tons per year of nitrogen-based products in an integrated fertilizer manufacturing complex; and capture a stream that is comprised primarily of carbon dioxide (CO2), a greenhouse gas, and transport it by pipeline to a neighboring oilfield for enhanced oil recovery (EOR) and sequestration. The proposed project is to be located at Section 10, Township 30S, Range 24E in western Kern County.

The proposed project is subject to the requirements of Rule 2201 – New and Modified Stationary Source Review and Rule 2410 – Prevention of Significant Deterioration.

After addressing all comments made during the 30-day public notice and the 45-day EPA comment periods, the Final Determination of Compliance (FDOC) will be issued to the facility. The public notice will be published approximately three days from the date of this letter. Please submit your written comments within the public comment period which begins on the date of publication of the public notice.

Seyed Sadredin
Executive Director/Air Pollution Control Officer

Northern Region
4800 Enterprise Way
Modesto, CA 95356-8718
Tel: (209) 557-6400 FAX: (209) 557-6475

Central Region (Main Office)
1990 E. Gettysburg Avenue
Fresno, CA 93726-0244
Tel: (559) 230-6000 FAX: (559) 230-6061

Southern Region
34946 Flyover Court
Bakersfield, CA 93308-9725
Tel: 661-392-5500 FAX: 661-392-5585

www.valleyair.org www.healthyairliving.com

Printed on recycled paper.

If you have any questions, please contact Mr. Leonard Scandura, Permit Services Manager, at (661) 392-5500.

Thank you for your cooperation in this matter.

Sincerely,

David Warner
Director of Permit Services

Enclosures

cc: Distribution list

Distribution list

Marisa Mascaro
Hydrogen Energy California, LLC
30 Monument Square, Suite 235
Concord, MA 01742

Gerardo C. Rios, Chief
Permits Office
Air Division
U.S. EPA - Region IX
75 Hawthorne St.
San Francisco, CA 94105

Mike Tollstrup, Chief
Project Assessment Branch
Air Resources Board
P O Box 2815
Sacramento, CA 95812-2815

Lorelei H. Oviatt, AICP
County of Kern
2700 "M" Street, Suite 100
Bakersfield, CA 93301

Trent Procter,
US Forest Service Land Management
Sequoia National Forest
1839 South Newcomb Street
Porterville, CA 93257-2035

Dave Van Mullem
Santa Barbara County APCD
260 N. San Antonio Rd, Suite A
Santa Barbara, CA 93110-1315

Michael Villegas
Ventura County APCD
669 County Square Dr., 2nd Fl.
Ventura, CA 93003

Larry Allen
San Luis Obispo County APCD
3433 Roberto Court
San Luis Obispo, CA 93401

Glen Stephens
Eastern Kern APCD
2700 "M" Street, Suite 302
Bakersfield, CA 93301

Barry Wallerstein
South Coast AQMD
21865 Copley Dr.
Diamond Bar, CA 91765

Tule River Indian Tribe
c/o Tribal Council
186 N. Reservation Rd.
Porterville, CA 93257

Santa Ynez Tribe
c/o Tribal Council
P.O. Box 517
Santa Ynez, CA 93460

Santa Rosa Rancheria
c/o Tribal Council
P O Box 8
Lemoore, CA 93245

HECA Neighbors
c/o Chris Romanini
P O Box 786
Buttonwillow, CA 93206

Bakersfield Californian

NOTICE OF PRELIMINARY DECISION
FOR THE PROPOSED ISSUANCE OF DETERMINATION OF COMPLIANCE AND PREVENTION OF SIGNIFICANT DETERIORATION NOTIFICATION

NOTICE IS HEREBY GIVEN that the San Joaquin Valley Air Pollution Control District solicits public comment on the proposed issuance of Preliminary Determination of Compliance (PDOC) to Hydrogen Energy California, LLC for the proposed installation of a power generation facility that uses integrated gasification combined cycle (IGCC), to produce a hydrogen-rich synthesis gas from a blend of coal or petroleum coke to power one combined-cycle combustion turbine generator. The facility will generate a total net output of up to a nominal 300 megawatts (MW) (up to a nominal 431 MW gross output) in a combined cycle power block; manufacture of up to 1 million tons per year of nitrogen-based products in an integrated fertilizer manufacturing complex; and capture a stream that is comprised primarily of carbon dioxide (CO2), a greenhouse gas, and transport it by pipeline to a neighboring oilfield for enhanced oil recovery (EOR) and sequestration. The proposed project is to be located at Section 10, Township 30S, Range 24E, approximately 1.5 miles northwest of Tupman in western Kern County.

The proposed DOC is subject to the requirements of Rule 2201 (New and Modified Stationary Source Review) and Rule 2410 (Prevention of Significant Deterioration). The proposed installation will result in significant emission increases of 317,310 lb-NO2/year, 544,421 lb-CO/year, 178,863 lb-PM10/year, 178,863 lb-PM/year, and 595,917 tons-CO2e/year, which are subject to the requirements of Rule 2410. There is no increment consumption of any attainment pollutant.

The analysis of the regulatory basis for these proposed actions, Project #S-1121903, is available for public inspection at http://www.valleyair.org/notices/public_notices_idx.htm and the District office at the address below. If requested by the public, the District will hold a public hearing regarding the proposed issuance of the subject DOC.

Written comments on the proposed initial permit must be submitted within 30 days of the publication date of this notice to **DAVID WARNER, DIRECTOR OF PERMIT SERVICES, SAN JOAQUIN VALLEY AIR POLLUTION CONTROL DISTRICT, 34946 FLYOVER COURT, BAKERSFIELD, CA 93308.**

PRELIMINARY DETERMINATION OF COMPLIANCE EVALUATION

Hydrogen Energy California Project
California Energy Commission
Application for Certification Docket #: 08-AFC-8A

Facility Name:	Hydrogen Energy California, LLC
Mailing Address:	30 Monument Square, Suite 235 Concord, MA 01742
Contact Name:	Marisa Mascaro
Telephone:	(978) 287-9529
E-Mail:	mmascaro@scsenergyllc.com
Alternate Contact:	Julie Mitchell, Sr. Air Quality Scientist
Telephone:	(858) 812-9292
Fax:	(858) 812-9293
E-Mail:	julie.mitchell@urs.com
Engineer:	Homero Ramirez
Lead Engineer:	Allan Phillips
Date:	February 5, 2013
Project #:	S-1121903
Application #'s:	S-7616-17-0 through '-40-0
Submitted:	June 4, 2012
Deemed Complete:	August 30, 2012

Table of Contents

Section		Page
I.	Proposal	1
II.	Applicable Rules	1
III.	Project Location	3
IV.	Process Description	3
V.	Equipment Listing	22
VI.	Emission Control Technology Evaluation	26
VII.	General Calculations	38
VIII.	Compliance	98
IX.	Recommendation	225
X.	Billing Information	225

APPENDIX A - Determination of Compliance Conditions

APPENDIX B - BACT Guidelines

APPENDIX C - Top Down BACT Analyses

APPENDIX D - Process Flow Diagrams

APPENDIX E - Fugitive Emission Calculations

APPENDIX F - Emission Information

APPENDIX G - Calculation Methodology for General Conformity Mitigation Agreement

APPENDIX H - Hazardous Air Pollutant Summary

APPENDIX I - Greenhouse Gas BACT Analysis

APPENDIX J - Notification of Federal Land Managers

APPENDIX K - Ambient Air Quality Impact and Health Risk Report

I. Proposal

Hydrogen Energy California, LLC (HECA) is seeking approval from the San Joaquin Valley Air Pollution Control District for the installation of a power generation facility that uses integrated gasification combined cycle (IGCC), a technology that turns a fuel blend consisting of 75 percent western sub-bituminous coal and 25 percent petroleum coke (petcoke) into a synthesis gas (syngas). The facility will gasify the fuel blend to produce hydrogen-rich syngas, which will be used to generate electricity in a combined cycle power block; manufacture nitrogen-based products in an integrated fertilizer manufacturing complex; and capture a stream that is comprised primarily of carbon dioxide (CO2), a greenhouse gas, and transport it by pipeline to a neighboring oilfield for enhanced oil recovery (EOR) and sequestration.

HECA is subject to approval by the California Energy Commission (CEC). The CEC is the sole authority that has discretionary approval of this project. Pursuant to SJVAPCD Rule 2201, Section 5.8, the Determination of Compliance (DOC) review is functionally equivalent to an Authority to Construct (ATC) review, and is intended to provide comment and guidance to the CEC on the proposal's compliance with air quality requirements. Unless the District receives comments that lead us to a contrary position, the District intends to issue and submit to the CEC the Final Determination of Compliance (FDOC) upon SJVAPCD approval of the project.

The CEC is the lead agency for this project for the requirements of the California Environmental Quality Act (CEQA). The District's proposed issuance of the DOC does not constitute a discretionary approval. As such, for purposes of CEQA the District is the commenting agency.

II. Applicable Rules

Rule 1080 Stack Monitoring (12/17/92)
Rule 1081 Source Sampling (12/16/93)
Rule 1100 Equipment Breakdown (12/17/92)
Rule 2010 Permits Required (12/17/92)
Rule 2201 New and Modified Stationary Source Review Rule (4/21/11)
Rule 2410 Prevention of Significant Deterioration (4/16/11, effective 11/26/12)
Rule 2520 Federally Mandated Operating Permits (6/21/01)
Rule 2540 Acid Rain Program (11/13/97)
Rule 2550 Federally Mandated Preconstruction Review for Major Sources of Air Toxics (6/18/98)
Rule 4001 New Source Performance Standards (4/14/99)
Subpart GG - Standards of Performance for Stationary Gas Turbines
Subpart KKKK - Standards of Performance for Stationary Gas Turbines
Subpart Db - Standards of Performance for Industrial-Commercial-Institutional Steam Generating Units
Subpart Ga - Standards of Performance for Nitric Acid Plants for Which Construction, Reconstruction, or Modification Commenced After October 14, 2011

Subpart Y - Standards of Performance for Coal Preparation and Processing Plants
Subpart IIII - Standards of Performance for Stationary Compression Ignition Internal Combustion Engines
Subpart A - General Provisions (Section 60.18 – General Control Device and Work Practice Requirements)

Rule 4002 National Emissions Standards for Hazardous Air Pollutants (5/20/04)
Subpart ZZZZ – National Emission Standards for Hazardous Air Pollutants for Stationary Reciprocating Internal Combustion Emissions (RICE)

Rule 4101 Visible Emissions (2/17/05)
Rule 4102 Nuisance (12/17/92)
Rule 4201 Particulate Matter Concentration (12/17/92)
Rule 4202 Particulate Matter Emission Rate (12/17/92)
Rule 4301 Fuel Burning Equipment (12/17/92)
Rule 4304 Equipment Tuning Procedure for Boilers, Steam Generators and Process Heaters (10/19/95)
Rule 4305 Boilers, Steam Generators and Process Heaters – Phase 2 (8/21/03)
Rule 4306 Boilers, Steam Generators and Process Heaters – Phase 3 (10/16/08)
Rule 4311 Flares (6/18/09)
Rule 4320 Advanced Emissions Reduction Options for Boilers, Steam Generators, and Process Heaters Greater than 5.0 MMBtu/hr (10/16/08)
Rule 4351 Boilers, Steam Generators and Process Heaters – Phase 1 (8/21/03)
Rule 4701 Stationary Internal Combustion Engines – Phase 1 (8/21/03)
Rule 4702 Stationary Internal Combustion Engines – Phase 2 (8/18/11)
Rule 4703 Stationary Gas Turbines (9/20/07)
Rule 4801 Sulfur Compounds (12/17/92)
Rule 7012 Hexavalent Chromium - Cooling Towers (12/17/92)
Rule 8011 General Requirements (8/19/04)
Rule 8021 Construction, Demolition, Excavation, Extraction and Other Earthmoving Activities (8/19/04)
Rule 8031 Bulk Materials (8/19/04)
Rule 8051 Open Areas (8/19/04)
Rule 8061 Paved and Unpaved Roads (8/19/04)
Rule 8071 Unpaved Vehicle/Equipment Traffic Areas (9/16/04)

Rule 9110 and 40 CFR Part 93 General Conformity (10/20/94)

Public Resources Code 21000-21177 - California Environmental Quality Act (CEQA)

California Code of Regulations, Title 14, Division 6, Chapter 3, Sections 15000-15387 – CEQA Guidelines

Title 13 California Code of Regulations (CCR), Section 2423 – Exhaust Emission Standards and Test Procedures, Off-Road Compression-Ignition Engines and Equipment

Title 17 California Code of Regulations (CCR), Section 93115 - Airborne Toxic Control Measure (ATCM) for Stationary Compression-Ignition (CI) Engines

CH&SC 42301.6 School Notice
CH&SC 44300 (Air Toxic “Hot Spots”)

III. Project Location

The site is located approximately 7 miles west of outermost edge of the city of Bakersfield and approximately 1.5 miles northwest of the unincorporated community of Tupman in western Kern County. The equipment will be located in Section 10, Township 30S, Range 24E. The equipment is not located within 1,000 feet of the outer boundary of a K-12 school. Therefore, the public notification requirement of California Health and Safety Code 42301.6 is not applicable to this project.

IV. Process Description

Combined Cycle Power Generating System (S-7616-26-0)

Summary

The power-generation equipment used for this project is similar to a conventional natural-gas combined-cycle plant, with the notable exception that substantial heat integration with the gasification process is included to maximize the recovery of useful energy both for internal and external process use and power generation. The combined cycle power block will include one single-shaft 431 megawatt (MW) gross output Mitsubishi Heavy Industries (MHI) 501GAC G-class, air-cooled advanced combustion turbine generator (CTG) and steam turbine generator (STG) configured to use hydrogen-rich fuel, one heat recovery steam generator (HRSG), and a water-cooled surface condenser. The CTG, HRSG, and STG will convert chemical energy contained in the syngas fuel to electricity through the shaft power developed by the CTG/STG, and through the thermal energy recovered from the CTG exhaust. This exhaust gas is converted to high-energy steam in the HRSG and combined with the high-energy steam recovered in the gasification process to generate additional electricity in the STG. The G-class machine is arranged in a single-shaft configuration, where the CTG and STG share a common shaft/generator.

The major equipment of the Power Block is described in the following sections:

Combustion Turbine Generator and Heat Recovery Steam Generator

The MHI 501 GAC CTG and STG generator will produce 431 MW nominal gross output. Exhaust gas from the turbine section is ducted through the HRSG to generate high-energy steam, which produces additional electricity in the STG. Some of the exhaust gas is also ducted from the HRSG to Gasification to dry the feed, and will be discharged at the stack in that process block. Remaining exhaust gas at the HRSG is discharged through the HRSG stack. The combustion system is designed for operation on hydrogen-rich fuel. The combustion system is also equipped with separate fuel nozzles for natural-gas firing during startup, shutdown, and equipment outages. The combustion system is designed to achieve low–nitrogen oxide (NOx) emissions, while injecting nitrogen diluent and combusting hydrogen-rich fuels. When operating on natural gas, water is injected for NOx control. Natural gas is used during startup and shutdown of the CTG and during periods of unplanned equipment outages (up to 2 weeks per year), but not during normal operations. The table below presents additional information.

The CTG exhaust gas, supplemental hydrogen-rich fuel, and pressure swing adsorption (PSA) off-gas for duct-firing are used as energy input into the HRSG.

Combustion Turbine Generator Specifications	
Model	Mitsubishi MHI 501 GAC
Fuels	H_2-rich fuel, natural gas (co-firing during transition between natural gas and H_2-rich fuel)
Inlet Air Cooling	Evaporative coolers, 85% effectiveness
Emissions Control Diluent	Nitrogen for H_2-rich fuel, water injection for natural gas
Ambient Temperature Range	20 °F to 115 °F, average 65 °F
Ambient Pressure	14.54 psia/feet above mean sea level
Exhaust Pressure Loss at 97ºF	18.0 inches H_2O
Air Extraction	Not included
H_2 and Diluent Temperature	302 °F at the MHI interface
Base Load Generator Output	282 MW
Exhaust Flow and Temperature	5,315 kilopounds/hr (kpph), 950°F at average ambient
Minimum Output in Emissions Compliance	60 percent of base load on syngas
Source: HECA, 2012.	

Duct Firing

Additional steam generation will occur in the duct-firing system in the CTG exhaust. The fuel to the duct burner will consist of a combination of hydrogen-rich fuel and off-gas from the PSA unit. The maximum expected firing rate for the duct burner is 360 MMBtu/hr. Backup natural-gas fuel will not be combusted in the duct burner.

Emission Control Systems

HRSG emission control systems are described in detail below.

A selective catalytic reduction (SCR) system is installed in the HRSG to reduce emissions of NOx from the CTG and duct burners to meet BACT requirements. An oxidation catalyst is also installed in the HRSG to reduce CO and VOC emissions in the same exhaust stream to achieve BACT levels. The HRSG stack is provided with a continuous emissions monitoring system (CEMS) to verify compliance with applicable air permitting requirements.

The SCR system reduces NOx emissions from the stack gases in the HRSG. Vaporized ammonia is mixed with dilution air and injected into the CTG exhaust gas upstream of a

catalytic system that converts NOx and ammonia to nitrogen and water. This vaporized ammonia will come from the on-site ammonia plant storage tank.

The components in the SCR system are as follows:

- Dilution air blower. The blower delivers fresh air to be combined with the vaporized ammonia.

- Ammonia injection grid. The diluted ammonia is sent to an injection grid, where the ammonia stream is divided among various injection points upstream of a catalyst. The flow of ammonia to each injection point can be balanced to provide optimum NOx reduction.

- SCR catalyst. The SCR catalyst provides the surface area and the catalyst material for ammonia and NOx to react and form nitrogen and water. The SCR catalyst is installed in a reactor housing in the HRSG at the proper flue gas temperature-point for good NOX conversion.

The oxidation catalyst is installed in the HRSG casing upstream of the SCR ammonia injection location to reduce CO emissions. The catalyst oxidizes the CO and VOCs produced from the CTG and duct burners.

Continuous Emissions Monitoring System (CEMS)

The CEMS records the emissions out of the HRSG stack to comply with local, state, and federal emission requirements. The CEMS typically monitors the NOx, O2, and CO levels. The CEMS uses control system signals for CTG power output and fuel gas to the CTG to calculate the total mass rate of emissions released, and may also be used as part of the ammonia injection controls for the SCR system. The CEMS is designed, installed, and certified in accordance with the applicable SJVAPCD and USEPA standards for analyzer performance, data acquisition, and data reporting.

These systems sample, analyze, and record stack emission data for several specified pollutants. CEMS incorporates data handling and acquisition systems to automatically generate emissions data logs and compliance documentation. Alarms alert operators if stack emissions exceed specified limits. Each CEMS undergoes periodic calibration, audits, and testing to verify accuracy.

In addition to continuous monitoring, the project will perform periodic stack emission tests to verify compliance with emission limits, as required.

Steam Turbine Generator

The STG for this project is an MHI reheat turbine. The STG is coupled to the generator through a clutch, along with the CTG on a single shaft, and the STG exhaust steam is condensed in a water-cooled condenser.

Cooling Towers

The excess thermal energy in the steam exhausted to the condenser is dissipated in the heat rejection system. This system is comprised of a condenser, a circulating water system, and a multi-cell cooling tower.

The condenser is a shell and tube heat exchanger with the steam condensing on the shell side under a vacuum, and the cooling water flowing through the tubes in a single- or double-pass design. The condensate collects in the condenser hotwell, where it supplies the condensate pumps that feed the HRSG.

The heat in the condenser is picked up by the circulating water system and transferred to the cooling tower. The cooling water system also transfers heat to the cooling tower from the hydrogen-cooled generator, and other power and gasification equipment.

During startup, a separate set of auxiliary cooling pumps supply water from the cooling tower basin and pump it through plate-type closed cooling water (CCW) exchangers, and return the water to the cooling tower fill material. The CCW pumps circulate higher-purity water through the CCW exchangers that cool the water before it removes heat from the closed-circuit cooling water users. The use of a separate closed cooling water system also reduces the electric power load by enabling the shutdown of the large, main circulating pumps when the Power Block is in standby mode, ready to start, or following a STG shutdown.

Major Electrical Equipment and Systems

The project will have a 230-kilovolt (kV) air-insulated switchyard for interconnection to a future PG&E switching station. The 230-kV transmission line is sized for the total plant output. Revenue metering is provided in the project Switchyard on the transmission line to PG&E.

Startup power for the project is obtained by back-feeding from the 230 kV grid through the main transformer to the unit auxiliary transformers.

The project's auxiliary loads are served by various Power Distribution Centers (PDCs). PDC-1 serves major 13.8 kV loads, including downstream 4160-V and 480-V PDCs, and large motor drivers. Each of the 4,160-volt (V) and 480 V PDCs has a double-ended substation configuration with two 100 percent sized transformers.

Dual 1.5 MW standby diesel generators provide emergency power to essential services in the event of a grid failure.

Medium-voltage (MV) and low-voltage (LV) switchgear, MV and LV motor control centers, 125 V direct-current batteries, chargers, uninterruptable power supply, and Distributed Control System In/Out racks are located indoors in pre-fabricated electrical PDCs with redundant heating, ventilation, air conditioning units. The Major Electrical Equipment will

be in accordance with American National Standards Institute/Institute of Electrical and Electronic Engineers/National Electrical Manufacturers Association/American Society for Testing and Materials standards. The electrical system design and installation are in accordance with the National Electrical Code

Feedstock Delivery, Handling, and Storage System:

Rail Unloading and Transfer System (S-7616-17-0):

The applicant proposes to transfer the coal feedstock to the project site by rail unloading and transfer system. However, if the rail unloading system is unavailable to transfer the coal feedstock to the project, the applicant proposes to utilize the truck unloading and transfer system (S-7616-18) described below.

For the rail unloading and transfer system, a new industrial railroad spur approximately 5 miles in length will connect the project site to the existing San Joaquin Valley Railroad (SJVRR) Buttonwillow railroad line, north of the project site. This railroad spur would also be used to transport some HECA products to customers. A rail unloading and transfer system would be constructed at the project site to unload coal from unit trains and convey it to the storage barn. This system accomplishes the following objectives.

- Unloads coal from unit trains; and
- Conveys the coal to storage in the coal barn.

The transfer conveyor is fully enclosed for weather protection and to control fugitive dust. The conveyor is provided with belt scales, magnetic separators, metal detectors, and safety switches, as required. All related coal feedstock buildings are fully enclosed. Dust suppression spray systems and multiple dust collection systems are used to control fugitive dust.

Truck Unloading and Transfer System (S-7616-18-0):

Petcoke (and/or coal if the rail unloading transfer system is not available) will be delivered to the project site via over-the-road bottom-dump haul trucks. Truck transport would be via existing roads. In addition, a portion of the products of the HECA facility will be transported to markets by truck. At the project site, petcoke will be unloaded at the truck-dump unloading station. The truck dump has a single hopper below each unloading station. Petcoke from these hoppers is sent to the petcoke storage via belt feeders, unloading conveyor, and transfer conveyors. An as-received sample system is provided with the petcoke transfer conveyors. The concrete floor under the truck unloading system slopes to a sump. This sump is equipped with an installed sump pump to recycle water back to the wash-down system, or to forward it to the IGCC water reclaim system.

Once trucks have unloaded the petcoke, each vehicle exits and passes through a truck wash system, which sprays the entire truck with wash-down water (no soap added), and a specific spray system cleans the wheels. This is done to minimize or eliminate any dust

and debris from being carried out and deposited on either the roads inside the project site or on public roads. The wastewater collected under the truck wash is routed to a sump that sends the wastewater back to the IGCC water reclaim system.

Feedstock Storage, Blending, and Reclaim System (S-7616-19-0):

Both coal and petcoke will be stored in a building with separate coal and petcoke storage piles. The coal and petcoke will be reclaimed at a set rate and blended as they are placed on conveyors for transfer from the storage building. The coal and petcoke blend will then flow to gasification for further processing.

The transfer conveyor between the storage building and gasification block is fully enclosed for weather protection and to control fugitive dust. The conveyor is provided with belt scales, magnetic separators, metal detectors, and safety switches, as required.

Feedstock Grinding/Crushing and Drying System (S-7616-20-0)

The MHI gasification system includes equipment to grind and dry the feedstock. The blended feedstock is stored in silos. The feedstock then flows to the grinding mills, where the particle size is reduced to that required for transport into the gasifier and simultaneously dried. The heat source for feedstock drying is hot turbine exhaust gas from the HRSG. After drying the feedstock, the drying gases flow through a dust collection system, then to the atmosphere. The dried feedstock flows to intermediate storage bins, from which it is transported into the gasifier.

During operations and some phases of the startup and shutdown activities, a portion of the HRSG flue gas will be diverted to the feedstock drying area, filtered through a baghouse, then exhausted from the coal-dryer stack. As a result, the emissions from the HRSG and coal-dryer stacks are interconnected. The HRSG flue gas that is diverted to the feedstock dryer has emissions already treated by the oxidation catalyst and SCR. The exhaust stream through the coal-dryer stack is further controlled with a baghouse before being exhausted to the atmosphere.

Gasification System (S-7616-21-0):

Gasifier

The MHI oxygen-blown gasifier is a pressurized, upflow, entrained-flow slagging reactor with a two-stage operation. The MHI gasifier is a dry-feed system; and the reactor internals are protected by a membrane wall.

The reactor consists of two sections (or stages). The coal enters the gasifier at two separate points, with one portion being fed into the lower stage together with O2, where it is gasified at high temperature to produce CO and CO2, in addition to water vapor. The temperature generated is sufficiently high to melt the coal ash. The molten coal ash flows down the membrane wall to the bottom of the gasifier, where it is quenched in a water bath and then removed using a lock hopper system.

The gas produced in the first stage rises to the second stage, where the remaining petcoke is added without any additional O2. In this fuel-rich reducing environment, the key reactions that take place are the gasification of char (the carbon-rich by-product of gasified coal) to CO, and the shifting of CO and water to H2 and CO2. In the second stage, heat provided by the hot gas from the first stage is used to drive these endothermic gasification reactions. As a result, the second stage operates at a lower temperature than the first stage. Completing the gasification reactions at a lower temperature reduces the O2 required and improves the efficiency of the gasifier. The produced syngas exits the second stage through a syngas cooler, generating steam in the process. This steam is used for power generation in the steam turbine of the power block. A cyclone and a filter are used downstream of the syngas cooler to collect the char and recycle it to the lower gasifier section to increase the overall carbon conversion efficiency. The raw syngas leaving the second stage of the gasifier is typically at a temperature of approximately 2,200 °F, hot enough that negligible hydrocarbon gases and liquids are formed.

Syngas Scrubbing, Sour Shift, Low-Temperature Gas Cooling, and Sour Water Treatment

Hot, raw syngas from the gasifier is treated in the syngas scrubber to remove chlorides. Removal of chlorides in the syngas scrubber minimizes the potential to precipitate ammonium chloride in downstream equipment as the syngas is further cooled. The bottoms stream from the syngas scrubber, along with sour water streams from the SRU, is sent to a sour water stripper. The sour gas from the stripper overhead is sent as a feed to the SRU. The stripper bottoms stream is sent to the Wastewater Treatment Unit for additional processing. Scrubbed syngas entering the Sour Shift Unit is rich in CO and water. The Sour Shift Unit employs the water-gas shift (WGS) reaction to convert CO and water to CO_2 and hydrogen. The WGS reaction proceeds as shown below:

$$CO + H_2O \leftrightarrow CO_2 + H_2$$

The heat from the exothermic shift reaction is used to generate steam or to heat other process streams via cross-exchange, thereby improving overall plant efficiency. The WGS reaction is carried out in a two-stage process. Each of the reactors has a sulfur-tolerant catalyst bed composed of cobalt and molybdenum oxides. This catalyst also promotes the hydrolysis of carbonyl sulfide (COS) to hydrogen sulfide (H_2S).

Hydrogenated tail gas from the SRU is recycled to the Sour Shift Unit. This configuration eliminates a need to remove H_2S from the hydrogenated tail gas and also eliminates the need for atmospheric tail gas emissions.

Hot syngas from the sour shift reaction section is cooled and sent to the ammonia wash column, where it is washed with clean boiler feed water to remove any ammonia present in the syngas. Cooled, shifted, ammonia-free syngas exits the wash column and is sent to the Mercury Removal Unit. The bottoms stream from the ammonia wash column is sent to a separate sour water stripper. Most of the ammonia is concentrated in the stripper

overhead stream, which is sent as a feed to the SRU. The stripper bottoms stream is recycled back to the syngas scrubber.

Mercury Removal

In order to minimize potential mercury emissions, this project has incorporated mercury capture technology. Tests of petcoke sources show occasional trace levels of mercury in the elemental analyses. Western sub-bituminous coals typically contain trace levels of mercury as well. Mercury is removed downstream of the sour shift and low-temperature gas cooling (LTGC) units, and at the feedstock dryer using activated carbon. After mercury removal, the product syngas is treated in the acid gas removal (AGR) unit. These controls will reduce mercury emissions to a level that will comply with the new National Emission Standards for Hazardous Air Pollutants (NESHAP) for IGCC Electric Generating Units.

Acid Gas Removal (AGR)

The term “acid gas” refers to vapor containing significant concentrations of acidic gases such as H_2S and CO_2. This section describes how acid gases are removed from the shifted syngas to produce a hydrogen-rich fuel that feeds the Combined Cycle Power Block. A portion of the hydrogen-rich fuel is also used to generate a high-purity hydrogen stream that serves as a feedstock to the Ammonia Synthesis Unit.

Rectisol® Process Description

In the Rectisol® unit, the shifted sour syngas feed is chilled prior to entering the pre-wash section, in which condensed or dissolved impurities are removed. The gas then flows to the absorber column, where it is contacted with methanol solvent for absorption of H_2S, other sulfur compounds, and CO_2.

Clean, hydrogen-rich fuel (very low in sulfur compounds and CO_2) exits the top of the absorber column. The clean, hydrogen-rich fuel is heated and sent to the Combined Cycle Power Block for use as fuel or to the PSA Unit for further purification.

The hydrogen-sulfide-laden solvent is withdrawn from the absorber column and flashed, with the flash gas recycled to the absorber column, and the separated liquid solvent sent to CO_2 separation columns. CO2-laden solvent from the absorber column is also sent to the CO_2 separation columns.

Separated CO_2 exits the top of the CO_2 separation columns and flows to CO_2 compression equipment. After compression, the CO_2 is transported to the OEHI CO_2 Processing Facility for CO_2 EOR.

CO_2-free solvent exiting the bottom of the CO_2 separation columns flows to the hot regenerator, where H_2S and other sulfur compounds are released from the solvent by increasing the temperature and stripping with methanol vapor generated in a reboiler. The

separated acid gas exiting the top of the hot regenerator undergoes further processing in the SRU to recover liquid sulfur as a product.

The regenerated methanol solvent exiting the bottom of the hot regenerator, now CO_{2-} and H_2S-free, is cooled and returned to the absorber column for reuse.

A small portion of the regenerated solvent is sent to the methanol-water column for separation of water and impurities from the methanol by distillation. The methanol-rich overhead stream from the methanol-water column is returned to the hot regenerator. The separated column bottoms water is cooled and sent to the Wastewater Treatment Unit.

Gasification Solids Material Handling System (S-7616-22-0):

Gasification solids are comprised of vitrified (glass-like) material produced by melting the mineral matter in the coal and petcoke, and small amounts of unconverted carbon.

In the collection sump, the gasification solids are separated from the water and are accumulated for off-site transportation by rail or truck.

Gasification Solids

Gasification solids are comprised of the silica, alumina, and other constituents found in coal and petcoke. The high temperature in the gasifier produces a glassy, vitrified solid that is suitable for reuse. Most of the gasifier solids will be transported by rail for beneficial reuse by regional industries. A smaller portion can be transported to nearby industries by truck. It is estimated that gasification solids export would be approximately 75 percent by rail and 25 percent by truck. The planned production rate would be about 840 stpd on a dry basis. The composition of the gasification solids has been estimated based on the anticipated feedstock composition. The table below represents a projected composition of the gasification solids:

Example Composition of Gasification Solids	
Determination	**Results %**
Silicon (SiO_2)	49.43
Aluminum (Al_2O_3)	16.65
Iron (Fe_2O_3)	10.71
Calcium (CaO)	17.43
Magnesium (MgO)	1.50
Sulfur (SO_3)	0.20
Sodium (Na_2O)	0.98
Potassium (K_2O)	1.80
Titanium (TiO_2)	0.78
Phosphorus (P_2O_5)	0.32
Manganese (MnO)	0.20
Carbon (C)	0.00 (below detectable)
Mercury (Hg)	0.00 (below detectable)
Source: HECA, 2012.	

Gasification solids are dewatered, and the solids are accumulated for shipment. Upon exiting the gasifier, the liquids are recovered and returned for reuse in the process. The dewatered gasification solids will be retained in on-site storage until sufficient quantities are accumulated to facilitate their economical transportation. On-site gasification solids storage has the capacity for 7 days of production.

<u>Sulfur Recovery and Tail Gas Compression System (S-7616-23-0)</u>:

Sulfur Recovery and Tail Gas Compression Unit

Acid gas from the acid gas removal (AGR) unit, sour gas streams from the two sour water strippers, and various plant vents are fed to a sulfur recovery unit (SRU). A portion of the H_2S in the feed is oxidized to SO_2 in a reaction furnace. The resulting SO_2 reacts with the remaining H_2S in the correct ratio to form elemental sulfur. These reactions proceed as shown below:

$$H_2S + 3\ O_2 \rightarrow SO_2 + H_2O$$

$$2\ H_2S + SO_2 \leftrightarrow 3\ S + 2\ H_2O$$

Hot effluent gases from the reaction furnace are cooled in the waste heat boiler by generation of 600 pounds per square inch gauge (psig) steam. The tempered effluent gas is sent to the first condenser, where the temperature is decreased further to condense and recover elemental sulfur. Low-pressure steam is generated in the first condenser. Gas leaving the first condenser is then reheated before entering a catalytic reactor to further promote the H_2S and SO_2 reaction to elemental sulfur, followed by a condenser to recover additional sulfur. One additional reheater, reactor and condenser follow.

Sulfur recovered in the three condenser stages is sent to a sulfur degassing unit to reduce the concentration of H_2S dissolved in the sulfur product. After degassing, the liquid sulfur product is sent to a storage tank and ultimately shipped from the facility via rail or truck.

SRU effluent gases exiting the final condenser are directed to the tail gas unit (TGU) hydrogenation equipment, which converts the various sulfur compounds remaining in the gas, back to H_2S. Water is condensed out of the hydrogenated tail gas in a quench tower, after which it is compressed and recycled to the sour shift unit. This configuration minimizes sulfur emissions from the facility and eliminates the need for a TGU amine section. This configuration also recovers the CO_2 that would be emitted by a conventional TGU.

The SRU will include both ammonia-destruction and O_2-enrichment technology in the reaction furnace, in addition to the degassing technology used in treatment of the product sulfur. Oxygen enrichment technology uses high-purity O_2 rather than air in the combustion section of the SRU, thereby decreasing the volumetric flow of gas through the entire unit. The use of O_2 increases the temperature in the reaction furnace to a level that destroys the ammonia present in the feed gases. Ammonia destruction technology is a critical part of the SRU design. Complete destruction of ammonia in the reaction furnace helps to prevent the potential for ammonia salts to foul downstream equipment.

Sulfur Storage and Handling

As stated above, the degassed liquid sulfur product is stored in a tank for shipment via railcars or tank trucks.

Tail Gas Thermal Oxidizer

Associated with the operation of the sulfur recovery process, the project will incorporate a thermal oxidizer on the TGU. The thermal oxidizer will serve as a control device to oxidize any remaining H_2S (after scrubbing) and other vent gas that is generated during startups, shutdowns, and times of non-delivery of CO_2 product. In addition, miscellaneous oxidizing streams from the gasification area (e.g., atmospheric tank vents and miscellaneous equipment vents) are directed to the thermal oxidizer during operation to prevent nuisance odors.

The thermal oxidizer operates at high temperatures, and provides sufficient residence time to ensure essentially complete destruction of reduced sulfur compounds like H_2S to SO_2. The thermal oxidizer fires natural gas continuously to reach and maintain the required operating temperature for proper thermal destruction. Pollutant emissions are generated from the firing of natural gas and the periodic oxidation of vent gas during SRU startup.

CO2 Recovery and Vent System (S-7616-24-0):

The CO2 venting system consists of a CO2 vent header, vent KO drum, and a CO2 vent stack. The system is used to vent incombustible, high-purity CO2. The vent gas is generated from reliefs, startup/shutdown vents, and venting when the CO2 compression, transportation, or injection system is unavailable.

Natural Gas-Fired Auxiliary Boiler (S-7616-25-0):

The auxiliary boiler is a pre-engineered shop-fabricated package boiler that will provide steam for pre-startup equipment warm-up and for other miscellaneous purposes when steam from the Gasification Block or HRSG is not available. During typical operation, the auxiliary boiler may be kept in warm standby (steam sparged, no firing) or cold standby (no sparging), and will not have emissions. When operating, the boiler will produce a maximum of about 150,000 pounds per hour of steam and will be fueled by natural gas. The boiler will be equipped with low-NOx burners and SCR to minimize emissions.

Cooling Towers (S-7616-27-0, -28-0, and -29-0):

Mechanical draft cooling towers are used for indirect heat rejection where low process outlet temperatures are critical to overall plant efficiency. Mechanical draft cooling towers serve multiple heat loads in more than one process unit.

The project has three mechanical draft cooling towers (one for the Gasification Block/Process Units, one for the ASU, and one for the Combined Cycle Power Block) that are described below. The cooling towers use treated water from the water treatment plant as makeup. Cooling-tower blowdown from the cooling towers is directed to the water treatment plant.

Power Block Cooling Tower

The largest heat rejection load in this project is the steam turbine generator surface condenser in the combined cycle power block. The main cooling water pumps supply water from the cooling tower basin and pump it through the surface condenser tubes and back to the top of the cooling tower cells. The return water flows into distribution piping below high-efficiency drift eliminators and above the cooling tower fill material. Electric motor driven-induced draft fans move air up through the tower fill material, contacting the cooling water with air and promoting evaporative cooling. A chemical feed system will supply water conditioning chemicals to the circulating water to minimize corrosion and control the formation of mineral scale and biofouling. Sulfuric acid will be fed into the circulating water system for alkalinity reduction to control the tendency for scaling. The acid feed system will consist of storage and two full-capacity metering pumps. A polyacrylate solution is also fed into the circulating water system to inhibit scale formation. This system also requires storage, and two full-capacity metering pumps. Sodium hypochlorite is added to prevent biofouling in the circulating water system. The system requires storage, and two full-capacity metering pumps.

The cooling tower is provided with high-efficiency drift eliminators designed to reduce drift to less than 0.0005 percent of the circulating water flow rate.

Gasification Block/Process Units Cooling Tower

The design of the Process Cooling Water System is similar to that of the Power Block Cooling Water System described above. The major heat rejection duties are from the CO2 compressor and the AGR refrigeration unit. This compressor is electricity driven. Cooling water is also supplied to the Gasification, Shift, LTGC, SRU/TGU, SWS, Manufacturing Complex, and other miscellaneous users. The process cooling tower has a cooling water basin, pumps, and piping system.

The tower is supplied with high-efficiency drift eliminators designed to reduce drift to less than 0.0005 percent of circulation.

Air Separation Unit Cooling Tower

This project will supply the IGC with treated makeup water, and will also treat the ASU cooling tower blowdown in the project's water treatment plant. The following description reflects the IGC's cooling water system design.

The ASU cooling water system design is also similar to that of the power block cooling water system. The major heat rejection duties are from the main air compressor intercooler and aftercooler, the booster air compressor intercooler, and the nitrogen compressor intercooler. These compressors are electricity driven. The ASU cooling tower is located in the ASU near the cooling loads. The ASU cooling tower has separate pumps and piping systems and is operated independently of the other cooling water systems.

The ASU cooling tower is supplied with high-efficiency drift eliminators designed to reduce drift to less than 0.0005 percent of circulation.

<u>Flares (S-7616-30-0, -31-0, and -32-0):</u>

Flaring shall occur only during startup and shutdown operations or during emergencies. The previous design (the previous HECA proposal, project S-7616/S-1093741) required regular rotation of three gasifiers into and out of service to facilitate periodic maintenance of the gasifier refractory and other critical gasifier system components. The rotation of each gasifier into service after maintenance required flaring of syngas from the time of light-off until the syngas was up to pressure and within specification. The new design uses a single, 100-percent-capacity MHI gasifier with an internal membrane wall that requires significantly less maintenance, eliminates rotations, and requires less syngas flaring events than a refractory-lined gasifier.

Although the plant is designed to avoid flaring during steady-state operations, flares are needed to protect the plant operators and equipment. The plant employs three pressure-relief systems and their corresponding flares (Gasification, Rectisol®, and SRU) for this purpose. All three flares are conventional elevated flares, and will be provided with natural

gas assist as required. Vessels, towers, heat exchangers, and other equipment are connected to piping systems that will discharge gases and vapors to a relief system in order to prevent excessive pressure from building up in the equipment during upsets and emergencies. The flares also allow safe venting of equipment during routine startup and shutdown operations.

During non–startup plant operation, the three flares will be operated in a standby mode with only minimal emissions from the natural-gas pilot flames. As explained below, the gasifier and SRU flares will be also be used to occasionally flare excess startup gases in a safe manner.

Gasification Flare:

The gasification unit is served with an elevated flare to safely flare excess gas during gasifier startup operations or during upset conditions. Syngas sent to the flare during planned flaring events is filtered, water-scrubbed, and sulfur-free. Flaring of untreated syngas or other streams within the plant will only occur as an emergency safety measure during unplanned plant upsets or equipment failures.

Sulfur Recovery Unit Flare

The SRU flare will be used to safely dispose of gas streams containing sulfur during startup and shutdown (as described further in this section) and gas streams containing sulfur during unplanned upsets or emergency events. Acid gas derived from the AGR and the sour water stripper (SWS) overhead is normally routed to the SRU for recovery as elemental sulfur. During cold plant startup of the gasification, AGR, and shift units, these acid gas streams will be diverted to the SRU flare header for a short time. To reduce the emissions of sulfur compounds to the environment during SRU or TGU shutdown, the acid gas is routed to the emergency caustic scrubber, where the sulfur compounds are absorbed with caustic solution. After scrubbing, the gas is then routed to the elevated SRU flare stack via the SRU flare knockout drum. Fresh and spent caustic tanks and pumps are provided to allow delivery of fresh caustic and disposal of spent caustic.

Rectisol Acid Gas Removal Flare (Rectisol Flare)

Cold reliefs and vents from the AGR Unit and its associated Refrigeration Unit, and the Ammonia Synthesis Unit are collected in the Rectisol® Flare header. The Rectisol® Flare header is used only in startup, shutdown, emergencies, or plant upsets, and contains gases that can be below the freezing point of water. For this reason, the Rectisol® Flare header gases are segregated from the wet gases in the Gasification Flare header.

<u>Manufacturing Complex:</u>

Pressure Swing Adsorption (PSA) Unit

A portion of clean hydrogen-rich fuel from the AGR unit is sent to the PSA unit to generate a high-purity hydrogen gas stream for use as a feedstock to the Ammonia Synthesis Unit. The

offgas from the PSA unit is compressed and sent to the HRSG for use as duct-burner fuel. Two PSA Units in series are used to maximize hydrogen recovery.

Ammonia Synthesis Unit (S-7616-33-0):

The high-purity hydrogen stream from the pressure swing adsorption (PSA) unit and a nitrogen stream from the Air Separation Unit are the two primary feedstocks for the Ammonia Synthesis Unit. The major steps in the process are described below.

The hydrogen and nitrogen feed streams are first compressed to a high pressure and then mixed with recycled gas in the syngas compressor (electric powered). The combined mixture is then further compressed, heated, and fed to the ammonia (NH3) synthesis converter, where the exothermic conversion to ammonia takes place over an iron-based catalyst as follows:

$$3\ H_2 + N_2 \leftrightarrow 2\ NH_3$$

The hot ammonia synthesis converter effluent is first cooled by generating steam in the waste heat boiler. The converter effluent is then further cooled in a series of exchangers to condense the ammonia product and separate it from the vapor stream in the primary separator. The vapor stream from the primary separator is recycled to the syngas compressor while the liquid ammonia product is first processed for the removal of inert substances, and then it is routed to storage.

The cold liquid ammonia storage system uses two vertical, cylindrical steel tanks, each housed in its own unique second vessel with double integrity, elevated above ground on a concrete pedestal, surrounded by a concrete barrier. A vapor recovery system is included to prevent any product losses. The tanks have sufficient storage capacity to support a cold startup of the ammonia synthesis unit. Additionally, the capacity of the tanks enables the production rate of urea pastilles and UAN solution to remain relatively constant as the IGCC plant undergoes on-peak and off-peak operations. The liquid ammonia is pumped from the tanks to the various users within the facility.

Ammonia is intended to be used on site to produce urea pastilles and UAN solution, and as the reagent for the SCR NOx emission control system. However, the plant has also been designed with facilities to load liquid ammonia for sale onto railcars or into trucks for off-site shipment to allow for future operational flexibility.

Ammonia Startup Heater Serving Ammonia Synthesis Unit

A 56.0 MMBtu/hr natural gas-fired startup heater is provided in the ammonia synthesis unit to raise the catalyst bed temperatures during initial plant commissioning, or during startup after a plant maintenance outage.

The ammonia synthesis unit also contains an ammonia refrigeration system to provide the chilling required for cooling the converter effluent stream and the ammonia product stream, and to recover and condense ammonia vapor from the ammonia storage tanks.

A process flow diagram of the ammonia synthesis unit (Figure 2-29: Ammonia Synthesis Unit) is located in Appendix D.

<u>Urea Unit with Urea Pastillation and Pastille Handling Operation (S-7616-34-0)</u>

Urea Unit

CO_2 recovered in the AGR Unit is compressed and treated in the CO_2 Purification Unit to remove any trace sulfur compounds and produce very high-purity CO_2 for urea synthesis. Liquid ammonia from the upstream Ammonia Synthesis Unit is pumped and combined with this CO_2 stream in the Urea Reactor. The following exothermic reaction proceeds quickly:

$$2\ NH_3 + CO_2 \leftrightarrow NH_2\text{-}CO\text{-}ONH_4 \text{ (ammonium carbamate)}$$

Ammonium carbamate is then dissociated to urea and water through the application of heat. The reaction kinetics for urea production are slower than those for the ammonium carbamate reaction.

$$NH_2\text{-}CO\text{-}ONH_4 \leftrightarrow NH_2\text{-}CO\text{-}NH_2 \text{ (urea)} + H_2O$$

Because the above reaction does not proceed to completion, additional steps are necessary to produce the desired urea product. Various combinations of dissociation, condensation, recycle of unconverted reactants, and stripping are used to complete the conversion to urea.

Finally, the intermediate urea solution is concentrated to provide the required feeds to the UAN Complex and to the Urea Pastillation Unit. Vacuum evaporator/separator systems are used to produce the required urea solutions. A single stage unit can provide approximately 80 weight percent urea feed to the UAN complex, and a multistage system is required to provide the approximately 99 weight percent urea melt for the pastillation unit. These solutions are then pumped to the final stage in their respective production processes. Vapors from the vacuum system are scrubbed in an absorber using process condensates. The treated vapors (inert substances) are vented. The process condensates are recycled within the Urea Unit.

The capacity of the Urea Unit is sufficient to provide the combined urea product for both downstream UAN and pastillation production requirements. An intermediate urea solution surge tank is provided to enable continuous production, should operations of either the upstream or downstream systems be briefly interrupted**.**

Process flow diagrams of the urea unit (Figure 2-30: Urea Unit – Synthesis and Figure 2-31: Urea Unit - Concentration) are located in Appendix D.

Urea Pastillation Unit and Pastille Handling

Pastillation technology converts the urea melt, which is manufactured in the urea unit, into pastilles. According the applicant, pastillation was selected due to its ability to minimize emissions of particulate matter and ammonia. A drop-former deposits uniform droplets onto a moving belt. These droplets solidify on the belt to produce a uniform pastille product. The heat of crystallization is removed by spraying the underside of the belt with cooling water. At no point in the process does the cooling water contact the urea product. After they have cooled and solidified, the urea pastilles are removed from the belt by an oscillating scraper. The section above the moving steel belt is enclosed with a hood and vented.

The urea pastille handling system collects urea pastilles from the urea pastillation unit and conveys them to the bulk storage/rail and truck loadout facility.

The system accomplishes the following objectives:

- Receives urea pastilles from the urea pastillation unit;
- Conveys the urea pastilles to the urea storage domes (S-7616-37-0);
- Maintains a low-humidity atmosphere inside the storage domes to prevent the urea pastille, which is hygroscopic, from absorbing moisture;
- Reclaims the urea pastilles; and
- Conveys the urea pastilles to the urea loadout system (S-7616-37-0).

All conveyors are fully enclosed in tubular galleries for weather protection and for control of fugitive dust. All urea-handling buildings are fully enclosed with roofing and siding. Dust collection systems are used to control dusting and fugitive dust emissions.

<u>Urea Ammonium Nitrate Complex:</u>

In order to produce UAN solution, it is necessary to produce several intermediate products. These include nitric acid (HNO3), ammonium nitrate (NH4NO3), and urea (NH2-CO-NH2). The following sections provide a brief overview of each of these processes.

<u>Nitric Acid Unit (S-7616-35-0):</u>

Nitric acid production is a three-step process consisting of NH_3 oxidation, nitric oxide (NO) oxidation, and absorption. In the ammonia oxidation step, ammonia from the Ammonia Synthesis Unit is oxidized by air at high temperatures as it passes over a platinum-based catalyst. The exothermic oxidation reaction proceeds as shown below:

$$4\ NH_3 + 5\ O_2 \rightarrow 4\ NO + 6\ H_2O$$

The hot effluent from the reactor is cooled via steam generation or cross-exchange with another process stream. Nitric oxide formed during the ammonia oxidation step must also be oxidized. In order to accomplish this, the process stream is cooled. Nitric oxide reacts non-catalytically with O2 to form nitrogen dioxide (NO_2):

$$2\ NO + O_2 \rightarrow 2\ NO_2$$

Next, the nitrogen dioxide is further cooled and introduced into an absorption tower along with water. Nitric acid is formed via the following reaction:

$$3\ NO_2 + H_2O \rightarrow 2\ HNO_3 + NO$$

The applicant indicated that on average the nitric acid concentration is expected to be 57 percent by weight. The unit capacity of the nitric acid unit is 501 tons per day, expressed on a 100% acid basis.

An additional air stream is introduced to re-oxidize the nitric oxide formed in the above reaction. This air stream also helps to remove any dissolved nitrous oxide present from the acid product.

Tail gas from the absorber column is cleaned before being vented. Catalytic decomposition and reduction of both nitrous oxide (N_2O) and NO_X are used to control emissions. The tail gas abatement unit complies with BACT requirements.

A process flow diagram of the nitric acid unit (Figure 2-32 – Nitric Acid Unit) is located in Appendix D.

<u>Ammonium Nitrate Unit (S-7616-36-0):</u>

Ammonium nitrate (NH_4NO_3) solution is produced via a neutralization reaction between gaseous NH_3 and aqueous HNO_3. The exothermic reaction proceeds as follows:

$$NH_3 + HNO_3 \rightarrow NH_4NO_3$$

The water produced in the aqueous phase neutralization reaction is reused in the process.

Ammonium nitrate is produced and stored as a liquid solution (rather than in the solid form) to enhance process safety.

Urea Ammonium Nitrate Unit

The ammonium nitrate solution and the urea solution are metered, mixed, and cooled. Depending upon the concentration of the feedstock solutions and the desired product specifications, water may be added in as well. The final product is UAN, an aqueous UAN solution.

A process flow diagram of the ammonium nitrate unit and the UAN units (Figure 2-33: Ammonium Nitrate/UAN Units) is located in Appendix D.

UAN Solution Storage and Handling

The UAN solution is stored in tanks, and then loaded into railcars or tank trucks for shipment.

Urea Storage and Loadout System (S-7616-37-0):

Urea pastilles are stored in four 20,000-ton storage capacity urea domes that are fully enclosed with roofing and siding. All PM emissions from these sources are assumed to be $PM_{2.5}$ or smaller.

Diesel-Fired Emergency Engines Powering Electrical Generators (S-7616-38-0 and -39-0):

The emergency engine powers an electrical generator. Other than emergency operation, the engine may be operated up to 50 hours per year for maintenance and testing purposes (as allowed by Rule 4702).

Two 60 Hz, 3-Phase, 2,000 kW, 0.8 PF standby diesel generators in an outdoor enclosure will be connected to the 480 V switchgear to supply emergency essential service power to critical lube oil and cooling pumps, gasification and auxiliary steam systems, station battery chargers, uninterruptible power supply (UPS), heat tracing, control room, and emergency exit lighting, and other critical plant loads.

Diesel-fired Emergency Engine Powering Firewater Pump (S-7616-40-0):

One approximately 600-horsepower standby diesel-driven firewater pump will be adjacent to the firewater tank. The emergency engine powers a firewater pump. Other than emergency operation, the engine may be operated up to 100 hours per year for maintenance and testing purposes (as allowed by Rule 4702).

V. Equipment Listing

S-7616-17-0 RAIL UNLOADING AND TRANSFER SYSTEM FOR THE HANDLING OF COAL, INCLUDING: ENCLOSED RAIL UNLOADING BUILDING SERVED BY BAGHOUSE DUST COLLECTOR AND DUST SUPPRESSION SPRAY SYSTEM, WITH RAILCAR UNLOADING STATION, RAIL UNLOADING BIN(S), BELT FEEDER(S), RAIL UNLOADING CONVEYOR(S) ENCLOSED IN UNLOADING TUNNEL (SERVED BY A DUST COLLECTOR) THAT TRANSFERS MATERIAL TO TOWER #1 SERVING FEEDSTOCK STORAGE (S-7616-19)

S-7616-18-0 TRUCK UNLOADING AND TRANSFER SYSTEM FOR THE HANDLING OF PETROLEUM COKE (PETCOKE) AND/OR COAL, INCLUDING: ENCLOSED TRUCK UNLOADING BUILDING SERVED BY BAGHOUSE DUST COLLECTOR AND DUST SUPPRESSION SPRAY SYSTEM, WITH TRUCK UNLOADING STATION(S), TRUCK UNLOADING BIN(S), BELT FEEDER(S), TRUCK UNLOADING CONVEYOR(S) ENCLOSED IN AN UNLOADING TUNNEL (SERVED BY A DUST COLLECTOR) THAT TRANSFERS MATERIAL TO TOWER #1 SERVING FEEDSTOCK STORAGE (S-7616-19)

S-7616-19-0 FEEDSTOCK STORAGE, BLENDING, AND RECLAIM SYSTEM INCLUDING: TRANSFER TOWER #1 (THAT TRANSFERS FEEDSTOCK FROM RAIL AND TRUCK UNLOADING AND TRANSFER SYSTEMS, S-7616-17 AND -18) SERVED BY A DUST COLLECTOR WITH COAL CRUSHER, REJECTS CONVEYOR(S); FEEDSTOCK STORAGE BUILDING (BARN) WITH A SEPARATE COAL AND PETCOKE STORAGE AREAS, STORAGE CONVEYOR(S), DISCHARGE CHUTE(S), AND RECLAIM CONVEYOR(S); AND TRANSFER TOWER #2 (THAT TRANSFERS MATERIAL TO THE FEEDSTOCK DRYING AND GRINDING/CRUSHING OPERATION, S-7616-20) SERVED BY TWO DUST COLLECTORS (ONE OPERATING AND ONE SPARE), TWO ENCLOSED TRANSFER CONVEYORS

S-7616-20-0 FEEDSTOCK DRYING AND GRINDING/CRUSHING OPERATION INCLUDING: CRUSHER BUILDING SERVED BY BAGHOUSE DUST COLLECTOR, WITH SURGE BIN(S), BELT FEEDER(S), BYPASS SCREEN(S), TWO FEEDSTOCK CRUSHERS; TWO ENCLOSED PLANT FEED CONVEYORS SERVED BY BAGHOUSE DUST COLLECTOR; MILLING AND DRYING BUILDING WITH FEEDSTOCK DRYER [WITH DRYING GAS FROM TREATED EXHAUST GAS FROM HEAT RECOVERY STEAM GENERATOR LISTED ON S-7616-26] SERVED BY BAGHOUSE DUST COLLECTOR, WITH REVERSING CONVEYOR(S), DIVERTER GATE(S), AND TWO MILLING AND DRYING SILOS

S-7616-21-0 GASIFICATION SYSTEM INCLUDING: ONE MHI OXYGEN-BLOWN GASIFIER; SYNGAS SCRUBBING SYSTEM; SOUR SHIFT/LOW TEMPERATURE GAS COOLING (LTGC) SYSTEM; SOUR WATER TREATMENT SYSTEM, MERCURY REMOVAL SYSTEM, AND RECTISOL ACID GAS REMOVAL (AGR) UNIT

S-7616-22-0 GASIFICATION SOLIDS MATERIAL HANDLING AND STORAGE SYSTEM INCLUDING: GASIFICATION SOLIDS UNLOADING BUNKER (STORAGE COVER WITH ROOFING AND PARTIAL SIDING) WITH DEWATERING TANK(S), STORAGE PILE(S), RECLAIM HOPPER AND GRIZZLY, BUCKET ELEVATOR FEED CONVEYOR SERVED BY DUST COLLECTOR, ENCLOSED TRANSFER CONVEYOR (TO GASIFICATION SOLIDS TRANSFER TOWER), GASIFICATION SOLIDS TRANSFER TOWER SERVED BY DUST COLLECTOR, WITH ENCLOSED LOAD-OUT FEED CONVEYOR (TO GASIFICATION SOLIDS LOAD-OUT BUILDING); AND ENCLOSED GASIFICATION SOLIDS LOAD-OUT BUILDING SERVED BY BAGHOUSE DUST COLLECTOR, WITH GASIFICATION SOLIDS LOAD-OUT SYSTEM WITH ONE TRUCK AND ONE RAIL LOAD-OUT STATION

S-7616-23-0 SULFUR RECOVERY AND TAIL GAS COMPRESSION SYSTEM CONSISTING OF SULFUR RECOVERY UNIT (SRU), A TAIL GAS UNIT (TGU) WITH A NATURAL GAS-FIRED TAIL GAS THERMAL OXIDIZER RATED UP TO 96 MMBTU/HR (OR EQUIVALENT), AND MISCELLANEOUS TANKS, COMPRESSORS, PUMPS, CONDENSERS, HEAT EXCHANGERS, PIPING

S-7616-24-0 CO2 RECOVERY (CAPTURE, COMPRESSION, AND TRANSPORTATION) AND VENT SYSTEM FOR EMERGENCY RELEASES OF A STREAM OF PRIMARILY CO2 FROM THE ACID GAS REMOVAL UNIT

S-7616-25-0 230 MMBTU/HR NATURAL GAS-FIRED AUXILIARY BOILER EQUIPPED WITH LOW-NOX BURNER WITH FLUE GAS RECIRCULATION AND SELECTIVE CATALYTIC REDUCTION (SCR) SYSTEM (OR EQUIVALENT)

S-7616-26-0 431 MW NOMINAL (GROSS) COMBINED-CYCLE POWER GENERATING SYSTEM CONSISTING OF HYDROGEN-RICH SYNGAS FUEL AND/OR BACK UP NATURAL GAS-FIRED MHI 501 GAC G-CLASS, AIR-COOLED ADVANCED COMBUSTION TURBINE GENERATOR (CTG), WITH A HEAT RECOVERY STEAM GENERATOR (HRSG), AND A CONDENSING STEAM TURBINE-GENERATOR (STG) OPERATING IN COMBINED CYCLE MODE

S-7616-27-0 MULTI-CELL MECHANICAL-DRAFT COOLING TOWER WITH HIGH-EFFICIENCY DRIFT ELIMINATORS, SERVING GASIFICATION BLOCK AND PROCESS UNITS

S-7616-28-0 MULTI-CELL MECHANICAL-DRAFT COOLING TOWER WITH HIGH-EFFICIENCY DRIFT ELIMINATORS, SERVING AIR SEPARATION UNIT

S-7616-29-0 MULTI-CELL MECHANICAL-DRAFT COOLING TOWER WITH HIGH-EFFICIENCY DRIFT ELIMINATORS, SERVING POWER BLOCK

S-7616-30-0 4,000 MMBTU/HR ELEVATED FLARE WITH 0.5 MMBTU/HR NATURAL GAS-FIRED PILOT, PRIMARILY SERVING GASIFICATION BLOCK (OR EQUIVALENT)

S-7616-31-0 800 MMBTU/HR ELEVATED FLARE WITH 0.3 MMBTU/HR NATURAL GAS FIRED PILOT, PRIMARILY SERVING SULFUR RECOVERY UNIT (OR EQUIVALENT)

S-7616-32-0 5,500 MMBTU/HR ELEVATED FLARE WITH 0.3 MMBTU/HR NATURAL GAS-FIRED PILOT, PRIMARILY SERVING RECTISOL UNIT (OR EQUIVALENT)

S-7616-33-0 AMMONIA SYNTHESIS UNIT CONSISTING OF: ONE 56.0 MMBTU/HR NATURAL GAS-FIRED AMMONIA STARTUP HEATER EQUIPPED WITH FOUR LOW-NOX BURNERS, EACH RATED AT 14.0 MMBTU/HR (OR EQUIVALENT); AMMONIA SYNTHESIS CONVERTER; SEPARATORS; ELECTRIC SYNGAS COMPRESSOR; ELECTRIC AMMONIA REFRIGERATION COMPRESSOR; AMMONIA ACCUMULATOR; AMMONIA REFRIGERATION SYSTEM; COLD LIQUID AMMONIA STORAGE SYSTEM; AMMONIA RECOVERY UNIT

S-7616-34-0 UREA UNIT WITH UREA PASTILLATION SYSTEM: UREA UNIT WITH HIGH-PRESSURE AND LOW-PRESSURE ABSORBERS; PASTILLATION UNIT WITH A DROP FORMER, MOVING BELT, OSCILLATING SCRAPER, AND BUCKET ELEVATOR SERVED BY A DUST COLLECTOR

S-7616-35-0 NITRIC ACID UNIT FOR THE PRODUCTION OF NITRIC ACID FROM AMMONIA OXIDATION, NITRIC OXIDE OXIDATION, AND ABSORPTION SERVED BY: SELECTIVE CATALYTIC REDUCTION (SCR) TO CONTROL NOX, AND TERTIARY CATALYTIC DECOMPOSITION TO CONTROL N2O

S-7616-36-0 AMMONIUM NITRATE UNIT THAT PRODUCES AMMONIUM NITRATE, CONSISTING OF: NEUTRALIZER WITH INTEGRAL SCRUBBER TO CONTROL AMMONIA; PROCESS CONDENSATE TANK WITH VENT SCRUBBER TO CONTROL PARTICULATE MATTER EMISSIONS; AMMONIUM NITRATE COOLER, AND PROCESS PUMP(S)

S-7616-37-0 UREA STORAGE AND HANDLING OPERATION CONSISTING OF FOUR 20,000-TON STORAGE CAPACITY ENCLOSED UREA STORAGE DOMES EACH WITH ONE UREA TRANSFER TOWER, WITH EACH TRANSFER TOWER SERVED BY ONE DUST COLLECTOR; ENCLOSED UREA RECLAIM BUILDING WITH RECLAIM HOPPERS AND GRIZZLIES; ENCLOSED,

TUBULAR RECLAIM CONVEYOR (THAT TRANSFERS MATERIAL TO UREA TRANSFER TOWER #5); UREA TRANSFER TOWER #5 SERVED BY DUST COLLECTOR; ENCLOSED, TUBULAR LOADOUT FEED CONVEYOR (THAT TRANSFERS MATERIAL TO LOADOUT BUILDING); UREA LOADOUT BUILDING SERVED BY BAGHOUSE DUST COLLECTOR, WITH RAIL LOADOUT CONVEYOR, ONE TRUCK AND ONE TRAIN LOADOUT WEIGH SYSTEM, ONE TRUCK AND ONE TRAIN LOADING SPOUT AND VENT SYSTEM

S-7616-38-0 2,922 BHP CUMMINS MODEL QSK60-G6 INTERIM TIER 4 (OR THE HIGHEST TIER RATING APPLICABLE AT THE TIME OF INSTALLATION, WHICHEVER TIER IS HIGHER) CERTIFIED DIESEL-FIRED EMERGENCY STANDBY IC ENGINE POWERING A 2,000 KW CUMMINS MODEL DQKC ELECTRIC GENERATOR, #1 (OR EQUIVALENT)

S-7616-39-0 2,922 BHP CUMMINS MODEL QSK60-G6 INTERIM TIER 4 (OR THE HIGHEST TIER RATING APPLICABLE AT THE TIME OF INSTALLATION, WHICHEVER TIER IS HIGHER) CERTIFIED DIESEL-FIRED EMERGENCY STANDBY IC ENGINE POWERING A 2,000 KW CUMMINS MODEL DQKC ELECTRIC GENERATOR, #2 (OR EQUIVALENT)

S-7616-40-0 556 BHP CUMMINS MODEL CFP-15E-F40 INTERIM TIER 4 (OR THE HIGHEST TIER RATING APPLICABLE AT THE TIME OF INSTALLATION, WHICHEVER TIER IS HIGHER) CERTIFIED DIESEL-FIRED EMERGENCY STANDBY IC ENGINE POWERING A FIREWATER PUMP (OR EQUIVALENT)

VI. Emission Control Technology Evaluation

Combined Cycle Power Generating System (S-7616-26-0)

Power Block Startup

The MHI 501 GAC® and the MHI steam turbine are on a common shaft, with the common generator located between the combustion turbine generator (CTG) and steam turbine generator (STG). A clutch is provided between the STG and the generator to allow the CTG to startup independently of the STG. The clutch is disengaged during the following CTG startup sequence.

Once all the startup emissions are met, the MHI 501 GAC CTG start signal is given and the generator is used as a motor to rotate the CTG and accelerate it until the operation is self-sustaining (static start). The CTG compressor is first partially loaded to provide enough air flow and duration to purge the HRSG. Following the purge, natural gas is introduced into the CTG combustors, resulting in the CTG operation becoming self-sustaining, and the discontinuation of the static start. Natural gas is required to start up the combustion turbine. When the combustion turbine reaches 3,600 revolutions per minute (rpm), or "full speed, no load," it is synchronized with the electrical grid, and the main breaker is closed. Shortly after the CTG is synchronized, it is loaded to a minimum, or "spinning reserve" load. All the preceding steps are executed automatically by the CTG's control computer system. At this point, the HRSG begins warming up and rapidly begins to produce steam. The steam is initially vented; and, as pressure builds in the steam system, the atmospheric vents close and the steam flow is diverted to the surface condenser. Once dry, superheated steam is available at the STG, the STG startup sequence can be initiated. The STG can then be accelerated to 3,600 rpm to match speed with the generator shaft. Once the speeds are synchronized, the clutch can be engaged, and both the CTG and the STG will supply shaft work to the generator. The steam turbine metal temperatures determine how quickly the steam turbine can be loaded. The cold-start sequence requires the CTG to operate at reduced load (below the emission compliance level) for up to 4 hours. During this time, the CTG load is slowly increased to match the steam temperature to the STG metal temperature to heat the STG while minimizing thermal stress. Once the CTG reaches the required load, steam is introduced to control NO_X formation. Once the SCR catalyst reaches the required temperature, ammonia injection is initiated, and the HRSG stack emissions will fall to the required compliance levels. The CTG can then be loaded normally to base load, and the STG will reach a load based on the available steam.

Operating Emissions

This section describes steady-state operations, and the startup/shutdown operations and associated emissions from each source at HECA. A detailed description of the sequence of actions that will be taken to bring all plant components on line during a plant-wide startup is provided in the calculations section.

Power Block CTG/HRSG

The most significant emission source of the project will be the CTG/HRSG train. The MHI 501 GAC CTG/STG generator will provide approximately 431 MW nominal gross output to produce approximately 300 MW of reliable, low-carbon baseload electricity. Exhaust gas from the turbine section is ducted through the HRSG to generate high-energy steam, which produces additional electricity in the steam turbine. Some of the exhaust gas is also ducted from the HRSG to the Gasification Block to dry the feedstock, and will be discharged at the coal-dryer stack in that process block. Remaining exhaust gas at the HRSG is discharged through the HRSG stack. The combustion system is designed for operation on hydrogen-rich fuel. The combustion system is also equipped with separate fuel nozzles for natural-gas firing during startup, shutdown, and equipment outages. The combustion system is designed to achieve low-NO_X emissions while injecting nitrogen diluent and combusting hydrogen-rich fuel. When operating on natural gas, water is injected for NO_X control, in addition to SCR. Natural gas is used during startup and shutdown of the combustion turbine and during periods of unplanned equipment outages (up to 2 weeks per year).

The combustion turbine exhaust gas, supplemental hydrogen-rich fuel for duct-firing, and PSA off-gas for duct-firing are used as energy input into the HRSG. An SCR system is installed in the HRSG to reduce emissions of NO_X to meet BACT requirements. An oxidation catalyst is also installed in the HRSG to reduce CO and VOC emissions to achieve BACT levels for these pollutants. The HRSG stack is provided with a CEMS to verify compliance with applicable requirements. The CTG/HRSG will operate in a compliance load range of 70 to 100 percent.

Power Block CTG/HRSG and Feedstock Dryer Operating Emissions

During operations and some phases of the startup and shutdown activities, a portion of the HRSG flue gas will be diverted to the feedstock drying area, filtered through a baghouse, then exhausted from the coal-dryer stack. As a result, the emissions from the HRSG and coal-dryer stacks are interconnected. The HRSG flue gas that is diverted to the feedstock dryer has emissions already controlled by the oxidation catalyst and SCR. The exhaust stream through the coal-dryer stack is further controlled with a baghouse before being exhausted to the atmosphere.

Maximum short-term operational emissions from the CTG/HRSG and feedstock dryer were determined from a comparative evaluation of potential emissions corresponding to on-peak and off-peak operating conditions. The criteria pollutant emission rates were provided by the turbine vendor and the design engineers for two load conditions (on-peak and off-peak), and for each of three ambient temperatures (39 ºF, 65 ºF, and 97 ºF) when firing syngas, and one load condition (off-peak) when firing natural gas. The maximum short-term operational emissions (in lb/hr) from the CTG/HRSG and feedstock dryer when combusting syngas, and from the CTG/HRSG when operating on natural gas, are presented in Table 3-3 (Maximum Short-Term Emissions From CTG/HRSG And Coal Dryer Stack During On-Peak Operations), which is located in Appendix F.

The long-term operational emissions (in tons/year) from the CTG/HRSG and feedstock dryer were estimated by summing the emissions contributions from on-peak operating conditions,

including duct-firing (for the average ambient condition of 65 ºF), CTG/HRSG startup/shutdown conditions, and maximum natural gas usage. These annual emissions of air pollutants for the CTG/HRSG and feedstock dryer have been calculated based on the expected operating schedule of 8,000 hours of operations, two startups and shutdowns per year, and 2 additional weeks of natural-gas operations other than startup and shutdown events.

CTG/HRSG Startup and Shutdown Emissions

Because startup and shutdown events typically have higher emission rates than normal operating conditions, they are incorporated into the short- and long-term emissions estimates for the CTG/HRSG for modeling purposes. The CTG will initially be started up using natural-gas fuel, then it will be shifted to syngas as the syngas becomes available. Conversely, during a shutdown, the CTG will be operated on syngas until production decreases, then the CTG will be operated on natural gas. Therefore, the expected emissions and durations of startup and shutdown events summarized in Table 3-5 (CTG/HRSG and Coal Drying Stack Emissions During Start-Up and Shut-Down), which is located in Appendix F.

Because hours that include startup and shutdown events will have higher NO_X, CO, and VOC emissions than the normal operating condition with fully functioning SCR and CO oxidation catalyst, these events were incorporated (as applicable) into the worst-case short- and long-term emissions estimates in the air quality dispersion modeling simulations for these pollutants.

Material Handling Dust Collection:

Railcar Unloading and Transfer System (S-7616-17-0)
Truck Unloading and Transfer System (S-7616-18-0)
Feedstock Storage, Blending, and Reclaim System (S-7616-19-0)
Gasification Solids Material Handling System (S-7616-22-0)

Particulate matter emissions are associated with the material handling of the feedstock, petcoke and coal, urea, and gasification solids. These operations include bulk material unloading, loading, belt conveying, belt transfer points, silo loading, and feedstock crusher, all controlled with a system of baghouses. Coal and petcoke will be stored in a storage building with separate coal and petcoke storage piles. The transfer conveyors are fully enclosed to control fugitive dust. All PM emissions from these sources are assumed to be PM2.5 or smaller.

Urea Storage and Loadout System (S-7616-37-0):

Urea pastilles are stored in four buildings that are fully enclosed with roofing and siding. All PM emissions from these sources are assumed to be $PM_{2.5}$ or smaller.

Feedstock Grinding/Crushing and Drying System (S-7616-20-0)

Feedstock Grinding and Drying

The proposed gasification system includes equipment to grind and dry the feedstock. The blended feedstock is stored in intermediate storage bins. The feedstock then flows to the grinding mills, where the particle size is reduced to that required for transport into the gasifier, and simultaneously dried. The heat source for feedstock drying is hot turbine exhaust gas from the heat recovery steam generator (HRSG). After drying the feedstock, the drying gases flow through a dust collection system before being vented through the coal-dryer stack.

The grinding mill feed bins will be totally enclosed and will include baghouses to remove airborne dust. Petcoke and coal will be transported from the unloading systems to the enclosed barn, the pre-crushing system, and the grinding mill feed bins in enclosed conveyors with dust collection systems.

Feedstock Dryer

The MHI gasification system includes equipment to grind and dry the feedstock. The blended feedstock is stored in silos. The feedstock then flows to the grinding mills, where the particle size is reduced to that required for transport into the gasifier and simultaneously dried. The heat source for feedstock drying is a slipstream of the hot turbine exhaust gas from the HRSG. After drying the feedstock, the drying gases flow through a dust collection system, then to the atmosphere. The dried feedstock flows to intermediate storage bins, from which it is transported into the gasifier.

Sulfur Recovery and Tail Gas Compression System (S-7616-23-0):

Acid gas from the AGR unit, sour gas streams from the two sour water strippers, and various plant vents are fed to a SRU. A portion of the H_2S in the feed is oxidized to SO_2 in a reaction furnace. The resulting SO_2 reacts with the remaining H_2S in the correct ratio to form elemental sulfur. These reactions proceed as shown below:

$$H_2S + 3\ O_2 \rightarrow SO_2 + H_2O$$

$$2\ H_2S + SO_2 \leftrightarrow 3\ S + 2\ H_2O$$

Hot effluent gases from the reaction furnace are cooled in the waste heat boiler by generation of 600 pounds per square inch gauge (psig) steam. The tempered effluent gas is sent to the first condenser, where the temperature is decreased further to condense and recover elemental sulfur. Low-pressure steam is generated in the first condenser. Gas leaving the first condenser is then reheated before entering a catalytic reactor to further promote the H_2S and SO_2 reaction to elemental sulfur, followed by a condenser to recover additional sulfur. One additional reheater, reactor and condenser follow.

Sulfur recovered in the three condenser stages is sent to a Sulfur Degassing Unit to reduce the concentration of H_2S dissolved in the sulfur product. After degassing, the liquid sulfur product is sent to a storage tank and ultimately shipped from the facility via rail or truck.

SRU effluent gases exiting the final condenser are directed to the Tail Gas Unit (TGU) hydrogenation equipment, which converts the various sulfur compounds remaining in the gas, back to H_2S. Water is condensed out of the hydrogenated tail gas in a quench tower, after which it is compressed and recycled to the Sour Shift Unit. This configuration minimizes sulfur emissions from the facility and eliminates the need for a TGU amine section. This configuration also recovers the CO_2 that would be emitted by a conventional TGU.

The SRU will include both ammonia-destruction and O_2-enrichment technology in the reaction furnace, in addition to the degassing technology used in treatment of the product sulfur. Oxygen enrichment technology uses high-purity O_2 rather than air in the combustion section of the SRU, thereby decreasing the volumetric flow of gas through the entire unit. The use of O_2 increases the temperature in the reaction furnace to a level that destroys the ammonia present in the feed gases. Ammonia destruction technology is a critical part of the SRU design. Complete destruction of ammonia in the reaction furnace helps to prevent the potential for ammonia salts to foul downstream equipment.

Tail Gas Thermal Oxidizer

Associated with the operation of the sulfur recovery process, the project will incorporate a thermal oxidizer on the TGU. The thermal oxidizer will serve as a control device to oxidize any remaining H2S (after scrubbing) and other vent gas that is generated during startups, shutdowns, and times of non-delivery of CO2 product. In addition, miscellaneous oxidizing streams from the gasification area (e.g., atmospheric tank vents and miscellaneous equipment vents) are directed to the thermal oxidizer during operation to prevent nuisance odors. The thermal oxidizer operates at high temperatures, and provides sufficient residence time to ensure essentially complete destruction of reduced sulfur compounds like H2S to SO2. The thermal oxidizer fires natural gas continuously to reach and maintain the required operating temperature for proper thermal destruction. Pollutant emissions are generated from the firing of natural gas and the periodic oxidation of vent gas during SRU startup.

<u>CO2 Recovery and Vent System (S-7616-24-0):</u>

Carbon Dioxide Vent

The CO2 vent stack will allow for startup and intermittent emergency venting of produced CO2 when the CO2 compression, transportation, or injection systems are unavailable. The CO2 vent will enable the project to operate, rather than be disabled, by brief periods when the CO2 injection system is unavailable, and in doing so, prevents gasifier shutdown and subsequent gasifier restart with associated emissions.

The CO2 vent exhaust stream will be nearly 100 percent CO2, with small amounts of CO, VOCs, and H2S. A summary of the maximum annual CO2 vent stack emissions is presented in the table below.

Venting durations during early and mature operations were determined based on the following types of events that could occur over any 1-year period: (A) Gasification Block cold startups; (B) unplanned outages of the CO_2 compressor; (C) unplanned outages of the CO_2 pipeline; and (D) CO_2 Off-Taker unable to accept. The scenarios shown in Table 3-13 were developed to provide a conservative estimate of the venting emissions that may be required during the early operations, and for mature operations. Safe operation of the HECA project is a key factor in considering whether to shut down the gasifier during short, unplanned CO_2 transportation system events. Shutting down the entire Gasification Block and restarting it increases the risk of upsets, and must be considered when evaluating whether to vent CO_2 or shut down the Gasification Block.

Carbon Dioxide Venting Scenarios				
Scenario for Early Operation				
	Event	**Events per yr**	**Duration or Time to Repair (days per event)**	**Duration of CO_2 Vent Operation (days/year)** [1]
A	Cold Gasification Block startup	2	3	6
B	CO_2 Compressor unplanned outage	4	2	8
C	CO_2 Pipeline unplanned outage	1	1	1
D	CO_2 off-taker unable to accept	2	3	6
Total Days				21
Scenario for Mature Operation				
	Event	**Events (per yr)**	**Duration or Time to Repair (days per event)**	**Duration of CO_2 Vent Operation (days/year)**
A	Cold Gasification Block startup	1	1	1
B	CO_2 Compressor unplanned outage	2 to 4	2	4 to 8
C	CO_2 Pipeline unplanned outage	0 to 1	1	0 to 1
D	CO_2 off-taker unable to accept	0	0	0
Total Days				5 to 10
Source: HECA, 2012.				

[1] The flow rate of CO2 during venting will vary depending on the operations at the Manufacturing Complex and Power Block. Venting is expected to occur at 50 to 85 percent of the maximum designed CO2 venting rate.

Natural-Gas Fired Auxiliary Boiler (S-7616-25-0):

The auxiliary boiler will provide steam to facilitate CTG startup and for other industrial purposes. The auxiliary boiler will be designed to burn pipeline-quality natural gas at the design maximum fuel flow rate of 230 MMBtu/hour (HHV). However the heat input of the unit will be limited and maintained at or below 213 MMBtu/hour. Its emissions are based on an annual capacity factor of 25 percent maximum load operation, or 466 billion Btu per year.

The NOx emissions from this boiler will be controlled by the installation of SCR. The NOX emissions are based on 5 parts per million volumetric dry (ppmvd) at 3 percent O2 with SCR. Emissions of CO are based on an exhaust concentration of 50 ppmvd at 3 percent O2. Ammonia slip emissions are estimated based on 5 ppmvd at 3 percent O2. SO2 emissions are calculated based on the sulfur content of the natural gas. PM10, PM2.5, and VOC emissions are based on vendor-supplied emission factors.

Cooling Towers (S-7616-27-0, -28-0, and -29-0):

Power cycle heat rejection will consist of a steam surface condenser, cooling tower, and cooling water system. The heat rejection system receives exhaust steam from the low pressure (LP) steam turbine and condenses it to water for reuse. Approximately 95,500 gallons per minute (gpm) of water will be circulated in the power block cooling tower.

The ASU cooling tower is located in the ASU unit near the cooling loads. The ASU cooling tower has separate pumps and piping systems, and is operated independently of the other cooling water systems. The ASU cooling tower circulation rate is approximately 45,000 gpm.

The major heat rejection duties associated with the process cooling tower are from the CO2 compressor and the AGR refrigeration unit. Cooling water is also supplied to the Gasification, Shift, LTGC, SRU/TGU, SWS, and Manufacturing Complex, as well as other miscellaneous users. The process cooling tower is next to the power-block cooling tower. Each tower has a separate cooling-water basin, pumps, and piping system, and operates independently. The process tower circulation rate is about 163,000 gpm.

The cooling water circulates through each of the mechanical draft-cooling towers, which use electric-motor–driven fans to move the air into contact with the flow of the cooling water. The heat removed in the condenser will be discharged by heating the air, and through evaporation of some of the cooling water. Maximum drift, the fine mist of water droplets entrained in the warm air leaving the cooling tower, will be limited to 0.0005 percent of the circulating water flow by use of an efficient drift eliminator.

For the Power Block and process cooling towers, circulating water could range from 3,000 to 9,000 parts per million (ppm) total dissolved solids (TDS), depending on makeup water quality and tower operation. Therefore, particulate matter 10 microns in diameter or less (PM10) emissions would vary proportionately. For emission calculation purposes, it is assumed that 9,000 ppm TDS are in the circulating cooling water. The cooling equipment in the ASU requires significantly lower dissolved solids in the circulating water than the rest of the plant; thus, a maximum of 2,000 ppm TDS is assumed in the circulating ASU cooling water.

The cooling tower total PM emissions are based on the maximum expected total dissolved solids in the cooling water, annual circulating water rate, and the use of a high-efficiency drift eliminator. It is conservatively estimated that 100 percent of the PM emitted from the cooling tower will be PM10, and 60 percent of the PM10 emissions will occur as particulate matter 2.5 microns in diameter or less ([PM2.5]; a fraction or ratio of 0.6). The basis for the ratio used is described in Response to Data Request 18 (URS, 2009b), and also in "Applicant Comments On The Preliminary Determination Of Compliance For The Hydrogen Energy California (HECA) Project (08-AFC-8)".

Flares (S-7616-30-0, -31-0, and -32-0):

During gasifier startup, unprocessed/vent gas is vented to the flaring system. The Gasification Block will operate a gasification flare to safely dispose of gases during gasifier startup and unplanned power plant upsets or equipment failures. The gasification flare may operate up to 28 hours per year for startup and shutdown events.

There will be an SRU flare installed to safely dispose of gas emissions from the AGR source during startup (after passing through a scrubber), or to oxidize gas releases during emergency or upset events. The SRU flare may combust such gas streams for up to 40 hours per year during plant startups.

The Rectisol® flare will be used to safely dispose of low-temperature gas streams during startup, shutdown, and unplanned upsets or emergency events. The Rectisol® flare may be used for off-specification CO2 during gasifier startup or shutdown events. It is expected that a maximum of 40 hours per year of flaring for this purpose would be required by this flare.

During normal operations, the three flares will have pilot flames that will operate continuously. Emissions from the flares are generated from the continual operation of the natural-gas–fired pilots, and from periodic vent gases that are oxidized during planned startups and shutdowns of the Gasification Block. The annual emissions from each flare were estimated by adding the emissions from continual combustion of the pilot gas plus the planned use during gasifier startup/shutdown events.

Ammonia Synthesis Unit with Ammonia Startup Heater (S-7616-33-0):

The high-purity hydrogen stream from the PSA Unit, and nitrogen, from the ASU, are combined in an exothermic ammonia synthesis reaction that takes place at high temperature and high pressure across an iron-based catalyst. There is a large degree of heat integration within the Ammonia Synthesis Unit, and the substantial heat of reaction is recovered and used to generate steam. Cold liquid ammonia is stored in a tank at atmospheric pressure.

There are no routine operating emissions from the Ammonia Synthesis Unit. However, a startup heater (natural gas-fired) is used to heat the catalyst during a cold start of the unit. A 56 MMBtu/hr natural gas-fired startup heater is provided in the ammonia synthesis unit to raise the catalyst-bed temperatures during initial plant commissioning, or during startup after a long

period of plant shutdown. The annual heat input for this heater is not expected to exceed 7,840 MMBtu HHV, which is equivalent to approximately 140 hours of operation at full capacity.

The heater will use a low-NOx burner to control exhaust emissions to no higher than 9 ppmvd at 3 percent O2. CO emissions are based on 50 ppmvd at 3 percent O2. PM10, PM2.5, and VOC emissions are based on vendor-supplied emission factors. SO2 emissions are calculated based on 12.65 ppmv total sulfur in pipeline natural gas.

Urea Unit (S-7616-34-0)

Urea Absorbers

The purified and compressed CO2 and the liquid ammonia are reacted in the Urea Unit to create a concentrated urea solution, which is pumped to the Urea Pastillation Unit. Lower-concentration urea solution is produced as a feedstock to the UAN Solution Plant. Vacuum evaporator/separator systems are used to produce the required urea solutions.

The off-gases from the urea synthesis process, consisting of inerts (CO2, nitrogen, and water) present in the CO2 feed, process air, and unreacted ammonia are cleaned before being vented in the high-pressure (HP) scrubber, which operates at an elevated pressure. The off-gases are scrubbed first with process water, and second with clean, cold water. In this way, nearly all of the ammonia is scrubbed from the gas. Low pressure off-gases are cleaned in the low-pressure (LP) scrubber, which operates at close to atmospheric pressure. Here, the off-gas is scrubbed with clean, cold water to reduce the ammonia content in the vent.

The only emissions associated with the HP and LP Urea Absorbers are in the form of ammonia, which is reduced by the wet scrubber.

Urea Pastillation Unit

The pastillation process is used to convert the urea melt into high-quality pastilles. This process unit is enclosed with a hood, and is exhausted through a baghouse, then vented. Limited ammonia and urea dust, which are classified as PM10/PM2.5, are emitted from this source. The HECA pastillation process PM10/PM2.5 emissions will be limited to a grain loading of no more than 0.001 grain per dry standard cubic foot (gr/dscf) by the baghouse.

Nitric Acid Unit (S-7616-35-0)

Nitric Acid Unit

Nitric acid production is a three-step process consisting of ammonia oxidation, NO oxidation, and absorption. Tail gas from the absorber column will be cleaned before being discharged by catalytic decomposition and reduction of both N2O and NOx.

The N2O emissions are treated in a system classified as tertiary reduction, based on its location at the end of the tail gas heat recovery system. Primary and secondary reduction occurs in the nitric acid unit equipment without any catalysis, simply due to the high process

temperature. In the tertiary reduction, a reducing catalyst that uses high temperature, rather than a reducing agent, converts 95 percent of the remaining N2O emission to molecular nitrogen (N2) and NO. The NOx emissions (including the NO formed in the N2O converter) are then reduced in one or more SCR units, with injected ammonia as a reducing agent, as is typical for NOx control in flue gas systems. Total NOx emissions from this unit will not exceed 0.2 lb/ton of dry nitric acid, or 15 ppmvd NOx. The HECA nitric acid plant will have an ammonia slip emission limit of 10 ppm downstream of the SCR.

Ammonium Nitrate Unit (S-7616-36-0)

Ammonia and nitric acid are the feedstocks to the ammonium nitrate unit, which makes the ammonium nitrate solution. The ammonium nitrate unit vent stream contains water vapor and residual ammonium nitrate solution mist that is not removed by the demisting system. If this vent stream with mist is emitted directly to the atmosphere, the mist droplets would evaporate and result in PM emissions. These particulate emissions are substantially reduced by routing the vent stream to a water-scrubbing system before discharge to the atmosphere. This vent scrubber condenses the vapor into condensate, which then absorbs the previously entrained mist droplets. The condensate stream is either recycled to the neutralizer or mixed with cooling tower blowdown for treatment and disposal. This project will use a near-total condensing vent scrubbing system, and the scrubber vent particulate emissions will be less than 0.2 lb/hr. All PM emissions are assumed to be PM2.5 or smaller.

Urea Storage and Loadout System (S-7616-37-0):

Urea pastilles are stored in four buildings that are fully enclosed with roofing and siding. All PM emissions from these sources are assumed to be $PM_{2.5}$ or smaller.

Diesel-Fired Emergency Engines Powering Electrical Generators (S-7616-38-0 and -39-0):

The emission control devices/technologies and their effect on diesel engine emissions detailed below are from *Non-catalytic NO_X Control of Stationary Diesel Engines*, by Don Koeberlein, CARB.

The turbocharger reduces the NOx emission rate from the engine by approximately 10% by increasing the efficiency and promoting more complete burning of the fuel.

The intercooler/aftercooler functions in conjunction with the turbocharger to reduce the inlet air temperature. By reducing the inlet air temperature, the peak combustion temperature is lowered, which reduces the formation of thermal NOx. NOx emissions are reduced by approximately 15% with this control technology.

The use of very low-sulfur diesel fuel (0.0015% by weight sulfur maximum) reduces SO_X emissions by over 99% from standard diesel fuel.

Diesel-Fired Emergency Engine Powering Firewater Pump (S-7616-40-0):

The emission control devices/technologies and their effect on diesel engine emissions detailed below are from *Non-catalytic NO_X Control of Stationary Diesel Engines*, by Don Koeberlein, CARB.

The turbocharger reduces the NOx emission rate from the engine by approximately 10% by increasing the efficiency and promoting more complete burning of the fuel.

The intercooler/aftercooler functions in conjunction with the turbocharger to reduce the inlet air temperature. By reducing the inlet air temperature, the peak combustion temperature is lowered, which reduces the formation of thermal NOx. NOx emissions are reduced by approximately 15% with this control technology.

The use of very low-sulfur diesel fuel (0.0015% by weight sulfur maximum) reduces SO_X emissions by over 99% from standard diesel fuel.

Fugitive Emissions:

Fugitive emissions of VOC, CO, NH3, H2S, and trace hazardous air pollutants (HAPs) and greenhouse gases (GHGs) may occur in some areas of the facility due to leaks in the piping and components. Fugitive emissions are associated primarily with the Gasification Block and the Manufacturing Complex. A leak detection and repair (LDAR) program will be implemented in select process areas to maximize emission reductions. LDAR is the primary established method for controlling fugitive emissions from various pieces of equipment, such as valves and seals.

Potential fugitive VOC emissions from piping components were estimated using the USEPA guidance, Protocol for Equipment Leak Emission Estimates (USEPA, 1995a). The emission factors used in the calculations are the Synthetic Organic Chemical Manufacturing Industry (SOCMI) factors from Table 7 of the referenced USEPA guidance document.

The following process streams have been identified:

Process stream #	Description
1	Methanol
2	Syngas
3	--
4	Shifted syngas
5	Propylene
6	Sour water
7	H2S-laden methanol
8	CO2-laden methanol
9	Acid gas
10	Ammonia-laden gas
11	Sulfur
12	TGU process gas
13	Low NH3 concentration
14	Moderate NH3 concentration
15	High NH3 concentration
16	Low CO2 concentration
17	Moderate CO2 concentration
18	High CO2 concentration
19	NO2
20	HNO3 (Nitric acid)
21	PSA off gas

An LDAR program will be implemented on select process areas with the largest estimated toxic air contaminant (TAC) and VOC fugitive emissions. Because the fugitive emission factors were based on factors for SOCMI facilities, the LDAR program implemented at this facility will meet the NESHAPs regulations, which are traditionally used at SOCMI facilities. The applicant proposes to apply the LDAR program to the following streams #1, 5, 7 through 10, and 13 through 21. These streams were selected because they had the largest uncontrolled emission estimates for methanol, propylene, H2S, and ammonia. The following compounds were included as VOCs (not all compounds are found in the gas in each process stream): methanol, propylene, COS, and H2S.

Some of the process streams identified in the table above serve more than one unit, so to simplify their calculation, each stream was assessed to the one DOC unit in which the stream was most prevalent. That determination was based on Figure A16-1 (Overall Block Flow Diagram with Locations of Fugitive Emissions from Process Streams), which is located in Appendix E. Based on this, the streams were assessed to a particular DOC unit as follows:

DOC Unit	**Streams**
S-7616-21	#1, 2, 4 through 10
S-7616-23	#11 through 12
S-7616-33	#13 through 21

VII. General Calculations

A & B. Assumptions & Emission Factors:

Combined Cycle Combustion Turbine Generator (S-7616-26-0):

Assumptions:

- During normal operation of the CTG/HRSG and some phases of the startup and shutdown activities, a portion of the treated HRSG flue gas will be diverted to the feedstock drying system, filtered through a baghouse, then exhausted from the feedstock dryer stack. As a result, the emissions from the HRSG and feedstock dryer stacks are interconnected.

- The HRSG flue gas that is diverted to the feedstock dryer has already been controlled by the oxidation catalyst and SCR at the HRSG. The PM10 from the exhaust stream diverted to the feedstock dryer stack is further controlled with a baghouse before being exhausted to the atmosphere.

- Since the HRSG flue gas that is diverted to the feedstock dryer is generated at the HRSG, the potential emissions out the feedstock dryer stack will be assessed to the S-7616-26.

- The emissions out the feedstock dryer stack that were generated by the CTG/HRSG will be assessed to the CTG/HRSG (S-7616-26).

- Operation of the combined-cycle power generating system:

    - Maximum annual hours of normal operation:[2]
        - On H2-rich fuel: 8,000 hr/yr
        - On natural gas backup fuel: 336 hr/yr (equivalent to 2 weeks/yr)
    - Total number of startup per year: 2
    - Total number of shutdowns per year: 2
    - Commissioning emissions will count towards the annual emission limits.

- Annual potential emissions are based on annual utilization and emission rates. Daily potential emissions are based on the maximum daily emission rates.

- Maximum short-term operational emissions from the CTG/HRSG and feedstock dryer were determined from a comparative evaluation of potential emissions corresponding to on-peak and off-peak operating conditions. The criteria pollutant emission rates were provided by the turbine vendor and the design engineers for two load conditions (on-peak and off-peak), and for each of three ambient temperatures (39 ºF, 65 ºF, and 97 ºF) when firing syngas, and one load condition (off-peak) when firing natural gas. The maximum short-term operational emissions (in lb/hr) from the CTG/HRSG and feedstock dryer when combusting syngas, and from the CTG/HRSG when operating on natural gas, are presented in Table 3-3 (Maximum

[2] Firing of the turbine on natural gas backup fuel will be limited to a maximum of 5 hr/yr during startup events, 10 hr/yr during shutdown events, and 336 hr/yr of unplanned equipment outages.

Short-Term Emissions from CTG/HRSG and Coal Dryer Stack During On-Peak Operations), which is located in Appendix F.

- The long-term operational emissions (in tons/year) from the CTG/HRSG and feedstock dryer were estimated by summing the emissions contributions from on-peak operating conditions, including duct-firing (for the average ambient condition of 65 ºF), CTG/HRSG startup/shutdown conditions, and maximum natural gas usage. These annual emissions of air pollutants for the CTG/HRSG and feedstock dryer have been calculated based on the expected operating schedule of 8,000 hours of operations, two startups and shutdowns per year, and 2 additional weeks of natural-gas operations other than startup and shutdown events. The annual emissions are presented in Table 3-4 (CTG/HRSG and Coal Dryer Maximum Annual Operation Emissions), which is located in Appendix F.

- Particulate matter emissions from combustion processes are in the sub-micron range. Therefore, particulate matter emissions are assumed to be equal to PM10.

Emission Factors:

Emission data for the combustion turbine generator was provided to the applicant by Mitsubishi Heavy Industries (MHI) based on various operating parameters. The lb/hr emission rates indicated in the tables below are equivalent to the stated ppm values of firing on natural gas and hydrogen-rich syngas.

<u>Maximum Hourly Emission Rates:</u>

Maximum short-term operational emissions from the CTG/HRSG and feedstock dryer were determined from a comparative evaluation of potential emissions corresponding to on-peak and off-peak operating conditions. The criteria pollutant emission rates were provided by the turbine vendor and the design engineers for two load conditions (on-peak and off-peak), and for each of three ambient temperatures (39 ºF, 65 ºF, and 97 ºF) when firing syngas, and one load condition (off-peak) when firing natural gas.

Maximum Short-Term Emissions From CTG/HRSG And Feedstock dryer Stack During Normal and Natural Gas Backup Operations

Pollutant	Hydrogen-Rich Fuel				Natural Gas	
	CTG/HRSG Emissions (lb/hr)	Feedstock dryer Emissions (lb/hr)	Basis	CTG/HRSG Emissions Basis (ppmv @ 15 % O2)	CTG/HRSG Emissions (lb/hr)	CTG/HRSG Emissions Basis (ppmv @ 15% O2)
NO_X	25.0	4.4	Case 1 (ON Peak, 97 °F Ambient)	2.5	34.1	4
SO_2	4.1	0.9	Case 2 (OFF Peak, 97 °F Ambient)	2 ppmv total sulfur in syngas, 10 ppmv sulfur in PSA Off-gas	4.7	12.65 ppm sulfur in natural gas
PM_{10}/ $PM_{2.5}$	12.9	1.4	Case 3 (ON Peak, 39 °F Ambient)	15 lb/hr	15.0	15 lb/hr
CO	18.3	3.2	Case 1 (ON Peak, 97 °F Ambient)	3	26.0	5
VOC	3.5	0.6	Case 1 (ON Peak, 97°F Ambient)	1	5.9	2
NH_3	18.5	3.2	Case 1 (ON Peak, 97°F Ambient)	5 ppmv ammonia slip	15.8	5 ppmv ammonia slip

Source: HECA, 2012. See Table 3.3 (Maximum Short-Term Emissions from CTG/HRSF and Coal Dryer Stack During On-Peak Operations) in Appendix F.

Notes:

- The emission factors in this table will be used for daily PE calculations, and the natural gas emission factors will also be used for annual PE calculations.
- Emissions include duct burner operations with syngas and PSA off-gas.
- Feedstock dryer PM emissions controlled to 0.001 gr/dscf by baghouse

CTG/HRSG and Feedstock Drying Stack Emissions During Startup and Shutdown [3]							
CTG/HRSG Startup							
Step	**Duration (hours)**	**Units**	**SO_2**	**NO_X**	**CO**	**$PM_{10}/PM_{2.5}$**	**VOC**
1. CTG ignition and synchronization, 20 percent load on natural gas	0.5	lb/hr	2.1	67.1	**2270**	**15.0**	**65**
2. HRSG/STG warm-up, ramp CTG to 40 percent load on natural gas	2	lb/hr	**2.4**	**107.2**	1044	13.1	13
3. CTG fuel change-over, 40 percent load on syngas, startup PSA/ammonia/urea units	2	lb/hr	**2.4**	66.6	81	13	4.6
Maximum Daily Startup Emissions for CTG/HRSG Stack (lb/day)			**10.7**	**381.2**	**3385.0**	**59.7**	**67.7**
Feedstock Drying Startup							
Step	**Duration (hours)**	**Units**	**SO_2**	**NO_X**	**CO**	**$PM_{10}/PM_{2.5}$**	**VOC**
1. HRSG/STG warm-up, ramp CTG to 40 percent load on natural gas	2	lb/hr	**0.3**	**15.1**	**147.4**	**0.9**	**1.9**
2. CTG fuel change-over, 40 percent load on syngas	2	lb/hr	**0.3**	9.4	11.5	**0.9**	0.7
Maximum Daily Startup Emissions for Feedstock dryer Stack (lb/day)			**1.2**	**49.0**	**317.8**	**24.8**	**5.2**

[3] Emission factors are based on Table 3-5 (CTG/HRSG and Coal Drying Stack Emissions During Start-Up and Shut-Down), which is located in Appendix F.

CTG/HRSG Shutdown							
Step	**Duration (hours)**	**Units**	**SO_2**	**NO_X**	**CO**	**$PM_{10}/PM_{2.5}$**	**VOC**
1. PSA, ammonia, and urea unit shutdown; gasifier to 60 percent; CTG to 40 percent load on syngas	4	lb/hr	2.4	66.6	81.0	13	4.6
2. CTG fuel change-over, 40 percent load on natural gas, gasifier depressurization	3	lb/hr	**2.7**	**122**	1191	**15.0**	15.3
3. Minimum plant load, 20 percent load on natural gas	2	lb/hr	2.1	67.1	**2270**	**15.0**	**64.8**
Maximum Daily Shutdown Emissions for CTG/HRSG Stack (lb/day)			**21.9**	**766.6**	**8437.0**	**127.0**	**193.9**
Feedstock Drying Shutdown							
Step	**Duration (hours)**	**Units**	**SO_2**	**NO_X**	**CO**	**$PM_{10}/PM_{2.5}$**	**VOC**
1. PSA, ammonia, and urea plant shutdown; gasifier to 60 percent; CTG to 40 percent load on syngas	4	lb/hr	**0.3**	**9.4**	**11.5**	**0.9**	**0.7**
Maximum Daily Shutdown Emissions for Feedstock dryer Stack (lb/day)			**1.2**	**37.6**	**46.0**	**3.6**	**2.8**

Maximum Short-Term Emission Rates from CTG/HRSG During Startup (1-hour duration)					
	NO_X (lb/hr)	SO_X (lb/hr)	PM_{10} (lb/hr)	CO (lb/hr)	VOC (lb/hr)
Mass Emission Rate	107.2	2.4	15.0	2,270.0	65.0
Event Description	HRSG/STG warm-up, ramp CTG to 40% load on NG	HRSG/STG warm-up, ramp CTG to 40% load on NG	CTG ignition and synchroni-zation, 20% load on NG	CTG ignition and synchroni-zation, 20% load on NG	CTG ignition and synchroni-zation, 20% load on NG

Source: HECA, 2012. See Table 3.5 (CTG/HRSG and Coal Drying Stack Emissions During Startup and Shutdown) in Appendix F.

Notes:
- The emission factors in this table will be used for daily PE calculations.

Maximum Short-Term Emission Rates from Feedstock Dryer Stack During Startup (1-hour duration)					
	NO_X (lb/hr)	SO_X (lb/hr)	PM_{10} (lb/hr)	CO (lb/hr)	VOC (lb/hr)
Mass Emission Rate	15.1	0.3	0.9	147.4	1.9

Source: HECA, 2012. See Table 3.5 (CTG/HRSG and Coal Drying Stack Emissions During Startup and Shutdown) in Appendix F.

Notes:
- The emission factors in this table will be used for daily PE calculations.
- Feedstock dryer PM emissions are controlled to 0.001 gr/dscf by baghouse.

Maximum Short-Term Emission Rates from CTG/HRSG During Shutdown (1-hour duration)					
	NO_X (lb/hr)	CO (lb/hr)	VOC (lb/hr)	PM_{10} (lb/hr)	SO_X (lb/hr)
Mass Emission Rate	122	2270	64.8	15.0	2.7
Event Description	CTG fuel change-over, 40% load on NG, gasifier depressurization	Minimum plant load, 20% load on NG	Minimum plant load, 20% load on NG	CTG fuel change-over, 40% load on NG, gasifier depressuri-zation	CTG fuel change-over, 40% load on NG, gasifier depressuri-zation

Source: HECA, 2012. See Table 3.5 (CTG/HRSG and Coal Drying Stack Emissions During Startup and Shutdown) in Appendix F.

Notes:
- The emission factors in this table will be used for daily PE calculations.

Maximum Short-Term Emission Rates from Feedstock Dryer Stack During Shutdown (1-hour duration)					
	NO_X (lb/hr)	CO (lb/hr)	VOC (lb/hr)	PM_{10} (lb/hr)	SO_X (lb/hr)
Mass Emission Rate	9.4	11.5	0.7	0.9	0.3
Source: HECA, 2012. See Table 3.5 (CTG/HRSG and Coal Drying Stack Emissions During Startup and Shutdown) in Appendix F. Notes: • The emission factors in this table will be used for daily PE calculations. • Feedstock dryer PM emissions are controlled to 0.001 gr/dscf by baghouse.					

Maximum Short-Term Emission Rates from HRSG When Firing on H2-Rich Fuel – @ Worst Case Extreme Conditions (to be used for Daily Calculations)						
	NO_X (lb/hr)	CO (lb/hr)	VOC (lb/hr)	PM_{10} (lb/hr)	SO_X (lb/hr)	NH_3 (lb/hr)
Mass Emission Rate	25.0	18.3	3.5	12.9	4.1	18.5
Event Description	Case 1 (On Peak, 97 F ambient)	Case 1 (On Peak, 97 F ambient)	Case 1 (On Peak, 97 F ambient)	Case 3 (On Peak, 39 F ambient)	Case 2 (Off Peak, 97 F ambient)	Case 1 (On Peak, 97 F ambient)

Natural gas is used during startup and shutdown of the CTG and during periods of unplanned equipment outages (up to 2 weeks per year), but not during normal operations.

Maximum Short-Term Emission Rates from HRSG When Firing on Natural Gas – @ Worst Case Extreme Conditions (to be used for Daily Calculations)						
	NO_X (lb/hr)	CO (lb/hr)	VOC (lb/hr)	PM_{10} (lb/hr)	SO_X (lb/hr)	NH_3 (lb/hr)
Mass Emission Rate	34.1	26.0	5.9	15.0	4.7	15.8
Emission basis	4.0 ppmv @ 15% O2	5.0 ppmv @ 15% O2	2.0 ppmv @ 15% O2	15.0 lb/hr	12.65 ppm-S in natural gas	5 ppmv, ammonia slip

Average Hourly Emission Rates:[4]

Maximum Long-Term Emission Rates from HRSG Stack When Firing on H2-Rich Fuel	
Pollutant:	**Emission Rate (lb/hr):**
NO_x @ 2.5 ppm @ 15% O2	24.9
CO @ 3.0 ppm @ 15% O2	18.2
VOC @ 1.0 ppm @ 15% O2	3.5
SO_2	4.1
PM_{10} = $PM_{2.5}$	12.8
NH_3 (@ 5.0 ppm slip)	18.4

Source: HECA, 2012. See DOC Application, p. 2 of 32 in Application Appendix D (Operational Criteria Pollutant Emissions) in Appendix F.

Notes:
- The average emission factors in this table will be used for annual PE calculations.
- Average emission rates from HRSG stack occur under normal operating conditions, with PSA off-gas and H2-rich syngas, at a 65 F ambient temperature.

Maximum Long-Term Emission Rates from Feedstock Dryer When Firing on H2-Rich Fuel	
Pollutant:	**Emission Rate (lb/hr):**
NO_x	4.2
CO	3.1
VOC	0.6
SO_2	0.7
PM_{10} = $PM_{2.5}$	1.4
NH_3	3.1

Source: HECA, 2012. See DOC Application, p. 2 of 32 in Application Appendix D (Operational Criteria Pollutant Emissions) in Appendix F.

Notes:
- The average emission factors in this table will be used for annual PE calculations.
- Average emission rates from feedstock dryer occur under normal operating conditions, with PSA off-gas and H2-rich syngas, at a 65 F ambient temperature.
- Feedstock dryer PM emissions are controlled to 0.001 gr/dscf by baghouse.

Commissioning Emissions:

The following emission rates are for commissioning on natural gas. Emission rates for commissioning on hydrogen-rich fuel are provided in a separate table that follows.

[4] The average hourly emission rates will be used for annual PE calculations. The maximum hourly emission rates will be used for daily PE calculations.

Emission Rates from CTG/HRSG Stack from Commissioning on Natural Gas						
Test Phase	**Hours of Opera-tion**	**SO_X**	**NO_X**	**CO**	**VOC**	**PM_{10}**
		(lb/hr)	**(lb/hr)**	**(lb/hr)**	**(lb/hr)**	**(lb/hr)**
First fire	4	2.10	67.10	**2,270.00**	**65.00**	**15.00**
Rotor run-in	12	2.10	67.08	**2,270.00**	**65.00**	**15.00**
Steam blows	168	3.10	93.20	908.00	11.70	**15.00**
Restoration	N/A	N/A	N/A	N/A	N/A	N/A
Initial steam turbine roll	24	3.10	93.21	908.00	11.71	**15.00**
NO_X tuning with water injection and initial STG loading	16	3.10	10.88	378.60	7.00	**15.00**
NO_X tuning with water injection and initial STG loading	16	**4.80**	391.19	344.50	3.80	**15.00**
Finalize NO_X control constants	40	3.10	10.90	378.60	7.00	**15.00**
Finalize NO_X control constants	40	4.00	298.05	361.50	6.08	**15.00**
Finalize NO_X control constants	96	**4.80**	**391.20**	344.50	3.80	**15.00**
GTG water wash and contractual emission and simple cycle performance testing	16	**4.80**	**391.19**	344.50	3.80	**15.00**
Install SCR and oxidation catalyst	24	4.70	34.08	26.00	5.92	**15.00**
CEMS drift and source testing	64	4.70	34.09	26.00	5.90	**15.00**
Functional testing demonstration hours (6 starts)	315	2.73	77.67	155.10	6.24	14.09
Functional testing demonstration hours (6 shutdowns)	54	2.58	89.46	942.56	21.87	**15.00**
Functional testing steady state hours	48	4.70	34.10	26.00	5.90	**15.00**
GTG water wash and preparation for performance testing	N/A	N/A	N/A	N/A	N/A	N/A
Continuous operation test	192	4.70	34.10	26.00	5.90	**15.00**
Total hours	1,129					
Source: HECA, 2012. See Table 3.7 (Duration and Criteria Pollutant Emissions of the CTG/HRSG on Natural Gas) in Appendix F.						

Based on the values in the table above, the maximum short-term emission rates from the CTG/HRSG stack for commissioning on natural gas are summarized in the table below:

Maximum Short-Term Emission Rates for Commissioning of CTG/HRSG on Natural Gas (1-hour duration)					
	NO_X (lb/hr)	CO (lb/hr)	VOC (lb/hr)	PM_{10} (lb/hr)	SO_X (lb/hr)
Emission Rates	391.2	2270.0	65.0	15.0	4.8
Event Description	Finalize NOx control constants	First fire; Rotor run-in	First fire; Rotor run-in	Various	NOx tuning with water injection and initial STG loading; and others
Source: HECA, 2012. See Table 3.7 (Duration and Criteria Pollutant Emissions of the CTG/HRSG on Natural Gas) in Appendix F.					

The following emission rates are for commissioning on hydrogen-rich fuel.

Emission Rates from CTG/HRSG Stack from Commissioning on Hydrogen-Rich Fuel						
Test Phase	**Hours of Operation**	**SO_X**	**NO_X**	**CO**	**VOC**	**PM_{10}**
		(lb/hr)	**(lb/hr)**	**(lb/hr)**	**(lb/hr)**	**(lb/hr)**
GTG starts on natural gas (for 20 starts)	50	2.32	**99.04**	1289.20	23.68	13.52
GTG hold time allowance (40% load on H_2-rich fuel)	240	2.40	19.98	24.30	4.60	13.00
GTG shutdown hold at 40% load on H_2-rich fuel (for 20 shutdowns)	80	2.40	19.98	24.30	4.60	13.00
GTG fired shutdowns on natural gas (for 20 shutdowns)	100	2.48	73.68	**1,622.60**	**35.12**	**15.00**
GTG/HRSG standby operation on natural gas	120	2.70	9.76	83.37	3.70	**15.00**
Gasifier fuel turnover tuning @ 40% H_2-rich fuel	20	2.40	66.60	81.00	4.60	**15.00**
CTG NO_X tuning on H_2-rich fuel	16	2.38	66.63	81.00	4.63	**15.00**
Gasifier feedstock dryer tuning	24	2.42	66.58	81.00	4.58	**15.00**
STG gasifier/SGC steam operation tuning	20	2.40	66.60	81.00	4.60	**15.00**
Zero flare tuning	48	2.40	66.60	81.00	4.60	**15.00**
CTG NO_X tuning on H_2 rich-fuel	60	4.10	21.80	16.00	3.10	**15.00**
CTG NO_X tuning on H_2 rich-fuel	60	4.10	25.00	18.30	3.50	**15.00**
CTG load change testing	60	3.30	45.80	49.70	4.10	**15.00**
CTG trip test	36	3.31	45.81	49.69	4.11	**15.00**
GTG water wash and contractual emission and simple cycle performance testing on H_2-rich fuel	24	3.00	28.71	9.42	3.71	**15.00**
Duct burner testing on H_2-rich syngas	48	4.00	29.10	15.50	3.90	**15.00**
Duct burner testing on PSA off-gas	48	**5.00**	18.60	13.60	2.60	**15.00**
Source testing @ 100% H_2-rich syngas (duct fired, H_2-rich + PSA)	16	**5.00**	29.38	21.50	4.13	**15.00**
Source testing @ 70% H_2-rich syngas (duct fired, PSA only)	16	4.00	18.63	13.63	2.63	**15.00**
IGCC performance and operating test	96	4.50	24.00	17.60	3.40	**15.00**
Total hours	1,182					
Source: HECA, 2012. See Table 3.9 (Duration and Criteria Pollutant Emissions of the CTG/HRSG on Hydrogen Rich Fuel) in Appendix F.						

Based on the values in the table above, the maximum short-term emission rates from the CTG/HRSG stack for commissioning on hydrogen-rich fuel are summarized in the table below:

Maximum Short-Term Emission Rates for Commissioning of CTG/HRSG on Hydrogen-Rich Fuel (1-hour duration)					
	NO_X (lb/hr)	CO (lb/hr)	VOC (lb/hr)	PM_{10} (lb/hr)	SO_X (lb/hr)
Emission Rates	99.0	1622.6	35.1	15.0	5.0
Event Description	GTG starts on natural gas (for 20 starts)	GTG fired shutdowns on natural gas (for 20 shutdowns)	GTG fired shutdowns on natural gas (for 20 shutdowns)	Various	Duct burner testing on PSA off-gas; & Source testing @ 100% H2 rich syngas (duct fired, H2 rich + PSA)
Source: HECA, 2012. See Table 3.9 (Duration and Criteria Pollutant Emissions of the CTG/HRSG on Hydrogen Rich Fuel) in Appendix F.					

<u>Railcar Unloading and Transfer System (S-7616-17-0)</u>
<u>Truck Unloading and Transfer System (S-7616-18-0)</u>
<u>Feedstock Storage, Blending, and Reclaim System (S-7616-19-0)</u>

- The feedstock handling and storage system will result in PM emission from the handling of coal and petroleum coke.

- The feedstock handling and storage system includes bulk material unloading, loading, belt conveying, belt transfer points, silo loading, and reclaim, which are served by baghouses.

- Outlet dust loading of each baghouse: 0.001 grains/scf (per supplier data, Air-Cure Inc.).

- Emissions are based on the air flow to the collector, hours of operation, and the outlet dust loading of each baghouse, which will be imposed as limits, as indicated in the table below.

- Particulate matter emissions from the feedstock handling systems are all highly controlled by baghouses that perform well in capturing small diameter particulate matter. Therefore, particulate matter emissions are assumed to be equal to PM10.

Railcar Unloading and Transfer System (S-7616-17-0)							
Description	Operating Capacity			Grain Loading (gr/dscf)	Maximum Process Weight of Material (ton/day)	Maximum Process Weight of Material (ton/yr)	Air Flow to Collector (acfm)
	hr/ day	day/ week	hr/yr [5]				
Rail Unloading Vent	6 avg (24 max)	5	1,560	0.001	6,107	395,955	20,000

Truck Unloading and Transfer System (S-7616-18-0)							
Description	Operating Capacity			Grain Loading (gr/dscf)	Maximum Process Weight of Material (ton/day)	Maximum Process Weight of Material (ton/yr)	Air Flow to Collector (acfm)
	hr/ day	day/ week	hr/yr				
Truck Unloading Vent	12 avg (24 max)	5	3,120	0.001	1,368	177,840	80,000

Feedstock Storage, Blending, and Reclaim System (S-7616-19-0)							
Description	Operating Capacity			Grain Loading (gr/dscf)	Maximum Process Weight of Material (ton/day)	Maximum Process Weight of Material (ton/yr)	Air Flow to Collector (acfm)
	hr/ day	day/ week	hr/yr				
Feedstock Transfer Tower 2	12 avg (24 max)	7	4,380	0.001	7,475	1,364,188	1,500
Feedstock Transfer Tower 1	12 avg (24 max)	5	3,120	0.001	6107	793,910	1,500

[5] The operating schedule shown is based on annual average operations for this and the other solid material handing operations that follow. According to the applicant any equipment item or activity may be in operation 24 hr/day on a short-term basis. Therefore, daily emissions will be based on 24 hr/day, and annual emissions will be based on the average operation schedule shown.

Feedstock Grinding/Crushing and Drying System (S-7616-20-0)

- As is explained in the assumptions for the combined cycle power system above, a portion of the treated HRSG flue gas will be diverted to the feedstock dryer to dry the coal. The gas stream will be filtered through a baghouse and then exhausted from the coal-dryer stack. As a result, the emissions from the HRSG and feedstock dryer stacks are interconnected. Since the combustion emissions are generated at the CTG/HRSG (S-7616-26), they will be listed under S-7616-26.

- The feedstock grinding and drying system will result in PM emissions, which will be controlled by a baghouse.

- Outlet dust loading of each baghouse: 0.001 grains/scf (per supplier data, Air-Cure Inc.)

- PM emissions are based on the air flow to the collector, hours of operation, and the outlet dust loading of each baghouse, which will be imposed as limits, as indicated in the table below.

- Particulate matter emissions from the feedstock handling systems are all highly controlled by baghouses that perform well in capturing small diameter particulate matter. Therefore, particulate matter emissions are assumed to be equal to PM10.

Feedstock Grinding/Crushing and Drying System (S-7616-20-0)							
Description	Operating Capacity			Grain Loading (gr/dscf)	Maximum Process Weight of Material (ton/day)	Maximum Process Weight of Material (ton/yr)	Air Flow to Collector (acfm)
	hr/ day	day/ week	hr/yr				
Feedstock Crusher Vent	12 avg (24 max)	7	4,380	0.001	7,475	1,364,188	12,600
Feedstock Bunkers Vent	12 avg (24 max)	7	4,380	0.001	7,475	1,364,188	12,600

Gasification System (S-7616-21-0):

Gasification System Fugitive Emissions:

- The gasification system will emit fugitive emissions (VOC, CO, and other non-criteria pollutants) from the components serving various streams serving the gasification system.

- As is explained in the process description section of this evaluation, fugitive emissions from the components serving the following streams will be assessed to S-7616-21 as calculated in the Fugitive Emission Calculations spreadsheet in Appendix E: Stream #1 (methanol), Stream #2 (syngas), Stream #4 (shifted syngas), Stream #5 (propylene), Stream #6 (sour

water), Stream #7 (H2S-laden methanol), Stream #8 (CO2-laden methanol), Stream #9 (acid gas), and Stream #10 (ammonia-laden gas).

- To control the fugitive emissions, the applicant proposes to apply a leak detection and repair (LDAR) program to the following streams for S-7616-21: streams #1, 5, and 7-10. These streams were selected because they had the largest uncontrolled emission estimates for methanol, propylene, H2S, and ammonia.

- The following compounds were included as VOCs (not all compounds are found in the gas in each process Stream): COS, CH3OH, C3H3, and HCN.

- Fugitive emission calculations are found in Appendix E.

Potential Fugitive Emissions for S-7616-21		
Pollutant	**Daily Emissions (lb/day)**	**Annual Emissions (lb/yr)**
NO_X	0	0
SO_X	0	0
PM_{10}	0	0
CO	24.5	8,925
VOC	86.6	31,604

Gasification Solids Material Handling System (S-7616-22-0)

- The gasification solids material handling operations will result in PM emissions, which will be controlled by a baghouse.

- Outlet dust loading of each baghouse: 0.001 grains/scf (per supplier data, Air-Cure Inc.)

- PM emissions from the gasification solids storage and handling operations are based on the air flow to the collector, hours of operation, and the outlet dust loading of each baghouse, which will be imposed as limits, as indicated in the table below.

- Particulate matter emissions from the feedstock handling systems are all highly controlled by baghouses that perform well in capturing small diameter particulate matter. Therefore, particulate matter emissions are assumed to be equal to PM10.

Gasification Solids Material Handling System (S-7616-22-0)							
Description	Operating Capacity			Grain Loading (gr/dscf)	Maximum Process Weight of Material (ton/day)	Maximum Process Weight of Material (ton/yr)	Air Flow to Collector (acfm)
	hr/ day	day/ week	hr/yr				
Gasification Solids Bucket Elevator	24	7	8,760	0.001	1,678	612,470	3,000
Gasification Solids Transfer Tower	8 avg (24 max)	3	1,248	0.001	1,678	87,256	3,000
Gasification Solids Load-Out System	8 avg (24 max)	3	1,248	0.001	1,678	87,256	10,000

- Additionally, PM emissions will result from the gasification solids bunker and pad (emission point #25) for the following processes:
    - o Gasification solids pad - stacking
    - o Gasification solids pad - reclaim

- Average wind speed for gasification solids pad emission calculations: 7.61 mi/hr

- Moisture content for solids stacking material: 12% (applicant)

- Moisture content for solids reclaim material: 8% (applicant)

<u>Sulfur Recovery and Tail Gas Compression System (S-7616-23-0):</u>

Tail Gas Thermal Oxidizer Serving Sulfur Recovery Unit (SRU):

- Thermal oxidizer firing rate (maximum natural gas consumption):
    - o 16 MMBtu/hr natural gas assist burner (normal operation to control the process vent gas) [6]
    - o additional 80 MMBtu/hr (during SRU startup for a total of 96 MMBtu/hr)

- The thermal oxidizer can potentially operate up 8,314 hr/yr to control the process vent gas (normal operation at a maximum heat input of 13 MMBtu/hr) and up to 48 hr/yr to control the SRU startup gas (as proposed by applicant).

[6] During normal operations, miscellaneous oxidizing streams from the gasification area (e.g., atmospheric tank vents and miscellaneous equipment vents) are directed to the thermal oxidizer to prevent nuisance odors. Although the maximum rating of the natural gas assist burner is 16 MMBtu/hr, the applicant proposes to limit its heat input to 13 MMBtu/hr.

- Only the SOx emission factors will vary depending on whether the oxidizer controls the process vent gas or the SRU startup gas. NOx, PM10, CO, and VOC emission factors will be the same under either type of operation.

- Assume an allowance of 2 lb-SO2/hr to account for sulfur in the various vent streams plus fuel.

- Maximum annual operation for SRU startup gas disposal:
  48 hr/yr (approximately 2 events per year at 80 MMBtu/hr)

- Particulate matter emissions from combustion processes are in the sub-micron range. Therefore, particulate matter emissions are assumed to be equal to PM10.

Emission Factors for Tail Gas Thermal Oxidizer (for Disposal of Process Vent Gas)		
NOx (lb/MMBtu)	0.24	Applicant's Engineering Estimates (from project S-1093741)
CO (lb/MMBtu)	0.20	Applicant's Engineering Estimates (from project S-1093741)
VOC (lb/MMBtu)	0.0055	AP-42 Table 1.4.2
SO2 (lb/hr)	2 lb/hr [7]	Applicant's Engineering Estimates (from project S-1093741)
PM10 = PM2.5 (lb/MMBtu)	0.0076	AP-42 Table 1.4.2

Emission Factors for Tail Gas Thermal Oxidizer (for Disposal of SRU Startup Gas)		
NOx (lb/MMBtu)	0.24	Applicant's Engineering Estimates (from project S-1093741))
CO (lb/MMBtu)	0.20	Applicant's Engineering Estimates (from project S-1093741)
VOC (lb/MMBtu)	0.0055	AP-42 Table 1.4.2
SO2 (lb/MMBtu)	0.00204	Applicant's Engineering Estimates (from project S-1093741)
PM10 = PM2.5 (lb/MMBtu)	0.0076	AP-42 Table 1.4.2

SRU Fugitive Emissions (S-7616-23-0):

- As with the gasification system, the SRU will also emit fugitive emissions from the components serving various streams serving the SRU.

- Fugitive emissions from the components serving the following streams are attributed to S-7616-23 as calculated in the Fugitive Emission Calculations spreadsheet in Appendix E: Stream #11 (sulfur) and Stream #12 (TGU process gas).

[7] Assume an allowance of 2 lb-SO2/hr emission to account for sulfur in the various vent streams plus fuel.

- Fugitive emission calculations are found in Appendix E.

Potential Fugitive Emissions for S-7616-23		
Pollutant	**Daily Emissions (lb/day)**	**Annual Emissions (lb/yr)**
NO_X	0	0
SO_X	0	0
PM_{10}	0	0
CO	2.7	969
VOC	0	0

CO2 Recovery and Vent System (S-7616-24-0):

- Maximum duration of venting episodes: 24 hr/day and equivalent to cumulative 504 hr/yr (21 days with breakdown of operation explained in the table below)
- Maximum flowrate: Equivalent to 761,400 lb/hr (17,584 lb-mol/hr) (proposed by applicant)
- Vent stream CO concentration limit: 1,000 ppm-CO (proposed by applicant)
- Vent stream VOC concentration limit: 40 ppm-VOC (proposed by applicant)
- Vent stream H2S concentration limit: 10 ppm-H2S (proposed by applicant)
- Molecular weights:
  - CH4: 16.04
  - CO: 28.01
  - H2S: 34.08
  - COS: 60.08

Natural Gas-Fired Auxiliary Boiler (S-7616-25-0)

Assumptions:

- The auxiliary boiler will provide steam to facilitate CTG startup and for other industrial purposes.
- The unit will be fired solely on PUC-regulated natural gas.
- The maximum rating of the boiler will be limited 213 MMBtu/hour (based on the higher heating value [HHV]), although the unit chosen may have a maximum rating of 230 MMBtu/hr.
- The maximum annual heat input of the boiler will be limited to 466 billion Btu/yr (per the application).

- Natural gas heating value: 1,000 Btu/scf (for PUC-quality natural gas)
- F-Factor for natural gas: 8,578 dscf/MMBtu corrected to 60°F (40 CFR 60, Appendix B)
- Particulate matter emissions from combustion processes are in the sub-micron range. Therefore, particulate matter emissions are assumed to be equal to PM10.

Emission Factors:

Emissions are based on vendor supplied emission factors. NOx emissions are based on 5 ppmvd at 3 percent O2 with installation of ultra-low NOx combustors and flue gas recirculation. CO emissions are based on 50 ppmvd @ 3% O2. A summary of the auxiliary boiler emission factors is presented below.

Pollutant	Post-Project Emission Factors (EF2)			Source
NO_X [8]	6.0 lb-NO_X/MMscf	0.0060 lb-NO_X/MMBtu	5 ppmvd NO_X (@ 3%O_2)	Proposed by applicant (based on data submitted in S-1093741)
SO_X	2.85 lb-SO_X/MMscf	0.00285 lb-SO_X/MMBtu		District Policy APR 1720
PM10		0.005 lb-PM10/MMBtu		Applicant's data
CO	37 lb-CO/MMscf	0.037 lb-CO/MMBtu	50.8 ppmvd CO (@ 3%O_2)	Proposed by applicant (based on data submitted in S-1093741)
VOC	4 lb-VOC/MMscf	0.004 lb-VOC/MMBtu	9.5 ppmvd VOC (@ 3% O_2)	Proposed by applicant (based on data submitted in S-1093741)

[8] According to boiler manufacturers, low NOx burners will achieve their rated emissions within one to two minutes of initial startup and do not require a special shutdown procedure. Because of the short duration before achieving the rated emission factor following startup, the emissions factors for this unit during startup and shutdown will be assumed to be the same as the steady state emission factors shown in the table above.

Cooling Towers (S-7616-27-0, -28-0, and -29-0):

- PM_{10} is the only criteria pollutant emitted by the cooling tower.
- Density of water = 8.34 lb/gal = 1000 g/L
- Cooling tower drift eliminator will have a drift rate not to exceed 0.0005% (which is proposed by the applicant and shall be documented required by DOC conditions).
- Total dissolved solids (TDS) concentration shall not exceed 9,000 ppm for S-7616-21 and -28 (which is proposed by the applicant),[9] which is equivalent to 75.06 lb/1000 gallon.[10]
- TDS concentration shall not exceed 3,000 ppm for S-7616-27 (proposed by applicant), which is equivalent to 25.02 lb/1000 gallon.[11]
- The equivalent annual cooling tower circulation rate in the table below will be used to calculate the annual emissions and placed on the DOC as a limit.
- Due to the use of a drift eliminator, particulate matter emissions from the cooling towers are assumed to be equal to PM10.

Cooling Tower Specifications:				
	Serving Power Block and Process Units (S-7616-27)	**Serving Air Separation Unit (S-7616-28)**	**Serving Power Block (S-7616-29)**	**Source**
Cooling water (CW) circulation rate, gpm	162,582	44,876	95,000	Proposed by applicant
Annual Operating Hours	8,314	8,314	8,668	Proposed by applicant
Cooling water (CW) circulation rate, gallon/yr	81.10 billion	22.39 billion	49.41 billion	[12]
CW dissolved solids (ppm-TDS)	9,000	2,000	9,000	Proposed by applicant
Drift, fraction of circulating CW	0.0005%	0.0005%	0.0005%	Proposed/ BACT

[9] Compliance with TDS limit shall be determined by cooling water sample analysis by independent laboratory within 60 days of initial operation and quarterly thereafter.
[10] 9,000 ppm-TDS = (9,000/1E6)(8.34 lb/gal) = 0.07506 lb/gal = 75.06 lb/1000 gal; 9,000 ppm-TDS = 9,000/1E6)(1000 g/L) = 9 g/L
[11] 3,000 ppm-TDS = (3,000/1E6)(8.34 lb/gal) = 0.02502 lb/gal = 25.02 lb/1000 gal; 3,000 ppm-TDS = (3,000/1E6)(1000 g/L) = 3 g/L
[12] This is equivalent to the units' rated capacity and proposed annual operating hours.

Flares (S-7616-30-0, -31-0, and -32-0):

Assumptions and Emission Factors:

- The plant is designed to avoid flaring during steady-state operations, however flares are needed to protect the plant operators and equipment. The plant employs three pressure-relief systems and their corresponding flares (Gasification, Rectisol®, and SRU) for this purpose.

- Vessels, towers, heat exchangers, and other equipment are connected to piping systems that will discharge gases and vapors to a relief system in order to prevent excessive pressure from building up in the equipment during upsets and emergencies. The flares also allow safe venting of equipment during routine startup and shutdown operations.

- Flaring will occur only during the startup and shutdown operations or during emergencies.

- All three flares are conventional elevated flares, and will be provided with natural gas assist as required.

- Since a portion of the operation will consist of planned flaring events, the flare will not be classified as an emergency flare.

- Particulate matter emissions from combustion processes are in the sub-micron range. Therefore, particulate matter emissions are assumed to be equal to PM10.

- During non–startup/shutdown plant operation, the three flares will be operated in a standby mode with only emissions from the natural-gas pilot flames, with emission factors in the table below:

Emission Factors for Natural Gas-Fired Pilots for each of the Three Flares		
Pollutant	**lb/MMBtu**	**Emission Factor Source [13]**
NO_X	0.068	BACT and proposed by applicant (based on data submitted in project S-1093741)
SO_X	0.00214	0.75 grain/100 scf [14]
PM_{10}	0.003	Supplier Data (John Zink Co.) – project S-1093741
CO	0.08	Supplier Data (Callidus Technologies) –project S-1093741
VOC	0.0013	Supplier Data (John Zink Co.) – project S-1093741

[13] The identified sources provided the emission factors in project S-7616/S-1093741.

[14] SOx emissions are based on a maximum sulfur content of 0.75 gr-S/100 scf (12.65 ppm-SOx in the natural gas) proposed by the applicant. (0.75 gr-S/100 dscf x 1 lb S/7000 gr x 64 lb-SOx/32 lb-S x 1 scf/1000 Btu x 106 Btu/MMBtu) = 0.00214 lb/MMBtu.

Gasification Flare (S-7616-30-0):

- The gasification flare is an elevated flare with a maximum design capacity of 4,000 MMBtu/hr that will be allowed to operate up to 28 hr/yr of planned flaring for startup and shutdown events as detailed in the table below.
- The gasification flare has a 0.5 MMBtu/hr natural gas pilot that can operate up to 8,760 hr/yr.
- The gasification flare will dispose of excess gas during gasifier startup operations or during unplanned power plant upsets or equipment failures.
- Planned flaring will consist of the types of events, duration, and maximum gas flared shown in the table below.
- Syngas sent to the flare during planned flaring events is filtered, water-scrubbed, and sulfur-free.
- Flaring of untreated syngas or other streams within the plant will only occur as an emergency safety measure during unplanned plant upsets or equipment failures.
- Particulate matter emissions from combustion processes are in the sub-micron range. Therefore, particulate matter emissions are assumed to be equal to PM10.

Planned Flaring -- Startup/Shutdown Flared Gas for Gasification Flare (S-7616-30)						
	Duration of event (hr)	Events /yr	hr/yr	Maximum Gas Flared (MMBtu/hr)	Annual Gas Flared (MMBtu/yr)	
Flaring natural gas (startup)	3	2	6	2,926	17,556	Natural Gas: 21,936 MMBtu/yr[15]
Flaring unshifted syngas (startup)	2	2	4	2,386	9,544	Unshifted syngas: 9,544 MMBtu/yr
Flaring shifted syngas (startup)	5	2	10	2,413	24,130	Shifted syngas: 43,434 MMBtu/yr
Flaring shifted syngas (shutdown)	4	2	8	2,413	19,304	
Total annual hours:			28		74,914	
Total heat input (MMBtu/yr):						

[15] Maximum annual natural gas flared will be limited to 21,936 MMBtu/hr, which is the sum of 17,556 MMBtu/yr from the natural gas startup gas and 4,380 MMBtu/yr from the 0.5 MMBtu/hr operating 8,760 hr/yr.

Emission Factors for Gasification Flare (S-7616-30)				
	When Incinerating Natural Gas		When Incinerating Syngas or Waste Gases	
Pollutant	lb/MMBtu	Emission Factor Source [16]	lb/MMBtu [17]	Emission Factor Source
NO_X	0.068	Supplier Data (John Zink Co.)	0.068	BACT and Supplier Data (John Zink Co.) – project S-1093741
SO_X	0.00214 [18]	0.75 grain/100 scf	Negligible = 0.000	No sulfur in startup feed
PM_{10}	0.003	Supplier Data (John Zink Co.)	Negligible = 0.000	
CO	0.08	Supplier Data (Callidus Technologies)	2.0 / 0.37	2.0 lb-CO/MMBtu on unshifted syngas (Supplier data from first project – 98% destruction of CO in waste gas); 0.37 lb/MMBtu on shifted syngas (Supplier data from project S-1093741) [19]
VOC	0.0013	Supplier Data (John Zink Co.)	Negligible = 0.000	No VOC in waste gas or H2-rich gas

<u>SRU Flare (S-7616-31-0):</u>

- The SRU flare has a maximum flaring capacity of 36 MMBtu/hr with a 0.3 MMBtu/hr natural gas pilot.

- The SRU flare will be used to safely flare gas streams containing sulfur during startup and shutdown, and gas streams containing sulfur during unplanned upsets or emergency events.

- The SRU flare will safely dispose of gas emissions from the AGR source during startup (after passing through a scrubber) or to oxidize gas releases during emergency or upset events.

- During cold plant startup of the gasification, AGR, and shift units, these acid gas streams will be diverted to the SRU Flare header for a short time. To reduce the emissions of sulfur compounds during SRU or TGU shutdown, the acid gas is routed to the emergency caustic scrubber, where the sulfur compounds are absorbed with caustic solution. After scrubbing, the gas is then routed to the elevated SRU Flare stack via the SRU Flare KO drum. Fresh and spent caustic tanks and pumps are provided to allow delivery of fresh caustic and disposal of spent caustic.

---

16 The identified sources provided the emission factors in project S-7616/S-1093741.

17 Emission limits will be set to 0.000 lb/MMBtu/hr for "negligible" values.

18 SO_X emissions are based on a maximum sulfur content of 0.75 gr-S/100 scf (12.65 ppm-SOx in the natural gas) proposed by the applicant. (0.75 gr S/100 dscf x 1 lb S/7000 gr x 64 lb SO_X/32 lb S x 1 scf/1000 Btu x 10^6 Btu/MMBtu) = 0.0021 lb/MMBtu.

19 Scrubbed syngas entering the Sour Shift Unit is rich in CO and water. The Sour Shift Unit employs the water-gas shift (WGS) reaction to convert CO and water to CO_2 and hydrogen (as is in Process Description portion of this evaluation). Therefore, CO emissions vary depending on whether the unshifted syngas or shifted syngas is combusted in the flare.

- The SRU flare may combust gas streams for up to 40 hours per year during plant startups.

- Particulate matter emissions from combustion processes are in the sub-micron range. Therefore, particulate matter emissions are assumed to be equal to PM10.

Emissions Factors for SRU Flare (S-7616-31)			
Pollutant	**Emission Factor (lb/MMBtu)** [20]	**Emission Rate (lb/hr)** [21]	**Emission Factor Source**
NO_X	0.068	2.4	BACT and Supplier Data (John Zink Co.) – project S-1093741
SO_X		18.4	4,600 lb/hr @ 99.6% control efficiency = 18.4 lb/hr
PM_{10}	0.003	0.11	Supplier Data (John Zink Co.) – project S-1093741
CO	0.08	2.9	Supplier Data (Callidus Technologies) – project S-1093741
VOC	0.0013	0.05	Supplier Data (John Zink Co.) – project S-1093741

<u>Rectisol Flare (S-7616-32-0):</u>

- The Rectisol flare will be used to safely dispose of low temperature gas streams during startup, shutdown, and unplanned upsets or emergency events.

- The flare may be used for off-specification CO2 during gasifier startup or shutdown events.

- The maximum design capacity of the Rectisol flare is based on the total flow from an unlikely equipment failure event, such as a major failure in the acid gas removal unit.

- The Rectisol flare is an elevated flare with a maximum rating of 430 MMBtu/hr during planned flaring events, waste gas plus natural gas assist flare, and 0.3 MMBtu/hr natural gas pilot.

- Total hours of operation (pilot): 8,760 hr/yr

- Total hour of planned flaring (for startup relief gas): 8 hr/day and 40 hr/yr (proposed by applicant)

- Maximum annual emissions are calculated based on 8,760 hr/yr of pilot operation and 40 hr/yr of planned flaring events.

[20] Emissions for CO, PM10, and VOC are based on factors for natural gas pilots above.
[21] Emission Rate (lb/hr) = Emission Factor (lb/MMBtu) x 36 MMBtu/hr.

- Particulate matter emissions from combustion processes are in the sub-micron range. Therefore, particulate matter emissions are assumed to be equal to PM10.

Emission Factors for Rectisol Flare (S-7616-32)			
Pollutant	**Emission Factor (lb/MMBtu)** [22]	**Emission Rate (lb/hr)** [23]	**Emission Factor Source**
NO_X	0.068	29.2	BACT and Supplier Data – Project S-1093741
SO_X		15.0	Proposed by applicant.
PM_{10}	0.003	1.29	Supplier Data (John Zink Co.) – Project S-1093741
CO	0.08	34.4	Supplier Data (Callidus Technologies) – Project S-1093741
VOC	0.0013	0.56	Supplier Data (John Zink Co.) – Project S-1093741

<u>Ammonia Synthesis Unit (S-7616-33-0)</u>

Ammonia Startup Heater

- The ammonia startup heater will be fired solely on PUC-regulated natural gas.
- The maximum rating of the heater is 56.0 MMBtu/hour, consisting of four 14 MMBtu/hour burners (based on the higher heating value [HHV]).
- The maximum annual heat input of the heater will be limited to 7,840 MMBtu/yr (7.84 billion Btu/yr), which is equivalent to 140 hours of operation at full capacity.
- Natural gas heating value: 1,000 Btu/scf (for PUC-quality natural gas)
- F-Factor for natural gas: 8,578 dscf/MMBtu corrected to 60°F (40 CFR 60, Appendix B)
- The applicant proposes to pay an annual emission fee as allowed in Section 5.1.2 of District Rule 4320 in lieu of complying with the NOx emission limit of Section 5.2.
- Particulate matter emissions from combustion processes are in the sub-micron range. Therefore, particulate matter emissions are assumed to be equal to PM10.

[22] Emissions for CO, PM10, and VOC are based on factors for natural gas pilots above.
[23] Emission Rate (lb/hr) = Emission Factor (lb/MMBtu) x 430 MMBtu/hr

Emission Factors:

The heater will use a low-NOx burner to control exhaust emissions to no higher than 9 ppmvd at 3 percent O2. CO emissions are based on 50 ppmvd at 3 percent O2. PM10, PM2.5, and VOC emissions are based on vendor-supplied emission factors. SO2 emissions are calculated based on 12.65 ppmv total sulfur in pipeline natural gas. A summary of auxiliary boiler emissions is presented below.

For this unit, post-project emission factors are listed in the table below.

Pollutant	Post-Project Emission Factors (EF2)			Source
NO_X	11.0 lb-NO_X/MMscf	0.011 lb-NO_X/MMBtu	9 ppmvd NO_X (@ 3%O_2)	Applicant's proposal
SO_X	2.85 lb-SO_X/MMscf	0.00285 lb-SO_X/MMBtu		District Policy APR 1720
PM10		0.005 lb-PM10/MMBtu		Applicant's proposal
CO	37 lb-CO/MMscf	0.037 lb-CO/MMBtu	50 ppmvd CO (@ 3%O_2)	Applicant's proposal
VOC	4 lb-VOC/MMscf	0.004 lb-VOC/MMBtu	9.5 ppmvd VOC (@ 3% O_2)	Applicant's proposal

Fertilizer Manufacturing Complex / Ammonia Synthesis Unit Fugitive Emissions:

- The ammonia synthesis unit (S-7616-33) is assessed fugitive emissions that will be emitted by the components serving various streams in the fertilizer manufacturing complex.

- Fugitive emissions from the components serving the following streams will be assessed to S-7616-33 as calculated in the Fugitive Emission Calculations spreadsheet in Appendix E: Stream #13 (low NH3 concentration), Stream #14 (moderate NH3 concentration), Stream #15 (high NH3 concentration), Stream # 16 (low CO2 concentration), Steam #17 (moderate CO2 concentration), Stream #18 (high CO2 concentration), Stream #19 (NO2), Stream #20 (HNO3), and Stream #21 (PSA off gas).

- Fugitive emission calculations are found in Appendix E.

Potential Fugitive Emissions for S-7616-33		
Pollutant	**Daily Emissions (lb/day)**	**Annual Emissions (lb/yr)**
NO_X	0	0
SO_X	0	0
PM_{10}	0	0
CO	5.9	2,140
VOC	0	0

Urea Unit, Including Urea Pastillation Unit and Pastille Handling Operation (S-7616-34)

Urea Absorbers:

- The urea unit consists of HP and LP urea absorbers, which results in ammonia emissions only, which are reduced by the wet scrubbers to the levels indicated below.
- Plant capacity: 1,701 ton/day (applicant)
- Urea absorbers emission rate: 13.1 lb-NH3/hr (applicant) [24]

Urea Pastillation Unit and Pastille Handling Operation:

- The pastillation process is used to convert the urea melt into pastilles.[25]
- The urea pastille handling system collects urea pastilles from the urea pastillation unit and conveys them to the bulk storage/rail and truck loadout facility.
- The urea pastillation process unit is enclosed, served by a hood, is exhausted through a baghouse, then vented.
- The urea pastillation unit will result in ammonia and urea dust, which are classified as PM, which will be controlled by baghouses.
- Outlet dust loading of each baghouse: 0.001 grains/scf (per supplier data, Air-Cure Inc.)
- PM emissions from the urea pastillation unit are based on the air flow to the collector, hours of operation, and the outlet dust loading of each baghouse, which will be imposed as limits, as indicated in the table below.

[24] The applicant provided manufacturer's guarantee that the combined ammonia emissions from the high- and low-pressure urea stacks will be 13.1 lb-NH3/hr.

[25] A drop-former deposits uniform droplets onto a moving belt. These droplets solidify on the belt to produce a uniform pastille product. The heat of crystallization is removed by spraying the underside of the belt with cooling water. At no point in the process does the cooling water contact the urea product. After they have cooled and solidified, the urea pastilles are removed from the belt by an oscillating scraper. The section above the moving steel belt is enclosed with a hood and vented

- Particulate matter emissions from the solids material handling systems are highly controlled by baghouses that perform well at capturing small diameter particulate matter. Therefore, particulate matter emissions are assumed to be equal to PM10.

Urea Pastillation Unit and Pastille Handling Operation (S-7616-34)							
Description	Operating Capacity			Grain Loading (gr/dscf)	Maximum Process Weight of Material (ton/day)	Maximum Process Weight of Material (ton/yr)	Air Flow to Collector (acfm)
	hr/ day	day/ week	hr/yr [26]				
Urea Bucket Elevator	24	7	8,760	0.001	1,720	627,800	1,500

Nitric Acid Unit (S-7616-35-0)

- The nitric acid unit is equipped with selective catalytic reduction to control NOx.

- The proposed nitric acid plant will have an ammonia slip emission limit of 10 ppm downstream of the SCR. The emission factors for the nitric acid plant are the following:

Nitric Acid Unit (S-7616-35-0) [27]	
NO_X	0.20 lb/ton (15 ppmv in vent gas)
NH_3	1.0 lb-NH3/hr (10 ppm NH_3 slip downstream of the SCR)

- Nitric acid production: 501 ton/day (proposed by applicant; based on 100% acid basis)

Ammonium Nitrate Unit (S-7616-36-0)

- The ammonium nitrate unit vent stream contains water vapor and residual ammonium nitrate solution mist that is not removed by the demisting system. If this vent stream with mist is emitted directly to the atmosphere, the mist droplets would evaporate and result in PM emissions. These particulate emissions are substantially reduced by routing the vent stream to a water-scrubbing system before discharge to the atmosphere.

- This vent scrubber condenses the vapor into condensate, which then absorbs the previously entrained mist droplets.

---

[26] The operating schedule shown is based on annual average operations. According to the applicant any equipment item or activity may be in operation 24 hr/day on a short-term basis. Therefore, daily emissions will be based on 24 hr/day, and annual emissions will be based on the average operation schedule shown.

[27] This is proposed by the applicant based on information provided by their equipment supplier (Weatherly). To adequately control the NO2 emissions from the nitric acid plant, sufficient ammonia must be injected into the SCR system. Thus, it is expected that the ammonia emission may be as high 1.0 lb-NH3/hr according to the vendor.

- The project will use a near-total condensing vent scrubbing system, and the scrubber vent particulate emissions will be less than 0.2 lb/hr. All PM emissions are assumed to be PM2.5 or smaller.

- PM10 emissions (from ammonia nitrate unit scrubber vent): 0.20 lb-PM10/hr [28]

- Ammonium nitrate production: 636 ton/day (proposed by applicant)

- Annual operating hours: 8,000 hr/yr (proposed by applicant)

Urea Storage and Loadout System (S-7616-37-0):

- The urea storage and handling operation will result in PM emissions from the handling of urea products, and these emissions will be controlled by a baghouse.

- Outlet dust loading of each baghouse: 0.001 grains/scf (per supplier data, Air-Cure Inc.)

- PM emissions from the urea storage and handling operation are based on the air flow to the collector, hours of operation, and the outlet dust loading of each baghouse, which will be imposed as limits, as indicated in the table below.

- Particulate matter emissions from the solids material handling systems are highly controlled by baghouses that perform well at capturing small diameter particulate matter. Therefore, particulate matter emissions are assumed to be equal to PM10.

[28] Emission rate is proposed by the applicant based on a vendor (Weatherly) guarantee in an email dated 7/16/12.

Urea Storage and Handling Operation (S-7616-37)							
Description	Operating Capacity			Grain Loading (gr/dscf)	Maximum Process Weight of Material (ton/day)	Maximum Process Weight of Material (ton/yr)	Air Flow to Collector (acfm)
	hr/ day	day/ week	hr/yr [29]				
Urea Transfer Tower 1	24	7	8,760	0.001	1,720	627,800	1,500
Urea Transfer Tower 2	24	1.75	2,190	0.001	1,720	156,950	1,500
Urea Transfer Tower 3	24	3.5	4,380	0.001	1,720	313,900	1,500
Urea Transfer Tower 4	24	1.75	2,190	0.001	1,720	156,950	1,500
Urea Transfer Tower 5	8 avg (24 max)	5	2,080	0.001	1,720	627,800	1,500
Urea Loading Vent	8 avg (24 max)	5	2,080	0.001	1,720	627,800	20,000

Diesel-Fired Emergency Engines Powering Electrical Generators (S-7616-38 and -39):

- Emergency operating schedule: 24 hr/day
- Non-emergency operating schedule: 50 hr/year (per Airborne Toxic Control Measure for Stationary Compression Ignition Engines, Table 1) [30]
- Density of diesel fuel: 7.1 lb/gal
- EPA F-factor (adjusted to 60 °F): 9,051 dscf/MMBtu
- Fuel heating value: 137,000 Btu/gal
- BHP to Btu/hr conversion: 2,542.5 Btu/bhp-hr
- Thermal efficiency of engine: commonly ≈ 35%
- PM_{10} fraction of diesel exhaust: 0.96 (CARB, 1988)
- Rating of each engine: 2,922 bhp
- Sulfur content of very low-sulfur diesel: 0.0015% by weight sulfur maximum

To maximize selection flexibility, the applicant requests that the District use the applicable CARB standard at the time of installation as the emission limits for these engines. S-7616-38 and -39 will require that the applicable CARB off-road engine Tier standard be installed. Currently, interim Tier 4 standards apply, and emission rates will not exceed those standards.

[29] The operating schedule shown is based on annual average operations. According to the applicant any equipment item or activity may be in operation 24 hr/day on a short-term basis. Therefore, daily emissions will be based on 24 hr/day, and annual emissions will be based on the average operation schedule shown.

[30] Table 1 (Summary of the Emission Standards and Operating Requirements for New Stationary Emergency Standby Diesel-Fueled CI Engines > 50 BHP) limits engines with PM emissions > 0.01 and ≤ 0.15 g-bhp to no more than 50 hr/yr of maintenance and testing.

The potential emissions from the engines will be based on CARB's "Table 1. Off Road Compression - Ignition Diesel Engine Standards (NMHC + NOx/CO/PM in g/bhp hr)" for interim Tier 4 engines.

Interim Tier 4 Diesel-Fired IC Engines NO_X and VOC Estimated Emissions				
Horsepower Range (bhp)	NMHC (g/bhp-hr)	NOx (g/bhp-hr)	CO (g/bhp-hr)	PM (g/bhp-hr)
≥ 1027 hp	0.3	0.5	2.6	0.07

Additionally, the emission limit for SOx will be 0.0051 g/bhp-hr based on the following calculation.

$$\frac{0.000015\,lb-S}{lb-fuel}\times\frac{7.1\,lb-fuel}{gallon}\times\frac{2\,lb-SO_2}{1\,lb-S}\times\frac{1\,gal}{137{,}000\,Btu}\times\frac{1\,bhp\,input}{0.35\,bhp\,out}\times\frac{2{,}542.5\,Btu}{bhp-hr}\times\frac{453.6\,g}{lb}=\quad 0.0051\quad\frac{g-SO_x}{bhp-hr}$$

<u>Diesel-Fired Emergency Engine Powering Firewater Pump (S-7616-40-0)</u>

- Emergency operating schedule: 24 hr/day
- Non-emergency operating schedule: 100 hr/year (Rule 4702 and Airborne Toxic Control Measure for Stationary Compression Ignition Engines, Table 1) [31]
- Density of diesel fuel: 7.1 lb/gal
- EPA F-factor (adjusted to 60 °F): 9,051 dscf/MMBtu
- Fuel heating value: 137,000 Btu/gal
- BHP to Btu/hr conversion: 2,542.5 Btu/bhp-hr
- Thermal efficiency of engine: commonly ≈ 35%
- PM_{10} fraction of diesel exhaust: 0.96 (CARB, 1988)
- Rating of engine: 556 bhp
- Sulfur content of very low-sulfur diesel: 0.0015% by weight sulfur maximum

To maximize selection flexibility, the applicant requests that the District use the applicable CARB standard at the time of installation as the emission limits for these engines. S-7616-40 will require that the applicable CARB off-road engine Tier standard be installed. Currently, interim Tier 4 standards apply, and emission rates will not exceed those standards. The potential emissions from the engine will be based on CARB's "Table 1. Off Road Compression - Ignition Diesel Engine Standards (NMHC + NOx/CO/PM in g/bhp hr)" for interim Tier 4 engines.

[31] Table 1 (Summary of the Emission Standards and Operating Requirements for New Stationary Emergency Standby Diesel-Fueled CI Engines > 50 BHP) limits engines with PM emissions ≤ 0.01 g-bhp to no more than 100 hr/yr of maintenance and testing.

Interim Tier 4 Diesel-Fired IC Engines NO_X and VOC Estimated Emissions				
Horsepower Range (bhp)	NMHC (g/bhp-hr)	NOx (g/bhp-hr)	CO (g/bhp-hr)	PM (g/bhp-hr)
≥ 300 and < 600 bp	0.14	1.5	2.6	0.01

Additionally, the emission limit for SOx will be 0.0051 g/bhp-hr based on the following calculation.

$$\frac{0.000015\,lb-S}{lb-fuel}\times\frac{7.1\,lb-fuel}{gallon}\times\frac{2\,lb-SO_2}{1\,lb-S}\times\frac{1\,gal}{137{,}000\,Btu}\times\frac{1\,bhp\,input}{0.35\,bhp\,out}\times\frac{2{,}542.5\,Btu}{bhp-hr}\times\frac{453.6\,g}{lb}=0.0051\ \frac{g-SO_x}{bhp-hr}$$

C. Calculations

1. Pre-Project Potential to Emit (PE1)

Since the emission units in this project are new, PE1 = 0 for all criteria pollutants.

2. Post-Project Potential to Emit (PE2)

<u>Combustion Turbine Generator (S-7616-26-0)</u>

a. Maximum Hourly PE

For most of the criteria pollutants, the maximum hourly emissions from the CTG/HRSG and its interrelated emissions from the feedstock dryer stack will occur during either startup or shutdown events as shown in the table below:

Maximum Emission Rates During Startup (1-hour duration)					
	NO_X (lb/hr)	CO (lb/hr)	VOC (lb/hr)	PM_{10} (lb/hr)	SO_X (lb/hr)
CTG/HRSG stack	107.2	2,270.0	65.0	15.0	2.4
Feedstock dryer stack	15.1	147.4	1.9	0.9	0.3

Maximum Emission Rates During Shutdown (1-hour duration)					
	NO_X (lb/hr)	CO (lb/hr)	VOC (lb/hr)	PM_{10} (lb/hr)	SO_X (lb/hr)
CTG/HRSG stack	122.0	2,270.0	64.8	15.0	2.7
Feedstock dryer stack	9.4	11.5	0.7	0.9	0.3

During normal operations (excluding startup and shutdown events) when firing on H2-rich fuel, the maximum hourly emissions at the CTG/HRGS and the feedstock dryer stack shall be the following:

Maximum Emission Rates During Normal Operations on H2-Rich Fuel (1-hour duration)					
	NO_X (lb/hr)	CO (lb/hr)	VOC (lb/hr)	PM_{10} (lb/hr)	SO_X (lb/hr)
CTG/HRSG stack	25.0	18.3	3.5	12.9	4.1
Feedstock dryer stack	4.4	3.2	0.6	1.4	0.9

Natural gas is required as a backup fuel for the combustion turbine (up to 2 weeks per year) and during startups and shutdowns. The maximum emission rate during those periods will be:

Maximum Emission Rates During Backup Natural Gas Operation (1-hour duration)					
	NO_X (lb/hr)	CO (lb/hr)	VOC (lb/hr)	PM_{10} (lb/hr)	SO_X (lb/hr)
CTG/HRSG stack	34.1	26.0	5.9	15.0	4.7
Feedstock dryer stack	N/A				

Commissioning

Maximum Emission Rates from CTG/HRSG when Firing on Natural Gas during Commissioning (1-hour duration)					
	NO_X (lb/hr)	CO (lb/hr)	VOC (lb/hr)	PM_{10} (lb/hr)	SO_X (lb/hr)
CTG/HRSG stack	391.2	2270.0	65.0	15.0	4.8
Feedstock dryer stack	N/A				

Maximum Emission Rates from CTG/HRSG when Firing on Hydrogen-Rich Fuel during Commissioning (1-hour duration)					
	NO_X (lb/hr)	CO (lb/hr)	VOC (lb/hr)	PM_{10} (lb/hr)	SO_X (lb/hr)
CTG/HRSG stack	99.0	1622.6	35.1	15.0	5.0
Feedstock dryer stack	N/A				

b. Maximum Daily PE2

After the commissioning is completed, the maximum daily emissions from the CTG and the feedstock dryer will occur during startup or shutdown for certain pollutants and during regular operation for others. So, the multiple scenarios are shown in the tables below.

Daily Post-Project Potential to Emit (PE2) (on days without a startup or shutdown)						
	CTG/HRSG				Feedstock dryer	
	CTG/HRSG on H2-Rich Fuel		CTG/HRSG on Natural Gas		Feedstock dryer on H2-Rich Fuel	
	Short-Term Emission Rate (lb/hr)	(lb/day)	Short-Term Emission Rate (lb/hr)	(lb/day)	Short-Term Emission Rate (lb/hr)	(lb/day)
Formula		lb/hr x 24 hr/day		lb/hr x 24 hr/day		lb/hr x 24 hr/day
NO_X	25.0	**600.0**	34.1	**818.4**	4.4	**105.6**
SO_X	4.1	**98.4**	4.7	**112.8**	0.9	**21.6**
PM_{10}	12.9	**309.6**	15.0	**360.0**	1.4	**33.6**
CO	18.3	**439.2**	26.0	**624.0**	3.2	**76.8**
VOC	3.5	**84.0**	5.9	**141.6**	0.6	**14.4**
NH_3	18.5	**444.0**	15.8	**379.2**	3.2	**76.8**

CTG/HRSG and Feedstock Drying Stack Emissions During Startup and Shutdown							
CTG/HRSG Startup							
Step	**Duration (hours)**	**Units**	**SO_2**	**NO_X**	**CO**	**$PM_{10}/PM_{2.5}$**	**VOC**
1. CTG ignition and synchronization, 20 percent load on natural gas	0.5	lb/hr	2.1	67.1	**2,270**	**15.0**	**65**
2. HRSG/STG warm-up, ramp CTG to 40 percent load on natural gas	2	lb/hr	**2.4**	**107.2**	1044	13.1	13
3. CTG fuel change-over, 40 percent load on syngas, startup PSA/ ammonia/urea units	2	lb/hr	**2.4**	66.6	81	13	4.6
Maximum Daily Startup Emissions for CTG/HRSG Stack (lb/day)			**10.7**	**381.2**	**3,385.0**	**59.7**	**67.7**
Feedstock Drying Startup							
Step	**Duration (hours)**	**Units**	**SO_2**	**NO_X**	**CO**	**$PM_{10}/PM_{2.5}$**	**VOC**
2. HRSG/STG warm-up, ramp CTG to 40 percent load on natural gas	2	lb/hr	**0.3**	**15.1**	**147.4**	**0.9**	**1.9**
3. CTG fuel change-over, 40 percent load on syngas	2	lb/hr	**0.3**	9.4	11.5	**0.9**	0.7
Maximum Daily Startup Emissions for Feedstock Dryer Stack (lb/day)			**1.2**	**49.0**	**317.8**	**3.6**	**5.2**

CTG/HRSG Shutdown							
Step	**Duration (hours)**	**Units**	**SO_2**	**NO_X**	**CO**	**$PM_{10}/PM_{2.5}$**	**VOC**
1. PSA, ammonia, and urea unit shutdown; gasifier to 60 percent; CTG to 40 percent load on syngas	4	lb/hr	2.4	66.6	81.0	13.0	4.6
2. CTG fuel change-over, 40 percent load on natural gas, gasifier depressurization	3	lb/hr	**2.7**	**122.0**	1,191.0	**15.0**	15.3
3. Minimum plant load, 20 percent load on natural gas	2	lb/hr	2.1	67.1	**2,270.0**	**15.0**	**64.8**
Maximum Daily Shutdown Emissions for CTG/HRSG Stack (lb/day)			**21.9**	**766.6**	**8,437.0**	**127.0**	**193.9**
Feedstock Drying Shutdown							
Step	**Duration (hours)**	**Units**	**SO_2**	**NO_X**	**CO**	**$PM_{10}/PM_{2.5}$**	**VOC**
1. PSA, ammonia, and urea plant shutdown; gasifier to 60 percent; CTG to 40 percent load on syngas	4	lb/hr	**0.3**	**9.4**	**11.5**	**0.9**	**0.7**
Maximum Daily Shutdown Emissions for Feedstock Dryer Stack (lb/day)			**1.2**	**37.6**	**46.0**	**3.6**	**2.8**

c. Maximum Annual PE2

The maximum annual emissions from the HRSG/CTG stack are based on 8,000 hr/yr of firing on H2-rich syngas, 336 hr/yr (equivalent to 2 weeks/year) firing on natural gas (other than startup and shutdown events), two startup events, and two shutdown events. The post-project potential to emit is summarized in the table below:

Annual Post-Project Potential to Emit (PE2) from CTG/HRSG									
	Average Emissions Rate from HRSG Stack on H2-Rich Syngas (lb/hr)	HRSG Stack Emissions on H2-Rich Syngas (lb/yr)	Average Emissions Rate from HRSG Stack on Natural Gas (lb/hr)	HRSG Stack Emissions on Natural Gas (lb/yr)	Startup Emissions Rate (lb/event)	Startup Emissions (lb/yr)	Shutdown Emissions Rate (lb/event)	Shutdown Emissions (lb/yr)	Annual PE2 (lb/yr)
Formula		lb/hr x 8000 hr/yr		lb/hr x 336 hr/yr		lb/event x 2 event/yr		lb/event x 2 event/yr	Total of all events
NO_X	24.9	199,200	34.1	11,457.6	381.2	762.4	766.6	1533.2	212,953
SO_X	4.1	32,800	4.7	1,579.2	10.8	21.5	21.9	43.8	34,445
PM_{10}	12.8	102,400	15.0	5,040.0	59.7	119.4	127.0	254.0	107,813
CO	18.2	145,600	26.0	8,736.0	3385.0	6770.0	8437.0	16874.0	177,980
VOC	3.5	28,000	5.9	1,982.4	67.7	135.4	193.9	387.8	30,506
NH_3	18.4	147,200	15.8	5,308.8	0	0	0	0	152,509

Annual Post-Project Potential to Emit (PE2) from Feedstock Dryer							
	Average Emissions Rate from Coal on H2-Rich Syngas (lb/hr)	Feedstock dryer Stack Emissions on H2-Rich Syngas (lb/yr)	Startup Emissions Rate (lb/event)	Startup Emissions (lb/yr)	Shutdown Emissions Rate (lb/event)	Shutdown Emissions (lb/yr)	Annual PE2 (lb/yr)
Formula		lb/hr x 8000 hr/yr		lb/event x 2 event/yr		lb/event x 2 event/yr	Total of all events
NO_X	4.2	33,600	49.0	98.0	37.6	75.2	33,773
SO_X	0.7	5,600	1.2	2.4	1.2	2.4	5,605
PM_{10}	1.4	11,200	24.8	49.6	3.6	7.2	11,257
CO	3.1	24,800	317.8	635.6	46.0	92.0	25,528
VOC	0.6	4,800	5.2	10.4	2.8	5.6	4,816
NH_3	3.1	24,800	0	0	0	0	24,800

Railcar Unloading and Transfer System (S-7616-17-0)

Emissions are based on the air flow to the collector, hours of operation, and the outlet dust loading of each baghouse. Below is a sample calculation:

Daily emissions = (Air Flow to Collector)(Grain Loading)
= (20,000 ft3/min)(24 hr x 60 min/hr)(0.001 gr/dscf)(lb/7,000 gr)
= 4.11 lb-PM10/day

Daily PE2 for S-7616-17-0				
Description	**Operating Capacity (hr/day)**	**Grain Loading (gr/dscf)**	**Air Flow to Collector (acfm)**	**Daily Emissions (lb-PM10/day)**
Rail Unloading Vent	6 avg (24 max)	0.001	20,000	4.1
Total Emissions (lb-PM10/day)				4.1

Annual emissions = (Air Flow to Collector)(Grain Loading)
= (20,000 ft3/min)(1560 hr x 60 min/hr)(0.001 gr/dscf)(lb/7,000 gr)
= 267.4 lb-PM10/yr

Annual PE2 for S-7616-17-0				
Description	**Operating Capacity (hr/yr)**	**Grain Loading (gr/dscf)**	**Air Flow to Collector (acfm)**	**Annual Emissions (lb-PM10/yr)**
Rail Unloading Vent	1,560	0.001	20,000	267
Total Emissions (lb-PM10/yr)				267

Truck Unloading and Transfer System (S-7616-18-0)

Daily PE2 for S-7616-18-0				
Description	**Operating Capacity (hr/day)**	**Grain Loading (gr/dscf)**	**Air Flow to Collector (acfm)**	**Daily Emissions (lb-PM10/day)**
Truck Unloading Vent	12 avg (24 max)	0.001	80,000	16.5
Total Emissions (lb-PM10/day)				16.5

Annual PE2 for S-7616-18-0				
Description	**Operating Capacity (hr/yr)**	**Grain Loading (gr/dscf)**	**Air Flow to Collector (acfm)**	**Annual Emissions (lb-PM10/yr)**
Truck Unloading Vent	3,120	0.001	20,000	535
Total Emissions (lb-PM10/yr)				535

Feedstock Storage, Blending, and Reclaim System (S-7616-19-0)

Daily PE2 for S-7616-19-0				
Description	**Operating Capacity (hr/day)**	**Grain Loading (gr/dscf)**	**Air Flow to Collector (acfm)**	**Daily Emissions (lb-PM10/day)**
Feedstock Transfer Tower 2	12 avg (24 max)	0.001	1,500	0.3
Feedstock Transfer Tower 1	5 avg (24 max)	0.001	1,500	0.3
Total Emissions (lb-PM10/day)				0.6

Annual PE2 for S-7616-19-0				
Description	**Operating Capacity (hr/yr)**	**Grain Loading (gr/dscf)**	**Air Flow to Collector (acfm)**	**Annual Emissions (lb-PM10/yr)**
Feedstock Transfer Tower 2	4,380	0.001	1,500	22.5
Feedstock Transfer Tower 1	3,120	0.001	1,500	16.0
Total Emissions (lb-PM10/yr)				39

Feedstock Grinding/Crushing and Drying System (S-7616-20-0)

Daily PE2 for S-7616-20-0				
Description	**Operating Capacity (hr/day)**	**Grain Loading (gr/dscf)**	**Air Flow to Collector (acfm)**	**Daily Emissions (lb-PM10/day)**
Feedstock Bunkers Vent	12 avg (24 max)	0.001	12,600	2.6
Feedstock Crusher Vent	12 avg (24 max)	0.001	12,600	2.6
Total Emissions (lb-PM10/day)				5.2

Annual PE2 for S-7616-20-0				
Description	**Operating Capacity (hr/yr)**	**Grain Loading (gr/dscf)**	**Air Flow to Collector (acfm)**	**Annual Emissions (lb-PM10/yr)**
Feedstock Bunkers Vent	4,380	0.001	12,600	473
Feedstock Crusher Vent	4,380	0.001	12,600	473
Total Emissions (lb-PM10/yr)				946

Gasification System (S-7616-21-0)

The gasification system has potential fugitive emissions from the process streams serving the gasification system components.

The table below summarizes the emissions which were calculated in the Fugitive Emission Calculations spreadsheet in Appendix E.

Potential Fugitive Emissions for S-7616-21		
Pollutant	**Daily Emissions (lb/day)**	**Annual Emissions (lb/yr)**
NO_X	0	0
SO_X	0	0
PM_{10}	0	0
CO	24.5	8,925
VOC	86.6	31,604

Gasification Solids Material Handling System (S-7616-22-0)

Daily PE2 for S-7616-22-0				
Description	**Operating Capacity (hr/day)**	**Grain Loading (gr/dscf)**	**Air Flow to Collector (acfm)**	**Daily Emissions (lb-PM10/day)**
Gasification Solids Bucket Elevator	24	0.001	3,000	0.6
Gasification Solids Transfer Tower	8 avg (24 max)	0.001	3,000	0.6
Gasification Solids Load-Out System	8 avg (24 max)	0.001	10,000	2.1
Gasification Solids Pad - Stacking	(See Calculations below.)			0.13
Gasification Solids Pad - Reclaim				0.23
Total Emissions (lb-PM10/day)				3.6

Annual PE2 for S-7616-22-0				
Description	**Operating Capacity (hr/yr)**	**Grain Loading (gr/dscf)**	**Air Flow to Collector (acfm)**	**Annual Emissions (lb-PM10/yr)**
Gasification Solids Bucket Elevator	8,760	0.001	3,000	225.3
Gasification Solids Transfer Tower	1,248	0.001	3,000	32.1
Gasification Solids Load-Out System	1,248	0.001	10,000	107.0
Gasification Solids Pad - Stacking	(See Calculations below.)			48.1
Gasification Solids Pad - Reclaim				85.2
Total Emissions (lb-PM10/yr)				498

Fugitive particulate emissions from the gasification solids handling on the drying pad are calculated using the following formula from U.S. EPA AP-42 Section 13.2.4.3:

$$E = k(0.0032)(U/5)^{1.3}/(M/2)^{1.4}$$

where:

E = emission factor, lb/ton
K = constant (0.35 for PM10)
U = wind speed, mph (7.61 for outdoors at the project site)
M = material moisture content, wt % (12% for solids stacking; 8% for solids reclaim)

<u>Solids stacking</u>:

$$E = k(0.0032)(U/5)^{1.3}/(M/2)^{1.4}$$
$$= 0.35(0.0032)(7.61/5)^{1.3}/(12/2)^{1.4}$$
$$= 0.000157 \text{ lb-PM10/ton}$$

PE, solids stacking = (0.000157 lb-PM10/ton)(35 ton/hr)(24 hr/day)
= 0.13 lb-PM10/day
= (0.13 lb-PM10/day)(365 day/yr) = 48.1 lb-PM10/yr

<u>Solids reclaim</u>:

$$E = k(0.0032)(U/5)^{1.3}/(M/2)^{1.4}$$
$$= 0.35(0.0032)(7.61/5)^{1.3}/(8/2)^{1.4}$$
$$= 0.000278 \text{ lb-PM10/ton}$$

PE, solids reclaim = (0.000278 lb-PM10/ton)(35 ton/hr)(24 hr/day)
= 0.23 lb-PM10/day
= (0.23 lb-PM10/day)(365 day/yr) = 85.2 lb-PM10/yr

Sulfur Recovery System's Tail Gas Thermal Oxidizer (S-7616-23-0)

Pollutant	Daily PE2 (S-7616-23-0)									
	Process Vent Disposal in TGTO				SRU Startup Disposal in TGTO				SRU Fugitive Emissions (lb/day)[32]	Daily PE2 (lb/day)[33]
	EF2 (lb/MMBtu)	Heat Input (MMBtu/hr)[34]	Operating Schedule (hr/day)	**Daily PE2 (lb/day)**	EF2 (lb/MMBtu)	Heat Input (MMBtu/hr)	Operating Schedule (hr/day)	**Daily PE2 (lb/day)**		
NO_X	0.24	13	24	74.9	0.24	80	24	460.8	0.0	535.7
SO_X	2.0 lb/hr		24	48.0	0.00204	80	24	3.9	0.0	51.9
PM_{10}	0.0076	13	24	2.4	0.0076	80	24	14.6	0.0	17.0
CO	0.20	13	24	62.4	0.20	80	24	384.0	2.7	449.1
VOC	0.0055	13	24	1.7	0.0055	80	24	10.6	0.0	12.3

Pollutant	Annual PE2 (S-7616-23-0)									
	Process Vent Disposal in TGTO				SRU Startup Disposal in TGTO				SRU Fugitive Emissions (lb/yr)	Annual PE2 (lb/yr)[35]
	EF2 (lb/MMBtu)	Heat Input (MMBtu/hr)	Operating Schedule (hr/yr)	**Annual PE2 (lb/yr)**	EF2 (lb/MMBtu)	Heat Input (MMBtu/hr)	Operating Schedule (hr/yr)	**Annual PE2 (lb/yr)**		
NO_X	0.24	13	8314	25,940	0.24	80	48	922	0	26,861
SO_X	2.0 lb/hr		8314	16,628	0.00204	80	48	8	0	16,636
PM_{10}	0.0076	13	8314	821	0.0076	80	48	29	0	851
CO	0.20	13	8314	21,616	0.20	80	48	768	969	23,353
VOC	0.0055	13	8314	594	0.0055	80	48	21	0	616

[32] Fugitive emissions from the components serving the following streams are attributed to S-7616-23: ammonia-laden gas, sulfur, tail gas unit process gas. Fugitive emission calculations are found in Appendix C.

[33] The maximum daily PE2 for S-7616-23 will be the sum of the fugitive emissions and on the highest of the Process Vent Disposal or the SRU Startup Disposal emissions.

[34] Although the natural gas assist burner has a maximum rating of 16 MMBtu/hr, the applicant proposes to limit the heat input rating to 13 MMBtu/hr during normal operation.

[35] The maximum annual PE2 for S-7616-23 will be the sum of the fugitive emissions, the Process Vent Disposal, and the SRU Startup Disposal emissions.

CO2 Recovery and Vent System (S-7616-24-0)

$PE2_{VOC}$ = (40 scf-VOC/1E6 scf)(lb-mol-VOC/379.5 scf-VOC)(16 lb-VOC/lbmol-VOC)(379.5 scf/lbmol)(17,584 lbmol/hr)(24 hr/day)
= 270.1 lb-VOC/day = 11.25 lb-VOC/hr

$PE2_{VOC}$ = (40 scf-VOC/1E6 scf)(lbmol-VOC/379.5 scf-VOC)(16 lb-VOC/lbmol-VOC)(379.5 scf/lbmol)(17,584 lbmol/hr)(504 hr/yr)
= 5,672 lb-VOC/yr = 2.34 tons-VOC/yr

$PE2_{CO}$ = (1,000 scf-CO/1E6 scf)(lbmol-CO/379.5 scf-CO)(28 lb-CO/lbmol-CO)(379.5 scf/lbmol)(17,584 lbmol/hr)(24 hr/day)
= 11,816.5 lb-CO/day = 492.35 lb-CO/hr

$PE2_{CO}$ = (1,000 scf-CO/1E6 scf)(lbmol-CO/379.5 scf-CO)(28 lb-CO/lbmol-CO)(379.5 scf/lbmol)(17,584 lbmol/hr)(504 hr/yr)
= 248,145 lb-CO/yr = 124.07 tons-CO/yr

$PE2_{H2S}$ = (10 scf-H2S/1E6 scf)(lbmol-H2S/379.5 scf-H2S)(34 lb-H2S/lbmol-H2S)(379.5 scf/lbmol)(17,584 lbmol/hr)(24 hr/day)
= 143.5 lb-H2S/day = 5.98 lb-H2S/hr

$PE2_{H2S}$ = (10 scf-H2S/1E6 scf)(lbmol- H2S /379.5 scf-H2S)(34 lb-H2S/lbmol-H2S)(379.5 scf/lbmol)(17,584 lbmol/hr)(504 hr/yr)
= 3,013 lb-H2S/yr = 1.51 tons-H2S/yr

Natural Gas-Fired Auxiliary Boiler (S-7616-25-0)

The PE2 for each pollutant is calculated with the following equation:

PE2 = EF (lb/MMBtu) × Heat Input (MMBtu/hr) × Operating Schedule (hr/day or hr/year)

Pollutant	Daily PE2 for S-7616-25-0			
	EF2 (lb/MMBtu)	Heat Input (MMBtu/hr)	Operating Schedule (hr/day)	Daily PE2 (lb/day)
NO_X	0.006	213	24	30.7
SO_X	0.00285	213	24	14.6
PM_{10}	0.0050	213	24	25.6
CO	0.037	213	24	189.1
VOC	0.0040	213	24	20.4

Pollutant	Annual PE2 for S-7616-25-0		
	EF2 (lb/MMBtu)	Annual Heat Input Limit (billion Btu/hr)	Annual PE2 (lb/year)
NO_X	0.006	466	2,796
SO_X	0.00285	466	1,328
PM_{10}	0.0050	466	2,330
CO	0.037	466	17,242
VOC	0.0040	466	1,864

<u>Cooling Towers (S-7616-27-0, -28-0, and -29-0)</u>:

<u>Cooling Tower Serving Power Block and Process Units (S-7616-27-0)</u>

PE_{PM10} = Drift rate x TDS (lb/gallon) x Water throughput (gal/min) x 60 min/hr x 24 hr/day
PE_{PM10} = (0.000005)(75.06 lb/1000 gallon)(162,582 gal/min)(60 min/hr)(24 hr/day)
= 87.9 lb-PM10/day
PE_{PM10} = (0.000005)(75.06 lb/1000 gallon)(162,582 gal/min)(60 min/hr)(8,314 hr/yr)
= 30,438 lb-PM10/yr

<u>Cooling Tower Serving Air Separation Unit (S-7616-28-0)</u>

PE_{PM10} = Drift rate x TDS (lb/gallon) x Water throughput (gal/min) x 60 min/hr x 24 hr/day
PE_{PM10} = (0.000005)(25.02 lb/1000 gallon)(44,876 gal/min)(60 min/hr)(24 hr/day)
= 8.1 lb-PM10/day
PE_{PM10} = (0.000005)(25.02 lb/1000 gallon)(44,876 gal/min)(60 min/hr)(8,314 hr/yr)
= 2,800 lb-PM10/yr

Cooling Tower Serving Power Block (S-7616-29-0)

PE_{PM10} = Drift rate x TDS (lb/gallon) x Water throughput (gal/min) x 60 min/hr x 24 hr/day
PE_{PM10} = (0.000005)(75.06 lb/1000 gallon)(95,000 gal/min)(60 min/hr)(24 hr/day)
= 51.3 lb-PM10/day
PE_{PM10} = (0.000005)(75.06 lb/1000 gallon)(95,500 gal/min)(60 min/hr)(8,668 hr/yr)
= 18,543 lb-PM10/yr

Flares (S-7616-30-0, -31-0, and -32-0)

4,000 MMBtu/hr Gasification Flare (S-7616-30-0):

Gasification Flare (S-7616-30-0) - Daily Potential Emissions											
	0.5 MMBtu/hr Natural Gas Pilot		**Flaring Natural Gas (Startup)**		**Flaring Unshifted Syngas (Startup)**		**Flaring Shifted Syngas (Startup)**		**Flaring Shifted Syngas (Shutdown)**		**Total Daily Emissions (lb/day)**
Incineration rate (MMBtu/day):	(0.5 MMBtu/hr) (24 hr/day)	12.0	(3 hr/ day)(2,926 MMBtu/hr) =	8,778	(2 hr/ day)(2,386 MMBtu/hr) =	4,772	(5 hr/ day)(2,413 MMBtu/hr) =	12,065	(4 hr/ day)(2,413 MMBtu/hr) =	9,652	
Pollutant	Emission Factor (lb/MMBtu)	Daily Emissions (lb/day)	Emission Factor (lb/MMBtu)	Daily Emissions (lb/day)	Emission Factor (lb/MMBtu)	Daily Emissions (lb/day) *	Emission Factor (lb/MMBtu)	Daily Emissions (lb/day) *	Emission Factor (lb/MMBtu)	Daily Emissions (lb/day)	
NO_X	0.068	0.82	0.068	596.9	0.068	324.5	0.068	820.4	0.068	656.3	2,399.0
SO_X	0.00214	0.03	0.00214	18.8	0	0.0	0	0.0	0	0.0	18.8
PM_{10}	0.003	0.04	0.003	26.3	0	0.0	0	0.0	0	0.0	26.4
CO	0.08	0.96	0.08	702.2	2	9544.0	0.37	9544.0	0.37	9544.0	29,335.2
VOC	0.0013	0.02	0.0013	11.4	0	0.0	0	0.0	0	0.0	11.4

Gasification Flare (S-7616-30-0) - Annual Potential Emissions											
	0.5 MMBtu/hr Natural Gas Pilot		**Flaring Natural Gas (Startup)**		**Flaring Unshifted Syngas (Startup)**		**Flaring Shifted Syngas (Startup)**		**Flaring Shifted Syngas (Shutdown)**		**Total Annual Emissions (lb/yr)**
Incineration rate (MMBtu/yr):	(0.5 MMBtu/hr)(876 0 hr/yr) =	4,380	(3 hr) (2,926 MMBtu/hr)(2 /yr) =	17,556	(2 hr) (2,386 MMBtu/hr)(2 /yr) =	9,544	(5 hr) (2,413 MMBtu/hr) (2 /yr) =	24,130	(4 hr) (2,413 MMBtu/hr)(2 /yr) =	19,304	
Pollutant	Emission Factor (lb/MMBtu)	Annual Emissions (lb/yr)	Emission Factor (lb/MMBtu)	Annual Emissions (lb/yr)	Emission Factor (lb/MMBtu)	Annual Emissions (lb/yr)	Emission Factor (lb/MMBtu)	Annual Emissions (lb/yr)	Emission Factor (lb/MMBtu)	Annual Emissions (lb/yr))	
NO_X	0.068	298	0.068	1194	0.068	649	0.068	1641	0.068	1313	5,094
SO_X	0.00214	9	0.00214	38	0	0	0	0	0	0	47
PM_{10}	0.003	13	0.003	53	0	0	0	0	0	0	66
CO	0.08	350	0.08	1404	2	1908 8	0.37	8928	0.37	7142	36,913
VOC	0.0013	6	0.0013	23	0	0	0	0	0	0	29

SRU Flare (S-7616-31-0):

SRU Flare (S-7616-31-0) - Daily Potential Emissions					
Pollutant	**From 0.3 MMBtu/hr Pilot**		**From SRU Flare Operation**		**Maximum Emissions (lb/day)**
	Emission Factor (lb/MMBtu)	Daily Emissions (lb/day)	Emission Factor (lb/hr)	Daily Emissions (lb/day) based on 24 hr/day and 36 MMBtu/hr planned flaring limit	Total
NO_X	0.068	0.5	2.4	58.8	59.3
SO_X	0.00214	0.02	18.4	441.6	441.6
PM_{10}	0.003	0.02	0.11	2.6	2.6
CO	0.08	0.6	2.9	69.6	70.2
VOC	0.0013	0.009	0.05	1.2	1.2

SRU Flare (S-7616-31-0) – Annual Potential Emissions					
Pollutant	**From 0.3 MMBtu/hr Pilot**		**From SRU Flare Operation**		**Maximum Emissions (lb/yr)**
	Emission Factor (lb/MMBtu)	Annual Emissions (lb/yr) based on 8760 hr/yr	Emission Factor (lb/hr)	Annual Emissions (lb/yr) based on 40 hr/yr and 36 MMBtu/hr planned flaring limit	Total
NO_X	0.068	179	2.4	98	277
SO_X	0.00214	6	18.4	736	742
PM_{10}	0.003	8	0.11	4	12
CO	0.08	210	2.9	116	326
VOC	0.0013	3	0.05	2	5

Rectisol Flare (S-7616-32-0):

Rectisol Flare (S-7616-32-0) - Daily Potential Emissions					
Pollutant	**From 0.3 MMBtu/hr Pilot**		**From Rectisol Flare Operation**		**Maximum Emissions (lb/day)**
	Emission Factor (lb/MMBtu)	Daily Emissions (lb/day)	Emission Factor (lb/hr)	Daily Emissions (lb/day) based on 8 hr/day and 430 MMBtu/hr planned flaring limit	Total (lb/day)
NO_X	0.068	0.5	29.2	233.6	234.1
SO_X	0.00214	0.02	15.0	120	120.0
PM_{10}	0.003	0.02	1.29	10.3	10.3
CO	0.08	0.6	34.4	275.2	275.8
VOC	0.0013	0.009	0.559	13.4	4.5

Rectisol Flare (S-7616-32-0) - Annual Potential Emissions					
Pollutant	**From 0.3 MMBtu/hr Pilot**		**From Rectisol Flare Operation**		**Maximum Emissions (lb/yr)**
	Emission Factor (lb/MMBtu)	Annual Emissions (lb/yr) based on 8760 hr/yr	Emission Factor (lb/hr)	Annual Emissions (lb/yr) based on 40 hr/yr and 430 MMBtu/hr planned flaring limit	Total (lb/yr)
NO_X	0.068	179	29.2	1,168	1,347
SO_X	0.00214	6	15.0	600	606
PM_{10}	0.003	8	1.29	52	60
CO	0.08	210	34.4	1,376	1,586
VOC	0.0013	3	0.559	22	25

<u>Ammonia Synthesis Plant (S-7616-33-0)</u>

Ammonia Synthesis Plant Startup Heater

The PE2 for the ammonia synthesis startup heater for each pollutant is calculated with the following equation:

PE2 = EF (lb/MMBtu) × Heat Input (MMBtu/hr) × Operating Schedule (hr/day or hr/year)

Pollutant	Daily PE2 for Startup Heater			
	EF2 (lb/MMBtu)	Heat Input (MMBtu/hr)	Operating Schedule (hr/day)	Daily PE2 (lb/day)
NO_X	0.011	56	24	14.8
SO_X	0.00285	56	24	3.8
PM_{10}	0.0050	56	24	6.7
CO	0.037	56	24	49.7
VOC	0.0040	56	24	5.4

Pollutant	Annual PE2 for Startup Heater		
	EF2 (lb/MMBtu)	Annual Heat Input Limit (billion Btu/yr)	Annual PE2 (lb/year)
NO_X	0.011	7.84	86
SO_X	0.00285	7.84	22
PM_{10}	0.0050	7.84	39
CO	0.037	7.84	290
VOC	0.0040	7.84	31

Potential Fugitive Emissions for S-7616-33-0		
Pollutant	**Daily Emissions (lb/day)**	**Annual Emissions (lb/yr)**
NO_X	0	0
SO_X	0	0
PM_{10}	0	0
CO	5.9	2,140
VOC	0	0

PE2 for S-7616-33-0 (from Heater and Fugitive Emissions)		
Pollutant	**Daily Emissions (lb/day)**	**Annual Emissions (lb/yr)**
NO_X	14.8	86
SO_X	3.8	22
PM_{10}	6.7	39
CO	49.7 + 5.9 = 54.7	290 + 2,140 = 2,430
VOC	5.4	31

<u>Urea Unit (S-7616-34-0)</u>

Urea Absorbers:

The only emissions associated with the HP and LP urea absorbers are in the form of ammonia.

Daily PE2:

$PE2_{NH3}$ = (13.1 lb-NH3/hr)(24 hr/day)
= 314.4 lb-NH3/day

Annual PE2:

$PE2_{NH3}$ = (13.1 lb-NH3/hr)(8,052 hr/yr)
= 105,481 lb-NH3/yr

Urea Pastillation Unit:

Emissions are based on the air flow to the collector, hours of operation, and the outlet dust loading of each baghouse. Below is a sample calculation:

Daily PE2 = (Air Flow to Collector)(Grain Loading)
= (1,500 ft^3/min)(24 hr x 60 min/hr)(0.001 gr/dscf)(lb/7,000 gr)
= 0.31 lb-PM10/day

Daily PE2 for S-7616-34-0				
Description	**Operating Capacity (hr/day)**	**Grain Loading (gr/dscf)**	**Air Flow to Collector (acfm)**	**Daily Emissions (lb-PM10/day)**
30: Urea Bucket Elevator	24	0.001	1,500	0.31
Total Emissions (lb-PM10/day)				0.3

Annual PE2 = (Air Flow to Collector)(Grain Loading)
= (1,500 ft^3/min)(8,760 hr/yr x 60 min/hr)(0.001 gr/dscf)(lb/7,000 gr)
= 112.6 lb-PM10/yr

Annual PE2 for S-7616-34-0				
Description	**Operating Capacity (hr/yr)**	**Grain Loading (gr/dscf)**	**Air Flow to Collector (acfm)**	**Annual Emissions (lb-PM10/yr)**
Urea Bucket Elevator	8,760	0.001	1,500	112.6
Total Emissions (lb-PM10/yr)				113

Nitric Acid Unit (S-7616-35-0)

Daily PE2:

$PE2_{NOx}$ = (501 ton/day of nitric acid)(0.2 lb-NOx/ton of nitric acid)
= 100.2 lb-NOx/day

$PE2_{NH3}$ = (0.5 lb-NH3/hr)(24 hr/day)
= 12.0 lb-NH3/day

Annual PE2:

$PE2_{NOx}$ = (501 ton/24 hr of nitric acid)(0.2 lb-NOx/ton of nitric acid)(8,052 hr/yr)
= 33,617 lb-NOx/yr

$PE2_{NH3}$ = (0.5 lb-NH3/hr)(8,052 hr/yr)
= 4,026 lb-NH3/yr

Ammonium Nitrate Unit (S-7616-36-0)

Daily PE2:

$PE2_{PM10}$ = (0.2 lb-PM10/hr)(24 hr/day)
= 4.8 lb-PM10/day

Annual PE2:

$PE2_{PM10}$ = (0.2 lb-PM10/hr)(8,000 hr/yr)
= 1,600 lb-PM10/yr

Urea Storage and Handling Operation (S-7616-37-0)

Daily PE2 for S-7616-37-0				
Description	**Operating Capacity (hr/day)**	**Grain Loading (gr/dscf)**	**Air Flow to Collector (acfm)**	**Daily Emissions (lb-PM10/day)**
Urea Transfer Tower 1	24	0.001	1,500	0.31
Urea Transfer Tower 2	24	0.001	1,500	0.31
Urea Transfer Tower 3	24	0.001	1,500	0.31
Urea Transfer Tower 4	24	0.001	1,500	0.31
Urea Transfer Tower 5	8 avg (24 max)	0.001	1,500	0.31
Urea Loading Vent	8 avg (24 max)	0.001	20,000	4.11
Total Emissions (lb-PM10/day)				5.7

Annual PE2 for S-7616-37-0				
Description	**Operating Capacity (hr/yr)**	**Grain Loading (gr/dscf)**	**Air Flow to Collector (acfm)**	**Annual Emissions (lb-PM10/yr)**
Urea Transfer Tower 1	8,760	0.001	1,500	112.6
Urea Transfer Tower 2	2,190	0.001	1,500	28.2
Urea Transfer Tower 3	4,380	0.001	1,500	56.3
Urea Transfer Tower 4	2,190	0.001	1,500	28.2
Urea Transfer Tower 5	2,080	0.001	1,500	26.7
Urea Loading Vent	2,080	0.001	20,000	356.6
Total Emissions (lb-PM10/yr)				609

Diesel-Fired Emergency Engines Powering Electrical Generators (S-7616-38-0 and -39-0)

Daily Post-Project Emissions (for Each Engine)					
Pollutant	Emissions Factor (g/bhp-hr)	Rating (bhp)	Daily Hours of Operation (hr/day)	Conversion (g/lb)	PE2 Total (lb/day)
NO_X	0.5	2,922	24	453.6	77.3
SO_X	0.0051	2,922	24	453.6	0.8
PM_{10}	0.07	2,922	24	453.6	10.8
CO	2.6	2,922	24	453.6	402.0
VOC	0.3	2,922	24	453.6	46.4

Annual Post-Project Emissions (for Each Engine)					
Pollutant	Emissions Factor (g/bhp-hr)	Rating (bhp)	Annual Hours of Operation (hr/yr)	Conversion (g/lb)	PE2 Total (lb/yr)
NO_X	0.5	2,922	50	453.6	161
SO_X	0.0051	2,922	50	453.6	2
PM_{10}	0.07	2,922	50	453.6	23
CO	2.6	2,922	50	453.6	837
VOC	0.3	2,922	50	453.6	97

Diesel-Fired Emergency Engine Powering Firewater Pump (S-7616-40-0)

Daily Post-Project Emissions (for Engine S-7616-40)					
Pollutant	Emissions Factor (g/bhp-hr)	Rating (bhp)	Daily Hours of Operation (hr/day)	Conversion (g/lb)	PE2 Total (lb/day)
NO_X	1.5	556	24	453.6	44.1
SO_X	0.0051	556	24	453.6	0.2
PM_{10}	0.01	556	24	453.6	0.3
CO	2.6	556	24	453.6	76.5
VOC	0.14	556	24	453.6	4.1

Annual Post-Project Emissions (for Engine S-7616-40-0)					
Pollutant	Emissions Factor (g/bhp-hr)	Rating (bhp)	Annual Hours of Operation (hr/yr)	Conversion (g/lb)	PE2 Total (lb/yr)
NO_X	1.5	556	100	453.6	184
SO_X	0.0051	556	100	453.6	1
PM_{10}	0.01	556	100	453.6	1
CO	2.6	556	100	453.6	319
VOC	0.14	556	100	453.6	17

3. Pre-Project Stationary Source Potential to Emit (SSPE1)

Pursuant to Section 4.9 of District Rule 2201, the Pre-Project Stationary Source Potential to Emit (SSPE1) is the Potential to Emit (PE) from all units with valid Determination of Compliance (DOC) at the Stationary Source and the quantity of emission reduction credits (ERC) which have been banked since September 19, 1991 for Actual Emissions Reductions that have occurred at the source, and which have not been used on-site.

Since this is a new facility, there are no valid DOC or ERCs banked at the Stationary Source; therefore, the SSPE1 will be equal to zero.

4. Post-Project Stationary Source Potential to Emit (SSPE2)

Pursuant to Section 4.10 of District Rule 2201, the Post-Project Stationary Source Potential to Emit (SSPE2) is the Potential to Emit (PE) from all units with valid Determinations of Compliance (DOC) at the Stationary Source and the quantity of emission reduction credits (ERC) which have been banked since September 19, 1991 for Actual Emissions Reductions that have occurred at the source, and which have not been used on-site.

Post-Project Stationary Source Potential to Emit [SSPE2] (lb/year)						
Unit	NO_X	SO_X	PM_{10}	$PM_{2.5}$[36]	CO	VOC
S-7616-17-0 - Rail unloading, transfer	0	0	267	267	0	0
S-7616-18-0 - Truck unloading, transfer	0	0	535	535	0	0
S-7616-19-0 - Feedstock storage, blending, reclaim	0	0	39	39	0	0
S-7616-20-0 - Feedstock drying, crushing operation	0	0	946	946	0	0
S-7616-21-0 - Gasification system	0	0	0	0	8,925	31,604
S-7616-22-0 - Gasification solids handling	0	0	498	498	0	0
S-7616-23-0 - Sulfur recovery	26,861	16,636	851	851	23,353	616
S-7616-24-0 - CO2 recovery, vent	0	0	0	0	248,145	5,672
S-7616-25-0 - Auxiliary boiler	2,796	1,328	2,330	2,330	17,242	1,864
S-7616-26-0 - Combined cycle power generating system + Feedstock dryer	212,953 +33,773 =	34,445 +5,605 =	107,813 +11,257 =	107,813 +11,257 =	177,980 +25,528 =	30,506+ 4,816 =
	246,726	40,050	119,070	119,070	203,508	35,322
S-7616-27-0 - Cooling tower	0	0	30,438	18,262	0	0
S-7616-28-0 - Cooling tower	0	0	2,802	1,681	0	0
S-7616-29-0 - Cooling tower	0	0	18,543	11,126	0	0
S-7616-30-0 - Flare	5094	47	66	66	36,913	29
S-7616-31-0 - Flare	277	742	12	12	326	5
S-7616-32-0 - Flare	1,347	606	60	60	1,586	25
S-7616-33-0 – Ammonia startup heater	86	22	39	39	2,430	31
S-7616-34-0 – Urea unit	0	0	113	113	0	0
S-7616-35-0 – Nitric acid unit	33,617	0	0	0	0	0
S-7616-36-0 – Ammonium nitrate unit	0	0	1,600	1,600	0	0
S-7616-37-0 - Urea storage and handling	0	0	609	609	0	0
S-7616-38-0 - Emergency engine	161	2	23	23	837	97
S-7616-39-0 – Emergency engine	161	2	23	23	837	97
S-7616-40-0 – Emergency engine	184	1	1	1	319	17
	NO_X	SO_X	PM_{10}	$PM_{2.5}$	CO	VOC
Post-Project SSPE (SSPE2)	317,310	59,436	178,863	158,151	544,421	75,379

[36] A fraction ratio of 0.6 $PM_{2.5}$:PM_{10} is assumed for the cooling towers as is explained in Section VI.

5. Major Source Determination

Rule 2201 Major Source Determination

Pursuant to District Rule 2201, a Major Source is a stationary source with a SSPE2 equal to or exceeding one or more of the following threshold values. However, for the purposes of determining major source status, the SSPE2 shall not include the quantity of ERCs which have been banked since September 19, 1991 for AER that have occurred at the source, and which have not been used on-site."

Major Source Determination (lb/year)						
	NO_X	SO_X	PM_{10}	$PM_{2.5}$	CO	VOC
SSPE1	0	0	0	0	0	0
SSPE2	317,310	59,436	178,863	158,151	544,421	75,379
Major Source Threshold	20,000	140,000	140,000	200,000	200,000	20,000
Major Source?	Yes	No	Yes	No	Yes	Yes

As seen in the table above, the facility is not an existing Major Source for any pollutant; however, is becoming a Major Source for NOx, PM10, CO, and VOC emissions as a result of this project.

Rule 2410 Major Source Determination

The facility or the equipment evaluated under this project is listed as one of the categories specified in 40 CFR 52.21 (b)(1)(i). Therefore the following PSD Major Source thresholds are applicable.

PSD Major Source Determination (tons/year)							
	NO2	VOC	SO2	CO	PM	PM10	CO2e
Estimated Facility PE before Project Increase	0	0	0	0	0	0	0
PSD Major Source Thresholds	100	100	100	100	100	100	100,000
PSD Major Source ? (Y/N)	No	No	No	No	No	No	No

As shown above, the facility is not an existing major source for PSD for at least one pollutant. Therefore the facility is not an existing major source for PSD.

6. Baseline Emissions (BE)

The BE calculation (in lb/year) is performed pollutant-by-pollutant for each unit within the project to calculate the QNEC, and if applicable, to determine the amount of offsets required.

Pursuant to District Rule 2201, BE = PE1 for:

- Any unit located at a non-Major Source,
- Any Highly-Utilized Emissions Unit, located at a Major Source,
- Any Fully-Offset Emissions Unit, located at a Major Source, or
- Any Clean Emissions Unit, located at a Major Source.

otherwise,

BE = Historic Actual Emissions (HAE), calculated pursuant to District Rule 2201.

Since these are all new emission units, BE = PE1 = 0 for all criteria pollutants.

7. SB 288 Major Modification

SB 288 Major Modification is defined in 40 CFR Part 51.165 as "any physical change in or change in the method of operation of a major stationary source that would result in a significant net emissions increase of any pollutant subject to regulation under the Act."

Since this facility is a new major source, it is not an SB 288 major modification.

8. Federal Major Modification

As shown above, this project does not constitute a Major Modification. Therefore, in accordance with District Rule 2201, Section 3.17, this project does not constitute a Federal Major Modification and no further discussion is required.

9. Rule 2410 – Prevention of Significant Deterioration (PSD) Applicability Determination

Rule 2410 applies to pollutants for which the District is in attainment or for unclassified pollutants. The pollutants addressed in the PSD applicability determination are listed as follows:

- NO2 (as a primary pollutant)
- SO2 (as a primary pollutant)
- CO
- PM
- PM10
- VOC
- Greenhouse gases (GHG): CO2, N2O, CH4, HFCs, PFCs, and SF6
- Lead
- Fluorides
- Sulfuric acid mist
- Hydrogen sulfide
- Total reduced sulfur (including H2S)
- Reduced sulfur compounds (including H2S)

The first step of this PSD evaluation consists of determining whether the facility is an existing PSD Major Source. As shown in Section VII.C.5, the facility is not an existing major source for PSD.

As the facility is a new major source for PSD, the second step of the PSD evaluation is to determine if the emission increases due to the facility are above the PSD significance thresholds.

Potential to Emit for New Emission Units vs PSD Major Source Thresholds

The project potential to emit from all new units is compared to the PSD major source threshold.

The equipment evaluated under this project is listed as one of the categories specified in 40 CFR 52.21 (b)(1)(i). Therefore the following PSD Major Source thresholds are applicable.

PSD Major Source Determination: Potential to Emit (tons/year)							
	NO2	VOC	SO2	CO	PM	PM10	CO2e
Total PE from New Units	158.7	37.7	29.7	272.2	89.4	89.4	595,917
PSD Major Source threshold	100	100	100	100	100	100	100,000
New PSD Major Source?	Yes	No	No	Yes	No	No	Yes

As demonstrated in the table above, the project potential to emit, for all new emission units exceeds one or more of the PSD major source thresholds. Therefore, the facility is a new major source for PSD.

I. Significance of Project Emission Increase Determination for Each Attainment/Unclassified Pollutant

a. Project Location Relative to Class 1 Area

As demonstrated in the section above, the project emission increase, for all new and modified emission units, exceeds one or more of the PSD major source thresholds. Because the project is not located within 10 km of a Class 1 area – modeling of the emission increase is not required to determine if the project is subject to the requirements of Rule 2410.

b. PSD Significant Emission Increase Determination For Each Attainment/ Unclassified Pollutant

As demonstrated above, the project was determined to be a new PSD major source for at least one pollutant. As a result, a PSD significant emission increase determination for all attainment/unclassified pollutant is required.

Below is a comparison of the emission increases for the project and the PSD significance thresholds.

PSD Significant Emission Increase Determination: Emission Increase (ton/yr)						
	NO2	SO2	CO	PM	PM10	CO2e
Emission Increases only	158.7	29.7	272.2	89.4	89.4	595,917
PSD Significance Threshold	40	40	100	25	15	75,000
Significant Emission Increase?	Yes	No	Yes	Yes	Yes	Yes

Additionally, the PSD significance thresholds and the emission increases[37] for the following pollutants are listed in the table below:

PSD Significant Emission Increase Determination: Emission Increase (ton/yr)			
	Emission increases only	PSD Significance Threshold	Significant Emission Increase?
Lead	0.007	0.6	No
Fluorides	0.001	3	No
Sulfuric acid mist	1.14	7	No
Hydrogen sulfide (H2s)	2.64	10	No
Total reduced sulfur (including H2S)	4.17	10	No
Reduced sulfur compounds (including H2S)	4.42	10	No
Municipal waste combustor organics (measured as total tetra-through octa-chlorinated dibenzo-p-dioxins and dibenzofurans)	0	3.5×10^{-6}	No
Municipal waste combustor metals (measured as particulate matter)	0	15	No
Municipal waste combustor acid gases (measured as sulfur dioxide and hydrogen chloride)	0	40	No
Municipal solid waste landfills emissions (measured as nonmethane organic compounds)	0	50	No

As demonstrated in the two tables above, the project results in a PSD significant emissions increase for the following pollutants: NO2, CO, PM, PM10, and CO2e. As such, the project is subject to Rule 2410 for NO2, CO, PM, PM10, and CO2e.

[37] These emission increases are tabulated in Table 8-4 of the PSD application, which is found in Appendix F of this evaluation.

Therefore, BACT and modeling is required for NO2, CO, PM, PM10. Please note that if the project is subject to Rule 2410 for greenhouse gas (GHG) emissions, BACT is required, but modeling is not required for CO2e (as there is not an AAQS for CO2e).

Rule 2410 Requirements

For projects subject to the requirements of District Rule 2410, the following are required:

I. BACT is required for NO2, CO, PM, PM10, and GHGs
II. Ambient air quality impact analysis (including secondary emissions), see 40CFR 52.21(k), (except for GHG emission increases)
III. Ambient air quality monitoring, see 40CFR 52.21(m), (except for GHG emission increases)
IV. Additional impact analyses, including visibility, soils, vegetation, see 40CFR 52.21(o), (except for GHG emission increases)
V. Public noticing requirements pursuant to Rule 2410 and District guidance

See Section VIII (Compliance) for a discussion of Rule 2410 compliance.

VIII. Compliance

<u>Rule 1080 - Stack Monitoring</u>

This rule grants the APCO the authority to request the installation and use of continuous emissions monitors (CEMs), and specifies performance standards for the equipment and administrative requirements for record keeping, reporting, and notification. The facility will be equipped with operational CEMs for NO_X, CO, and O_2. Provisions included in the DOC are consistent with the requirements of this Rule. Compliance with the requirements of this rule is anticipated.

S-7616-26-0 (Combustion Turbine Generator)

The CTG will be equipped with operational CEMs for NOx, CO, and O2. Provisions included in the DOC are consistent with the requirements of this Rule. Compliance with the requirements of this rule is anticipated.

Proposed Rule 1080 Conditions:

- The permittee shall install and maintain equipment, facilities, and systems compatible with the District's CEM data polling software system and shall make CEM data available to the District's automated polling system on a daily basis. [District Rule 1080]

- Upon notice by the District that the facility's CEM system is not providing polling data, the facility may continue to operate without providing automated data for a maximum of 30 days per calendar year provided the CEM data is sent to the District by a District-approved alternative method. [District Rule 1080]

- Results of continuous emissions monitoring shall be reduced according to the procedure established in 40 CFR, Part 51, Appendix P, paragraphs 5.0 through 5.3.3, or by other methods deemed equivalent by mutual agreement with the District, the ARB, and the EPA. [District Rule 1080]

- The owner or operator shall install, certify, maintain, operate and quality-assure a Continuous Emission Monitoring System (CEMS) which continuously measures and records the exhaust gas NO_X, CO and O_2 concentrations. Continuous emissions monitor(s) shall be capable of monitoring emissions during normal operating conditions, and during startups and shutdowns provided the CEMS pass the relative accuracy requirement for startups and shutdowns specified herein. If relative accuracy of CEMS cannot be demonstrated during startup conditions, CEMS results during startup and shutdown events shall be replaced with startup emission rates obtained from source testing to determine compliance with emission limits contained in this document. [District Rules 1080, 2201 and 4703 and 40 CFR 60.4335(b)(1)]

- APCO or an authorized representative shall be allowed to inspect, as determined to be necessary, the required monitoring devices to ensure that such devices are functioning properly. [District Rule 1080]

- The CEMS shall complete a minimum of one cycle of operation (sampling, analyzing, and data recording) for each successive 15-minute period or shall meet equivalent specifications established by mutual agreement of the District, the ARB and the EPA. [District Rule 1080 and 40 CFR 60.4345(b)]

- Audits of continuous emission monitors shall be conducted quarterly, except during quarters in which relative accuracy and compliance source testing are both performed, in accordance with EPA guidelines. The District shall be notified prior to completion of the audits. Audit reports shall be submitted along with quarterly compliance reports to the District. [District Rule 1080]

- The NO_X, CO and O_2 CEMS shall meet the requirements in 40 CFR 60, Appendix F Procedure 1 and Part 60, Appendix B Performance Specification 2 (PS 2), or shall meet equivalent specifications established by mutual agreement of the District, the ARB, and the EPA. [District Rule 1080 and 40 CFR 60.4345(a)]

- The owner/operator shall perform a relative accuracy test audit (RATA) for the NOx, CO, and O2 CEMs as specified by 40 CFR Part 60, Appendix F, 5.11, at least once every four calendar quarters. The permittee shall comply with the applicable requirements for quality assurance testing and maintenance of the continuous emission monitor equipment in accordance with the procedures and guidance specified in 40 CFR Part 60, Appendix F. [District Rule 1080]

- The permittee shall maintain the following records: date and time, duration, and type of any startup, shutdown, or malfunction; performance testing; evaluations, calibrations, checks, adjustments, any period during which a continuous monitoring system or monitoring device

was inoperative, and maintenance of any continuous emission monitor. [District Rules 1080, 2201, and 4703 and 40 CFR 60.8(d)]

- The owner or operator shall submit a written report of CEM operations for each calendar quarter to the APCO. The report is due on the 30th day following the end of the calendar quarter and shall include the following: Time intervals, data and magnitude of excess NO_X emissions, nature and the cause of excess (if known), corrective actions taken and preventative measures adopted; Averaging period used for data reporting corresponding to the averaging period specified in the emission test period and used to determine compliance with an emissions standard; Applicable time and date of each period during which the CEM was inoperative (monitor downtime), except for zero and span checks, and the nature of system repairs and adjustments; a negative declaration when no excess emissions occurred. [District Rule 1080 and 40 CFR 60.4375(a) and 60.4395]

- The owner or operator shall, upon written notice from the APCO, provide a summary of the data obtained from the CEM systems. This summary shall be in the form and the manner prescribed by the APCO. [District Rule 1080]

S-7616-35-0 (Nitric Acid Plant)

The nitric acid will be equipped with operational CEMs for NOx. Provisions included in the DOC are consistent with the requirements of this rule. Compliance with the requirements of this Rule is anticipated.

Proposed Rule 1080 Conditions:

- The permittee shall install, calibrate, maintain, and operate a continuous emission monitoring system (CEMS) for measuring and recording the concentration of NOx emissions in accordance with the provisions of Section 60.13 and Performance Specification 2 of Appendix B and Procedure 1 of Appendix F of part 60. [District Rules 2201, 1080, and 40 CFR 60 Subpart Ga]

- The permittee shall perform a relative accuracy test audit (RATA) for the NOx CEMS as specified by 40 CFR Part 60, Appendix F, 5.11, at least once every four calendar quarters. The permittee shall comply with the applicable requirements for quality assurance testing and maintenance of the continuous emission monitor equipment in accordance with the procedures and guidance specified in 40 CFR Part 60, Appendix F. [District Rule 1080 and 40 CFR 60 Subpart Ga]

- The permittee must operate and certify the continuous emissions rate monitoring system (CERMS) in accordance with the provisions of §60.13 and Performance Specification 6 of Appendix B of part 60 and the specifications of Section 60.73a (Subpart Ga). [District Rule 1080 and 40 CFR 60 Subpart Ga]

- The permittee must conduct an initial performance test to demonstrate compliance with the NOx emissions limit under §60.72a(a) beginning in the calendar month following initial certification of the NOx and flow rate monitoring CEMS. The initial performance test consists

of collection of hourly NOx average concentration, mass flow rate recorded with the certified NOx concentration and flow rate CEMS and the corresponding acid generation (tons) data for all of the hours of operation for the first 30 days beginning on the first day of the first month following completion of the CEMS installation and certification as described above. The permittee must assure that the CERMS meets all of the data quality assurance requirements as per §60.13 and Appendix F, Procedure 1, of this part and you must use the data from the continuous emissions rate monitoring system (CERMS) for this compliance determination. [District Rule 1080 and 40 CFR 60 Subpart Ga]

- The permittee shall maintain records of any modifications to CEMS which could affect the ability of the CEMS to comply with applicable performance specifications. For each malfunction, the permittee shall maintain records of the following information: (1) records of the occurrence and duration of each malfunction of operation (i.e., process equipment) or the air pollution control and monitoring equipment; (2) records of actions taken during periods of malfunction to minimize emissions in accordance with section 60.11(d), including corrective actions to restore malfunctioning process and air pollution control and monitoring equipment to its normal or usual manner of operation. [District Rule 1080 and 40 CFR 60 Subpart Ga]

- The permittee to submit performance test data from the initial and subsequent performance tests and from performance evaluations of the continuous monitors to the Administrator at the appropriate address as shown in 40 CFR 60.4. The permittee shall report to the Administrator for each 30 operating day period where the nitric acid plant was not in compliance with the emissions standard: (1) Time period; (2) NOx emission rates (lb/ton of acid produced); (3) Reasons for noncompliance with the emissions standard; and (4) Description of corrective actions taken. The permittee shall also report the following whenever they occur: (1) Times when the pollutant concentration exceeded full span of the NOx pollutant monitoring equipment; and (2) Times when the volumetric flow rate exceeded the high value of the volumetric flow rate monitoring equipment. [District Rule 1080 and 40 CFR 60 Subpart Ga]

<u>Rule 1081 - Source Sampling</u>

This rule requires adequate and safe facilities for using in sampling to determine compliance with emissions limits, and specifies methods and procedures for source testing and sample collection. The requirements of this rule will be included in the DOC. Compliance with this Rule is anticipated.

S-7616-26-0 (Combustion Turbine Generator)
Proposed Rule 1081 Conditions:

- The exhaust stack shall be equipped with permanent provisions to allow collection of stack gas samples consistent with EPA test methods and shall be equipped with safe permanent provisions to sample stack gases with a portable NOx, CO, and O2 analyzer during District inspections. The sampling ports shall be located in accordance with the CARB regulation titled California Air Resources Board Air Monitoring Quality Assurance Volume VI, Standard Operating Procedures for Stationary Emission Monitoring and Testing. [District Rule 1081]

- Source testing to measure startup and shutdown NOx, CO, and VOC mass emission rates shall be conducted prior to the end of the commissioning period and at least once every seven years thereafter. CEM relative accuracy shall be determined during startup source testing in accordance with 40 CFR 60, Appendix B. If CEM data is not certifiable to determine compliance with NOx and CO startup emission limits, then source testing to measure startup NOx and CO mass emission rates shall be conducted at least once every 12 months. [District Rule 1081]

- Source testing to measure the NOx, CO, VOC, and NH3 emission rates (lb/hr and ppmvd @ 15% O2) and PM10 emission rate (lb/hr) shall be conducted within 120 days after initial operation and at least once every twelve months thereafter. [District Rules 1081 and 4703 and 40 CFR 60.4400(a)]

- Compliance demonstration (source testing) shall be District witnessed, or authorized and samples shall be collected by a California Air Resources Board certified testing laboratory. Source testing shall be conducted using the methods and procedures approved by the District. The District must be notified 30 days prior to any compliance source test, and a source test plan must be submitted for approval 15 days prior to testing. The results of each source test shall be submitted to the District within 60 days thereafter. [District Rule 1081]

- The following test methods shall be used: NOx - EPA Method 7E or 20, PM10 - EPA Method 5/202 (front half and back half), CO - EPA Method 10 or 10B, O2 - EPA Method 3, 3A, or 20, VOC - EPA Method 18 or 25, and ammonia – EPA Method 206. EPA approved alternative test methods as approved by the District may also be used to address the source testing requirements of this DOC. The request to utilize EPA approved alternative source testing methods must be submitted in writing and written approval received from the District prior to the submission of the source test plan. [District Rules 1081 and 4703 and 40 CFR 60.4400(1)(i)]

S-7616-27-0 (Gasification Process Area Cooling Tower)
S-7616-28-0 (Air Separation Unit Cooling Tower)
S-7616-29-0 (Power Block Cooling Tower)
Proposed Rule 1081 Condition:

- Compliance with TDS limit shall be determined by cooling water sample analysis by independent laboratory within 60 days of initial operation and quarterly thereafter. [District Rule 1081]

S-7616-23-0 (Sulfur Recovery Unit/Themal Oxidizer)
Proposed Rule 1081 Conditions:

- Source testing shall be conducted using the methods and procedures approved by the District. The District must be notified at least 30 days prior to any compliance source test, and a source test plan must be submitted for approval at least 15 days prior to testing. [District Rule 1081]

- The results of each source test shall be submitted to the District within 60 days thereafter. [District Rule 1081]

- The following test methods shall be used NOx: EPA Method 7E or 20, CO: EPA method 10 or 10B, O2: EPA Method 3, 3A, or 20, VOC: EPA method 18 or 25 and SOx: EPA Method 6, 6B or 8. EPA or CARB approved alternative test methods as approved by the District may also be used to address the source testing requirements of this permit. [District Rules 1081 and 2201]

S-7616-24-0 (CO2 Recovery and Vent System)
Proposed Rule 1081 Conditions:

- Permittee shall conduct an initial speciated HAPs and total VOC source test for the CO2 recovery and vent system by District witnessed in situ sampling of vented stream by a qualified independent source test firm. The permittee shall determine the total HAPs emissions rate, the single highest HAP emission rate, and the VOC mass emission during the source test. Initial compliance with the HAPs emissions limit (25 tpy all HAPs or 10 tpy any single HAP) shall be demonstrated by the combined VOC emissions rates determined during initial compliance source testing and the correlation between VOC emissions and HAP(s). Ongoing compliance shall be determined using mass flow and VOC sampling during venting occurrences as described in the condition below. [District Rule 4002]

- The vent stream composition of CO, VOC, H2S, COS, and the HAPs identified in the initial speciated HAPs and total VOC source test, shall be measured during each venting occurrence exceeding 500,000 scf/day using EPA-approved test methods with a gas chromatograph or equivalent equipment as determined by the District in writing. [District Rule 2201]

S-7616-25-0 (Auxiliary Boiler)
Proposed Rule 1081 Conditions:

- This unit shall be tested for compliance with the NOx and CO emissions limits within 60 days of initial startup and at least once every twelve (12) months. After demonstrating compliance on two (2) consecutive annual source tests, the unit shall be tested not less than once every thirty-six (36) months. If the result of the 36-month source test demonstrates that the unit does not meet the applicable emission limits, the source testing frequency shall revert to at least once every twelve (12) months. [District Rules 4305, 4306, and 4320]

- {110} The results of each source test shall be submitted to the District within 60 days thereafter. [District Rule 1081]

- {109} Source testing shall be conducted using the methods and procedures approved by the District. The District must be notified at least 30 days prior to any compliance source test, and a source test plan must be submitted for approval at least 15 days prior to testing. [District Rule 1081]

- The source test plan shall identify which basis (ppmv or lb/MMBtu) will be used to demonstrate compliance. [District Rules 4305, 4306, and 4320]

S-7616-33-0 (Ammonia Synthesis Unit Startup Heater)
Proposed Rule 1081 Conditions:

- This unit shall be tested for compliance with the NOx and CO emissions limits at least once every twelve (12) months. After demonstrating compliance on two (2) consecutive annual source tests, the unit shall be tested not less than once every thirty-six (36) months. If the result of the 36-month source test demonstrates that the unit does not meet the applicable emission limits, the source testing frequency shall revert to at least once every twelve (12) months. [District Rules 4305, 4306, and 4320]

- {110} The results of each source test shall be submitted to the District within 60 days thereafter. [District Rule 1081]

- {109} Source testing shall be conducted using the methods and procedures approved by the District. The District must be notified at least 30 days prior to any compliance source test, and a source test plan must be submitted for approval at least 15 days prior to testing. [District Rule 1081]

- The source test plan shall identify which basis (ppmv or lb/MMBtu) will be used to demonstrate compliance. [District Rules 4305, 4306, and 4320]

S-7616-35-0 (Nitric Acid Unit)
Proposed Rule 1081 Conditions:

- Source testing to quantify N2O emissions (lb-N2O/ton of HNO3 produced) shall be conducted within 60 days after initial start-up, and once every twelve (12) months thereafter, with equipment in operation at 90 percent or more of the rated capacity when the analysis is conducted. [District Rules 1081, 2201, and 2410]

- {109} Source testing shall be conducted using the methods and procedures approved by the District. The District must be notified at least 30 days prior to any compliance source test, and a source test plan must be submitted for approval at least 15 days prior to testing. [District Rule 1081]

- {33} Sampling facilities for source testing shall be provided in accordance with the provisions of Rule 1081 (Source Sampling). [District Rule 1081]

- {110} The results of each source test shall be submitted to the District within 60 days thereafter. [District Rule 1081]

S-7616-36-0 (Ammonium Nitrate Unit)
Proposed Rule 1081 Conditions:

- Source testing to quantify PM10 emissions (lb-PM10/hr and lb-PM10/ton of ammonium nitrate produced) from scrubber vent shall be conducted within 60 days after initial start-up, and once every twelve (12) months thereafter, with equipment in operation at 90 percent or more of the rated capacity when the analysis is conducted. [District Rules 1081 and 2201]

- {109} Source testing shall be conducted using the methods and procedures approved by the District. The District must be notified at least 30 days prior to any compliance source test, and a source test plan must be submitted for approval at least 15 days prior to testing. [District Rule 1081]

- The following test methods shall be used PM10: EPA method 5 (front half and back half). Alternative test methods as approved by the District may also be used to address the source testing requirements of this permit. [District Rules 1081 and 2201]

- {33} Sampling facilities for source testing shall be provided in accordance with the provisions of Rule 1081 (Source Sampling). [District Rule 1081]

- {110} The results of each source test shall be submitted to the District within 60 days thereafter. [District Rule 1081]

Rule 1100 - Equipment Breakdown

This rule defines a breakdown condition and the procedures to follow if one occurs. The corrective action, the issuance of an emergency variance, and the reporting requirements are also specified.

The requirements of this rule will be included in the DOC. Compliance with this rule is anticipated.

S-7616-26-0 (Combustion Turbine Generator)

Proposed Rule 1100 Conditions:

- Permittee shall notify the District of any breakdown condition as soon as reasonably possible, but no later than one hour after its detection, unless the owner or operator demonstrates to the District's satisfaction that the longer reporting period was necessary. [District Rule 1100, 6.1]

- The District shall be notified in writing within ten days following the correction of any breakdown condition. The breakdown notification shall include a description of the equipment malfunction or failure, the date and cause of the initial failure, the estimated emissions in excess of those allowed, and the methods utilized to restore normal operations. [District Rule 1100, 7.0]

Rule 2010 - Permits Required

This rule requires any person building, altering, or replacing any operation, article, machine, equipment, or other contrivance, the use of which may cause the issuance of air contaminants, to first obtain authorization from the District in the form of an ATC (or in the case of this project, a Determination of Compliance (DOC)). With the submission of this application, the applicant is complying with the requirements of this rule.

Rule 2201 - New and Modified Stationary Source Review Rule

A. Best Available Control Technology (BACT)

1. BACT Applicability

BACT requirements are triggered on a pollutant-by-pollutant basis and on an emissions unit-by-emissions unit basis for the following*:

a. Any new emissions unit with a potential to emit exceeding two pounds per day,
b. The relocation from one Stationary Source to another of an existing emissions unit with a potential to emit exceeding two pounds per day,
c. Modifications to an existing emissions unit with a valid Permit to Operate resulting in an AIPE exceeding two pounds per day, and/or
d. Any new or modified emissions unit, in a stationary source project, which results in a Major Modification.

*Except for CO emissions from a new or modified emissions unit at a Stationary Source with an SSPE2 of less than 200,000 pounds per year of CO.

a. New emissions units – PE > 2 lb/day

All of the emissions units in this project are new emissions units. The units' PEs are calculated in Section VII.C.2 of this evaluation.

S-7616-26-0 (Combustion Turbine Generator)

As explained in Section VII.C.2 of this evaluation, the applicant is proposing to install a new CTG with a PE greater than 2 lb/day for NO_X, SO_X, PM_{10}, CO, and VOC. BACT is triggered for NO_X, SO_X, PM_{10}, CO, and VOC since the PEs are greater than 2 lb/day and the SSPE2 for CO is greater than 200,000 lb/year, as demonstrated in Section VII.C.5 of this document.

The PE of ammonia is greater than 2.0 pounds per day for the CTG. However, the ammonia emissions are intrinsic to the operation of the SCR system, which is BACT for NOx. The emissions from a control device that is determined by the District to be BACT are not subject to BACT.

S-7616-17-0 (Railcar Unloading and Transfer System)

As explained in Section VII.C.2 of this evaluation, the applicant is proposing to install a new Railcar Unloading and Transfer System with a PE greater than 2 lb/day for PM10. BACT is triggered for PM10 since the PE is greater than 2 lb/day.

S-7616-18-0 (Truck Unloading and Transfer System)

As explained in Section VII.C.2 of this evaluation, the applicant is proposing to install a new Truck Unloading and Transfer System with a PE greater than 2 lb/day for PM10. BACT is triggered for PM10 since the PE is greater than 2 lb/day.

S-7616-19-0 (Feedstock Storage, Blending, and Reclaim System)

As explained in Section VII.C.2 of this evaluation, the applicant is proposing to install a new Feedstock Storage, Blending, and Reclaim System with a PE less than 2 lb/day for PM10. Therefore, BACT is not triggered since the PEs for all criteria pollutants are less than 2 lb/day.

S-7616-20-0 (Feedstock Grinding/Crushing and Drying System)

As explained in Section VII.C.2 of this evaluation, the applicant is proposing to install a new Feedstock Grinding/Crushing and Drying System with a PE greater than 2 lb/day for PM10. BACT is triggered for PM10 since the PE is greater than 2 lb/day.

S-7616-21-0 (Gasification System)

As explained in Section VII.C.2 of this evaluation, the applicant is proposing to install a new Gasification System with a PE greater than 2 lb/day for CO and VOC. BACT is triggered for CO and VOC since the PE is greater than 2 lb/day.

S-7616-22-0 (Gasification Solids Handling System)

As explained in Section VII.C.2 of this evaluation, the applicant is proposing to install a new Gasification Solids Material Handling System with a PE greater than 2 lb/day for PM10. BACT is triggered for PM10 since the PE is greater than 2 lb/day.

S-7616-23-0 (Sulfur Recovery System)

As explained in Section VII.C.2 of this evaluation, the applicant is proposing to install a new Sulfur Recovery System which would result in a PE greater than 2 lb/day for SOx. BACT is triggered for SOx since the PE is greater than 2 lb/day, as demonstrated in Section VII.C.5 of this document.

S-7616-24-0 (CO2 Recovery and Vent System)

As explained in Section VII.C.2 of this evaluation, the applicant is proposing to install a new CO2 Recovery and Vent System with a PE greater than 2 lb/day for CO and VOC. BACT is

triggered for CO and VOC since the PEs are greater than 2 lb/day and the SSPE2 for CO is greater than 200,000 lb/year, as demonstrated in Section VII.C.5 of this document.

S-7616-25-0 (Auxiliary Boiler)

As explained in Section VII.C.2 of this evaluation, the applicant is proposing to install a new natural gas fired auxiliary boiler with a PE greater than 2 lb/day for NO_X, SO_X, PM_{10}, CO, and VOC. BACT is triggered for NO_X, SO_X, PM_{10}, CO, and VOC since the PEs are greater than 2 lb/day and the SSPE2 for CO is greater than 200,000 lb/year, as demonstrated in Section VII.C.5 of this document.

S-7616-27-0, -28-0, and -29-0 (Cooling Towers)

As explained in Section VII.C.2 of this evaluation, the applicant is proposing to install three new cooling towers, each with a PE greater than 2 lb/day for PM10. BACT is triggered for PM10 since the PE is greater than 2 lb/day, as demonstrated in Section VII.C.5 of this document.

S-7616-30-0 (Gasification Flare)

As explained in Section VII.C.2 of this evaluation, the applicant is proposing to install a new gasification flare with a PE greater than 2 lb/day for NO_X, SO_X, PM_{10}, VOC, and CO. BACT is triggered for NO_X, SO_X, PM_{10}, VOC, and CO since the PEs are greater than 2 lb/day and the SSPE2 for CO is greater than 200,000 lb/year, as demonstrated in Section VII.C.5 of this document.

S-7616-31-0 (Sulfur Recovery Unit Flare)

As explained in Section VII.C.2 of this evaluation, the applicant is proposing to install a new sulfur recovery flare with a PE greater than 2 lb/day for NO_X, SO_X, PM_{10}, and CO. BACT is triggered for NO_X, SO_X, PM_{10}, and CO since the PEs are greater than 2 lb/day and the SSPE2 for CO is greater than 200,000 lb/year, as demonstrated in Section VII.C.5 of this document.

S-7616-32-0 (Rectisol Flare)

As explained in Section VII.C.2 of this evaluation, the applicant is proposing to install a new Rectisol flare with a PE greater than 2 lb/day for NO_X, SO_X, PM_{10}, CO, and VOC. BACT is triggered for NO_X, SO_X, PM_{10}, CO, and VOC since the PEs are greater than 2 lb/day and the SSPE2 for CO is greater than 200,000 lb/year, as demonstrated in Section VII.C.5 of this document.

S-7616-33-0 (Ammonia Startup Heater)

As explained in Section VII.C.2 of this evaluation, the applicant is proposing to install a new natural gas-fired startup heater that will serve the ammonia synthesis unit with a PE greater than 2 lb/day for NO_X, SO_X, PM_{10}, CO, and VOC. BACT is triggered for NO_X, SO_X, PM_{10}, CO, and VOC since the PEs are greater than 2 lb/day and the SSPE2 for CO is greater than 200,000 lb/year, as demonstrated in Section VII.C.5 of this document.

S-7616-34-0 (Urea Absorber and Urea Pastillation Unit)

As explained in Section VII.C.2 of this evaluation, the applicant is proposing to install new urea absorbers and a new pastillation unit with a PE that is less than 2 lb/day for PM_{10} and the other criteria pollutants. Therefore, BACT is not triggered since the PEs for all criteria pollutants are less than 2 lb/day.

S-7616-35-0 (Nitric Acid Unit)

As explained in Section VII.C.2 of this evaluation, the applicant is proposing to install a new nitric acid unit with a PE greater than 2 lb/day for NO_X. BACT is triggered for NO_X, since the PE is greater than 2 lb/day.

S-7616-36-0 (Ammonium Nitrate Unit)

As explained in Section VII.C.2 of this evaluation, the applicant is proposing to install a new ammonium nitrate unit with a PE greater than 2 lb/day for PM_{10}. BACT is triggered for PM_{10} since the PE is greater than 2 lb/day.

S-7616-37-0 (Urea Storage and Handling Operation)

As explained in Section VII.C.2 of this evaluation, the applicant is proposing to install urea storage and handling system with a PE that is less than 2 lb/day for PM_{10} for the urea loading area. Therefore, BACT is triggered for the urea loading area since the PEs for all criteria pollutants are less than 2 lb/day.

S-7616-38-0 and -39-0 (Emergency Engines Powering Electrical Generators)

As explained in Section VII.C.2 of this evaluation, the applicant is proposing to install two new diesel-fired emergency engines powering electrical generator with a PE greater than 2 lb/day for NO_X, PM_{10}, CO, and VOC. BACT is triggered for NO_X, PM_{10}, CO and VOC since the PEs are greater than 2 lb/day and the SSPE2 for CO is greater than 200,000 lb/year, as demonstrated in Section VII.C.5 of this document.

S-7616-40-0 (Emergency Engine Powering Firewater Pump)

As explained in Section VII.C.2 of this evaluation, the applicant is proposing to install one new diesel-fired emergency engine powering a firewater pump with a PE greater than 2 lb/day for NO_X, PM_{10}, CO, and VOC. BACT is triggered for NO_X, PM_{10}, CO and VOC since the PEs are greater than 2 lb/day and the SSPE2 for CO is greater than 200,000 lb/year, as demonstrated in Section VII.C.5 of this document.

b. Relocation of emissions units – PE > 2 lb/day

As discussed in Section I above, there are no emissions units being relocated from one stationary source to another; therefore BACT is not triggered.

c. Modification of emissions units – AIPE > 2 lb/day

As discussed in Section I above, there are no modified emissions units associated with this project; therefore BACT is not triggered.

d. Major Modification

As discussed in Section VII.C.7 above, this project does not constitute a Major Modification; therefore BACT is not triggered.

2. BACT Guidelines

The BACT Guidelines mentioned below are located in Appendix B of this document.

S-7616-26-0 (Combustion Turbine Generator)

- A new BACT Guideline was developed in project S-1093741. A summary sheet of the requirements is included in Appendix B.

S-7616-17-0 (Railcar Unloading and Transfer System)
S-7616-18-0 (Truck Unloading and Transfer System)
S-7616-20-0 (Feedstock Grinding/Crushing and Drying System)

- BACT Guideline 8.2.1 applies to Petroleum Coke Handling - Receiving, Storage, and Loadout = or > 1,000 tons coke per day.

- BACT Guideline 8.4.1 applies to Dry Material Storage and Conveying Operation, 100 tons/day.

- BACT Guideline 8.4.3 applies to Dry Material Handling - Mixing, Blending, Milling, or Storage.

S-7616-22-0 (Gasification Solids Handling System)
S-7616-37-0 (Urea Storage and Handling Operation)

- BACT Guideline 8.4.1 applies to Dry Material Storage and Conveying Operation, 100 tons/day.

- BACT Guideline 8.4.2 applies to Wet Material Storage and Conveying Operation, 200 tons/day.

- BACT Guideline 8.4.3 applies to Dry Material Handling - Mixing, Blending, Milling, or Storage.

S-7616-21-0 (Fugitive Emissions from Gasification System)

- BACT Guideline 4.12.1 applies to Chemical Plants - Valves and Connectors.
- BACT Guideline 4.12.2 applies to Chemical Plants - Pump and Compressor Seals.

S-7616-23-0 (Sulfur Recovery System):

- BACT Guideline 7.2.6 (Petroleum Refineries and Chemical Plants, Sulfur Recovery Plant, = or > 20 tons sulfur/day), applies to the sulfur recovery system.
- BACT Guideline 4.12.1 applies to Chemical Plants - Valves and Connectors.
- BACT Guideline 4.12.2 applies to Chemical Plants - Pump and Compressor Seals.

S-7616-24-0 (CO2 Recovery and Vent System)

- A new BACT Guideline was developed in project S-1093741. A summary sheet of the requirements is included in Appendix B.

S-7616-25-0 (Auxiliary Boiler)

- BACT Guidelines 1.1.1 to 1.1.8 have been rescinded. Please note that BACT Guideline 1.1.2 [Steam Generator $\geq$ 20 MMBtu/hr] has been rescinded. The NO_X emission limit requirement of District Rule 4320 is lower than the Achieved-in-Practice requirement of BACT Guideline 1.1.2 (9 ppmv @ 3% O2); therefore a project specific BACT analysis will be performed to determine BACT for this project. More details regarding this are provided in the Top-Down BACT Analysis in Appendix C.

S-7616-27-0 (Gasification Process Area Cooling Tower)
S-7616-28-0 (Air Separation Unit Cooling Tower)
S-7616-29-0 (Power Block Cooling Tower)

- BACT Guideline 8.3.10 applies to Cooling Tower – Induced Draft, Evaporative Cooling).

S-7616-30-0 (Gasification Flare)
S-7616-31-0 (Sulfur Recovery Unit Flare)
S-7616-32-0 (Rectisol Flare)

- BACT Guideline 1.4.8 (Refinery Flare) applies to the flares.

S-7616-33-0 (Ammonia Startup Heater)

- BACT Guidelines 1.1.1 to 1.1.8 have been rescinded. Please note that BACT Guideline 1.1.2 [Steam Generator $\geq$ 20 MMBtu/hr] has been rescinded. The NO_X emission limit requirement of District Rule 4320 is lower than the Achieved-in-Practice

requirement of BACT Guideline 1.1.2 (9 ppmv @ 3% O2); therefore a project specific BACT analysis will be performed to determine BACT for this project. More details regarding this are provided in the Top-Down BACT Analysis in Appendix C.

S-7616-35-0 (Nitric Acid Unit)

- A new BACT Guideline was developed for this project. A summary sheet of the requirements is included in Appendix B.

S-7616-36-0 (Ammonium Nitrate Unit)

- A new BACT Guideline was developed for this project. A summary sheet of the requirements is included in Appendix B.

S-7616-38-0 (Emergency Engine Powering Electrical Generator)
S-7616-39-0 (Emergency Engine Powering Electrical Generator)

- BACT Guideline 3.1.1 (Emergency Diesel IC Engine), applies to the diesel-fired emergency IC engines.

S-7616-40-0 (Emergency Engine Powering Firewater Pump)

- BACT Guideline 3.1.1 (Emergency Diesel IC Engine), applies to the diesel-fired emergency IC engine.

3. Top-Down BACT Analysis

Per Permit Services Policies and Procedures for BACT, a Top-Down BACT analysis shall be performed as a part of the application review for each application subject to the BACT requirements pursuant to the District's NSR Rule.

Pursuant to the attached Top-Down BACT Analysis (see Appendix C), BACT has been satisfied with the following:

S-7616-26-0 (Combustion Turbine Generator)

NOx: Selective catalytic reduction that does not exceed 2.5 ppmvd-NOx @ 15% O_2 (1-hour average) when firing on hydrogen-rich fuel, except during startup/shutdown; and selective catalytic reduction that does not exceed 4.0 ppmvd-NOx @ 15% O_2 (1-hour average) when firing on natural gas, except during startup/shutdown

SOx: PUC-regulated natural gas with no more than 0.75 grains-S/100 dscf, or 0.003 lb-SOx/MMBtu when firing on hydrogen-rich fuel

CO: Oxidation catalyst that does not exceed 3.0 ppmvd-CO @ 15% O2 when firing on hydrogen-rich fuel, and does not exceed 5.0 ppmvd @ 15% O2 when firing on natural gas, except during startup/shutdown

VOC: Oxidation catalyst that does not exceed 1.0 ppmvd-VOC @ 15% O2 when firing on hydrogen-rich fuel, and does not exceed 2.0 ppmvd-VOC when firing on natural gas, except during startup/shutdown

PM_{10}: Air inlet cooler/filter, lube oil vent coalescer (or equal), and either PUC-regulated natural gas, non-PUC regulated natural gas with no more than 0.75 grains-S/100 dscf, or 0.003 lb-SOx/MMBtu when firing on hydrogen-rich fuel exclusively.

S-7616-17-0 (Railcar Unloading and Transfer System)
S-7616-18-0 (Truck Unloading and Transfer System)
S-7616-20-0 (Feedstock Grinding/Crushing and Drying System)

PM_{10}: Petroleum coke handling: adequate moisture content of coke received, and loaded out, to prevent visible emissions in excess of 5% opacity. Water and surfactant applied to storage piles.

Dry material handling: mixer, augers, elevators, conveyors all enclosed and vented to a fabric filter baghouse.

Dry material storage and conveying operation: storage, augers, elevators, conveyors all enclosed and vented to a fabric filter baghouse.

S-7616-22-0 (Gasification Solids Handling System)
S-7616-37-0 (Urea Storage and Handling Operation)

PM_{10}: Dry material storage and conveying operation: storage, augers, elevators, conveyors all enclosed and vented to a fabric filter baghouse.

Wet material storage and conveying operation: enclosed storage with sufficient moisture so visible emissions are less than 5% opacity from any single emission point.

S-7616-21-0 (Fugitive Emissions from Gasification System)

VOC: Leak defined as a reading of methane in excess of 100 ppmv above background for valves and connectors when measure per EPA Method 21 and an Inspection and Maintenance Program pursuant to District Rule 4455. Leak defined as a reading of methane in excess of 500 ppmv above background for pump and compressor seals when measure per EPA Method 21 and an Inspection and Maintenance Program pursuant to District Rule 4455.

S-7616-23-0 (Sulfur Recovery System):

SOx: Sulfur recovery unit with tail gas treating unit to treat gas to = or < 10 ppmv H2S (based on a three-hour, moving average) and a standby incinerator, except during startup and shutdown

S-7616-23-0 (Fugitive Emissions from Sulfur Recovery System):

VOC: Leak defined as a reading of methane in excess of 100 ppmv above background for valves and connectors when measure per EPA Method 21 and an Inspection and Maintenance Program pursuant to District Rule 4455. Leak defined as a reading of methane in excess of 500 ppmv above background for pump and compressor seals when measure per EPA Method 21 and an Inspection and Maintenance Program pursuant to District Rule 4455.

S-7616-24-0 (CO2 Recovery and Vent System)

CO and VOC: Capture, compression, and transportation of the exhaust stream in a pipeline for injection (during normal operation); venting allowed when transportation system is unavailable due to upset condition up to 504 hr (or equivalent) per rolling 12-month period.

S-7616-25-0 (Auxiliary Boiler)

VOC: PUC-quality natural gas firing
SOx: PUC-quality natural gas firing
NOx: 5 ppmvd @ 3% O_2
CO: PUC-quality natural gas firing
PM_{10}: PUC-quality natural gas firing

S-7616-27-0 (Gasification Process Area Cooling Tower)
S-7616-28-0 (Air Separation Unit Cooling Tower)
S-7616-29-0 (Power Block Cooling Tower)

PM_{10}: Cellular-type drift eliminator

S-7616-30-0 (Gasification Flare)
S-7616-31-0 (Sulfur Recovery Unit Flare)
S-7616-32-0 (Rectisol Flare)

CO: Engineered flare, with air or steam assisted combustion, staged combustion, and/or equivalent District approved controls. Flare shall be equipped with a flare gas recovery system for non-emergency releases or equivalent District approved controls.

NOx: Engineered flare or enclosed burner with air or steam assisted combustion, staged combustion, and/or equivalent District approved controls, and having

demonstrated emissions of NOx or less than 0.068 lb/MMBtu. Flare shall be equipped with a flare gas recovery system for non-emergency releases or equivalent District approved controls.

PM_{10}: Engineered flare designed for and operated without visible emissions, except as allowed by 40 CFR 60.18(c)(1) and District Rule 4101 and equipped with air or steam assisted combustion, staged combustion, and/or equivalent District approved controls. Flare shall be equipped with a flare gas recovery system for non-emergency releases or equivalent District approved controls. Pilot and sweep fuel shall be natural gas, treated refinery gas or LPG.

SOx: Flare shall be equipped with a flare gas recovery system for non-emergency releases or equivalent District approved controls. Pilot and purge gas shall be natural gas, treated refinery gas or LPG.

VOC: Enclosed ground level flare or any other engineered flare designed with a VOC destruction efficiency of ≥ 98.5%. Flare design shall include air or steam assisted combustion, staged combustion, and/or equivalent District approved controls. Flare shall be equipped with a flare gas recovery system for non-emergency releases or equivalent District approved controls, a continuous pilot or District approved alternative and a method for detecting flame. Pilot and sweep fuel shall be natural gas, treated refinery gas or LPG.

S-7616-33-0 (Ammonia Synthesis Startup Heater)

VOC: PUC-quality natural gas firing
SOx: PUC-quality natural gas firing
NOx: 9 ppmvd @ 3% O_2
CO: PUC-quality natural gas firing
PM_{10}: PUC-quality natural gas firing

S-7616-35-0 (Nitric Acid Unit)

NOx: Extended absorption and/or catalytic reduction, with NOx emissions no greater than 0.20 lb/ton of nitric acid produced (expressed as 100 percent nitric acid), on a 24-hour rolling average basis

S-7616-36-0 (Ammonium Nitrate Unit)

PM_{10}: Wet scrubber system with PM10 emissions limited to no more than 0.0075 lb-PM10/ton of ammonium nitrate produced

S-7616-38-0 (Emergency Engine Powering Electrical Generator)
S-7616-39-0 (Emergency Engine Powering Electrical Generator)
S-7616-40-0 (Emergency Engine Powering Firewater Pump)

CO: Latest EPA Tier Certification level for applicable horsepower range
NOx: Latest EPA Tier Certification level for applicable horsepower range

PM_{10}: 0.15 g/hp-hr or the Latest EPA Tier Certification level for applicable horsepower range, whichever is more stringent. (ATCM)
SOx: Very low sulfur diesel fuel (15 ppmw sulfur or less)
VOC: Latest EPA Tier Certification level for applicable horsepower range

B. Offsets

1. Offset Applicability

Pursuant to Section 4.5.3, offset requirements shall be triggered on a pollutant by pollutant basis and shall be required if the Post-Project Stationary Source Potential to Emit (SSPE2) equals to or exceeds the offset threshold levels in Table 4-1 of Rule 2201.

The following table compares the post-project facility-wide annual emissions in order to determine if offsets will be required for this project.

Offset Determination (lb/year)					
	NO_X	SO_X	PM_{10}	CO	VOC
Post-Project SSPE (SSPE2)	317,310	59,436	178,863	544,421	75,379
Offset Threshold	20,000	54,750	29,200	200,000	20,000
Offsets Triggered?	Yes	Yes	Yes	Yes	Yes

2. Quantity of Offsets Required

As seen above, the SSPE2 is greater than the offset thresholds for NOx, SOx, PM10, CO, and VOC; therefore offset calculations will be required for this project.

Additionally, as the project had a modeled impacts for PM2.5 greater than the applicable significance impact levels, offsets for PM2.5 are being provided for all increases in PM2.5 emissions (without excluding any offset threshold or emissions from emergency equipment). Please note that because the facility is not a major source for PM2.5 , i.e. emissions less than 100 ton/year, PM2.5 emission offsets are not otherwise required for the project. See PM2.5 offset discussion below.

Per Sections 4.7.2 and 4.7.3, the quantity of offsets in pounds per year for NO_X is calculated as follows for sources with an SSPE1 less than the offset threshold levels before implementing the project being evaluated.

Offsets Required (lb/year) = [(SSPE2 – ROT + ICCE) x DOR]

Where,
SSPE2 = Post Project Stationary Source Potential to Emit
ROT = Respective Offset Threshold, for the respective pollutant indicated in Section 4.5.3.
ICCE = Increase in Cargo Carrier Emissions
DOR = Distance Offset Ratio, determined pursuant to Section 4.8

Per Section 4.6.2, emergency equipment that is used exclusively as emergency standby equipment for electrical power generation or any other emergency equipment as approved by the APCO that does not operate more than 200 hours per year of non-emergency purposes and is not used pursuant to voluntary arrangements with a power supplier to curtail power, is exempt from providing emission offsets. Therefore, units S-7616-30, -31, and -32 for emergency IC engines will be exempt from providing offsets and the emissions associated with these units contributing to the SSPE2 should be removed prior to calculating actual offset amounts.

Offsets Required (lb/year) = [(SSPE2 – Emergency Equipment – ROT + ICCE) x DOR]

Emission Reduction Certificates Proposed for this Project (lb/qtr)					
Pollutant	**Certificate**	**1st Quarter**	**2nd Quarter**	**3rd Quarter**	**4th Quarter**
NOx	ERC #S-3273-2	120,500	120,500	120,500	120,500
NOx	ERC #C-1058-2	10,100	10,100	10,100	10,100
SOx	ERC #S-3275-5	42,000	42,000	42,000	42,000
SOx	ERC #C-1058-5	24,500	24,500	24,500	24,500
VOC	ERC #S-3305-1	14,625	14,625	14,625	14,625
VOC	ERC #S-3557-1	11,437	11,438	11,438	11,437
VOC	ERC #S-3605-1	7,937	7,938	7,938	7,937

<u>NOx Offsets Required:</u>

SSPE2 (NO_X) = 317,310 lb/year

Emergency Equipment:
S-7616-38-0 (NO_X) = 161 lb/year
S-7616-39-0 (NO_X) = 161 lb/year
S-7616-40-0 (NO_X) = 184 lb/year

Respective offset threshold (NO_X) = 20,000 lb/year

ICCE = 0 lb/year

Offsets Required (lb/yr) = [(317,310 - 161 -161 - 184 - 20,000 + 0) x DOR]
= 296,804 x DOR

Calculating the appropriate quarterly emissions to be offset are as follows (in lb/qtr without distance ratio) is calculated by dividing the annual offsets required by four:

1st Quarter	2nd Quarter	3rd Quarter	4th Quarter
74,201	74,201	74,201	74,201

The applicant has stated that the facility plans to use ERC certificate S-3273-2 and C-1058-2, which have an original site of reduction greater than 15 miles from the location of this project. Therefore, an offset ratio of 1.5:1 is applicable and the amount of NO_X ERCs that need to be withdrawn is:

Offsets Required (lb/year) = 296,804 x 1.5
= 445,206 lb-NO_X/year

Calculating the appropriate quarterly emissions to be offset is as follows (in lb/qtr):

1st Quarter	2nd Quarter	3rd Quarter	4th Quarter
111,302	111,302	111,302	111,302

The applicant has stated that the facility plans to use ERC certificates S-3273-2 and C-1058-2 to offset the increases in NO_X emissions associated with this project. The above certificates have available quarterly NO_X credits as follows:

(lb/qtr)	1st Quarter	2nd Quarter	3rd Quarter	4th Quarter
ERC #S-3273-2	120,500	120,500	120,500	120,500
ERC #C-1058-2	10,100	10,100	10,100	10,100
Total	130,600	130,600	130,600	130,600

As seen above, the facility has sufficient credits to fully offset the quarterly NO_X emissions increases associated with this project.

<u>SOx Offsets Required:</u>

SSPE2 (SOx) = 59,436 lb/year

Emergency Equipment:
S-7616-38-0 (SOx) = 2 lb/year
S-7616-39-0 (SOx) = 2 lb/year
S-7616-40-0 (SOx) = 1 lb/year

Respective offset threshold (SOx) = 54,750 lb/year

ICCE = 0 lb/year

Offsets Required (lb/yr) = [(59,436 - 2 - 2 -1 - 54,750 + 0) x DOR]
= 4,681 x DOR

Calculating the appropriate quarterly emissions to be offset is as follows:

1st Quarter	2nd Quarter	3rd Quarter	4th Quarter
1,170	1,170	1,170	1,170

The applicant has stated that the facility plans to use ERC certificate S-3275-5 and C-1058-5, which have an original site of reduction greater than 15 miles from the location of this project. Therefore, an offset ratio of 1.5:1 is applicable and the amount of SO_X ERCs that need to be withdrawn is:

Offsets Required (lb/year) = 4,681 x 1.5
= 7,022 lb-SO_X/year

Calculating the appropriate quarterly emissions to be offset is as follows (in lb/qtr):

1st Quarter	2nd Quarter	3rd Quarter	4th Quarter
1,755	1,755	1,755	1,755

The applicant has stated that the facility plans to use ERC certificates S-3275-5 and C-1058-5 to offset the increases in SO_X emissions associated with this project. The above certificates have available quarterly SO_X credits as follows:

(lb-SOx/qtr)	1st Quarter	2nd Quarter	3rd Quarter	4th Quarter
ERC # S-3275-5	42,000	42,000	42,000	42,000
ERC # C-1058-5	24,500	24,500	24,500	24,500
Total:	66,500	66,500	66,500	66,500

As seen above, the facility has sufficient credits to fully offset the quarterly SO_X emissions increases associated with this project.

Additionally, the applicant plans to satisfy their offset requirements for PM10 reductions by providing SOx reductions in place of PM10 reductions. Per Rule 2201 Section 4.13.3.2, interpollutant offsets between PM10 and PM10 precursors (i.e. SOx) may be allowed. The applicant is proposing to use the District-approved interpollutant ratio of 1:1 of SOx offsets for PM10.

The table below indicates the amount of SOx credits necessary to fully offset the quarterly SOx and PM10 increases associated with this project.

(lb/qtr)	1st Quarter	2nd Quarter	3rd Quarter	4th Quarter
Total ERCs available:	66,500	66,500	66,500	66,500
SOx ERCs required:	1,755	1,755	1,755	1,755
PM10/PM2.5 ERCs required: [38]	59,307	59,307	59,307	59,307
Total ERCs required:	61,062	61,062	61,062	61,062

As seen above, the facility has sufficient credits to fully offset the quarterly SO_X and PM10/PM2.5 emissions increases associated with this project.

[38] See the offset calculations for PM10 and PM2.5 in the sections that follow. As is explained in those sections, the offset requirement for PM10 and PM2.5 will be based on the pollutant that requires the greater offset quantities.

PM10 Offsets Required:

SSPE2 (PM10) = 178,863 lb/year

Emergency Equipment:
S-7616-38-0 (PM10) = 23 lb/year
S-7616-39-0 (PM10) = 23 lb/year
S-7616-40-0 (PM10) = 1 lb/year

Respective offset threshold (PM10) = 29,200 lb/year

ICCE = 0 lb/year

Offsets Required (lb/yr) = [(178,863 - 23 -23 - 1 - 29,200 + 0) x DOR]
= 149,616 x DOR

Calculating the appropriate quarterly emissions to be offset is as follows:

1st Quarter	2nd Quarter	3rd Quarter	4th Quarter
37,404	37,404	37,404	37,404

As explained in the SOx offset section above, the applicant has stated that the facility plans to use SOx reductions to offset PM10 emission as allowed by the District Rule 2201 Section 4.13.3.2, at a District-approved interpollutant ratio of 1:1 of SOx offsets for PM10. The applicant proposes to use SOx ERC certificates S-3275-5 and C-1058-5, which have an original site of reduction greater than 15 miles from the location of this project. Therefore, an offset ratio of 1.5:1 is applicable and the amount of ERCs that need to be withdrawn is:

Offsets Required (lb/year) = 149,616 x 1.5
= 224,424 lb-PM10/year

Calculating the appropriate quarterly emissions to be offset is as follows (in lb/qtr):

1st Quarter	2nd Quarter	3rd Quarter	4th Quarter
56,106	56,106	56,106	56,106

The PM2.5 offset requirements will be calculated in the section that follows, and the offset requirement for PM10/PM2.5 will be the based on the pollutant with the greater offset requirement.

PM2.5 Offsets Required:

Offset requirements for modeled impacts of PM2.5 emissions

Rule 2201 section 4.14.1 requires that emissions from new and modified stationary sources (that are subject to public noticing requirements) be modeled to determine if the emissions

cause or make worse a violation of an AAQS. In making this determination the District can consider the mitigation of emissions through offsets provided pursuant to Rule 2201.

The modeled impact of PM2.5 emissions from the project exceeds the daily and annual significance impact levels (de minimus levels) for PM2.5 (as shown in Appendix K). As the total PM2.5 emissions from the project will be mitigated by emission offsets, the District has determined that the project will not cause or make worse a violation of the PM2.5 AAQS. Please note that the project is not a "major source" of PM2.5 emissions, as defined in Rule 2201, as its emissions of PM2.5 are less than 100 ton/year. As such Rule 2201 does not explicitly require that PM2.5 emissions be offset for non-major sources of PM2.5.

The offsets provided will mitigate the total PM2.5 emissions from the permitted equipment, including emissions from maintenance and testing of emergency equipment (otherwise exempt from emission offsets). Additionally, no adjustment will be made for the total quality of offsets provided to account for the PM10 offset threshold of 29,200 lb/year (a portion of which is PM2.5) as is otherwise allowed in Rule 2201 for PM10.

The applicant has proposed to offset PM10 (and PM2.5) emission increases using SOx emission reduction credits as interpollutant offsets. The District has determined that the appropriate interpollutant ratio for SOx emission reductions to be used to offset PM10 emission increases is 1:1 based on chemical mass balance modeling and speciated rollback modeling as performed by the 2008 PM2.5 attainment plan. This same ratio (1:1) is applicable for SOx/PM2.5 interpollutant offsets.

Please note that Rule 2201 section 4.13.2.2 restriction on the use of interpollutant offsets only to those ratios established by EPA or as approved into the SIP by EPA is applicable only for new major sources and major modifications of PM2.5 (consistent with 40 CFR 51.165). As the proposed facility is not a new major source of PM2.5, the requirements of section 4.13.3.2 are not applicable.

The SSPE for PM2.5 for the facility are: 158,151 lb-PM2.5/yr.[39]

Since the applicant will be required to fully offset its PM2.5 emissions down to zero, the amount of PM2.5 offsets required is:

Offsets Required (lb/yr) = 158,151 x DOR

[39] As is discussed in the Refined AAQA Results in Section 8.2.9.2 of the Ambient Air Quality Impact and Health Risk Assessment Report in Appendix K of this document, HECA will be required to fully offset its PM2.5 emissions down to zero since the emissions for PM2.5 24-hour and annual exceed the NAAQS/CAAQS and SIL thresholds.

Calculating the appropriate quarterly emissions to be offset is as follows:

1st Quarter	2nd Quarter	3rd Quarter	4th Quarter
39,538	39,538	39,538	39,538

The applicant proposes to use SOx ERC certificates S-3275-5 and C-1058-5 to offset PM10 (and PM2.5), which have an original site of reduction greater than 15 miles from the location of this project. Therefore, an offset ratio of 1.5:1 is applicable and the amount of ERCs that need to be withdrawn is:

Offsets Required (lb/year) = 158,151 x 1.5
= 237,227 lb-PM10/year

Calculating the appropriate quarterly emissions to be offset is as follows (in lb/qtr):

1st Quarter	2nd Quarter	3rd Quarter	4th Quarter
59,307	59,307	59,307	59,307

As shown above, 59,307 lb/quarter of PM2.5 emission increases will be offset using SOx ERCs. Please note that the quantity of PM2.5 increases to be offset is greater than the quantity of PM10 emission increases to be offset. As all PM2.5 is included in PM10, the quantity of PM2.5 emission required will adequately offset both the PM2.5 and PM10 emission increases.

The table below indicates the amount of SOx credits necessary to fully offset the quarterly SOx and PM10/PM2.5 increases associated with this project.

(lb/qtr)	1st Quarter	2nd Quarter	3rd Quarter	4th Quarter
Total ERCs available:	66,500	66,500	66,500	66,500
SOx ERCs required:	1,755	1,755	1,755	1,755
PM2.5 ERCs required:	59,307	59,307	59,307	59,307
Total ERCs required:	61,062	61,062	61,062	61,062

As seen above, the facility has sufficient credits to fully offset the quarterly SO_X and PM10/PM2.5 emissions increases associated with this project.

<u>VOC Offsets Required:</u>

SSPE2 (VOC) = 75,379 lb/year

Emergency Equipment:
S-7616-38-0 (VOC) = 97 lb/year
S-7616-39-0 (VOC) = 97 lb/year
S-7616-40-0 (VOC) = 17 lb/year
Respective offset threshold (VOC) = 20,000 lb/year

ICCE = 0 lb/year

Offsets Required (lb/yr) = [(75,379 - 97 -97 - 17 - 20,000 + 0) x DOR]
= 55,168 x DOR

Calculating the appropriate quarterly emissions to be offset is as follows (in lb/qtr without distance ratio):

1st Quarter	2nd Quarter	3rd Quarter	4th Quarter
13,792	13,792	13,792	13,792

The applicant has stated that the facility plans to use ERC certificates S-3305-1, S-3557-1, and S-3605-1, which have an original site of reduction less than 15 miles of the location of this project. Therefore, an offset ratio of 1.3:1 is applicable (for major sources), and the amount of VOC ERCs that need to be withdrawn is:

Offsets Required (lb/year) = 55,168 x 1.3
= 71,718 lb VOC/year

Calculating the appropriate quarterly emissions to be offset is as follows (in lb/qtr):

1st Quarter	2nd Quarter	3rd Quarter	4th Quarter
17,930	17,930	17,930	17,930

As seen above, the facility has sufficient credits to fully offset the quarterly VOC emissions increases associated with this project.

The applicant has stated that the facility plans to use ERC certificates S-3305-1 and portions of S-3306-1 in the future to offset the increases in VOC emissions associated with this project. The above certificates have available quarterly VOC credits as follows:

(lb/qtr)	1st Quarter	2nd Quarter	3rd Quarter	4th Quarter
ERC #S-3305-1	14,625	14,625	14,625	14,625
ERC #S-3557-1	11,437	11,438	11,438	11,437
ERC #S-3605-1	7,937	7,938	7,938	7,937
Total	33,999	34,001	34,001	33,999

As seen above, the facility has sufficient credits to fully offset the quarterly VOC emissions increases associated with this project.

CO Offsets Required:

CO offsets are triggered by CO emissions in excess of 200,000 lb/year for the facility. As shown previously, the SSPE2 for CO, after this project, is 544,421 lb/year, so offset requirements are triggered.

However, pursuant to Section 4.6.1, "Emission Offsets shall not be required for the following: increases in carbon monoxide in attainment areas if the applicant demonstrates to the satisfaction of the APCO, that the Ambient Air Quality Standards are not violated in the areas to be affected, and such emissions will be consistent with Reasonable Further Progress, and will not cause or contribute to a violation of Ambient Air Quality Standards (AAQS)."

The Technical Services Section of the San Joaquin Valley Unified Air Pollution Control District performed a CO modeling run, using the EPA AERMOD air dispersion model, to determine if the CO emissions from the new facility would exceed the State and Federal AAQS (as shown in the modeling results in Appendix K). Modeling of the worst case 1 hour and 8 hour CO impacts were performed. These values were added to the worst case ambient concentration (background) measured and compared to the ambient air quality standards. Results of the modeling are presented below:

Ambient Modeling Results for CO		
	1 hr std	**8 hr std**
AAQS (ug/m^3)	23,000	10,000
Worst case ambient (background) (ug/m^3)	4,581	2,485
Facility totals (ug/m^3)	7,244	2,856

This modeling demonstrates that the proposed increase in CO emissions will not cause a violation of the CO ambient air quality standards. Therefore, the increase in CO emissions is exempt from offsets pursuant to Rule 2201 Section 4.6.1.

Proposed Rule 2201 (offset) Conditions:

- Prior to initial operation of S-7616-23, -25, -26, -30, -31, -32, -33, and -35, permittee shall provide NO_X emission reduction credits for the following quantity of emissions: 1st quarter: 74,201 lb, 2nd quarter: 74,201 lb, 3rd quarter: 74,201 lb, and fourth quarter: 74,201 lb. Offsets shall be provided at the applicable offset ratio specified in Table 4-2 of Rule 2201 (as amended 4/21/11). [District Rule 2201]

- Prior to initial operation of S-7616-23, -25, -26, -30, -31, -32, and -33, permittee shall provide SO_X emission reduction credits for the following quantity of emissions: 1st quarter: 1,170 lb, 2nd quarter: 1,170 lb, 3rd quarter: 1,170 lb, and 4th quarter: 1,170 lb. Offsets shall be provided at the applicable offset ratio specified in Table 4-2 of Rule 2201 (as amended 4/21/11). [District Rule 2201]

- Prior to initial operation of S-7616-17, -18, -19, -20, -22, -23, -25, -26, -27, -28, -29, -30, -31, -32, -33, -34, -36, -37, -38, -39, and -40, permittee shall provide PM10/PM2.5 emission reduction credits for the following quantity of emissions: 1st quarter: 39,538 lb, 2nd quarter: 39,538 lb, 3rd quarter: 39,538 lb, and 4th quarter: 39,538 lb. Offsets shall be provided at the applicable offset ratio specified in Table 4-2 of Rule 2201 (as amended 4/21/11). SOx ERCs may be used to offset PM10/PM2.5 increases at an interpollutant ratio of 1.0 lb-SOx: 1.0 lb-PM10. [District Rule 2201]

- Prior to initial operation of S-7616-21, -23, -24, -25, -26, -30, -31, -32, and -33, permittee shall provide VOC emission reduction credits for the following quantity of emissions: 1st quarter: 13,792 lb, 2nd quarter: 13,792 lb, 3rd quarter: 13,792 lb, and 4th quarter: 13,792 lb. Offsets shall be provided at the applicable offset ratio specified in Table 4-2 of Rule 2201 (as amended 4/21/11). [District Rule 2201]

- ERC certificate numbers C-1058-2, C-1058-5, S-3275-5, S-3273-2, S-3305-1, S-3557-1, and/or S-3605-1 (or a certificate split from these certificates) shall be used to supply the required offsets, unless a revised offsetting proposal is received and approved by the District, upon which this Determination of Compliance shall be reissued, administratively specifying the new offsetting proposal. Original public noticing requirements, if any, shall be duplicated prior to reissuance of this Determination of Compliance. [District Rule 2201]

C. Public Notification

1. Applicability

Public noticing is required for:
a. Any new Major Source, which is a new facility that is also a Major Source,
b. Major Modifications,
c. Any new emissions unit with a Potential to Emit greater than 100 pounds during any one day for any one pollutant,
d. Any project which results in the offset thresholds being surpassed, and/or
e. Any project with an SSIPE of greater than 20,000 lb/year for any pollutant.

a. New Major Source

New Major Sources are new facilities, which are also Major Sources. As shown in Section VII.C.5 above, the SSPE2 is greater than the Major Source threshold for NO_X, PM10, CO, and VOC. Therefore, public noticing is required for this project for new Major Source purposes because this facility is becoming a new Major Source.

b. Major Modification

As demonstrated in VII.C.7, this project does not constitute a Major Modification; therefore, public noticing for Major Modification purposes is not required.

c. PE > 100 lb/day

As demonstrated in VII.C.7, this project, this project consists of several emissions units with a Potential to Emit greater than 100 pounds during any one day for any one pollutant. Therefore, public noticing for PE > 100 lb/day purposes is required.

d. Offset Threshold

The following table compares the SSPE1 with the SSPE2 in order to determine if any offset thresholds have been surpassed with this project.

Offset Threshold				
Pollutant	SSPE1 (lb/yr)	SSPE2 (lb/yr)	Offset Threshold	Public Notice Required?
NO_X	0	317,310	20,000 lb/year	Yes
SO_X	0	59,436	54,750 lb/year	Yes
PM_{10}	0	178,863	29,200 lb/year	Yes
CO	0	544,421	200,000 lb/year	Yes
VOC	0	75,379	20,000 lb/year	Yes

As detailed above, offset thresholds were surpassed for NO_X, PM10, CO, VOC with this project; therefore public noticing is required for offset purposes.

e. SSIPE > 20,000 lb/year

Public notification is required for any permitting action that results in a Stationary Source Increase in Permitted Emissions (SSIPE) of more than 20,000 lb/year of any affected pollutant. According to District policy, the SSIPE is calculated as the Post Project Stationary Source Potential to Emit (SSPE2) minus the Pre-Project Stationary Source Potential to Emit (SSPE1), i.e. SSIPE = SSPE2 – SSPE1. The values for SSPE2 and SSPE1 are calculated according to Rule 2201, Sections 4.9 and 4.10, respectively. The SSIPE is compared to the SSIPE Public Notice thresholds in the following table:

Stationary Source Increase in Permitted Emissions [SSIPE] – Public Notice					
Pollutant	SSPE2 (lb/yr)	SSPE1 (lb/yr)	SSIPE (lb/yr)	SSIPE Public Notice Threshold	Public Notice Required?
NO_x	317,310	0	317,310	20,000 lb/year	Yes
SO_x	59,436	0	59,436	20,000 lb/year	Yes
PM_{10}	178,863	0	178,863	20,000 lb/year	Yes
CO	544,421	0	544,421	20,000 lb/year	Yes
VOC	75,379	0	75,379	20,000 lb/year	Yes

As demonstrated above, the SSIPEs for NO_X, SO_X, PM10, CO, and VOC were greater than 20,000 lb/year; therefore public noticing for SSIPE purposes is required.

2. Public Notice Action

As discussed above, public noticing is required for this project for new major source, PEs in excess of 100 lb/day, offset threshold being surpassed, and SSIPE greater than 20,000 lb/year. The District shall public notice this project according to the requirements of Section 5.5.

D. Daily Emission Limits (DELs)

Daily Emissions Limitations (DELs) and other enforceable conditions are required by Section 3.16 to restrict a unit's maximum daily emissions, to a level at or below the emissions associated with the maximum design capacity. Per Sections 3.16.1 and 3.16.2, the DEL must be contained in the latest Determination of Compliance and contained in or enforced by the latest PTO and enforceable, in a practicable manner, on a daily basis. DELs are also required to enforce the applicability of BACT.

S-7616-26-0 (Combustion Turbine Generator)

- During normal operation (excluding startup and shutdown), emission rate from the CTG/HRSG stack when firing on hydrogen-rich fuel shall not exceed any of the following: NOx (as NO2) - 25.0 lb/hr and 2.5 ppmvd-NOx @ 15% O2 (1-hour average); VOC (as methane) - 3.5 lb/hr and 1.0 ppmvd-VOC @ 15% O2; CO - 18.3 lb/hr and 3.0 ppmvd-CO @ 15% O2; PM10 - 12.9 lb/hr; or SOx (as SO2) - 4.1 lb/hr. The NOx (as NO2) emission limit indicated above is a one-hour rolling average. All other pollutant emission limits are three-hour rolling averages. [District Rules 2201 and 4703 and 40 CFR 60.4320(a) & (b)]

- During normal operation (excluding startup and shutdown), emission rate from the feedstock dryer stack when firing on hydrogen-rich fuel shall not exceed any of the following: NOx (as NO2) - 4.4 lb/hr and 2.5 ppmvd-NOx @ 15% O2 (1-hour average); VOC (as methane) - 0.6 lb/hr and 1.0 ppmvd-VOC @ 15% O2; CO - 3.2 lb/hr and 3.0 ppmvd-CO @ 15% O2; PM10 - 1.4 lb/hr; or SOx (as SO2) - 0.9 lb/hr. The NOx (as NO2) emission limit indicated above is a one-hour rolling average. All other pollutant emission limits are three-hour rolling averages. [District Rules 2201 and 4703 and 40 CFR 60.4320(a) & (b)]

- During normal operation (excluding startup and shutdown), emission rate from the CTG/HRSG stack when firing on natural gas shall not exceed any of the following: NOx (as NO2) - 34.1 lb/hr and 4.0 ppmvd-NOx @ 15% O2; VOC (as methane) - 5.9 lb/hr and 2.0 ppmvd-VOC @ 15% O2; CO - 26.0 lb/hr and 5.0 ppmvd-CO @ 15% O2; PM10 - 15.0 lb/hr; or SOx (as SO2) - 4.7 lb/hr. All pollutant emission limits are three-hour rolling averages. [District Rules 2201 and 4703 and 40 CFR 60.4320(a) & (b)]

- Ammonia (NH3) emissions shall not exceed either of the following limits: 18.50 lb/hr or 5.0 ppmvd @ 15% O2 (based on a 24 hour rolling average). [District Rule 2201]

- During startup, emission rates from the CTG/HRSG stack shall not exceed any of the following: NOx (as NO2) - 107.20 lb/hr, SOx - 2.40 lb/hr, PM10 - 15.00 lb/hr, CO - 2,270.00 lb/hr, or VOC - 65.00 lb/hr, based on one-hour averages. During startup, emission rates from the CTG/HRSG stack shall not exceed any of the following: NOx (as NO2) - 381.2 lb/day, SOx - 10.7 lb/day, PM10 - 59.7 lb/day, CO - 3,385.0 lb/day, or VOC - 67.7 lb/day. [District Rule 2201]

- During startup, emission rates from the feedstock dryer stack shall not exceed any of the following: NOx (as NO2) - 15.10 lb/hr, SOx - 0.30 lb/hr, PM10 - 0.90 lb/hr, CO - 147.40

lb/hr, or VOC - 1.90 lb/hr, based on one-hour averages. During startup, emission rates from the feedstock dryer stack shall not exceed any of the following: NOx (as NO2) - 49.0 lb/day, SOx - 1.2 lb/day, PM10 - 3.6 lb/day, CO - 317.8 lb/day, or VOC - 5.2 lb/day. [District Rule 2201]

- During shutdown, emission rates from the CTG/HRSG stack shall not exceed any of the following: NOx (as NO2) - 122.0 lb/hr, SOx - 2.7 lb/hr, PM10 - 15.0 lb/hr, CO - 2,270.0 lb/hr, or VOC - 64.8 lb/hr, based on one-hour averages. During shutdown, emission rates from the CTG/HRSG stack shall not exceed any of the following: NOx (as NO2) - 766.6 lb/day, SOx - 21.9 lb/day, PM10 - 127.0 lb/day, CO - 8,437.0 lb/day, or VOC - 193.9 lb/day. [District Rule 2201]

- During shutdown, emission rates from the feedstock dryer stack shall not exceed any of the following: NOx (as NO2) - 9.4 lb/hr, SOx - 0.3 lb/hr, PM10 - 0.9 lb/hr, CO - 11.5 lb/hr, or VOC - 0.7 lb/hr, based on one-hour averages. During shutdown, emission rates from the feedstock dryer stack shall not exceed any of the following: NOx (as NO2) - 37.6 lb/day, SOx - 1.2 lb/day, PM10 - 3.6 lb/day, CO - 46.0 lb/day, or VOC - 2.8 lb/day. [District Rule 2201]

- Daily emissions from the CTG/HRSG stack when firing on hydrogen-rich fuel on days without a startup or shutdown shall not exceed any of the following: NOx (as NO2) - 600.0 lb/day; CO - 439.2 lb/day; VOC - 84.0 lb/day; PM10 - 309.6 lb/day; SOx (as SO2) - 98.4 lb/day, or NH3 - 444.0 lb/day. [District Rule 2201]

- Daily emissions from the CTG/HRSG stack when firing on natural gas on days without a startup or shutdown shall not exceed any of the following: NOx (as NO2) - 818.4 lb/day; CO - 624.0 lb/day; VOC - 141.6 lb/day; PM10 - 360.0 lb/day; SOx (as SO2) - 112.8 lb/day, or NH3 - 379.2 lb/day. [District Rule 2201]

- Daily emissions from the feedstock dryer stack when firing on hydrogen-rich fuel on days without a startup or shutdown shall not exceed any of the following: NOx (as NO2) - 105.6 lb/day; CO - 76.8 lb/day; VOC - 14.4 lb/day; PM10 - 33.6 lb/day; SOx (as SO2) - 21.6 lb/day, or NH3 - 76.8 lb/day. [District Rule 2201]

S-7616-17-0 (Railcar Unloading and Transfer System)

- PM10 emissions shall not exceed any of the following emissions for the following operation(s): rail unloading station: 4.1 lb/day. [District Rule 2201]

- The maximum process rates of material on a weight basis shall not exceed any of the following: rail unloading station: 6,107 ton/day. [District Rule 2201]

- Airflow for the following dust collector(s) shall not exceed: rail unloading station: 20,000 cfm. [District Rule 2201]

- Particulate matter emissions from the dust collectors shall not exceed 0.001 grains/dscf in concentration. [District Rules 2201, 4001, and 40 CFR 60.254]

S-7616-18-0 (Truck Unloading and Transfer System)

- PM10 emissions shall not exceed any of the following emissions for the following operation(s): truck unloading station: 16.5 lb/day. [District Rule 2201]

- The maximum process rates of material on a weight basis shall not exceed any of the following: truck unloading station: 1,368 ton/day. [District Rule 2201]

- Airflow for the following dust collector(s) shall not exceed: truck unloading station: 80,000 cfm. [District Rule 2201]

- Particulate matter emissions from the dust collectors shall not exceed 0.001 grains/dscf in concentration. [District Rules 2201, 4001, and 40 CFR 60.254]

S-7616-19-0 (Feedstock Storage, Blending, and Reclaim System)

- PM10 emissions shall not exceed any of the following emissions for the following operation(s): feedstock transfer tower 1: 0.3 lb/day; feedstock transfer tower 2: 0.3 lb/day. [District Rule 2201]

- The maximum process rates of material on a weight basis shall not exceed any of the following: feedstock transfer tower 1: 6,107 ton/day; feedstock transfer tower 2: 7,475 ton/day. [District Rule 2201]

- Airflow for the following dust collector(s) shall not exceed: feedstock transfer tower 1: 1,500 cfm; feedstock transfer tower 2: 1,500 cfm. [District Rule 2201]

- Particulate matter emissions from the dust collectors shall not exceed 0.001 grains/dscf in concentration. [District Rules 2201, 4001, and 40 CFR 60.254]

S-7616-20-0 (Feedstock Grinding/Crushing and Drying System)

- PM10 emissions shall not exceed any of the following emissions for the following operation(s): feedstock bunkers: 2.6 lb/day; feedstock crusher: 2.6 lb/day. [District Rule 2201]

- The maximum process rates of material on a weight basis shall not exceed any of the following: feedstock bunkers: 7,475 ton/day; feedstock crusher: 7,475 ton/day. [District Rule 2201]

- Airflow for the following dust collector(s) shall not exceed: feedstock bunkers: 12,600 cfm; feedstock crusher: 12,600 cfm. [District Rule 2201]

- Particulate matter emissions from the dust collectors shall not exceed 0.001 grains/dscf in concentration. [District Rules 2201, 4001, and 40 CFR 60.254]

S-7616-21-0 (Gasification System)

- Fugitive VOC emission rate from the unit shall not exceed 86.6 lb/day based on the component count and emission factors from EPA document Protocol for Equipment Leak Emission Estimates (EPA-453/R-95-017), Table 2-1, SOCMI Average Emissions Factors and the applicable control efficiency for those components subject to a leak detection and repair (LDAR) program. Components serving the following streams associated with this unit shall be subject to a leak detection and repair (LDAR) program: methanol, propylene, H2S-laden methanol, CO2-laden methanol, acid gas, and ammonia laden gas. The following control efficiencies in Table 5-2 of the EPA document shall apply to those components under an LDAR program: gas valves: 92%; light liquid valves: 88%; light liquid pump seals: 75%; and connectors: 93%. [District Rule 2201]

- Fugitive CO emission rate from the unit shall not exceed 30.3 lb/day based on the component count, CO percentage in the fluid stream, emission factors from Protocol for Equipment Leak Emission Estimates (EPA-453/R-95-017), Table 2-1, SOCMI Average Emissions Factors and the applicable control efficiency for those components subject to a leak detection and repair (LDAR) program. [District Rule 2201]

- The VOC content of the gas in the following streams shall not exceed 10% by weight: syngas, shifted syngas, sour water, acid gas, ammonia-laden gas. [District Rule 2201]

S-7616-22-0 (Gasification Solids Material Handling System)

- PM10 emissions shall not exceed any of the following emissions for the following operation(s): gasification solids bucket elevator: 0.6 lb/day; gasification solids transfer tower: 0.6 lb/day; gasification solids load-out system: 2.1 lb/day; gasification solids pad stacking: 0.1 lb/day; gasification solids pad reclaim: 0.2 lb/day. [District Rule 2201]

- The maximum process rates of material on a weight basis shall not exceed any of the following: gasification solids bucket elevator: 1,678 ton/day; gasification solids transfer tower: 1,678 ton/day; gasification solids load-out system: 1,678 ton/day. [District Rule 2201]

- Airflow for the following dust collector(s) shall not exceed: gasification solids bucket elevator: 3,000 cfm; gasification solids transfer tower: 3,000 cfm; gasification solids load-out system: 10,000 cfm. [District Rule 2201]

- Particulate matter emissions from the dust collectors shall not exceed 0.001 grains/dscf in concentration. [District Rules 2201, 4001, and 40 CFR 60.254]

S-7616-23-0 (Sulfur Recovery and Tail Gas Compression System)

- Emission rates from the tail gas thermal oxidizer shall not exceed the following: NOx: 0.24 lb/MMBtu; CO: 0.20 lb/MMBtu; VOC: 0.0055 lb/MMBtu; PM10: 0.0076 lb/MMBtu. [District Rule 2201]

- SOx (as SO2) emissions from the tail gas thermal oxidizer shall not exceed 0.0204 lb/MMBtu for the disposal of SRU startup gas nor 2.00 lb/hr for the disposal of the process vent gas. [District Rule 2201]

- The thermal oxidizer firing rate shall not exceed 13.0 MMBtu/hr of natural gas from normal operation (for the disposal of process vent gas). The thermal oxidizer firing rate shall not exceed 80.0 MMBtu/hr of natural gas from SRU startup operation (for the disposal of SRU startup gas). [District Rule 2201]

- Fugitive CO emission rate from the unit shall not exceed 2.7 lb/day based on the component count, CO percentage in the fluid stream, emission factors from Protocol for Equipment Leak Emission Estimates (EPA-453/R-95-017), Table 2-1, SOCMI Average Emissions Factors. [District Rule 2201]

- The VOC content of the gas in the following streams shall not exceed 10% by weight: sulfur, tail gas unit process gas. [District Rule 2201]

S-7616-24-0 (CO2 Recovery and Vent System)

- Emission rates from the vent stream shall not exceed 492.4 lb-CO/hour, 11.3 lb-VOC/hour, 58.0 lb-COS/hour, nor 6.0 lb-H2S/hour. Compliance with these rates shall be demonstrated by measuring the vent stream flowrate and the concentration of these constituents in the vent stream. [District Rule 2201]

- Vent stream concentration shall not exceed 1,000 ppm-CO, 40 ppm-VOC, 55 ppm-COS, nor 10 ppm-H2S. [District Rule 2201]

- Emission rates from the vent stream shall not exceed 11,816.5 lb-CO/day nor 270.1 lb-VOC/day. [District Rule 2201]

S-7616-25-0 (Auxiliary Boiler)

- Emissions from this unit, except during startup or shutdown, shall not exceed any of the following limits: NOx (as NO2): 5.0 ppmvd @ 3% O2 or 0.006 lb/MMBtu, SOx (as SO2): 0.00285 lb/MMBtu, PM10: 0.005 lb/MMBtu, CO: 50.8 ppmvd @ 3% O2 or 0.037 lb/MMBtu, or VOC: 0.0040 lb/MMBtu. [District Rules 2201, 4305, 4306 and 4320]

- The maximum allowable heat input of the boiler shall not exceed 213 MMBtu/hr. [District Rule 2201]

S-7616-27-0 (Gasification Process Area Cooling Tower)

- Drift eliminator drift rate shall not exceed 0.0005%. [District Rule 2201]

- Total dissolved solids (TDS) in circulating water shall not exceed 9,000 mg/liter. [District Rule 2201]

- Cooling tower circulation water flow rate shall not exceed 162,582 gallons per minute nor 81.10 billion gallons per calendar year. [District Rule 2201]

- PM10 emission rate from the cooling tower shall not exceed 87.9 lb/day. [District Rule 2201]

- Compliance with the PM10 daily emission limit shall be demonstrated as follows: PM10 lb/day = circulating water recirculation rate x total dissolved solids concentration in the circulating water x manufacturer's design drift rate. [District Rule 2201]

S-7616-28-0 (Air Separation Unit Cooling Tower)

- Drift eliminator drift rate shall not exceed 0.0005%. [District Rule 2201]

- Total dissolved solids (TDS) in circulating water shall not exceed 2,000 mg/liter. [District Rule 2201]

- Cooling tower circulation water flow rate shall not exceed 44,876 gallons per minute nor 22.39 billion gallons per calendar year. [District Rule 2201]

- PM10 emission rate from the cooling tower shall not exceed 8.1 lb/day. [District Rule 2201]

- Compliance with the PM10 daily emission limit shall be demonstrated as follows: PM10 lb/day = circulating water recirculation rate x total dissolved solids concentration in the circulating water x manufacturer's design drift rate. [District Rule 2201]

S-7616-29-0 (Power Block Cooling Tower)

- Drift eliminator drift rate shall not exceed 0.0005%. [District Rule 2201]

- Total dissolved solids (TDS) in circulating water shall not exceed 9,000 mg/liter. [District Rule 2201]

- Cooling tower circulation water flow rate shall not exceed 95,000 gallons per minute nor 49.41 billion gallons per calendar year. [District Rule 2201]

- PM10 emission rate from the cooling tower shall not exceed 51.6 lb/day. [District Rule 2201]

- Compliance with the PM10 daily emission limit shall be demonstrated as follows: PM10 lb/day = circulating water recirculation rate x total dissolved solids concentration in the circulating water x manufacturer's design drift rate. [District Rule 2201]

S-7616-30-0 (Gasification Flare)

- Maximum amount of gas combusted in the flare during planned flaring shall not exceed any of the following: 21,936 MMBtu/yr of natural gas (including pilot gas); 9,544 MMBtu/yr of unshifted syngas; 43,434 MMBtu/yr of shifted gas. [District Rule 2201]

- Emissions from the flare, during the non-emergency combustion of natural gas, shall not exceed any of the following (based on total gas combusted): PM10: 0.003 lb/MMBtu; NOx (as NO2): 0.068 lb/MMBtu; VOC: 0.0004 lb/MMBtu; CO: 0.08 lb/MMBtu; or SOx: 0.00214 lb/MMBtu. [District Rule 2201]

- Emissions from the flare, during the non-emergency combustion of syngas and waste gas, shall not exceed any of the following (based on total gas combusted): PM10: 0.000 lb/MMBtu; NOx (as NO2): 0.07 lb/MMBtu; VOC: 0.000 lb/MMBtu; CO: 2.0 lb/MMBtu on unshifted syngas and 0.37 lb/MMBtu on shifted syngas; or SOx: 0.000 lb/MMBtu. [District Rule 2201]

- Emissions from the flare shall not exceed any of the following: NOx: 2,399.0 lb/day; SOx: 18.8 lb/day; PM10: 26.4 lb/day; CO: 20,335.2 lb/day; or VOC: 11.4 lb/day. [District Rule 2201]

- Total sulfur content of natural gas combusted shall not exceed 0.75 grain/100 scf. [District Rule 2201]

S-7616-31-0 (Sulfur Recovery Unit Flare)

- During planned flaring events, no more than 36 MMBtu/hr shall be combusted. [District Rule 2201]

- Emissions from the flare shall not exceed any of the following (based on total gas combusted): PM10: 0.003 lb/MMBtu; NOx (as NO2): 0.068 lb/MMBtu; VOC: 0.0013 lb/MMBtu; or CO: 0.08 lb/MMBtu. [District Rule 2201]

- SOx emissions from the flare shall not exceed 0.00214 lb/MMBtu during pilot gas combustion nor 18.4 lb/hr during other non-emergency combustion. [District Rule 2201]

- Total sulfur content of natural gas combusted shall not exceed 0.75 grain/100 scf. [District Rule 2201]

S-7616-32-0 (Rectisol Flare)

- Total time of planned flaring shall not exceed 8 hours per day nor 40 hours per calendar year. [District Rule 2201 and 2410]

- Emissions from the flare during pilot and other non-emergency operation shall not exceed any of the following: PM10: 0.003 lb/MMBtu; NOx (as NO2): 0.068 lb/MMBtu; VOC: 0.0013 lb/MMBtu; or CO: 0.08 lb/MMBtu. [District Rule 2201]

- SOx emissions from the flare shall not exceed 0.00214 lb/MMBtu during pilot gas combustion nor 15.0 lb/hr during other non-emergency combustion. [District Rule 2201]

- Total sulfur content of natural gas combusted shall not exceed 0.75 grain/100 scf. [District Rule 2201]

S-7616-33-0 (Ammonia Synthesis Unit Startup Heater)

- Emissions from heater, except during startup or shutdown, shall not exceed any of the following limits: NOx (as NO2): 9.0 ppmvd @ 3% O2 or 0.011 lb/MMBtu, SOx (as SO2): 0.00285 lb/MMBtu, PM10: 0.005 lb/MMBtu, CO: 50 ppmvd @ 3% O2 or 0.037 lb/MMBtu, or VOC: 0.0040 lb/MMBtu. [District Rules 2201, 4305, 4306 and 4320]

- Fugitive VOC emission rate from the unit shall not exceed 0.0 lb/day based on the component count and emission factors from EPA document Protocol for Equipment Leak Emission Estimates (EPA-453/R-95-017), Table 2-1, SOCMI Average Emissions Factors and the applicable control efficiency for those components subject to a leak detection and repair (LDAR) program. Components serving the following streams associated with this unit shall be subject to a leak detection and repair (LDAR) program: low NH3 concentration, moderate NH3 concentration, high NH3 concentration, low CO2 concentration, moderate CO2 concentration, high CO2 concentration, NO2, nitric acid (HNO3), and PSA off gas. The following control efficiencies in Table 5-2 of the EPA document shall apply to those components under an LDAR program: gas valves: 92%; light liquid valves: 88%; light liquid pump seals: 75%; and connectors: 93%. [District Rule 2201]

- Fugitive CO emission rate from the unit shall not exceed 5.9 lb/day based on the component count, CO percentage in the fluid stream, emission factors from Protocol for Equipment Leak Emission Estimates (EPA-453/R-95-017), Table 2-1, SOCMI Average Emissions Factors and the applicable control efficiency for those components subject to a leak detection and repair (LDAR) program. [District Rule 2201]

- The VOC content of the gas in the following streams shall not exceed 10% by weight: low NH3 concentration, moderate NH3 concentration, high NH3 concentration, low CO2 concentration, moderate CO2 concentration, high CO2 concentration, NO2, nitric acid (HNO3), and PSA off gas. [District Rule 2201]

S-7616-34-0 (Urea Unit)

- PM10 emissions shall not exceed any of the following emissions for the following operations: urea bucket elevator: 0.3 lb/day. [District Rule 2201]

- The maximum process rates of material on a weight basis shall not exceed any of the following: urea bucket elevator: 1,720 ton/day. [District Rule 2201]

- Airflow for the following dust collector(s) shall not exceed: urea bucket elevator: 1,500 cfm. [District Rule 2201]

- Particulate matter emissions from the dust collectors shall not exceed 0.001 grains/dscf in concentration. [District Rule 2201]

- Particulate matter emissions from the dust collectors shall not exceed 0.001 grains/dscf in concentration. [District Rule 2201]

S-7616-35-0 (Nitric Acid Unit)

- The production rate of nitric acid shall not exceed 501 tons of nitric acid in one day. [District Rule 2201]

- The selective catalytic reduction system shall be operated at all times that nitric acid production is occurring. [District Rule 2201]

- NOx emissions form the nitric acid unit shall not exceed 100.2 lb-NOx/day. [District Rule 2201]

- NOx emissions form the nitric acid unit shall not exceed 33,617 lb-NOx per calendar year. [District Rule 2201]

S-7616-36-0 (Ammonium Nitrate Unit)

- PM10 emissions from scrubber vent shall not exceed 0.20 lb-PM10/hr. [District Rule 2201]

- PM10 emission from scrubber vent shall not exceed 0.0075 lb-PM10 per ton of ammonium nitrate produced. [District Rule 2201]

- Production of ammonium nitrate shall not exceed 636 tons per day nor 212,000 tons during any consecutive 12-month period. [District Rule 2201]

S-7616-37-0 (Urea Storage and Loadout System)

- PM10 emissions shall not exceed any of the following emissions for the following operations: urea transfer tower 1: 0.3 lb/day; urea transfer tower 2: 0.3 lb/day; urea transfer tower 3: 0.3 lb/day; urea transfer tower 4: 0.3 lb/day; urea transfer tower 5: 0.3 lb/day; urea loading building: 4.1 lb/day. [District Rule 2201]

- The maximum process rates of material on a weight basis shall not exceed any of the following: urea bucket elevator to conveyor: 1,720 ton/day; urea transfer tower 1: 1,720 ton/day; urea transfer tower 2: 1,720 ton/day; urea transfer tower 3: 1,720 ton/day; urea transfer tower 4: 1,720 ton/day; urea transfer tower 5: 1,720 ton/day; urea loading building: 1,720 ton/day. [District Rule 2201]

- Dust collector filters shall be completely inspected annually while not in operation for tears, scuffs, abrasives or holes which might interfere with PM collection efficiency and shall be replaced as needed. [District Rule 2201]

- Airflow for the following dust collector(s) shall not exceed: urea transfer tower 1: 1,500 cfm; urea transfer tower 2: 1,500 cfm; urea transfer tower 3: 1,500 cfm; urea transfer tower 4: 1,500 cfm; urea transfer tower 5: 1,500 cfm; urea loading building: 20,000 cfm. [District Rule 2201]

- Particulate matter emissions from the dust collectors shall not exceed 0.001 grains/dscf in concentration. [District Rule 2201]

S-7616-38-0 (Emergency Engine Powering Electrical Generator)

- Emissions from this IC engine shall not exceed any of the following limits: 0.5 g-NOx/bhp-hr, 2.6 g-CO/bhp-hr, or 0.3 g-VOC/bhp-hr. [District Rule 2201 and 13 CCR 2423 and 17 CCR 93115]

- Emissions from this IC engine shall not exceed 0.07 g-PM10/bhp-hr based on USEPA certification using ISO 8178 test procedure. [District Rules 2201 and 4102 and 13 CCR 2423 and 17 CCR 93115]

S-7616-39-0 (Emergency Engine Powering Electrical Generator)

- Emissions from this IC engine shall not exceed any of the following limits: 0.5 g-NOx/bhp-hr, 2.6 g-CO/bhp-hr, or 0.3 g-VOC/bhp-hr. [District Rule 2201 and 13 CCR 2423 and 17 CCR 93115]

- Emissions from this IC engine shall not exceed 0.07 g-PM10/bhp-hr based on USEPA certification using ISO 8178 test procedure. [District Rules 2201 and 4102 and 13 CCR 2423 and 17 CCR 93115]

S-7616-40-0 (Emergency Engine Powering Firewater Pump)

- Emissions from this IC engine shall not exceed any of the following limits: 1.5 g-NOx/bhp-hr, 2.6 g-CO/bhp-hr, or 0.14 g-VOC/bhp-hr. [District Rule 2201 and 13 CCR 2423 and 17 CCR 93115]

- Emissions from this IC engine shall not exceed 0.01 g-PM10/bhp-hr based on USEPA certification using ISO 8178 test procedure. [District Rules 2201 and 4102 and 13 CCR 2423 and 17 CCR 93115]

E. Compliance Assurance

1. Source Testing

S-7616-26-0 (Combustion Turbine Generator)

District Rule 4703 requires NO_X and CO emission testing on an annual basis. The District Source Test Policy (APR 1705) requires annual testing for all pollutants controlled by catalysts. The control equipment will include a SCR system and an oxidation catalyst. Ammonia slip is an indicator of how well the SCR system is performing and PM_{10} emissions are a good indicator of how well the inlet air cooler and filter are performing. Therefore, source testing for NO_X, VOC, CO, PM_{10}, and ammonia slip will be required within 120 days of initial operation and at least once every 12 months thereafter.

Also, initial source testing of NO_X, CO, and VOC startup emissions will be required for the CTG initially and not less than every seven years thereafter. If CEM data is not certifiable to determine compliance with NO_X and CO startup emission limits, then source testing to measure startup NO_X and CO mass emission rates shall be conducted at least once every 12 months. This testing will serve two purposes: to validate the startup emission estimates used in the emission calculations and to verify that the CEMs accurately measure startup emissions.

The CTG will be equipped with CEMs for NO_X, CO, and O_2. The CEM will have two ranges to allow accurate measurements of NO_X and CO emissions during startup. The CEMs must meet the installation, performance, relative accuracy, and quality assurance requirements specified in 40 CFR 60.13 and Appendix B (referenced in the CEM requirements of Rule 4703) and the acid rain requirements in 40 CFR Part 75.

40 CFR Part 60 subpart KKKK requires fuel nitrogen content testing. The District will accept the NO_X source testing required by District Rule 4703 as equivalent to fuel nitrogen content testing.

40 CFR Part 60 subpart KKKK requires that fuel sulfur content be monitored. Refer to the monitoring section of this document for a discussion of the fuel sulfur testing requirements.

S-7616-38-0 (Emergency Engines Powering Electrical Generator)
S-7616-39-0 (Emergency Engines Powering Electrical Generator)
S-7616-40-0 (Emergency Engine Powering Firewater Pump)

Pursuant to District Policy APR 1705, source testing is not required for emergency IC engines to demonstrate compliance with Rule 2201.

S-7616-17-0 (Railcar Unloading and Transfer System)
S-7616-18-0 (Truck Unloading and Transfer System)
S-7616-19-0 (Feedstock Storage, Blending, and Reclaim System)
S-7616-20-0 (Feedstock Grinding/Crushing and Drying System)
S-7616-22-0 (Gasification Solids Material Handling System)
S-7616-37-0 (Urea Storage and Loadout System)

Testing for particulate matter concentration for each dust collector shall be conducted within 60 days after achieving the maximum production rate, not later than 180 days after initial startup of such facility, and within 12 calendar months of the date the previous performance test was required to be completed thereafter. If the results of the most recent performance test demonstrate that emissions from the affected facility are 50 percent or less of the applicable emissions standard, a new performance test must be conducted within 24 calendar months of the date that the previous performance test was required to be completed.

S-7616-24-0 (CO2 Recovery and Vent System)

Permittee shall conduct an initial speciated hazardous air pollutants (HAPs) and total VOC source test for the CO2 recovery and vent system by District witnessed in situ sampling of vented stream by a qualified independent source test firm. The permittee shall determine the total HAPs emissions rate, the single highest HAP emission rate, and the VOC mass emission during the source test. Initial compliance with the HAPs emissions limit (25 tpy all HAPs or 10 tpy any single HAP) shall be demonstrated by the combined VOC emissions rates determined during initial compliance source testing and the correlation between VOC emissions and HAP(s). The vent stream composition of CO, VOC, H2S, COS, and the HAPs identified in the initial speciated HAPs and total VOC source test, shall be measured during each venting occurrence exceeding 500,000 scf/day using EPA-approved test methods with a gas chromatograph or equivalent equipment as determined by the District in writing.

S-7616-25-0 (Natural-Gas Fired Auxiliary Boiler)
S-7616-33-0 (Ammonia Synthesis Startup Heater)

The units shall be tested for compliance with the NOx and CO emissions limits at least once every twelve months. After demonstrating compliance on two consecutive annual source tests, the unit shall be tested not less than once every thirty-six months.

S-7616-27-0, -28-0, and -29-0 (Cooling Towers)

Compliance with the total dissolved solids (TDS) limit in the circulating water shall be determined by an independent laboratory within 60 days of initial operation and quarterly thereafter.

S-7616-36-0 (Ammonium Nitrate Unit)

Source testing to quantify PM10 emissions from scrubber vent, expressed as lb-PM10/hr, and scrubber PM10 control efficiency shall be conducted within 60 days after initial start-up with equipment in operation at 90 percent or more of the rated capacity when the analysis is conducted, and once every twelve months thereafter.

2. Monitoring

S-7616-26-0 (Combustion Turbine Generator)

Monitoring of NO_X emissions is required by District Rule 4703. The applicant has proposed a CEMS for NO_X.

CO monitoring is not specifically required by any applicable Rule or Regulation. Nevertheless, due to erratic CO emission concentrations during startup and shutdown periods, it is necessary to limit the CO emissions on a pound per hour basis. Therefore, a CO CEMS is necessary to show compliance with the CO limits of this DOC. The applicant has proposed a CO CEMS.

40 CFR Part 60 Subpart KKKK requires monitoring of the fuel consumption. Fuel consumption monitoring will be required.

40 CFR Part 60 Subpart KKKK requires monitoring of the fuel nitrogen content. As stated in the Subpart KKKK compliance section of this document, the District will allow the annual NO_X source test to substitute for this requirement.

40 CFR Part 60 Subpart KKKK requires monitoring of the fuel sulfur content. The gas supplier, Pacific Gas & Electric (PG&E), may deliver gas with a sulfur content of up to 1.0 gr/scf. Since the sulfur content of the natural gas would not exceed this value, it is District practice to require initial weekly testing for eight consecutive weeks and semi-annual fuel sulfur content testing thereafter if the fuel sulfur content remains below 1.0 gr/scf. Therefore, fuel sulfur content testing is required.

S-7616-21-0 (Gasification Process Area Cooling Tower)
S-7616-27-0 (Air Separation Unit Cooling Tower)
S-7616-28-0 (Power Block Cooling Tower)

District Rule 7012 requires hexavalent chromium concentration testing to be conducted at least once every six (6) months for non-wooden cooling towers subject to Section 5.2.3 of the rule. Since the cooling tower has never had hexavalent chromium containing compounds added to the circulating water, this unit is exempt from the monitoring requirements of the rule. Therefore, no monitoring will be required for these units.

S-7616-23-0 (Sulfur Recovery System)

The operation shall include a continuously recording H2S monitor at the incinerator inlet (on the TGU absorber overhead) and shall include an incinerator with continuously recording SO2 and O2 monitors.

S-7616-25-0 (Natural-Gas Fired Auxiliary Boiler)
S-7616-33-0 (Ammonia Synthesis Startup Heater)

The permittee shall monitor and record the stack concentration of NOx, CO, and O2 at least once every month (in which a source test is not performed) using a portable analyzer that meets District specifications.

S-7616-35-0 (Nitric Acid Unit)

The permittee shall install, calibrate, maintain, and operate a continuous emission monitoring system (CEMS) for measuring and recording the concentration of NOx emissions in accordance with the provisions of Section 60.13 and Performance Specification 2 of Appendix B and Procedure 1 of Appendix F of part 60.

3. Recordkeeping

Recordkeeping is required to demonstrate compliance with the offset, public notification and daily emission limit requirements of Rule 2201. The applicant is required to keep records of parameter for many of the emission units. Refer to section VIII.E.2 of this document for a discussion of the parameters that will be monitored.

4. Reporting

S-7616-26-0 (Combustion Turbine Generator)

40 CFR Part 60 Subpart KKKK requires that the facility report the use of fuel with a sulfur content of more than 0.8% by weight. Such reporting will be required.

40 CFR Part 60 Subpart KKKK requires the reporting of exceedances of the NO_X emission limit. Such reporting will be required.

S-7616-27-0, -28-0, and -29-0 (Cooling Towers)

District Rule 7012 requires the facility submit a compliance plan to the APCO at least 90 days before the newly constructed cooling tower is operated. Such reporting will be required.

S-7616-23-0 (Sulfur Recovery System)

For the SRU, the operator shall report all 3-hour periods during which the average concentration of H2S as measured by the H2S continuous monitoring system exceeds 10 ppm (dry basis, zero percent excess air).

S-7616-24-0 (CO2 Recovery and Vent System)

Periods of venting from the CO2 recovery and vent system shall be reported to the District by the following working day, including the duration of the venting event and the vent gas composition observed.

S-7616-30-0, -31-0, and -32-0 (Flares)

The permittee shall report to the District in writing within ten days following the emergency use of the flare. The report shall include 1) a statement that the failure or malfunction has been corrected, the date corrected, and proof of correction; 2) a specific statement of the reason or cause for the occurrence; 3) a description of the corrective measures undertaken and/or to be undertaken to avoid such an occurrence in the future; and 4) an estimate of the emissions caused by the emergency use, specifically including duration of flare operation and amount of gas burned.

Also, periods of flare monitoring system in operation greater than 24 continuous hours shall be reported by the following working day, followed by notification of resumption of monitoring. Periods of inoperation of monitoring equipment shall not exceed 14 days per any 18-consecutive-month period. Periods of flare monitoring system inoperation do not include the periods when the system feeding the flare is not operating.

S-7616-35-0 (Nitric Acid Unit)

40 CFR 60 Subpart Ga, requires the permittee to submit performance test data from the initial and subsequent performance tests and from performance evaluations of the continuous monitors to the EPA Administrator at the appropriate address as shown in 40 CFR 60.4. The permittee shall report to the Administrator for each 30 operating day period where the nitric acid plant was not in compliance with the emissions standard: (1) Time period; (2) NOx emission rates (lb/ton of acid produced); (3) Reasons for noncompliance with the emissions standard; and (4) Description of corrective actions taken. The permittee shall also report the following whenever they occur: (1) Times when the pollutant concentration exceeded full span of the NOx pollutant monitoring equipment; and (2) Times when the volumetric flow rate exceeded the high value of the volumetric flow rate monitoring equipment.

Additionally, the permittee shall report any modifications to CERMS which could affect the ability of the CERMS to comply with applicable performance specifications. If a malfunction occurred during the reporting period, the permittee must submit a report that contains the following: (1) The number, duration, and a brief description for each type of malfunction which occurred during the reporting period and which caused or may have caused any applicable emission limitation to be exceeded; (2) A description of actions taken by an owner or operator during a malfunction of an affected facility to minimize emissions in accordance with §60.11(d), including actions taken to correct a malfunction.

F. Ambient Air Quality Analysis

Section 4.14.1 of this Rule requires that an ambient air quality analysis (AAQA) be conducted for the purpose of determining whether a new or modified Stationary Source will cause or make worse a violation of an air quality standard. The Technical Services Division of the SJVAPCD conducted the required analysis. Refer to the Refined AAQA Results in Section 8.2.9.2 of Appendix K (Ambient Air Quality Impact and Health Risk Report). The results of the refined AAQS analysis for HECA's operations are shown in Table 8-5. The analysis demonstrates that emissions from HECA will not cause or contribute to exceedance of a NAAQS and/or CAAQS for any affected pollutant.

The District also considered additional information to ensure that the Project would not be responsible for causing a new NAAQS and/or CAAQS exceedance outside this modeling area. The District also considered the emission reduction credits being surrendered by the applicant if the project exceeds any NAAQA, CAAQS, and SIL threshold when making its determination. The District concludes the Project's expected emissions would not create any new NAAQS and/or CAAQS exceedances.

As noted in Table 8-5, all pollutants except PM2.5 24-hour and annual are below either the NAAQS/CAAQS or the SIL thresholds. As per District Rule 2201 section 4.14.1, mitigation may be considered when evaluating a projects ambient air quality impact. To ensure, to the maximum extent possible, that a facility's emissions do not adversely impact air quality the District requires that it fully offsets any air quality impact. Therefore, since emissions from PM2.5 24-hour and annual exceed the NAAQS/CAAQS and SIL thresholds HECA will be required to fully offset, down to zero, their PM2.5 emissions - see application review Rule 2201 compliance discussion.

G. Compliance Certification

Section 4.15.2 of this rule requires the owner of a new Major Source or a source undergoing a Major Modification to demonstrate to the satisfaction of the District that all other Major Sources owned by such person and operating in California are in compliance or are on a schedule for compliance with all applicable emission limitations and standards. Hydrogen Energy California, LLC and SCS Energy California, LLC do not own or operate any facilities in the State of California; therefore, proof of compliance with applicable federal, state, and SJVAPCD emission limits, and applicable environmental standards, is not applicable.

Rule 2410 – Prevention of Significant Deterioration

As demonstrated in Section VII.C.9 above, the project is subject to the requirements of Rule 2410 for NO2, CO, PM, PM10, and GHGs.

Below is a listing of the requirements of Rule 2410, and demonstration that compliance with the requirements is expected.

A. Best Available Control Technology (BACT)

NOx, CO, and PM10 emissions

The Rule 2410 requirement for BACT is less stringent than the Rule 2201 requirement for BACT. In Rule 2410, BACT is defined as an emission limit based on the maximum degree of emission reduction, as determined on a case by case basis after taking into account energy, environmental, economic impacts, and other costs. For Rule 2410 purposes, costs can be taken into account even of the control technology has been achieved in practice for similar units.

In Rule 2201 BACT is defined as the most stringent control that either 1) achieved in practice for such class and category of source (regardless of cost), 2) contained in an EPA approved SIP for such lass and category of source, 2) contained in a Federal New Source Performance Standard, or 4) any emission technique that is both technologically feasible and cost effective. This BACT definition does not allow a consideration of costs for control techniques that have been achieved in practice.

As Rule 2201 required BACT for NOx, CO, and PM10, the BACT requirements of Rule 2410 are satisfied by compliance with the Rule 2201 BACT requirement.

PM emissions

As discussed in Section VII, all particulate matter emissions from the stationary source are PM10 and smaller due to the use of baghouses on all solids material handling operations and combustion of gaseous fuels. As Rule 2201 required BACT for PM10, the BACT requirements of Rule 2410 for PM are satisfied by compliance with the Rule 2201 PM10 BACT requirement.

GHG emissions

GHG BACT requirements for this project are discussed in the GHG BACT discussion in Appendix I of this evaluation, with the specific requirements summarized in Table 7 of that discussion.

Pursuant to the GHG BACT discussion, BACT for GHG will be satisfied with the following:

S-7616 (Facilitywide requirement)

GHG:

- The facility CO2e potential emissions will be limited to 595,917 tons-CO2e/yr. The permittee will be required to monitor the facility's CO2e and maintain such records onsite.

S-7616-26-0 (Combustion Turbine Generator)

GHG:

- Capture of 90% of the pre-combustion CO2 through carbon sequestration and firing on hydrogen-rich fuel
- Energy-efficient turbine design
- Firing on PUC-quality natural gas backup fuel limited to startups, shutdowns, and unplanned equipment outages

S-7616-24-0 (CO2 Recovery and Vent System)

GHG:

- Capture, compression, and transportation of the CO2 stream in a pipeline for injection (during normal operation); venting of CO2 stream when injection system is unavailable due to upset condition with such cumulative periods not exceeding 504 hours per calendar year; and the use of good operating practices on the CO2 and transportation system.

S-7616-25-0 (Auxiliary Boiler)

GHG:

- Limited operation (annual fuel firing rate limited to 466 billion Btu per year)
- Firing on a lower-carbon fuel (PUC-quality natural gas)
- Energy-efficiency measures (economizer and condensate recovery)
- Tuning the boiler twice per calendar year

S-7616-35-0 (Nitric Acid Unit)

GHG:

- Tertiary control (catalytic decomposition) and N2O emission rate limited to 0.54 lb-N2O/ton of HNO3 produced

S-7616-23-0 (Tail Gas Thermal Oxidizer)

GHG:

- Firing on PUC-quality natural gas
- Sulfur recovery unit startup venting limited to 48 hours per calendar year

S-7616-30-0, -31-0, and -32-0 (Flares)

GHG:

- Minimization of flaring and the preparation of a flare minimization plan.
- Limited venting

S-7616-33-0 (Ammonia Synthesis Plant Startup Heater)

GHG:

- Intermittent use of the startup heater (annual firing rate limited to 7.84 billion Btu/yr)
- Firing on PUC-quality natural gas

S-7616-34-0 (Urea Absorbers)

GHG:

- Implementation of good operating practices.

S-7616-38, -39-0 (Diesel-Fired Emergency Engines Powering Electrical Generators)

GHG:

- Limited operation (limited to emergencies and during maintenance, testing, and required regulatory purposes not to exceed 50 hours per calendar year)
- Installation the latest EPA Tier certification level

S-7616-40-0 (Diesel-Fired Emergency Engines Powering Firewater Pump)

GHG:

- Limited operation (limited to emergencies and during maintenance, testing, and required regulatory purposes not to exceed 100 hours per calendar year)
- Installation the latest EPA Tier certification level

S-7616-21-0, -23-0, -33-0 (Fugitive Emissions – Gasification Block and Manufacturing Complex)

GHG:

- Leak detection and repair (LDAR) program

Circuit Breakers

GHG: [40]

- Use of state-of-the art circuit breakers that use SF6 technology with a leak detection system

B. Other Rule 2410 Requirements

The project's ambient air quality impact analysis and additional analysis including visibility, soils, vegetation, and growth are discussed in the Ambient Air Quality Impact and Health Risk Report for District Rule 2201 (New Source Review), District Rule 4201 (Nuisance) and District Rule 2410 (Prevention of Significant Deterioration), which is found in Appendix K (Ambient Air Quality Impact and Health Risk Assessment Report).

Based on this analysis, Compliance with the requirements of Rule 2410 is expected.

[40] Circuit breakers are not subject to District permitting requirements, but the GHG BACT requirement conditions regarding circuit breakers will be included on S-7616-26.

Rule 2520 - Federally Mandated Operating Permits

Since this facility's emissions exceed the major source thresholds of District Rule 2201, this facility is a major source. Pursuant to Rule 2520 Section 5.1, and as required by DOC condition, the facility will have up to 12 months from the date of DOC issuance to either submit a Title V Application or comply with District Rule 2530 (Federally Enforceable Potential to Emit).

- Permittee shall submit an application to comply with Rule 2520 - Federally Mandated Operating Permits within twelve months of commencing operation. [District Rule 2520]

Rule 2540 - Acid Rain Program

The proposed CTG is subject to the acid rain program as a phase II unit, i.e. it will be installed after 11/15/90 and it has a generator nameplate rating greater than 25 MW.

The acid rain program will be implemented through a Title V operating permit. Federal regulations require submission of an acid rain permit application to EPA at least 24 months before the date the unit expects to generate electricity.

The acid rain program requirements for this facility are relatively minimal. Monitoring of the NO_X and SO_X emissions and a relatively small quantity of SO_X allowances (from a national SO_X allowance bank) will be required as well as the use of a NO_X CEM.

Proposed Rule 2540 Condition:

- Permittee shall submit an application to comply with SJVUAPCD District Rule 2540 - Acid Rain Program. [District Rule 2540]

Rule 2550 - Federally Mandated Preconstruction Review for Major Sources of Air Toxics

Section 2.0 states, "*The provisions of this rule shall only apply to applications to construct or reconstruct a major air toxics source with Authority to Construct issued on or after June 28, 1998.*" The applicant has provided the analysis for Non-criteria pollutants/HAPs as shown in Appendix H.

Non-criteria pollutants are compounds that have been identified as pollutants that pose a significant health hazard. Nine of these pollutants are regulated under the Federal New Source Review program: lead, asbestos, beryllium, mercury, fluorides, sulfuric acid mist, hydrogen sulfide, total reduced sulfur, and reduced sulfur compounds.[41]

In addition to these nine compounds, the federal Clean Air Act lists 189 substances as potential hazardous air pollutants (Clean Air Act Sec. 112(b)(1)). Any pollutant that may be emitted from the project and is on the federal New Source Review List and the federal Clean Air Act list has been evaluated.

[41] These pollutants are regulated under federal and state air quality programs; however, they are evaluated as noncriteria pollutants by the California Energy Commission (CEC).

As is shown in the Hazardous Air Pollutant Summary in Appendix H (Table 5-2 HECA Total Toxic Air Contaminant Annual Emission Rates), emissions of each individual HAP are below 10 tons per year and total HAP emissions for the stationary source are below 25 tons per year. Therefore, this stationary source will not be a major air toxics source and the provisions of this rule do not apply.

To ensure this source is not a major air toxics source, the following conditions will be listed on the DOC:

- Hazardous Air Pollutant (HAP) emissions for the stationary source shall not exceed 25 tpy all HAPs nor 10 tpy for any single HAP. [District Rule 4002]

Additionally, units S-7616-24 and -26 are the primary contributors of HAPs, the following conditions will be placed on S-7616-24 and -26:

S-7616-24-0 (CO2 Recovery and Vent System)

- Permittee shall conduct an initial speciated HAPs and total VOC source test for the CO2 recovery and vent system by District witnessed in situ sampling of vented stream by a qualified independent source test firm. The permittee shall determine the total HAPs emissions rate, the single highest HAP emission rate, and the VOC mass emission during the source test. Initial compliance with the HAPs emissions limit (25 tpy all HAPs or 10 tpy any single HAP) shall be demonstrated by the combined VOC emissions rates determined during initial compliance source testing and the correlation between VOC emissions and HAP(s). Ongoing compliance shall be determined using mass flow and VOC sampling during venting occurrences as described in the condition below. [District Rule 4002]

- The vent stream composition of CO, VOC, H2S, COS, and the HAPs identified in the initial speciated HAPs and total VOC source test, shall be measured during each venting occurrence exceeding 500,000 scf/day using EPA-approved test methods with a gas chromatograph or equivalent equipment as determined by the District in writing. [District Rule 2201]

S-7616-26-0 (Combustion Turbine Generator)

- Permittee shall conduct an initial speciated HAPs and total VOC source test for the combustion turbine generator by District witnessed in situ sampling of exhaust gases by a qualified independent source test firm. The permittee shall correlate the total HAPs emissions rate and the single highest HAP emission rate to the VOC mass emission determined during the speciated HAPs source test. Initial and annual compliance with the HAPs emissions limit (25 tpy all HAPs or 10 tpy any single HAP) shall be demonstrated by the combined VOC emissions rates for the combustion gas turbine determined during initial and annual compliance source testing and the correlation between VOC emissions and HAP(s). [District Rule 4002]

Rule 4001 - New Source Performance Standards (NSPS)

40 CFR 60 – Subpart GG (Standards of Performance for Stationary Gas Turbines)

S-7616-26-0 (Combustion Turbine Generator)

40 CFR Part 60 Subpart GG applies to all stationary gas turbines with a heat input greater than 10.7 gigajoules per hour (10.2 MMBtu/hr), that commence construction, modification, or reconstruction after October 3, 1977. Therefore, the requirements of this subpart apply to the proposed CTG.

40 CFR 60 Subpart KKKK, Section 60.4305(a), states that this subpart applies to all stationary gas turbines with a heat input greater than 10.7 gigajoules (10 MMBtu) per hour, which commenced construction, modification, or reconstruction after February 18, 2005. Therefore, the requirements of this subpart apply to the proposed CTG.

40 CFR 60 Subpart KKKK, Section 60.4305(b), states that stationary combustion turbines regulated under this subpart are exempt from the requirements of 40 CFR 60 Subpart GG. As discussed above, 40 CFR 60 Subpart KKKK is applicable to the proposed turbine. Therefore, it is exempt from the requirements of 40 CFR 60 Subpart GG and no further discussion is required.

40 CFR 60 – Subpart KKKK (Standards of Performance for Stationary Turbines)

S-7616-26-0 (Combustion Turbine Generator)

40 CFR Part 60 Subpart KKKK applies to all stationary gas turbines rated at greater than or equal to 10 MMBtu/hr that commence construction, modification, or reconstruction after February 18, 2005. Therefore, the requirements of this subpart apply to the proposed CTG.

Subpart KKKK established requirements for nitrogen oxide (NO_X) and sulfur dioxide (SO_X) emissions.

Section 60.4320 - Standards for Nitrogen Oxides:

Paragraph (a) states that NO_X emissions shall not exceed the emission limits specified in Table 1 of this subpart. Paragraph (b) states that if you have two or more turbines that are connected to a single generator, each turbine must meet the emission limits for NO_X. Table 1 states that new turbines firing natural gas with a combustion turbine heat input at peak load of greater than 850 MMBtu/hr shall meet a NO_X emissions limit of 15 ppmvd @ 15% O_2 or 54 ng/J of useful output (0.43 lb/MWh). Table 1 also states that new turbines firing fuel other than natural gas with a combustion turbine heat input at peak load of greater than 850 MMBtu/hr shall meet a NO_X emissions limit of 42 ppmvd @ 15% O_2 or 1604 ng/J of useful output (1.3 lb/MWh).

The proposed combustion turbine generator's NO_X emission concentration will be limited to the following emissions limits:

NOx : 2.5 ppmvd @ 15% O2 (1-hour average) when firing on hydrogen-rich fuel and 4.0 ppmvd @ 15% O2 when firing on natural gas, except during startup/shutdown.

Therefore, the proposed turbine will be operating in compliance with the NO_X emission requirements of this subpart. The following condition will ensure continued compliance with the requirements of this section:

- During normal operation (excluding startup and shutdown), emission rate from the CTG/HRSG stack when firing on hydrogen-rich fuel shall not exceed any of the following: NOx (as NO2) - 25.0 lb/hr and 2.5 ppmvd-NOx @ 15% O2 (1-hour average); VOC (as methane) - 3.5 lb/hr and 1.0 ppmvd-VOC @ 15% O2; CO - 18.3 lb/hr and 3.0 ppmvd-CO @ 15% O2; PM10 - 12.9 lb/hr; or SOx (as SO2) - 4.1 lb/hr. The NOx (as NO2) emission limit indicated above is a one-hour rolling average. All other pollutant emission limits are three-hour rolling averages. [District Rules 2201 and 4703 and 40 CFR 60.4320(a) & (b)]

- During normal operation (excluding startup and shutdown), emission rate from the feedstock dryer stack when firing on hydrogen-rich fuel shall not exceed any of the following: NOx (as NO2) - 4.4 lb/hr and 2.5 ppmvd-NOx @ 15% O2 (1-hour average); VOC (as methane) - 0.6 lb/hr and 1.0 ppmvd-VOC @ 15% O2; CO - 3.2 lb/hr and 3.0 ppmvd-CO @ 15% O2; PM10 - 1.4 lb/hr; or SOx (as SO2) - 0.9 lb/hr. The NOx (as NO2) emission limit indicated above is a one-hour rolling average. All other pollutant emission limits are three-hour rolling averages. [District Rules 2201 and 4703 and 40 CFR 60.4320(a) & (b)]

<u>Section 60.4330 - Standards for Sulfur Dioxide:</u>

Paragraph (a) states that a turbine located in a continental area must comply with one of the following:

(1) Operator must not cause to be discharged into the atmosphere from the subject stationary combustion turbine any gases which contain SO_2 in excess of 110 nanograms per Joule (ng/J) (0.90) pounds per megawatt-hour (lb/MWh)) gross output; or
(2) Operator must not burn in the subject stationary combustion turbine any fuel which contains total potential sulfur emissions in excess of 26 ng SO_2/J (0.060 lb SO_2/MMBtu) heat input. If the turbine simultaneously fires multiple fuels, each fuel must meet this requirement.

The applicant is proposing to burn natural gas fuel with a maximum sulfur content of 0.75 grain/ 100 scf (12 ppm-SO2 or 0.0021 lb-SO2/MMBtu), and hydrogen-rich gas with a maximum sulfur content of 10 ppm-SO2. Therefore, the proposed turbines will be operating in compliance with the SO_X emission requirements of this section. The following condition will ensure continued compliance with the requirements of this section:

- This unit shall exclusively burn PUC-regulated natural gas with a sulfur content no greater than 0.75 grains of sulfur compounds (as S) per 100 dry scf of natural gas, hydrogen-rich fuel with a sulfur content no greater than 10 ppmv, or a combination of both fuels. [District Rule 2201 and 40 CFR 60.4330(a)(2)]

Section 60.4335 – NO_X Compliance Demonstration, with Water or Steam Injection:

Paragraph (a) states that when a turbine is using water or steam injection to reduce NO_X emissions, the permittee must install, calibrate, maintain and operate a continuous monitoring system to monitor and record the fuel consumption and the ratio of water or steam to fuel being fired in the turbine when burning a fuel that requires water or steam injection for compliance.

Paragraph (b) states that alternatively, an operator may use continuous emission monitoring, as follows:

(1) Install, certify, maintain and operate a continuous emissions monitoring system (CEMS) consisting of a NO_X monitor and a diluent gas (oxygen (O_2) or carbon dioxide (CO_2)) monitor, to determine hourly NO_X emission rate in parts per million (ppm) or pounds per million British thermal units (lb/MMBtu); and
(2) For units complying with the output-based standard, install, calibrate, maintain and operate a fuel flow meter (or flow meters) to continuously measure the heat input to the affected unit; and
(3) For units complying with the output based standard, install, calibrate, maintain and operate a watt meter (or meters) to continuously measure the gross electrical output of the unit in megawatt-hours; and
(4) For combined heat and power units complying with the output-based standard, install, calibrate, maintain and operate meters for useful recovered energy flow rate, temperature, and pressure, to continuously measure the total thermal energy output in British thermal units per hour (Btu/hr).

The applicant proposes a turbine that utilizes steam injection. They are proposing to install, certify, maintain and operate a CEMS consisting of a NO_X monitor and an O_2 monitor to determine hourly NO_X emission rate in ppm. They are not proposing to comply with the output-based NO_X emission standards listed in Table 1. Therefore, the proposed CEMS satisfies the requirements of this section. The following condition will ensure continued compliance with the requirements of this section:

- The turbine shall be equipped with a continuous monitoring system to measure and record fuel consumption. [District Rules 2201 and 4703 and 40 CFR 60.4335(b)(1)]

- The owner or operator shall install, certify, maintain, operate and quality-assure a Continuous Emission Monitoring System (CEMS) which continuously measures and records the exhaust gas NO_X, CO and O_2 concentrations. Continuous emissions monitor(s) shall be capable of monitoring emissions during normal operating conditions, and during startups and shutdowns provided the CEMS pass the relative accuracy requirement for startups and shutdowns specified herein. If relative accuracy of CEMS cannot be demonstrated during startup conditions, CEMS results during startup and shutdown events shall be replaced with startup emission rates obtained from source testing to determine compliance with emission limits contained in this document. [District Rules 1080, 2201 and 4703 and 40 CFR 60.4335(b)(1)]

Section 60.4340 – NO_X Compliance Demonstration, without Water or Steam Injection:

This section specifies the requirements for units not equipped with water or steam injection. As discussed above, the applicant is proposing to use steam injection to reduce NO_X emissions in each of these turbines. Therefore, the requirements of this section are not applicable and no further discussion is required.

Section 60.4345 – CEMS Equipment Requirements:

Paragraph (a) states that each NO_X diluent CEMS must be installed and certified according to Performance Specification 2 (PS 2) in appendix B to this part, except the 7-day calibration drift is based on unit operating days, not calendar days. With state approval, Procedure 1 in appendix F to this part is not required. Alternatively, a NO_X diluent CEMS that is installed and certified according to appendix A of part 75 of this chapter is acceptable for use under this subpart. The relative accuracy test audit (RATA) of the CEMS shall be performed on a lb/MMBtu basis.

Paragraph (b) states that as specified in §60.13(e)(2), during each full unit operating hour, both the NO_X monitor and the diluent monitor must complete a minimum of one cycle of operation (sampling, analyzing, and data recording) for each 15-minute quadrant of the hour, to validate the hour. For partial unit operating hours, at least one valid data point must be obtained with each monitor for each quadrant of the hour in which the unit operates. For unit operating hours in which required quality assurance and maintenance activities are performed on the CEMS, a minimum of two valid data points (one in each of two quadrants) are required for each monitor to validate the NO_X emission rate for the hour.

Paragraph (c) states that each fuel flowmeter shall be installed, calibrated, maintained, and operated according to the manufacturer's instructions. Alternatively, with state approval, fuel flowmeters that meet the installation, certification, and quality assurance requirements of appendix D to part 75 of this chapter are acceptable for use under this subpart.

Paragraph (d) states that each watt meter, steam flow meter, and each pressure or temperature measurement device shall be installed, calibrated, maintained, and operated according to manufacturer's instructions.

Paragraph (e) states that the owner or operator shall develop and keep on-site a quality assurance (QA) plan for all of the continuous monitoring equipment described in paragraphs (a), (c), and (d) of this section. For the CEMS and fuel flow meters, the owner or operator may, with state approval, satisfy the requirements of this paragraph by implementing the QA program and plan described in section 1 of appendix B to part 75 of this chapter.

The permittee will be required to install and operate a NO_X CEMS in accordance with the requirements of this section. As discussed above, the permittee is not required to install a fuel flow meter, watt meter, steam flow meter, or a pressure or temperature measurement device to comply with the requirements of this subpart. Therefore, the proposed turbines will be operating in compliance with the requirements of this section. The following conditions will ensure continued compliance with the requirements of this section:

- The NO_X, CO and O_2 CEMS shall meet the requirements in 40 CFR 60, Appendix F Procedure 1 and Part 60, Appendix B Performance Specification 2 (PS 2), or shall meet equivalent specifications established by mutual agreement of the District, the ARB, and the EPA. [District Rule 1080 and 40 CFR 60.4345(a)]

- The CEMS shall complete a minimum of one cycle of operation (sampling, analyzing, and data recording) for each successive 15-minute period or shall meet equivalent specifications established by mutual agreement of the District, the ARB and the EPA. [District Rule 1080 and 40 CFR 60.4345(b)]

<u>Section 60.4350 – CEMS Data and Excess NO_X Emissions:</u>

Section 60.4350 states that for purposes of identifying excess emissions:

(a) All CEMS data must be reduced to hourly averages as specified in §60.13(h).

(b) For each unit operating hour in which a valid hourly average, as described in §60.4345(b), is obtained for both NO_X and diluent monitors, the data acquisition and handling system must calculate and record the hourly NO_X emission rate in units of ppm or lb/MMBtu, using the appropriate equation from method 19 in appendix A of this part. For any hour in which the hourly average O_2 concentration exceeds 19.0 percent O_2 (or the hourly average CO_2 concentration is less than 1.0 percent CO_2), a diluent cap value of 19.0 percent O_2 or 1.0 percent CO_2 (as applicable) may be used in the emission calculations.

(c) Correction of measured NO_X concentrations to 15 percent O_2 is not allowed.

(d) If you have installed and certified a NO_X diluent CEMS to meet the requirements of part 75 of this chapter, states can approve that only quality assured data from the CEMS shall be used to identify excess emissions under this subpart. Periods where the missing data substitution procedures in subpart D of part 75 are applied are to be reported as monitor downtime in the excess emissions and monitoring performance report required under §60.7(c).

(e) All required fuel flow rate, steam flow rate, temperature, pressure, and megawatt data must be reduced to hourly averages.

(f) Calculate the hourly average NO_X emission rates, in units of the emission standards under §60.4320, using either ppm for units complying with the concentration limit or the equations 1 (simple cycle turbines) or 2 (combined cycle turbines) listed in §60.4350, paragraph (f).

HECA is proposing to monitor the NO_X emissions rates from the turbine with a CEMS. The CEMS system will be used to determine if, and when, any excess NO_X emissions are released to the atmosphere from the turbine exhaust stacks. The CEMS will be operated in accordance with the methods and procedures described above. Therefore, the proposed turbines will be operating in compliance with the requirements of this section. The following condition will ensure continued compliance with the requirements of this section:

- Results of continuous emissions monitoring shall be reduced according to the procedure established in 40 CFR, Part 51, Appendix P, paragraphs 5.0 through 5.3.3, or by other methods deemed equivalent by mutual agreement with the District, the ARB, and the EPA. [District Rule 1080]

Section 60.4355 – Parameter Monitoring Plan:

This section sets forth the requirements for operators that elect to continuously monitor parameters in lieu of installing a CEMS for NO_X emissions. As discussed above, HECA is proposing to install CEMS on the turbine that will directly measure NO_X emissions. Therefore, the requirements of this section are not applicable and no further discussion is required.

Sections 60.4360, 60.4365 and 60.4370 – Monitoring of Fuel Sulfur Content:

Section 60.4360 states that an operator must monitor the total sulfur content of the fuel being fired in the turbine, except as provided in §60.4365. The sulfur content of the fuel must be determined using total sulfur methods described in §60.4415. Alternatively, if the total sulfur content of the gaseous fuel during the most recent performance test was less than half the applicable limit, ASTM D4084, D4810, D5504, or D6228, or Gas Processors Association Standard 2377 (all of which are incorporated by reference, see §60.17), which measure the major sulfur compounds, may be used.

Section 60.4365 states that an operator may elect not to monitor the total sulfur content of the fuel combusted in the turbine, if the fuel is demonstrated not to exceed potential sulfur emissions of 26 ng SO_2/J (0.060 lb SO_2/MMBtu) heat input for units located in continental areas and 180 ng SO_2/J (0.42 lb SO_2/MMBtu) heat input for units located in noncontinental areas or a continental area that the Administrator determines does not have access to natural gas and that the removal of sulfur compounds would cause more environmental harm than benefit. One of the following sources of information must be used to make the required demonstration:

(a) The fuel quality characteristics in a current, valid purchase contract, tariff sheet or transportation contract for the fuel, specifying that the maximum total sulfur content for oil use in continental areas is 0.05 weight percent (500 ppmw) or less and 0.4 weight percent (4,000 ppmw) or less for noncontinental areas, the total sulfur content for natural gas use in continental areas is 20 grains of sulfur or less per 100 standard cubic feet and 140 grains of sulfur or less per 100 standard cubic feet for noncontinental areas, has potential sulfur emissions of less than less than 26 ng SO_2/J (0.060 lb SO_2/MMBtu) heat input for continental areas and has potential sulfur emissions of less than less than 180 ng SO_2/J (0.42 lb SO_2/MMBtu) heat input for noncontinental areas; or

(b) Representative fuel sampling data which show that the sulfur content of the fuel does not exceed 26 ng SO_2/J (0.060 lb SO_2/MMBtu) heat input for continental areas or 180 ng SO_2/J (0.42 lb SO_2/MMBtu) heat input for noncontinental areas. At a minimum, the amount of fuel sampling data specified in section 2.3.1.4 or 2.3.2.4 of appendix D to part 75 of this chapter is required.

HECA is proposing to operate the turbine on natural gas fuel with a maximum sulfur content of 0.75 grain/ 100 scf (12 ppm-SO2 or 0.0021 lb-SO2/MMBtu), and hydrogen-rich gas with a maximum sulfur content of 5 ppm-SO2. The following condition will ensure continued compliance with the requirements of this section:

- This unit shall exclusively burn PUC-regulated natural gas with a sulfur content no greater than 0.75 grains of sulfur compounds (as S) per 100 dry scf of natural gas, hydrogen-rich fuel with a sulfur content no greater than 5 ppmv, or a combination of both fuels. [District Rule 2201 and 40 CFR 60.4330(a)(2)]

Section 60.4370 states that the frequency of determining the sulfur content of the fuel must be as follows:

(a) *Fuel oil.* For fuel oil, use one of the total sulfur sampling options and the associated sampling frequency described in sections 2.2.3, 2.2.4.1, 2.2.4.2, and 2.2.4.3 of appendix D to part 75 of this chapter (*i.e.*, flow proportional sampling, daily sampling, sampling from the unit's storage tank after each addition of fuel to the tank, or sampling each delivery prior to combining it with fuel oil already in the intended storage tank).

(b) *Gaseous fuel.* If you elect not to demonstrate sulfur content using options in §60.4365, and the fuel is supplied without intermediate bulk storage, the sulfur content value of the gaseous fuel must be determined and recorded once per unit operating day.

(c) *Custom schedules.* Notwithstanding the requirements of paragraph (b) of this section, operators or fuel vendors may develop custom schedules for determination of the total sulfur content of gaseous fuels, based on the design and operation of the affected facility and the characteristics of the fuel supply. Except as provided in paragraphs (c)(1) and (c)(2) of this section, custom schedules shall be substantiated with data and shall be approved by the Administrator before they can be used to comply with the standard in §60.4330.

When actually required to physically monitor the sulfur content in the fuel burned in the turbine, the District and EPA have previously approved a custom monitoring schedule of at least one per week. Then, if compliance with the fuel sulfur content limit is demonstrated for eight consecutive weeks, the monitoring frequency shall be at least once every six months. If any six month monitoring period shows an exceedance, weekly monitoring shall resume. HECA is proposing to follow this same pre-approved fuel sulfur content monitoring scheme for these turbines. The following condition will ensure continued compliance with the requirements of this section:

- The sulfur content of each natural gas fuel source shall be: (i) documented in a valid purchase contract, a supplier certification, a tariff sheet or transportation contract or (ii) demonstrated within 60 days after the end of the commissioning period and monitored weekly thereafter. If the sulfur content is demonstrated to be less than 1.0 gr/100 scf for eight consecutive weeks, then the monitoring frequency shall be every six months. If the result of any six month monitoring demonstrates that the fuel does not meet the fuel sulfur

content limit, weekly monitoring shall resume. [40 CFR 60.4360, 60.4365(a) and 60.4370(c)]

Section 60.4380 – Excess NO_X Emissions:

Section 60.4380 establishes reporting requirements for periods of excess emissions and monitor downtime. Paragraph (a) lists requirements for operators choosing to monitor parameters associated with water or steam to fuel ratios. As discussed above, HECA is not proposing to monitor parameters associated with water or steam to fuel ratios to predict what the NO_X emissions from the turbines will be. Therefore, the requirements of this paragraph are not applicable and no further discussion is required.

Paragraph (b) states that for turbines using CEMS:

(1) An excess emissions is any unit operating period in which the 4-hour or 30-day rolling average NO_X emission rate exceeds the applicable emission limit in §60.4320. For the purposes of this subpart, a "4-hour rolling average NO_X emission rate" is the arithmetic average of the average NO_X emission rate in ppm or ng/J (lb/MWh) measured by the continuous emission monitoring equipment for a given hour and the three unit operating hour average NO_X emission rates immediately preceding that unit operating hour. Calculate the rolling average if a valid NO_X emission rate is obtained for at least 3 of the 4 hours. For the purposes of this subpart, a "30-day rolling average NO_X emission rate" is the arithmetic average of all hourly NO_X emission data in ppm or ng/J (lb/MWh) measured by the continuous emission monitoring equipment for a given day and the twenty-nine unit operating days immediately preceding that unit operating day. A new 30-day average is calculated each unit operating day as the average of all hourly NO_X emissions rates for the preceding 30 unit operating days if a valid NO_X emission rate is obtained for at least 75 percent of all operating hours.

(2) A period of monitor downtime is any unit operating hour in which the data for any of the following parameters are either missing or invalid: NO_X concentration, CO2 or O_2 concentration, fuel flow rate, steam flow rate, steam temperature, steam pressure, or megawatts. The steam flow rate, steam temperature, and steam pressure are only required if you will use this information for compliance purposes.

(3) For operating periods during which multiple emissions standards apply, the applicable standard is the average of the applicable standards during each hour. For hours with multiple emissions standards, the applicable limit for that hour is determined based on the condition that corresponded to the highest emissions standard.

Paragraph (c) lists requirements for operators who choose to monitor combustion parameters that document proper operation of the NO_X emission controls. HECA is not proposing to monitor combustion parameters that document proper operation of the NO_X emission controls. Therefore, the requirements of this paragraph are not applicable and no further discussion is required.

The following condition will ensure continued compliance with the requirements of this section:

- Excess emissions shall be defined as any operating hour in which the 4-hour or 30-day rolling average NO_X concentration exceeds applicable emissions limit and a period of monitor downtime shall be any unit operating hour in which sufficient data are not obtained to validate the hour for either NO_X or O2 (or both). [40 CFR 60.4380(b)(1)]

Section 60.4385 – Excess SO_X Emissions:

Section 60.4385 states that if an operator chooses the option to monitor the sulfur content of the fuel, excess emissions and monitoring downtime are defined as follows:

(a) For samples of gaseous fuel and for oil samples obtained using daily sampling, flow proportional sampling, or sampling from the unit's storage tank, an excess emission occurs each unit operating hour included in the period beginning on the date and hour of any sample for which the sulfur content of the fuel being fired in the combustion turbine exceeds the applicable limit and ending on the date and hour that a subsequent sample is taken that demonstrates compliance with the sulfur limit.

(b) If the option to sample each delivery of fuel oil has been selected, you must immediately switch to one of the other oil sampling options (i.e., daily sampling, flow proportional sampling, or sampling from the unit's storage tank) if the sulfur content of a delivery exceeds 0.05 weight percent. You must continue to use one of the other sampling options until all of the oil from the delivery has been combusted, and you must evaluate excess emissions according to paragraph (a) of this section. When all of the fuel from the delivery has been burned, you may resume using the as-delivered sampling option.

(c) A period of monitor downtime begins when a required sample is not taken by its due date. A period of monitor downtime also begins on the date and hour of a required sample, if invalid results are obtained. The period of monitor downtime ends on the date and hour of the next valid sample.

The permittee will be following the definitions and procedures specified above for determining periods of excess SO_X emissions. Therefore, the proposed turbine will be operating in compliance with the requirements of this section.

Sections 60.4375, 60.4380, 60.4385 and 60.4395 – Reporting:

These sections establish the reporting requirements for the turbine. These requirements include methods and procedures for submitting reports of monitoring parameters, annual performance tests, excess emissions and periods of monitor downtime. The permittee is proposing to maintain records and submit reports in accordance with the requirements specified in these sections. Therefore, the proposed turbines will be operating in compliance with the requirements of this section. The following condition will ensure continued compliance with the requirements of this section:

- The owner or operator shall submit a written report of CEM operations for each calendar quarter to the APCO. The report is due on the 30th day following the end of the calendar

quarter and shall include the following: Time intervals, data and magnitude of excess NO_X emissions, nature and the cause of excess (if known), corrective actions taken and preventative measures adopted; Averaging period used for data reporting corresponding to the averaging period specified in the emission test period and used to determine compliance with an emissions standard; Applicable time and date of each period during which the CEM was inoperative (monitor downtime), except for zero and span checks, and the nature of system repairs and adjustments; A negative declaration when no excess emissions occurred. [District Rule 1080 and 40 CFR 60.4375(a) and 60.4395]

Section 60.4400 – NO_X Performance Testing:

Section 60.4400, paragraph (a) states that an operator must conduct an initial performance test, as required in §60.8. Subsequent NO_X performance tests shall be conducted on an annual basis (no more than 14 calendar months following the previous performance test).

Paragraphs (1), (2) and (3) set forth the requirements for the methods that are to be used during source testing.

The permittee will be required to source test the exhaust of the turbine within 120 days of initial startup and at least once every 12 months thereafter. The permittee will be required to source test in accordance with the methods and procedures specified in paragraphs (1), (2), and (3). Therefore, the proposed turbines will be operating in compliance with the requirements of this section. The following conditions will ensure continued compliance with the requirements of this section:

- Source testing to measure the NOx, CO, VOC, and NH3 emission rates (lb/hr and ppmvd @ 15% O2) and PM10 emission rate (lb/hr) shall be conducted within 60 days after initial operation and at least once every twelve months thereafter. [District Rules 1081 and 4703 and 40 CFR 60.4400(a)]

- The following test methods shall be used: NOx - EPA Method 7E or 20, PM10 - EPA Method 5/202 (front half and back half), CO - EPA Method 10 or 10B, O2 - EPA Method 3, 3A, or 20, VOC - EPA Method 18 or 25, and ammonia – EPA Method 206. EPA approved alternative test methods as approved by the District may also be used to address the source testing requirements of this DOC. The request to utilize EPA approved alternative source testing methods must be submitted in writing and written approval received from the District prior to the submission of the source test plan. [District Rules 1081 and 4703 and 40 CFR 60.4400(1)(i)]

Section 60.4405 – Initial CEMS Relative Accuracy Testing:

Section 60.4405 states that if you elect to install and certify a NO_X-diluent CEMS, then the initial performance test required under §60.8 may be performed in the alternative manner described in paragraphs (a), (b), (c) and (d). The permittee has not indicated that they would like to perform the initial performance test of the CEMS using the alternative methods described in this section. Therefore, the requirements of this section are not applicable and no further discussion is required.

Section 60.4410 – Parameter Monitoring Ranges:

Section 60.4410 sets forth requirements for operators that elect to monitor combustion parameters or parameters indicative of proper operation of NO_X emission controls. As discussed above, the permittee is proposing to install a CEMS system to monitor the NO_X emissions from the turbine and is not proposing to monitor combustion parameters or parameters indicative of proper operation. Therefore, the requirements of this section are not applicable and no further discussion is required.

Section 60.4415 – SO_X Performance Testing:

Section 60.4415 states that an operator must conduct an initial performance test, as required in §60.8. Subsequent SO_2 performance tests shall be conducted on an annual basis (no more than 14 calendar months following the previous performance test). There are three methodologies that may be used to conduct the performance tests.

(1) If the applicant chooses to periodically determine the sulfur content of the fuel combusted in the turbine, a representative fuel sample would be collected following ASTM D5287 (incorporated by reference, see §60.17) for natural gas or ASTM D4177 (incorporated by reference, see §60.17) for oil. Alternatively, for oil, the applicant may follow the procedures for manual pipeline sampling in section 14 of ASTM D4057 (incorporated by reference, see §60.17). The fuel analyses of this section may be performed either by the permittee, a service contractor retained by the permittee, the fuel vendor, or any other qualified agency. The samples should be analyzed for the total sulfur content of the fuel using:

(i) For liquid fuels, ASTM D129, or alternatively D1266, D1552, D2622, D4294, or D5453 (all of which are incorporated by reference, see §60.17); or

(ii) For gaseous fuels, ASTM D1072, or alternatively D3246, D4084, D4468, D4810, D6228, D6667, or Gas Processors Association Standard 2377 (all of which are incorporated by reference, see §60.17).

The permittee shall periodically determine the sulfur content of the fuel combusted in each of these turbines when valid purchase contracts, tariff sheets or transportation contract are not available. The sulfur content will be determined using the methods specified above. Therefore, the proposed turbines will be operating in compliance with the requirements of this section. The following condition will ensure continued compliance with the requirements of this section:

- Fuel sulfur content shall be monitored using one of the following methods: ASTM Methods D1072, D3246, D4084, D4468, D4810, D6228, D6667 or Gas Processors Association Standard 2377. [40 CFR 60.4415(a)(1)(i)]

Methodologies (2) and (3) are applicable to operators that elect to measure the SO_2 concentration in the exhaust stream. HECA is not proposing to measure the SO_2 in the exhaust stream of the turbine. Therefore, the requirements of these methodologies are not applicable and no further discussion is required.

Conclusion:

Conditions will be incorporated into the DOC in order to ensure compliance with each applicable section of this subpart. Therefore, compliance with the requirements of Subpart KKKK is expected and no further discussion is required.

40 CFR 60 – Subpart Db (Standards of Performance for Industrial-Commercial-Institutional Steam Generating Units)

S-7616-25-0 (Auxiliary Boiler)

New Source Performance Standards, Code of Federal Regulations 40 part 60, Subpart Db (Standards of Performance for Small Industrial-Commercial-Institutional Steam Generating Units) applies only to units with heat input capacity of greater than 100 MMBtu/hr.

The new 230 MMBtu/hr[42] natural gas-fired auxiliary boiler (S-7616-25-0) in this project is subject to the New Source Performance Standards, Code of Federal Regulations 40 part 60, Subpart Db (Standards of Performance for Small Industrial-Commercial-Institutional Steam Generating Units).

PM and SOx Standards:

Sections 60.42b and 60.43b list requirements for Particulate Matter (PM) and SO_X emissions. The PM and SO_X requirements are applicable for facilities that operate coal or oil fired steam generators. The applicant is only proposing to operate the new boiler on PUC-quality natural gas. Therefore, the PM and SOx standards of this subpart do not apply.

NOx Standards and Testing:

Section 60.44b (a) states that the owner or operator of an affected facility that is subject to the provisions of this section and that combusts only coal, oil or natural gas shall cause to be discharged into the atmosphere from the affected facility any gases that contain nitrogen oxides (expressed as NO_2) in excess of the specified limits.

Section 60.44b (a) states that, for low heat and high release rate units, the natural gas-fired emission limit is 0.10 lb-NOx/MMBtu and 0.20 lb-NOx/MMBtu, respectively. The permittee has proposed a boiler that will be limited to 0.0060 lb-NOx/MMBtu (5 ppmvd-NOx @ 3% O2). Section 60.44b (h) states the emission limit in Section 60.44b (a) shall apply at all times, including periods of startup, shutdown, or malfunction. Section 60.44b (i) states that, except provided under paragraph 60.44b (j), compliance with the emission limits in Section 60.44b (a) is determined on a 30-day rolling average.

[42] The auxiliary boiler will be designed to burn pipeline-quality natural gas at the design maximum fuel flow rate of 230 MMBtu/hour (HHV). However the heat input of the unit will be limited and maintained at or below 213 MMBtu/hour.

Section 60.46b (c) states that compliance with the NOx limits in Section 60.44b shall be determined through performance testing under paragraph (e) or (f), or under paragraphs (g) and (h) of section 60.46b, as applicable.

Section 60.46b (e) states that, to determine compliance with the emission limits for NOx required under Section 60.44b, the owner or operator of an affected facility shall conduct the performance test as required under Section 60.8 using the continuous emission monitoring system for monitoring NOx under 60.48b.

NOx Monitoring

Section 60.48b (b) states that, except as provided under paragraphs (g), (h), and (i) of section 60.48b, the owner or operator of an affected facility subject to the NOx standard under Section 60.44b shall comply with either paragraphs (b)(1) or (b)(2) of Section 60.48b.

(b)(1) Install, calibrate, maintain, and operate a continuous monitoring system (CEMs), and record the output of the system, of measuring NOx emissions discharged to the atmosphere

Section 60.48b (g) states that the owner or operator of an affected facility that has a heat input capacity of 73 MW (250 MMBtu/hr) or less, and which has an annual capacity factor for residual oil having a nitrogen content of 0.30 weight percent or less, natural gas, distillate oil, or any mixture of these fuels, greater than 10 percent shall:

(1) Comply with the provisions of paragraphs (b), (c), (d), (e)(2), and (f) of Section 60.48b, or
(2) Monitor steam generating unit operating conditions and predict NOx emission rates as specified in a plan submitted pursuant to Section 60.49b (c).

Section 60.48b (j) states that units that burn only oil that contains no more than 0.3 weight percent sulfur or liquid or gaseous fuels with potential sulfur dioxide emission rates of 140 ng/J (0.32 lb/MMBtu) heat input or less are not required to conduct PM emissions monitoring if they maintain fuel supplier certifications of the sulfur content of the fuels burned.

Recordkeeping and Reporting

Section 60.49b (a)(1) states that the owner or operator of an affected facility shall submit notification of the date of initial startup, as provided by Section 60.7 and shall include the design heat input capacity and identification of the fuels to be combusted. The following condition will be added to the DOC to assure compliance with this section:

- Permittee shall comply with all applicable NSPS requirements, including monitoring, notification and reporting requirements as described in 40 CFR 60 Subparts A and Db. [District Rule 4001]

Section 60.49b (c) states that the owner or operator of each affected facility subject to the NOx standard of 60.44b who seeks to demonstrate compliance with those standards through the monitoring of steam generator unit operating conditions under the provisions of 60.48b (g)(2) shall submit to the Administrator for approval a plan that identifies the operating conditions to be

monitored under 60.48b (g)(2) and the records to be maintained under 60.49b (j). This plan shall be submitted to the Administrator for approval within 360 days of the initial startup of the affected facility. The plan shall:

(1) Identify the specific operating conditions to be monitored and the relationship between these operating conditions and NOx emission rates (lb/MMBtu heat input). Steam generating unit operating conditions include, but are not limited to, the degree of staged combustion (i.e. ratio of primary air to secondary and/or tertiary air) and the level of excess air (i.e. flue gas oxygen level);
(2) Include the data and information that the owner or operator used to identify the relationship between NOx emission rates and these operating conditions;
(3) Identify how these operating condition, including steam generating unit load, will be monitored under 60.48b(g) on an hourly basis by the owner or operator during the period of operation of the affected facility; the quality assurance procedure or practices that will be employed to ensure that the data generated by monitoring these operating conditions will be representative and accurate; and the type and format of the records of these operating conditions, including steam generating unit load, that will be maintained by the owner or operator under 60.49b(j).

If the plan is approved, the owner or operator shall maintain records of predicted NOx emission rates and the monitored operating conditions, including steam generating unit load, identified in the plan. The following condition will be added to the DOC:

- Permittee shall submit to the EPA Regional Administrator for approval a plan that identifies the operating conditions to be monitored under 40 CFR 60.48b (g)(2) and the records to be maintained under 60.49b (j). This plan shall be submitted to the EPA Regional Administrator for approval within 360 days of the initial startup of the affected facility. [District Rule 4001]

<u>Conclusion:</u>

The new boiler complies with Subpart Db requirements. The following condition will be added to the DOC to ensure compliance:

- Permittee shall comply with all applicable NSPS requirements, including monitoring, notification and reporting requirements as described in 40 CFR 60 Subparts A and Db. [District Rule 4001]

- Permittee shall submit to the EPA Regional Administrator for approval a plan that identifies the operating conditions to be monitored under 40 CFR 60.48b (g)(2) and the records to be maintained under 60.49b (j). This plan shall be submitted to the EPA Regional Administrator for approval within 360 days of the initial startup of the affected facility. [District Rule 4001]

Therefore, compliance with the requirements of this rule is expected.

40 CFR 60 – Subpart G (Standards of Performance for Nitric Acid Plants)

This subpart applies to each nitric acid production unit that commences construction or modification after August 17, 1971, and on or before October 14, 2011. Any facility that commences construction or modification after October 14, 2011 is subject to Subpart Ga of this part. Therefore, Subpart Ga, which is discussed below, will apply to the nitric acid unit (S-7616-35-0) instead.

40 CFR 60 – Subpart Ga (Standards of Performance for Nitric Acid Plants for Which Construction, Reconstruction, or Modification Commenced After October 14, 2011)

S-7616-35-0 (Nitric Acid Unit)

Section 60.70a - Applicability and designation of affected facility:

The provisions of this subpart are applicable to each nitric acid production unit, which is the affected facility. This subpart applies to any nitric acid production unit that commences construction or modification after October 14, 2011.

Thus, the provisions of this subpart are applicable to proposed nitric acid unit (S-7616-35-0).

Section 60.72a - Standards:

This section states that on and after the date on which the performance test required to be conducted by §60.73a(e) is completed, the nitric acid unit shall not discharge into the atmosphere from any affected facility any gases which contain NO_X, expressed as NO_2, in excess of 0.50 pounds (lb) per ton of nitric acid produced, as a 30-day emission rate calculated based on 30 consecutive operating days, the production being expressed as 100 percent nitric acid. The emission standard applies at all times.

Per information submitted by the applicant, the nitric acid unit will discharge NOx emissions at a rate no more than 0.20 lb-NOx per ton of nitric acid produced (expressed as 100 percent nitric acid), averaged over a 24-hour rolling hour period, which complies with the applicable standard. The following condition will assure compliance with this section:

- The nitric acid unit shall not discharge into the atmosphere any gases which contained NOx, expressed as NO2, in exceed of 0.20 lb-NOx per ton of nitric acid produced (24-hour rolling average, expressed as 100 percent nitric acid). [District Rule 2201 and 40 CFR 60 Subpart Ga]

- The nitric acid plant shall comply with the requirements of 40 CFR Part 60, Subpart Ga. [40 CFR 60 Subpart Ga]

Section 60.73a - Emissions testing and monitoring:

General emissions monitoring requirements:

This section requires the permittee to install and operate a NO_X concentration (ppmv) continuous emissions monitoring system (CEMS). The permittee must also install and operate a stack gas flow rate monitoring system. With measurements of stack gas NO_X concentration and stack gas flow rate, the permittee shall determine hourly NO_X emissions rate (e.g., lb/hr) and with measured data of the hourly nitric acid production (tons), calculate emissions in units of the applicable emissions limit (lb/ton of 100 percent acid produced). The permittee must operate the monitoring system and report emissions during all operating periods including unit startup and shutdown, and malfunction.

- The permittee shall install, calibrate, maintain, and operate a continuous emission monitoring system (CEMS) for measuring and recording the concentration of NOx emissions in accordance with the provisions of Section 60.13 and Performance Specification 2 of Appendix B and Procedure 1 of Appendix F of part 60. [District Rule 2201 and 40 CFR 60 Subpart Ga]

- The permittee shall install, calibrate, maintain, and operate a stack gas flow rate monitoring system. [40 CFR 60 Subpart Ga]

- The permittee shall determine hourly NOx emissions rate and calculate emissions in units of the applicable emissions limit (lb/ton of 100 percent acid produced). [40 CFR 60 Subpart Ga]

- The CEMS shall be in continuous operation during all operating periods including unit startup and shutdown, and malfunction. [40 CFR 60 Subpart Ga]

- The permittee shall determine hourly NOx emissions rate and calculate emissions in units of the applicable emissions limit (lb/ton of 100 percent acid produced). [40 CFR 60 Subpart Ga]

Nitrogen oxides concentration continuous emissions monitoring system:

This section also states that the permittee must install, calibrate, maintain, and operate a CEMS for measuring and recording the concentration of NOx emissions in accordance with the provisions of Section 60.13 and Performance Specification 2 of Appendix B and Procedure 1 of Appendix F of this part. The permittee must use cylinder gas audits to fulfill the quarterly auditing requirement.

For the NOx concentration CEMS, the permittee must use a span value, as defined in Performance Specification 2, Section 3.11, of Appendix B of this part, of 500 ppmv (as NO2). If the NOx concentrations emitted is higher than 600 ppmv (e.g., during startup or shutdown periods), the permittee must apply a second CEMS or dual range CEMS and a second span value equal to 125 percent of the maximum estimated NOx emission concentration to apply to the second CEMS or to the higher of the dual analyzer ranges during such periods.

Compliance with this section will be better assured with the following conditions:

- The permittee shall install, calibrate, maintain, and operate a continuous emission monitoring system (CEMS) for measuring and recording the concentration of NOx emissions in accordance with the provisions of Section 60.13 and Performance Specification 2 of Appendix B and Procedure 1 of Appendix F of part 60. [District Rule 2201 and 40 CFR 60 Subpart Ga]

- The permittee must use cylinder gas audits to fulfill the quarterly auditing requirement. [40 CFR 60 Subpart Ga]

- For the NOx concentration CEMS, the permittee must use a span value, as defined in Performance Specification 2, Section 3.11, of Appendix B of this part, of 500 ppmv (as NO2). If the NOx concentrations emitted is higher than 600 ppmv (e.g., during startup or shutdown periods), the permittee must apply a second CEMS or dual range CEMS and a second span value equal to 125 percent of the maximum estimated NOx emission concentration to apply to the second CEMS or to the higher of the dual analyzer ranges during such periods. [40 CFR 60 Subpart Ga]

For conducting the relative accuracy test audits, per Performance Specification 2, section 8.4, of Appendix B of this part and Procedure 1, section 5.1.1, of Appendix F of this part, the permittee shall use either EPA Reference Method 7, 7A, 7C, 7D, or 7E of Appendix A–4 of this part; EPA Reference Method 320 of Appendix A of part 63 of this chapter; or ASTM D6348–03 (incorporated by reference, see §60.17). To verify the operation of the second CEMS or the higher range of a dual analyzer CEMS described in paragraph (b)(2) of this section, you need not conduct a relative accuracy test audit but only the calibration drift test initially (found in Performance Specification 2, section 8.3.1, of Appendix B of this part) and the cylinder gas audit thereafter (found in Procedure 1, section 5.1.2, of Appendix F of this part).

Compliance with this section will be better assured with the following conditions:

- The permittee shall perform a relative accuracy test audit (RATA) for the NOx CEMS as specified by 40 CFR Part 60, Appendix F, 5.11, at least once every four calendar quarters. The permittee shall comply with the applicable requirements for quality assurance testing and maintenance of the continuous emission monitor equipment in accordance with the procedures and guidance specified in 40 CFR Part 60, Appendix F. [District Rule 1080 and 40 CFR 60 Subpart Ga]

Determining NOx mass emissions rate values:

The permittee must use the NOx concentration CEMS, acid production, gas flow rate monitor and other monitoring data to calculate emissions data in units of the applicable limit (lb NOx/ton of acid produced expressed as 100 percent nitric acid).

The permittee must install, calibrate, maintain, and operate a CEMS for measuring and recording the stack gas flow rates to use in combination with data from the CEMS for measuring

emissions concentrations of NOx to produce data in units of mass rate (e.g., lb/hr) of NOx on an hourly basis. The permittee must operate and certify the continuous emissions rate monitoring system (CERMS) in accordance with the provisions of §60.13 and Performance Specification 6 of Appendix B of this part.

Compliance with this section will be better assured with the following conditions:

- The permittee must operate and certify the continuous emissions rate monitoring system (CERMS) in accordance with the provisions of §60.13 and Performance Specification 6 of Appendix B of part 60 and the specifications of Section 60.73a (Subpart Ga). [40 CFR 60 Subpart Ga]

Initial performance testing:

The permittee must conduct an initial performance test to demonstrate compliance with the NOx emissions limit under §60.72a(a) beginning in the calendar month following initial certification of the NOx and flow rate monitoring CEMS. The initial performance test consists of collection of hourly NOx average concentration, mass flow rate recorded with the certified NOx concentration and flow rate CEMS and the corresponding acid generation (tons) data for all of the hours of operation for the first 30 days beginning on the first day of the first month following completion of the CEMS installation and certification as described above. The permittee must assure that the CERMS meets all of the data quality assurance requirements as per §60.13 and Appendix F, Procedure 1, of this part and you must use the data from the continuous emissions rate monitoring system (CERMS) for this compliance determination.

Compliance with this section is better assured with this condition:

- The permittee must conduct an initial performance test to demonstrate compliance with the NOx emissions limit under §60.72a(a) beginning in the calendar month following initial certification of the NOx and flow rate monitoring CEMS. The initial performance test consists of collection of hourly NOx average concentration, mass flow rate recorded with the certified NOx concentration and flow rate CEMS and the corresponding acid generation (tons) data for all of the hours of operation for the first 30 days beginning on the first day of the first month following completion of the CEMS installation and certification as described above. The permittee must assure that the CERMS meets all of the data quality assurance requirements as per §60.13 and Appendix F, Procedure 1, of this part and you must use the data from the continuous emissions rate monitoring system (CERMS) for this compliance determination. [40 CFR 60 Subpart Ga]

<u>Section 60.74a - Affirmative defense for violations of emission standards during malfunction:</u>

This section describes how a permittee may assert an affirmative defense to a claim for civil penalties for violation of standards set forth in section 60.72a, where such violations are caused by malfunction as defined in 40 CFR 60.2.

Section 60.75a - Calculations:

This section requires that the permittee calculate the 30 operating day rolling arithmetic average emission rate in units of the applicable emissions standard (lb-NOx/ton 100 percent acid produced) at the end of each operating day using all the quality assured hourly average CEMS data for the previous 30 operating days.

Since the BACT requirement for the nitric unit specifies compliance with a 24-hour rolling average limit, the following condition will assure compliance with the requirements of this section and BACT:

- The permittee shall calculate the 24-hour day rolling arithmetic average emission rate in units of the applicable emissions standard (lb-NOx/ton 100 percent acid produced) at the end of each operating day using all the quality assured hourly average CEMS data for the previous 24 operating hours according to the procedures specified in Section 60.75a. [District Rule 2201 and 40 CFR 60 Subpart Ga]

Section 60.76a - Recordkeeping:

According to this section, for the NOx emissions rate, the permittee must keep records for and results of the performance evaluations of the continuous emissions monitoring systems.

The permittee must maintain records of the following information for each 30 operating day period:
(1) Hours of operation.
(2) Production rate of nitric acid, expressed as 100 percent nitric acid.
(3) 24 operating hour average NOx emissions rate values.

The following condition will assure compliance with this section:

- The permittee shall maintain records of the following information for each operating day period: (1) hours of operation; (2) production rate of nitric acid, expressed as 100 percent nitric acid; (3) 24-hour average NOx emissions rate values. [District Rule 2201 and 40 CFR 60 Subpart Ga]

The permittee must also maintain records of the following time periods:
(1) Times when the equipment is not in compliance with the emissions standards.
(2) Times when the pollutant concentration exceeded full span of the NOx monitoring equipment.
(3) Times when the volumetric flow rate exceeded the high value of the volumetric flow rate monitoring equipment.

These requirements will be satisfied with this condition:

- The permittee shall maintain records of the following time periods: (1) times when the equipment is not in compliance with the emissions standards; (2) times when the pollutant concentration exceeded full span of the NOx monitoring equipment; (3) times when the

volumetric flow rate exceeded the high value of the volumetric flow rate monitoring equipment. [40 CFR 60 Subpart Ga]

The permittee must maintain records of the reasons for any periods of noncompliance and description of corrective actions taken.

The permittee must maintain records of any modifications to CEMS which could affect the ability of the CEMS to comply with applicable performance specifications.

For each malfunction, the permittee must maintain records of the following information:
(1) Records of the occurrence and duration of each malfunction of operation (i.e., process equipment) or the air pollution control and monitoring equipment.
(2) Records of actions taken during periods of malfunction to minimize emissions in accordance with §60.11(d), including corrective actions to restore malfunctioning process and air pollution control and monitoring equipment to its normal or usual manner of operation.

These requirements will be satisfied with this condition:

- The permittee shall maintain records of any modifications to CEMS which could affect the ability of the CEMS to comply with applicable performance specifications. For each malfunction, the permittee shall maintain records of the following information: (1) records of the occurrence and duration of each malfunction of operation (i.e., process equipment) or the air pollution control and monitoring equipment; (2) records of actions taken during periods of malfunction to minimize emissions in accordance with section 60.11(d), including corrective actions to restore malfunctioning process and air pollution control and monitoring equipment to its normal or usual manner of operation. [40 CFR 60 Subpart Ga]

<u>Section 60.77a - Reporting:</u>

This section requires the permittee to submit performance test data from the initial and subsequent performance tests and from performance evaluations of the continuous monitors to the Administrator at the appropriate address as shown in 40 CFR 60.4.

The following information must be reported to the Administrator for each 30 operating day period where the nitric acid plant was not in compliance with the emissions standard:
(1) Time period;
(2) NOx emission rates (lb/ton of acid produced);
(3) Reasons for noncompliance with the emissions standard; and
(4) Description of corrective actions taken.

The permittee must also report the following whenever they occur:
(1) Times when the pollutant concentration exceeded full span of the NOx pollutant monitoring equipment.
(2) Times when the volumetric flow rate exceeded the high value of the volumetric flow rate monitoring equipment.

These requirements will be satisfied with this condition:

- The permittee to submit performance test data from the initial and subsequent performance tests and from performance evaluations of the continuous monitors to the Administrator at the appropriate address as shown in 40 CFR 60.4. The permittee shall report to the Administrator for each 30 operating day period where the nitric acid plant was not in compliance with the emissions standard: (1) Time period; (2) NOx emission rates (lb/ton of acid produced); (3) Reasons for noncompliance with the emissions standard; and (4) Description of corrective actions taken. The permittee shall also report the following whenever they occur: (1) Times when the pollutant concentration exceeded full span of the NOx pollutant monitoring equipment; and (2) Times when the volumetric flow rate exceeded the high value of the volumetric flow rate monitoring equipment. [40 CFR 60 Subpart Ga]

The permittee must report any modifications to CERMS which could affect the ability of the CERMS to comply with applicable performance specifications.

These requirements will be satisfied with this condition:

- The permittee shall report any modifications to CERMS which could affect the ability of the CERMS to comply with applicable performance specifications. [40 CFR 60 Subpart Ga]

Within 60 days of completion of the relative accuracy test audit (RATA) required by this subpart, the permittee must submit the data from that audit to EPA's WebFIRE database by using the Compliance and Emissions Data Reporting Interface (CEDRI) that is accessed through EPA's Central Data Exchange (CDX) (https://cdx.epa.gov/SSL/cdx/EPA_Home.asp). The permittee must submit performance test data in the file format generated through use of EPA's Electronic Reporting Tool (ERT) (http://www.epa.gov/ttn/chief/ert/index.html). Only data collected using test methods listed on the ERT Web site are subject to this requirement for submitting reports electronically to WebFIRE.

These requirements will be satisfied with this condition:

- Within 60 days of completion of the relative accuracy test audit (RATA) required by this subpart, the permittee must submit the data from that audit to EPA's WebFIRE database by using the Compliance and Emissions Data Reporting Interface (CEDRI) that is accessed through EPA's Central Data Exchange (CDX) (https://cdx.epa.gov/SSL/cdx/EPA_Home.asp) in the format specified in 40 CFR 60 Subpart Ga, Section 60.77a. [40 CFR 60 Subpart Ga]

If a malfunction occurred during the reporting period, the permittee must submit a report that contains the following:

(1) The number, duration, and a brief description for each type of malfunction which occurred during the reporting period and which caused or may have caused any applicable emission limitation to be exceeded.

(2) A description of actions taken by an owner or operator during a malfunction of an affected facility to minimize emissions in accordance with §60.11(d), including actions taken to correct a malfunction.

These requirements will be satisfied with this condition:

- If a malfunction occurred during the reporting period, the permittee must submit a report that contains the following: (1) The number, duration, and a brief description for each type of malfunction which occurred during the reporting period and which caused or may have caused any applicable emission limitation to be exceeded; (2) A description of actions taken by an owner or operator during a malfunction of an affected facility to minimize emissions in accordance with §60.11(d), including actions taken to correct a malfunction. [40 CFR 60 Subpart Ga]

Therefore, compliance with Subpart Ga is expected.

40 CFR 60 – Subpart Y (Standards of Performance for Coal Preparation and Processing Plants)

S-7616-17-0 (Railcar Unloading and Transfer System)
S-7616-18-0 (Truck Unloading and Transfer System)
S-7616-19-0 (Feedstock Storage, Blending, and Reclaim System)
S-7616-20-0 (Feedstock Grinding/Crushing and Drying System)

New Source Performance Standards, Code of Federal Regulations 40 part 60, Subpart Y (Standards of Performance for Coal Preparation and Processing Plants) applies to affected facilities in coal preparation and processing plants that process more than 181 megagrams (Mg) (200 tons) of coal per day. The HECA facility will be authorized to amounts greater than this value for each of the operations identified above.

Section 60.250 - Applicability and designation of affected facility:

(d) The provisions in §60.251 - Definitions, §60.252(b)(1) through (3), and (c) – Standards for thermal dryers; §60.253(b) – Standards for pneumatic coal-cleaning equipment; §60.254(b) and (c) – Standard for coal processing and conveying equipment, coal storage systems, transfer and loading systems, and open storage piles; §60.255(b) through (h) – Performance tests and other compliance requirements; §60.256(b) and (c) – Continuous monitoring requirements; §60.257 – Test methods and procedures; and §60.258 – Reporting and recordkeeping of this subpart are applicable to any of the following affected facilities that commenced construction, reconstruction or modification after May 27, 2009: thermal dryers, pneumatic coal-cleaning equipment (air tables), coal processing and conveying equipment (including breakers and crushers), coal storage systems, transfer and loading systems, and open storage piles. This operation will commence construction after this applicable date, and it will consist of coal processing and conveying equipment and coal storage systems.

Section 60.252 - Standards for thermal dryers:

Section 60.251 (r)(2) defines a thermal dryer for units constructed, reconstructed, or modified after May 27, 2009 as "any facility which the moisture content of the coal is reduced by either contact with a heater gas stream which is exhausted to the atmosphere or through indirect heating of the coal through contact with a heater transfer medium." The proposed feedstock dryer meets the definition of a thermal dryer.

Section 60.252 (c) states that "thermal dryers receiving all of their thermal input from an affected facility covered under another 40 CFR Part 60 subpart must meet the applicable requirements in that subpart but are not subject to the requirements in this subpart."

The proposed feedstock dryer (S-7616-20) receives all of its thermal input from the treated exhaust of the combustion turbine generator/heat recovery steam generator (S-7616-26-0) which is subject to 40 CFR Part 60 Subpart KKKK (Standards of Performance for Stationary Turbines). Therefore, the requirements of section 60.252 do not apply to S-7616-20 per Section 60.252 (c).

Section 60.254 - Standards for coal processing and conveying equipment, coal storage systems, transfer and loading systems, and open storage piles:

Section 60.254 (b) states that on and after the date on which the performance test is conducted or required to be completed under §60.8, whichever date comes first, an owner or operator of any coal processing and conveying equipment, coal storage system, or coal transfer and loading system processing coal constructed, reconstructed, or modified after April 28, 2008, must meet the requirements in paragraphs (b)(1) through (3) of this section, as applicable to the affected facility.

Section 60.254 (b)(1) states that except as provided in paragraph (b)(3) of this section, the owner or operator must not cause to be discharged into the atmosphere from the affected facility any gases which exhibit 10 percent opacity or greater. The proposed operation has conditions prohibiting visible emissions (5 percent opacity), so this requirement is satisfied. The following conditions will ensure compliance with this section:

- All feedstock processing and conveying equipment, feedstock storage systems, and feedstock transfer and loading systems shall be dust-tight (to prevent visible emissions in excess of 5% opacity) and shall vent only to dust collectors. [District Rules 2201, 4001, and 40 CFR 60.254]

- Each dust collector shall be equipped with dust-tight (no visible emissions in excess of 5% opacity) provisions to return collected material to process equipment. [District Rules 2201, 4001, and 40 CFR 60.254]

Section 60.254 (b)(2) states that the owner or operator must not cause to be discharged into the atmosphere from any mechanical vent on an affected facility gases which contain particulate matter in excess of 0.023 g/dscm (0.010 gr/dscf). The exhaust PM10 emission concentration

rate will not exceed 0.001 gr/dscf from any of the dust collectors, so this requirement is satisfied. The following condition will ensure compliance with this section.

- Particulate matter emissions shall not exceed 0.001 grains/dscf in concentration from this operation. [District Rules 2201, 4001, and 40 CFR 60.254]

Section 60.254 (b)(3) states that equipment used in the loading, unloading, and conveying operations of open storage piles are not subject to the opacity limitations of paragraph (b)(1) of this section. Open storage pile is defined as "any facility, including storage area, that is not enclosed that is used to store coal, including the equipment used in the loading, unloading, and conveying operations of the facility". The proposed operation does not consist of open storage piles, so this section does not apply.

Section 60.254 (c) states that the owner or operator of an open storage pile, which includes the equipment used in the loading, unloading, and conveying operations of the affected facility, constructed, reconstructed, or modified after May 27, 2009, must prepare and operate in accordance with a submitted fugitive coal dust emissions control plan that is appropriate for the site conditions as specified in paragraphs (c)(1) through (6) of this section. The proposed operation does not consist of open storage piles, so this section does not apply.

<u>Section 60.255 - Performance tests and other compliance requirements</u>:

Section 60.255 (b)(1) states that an owner or operator of each affected facility that commenced construction, reconstruction, or modification after April 28, 2008, must conduct performance tests according to the requirements of §60.8 and the methods identified in §60.257 to demonstrate compliance with the applicable emissions standards in this subpart as specified in paragraphs (b)(1) and (2) of this section.

Section 60.255 (b)(1) states that for each affected facility subject to a PM, SO_2, or combined NO_X and CO emissions standard, an initial performance test must be performed. Thereafter, a new performance test must be conducted according the requirements in paragraphs (b)(1)(i) through (iii) of this section, as applicable.

(i) If the results of the most recent performance test demonstrate that emissions from the affected facility are greater than 50 percent of the applicable emissions standard, a new performance test must be conducted within 12 calendar months of the date that the previous performance test was required to be completed.

(ii) If the results of the most recent performance test demonstrate that emissions from the affected facility are 50 percent or less of the applicable emissions standard, a new performance test must be conducted within 24 calendar months of the date that the previous performance test was required to be completed.

Therefore, the following conditions will be included on S-7616-17, -18, -19, and -20:

- Testing for particulate matter concentration for each dust collector shall be conducted within 60 days after achieving the maximum production rate, not later than 180 days after initial

startup of such facility, and within 12 calendar months of the date the previous performance test was required to be completed thereafter. If the results of the most recent performance test demonstrate that emissions from the affected facility are 50 percent or less of the applicable emissions standard, a new performance test must be conducted within 24 calendar months of the date that the previous performance test was required to be completed. [District Rule 4001 and 40 CFR 60.255(1), 40 CFR 60.8]

- Testing for compliance with particulate matter concentration limit shall be conducted using EPA method 5. The sampling time and sample volume for each run shall be at least 60 minutes and 0.85 dscm (30 dscf). Sampling shall begin no less than 30 minutes after startup and shall terminate before shutdown procedures begin. A minimum of three valid test runs are needed to comprise a PM performance test. [District Rule 4001 and 40 CFR 60.255(1) and 60.257(5)(i)]

Section 60.255 (b)(2) states that for each affected facility subject to an opacity standard, an initial performance test must be performed. Thereafter, a new performance test must be conducted according to the requirements in paragraphs (b)(2)(i) through (iii) of this section, as applicable, except as provided for in paragraphs (e) and (f) of this section. Performance test and other compliance requirements for coal truck dump operations are specified in paragraph (h) of this section.

(i) If any 6-minute average opacity reading in the most recent performance test exceeds half the applicable opacity limit, a new performance test must be conducted within 90 operating days of the date that the previous performance test was required to be completed.

(ii) If all 6-minute average opacity readings in the most recent performance test are equal to or less than half the applicable opacity limit, a new performance test must be conducted within 12 calendar months of the date that the previous performance test was required to be completed.

(iii) An owner or operator of an affected facility continuously monitoring scrubber parameters as specified in §60.256(b)(2) is exempt from the requirements in paragraphs (b)(2)(i) and (ii) if opacity performance tests are conducted concurrently with (or within a 60-minute period of) PM performance tests.

Therefore, the following conditions will be included on S-7616-17, -18, -19, and -20:

- Testing for the opacity standards for the operations shall be conducted within 60 days after achieving the maximum production rate, not later than 180 days after initial startup of such facility, and within 90 operating days of the date the previous performance test was required to be completed thereafter. If all 6-minute average opacity readings in the most recent performance test are equal to or less than half the applicable opacity limit, a new performance test must be conducted within 12 calendar months of the date that the previous performance test was required to be completed. [District Rule 4001 and 40 CFR 60.255(2), 40 CFR 60.8]

- Source testing to determine opacity as required by 40 CFR Part 60, Subpart Y shall be conducted using EPA method 9. [District Rule 4001 and 40 CFR 60.257(a)]

- The permittee shall conduct monthly visual observations of all process and control equipment. If any deficiencies are observed, the necessary maintenance must be performed as expeditiously as possible. [District Rule 4001 and 40 CFR 60.257]

Section 60.256 - Continuous monitoring requirements:

Section 60.256 (b) states that "the owner or operator of each affected facility constructed, reconstructed, or modified after April 28, 2008, that has one or more mechanical vents must install, calibrate, maintain, and continuously operate the monitoring devices specified in paragraphs (b)(1) through (3) of this section, as applicable to the mechanical vent and any control device installed on the vent." A mechanical vent is defined as "any vent that uses a powered mechanical drive (machine) to induce air flow." Since the operation does not include mechanical vents, the continuous monitoring requirements of this section do not apply.

Section 60.257 - Test methods and procedures:

Section 60.257 contains the test methods and procedures required for determine compliance with the applicability opacity standards and PM concentration limits. Those requirements are specified in the discussions above.

Section 60.258 - Reporting and recordkeeping:

Section 60.258 (a) states that the owner or operator of a coal preparation and processing plant that commenced construction, reconstruction, or modification after April 28, 2008, shall maintain in a logbook (written or electronic) on-site and make it available upon request. The logbook requires the permittee to maintain records as specified in Section 60.258. The following condition will be included:

- Permittee shall maintain a logbook (written or electronic) with the records specified in 40 CFR Subpart 60.258(a) on-site and make it available upon request. [District Rule 4001 and 40 CFR 60.258]

Section 60.258 (b) lists notification and recordkeeping requirements for those units subject to section 60.7(c). Section 60.7 (c) applies to those units served by continuous emission monitoring systems, and since this operation is not equipped with them, this section does not apply.

Section 60.258 (c) indicates that affected facilities subject to performance test requirements of section 60.8 shall submit the initial performance test results consistent with the provisions of section 60.8, which requires submittal of test results within 60 days after achieving the maximum production rate at which the affected facility will be operated, but not later than 180 days after initial startup of such facility, or at such other times specified by this part, and at such other times as may be required by the Administrator under section 114 of the Act, the owner or operator of such facility shall conduct performance test(s) and furnish the Administrator a written report of the results of such performance test(s).

- Permittee shall conduct testing for compliance with the particulate matter concentration limit and particulate matter concentration limit within 60 days after achieving the maximum production rate, not later than 180 days after initial startup of such facility. [District Rule 4001 and 40 CFR 60.258(c), 40 CFR 60.8]

- Permittee shall provide the District at least 30 days prior notice of any performance test, except as specified under other subparts, to afford the Administrator the opportunity to have an observer present. [District Rule 4001 and 40 CFR 60.8]

Conclusion:

Conditions will be incorporated into the DOC in order to ensure compliance with each applicable section of this subpart. Therefore, compliance with the requirements of Subpart Y is expected and no further discussion is required.

40 CFR 60 – Subpart IIII (Standards of Performance for Stationary Compression Ignition Internal Combustion Engines)

S-7616-38-0 (Emergency Engine Powering Electrical Generator)
S-7616-39-0 (Emergency Engine Powering Electrical Generator)
S-7616-40-0 (Emergency Engine Powering Firewater Pump)

The following table demonstrates how the proposed engines will comply with the requirements of 40 CFR Part 60 Subpart IIII.

40 CFR 60 Subpart IIII Requirements for New Emergency IC Engines Powering Generators (2007 and Later Model Year)	Proposed Method of Compliance with 40 CFR 60 Subpart IIII Requirements
Engines must meet the appropriate Subpart IIII emission standards for new engines, based on the model year, size, and number of liters per cylinder.	The applicant has proposed the use of engine(s) that are certified to the latest EPA Tier Certification level for the applicable horsepower range, guaranteeing compliance with the emission standards of Subpart IIII.
Engines must be fired on 500 ppm sulfur content fuel or less, and fuel with a minimum centane index of 40 or a maximum aromatic content of 35 percent by volume. Starting in October 1, 2010, the maximum allowable sulfur fuel content will be lowered to 15 ppm.	The applicant has proposed the use of CARB certified diesel fuel, which meets all of the fuel requirements listed in Subpart IIII. An DOC condition enforcing this requirement was included earlier in this evaluation.

The operator/owner must install a non-resettable hour meter prior to startup of the engines.	The applicant has proposed to install a non-resettable hour meter. The following condition will be included in the DOC: This engine shall be equipped with an operational non-resettable elapsed time meter or other APCO approved alternative. [District Rule 4702, 17 CCR 93115, and 40 CFR 60 Subpart IIII]
Emergency engines may be operated for the purpose of maintenance and testing up to 100 hours per year. There is no limit on emergency use.	The Air Toxic Control Measure for Stationary Compression Ignition Engines (Stationary ATCM) limits the maintenance and testing to 50 hours/year for engines S-7616-14-0 and '-15-0, and to 100 hours/year for engine '-16-0. Thus, compliance is expected.
The owner/operator must operate and maintain the engines and any installed control devices according to the manufacturers written instructions.	The following condition will be included in the DOC: This engine shall be operated and maintained in proper operating condition as recommended by the engine manufacturer or emissions control system supplier. [District Rule 4702 and 40 CFR 60 Subpart IIII]

S-7616-40-0 (Emergency Engine Powering Firewater Pump)

<u>§60.4200 - Applicability</u>

This subpart is applicable to owners and operators of stationary compression ignited internal combustion engines that commence construction after July 11, 2005, where the engines are:

1) Manufactured after April 1, 2006, if not a fire pump engine.
2) Manufactured as a National Fire Protection Association (NFPA) fire pump engine after July 1, 2006.

Since the proposed engine will be installed after July 11, 2005 and will be manufactured after April 1, 2006, this subpart applies.

All of the applicable standards of this subpart are less restrictive than current District requirements. This engine will comply with all current District standards so no further discussion is required.

<u>Rule 4002 - National Emission Standards for Hazardous Air Pollutants (NESHAPs)</u>

Pursuant to Section 2.0, "All sources of hazardous air pollution shall comply with the standards, criteria, and requirements set forth therein;" therefore, the requirements of this rule applies to HECA. But there are no applicable requirements for a non-major HAPs source. HECA will conduct an initial speciated HAPS compliance source test to demonstrate that the facility is not a major HAPS source.

Proposed Rule 4002 Condition:

- Hazardous Air Pollutant (HAP) emissions shall not exceed 25 tpy all HAPS or 10 tpy any single HAP. [District Rule 4002]

- Permittee shall conduct an initial speciated HAPS and total VOC source test for the combustion turbine generator, by District witnessed in situ sampling of exhaust gases by a qualified independent source test firm. The permittee shall correlate the total HAPs emissions rate and the single highest HAP emission rate to the VOC mass emission determined during the speciated HAPs source test. Initial and annual compliance with the HAPs emissions limit (25 tpy all HAPs or 10 tpy any single HAP) shall be demonstrated by the combined VOC emissions rates for the combustion gas turbine determined during initial and annual compliance source testing and the correlation between VOC emissions and HAP(s). [District Rule 4002]

40 CFR 63 Subpart ZZZZ – National Emission Standards for Hazardous Air Pollutants for Stationary Reciprocating Internal Combustion Emissions (RICE)

Emergency engines are subject to this subpart if they are operated at a major or area source of Hazardous Air Pollutant (HAP) emissions. A major source of HAP emissions is a facility that has the potential to emit any single HAP at a rate of 10 tons/year or greater or any combinations of HAPs at a rate of 25 tons/year or greater. An area source of HAPs is a facility is not a major source of HAPs. The proposed engines are new stationary RICE located at an area source of HAP emissions; therefore, these engines are subject to this Subpart.

40 CFR 63 Subpart ZZZZ requires the following engines to comply with 40 CFR 60 Subpart IIII:

1. New emergency engines located at area sources of HAPs
2. Emergency engines rated less than or equal to 500 bhp and located at major sources of HAPs

The proposed engines will be in compliance with 40 CFR 60 Subpart IIII (as explained in the Subpart IIII discussion above).

Additionally, 40 CFR 63 Subpart ZZZZ requires engines rated greater 500 bhp and located at major sources of HAPs to meet the notification requirements of §63.6645(h); however, that section only applies if an initial performance test is required. Since an initial performance test is not required for emergency engines, the notification requirement is not applicable.

Therefore, the proposed engines are expected to be in compliance with 40 CFR 63 Subpart ZZZZ.

Rule 4101 - Visible Emissions

Per Section 5.0, no person shall discharge into the atmosphere emissions of any air contaminant aggregating more than 3 minutes in any hour which is as dark as or darker than Ringelmann 1 (or 20% opacity). None of the equipment proposed will discharge into the atmosphere emissions of any air contaminant aggregating more than 3 minutes in any hour which is as dark as or darker than Ringelmann 1 (or 20% opacity). Therefore, compliance with District Rule 4101 requirements is expected.

Rule 4102 - Nuisance

Section 4.0 prohibits discharge of air contaminants which could cause injury, detriment, nuisance or annoyance to the public. Public nuisance conditions are not expected as a result of these operations, provided the equipment is well maintained. Therefore, compliance with this rule is expected.

California Health & Safety Code 41700 (Health Risk Assessment)

District Policy APR 1905 – Risk Management Policy for Permitting New and Modified Sources specifies that for an increase in emissions associated with a proposed new source or modification, the District perform an analysis to determine the possible impact to the nearest resident or worksite.

An HRA is not required for a project with a total facility prioritization score of less than one. According to the Ambient Air Quality Impact and Health Risk Report, which is found in Appendix K, the total facility prioritization score including this project was greater than one. Therefore, a health risk assessment was required to determine the short-term acute and long-term chronic exposure from this project.

As is shown in the Health Risk Analysis Results in section 9.3.6 of the Ambient Air Quality Impact and Health Risk Report in Appendix K, the cancer risk for this project is shown below:

HRA Summary		
Unit	Cancer Risk	T-BACT Required
S-7616-17-0 through -25-0 and -27-0 through -40-0	0.15 per million	No
S-7616-26-0	3.68 per million	Yes

Discussion of T-BACT

BACT for toxic emission control (T-BACT) is required if the cancer risk exceeds one in one million. For this project, T-BACT is triggered for PM10 and VOC for unit S-7616-26-0 as indicted in Section 10.3 in Appendix K. According to that section, T-BACT is satisfied with BACT for PM10 and VOC. As is discussed in the BACT discussion in Rule 2201 of this document, BACT is proposed for PM10 and VOC for unit S-7616-26-0.

Therefore, in accordance with the District Risk Management Policy, the project is approved with Toxic Best Available Control Technology (T-BACT) requirements and compliance with the District's Risk Management Policy is expected.

<u>Rule 4201 - Particulate Matter Concentration</u>

Section 3.1 prohibits discharge of dust, fumes, or total particulate matter into the atmosphere from any single source operation in excess of 0.1 grain per dry standard cubic foot.

S-7616-26-0 (Combustion Turbine Generator)

$$\text{PM Conc. (gr/scf)} = \frac{\text{(PM emission rate)(7,000 gr/lb)}}{\text{(Exhaust gas flow rate)(60 min/hr)(24 hr/day)}}$$

PM_{10} emission rate: 15.0 lb/hr (assuming 100% of PM is PM10; maximum hourly PM10 rate)
Exhaust gas flow: 1,017,162 to 1,419,360 scfm (as identified in the application. For purposes of this calculation, the lowest value will be used.)

PM Conc. (gr/scf) = [(15.0 lb/hr)(7,000 gr/lb)] ÷ [(1,017,162 ft^3/min)(60 min/hr)]
PM Conc. = 0.0017 gr/scf

S-7616-25-0 (Auxiliary Boiler)

F-Factor for natural gas: 8,578 dscf/MMBtu at 60 °F
PM10 emission factor: 0.0050 lb-PM10/MMBtu
Percentage of PM as PM10 in exhaust: 100%
Exhaust O_2 Concentration: 3%

$$\text{Excess Air Correction to F Factor} = \frac{20.9}{(20.9 - 3)} = 1.17$$

$$GL = \left(\frac{0.0050\ lb-PM}{MMBtu} \times \frac{7{,}000\ grain}{lb-PM}\right) / \left(\frac{8{,}578\ ft^3}{MMBtu} \times 1.17\right)$$

$$GL = 0.0035\ grain/dscf < 0.1\ grain/dscf$$

S-7616-33-0 (Ammonia Synthesis Unit Startup Heater)

F-Factor for natural gas: 8,578 dscf/MMBtu at 60 °F
PM10 emission factor: 0.0050 lb-PM10/MMBtu
Percentage of PM as PM10 in exhaust: 100%
Exhaust O_2 Concentration: 3%

$$\text{Excess Air Correction to F-Factor} = \frac{20.9}{(20.9 - 3)} = 1.17$$

$$GL = \left(\frac{0.0050\ lb - PM}{MMBtu} \times \frac{7{,}000\ grain}{lb - PM} \right) / \left(\frac{8{,}578\ \ ft^3}{MMBtu} \times\ 1.17 \right)$$

$$GL = 0.0035\ grain/dscf < 0.1\, grain/dscf$$

S-7616-17-0 (Railcar Unloading and Transfer System)
S-7616-18-0 (Truck Unloading and Transfer System)
S-7616-19-0 (Feedstock Storage, Blending, and Reclaim System)
S-7616-20-0 (Feedstock Grinding/Crushing and Drying System)
S-7616-22-0 (Gasification Solids Material Handling System)
S-7616-34-0 (Urea Unit)
S-7616-37-0 (Urea Storage and Loadout System)

The particulate matter emissions from the dust collectors serving the solid material processing equipment will be limited to 0.001 grains/dscf in concentration, which complies with the standard in this rule.

S-7616-38-0 (Emergency Engine Powering Electrical Generator)
S-7616-39-0 (Emergency Engine Powering Electrical Generator)

$$0.07 \quad \frac{g - PM_{10}}{bhp - hr} \times \frac{1g - PM}{0.96 g - PM_{10}} \times \frac{1 bhp - hr}{2{,}542.5\, Btu} \times \frac{10^6\, Btu}{9{,}051\, dscf} \times \frac{0.35\, Btu_{out}}{1\, Btu_{in}} \times \frac{15.43\, grain}{g} = \quad 0.017 \quad \frac{grain - PM}{dscf}$$

S-7616-40-0 (Emergency Engine Powering Firewater Pump)

$$0.01 \quad \frac{g - PM_{10}}{bhp - hr} \times \frac{1g - PM}{0.96 g - PM_{10}} \times \frac{1 bhp - hr}{2{,}542.5\, Btu} \times \frac{10^6\, Btu}{9{,}051\, dscf} \times \frac{0.35\, Btu_{out}}{1\, Btu_{in}} \times \frac{15.43\, grain}{g} = \quad 0.002 \quad \frac{grain - PM}{dscf}$$

Calculated emissions are well below the allowable emissions level. Therefore, compliance with Rule 4201 is expected. The following conditions will be added to the DOC:

- {14} Particulate matter emissions shall not exceed 0.1 grains/dscf in concentration. [District Rule 4201]

<u>Rule 4202 - Particulate Matter Emission Rate</u>

Rule 4202 establishes PM emission limits as a function of process weight rate in tons/hr. Gas and liquid fuels are excluded from the definition of process weight. Therefore, Rule 4202 does not apply to the turbine or the engine. However, it does apply to the cooling towers.

Assuming all cooling tower PM emissions are PM_{10}, Rule 4202 emission limits are calculated as follows:

S-7616-27-0 (Gasification Process Area Cooling Tower)

Weight rate/cooling tower = (162,582 gal/min)(60 min/hr)(8.34 lb/gal) ÷ 2,000 lb/ton
= 40,678 ton/hr

Rule 4202 emission limit = 17.31 * $P^{0.16}$ (where P greater than 30 tons/hr)
= 17.31 * $(40,678)^{0.16}$
= 94.6 lb/hr > Calculated PM rate

Calculated PM rate = 3.7 lb/hr (87.9 lb/day @ 24 hr/day)

S-7616-28-0 (Air Separation Unit Cooling Tower)

Weight rate/cooling tower = (44,876 gal/min)(60 min/hr)(8.34 lb/gal) ÷ 2,000 lb/ton
= 11,228 ton/hr

Rule 4202 emission limit = 17.31 * $P^{0.16}$ (where P greater than 30 tons/hr)
= 17.31 * $(11,228)^{0.16}$
= 77.0 lb/hr > Calculated PM rate

Calculated PM rate = 0.34 lb/hr (8.1 lb/day @ 24 hr/day)

S-7616-29-0 (Power Block Cooling Tower)

Weight rate/cooling tower = (95,500 gal/min)(60 min/hr)(8.34 lb/gal) ÷ 2,000 lb/ton
= 23,894 ton/hr

Rule 4202 emission limit = 17.31 * $P^{0.16}$ (where P greater than 30 tons/hr)
= 17.31 * $(23,894)^{0.16}$
= 86.8 lb/hr > Calculated PM rate

Calculated PM rate = 2.1 lb/hr (51.3 lb/day @ 24 hr/day)

As is shown above, all cooling tower will comply with the Rule 4202 emission limits.

Additionally, the Rule 4202 emissions limits for the solid material handling processing equipment are calculated below:

	Daily Process Rate (ton/day)	Hourly Process Rate (ton/day)	Rule 4202 Emission Limit (lb-PM10/hr)	Calculated PM10 rate (lb-PM10/hr)
S-7616-17:				
Rail Unloading Vent	6,107	254.46	41.99	0.17
S-7616-18:				
Truck Unloading Vent	1,368	57.00	33.05	0.69
S-7616-19:				
Feedstock Transfer Tower 2	7,475	311.46	43.38	0.01
Feedstock Transfer Tower 1	6107	254.46	41.99	0.01
S-7616-20:				
Feedstock Crusher Vent	7,475	311.46	43.38	0.11
Feedstock Bunkers Vent	7,475	311.46	43.38	0.11
S-7616-22:				
Gasification Solids Bucket Elevator	1,678	69.92	34.15	0.03
Gasification Solids Transfer Tower	1,678	69.92	34.15	0.03
Gasification Solids Load-Out System	1,678	69.92	34.15	0.09
S-7616-34:				
Urea Bucket Elevator	1,720	71.67	34.29	0.01
S-7616-37:				
Urea Transfer Tower 1	1,720	71.67	34.29	0.01
Urea Transfer Tower 2	1,720	71.67	34.29	0.01
Urea Transfer Tower 3	1,720	71.67	34.29	0.01
Urea Transfer Tower 4	1,720	71.67	34.29	0.01
Urea Transfer Tower 5	1,720	71.67	34.29	0.01
Urea Loading Vent	1,720	71.67	34.29	0.17

As is shown above, all the solid material handling equipment will comply with the Rule 4202 emission limits. Therefore, compliance with this rule is expected.

Rule 4301 - Fuel Burning Equipment

Rule 4301 limits air contaminant emissions from fuel burning equipment as defined in the rule. Section 3.1 defines fuel burning equipment as “any furnace, boiler, apparatus, stack, and all appurtenances thereto, used in the process of burning fuel for the primary purpose of producing heat or power by indirect heat transfer”.

S-7616-26-0 (Combustion Turbine Generator)

The CTG primarily produces power mechanically, i.e. the products of combustion pass across the power turbine blades which cause the turbine shaft to rotate. The turbine shaft is coupled to an electrical generator shaft which is rotated to produce electricity. Because CTG primarily produce power by mechanical means, it does not meet the definition of fuel burning equipment. Rule 4301 does not apply to the affected equipment.

S-7616-38-0 (Emergency Engine Powering Electrical Generator)
S-7616-39-0 (Emergency Engine Powering Electrical Generator)
S-7616-40-0 (Emergency Engine Powering Firewater Pump)

The emergency use IC engines produce power mechanically. Therefore, they do not meet the definition of fuel burning equipment. Rule 4301 does not apply to the affected equipment.

S-7616-25-0 (Auxiliary Boiler)
S-7616-33-0 (Ammonia Startup Heater)

This rule specifies maximum emission rates in lb/hr for SO_2, NO_2, and combustion contaminants (defined as total PM in Rule 1020). This rule also limits combustion contaminants to ≤ 0.1 gr/scf. According to AP 42 (Table 1.4-2, footnote c), all PM emissions from natural gas combustion are less than 1 μm in diameter.

District Rule 4301 Limits			
Pollutant	**NO_2**	**Total PM**	**SO_2**
S-7616-25-0 (lb/day)	30.7	25.6	14.6
S-7616-25-0 (lb/hr)	1.3	1.1	0.6
S-7616-33-0 (lb/day)	14.5	6.6	3.8
S-7616-33-0 (lb/hr)	0.6	0.3	0.2
Rule Limit (lb/hr)	140	10	200

The above table indicates compliance with the maximum lb/hr emissions in this rule; therefore, compliance is expected.

<u>Rule 4305 - Boilers, Steam Generators and Process Heaters – Phase 2</u>

S-7616-25-0 (Auxiliary Boiler)
S-7616-33-0 (Ammonia Synthesis Unit Startup Heater)

The auxiliary boiler (S-7616-29-0) and the ammonia startup heater (S-7616-33) are natural gas-fired with a maximum heat input of 230 MMBtu/hr and 56 MMBtu/hr, respectively. Pursuant to

Section 2.0 of District Rule 4305, the unit is subject to District Rule 4305, *Boilers, Steam Generators and Process Heaters – Phase 2.*

In addition, the unit is also subject to District Rule 4306, *Boilers, Steam Generators and Process Heaters – Phase 3.*

Since emissions limits of District Rule 4306 and all other requirements are equivalent or more stringent than District Rule 4305 requirements, compliance with District Rule 4306 requirements will satisfy requirements of District Rule 4305. Therefore, compliance with District Rule 4305 requirements is expected and no further discussion is required.

Rule 4306 - Boilers, Steam Generators and Process Heaters – Phase 3

S-7616-25-0 (Auxiliary Boiler)
S-7616-33-0 (Ammonia Synthesis Unit Startup Heater)

This rule limits NOx and CO emissions from boilers, steam generators, and process heaters rated greater than 5 MMBtu/hr. The subject natural gas-fired auxiliary boiler (S-7616-25) and ammonia synthesis unit startup heater (S-7616-33) will comply with the applicable provisions of this rule. Source testing, monitoring and recordkeeping requirements of Rule 4320 are equal to or more stringent than the requirements of this rule; therefore, compliance is expected

Rule 4320 - Advanced Emission Reduction Options for Boilers, Steam Generators, and Process Heaters Greater Than 5.0 MMBtu/hr

This rule limits NOx, CO, SO2 and PM10 emissions from boilers, steam generators and process heaters rated greater than 5 MMBtu/hr. This rule also provides a compliance option of payment of fees in proportion to the actual amount of NOx emitted over the previous year.

S-7616-25-0 (Auxiliary Boiler)
S-7616-33-0 (Ammonia Synthesis Unit Startup Heater)

Section 5 - Requirements

Section 5.1 states that an operator of a unit(s) subject to this rule shall comply with all applicable requirements of the rule and one of the following, on a unit-by-unit basis:

5.1.1 Operate the unit to comply with the emission limits specified in Sections 5.2 and 5.4; or
5.1.2 Pay an annual emissions fee to the District as specified in Section 5.3 and comply with the control requirements specified in Section 5.4; or
5.1.3 Comply with the applicable Low-use Unit requirements of Section 5.5.

Section 5.0 - NOx and CO Emission Limits

Section 5.2.1 states that on and after the indicated Compliance Deadline, a unit shall not be operated in a manner which exceeds the applicable NOx limit specified in Table 1 of this rule. Units shall not be operated in a manner which exceeds CO emissions of 400 ppmv.

S-7616-25-0 (Auxiliary Boiler)

The auxiliary boiler (S-7616-25-0) in this project is rated at 230 MMBtu/hr heat input, and the permittee plans to equip the boiler with an ultra-low NOx burner and flue gas recirculation to meet a NOx emission limit of 5 ppmv @ 3% O2, and CO emissions will be limited to 50.8 ppmv-CO @ 3% O2. Based on that heat input rating, the applicable emission limit category Section 5.2, Table 1, Category B, from District Rule 4320 is as follows:

Rule 4320 NOx Emission Limits			
Category	**NOx Limit**	**Application**	**Compliance Deadline**
Units with a total rated heat input > 20.0 MMBtu/hr, except for Categories C through G units	a) Standard Schedule: 7 ppmv or 0.008 lb/MMBtu; or	July 1, 2009	July 1, 2010
	b) Enhanced Schedule: 5 ppmv or 0.0062 lb/MMBtu	January 1, 2013	January 1, 2014

Therefore, S-7616-25 will be in compliance with the applicable NOx and CO emission limits.

The following condition will be added to S-7616-25:

- Emissions from this unit, except during startup or shutdown, shall not exceed any of the following limits: NOx (as NO2): 5 ppmvd @ 3% O_2 or 0.006 lb/MMBtu, SOx (as SO_2): 0.00285 lb/MMBtu, PM_{10}: 0.005 lb/MMBtu, CO: 50.8 ppmvd @ 3% O_2 or 0.037 lb/MMBtu, or VOC: 0.0040 lb/MMBtu. [District Rules 2201, 4305, 4306 and 4320]

S-7616-33-0 (Ammonia Synthesis Unit Startup Heater)

A 55.0 MMBtu/hr natural gas-fired startup heater is provided in the ammonia synthesis unit to raise the catalyst bed temperatures during initial plant commissioning, or during startup after a plant maintenance outage. The startup heater transfers heat from combustion gases to the ammonia stream, a process stream, and as such meets the definition of a process heater as defined in Section 3.19 of the rule.

For the proposed ammonia startup heater, the permittee proposes to pay an annual emissions fee to the District as allowed by Section 5.1.2. The fee shall be calculated annually as specified in Section 5.3.

The following condition will be added to S-7616-33:

- Pursuant to Rule 4320, the operator shall pay an annual emission fee to the District for NOx emissions from this unit for the previous calendar year. Payments are due by July 1

of each year. Payments shall continue annually until either the unit is permanently removed from service in the District or the operator demonstrates compliance with the applicable NOx emission limit listed in Rule 4320. [District Rule 4320]

Section 5.4 - Particulate Matter Control Requirements

The applicable particulate matter control requirement of Section 5.4 will be satisfied by both units (S-7616-25 and -33) by complying with Section 5.4.1.1, by operating the units exclusively on PUC-quality natural gas.

- The unit shall be fired solely on PUC-quality natural gas. [District Rules 2201 and 4320]

Section 5.6 - Startup and Shutdown Provisions

Section 5.6 states that on and after the full compliance deadline specified in Section 5.0, the applicable emission limits of Sections 5.2 Table 1 and 5.5.2 shall not apply during startup or shutdown provided an operator complies with the requirements specified in Sections 5.6.1 through 5.6.5.

Section 5.6 specifies startup and shutdown provisions. Section 5.6.1 states that the duration of each startup or each shutdown shall not exceed two hours, except as provided in Section 5.6.3, whereby the applicant applies and received approval for more than two hours for each startup or each shutdown.

The applicant has not proposed startup and shutdown duration limits greater than those specified in section 5.6.1. Emissions during startup and shutdown will not be subject to the emission limits in Sections 5.2 and 5.2.2. The following condition will be added to S-7616-29 and -33:

- Duration of startup and shutdown of heater shall not exceed 2 hours each per occurrence. The emission control system shall be in operation and emissions shall be minimized insofar as technologically feasible during startup and shutdown. The operator shall maintain records of the duration of startup and shutdown. [District Rules 4305, 4306, and 4320]

Section 5.7 - Monitoring Provisions

Section 5.7.1 requires that units subject to District Rule 4320, Section 5.2 shall either install and maintain an operational APCO approved Continuous Emission Monitoring System (CEMS) for NO_X, CO and O_2, or implement an APCO-approved alternate monitoring.

The permittee proposes to implement Alternate Monitoring Scheme A (pursuant to District Policy SSP-1105), which requires that monitoring of NO_X, CO, and O_2 exhaust concentrations shall be conducted at least once per month (in which a source test is not performed) using a portable analyzer. The following conditions will be incorporated into S-7616-25 and -33 to ensure compliance with the requirements of the proposed alternate monitoring plan:

- The permittee shall monitor and record the stack concentration of NO_X, CO, and O2 at least once every month (in which a source test is not performed) using a portable analyzer that meets District specifications. Measurement shall be made with the FGR system in the mode of operation (closed or open) in which it was used in the preceding 30 days. Monitoring shall not be required if the unit is not in operation, i.e. the unit need not be started solely to perform monitoring. Monitoring shall be performed within 5 days of restarting the unit unless monitoring has been performed within the last month. [District Rules 4305, 4306, and 4320]

- If either the NO_X or CO concentrations corrected to 3% O2, as measured by the portable analyzer, exceed the allowable emissions concentration, the permittee shall return the emissions to within the acceptable range as soon as possible, but no longer than 1 hour of operation after detection. If the portable analyzer readings continue to exceed the allowable emissions concentration after 1 hour of operation after detection, the permittee shall notify the District within the following 1 hour and conduct a certified source test within 60 days of the first exceedance. In lieu of conducting a source test, the permittee may stipulate a violation has occurred, subject to enforcement action. The permittee must then correct the violation, show compliance has been re-established, and resume monitoring procedures. If the deviations are the result of a qualifying breakdown condition pursuant to Rule 1100, the permittee may fully comply with Rule 1100 in lieu of the performing the notification and testing required by this condition. [District Rules 4305, 4306 and 4320]

- All alternate monitoring parameter emission readings shall be taken with the unit operating either at conditions representative of normal operations or conditions specified in the DOC. The analyzer shall be calibrated, maintained, and operated in accordance with the manufacturer's specifications and recommendations or a protocol approved by the APCO. Emission readings taken shall be averaged over a 15 consecutive-minute period by either taking a cumulative 15 consecutive-minute sample reading or by taking at least five (5) readings, evenly spaced out over the 15 consecutive-minute period. [District Rules 4305, 4306 and 4320]

- The permittee shall maintain records of: (1) the date and time of NO_X, CO, and O2 measurements, (2) the O2 concentration in percent by volume and the measured NOx and CO concentrations corrected to 3% O2, (3) make and model of exhaust gas analyzer, (4) exhaust gas analyzer calibration records, and (5) a description of any corrective action taken to maintain the emissions within the acceptable range. [District Rules 4305, 4306 and 4320]

Section 5.7.6 requires that operators complying with Sections 5.4.1.1 or 5.4.1.2 shall provide an annual fuel analysis to the District. Provided the units are fired on PUC-quality natural gas as required, the units are expected to comply with this section.

Section 5.8 - Compliance Determination

Section 5.8.1 requires that the operator of any unit shall have the option of complying with either the applicable heat input (lb/MMBtu), emission limits or the concentration (ppmv) emission limits specified in Section 5.2. The emission limits selected to demonstrate compliance shall be specified in the source test proposal pursuant to Rule 1081 (Source Sampling). Therefore, the following condition will be listed on the S-7616-25 and -33 as follows:

- {2976} The source plan shall identify which basis (ppmv or lb/MMBtu) will be used to demonstrate compliance. [District Rules 4305, 4306 and 4320]

Section 5.8.2 requires that all emissions measurements shall be made with the unit operating either at conditions representative of normal operations or conditions specified in the DOC. No determination of compliance shall be established within two hours after a continuous period in which fuel flow to the unit is shut off for 30 minutes or longer, or within 30 minutes after a re-ignition as defined in Section 3.0. Therefore, the following condition will be listed on S-7616-25 and -33 as follows:

- All emissions measurements shall be made with the unit operating either at conditions representative of normal operations or conditions specified in the DOC. Unless otherwise specified in the DOC, no determination of compliance shall be established within two hours after a continuous period in which fuel flow to the unit is shut off for 30 minutes or longer, or within 30 minutes after a re-ignition as defined in Section 3.0. For the purposes of permittee-performed alternate monitoring, emissions measurements may be performed at any time after the unit reaches conditions representative of normal operation. [District Rules 4305, 4306 and 4320]

Section 5.8.4 requires that for emissions monitoring pursuant to Sections 5.7.1 and 6.3.1 using a portable NO_X analyzer as part of an APCO approved Alternate Emissions Monitoring System, emission readings shall be averaged over a 15 consecutive-minute period by either taking a cumulative 15-consecutive-minute sample reading or by taking at least five (5) readings evenly spaced out over the 15-consecutive-minute period. Therefore, the following condition will be added to S-7616-25 and -33:

- All alternate monitoring parameter emission readings shall be taken with the unit operating either at conditions representative of normal operations or conditions specified in the DOC. The analyzer shall be calibrated, maintained, and operated in accordance with the manufacturer's specifications and recommendations or a protocol approved by the APCO. Emission readings taken shall be averaged over a 15 consecutive-minute period by either taking a cumulative 15 consecutive-minute sample reading or by taking at least five (5) readings, evenly spaced out over the 15 consecutive-minute period. [District Rules 4305, 4306 and 4320]

Section 5.8.5 requires that for emissions source testing performed pursuant to Section 6.3.1 for the purpose of determining compliance with an applicable standard or numerical limitation of this rule, the arithmetic average of three (3) 30-consecutive-minute test runs shall apply. If two (2) of three (3) runs are above an applicable limit the test cannot be used to demonstrate compliance with an applicable limit. Therefore, the following condition will be listed on S-7616-25 and -33:

- {2980} For emissions source testing, the arithmetic average of three 30-consecutive-minute test runs shall apply. If two of three runs are above an applicable limit the test cannot be used to demonstrate compliance with an applicable limit. [District Rules 4305, 4306 and 4320]

Section 6.1 - Recordkeeping

Section 6.1 requires that the records required by Sections 6.1.1 through 6.1.5 shall be maintained for five calendar years and shall be made available to the APCO and EPA upon request. Failure to maintain records or information contained in the records that demonstrate noncompliance with the applicable requirements of this rule shall constitute a violation of this rule.

The following condition will be added to S-7616-25 and -33:

- {2983} All records shall be maintained and retained on-site for a minimum of five (5) years, and shall be made available for District inspection upon request. [District Rules 1070, 4305, 4306 and 4320]

Section 6.2 - Test Methods

Section 6.2 identifies the following test methods as District-approved source testing methods for the pollutants listed:

Pollutant	Units	Test Method Required
NO_X	ppmv	EPA Method 7E or ARB Method 100
NO_X	lb/MMBtu	EPA Method 19
CO	ppmv	EPA Method 10 or ARB Method 100
Stack Gas O_2	%	EPA Method 3 or 3A, or ARB Method 100
Stack Gas Velocities	ft/min	EPA Method 2
Stack Gas Moisture Content	%	EPA Method 4

The following conditions will be listed on S-7616-25 and -33 as follows:

- {109} Source testing shall be conducted using the methods and procedures approved by the District. The District must be notified at least 30 days prior to any compliance source test, and a source test plan must be submitted for approval at least 15 days prior to testing. [District Rule 1081]

- The following test methods shall be used: NOx (ppmv) - EPA Method 7E or ARB Method 100, NOx (lb/MMBtu) - EPA Method 19, CO (ppmv) - EPA Method 10 or 10B or ARB

Method 100, stack gas oxygen - EPA Method 3 or 3Aor ARB Method 100, SOx (lb/MMBtu) - ARB Method 100 or EPA Method 6, 6C or fuel gas sulfur content analysis and EPA Method 19, fuel gas sulfur content - EPA Method 11 or 15, ASTM D3246 or double GC for H2S and mercaptans performed in a laboratory, fuel gas hhv - ASTM D1826 or D1945 in conjunction with ASTM D3588. [District Rules 4305, 4306 and 4320]

Section 6.3 - Compliance Testing

Section 6.3.1 requires that each unit subject to the NOx and CO emission limits shall be source tested at least once every 12 months, except if two consecutive annual source tests demonstrate compliance, source testing may be performed every 36 months. If such a source test demonstrates non-compliance, source testing shall revert to every 12 months. The following conditions will be included in S-7616-29 and -33:

- This unit shall be tested for compliance with the NOx and CO emissions limits at least once every twelve (12) months. After demonstrating compliance on two (2) consecutive annual source tests, the unit shall be tested not less than once every thirty-six (36) months. If the result of the 36-month source test demonstrates that the unit does not meet the applicable emission limits, the source testing frequency shall revert to at least once every twelve (12) months. [District Rules 4305, 4306 and 4320]

- Source testing to measure NOx, and CO emissions shall be conducted within 60 days of initial operation and whenever flue gas recirculation rate is changed. [District Rules 2201, 4305, 4306 and 4320]

- {110} The results of each source test shall be submitted to the District within 60 days thereafter. [District Rule 1081]

Section 6.4 - Emission Control Plan (ECP)

Section 6.4 requires the operator of any unit to submit to APCO for approval an Emissions Control Plan no later than January 1, 2010. The applicant is not yet an operator of the units, so an ECP is not due yet.

Section 7.0 - Compliance Schedule

Section 7.0 identifies the dates by which the operator shall submit an application for an ATC (and in this case a DOC) and the date by which the owner shall demonstrate compliance with this rule.

The units will be in compliance with the emissions limits listed in Table 1, Section 5.2 of this rule, and periodic monitoring and source testing as required by District Rule 4320. Therefore, requirements of the compliance schedule, as listed in Section 7.0 of District Rule 4320, are satisfied. No further discussion is required.

Conclusion

Conditions will be incorporated into S-7616-25 and -33 in order to ensure compliance with each section of this rule, see attached draft DOC. Therefore, compliance with District Rule 4320 requirements is expected.

Rule 4311 - Flares

S-7616-30-0 (Gasification Flare)
S-7616-31-0 (Sulfur Recovery Unit Flare)
S-7616-32-0 (Rectisol Flare)

The purpose of this rule is to limit the emissions of volatile organic compounds (VOC), oxides of nitrogen (NOx), and sulfur oxides (SOx) from the operation of flares.

Section 5.0 - Requirements

Section 5.1 states that flares that are permitted to operate only during an emergency are not subject to the requirements of Sections 5.6 and 5.7. Since all three of the proposed flares for the project will be allowed some non-emergency operation (such as for startup and shutdown events), all three flare are subject to the requirements of Sections 5.6 and 5.7.

Section 5.2 requires a flame to be present at all times when combustible gases are vented through the flare. The following condition on S-7616-30, -31, and -32 will ensure compliance with Section 5.2:

- A flame shall be present at all times when combustible gases are vented through this flare. [District Rules 2201 and 4311, 5.2 and 40 CFR 60.18(c)(2)]

Section 5.3 requires the flare outlet to be equipped with an automatic ignition system or to operate with a pilot flame present at all times when combustible gases are vented through the flare, except during purge periods for automatic-ignition equipped flares. The following condition on S-7616-30, -31, and -32 will ensure compliance with Section 5.3:

- The outlet shall be equipped with an automatic ignition system or shall operate with a pilot flame present at all times when combustible gases are vented through the flare, except

during purge periods for automatic-ignition equipped flares. [District Rule 4311, 5.3 and 40 CFR 60.18]

Except for flares equipped with a flow-sensing ignition system, Section 5.4 requires the flare be equipped with a heat sensing device such as a thermocouple, ultraviolet beam sensor, infrared sensor, or an equivalent device, capable of continuously detecting at least one pilot flame or the flare flame is present to be installed and operated. The flares in this project each have a continuous pilot; therefore, the following condition will be included on S-7616-30, -31, and -32 to ensure compliance with Section 5.4:

- Except for flares equipped with a flow-sensing ignition system, a heat sensing device such as a thermocouple, ultraviolet beam sensor, infrared sensor, or an equivalent device, capable of continuously detecting at least one pilot flame or the flare flame is present shall be installed and operated. Request for determination of an alternate equivalent flame sensing or heat sensing device shall be submitted to the District in writing 30 days prior to installation for District approval. [District Rule 4311, 5.4 and 40 CFR 60.18]

Section 5.5 requires flares that use flow-sensing automatic ignition systems and which do not use a continuous flame pilot shall use purge gas for purging. Each flare is equipped with a continuous pilot; therefore, this section is not applicable.

Section 5.6 requires open flares (air-assisted, steam-assisted, or non-assisted) in which the flare gas pressure is less than 5 psig shall be operated in such a manner that meets the provisions of 40 CFR 60.18.

According to the application, the flare gas pressure of the gasification flare (S-7616-30) will be greater than or equal to 5 psig; therefore the requirements of Section 5.6 and 40 CFR 60.18 do not apply to flare S-7616-30.

- Flare gas pressure shall not be less than 5 psig when incinerating combustible gasses. [District Rule 4311, 5.6]

The flare gas pressure of the other two flares (S-7616-31 and -32) however, will be less than 5 psig. Therefore, the requirements of Section 5.6 and 40 CFR 60.18 will be included on S-7616-31 and -32. The following condition will be included on S-7616-31 and -32:

- Open flares (air-assisted, steam-assisted, or non-assisted) in which the flare gas pressure is less than 5 psig shall be operated in such a manner that meets the provisions of 40 CFR 60.18. The requirements of this section shall not apply to Coanda effect flares. [District Rule 4311, 5.6]

Additionally, conditions addressing the specific requirements of 40 CFR 60.18 (General Control Device and Work Practice Requirements), a separate section below discussed below, will be included on S-7616-31 and -32 in order to comply with Section 5.6 of this rule.

Section 5.7 applies to ground level enclosed flares. The proposed flares in this project are not ground level enclosed flares; therefore, this section is not applicable.

Section 5.8 requires the operator of a petroleum refinery flare or any flare that has a flaring capacity of greater than or equal to 5.0 MMBtu per hour to submit a flare minimization plan (FMP) to the APCO for approval. All three proposed flares have a capacity greater than 5.0 MMBtu/hr. Therefore, the following condition will be included on S-7616-30, -31, and -32:

- No less than 90 days prior to installation of the flare, permittee shall submit a flare minimization plan (FMP) that complies with the requirements of Rule 4311 Section 6.5 to the APCO for approval. [District Rule 4311, 6.5]

Section 5.9 does not apply as it applies to petroleum refinery flares.

Section 5.10 states the operator of a flare subject to flare minimization requirements pursuant to Section 5.8 shall monitor the vent gas flow to the flare with a flow measuring device or other parameters as specified in the DOC. The operator shall maintain records pursuant to Section 6.1.7.

- Flare shall be equipped with a non-resettable, totalizing flare gas volume flow meter. [District Rule 2201]

Section 5.11 states that the operator of a petroleum refinery or a flare with a flaring capacity equal to or greater than 50 MMBtu/hr shall monitor the flare pursuant to Sections 6.6, 6.7, 6.8, 6.9, and 6.10. Flares S-7616-30, 31, and -32 have a flaring capacity greater than 50 MMBtu/hr, so the monitoring requirements of those sections apply to S-7616-30, -31, and -32 as discussed in the respective sections below.

<u>Section 6.0 - Administrative Requirements</u>
<u>Section 6.1 - Recordkeeping</u>

Section 6.1.1 requires the operator of flares that are subject to the requirements of 40 CFR 60.18 to make available to the APCO upon request the compliance determination records that demonstrate compliance with the provisions of 40 CFR 60.18, (c)(3) through (c)(5).

Flares S-7616-31 and -32 are subject to the requirements of 40 CFR 60.18 per Section 5.6; therefore, Section 6.1.1 is applicable to these flare. Therefore the following conditions will be included on S-7616-31 and -32:

- Upon request, operator shall make available to the APCO the compliance determination records that demonstrate compliance with the provisions of 40 CFR 60.18. [District Rule 4311, 6.1]

- Semi-annual reports of all periods without the presence of a flare pilot flame shall be furnished to the District Compliance Division and EPA. [District Rule 4001 and 40 CFR 60.115b(d)(3)]

- The permittee shall keep accurate daily records of the amount of gas combusted in the flare, hours of operation, the sulfur content and heat content of the gas combusted, and

records demonstrating compliance with the provisions of 40 CFR 60.18, (c)(3) through (c)(5). The permittee shall keep these records for a period of at least five years and shall make such records available for District inspection upon request. [District Rules 2201 and 4311]

Section 6.1.2 applies to ground level enclosed flares. None of the proposed flare will be ground level enclosed flare; therefore, this section is not applicable.

Section 6.1.3 requires for flares used during an emergency that records of the duration of flare operation, amount of gas burned, and the nature of the emergency situation be maintained. The following conditions will be added to S-7616-30, -31, and -32:

- Records of the duration of flare operation, amount of gas burned, and the nature of the emergency situation for flare used during an emergency situation shall be made readily available to the APCO, ARB, and EPA upon request for a minimum of 5 years. [District Rule 4311, 6.1]

Section 6.1.4 does not apply as the operator is not claiming an exemption pursuant to Section 4.3.

Section 6.1.5 requires the permittee to retain on site a copy of the approved flare minimization plan. The following condition will be added to S-7616-30, -31, and -32:

- Copies of approved flare minimization plan pursuant to Rule 4311 Section 6.5 shall be made readily available to the APCO, ARB, and EPA upon request for a minimum of 5 years. [District Rule 4311, 6.1]

Section 6.1.6 requires the permittee to retain a copy of annual reports submitted to the APCO pursuant to Section 6.2. The following condition will be added to S-7616-30, -31, and -32:

- Copies of compliance determination pursuant to 40 CFR 60.18 shall be made readily available to the APCO, ARB, and EPA upon request for a minimum of 5 years. [District Rule 4311, 6.1 and 40 CFR 60.18]

Section 6.1.7 requires the permittee to retain monitoring data, where applicable, collected pursuant to Sections 5.10, 6.6, 6.7, 6.8, 6.9, and 6.10. Section 5.10 (flare minimization vent gas flow rate) applies. Therefore monitoring data for that section will be required. Monitoring for the other section applies only to petroleum refinery flares. The following condition will be added to S-7616-30, -31, and -32:

- Copies of monitoring data collected pursuant to Rule 4311 Section 5.10 shall be made readily available to the APCO, ARB, and EPA upon request for a minimum of 5 years. [District Rule 4311, Section 6.1]

Section 6.2 - Flare Reporting

Section 6.2.1 states that the operator of a flare subject to flare minimization plans pursuant to Section 5.8 of this rule shall notify the APCO of an unplanned flaring event within 24 hours after the start of the next business day or within 24 hours of their discovery, whichever occurs first. The notification shall include the flare source identification, the start date and time, and the end date and time. The following condition will be added to S-7616-30, -31, and -32:

- The operator shall notify the APCO of an unplanned flaring event within 24 hours after the start of the next business day or within 24 hours of their discovery, whichever occurs first. The notification shall include the flare source identification, the start date and time, and the end date and time. [District Rule 4311, Section 6.2]

Section 6.2.2 states that the operator of a flare subject to flare minimization plans pursuant to Section 5.8 shall submit an annual report to the APCO that summarizes all Reportable Flaring Events as defined in Section 3.0 that occurred during the previous 12 month period. The report (as described in that section) shall be submitted within 30 days following the end of the twelve month period of the previous year. The following condition will be added to S-7616-30, -31, and -32:

- The operator of a flare subject to flare minimization plans pursuant to Section 5.8 shall submit an annual report to the APCO that summarizes all Reportable Flaring Events as defined in Rule 4311 Section 3.0 that occurred during the previous 12 month period. The report shall be submitted within 30 days following the end of the twelve month period of the previous year. [District Rule 4311, Section 6.2]

Section 6.2.3 states that the operator of a flare subject to flare monitoring requirements pursuant to Sections 5.10, 6.6, 6.7, 6.8, 6.9, and 6.10, as appropriate, shall submit an annual report to the APCO within 30 days following the end of each 12 month period. The report shall include components specified in Section 6.2.3.1 through 6.2.3.8. Section 5.10 (flare minimization vent gas flow rate) applies, therefore monitoring data for that section will be required. Monitoring for the other section applies only to petroleum refinery flares. The following condition will be added to S-7616-30, -31, and -32:

- The operator of a flare subject to flare monitoring requirements pursuant to Sections 5.10, 6.6, 6.7, 6.8, 6.9, and 6.10, as appropriate, shall submit an annual report to the APCO as specified in Rule 4311 Section 6.2.3 within 30 days following the end of each 12 month period. [District Rule 4311, Section 6.2]

Section 6.3 – Test Methods

Section 6.3 lists the approved test methods to demonstrate compliance with this rule. Alternate equivalent test methods may be used provided the test methods have been approved by the APCO and EPA. Those methods shall be listed on S-7616-30, -31, and -32 as appropriate.

Section 6.4 - Compliance Determination

Section 6.4.1 states that upon request, the operator of flares that are subject to Section 5.6 shall make available, to the APCO, the compliance determination records that demonstrate compliance with the provisions of 40 CFR 60.18, (c)(3) through (c)(5). Flares S-7616-31 and -32 are subject to Section 5.6. Therefore, the following condition will be added to S-7616-31 and -32:

- Upon request, operator shall make available to the APCO the compliance determination records that demonstrate compliance with the provisions of 40 CFR 60.18. [District Rule 4311, 6.1]

Section 6.4.2 applies to ground-level enclosed flares. None of the flare in this project will be ground-level flares, so this section does not apply.

Section 6.5 - Flare Minimization Plan

Section 6.5.1 requires the operator of a petroleum refinery flare or any flare that has a flaring capacity of greater than or equal to 5.0 MMBtu per hour to submit a flare minimization plan (FMP) to the APCO for approval. The following condition will be added to S-7616-30, -31, and -32:

- No less than 90 days prior to installation of the flare, permittee shall submit a flare minimization plan (FMP) that complies with the requirements of Rule 4311 Section 6.5 to the APCO for approval. [District Rule 4311, 6.5]

Sections 6.6, 6.7, 6.8, and 6.9 are applicable to flares with an hourly heat input exceeding 50 MMBtu/hr, and therefore these sections potentially apply to flares S-7616-30 (4,000 MMBtu/hr), and S-7616-31 (800 MMBtu/hr) and S-7616-32 (5,500 MMBtu/hr).

Section 6.6 - Vent Gas Composition Monitoring

Section 6.6 requires the operator of a petroleum refinery flare or any flare that has a flaring capacity equal to or greater than 50 MMBtu per hour to monitor vent gas composition of that flare using one of the five methods pursuant to Section 6.6.1 through Section 6.6.5 as appropriate. Therefore, the following conditions will be added to flares S-7616-30, -31, -32, which have a flare capacity greater than 50 MMBtu/hr:

- Pursuant to Rule 4311 Section 6.6, the operator shall monitor vent gas composition using one the methods pursuant to Section 6.6.1 through Section 6.6.5 as appropriate. [District Rule 4311, Section 6.6]

Section 6.7 – Pilot and Purge Gas Monitoring

Section 6.7 requires the operator of a petroleum refinery flare or any flare that has a flaring capacity equal to or greater than 50 MMBtu per hour to monitor the volumetric flows of purge and pilot gases with flow measuring devices or other parameters as specified on the DOC so

that volumetric flows of pilot and purge gas may be calculated based on pilot design and the parameters monitored. Therefore, the following condition will be added to S-7616-30. -31 and -32, which have a flare capacity greater than 50 MMBtu/hr:

- The operator shall monitor the volumetric flows of purge and pilot gases with flow measuring devices. [District Rule 4311, Section 6.7]

Section 6.8 – Water Seal Monitoring

Section 6.8 requires the operator of a petroleum refinery flare or any flare that has a flaring capacity equal to or greater than 50 MMBtu per hour with a water seal shall monitor and record the water level and pressure of the water seal that services each flare daily or as specified in the DOC. Therefore, the following condition will be added to S-7616-30, -31, and -32, which have a flare capacity greater than 50 MMBtu/hr:

- If the flare is equipped with a water seal, the operator shall monitor and record the water level and pressure of the water seal that services each flare daily. [District Rule 4311, Section 6.8]

Section 6.9 - General Monitoring

Section 6.9 requires the operator of a petroleum refinery flare or any flare that has a flaring capacity equal to or greater than 50 MMBtu per hour shall comply with the following, as applicable:

Section 6.9.1 states that periods of flare monitoring systems in operation greater than 24 continuous hours shall be reported by the following working day, followed by notification of resumption of monitoring. Periods of inoperation of monitoring equipment shall not exceed 14 days per any 18-consecutive-month period. Periods of flare monitoring system inoperation do not include the periods when the system feeding the flare is not operating.

Section 6.9.2 states that during periods of inoperation of continuous analyzers or auto-samplers installed pursuant to Section 6.6, operators responsible for monitoring shall take one sample within 30 minutes of the commencement of flaring, from the flare header or from an alternate location at which samples are representative of vent gas composition and have samples analyzed pursuant to Section 6.3.4. During periods of inoperation of flow monitors required by Section 5.10, flow shall be calculated using good engineering practices.

Section 6.9.3 states that the permittee shall maintain and calibrate all required monitors and recording devices in accordance with the applicable manufacturer's specifications. In order to claim that a manufacturer's specification is not applicable, the person responsible for emissions must have, and follow, a written maintenance policy that was developed for the device in question. The written policy must explain and justify the difference between the written procedure and the manufacturer's procedure.

Section 6.9.4 states that all in-line continuous analyzer and flow monitoring data must be continuously recorded by an electronic data acquisition system capable of one-minute averages. Flow monitoring data shall be recorded as one-minute averages.

Therefore the following conditions will be included on S-7616-30, -31, and -32:

- Periods of flare monitoring system in operation greater than 24 continuous hours shall be reported by the following working day, followed by notification of resumption of monitoring. Periods of inoperation of monitoring equipment shall not exceed 14 days per any 18-consecutive-month period. Periods of flare monitoring system inoperation do not include the periods when the system feeding the flare is not operating. [District Rule 4311, Section 6.9]

- During periods of inoperation of continuous analyzers or auto-samplers installed pursuant to Section 6.6, operators responsible for monitoring shall take one sample within 30 minutes of the commencement of flaring, from the flare header or from an alternate location at which samples are representative of vent gas composition and have samples analyzed pursuant to Section 6.3.4. During periods of inoperation of flow monitors required by Section 5.10, flow shall be calculated using good engineering practices. [District Rule 4311, Section 6.9]

- Operator shall maintain and calibrate all required monitors and recording devices in accordance with the applicable manufacturer's specifications. In order to claim that a manufacturer's specification is not applicable, the person responsible for emissions must have, and follow, a written maintenance policy that was developed for the device in question. The written policy must explain and justify the difference between the written procedure and the manufacturer's procedure. [District Rule 4311, Section 6.9]

- All in-line continuous analyzer and flow monitoring data must be continuously recorded by an electronic data acquisition system capable of one-minute averages. Flow monitoring data shall be recorded as one-minute averages. [District Rule 4311, Section 6.9]

<u>Section 6.10 – Video Monitoring</u>

This section is not applicable as it addresses petroleum refinery flares.

<u>Section 7.0 Compliance Schedule</u>

Operators of flares, that are exempt under Section 4.0 and that lose exemption status, shall not operate flares until in full compliance with all applicable requirements of this rule effective on the date the exemption status is lost. The flares are not exempt under Section 4.0. Therefore, this section is not applicable.

Compliance with the rule is expected.

40 CFR 60.18 - General Control Device and Work Practice Requirements

District Rule 4311 (Flares) Section 5.6 requires open flares (air-assisted, steam-assisted, or non-assisted) in which the flare gas pressure is less than 5 psig shall be operated in such a manner that meets the provisions of 40 CFR 60.18.

The flare gas pressure of the two flares in this project (S-7616-31 and -32) will be less than 5 psig. Therefore, the requirements of Section 5.6 and 40 CFR 60.18 will be included on S-7616-31 and -32.

According to paragraph 60.18(b), paragraphs (c) through (f) apply to flares.

(c)(1) This subpart requires no visible emissions. Flares shall be designed for and operated with no visible emissions as determined by EPA Method 22, except for periods not to exceed a total of 5 minutes during any 2 consecutive hours. The following conditions will be included S-7616-31 and -32:

- No air contaminant shall be discharged into the atmosphere for a period or periods aggregating more than five minutes in any two hours which is as dark as, or darker than, Ringelmann 1/4 or 5% opacity. [District Rule 4101 and 40 CFR 60.18]

- A trained observer, as defined in EPA Method 22, shall check visible emissions at least once annually for a period of 15 minutes. If visible emissions are detected at any time during this period, the observation period shall be extended to two hours. A record containing the results of these observations shall be maintained, which also includes company name, process unit, observer's name and affiliation, date, estimated wind speed and direction, sky condition, and the observer's location relative to the source and sun. [District Rules 4311]

(c)(2) This subpart requires a flame to be present at all times. The flare shall be operated with a flame present at all times. Presence of a flame shall be monitored using a thermocouple or equivalent device to detect the presence of a flame. The flare is equipped with a pilot flame monitoring device.

The following two conditions to be included on S-7616-31 and -32 require a continuous pilot flame and smokeless combustion:

- A flame shall be present at all times when combustible gases are vented through the flare. [District Rule 4311, 5.2 and 40 CFR 60.18(c)(2)]

- Except for flares equipped with a flow-sensing ignition system, a heat sensing device such as a thermocouple, ultraviolet beam sensor, infrared sensor, or an equivalent device, capable of continuously detecting at least one pilot flame or the flare flame is present shall be installed and operated. Request for determination of an alternate equivalent flame sensing or heat sensing device shall be submitted to the District in writing 30 days prior to installation for District approval. [District Rule 4311, 5.4 and 40 CFR 60.18]

(c)(3) This subpart gives the operator the option of complying with either (c)(3)(i), or (c)(3)(ii) and (c)(4).

The following condition will be included on S-7616-31 and -32:

- No less than 90 days prior to installation, the applicant shall demonstrate to the District how compliance with 40 CFR 60.18 (c)(3) shall be satisfied. Compliance with either subparts (c)(3)(i) or (c)(3)(ii) and (c)(4) shall be demonstrated to the District. [40 CFR 60.18 (c)(3)]

(c)(3)(i) This subpart states that flares shall be used that have a diameter of 3 inches or greater, are nonassisted, have a hydrogen content of 8.0 percent (by volume), or greater, and are designed for and operated with an exit velocity less than 122 ft/sec and less than the velocity, Vmax, as determined in that section.

The following conditions will be added to S-7616-31 and -32:

- If the permittee opts to comply with 40 CFR 60.18 (c)(3)(i), a non-assisted flare shall have a diameter of 3 inches or greater, have a minimum hydrogen content of 8.0% by volume, and be designed for and operated with an exit velocity less than 122 ft/sec and less than the velocity Vmax, as determined by the equation specified in paragraph 40 CFR 60.18 (c)(3)(i)(A). [40 CFR 60.18 (c)(3)(i)(a)]

(c)(3)(ii) This subpart lists the minimum heating value of gas being combusted in a non-assisted flare as 200 Btu/scf.

The following conditions will be added to S-7616-31 and -32:

- If the permittee opts to comply with 40 CFR 60.18 (c)(3)(ii) and (c)(4), the heating value of the gas combusted in the flare shall be at least 200 Btu/scf. [District Rule 4311 and 40 CFR 60.18]

(c)(4)(i) This subpart lists a maximum velocity for nonassisted flares as 60 ft/sec, except as provided by (c)(4)(ii) and (c)(4)(iii).

(c)(4)(ii) This subpart lists a maximum exit velocity of 400 ft/sec when the gas being combusted has a heating value of 1,000 Btu/scf. Based on the heat input rating and diameter of the flare, it will not operate with an exit velocity of 400 ft/sec or greater.

Compliance with this subpart is expected, and the following conditions will be added to S-7616-31 and -32:

- If the permittee opts to comply with 40 CFR 60.18 (c)(3)(ii) and (c)(4), non-assisted flares may be operated with an exit velocity equal to or greater than 60 ft/sec, but less than 400 ft/sec, if the net heating value of the gas being combusted is greater than 1,000 Btu/scf. [40 CFR 60.18 (c)(4)]

- If the permittee opts to comply with 40 CFR 60.18 (c)(3)(ii) and (c)(4), non-assisted flares shall be operated with an exit velocity less than 60 ft/sec, except as provided in 40 CFR 60.18 (c)(4)(ii) and (iii). [40 CFR 60.18 (c)(4)]

(c)(4)(iii) This subpart sets a maximum exit velocity, based on the heating value of the gas combusted and the equation listed in (f)(5).

The following conditions will be added to S-7616-31 and -32:

- If the permittee opts to comply with 40 CFR 60.18 (c)(3)(ii) and (c)(4), non-assisted flares may be operated with an exit velocity less than the velocity Vmax, as determined by the methods specified in 40 CFR 60.18 (f)(5), and less than 400 ft/sec. [40 CFR 60.18 (c)(4)(iii)]

(d) This subpart requires the owner or operator to monitor the flare to ensure it is operated and maintained in conformance with its design. Applicable subparts will provide provisions stating how owners or operators of flares shall monitor these control devices.

Monitoring requirements of District Rule 4311 mentioned earlier, will ensure compliance with this section.

(e) This subpart requires that the flare be operational when emissions may be vented to the flare. The presence of a continuous pilot flame will ensure that the flare is operational.

The following conditions are included on S-7616-31 and -32:

- A flame shall be present at all times when combustible gases are vented through the flare. [District Rule 4311, 5.2 and 40 CFR 60.18(c)(2)]

- Except for flares equipped with a flow-sensing ignition system, a heat sensing device such as a thermocouple, ultraviolet beam sensor, infrared sensor, or an equivalent device, capable of continuously detecting at least one pilot flame or the flare flame is present shall be installed and operated. Request for determination of an alternate equivalent flame sensing or heat sensing device shall be submitted to the District in writing 30 days prior to installation for District approval. [District Rule 4311, 5.4 and 40 CFR 60.18]

(f) This subpart lists the methods and equations to be used to demonstrate compliance with the paragraphs of this subpart. Compliance with the above-listed conditions ensures compliance with this paragraph.

The following conditions are included on S-7616-31 and -32:

- The net heating value of the gas being combusted the flare shall be calculated pursuant to 40 CFR 60.18(f)(3) or by using EPA Method 18, ASTM D1946, and ASTM D2382 if published values are not available or cannot be calculated. [40 CFR 60.18 (f)(3)]

- The flare shall be inspected during operation for visible emissions, using EPA Method 22. If visible emissions are observed, corrective action shall be taken. If visible emissions cannot be eliminated, an EPA Method 9 test shall be conducted within 72 hours. [District Rule 2201 and 40 CFR 60.18(f)(1)]

- The outlet shall be equipped with an automatic ignition system or shall operate with a pilot flame present at all times when combustible gases are vented through the flare, except during purge periods for automatic-ignition equipped flares. [District Rule 4311, 5.3 and 40CFR 60.18(f)(2)]

- Except for flares equipped with a flow-sensing ignition system, a heat sensing device such as a thermocouple, ultraviolet beam sensor, infrared sensor, or an equivalent device, capable of continuously detecting at least one pilot flame or the flare flame is present shall be installed and operated. [District Rule 4311, 5.4 and 40 CFR 60.18(f)(2)]

- The actual exit velocity of a flare shall be determined by dividing the volumetric flowrate (in units of standard temperature and pressure), as determined by Reference Methods 2, 2A, 2C, or 2D as appropriate; by the unobstructed (free) cross sectional area of the flare tip. [40 CFR 60.18 (f)(4)]

Rule 4351 - Boilers, Steam Generators and Process Heaters – Phase 1

This rule does not apply to any unit located west of Interstate Highway 5 located in Fresno, Kern, or Kings County. Since the operation is located west of Interstate Highway 5 in Kern County, this rule does not apply.

Rule 4455 - Components at Petroleum Refineries, Gas Liquids Processing Facilities, and Chemical Plants

This rule applies to components containing or contacting VOC at petroleum refineries, gas liquids processing facilities, and chemical plants. Since the facility is none of the affected facilities, the rule does not apply. However, the Inspection and Maintenance requirements of the rule (Sections 5.2 and 5.3) do apply as BACT requirements, so the conditions specifying those requirements will list Rule 2201 as the rule requiring them.

Rule 4701 - Internal Combustion Engines – Phase 1

Pursuant to Section 7.5.2.3 of District Rule 4702, as of June 1, 2006 District Rule 4701 is no longer applicable to diesel-fired emergency standby or emergency IC engines. Therefore, this diesel-fired emergency IC engine will comply with the requirements of District Rule 4702 and no further discussion is required.

Rule 4702 - Internal Combustion Engines – Phase 2

This rule applies to any internal combustion engine rated at 25 brake horsepower or greater. The purpose of this rule is to limit the emissions of nitrogen oxides (NO_X), carbon monoxide (CO), and volatile organic compounds (VOC), and sulfur oxides (SOx) from internal combustion engines.

Pursuant to Section 4.3, except for the requirements of Section 6.2.3, the requirements of this rule shall not apply to an internal combustion engine that meets the following conditions:

1) The engine is operated exclusively to preserve or protect property, human life, or public health during a disaster or state of emergency, such as a fire or flood, and
2) Except for operations associated with Section 4.3.1.1, the engine is limited to operate no more than 100 hours per calendar year as determined by an operational nonresettable elapsed operating time meter, for periodic maintenance, periodic readiness testing, and readiness testing during and after repair work of the engine, and
3) The engine is operated with a nonresettable elapsed operating time meter. In lieu of installing a nonresettable time meter, the owner of an engine may use an alternative device, method, or technique, in determining operating time provided that the alternative is approved by the APCO. The owner of the engine shall properly maintain and operate the time meter or alternative device in accordance with the manufacturer's instructions.

Therefore, the emergency IC engines involved with this project will only have to meet the requirements of Section 6.2.3 of this Rule.

Section 6.2.3 requires that an owner claiming an exemption under Section 4.2 or Section 4.3 shall maintain annual operating records. This information shall be retained for at least five years, shall be readily available, and submitted to the APCO upon request and at the end of each calendar year in a manner and form approved by the APCO.

The following table demonstrates how the proposed engines will comply with the requirements of District Rule 4702.

District Rule 4702 Requirements Emergency Standby IC Engines	Proposed Method of Compliance with District Rule 4702 Requirements
Operation of emergency standby engines is limited to 100 hours or less per calendar year for non-emergency purposes, verified through the use of a non-resettable elapsed operating time meter.	The Air Toxic Control Measure for Stationary Compression Ignition Engines (Stationary ATCM) limits this engine maintenance and testing to 50 hours/year. Thus, compliance is expected.

Emergency standby engines cannot be used to reduce the demand for electrical power when normal electrical power line service has not failed, or to produce power for the electrical distribution system, or in conjunction with a voluntary utility demand reduction program or interruptible power contract.	The following conditions will be included on the DOC: {3807} An emergency situation is an unscheduled electrical power outage caused by sudden and reasonably unforeseen natural disasters or sudden and reasonably unforeseen events beyond the control of the permittee. [District Rule 4702] {3808} This engine shall not be used to produce power for the electrical distribution system, as part of a voluntary utility demand reduction program, or for an interruptible power contract. [District Rule 4702]
The owner/operator must operate and maintain the engine(s) and any installed control devices according to the manufacturers written instructions.	A DOC condition enforcing this requirement was shown earlier in the evaluation.
The owner/operator must monitor the operational characteristics of each engine as recommended by the engine manufacturer or emission control system supplier.	The following condition will be included on DOC: {3478} During periods of operation for maintenance, testing, and required regulatory purposes, the permittee shall monitor the operational characteristics of the engine as recommended by the manufacturer or emission control system supplier (for example: check engine fluid levels, battery, cables and connections; change engine oil and filters; replace engine coolant; and/or other operational characteristics as recommended by the manufacturer or supplier). [District Rule 4702]
Records of the total hours of operation of the emergency standby engine, type of fuel used, purpose for operating the engine, all hours of non-emergency and emergency operation, and support documentation must be maintained. All records shall be retained for a period of at least five years, shall be readily available, and be made available to the APCO upon request.	The following conditions will be included on the DOC: {3496} The permittee shall maintain monthly records of emergency and non-emergency operation. Records shall include the number of hours of emergency operation, the date and number of hours of all testing and maintenance operations, the purpose of the operation (for example: load testing, weekly testing, rolling blackout, general area power outage, etc.) and records of operational characteristics monitoring. For units with automated testing systems, the operator may, as an alternative to keeping records of actual operation for testing purposes, maintain a readily accessible written record of the automated testing schedule. [District Rule 4702 and 17 CCR 93115]

	The permittee shall maintain monthly records of the type of fuel purchased. [District Rule 4702 and 17 CCR 93115] {3475} All records shall be maintained and retained on-site for a minimum of five (5) years, and shall be made available for District inspection upon request. [District Rule 4702 and 17 CCR 93115]

Therefore, the following conditions will be listed on the emergency engine DOC to ensure compliance:

S-7616-40-0 (Emergency Engine Powering Firewater Pump)

- {3488} This engine shall be operated only for maintenance, testing, required regulatory purposes, and during emergency situations. For testing purposes, the engine shall only be operated the number of hours necessary to comply with the testing requirements of the National Fire Protection Association (NFPA) 25 - "Standard for the Inspection, Testing, and Maintenance of Water-Based Fire Protection Systems", 1998 edition. Total hours of operation for all maintenance, testing, and required regulatory purposes shall not exceed 100 hours per calendar year. [District Rule 4702 and 17 CCR 93115]

S-7616-38-0 (Emergency Engine Powering Electrical Generator)
S-7616-39-0 (Emergency Engine Powering Electrical Generator)

- This engine shall be operated only for testing and maintenance of the engine, required regulatory purposes, and during emergency situations. Operation of the engine for maintenance, testing, and required regulatory purposes shall not exceed 50 hours per calendar year. [District Rule 4702 and 17 CCR 93115]

S-7616-38-0 (Emergency Engine Powering Electrical Generator)
S-7616-39-0 (Emergency Engine Powering Electrical Generator)
S-7616-40-0 (Emergency Engine Powering Firewater Pump)

- {3489} The permittee shall maintain monthly records of emergency and non-emergency operation. Records shall include the number of hours of emergency operation, the date and number of hours of all testing and maintenance operations, and the purpose of the operation (for example: load testing, weekly testing, rolling blackout, general area power outage, etc.). For units with automated testing systems, the operator may, as an alternative to keeping records of actual operation for testing purposes, maintain a readily accessible written record of the automated testing schedule. [District Rule 4702 and 17 CCR 93115]

- {3475} All records shall be maintained and retained on-site for a minimum of five (5) years, and shall be made available for District inspection upon request. [District Rule 4702 and 17 CCR 93115]

In addition, the following condition will be listed on the DOC to ensure compliance:

- This engine shall be equipped with an operational non-resettable elapsed time meter or other APCO approved alternative. [District Rule 4702, 17 CCR 93115, and 40 CFR 60 Subpart IIII]

Rule 4703 - Stationary Gas Turbines

Rule 4703 is applicable to stationary gas turbines with a rating greater than 0.3 megawatts, and it defines a gas turbine as "an internal combustion engine consisting of a compressor, a combustor, and a power turbine that is gas and/or liquid fueled, with or without power augmentation." This rule defines "gas fuel" in Section 3.10 as "any of the following fuels or fuels containing any of the following fuels: natural gas, LPG, propane, digester gas, and landfill gas."

S-7616-26-0 (Combustion Turbine Generator)

Hydrogen-rich fuel is not considered gas fuel per the definition of gas fuel as defined in the rule, so this rule will not apply to the CTG when firing solely on hydrogen-rich fuel. However, when firing on natural gas the requirements of this rule will apply.

Section 5.1 – NOx Emission Requirements:

When operating on natural gas, the proposed gas turbine with a generating capacity of up to 431 nominal gross MW. Section 5.1.2 (Table 5-2: Tier 2 NOx Compliance Limits) of this rule limits the NO_X emissions from combined cycle gas turbines greater than 10 MW to 5 ppmv @ 15% O_2 (Standard option) and 3 ppmv @ 15% O_2 (Enhanced Option) for gas fuel as shown in the table below. The applicant's proposal of 4.0 ppm-NOx when firing on natural gas satisfies the standard compliance option.

Turbine Classification Rating	Compliance Option (see Section 7.2)	NOx Compliance Limit, ppmvd at 15% O2	
		Gas Fuel	Liquid Fuel
d) Greater than 10 MW, Combined cycle.	Standard	5	25
	Enhanced	3	5

As discussed above, the proposed turbine will be limited to NOx emission less than those specified in Section 5.1, therefore compliance with this section is expected.

Section 5.2 – CO Emission Requirements:

Per Section 5.2 (Table 5-4: CO Compliance Limits), the CO emissions concentration from the gas turbine must be less than 200 ppmvd @ 15% O_2. Rule 4703 does not include a specific averaging period requirement for demonstrating compliance with the CO emission limit. However, District practice is to have an applicant demonstrate compliance with the CO emissions on a turbine with three-hour averaging periods. Therefore, compliance with the CO emission limit shall be demonstrated by an average over a three-hour period.

The CO emission concentration will be limited to 5.0 ppmvd-CO @ 15% O2 when firing on fuel containing natural gas. Therefore, the proposed turbine will be in compliance with the CO emission requirements of this rule. The following conditions will ensure continued compliance with the requirements of this section:

- During normal operation (excluding startup and shutdown), emission rate from the CTG/HRSG stack when firing on natural gas shall not exceed any of the following: NOx (as NO2) - 34.1 lb/hr and 4.0 ppmvd-NOx @ 15% O2; VOC (as methane) - 5.9 lb/hr and 2.0 ppmvd-VOC @ 15% O2; CO - 26.0 lb/hr and 5.0 ppmvd-CO @ 15% O2; PM10 - 15.0 lb/hr; or SOx (as SO2) - 4.7 lb/hr. All pollutant emission limits are three-hour rolling averages. [District Rules 2201 and 4703 and 40 CFR 60.4320(a) & (b)]

<u>Section 5.3 – Transitional Operation Periods Requirements</u>:

This section states that the emission limit requirements of Sections 5.1 and 5.2 shall not apply during startup, shutdown, or a reduced load period provided an operator complies with the requirements specified below:

- The duration of each startup or each shutdown shall not exceed two hours, and the duration of each reduced load period shall not exceed one hour, except as provided below.
- The emission control system shall be in operation and emissions shall be minimized insofar as technologically feasible during startup, shutdown, or a reduced load period.
- An operator may submit an application to allow more than two hours for each startup or each shutdown or more than one hour for each reduced load period provided the operator meets all of the conditions specified in the rule.

As allowed by Section 5.3.3, the applicant is proposing more than the duration of each startup and shutdown allowed by the rule, and as such has provided a written request and supporting information to the District. The District shall provide EPA and ARB with a copy of the evaluation of this request for EPA and ARB approval. Per Section 5.3.3.2, at a minimum, a justification for the increased duration shall include the following:

- A clear identification of the control technologies or strategies to be utilized ; and
- A description of what physical conditions prevail during the period that prevent the controls from being effective; and
- A reasonably precise estimate as to when the physical conditions will have reached a state that allows for the effective control of emissions; and
- A detailed list of activities to be performed during the period and a reasonable explanation for the length of time needed to complete each activity; and
- A description of the material process flow rates and system operating parameters, etc., the operator plans to evaluate during the process optimization; and an explanation of how the activities and process flow affect the operation of the emissions control equipment; and
- The basis for the requested additional duration.

MHI, the turbine manufacturer, has estimated that each startup or shutdown event will be more than the two hours per event. The applicant proposes to limit the duration of each startup and shutdown event according to the manufacturer's recommendations as indicated in the tables

below. During this period, the permittee will operate the catalytic emission controls during the startup/shutdown periods within the constraint of the minimum catalyst temperature for ammonia injection to avoid SCR fouling. Each necessary step, its duration, and emission rates are also indicated in the tables below:

CTG /HRSG Startup	
Step	**Duration (hr)**
1. CTG ignition and synchronization, 20 percent load on natural gas	0.5
2. HRSG/STG warm-up, ramp CTG to 40 percent load on natural gas	2
3.CTG fuel change-over, 40 percent load on syngas, startup PSA/ ammonia/urea units	2
Feedstock Dryer Startup	
Step	**Duration (hr)**
1. HRSG/STG warm-up, ramp CTG to 40 percent load on natural gas	2
2. CTG fuel change-over, 40 percent load on syngas	2
CTG/HRSG Shutdown	
Step	**Duration (hr)**
1. PSA, ammonia, and urea unit shutdown; gasifier to 60 percent; CTG to 40 percent load on syngas	4
2.CTG fuel change-over, 40 percent load on natural gas, gasifier depressurization	3
3. Minimum plant load, 20 percent load on natural gas	2
CTG/HRSG Shutdown	
Step	**Duration (hr)**
1. PSA, ammonia, and urea unit shutdown; gasifier to 60 percent; CTG to 40 percent load on syngas	4

The oxidation catalyst will start functioning automatically as soon as it reaches its operating temperature range. The only action to be taken in order to begin catalytic operation is to start the ammonia injection into the SCR. The ammonia injection must wait until the SCR reactor exceeds the maximum temperature for ammonium sulfate precipitation to avoid fouling the catalyst.

Therefore the following conditions that limit the duration of the startup and shutdown periods will be added to S-7616-26:

- Startup shall be defined as the period of time during which a unit is brought from a shutdown status to its operating temperature and pressure, including the time required by the unit's emission control system to reach full operation. Shutdown shall be defined as the period of time during which a unit is taken from an operational to a non-operational status by allowing it to cool down from its operating temperature to ambient temperature as the fuel supply to the unit is completely turned off. [District Rules 2201 and 4703]

- The duration of each startup shall not exceed 4.5 hours, and the duration of each shutdown shall not exceed 9.0 hours. Startup and shutdown emissions shall be counted toward all applicable emission limits. [District Rules 2201 and 4703]

- The emission control systems shall be in operation and emissions shall be minimized insofar as technologically feasible during startup and shutdown. [District Rule 4703]

Section 6.2 - Monitoring and Recordkeeping:

Section 6.2.1 requires the owner to operate and maintain continuous emissions monitoring equipment for NO_X and oxygen, or install and maintain APCO-approved alternate monitoring. The applicant proposes to operate a Continuous Emissions Monitoring System (CEMS) that monitors the NO_X and oxygen content for both the CTG/HRSG stream and the feedstock dryer exhaust.

As is explained earlier in this evaluation, during normal operation of the CTG/HRSG and some phases of the startup and shutdown activities, a portion of the treated HRSG flue gas will be diverted to the feedstock drying system, filtered through a baghouse, then exhausted from the coal-dryer stack. As a result, the emissions from the HRSG and feedstock dryer stacks are interconnected. Since it is not feasible to monitor the CTG/HRSG exhaust stream prior to being diverted to the feedstock dryer, the permittee will be required to operate CEMS that monitors the NOx and oxygen content for both the CTG/HRSG stream and the feedstock dryer exhaust.

The following condition will ensure compliance with the requirements of this section:

- The owner or operator shall install, certify, maintain, operate and quality-assure a Continuous Emission Monitoring System (CEMS) which continuously measures and records the exhaust gas NOx, CO and O2 concentrations. Continuous emissions monitor(s) shall be capable of monitoring emissions during normal operating conditions, and during startups and shutdowns provided the CEMS pass the relative accuracy requirement for startups and shutdowns specified herein. If relative accuracy of CEMS cannot be demonstrated during startup conditions, CEMS results during startup and shutdown events shall be replaced with startup emission rates obtained from source testing to determine compliance with emission limits contained in this document. [District Rules 1080, 2201, and 4703 and 40 CFR 60.4335(b)(1)]

- CEMS shall continuously measure and record the parameters in the condition above for both the CTG/HRSG exhaust and the feedstock dryer exhaust. [District Rules 1080, 2201, and 4703 and 40 CFR 60.4335(b)(1)]

Section 6.2.2 specifies monitoring requirements for turbines without exhaust-gas NO_X control devices. The proposed turbine will be equipped with an SCR system that is designed to control NO_X emissions. Therefore, the requirements of this section are not applicable.

Section 6.2.3 requires that for units 10 MW and greater that operated an average of more than 4,000 hours per year over the last three years before August 18, 1994, the owner or operator

shall monitor the exhaust gas NO_X emissions. The proposed turbine will be a new installation. Therefore, it was not in operation prior to August 18, 1994 and the requirements of this section are not applicable. No further discussion is required.

Section 6.2.4 requires the facility to maintain all records for a period of five years from the date of data entry and shall make such records available to the APCO upon request. The permittee will be required to maintain all records for at least five years and make them available to the APCO upon request. Therefore, the proposed turbine will be operating in compliance with the five year recordkeeping requirements of this rule. The following condition will ensure continued compliance with the requirements of this section:

- All records shall be maintained and retained on-site for a period of at least 5 years and shall be made available for District inspection upon request. [District Rules 1070, 2201, and 4703]

Section 6.2.5 requires that the owner or operator shall submit to the APCO, before issuance of the Permit to Operate, information correlating the control system operating to the associated measure NO_X output. This information may be used by the APCO to determine compliance when there is no continuous emission monitoring system for NO_X available or when the continuous emissions monitoring system is not operating properly. The permittee will be required, by DOC condition, to submit information correlating the NO_X control system operating parameters to the associated measured NO_X output. Therefore, the proposed turbine will be operating in compliance with the control system operating parameter requirements of this rule. The following condition will ensure continued compliance with the requirements of this section:

- The owner or operator shall submit to the District, before issuance of the Permit to Operate, information correlating the NOx control system operating parameters to the associated measured NOx output. The information must be sufficient to allow the District to determine compliance with the NOx emission limits of this DOC when no continuous emission monitoring data for NOx is available or when the continuous emission monitoring system is not operating properly. [District Rule 4703]

Section 6.2.6 requires the facility to maintain a stationary gas turbine system operating log that includes, on a daily basis, the actual local startup and stop time, length and reason for reduced load periods, total hours of operation, and the type and quantity of fuel used. The permittee will be required to maintain records of each item listed above. Therefore, the proposed turbine will be operating in compliance with the recordkeeping requirements of this rule. The following conditions will ensure continued compliance with the requirements of this section:

- The permittee shall maintain the following records: date and time, duration, and type of any startup, shutdown, or malfunction; performance testing; evaluations, calibrations, checks, adjustments, any period during which a continuous monitoring system or monitoring device was inoperative, and maintenance of any continuous emission monitor. [District Rules 1080, 2201, and 4703 and 40 CFR 60.8(d)]

- The permittee shall maintain the following records: quarterly hours of operation, fuel consumption (scf/hr and scf/rolling twelve month period), continuous emission monitor

measurements, calculated ammonia slip, and calculated NOx mass emission rates (lb/hr and lb/twelve month rolling period). [District Rules 2201 and 4703]

Section 6.2.7 establishes recordkeeping requirements for units that are exempt pursuant to the requirements of Section 4.2. Each of the proposed turbines is subject to the requirements of this rule. Therefore, the requirements of this section are not applicable and no further discussion is required.

Section 6.2.8 requires owners or operators performing startups or shutdowns to keep records of the duration of each startup and shutdown. As discussed in the Section 6.2.6 discussion above for this rule, the permittee will be required, by condition, to maintain records of the date, time and duration or each startup and shutdown. Therefore, the proposed turbine will be operating in compliance with the recordkeeping requirements of this rule.

<u>Sections 6.3 and 6.4 - Compliance Testing and Test Methods</u>:

Section 6.3.1 states that the owner or operator of any stationary gas turbine system subject to the provisions of Section 5.0 of this rule shall provide source test information annually regarding the exhaust gas NO_X and CO concentrations. The proposed turbine is subject to the provisions of Section 5.0 of this rule. Therefore, it will be required to test annually to demonstrate compliance with the exhaust gas NO_X and CO concentrations. The following condition will ensure continued compliance with the requirements of this section:

- Source testing to measure the NOx, CO, VOC, and NH3 emission rates (lb/hr and ppmvd @ 15% O2) and PM10 emission rate (lb/hr) shall be conducted within 60 days after initial operation and at least once every twelve months thereafter. [District Rules 1081 and 4703 and 40 CFR 60.4400(a)]

Section 6.3.2 specifies source testing requirements for units operating less than 877 hours per year. The proposed turbine will be allowed to operate more than 877 hours per year. Therefore, the requirements of this section are not applicable and no further discussion is required.

Section 6.3.3 specifies source testing requirements for units that are equipped with intermittently operated auxiliary burners. The permittee is not proposing to operate the turbine with auxiliary burners. Therefore, the requirements of this section are not applicable and no further discussion is required.

Section 6.4 states that the facility must demonstrate compliance annually with the NO_X and CO emission limits using the following test methods, unless otherwise approved by the APCO and EPA:

- Oxides of nitrogen emissions for compliance tests shall be determined by using EPA Method 7E or EPA Method 20.
- Carbon monoxide emissions for compliance tests shall be determined by using EPA Test Methods 10 or 10B.
- Oxygen content of the exhaust gas shall be determined by using EPA Methods 3, 3A, or 20.

- HHV and LHV of gaseous fuels shall be determined by using ASTM D3588-91, ASTM 1826-88, or ASTM 1945-81.

The following conditions will ensure continued compliance with the test method requirements of this section:

- The following test methods shall be used: NOx - EPA Method 7E or 20, PM10 - EPA Method 5/202 (front half and back half), CO - EPA Method 10 or 10B, O2 - EPA Method 3, 3A, or 20, VOC - EPA Method 18 or 25, and ammonia – EPA Method 206. EPA approved alternative test methods as approved by the District may also be used to address the source testing requirements of this DOC. The request to utilize EPA approved alternative source testing methods must be submitted in writing and written approval received from the District prior to the submission of the source test plan. [District Rules 1081 and 4703 and 40 CFR 60.4400(1)(i)]

- HHV and LHV of the fuel shall be determined using ASTM D3588, ASTM 1826, or ASTM 1945. [40 CFR 60.332(a),(b) and District Rule 4703, 6.4.5]

Conclusion:

Conditions will be incorporated into the DOC in order to ensure compliance with each applicable section of this rule. Therefore, compliance with the requirements of Rule 4703 is expected and no further discussion is required.

Rule 4801 - Sulfur Compounds

Per Section 3.1, a person shall not discharge into the atmosphere sulfur compounds, which would exist as a liquid or gas at standard conditions, exceeding in concentration at the point of discharge: 0.2% by volume calculated as SO_2 on a dry basis averaged over 15 consecutive minutes:

S-7616-26-0 (Combustion Turbine Generator)

The sulfur content of the natural gas fuel will be no greater than 0.75 gr/100 dscf (12 ppm-SOx or 0.0021 lb-SOx/MMBtu) and that of the hydrogen-rich fuel will be no greater than 5 ppm-SOx. Therefore, the following demonstration will be based on the sulfur content of the natural gas.

Using the ideal gas equation and the emission factors presented in Section VII, the sulfur compound emissions are calculated as follows:

Volume SO_2 = (n x R x T) / P

With:

N = moles SO_2
T (Standard Temperature) = 60°F = 520°R
P (Standard Pressure) = 14.7 psi

R (Universal Gas Constant) = $\frac{10.73\,\text{psi}\cdot\text{ft}^3}{\text{lb}\cdot\text{mol}\cdot°\text{R}}$

$$\frac{0.0021\,lb-SOx}{MMBtu}\times\frac{MMBtu}{8{,}578\,dscf}\times\frac{1\,lb\cdot mol}{64\,lb}\times\frac{10.73\,psi\cdot ft^3}{lb\cdot mol\cdot °R}\times\frac{520°R}{14.7\,psi}\times\frac{1{,}000{,}000\cdot parts}{million}=1.5\frac{parts}{million}$$

$SulfurConcentration = 1.5\frac{parts}{million}$ < 2,000 ppmv (or 0.2%)

Since 1.5 ppmv ≤ 2000 ppmv, the turbine is expected to comply with Rule 4801.

S-7616-38-0 (Emergency Engine Powering Electrical Generator)
S-7616-39-0 (Emergency Engine Powering Electrical Generator)
S-7616-40-0 (Emergency Engine Powering Firewater Pump)

Volume SO_2 = (n x R x T) / P

With:

N = moles SO_2
T (Standard Temperature) = 60°F = 520°R
P (Standard Pressure) = 14.7 psi
R (Universal Gas Constant) = $\frac{10.73\,\text{psi}\cdot\text{ft}^3}{\text{lb}\cdot\text{mol}\cdot°\text{R}}$

$$\frac{0.000015\,lb-S}{lb-fuel}\times\frac{7.1\,\text{lb}}{\text{gal}}\times\frac{64\,\text{lb}-SO_2}{32\,\text{lb}-\text{S}}\times\frac{1\,\text{MMBtu}}{9{,}051\,\text{scf}}\times\frac{1\,\text{gal}}{0.137\,\text{MMBtu}}\times\frac{\text{lb}-\text{mol}}{64\,\text{lb}-SO_2}\times\frac{10.73\,\text{psi}-\text{ft}^3}{\text{lb}-\text{mol}-°\text{R}}\times\frac{520°\text{R}}{14.7\,\text{psi}}\times 1{,}000{,}000 = 1.0\ \text{ppmv}$$

Since 1.0 ppmv is ≤ 2,000 ppmv, this engine is expected to comply with Rule 4801. Therefore, the following condition will be added to S-7616-38 through '-40 to ensure compliance:

- {3395} Only CARB certified diesel fuel containing not more than 0.0015% sulfur by weight is to be used. [District Rules 2201 and 4801 and 17 CCR 93115]

S-7616-25-0 (Auxiliary Boiler)
S-7616-33-0 (Ammonia Startup Heater)

Using the ideal gas equation and the emission factors presented in Section VII, the sulfur compound emissions are calculated as follows:

Volume SO_2 = (n x R x T) / P

With:

N = moles SO_2
T (Standard Temperature) = 60°F = 520°R

P (Standard Pressure) = 14.7 psi

R (Universal Gas Constant) = $\frac{10.73\,\text{psi}\cdot\text{ft}^3}{\text{lb}\cdot\text{mol}\cdot{}^\circ\text{R}}$

$$\frac{0.00285\,lb-SOx}{MMBtu}\times\frac{MMBtu}{8{,}578\,dscf}\times\frac{1\,lb\cdot mol}{64\,lb}\times\frac{10.73\,psi\cdot ft^3}{lb\cdot mol\cdot{}^\circ R}\times\frac{520^\circ R}{14.7\,psi}\times\frac{1{,}000{,}000\cdot parts}{million}=2.0\frac{parts}{million}$$

$SulfurConcentration = 2.0\frac{parts}{million}$ < 2,000 ppmv (or 0.2%)

Since 2.0 ppmv ≤ 2000 ppmv, the auxiliary boiler and the ammonia startup heater are expected to comply with Rule 4801. Therefore, compliance with District Rule 4801 requirements is expected.

<u>Rule 7012 - Hexavalent Chromium – Cooling Towers</u>

Since the proposed cooling towers will not and have never had hexavalent chromium containing compounds added, the cooling towers will be exempt from the provision of this rule except for the Sections 5.2.1, 6.1, and 7.1.

Section 5.2.1 requires that no hexavalent chromium compounds be added after 9/16/91 (intended to apply to cooling towers that previously used hexavalent chromium). A DOC condition will be added to satisfy this requirement.

Section 6.1 requires that the owner/operator of a new cooling tower submit a compliance plan at least 90 days before it is operated containing business information, location of cooling tower, type and materials of construction, and a statement regarding the use or non-use of hexavalent chromium. A DOC condition will be added to satisfy this requirement.

The following conditions will be added to S-7616-27 through '-29-0:

- Permittee shall submit cooling tower design details including the cooling tower type, drift eliminator design details, and materials of construction to the District at least 90 days before the tower is operated. [District Rule 7012]

- No hexavalent chromium containing compounds shall be added to cooling tower circulating water. [District Rule 7012]

Section 7.1 requires that the permittee pay filing fees associated with the cooling tower as specified in Rule 3010 (Permit Fee). The applicant has already paid such fees with the submittal of this project's applications. Therefore, compliance is expected.

Rule 8011 - General Requirements

The definitions, exemptions, requirements, administrative requirements, recordkeeping requirements, and test methods set forth in this rule are applicable to all rules under Regulation VIII (Fugitive PM10 Prohibitions) of the Rules and Regulations of the San Joaquin Valley Unified Air Pollution Control District.

Rule 8021 - Construction, Demolition, Excavation, Extraction and Other Earthmoving Activities

The purpose of this rule is to limit fugitive dust emissions from construction, demolition, excavation, and other earthmoving activities. It requires the use of control measures to maintain visible dust emissions (VDE) under the 20% opacity requirement.

The applicant will commit to the use of dust control measures (e.g., water, approved chemical stabilizers, etc.) during construction to maintain opacity to a level below 20% per Rule 8021 requirements. Compliance with the requirements of this rule is anticipated.

Proposed Rule 8021 Condition:

- Disturbances of soil related to any construction, demolition, excavation, extraction, or other earthmoving activities shall comply with the requirements for fugitive dust control in District Rule 8021 unless specifically exempted under Section 4.0 of Rule 8021 or Rule 8011. [District Rules 8011 and 8021]

- An owner/operator shall submit a Dust Control Plan to the APCO prior to the start of any construction activity on any site that will include 10 acres or more of disturbed surface area for residential developments, or 5 acres or more of disturbed surface area for non-residential development, or will include moving, depositing, or relocating more than 2,500 cubic yards per day of bulk materials on at least three days. [District Rules 8011 and 8021]

- An owner/operator shall prevent or cleanup any carryout or trackout in accordance with the requirements of District Rule 8041 Section 5.0, unless specifically exempted under Section 4.0 of Rule 8041 (8/19/04) or Rule 8011(8/19/04). [District Rules 8011 and 8021]

Rule 8031 - Bulk Materials

Pursuant to Section 2.0, this rule is applicable to the outdoor handling, storage, and transport of any bulk material. The following condition will be added to the DOC to satisfy the requirements of the rule.

Proposed Rule 8031 Condition:

- Records and other supporting documentation shall be maintained as required to demonstrate compliance with the requirements of the rules under Regulation VIII only for those days that a control measure was implemented. Such records shall include the type of control measure(s) used, the location and extent of coverage, and the date, amount, and frequency of application

of dust suppressant, manufacturer's dust suppressant product information sheet that identifies the name of the dust suppressant and application instructions. Records shall be kept for one year following project completion that results in the termination of all dust generating activities. [District Rules 8011, 8031, and 8071]

Rule 8051 - Open Areas

Pursuant to Section 2.0, this rule is applicable to any open area having 3.0 acres or more of disturbed surface area that has remained undeveloped, unoccupied, unused or vacant for more than seven days. The following condition will be added to the DOC to satisfy the requirements of the rule.

Proposed Rule 8051 Condition:

- Whenever open areas are disturbed, or vehicles are used in open areas, the facility shall comply with the requirements of Section 5.0 of District Rule 8051, unless specifically exempted under Section 4.0 of Rule 8051 or Rule 8011. [District Rules 8011 and 8051]

Rule 8061 - Paved and Unpaved Roads

Pursuant to Section 2.0, this rule applies to any new or existing public or private paved or unpaved road, road construction project, or road modification project. The following condition will be added to the DOC to satisfy the requirements of the rule.

Proposed Rule 8061 Condition:

- Any paved road or unpaved road shall comply with the requirements of District Rule 8061 unless specifically exempted under Section 4.0 of Rule 8061 or Rule 8011. [District Rules 8011 and 8061]

Rule 8071 - Unpaved Vehicle/Equipment Traffic Areas

Pursuant to Section 2.0, this rule applies to any unpaved vehicle/equipment traffic area of 1.0 acre or larger. The following condition will be added to the DOC to satisfy the requirements of the rule.

Proposed Rule 8071 Condition:

- Water, gravel, roadmix, or chemical/organic dust stabilizers/suppressants, vegetative materials, or other District-approved control measure shall be applied to unpaved vehicle travel areas as required to limit Visible Dust Emissions to 20% opacity and comply with the requirements for a stabilized unpaved road as defined in Section 3.59 of District Rule 8011. [District Rule 8011 and 8071]

- Where dusting materials are allowed to accumulate on paved surfaces, the accumulation shall be removed daily or water and/or chemical/organic dust stabilizers/suppressants shall be applied to the paved surface as required to maintain continuous compliance with the

requirements for a stabilized unpaved road as defined in Section 3.59 of District Rule 8011 and limit Visible Dust Emissions (VDE) to 20% opacity. [District Rule 8011 and 8071]

- On each day that 50 or more Vehicle Daily Trips or 25 or more Vehicle Daily Trips with 3 axles or more will occur on an unpaved vehicle/equipment traffic area, permittee shall apply water, gravel, roadmix, or chemical/organic dust stabilizers/suppressants, vegetative materials, or other District-approved control measure as required to limit Visible Dust Emissions to 20% opacity and comply with the requirements for a stabilized unpaved road as defined in Section 3.59 of District Rule 8011. [District Rule 8011 and 8071]

- Whenever any portion of the site becomes inactive, Permittee shall restrict access and periodically stabilize any disturbed surface to comply with the conditions for a stabilized surface as defined in Section 3.58 of District Rule 8011. [District Rules 8011 and 8071]

Rule 9110 - General Conformity and 40 CFR Part 93

District Rule 9110 and 40 CFR Part 93 Subpart B, "Determining Conformity of Federal Actions to State or Federal Implementation Plans," requires that Federal agencies make determinations that Federal Actions conform to approved State Implementation Plans (SIPs), as outlined in the subpart, before Federal Actions are taken, i.e. that the emission increases due to Federal Actions "conform" with approved SIPs and would not delay or impede the region's attainment

This project is a Federal action as the United States Department of Energy is providing substantial funding to the project and is playing a direct role in the design of the project.

Per 40 CFR 93.153, a conformity determination is not required for portions of projects subject to New Source Review requirements. This project is subject to the District's New Source Review Rule (Rule 2201), and direct emissions of NOx and VOC (as well as CO, PM10, and SOx) from the facility and are being mitigated through Rule 2201 requirements that include Best Available Control Technology and offsetting of emissions through the withdrawal of emission reduction credits. As such, direct emissions of NOx and VOC are being mitigated.

Per 40 CFR 93.153 and the San Joaquin Valley's attainment status (extreme nonattainment for ozone, nonattainment for PM2.5, and maintenance for PM10 and carbon monoxide), the following conformity thresholds apply:

- 10 tons per year (tpy) NOx
- 10 tpy VOC
- 100 tpy SO2
- 100 tpy carbon monoxide
- 100 tpy directly-emitted PM2.5
- 100 tpy directly-emitted PM10

Indirect emissions are expected to exceed the conformity threshold for NOx due to construction and operation emissions, and the conformity threshold for VOC due to construction emissions.

The indirect NOx and VOC emissions due to the project will be mitigated through a mitigation agreement between HECA and the District, subject to Governing Board approval. This agreement will result in the full mitigation of indirect NOx and VOC emissions from this project. Through this mitigation agreement, HECA would provide the District with adequate funds to be used in the District's emission reduction incentive programs to fully mitigate the project's NOx and VOC emissions.

In addition to addressing general conformity requirements, the mitigation agreement would also be used to help address CEQA requirements, as discussed below.

With this agreement, the District believes that the emissions from the project will be fully mitigated (see Appendix G for the calculation methodology that the parties have agreed will be the basis of the agreement). As such, the District believes that conformity with the SIP has been demonstrated.

The Agreement, which will address necessary mitigation under both General Conformity and CEQA, will be presented to the District's Governing Board for adoption prior to final action on the determination of compliance to be made by the District for the approval of the California Energy Commission.

The following condition will be added to the DOC to assure compliance with Rule 9110 and 40 CFR Part 93 Subpart B requirements:

- Prior to the District's issuance of a Final Determination of Compliance, the District and HECA shall enter into a mitigation agreement that fully mitigates the indirect emissions associated with construction and operation of the HECA facility, as determined appropriate and necessary by the District to comply with Rule 9110 and 40 CFR Part 93 Subpart B requirements, and feasible mitigation requirements under CEQA. [Rule 9110, 40 CFR Part 93 Subpart B, and CEQA]

Public Resources Code 21000-21177: California Environmental Quality Act (CEQA)
California Code of Regulations, Title 14, Division 6, Chapter 3, Sections 15000-15387: CEQA Guidelines

The California Environmental Quality Act (CEQA) requires each public agency to adopt objectives, criteria, and specific procedures consistent with CEQA Statutes and the CEQA Guidelines for administering its responsibilities under CEQA, including the orderly evaluation of projects and preparation of environmental documents. The San Joaquin Valley Unified Air Pollution Control District (District) adopted its *Environmental Review Guidelines* (ERG) in 2001. The basic purposes of CEQA are to:

- Inform governmental decision-makers and the public about the potential, significant environmental effects of proposed activities.

- Identify the ways that environmental damage can be avoided or significantly reduced.

- Prevent significant, avoidable damage to the environment by requiring changes in projects through the use of alternatives or mitigation measures when the governmental agency finds the changes to be feasible.

- Disclose to the public the reasons why a governmental agency approved the project in the manner the agency chose if significant environmental effects are involved.

The California Energy Commission (CEC) has the exclusive power to certify all thermal electric power plants greater than 50 MW in the State of California (Public Resources Code § 25500). While the CEC siting process is exempt from CEQA (14 CCR § 15251(k)), it is functionally equivalent to CEQA.

The District holds no discretionary approval powers over this project; however the District prepares a Determination of Compliance (DOC), this document. The DOC confers the rights and privileges of an Authority to Construct upon certification by the CEC, where the CEC certificate contains the conditions set forth in this DOC (20 CCR § 1744.5 and Rule 2201 § 5.8.8). A Permit to Operate is required to be issued if the project receives a certificate from the CEC and the project is constructed in accordance with the conditions set forth in the DOC (Rule 2201 § 5.8.9).

The District makes the following findings regarding this project: the District holds no discretionary approval powers over this project and the District's actions are ministerial (CEQA Guidelines § 15369).

However, by implementing District Rule 2201, *New and Modified Stationary Source Review*, project direct stationary source emissions will be reduced and mitigated through the withdrawal of emission reduction credits to below the District's thresholds of significance.

In addition, to mitigate indirect emissions associated with construction and operations of the project, HECA will be entering into a contractual Mitigation Agreement (Agreement) with the District. This Agreement will result in mitigation of indirect project emissions for purposes of satisfying General Conformity and CEQA requirements.

Under the Agreement, HECA will provide the necessary funds used by the District to achieve the required emission reductions, thus mitigating project indirect air quality emissions.

For indirect construction emission impacts, emissions from any criteria pollutant exceeding the General Conformity Threshold or the District CEQA Significance Threshold in any given year will be fully mitigated for that pollutant for the entire project construction period. For indirect operational emission impacts, emission from any criteria pollutant exceeding the General Conformity Threshold or the District CEQA Significance Threshold will be fully mitigated for that pollutant (see Appendix G for the calculation methodology that the parties have agreed will be the basis of the agreement).

The Agreement, which will address necessary mitigation under both General Conformity and CEQA, will be presented to the District's Governing Board for adoption prior to final action on

the determination of compliance to be made by the District for the approval of the California Energy Commission.

The following condition will be added to the DOC to assure that the expected CEQA mitigation will take place:

- Prior to the District's issuance of a Final Determination of Compliance, the District and HECA shall enter into a mitigation agreement that fully mitigates the indirect emissions associated with construction and operation of the HECA facility, as determined appropriate and necessary by the District to comply with Rule 9110 and 40 CFR Part 93 Subpart B requirements, and feasible mitigation requirements under CEQA. [Rule 9110, 40 CFR Part 93 Subpart B, and CEQA]

Title 13 California Code of Regulations (CCR), Section 2423 – Exhaust Emission Standards and Test Procedures, Off-Road Compression-Ignition Engines and Equipment (Required by Title 17 CCR, Section 93115 for New Emergency Diesel IC Engines)

S-7616-40-0 (Emergency Engine Powering Firewater Pump)

Title 13 CCR, Section 2423 lists diesel engine emission standards. The proposed 556 bhp Cummins QSB4.5 Series emergency diesel IC engine (or approved equivalent) will be required to meet the latest Tier emission standard in effect at the time of installation as specified in the Off-Road Compression Ignition Engine Standards for off-road engines on the applicable dates specified. The following table compares the requirements of Title 13 CCR, Section 2423 to the emissions factors for the proposed engine.

Requirements of Title 13 CCR, Section 2423						
Source	Maximum Rated Power	Model Year	NO_X	VOC	CO	PM
Title 13 CCR, §2423	301.7 – 603.4 bhp (225 - 450 kW)	2011-2013 (Interim Tier 4)	1.5 g/bhp-hr	0.14 g/bhp-hr	2.6 g/bhp-hr	0.015 g/bhp-hr
Title 13 CCR, §2423	301.7 – 603.4 bhp (225 - 450 kW)	2014 and later (Tier 4)	0.3 g/bhp-hr	0.14 g/bhp-hr	2.6 g/bhp-hr	0.01 g/bhp-hr

As presented in the table above, the proposed engine will be required to be the latest Tier level required at the time of installation in compliance with the requirements of this section.

Therefore, the following conditions will be listed on the DOC to ensure compliance:

- {edited 3485} Emissions from this IC engine shall not exceed any of the following limits: 1.5 g-NOx/bhp-hr, 2.6 g-CO/bhp-hr, or 0.14 g-VOC/bhp-hr. [District Rule 2201 and 13 CCR 2423 and 17 CCR 93115]

- {edited 3486} Emissions from this IC engine shall not exceed 0.01 g-PM10/bhp-hr based on USEPA certification using ISO 8178 test procedure. [District Rules 2201 and 4102 and 13 CCR 2423 and 17 CCR 93115]

- The engine EPA Tier rating shall be the highest applicable Tier rating at the time of installation. [District Rule 2201 and 13 CCR 2423 and 17 CCR 93115]

S-7616-38-0 (Emergency Engine Powering Electrical Generator)
S-7616-39-0 (Emergency Engine Powering Electrical Generator)

Title 13 CCR, Section 2423 lists diesel engine emission standards. The proposed 2,922 bhp Cummins QSK60-G6 emergency diesel IC engine (or approved equivalent) will be required to meet the latest Tier emission standard in effect at the time of installation as specified in the Off-Road Compression Ignition Engine Standards for off-road engines on the applicable dates specified. The following table compares the requirements of Title 13 CCR, Section 2423 to the emissions factors for the proposed engine.

Requirements of Title 13 CCR, Section 2423						
Source	Maximum Rated Power	Model Year	NO_X	VOC	CO	PM
Title 13 CCR, §2423	≥ 1207 bhp	2011-2014 (Interim Tier 4)	0.5 g/bhp-hr	0.3 g/bhp-hr	2.6 g/bhp-hr	0.07 g/bhp-hr
Title 13 CCR, §2423	≥ 1207 bhp	2015 and later (Tier 4)	0.5 g/bhp-hr	0.14 g/bhp-hr	2.6 g/bhp-hr	0.02 g/bhp-hr

As presented in the table above, the proposed engines will be required to be the latest Tier level required at the time of installation in compliance with the requirements of this section.

Therefore, the following conditions (previously proposed in this engineering evaluation) will be listed on the DOC to ensure compliance:

- {edited 3485} Emissions from this IC engine shall not exceed any of the following limits: 0.5 g-NOx/bhp-hr, 2.6 g-CO/bhp-hr, or 0.3 g-VOC/bhp-hr. [District Rule 2201 and 13 CCR 2423 and 17 CCR 93115]

- {edited 3486} Emissions from this IC engine shall not exceed 0.07 g-PM10/bhp-hr based on USEPA certification using ISO 8178 test procedure. [District Rules 2201 and 4102 and 13 CCR 2423 and 17 CCR 93115]

- The engine EPA Tier rating shall be the highest applicable Tier rating at the time of installation. [District Rule 2201 and 13 CCR 2423 and 17 CCR 93115]

Right of the District to Establish More Stringent Standards:

This regulation also stipulates that the District:

1. May establish more stringent diesel PM, NO_X + VOC, VOC, NO_X, and CO emission rate standards; and
2. May establish more stringent limits on hours of maintenance and testing on a site-specific basis; and
3. Shall determine an appropriate limit on the number of hours of operation for demonstrating compliance with other District rules and initial startup testing

The District has not established more stringent standards at this time. Therefore, the standards previously established in this Section will be utilized.

Title 17 California Code of Regulations (CCR), Section 93115 - Airborne Toxic Control Measure (ATCM) for Stationary Compression-Ignition (CI) Engines

S-7616-38-0 (Emergency Engine Powering Electrical Generator)
S-7616-39-0 (Emergency Engine Powering Electrical Generator)
S-7616-40-0 (Emergency Engine Powering Firewater Pump)

Emergency Operating Requirements:

This regulation stipulates that no owner or operator shall operate any new or in-use stationary diesel-fueled compression ignition (CI) emergency standby engine, in response to the notification of an impending rotating outage, unless specific criteria are met.

This section applies to emergency standby IC engines that are permitted to operate during non-emergency conditions for the purpose of providing electrical power. However, District Rule 4702 states that emergency standby IC engines may only be operated during non-emergency conditions for the purposes of maintenance and testing. Therefore, this section does not apply and no further discussion is required.

Fuel and Fuel Additive Requirements:

This regulation also stipulates that as of January 1, 2006 an owner or operator of a new or in-use stationary diesel-fueled CI emergency standby engine shall fuel the engine with CARB Diesel Fuel.

Since the engines involved with this project are new stationary diesel-fueled CI emergency standby engine, these fuel requirements are applicable. Therefore, the following condition (previously proposed in this engineering evaluation) will be listed on the DOC to ensure compliance:

- {3395} Only CARB certified diesel fuel containing not more than 0.0015% sulfur by weight is to be used. [District Rules 2201 and 4801 and 17 CCR 93115]

At-School and Near-School Provisions:

This regulation stipulates that no owner or operator shall operate a new stationary emergency standby diesel-fueled CI engine, with a PM_{10} emissions factor > than 0.01 g/bhp-hr, for non-emergency use, including maintenance and testing, during the following periods:

1. Whenever there is a school sponsored activity, if the engine is located on school grounds, and
2. Between 7:30 a.m. and 3:30 p.m. on days when school is in session, if the engine is located within 500 feet of school grounds.

The District has verified that the engine is not located within 500 feet of a K-12 school. Therefore, conditions prohibiting non-emergency usage of the engine during school hours will not be included in the DOC.

Recordkeeping Requirements:

This regulation stipulates that as of January 1, 2005, each owner or operator of an emergency standby diesel-fueled CI engine shall keep a monthly log of usage that shall list and document the nature of use for each of the following:

a. Emergency use hours of operation;
b. Maintenance and testing hours of operation;
c. Hours of operation for emission testing;
d. Initial startup hours; and
e. If applicable, hours of operation to comply with the testing requirements of National Fire Protection Association (NFPA) 25 — "Standard for the Inspection, Testing, and Maintenance of Water-Based Fire Protection Systems," 1998 edition;
f. Hours of operation for all uses other than those specified in sections 'a' through 'd' above; and
g. For in-use emergency standby diesel-fueled engines, the fuel used. The owner or operator shall document fuel use through the retention of fuel purchase records that account for all fuel used in the engine and all fuel purchased for use in the engine, and, at a minimum, contain the following information for each individual fuel purchase transaction:
    I. Identification of the fuel purchased as either CARB Diesel, or an alternative diesel fuel that meets the requirements of the Verification Procedure, or an alternative fuel, or CARB Diesel fuel used with additives that meet the requirements of the Verification Procedure, or any combination of the above;
    II. Amount of fuel purchased;
    III. Date when the fuel was purchased;
    IV. Signature of owner or operator or representative of owner or operator who received the fuel; and
    V. Signature of fuel provider indicating fuel was delivered.

The engines associated with this project are new emergency standby engines, two of which will power electrical generators and one will power a firewater pump. Therefore, the following conditions (previously proposed in this engineering evaluation) will be listed on the DOC to ensure compliance:

- {3479} The permittee shall maintain monthly records of emergency and non-emergency operation. Records shall include the number of hours of emergency operation, the date and number of hours of all testing and maintenance operations, the purpose of the operation (for example: load testing, weekly testing, rolling blackout, general area power outage, etc.) and records of operational characteristics monitoring. For units with automated testing systems, the operator may, as an alternative to keeping records of actual operation for testing purposes, maintain a readily accessible written record of the automated testing schedule. [District Rule 4702 and 17 CCR 93115]

- {3475} All records shall be maintained and retained on-site for a minimum of five (5) years, and shall be made available for District inspection upon request. [District Rule 4702 and 17 CCR 93115]

<u>PM Emissions and Hours of Operation Requirements for New Diesel Engines (S-7616-38-0 and -39-0:</u>

This regulation stipulates that as of January 1, 2005, no person shall operate any new stationary emergency standby diesel-fueled CI engine that has a rated brake horsepower greater than 50, unless it meets all of the following applicable emission standards and operating requirements.

1. Emits diesel PM at a rate greater than 0.01 g/bhp-hr or less than or equal to 0.15 g/bhp-hr; or
2. Meets the current model year diesel PM standard specified in the Off-Road Compression Ignition Engine Standards for off-road engines with the same maximum rated power (Title 13 CCR, Section 2423), whichever is more stringent; and
3. Does not operate more than 50 hours per year for maintenance and testing purposes. Engine operation is not limited during emergency use and during emissions source testing to show compliance with the ATCM.

Therefore, the following conditions (previously proposed in this engineering evaluation) will be listed on the DOC to ensure compliance:

- {edited 3486} Emissions from this IC engine shall not exceed 0.07 g-PM10/bhp-hr based on USEPA certification using ISO 8178 test procedure. [District Rules 2201 and 4102 and 13 CCR 2423 and 17 CCR 93115]

- {3810} This engine shall be operated only for testing and maintenance of the engine, required regulatory purposes, and during emergency situations. Operation of the

engine for maintenance, testing, and required regulatory purposes shall not exceed 50 hours per calendar year. [District Rule 4702 and 17 CCR 93115]

PM Emissions and Hours of Operation Requirements for New Diesel Engine (S-7616-40-0):

This regulation stipulates that as of January 1, 2005, no person shall operate any new stationary emergency standby diesel-fueled CI engine that has a rated brake horsepower greater than 50 unless it meets all of the following applicable emission standards and operating requirements.

1. Emits diesel PM at a rate less than or equal to 0.01 g/bhp-hr; or
2. Meets the current model year diesel PM standard specified in the Off-Road Compression Ignition Engine Standards for off-road engines with the same maximum rated power (Title 13 CCR, Section 2423), whichever is more stringent; and
3. Does not operate more than 51 to 100 hours per year (upon approval by the District) for maintenance and testing purposes. Engine operation is not limited during emergency use and during emissions source testing to show compliance with the ATCM.

Therefore, the following conditions (previously proposed in this engineering evaluation) will be listed on the DOC to ensure compliance:

- {edited 3486} Emissions from this IC engine shall not exceed 0.01 g-PM10/bhp-hr based on USEPA certification using ISO 8178 test procedure. [District Rules 2201 and 4102 and 13 CCR 2423 and 17 CCR 93115]

- {3809} This engine shall be operated only for testing and maintenance of the engine, required regulatory purposes, and during emergency situations. Operation of the engine for maintenance, testing, and required regulatory purposes shall not exceed 100 hours per calendar year. [District Rule 4702 and 17 CCR 93115]

California Health & Safety Code 42301.6 (School Notice)

The District has verified that this site is not located within 1,000 feet of a school. Therefore, the public notification requirement of California Health and Safety Code 42301.6 is not applicable to this project

California Health & Safety Code, Section 44300 (Air Toxic "Hot Spots")

Section 44300 of the California Health and Safety Code requires submittal of an air toxics "Hot Spot" information and assessment report for sources with criteria pollutant emissions greater than 10 tons per year. However, Section 44344.5 (b) states that a new facility shall not be required to submit such a report if all of the following conditions are met:

1. The facility is subject to a district permit program established pursuant to Section 42300.

2. The district conducts an assessment of the potential emissions or their associated risks, and finds that the emissions will not result in a significant risk.

3. The district issues a permit authorizing construction or operation of the new facility.

A health risk screening assessment was performed for the proposed project. The acute and chronic hazard indices are less than 1.0 and the cancer risk is less than ten (10) in a million, which are the thresholds of significance for toxic air contaminants. This project qualifies for exemption per the above exemption criteria.

IX. Recommendation

Compliance with all applicable prohibitory rules and regulations is expected. Pending a successful NSR Public Noticing period, issue the Final Determination of Compliance for the facility subject to the conditions presented in Appendix A.

X. Billing Information

The equipment rating for some of the DOC units is not yet known. So the equipment rating will be required to be identified prior to the operation of the equipment.

APPENDIX A
Determination of Compliance Conditions

S-7616-17-0

RAIL UNLOADING AND TRANSFER SYSTEM FOR THE HANDLING OF COAL, INCLUDING: ENCLOSED RAIL UNLOADING BUILDING SERVED BY BAGHOUSE DUST COLLECTOR AND DUST SUPPRESSION SPRAY SYSTEM, WITH RAILCAR UNLOADING STATION, RAIL UNLOADING BIN(S), BELT FEEDER(S), RAIL UNLOADING CONVEYOR(S) ENCLOSED IN UNLOADING TUNNEL (SERVED BY A DUST COLLECTOR) THAT TRANSFERS MATERIAL TO TOWER #1 SERVING FEEDSTOCK STORAGE (S-7616-19)

1. Prior to the District's issuance of a Final Determination of Compliance, the District and HECA shall enter into a mitigation agreement that fully mitigates the indirect emissions associated with construction and operation of the HECA facility, as determined appropriate and necessary by the District to comply with Rule 9110 and 40 CFR Part 93 Subpart B requirements, and feasible mitigation requirements under CEQA. [Rule 9110, 40 CFR Part 93 Subpart B, and Public Resources Code 21000-21177: California Environmental Quality Act]

2. The permittee shall enter into an Air Quality Mitigation Settlement Agreement with the District prior to issuance of the Final Determination of Compliance, or such other time that is mutually agreeable. [Rule 9110, 40 CFR Part 93 Subpart B, and Public Resources Code 21000-21177: California Environmental Quality Act]

3. Permittee shall submit an application to comply with Rule 2520 - Federally Mandated Operating Permits within twelve months of commencing operation. [District Rule 2520]

4. Permittee shall submit an application to comply with Rule 2540 - Acid Rain Program within twelve months of commencing operation. [District Rule 2540]

5. Prior to initial operation of S-7616-17, -18, -19, -20, -22, -23, -25, -26, -27, -28, -29, -30, -31, -32, -33, -34, -36, -37, -38, -39, and -40-32, -33, -34, -36, -37, -38, -39, and -40, permittee shall provide PM10/PM2.5 emission reduction credits for the following quantity of emissions: 1st quarter: 39,538 lb, 2nd quarter: 39,538 lb, 3rd quarter: 39,538 lb, and 4th quarter: 39,538 lb. Offsets shall be provided at the applicable offset ratio specified in Table 4-2 of Rule 2201 (as amended 4/21/11). SOx ERCs may be used to offset PM10/PM2.5 increases at an interpollutant ratio of 1.0 lb-SOx: 1.0 lb-PM10. [District Rule 2201]

6. ERC certificate numbers C-1058-2, C-1058-5, S-3275-5, S-3273-2, S-3305-1, S-3557-1, and/or S-3605-1 (or a certificate split from these certificates) shall be used to supply the required offsets, unless a revised offsetting proposal is received and approved by the District, upon which this Determination of Compliance shall be reissued, administratively specifying the new offsetting proposal. Original public noticing requirements, if any, shall be duplicated prior to reissuance of this Determination of Compliance. [District Rule 2201]

7. {98} No air contaminant shall be released into the atmosphere which causes a public nuisance. [District Rule 4102]

8. Unloading hopper shall be equipped with water/additive misting system, which shall be employed as needed to control dust emissions during unloading. [District Rule 2201]

9. Operation shall include the following dust collectors serving the following operation(s): rail unloading station. [District Rule 2201]

10. Railcar unloading station shall include water spray nozzles that shall be automatically activated at or prior to unloading as necessary to prevent visible emissions. [District Rule 2201]

11. All conveyors and crushers shall be fully enclosed and shall vent only to dust collectors. [District Rule 2201]

12. All feedstock processing and conveying equipment, feedstock storage systems, and feedstock transfer and loading systems shall be dust-tight (to prevent visible emissions in excess of 5% opacity) and shall vent only to dust collectors. [District Rules 2201, 4001, and 40 CFR 60.254]

13. Each dust collector shall be equipped with dust-tight (to prevent visible emissions in excess of 5% opacity) provisions to return collected material to process equipment. [District Rules 2201, 4001, and 40 CFR 60.254]

14. Each dust collector shall be equipped with operational differential pressure indicators, and during fabric collector operation read in the proper range specified by the manufacturer. [District Rule 2201]

15. The differential pressure across each compartment of the dust collectors shall be checked and the results recorded quarterly. If the differential pressure across each compartment of the dust collectors is not within the proper range specified by the manufacturer, corrective action is required prior to further operation of the equipment. Corrective action means that the cause of the improper pressure differential is corrected before operation of the equipment is resumed. [District Rule 2201]

16. Each dust collector shall automatically activate whenever process equipment served is activated. [District Rule 2201]

17. Enclosure dust suppression system water spray nozzles shall automatically operate when railcar unloading is occurring. [District Rule 2201]

18. Material shall not be conveyed or crushed unless ventilation system and dust collectors are operating and functioning properly. [District Rule 2201]

19. Permittee shall maintain daily records of the hours of operation and weight of material processed by this operation, and records shall be made available for District inspection upon request. [District Rule 2201]

20. Airflow for the following dust collector(s) shall not exceed: rail unloading station: 20,000 cfm. [District Rule 2201]

21. Particulate matter emissions from the dust collectors shall not exceed 0.001 grains/dscf in concentration. [District Rules 2201, 4001, and 40 CFR 60.254]

22. PM10 emissions shall not exceed any of the following emissions for the following operation(s): rail unloading station: 4.1 lb/day. [District Rule 2201]

23. PM10 emissions shall not exceed any of the following emissions for the following operation(s): rail unloading station: 267 lb/yr. [District Rule 2201]

24. The maximum process rates of material on a weight basis shall not exceed any of the following: rail unloading station: 6,107 ton/day. [District Rule 2201]

25. The maximum process rates of material on a weight basis shall not exceed any of the following: rail unloading station: 396,955 ton/yr. [District Rule 2201]

26. Dust collector filters shall be completely inspected annually while not in operation for tears, scuffs, abrasives or holes which might interfere with PM collection efficiency and shall be replaced as needed. [District Rule 2201]

27. Visible emissions from the operation shall be checked and record results quarterly. If visible emissions are observed, corrective action is required prior to further loading. Corrective action means that visible emissions are eliminated before next loading event. [District Rule 2201]

28. Records of dust control device maintenance, inspection, and repairs shall be maintained. The records shall include identification of equipment, date of inspection, corrective action taken, and identification of individual performing inspection. [District Rule 2201]

29. Testing for particulate matter concentration for each dust collector shall be conducted within 60 days after achieving the maximum production rate, not later than 180 days after initial startup of such facility, and within 12 calendar months of the date the previous performance test was required to be completed thereafter. If the results of the most recent performance test demonstrate that emissions from the affected facility are 50 percent or less of the applicable emissions standard, a new performance test must be conducted within 24 calendar months of the date that the previous performance test was required to be completed. [District Rule 4001 and 40 CFR 60.255(1), 40 CFR 60.8]

30. Testing for compliance with particulate matter concentration limit shall be conducted using EPA method 5. The sampling time and sample volume for each run shall be at least 60 minutes and 0.85 dscm (30 dscf). Sampling shall begin no less than 30 minutes after startup and shall terminate before shutdown procedures begin. A minimum of three valid test runs are needed to comprise a PM performance test. [District Rule 4001 and 40 CFR 60.255(1) and 60.257(5)(i)]

31. Testing for the opacity standards for the operations shall be conducted within 60 days after achieving the maximum production rate, not later than 180 days after initial startup of such facility, and within 90 operating days of the date the previous performance test was required to be completed thereafter. If all 6-minute average opacity readings in the most recent performance test are equal to or less than half the applicable opacity limit, a new performance test must be conducted within 12 calendar months of the date that the previous performance test was required to be completed. [District Rule 4001 and 40 CFR 60.255(2), 40 CFR 60.8]

32. Source testing to determine opacity as required by 40 CFR Part 60, Subpart Y shall be conducted using EPA method 9. [District Rule 4001 and 40 CFR 60.257(a)]

33. The permittee shall conduct monthly visual observations of all process and control equipment. If any deficiencies are observed, the necessary maintenance must be performed as expeditiously as possible. [District Rule 4001 and 40 CFR 60.257]

34. Permittee shall maintain a logbook (written or electronic) with the records specified in 40 CFR Subpart 60.258(a) on-site and make it available upon request. [District Rule 4001 and 40 CFR 60.258]

35. Permittee shall conduct testing for compliance with the particulate matter concentration limit and particulate matter concentration limit within 60 days after achieving the maximum production rate, not later than 180 days after initial startup of such facility. [District Rule 4001 and 40 CFR 60.258(c), 40 CFR 60.8]

36. Permittee shall provide the District at least 30 days prior notice of any performance test, except as specified under other subparts, to afford the Administrator the opportunity to have an observer present. [District Rule 4001 and 40 CFR 60.8]

37. {3433} Disturbances of soil related to any construction, demolition, excavation, extraction, or other earthmoving activities shall comply with the requirements for fugitive dust control in District Rule 8021 unless specifically exempted under Section 4.0 of Rule 8021 or Rule 8011. [District Rules 8011 and 8021]

38. {3434} An owner/operator shall submit a Dust Control Plan to the APCO prior to the start of any construction activity on any site that will include 10 acres or more of disturbed surface area for residential developments, or 5 acres or more of disturbed surface area for non-residential development, or will include moving, depositing, or relocating more than 2,500 cubic yards per day of bulk materials on at least three days. [District Rules 8011 and 8021]

39. {3435} An owner/operator shall prevent or cleanup any carryout or trackout in accordance with the requirements of District Rule 8041 Section 5.0, unless specifically exempted under Section 4.0 of Rule 8041 (8/19/04) or Rule 8011(8/19/04). [District Rules 8011 and 8021]

40. {3436} Whenever open areas are disturbed, or vehicles are used in open areas, the facility shall comply with the requirements of Section 5.0 of District Rule 8051, unless specifically exempted under Section 4.0 of Rule 8051 or Rule 8011. [District Rules 8011 and 8051]

41. {3437} Any paved road or unpaved road shall comply with the requirements of District Rule 8061 unless specifically exempted under Section 4.0 of Rule 8061 or Rule 8011. [District Rules 8011 and 8061]

42. {3438} Water, gravel, roadmix, or chemical/organic dust stabilizers/suppressants, vegetative materials, or other District-approved control measure shall be applied to unpaved vehicle travel areas as required to limit Visible Dust Emissions to 20% opacity and comply with the requirements for a stabilized unpaved road as defined in Section 3.59 of District Rule 8011. [District Rule 8011 and 8071]

43. {3439} Where dusting materials are allowed to accumulate on paved surfaces, the accumulation shall be removed daily or water and/or chemical/organic dust stabilizers/suppressants shall be applied to the paved surface as required to maintain continuous compliance with the requirements for a stabilized unpaved road as defined in Section 3.59 of District Rule 8011 and limit Visible Dust Emissions (VDE) to 20% opacity. [District Rule 8011 and 8071]

44. {3440} On each day that 50 or more Vehicle Daily Trips or 25 or more Vehicle Daily Trips with 3 axles or more will occur on an unpaved vehicle/equipment traffic area, permittee shall apply water, gravel, roadmix, or chemical/organic dust stabilizers/suppressants, vegetative materials, or other District-approved control measure as required to limit Visible Dust Emissions to 20% opacity and comply with the requirements for a stabilized unpaved road as defined in Section 3.59 of District Rule 8011. [District Rule 8011 and 8071]

45. {3441} Whenever any portion of the site becomes inactive, Permittee shall restrict access and periodically stabilize any disturbed surface to comply with the conditions for a stabilized surface as defined in Section 3.58 of District Rule 8011. [District Rules 8011 and 8071]

46. {3442} Records and other supporting documentation shall be maintained as required to demonstrate compliance with the requirements of the rules under Regulation VIII only for those days that a control measure was implemented. Such records shall include the type of control measure(s) used, the location and extent of coverage, and the date, amount, and frequency of application of dust suppressant, manufacturer's dust suppressant product information sheet that identifies the name of the dust suppressant and application instructions. Records shall be kept for one year following project completion that results in the termination of all dust generating activities. [District Rules 8011, 8031, and 8071]

S-7616-18-0

TRUCK UNLOADING AND TRANSFER SYSTEM FOR THE HANDLING OF PETROLEUM COKE (PETCOKE) AND/OR COAL, INCLUDING: ENCLOSED TRUCK UNLOADING BUILDING SERVED BY BAGHOUSE DUST COLLECTOR AND DUST SUPPRESSION SPRAY SYSTEM, WITH TRUCK UNLOADING STATION(S), TRUCK UNLOADING BIN(S), BELT FEEDER(S), TRUCK UNLOADING CONVEYOR(S) ENCLOSED IN AN UNLOADING TUNNEL (SERVED BY A DUST COLLECTOR) THAT TRANSFERS MATERIAL TO TOWER #1 SERVING FEEDSTOCK STORAGE (S-7616-19)

1. Prior to the District's issuance of a Final Determination of Compliance, the District and HECA shall enter into a mitigation agreement that fully mitigates the indirect emissions associated with construction and operation of the HECA facility, as determined appropriate and necessary by the District to comply with Rule 9110 and 40 CFR Part 93 Subpart B requirements, and feasible mitigation requirements under CEQA. [Rule 9110, 40 CFR Part 93 Subpart B, and Public Resources Code 21000-21177: California Environmental Quality Act]

2. The permittee shall enter into an Air Quality Mitigation Settlement Agreement with the District prior to issuance of the Final Determination of Compliance, or such other time that is mutually agreeable. [Rule 9110, 40 CFR Part 93 Subpart B, and Public Resources Code 21000-21177: California Environmental Quality Act]

3. Permittee shall submit an application to comply with Rule 2520 - Federally Mandated Operating Permits within twelve months of commencing operation. [District Rule 2520]

4. Permittee shall submit an application to comply with Rule 2540 - Acid Rain Program within twelve months of commencing operation. [District Rule 2540]

5. Prior to initial operation of S-7616-17, -18, -19, -20, -22, -23, -25, -26, -27, -28, -29, -30, -31, -32, -33, -34, -36, -37, -38, -39, and -40-32, -33, -34, -36, -37, -38, -39, and -40, permittee shall provide PM10/PM2.5 emission reduction credits for the following quantity of emissions: 1st quarter: 39,538 lb, 2nd quarter: 39,538 lb, 3rd quarter: 39,538 lb, and 4th quarter: 39,538 lb. Offsets shall be provided at the applicable offset ratio specified in Table 4-2 of Rule 2201 (as amended 4/21/11). SOx ERCs may be used to offset PM10/PM2.5 increases at an interpollutant ratio of 1.0 lb-SOx: 1.0 lb-PM10. [District Rule 2201]

6. ERC certificate numbers C-1058-2, C-1058-5, S-3275-5, S-3273-2, S-3305-1, S-3557-1, and/or S-3605-1 (or a certificate split from these certificates) shall be used to supply the required offsets, unless a revised offsetting proposal is received and approved by the District, upon which this Determination of Compliance shall be reissued, administratively specifying the new offsetting proposal. Original public noticing requirements, if any, shall be duplicated prior to reissuance of this Determination of Compliance. [District Rule 2201]

7. {98} No air contaminant shall be released into the atmosphere which causes a public nuisance. [District Rule 4102]

8. Unloading hopper shall be equipped with water/additive misting system, which shall be employed as needed to control dust emissions during unloading. [District Rule 2201]

9. Operation shall include the following dust collectors serving the following operation(s): truck unloading station. [District Rule 2201]

10. Truck unloading station shall include water spray nozzles that shall be automatically activated at or prior to unloading as necessary to prevent visible emissions. [District Rule 2201]

11. All conveyors and crushers shall be fully enclosed and shall vent only to dust collectors. [District Rule 2201]

12. All feedstock processing and conveying equipment, feedstock storage systems, and feedstock transfer and loading systems shall be dust-tight (to prevent visible emissions in excess of 5% opacity) and shall vent only to dust collectors. [District Rules 2201, 4001, and 40 CFR 60.254]

13. Each dust collector shall be equipped with dust-tight (to prevent visible emissions in excess of 5% opacity) provisions to return collected material to process equipment. [District Rules 2201, 4001, and 40 CFR 60.254]

14. Each dust collector shall be equipped with operational differential pressure indicators, and during fabric collector operation read in the proper range specified by the manufacturer. [District Rule 2201]

15. The differential pressure across each compartment of the dust collectors shall be checked and the results recorded quarterly. If the differential pressure across each compartment of the dust collectors is not within the proper range specified by the manufacturer, corrective action is required prior to further operation of the equipment. Corrective action means that the cause of the improper pressure differential is corrected before operation of the equipment is resumed. [District Rule 2201]

16. Each dust collector shall automatically activate whenever process equipment served is activated. [District Rule 2201]

17. Enclosure dust suppression system water spray nozzles shall automatically operate when truck unloading is occurring. [District Rule 2201]

18. Material shall not be conveyed or crushed unless ventilation system and dust collectors are operating and functioning properly. [District Rule 2201]

19. Permittee shall maintain daily records of the hours of operation and weight of material processed by this operation, and records shall be made available for District inspection upon request. [District Rule 2201]

20. Airflow for the following dust collector(s) shall not exceed: truck unloading station: 80,000 cfm. [District Rule 2201]

21. Particulate matter emissions from the dust collectors shall not exceed 0.001 grains/dscf in concentration. [District Rules 2201, 4001, and 40 CFR 60.254]

22. PM10 emissions shall not exceed any of the following emissions for the following operation(s): truck unloading station: 16.5 lb/day. [District Rule 2201]

23. PM10 emissions shall not exceed any of the following emissions for the following operation(s): truck unloading station: 535 lb/yr. [District Rule 2201]

24. The maximum process rates of material on a weight basis shall not exceed any of the following: truck unloading station: 1,368 ton/day. [District Rule 2201]

25. The maximum process rates of material on a weight basis shall not exceed any of the following: truck unloading station: 177,840 ton/yr. [District Rule 2201]

26. Dust collector filters shall be completely inspected annually while not in operation for tears, scuffs, abrasives or holes which might interfere with PM collection efficiency and shall be replaced as needed. [District Rule 2201]

27. Visible emissions from the operation shall be checked and record results quarterly. If visible emissions are observed, corrective action is required prior to further loading. Corrective action means that visible emissions are eliminated before next loading event. [District Rule 2201]

28. Records of dust control device maintenance, inspection, and repairs shall be maintained. The records shall include identification of equipment, date of inspection, corrective action taken, and identification of individual performing inspection. [District Rule 2201]

29. Testing for particulate matter concentration for each dust collector shall be conducted within 60 days after achieving the maximum production rate, not later than 180 days after initial startup of such facility, and within 12 calendar months of the date the previous performance test was required to be completed thereafter. If the results of the most recent performance test demonstrate that emissions from the affected facility are 50 percent or less of the applicable emissions standard, a new performance test must be conducted within 24 calendar months of the date that the previous performance test was required to be completed. [District Rule 4001 and 40 CFR 60.255(1), 40 CFR 60.8]

30. Testing for compliance with particulate matter concentration limit shall be conducted using EPA method 5. The sampling time and sample volume for each run shall be at least 60 minutes and 0.85 dscm (30 dscf). Sampling shall begin no less than 30 minutes

after startup and shall terminate before shutdown procedures begin. A minimum of three valid test runs are needed to comprise a PM performance test. [District Rule 4001 and 40 CFR 60.255(1) and 60.257(5)(i)]

31. Testing for the opacity standards for the operations shall be conducted within 60 days after achieving the maximum production rate, not later than 180 days after initial startup of such facility, and within 90 operating days of the date the previous performance test was required to be completed thereafter. If all 6-minute average opacity readings in the most recent performance test are equal to or less than half the applicable opacity limit, a new performance test must be conducted within 12 calendar months of the date that the previous performance test was required to be completed. [District Rule 4001 and 40 CFR 60.255(2), 40 CFR 60.8]

32. Source testing to determine opacity as required by 40 CFR Part 60, Subpart Y shall be conducted using EPA method 9. [District Rule 4001 and 40 CFR 60.257(a)]

33. The permittee shall conduct monthly visual observations of all process and control equipment. If any deficiencies are observed, the necessary maintenance must be performed as expeditiously as possible. [District Rule 4001 and 40 CFR 60.257]

34. Permittee shall maintain a logbook (written or electronic) with the records specified in 40 CFR Subpart 60.258(a) on-site and make it available upon request. [District Rule 4001 and 40 CFR 60.258]

35. Permittee shall conduct testing for compliance with the particulate matter concentration limit and particulate matter concentration limit within 60 days after achieving the maximum production rate, not later than 180 days after initial startup of such facility. [District Rule 4001 and 40 CFR 60.258(c), 40 CFR 60.8]

36. Permittee shall provide the District at least 30 days prior notice of any performance test, except as specified under other subparts, to afford the Administrator the opportunity to have an observer present. [District Rule 4001 and 40 CFR 60.8]

37. {3433} Disturbances of soil related to any construction, demolition, excavation, extraction, or other earthmoving activities shall comply with the requirements for fugitive dust control in District Rule 8021 unless specifically exempted under Section 4.0 of Rule 8021 or Rule 8011. [District Rules 8011 and 8021]

38. {3434} An owner/operator shall submit a Dust Control Plan to the APCO prior to the start of any construction activity on any site that will include 10 acres or more of disturbed surface area for residential developments, or 5 acres or more of disturbed surface area for non-residential development, or will include moving, depositing, or relocating more than 2,500 cubic yards per day of bulk materials on at least three days. [District Rules 8011 and 8021]

39. {3435} An owner/operator shall prevent or cleanup any carryout or trackout in accordance with the requirements of District Rule 8041 Section 5.0, unless specifically exempted

under Section 4.0 of Rule 8041 (8/19/04) or Rule 8011(8/19/04). [District Rules 8011 and 8021]

40. {3436} Whenever open areas are disturbed, or vehicles are used in open areas, the facility shall comply with the requirements of Section 5.0 of District Rule 8051, unless specifically exempted under Section 4.0 of Rule 8051 or Rule 8011. [District Rules 8011 and 8051]

41. {3437} Any paved road or unpaved road shall comply with the requirements of District Rule 8061 unless specifically exempted under Section 4.0 of Rule 8061 or Rule 8011. [District Rules 8011 and 8061]

42. {3438} Water, gravel, roadmix, or chemical/organic dust stabilizers/suppressants, vegetative materials, or other District-approved control measure shall be applied to unpaved vehicle travel areas as required to limit Visible Dust Emissions to 20% opacity and comply with the requirements for a stabilized unpaved road as defined in Section 3.59 of District Rule 8011. [District Rule 8011 and 8071]

43. {3439} Where dusting materials are allowed to accumulate on paved surfaces, the accumulation shall be removed daily or water and/or chemical/organic dust stabilizers/suppressants shall be applied to the paved surface as required to maintain continuous compliance with the requirements for a stabilized unpaved road as defined in Section 3.59 of District Rule 8011 and limit Visible Dust Emissions (VDE) to 20% opacity. [District Rule 8011 and 8071]

44. {3440} On each day that 50 or more Vehicle Daily Trips or 25 or more Vehicle Daily Trips with 3 axles or more will occur on an unpaved vehicle/equipment traffic area, permittee shall apply water, gravel, roadmix, or chemical/organic dust stabilizers/suppressants, vegetative materials, or other District-approved control measure as required to limit Visible Dust Emissions to 20% opacity and comply with the requirements for a stabilized unpaved road as defined in Section 3.59 of District Rule 8011. [District Rule 8011 and 8071]

45. {3441} Whenever any portion of the site becomes inactive, Permittee shall restrict access and periodically stabilize any disturbed surface to comply with the conditions for a stabilized surface as defined in Section 3.58 of District Rule 8011. [District Rules 8011 and 8071]

46. {3442} Records and other supporting documentation shall be maintained as required to demonstrate compliance with the requirements of the rules under Regulation VIII only for those days that a control measure was implemented. Such records shall include the type of control measure(s) used, the location and extent of coverage, and the date, amount, and frequency of application of dust suppressant, manufacturer's dust suppressant product information sheet that identifies the name of the dust suppressant and application instructions. Records shall be kept for one year following project completion that results in the termination of all dust generating activities. [District Rules 8011, 8031, and 8071]

S-7616-19-0

FEEDSTOCK STORAGE, BLENDING, AND RECLAIM SYSTEM INCLUDING: TRANSFER TOWER #1 (THAT TRANSFERS FEEDSTOCK FROM RAIL AND TRUCK UNLOADING AND TRANSFER SYSTEMS, S-7616-17 AND -18) SERVED BY A DUST COLLECTOR WITH COAL CRUSHER, REJECTS CONVEYOR(S); FEEDSTOCK STORAGE BUILDING (BARN) WITH A SEPARATE COAL AND PETCOKE STORAGE AREAS, STORAGE CONVEYOR(S), DISCHARGE CHUTE(S), AND RECLAIM CONVEYOR(S); AND TRANSFER TOWER #2 (THAT TRANSFERS MATERIAL TO THE FEEDSTOCK DRYING AND GRINDING/CRUSHING OPERATION, S-7616-20) SERVED BY TWO DUST COLLECTORS (ONE OPERATING AND ONE SPARE), TWO ENCLOSED TRANSFER CONVEYORS

1. Prior to the District's issuance of a Final Determination of Compliance, the District and HECA shall enter into a mitigation agreement that fully mitigates the indirect emissions associated with construction and operation of the HECA facility, as determined appropriate and necessary by the District to comply with Rule 9110 and 40 CFR Part 93 Subpart B requirements, and feasible mitigation requirements under CEQA. [Rule 9110, 40 CFR Part 93 Subpart B, and Public Resources Code 21000-21177: California Environmental Quality Act]

2. The permittee shall enter into an Air Quality Mitigation Settlement Agreement with the District prior to issuance of the Final Determination of Compliance, or such other time that is mutually agreeable. [Rule 9110, 40 CFR Part 93 Subpart B, and Public Resources Code 21000-21177: California Environmental Quality Act]

3. Permittee shall submit an application to comply with Rule 2520 - Federally Mandated Operating Permits within twelve months of commencing operation. [District Rule 2520]

4. Permittee shall submit an application to comply with Rule 2540 - Acid Rain Program within twelve months of commencing operation. [District Rule 2540]

5. Prior to initial operation of S-7616-17, -18, -19, -20, -22, -23, -25, -26, -27, -28, -29, -30, -31, -32, -33, -34, -36, -37, -38, -39, and -40-32, -33, -34, -36, -37, -38, -39, and -40, permittee shall provide PM10/PM2.5 emission reduction credits for the following quantity of emissions: 1st quarter: 39,538 lb, 2nd quarter: 39,538 lb, 3rd quarter: 39,538 lb, and 4th quarter: 39,538 lb. Offsets shall be provided at the applicable offset ratio specified in Table 4-2 of Rule 2201 (as amended 4/21/11). SOx ERCs may be used to offset PM10/PM2.5 increases at an interpollutant ratio of 1.0 lb-SOx: 1.0 lb-PM10. [District Rule 2201]

6. ERC certificate numbers C-1058-2, C-1058-5, S-3275-5, S-3273-2, S-3305-1, S-3557-1, and/or S-3605-1 (or a certificate split from these certificates) shall be used to supply the required offsets, unless a revised offsetting proposal is received and approved by the District, upon which this Determination of Compliance shall be reissued, administratively specifying the new offsetting proposal. Original public noticing requirements, if any, shall be duplicated prior to reissuance of this Determination of Compliance. [District Rule 2201]

7. {98} No air contaminant shall be released into the atmosphere which causes a public nuisance. [District Rule 4102]

8. Operation shall include the following dust collectors serving the following operation(s): feedstock transfer tower 1; feedstock transfer tower 2 [District Rule 2201]

9. All conveyors and crushers shall be fully enclosed and shall vent only to dust collectors. [District Rule 2201]

10. All feedstock processing and conveying equipment, feedstock storage systems, and feedstock transfer and loading systems shall be dust-tight (to prevent visible emissions in excess of 5% opacity) and shall vent only to dust collectors. [District Rules 2201, 4001, and 40 CFR 60.254]

11. Each dust collector shall be equipped with dust-tight (to prevent visible emissions in excess of 5% opacity) provisions to return collected material to process equipment. [District Rules 2201, 4001, and 40 CFR 60.254]

12. Each dust collector shall be equipped with operational differential pressure indicators, and during fabric collector operation read in the proper range specified by the manufacturer. [District Rule 2201]

13. The differential pressure across each compartment of the dust collectors shall be checked and the results recorded quarterly. If the differential pressure across each compartment of the dust collectors is not within the proper range specified by the manufacturer, corrective action is required prior to further operation of the equipment. Corrective action means that the cause of the improper pressure differential is corrected before operation of the equipment is resumed. [District Rule 2201]

14. Each dust collector shall automatically activate whenever process equipment served is activated. [District Rule 2201]

15. Enclosure dust suppression system water spray nozzles shall automatically operate when railcar unloading is occurring. [District Rule 2201]

16. Material shall not be conveyed or crushed unless ventilation system and dust collectors are operating and functioning properly. [District Rule 2201]

17. Permittee shall maintain daily records of the hours of operation and weight of material processed by this operation, and records shall be made available for District inspection upon request. [District Rule 2201]

18. Airflow for the following dust collector(s) shall not exceed: feedstock transfer tower 1: 1,500 cfm; feedstock transfer tower 2: 1,500 cfm. [District Rule 2201]

19. Particulate matter emissions from the dust collectors shall not exceed 0.001 grains/dscf in concentration. [District Rules 2201, 4001, and 40 CFR 60.254]

20. PM10 emissions shall not exceed any of the following emissions for the following operation(s): feedstock transfer tower 1: 0.3 lb/day; feedstock transfer tower 2: 0.3 lb/day. [District Rule 2201]

21. PM10 emissions shall not exceed any of the following emissions for the following operation(s): feedstock transfer tower 1: 16.0 lb/yr; feedstock transfer tower 2: 22.5 lb/yr. [District Rule 2201]

22. The maximum process rates of material on a weight basis shall not exceed any of the following: feedstock transfer tower 1: 6,107 ton/day; feedstock transfer tower 2: 7,475 ton/day. [District Rule 2201]

23. The maximum process rates of material on a weight basis shall not exceed any of the following: feedstock transfer tower 1: 793,910 ton/yr; feedstock transfer tower 2: 1,364,188 ton/yr. [District Rule 2201]

24. Dust collector filters shall be completely inspected annually while not in operation for tears, scuffs, abrasives or holes which might interfere with PM collection efficiency and shall be replaced as needed. [District Rule 2201]

25. Visible emissions from the operation shall be checked and record results quarterly. If visible emissions are observed, corrective action is required prior to further loading. Corrective action means that visible emissions are eliminated before next loading event. [District Rule 2201]

26. Records of dust control device maintenance, inspection, and repairs shall be maintained. The records shall include identification of equipment, date of inspection, corrective action taken, and identification of individual performing inspection. [District Rule 2201]

27. Testing for particulate matter concentration for each dust collector shall be conducted within 60 days after achieving the maximum production rate, not later than 180 days after initial startup of such facility, and within 12 calendar months of the date the previous performance test was required to be completed thereafter. If the results of the most recent performance test demonstrate that emissions from the affected facility are 50 percent or less of the applicable emissions standard, a new performance test must be conducted within 24 calendar months of the date that the previous performance test was required to be completed. [District Rule 4001 and 40 CFR 60.255(1), 40 CFR 60.8]

28. Testing for compliance with particulate matter concentration limit shall be conducted using EPA method 5. The sampling time and sample volume for each run shall be at least 60 minutes and 0.85 dscm (30 dscf). Sampling shall begin no less than 30 minutes after startup and shall terminate before shutdown procedures begin. A minimum of three valid test runs are needed to comprise a PM performance test. [District Rule 4001 and 40 CFR 60.255(1) and 60.257(5)(i)]

29. Testing for the opacity standards for the operations shall be conducted within 60 days after achieving the maximum production rate, not later than 180 days after initial startup of such facility, and within 90 operating days of the date the previous performance test was required to be completed thereafter. If all 6-minute average opacity readings in the most recent performance test are equal to or less than half the applicable opacity limit, a new performance test must be conducted within 12 calendar months of the date that the previous performance test was required to be completed. [District Rule 4001 and 40 CFR 60.255(2), 40 CFR 60.8]

30. Source testing to determine opacity as required by 40 CFR Part 60, Subpart Y shall be conducted using EPA method 9. [District Rule 4001 and 40 CFR 60.257(a)]

31. The permittee shall conduct monthly visual observations of all process and control equipment. If any deficiencies are observed, the necessary maintenance must be performed as expeditiously as possible. [District Rule 4001 and 40 CFR 60.257]

32. Permittee shall maintain a logbook (written or electronic) with the records specified in 40 CFR Subpart 60.258(a) on-site and make it available upon request. [District Rule 4001 and 40 CFR 60.258]

33. Permittee shall conduct testing for compliance with the particulate matter concentration limit and particulate matter concentration limit within 60 days after achieving the maximum production rate, not later than 180 days after initial startup of such facility. [District Rule 4001 and 40 CFR 60.258(c), 40 CFR 60.8]

34. Permittee shall provide the District at least 30 days prior notice of any performance test, except as specified under other subparts, to afford the Administrator the opportunity to have an observer present. [District Rule 4001 and 40 CFR 60.8]

35. {3433} Disturbances of soil related to any construction, demolition, excavation, extraction, or other earthmoving activities shall comply with the requirements for fugitive dust control in District Rule 8021 unless specifically exempted under Section 4.0 of Rule 8021 or Rule 8011. [District Rules 8011 and 8021]

36. {3434} An owner/operator shall submit a Dust Control Plan to the APCO prior to the start of any construction activity on any site that will include 10 acres or more of disturbed surface area for residential developments, or 5 acres or more of disturbed surface area for non-residential development, or will include moving, depositing, or relocating more than 2,500 cubic yards per day of bulk materials on at least three days. [District Rules 8011 and 8021]

37. {3435} An owner/operator shall prevent or cleanup any carryout or trackout in accordance with the requirements of District Rule 8041 Section 5.0, unless specifically exempted under Section 4.0 of Rule 8041 (8/19/04) or Rule 8011(8/19/04). [District Rules 8011 and 8021]

38. {3436} Whenever open areas are disturbed, or vehicles are used in open areas, the facility shall comply with the requirements of Section 5.0 of District Rule 8051, unless specifically exempted under Section 4.0 of Rule 8051 or Rule 8011. [District Rules 8011 and 8051]

39. {3437} Any paved road or unpaved road shall comply with the requirements of District Rule 8061 unless specifically exempted under Section 4.0 of Rule 8061 or Rule 8011. [District Rules 8011 and 8061]

40. {3438} Water, gravel, roadmix, or chemical/organic dust stabilizers/suppressants, vegetative materials, or other District-approved control measure shall be applied to unpaved vehicle travel areas as required to limit Visible Dust Emissions to 20% opacity and comply with the requirements for a stabilized unpaved road as defined in Section 3.59 of District Rule 8011. [District Rule 8011 and 8071]

41. {3439} Where dusting materials are allowed to accumulate on paved surfaces, the accumulation shall be removed daily or water and/or chemical/organic dust stabilizers/suppressants shall be applied to the paved surface as required to maintain continuous compliance with the requirements for a stabilized unpaved road as defined in Section 3.59 of District Rule 8011 and limit Visible Dust Emissions (VDE) to 20% opacity. [District Rule 8011 and 8071]

42. {3440} On each day that 50 or more Vehicle Daily Trips or 25 or more Vehicle Daily Trips with 3 axles or more will occur on an unpaved vehicle/equipment traffic area, permittee shall apply water, gravel, roadmix, or chemical/organic dust stabilizers/suppressants, vegetative materials, or other District-approved control measure as required to limit Visible Dust Emissions to 20% opacity and comply with the requirements for a stabilized unpaved road as defined in Section 3.59 of District Rule 8011. [District Rule 8011 and 8071]

43. {3441} Whenever any portion of the site becomes inactive, Permittee shall restrict access and periodically stabilize any disturbed surface to comply with the conditions for a stabilized surface as defined in Section 3.58 of District Rule 8011. [District Rules 8011 and 8071]

44. {3442} Records and other supporting documentation shall be maintained as required to demonstrate compliance with the requirements of the rules under Regulation VIII only for those days that a control measure was implemented. Such records shall include the type of control measure(s) used, the location and extent of coverage, and the date, amount, and frequency of application of dust suppressant, manufacturer's dust suppressant product information sheet that identifies the name of the dust suppressant and application instructions. Records shall be kept for one year following project completion that results in the termination of all dust generating activities. [District Rules 8011, 8031, and 8071]

S-7616-20-0

FEEDSTOCK DRYING AND GRINDING/CRUSHING OPERATION INCLUDING: CRUSHER BUILDING SERVED BY BAGHOUSE DUST COLLECTOR, WITH SURGE BIN(S), BELT FEEDER(S), BYPASS SCREEN(S), TWO FEEDSTOCK CRUSHERS; TWO ENCLOSED PLANT FEED CONVEYORS SERVED BY BAGHOUSE DUST COLLECTOR; MILLING AND DRYING BUILDING WITH FEEDSTOCK DRYER [WITH DRYING GAS FROM TREATED EXHAUST GAS FROM HEAT RECOVERY STEAM GENERATOR LISTED ON S-7616-26] SERVED BY BAGHOUSE DUST COLLECTOR, WITH REVERSING CONVEYOR(S), DIVERTER GATE(S), AND TWO MILLING AND DRYING SILOS

1. Prior to the District's issuance of a Final Determination of Compliance, the District and HECA shall enter into a mitigation agreement that fully mitigates the indirect emissions associated with construction and operation of the HECA facility, as determined appropriate and necessary by the District to comply with Rule 9110 and 40 CFR Part 93 Subpart B requirements, and feasible mitigation requirements under CEQA. [Rule 9110, 40 CFR Part 93 Subpart B, and Public Resources Code 21000-21177: California Environmental Quality Act]

2. The permittee shall enter into an Air Quality Mitigation Settlement Agreement with the District prior to issuance of the Final Determination of Compliance, or such other time that is mutually agreeable. [Rule 9110, 40 CFR Part 93 Subpart B, and Public Resources Code 21000-21177: California Environmental Quality Act]

3. Permittee shall submit an application to comply with Rule 2520 - Federally Mandated Operating Permits within twelve months of commencing operation. [District Rule 2520]

4. Permittee shall submit an application to comply with Rule 2540 - Acid Rain Program within twelve months of commencing operation. [District Rule 2540]

5. Prior to initial operation of S-7616-17, -18, -19, -20, -22, -23, -25, -26, -27, -28, -29, -30, -31, -32, -33, -34, -36, -37, -38, -39, and -40-32, -33, -34, -36, -37, -38, -39, and -40, permittee shall provide PM10/PM2.5 emission reduction credits for the following quantity of emissions: 1st quarter: 39,538 lb, 2nd quarter: 39,538 lb, 3rd quarter: 39,538 lb, and 4th quarter: 39,538 lb. Offsets shall be provided at the applicable offset ratio specified in Table 4-2 of Rule 2201 (as amended 4/21/11). SOx ERCs may be used to offset PM10/PM2.5 increases at an interpollutant ratio of 1.0 lb-SOx: 1.0 lb-PM10. [District Rule 2201]

6. ERC certificate numbers C-1058-2, C-1058-5, S-3275-5, S-3273-2, S-3305-1, S-3557-1, and/or S-3605-1 (or a certificate split from these certificates) shall be used to supply the required offsets, unless a revised offsetting proposal is received and approved by the District, upon which this Determination of Compliance shall be reissued, administratively specifying the new offsetting proposal. Original public noticing requirements, if any, shall be duplicated prior to reissuance of this Determination of Compliance. [District Rule 2201]

7. {98} No air contaminant shall be released into the atmosphere which causes a public nuisance. [District Rule 4102]

8. Operation shall include the following dust collectors serving the following operation(s): feedstock bunkers; feedstock crusher. [District Rule 2201]

9. All conveyors and crushers shall be fully enclosed and shall vent only to dust collectors. [District Rule 2201]

10. All feedstock processing and conveying equipment, feedstock storage systems, and feedstock transfer and loading systems shall be dust-tight (to prevent visible emissions in excess of 5% opacity) and shall vent only to dust collectors. [District Rules 2201, 4001, and 40 CFR 60.254]

11. Each dust collector shall be equipped with dust-tight (to prevent visible emissions in excess of 5% opacity) provisions to return collected material to process equipment. [District Rules 2201, 4001, and 40 CFR 60.254]

12. Each dust collector shall be equipped with operational differential pressure indicators, and during fabric collector operation read in the proper range specified by the manufacturer. [District Rule 2201]

13. The differential pressure across each compartment of the dust collectors shall be checked and the results recorded quarterly. If the differential pressure across each compartment of the dust collectors is not within the proper range specified by the manufacturer, corrective action is required prior to further operation of the equipment. Corrective action means that the cause of the improper pressure differential is corrected before operation of the equipment is resumed. [District Rule 2201]

14. Each dust collector shall automatically activate whenever process equipment served is activated. [District Rule 2201]

15. Material shall not be conveyed or crushed unless ventilation system and dust collectors are operating and functioning properly. [District Rule 2201]

16. Permittee shall maintain daily records of the hours of operation and weight of material processed by this operation, and records shall be made available for District inspection upon request. [District Rule 2201]

17. Airflow for the following dust collector(s) shall not exceed: feedstock bunkers: 12,600 cfm; feedstock crusher: 12,600 cfm. [District Rule 2201]

18. Particulate matter emissions from the dust collectors shall not exceed 0.001 grains/dscf in concentration. [District Rules 2201, 4001, and 40 CFR 60.254]

19. PM10 emissions shall not exceed any of the following emissions for the following operation(s): feedstock bunkers: 2.6 lb/day; feedstock crusher: 2.6 lb/day. [District Rule 2201]

20. PM10 emissions shall not exceed any of the following emissions for the following operation(s): feedstock bunkers: 473 lb/yr; feedstock crusher: 473 lb/yr. [District Rule 2201]

21. The maximum process rates of material on a weight basis shall not exceed any of the following: feedstock bunkers: 7,475 ton/day; feedstock crusher: 7,475 ton/day. [District Rule 2201]

22. The maximum process rates of material on a weight basis shall not exceed any of the following: feedstock bunkers: 1,364,188 ton/yr; feedstock crusher: 1,364,188 ton/yr. [District Rule 2201]

23. Dust collector filters shall be completely inspected annually while not in operation for tears, scuffs, abrasives or holes which might interfere with PM collection efficiency and shall be replaced as needed. [District Rule 2201]

24. Visible emissions from the operation shall be checked and record results quarterly. If visible emissions are observed, corrective action is required prior to further loading. Corrective action means that visible emissions are eliminated before next loading event. [District Rule 2201]

25. Records of dust control device maintenance, inspection, and repairs shall be maintained. The records shall include identification of equipment, date of inspection, corrective action taken, and identification of individual performing inspection. [District Rule 2201]

26. Testing for particulate matter concentration for each dust collector shall be conducted within 60 days after achieving the maximum production rate, not later than 180 days after initial startup of such facility, and within 12 calendar months of the date the previous performance test was required to be completed thereafter. If the results of the most recent performance test demonstrate that emissions from the affected facility are 50 percent or less of the applicable emissions standard, a new performance test must be conducted within 24 calendar months of the date that the previous performance test was required to be completed. [District Rule 4001 and 40 CFR 60.255(1), 40 CFR 60.8]

27. Testing for compliance with particulate matter concentration limit shall be conducted using EPA method 5. The sampling time and sample volume for each run shall be at least 60 minutes and 0.85 dscm (30 dscf). Sampling shall begin no less than 30 minutes after startup and shall terminate before shutdown procedures begin. A minimum of three valid test runs are needed to comprise a PM performance test. [District Rule 4001 and 40 CFR 60.255(1) and 60.257(5)(i)]

28. Testing for the opacity standards for the operations shall be conducted within 60 days after achieving the maximum production rate, not later than 180 days after initial startup

of such facility, and within 90 operating days of the date the previous performance test was required to be completed thereafter. If all 6-minute average opacity readings in the most recent performance test are equal to or less than half the applicable opacity limit, a new performance test must be conducted within 12 calendar months of the date that the previous performance test was required to be completed. [District Rule 4001 and 40 CFR 60.255(2), 40 CFR 60.8]

29. Source testing to determine opacity as required by 40 CFR Part 60, Subpart Y shall be conducted using EPA method 9. [District Rule 4001 and 40 CFR 60.257(a)]

30. The permittee shall conduct monthly visual observations of all process and control equipment. If any deficiencies are observed, the necessary maintenance must be performed as expeditiously as possible. [District Rule 4001 and 40 CFR 60.257]

31. Permittee shall maintain a logbook (written or electronic) with the records specified in 40 CFR Subpart 60.258(a) on-site and make it available upon request. [District Rule 4001 and 40 CFR 60.258]

32. Permittee shall conduct testing for compliance with the particulate matter concentration limit and particulate matter concentration limit within 60 days after achieving the maximum production rate, not later than 180 days after initial startup of such facility. [District Rule 4001 and 40 CFR 60.258(c), 40 CFR 60.8]

33. Permittee shall provide the District at least 30 days prior notice of any performance test, except as specified under other subparts, to afford the Administrator the opportunity to have an observer present. [District Rule 4001 and 40 CFR 60.8]

34. {3433} Disturbances of soil related to any construction, demolition, excavation, extraction, or other earthmoving activities shall comply with the requirements for fugitive dust control in District Rule 8021 unless specifically exempted under Section 4.0 of Rule 8021 or Rule 8011. [District Rules 8011 and 8021]

35. {3434} An owner/operator shall submit a Dust Control Plan to the APCO prior to the start of any construction activity on any site that will include 10 acres or more of disturbed surface area for residential developments, or 5 acres or more of disturbed surface area for non-residential development, or will include moving, depositing, or relocating more than 2,500 cubic yards per day of bulk materials on at least three days. [District Rules 8011 and 8021]

36. {3435} An owner/operator shall prevent or cleanup any carryout or trackout in accordance with the requirements of District Rule 8041 Section 5.0, unless specifically exempted under Section 4.0 of Rule 8041 (8/19/04) or Rule 8011(8/19/04). [District Rules 8011 and 8021]

37. {3436} Whenever open areas are disturbed, or vehicles are used in open areas, the facility shall comply with the requirements of Section 5.0 of District Rule 8051, unless

specifically exempted under Section 4.0 of Rule 8051 or Rule 8011. [District Rules 8011 and 8051]

38. {3437} Any paved road or unpaved road shall comply with the requirements of District Rule 8061 unless specifically exempted under Section 4.0 of Rule 8061 or Rule 8011. [District Rules 8011 and 8061]

39. {3438} Water, gravel, roadmix, or chemical/organic dust stabilizers/suppressants, vegetative materials, or other District-approved control measure shall be applied to unpaved vehicle travel areas as required to limit Visible Dust Emissions to 20% opacity and comply with the requirements for a stabilized unpaved road as defined in Section 3.59 of District Rule 8011. [District Rule 8011 and 8071]

40. {3439} Where dusting materials are allowed to accumulate on paved surfaces, the accumulation shall be removed daily or water and/or chemical/organic dust stabilizers/suppressants shall be applied to the paved surface as required to maintain continuous compliance with the requirements for a stabilized unpaved road as defined in Section 3.59 of District Rule 8011 and limit Visible Dust Emissions (VDE) to 20% opacity. [District Rule 8011 and 8071]

41. {3440} On each day that 50 or more Vehicle Daily Trips or 25 or more Vehicle Daily Trips with 3 axles or more will occur on an unpaved vehicle/equipment traffic area, permittee shall apply water, gravel, roadmix, or chemical/organic dust stabilizers/suppressants, vegetative materials, or other District-approved control measure as required to limit Visible Dust Emissions to 20% opacity and comply with the requirements for a stabilized unpaved road as defined in Section 3.59 of District Rule 8011. [District Rule 8011 and 8071]

42. {3441} Whenever any portion of the site becomes inactive, Permittee shall restrict access and periodically stabilize any disturbed surface to comply with the conditions for a stabilized surface as defined in Section 3.58 of District Rule 8011. [District Rules 8011 and 8071]

43. {3442} Records and other supporting documentation shall be maintained as required to demonstrate compliance with the requirements of the rules under Regulation VIII only for those days that a control measure was implemented. Such records shall include the type of control measure(s) used, the location and extent of coverage, and the date, amount, and frequency of application of dust suppressant, manufacturer's dust suppressant product information sheet that identifies the name of the dust suppressant and application instructions. Records shall be kept for one year following project completion that results in the termination of all dust generating activities. [District Rules 8011, 8031, and 8071]

S-7616-21-0

GASIFICATION SYSTEM INCLUDING: ONE MHI OXYGEN-BLOWN GASIFIER; SYNGAS SCRUBBING SYSTEM; SOUR SHIFT/LOW TEMPERATURE GAS COOLING (LTGC) SYSTEM; SOUR WATER TREATMENT SYSTEM, MERCURY REMOVAL SYSTEM, AND RECTISOL ACID GAS REMOVAL (AGR) UNIT

1. Prior to the District's issuance of a Final Determination of Compliance, the District and HECA shall enter into a mitigation agreement that fully mitigates the indirect emissions associated with construction and operation of the HECA facility, as determined appropriate and necessary by the District to comply with Rule 9110 and 40 CFR Part 93 Subpart B requirements, and feasible mitigation requirements under CEQA. [Rule 9110, 40 CFR Part 93 Subpart B, and Public Resources Code 21000-21177: California Environmental Quality Act]

2. The permittee shall enter into an Air Quality Mitigation Settlement Agreement with the District prior to issuance of the Final Determination of Compliance, or such other time that is mutually agreeable. [Rule 9110, 40 CFR Part 93 Subpart B, and Public Resources Code 21000-21177: California Environmental Quality Act]

3. Permittee shall submit an application to comply with Rule 2520 - Federally Mandated Operating Permits within twelve months of commencing operation. [District Rule 2520]

4. Permittee shall submit an application to comply with Rule 2540 - Acid Rain Program within twelve months of commencing operation. [District Rule 2540]

5. Prior to initial operation of S-7616-21, -23, -24, -25, -26, -30, -31, -32, and -33, permittee shall provide VOC emission reduction credits for the following quantity of emissions: 1st quarter: 13,792 lb, 2nd quarter: 13,792 lb, 3rd quarter: 13,792 lb, and 4th quarter: 13,792 lb. Offsets shall be provided at the applicable offset ratio specified in Table 4-2 of Rule 2201 (as amended 4/21/11). [District Rule 2201]

6. ERC certificate numbers C-1058-2, C-1058-5, S-3275-5, S-3273-2, S-3305-1, S-3557-1, and/or S-3605-1 (or a certificate split from these certificates) shall be used to supply the required offsets, unless a revised offsetting proposal is received and approved by the District, upon which this Determination of Compliance shall be reissued, administratively specifying the new offsetting proposal. Original public noticing requirements, if any, shall be duplicated prior to reissuance of this Determination of Compliance. [District Rule 2201]

7. {98} No air contaminant shall be released into the atmosphere which causes a public nuisance. [District Rule 4102]

8. Components attributed to this unit shall include those components serving the following process streams: methanol, syngas, shifted syngas, propylene, sour water, H2S-laden methanol, CO2-laden methanol, acid gas, and ammonia-laden gas. [District Rule 2201]

9. Fugitive VOC emission rate from the unit shall not exceed 86.6 lb/day based on the component count and emission factors from EPA document Protocol for Equipment Leak Emission Estimates (EPA-453/R-95-017), Table 2-1, SOCMI Average Emissions Factors and the applicable control efficiency for those components subject to a leak detection and repair (LDAR) program. Components serving the following streams associated with this unit shall be subject to a leak detection and repair (LDAR) program: methanol, propylene, H2S-laden methanol, CO2-laden methanol, acid gas, and ammonia laden gas. The following control efficiencies in Table 5-2 of the EPA document shall apply to those components under an LDAR program: gas valves: 92%; light liquid valves: 88%; light liquid pump seals: 75%; and connectors: 93%. [District Rules 2201 and 2410]

10. Fugitive CO emission rate from the unit shall not exceed 30.3 lb/day based on the component count, CO percentage in the fluid stream, emission factors from Protocol for Equipment Leak Emission Estimates (EPA-453/R-95-017), Table 2-1, SOCMI Average Emissions Factors and the applicable control efficiency for those components subject to a leak detection and repair (LDAR) program. [District Rule 2201]

11. Permittee shall maintain with the DOC an accurate fugitive component count and the resulting emissions calculated using above specified leak rates and control efficiencies. [District Rule 2201]

12. The VOC content of the gas in the following streams shall not exceed 10% by weight: syngas, shifted syngas, sour water, acid gas, ammonia-laden gas. [District Rule 2201]

13. Operator shall conduct quarterly gas sampling to qualify for exemption from fugitive component counts for those components handling fluids with VOC content equal to or less than 10% by weight. If gas samples are equal to or less than 10% VOC by weight for 8 consecutive quarterly samplings, sampling frequency shall only be required annually. [District Rule 2201]

14. VOC content of gas streams shall be determined by ASTM D1945, EPA Method 18 referenced as methane, or equivalent test method with prior District approval. [District Rule 2201]

15. All sampling connections, open-ended valves, and lines shall be equipped with two closed valves or be sealed with blind flanges, caps, or threaded plugs except during actual use. [District Rule 2201]

16. Permittee shall maintain records of the VOC content test results for a period of five years and make such records available for inspection upon request. [District Rule 1070]

17. For valves and connectors attributed to this unit, a leak shall be defined as a reading of methane in excess of 100 ppmv above background when measured per EPA Method 21. For pump and compressor seals attributed to this unit, a leak shall be defined as a reading of methane in excess of 500 ppmv above background when measure per EPA Method 21. [District Rule 2201]

18. The operator shall audio-visually inspect for leaks all accessible operating pumps, compressors and Pressure Relief Devices (PRDs) in service at least once every 24 hours, except when operators do not report to the facility for that given 24 hours. Any identified leak that cannot be immediately repaired shall be reinspected within 24 hours using a portable analyzer. If a leak is found, it shall be repaired as soon as practical but not later than the time frame specified in Rule 4455 Table 3. [District Rule 2201]

19. The operator shall inspect all components at least once every calendar quarter, except for inaccessible components, unsafe-to-monitor components and pipes. Inaccessible components, unsafe-to-monitor components and pipes shall be inspected in accordance with the requirements set forth in Rule 4455 Sections 5.2.5, 5.2.6, and 5.2.7. New, replaced, or repaired fittings, flanges and threaded connections shall be inspected immediately after being placed into service. Components shall be inspected using EPA Method 21. [District Rule 2201]

20. The operator may apply for a written approval from the APCO to change the inspection frequency from quarterly to annually for a component type, provided the operator meets all the criteria specified in Rule 4455 Sections 5.2.8.1 through 5.2.8.3. This approval shall apply to accessible component types, specifically designated by the APCO, except pumps, compressors, and PRDs which shall continue to be inspected on a quarterly basis. [District Rule 2201]

21. An annual inspection frequency approved by the APCO shall revert to quarterly inspection frequency for a component type if either the operator inspection or District inspection demonstrates that a violation of the provisions of Rule 4455 Sections 5.1, 5.2 and 5.3 of the rule exists for that component type, or the APCO issued a Notice of Violation for violating any of the provisions of Rule 4455 during the annual inspection period for that component type. When the inspection frequency changes from annual to quarterly inspections, the operator shall notify the APCO in writing within five (5) calendar days after changing the inspection frequency, giving the reason(s) and date of change to quarterly inspection frequency. [District Rule 2201]

22. The operator shall initially inspect a process PRD that releases to the atmosphere as soon as practicable but not later than 24 hours after the time of the release. To insure that the process PRD is operating properly, and is leak-free, the operator shall re-inspect the process PRD not earlier than 24 hours after the initial inspection but not later than 15 calendar days after the date of the release using EPA Method 21. If the process PRD is found to be leaking at either inspection, the PRD leak shall be treated as if the leak was found during quarterly operator inspections. [District Rule 2201]

23. Except for process PRD, a component shall be inspected within 15 calendar days after repairing the leak or replacing the component using EPA Method 21. [District Rule 2201]

24. Upon detection of a leaking component, the operator shall affix to that component a weatherproof readily visible tag that contains the information specified in Rule 4455 Section 5.3.3. The tag shall remain affixed to the component until the leaking component has been repaired or replaced; has been re-inspected using EPA Method 21; and is

found to be in compliance with leak, inspection, and maintenance requirements. [District Rule 2201]

25. An operator shall minimize all component leaks immediately to the extent possible, but not later than one (1) hour after detection of leaks in order to stop or reduce leakage to the atmosphere. [District Rule 2201]

26. If the leak has been minimized but the leak still exceeds the applicable leak standards of this DOC, an operator shall repair or replace the leaking component, vent the leaking component to a closed vent system, or remove the leaking component from operation as soon as practicable but not later than the time period specified in Rule 4455 Table 3. For each calendar quarter, the operator may be allowed to extend the repair period as specified in Rule 4455 Table 3, for a total number of leaking components, not to exceed 0.05 percent of the number of components inspected, by type, rounded upward to the nearest integer where required. [District Rule 2201]

27. If the leaking component is an essential component or a critical component and which cannot be immediately shut down for repairs, the operator shall minimize the leak within one hour after detection of the leak. If the leak has been minimized, but the leak still exceeds any of the applicable leak standards of the DOC, the essential component or critical component shall be repaired or replaced to eliminate the leak during the next process unit turnaround, but in no case later than one year from the date of the original leak detection, whichever comes earlier. [District Rule 2201]

28. For any component that has incurred five repair actions for major gas leaks or major liquid leaks, or any combination of major gas leaks and major liquid leaks within a continuous 12-month period, the operator shall comply with at least one of the requirements specified in Rule 4455 Sections 5.3.7.1, 5.3.7.2, 5.3.7.3, or 5.3.7.4 by the applicable deadlines specified in Sections 5.3.7.5 and 5.3.7.6. If the original leaking component is replaced with a new like-in-kind component before incurring five repair actions for major leaks within 12-consecutive months, the repair count shall start over for the new component. An entire compressor or pump need not be replaced provided the compressor part(s) or pump part(s) that have incurred five repair actions as described in Section 5.3.7 are brought into compliance with at least one of the requirements of Sections 5.3.7.1 through 5.3.7.6. [District Rule 2201]

29. All records required by this DOC shall be retained for a period of at least 5 years and shall be made available to the District upon request. [District Rules 1070 and 2201]

30. Sampling ports adequate for extraction of grab samples and measurement of gas flow rate shall be provided for both the influent and the effluent gas streams of the acid gas removal unit. [District Rules 1081 and 2410]

31. {3433} Disturbances of soil related to any construction, demolition, excavation, extraction, or other earthmoving activities shall comply with the requirements for fugitive dust control in District Rule 8021 unless specifically exempted under Section 4.0 of Rule 8021 or Rule 8011. [District Rules 8011 and 8021]

32. {3434} An owner/operator shall submit a Dust Control Plan to the APCO prior to the start of any construction activity on any site that will include 10 acres or more of disturbed surface area for residential developments, or 5 acres or more of disturbed surface area for non-residential development, or will include moving, depositing, or relocating more than 2,500 cubic yards per day of bulk materials on at least three days. [District Rules 8011 and 8021]

33. {3435} An owner/operator shall prevent or cleanup any carryout or trackout in accordance with the requirements of District Rule 8041 Section 5.0, unless specifically exempted under Section 4.0 of Rule 8041 (8/19/04) or Rule 8011(8/19/04). [District Rules 8011 and 8021]

34. {3436} Whenever open areas are disturbed, or vehicles are used in open areas, the facility shall comply with the requirements of Section 5.0 of District Rule 8051, unless specifically exempted under Section 4.0 of Rule 8051 or Rule 8011. [District Rules 8011 and 8051]

35. {3437} Any paved road or unpaved road shall comply with the requirements of District Rule 8061 unless specifically exempted under Section 4.0 of Rule 8061 or Rule 8011. [District Rules 8011 and 8061]

36. {3438} Water, gravel, roadmix, or chemical/organic dust stabilizers/suppressants, vegetative materials, or other District-approved control measure shall be applied to unpaved vehicle travel areas as required to limit Visible Dust Emissions to 20% opacity and comply with the requirements for a stabilized unpaved road as defined in Section 3.59 of District Rule 8011. [District Rule 8011 and 8071]

37. {3439} Where dusting materials are allowed to accumulate on paved surfaces, the accumulation shall be removed daily or water and/or chemical/organic dust stabilizers/suppressants shall be applied to the paved surface as required to maintain continuous compliance with the requirements for a stabilized unpaved road as defined in Section 3.59 of District Rule 8011 and limit Visible Dust Emissions (VDE) to 20% opacity. [District Rule 8011 and 8071]

38. {3440} On each day that 50 or more Vehicle Daily Trips or 25 or more Vehicle Daily Trips with 3 axles or more will occur on an unpaved vehicle/equipment traffic area, permittee shall apply water, gravel, roadmix, or chemical/organic dust stabilizers/suppressants, vegetative materials, or other District-approved control measure as required to limit Visible Dust Emissions to 20% opacity and comply with the requirements for a stabilized unpaved road as defined in Section 3.59 of District Rule 8011. [District Rule 8011 and 8071]

39. {3441} Whenever any portion of the site becomes inactive, Permittee shall restrict access and periodically stabilize any disturbed surface to comply with the conditions for a stabilized surface as defined in Section 3.58 of District Rule 8011. [District Rules 8011 and 8071]

40. {3442} Records and other supporting documentation shall be maintained as required to demonstrate compliance with the requirements of the rules under Regulation VIII only for those days that a control measure was implemented. Such records shall include the type of control measure(s) used, the location and extent of coverage, and the date, amount, and frequency of application of dust suppressant, manufacturer's dust suppressant product information sheet that identifies the name of the dust suppressant and application instructions. Records shall be kept for one year following project completion that results in the termination of all dust generating activities. [District Rules 8011, 8031, and 8071]

S-7616-22-0

GASIFICATION SOLIDS MATERIAL HANDLING AND STORAGE SYSTEM INCLUDING: GASIFICATION SOLIDS UNLOADING BUNKER (STORAGE COVER WITH ROOFING AND PARTIAL SIDING) WITH DEWATERING TANK(S), STORAGE PILE(S), RECLAIM HOPPER AND GRIZZLY, BUCKET ELEVATOR FEED CONVEYOR SERVED BY DUST COLLECTOR, ENCLOSED TRANSFER CONVEYOR (TO GASIFICATION SOLIDS TRANSFER TOWER), GASIFICATION SOLIDS TRANSFER TOWER SERVED BY DUST COLLECTOR, WITH ENCLOSED LOAD-OUT FEED CONVEYOR (TO GASIFICATION SOLIDS LOAD-OUT BUILDING); AND ENCLOSED GASIFICATION SOLIDS LOAD-OUT BUILDING SERVED BY BAGHOUSE DUST COLLECTOR, WITH GASIFICATION SOLIDS LOAD-OUT SYSTEM WITH ONE TRUCK AND ONE RAIL LOAD-OUT STATION

1. Prior to the District's issuance of a Final Determination of Compliance, the District and HECA shall enter into a mitigation agreement that fully mitigates the indirect emissions associated with construction and operation of the HECA facility, as determined appropriate and necessary by the District to comply with Rule 9110 and 40 CFR Part 93 Subpart B requirements, and feasible mitigation requirements under CEQA. [Rule 9110, 40 CFR Part 93 Subpart B, and Public Resources Code 21000-21177: California Environmental Quality Act]

2. The permittee shall enter into an Air Quality Mitigation Settlement Agreement with the District prior to issuance of the Final Determination of Compliance, or such other time that is mutually agreeable. [Rule 9110, 40 CFR Part 93 Subpart B, and Public Resources Code 21000-21177: California Environmental Quality Act]

3. Permittee shall submit an application to comply with Rule 2520 - Federally Mandated Operating Permits within twelve months of commencing operation. [District Rule 2520]

4. Permittee shall submit an application to comply with Rule 2540 - Acid Rain Program within twelve months of commencing operation. [District Rule 2540]

5. Prior to initial operation of S-7616-17, -18, -19, -20, -22, -23, -25, -26, -27, -28, -29, -30, -31, -32, -33, -34, -36, -37, -38, -39, and -40-32, -33, -34, -36, -37, -38, -39, and -40, permittee shall provide PM10/PM2.5 emission reduction credits for the following quantity of emissions: 1st quarter: 39,538 lb, 2nd quarter: 39,538 lb, 3rd quarter: 39,538 lb, and 4th quarter: 39,538 lb. Offsets shall be provided at the applicable offset ratio specified in Table 4-2 of Rule 2201 (as amended 4/21/11). SOx ERCs may be used to offset PM10/PM2.5 increases at an interpollutant ratio of 1.0 lb-SOx: 1.0 lb-PM10. [District Rule 2201]

6. ERC certificate numbers C-1058-2, C-1058-5, S-3275-5, S-3273-2, S-3305-1, S-3557-1, and/or S-3605-1 (or a certificate split from these certificates) shall be used to supply the required offsets, unless a revised offsetting proposal is received and approved by the District, upon which this Determination of Compliance shall be reissued, administratively

specifying the new offsetting proposal. Original public noticing requirements, if any, shall be duplicated prior to reissuance of this Determination of Compliance. [District Rule 2201]

7. {98} No air contaminant shall be released into the atmosphere which causes a public nuisance. [District Rule 4102]

8. Operation shall include the following dust collectors serving the following operation(s): gasification solids bucket elevator; gasification solids transfer tower; gasification solids load-out system. [District Rule 2201]

9. All conveyors and crushers shall be fully enclosed and shall vent only to dust collectors. [District Rule 2201]

10. All material processing and conveying equipment, material storage systems, and material transfer and loading systems shall be dust-tight (to prevent visible emissions in excess of 5% opacity) and shall vent only to dust collectors. [District Rules 2201, 4001, and 40 CFR 60.254]

11. Each dust collector shall be equipped with dust-tight (to prevent visible emissions in excess of 5% opacity) provisions to return collected material to process equipment. [District Rules 2201, 4001, and 40 CFR 60.254]

12. Each dust collector shall be equipped with operational differential pressure indicators, and during fabric collector operation read in the proper range specified by the manufacturer. [District Rule 2201]

13. The differential pressure across each compartment of the dust collectors shall be checked and the results recorded quarterly. If the differential pressure across each compartment of the dust collectors is not within the proper range specified by the manufacturer, corrective action is required prior to further operation of the equipment. Corrective action means that the cause of the improper pressure differential is corrected before operation of the equipment is resumed. [District Rule 2201]

14. Each dust collector shall automatically activate whenever process equipment served is activated. [District Rule 2201]

15. Material shall not be conveyed or crushed unless ventilation system and dust collectors are operating and functioning properly. [District Rule 2201]

16. Permittee shall maintain daily records of the hours of operation and weight of material processed by this operation, and records shall be made available for District inspection upon request. [District Rule 2201]

17. Airflow for the following dust collector(s) shall not exceed: gasification solids bucket elevator: 3,000 cfm; gasification solids transfer tower: 3,000 cfm; gasification solids load-out system: 10,000 cfm. [District Rule 2201]

18. Particulate matter emissions from the dust collectors shall not exceed 0.001 grains/dscf in concentration. [District Rules 2201, 4001, and 40 CFR 60.254]

19. PM10 emissions shall not exceed any of the following emissions for the following operation(s): gasification solids bucket elevator: 0.6 lb/day; gasification solids transfer tower: 0.6 lb/day; gasification solids load-out system: 2.1 lb/day; gasification solids pad stacking: 0.1 lb/day; gasification solids pad reclaim: 0.2 lb/day. [District Rule 2201]

20. PM10 emissions shall not exceed any of the following emissions for the following operation(s): gasification solids bucket elevator: 225 lb/yr; gasification solids transfer tower: 32 lb/yr; gasification solids load-out system: 107 lb/yr; gasification solids pad stacking: 48 lb/yr; gasification solids pad reclaim: 85 lb/yr. [District Rule 2201]

21. The maximum process rates of material on a weight basis shall not exceed any of the following: gasification solids bucket elevator: 1,678 ton/day; gasification solids transfer tower: 1,678 ton/day; gasification solids load-out system: 1,678 ton/day. [District Rule 2201]

22. The maximum process rates of material on a weight basis shall not exceed any of the following: gasification solids bucket elevator: 612,470 ton/yr; gasification solids transfer tower: 87,256 ton/yr; gasification solids load-out system: 87,256 ton/yr. [District Rule 2201]

23. Moisture content of the solids stacking material shall be maintained at 12% or greater, by weight, and moisture content of solids reclaim material shall be maintained at 8% or greater, by weight. [District Rule 2201]

24. The percent moisture the solids stacking material and the solids reclaim material shall be determined by weighing an approximately 2-lb sample of each material from in the material handling area, bringing the sample to dryness in a drying oven, then weighing the dried sample; the weight difference divided by the initial weigh of the sample; all multiply by 100% is the moisture content (% moisture = ((initial weight - dry weight)/initial weight) x 100%). [District Rule 2201]

25. Moisture content of the solids stacking material and the solids reclaim material shall be measured on monthly basis and when requested by the District. [District Rule 2201]

26. Records of monthly moisture content of the solids stacking material and the solids reclaim material shall be maintained, retained on-site for a period of at least five (5) years and made available for District inspection upon. [District Rule 2201]

27. Dust collector filters shall be completely inspected annually while not in operation for tears, scuffs, abrasives or holes which might interfere with PM collection efficiency and shall be replaced as needed. [District Rule 2201]

28. Visible emissions from the operation shall be checked and record results quarterly. If visible emissions are observed, corrective action is required prior to further loading.

Corrective action means that visible emissions are eliminated before next loading event. [District Rule 2201]

29. Records of dust control device maintenance, inspection, and repairs shall be maintained. The records shall include identification of equipment, date of inspection, corrective action taken, and identification of individual performing inspection. [District Rule 2201]

30. Testing for particulate matter concentration for each dust collector shall be conducted within 60 days after achieving the maximum production rate, not later than 180 days after initial startup of such facility, and within 12 calendar months of the date the previous performance test was required to be completed thereafter. If the results of the most recent performance test demonstrate that emissions from the affected facility are 50 percent or less of the applicable emissions standard, a new performance test must be conducted within 24 calendar months of the date that the previous performance test was required to be completed. [District Rule 4001 and 40 CFR 60.255(1), 40 CFR 60.8]

31. Testing for compliance with particulate matter concentration limit shall be conducted using EPA method 5. The sampling time and sample volume for each run shall be at least 60 minutes and 0.85 dscm (30 dscf). Sampling shall begin no less than 30 minutes after startup and shall terminate before shutdown procedures begin. A minimum of three valid test runs are needed to comprise a PM performance test. [District Rule 4001 and 40 CFR 60.255(1) and 60.257(5)(i)]

32. Testing for the opacity standards for the operations shall be conducted within 60 days after achieving the maximum production rate, not later than 180 days after initial startup of such facility, and within 90 operating days of the date the previous performance test was required to be completed thereafter. If all 6-minute average opacity readings in the most recent performance test are equal to or less than half the applicable opacity limit, a new performance test must be conducted within 12 calendar months of the date that the previous performance test was required to be completed. [District Rule 4001 and 40 CFR 60.255(2), 40 CFR 60.8]

33. Source testing to determine opacity as required by 40 CFR Part 60, Subpart Y shall be conducted using EPA method 9. [District Rule 4001 and 40 CFR 60.257(a)]

34. The permittee shall conduct monthly visual observations of all process and control equipment. If any deficiencies are observed, the necessary maintenance must be performed as expeditiously as possible. [District Rule 4001 and 40 CFR 60.257]

35. Permittee shall maintain a logbook (written or electronic) with the records specified in 40 CFR Subpart 60.258(a) on-site and make it available upon request. [District Rule 4001 and 40 CFR 60.258]

36. Permittee shall conduct testing for compliance with the particulate matter concentration limit and particulate matter concentration limit within 60 days after achieving the maximum production rate, not later than 180 days after initial startup of such facility. [District Rule 4001 and 40 CFR 60.258(c), 40 CFR 60.8]

37. Permittee shall provide the District at least 30 days prior notice of any performance test, except as specified under other subparts, to afford the Administrator the opportunity to have an observer present. [District Rule 4001 and 40 CFR 60.8]

38. {3433} Disturbances of soil related to any construction, demolition, excavation, extraction, or other earthmoving activities shall comply with the requirements for fugitive dust control in District Rule 8021 unless specifically exempted under Section 4.0 of Rule 8021 or Rule 8011. [District Rules 8011 and 8021]

39. {3434} An owner/operator shall submit a Dust Control Plan to the APCO prior to the start of any construction activity on any site that will include 10 acres or more of disturbed surface area for residential developments, or 5 acres or more of disturbed surface area for non-residential development, or will include moving, depositing, or relocating more than 2,500 cubic yards per day of bulk materials on at least three days. [District Rules 8011 and 8021]

40. {3435} An owner/operator shall prevent or cleanup any carryout or trackout in accordance with the requirements of District Rule 8041 Section 5.0, unless specifically exempted under Section 4.0 of Rule 8041 (8/19/04) or Rule 8011(8/19/04). [District Rules 8011 and 8021]

41. {3436} Whenever open areas are disturbed, or vehicles are used in open areas, the facility shall comply with the requirements of Section 5.0 of District Rule 8051, unless specifically exempted under Section 4.0 of Rule 8051 or Rule 8011. [District Rules 8011 and 8051]

42. {3437} Any paved road or unpaved road shall comply with the requirements of District Rule 8061 unless specifically exempted under Section 4.0 of Rule 8061 or Rule 8011. [District Rules 8011 and 8061]

43. {3438} Water, gravel, roadmix, or chemical/organic dust stabilizers/suppressants, vegetative materials, or other District-approved control measure shall be applied to unpaved vehicle travel areas as required to limit Visible Dust Emissions to 20% opacity and comply with the requirements for a stabilized unpaved road as defined in Section 3.59 of District Rule 8011. [District Rule 8011 and 8071]

44. {3439} Where dusting materials are allowed to accumulate on paved surfaces, the accumulation shall be removed daily or water and/or chemical/organic dust stabilizers/suppressants shall be applied to the paved surface as required to maintain continuous compliance with the requirements for a stabilized unpaved road as defined in Section 3.59 of District Rule 8011 and limit Visible Dust Emissions (VDE) to 20% opacity. [District Rule 8011 and 8071]

45. {3440} On each day that 50 or more Vehicle Daily Trips or 25 or more Vehicle Daily Trips with 3 axles or more will occur on an unpaved vehicle/equipment traffic area, permittee shall apply water, gravel, roadmix, or chemical/organic dust stabilizers/suppressants,

vegetative materials, or other District-approved control measure as required to limit Visible Dust Emissions to 20% opacity and comply with the requirements for a stabilized unpaved road as defined in Section 3.59 of District Rule 8011. [District Rule 8011 and 8071]

46. {3441} Whenever any portion of the site becomes inactive, Permittee shall restrict access and periodically stabilize any disturbed surface to comply with the conditions for a stabilized surface as defined in Section 3.58 of District Rule 8011. [District Rules 8011 and 8071]

47. {3442} Records and other supporting documentation shall be maintained as required to demonstrate compliance with the requirements of the rules under Regulation VIII only for those days that a control measure was implemented. Such records shall include the type of control measure(s) used, the location and extent of coverage, and the date, amount, and frequency of application of dust suppressant, manufacturer's dust suppressant product information sheet that identifies the name of the dust suppressant and application instructions. Records shall be kept for one year following project completion that results in the termination of all dust generating activities. [District Rules 8011, 8031, and 8071]

S-7616-23-0

SULFUR RECOVERY AND TAIL GAS COMPRESSION SYSTEM CONSISTING OF SULFUR RECOVERY UNIT (SRU), A TAIL GAS UNIT (TGU) WITH A NATURAL GAS-FIRED TAIL GAS THERMAL OXIDIZER RATED UP TO 96 MMBTU/HR, AND MISCELLANEOUS TANKS, COMPRESSORS, PUMPS, CONDENSERS, HEAT EXCHANGERS, PIPING

1. Prior to the District's issuance of a Final Determination of Compliance, the District and HECA shall enter into a mitigation agreement that fully mitigates the indirect emissions associated with construction and operation of the HECA facility, as determined appropriate and necessary by the District to comply with Rule 9110 and 40 CFR Part 93 Subpart B requirements, and feasible mitigation requirements under CEQA. [Rule 9110, 40 CFR Part 93 Subpart B, and Public Resources Code 21000-21177: California Environmental Quality Act]

2. The permittee shall enter into an Air Quality Mitigation Settlement Agreement with the District prior to issuance of the Final Determination of Compliance, or such other time that is mutually agreeable. [Rule 9110, 40 CFR Part 93 Subpart B, and Public Resources Code 21000-21177: California Environmental Quality Act]

3. Permittee shall submit an application to comply with Rule 2520 - Federally Mandated Operating Permits within twelve months of commencing operation. [District Rule 2520]

4. Permittee shall submit an application to comply with Rule 2540 - Acid Rain Program within twelve months of commencing operation. [District Rule 2540]

5. Prior to initial operation of S-7616-23, -25, -26, -30, -31, -32, -33, and -35, permittee shall provide NOx emission reduction credits for the following quantity of emissions: 1st quarter: 74,201 lb, 2nd quarter: 74,201 lb, 3rd quarter: 74,201 lb, and fourth quarter: 74,201 lb. Offsets shall be provided at the applicable offset ratio specified in Table 4-2 of Rule 2201 (as amended 4/21/11). [District Rule 2201]

6. Prior to initial operation of S-7616-17, -18, -19, -20, -22, -23, -25, -26, -27, -28, -29, -30, -31, -32, -33, -34, -36, -37, -38, -39, and -40-32, -33, -34, -36, -37, -38, -39, and -40, permittee shall provide PM10/PM2.5 emission reduction credits for the following quantity of emissions: 1st quarter: 39,538 lb, 2nd quarter: 39,538 lb, 3rd quarter: 39,538 lb, and 4th quarter: 39,538 lb. Offsets shall be provided at the applicable offset ratio specified in Table 4-2 of Rule 2201 (as amended 4/21/11). SOx ERCs may be used to offset PM10/PM2.5 increases at an interpollutant ratio of 1.0 lb-SOx: 1.0 lb-PM10. [District Rule 2201]

7. Prior to initial operation of S-7616-23, -25, -26, -30, -31, -32, and -33, permittee shall provide SOx emission reduction credits for the following quantity of emissions: 1st quarter: 1,170 lb, 2nd quarter: 1,170 lb, 3rd quarter: 1,170 lb, and 4th quarter: 1,170 lb. Offsets shall be provided at the applicable offset ratio specified in Table 4-2 of Rule 2201 (as amended 4/21/11). [District Rule 2201]

8. Prior to initial operation of S-7616-21, -23, -24, -25, -26, -30, -31, -32, and -33, permittee shall provide VOC emission reduction credits for the following quantity of emissions: 1st quarter: 13,792 lb, 2nd quarter: 13,792 lb, 3rd quarter: 13,792 lb, and 4th quarter: 13,792 lb. Offsets shall be provided at the applicable offset ratio specified in Table 4-2 of Rule 2201 (as amended 4/21/11). [District Rule 2201]

9. ERC certificate numbers C-1058-2, C-1058-5, S-3275-5, S-3273-2, S-3305-1, S-3557-1, and/or S-3605-1 (or a certificate split from these certificates) shall be used to supply the required offsets, unless a revised offsetting proposal is received and approved by the District, upon which this Determination of Compliance shall be reissued, administratively specifying the new offsetting proposal. Original public noticing requirements, if any, shall be duplicated prior to reissuance of this Determination of Compliance. [District Rule 2201]

10. {98} No air contaminant shall be released into the atmosphere which causes a public nuisance. [District Rule 4102]

11. The sulfur recovery unit shall consist of a single train designed to include two Claus converters, two reheaters, three sulfur condensers, waste gas boiler, reaction furnace, oxygen preheater (optional), main burner, acid gas preheater, acid gas wash drum, acid gas wash drum pumps, sour water stripper (SWS) acid gas knockout drum, SWS acid gas preheater, SWS acid gas drum pumps, combustion air blower(s), and piping. [District Rule 2201]

12. Tail gas unit (TGU) shall be designed to include a tail gas heater, tail gas trim heater (optional), hydrogenation reactor, reactor effluent cooler, contact condenser/desuperheater, desuperheater pumps, contact condenser cooler, tailgas compressor, and thermal oxidizer. [District Rule 2201]

13. The operation shall include continuously recording H2S monitor for incinerator inlet (on the TGU absorber overhead) and incinerator with continuously recording SO2 and O2 monitors. [District Rule 2201]

14. Exhaust stack shall be equipped with adequate provisions facilitating the collection of samples consistent with EPA test methods. [District Rule 1080]

15. Incinerator firebox temperature shall be maintained above 1,200 degrees F. [District Rule 2201]

16. Permittee shall maintain accurate records of the incinerator firebox temperature, and such records shall be maintained on site readily available for District inspection. [District Rule 2201]

17. Sulfur production shall not exceed 100 short tons/day. [District Rule 2201]

18. Permittee shall maintain accurate records of daily sulfur production, and such records shall be maintained on site readily available for District inspection. [District Rule 2201]

19. Shutdown is defined as the period beginning with the termination of acid gas feed and the initiation of fuel feed gas or nitrogen purge operation feed (for the purpose of heat stripping sulfur from the internal surfaces of the SRU). [District Rule 2201]

20. Warm standby is defined as the period between shutdown and startup when the SRU feed is solely natural gas. [District Rule 2201]

21. Startup is defined as the period beginning with the introduction (or increased utilization) of natural gas to the SRU to raise the temperature of the catalytic reactors to operating temperature (approximately 350 degrees F). Startup ends when the concentration of H2S in the TGU absorber offgas does not exceed 10 ppmv (moving 3-hour average). [District Rule 2201]

22. Except during shutdown, warm standby, startup, and breakdown (as defined in Rule 1100) conditions, concentration of H2S in the TGU absorber offgas when feeding the TGU incinerator shall not exceed 10 ppmv H2S (moving 3-hour average). [District Rule 2201]

23. The permittee shall, at all times including periods of startup, shutdown, and malfunction, maintain and operate the SRU and associated control equipment in a manner consistent with good air pollution control practice for minimizing emissions. [District Rule 2201]

24. In case of any exceedance of any H2S or SOx (as SO2) emission limit or any malfunction, permittee shall begin actions to minimize emissions exceedance or amount of sour gas flared, by removing high sulfur feed stocks and reducing unit rates, or by other means approved by the District. [District Rule 2201]

25. Emission rates from the tail gas thermal oxidizer shall not exceed the following: NOx: 0.24 lb/MMBtu; CO: 0.20 lb/MMBtu; VOC: 0.0055 lb/MMBtu; PM10: 0.0076 lb/MMBtu. [District Rule 2201]

26. SOx (as SO2) emissions from the tail gas thermal oxidizer shall not exceed 0.0204 lb/MMBtu for the disposal of SRU startup gas nor 2.00 lb/hr for the disposal of the process vent gas. [District Rule 2201]

27. The thermal oxidizer shall be fired solely on PUC-quality natural gas. [District Rules 2201 and 2410]

28. The thermal oxidizer firing rate shall not exceed 13.0 MMBtu/hr of natural gas from normal operation (for the disposal of process vent gas). The thermal oxidizer firing rate shall not exceed 80.0 MMBtu/hr of natural gas from SRU startup operation (for the disposal of SRU startup gas). [District Rule 2201]

29. The thermal oxidizer shall not exceed 8,314 hours per calendar year of normal operation (for the disposal of process vent gas) nor 48 hours per calendar year of SRU startup operation (for the disposal of SRU startup gas). [District Rules 2201 and 2410]

30. The annual heat input of the unit shall not exceed 111.9 billion Btu/yr. [District Rule 2201]

31. A non-resettable, totalizing, continuously recording, mass or volumetric fuel flow meter to measure the amount of natural gas combusted in the unit shall be installed, utilized and maintained. [District Rules 2201 and 2410]

32. Permittee shall maintain records of the annual heat input of the unit. [District Rules 1070 and 2201]

33. During SRU shutdown, SRU tail gas shall be directed to the TGU provided the O2 content of the SRU tail gas is less than or equal to 0.5% by weight as measured with portable O2 analyzer or equivalent CO value as measured by the CO/CO2 analyzer. During such periods, SRU tail gas shall be directed to the TGU. During the final 12 hours of SRU shutdown, the SRU tail gas may bypass the TGU and be introduced directly to the incinerator. [District Rule 2201]

34. During SRU warm standby, SRU tail gas may bypass the TGU and be introduced directly to the incinerator. [District Rule 2201]

35. During SRU startup (after being completely down), SRU tail gas may bypass the TGU and be introduced directly to the incinerator provided the O2 content of the SRU tail is greater than zero percent by volume as measured with portable O2 analyzer or equivalent CO value as measured by the CO/CO2 analyzer. The duration in which the TGU is bypassed shall not exceed 72 hours. [District Rule 2201]

36. During SRU startup (after being in warm standby), SRU tail gas shall be directed to the TGU. Within 24 hours of directing the SRU tail gas to the TGU, the TGU absorber offgas H2S content shall not exceed 10 ppmv (moving 3-hour average). [District Rule 2201]

37. All required source testing shall conform to the compliance testing procedures described in District Rule 1081. [District Rule 1081]

38. Within 90 days of startup and annually thereafter, operator shall conduct source testing of the thermal oxidizer to demonstrate compliance with SOx, NOx, CO and VOC emission limits. [District Rules 2201]

39. {110} The results of each source test shall be submitted to the District within 60 days thereafter. [District Rule 1081]

40. Source test results for NOx emissions shall be submitted to the District as NOx, NO, and NO2 when available. [District Rule 2410]

41. {109} Source testing shall be conducted using the methods and procedures approved by the District. The District must be notified at least 30 days prior to any compliance source test, and a source test plan must be submitted for approval at least 15 days prior to testing. [District Rule 1081]

42. Copies of all fuel invoices, gas purchase contracts, supplier certifications, and test results to determine compliance with the conditions of this FDOC shall be maintained. The operator shall record daily amount and type(s) of fuel(s) combusted and all dates on which unit is fired on any noncertified fuel. [District Rule 2201]

43. Particulate matter emissions shall not exceed 0.1 grain/dscf calculated to 12% CO2, nor 10 lb/hr. [District Rules 4201 and 4301, 5.1 and 5.2.3]

44. For the sulfur recovery unit, operator shall not discharge or cause the discharge of any gases into the atmosphere in excess of 10 ppm by volume (dry basis) of H2S at zero percent excess air (moving 3-hour average). [District Rule 2201]

45. For the sulfur recovery unit, a continuous emissions monitoring system shall be installed, calibrated, operated, and reported. Operator shall report all 3-hour periods during which the average concentration of H2S as measured by the H2S continuous monitoring system exceeds 10 ppm (dry basis, zero percent excess air). [District Rule 2201]

46. Operator shall determine compliance with the SO2 and H2S standard using EPA Method 3, EPA Method 6, and EPA Method 15. [District Rule 2201]

47. Components attributed to this unit shall include those components serving the following process streams: sulfur and tail gas unit (TGU) process gas. [District Rule 2201]

48. Fugitive VOC emission rate from the unit shall not exceed 0.0 lb/day based on the component count and emission factors from EPA document Protocol for Equipment Leak Emission Estimates (EPA-453/R-95-017), Table 2-1, SOCMI Average Emissions Factors. [District Rule 2201]

49. Fugitive CO emission rate from the unit shall not exceed 2.7 lb/day based on the component count, CO percentage in the fluid stream, emission factors from Protocol for Equipment Leak Emission Estimates (EPA-453/R-95-017), Table 2-1, SOCMI Average Emissions Factors. [District Rule 2201]

50. Permittee shall maintain with the DOC an accurate fugitive component count and the resulting emissions calculated using above specified leak rates and control efficiencies. [District Rule 2201]

51. The VOC content of the gas in the following streams shall not exceed 10% by weight: sulfur, tail gas unit process gas. [District Rule 2201]

52. Operator shall conduct quarterly gas sampling to qualify for exemption from fugitive component counts for those components handling fluids with VOC content equal to or less than 10% by weight. If gas samples are equal to or less than 10% VOC by weight for 8 consecutive quarterly samplings, sampling frequency shall only be required annually. [District Rule 2201]

53. VOC content of gas streams shall be determined by ASTM D1945, EPA Method 18 referenced as methane, or equivalent test method with prior District approval. [District Rule 2201]

54. All sampling connections, open-ended valves, and lines shall be equipped with two closed valves or be sealed with blind flanges, caps, or threaded plugs except during actual use. [District Rule 2201]

55. Permittee shall maintain records of the VOC content test results for a period of five years and make such records available for inspection upon request. [District Rule 1070]

56. For valves and connectors attributed to this unit, a leak shall be defined as a reading of methane in excess of 100 ppmv above background when measured per EPA Method 21. For pump and compressor seals attributed to this unit, a leak shall be defined as a reading of methane in excess of 500 ppmv above background when measure per EPA Method 21. [District Rule 2201]

57. The operator shall audio-visually inspect for leaks all accessible operating pumps, compressors and Pressure Relief Devices (PRDs) in service at least once every 24 hours, except when operators do not report to the facility for that given 24 hours. Any identified leak that cannot be immediately repaired shall be reinspected within 24 hours using a portable analyzer. If a leak is found, it shall be repaired as soon as practical but not later than the time frame specified in Rule 4455 Table 3. [District Rule 2201]

58. The operator shall inspect all components at least once every calendar quarter, except for inaccessible components, unsafe-to-monitor components and pipes. Inaccessible components, unsafe-to-monitor components and pipes shall be inspected in accordance with the requirements set forth in Rule 4455 Sections 5.2.5, 5.2.6, and 5.2.7. New, replaced, or repaired fittings, flanges and threaded connections shall be inspected immediately after being placed into service. Components shall be inspected using EPA Method 21. [District Rule 2201]

59. The operator may apply for a written approval from the APCO to change the inspection frequency from quarterly to annually for a component type, provided the operator meets all the criteria specified in Rule 4455 Sections 5.2.8.1 through 5.2.8.3. This approval shall apply to accessible component types, specifically designated by the APCO, except pumps, compressors, and PRDs which shall continue to be inspected on a quarterly basis. [District Rule 2201]

60. An annual inspection frequency approved by the APCO shall revert to quarterly inspection frequency for a component type if either the operator inspection or District inspection demonstrates that a violation of the provisions of Rule 4455 Sections 5.1, 5.2 and 5.3 of the rule exists for that component type, or the APCO issued a Notice of Violation for violating any of the provisions of Rule 4455 during the annual inspection period for that component type. When the inspection frequency changes from annual to quarterly inspections, the operator shall notify the APCO in writing within five (5) calendar

days after changing the inspection frequency, giving the reason(s) and date of change to quarterly inspection frequency. [District Rule 2201]

61. The operator shall initially inspect a process PRD that releases to the atmosphere as soon as practicable but not later than 24 hours after the time of the release. To insure that the process PRD is operating properly, and is leak-free, the operator shall re-inspect the process PRD not earlier than 24 hours after the initial inspection but not later than 15 calendar days after the date of the release using EPA Method 21. If the process PRD is found to be leaking at either inspection, the PRD leak shall be treated as if the leak was found during quarterly operator inspections. [District Rule 2201]

62. Except for process PRD, a component shall be inspected within 15 calendar days after repairing the leak or replacing the component using EPA Method 21. [District Rule 2201]

63. Upon detection of a leaking component, the operator shall affix to that component a weatherproof readily visible tag that contains the information specified in Rule 4455 Section 5.3.3. The tag shall remain affixed to the component until the leaking component has been repaired or replaced; has been re-inspected using EPA Method 21; and is found to be in compliance with leak, inspection, and maintenance requirements. [District Rule 2201]

64. An operator shall minimize all component leaks immediately to the extent possible, but not later than one (1) hour after detection of leaks in order to stop or reduce leakage to the atmosphere. [District Rule 2201]

65. If the leak has been minimized but the leak still exceeds the applicable leak standards of this FDOC, an operator shall repair or replace the leaking component, vent the leaking component to a closed vent system, or remove the leaking component from operation as soon as practicable but not later than the time period specified in Rule 4455 Table 3. For each calendar quarter, the operator may be allowed to extend the repair period as specified in Rule 4455 Table 3, for a total number of leaking components, not to exceed 0.05 percent of the number of components inspected, by type, rounded upward to the nearest integer where required. [District Rule 2201]

66. If the leaking component is an essential component or a critical component and which cannot be immediately shut down for repairs, the operator shall minimize the leak within one hour after detection of the leak. If the leak has been minimized, but the leak still exceeds any of the applicable leak standards of the FDOC, the essential component or critical component shall be repaired or replaced to eliminate the leak during the next process unit turnaround, but in no case later than one year from the date of the original leak detection, whichever comes earlier. [District Rule 2201]

67. For any component that has incurred five repair actions for major gas leaks or major liquid leaks, or any combination of major gas leaks and major liquid leaks within a continuous 12-month period, the operator shall comply with at least one of the requirements specified in Rule 4455 Sections 5.3.7.1, 5.3.7.2, 5.3.7.3, or 5.3.7.4 by the applicable deadlines specified in Sections 5.3.7.5 and 5.3.7.6. If the original leaking

component is replaced with a new like-in-kind component before incurring five repair actions for major leaks within 12-consecutive months, the repair count shall start over for the new component. An entire compressor or pump need not be replaced provided the compressor part(s) or pump part(s) that have incurred five repair actions as described in Section 5.3.7 are brought into compliance with at least one of the requirements of Sections 5.3.7.1 through 5.3.7.6. [District Rule 2201]

68. All records required by this DOC shall be retained for a period of at least 5 years and shall be made available to the District upon request. [District Rules 1070 and 2201]

69. The permittee shall obtain written District approval for the use of any equivalent equipment not specifically approved by this Determination of Compliance. Approval of the equivalent equipment shall be made only after the District's determination that the submitted design and performance of the proposed alternate equipment is equivalent to the specifically authorized equipment. [District Rule 2201]

70. The permittee's request for approval of equivalent equipment shall include the make, model, manufacturer's maximum rating, manufacturer's guaranteed emission rates, equipment drawing(s), and operational characteristics/parameters. [District Rule 2201]

71. Alternate equipment shall be of the same class and category of source as the equipment authorized by the Determination of Compliance. [District Rule 2201]

72. No emission factor and no emission shall be greater for the alternate equipment than for the proposed equipment. No changes in the hours of operation, operating rate, throughput, or firing rate may be authorized for any alternate equipment. [District Rule 2201]

73. The air quality modeled impacts of the proposed alternative equivalent equipment shall not result in any more adverse impacts than the equipment it replaces. [District Rule 2201]

74. {3433} Disturbances of soil related to any construction, demolition, excavation, extraction, or other earthmoving activities shall comply with the requirements for fugitive dust control in District Rule 8021 unless specifically exempted under Section 4.0 of Rule 8021 or Rule 8011. [District Rules 8011 and 8021]

75. {3434} An owner/operator shall submit a Dust Control Plan to the APCO prior to the start of any construction activity on any site that will include 10 acres or more of disturbed surface area for residential developments, or 5 acres or more of disturbed surface area for non-residential development, or will include moving, depositing, or relocating more than 2,500 cubic yards per day of bulk materials on at least three days. [District Rules 8011 and 8021]

76. {3435} An owner/operator shall prevent or cleanup any carryout or trackout in accordance with the requirements of District Rule 8041 Section 5.0, unless specifically exempted

under Section 4.0 of Rule 8041 (8/19/04) or Rule 8011(8/19/04). [District Rules 8011 and 8021]

77. {3436} Whenever open areas are disturbed, or vehicles are used in open areas, the facility shall comply with the requirements of Section 5.0 of District Rule 8051, unless specifically exempted under Section 4.0 of Rule 8051 or Rule 8011. [District Rules 8011 and 8051]

78. {3437} Any paved road or unpaved road shall comply with the requirements of District Rule 8061 unless specifically exempted under Section 4.0 of Rule 8061 or Rule 8011. [District Rules 8011 and 8061]

79. {3438} Water, gravel, roadmix, or chemical/organic dust stabilizers/suppressants, vegetative materials, or other District-approved control measure shall be applied to unpaved vehicle travel areas as required to limit Visible Dust Emissions to 20% opacity and comply with the requirements for a stabilized unpaved road as defined in Section 3.59 of District Rule 8011. [District Rule 8011 and 8071]

80. {3439} Where dusting materials are allowed to accumulate on paved surfaces, the accumulation shall be removed daily or water and/or chemical/organic dust stabilizers/suppressants shall be applied to the paved surface as required to maintain continuous compliance with the requirements for a stabilized unpaved road as defined in Section 3.59 of District Rule 8011 and limit Visible Dust Emissions (VDE) to 20% opacity. [District Rule 8011 and 8071]

81. {3440} On each day that 50 or more Vehicle Daily Trips or 25 or more Vehicle Daily Trips with 3 axles or more will occur on an unpaved vehicle/equipment traffic area, permittee shall apply water, gravel, roadmix, or chemical/organic dust stabilizers/suppressants, vegetative materials, or other District-approved control measure as required to limit Visible Dust Emissions to 20% opacity and comply with the requirements for a stabilized unpaved road as defined in Section 3.59 of District Rule 8011. [District Rule 8011 and 8071]

82. {3441} Whenever any portion of the site becomes inactive, Permittee shall restrict access and periodically stabilize any disturbed surface to comply with the conditions for a stabilized surface as defined in Section 3.58 of District Rule 8011. [District Rules 8011 and 8071]

83. {3442} Records and other supporting documentation shall be maintained as required to demonstrate compliance with the requirements of the rules under Regulation VIII only for those days that a control measure was implemented. Such records shall include the type of control measure(s) used, the location and extent of coverage, and the date, amount, and frequency of application of dust suppressant, manufacturer's dust suppressant product information sheet that identifies the name of the dust suppressant and application instructions. Records shall be kept for one year following project completion that results in the termination of all dust generating activities. [District Rules 8011, 8031, and 8071]

S-7616-24-0

CO2 RECOVERY (CAPTURE, COMPRESSION, AND TRANSPORTATION) AND VENT SYSTEM FOR EMERGENCY RELEASES OF A STREAM OF PRIMARILY CO2 FROM THE ACID GAS REMOVAL UNIT

1. Prior to the District's issuance of a Final Determination of Compliance, the District and HECA shall enter into a mitigation agreement that fully mitigates the indirect emissions associated with construction and operation of the HECA facility, as determined appropriate and necessary by the District to comply with Rule 9110 and 40 CFR Part 93 Subpart B requirements, and feasible mitigation requirements under CEQA. [Rule 9110, 40 CFR Part 93 Subpart B, and Public Resources Code 21000-21177: California Environmental Quality Act]

2. The permittee shall enter into an Air Quality Mitigation Settlement Agreement with the District prior to issuance of the Final Determination of Compliance, or such other time that is mutually agreeable. [Rule 9110, 40 CFR Part 93 Subpart B, and Public Resources Code 21000-21177: California Environmental Quality Act]

3. Permittee shall submit an application to comply with Rule 2520 - Federally Mandated Operating Permits within twelve months of commencing operation. [District Rule 2520]

4. Permittee shall submit an application to comply with Rule 2540 - Acid Rain Program within twelve months of commencing operation. [District Rule 2540]

5. Prior to initial operation of S-7616-21, -23, -24, -25, -26, -30, -31, -32, and -33, permittee shall provide VOC emission reduction credits for the following quantity of emissions: 1st quarter: 13,792 lb, 2nd quarter: 13,792 lb, 3rd quarter: 13,792 lb, and 4th quarter: 13,792 lb. Offsets shall be provided at the applicable offset ratio specified in Table 4-2 of Rule 2201 (as amended 4/21/11). [District Rule 2201]

6. ERC certificate numbers C-1058-2, C-1058-5, S-3275-5, S-3273-2, S-3305-1, S-3557-1, and/or S-3605-1 (or a certificate split from these certificates) shall be used to supply the required offsets, unless a revised offsetting proposal is received and approved by the District, upon which this Determination of Compliance shall be reissued, administratively specifying the new offsetting proposal. Original public noticing requirements, if any, shall be duplicated prior to reissuance of this Determination of Compliance. [District Rule 2201]

7. {98} No air contaminant shall be released into the atmosphere which causes a public nuisance. [District Rule 4102]

8. Emission rates from the vent stream shall not exceed 492.4 lb-CO/hour, 11.3 lb-VOC/hour, 58.0 lb-COS/hour, nor 6.0 lb-H2S/hour. Compliance with these rates shall be demonstrated by measuring the vent stream flowrate and the concentration of these constituents in the vent stream. [District Rule 2201]

9. Venting shall only be allowed when compression and transportation system is unavailable or CO2 delivery system is unavailable due to cold gasification block startup, CO2 compressor unplanned outage, CO2 pipeline unplanned outage, or CO2 off-taker unable to accept, and emissions from such venting shall not exceed 124.07 tons-CO/yr, 2.34 tons-VOC/yr, nor 14.62 tons-COS/yr, per rolling 12-month period. Compliance with these rates shall be demonstrated by measuring the vent stream flowrate and the concentration of these constituents in the vent stream. [District Rules 2201 and 2410]

10. Venting shall not exceed 504 hours per rolling 12-month period. [District Rules 2201and 2410]

11. Vent stream concentration shall not exceed 1,000 ppm-CO, 40 ppm-VOC, 55 ppm-COS, nor 10 ppm-H2S. [District Rules 2201 and 2410]

12. Emission rates from the vent stream shall not exceed 11,816.5 lb-CO/day nor 270.1 lb-VOC/day. [District Rules 2201 and 2410]

13. A non-resettable, totalizing mass or volumetric flow meter to measure the amount of gas vented shall be installed, utilized and maintained. [District Rules 2201 and 2410]

14. Period of venting shall be reported to the District by the following working day, including the duration of the venting event and the vent gas composition observed. [District Rule 2201]

15. Hazardous Air Pollutant (HAP) emissions for the stationary source shall not exceed 25 ton/year for all HAPs nor 10 ton/year for any single HAP. [District Rule 4002]

16. Permittee shall conduct an initial speciated HAPs and total VOC source test for the CO2 recovery and vent system by District witnessed in situ sampling of vented stream by a qualified independent source test firm. The permittee shall determine the total HAPs emissions rate, the single highest HAP emission rate, and the VOC mass emission during the source test. Initial compliance with the HAPs emissions limit (25 tpy all HAPs or 10 tpy any single HAP) shall be demonstrated by the combined VOC emissions rates determined during initial compliance source testing and the correlation between VOC emissions and HAP(s). Ongoing compliance shall be determined using mass flow and VOC sampling during venting occurrences as described in the condition below. [District Rule 4002]

17. The vent stream composition of CO, VOC, H2S, COS, and the HAPs identified in the initial speciated HAPs and total VOC source test, shall be measured during each venting occurrence exceeding 500,000 scf/day using EPA-approved test methods with a gas chromatograph or equivalent equipment as determined by the District in writing. [District Rule 2201]

18. Permittee shall monitor the CO2 concentration in the CO2 stream prior to the custody transfer. The permittee shall calculate the CO2e emissions for each calendar month and shall maintain such records of onsite for District review. [District Rule 2410]

19. Permittee shall maintain records of the CO2 concentration of the CO2 stream prior to custody transfer and records of venting events including the flowrate of the vent stream and reasons for venting event, and such records shall be retained on site readily available for District inspection. [District Rules 2201 and 2410]

20. {3433} Disturbances of soil related to any construction, demolition, excavation, extraction, or other earthmoving activities shall comply with the requirements for fugitive dust control in District Rule 8021 unless specifically exempted under Section 4.0 of Rule 8021 or Rule 8011. [District Rules 8011 and 8021]

21. {3434} An owner/operator shall submit a Dust Control Plan to the APCO prior to the start of any construction activity on any site that will include 10 acres or more of disturbed surface area for residential developments, or 5 acres or more of disturbed surface area for non-residential development, or will include moving, depositing, or relocating more than 2,500 cubic yards per day of bulk materials on at least three days. [District Rules 8011 and 8021]

22. {3435} An owner/operator shall prevent or cleanup any carryout or trackout in accordance with the requirements of District Rule 8041 Section 5.0, unless specifically exempted under Section 4.0 of Rule 8041 (8/19/04) or Rule 8011(8/19/04). [District Rules 8011 and 8021]

23. {3436} Whenever open areas are disturbed, or vehicles are used in open areas, the facility shall comply with the requirements of Section 5.0 of District Rule 8051, unless specifically exempted under Section 4.0 of Rule 8051 or Rule 8011. [District Rules 8011 and 8051]

24. {3437} Any paved road or unpaved road shall comply with the requirements of District Rule 8061 unless specifically exempted under Section 4.0 of Rule 8061 or Rule 8011. [District Rules 8011 and 8061]

25. {3438} Water, gravel, roadmix, or chemical/organic dust stabilizers/suppressants, vegetative materials, or other District-approved control measure shall be applied to unpaved vehicle travel areas as required to limit Visible Dust Emissions to 20% opacity and comply with the requirements for a stabilized unpaved road as defined in Section 3.59 of District Rule 8011. [District Rule 8011 and 8071]

26. {3439} Where dusting materials are allowed to accumulate on paved surfaces, the accumulation shall be removed daily or water and/or chemical/organic dust stabilizers/suppressants shall be applied to the paved surface as required to maintain continuous compliance with the requirements for a stabilized unpaved road as defined in Section 3.59 of District Rule 8011 and limit Visible Dust Emissions (VDE) to 20% opacity. [District Rule 8011 and 8071]

27. {3440} On each day that 50 or more Vehicle Daily Trips or 25 or more Vehicle Daily Trips with 3 axles or more will occur on an unpaved vehicle/equipment traffic area, permittee

shall apply water, gravel, roadmix, or chemical/organic dust stabilizers/suppressants, vegetative materials, or other District-approved control measure as required to limit Visible Dust Emissions to 20% opacity and comply with the requirements for a stabilized unpaved road as defined in Section 3.59 of District Rule 8011. [District Rule 8011 and 8071]

28. {3441} Whenever any portion of the site becomes inactive, Permittee shall restrict access and periodically stabilize any disturbed surface to comply with the conditions for a stabilized surface as defined in Section 3.58 of District Rule 8011. [District Rules 8011 and 8071]

29. {3442} Records and other supporting documentation shall be maintained as required to demonstrate compliance with the requirements of the rules under Regulation VIII only for those days that a control measure was implemented. Such records shall include the type of control measure(s) used, the location and extent of coverage, and the date, amount, and frequency of application of dust suppressant, manufacturer's dust suppressant product information sheet that identifies the name of the dust suppressant and application instructions. Records shall be kept for one year following project completion that results in the termination of all dust generating activities. [District Rules 8011, 8031, and 8071]

S-7616-25-0

230 MMBTU/HR NATURAL GAS-FIRED AUXILIARY BOILER EQUIPPED WITH LOW-NOX BURNER WITH FLUE GAS RECIRCULATION AND SELECTIVE CATALYTIC REDUCTION (SCR) SYSTEM (OR EQUIVALENT)

1. Prior to the District's issuance of a Final Determination of Compliance, the District and HECA shall enter into a mitigation agreement that fully mitigates the indirect emissions associated with construction and operation of the HECA facility, as determined appropriate and necessary by the District to comply with Rule 9110 and 40 CFR Part 93 Subpart B requirements, and feasible mitigation requirements under CEQA. [Rule 9110, 40 CFR Part 93 Subpart B, and Public Resources Code 21000-21177: California Environmental Quality Act]

2. The permittee shall enter into an Air Quality Mitigation Settlement Agreement with the District prior to issuance of the Final Determination of Compliance, or such other time that is mutually agreeable. [Rule 9110, 40 CFR Part 93 Subpart B, and Public Resources Code 21000-21177: California Environmental Quality Act]

3. Permittee shall submit an application to comply with Rule 2520 - Federally Mandated Operating Permits within twelve months of commencing operation. [District Rule 2520]

4. Permittee shall submit an application to comply with Rule 2540 - Acid Rain Program within twelve months of commencing operation. [District Rule 2540]

5. Prior to initial operation of S-7616-23, -25, -26, -30, -31, -32, -33, and -35, permittee shall provide NOx emission reduction credits for the following quantity of emissions: 1st quarter: 74,201 lb, 2nd quarter: 74,201 lb, 3rd quarter: 74,201 lb, and fourth quarter: 74,201 lb. Offsets shall be provided at the applicable offset ratio specified in Table 4-2 of Rule 2201 (as amended 4/21/11). [District Rule 2201]

6. Prior to initial operation of S-7616-17, -18, -19, -20, -22, -23, -25, -26, -27, -28, -29, -30, -31, -32, -33, -34, -36, -37, -38, -39, and -40-32, -33, -34, -36, -37, -38, -39, and -40, permittee shall provide PM10/PM2.5 emission reduction credits for the following quantity of emissions: 1st quarter: 39,538 lb, 2nd quarter: 39,538 lb, 3rd quarter: 39,538 lb, and 4th quarter: 39,538 lb. Offsets shall be provided at the applicable offset ratio specified in Table 4-2 of Rule 2201 (as amended 4/21/11). SOx ERCs may be used to offset PM10/PM2.5 increases at an interpollutant ratio of 1.0 lb-SOx: 1.0 lb-PM10. [District Rule 2201]

7. Prior to initial operation of S-7616-23, -25, -26, -30, -31, -32, and -33, permittee shall provide SOx emission reduction credits for the following quantity of emissions: 1st quarter: 1,170 lb, 2nd quarter: 1,170 lb, 3rd quarter: 1,170 lb, and 4th quarter: 1,170 lb. Offsets shall be provided at the applicable offset ratio specified in Table 4-2 of Rule 2201 (as amended 4/21/11). [District Rule 2201]

8. Prior to initial operation of S-7616-21, -23, -24, -25, -26, -30, -31, -32, and -33, permittee shall provide VOC emission reduction credits for the following quantity of emissions: 1st quarter: 13,792 lb, 2nd quarter: 13,792 lb, 3rd quarter: 13,792 lb, and 4th quarter: 13,792 lb. Offsets shall be provided at the applicable offset ratio specified in Table 4-2 of Rule 2201 (as amended 4/21/11). [District Rule 2201]

9. ERC certificate numbers C-1058-2, C-1058-5, S-3275-5, S-3273-2, S-3305-1, S-3557-1, and/or S-3605-1 (or a certificate split from these certificates) shall be used to supply the required offsets, unless a revised offsetting proposal is received and approved by the District, upon which this Determination of Compliance shall be reissued, administratively specifying the new offsetting proposal. Original public noticing requirements, if any, shall be duplicated prior to reissuance of this Determination of Compliance. [District Rule 2201]

10. {98} No air contaminant shall be released into the atmosphere which causes a public nuisance. [District Rule 4102]

11. {15} No air contaminant shall be discharged into the atmosphere for a period or periods aggregating more than three minutes in any one hour which is as dark as, or darker than, Ringelmann 1 or 20% opacity. [District Rule 4101]

12. {14} Particulate matter emissions shall not exceed 0.1 grains/dscf in concentration. [District Rule 4201]

13. The unit shall be fired solely on PUC-quality natural gas. [District Rules 2201, 2410, 4320, 2410]

14. The boiler shall be equipped with an economizer and condensate recovery system. [District Rules 2201 and 2410]

15. Duration of startup and shutdown of heater shall not exceed 2 hours each per occurrence. The emission control system shall be in operation and emissions shall be minimized insofar as technologically feasible during startup and shutdown. The operator shall maintain records of the duration of startup and shutdown. [District Rules 4305, 4306, and 4320]

16. Emissions from this unit, except during startup or shutdown, shall not exceed any of the following limits: NOx (as NO2): 5.0 ppmvd @ 3% O2 or 0.006 lb/MMBtu, SOx (as SO2): 0.00285 lb/MMBtu, PM10: 0.005 lb/MMBtu, CO: 50.8 ppmvd @ 3% O2 or 0.037 lb/MMBtu, or VOC: 0.0040 lb/MMBtu. [District Rules 2201, 4305, 4306 and 4320]

17. The maximum allowable heat input of the boiler shall not exceed 213 MMBtu/hr. [District Rule 2201]

18. The annual heat input of the unit shall not exceed 466.0 billion Btu per calendar year. [District Rules 2201 and 2410]

19. A non-resettable, totalizing, continuously recording, mass or volumetric fuel flow meter to measure the amount of natural gas combusted in the unit shall be installed, utilized and maintained. [District Rules 2201 and 2410]

20. Permittee shall maintain records of the annual heat input of the unit. [District Rules 1070 and 2201]

21. The operator shall tune the unit at least twice per calendar year, (from four to eight months apart) by a qualified technician in accordance with the procedure described in Rule 4304 (Equipment Tuning Procedure for Boilers, Steam Generators, and Process Heaters). If the unit does not operate throughout a continuous six-month period within a calendar year, only one tune-up is required for that calendar year. No tune-up is required for any unit that is not operated during that calendar year; this unit may be test fired to verify availability of the unit for its intended use, but once the test firing is completed the unit shall be shutdown. [District Rule 2410]

22. {4063} The permittee shall monitor and record the stack concentration of NOX, CO, and O2 at least once every month (in which a source test is not performed) using a portable analyzer that meets District specifications. Monitoring shall not be required if the unit is not in operation, i.e. the unit need not be started solely to perform monitoring. Monitoring shall be performed within 5 days of restarting the unit unless monitoring has been performed within the last month. [District Rules 4305 and 4306]

23. {4064} If either the NOX or CO concentrations corrected to 3% O2, as measured by the portable analyzer, exceed the allowable emissions concentration, the permittee shall return the emissions to within the acceptable range as soon as possible, but no longer than 1 hour of operation after detection. If the portable analyzer readings continue to exceed the allowable emissions concentration after 1 hour of operation after detection, the permittee shall notify the District within the following 1 hour and conduct a certified source test within 60 days of the first exceedance. In lieu of conducting a source test, the permittee may stipulate a violation has occurred, subject to enforcement action. The permittee must then correct the violation, show compliance has been re-established, and resume monitoring procedures. If the deviations are the result of a qualifying breakdown condition pursuant to Rule 1100, the permittee may fully comply with Rule 1100 in lieu of performing the notification and testing required by this condition. [District Rules 4305 and 4306]

24. {4065} All alternate monitoring parameter emission readings shall be taken with the unit operating either at conditions representative of normal operations or conditions specified in the permit-to-operate. The analyzer shall be calibrated, maintained, and operated in accordance with the manufacturer's specifications and recommendations or a protocol approved by the APCO. Emission readings taken shall be averaged over a 15 consecutive-minute period by either taking a cumulative 15 consecutive-minute sample reading or by taking at least five (5) readings, evenly spaced out over the 15 consecutive-minute period. [District Rules 4305 and 4306]

25. {4066} The permittee shall maintain records of: (1) the date and time of NOX, CO, and O2 measurements, (2) the O2 concentration in percent by volume and the measured NOX and CO concentrations corrected to 3% O2, (3) make and model of exhaust gas analyzer, (4) exhaust gas analyzer calibration records, and (5) a description of any corrective action taken to maintain the emissions within the acceptable range. [District Rules 4305 and 4306]

26. This unit shall be tested for compliance with the NOx and CO emissions limits within 60 days of initial startup and at least once every twelve (12) months. After demonstrating compliance on two (2) consecutive annual source tests, the unit shall be tested not less than once every thirty-six (36) months. If the result of the 36-month source test demonstrates that the unit does not meet the applicable emission limits, the source testing frequency shall revert to at least once every twelve (12) months. [District Rules 4305, 4306, and 4320]

27. {110} The results of each source test shall be submitted to the District within 60 days thereafter. [District Rule 1081]

28. Source test results for NOx emissions shall be submitted to the District as NOx, NO, and NO2 when available. [District Rule 2410]

29. {109} Source testing shall be conducted using the methods and procedures approved by the District. The District must be notified at least 30 days prior to any compliance source test, and a source test plan must be submitted for approval at least 15 days prior to testing. [District Rule 1081]

30. The source test plan shall identify which basis (ppmv or lb/MMBtu) will be used to demonstrate compliance. [District Rules 4305, 4306, and 4320]

31. All emissions measurements shall be made with the unit operating either at conditions representative of normal operations or conditions specified in the DOC. No determination of compliance shall be established within two hours after a continuous period in which fuel flow to the unit is shut off for 30 minutes or longer, or within 30 minutes after a re-ignition as defined in Section 3.0 of District Rule 4306. [District Rules 4305 and 4306]

32. The following test methods shall be used: NOx (ppmv) - EPA Method 7E or ARB Method 100, NOx (lb/MMBtu) - EPA Method 19, CO (ppmv) - EPA Method 10 or 10B or ARB Method 100, stack gas oxygen - EPA Method 3 or 3A or ARB Method 100, SOx (lb/MMBtu) - ARB Method 100 or EPA Method 6, 6C or fuel gas sulfur content analysis and EPA Method 19, fuel gas sulfur content - EPA Method 11 or 15, ASTM D3246 or double GC for H2S and mercaptans performed in a laboratory, fuel gas hhv - ASTM D1826 or D1945 in conjunction with ASTM D3588. [District Rules 4305, 4306 and 4320]

33. The permittee shall monitor and record the stack concentration of NOx, CO, and O2 at least once every month (in which a source test is not performed) using a portable analyzer that meets District specifications. Monitoring shall not be required if the unit is not in operation, i.e. the unit need not be started solely to perform monitoring. Monitoring

shall be performed within 5 days of restarting the unit unless monitoring has been performed within the last month. [District Rules 4305, 4306, and 4320]

34. If either the NOx or CO concentrations corrected to 3% O2, as measured by the portable analyzer, exceed the allowable emissions concentration, the permittee shall return the emissions to within the acceptable range as soon as possible, but no longer than 1 hour of operation after detection. If the portable analyzer readings continue to exceed the allowable emissions concentration after 1 hour of operation after detection, the permittee shall notify the District within the following 1 hour and conduct a certified source test within 60 days of the first exceedance. In lieu of conducting a source test, the permittee may stipulate a violation has occurred, subject to enforcement action. The permittee must then correct the violation, show compliance has been re-established, and resume monitoring procedures. If the deviations are the result of a qualifying breakdown condition pursuant to Rule 1100, the permittee may fully comply with Rule 1100 in lieu of performing the notification and testing required by this condition. [District Rules 4305, 4306, and 4320]

35. All alternate monitoring parameter emission readings shall be taken with the unit operating either at conditions representative of normal operations or conditions specified in the DOC. The analyzer shall be calibrated, maintained, and operated in accordance with the manufacturer's specifications and recommendations or a protocol approved by the APCO. Emission readings taken shall be averaged over a 15 consecutive-minute period by either taking a cumulative 15 consecutive-minute sample reading or by taking at least five (5) readings, evenly spaced out over the 15 consecutive-minute period. [District Rules 4305, 4306, and 4320]

36. The permittee shall maintain records of: (1) the date and time of NOx, CO, and O2 measurements, (2) the O2 concentration in percent by volume and the measured NOX and CO concentrations corrected to 3% O2, (3) make and model of exhaust gas analyzer, (4) exhaust gas analyzer calibration records, and (5) a description of any corrective action taken to maintain the emissions within the acceptable range. [District Rules 4305, 4306, and 4320]

37. For emissions source testing, the arithmetic average of three 30-consecutive-minute test runs shall apply. If two of three runs are above an applicable limit the test cannot be used to demonstrate compliance with an applicable limit. [District Rules 4305, 4306, and 4320]

38. All records shall be maintained and retained on-site for a minimum of five (5) years, and shall be made available for District inspection upon request. [District Rules 1070, 2201, 4305, 4306, and 4320]

39. Permittee shall comply with all applicable NSPS requirements, including monitoring, notification and reporting requirements as described in 40 CFR 60 Subparts A and Db. [District Rule 4001]

40. Permittee shall submit to the EPA Regional Administrator for approval a plan that identifies the operating conditions to be monitored under 40 CFR 60.48b (g)(2) and the records to be maintained under 60.49b (j). This plan shall be submitted to the EPA Regional Administrator for approval within 360 days of the initial startup of the affected facility. [District Rule 4001]

41. The permittee shall obtain written District approval for the use of any equivalent equipment not specifically approved by this Determination of Compliance. Approval of the equivalent equipment shall be made only after the District's determination that the submitted design and performance of the proposed alternate equipment is equivalent to the specifically authorized equipment. [District Rule 2201]

42. The permittee's request for approval of equivalent equipment shall include the make, model, manufacturer's maximum rating, manufacturer's guaranteed emission rates, equipment drawing(s), and operational characteristics/parameters. [District Rule 2201]

43. Alternate equipment shall be of the same class and category of source as the equipment authorized by the Determination of Compliance. [District Rule 2201]

44. No emission factor and no emission shall be greater for the alternate equipment than for the proposed equipment. No changes in the hours of operation, operating rate, throughput, or firing rate may be authorized for any alternate equipment. [District Rule 2201]

45. The air quality modeled impacts of the proposed alternative equivalent equipment shall not result in any more adverse impacts than the equipment it replaces. [District Rule 2201]

46. {3433} Disturbances of soil related to any construction, demolition, excavation, extraction, or other earthmoving activities shall comply with the requirements for fugitive dust control in District Rule 8021 unless specifically exempted under Section 4.0 of Rule 8021 or Rule 8011. [District Rules 8011 and 8021]

47. {3434} An owner/operator shall submit a Dust Control Plan to the APCO prior to the start of any construction activity on any site that will include 10 acres or more of disturbed surface area for residential developments, or 5 acres or more of disturbed surface area for non-residential development, or will include moving, depositing, or relocating more than 2,500 cubic yards per day of bulk materials on at least three days. [District Rules 8011 and 8021]

48. {3435} An owner/operator shall prevent or cleanup any carryout or trackout in accordance with the requirements of District Rule 8041 Section 5.0, unless specifically exempted under Section 4.0 of Rule 8041 (8/19/04) or Rule 8011(8/19/04). [District Rules 8011 and 8021]

49. {3436} Whenever open areas are disturbed, or vehicles are used in open areas, the facility shall comply with the requirements of Section 5.0 of District Rule 8051, unless

specifically exempted under Section 4.0 of Rule 8051 or Rule 8011. [District Rules 8011 and 8051]

50. {3437} Any paved road or unpaved road shall comply with the requirements of District Rule 8061 unless specifically exempted under Section 4.0 of Rule 8061 or Rule 8011. [District Rules 8011 and 8061]

51. {3438} Water, gravel, roadmix, or chemical/organic dust stabilizers/suppressants, vegetative materials, or other District-approved control measure shall be applied to unpaved vehicle travel areas as required to limit Visible Dust Emissions to 20% opacity and comply with the requirements for a stabilized unpaved road as defined in Section 3.59 of District Rule 8011. [District Rule 8011 and 8071]

52. {3439} Where dusting materials are allowed to accumulate on paved surfaces, the accumulation shall be removed daily or water and/or chemical/organic dust stabilizers/suppressants shall be applied to the paved surface as required to maintain continuous compliance with the requirements for a stabilized unpaved road as defined in Section 3.59 of District Rule 8011 and limit Visible Dust Emissions (VDE) to 20% opacity. [District Rule 8011 and 8071]

53. {3440} On each day that 50 or more Vehicle Daily Trips or 25 or more Vehicle Daily Trips with 3 axles or more will occur on an unpaved vehicle/equipment traffic area, permittee shall apply water, gravel, roadmix, or chemical/organic dust stabilizers/suppressants, vegetative materials, or other District-approved control measure as required to limit Visible Dust Emissions to 20% opacity and comply with the requirements for a stabilized unpaved road as defined in Section 3.59 of District Rule 8011. [District Rule 8011 and 8071]

54. {3441} Whenever any portion of the site becomes inactive, Permittee shall restrict access and periodically stabilize any disturbed surface to comply with the conditions for a stabilized surface as defined in Section 3.58 of District Rule 8011. [District Rules 8011 and 8071]

55. {3442} Records and other supporting documentation shall be maintained as required to demonstrate compliance with the requirements of the rules under Regulation VIII only for those days that a control measure was implemented. Such records shall include the type of control measure(s) used, the location and extent of coverage, and the date, amount, and frequency of application of dust suppressant, manufacturer's dust suppressant product information sheet that identifies the name of the dust suppressant and application instructions. Records shall be kept for one year following project completion that results in the termination of all dust generating activities. [District Rules 8011, 8031, and 8071]

S-7616-26-0

431 MW NOMINAL (GROSS) COMBINED-CYCLE POWER GENERATING SYSTEM CONSISTING OF HYDROGEN-RICH SYNGAS FUEL AND/OR BACK UP NATURAL GAS-FIRED MHI 501 GAC G-CLASS, AIR-COOLED ADVANCED COMBUSTION TURBINE GENERATOR (CTG), WITH A HEAT RECOVERY STEAM GENERATOR (HRSG), AND A CONDENSING STEAM TURBINE-GENERATOR (STG) OPERATING IN COMBINED CYCLE MODE

1. Prior to the District's issuance of a Final Determination of Compliance, the District and HECA shall enter into a mitigation agreement that fully mitigates the indirect emissions associated with construction and operation of the HECA facility, as determined appropriate and necessary by the District to comply with Rule 9110 and 40 CFR Part 93 Subpart B requirements, and feasible mitigation requirements under CEQA. [Rule 9110, 40 CFR Part 93 Subpart B, and Public Resources Code 21000-21177: California Environmental Quality Act]

2. The permittee shall enter into an Air Quality Mitigation Settlement Agreement with the District prior to issuance of the Final Determination of Compliance, or such other time that is mutually agreeable. [Rule 9110, 40 CFR Part 93 Subpart B, and Public Resources Code 21000-21177: California Environmental Quality Act]

3. Permittee shall submit an application to comply with Rule 2520 - Federally Mandated Operating Permits within twelve months of commencing operation. [District Rule 2520]

4. Permittee shall submit an application to comply with Rule 2540 - Acid Rain Program within twelve months of commencing operation. [District Rule 2540]

5. Prior to initial operation of S-7616-23, -25, -26, -30, -31, -32, -33, and -35, permittee shall provide NOx emission reduction credits for the following quantity of emissions: 1st quarter: 74,201 lb, 2nd quarter: 74,201 lb, 3rd quarter: 74,201 lb, and fourth quarter: 74,201 lb. Offsets shall be provided at the applicable offset ratio specified in Table 4-2 of Rule 2201 (as amended 4/21/11). [District Rule 2201]

6. Prior to initial operation of S-7616-17, -18, -19, -20, -22, -23, -25, -26, -27, -28, -29, -30, -31, -32, -33, -34, -36, -37, -38, -39, and -40, permittee shall provide PM10/PM2.5 emission reduction credits for the following quantity of emissions: 1st quarter: 39,538 lb, 2nd quarter: 39,538 lb, 3rd quarter: 39,538 lb, and 4th quarter: 39,538 lb. Offsets shall be provided at the applicable offset ratio specified in Table 4-2 of Rule 2201 (as amended 4/21/11). SOx ERCs may be used to offset PM10/PM2.5 increases at an interpollutant ratio of 1.0 lb-SOx: 1.0 lb-PM10. [District Rule 2201]

7. Prior to initial operation of S-7616-23, -25, -26, -30, -31, -32, and -33, permittee shall provide SOx emission reduction credits for the following quantity of emissions: 1st quarter: 1,170 lb, 2nd quarter: 1,170 lb, 3rd quarter: 1,170 lb, and 4th quarter: 1,170 lb.

Offsets shall be provided at the applicable offset ratio specified in Table 4-2 of Rule 2201 (as amended 4/21/11). [District Rule 2201]

8. Prior to initial operation of S-7616-21, -23, -24, -25, -26, -30, -31, -32, and -33, permittee shall provide VOC emission reduction credits for the following quantity of emissions: 1st quarter: 13,792 lb, 2nd quarter: 13,792 lb, 3rd quarter: 13,792 lb, and 4th quarter: 13,792 lb. Offsets shall be provided at the applicable offset ratio specified in Table 4-2 of Rule 2201 (as amended 4/21/11). [District Rule 2201]

9. ERC certificate numbers C-1058-2, C-1058-5, S-3275-5, S-3273-2, S-3305-1, S-3557-1, and/or S-3605-1 (or a certificate split from these certificates) shall be used to supply the required offsets, unless a revised offsetting proposal is received and approved by the District, upon which this Determination of Compliance shall be reissued, administratively specifying the new offsetting proposal. Original public noticing requirements, if any, shall be duplicated prior to reissuance of this Determination of Compliance. [District Rule 2201]

10. {98} No air contaminant shall be released into the atmosphere which causes a public nuisance. [District Rule 4102]

11. {15} No air contaminant shall be discharged into the atmosphere for a period or periods aggregating more than three minutes in any one hour which is as dark as, or darker than, Ringelmann 1 or 20% opacity. [District Rule 4101]

12. {14} Particulate matter emissions shall not exceed 0.1 grains/dscf in concentration. [District Rule 4201]

13. The owner/operator of the facility shall minimize the emissions from the gas turbine to the maximum extent possible during the commissioning period. [District Rule 2201]

14. Commissioning activities are defined as, but not limited to, all testing, adjustment, tuning, and calibration activities recommended by the equipment manufacturers and the construction contractor to insure safe and reliable steady state operation of the gas turbines and associated electrical delivery systems. [District Rule 2201]

15. Commissioning period shall commence when all mechanical, electrical, and control systems are installed and individual system startup has been completed, or when a gas turbine is first fired, whichever occurs first. The commissioning period shall terminate when the plant has completed initial performance testing, completed final plant tuning, and is available for commercial operation. Two commissioning periods will occur: when firing on natural gas and when firing on hydrogen-rich fuel. [District Rule 2201]

16. At the earliest feasible opportunity, in accordance with the recommendations of the equipment manufacturer and the construction contractor, the combustors of this unit shall be tuned to minimize emissions. [District Rule 2201]

17. At the earliest feasible opportunity, in accordance with the recommendations of the equipment manufacturer and the construction contractor, the Selective Catalytic

Reduction (SCR) system and the oxidation catalyst shall be installed, adjusted, and operated to minimize emissions from this unit. [District Rule 2201]

18. The permittee shall submit a plan to the District at least four weeks prior to the first firing of this unit, describing the procedures to be followed during the commissioning period. The plan shall include a description of each commissioning activity, the anticipated duration of each activity in hours, and the purpose of the activity. The activities described shall include, but not limited to, the tuning of the combustors, the installation and operation of the SCR system and the oxidation catalyst, the installation, calibration, and testing of the NOx and CO continuous emissions monitors, and any activities requiring the firing of this unit without abatement by the SCR system or oxidation catalyst. [District Rule 2201]

19. During the commissioning period when firing on natural gas, emission rates from the CTG/HRSG stack shall not exceed any of the following limits: NOx (as NO2) - 391.20 lb/hr; SOx - 4.80 lb/hr; PM10 - 15.00 lb/hr; CO - 2,270.00 lb/hr; or VOC (as methane) - 65.00 lb/hr. During the commissioning period when firing on hydrogen-rich fuel, emission rates from the CTG shall not exceed any of the following limits: NOx (as NO2) - 99.04 lb/hr; SOx - 5.00 lb/hr; PM10 - 15.00 lb/hr; CO - 1622.60 lb/hr; or VOC (as methane) - 35.12 lb/hr. [District Rule 2201]

20. During the commissioning period, the permittee shall demonstrate NOx and CO compliance with the condition above through the use of properly operated and maintained continuous emissions monitors and recorders as specified in this document. The monitored parameters for this unit shall be recorded at least once every 15 minutes (excluding normal calibration periods or when the monitored source is not in operation). [District Rule 2201]

21. The continuous emissions monitors specified in these conditions shall be installed, calibrated and operational prior to the first firing of the unit. After first firing, the detection range of the CEMS shall be adjusted as necessary to accurately measure the resulting range of NOx and CO emissions concentrations. [District Rule 2201]

22. During the commissioning period on natural gas, this unit shall not fire more than 456 total hours without abatement of emissions by the SCR system and/or the oxidation catalyst. During the commissioning period on hydrogen-rich fuel, this unit shall not fire more than 50 total hours without abatement of emissions by the SCR system and/or the oxidation catalyst and shall not fire more than 200 total hours without the partial operation of the SCR system and/or the oxidation catalyst. Such operation of this unit without abatement shall be limited to discrete commissioning activities that can only be properly executed without the SCR system and the oxidation catalyst in place. Upon completion of these activities, the permittee shall provide written notice to the District and the unused balance of the firing hours without abatement shall expire. Records of the commissioning hours of operation for the unit shall be maintained. [District Rule 2201]

23. The total mass emissions of NOx, SOx, PM10, CO, and VOC that are emitted during the commissioning period shall accrue towards the consecutive twelve month emission limits

specified in this document. NOx and CO total mass emissions will be determined from CEMs data and SOx, PM10, and VOC total mass emissions will be calculated. [District Rule 2201]

24. A selective catalytic reduction (SCR) system and an oxidation catalyst shall serve the gas turbine engine. Exhaust ducting may be equipped (if required) with a fresh air inlet blower to be used to lower the exhaust temperature prior to inlet of the SCR system catalyst. The permittee shall submit SCR and oxidation catalyst design details to the District at least 30 days prior to commencement of construction. [District Rule 2201]

25. Permittee shall submit continuous emission monitor design, installation, and operational details to the District at least 30 days prior to commencement of construction. [District Rule 2201]

26. The permittee shall submit to the District information correlating the NOx control system operating parameters to the associated measured NOx output. The information must be sufficient to allow the District to determine compliance with the NOx emission limits of this DOC when no continuous emission monitoring data for NOx is available or when the continuous emission monitoring system is not operating properly. [District Rule 4703]

27. All equipment shall be maintained in good operating condition and shall be operated in a manner to minimize emissions of air contaminants into the atmosphere. [District Rule 2201]

28. Combustion turbine generator (CTG) and electrical generator lube oil vents shall be equipped with mist eliminators. Visible emissions from lube oil vents shall not exhibit opacity of 5% or greater, except for a period or periods not exceeding three minutes in any one hour. [District Rules 2201 and 4101]

29. This unit shall be fired on hydrogen-rich fuel or on PUC-regulated natural gas backup fuel. Firing on backup PUC-quality natural gas shall only occur during CTG startups (with firing on natural gas not to exceed 5 total hours per calendar year), CTG shutdowns (with firing on natural gas not to exceed 10 hours per calendar year), or during periods of unplanned equipment outages (with firing on natural gas not to exceed 336 hours per calendar year). [District Rule 2201 and 2410]

30. This unit shall be fired on hydrogen-rich fuel with a sulfur content no greater than 10 ppmv, or on PUC-regulated natural gas with a sulfur content of no greater than 0.75 grain of sulfur compounds (as S) per 100 dry scf of natural gas. [District Rules 2201 and 2410, and 40 CFR 60.4330(a)(2)]

31. During normal operation (excluding startup and shutdown), emission rate from the CTG/HRSG stack when firing on hydrogen-rich fuel shall not exceed any of the following: NOx (as NO2) - 25.0 lb/hr and 2.5 ppmvd-NOx @ 15% O2 (1-hour average); VOC (as methane) - 3.5 lb/hr and 1.0 ppmvd-VOC @ 15% O2; CO - 18.3 lb/hr and 3.0 ppmvd-CO @ 15% O2; PM10 - 12.9 lb/hr; or SOx (as SO2) - 4.1 lb/hr. The NOx (as NO2) emission

limit indicated above is a one-hour rolling average. All other pollutant emission limits are three-hour rolling averages. [District Rules 2201 and 4703 and 40 CFR 60.4320(a) & (b)]

32. During normal operation (excluding startup and shutdown), emission rate from the feedstock dryer stack when firing on hydrogen-rich fuel shall not exceed any of the following: NOx (as NO2) - 4.4 lb/hr and 2.5 ppmvd-NOx @ 15% O2 (1-hour average); VOC (as methane) - 0.6 lb/hr and 1.0 ppmvd-VOC @ 15% O2; CO - 3.2 lb/hr and 3.0 ppmvd-CO @ 15% O2; PM10 - 1.4 lb/hr; or SOx (as SO2) - 0.9 lb/hr. The NOx (as NO2) emission limit indicated above is a one-hour rolling average. All other pollutant emission limits are three-hour rolling averages. [District Rules 2201 and 4703 and 40 CFR 60.4320(a) & (b)]

33. During normal operation (excluding startup and shutdown), emission rate from the CTG/HRSG stack when firing on natural gas shall not exceed any of the following: NOx (as NO2) - 34.1 lb/hr and 4.0 ppmvd-NOx @ 15% O2; VOC (as methane) - 5.9 lb/hr and 2.0 ppmvd-VOC @ 15% O2; CO - 26.0 lb/hr and 5.0 ppmvd-CO @ 15% O2; PM10 - 15.0 lb/hr; or SOx (as SO2) - 4.7 lb/hr. All pollutant emission limits are three-hour rolling averages. [District Rules 2201 and 4703 and 40 CFR 60.4320(a) & (b)]

34. Ammonia (NH3) emissions shall not exceed either of the following limits: 18.50 lb/hr or 5.0 ppmvd @ 15% O2 (based on a 24 hour rolling average). [District Rule 2201]

35. During startup, emission rates from the CTG/HRSG stack shall not exceed any of the following: NOx (as NO2) - 107.20 lb/hr, SOx - 2.40 lb/hr, PM10 - 15.00 lb/hr, CO - 2,270.00 lb/hr, or VOC - 65.00 lb/hr, based on one-hour averages. During startup, emission rates from the CTG/HRSG stack shall not exceed any of the following: NOx (as NO2) - 381.2 lb/day, SOx - 10.7 lb/day, PM10 - 59.7 lb/day, CO - 3,385.0 lb/day, or VOC - 67.7 lb/day. [District Rule 2201]

36. During startup, emission rates from the feedstock dryer stack shall not exceed any of the following: NOx (as NO2) - 15.10 lb/hr, SOx - 0.30 lb/hr, PM10 - 0.90 lb/hr, CO - 147.40 lb/hr, or VOC - 1.90 lb/hr, based on one-hour averages. During startup, emission rates from the feedstock dryer stack shall not exceed any of the following: NOx (as NO2) - 49.0 lb/day, SOx - 1.2 lb/day, PM10 - 3.6 lb/day, CO - 317.8 lb/day, or VOC - 5.2 lb/day. [District Rule 2201]

37. During shutdown, emission rates from the CTG/HRSG stack shall not exceed any of the following: NOx (as NO2) - 122.0 lb/hr, SOx - 2.7 lb/hr, PM10 - 15.0 lb/hr, CO - 2,270.0 lb/hr, or VOC - 64.8 lb/hr, based on one-hour averages. During shutdown, emission rates from the CTG/HRSG stack shall not exceed any of the following: NOx (as NO2) - 766.6 lb/day, SOx - 21.9 lb/day, PM10 - 127.0 lb/day, CO - 8,437.0 lb/day, or VOC - 193.9 lb/day. [District Rule 2201]

38. During shutdown, emission rates from the feedstock dryer stack shall not exceed any of the following: NOx (as NO2) - 9.4 lb/hr, SOx - 0.3 lb/hr, PM10 - 0.9 lb/hr, CO - 11.5 lb/hr, or VOC - 0.7 lb/hr, based on one-hour averages. During shutdown, emission rates from the feedstock dryer stack shall not exceed any of the following: NOx (as NO2) - 37.6

lb/day, SOx - 1.2 lb/day, PM10 - 3.6 lb/day, CO - 46.0 lb/day, or VOC - 2.8 lb/day. [District Rule 2201]

39. Startup shall be defined as the period of time during which a unit is brought from a shutdown status to its operating temperature and pressure, including the time required by the unit's emission control system to reach full operation. Shutdown shall be defined as the period of time during which a unit is taken from an operational to a non-operational status by allowing it to cool down from its operating temperature to ambient temperature as the fuel supply to the unit is completely turned off. [District Rules 2201 and 4703]

40. For CTG/HRSG, the duration of each startup event shall not exceed 4.5 hours, and the duration of each shutdown event shall not exceed 9.0 hours. For feedstock dryer, the duration of each startup event shall not exceed 4.0 hours, and the duration of each shutdown event shall not exceed 4.0 hours. Startup and shutdown emissions shall be counted toward all applicable emission limits. [District Rules 2201 and 4703]

41. CTG/HRSG and feedstock dryer shall each be limited to two startups and two shutdowns per calendar year. [District Rule 2201]

42. The emission control systems shall be in operation and emissions shall be minimized insofar as technologically feasible during startup and shutdown. [District Rule 4703]

43. Daily emissions from the CTG/HRSG stack when firing on hydrogen-rich fuel on days without a startup or shutdown shall not exceed any of the following: NOx (as NO2) - 600.0 lb/day; CO - 439.2 lb/day; VOC - 84.0 lb/day; PM10 - 309.6 lb/day; SOx (as SO2) - 98.4 lb/day, or NH3 - 444.0 lb/day. [District Rule 2201]

44. Daily emissions from the CTG/HRSG stack when firing on natural gas on days without a startup or shutdown shall not exceed any of the following: NOx (as NO2) - 818.4 lb/day; CO - 624.0 lb/day; VOC - 141.6 lb/day; PM10 - 360.0 lb/day; SOx (as SO2) - 112.8 lb/day, or NH3 - 379.2 lb/day. [District Rule 2201]

45. Daily emissions from the feedstock dryer stack when firing on hydrogen-rich fuel on days without a startup or shutdown shall not exceed any of the following: NOx (as NO2) - 105.6 lb/day; CO - 76.8 lb/day; VOC - 14.4 lb/day; PM10 - 33.6 lb/day; SOx (as SO2) - 21.6 lb/day, or NH3 - 76.8 lb/day. [District Rule 2201]

46. Annual emissions from the CTG/HRSG stack, calculated on a twelve-consecutive month rolling basis, shall not exceed any of the following: NOx (as NO2) - 212,953 lb/year; SOx (as SO2) - 34,445 lb/year; PM10 - 107,813 lb/year; CO - 177,980 lb/year; or VOC - 30,506 lb/year. [District Rule 2201]

47. Annual emissions from the feedstock dryer stack, calculated on a twelve-consecutive month rolling basis, shall not exceed any of the following: NOx (as NO2) - 33,773 lb/year; SOx (as SO2) - 5,605 lb/year; PM10 - 11,257 lb/year; CO - 25,528 lb/year; or VOC - 4,816 lb/year. [District Rule 2201]

48. Each one-hour period shall commence on the hour. Each one-hour period in a three-hour rolling average will commence on the hour. The three-hour average will be compiled from the three most recent one-hour periods. Each one-hour period in a twenty-four hour average for ammonia slip will commence on the hour. [District Rule 2201]

49. Daily emissions will be compiled for a twenty-four hour period starting and ending at twelve-midnight. Each month in the twelve consecutive month rolling average emissions shall commence at the beginning of the first day of the month. The twelve consecutive month rolling average emissions to determine compliance with annual emissions limitations shall be compiled from the twelve most recent calendar months. [District Rule 2201]

50. Compliance with the ammonia emission limits shall be demonstrated utilizing one of the following procedures: 1.) calculate the daily ammonia emissions using the following equation: (ppmvd @ 15% O2) = ((a - (b x c/1,000,000)) x (1,000,000 / b)) x d, where a = average ammonia injection rate (lb/hr) / (17 lb/lb mol), b = dry exhaust flow rate (lb/hr) / (29 lb/lb mol), c = change in measured NOx concentration ppmvd @ 15% O2 across the catalyst, and d = correction factor. The correction factor shall be derived annually during compliance testing by comparing the measured and calculated ammonia slip; 2.) Utilize another District-approved calculation method using measured surrogate parameters to determine the daily ammonia emissions in ppmvd @ 15% O2. If this option is chosen, the permittee shall submit a detailed calculation protocol for District approval at least 60 days prior to commencement of operation; 3.) Alternatively, the permittee may utilize a continuous in-stack ammonia monitor to verify compliance with the ammonia emissions limit. If this option is chosen, the permittee shall submit a monitoring plan for District approval at least 60 days prior to commencement of operation. [District Rule 2201]

51. Source testing to measure startup and shutdown NOx, CO, and VOC mass emission rates shall be conducted prior to the end of the commissioning period and at least once every seven years thereafter. CEM relative accuracy shall be determined during startup source testing in accordance with 40 CFR 60, Appendix B. If CEM data is not certifiable to determine compliance with NOx and CO startup emission limits, then source testing to measure startup NOx and CO mass emission rates shall be conducted at least once every 12 months. [District Rule 1081]

52. Hazardous Air Pollutant (HAP) emissions for the stationary source shall not exceed 25 ton/year for all HAPS nor 10 ton/year for any single HAP. [District Rule 4002]

53. Permittee shall conduct an initial speciated HAPs and total VOC source test for the combustion turbine generator, by District witnessed in situ sampling of exhaust gases by a qualified independent source test firm. The permittee shall correlate the total HAPs emissions rate and the single highest HAP emission rate to the VOC mass emission determined during the speciated HAPs source test. Initial and annual compliance with the HAPs emissions limit (25 tpy all HAPs or 10 tpy any single HAP) shall be demonstrated by the combined VOC emissions rates for the combustion gas turbine

determined during initial and annual compliance source testing and the correlation between VOC emissions and HAP(s). [District Rule 4002]

54. Source testing to measure the NOx, CO, VOC, and NH3 emission rates (lb/hr and ppmvd @ 15% O2) and PM10 emission rate (lb/hr) shall be conducted within 60 days after the conclusion of the commissioning period and at least once every twelve months thereafter. [District Rules 1081 and 4703 and 40 CFR 60.4400(a)]

55. {110} The results of each source test shall be submitted to the District within 60 days thereafter. [District Rule 1081]

56. Source test results for NOx emissions shall be submitted to the District as NOx, NO, and NO2 when available. [District Rule 2410]

57. The sulfur content of the natural gas fuel source shall be: (i) documented in a valid purchase contract, a supplier certification, a tariff sheet or transportation contract or (ii) shall be demonstrated within 60 days after the end of the commissioning period and monitored weekly thereafter. If the sulfur content is demonstrated to be less than 0.75 gr/100 scf for eight consecutive weeks, then the monitoring frequency shall be every six months. If the result of any six month monitoring demonstrates that the fuel does not meet the fuel sulfur content limit, weekly monitoring shall resume. [40 CFR 60.4360, 60.4365(a) and 60.4370(c)]

58. The following test methods shall be used: NOx - EPA Method 7E or 20, PM10 - EPA Method 5/202 (front half and back half), CO - EPA Method 10 or 10B, O2 - EPA Method 3, 3A, or 20, VOC - EPA Method 18 or 25, and ammonia - EPA Method 206. EPA approved alternative test methods as approved by the District may also be used to address the source testing requirements of this DOC. The request to utilize EPA approved alternative source testing methods must be submitted in writing and written approval received from the District prior to the submission of the source test plan. [District Rules 1081 and 4703 and 40 CFR 60.4400(1)(i)]

59. HHV and LHV of the fuel shall be determined using ASTM D3588, ASTM 1826, or ASTM 1945. [40 CFR 60.332(a),(b) and District Rule 4703, 6.4.5]

60. Fuel sulfur content shall be monitored using one of the following methods: ASTM Methods D1072, D3246, D4084, D4468, D4810, D6228, D6667 or Gas Processors Association Standard 2377. [40 CFR 60.4415(a)(1)(i)]

61. The exhaust stack shall be equipped with permanent provisions to allow collection of stack gas samples consistent with EPA test methods and shall be equipped with safe permanent provisions to sample stack gases with a portable NOx, CO, and O2 analyzer during District inspections. The sampling ports shall be located in accordance with the CARB regulation titled California Air Resources Board Air Monitoring Quality Assurance Volume VI, Standard Operating Procedures for Stationary Source Emission Monitoring and Testing. [District Rule 1080]

62. Compliance demonstration (source testing) shall be District witnessed or authorized and samples shall be collected by a certified testing laboratory. Source testing shall be conducted using the methods and procedures approved by the District. The District must be notified 30 days prior to any compliance source test, and a source test plan must be submitted for approval 15 days prior to testing. The results of each source test shall be submitted to the District within 60 days thereafter. [District Rule 1081]

63. The turbine shall be equipped with a continuous monitoring system to measure and record fuel consumption. [District Rules 2201 and 4703 and 40 CFR 60.4335(b)(1)]

64. The owner or operator shall install, certify, maintain, operate and quality-assure a Continuous Emission Monitoring System (CEMS) which continuously measures and records the exhaust gas NOx, CO and O2 concentrations. Continuous emissions monitor(s) shall be capable of monitoring emissions during normal operating conditions, and during startups and shutdowns provided the CEMS pass the relative accuracy requirement for startups and shutdowns specified herein. If relative accuracy of CEMS cannot be demonstrated during startup conditions, CEMS results during startup and shutdown events shall be replaced with startup emission rates obtained from source testing to determine compliance with emission limits contained in this document. [District Rules 1080, 2201, and 4703 and 40 CFR 60.4335(b)(1)]

65. CEMS shall continuously measure and record the parameters required in the condition above for both the CTG/HRSG exhaust and the feedstock dryer exhaust. [District Rules 1080, 2201, and 4703 and 40 CFR 60.4335(b)(1)]

66. The CEMS shall complete a minimum of one cycle of operation (sampling, analyzing, and data recording) for each successive 15-minute period or shall meet equivalent specifications established by mutual agreement of the District, the ARB and the EPA. [District Rule 1080 and 40 CFR 60.4345(b)]

67. The NOx, CO and O2 CEMS shall meet the requirements in 40 CFR 60, Appendix F Procedure 1 and Part 60, Appendix B Performance Specification 2 (PS 2), or shall meet equivalent specifications established by mutual agreement of the District, the ARB, and the EPA. [District Rule 1080 and 40 CFR 60.4345(a)]

68. Audits of continuous emission monitors shall be conducted quarterly, except during quarters in which relative accuracy and total accuracy testing is performed, in accordance with EPA guidelines. The District shall be notified prior to completion of the audits. Audit reports shall be submitted along with quarterly compliance reports to the District. [District Rule 1080]

69. The owner/operator shall perform a relative accuracy test audit (RATA) for the NOx, CO, and O2 CEMs as specified by 40 CFR Part 60, Appendix F, 5.11, at least once every four calendar quarters. The permittee shall comply with the applicable requirements for quality assurance testing and maintenance of the continuous emission monitor equipment in accordance with the procedures and guidance specified in 40 CFR Part 60, Appendix F. [District Rule 1080]

70. Results of the CEM system shall be averaged over a one hour period for NOx emissions and a three hour period for CO emissions using consecutive 15-minute sampling periods in accordance with all applicable requirements of CFR 60.13. [District Rule 4703 and 40 CFR 60.13]

71. Excess emissions shall be defined as any operating hour in which the 4-hour or 30-day rolling average NOx concentration exceeds applicable emissions limit and a period of monitor downtime shall be any unit operating hour in which sufficient data are not obtained to validate the hour for either NOx or O2 (or both). [40 CFR 60.4380(b)(1)]

72. Results of continuous emissions monitoring shall be reduced according to the procedure established in 40 CFR, Part 51, Appendix P, paragraphs 5.0 through 5.3.3, or by other methods deemed equivalent by mutual agreement with the District, the ARB, and the EPA. [District Rule 1080]

73. The permittee shall install and maintain equipment, facilities, and systems compatible with the District's CEM data polling software system and shall make CEM data available to the District's automated polling system on a daily basis. [District Rule 1080]

74. Upon notice by the District that the facility's CEM system is not providing polling data, the facility may continue to operate without providing automated data for a maximum of 30 days per calendar year provided the CEM data is sent to the District by a District-approved alternative method. [District Rule 1080]

75. The owner or operator shall, upon written notice from the APCO, provide a summary of the data obtained from the CEM systems. This summary shall be in the form and the manner prescribed by the APCO. [District Rule 1080]

76. The owner or operator shall submit a written report of CEM operations for each calendar quarter to the APCO. The report is due on the 30th day following the end of the calendar quarter and shall include the following: Time intervals, data and magnitude of excess NOx emissions, nature and the cause of excess (if known), corrective actions taken and preventative measures adopted; Averaging period used for data reporting corresponding to the averaging period specified in the emission test period and used to determine compliance with an emissions standard; Applicable time and date of each period during which the CEM was inoperative (monitor downtime), except for zero and span checks, and the nature of system repairs and adjustments; A negative declaration when no excess emissions occurred. [District Rule 1080 and 40 CFR 60.4375(a) and 60.4395]

77. APCO or an authorized representative shall be allowed to inspect, as determined to be necessary, the required monitoring devices to ensure that such devices are functioning properly. [District Rule 1080]

78. Permittee shall notify the District of any breakdown condition as soon as reasonably possible, but no later than one hour after its detection, unless the owner or operator

demonstrates to the District's satisfaction that the longer reporting period was necessary. [District Rule 1100, 6.1]

79. The District shall be notified in writing within ten days following the correction of any breakdown condition. The breakdown notification shall include a description of the equipment malfunction or failure, the date and cause of the initial failure, the estimated emissions in excess of those allowed, and the methods utilized to restore normal operations. [District Rule 1100, 7.0]

80. When operating the turbine on hydrogen-rich fuel, no less than 90 percent (by weight) of the pre-combustion carbon in the gasified fuel stream shall be removed. [District Rule 2410]

81. Sampling ports adequate for extraction of grab samples and measurement of gas flow rate shall be provided for both the influent and the effluent gas streams of the acid gas removal unit. [District Rules 1081 and 2410]

82. Operator shall monitor the syngas flow rate and the CO, CO2, and CH4 concentration in the gas upstream and downstream of the acid gas removal (AGR) unit using laboratory sample analysis at least once every month. [District Rules 1081 and 2410]

83. Compliance with the 90 percent (by weight) reduction in the pre-combustion carbon content in the gasified fuel stream shall be demonstrated by the results of the laboratory sample analysis and flow rates once every month. [District Rules 1081 and 2410]

84. The permittee shall maintain records of the CO, CO2, and CH4 concentration upstream and downstream of the AGR unit, the syngas flow rate, and the carbon capture percentage captured. [District Rule 2410]

85. Except as noted below, removed pre-combustion CO2 stream shall be transported and sequestered to Occidental of Elk Hills (OEHI) in compliance with the latest OEHI CO2 Project Monitoring, Reporting and Verification (MRV) Plan that has been approved by California Department of Oil, Gas and Geothermal Resource. Venting of the CO2 stream shall only be allowed when compression and transportation system is unavailable or CO2 delivery system is unavailable due to cold gasification block startup, CO2 compressor unplanned outage, CO2 pipeline unplanned outage, or CO2 off-taker unable to accept. Such venting shall not exceed 504 hours per rolling 12-month period. [District Rule 2410]

86. The permittee shall demonstrate compliance with the emission performance standard of 400 lb/MWh using the calculation methodology established by SB 1368 (Greenhouse Gases Emission Performance Standard) for each calendar month. The permittee shall calculate the facility's emission performance value and maintain records of this value. [District Rule 2410]

87. CO2e emissions from entire stationary source (S-7616) shall not exceed 595,917 tons per calendar year. The permittee shall calculate the CO2e emissions for each calendar month and shall maintain such records onsite for District review. [District Rule 2410]

88. The circuit breakers at the facility shall be enclosed-pressure SF5 circuit breakers with a leak detection system that consists of a density alarm that provides a warning prior to a total of 10 percent of the SF6 (by weight) of the circuit breakers has escaped. Within 30 days of the alarm, circuit breakers shall be replaced or the leak shall be repaired to prevent further release of the gas. [District Rule 2410]

89. The permittee shall maintain the following records: date and time, duration, and type of any startup, shutdown, or malfunction; performance testing, evaluations, calibrations, checks, adjustments, any period during which a continuous monitoring system or monitoring device was inoperative, and maintenance of any continuous emission monitor. [District Rules 2201 and 4703]

90. The permittee shall maintain the following records: quarterly hours of operation, fuel consumption (scf/hr and scf/rolling twelve month period), continuous emission monitor measurements, calculated ammonia slip, and calculated NOx mass emission rates (lb/hr and lb/twelve month rolling period). [District Rules 2201 and 4703]

91. All records shall be maintained and retained on-site for a period of at least 5 years and shall be made available for District inspection upon request. [District Rules 1070, 2201, and 4703]

92. {3433} Disturbances of soil related to any construction, demolition, excavation, extraction, or other earthmoving activities shall comply with the requirements for fugitive dust control in District Rule 8021 unless specifically exempted under Section 4.0 of Rule 8021 or Rule 8011. [District Rules 8011 and 8021]

93. {3434} An owner/operator shall submit a Dust Control Plan to the APCO prior to the start of any construction activity on any site that will include 10 acres or more of disturbed surface area for residential developments, or 5 acres or more of disturbed surface area for non-residential development, or will include moving, depositing, or relocating more than 2,500 cubic yards per day of bulk materials on at least three days. [District Rules 8011 and 8021]

94. {3435} An owner/operator shall prevent or cleanup any carryout or trackout in accordance with the requirements of District Rule 8041 Section 5.0, unless specifically exempted under Section 4.0 of Rule 8041 (8/19/04) or Rule 8011(8/19/04). [District Rules 8011 and 8021]

95. {3436} Whenever open areas are disturbed, or vehicles are used in open areas, the facility shall comply with the requirements of Section 5.0 of District Rule 8051, unless specifically exempted under Section 4.0 of Rule 8051 or Rule 8011. [District Rules 8011 and 8051]

96. {3437} Any paved road or unpaved road shall comply with the requirements of District Rule 8061 unless specifically exempted under Section 4.0 of Rule 8061 or Rule 8011. [District Rules 8011 and 8061]

97. {3438} Water, gravel, roadmix, or chemical/organic dust stabilizers/suppressants, vegetative materials, or other District-approved control measure shall be applied to unpaved vehicle travel areas as required to limit Visible Dust Emissions to 20% opacity and comply with the requirements for a stabilized unpaved road as defined in Section 3.59 of District Rule 8011. [District Rule 8011 and 8071]

98. {3439} Where dusting materials are allowed to accumulate on paved surfaces, the accumulation shall be removed daily or water and/or chemical/organic dust stabilizers/suppressants shall be applied to the paved surface as required to maintain continuous compliance with the requirements for a stabilized unpaved road as defined in Section 3.59 of District Rule 8011 and limit Visible Dust Emissions (VDE) to 20% opacity. [District Rule 8011 and 8071]

99. {3440} On each day that 50 or more Vehicle Daily Trips or 25 or more Vehicle Daily Trips with 3 axles or more will occur on an unpaved vehicle/equipment traffic area, permittee shall apply water, gravel, roadmix, or chemical/organic dust stabilizers/suppressants, vegetative materials, or other District-approved control measure as required to limit Visible Dust Emissions to 20% opacity and comply with the requirements for a stabilized unpaved road as defined in Section 3.59 of District Rule 8011. [District Rule 8011 and 8071]

100. {3441} Whenever any portion of the site becomes inactive, Permittee shall restrict access and periodically stabilize any disturbed surface to comply with the conditions for a stabilized surface as defined in Section 3.58 of District Rule 8011. [District Rules 8011 and 8071]

101. {3442} Records and other supporting documentation shall be maintained as required to demonstrate compliance with the requirements of the rules under Regulation VIII only for those days that a control measure was implemented. Such records shall include the type of control measure(s) used, the location and extent of coverage, and the date, amount, and frequency of application of dust suppressant, manufacturer's dust suppressant product information sheet that identifies the name of the dust suppressant and application instructions. Records shall be kept for one year following project completion that results in the termination of all dust generating activities. [District Rules 8011, 8031, and 8071]

S-7616-27-0

MULTI-CELL MECHANICAL-DRAFT COOLING TOWER WITH HIGH-EFFICIENCY DRIFT ELIMINATORS, SERVING GASIFICATION BLOCK AND PROCESS UNITS

1. Prior to the District's issuance of a Final Determination of Compliance, the District and HECA shall enter into a mitigation agreement that fully mitigates the indirect emissions associated with construction and operation of the HECA facility, as determined appropriate and necessary by the District to comply with Rule 9110 and 40 CFR Part 93 Subpart B requirements, and feasible mitigation requirements under CEQA. [Rule 9110, 40 CFR Part 93 Subpart B, and Public Resources Code 21000-21177: California Environmental Quality Act]

2. The permittee shall enter into an Air Quality Mitigation Settlement Agreement with the District prior to issuance of the Final Determination of Compliance, or such other time that is mutually agreeable. [Rule 9110, 40 CFR Part 93 Subpart B, and Public Resources Code 21000-21177: California Environmental Quality Act]

3. Permittee shall submit an application to comply with Rule 2520 - Federally Mandated Operating Permits within twelve months of commencing operation. [District Rule 2520]

4. Permittee shall submit an application to comply with Rule 2540 - Acid Rain Program within twelve months of commencing operation. [District Rule 2540]

5. Prior to initial operation of S-7616-17, -18, -19, -20, -22, -23, -25, -26, -27, -28, -29, -30, -31, -32, -33, -34, -36, -37, -38, -39, and -40, permittee shall provide PM10/PM2.5 emission reduction credits for the following quantity of emissions: 1st quarter: 39,538 lb, 2nd quarter: 39,538 lb, 3rd quarter: 39,538 lb, and 4th quarter: 39,538 lb. Offsets shall be provided at the applicable offset ratio specified in Table 4-2 of Rule 2201 (as amended 4/21/11). SOx ERCs may be used to offset PM10/PM2.5 increases at an interpollutant ratio of 1.0 lb-SOx: 1.0 lb-PM10. [District Rule 2201]

6. ERC certificate numbers C-1058-2, C-1058-5, S-3275-5, S-3273-2, S-3305-1, S-3557-1, and/or S-3605-1 (or a certificate split from these certificates) shall be used to supply the required offsets, unless a revised offsetting proposal is received and approved by the District, upon which this Determination of Compliance shall be reissued, administratively specifying the new offsetting proposal. Original public noticing requirements, if any, shall be duplicated prior to reissuance of this Determination of Compliance. [District Rule 2201]

7. Permittee shall submit cooling tower design details including the cooling tower type, drift eliminator design details, and materials of construction to the District at least 90 days before the tower is operated. [District Rule 7012]

8. {98} No air contaminant shall be released into the atmosphere which causes a public nuisance. [District Rule 4102]

9. {271} All equipment shall be maintained in good operating condition and shall be operated in a manner to minimize emissions of air contaminants into the atmosphere. [District Rule 2201]

10. {15} No air contaminant shall be discharged into the atmosphere for a period or periods aggregating more than three minutes in any one hour which is as dark as, or darker than, Ringelmann 1 or 20% opacity. [District Rule 4101]

11. {14} Particulate matter emissions shall not exceed 0.1 grains/dscf in concentration. [District Rule 4201]

12. No hexavalent chromium containing compounds shall be added to cooling tower circulating water. [District Rule 7012]

13. Drift eliminator drift rate shall not exceed 0.0005%. [District Rule 2201]

14. Total dissolved solids (TDS) in circulating water shall not exceed 9,000 mg/liter. [District Rule 2201]

15. Compliance with TDS limit shall be determined by cooling water sample analysis by independent laboratory within 60 days of initial operation and quarterly thereafter. [District Rule 1081]

16. Cooling tower circulation water flow rate shall not exceed 162,582 gallons per minute nor 81.1 billion gallons per calendar year. [District Rule 2201]

17. A non-resettable, totalizing mass or volumetric flow meter to measure circulation water flow rate shall be installed, utilized and maintained. [District Rule 2201]

18. PM10 emission rate from the cooling tower shall not exceed 87.9 lb/day. [District Rule 2201]

19. Compliance with the PM10 daily emission limit shall be demonstrated as follows: PM10 lb/day = circulating water recirculation rate x total dissolved solids concentration in the circulating water x manufacturer's design drift rate. [District Rule 2201]

20. Records of the cooling tower circulating water flow rate and cooling tower water TDS shall be kept at the facility and made readily available for District inspection upon request for 5 years. [District Rule 1070]

21. {3433} Disturbances of soil related to any construction, demolition, excavation, extraction, or other earthmoving activities shall comply with the requirements for fugitive dust control in District Rule 8021 unless specifically exempted under Section 4.0 of Rule 8021 or Rule 8011. [District Rules 8011 and 8021]

22. {3434} An owner/operator shall submit a Dust Control Plan to the APCO prior to the start of any construction activity on any site that will include 10 acres or more of disturbed

surface area for residential developments, or 5 acres or more of disturbed surface area for non-residential development, or will include moving, depositing, or relocating more than 2,500 cubic yards per day of bulk materials on at least three days. [District Rules 8011 and 8021]

23. {3435} An owner/operator shall prevent or cleanup any carryout or trackout in accordance with the requirements of District Rule 8041 Section 5.0, unless specifically exempted under Section 4.0 of Rule 8041 (8/19/04) or Rule 8011(8/19/04). [District Rules 8011 and 8021]

24. {3436} Whenever open areas are disturbed, or vehicles are used in open areas, the facility shall comply with the requirements of Section 5.0 of District Rule 8051, unless specifically exempted under Section 4.0 of Rule 8051 or Rule 8011. [District Rules 8011 and 8051]

25. {3437} Any paved road or unpaved road shall comply with the requirements of District Rule 8061 unless specifically exempted under Section 4.0 of Rule 8061 or Rule 8011. [District Rules 8011 and 8061]

26. {3438} Water, gravel, roadmix, or chemical/organic dust stabilizers/suppressants, vegetative materials, or other District-approved control measure shall be applied to unpaved vehicle travel areas as required to limit Visible Dust Emissions to 20% opacity and comply with the requirements for a stabilized unpaved road as defined in Section 3.59 of District Rule 8011. [District Rule 8011 and 8071]

27. {3439} Where dusting materials are allowed to accumulate on paved surfaces, the accumulation shall be removed daily or water and/or chemical/organic dust stabilizers/suppressants shall be applied to the paved surface as required to maintain continuous compliance with the requirements for a stabilized unpaved road as defined in Section 3.59 of District Rule 8011 and limit Visible Dust Emissions (VDE) to 20% opacity. [District Rule 8011 and 8071]

28. {3440} On each day that 50 or more Vehicle Daily Trips or 25 or more Vehicle Daily Trips with 3 axles or more will occur on an unpaved vehicle/equipment traffic area, permittee shall apply water, gravel, roadmix, or chemical/organic dust stabilizers/suppressants, vegetative materials, or other District-approved control measure as required to limit Visible Dust Emissions to 20% opacity and comply with the requirements for a stabilized unpaved road as defined in Section 3.59 of District Rule 8011. [District Rule 8011 and 8071]

29. {3441} Whenever any portion of the site becomes inactive, Permittee shall restrict access and periodically stabilize any disturbed surface to comply with the conditions for a stabilized surface as defined in Section 3.58 of District Rule 8011. [District Rules 8011 and 8071]

30. {3442} Records and other supporting documentation shall be maintained as required to demonstrate compliance with the requirements of the rules under Regulation VIII only for

those days that a control measure was implemented. Such records shall include the type of control measure(s) used, the location and extent of coverage, and the date, amount, and frequency of application of dust suppressant, manufacturer's dust suppressant product information sheet that identifies the name of the dust suppressant and application instructions. Records shall be kept for one year following project completion that results in the termination of all dust generating activities. [District Rules 8011, 8031, and 8071]

S-7616-28-0

MULTI-CELL MECHANICAL-DRAFT COOLING TOWER WITH HIGH-EFFICIENCY DRIFT ELIMINATORS, SERVING AIR SEPARATION UNIT

1. Prior to the District's issuance of a Final Determination of Compliance, the District and HECA shall enter into a mitigation agreement that fully mitigates the indirect emissions associated with construction and operation of the HECA facility, as determined appropriate and necessary by the District to comply with Rule 9110 and 40 CFR Part 93 Subpart B requirements, and feasible mitigation requirements under CEQA. [Rule 9110, 40 CFR Part 93 Subpart B, and Public Resources Code 21000-21177: California Environmental Quality Act]

2. The permittee shall enter into an Air Quality Mitigation Settlement Agreement with the District prior to issuance of the Final Determination of Compliance, or such other time that is mutually agreeable. [Rule 9110, 40 CFR Part 93 Subpart B, and Public Resources Code 21000-21177: California Environmental Quality Act]

3. Permittee shall submit an application to comply with Rule 2520 - Federally Mandated Operating Permits within twelve months of commencing operation. [District Rule 2520]

4. Permittee shall submit an application to comply with Rule 2540 - Acid Rain Program within twelve months of commencing operation. [District Rule 2540]

5. Prior to initial operation of S-7616-17, -18, -19, -20, -22, -23, -25, -26, -27, -28, -29, -30, -31, -32, -33, -34, -36, -37, -38, -39, and -40, permittee shall provide PM10/PM2.5 emission reduction credits for the following quantity of emissions: 1st quarter: 39,538 lb, 2nd quarter: 39,538 lb, 3rd quarter: 39,538 lb, and 4th quarter: 39,538 lb. Offsets shall be provided at the applicable offset ratio specified in Table 4-2 of Rule 2201 (as amended 4/21/11). SOx ERCs may be used to offset PM10/PM2.5 increases at an interpollutant ratio of 1.0 lb-SOx: 1.0 lb-PM10. [District Rule 2201]

6. ERC certificate numbers C-1058-2, C-1058-5, S-3275-5, S-3273-2, S-3305-1, S-3557-1, and/or S-3605-1 (or a certificate split from these certificates) shall be used to supply the required offsets, unless a revised offsetting proposal is received and approved by the District, upon which this Determination of Compliance shall be reissued, administratively specifying the new offsetting proposal. Original public noticing requirements, if any, shall be duplicated prior to reissuance of this Determination of Compliance. [District Rule 2201]

7. Permittee shall submit cooling tower design details including the cooling tower type, drift eliminator design details, and materials of construction to the District at least 90 days before the tower is operated. [District Rule 7012]

8. {98} No air contaminant shall be released into the atmosphere which causes a public nuisance. [District Rule 4102]

9. {271} All equipment shall be maintained in good operating condition and shall be operated in a manner to minimize emissions of air contaminants into the atmosphere. [District Rule 2201]

10. {15} No air contaminant shall be discharged into the atmosphere for a period or periods aggregating more than three minutes in any one hour which is as dark as, or darker than, Ringelmann 1 or 20% opacity. [District Rule 4101]

11. {14} Particulate matter emissions shall not exceed 0.1 grains/dscf in concentration. [District Rule 4201]

12. No hexavalent chromium containing compounds shall be added to cooling tower circulating water. [District Rule 7012]

13. Drift eliminator drift rate shall not exceed 0.0005%. [District Rule 2201]

14. Total dissolved solids (TDS) in circulating water shall not exceed 2,000 mg/liter. [District Rule 2201]

15. Compliance with TDS limit shall be determined by cooling water sample analysis by independent laboratory within 60 days of initial operation and quarterly thereafter. [District Rule 1081]

16. Cooling tower circulation water flow rate shall not exceed 44,876 gallons per minute nor 22.40 billion gallons per calendar year. [District Rule 2201]

17. A non-resettable, totalizing mass or volumetric flow meter to measure circulation water flow rate shall be installed, utilized and maintained. [District Rule 2201]

18. PM10 emission rate from the cooling tower shall not exceed 8.1 lb/day. [District Rule 2201]

19. Compliance with the PM10 daily emission limit shall be demonstrated as follows: PM10 lb/day = circulating water recirculation rate x total dissolved solids concentration in the circulating water x manufacturer's design drift rate. [District Rule 2201]

20. Records of the cooling tower circulating water flow rate and cooling tower water TDS shall be kept at the facility and made readily available for District inspection upon request for 5 years. [District Rule 1070]

21. {3433} Disturbances of soil related to any construction, demolition, excavation, extraction, or other earthmoving activities shall comply with the requirements for fugitive dust control in District Rule 8021 unless specifically exempted under Section 4.0 of Rule 8021 or Rule 8011. [District Rules 8011 and 8021]

22. {3434} An owner/operator shall submit a Dust Control Plan to the APCO prior to the start of any construction activity on any site that will include 10 acres or more of disturbed

surface area for residential developments, or 5 acres or more of disturbed surface area for non-residential development, or will include moving, depositing, or relocating more than 2,500 cubic yards per day of bulk materials on at least three days. [District Rules 8011 and 8021]

23. {3435} An owner/operator shall prevent or cleanup any carryout or trackout in accordance with the requirements of District Rule 8041 Section 5.0, unless specifically exempted under Section 4.0 of Rule 8041 (8/19/04) or Rule 8011(8/19/04). [District Rules 8011 and 8021]

24. {3436} Whenever open areas are disturbed, or vehicles are used in open areas, the facility shall comply with the requirements of Section 5.0 of District Rule 8051, unless specifically exempted under Section 4.0 of Rule 8051 or Rule 8011. [District Rules 8011 and 8051]

25. {3437} Any paved road or unpaved road shall comply with the requirements of District Rule 8061 unless specifically exempted under Section 4.0 of Rule 8061 or Rule 8011. [District Rules 8011 and 8061]

26. {3438} Water, gravel, roadmix, or chemical/organic dust stabilizers/suppressants, vegetative materials, or other District-approved control measure shall be applied to unpaved vehicle travel areas as required to limit Visible Dust Emissions to 20% opacity and comply with the requirements for a stabilized unpaved road as defined in Section 3.59 of District Rule 8011. [District Rule 8011 and 8071]

27. {3439} Where dusting materials are allowed to accumulate on paved surfaces, the accumulation shall be removed daily or water and/or chemical/organic dust stabilizers/suppressants shall be applied to the paved surface as required to maintain continuous compliance with the requirements for a stabilized unpaved road as defined in Section 3.59 of District Rule 8011 and limit Visible Dust Emissions (VDE) to 20% opacity. [District Rule 8011 and 8071]

28. {3440} On each day that 50 or more Vehicle Daily Trips or 25 or more Vehicle Daily Trips with 3 axles or more will occur on an unpaved vehicle/equipment traffic area, permittee shall apply water, gravel, roadmix, or chemical/organic dust stabilizers/suppressants, vegetative materials, or other District-approved control measure as required to limit Visible Dust Emissions to 20% opacity and comply with the requirements for a stabilized unpaved road as defined in Section 3.59 of District Rule 8011. [District Rule 8011 and 8071]

29. {3441} Whenever any portion of the site becomes inactive, Permittee shall restrict access and periodically stabilize any disturbed surface to comply with the conditions for a stabilized surface as defined in Section 3.58 of District Rule 8011. [District Rules 8011 and 8071]

30. {3442} Records and other supporting documentation shall be maintained as required to demonstrate compliance with the requirements of the rules under Regulation VIII only for

those days that a control measure was implemented. Such records shall include the type of control measure(s) used, the location and extent of coverage, and the date, amount, and frequency of application of dust suppressant, manufacturer's dust suppressant product information sheet that identifies the name of the dust suppressant and application instructions. Records shall be kept for one year following project completion that results in the termination of all dust generating activities. [District Rules 8011, 8031, and 8071]

S-7616-29-0

MULTI-CELL MECHANICAL-DRAFT COOLING TOWER WITH HIGH-EFFICIENCY DRIFT ELIMINATORS, SERVING POWER BLOCK

1. Prior to the District's issuance of a Final Determination of Compliance, the District and HECA shall enter into a mitigation agreement that fully mitigates the indirect emissions associated with construction and operation of the HECA facility, as determined appropriate and necessary by the District to comply with Rule 9110 and 40 CFR Part 93 Subpart B requirements, and feasible mitigation requirements under CEQA. [Rule 9110, 40 CFR Part 93 Subpart B, and Public Resources Code 21000-21177: California Environmental Quality Act]

2. The permittee shall enter into an Air Quality Mitigation Settlement Agreement with the District prior to issuance of the Final Determination of Compliance, or such other time that is mutually agreeable. [Rule 9110, 40 CFR Part 93 Subpart B, and Public Resources Code 21000-21177: California Environmental Quality Act]

3. Permittee shall submit an application to comply with Rule 2520 - Federally Mandated Operating Permits within twelve months of commencing operation. [District Rule 2520]

4. Permittee shall submit an application to comply with Rule 2540 - Acid Rain Program within twelve months of commencing operation. [District Rule 2540]

5. Prior to initial operation of S-7616-17, -18, -19, -20, -22, -23, -25, -26, -27, -28, -29, -30, -31, -32, -33, -34, -36, -37, -38, -39, and -40, permittee shall provide PM10/PM2.5 emission reduction credits for the following quantity of emissions: 1st quarter: 39,538 lb, 2nd quarter: 39,538 lb, 3rd quarter: 39,538 lb, and 4th quarter: 39,538 lb. Offsets shall be provided at the applicable offset ratio specified in Table 4-2 of Rule 2201 (as amended 4/21/11). SOx ERCs may be used to offset PM10/PM2.5 increases at an interpollutant ratio of 1.0 lb-SOx: 1.0 lb-PM10. [District Rule 2201]

6. ERC certificate numbers C-1058-2, C-1058-5, S-3275-5, S-3273-2, S-3305-1, S-3557-1, and/or S-3605-1 (or a certificate split from these certificates) shall be used to supply the required offsets, unless a revised offsetting proposal is received and approved by the District, upon which this Determination of Compliance shall be reissued, administratively specifying the new offsetting proposal. Original public noticing requirements, if any, shall be duplicated prior to reissuance of this Determination of Compliance. [District Rule 2201]

7. Permittee shall submit cooling tower design details including the cooling tower type, drift eliminator design details, and materials of construction to the District at least 90 days before the tower is operated. [District Rule 7012]

8. {98} No air contaminant shall be released into the atmosphere which causes a public nuisance. [District Rule 4102]

9. {271} All equipment shall be maintained in good operating condition and shall be operated in a manner to minimize emissions of air contaminants into the atmosphere. [District Rule 2201]

10. {15} No air contaminant shall be discharged into the atmosphere for a period or periods aggregating more than three minutes in any one hour which is as dark as, or darker than, Ringelmann 1 or 20% opacity. [District Rule 4101]

11. {14} Particulate matter emissions shall not exceed 0.1 grains/dscf in concentration. [District Rule 4201]

12. No hexavalent chromium containing compounds shall be added to cooling tower circulating water. [District Rule 7012]

13. Drift eliminator drift rate shall not exceed 0.0005%. [District Rule 2201]

14. Total dissolved solids (TDS) in circulating water shall not exceed 9,000 mg/liter. [District Rule 2201]

15. Compliance with TDS limit shall be determined by cooling water sample analysis by independent laboratory within 60 days of initial operation and quarterly thereafter. [District Rule 1081]

16. Cooling tower circulation water flow rate shall not exceed 95,000 gallons per minute nor 49.41 billion gallons per calendar year. [District Rule 2201]

17. A non-resettable, totalizing mass or volumetric flow meter to measure circulation water flow rate shall be installed, utilized and maintained. [District Rule 2201]

18. PM10 emission rate from the cooling tower shall not exceed 51.6 lb/day. [District Rule 2201]

19. Compliance with the PM10 daily emission limit shall be demonstrated as follows: PM10 lb/day = circulating water recirculation rate x total dissolved solids concentration in the circulating water x manufacturer's design drift rate. [District Rule 2201]

20. Records of the cooling tower circulating water flow rate and cooling tower water TDS shall be kept at the facility and made readily available for District inspection upon request for 5 years. [District Rule 1070]

21. {3433} Disturbances of soil related to any construction, demolition, excavation, extraction, or other earthmoving activities shall comply with the requirements for fugitive dust control in District Rule 8021 unless specifically exempted under Section 4.0 of Rule 8021 or Rule 8011. [District Rules 8011 and 8021]

22. {3434} An owner/operator shall submit a Dust Control Plan to the APCO prior to the start of any construction activity on any site that will include 10 acres or more of disturbed

surface area for residential developments, or 5 acres or more of disturbed surface area for non-residential development, or will include moving, depositing, or relocating more than 2,500 cubic yards per day of bulk materials on at least three days. [District Rules 8011 and 8021]

23. {3435} An owner/operator shall prevent or cleanup any carryout or trackout in accordance with the requirements of District Rule 8041 Section 5.0, unless specifically exempted under Section 4.0 of Rule 8041 (8/19/04) or Rule 8011(8/19/04). [District Rules 8011 and 8021]

24. {3436} Whenever open areas are disturbed, or vehicles are used in open areas, the facility shall comply with the requirements of Section 5.0 of District Rule 8051, unless specifically exempted under Section 4.0 of Rule 8051 or Rule 8011. [District Rules 8011 and 8051]

25. {3437} Any paved road or unpaved road shall comply with the requirements of District Rule 8061 unless specifically exempted under Section 4.0 of Rule 8061 or Rule 8011. [District Rules 8011 and 8061]

26. {3438} Water, gravel, roadmix, or chemical/organic dust stabilizers/suppressants, vegetative materials, or other District-approved control measure shall be applied to unpaved vehicle travel areas as required to limit Visible Dust Emissions to 20% opacity and comply with the requirements for a stabilized unpaved road as defined in Section 3.59 of District Rule 8011. [District Rule 8011 and 8071]

27. {3439} Where dusting materials are allowed to accumulate on paved surfaces, the accumulation shall be removed daily or water and/or chemical/organic dust stabilizers/suppressants shall be applied to the paved surface as required to maintain continuous compliance with the requirements for a stabilized unpaved road as defined in Section 3.59 of District Rule 8011 and limit Visible Dust Emissions (VDE) to 20% opacity. [District Rule 8011 and 8071]

28. {3440} On each day that 50 or more Vehicle Daily Trips or 25 or more Vehicle Daily Trips with 3 axles or more will occur on an unpaved vehicle/equipment traffic area, permittee shall apply water, gravel, roadmix, or chemical/organic dust stabilizers/suppressants, vegetative materials, or other District-approved control measure as required to limit Visible Dust Emissions to 20% opacity and comply with the requirements for a stabilized unpaved road as defined in Section 3.59 of District Rule 8011. [District Rule 8011 and 8071]

29. {3441} Whenever any portion of the site becomes inactive, Permittee shall restrict access and periodically stabilize any disturbed surface to comply with the conditions for a stabilized surface as defined in Section 3.58 of District Rule 8011. [District Rules 8011 and 8071]

30. {3442} Records and other supporting documentation shall be maintained as required to demonstrate compliance with the requirements of the rules under Regulation VIII only for

those days that a control measure was implemented. Such records shall include the type of control measure(s) used, the location and extent of coverage, and the date, amount, and frequency of application of dust suppressant, manufacturer's dust suppressant product information sheet that identifies the name of the dust suppressant and application instructions. Records shall be kept for one year following project completion that results in the termination of all dust generating activities. [District Rules 8011, 8031, and 8071]

S-7616-30-0

4,000 MMBTU/HR ELEVATED FLARE WITH 0.5 MMBTU/HR NATURAL GAS-FIRED PILOT, PRIMARILY SERVING GASIFICATION BLOCK (OR EQUIVALENT)

1. Prior to the District's issuance of a Final Determination of Compliance, the District and HECA shall enter into a mitigation agreement that fully mitigates the indirect emissions associated with construction and operation of the HECA facility, as determined appropriate and necessary by the District to comply with Rule 9110 and 40 CFR Part 93 Subpart B requirements, and feasible mitigation requirements under CEQA. [Rule 9110, 40 CFR Part 93 Subpart B, and Public Resources Code 21000-21177: California Environmental Quality Act]

2. The permittee shall enter into an Air Quality Mitigation Settlement Agreement with the District prior to issuance of the Final Determination of Compliance, or such other time that is mutually agreeable. [Rule 9110, 40 CFR Part 93 Subpart B, and Public Resources Code 21000-21177: California Environmental Quality Act]

3. Permittee shall submit an application to comply with Rule 2520 - Federally Mandated Operating Permits within twelve months of commencing operation. [District Rule 2520]

4. Permittee shall submit an application to comply with Rule 2540 - Acid Rain Program within twelve months of commencing operation. [District Rule 2540]

5. Prior to initial operation of S-7616-23, -25, -26, -30, -31, -32, -33, and -35, permittee shall provide NOx emission reduction credits for the following quantity of emissions: 1st quarter: 74,201 lb, 2nd quarter: 74,201 lb, 3rd quarter: 74,201 lb, and fourth quarter: 74,201 lb. Offsets shall be provided at the applicable offset ratio specified in Table 4-2 of Rule 2201 (as amended 4/21/11). [District Rule 2201]

6. Prior to initial operation of S-7616-17, -18, -19, -20, -22, -23, -25, -26, -27, -28, -29, -30, -31, -32, -33, -34, -36, -37, -38, -39, and -40, permittee shall provide PM10/PM2.5 emission reduction credits for the following quantity of emissions: 1st quarter: 39,538 lb, 2nd quarter: 39,538 lb, 3rd quarter: 39,538 lb, and 4th quarter: 39,538 lb. Offsets shall be provided at the applicable offset ratio specified in Table 4-2 of Rule 2201 (as amended 4/21/11). SOx ERCs may be used to offset PM10/PM2.5 increases at an interpollutant ratio of 1.0 lb-SOx: 1.0 lb-PM10. [District Rule 2201]

7. Prior to initial operation of S-7616-23, -25, -26, -30, -31, -32, and -33, permittee shall provide SOx emission reduction credits for the following quantity of emissions: 1st quarter: 1,170 lb, 2nd quarter: 1,170 lb, 3rd quarter: 1,170 lb, and 4th quarter: 1,170 lb. Offsets shall be provided at the applicable offset ratio specified in Table 4-2 of Rule 2201 (as amended 4/21/11). [District Rule 2201]

8. Prior to initial operation of S-7616-21, -23, -24, -25, -26, -30, -31, -32, and -33, permittee shall provide VOC emission reduction credits for the following quantity of emissions: 1st

quarter: 13,792 lb, 2nd quarter: 13,792 lb, 3rd quarter: 13,792 lb, and 4th quarter: 13,792 lb. Offsets shall be provided at the applicable offset ratio specified in Table 4-2 of Rule 2201 (as amended 4/21/11). [District Rule 2201]

9. ERC certificate numbers C-1058-2, C-1058-5, S-3275-5, S-3273-2, S-3305-1, S-3557-1, and/or S-3605-1 (or a certificate split from these certificates) shall be used to supply the required offsets, unless a revised offsetting proposal is received and approved by the District, upon which this Determination of Compliance shall be reissued, administratively specifying the new offsetting proposal. Original public noticing requirements, if any, shall be duplicated prior to reissuance of this Determination of Compliance. [District Rule 2201]

10. {98} No air contaminant shall be released into the atmosphere which causes a public nuisance. [District Rule 4102]

11. Flare pilot shall be fired solely on PUC-quality natural gas. [District Rules 2201 and 2410]

12. Flare shall be equipped with a non-resettable, totalizing flare gas volume flow meter. [District Rules 2201 and 4311]

13. Flare shall be equipped with control valves and relief valves that will maintain a tight shutoff arrangement where no unintended flow is expected, except during actual flaring events. [District Rule 2201]

14. The outlet shall be equipped with an automatic ignition system or shall operate with a pilot flame present at all times when combustible gases are vented through the flare, except during purge periods for automatic-ignition equipped flares. [District Rule 4311, 5.3]

15. Except for flares equipped with a flow-sensing ignition system, a heat sensing device such as a thermocouple, ultraviolet beam sensor, infrared sensor, or an equivalent device, capable of continuously detecting at least one pilot flame or the flare flame is present shall be installed and operated. Request for determination of an alternate equivalent flame sensing or heat sensing device shall be submitted to the District in writing 30 days prior to installation for District approval. [District Rule 4311, 5.4]

16. Flares using a flow-sensing automatic ignition systems and which do not use a continuous flame pilot shall use purge gas for purging. [District Rule 4311, 5.5]

17. A flame shall be present at all times when combustible gases are vented through the flare. [District Rules 2201, 4311, 5.2]

18. No air contaminant shall be discharged into the atmosphere for a period or periods aggregating more than five minutes in any two hours which is as dark as, or darker than, Ringelmann 1/4 or 5% opacity. [District Rule 4101]

19. Maximum amount of gas combusted in the flare during planned flaring shall not exceed any of the following: 21,936 MMBtu/yr of natural gas (including pilot gas); 9,544 MMBtu/yr of unshifted syngas; 43,434 MMBtu/yr of shifted gas. [District Rules 2201 and 2410]

20. Emissions from the flare, during the non-emergency combustion of natural gas, shall not exceed any of the following (based on total gas combusted): PM10: 0.003 lb/MMBtu; NOx (as NO2): 0.068 lb/MMBtu; VOC: 0.0004 lb/MMBtu; CO: 0.08 lb/MMBtu; or SOx: 0.00214 lb/MMBtu. [District Rule 2201]

21. Emissions from the flare, during the non-emergency combustion of syngas and waste gas, shall not exceed any of the following (based on total gas combusted): PM10: 0.000 lb/MMBtu; NOx (as NO2): 0.068 lb/MMBtu; VOC: 0.000 lb/MMBtu; CO: 2.0 lb/MMBtu on unshifted syngas and 0.37 lb/MMBtu on shifted syngas; or SOx: 0.000 lb/MMBtu. [District Rule 2201]

22. {279} Total sulfur content of natural gas combusted shall not exceed 0.75 grain/100 scf. [District Rule 2201]

23. Emissions from the flare shall not exceed any of the following: NOx: 2,399.0 lb/day; SOx: 18.8 lb/day; PM10: 26.4 lb/day; CO: 20,335.2 lb/day; or VOC: 11.4 lb/day. [District Rule 2201]

24. Other than the planned flaring limited in the condition above, this flare shall be operated solely for emergency situations, which are any situations or conditions arising from a sudden and reasonably unforeseen and unpreventable event beyond the control of the operator. Examples include, but are not limited to, not preventable equipment failure, natural disaster, act of war or terrorism, or external power curtailment, excluding a power curtailment due to an interruptible power service agreement from a utility. A flaring event due to improperly designed equipment, lack of preventative maintenance, careless or improper operation, operator error or willful misconduct does not quality as an emergency. An emergency situation requires immediate corrective action to restore safe operation. A planned flaring event shall not be considered as an emergency. [District Rules 2201 and 4311]

25. A trained observer, as defined in EPA Method 22, shall check visible emissions at least once annually for a period of 15 minutes. If visible emissions are detected at any time during this period, the observation period shall be extended to two hours. A record containing the results of these observations shall be maintained, which also includes company name, process unit, observer's name and affiliation, date, estimated wind speed and direction, sky condition, and the observer's location relative to the source and sun. [District Rule 4311]

26. No less than 90 days prior to installation of the flare, permittee shall submit a flare minimization plan (FMP) that complies with the requirements of Rule 4311 Section 6.5 to the APCO for approval. [District Rules 4311, 6.5 and 2410]

27. Records of the duration of flare operation, amount of gas burned, and the nature of the emergency situation for flare used during an emergency situation shall be made readily available to the APCO, ARB, and EPA upon request for a minimum of 5 years. [District Rule 4311, 6.1]

28. Copies of approved flare minimization plan pursuant to Rule 4311 Section 6.5 shall be made readily available to the APCO, ARB, and EPA upon request for a minimum of 5 years. [District Rule 4311, 6.1]

29. Flare gas pressure shall not be less than 5 psig when incinerating combustible gasses. [District Rule 4311, 5.6]

30. Copies of monitoring data collected pursuant to Rule 4311 Section 5.10 shall be made readily available to the APCO, ARB, and EPA upon request for a minimum of 5 years. [District Rule 4311, 6.1]

31. The operator shall notify the APCO of an unplanned flaring event within 24 hours after the start of the next business day or within 24 hours of their discovery, whichever occurs first. The notification shall include the flare source identification, the start date and time, and the end date and time. [District Rule 4311, 6.2]

32. The operator of a flare subject to flare minimization plans pursuant to Section 5.8 shall submit an annual report to the APCO that summarizes all Reportable Flaring Events as defined in Rule 4311 Section 3.0 that occurred during the previous 12 month period. The report shall be submitted within 30 days following the end of the twelve month period of the previous year. [District Rule 4311, 6.2]

33. The operator of a flare subject to flare monitoring requirements pursuant to Sections 5.10, 6.6, 6.7, 6.8, 6.9, and 6.10, as appropriate, shall submit an annual report to the APCO as specified in Rule 4311 Section 6.2.3 within 30 days following the end of each 12 month period. [District Rule 4311, 6.2]

34. Pursuant to Rule 4311 Section 6.6, the operator shall monitor vent gas composition using one the methods pursuant to Section 6.6.1 through Section 6.6.5 as appropriate. [District Rule 4311, 6.6]

35. The operator shall monitor the volumetric flows of purge and pilot gases with flow measuring devices. [District Rule 4311, 6.7]

36. If the flare is equipped with a water seal, the operator shall monitor and record the water level and pressure of the water seal that services each flare daily. [District Rule 4311, 6.8]

37. Periods of flare monitoring system in operation greater than 24 continuous hours shall be reported by the following working day, followed by notification of resumption of monitoring. Periods of inoperation of monitoring equipment shall not exceed 14 days per any 18-consecutive-month period. Periods of flare monitoring system inoperation do not

include the periods when the system feeding the flare is not operating. [District Rule 4311, 6.9]

38. During periods of inoperation of continuous analyzers or auto-samplers installed pursuant to Section 6.6, operators responsible for monitoring shall take one sample within 30 minutes of the commencement of flaring, from the flare header or from an alternate location at which samples are representative of vent gas composition and have samples analyzed pursuant to Section 6.3.4. During periods of inoperation of flow monitors required by Section 5.10, flow shall be calculated using good engineering practices. [District Rule 4311, 6.9]

39. Operator shall maintain and calibrate all required monitors and recording devices in accordance with the applicable manufacturer's specifications. In order to claim that a manufacturer's specification is not applicable, the person responsible for emissions must have, and follow, a written maintenance policy that was developed for the device in question. The written policy must explain and justify the difference between the written procedure and the manufacturer's procedure. [District Rule 4311, 6.9]

40. All in-line continuous analyzer and flow monitoring data must be continuously recorded by an electronic data acquisition system capable of one-minute averages. Flow monitoring data shall be recorded as one-minute averages. [District Rule 4311, 6.9]

41. The owner or operator shall notify the District of any emergency use of the flare within one hour after confirmation that an actual flaring event has occurred, unless the owner or operator demonstrates to the District's satisfaction that a longer notification period was necessary. However, in the event that confirmation of an actual flaring event cannot be made, then the owner or operator shall notify the District no more than 3 hours after an alarm indicates that a flaring event may have occurred, unless the owner or operator demonstrates to the District's satisfaction that a longer notification period was necessary. [District Rule 1070]

42. The permittee shall report to the District in writing within ten days following the emergency use of the flare. The report shall include 1) a statement that the failure or malfunction has been corrected, the date corrected, and proof of correction; 2) a specific statement of the reason or cause for the occurrence; 3) a description of the corrective measures undertaken and/or to be undertaken to avoid such an occurrence in the future; and 4) an estimate of the emissions caused by the emergency use, specifically including duration of flare operation and amount of gas burned. [District Rules 1070 and 4311]

43. The flare shall be inspected during operation for visible emissions, using EPA Method 22. If visible emissions are observed, corrective action shall be taken. If visible emissions cannot be eliminated, an EPA Method 9 test shall be conducted within 72 hours. [District Rule 2201]

44. The permittee shall keep accurate daily records of the amount of gas combusted in the flare, gas type, reason for flaring, hours of operation, the sulfur content and heat content of the gas combusted. The permittee shall keep these records for a period of at least five

years and shall make such records available for District inspection upon request. [District Rules 2201 and 4311]

45. Permittee shall record the sulfur content and the quantity of gas flared and shall demonstrate compliance with the SOx emission limit. [District Rule 2201]

46. The permittee shall obtain written District approval for the use of any equivalent equipment not specifically approved by this Determination of Compliance. Approval of the equivalent equipment shall be made only after the District's determination that the submitted design and performance of the proposed alternate equipment is equivalent to the specifically authorized equipment. [District Rule 2201]

47. The permittee's request for approval of equivalent equipment shall include the make, model, manufacturer's maximum rating, manufacturer's guaranteed emission rates, equipment drawing(s), and operational characteristics/parameters. [District Rule 2201]

48. Alternate equipment shall be of the same class and category of source as the equipment authorized by the Determination of Compliance. [District Rule 2201]

49. No emission factor and no emission shall be greater for the alternate equipment than for the proposed equipment. No changes in the hours of operation, operating rate, throughput, or firing rate may be authorized for any alternate equipment. [District Rule 2201]

50. The air quality modeled impacts of the proposed alternative equivalent equipment shall not result in any more adverse impacts than the equipment it replaces. [District Rule 2201]

51. {3246} All records shall be maintained and retained on-site for a period of at least 5 years and shall be made available for District inspection upon request. [District Rule 1070]

52. {3433} Disturbances of soil related to any construction, demolition, excavation, extraction, or other earthmoving activities shall comply with the requirements for fugitive dust control in District Rule 8021 unless specifically exempted under Section 4.0 of Rule 8021 or Rule 8011. [District Rules 8011 and 8021]

53. {3434} An owner/operator shall submit a Dust Control Plan to the APCO prior to the start of any construction activity on any site that will include 10 acres or more of disturbed surface area for residential developments, or 5 acres or more of disturbed surface area for non-residential development, or will include moving, depositing, or relocating more than 2,500 cubic yards per day of bulk materials on at least three days. [District Rules 8011 and 8021]

54. {3435} An owner/operator shall prevent or cleanup any carryout or trackout in accordance with the requirements of District Rule 8041 Section 5.0, unless specifically exempted under Section 4.0 of Rule 8041 (8/19/04) or Rule 8011(8/19/04). [District Rules 8011 and 8021]

55. {3436} Whenever open areas are disturbed, or vehicles are used in open areas, the facility shall comply with the requirements of Section 5.0 of District Rule 8051, unless specifically exempted under Section 4.0 of Rule 8051 or Rule 8011. [District Rules 8011 and 8051]

56. {3437} Any paved road or unpaved road shall comply with the requirements of District Rule 8061 unless specifically exempted under Section 4.0 of Rule 8061 or Rule 8011. [District Rules 8011 and 8061]

57. {3438} Water, gravel, roadmix, or chemical/organic dust stabilizers/suppressants, vegetative materials, or other District-approved control measure shall be applied to unpaved vehicle travel areas as required to limit Visible Dust Emissions to 20% opacity and comply with the requirements for a stabilized unpaved road as defined in Section 3.59 of District Rule 8011. [District Rule 8011 and 8071]

58. {3439} Where dusting materials are allowed to accumulate on paved surfaces, the accumulation shall be removed daily or water and/or chemical/organic dust stabilizers/suppressants shall be applied to the paved surface as required to maintain continuous compliance with the requirements for a stabilized unpaved road as defined in Section 3.59 of District Rule 8011 and limit Visible Dust Emissions (VDE) to 20% opacity. [District Rule 8011 and 8071]

59. {3440} On each day that 50 or more Vehicle Daily Trips or 25 or more Vehicle Daily Trips with 3 axles or more will occur on an unpaved vehicle/equipment traffic area, permittee shall apply water, gravel, roadmix, or chemical/organic dust stabilizers/suppressants, vegetative materials, or other District-approved control measure as required to limit Visible Dust Emissions to 20% opacity and comply with the requirements for a stabilized unpaved road as defined in Section 3.59 of District Rule 8011. [District Rule 8011 and 8071]

60. {3441} Whenever any portion of the site becomes inactive, Permittee shall restrict access and periodically stabilize any disturbed surface to comply with the conditions for a stabilized surface as defined in Section 3.58 of District Rule 8011. [District Rules 8011 and 8071]

61. {3442} Records and other supporting documentation shall be maintained as required to demonstrate compliance with the requirements of the rules under Regulation VIII only for those days that a control measure was implemented. Such records shall include the type of control measure(s) used, the location and extent of coverage, and the date, amount, and frequency of application of dust suppressant, manufacturer's dust suppressant product information sheet that identifies the name of the dust suppressant and application instructions. Records shall be kept for one year following project completion that results in the termination of all dust generating activities. [District Rules 8011, 8031, and 8071]

S-7616-31-0

800 MMBTU/HR ELEVATED FLARE WITH 0.3 MMBTU/HR NATURAL GAS FIRED PILOT, PRIMARILY SERVING SULFUR RECOVERY UNIT (OR EQUIVALENT)

1. Prior to the District's issuance of a Final Determination of Compliance, the District and HECA shall enter into a mitigation agreement that fully mitigates the indirect emissions associated with construction and operation of the HECA facility, as determined appropriate and necessary by the District to comply with Rule 9110 and 40 CFR Part 93 Subpart B requirements, and feasible mitigation requirements under CEQA. [Rule 9110, 40 CFR Part 93 Subpart B, and Public Resources Code 21000-21177: California Environmental Quality Act]

2. The permittee shall enter into an Air Quality Mitigation Settlement Agreement with the District prior to issuance of the Final Determination of Compliance, or such other time that is mutually agreeable. [Rule 9110, 40 CFR Part 93 Subpart B, and Public Resources Code 21000-21177: California Environmental Quality Act]

3. Permittee shall submit an application to comply with Rule 2520 - Federally Mandated Operating Permits within twelve months of commencing operation. [District Rule 2520]

4. Permittee shall submit an application to comply with Rule 2540 - Acid Rain Program within twelve months of commencing operation. [District Rule 2540]

5. Prior to initial operation of S-7616-23, -25, -26, -30, -31, -32, -33, and -35, permittee shall provide NOx emission reduction credits for the following quantity of emissions: 1st quarter: 74,201 lb, 2nd quarter: 74,201 lb, 3rd quarter: 74,201 lb, and fourth quarter: 74,201 lb. Offsets shall be provided at the applicable offset ratio specified in Table 4-2 of Rule 2201 (as amended 4/21/11). [District Rule 2201]

6. Prior to initial operation of S-7616-17, -18, -19, -20, -22, -23, -25, -26, -27, -28, -29, -30, -31, -32, -33, -34, -36, -37, -38, -39, and -40, permittee shall provide PM10/PM2.5 emission reduction credits for the following quantity of emissions: 1st quarter: 39,538 lb, 2nd quarter: 39,538 lb, 3rd quarter: 39,538 lb, and 4th quarter: 39,538 lb. Offsets shall be provided at the applicable offset ratio specified in Table 4-2 of Rule 2201 (as amended 4/21/11). SOx ERCs may be used to offset PM10/PM2.5 increases at an interpollutant ratio of 1.0 lb-SOx: 1.0 lb-PM10. [District Rule 2201]

7. Prior to initial operation of S-7616-23, -25, -26, -30, -31, -32, and -33, permittee shall provide SOx emission reduction credits for the following quantity of emissions: 1st quarter: 1,170 lb, 2nd quarter: 1,170 lb, 3rd quarter: 1,170 lb, and 4th quarter: 1,170 lb. Offsets shall be provided at the applicable offset ratio specified in Table 4-2 of Rule 2201 (as amended 4/21/11). [District Rule 2201]

8. Prior to initial operation of S-7616-21, -23, -24, -25, -26, -30, -31, -32, and -33, permittee shall provide VOC emission reduction credits for the following quantity of emissions: 1st

quarter: 13,792 lb, 2nd quarter: 13,792 lb, 3rd quarter: 13,792 lb, and 4th quarter: 13,792 lb. Offsets shall be provided at the applicable offset ratio specified in Table 4-2 of Rule 2201 (as amended 4/21/11). [District Rule 2201]

9. ERC certificate numbers C-1058-2, C-1058-5, S-3275-5, S-3273-2, S-3305-1, S-3557-1, and/or S-3605-1 (or a certificate split from these certificates) shall be used to supply the required offsets, unless a revised offsetting proposal is received and approved by the District, upon which this Determination of Compliance shall be reissued, administratively specifying the new offsetting proposal. Original public noticing requirements, if any, shall be duplicated prior to reissuance of this Determination of Compliance. [District Rule 2201]

10. {98} No air contaminant shall be released into the atmosphere which causes a public nuisance. [District Rule 4102]

11. Flare pilot shall be fired solely on PUC-quality natural gas. [District Rules 2201 and 2410]

12. Flare shall be equipped with a non-resettable, totalizing flare gas volume flow meter. [District Rules 2201 and 4311]

13. Flare shall be equipped with control valves and relief valves that will maintain a tight shutoff arrangement where no unintended flow is expected, except during actual flaring events. [District Rule 2201]

14. The outlet shall be equipped with an automatic ignition system or shall operate with a pilot flame present at all times when combustible gases are vented through the flare, except during purge periods for automatic-ignition equipped flares. [District Rule 4311, 5.3 and 40 CFR 60.18]

15. Except for flares equipped with a flow-sensing ignition system, a heat sensing device such as a thermocouple, ultraviolet beam sensor, infrared sensor, or an equivalent device, capable of continuously detecting at least one pilot flame or the flare flame is present shall be installed and operated. Request for determination of an alternate equivalent flame sensing or heat sensing device shall be submitted to the District in writing 30 days prior to installation for District approval. [District Rule 4311, 5.4 and 40 CFR 60.18]

16. Flares using a flow-sensing automatic ignition systems and which do not use a continuous flame pilot shall use purge gas for purging. [District Rule 4311, 5.5]

17. A flame shall be present at all times when combustible gases are vented through the flare. [District Rules 2201, 4311, 5.2 and 40 CFR 60.18(c)(2)]

18. No air contaminant shall be discharged into the atmosphere for a period or periods aggregating more than five minutes in any two hours which is as dark as, or darker than, Ringelmann 1/4 or 5% opacity. [District Rule 4101 and 40 CFR 60.18]

19. Total time of planned flaring shall not exceed 40 hours per calendar year. [District Rule 2201 and 2410]

20. During planned flaring events, no more than 36 MMBtu/hr shall be combusted. [District Rules 2201 and 2410]

21. Emissions from the flare shall not exceed any of the following (based on total gas combusted): PM10: 0.003 lb/MMBtu; NOx (as NO2): 0.068 lb/MMBtu; VOC: 0.0013 lb/MMBtu; or CO: 0.08 lb/MMBtu. [District Rule 2201]

22. SOx emissions from the flare shall not exceed 0.00214 lb/MMBtu during pilot gas combustion nor 18.4 lb/hr during other non-emergency combustion. [District Rule 2201]

23. {279} Total sulfur content of natural gas combusted shall not exceed 0.75 grain/100 scf. [District Rule 2201]

24. Other than the planned flaring limited in the condition above, this flare shall be operated solely for emergency situations, which are any situations or conditions arising from a sudden and reasonably unforeseen and unpreventable event beyond the control of the operator. Examples include, but are not limited to, not preventable equipment failure, natural disaster, act of war or terrorism, or external power curtailment, excluding a power curtailment due to an interruptible power service agreement from a utility. A flaring event due to improperly designed equipment, lack of preventative maintenance, careless or improper operation, operator error or willful misconduct does not quality as an emergency. An emergency situation requires immediate corrective action to restore safe operation. A planned flaring event shall not be considered as an emergency. [District Rules 2201 and 4311]

25. A trained observer, as defined in EPA Method 22, shall check visible emissions at least once annually for a period of 15 minutes. If visible emissions are detected at any time during this period, the observation period shall be extended to two hours. A record containing the results of these observations shall be maintained, which also includes company name, process unit, observer's name and affiliation, date, estimated wind speed and direction, sky condition, and the observer's location relative to the source and sun. [District Rule 4311]

26. No less than 90 days prior to installation of the flare, permittee shall submit a flare minimization plan (FMP) that complies with the requirements of Rule 4311 Section 6.5 to the APCO for approval. [District Rules 4311, 6.5 and 2410]

27. Records of the duration of flare operation, amount of gas burned, and the nature of the emergency situation for flare used during an emergency situation shall be made readily available to the APCO, ARB, and EPA upon request for a minimum of 5 years. [District Rule 4311, 6.1]

28. Copies of approved flare minimization plan pursuant to Rule 4311 Section 6.5 shall be made readily available to the APCO, ARB, and EPA upon request for a minimum of 5 years. [District Rule 4311, 6.1]

29. Copies of compliance determination pursuant to 40 CFR 60.18 shall be made readily available to the APCO, ARB, and EPA upon request for a minimum of 5 years. [District Rule 4311, 6.1 and 40 CFR 60.18]

30. Copies of monitoring data collected pursuant to Rule 4311 Section 5.10 shall be made readily available to the APCO, ARB, and EPA upon request for a minimum of 5 years. [District Rule 4311, 6.1]

31. The operator shall notify the APCO of an unplanned flaring event within 24 hours after the start of the next business day or within 24 hours of their discovery, whichever occurs first. The notification shall include the flare source identification, the start date and time, and the end date and time. [District Rule 4311, 6.2]

32. The operator of a flare subject to flare minimization plans pursuant to Section 5.8 shall submit an annual report to the APCO that summarizes all Reportable Flaring Events as defined in Rule 4311 Section 3.0 that occurred during the previous 12 month period. The report shall be submitted within 30 days following the end of the twelve month period of the previous year. [District Rule 4311, 6.2]

33. The operator of a flare subject to flare monitoring requirements pursuant to Sections 5.10, 6.6, 6.7, 6.8, 6.9, and 6.10, as appropriate, shall submit an annual report to the APCO as specified in Rule 4311 Section 6.2.3 within 30 days following the end of each 12 month period. [District Rule 4311, 6.2]

34. Pursuant to Rule 4311 Section 6.6, the operator shall monitor vent gas composition using one the methods pursuant to Section 6.6.1 through Section 6.6.5 as appropriate. [District Rule 4311, 6.6]

35. The operator shall monitor the volumetric flows of purge and pilot gases with flow measuring devices. [District Rule 4311, 6.7]

36. If the flare is equipped with a water seal, the operator shall monitor and record the water level and pressure of the water seal that services each flare daily. [District Rule 4311, 6.8]

37. Periods of flare monitoring system in operation greater than 24 continuous hours shall be reported by the following working day, followed by notification of resumption of monitoring. Periods of inoperation of monitoring equipment shall not exceed 14 days per any 18-consecutive-month period. Periods of flare monitoring system inoperation do not include the periods when the system feeding the flare is not operating. [District Rule 4311, 6.9]

38. During periods of inoperation of continuous analyzers or auto-samplers installed pursuant to Section 6.6, operators responsible for monitoring shall take one sample within 30 minutes of the commencement of flaring, from the flare header or from an alternate location at which samples are representative of vent gas composition and have samples analyzed pursuant to Section 6.3.4. During periods of inoperation of flow monitors required by Section 5.10, flow shall be calculated using good engineering practices. [District Rule 4311, 6.9]

39. Operator shall maintain and calibrate all required monitors and recording devices in accordance with the applicable manufacturer's specifications. In order to claim that a manufacturer's specification is not applicable, the person responsible for emissions must have, and follow, a written maintenance policy that was developed for the device in question. The written policy must explain and justify the difference between the written procedure and the manufacturer's procedure. [District Rule 4311, 6.9]

40. All in-line continuous analyzer and flow monitoring data must be continuously recorded by an electronic data acquisition system capable of one-minute averages. Flow monitoring data shall be recorded as one-minute averages. [District Rule 4311, 6.9]

41. The owner or operator shall notify the District of any emergency use of the flare within one hour after confirmation that an actual flaring event has occurred, unless the owner or operator demonstrates to the District's satisfaction that a longer notification period was necessary. However, in the event that confirmation of an actual flaring event cannot be made, then the owner or operator shall notify the District no more than 3 hours after an alarm indicates that a flaring event may have occurred, unless the owner or operator demonstrates to the District's satisfaction that a longer notification period was necessary. [District Rule 1070]

42. The permittee shall report to the District in writing within ten days following the emergency use of the flare. The report shall include 1) a statement that the failure or malfunction has been corrected, the date corrected, and proof of correction; 2) a specific statement of the reason or cause for the occurrence; 3) a description of the corrective measures undertaken and/or to be undertaken to avoid such an occurrence in the future; and 4) an estimate of the emissions caused by the emergency use, specifically including duration of flare operation and amount of gas burned. [District Rules 1070 and 4311]

43. Open flares (air-assisted, steam-assisted, or non-assisted) in which the flare gas pressure is less than 5 psig shall be operated in such a manner that meets the provisions of 40 CFR 60.18. The requirements of this section shall not apply to Coanda effect flares. [District Rule 4311, 5.6]

44. No less than 90 days prior to installation, the applicant shall demonstrate to the District how compliance with 40 CFR 60.18 (c)(3) shall be satisfied. Compliance with either subparts (c)(3)(i), or (c)(3)(ii) and (c)(4) shall be demonstrated to the District. [40 CFR 60.18 (c)(3)]

45. If the permittee opts to comply with 40 CFR 60.18 (c)(3)(i), a non-assisted flare shall have a diameter of 3 inches or greater, have a minimum hydrogen content of 8.0% by volume, and be designed for and operated with an exit velocity less than 122 ft/sec and less than the velocity Vmax, as determined by the equation specified in paragraph 40 CFR 60.18 (c)(3)(i)(A). [40 CFR 60.18]

46. If the permittee opts to comply with 40 CFR 60.18 (c)(3)(ii) and (c)(4), the heating value of the gas combusted in the flare shall be at least 200 Btu/scf. [District Rule 4311 and 40 CFR 60.18]

47. If the permittee opts to comply with 40 CFR 60.18 (c)(3)(ii) and (c)(4), non-assisted flares may be operated with an exit velocity equal to or greater than 60 ft/sec, but less than 400 ft/sec, if the net heating value of the gas being combusted is greater than 1,000 Btu/scf. [40 CFR 60.18]

48. If the permittee opts to comply with 40 CFR 60.18 (c)(3)(ii) and (c)(4), non-assisted flares shall be operated with an exit velocity less than 60 ft/sec, except as provided in 40 CFR 60.18 (c)(4)(ii) and (iii). [40 CFR 60.18]

49. If the permittee opts to comply with 40 CFR 60.18 (c)(3)(ii) and (c)(4), non-assisted flares may be operated with an exit velocity less than the velocity Vmax, as determined by the methods specified in 40 CFR 60.18 (f)(5), and less than 400 ft/sec. [40 CFR 60.18]

50. The net heating value of the gas being combusted the flare shall be calculated pursuant to 40 CFR 60.18(f)(3) or by using EPA Method 18, ASTM D1946, and ASTM D2382 if published values are not available or cannot be calculated. [40 CFR 60.18]

51. The flare shall be inspected during operation for visible emissions, using EPA Method 22. If visible emissions are observed, corrective action shall be taken. If visible emissions cannot be eliminated, an EPA Method 9 test shall be conducted within 72 hours. [District Rule 2201 and 40 CFR 60.18]

52. The actual exit velocity of a flare shall be determined by dividing the volumetric flowrate (in units of standard temperature and pressure), as determined by Reference Methods 2, 2A, 2C, or 2D as appropriate; by the unobstructed (free) cross sectional area of the flare tip. [40 CFR 60.18]

53. Upon request, operator shall make available to the APCO the compliance determination records that demonstrate compliance with the provisions of 40 CFR 60.18. [District Rule 4311, 6.1]

54. Semi-annual reports of all periods without the presence of a flare pilot flame shall be furnished to the District Compliance Division and EPA. [District Rule 4001 and 40 CFR 60.115b(d)(3)]

55. The permittee shall keep accurate daily records of the amount of gas combusted in the flare, gas type, reason for flaring, hours of operation, the sulfur content and heat content

of the gas combusted, and records demonstrating compliance with the provisions of 40 CFR 60.18, (c)(3) through (c)(5). The permittee shall keep these records for a period of at least five years and shall make such records available for District inspection upon request. [District Rules 2201, 4311, 40 CFR 60.18]

56. Permittee shall record the sulfur content and the quantity of gas flared and shall demonstrate compliance with the SOx emission limit. [District Rule 2201]

57. The permittee shall obtain written District approval for the use of any equivalent equipment not specifically approved by this Determination of Compliance. Approval of the equivalent equipment shall be made only after the District's determination that the submitted design and performance of the proposed alternate equipment is equivalent to the specifically authorized equipment. [District Rule 2201]

58. The permittee's request for approval of equivalent equipment shall include the make, model, manufacturer's maximum rating, manufacturer's guaranteed emission rates, equipment drawing(s), and operational characteristics/parameters. [District Rule 2201]

59. Alternate equipment shall be of the same class and category of source as the equipment authorized by the Determination of Compliance. [District Rule 2201]

60. No emission factor and no emission shall be greater for the alternate equipment than for the proposed equipment. No changes in the hours of operation, operating rate, throughput, or firing rate may be authorized for any alternate equipment. [District Rule 2201]

61. The air quality modeled impacts of the proposed alternative equivalent equipment shall not result in any more adverse impacts than the equipment it replaces. [District Rule 2201]

62. {3246} All records shall be maintained and retained on-site for a period of at least 5 years and shall be made available for District inspection upon request. [District Rule 1070]

63. {3433} Disturbances of soil related to any construction, demolition, excavation, extraction, or other earthmoving activities shall comply with the requirements for fugitive dust control in District Rule 8021 unless specifically exempted under Section 4.0 of Rule 8021 or Rule 8011. [District Rules 8011 and 8021]

64. {3434} An owner/operator shall submit a Dust Control Plan to the APCO prior to the start of any construction activity on any site that will include 10 acres or more of disturbed surface area for residential developments, or 5 acres or more of disturbed surface area for non-residential development, or will include moving, depositing, or relocating more than 2,500 cubic yards per day of bulk materials on at least three days. [District Rules 8011 and 8021]

65. {3435} An owner/operator shall prevent or cleanup any carryout or trackout in accordance with the requirements of District Rule 8041 Section 5.0, unless specifically exempted

under Section 4.0 of Rule 8041 (8/19/04) or Rule 8011(8/19/04). [District Rules 8011 and 8021]

66. {3436} Whenever open areas are disturbed, or vehicles are used in open areas, the facility shall comply with the requirements of Section 5.0 of District Rule 8051, unless specifically exempted under Section 4.0 of Rule 8051 or Rule 8011. [District Rules 8011 and 8051]

67. {3437} Any paved road or unpaved road shall comply with the requirements of District Rule 8061 unless specifically exempted under Section 4.0 of Rule 8061 or Rule 8011. [District Rules 8011 and 8061]

68. {3438} Water, gravel, roadmix, or chemical/organic dust stabilizers/suppressants, vegetative materials, or other District-approved control measure shall be applied to unpaved vehicle travel areas as required to limit Visible Dust Emissions to 20% opacity and comply with the requirements for a stabilized unpaved road as defined in Section 3.59 of District Rule 8011. [District Rule 8011 and 8071]

69. {3439} Where dusting materials are allowed to accumulate on paved surfaces, the accumulation shall be removed daily or water and/or chemical/organic dust stabilizers/suppressants shall be applied to the paved surface as required to maintain continuous compliance with the requirements for a stabilized unpaved road as defined in Section 3.59 of District Rule 8011 and limit Visible Dust Emissions (VDE) to 20% opacity. [District Rule 8011 and 8071]

70. {3440} On each day that 50 or more Vehicle Daily Trips or 25 or more Vehicle Daily Trips with 3 axles or more will occur on an unpaved vehicle/equipment traffic area, permittee shall apply water, gravel, roadmix, or chemical/organic dust stabilizers/suppressants, vegetative materials, or other District-approved control measure as required to limit Visible Dust Emissions to 20% opacity and comply with the requirements for a stabilized unpaved road as defined in Section 3.59 of District Rule 8011. [District Rule 8011 and 8071]

71. {3441} Whenever any portion of the site becomes inactive, Permittee shall restrict access and periodically stabilize any disturbed surface to comply with the conditions for a stabilized surface as defined in Section 3.58 of District Rule 8011. [District Rules 8011 and 8071]

72. {3442} Records and other supporting documentation shall be maintained as required to demonstrate compliance with the requirements of the rules under Regulation VIII only for those days that a control measure was implemented. Such records shall include the type of control measure(s) used, the location and extent of coverage, and the date, amount, and frequency of application of dust suppressant, manufacturer's dust suppressant product information sheet that identifies the name of the dust suppressant and application instructions. Records shall be kept for one year following project completion that results in the termination of all dust generating activities. [District Rules 8011, 8031, and 8071]

S-7616-32-0

5,500 MMBTU/HR ELEVATED FLARE WITH 0.3 MMBTU/HR NATURAL GAS-FIRED PILOT, PRIMARILY SERVING RECTISOL UNIT (OR EQUIVALENT)

1. Prior to the District's issuance of a Final Determination of Compliance, the District and HECA shall enter into a mitigation agreement that fully mitigates the indirect emissions associated with construction and operation of the HECA facility, as determined appropriate and necessary by the District to comply with Rule 9110 and 40 CFR Part 93 Subpart B requirements, and feasible mitigation requirements under CEQA. [Rule 9110, 40 CFR Part 93 Subpart B, and Public Resources Code 21000-21177: California Environmental Quality Act]

2. The permittee shall enter into an Air Quality Mitigation Settlement Agreement with the District prior to issuance of the Final Determination of Compliance, or such other time that is mutually agreeable. [Rule 9110, 40 CFR Part 93 Subpart B, and Public Resources Code 21000-21177: California Environmental Quality Act]

3. Permittee shall submit an application to comply with Rule 2520 - Federally Mandated Operating Permits within twelve months of commencing operation. [District Rule 2520]

4. Permittee shall submit an application to comply with Rule 2540 - Acid Rain Program within twelve months of commencing operation. [District Rule 2540]

5. Prior to initial operation of S-7616-23, -25, -26, -30, -31, -32, -33, and -35, permittee shall provide NOx emission reduction credits for the following quantity of emissions: 1st quarter: 74,201 lb, 2nd quarter: 74,201 lb, 3rd quarter: 74,201 lb, and fourth quarter: 74,201 lb. Offsets shall be provided at the applicable offset ratio specified in Table 4-2 of Rule 2201 (as amended 4/21/11). [District Rule 2201]

6. Prior to initial operation of S-7616-17, -18, -19, -20, -22, -23, -25, -26, -27, -28, -29, -30, -31, -32, -33, -34, -36, -37, -38, -39, and -40, permittee shall provide PM10/PM2.5 emission reduction credits for the following quantity of emissions: 1st quarter: 39,538 lb, 2nd quarter: 39,538 lb, 3rd quarter: 39,538 lb, and 4th quarter: 39,538 lb. Offsets shall be provided at the applicable offset ratio specified in Table 4-2 of Rule 2201 (as amended 4/21/11). SOx ERCs may be used to offset PM10/PM2.5 increases at an interpollutant ratio of 1.0 lb-SOx: 1.0 lb-PM10. [District Rule 2201]

7. Prior to initial operation of S-7616-23, -25, -26, -30, -31, -32, and -33, permittee shall provide SOx emission reduction credits for the following quantity of emissions: 1st quarter: 1,170 lb, 2nd quarter: 1,170 lb, 3rd quarter: 1,170 lb, and 4th quarter: 1,170 lb. Offsets shall be provided at the applicable offset ratio specified in Table 4-2 of Rule 2201 (as amended 4/21/11). [District Rule 2201]

8. Prior to initial operation of S-7616-21, -23, -24, -25, -26, -30, -31, -32, and -33, permittee shall provide VOC emission reduction credits for the following quantity of emissions: 1st

quarter: 13,792 lb, 2nd quarter: 13,792 lb, 3rd quarter: 13,792 lb, and 4th quarter: 13,792 lb. Offsets shall be provided at the applicable offset ratio specified in Table 4-2 of Rule 2201 (as amended 4/21/11). [District Rule 2201]

9. ERC certificate numbers C-1058-2, C-1058-5, S-3275-5, S-3273-2, S-3305-1, S-3557-1, and/or S-3605-1 (or a certificate split from these certificates) shall be used to supply the required offsets, unless a revised offsetting proposal is received and approved by the District, upon which this Determination of Compliance shall be reissued, administratively specifying the new offsetting proposal. Original public noticing requirements, if any, shall be duplicated prior to reissuance of this Determination of Compliance. [District Rule 2201]

10. {98} No air contaminant shall be released into the atmosphere which causes a public nuisance. [District Rule 4102]

11. Flare pilot shall be fired solely on PUC-quality natural gas. [District Rules 2201, 2410]

12. Flare shall be equipped with a non-resettable, totalizing flare gas volume flow meter. [District Rules 2201 and 4311]

13. Flare shall be equipped with control valves and relief valves that will maintain a tight shutoff arrangement where no unintended flow is expected, except during actual flaring events. [District Rule 2201]

14. The outlet shall be equipped with an automatic ignition system or shall operate with a pilot flame present at all times when combustible gases are vented through the flare, except during purge periods for automatic-ignition equipped flares. [District Rule 4311, 5.3 and 40 CFR 60.18]

15. Except for flares equipped with a flow-sensing ignition system, a heat sensing device such as a thermocouple, ultraviolet beam sensor, infrared sensor, or an equivalent device, capable of continuously detecting at least one pilot flame or the flare flame is present shall be installed and operated. Request for determination of an alternate equivalent flame sensing or heat sensing device shall be submitted to the District in writing 30 days prior to installation for District approval. [District Rule 4311, 5.4 and 40 CFR 60.18]

16. Flares using a flow-sensing automatic ignition systems and which do not use a continuous flame pilot shall use purge gas for purging. [District Rule 4311, 5.5]

17. A flame shall be present at all times when combustible gases are vented through the flare. [District Rules 2201, 4311, 5.2 and 40 CFR 60.18(c)(2)]

18. No air contaminant shall be discharged into the atmosphere for a period or periods aggregating more than five minutes in any two hours which is as dark as, or darker than, Ringelmann 1/4 or 5% opacity. [District Rule 4101 and 40 CFR 60.18]

19. Total time of planned flaring shall not exceed 8 hours per day nor 40 hours per calendar year. [District Rules 2201 and 2410]

20. During planned flaring events, no more than 430 MMBtu/hr shall be combusted. [District Rule 2201 and 2410]

21. Emissions from the flare during pilot and other non-emergency operation shall not exceed any of the following: PM10: 0.003 lb/MMBtu; NOx (as NO2): 0.068 lb/MMBtu; VOC: 0.0013 lb/MMBtu; or CO: 0.08 lb/MMBtu. [District Rule 2201]

22. SOx emissions from the flare shall not exceed 0.00214 lb/MMBtu during pilot gas combustion nor 15.0 lb/hr during other non-emergency combustion. [District Rule 2201]

23. {279} Total sulfur content of natural gas combusted shall not exceed 0.75 grain/100 scf. [District Rule 2201]

24. Other than the planned flaring limited in the condition above, this flare shall be operated solely for emergency situations, which are any situations or conditions arising from a sudden and reasonably unforeseen and unpreventable event beyond the control of the operator. Examples include, but are not limited to, not preventable equipment failure, natural disaster, act of war or terrorism, or external power curtailment, excluding a power curtailment due to an interruptible power service agreement from a utility. A flaring event due to improperly designed equipment, lack of preventative maintenance, careless or improper operation, operator error or willful misconduct does not quality as an emergency. An emergency situation requires immediate corrective action to restore safe operation. A planned flaring event shall not be considered as an emergency. [District Rules 2201 and 4311]

25. A trained observer, as defined in EPA Method 22, shall check visible emissions at least once annually for a period of 15 minutes. If visible emissions are detected at any time during this period, the observation period shall be extended to two hours. A record containing the results of these observations shall be maintained, which also includes company name, process unit, observer's name and affiliation, date, estimated wind speed and direction, sky condition, and the observer's location relative to the source and sun. [District Rule 4311]

26. No less than 90 days prior to installation of the flare, permittee shall submit a flare minimization plan (FMP) that complies with the requirements of Rule 4311 Section 6.5 to the APCO for approval. [District Rules 4311, 6.5 and 2410]

27. Records of the duration of flare operation, amount of gas burned, and the nature of the emergency situation for flare used during an emergency situation shall be made readily available to the APCO, ARB, and EPA upon request for a minimum of 5 years. [District Rule 4311, 6.1]

28. Copies of approved flare minimization plan pursuant to Rule 4311 Section 6.5 shall be made readily available to the APCO, ARB, and EPA upon request for a minimum of 5 years. [District Rule 4311, 6.1]

29. Copies of compliance determination pursuant to 40 CFR 60.18 shall be made readily available to the APCO, ARB, and EPA upon request for a minimum of 5 years. [District Rule 4311, 6.1 and 40 CFR 60.18]

30. Copies of monitoring data collected pursuant to Rule 4311 Section 5.10 shall be made readily available to the APCO, ARB, and EPA upon request for a minimum of 5 years. [District Rule 4311, 6.1]

31. The operator shall notify the APCO of an unplanned flaring event within 24 hours after the start of the next business day or within 24 hours of their discovery, whichever occurs first. The notification shall include the flare source identification, the start date and time, and the end date and time. [District Rule 4311, 6.2]

32. The operator of a flare subject to flare minimization plans pursuant to Section 5.8 shall submit an annual report to the APCO that summarizes all Reportable Flaring Events as defined in Rule 4311 Section 3.0 that occurred during the previous 12 month period. The report shall be submitted within 30 days following the end of the twelve month period of the previous year. [District Rule 4311, 6.2]

33. The operator of a flare subject to flare monitoring requirements pursuant to Sections 5.10, 6.6, 6.7, 6.8, 6.9, and 6.10, as appropriate, shall submit an annual report to the APCO as specified in Rule 4311 Section 6.2.3 within 30 days following the end of each 12 month period. [District Rule 4311, 6.2]

34. Pursuant to Rule 4311 Section 6.6, the operator shall monitor vent gas composition using one the methods pursuant to Section 6.6.1 through Section 6.6.5 as appropriate. [District Rule 4311, 6.6]

35. The operator shall monitor the volumetric flows of purge and pilot gases with flow measuring devices. [District Rule 4311, 6.7]

36. If the flare is equipped with a water seal, the operator shall monitor and record the water level and pressure of the water seal that services each flare daily. [District Rule 4311, 6.8]

37. Periods of flare monitoring system in operation greater than 24 continuous hours shall be reported by the following working day, followed by notification of resumption of monitoring. Periods of inoperation of monitoring equipment shall not exceed 14 days per any 18-consecutive-month period. Periods of flare monitoring system inoperation do not include the periods when the system feeding the flare is not operating. [District Rule 4311, 6.9]

38. During periods of inoperation of continuous analyzers or auto-samplers installed pursuant to Section 6.6, operators responsible for monitoring shall take one sample within 30 minutes of the commencement of flaring, from the flare header or from an alternate location at which samples are representative of vent gas composition and have samples analyzed pursuant to Section 6.3.4. During periods of inoperation of flow monitors required by Section 5.10, flow shall be calculated using good engineering practices. [District Rule 4311, 6.9]

39. Operator shall maintain and calibrate all required monitors and recording devices in accordance with the applicable manufacturer's specifications. In order to claim that a manufacturer's specification is not applicable, the person responsible for emissions must have, and follow, a written maintenance policy that was developed for the device in question. The written policy must explain and justify the difference between the written procedure and the manufacturer's procedure. [District Rule 4311, 6.9]

40. All in-line continuous analyzer and flow monitoring data must be continuously recorded by an electronic data acquisition system capable of one-minute averages. Flow monitoring data shall be recorded as one-minute averages. [District Rule 4311, 6.9]

41. The owner or operator shall notify the District of any emergency use of the flare within one hour after confirmation that an actual flaring event has occurred, unless the owner or operator demonstrates to the District's satisfaction that a longer notification period was necessary. However, in the event that confirmation of an actual flaring event cannot be made, then the owner or operator shall notify the District no more than 3 hours after an alarm indicates that a flaring event may have occurred, unless the owner or operator demonstrates to the District's satisfaction that a longer notification period was necessary. [District Rule 1070]

42. The permittee shall report to the District in writing within ten days following the emergency use of the flare. The report shall include 1) a statement that the failure or malfunction has been corrected, the date corrected, and proof of correction; 2) a specific statement of the reason or cause for the occurrence; 3) a description of the corrective measures undertaken and/or to be undertaken to avoid such an occurrence in the future; and 4) an estimate of the emissions caused by the emergency use, specifically including duration of flare operation and amount of gas burned. [District Rules 1070 and 4311]

43. Open flares (air-assisted, steam-assisted, or non-assisted) in which the flare gas pressure is less than 5 psig shall be operated in such a manner that meets the provisions of 40 CFR 60.18. The requirements of this section shall not apply to Coanda effect flares. [District Rule 4311, 5.6]

44. No less than 90 days prior to installation, the applicant shall demonstrate to the District how compliance with 40 CFR 60.18 (c)(3) shall be satisfied. Compliance with either subparts (c)(3)(i), or (c)(3)(ii) and (c)(4) shall be demonstrated to the District. [40 CFR 60.18 (c)(3)]

45. If the permittee opts to comply with 40 CFR 60.18 (c)(3)(i), a non-assisted flare shall have a diameter of 3 inches or greater, have a minimum hydrogen content of 8.0% by volume, and be designed for and operated with an exit velocity less than 122 ft/sec and less than the velocity Vmax, as determined by the equation specified in paragraph 40 CFR 60.18 (c)(3)(i)(A). [40 CFR 60.18]

46. If the permittee opts to comply with 40 CFR 60.18 (c)(3)(ii) and (c)(4), the heating value of the gas combusted in the flare shall be at least 200 Btu/scf. [District Rule 4311 and 40 CFR 60.18]

47. If the permittee opts to comply with 40 CFR 60.18 (c)(3)(ii) and (c)(4), non-assisted flares may be operated with an exit velocity equal to or greater than 60 ft/sec, but less than 400 ft/sec, if the net heating value of the gas being combusted is greater than 1,000 Btu/scf. [40 CFR 60.18]

48. If the permittee opts to comply with 40 CFR 60.18 (c)(3)(ii) and (c)(4), non-assisted flares shall be operated with an exit velocity less than 60 ft/sec, except as provided in 40 CFR 60.18 (c)(4)(ii) and (iii). [40 CFR 60.18]

49. If the permittee opts to comply with 40 CFR 60.18 (c)(3)(ii) and (c)(4), non-assisted flares may be operated with an exit velocity less than the velocity Vmax, as determined by the methods specified in 40 CFR 60.18 (f)(5), and less than 400 ft/sec. [40 CFR 60.18]

50. The net heating value of the gas being combusted the flare shall be calculated pursuant to 40 CFR 60.18(f)(3) or by using EPA Method 18, ASTM D1946, and ASTM D2382 if published values are not available or cannot be calculated. [40 CFR 60.18]

51. The flare shall be inspected during operation for visible emissions, using EPA Method 22. If visible emissions are observed, corrective action shall be taken. If visible emissions cannot be eliminated, an EPA Method 9 test shall be conducted within 72 hours. [District Rule 2201 and 40 CFR 60.18]

52. The actual exit velocity of a flare shall be determined by dividing the volumetric flowrate (in units of standard temperature and pressure), as determined by Reference Methods 2, 2A, 2C, or 2D as appropriate; by the unobstructed (free) cross sectional area of the flare tip. [40 CFR 60.18]

53. Upon request, operator shall make available to the APCO the compliance determination records that demonstrate compliance with the provisions of 40 CFR 60.18. [District Rule 4311, 6.1]

54. Semi-annual reports of all periods without the presence of a flare pilot flame shall be furnished to the District Compliance Division and EPA. [District Rule 4001 and 40 CFR 60.115b(d)(3)]

55. The permittee shall keep accurate daily records of the amount of gas combusted in the flare, gas type, reason for flaring, hours of operation, the sulfur content and heat content

of the gas combusted, and records demonstrating compliance with the provisions of 40 CFR 60.18, (c)(3) through (c)(5). The permittee shall keep these records for a period of at least five years and shall make such records available for District inspection upon request. [District Rules 2201, 4311, 40 CFR 60.18]

56. Permittee shall record the sulfur content and the quantity of gas flared and shall demonstrate compliance with the SOx emission limit. [District Rule 2201]

57. The permittee shall obtain written District approval for the use of any equivalent equipment not specifically approved by this Determination of Compliance. Approval of the equivalent equipment shall be made only after the District's determination that the submitted design and performance of the proposed alternate equipment is equivalent to the specifically authorized equipment. [District Rule 2201]

58. The permittee's request for approval of equivalent equipment shall include the make, model, manufacturer's maximum rating, manufacturer's guaranteed emission rates, equipment drawing(s), and operational characteristics/parameters. [District Rule 2201]

59. Alternate equipment shall be of the same class and category of source as the equipment authorized by the Determination of Compliance. [District Rule 2201]

60. No emission factor and no emission shall be greater for the alternate equipment than for the proposed equipment. No changes in the hours of operation, operating rate, throughput, or firing rate may be authorized for any alternate equipment. [District Rule 2201]

61. The air quality modeled impacts of the proposed alternative equivalent equipment shall not result in any more adverse impacts than the equipment it replaces. [District Rule 2201]

62. {3246} All records shall be maintained and retained on-site for a period of at least 5 years and shall be made available for District inspection upon request. [District Rule 1070]

63. {3433} Disturbances of soil related to any construction, demolition, excavation, extraction, or other earthmoving activities shall comply with the requirements for fugitive dust control in District Rule 8021 unless specifically exempted under Section 4.0 of Rule 8021 or Rule 8011. [District Rules 8011 and 8021]

64. {3434} An owner/operator shall submit a Dust Control Plan to the APCO prior to the start of any construction activity on any site that will include 10 acres or more of disturbed surface area for residential developments, or 5 acres or more of disturbed surface area for non-residential development, or will include moving, depositing, or relocating more than 2,500 cubic yards per day of bulk materials on at least three days. [District Rules 8011 and 8021]

65. {3435} An owner/operator shall prevent or cleanup any carryout or trackout in accordance with the requirements of District Rule 8041 Section 5.0, unless specifically exempted

under Section 4.0 of Rule 8041 (8/19/04) or Rule 8011(8/19/04). [District Rules 8011 and 8021]

66. {3436} Whenever open areas are disturbed, or vehicles are used in open areas, the facility shall comply with the requirements of Section 5.0 of District Rule 8051, unless specifically exempted under Section 4.0 of Rule 8051 or Rule 8011. [District Rules 8011 and 8051]

67. {3437} Any paved road or unpaved road shall comply with the requirements of District Rule 8061 unless specifically exempted under Section 4.0 of Rule 8061 or Rule 8011. [District Rules 8011 and 8061]

68. {3438} Water, gravel, roadmix, or chemical/organic dust stabilizers/suppressants, vegetative materials, or other District-approved control measure shall be applied to unpaved vehicle travel areas as required to limit Visible Dust Emissions to 20% opacity and comply with the requirements for a stabilized unpaved road as defined in Section 3.59 of District Rule 8011. [District Rule 8011 and 8071]

69. {3439} Where dusting materials are allowed to accumulate on paved surfaces, the accumulation shall be removed daily or water and/or chemical/organic dust stabilizers/suppressants shall be applied to the paved surface as required to maintain continuous compliance with the requirements for a stabilized unpaved road as defined in Section 3.59 of District Rule 8011 and limit Visible Dust Emissions (VDE) to 20% opacity. [District Rule 8011 and 8071]

70. {3440} On each day that 50 or more Vehicle Daily Trips or 25 or more Vehicle Daily Trips with 3 axles or more will occur on an unpaved vehicle/equipment traffic area, permittee shall apply water, gravel, roadmix, or chemical/organic dust stabilizers/suppressants, vegetative materials, or other District-approved control measure as required to limit Visible Dust Emissions to 20% opacity and comply with the requirements for a stabilized unpaved road as defined in Section 3.59 of District Rule 8011. [District Rule 8011 and 8071]

71. {3441} Whenever any portion of the site becomes inactive, Permittee shall restrict access and periodically stabilize any disturbed surface to comply with the conditions for a stabilized surface as defined in Section 3.58 of District Rule 8011. [District Rules 8011 and 8071]

72. {3442} Records and other supporting documentation shall be maintained as required to demonstrate compliance with the requirements of the rules under Regulation VIII only for those days that a control measure was implemented. Such records shall include the type of control measure(s) used, the location and extent of coverage, and the date, amount, and frequency of application of dust suppressant, manufacturer's dust suppressant product information sheet that identifies the name of the dust suppressant and application instructions. Records shall be kept for one year following project completion that results in the termination of all dust generating activities. [District Rules 8011, 8031, and 8071]

S-7616-33-0

AMMONIA SYNTHESIS UNIT CONSISTING OF: ONE 56.0 MMBTU/HR NATURAL GAS-FIRED AMMONIA STARTUP HEATER EQUIPPED WITH FOUR LOW-NOX BURNERS, EACH RATED AT 14.0 MMBTU/HR (OR EQUIVALENT); AMMONIA SYNTHESIS CONVERTER; SEPARATORS; ELECTRIC SYNGAS COMPRESSOR; ELECTRIC AMMONIA REFRIGERATION COMPRESSOR; AMMONIA ACCUMULATOR; AMMONIA REFRIGERATION SYSTEM; COLD LIQUID AMMONIA STORAGE SYSTEM; AMMONIA RECOVERY UNIT

1. Prior to the District's issuance of a Final Determination of Compliance, the District and HECA shall enter into a mitigation agreement that fully mitigates the indirect emissions associated with construction and operation of the HECA facility, as determined appropriate and necessary by the District to comply with Rule 9110 and 40 CFR Part 93 Subpart B requirements, and feasible mitigation requirements under CEQA. [Rule 9110, 40 CFR Part 93 Subpart B, and Public Resources Code 21000-21177: California Environmental Quality Act]

2. The permittee shall enter into an Air Quality Mitigation Settlement Agreement with the District prior to issuance of the Final Determination of Compliance, or such other time that is mutually agreeable. [Rule 9110, 40 CFR Part 93 Subpart B, and Public Resources Code 21000-21177: California Environmental Quality Act]

3. Permittee shall submit an application to comply with Rule 2520 - Federally Mandated Operating Permits within twelve months of commencing operation. [District Rule 2520]

4. Permittee shall submit an application to comply with Rule 2540 - Acid Rain Program within twelve months of commencing operation. [District Rule 2540]

5. Prior to initial operation of S-7616-23, -25, -26, -30, -31, -32, -33, and -35, permittee shall provide NOx emission reduction credits for the following quantity of emissions: 1st quarter: 74,201 lb, 2nd quarter: 74,201 lb, 3rd quarter: 74,201 lb, and fourth quarter: 74,201 lb. Offsets shall be provided at the applicable offset ratio specified in Table 4-2 of Rule 2201 (as amended 4/21/11). [District Rule 2201]

6. Prior to initial operation of S-7616-17, -18, -19, -20, -22, -23, -25, -26, -27, -28, -29, -30, -31, -32, -33, -34, -36, -37, -38, -39, and -40, permittee shall provide PM10/PM2.5 emission reduction credits for the following quantity of emissions: 1st quarter: 39,538 lb, 2nd quarter: 39,538 lb, 3rd quarter: 39,538 lb, and 4th quarter: 39,538 lb. Offsets shall be provided at the applicable offset ratio specified in Table 4-2 of Rule 2201 (as amended 4/21/11). SOx ERCs may be used to offset PM10/PM2.5 increases at an interpollutant ratio of 1.0 lb-SOx: 1.0 lb-PM10. [District Rule 2201]

7. Prior to initial operation of S-7616-23, -25, -26, -30, -31, -32, and -33, permittee shall provide SOx emission reduction credits for the following quantity of emissions: 1st quarter: 1,170 lb, 2nd quarter: 1,170 lb, 3rd quarter: 1,170 lb, and 4th quarter: 1,170 lb.

Offsets shall be provided at the applicable offset ratio specified in Table 4-2 of Rule 2201 (as amended 4/21/11). [District Rule 2201]

8. Prior to initial operation of S-7616-21, -23, -24, -25, -26, -30, -31, -32, and -33, permittee shall provide VOC emission reduction credits for the following quantity of emissions: 1st quarter: 13,792 lb, 2nd quarter: 13,792 lb, 3rd quarter: 13,792 lb, and 4th quarter: 13,792 lb. Offsets shall be provided at the applicable offset ratio specified in Table 4-2 of Rule 2201 (as amended 4/21/11). [District Rule 2201]

9. ERC certificate numbers C-1058-2, C-1058-5, S-3275-5, S-3273-2, S-3305-1, S-3557-1, and/or S-3605-1 (or a certificate split from these certificates) shall be used to supply the required offsets, unless a revised offsetting proposal is received and approved by the District, upon which this Determination of Compliance shall be reissued, administratively specifying the new offsetting proposal. Original public noticing requirements, if any, shall be duplicated prior to reissuance of this Determination of Compliance. [District Rule 2201]

10. {98} No air contaminant shall be released into the atmosphere which causes a public nuisance. [District Rule 4102]

11. {15} No air contaminant shall be discharged into the atmosphere for a period or periods aggregating more than three minutes in any one hour which is as dark as, or darker than, Ringelmann 1 or 20% opacity. [District Rule 4101]

12. {14} Particulate matter emissions shall not exceed 0.1 grains/dscf in concentration. [District Rule 4201]

13. Heater shall be fired solely on PUC-quality natural gas. [District Rules 2201, 2410, and 4320]

14. Duration of startup and shutdown of heater shall not exceed 2 hours each per occurrence. The emission control system shall be in operation and emissions shall be minimized insofar as technologically feasible during startup and shutdown. The operator shall maintain records of the duration of startup and shutdown. [District Rules 4305, 4306, and 4320]

15. Emissions from heater, except during startup or shutdown, shall not exceed any of the following limits: NOx (as NO2): 9.0 ppmvd @ 3% O2 or 0.011 lb/MMBtu, SOx (as SO2): 0.00285 lb/MMBtu, PM10: 0.005 lb/MMBtu, CO: 50 ppmvd @ 3% O2 or 0.037 lb/MMBtu, or VOC: 0.0040 lb/MMBtu. [District Rules 2201, 4305, 4306 and 4320]

16. The annual heat input of the heater shall not exceed 7.84 billion Btu per calendar year. [District Rules 2201 and 2410]

17. Pursuant to Rule 4320, the operator shall pay an annual emission fee to the District for NOx emissions from this heater for the previous calendar year. Payments are due by July 1 of each year. Payments shall continue annually until either the unit is permanently

removed from service in the District or the operator demonstrates compliance with the applicable NOx emission limit listed in Rule 4320. [District Rule 4320]

18. A non-resettable, totalizing mass or volumetric fuel flow meter to measure the amount of natural gas combusted in the unit shall be installed, utilized and maintained. [District Rule 2201]

19. Permittee shall maintain records of the annual heat input of the unit. [District Rules 1070, 2201]

20. The permittee shall monitor and record the stack concentration of NOX, CO, and O2 at least once every month (in which a source test is not performed) using a portable analyzer that meets District specifications. Monitoring shall not be required if the unit is not in operation, i.e. the unit need not be started solely to perform monitoring. Monitoring shall be performed within 5 days of restarting the unit unless monitoring has been performed within the last month. [District Rules 4305, 4306, and 4320]

21. If either the NOX or CO concentrations corrected to 3% O2, as measured by the portable analyzer, exceed the allowable emissions concentration, the permittee shall return the emissions to within the acceptable range as soon as possible, but no longer than 1 hour of operation after detection. If the portable analyzer readings continue to exceed the allowable emissions concentration after 1 hour of operation after detection, the permittee shall notify the District within the following 1 hour and conduct a certified source test within 60 days of the first exceedance. In lieu of conducting a source test, the permittee may stipulate a violation has occurred, subject to enforcement action. The permittee must then correct the violation, show compliance has been re-established, and resume monitoring procedures. If the deviations are the result of a qualifying breakdown condition pursuant to Rule 1100, the permittee may fully comply with Rule 1100 in lieu of performing the notification and testing required by this condition. [District Rules 4305, 4306, and 4320]

22. All alternate monitoring parameter emission readings shall be taken with the unit operating either at conditions representative of normal operations or conditions specified in the permit-to-operate. The analyzer shall be calibrated, maintained, and operated in accordance with the manufacturer's specifications and recommendations or a protocol approved by the APCO. Emission readings taken shall be averaged over a 15 consecutive-minute period by either taking a cumulative 15 consecutive-minute sample reading or by taking at least five (5) readings, evenly spaced out over the 15 consecutive-minute period. [District Rules 4305, 4306, and 4320]

23. The permittee shall maintain records of: (1) the date and time of NOX, CO, and O2 measurements, (2) the O2 concentration in percent by volume and the measured NOX and CO concentrations corrected to 3% O2, (3) make and model of exhaust gas analyzer, (4) exhaust gas analyzer calibration records, and (5) a description of any corrective action taken to maintain the emissions within the acceptable range. [District Rules 4305, 4306, and 4320]

24. This unit shall be tested for compliance with the NOx and CO emissions limits at least once every twelve (12) months. After demonstrating compliance on two (2) consecutive annual source tests, the unit shall be tested not less than once every thirty-six (36) months. If the result of the 36-month source test demonstrates that the unit does not meet the applicable emission limits, the source testing frequency shall revert to at least once every twelve (12) months. [District Rules 4305, 4306, and 4320]

25. {110} The results of each source test shall be submitted to the District within 60 days thereafter. [District Rule 1081]

26. Source test results for NOx emissions shall be submitted to the District as NOx, NO, and NO2 when available. [District Rule 2410]

27. {109} Source testing shall be conducted using the methods and procedures approved by the District. The District must be notified at least 30 days prior to any compliance source test, and a source test plan must be submitted for approval at least 15 days prior to testing. [District Rule 1081]

28. The source test plan shall identify which basis (ppmv or lb/MMBtu) will be used to demonstrate compliance. [District Rules 4305, 4306, and 4320]

29. All emissions measurements shall be made with the unit operating either at conditions representative of normal operations or conditions specified in the DOC. No determination of compliance shall be established within two hours after a continuous period in which fuel flow to the unit is shut off for 30 minutes or longer, or within 30 minutes after a re-ignition as defined in Section 3.0 of District Rule 4306. [District Rules 4305 and 4306]

30. The following test methods shall be used: NOx (ppmv) - EPA Method 7E or ARB Method 100, NOx (lb/MMBtu) - EPA Method 19, CO (ppmv) - EPA Method 10 or 10B or ARB Method 100, stack gas oxygen - EPA Method 3 or 3A or ARB Method 100, SOx (lb/MMBtu) - ARB Method 100 or EPA Method 6, 6C or fuel gas sulfur content analysis and EPA Method 19, fuel gas sulfur content - EPA Method 11 or 15, ASTM D3246 or double GC for H2S and mercaptans performed in a laboratory, fuel gas hhv - ASTM D1826 or D1945 in conjunction with ASTM D3588. [District Rules 4305, 4306 and 4320]

31. The permittee shall monitor and record the stack concentration of NOx, CO, and O2 at least once every month (in which a source test is not performed) using a portable analyzer that meets District specifications. Monitoring shall not be required if the unit is not in operation, i.e. the unit need not be started solely to perform monitoring. Monitoring shall be performed within 5 days of restarting the unit unless monitoring has been performed within the last month. [District Rules 4305, 4306, and 4320]

32. If either the NOx or CO concentrations corrected to 3% O2, as measured by the portable analyzer, exceed the allowable emissions concentration, the permittee shall return the emissions to within the acceptable range as soon as possible, but no longer than 1 hour of operation after detection. If the portable analyzer readings continue to exceed the allowable emissions concentration after 1 hour of operation after detection, the permittee

shall notify the District within the following 1 hour and conduct a certified source test within 60 days of the first exceedance. In lieu of conducting a source test, the permittee may stipulate a violation has occurred, subject to enforcement action. The permittee must then correct the violation, show compliance has been re-established, and resume monitoring procedures. If the deviations are the result of a qualifying breakdown condition pursuant to Rule 1100, the permittee may fully comply with Rule 1100 in lieu of performing the notification and testing required by this condition. [District Rules 4305, 4306, and 4320]

33. All alternate monitoring parameter emission readings shall be taken with the unit operating either at conditions representative of normal operations or conditions specified in the DOC. The analyzer shall be calibrated, maintained, and operated in accordance with the manufacturer's specifications and recommendations or a protocol approved by the APCO. Emission readings taken shall be averaged over a 15 consecutive-minute period by either taking a cumulative 15 consecutive-minute sample reading or by taking at least five (5) readings, evenly spaced out over the 15 consecutive-minute period. [District Rules 4305, 4306, and 4320]

34. The permittee shall maintain records of: (1) the date and time of NOx, CO, and O2 measurements, (2) the O2 concentration in percent by volume and the measured NOx and CO concentrations corrected to 3% O2, (3) make and model of exhaust gas analyzer, (4) exhaust gas analyzer calibration records, and (5) a description of any corrective action taken to maintain the emissions within the acceptable range. [District Rules 4305, 4306, and 4320]

35. For emissions source testing, the arithmetic average of three 30-consecutive-minute test runs shall apply. If two of three runs are above an applicable limit the test cannot be used to demonstrate compliance with an applicable limit. [District Rules 4305, 4306, and 4320]

36. All records shall be maintained and retained on-site for a minimum of five (5) years, and shall be made available for District inspection upon request. [District Rules 1070, 2201, 4305, 4306, and 4320]

37. Components attributed to this unit shall include those components serving the following process streams: low NH3 concentration, moderate NH3 concentration, high NH3 concentration, low CO2 concentration, moderate CO2 concentration, high CO2 concentration, NO2, nitric acid (HNO3), and PSA off gas. [District Rule 2201]

38. Fugitive VOC emission rate from the unit shall not exceed 0.0 lb/day based on the component count and emission factors from EPA document Protocol for Equipment Leak Emission Estimates (EPA-453/R-95-017), Table 2-1, SOCMI Average Emissions Factors and the applicable control efficiency for those components subject to a leak detection and repair (LDAR) program. Components serving the following streams associated with this unit shall be subject to a leak detection and repair (LDAR) program: low NH3 concentration, moderate NH3 concentration, high NH3 concentration, low CO2 concentration, moderate CO2 concentration, high CO2 concentration, NO2, nitric acid

(HNO3), and PSA off gas. The following control efficiencies in Table 5-2 of the EPA document shall apply to those components under an LDAR program: gas valves: 92%; light liquid valves: 88%; light liquid pump seals: 75%; and connectors: 93%. [District Rules 2201 and 2410]

39. Fugitive CO emission rate from the unit shall not exceed 5.9 lb/day based on the component count, CO percentage in the fluid stream, emission factors from Protocol for Equipment Leak Emission Estimates (EPA-453/R-95-017), Table 2-1, SOCMI Average Emissions Factors and the applicable control efficiency for those components subject to a leak detection and repair (LDAR) program. [District Rule 2201]

40. Permittee shall maintain with the DOC an accurate fugitive component count and the resulting emissions calculated using above specified leak rates and control efficiencies. [District Rule 2201]

41. The VOC content of the gas in the following streams shall not exceed 10% by weight: low NH3 concentration, moderate NH3 concentration, high NH3 concentration, low CO2 concentration, moderate CO2 concentration, high CO2 concentration, NO2, nitric acid (HNO3), and PSA off gas. [District Rule 2201]

42. Operator shall conduct quarterly gas sampling to qualify for exemption from fugitive component counts for those components handling fluids with VOC content equal to or less than 10% by weight. If gas samples are equal to or less than 10% VOC by weight for 8 consecutive quarterly samplings, sampling frequency shall only be required annually. [District Rule 2201]

43. VOC content of gas streams shall be determined by ASTM D1945, EPA Method 18 referenced as methane, or equivalent test method with prior District approval. [District Rule 2201]

44. All sampling connections, open-ended valves, and lines shall be equipped with two closed valves or be sealed with blind flanges, caps, or threaded plugs except during actual use. [District Rule 2201]

45. Permittee shall maintain records of the VOC content test results for a period of five years and make such records available for inspection upon request. [District Rule 1070]

46. For valves and connectors attributed to this unit, a leak shall be defined as a reading of methane in excess of 100 ppmv above background when measured per EPA Method 21. For pump and compressor seals attributed to this unit, a leak shall be defined as a reading of methane in excess of 500 ppmv above background when measure per EPA Method 21. [District Rule 2201]

47. The operator shall audio-visually inspect for leaks all accessible operating pumps, compressors and Pressure Relief Devices (PRDs) in service at least once every 24 hours, except when operators do not report to the facility for that given 24 hours. Any identified leak that cannot be immediately repaired shall be reinspected within 24 hours

using a portable analyzer. If a leak is found, it shall be repaired as soon as practical but not later than the time frame specified in Rule 4455 Table 3. [District Rule 2201]

48. The operator shall inspect all components at least once every calendar quarter, except for inaccessible components, unsafe-to-monitor components and pipes. Inaccessible components, unsafe-to-monitor components and pipes shall be inspected in accordance with the requirements set forth in Rule 4455 Sections 5.2.5, 5.2.6, and 5.2.7. New, replaced, or repaired fittings, flanges and threaded connections shall be inspected immediately after being placed into service. Components shall be inspected using EPA Method 21. [District Rule 2201]

49. The operator may apply for a written approval from the APCO to change the inspection frequency from quarterly to annually for a component type, provided the operator meets all the criteria specified in Rule 4455 Sections 5.2.8.1 through 5.2.8.3. This approval shall apply to accessible component types, specifically designated by the APCO, except pumps, compressors, and PRDs which shall continue to be inspected on a quarterly basis. [District Rule 2201]

50. An annual inspection frequency approved by the APCO shall revert to quarterly inspection frequency for a component type if either the operator inspection or District inspection demonstrates that a violation of the provisions of Rule 4455 Sections 5.1, 5.2 and 5.3 of the rule exists for that component type, or the APCO issued a Notice of Violation for violating any of the provisions of Rule 4455 during the annual inspection period for that component type. When the inspection frequency changes from annual to quarterly inspections, the operator shall notify the APCO in writing within five (5) calendar days after changing the inspection frequency, giving the reason(s) and date of change to quarterly inspection frequency. [District Rule 2201]

51. The operator shall initially inspect a process PRD that releases to the atmosphere as soon as practicable but not later than 24 hours after the time of the release. To insure that the process PRD is operating properly, and is leak-free, the operator shall re-inspect the process PRD not earlier than 24 hours after the initial inspection but not later than 15 calendar days after the date of the release using EPA Method 21. If the process PRD is found to be leaking at either inspection, the PRD leak shall be treated as if the leak was found during quarterly operator inspections. [District Rule 2201]

52. Except for process PRD, a component shall be inspected within 15 calendar days after repairing the leak or replacing the component using EPA Method 21. [District Rule 2201]

53. Upon detection of a leaking component, the operator shall affix to that component a weatherproof readily visible tag that contains the information specified in Rule 4455 Section 5.3.3. The tag shall remain affixed to the component until the leaking component has been repaired or replaced; has been re-inspected using EPA Method 21; and is found to be in compliance with leak, inspection, and maintenance requirements. [District Rule 2201]

54. An operator shall minimize all component leaks immediately to the extent possible, but not later than one (1) hour after detection of leaks in order to stop or reduce leakage to the atmosphere. [District Rule 2201]

55. If the leak has been minimized but the leak still exceeds the applicable leak standards of this DOC, an operator shall repair or replace the leaking component, vent the leaking component to a closed vent system, or remove the leaking component from operation as soon as practicable but not later than the time period specified in Rule 4455 Table 3. For each calendar quarter, the operator may be allowed to extend the repair period as specified in Rule 4455 Table 3, for a total number of leaking components, not to exceed 0.05 percent of the number of components inspected, by type, rounded upward to the nearest integer where required. [District Rule 2201]

56. If the leaking component is an essential component or a critical component and which cannot be immediately shut down for repairs, the operator shall minimize the leak within one hour after detection of the leak. If the leak has been minimized, but the leak still exceeds any of the applicable leak standards of the DOC, the essential component or critical component shall be repaired or replaced to eliminate the leak during the next process unit turnaround, but in no case later than one year from the date of the original leak detection, whichever comes earlier. [District Rule 2201]

57. For any component that has incurred five repair actions for major gas leaks or major liquid leaks, or any combination of major gas leaks and major liquid leaks within a continuous 12-month period, the operator shall comply with at least one of the requirements specified in Rule 4455 Sections 5.3.7.1, 5.3.7.2, 5.3.7.3, or 5.3.7.4 by the applicable deadlines specified in Sections 5.3.7.5 and 5.3.7.6. If the original leaking component is replaced with a new like-in-kind component before incurring five repair actions for major leaks within 12-consecutive months, the repair count shall start over for the new component. An entire compressor or pump need not be replaced provided the compressor part(s) or pump part(s) that have incurred five repair actions as described in Section 5.3.7 are brought into compliance with at least one of the requirements of Sections 5.3.7.1 through 5.3.7.6. [District Rule 2201]

58. All records required by this DOC shall be retained for a period of at least 5 years and shall be made available to the District upon request. [District Rules 1070 and 2201]

59. The permittee shall obtain written District approval for the use of any equivalent equipment not specifically approved by this Determination of Compliance. Approval of the equivalent equipment shall be made only after the District's determination that the submitted design and performance of the proposed alternate equipment is equivalent to the specifically authorized equipment. [District Rule 2201]

60. The permittee's request for approval of equivalent equipment shall include the make, model, manufacturer's maximum rating, manufacturer's guaranteed emission rates, equipment drawing(s), and operational characteristics/parameters. [District Rule 2201]

61. Alternate equipment shall be of the same class and category of source as the equipment authorized by the Determination of Compliance. [District Rule 2201]

62. No emission factor and no emission shall be greater for the alternate equipment than for the proposed equipment. No changes in the hours of operation, operating rate, throughput, or firing rate may be authorized for any alternate equipment. [District Rule 2201]

63. The air quality modeled impacts of the proposed alternative equivalent equipment shall not result in any more adverse impacts than the equipment it replaces. [District Rule 2201]

64. {3433} Disturbances of soil related to any construction, demolition, excavation, extraction, or other earthmoving activities shall comply with the requirements for fugitive dust control in District Rule 8021 unless specifically exempted under Section 4.0 of Rule 8021 or Rule 8011. [District Rules 8011 and 8021]

65. {3434} An owner/operator shall submit a Dust Control Plan to the APCO prior to the start of any construction activity on any site that will include 10 acres or more of disturbed surface area for residential developments, or 5 acres or more of disturbed surface area for non-residential development, or will include moving, depositing, or relocating more than 2,500 cubic yards per day of bulk materials on at least three days. [District Rules 8011 and 8021]

66. {3435} An owner/operator shall prevent or cleanup any carryout or trackout in accordance with the requirements of District Rule 8041 Section 5.0, unless specifically exempted under Section 4.0 of Rule 8041 (8/19/04) or Rule 8011(8/19/04). [District Rules 8011 and 8021]

67. {3436} Whenever open areas are disturbed, or vehicles are used in open areas, the facility shall comply with the requirements of Section 5.0 of District Rule 8051, unless specifically exempted under Section 4.0 of Rule 8051 or Rule 8011. [District Rules 8011 and 8051]

68. {3437} Any paved road or unpaved road shall comply with the requirements of District Rule 8061 unless specifically exempted under Section 4.0 of Rule 8061 or Rule 8011. [District Rules 8011 and 8061]

69. {3438} Water, gravel, roadmix, or chemical/organic dust stabilizers/suppressants, vegetative materials, or other District-approved control measure shall be applied to unpaved vehicle travel areas as required to limit Visible Dust Emissions to 20% opacity and comply with the requirements for a stabilized unpaved road as defined in Section 3.59 of District Rule 8011. [District Rule 8011 and 8071]

70. {3439} Where dusting materials are allowed to accumulate on paved surfaces, the accumulation shall be removed daily or water and/or chemical/organic dust stabilizers/suppressants shall be applied to the paved surface as required to maintain

continuous compliance with the requirements for a stabilized unpaved road as defined in Section 3.59 of District Rule 8011 and limit Visible Dust Emissions (VDE) to 20% opacity. [District Rule 8011 and 8071]

71. {3440} On each day that 50 or more Vehicle Daily Trips or 25 or more Vehicle Daily Trips with 3 axles or more will occur on an unpaved vehicle/equipment traffic area, permittee shall apply water, gravel, roadmix, or chemical/organic dust stabilizers/suppressants, vegetative materials, or other District-approved control measure as required to limit Visible Dust Emissions to 20% opacity and comply with the requirements for a stabilized unpaved road as defined in Section 3.59 of District Rule 8011. [District Rule 8011 and 8071]

72. {3441} Whenever any portion of the site becomes inactive, Permittee shall restrict access and periodically stabilize any disturbed surface to comply with the conditions for a stabilized surface as defined in Section 3.58 of District Rule 8011. [District Rules 8011 and 8071]

73. {3442} Records and other supporting documentation shall be maintained as required to demonstrate compliance with the requirements of the rules under Regulation VIII only for those days that a control measure was implemented. Such records shall include the type of control measure(s) used, the location and extent of coverage, and the date, amount, and frequency of application of dust suppressant, manufacturer's dust suppressant product information sheet that identifies the name of the dust suppressant and application instructions. Records shall be kept for one year following project completion that results in the termination of all dust generating activities. [District Rules 8011, 8031, and 8071]

S-7616-34-0

UREA UNIT WITH UREA PASTILLATION SYSTEM: UREA UNIT WITH HIGH-PRESSURE AND LOW-PRESSURE ABSORBERS; PASTILLATION UNIT WITH A DROP FORMER, MOVING BELT, OSCILLATING SCRAPER, AND BUCKET ELEVATOR SERVED BY A DUST COLLECTOR

1. Prior to the District's issuance of a Final Determination of Compliance, the District and HECA shall enter into a mitigation agreement that fully mitigates the indirect emissions associated with construction and operation of the HECA facility, as determined appropriate and necessary by the District to comply with Rule 9110 and 40 CFR Part 93 Subpart B requirements, and feasible mitigation requirements under CEQA. [Rule 9110, 40 CFR Part 93 Subpart B, and Public Resources Code 21000-21177: California Environmental Quality Act]

2. The permittee shall enter into an Air Quality Mitigation Settlement Agreement with the District prior to issuance of the Final Determination of Compliance, or such other time that is mutually agreeable. [Rule 9110, 40 CFR Part 93 Subpart B, and Public Resources Code 21000-21177: California Environmental Quality Act]

3. Permittee shall submit an application to comply with Rule 2520 - Federally Mandated Operating Permits within twelve months of commencing operation. [District Rule 2520]

4. Permittee shall submit an application to comply with Rule 2540 - Acid Rain Program within twelve months of commencing operation. [District Rule 2540]

5. Prior to initial operation of S-7616-17, -18, -19, -20, -22, -23, -25, -26, -27, -28, -29, -30, -31, -32, -33, -34, -36, -37, -38, -39, and -40, permittee shall provide PM10/PM2.5 emission reduction credits for the following quantity of emissions: 1st quarter: 39,538 lb, 2nd quarter: 39,538 lb, 3rd quarter: 39,538 lb, and 4th quarter: 39,538 lb. Offsets shall be provided at the applicable offset ratio specified in Table 4-2 of Rule 2201 (as amended 4/21/11). SOx ERCs may be used to offset PM10/PM2.5 increases at an interpollutant ratio of 1.0 lb-SOx: 1.0 lb-PM10. [District Rule 2201]

6. ERC certificate numbers C-1058-2, C-1058-5, S-3275-5, S-3273-2, S-3305-1, S-3557-1, and/or S-3605-1 (or a certificate split from these certificates) shall be used to supply the required offsets, unless a revised offsetting proposal is received and approved by the District, upon which this Determination of Compliance shall be reissued, administratively specifying the new offsetting proposal. Original public noticing requirements, if any, shall be duplicated prior to reissuance of this Determination of Compliance. [District Rule 2201]

7. {98} No air contaminant shall be released into the atmosphere which causes a public nuisance. [District Rule 4102]

8. All equipment shall be maintained in good operating condition and shall be operated in a manner to minimize emissions of air contaminants into the atmosphere. [District Rules 2201 and 2410]

9. Operation shall include the following dust collectors serving the following operations: urea bucket elevator. [District Rule 2201]

10. All conveyors and crushers shall be fully enclosed and shall vent only to dust collectors. [District Rule 2201]

11. All processing and conveying equipment, storage systems, and transfer and loading systems shall be dust-tight (to prevent visible emissions in excess of 5% opacity) and shall vent only to dust collectors. [District Rule 2201]

12. Each dust collector shall be equipped with dust-tight (to prevent visible emissions in excess of 5% opacity) provisions to return collected material to process equipment. [District Rule 2201]

13. Each dust collector shall be equipped with operational differential pressure indicators, and during fabric collector operation read in the proper range specified by the manufacturer. [District Rule 2201]

14. The differential pressure across each compartment of the dust collectors shall be checked and the results recorded quarterly. If the differential pressure across each compartment of the dust collectors is not within the proper range specified by the manufacturer, corrective action is required prior to further operation of the equipment. Corrective action means that the cause of the improper pressure differential is corrected before operation of the equipment is resumed. [District Rule 2201]

15. Each dust collector shall automatically activate whenever process equipment served is activated. [District Rule 2201]

16. Material shall not be conveyed or crushed unless ventilation system and dust collectors are operating and functioning properly. [District Rule 2201]

17. Permittee shall maintain daily records of the hours of operation of material processed and records shall be made available for District inspection upon request. [District Rule 2201]

18. Airflow for the following dust collector(s) shall not exceed: urea bucket elevator: 1,500 cfm. [District Rule 2201]

19. Particulate matter emissions from the dust collectors shall not exceed 0.001 grains/dscf in concentration. [District Rule 2201]

20. PM10 emissions shall not exceed any of the following emissions for the following operations: urea bucket elevator: 0.3 lb/day. [District Rule 2201]

21. PM10 emissions shall not exceed any of the following emissions for the following operations: urea bucket elevator: 113 lb/yr. [District Rule 2201]

22. The maximum process rates of material on a weight basis shall not exceed any of the following: urea bucket elevator: 1,720 ton/day. [District Rule 2201]

23. The maximum process rates of material on a weight basis shall not exceed any of the following: urea bucket elevator: 627,800 ton/yr. [District Rule 2201]

24. Dust collector filters shall be completely inspected annually while not in operation for tears, scuffs, abrasives or holes which might interfere with PM collection efficiency and shall be replaced as needed. [District Rule 2201]

25. Visible emissions from the operation shall be checked and record results quarterly. If visible emissions are observed, corrective action is required prior to further loading. Corrective action means that visible emissions are eliminated before next loading event. [District Rule 2201]

26. Records of dust control device maintenance, inspection, and repairs shall be maintained. The records shall include identification of equipment, date of inspection, corrective action taken, and identification of individual performing inspection. [District Rule 2201]

27. Testing for particulate matter concentration for each dust collector shall be conducted within 60 days after achieving the maximum production rate, not later than 180 days after initial startup of such facility, and within 12 calendar months of the date the previous performance test was required to be completed thereafter. If the results of the most recent performance test demonstrate that emissions from the affected facility are 50 percent or less of the applicable emissions standard, a new performance test must be conducted within 24 calendar months of the date that the previous performance test was required to be completed. [District Rule 1081]

28. Testing for compliance with particulate matter concentration limit shall be conducted using EPA method 5. The sampling time and sample volume for each run shall be at least 60 minutes and 0.85 dscm (30 dscf). Sampling shall begin no less than 30 minutes after startup and shall terminate before shutdown procedures begin. A minimum of three valid test runs are needed to comprise a PM performance test. [District Rule 1081]

29. Testing for the opacity standards for the operations shall be conducted within 60 days after achieving the maximum production rate, not later than 180 days after initial startup of such facility, and within 90 operating days of the date the previous performance test was required to be completed thereafter. If all 6-minute average opacity readings in the most recent performance test are equal to or less than half the applicable opacity limit, a new performance test must be conducted within 12 calendar months of the date that the previous performance test was required to be completed. [District Rule 1081]

30. Source testing to determine opacity shall be conducted using EPA method 9. [District Rule 1081]

31. The permittee shall conduct monthly visual observations of all process and control equipment. If any deficiencies are observed, the necessary maintenance must be performed as expeditiously as possible. [District Rule 1081]

32. Permittee shall conduct testing for compliance with the particulate matter concentration limit and particulate matter concentration limit within 60 days after achieving the maximum production rate, not later than 180 days after initial startup of such facility. [District Rule 1081]

33. Permittee shall provide the District at least 30 days prior notice of any performance test, except as specified under other subparts, to afford the Administrator the opportunity to have an observer present. [District Rule 1081]

34. Permittee shall maintain a logbook (written or electronic) with the records specified in this document on-site and make it available upon request. [District Rule 1081]

35. All records required by this DOC shall be retained for a period of at least 5 years and shall be made available to the District, ARB, and USEPA upon request. [District Rules 1070 and 2201]

36. {3433} Disturbances of soil related to any construction, demolition, excavation, extraction, or other earthmoving activities shall comply with the requirements for fugitive dust control in District Rule 8021 unless specifically exempted under Section 4.0 of Rule 8021 or Rule 8011. [District Rules 8011 and 8021]

37. {3434} An owner/operator shall submit a Dust Control Plan to the APCO prior to the start of any construction activity on any site that will include 10 acres or more of disturbed surface area for residential developments, or 5 acres or more of disturbed surface area for non-residential development, or will include moving, depositing, or relocating more than 2,500 cubic yards per day of bulk materials on at least three days. [District Rules 8011 and 8021]

38. {3435} An owner/operator shall prevent or cleanup any carryout or trackout in accordance with the requirements of District Rule 8041 Section 5.0, unless specifically exempted under Section 4.0 of Rule 8041 (8/19/04) or Rule 8011(8/19/04). [District Rules 8011 and 8021]

39. {3436} Whenever open areas are disturbed, or vehicles are used in open areas, the facility shall comply with the requirements of Section 5.0 of District Rule 8051, unless specifically exempted under Section 4.0 of Rule 8051 or Rule 8011. [District Rules 8011 and 8051]

40. {3437} Any paved road or unpaved road shall comply with the requirements of District Rule 8061 unless specifically exempted under Section 4.0 of Rule 8061 or Rule 8011. [District Rules 8011 and 8061]

41. {3438} Water, gravel, roadmix, or chemical/organic dust stabilizers/suppressants, vegetative materials, or other District-approved control measure shall be applied to unpaved vehicle travel areas as required to limit Visible Dust Emissions to 20% opacity and comply with the requirements for a stabilized unpaved road as defined in Section 3.59 of District Rule 8011. [District Rule 8011 and 8071]

42. {3439} Where dusting materials are allowed to accumulate on paved surfaces, the accumulation shall be removed daily or water and/or chemical/organic dust stabilizers/suppressants shall be applied to the paved surface as required to maintain continuous compliance with the requirements for a stabilized unpaved road as defined in Section 3.59 of District Rule 8011 and limit Visible Dust Emissions (VDE) to 20% opacity. [District Rule 8011 and 8071]

43. {3440} On each day that 50 or more Vehicle Daily Trips or 25 or more Vehicle Daily Trips with 3 axles or more will occur on an unpaved vehicle/equipment traffic area, permittee shall apply water, gravel, roadmix, or chemical/organic dust stabilizers/suppressants, vegetative materials, or other District-approved control measure as required to limit Visible Dust Emissions to 20% opacity and comply with the requirements for a stabilized unpaved road as defined in Section 3.59 of District Rule 8011. [District Rule 8011 and 8071]

44. {3441} Whenever any portion of the site becomes inactive, Permittee shall restrict access and periodically stabilize any disturbed surface to comply with the conditions for a stabilized surface as defined in Section 3.58 of District Rule 8011. [District Rules 8011 and 8071]

45. {3442} Records and other supporting documentation shall be maintained as required to demonstrate compliance with the requirements of the rules under Regulation VIII only for those days that a control measure was implemented. Such records shall include the type of control measure(s) used, the location and extent of coverage, and the date, amount, and frequency of application of dust suppressant, manufacturer's dust suppressant product information sheet that identifies the name of the dust suppressant and application instructions. Records shall be kept for one year following project completion that results in the termination of all dust generating activities. [District Rules 8011, 8031, and 8071]

S-7616-35-0

NITRIC ACID UNIT FOR THE PRODUCTION OF NITRIC ACID FROM AMMONIA OXIDATION, NITRIC OXIDE OXIDATION, AND ABSORPTION SERVED BY: SELECTIVE CATALYTIC REDUCTION (SCR) TO CONTROL NOX, AND TERTIARY CATALYTIC DECOMPOSITION TO CONTROL N2O

1. Prior to the District's issuance of a Final Determination of Compliance, the District and HECA shall enter into a mitigation agreement that fully mitigates the indirect emissions associated with construction and operation of the HECA facility, as determined appropriate and necessary by the District to comply with Rule 9110 and 40 CFR Part 93 Subpart B requirements, and feasible mitigation requirements under CEQA. [Rule 9110, 40 CFR Part 93 Subpart B, and Public Resources Code 21000-21177: California Environmental Quality Act]

2. The permittee shall enter into an Air Quality Mitigation Settlement Agreement with the District prior to issuance of the Final Determination of Compliance, or such other time that is mutually agreeable. [Rule 9110, 40 CFR Part 93 Subpart B, and Public Resources Code 21000-21177: California Environmental Quality Act]

3. Permittee shall submit an application to comply with Rule 2520 - Federally Mandated Operating Permits within twelve months of commencing operation. [District Rule 2520]

4. Permittee shall submit an application to comply with Rule 2540 - Acid Rain Program within twelve months of commencing operation. [District Rule 2540]

5. Prior to initial operation of S-7616-23, -25, -26, -30, -31, -32, -33, and -35, permittee shall provide NOx emission reduction credits for the following quantity of emissions: 1st quarter: 74,201 lb, 2nd quarter: 74,201 lb, 3rd quarter: 74,201 lb, and fourth quarter: 74,201 lb. Offsets shall be provided at the applicable offset ratio specified in Table 4-2 of Rule 2201 (as amended 4/21/11). [District Rule 2201]

6. ERC certificate numbers C-1058-2, C-1058-5, S-3275-5, S-3273-2, S-3305-1, S-3557-1, and/or S-3605-1 (or a certificate split from these certificates) shall be used to supply the required offsets, unless a revised offsetting proposal is received and approved by the District, upon which this Determination of Compliance shall be reissued, administratively specifying the new offsetting proposal. Original public noticing requirements, if any, shall be duplicated prior to reissuance of this Determination of Compliance. [District Rule 2201]

7. {98} No air contaminant shall be released into the atmosphere which causes a public nuisance. [District Rule 4102]

8. {271} All equipment shall be maintained in good operating condition and shall be operated in a manner to minimize emissions of air contaminants into the atmosphere. [District Rule 2201]

9. No air contaminant shall be discharged into the atmosphere for a period or periods aggregating more than three minutes in any one hour which is as dark as, or darker than, 10% opacity. [District Rules 2201]

10. The production rate of nitric acid shall not exceed 501 tons of nitric acid in one day. [District Rule 2201]

11. The selective catalytic reduction system shall be operated at all times that nitric acid production is occurring. [District Rule 2201]

12. NOx emissions from the nitric acid unit shall not exceed 100.2 lb-NOx/day. [District Rule 2201]

13. NOx emissions from the nitric acid unit shall not exceed 33,617 lb-NOx per calendar year. [District Rule 2201]

14. The ammonia slip emissions (NH3) shall not exceed either of the following limits: 0.5 lb/hr or 10.0 ppmvd @15% O2 (based on a 24 hour rolling average). [District Rule 2201]

15. N2O emission rate shall not exceed 0.54 lb-N2O per ton of HNO3 produced. [District Rule 2410]

16. Source testing to quantify N2O emissions (lb-N2O/ton of HNO3 produced) shall be conducted within 60 days after initial start-up, and once every twelve (12) months thereafter, with equipment in operation at 90 percent or more of the rated capacity when the analysis is conducted. [District Rules 1081, 2201, and 2410]

17. {109} Source testing shall be conducted using the methods and procedures approved by the District. The District must be notified at least 30 days prior to any compliance source test, and a source test plan must be submitted for approval at least 15 days prior to testing. [District Rule 1081]

18. {33} Sampling facilities for source testing shall be provided in accordance with the provisions of Rule 1081 (Source Sampling). [District Rule 1081]

19. {110} The results of each source test shall be submitted to the District within 60 days thereafter. [District Rule 1081]

20. The nitric acid unit shall not discharge into the atmosphere any gases which contained NOx, expressed as NO2, in exceed of 0.20 lb-NOx per ton of nitric acid produced (24-hour rolling average, expressed as 100 percent nitric acid). [District Rule 2201 and 40 CFR 60 Subpart Ga]

21. The nitric acid plant shall comply with the requirements of 40 CFR Part 60, Subpart Ga. [40 CFR 60 Subpart Ga]

22. The permittee shall install, calibrate, maintain, and operate a continuous emission monitoring system (CEMS) for measuring and recording the concentration of NOx emissions in accordance with the provisions of Section 60.13 and Performance Specification 2 of Appendix B and Procedure 1 of Appendix F of part 60. [District Rules 2201, 1080, and 40 CFR 60 Subpart Ga]

23. The permittee shall install, calibrate, maintain, and operate a stack gas flow rate monitoring system. [40 CFR 60 Subpart Ga]

24. The permittee shall determine hourly NOx emissions rate and calculate emissions in units of the applicable emissions limit (lb/ton of 100 percent acid produced). [40 CFR 60 Subpart Ga]

25. The CEMS shall be in continuous operation during all operating periods including unit startup and shutdown, and malfunction. [District Rule 1080 and 40 CFR 60 Subpart Ga]

26. The permittee must use cylinder gas audits to fulfill the quarterly auditing requirement. [40 CFR 60 Subpart Ga]

27. For the NOx concentration CEMS, the permittee must use a span value, as defined in Performance Specification 2, Section 3.11, of Appendix B of this part, of 500 ppmv (as NO2). If the NOx concentrations emitted is higher than 600 ppmv (e.g., during startup or shutdown periods), the permittee must apply a second CEMS or dual range CEMS and a second span value equal to 125 percent of the maximum estimated NOx emission concentration to apply to the second CEMS or to the higher of the dual analyzer ranges during such periods. [40 CFR 60 Subpart Ga]

28. The permittee shall perform a relative accuracy test audit (RATA) for the NOx CEMS as specified by 40 CFR Part 60, Appendix F, 5.11, at least once every four calendar quarters. The permittee shall comply with the applicable requirements for quality assurance testing and maintenance of the continuous emission monitor equipment in accordance with the procedures and guidance specified in 40 CFR Part 60, Appendix F. [District Rule 1080 and 40 CFR 60 Subpart Ga]

29. The permittee must operate and certify the continuous emissions rate monitoring system (CERMS) in accordance with the provisions of §60.13 and Performance Specification 6 of Appendix B of part 60 and the specifications of Section 60.73a (Subpart Ga). [District Rule 1080 and 40 CFR 60 Subpart Ga]

30. The permittee must conduct an initial performance test to demonstrate compliance with the NOx emissions limit under §60.72a(a) beginning in the calendar month following initial certification of the NOx and flow rate monitoring CEMS. The initial performance test consists of collection of hourly NOx average concentration, mass flow rate recorded with the certified NOx concentration and flow rate CEMS and the corresponding acid generation (tons) data for all of the hours of operation for the first 30 days beginning on the first day of the first month following completion of the CEMS installation and certification as described above. The permittee must assure that the CERMS meets all

of the data quality assurance requirements as per §60.13 and Appendix F, Procedure 1, of this part and you must use the data from the continuous emissions rate monitoring system (CERMS) for this compliance determination. [District Rule 1080 and 40 CFR 60 Subpart Ga]

31. The permittee shall calculate the 24-hour day rolling arithmetic average emission rate in units of the applicable emissions standard (lb-NOx/ton 100 percent acid produced) at the end of each operating day using all the quality assured hourly average CEMS data for the previous 24 operating hours according to the procedures specified in Section 60.75a. [District Rule 2201 and 40 CFR 60 Subpart Ga]

32. The permittee shall maintain records of the following information for each operating day period: (1) hours of operation; (2) production rate of nitric acid, expressed as 100 percent nitric acid; (3) 24-hour average NOx emissions rate values. [District Rule 2201 and 40 CFR Subpart Ga]

33. The permittee shall maintain records of the following time periods: (1) times when the equipment is not in compliance with the emissions standards; (2) times when the pollutant concentration exceeded full span of the NOx monitoring equipment; (3) times when the volumetric flow rate exceeded the high value of the volumetric flow rate monitoring equipment. [40 CFR 60 Subpart Ga]

34. The permittee shall maintain records of any modifications to CEMS which could affect the ability of the CEMS to comply with applicable performance specifications. For each malfunction, the permittee shall maintain records of the following information: (1) records of the occurrence and duration of each malfunction of operation (i.e., process equipment) or the air pollution control and monitoring equipment; (2) records of actions taken during periods of malfunction to minimize emissions in accordance with section 60.11(d), including corrective actions to restore malfunctioning process and air pollution control and monitoring equipment to its normal or usual manner of operation. [District Rule 1080 and 40 CFR 60 Subpart Ga]

35. The permittee to submit performance test data from the initial and subsequent performance tests and from performance evaluations of the continuous monitors to the Administrator at the appropriate address as shown in 40 CFR 60.4. The permittee shall report to the Administrator for each 30 operating day period where the nitric acid plant was not in compliance with the emissions standard: (1) Time period; (2) NOx emission rates (lb/ton of acid produced); (3) Reasons for noncompliance with the emissions standard; and (4) Description of corrective actions taken. The permittee shall also report the following whenever they occur: (1) Times when the pollutant concentration exceeded full span of the NOx pollutant monitoring equipment; and (2) Times when the volumetric flow rate exceeded the high value of the volumetric flow rate monitoring equipment. [District Rule 1080 and 40 CFR 60 Subpart Ga]

36. The permittee shall report any modifications to CERMS which could affect the ability of the CERMS to comply with applicable performance specifications. [40 CFR 60 Subpart Ga]

37. Within 60 days of completion of the relative accuracy test audit (RATA) required by this subpart, the permittee must submit the data from that audit to EPA's WebFIRE database by using the Compliance and Emissions Data Reporting Interface (CEDRI) that is accessed through EPA's Central Data Exchange (CDX) (https://cdx.epa.gov/SSL/cdx/EPA_Home.asp) in the format specified in 40 CFR 60 Subpart Ga, Section 60.77a. [40 CFR 60 Subpart Ga]

38. If a malfunction occurred during the reporting period, the permittee must submit a report that contains the following: (1) The number, duration, and a brief description for each type of malfunction which occurred during the reporting period and which caused or may have caused any applicable emission limitation to be exceeded; (2) A description of actions taken by an owner or operator during a malfunction of an affected facility to minimize emissions in accordance with §60.11(d), including actions taken to correct a malfunction. [40 CFR 60 Subpart Ga]

39. Source testing to measure the NOx and NH3 emission rates (lb/hr and ppmvd @ 15% O2) and PM10 emission rate (lb/hr) shall be conducted within 60 days after the conclusion of the commissioning period and at least once every twelve months thereafter. [District Rules 1081]

40. The following test methods shall be used: NOx - EPA Method 7E or 20, PM10 - EPA Method 5/202 (front half and back half), CO - EPA Method 10 or 10B, O2 - EPA Method 3, 3A, or 20, VOC - EPA Method 18 or 25, and ammonia - EPA Method 206. EPA approved alternative test methods as approved by the District may also be used to address the source testing requirements of this DOC. The request to utilize EPA approved alternative source testing methods must be submitted in writing and written approval received from the District prior to the submission of the source test plan. [District Rules 1081]

41. NH3 emissions for source test purposes shall be determined using BAAQMD method ST-1B. [District Rule 1081]

42. All records required by this DOC shall be retained for a period of at least 5 years and shall be made available to the District, ARB, and USEPA upon request. [District Rules 1070 and 2201]

43. {3433} Disturbances of soil related to any construction, demolition, excavation, extraction, or other earthmoving activities shall comply with the requirements for fugitive dust control in District Rule 8021 unless specifically exempted under Section 4.0 of Rule 8021 or Rule 8011. [District Rules 8011 and 8021]

44. {3434} An owner/operator shall submit a Dust Control Plan to the APCO prior to the start of any construction activity on any site that will include 10 acres or more of disturbed surface area for residential developments, or 5 acres or more of disturbed surface area for non-residential development, or will include moving, depositing, or relocating more

than 2,500 cubic yards per day of bulk materials on at least three days. [District Rules 8011 and 8021]

45. {3435} An owner/operator shall prevent or cleanup any carryout or trackout in accordance with the requirements of District Rule 8041 Section 5.0, unless specifically exempted under Section 4.0 of Rule 8041 (8/19/04) or Rule 8011(8/19/04). [District Rules 8011 and 8021]

46. {3436} Whenever open areas are disturbed, or vehicles are used in open areas, the facility shall comply with the requirements of Section 5.0 of District Rule 8051, unless specifically exempted under Section 4.0 of Rule 8051 or Rule 8011. [District Rules 8011 and 8051]

47. {3437} Any paved road or unpaved road shall comply with the requirements of District Rule 8061 unless specifically exempted under Section 4.0 of Rule 8061 or Rule 8011. [District Rules 8011 and 8061]

48. {3438} Water, gravel, roadmix, or chemical/organic dust stabilizers/suppressants, vegetative materials, or other District-approved control measure shall be applied to unpaved vehicle travel areas as required to limit Visible Dust Emissions to 20% opacity and comply with the requirements for a stabilized unpaved road as defined in Section 3.59 of District Rule 8011. [District Rule 8011 and 8071]

49. {3439} Where dusting materials are allowed to accumulate on paved surfaces, the accumulation shall be removed daily or water and/or chemical/organic dust stabilizers/suppressants shall be applied to the paved surface as required to maintain continuous compliance with the requirements for a stabilized unpaved road as defined in Section 3.59 of District Rule 8011 and limit Visible Dust Emissions (VDE) to 20% opacity. [District Rule 8011 and 8071]

50. {3440} On each day that 50 or more Vehicle Daily Trips or 25 or more Vehicle Daily Trips with 3 axles or more will occur on an unpaved vehicle/equipment traffic area, permittee shall apply water, gravel, roadmix, or chemical/organic dust stabilizers/suppressants, vegetative materials, or other District-approved control measure as required to limit Visible Dust Emissions to 20% opacity and comply with the requirements for a stabilized unpaved road as defined in Section 3.59 of District Rule 8011. [District Rule 8011 and 8071]

51. {3441} Whenever any portion of the site becomes inactive, Permittee shall restrict access and periodically stabilize any disturbed surface to comply with the conditions for a stabilized surface as defined in Section 3.58 of District Rule 8011. [District Rules 8011 and 8071]

52. {3442} Records and other supporting documentation shall be maintained as required to demonstrate compliance with the requirements of the rules under Regulation VIII only for those days that a control measure was implemented. Such records shall include the type of control measure(s) used, the location and extent of coverage, and the date, amount,

and frequency of application of dust suppressant, manufacturer's dust suppressant product information sheet that identifies the name of the dust suppressant and application instructions. Records shall be kept for one year following project completion that results in the termination of all dust generating activities. [District Rules 8011, 8031, and 8071]

S-7616-36-0

AMMONIUM NITRATE UNIT THAT PRODUCES AMMONIUM NITRATE, CONSISTING OF: NEUTRALIZER WITH INTEGRAL SCRUBBER TO CONTROL AMMONIA; PROCESS CONDENSATE TANK WITH VENT SCRUBBER TO CONTROL PARTICULATE MATTER EMISSIONS; AMMONIUM NITRATE COOLER, AND PROCESS PUMP(S)

1. Prior to the District's issuance of a Final Determination of Compliance, the District and HECA shall enter into a mitigation agreement that fully mitigates the indirect emissions associated with construction and operation of the HECA facility, as determined appropriate and necessary by the District to comply with Rule 9110 and 40 CFR Part 93 Subpart B requirements, and feasible mitigation requirements under CEQA. [Rule 9110, 40 CFR Part 93 Subpart B, and Public Resources Code 21000-21177: California Environmental Quality Act]

2. The permittee shall enter into an Air Quality Mitigation Settlement Agreement with the District prior to issuance of the Final Determination of Compliance, or such other time that is mutually agreeable. [Rule 9110, 40 CFR Part 93 Subpart B, and Public Resources Code 21000-21177: California Environmental Quality Act]

3. Permittee shall submit an application to comply with Rule 2520 - Federally Mandated Operating Permits within twelve months of commencing operation. [District Rule 2520]

4. Permittee shall submit an application to comply with Rule 2540 - Acid Rain Program within twelve months of commencing operation. [District Rule 2540]

5. Prior to initial operation of S-7616-17, -18, -19, -20, -22, -23, -25, -26, -27, -28, -29, -30, -31, -32, -33, -34, -36, -37, -38, -39, and -40, permittee shall provide PM10/PM2.5 emission reduction credits for the following quantity of emissions: 1st quarter: 39,538 lb, 2nd quarter: 39,538 lb, 3rd quarter: 39,538 lb, and 4th quarter: 39,538 lb. Offsets shall be provided at the applicable offset ratio specified in Table 4-2 of Rule 2201 (as amended 4/21/11). SOx ERCs may be used to offset PM10/PM2.5 increases at an interpollutant ratio of 1.0 lb-SOx: 1.0 lb-PM10. [District Rule 2201]

6. ERC certificate numbers C-1058-2, C-1058-5, S-3275-5, S-3273-2, S-3305-1, S-3557-1, and/or S-3605-1 (or a certificate split from these certificates) shall be used to supply the required offsets, unless a revised offsetting proposal is received and approved by the District, upon which this Determination of Compliance shall be reissued, administratively specifying the new offsetting proposal. Original public noticing requirements, if any, shall be duplicated prior to reissuance of this Determination of Compliance. [District Rule 2201]

7. {98} No air contaminant shall be released into the atmosphere which causes a public nuisance. [District Rule 4102]

8. {271} All equipment shall be maintained in good operating condition and shall be operated in a manner to minimize emissions of air contaminants into the atmosphere. [District Rule 2201]

9. {15} No air contaminant shall be discharged into the atmosphere for a period or periods aggregating more than three minutes in any one hour which is as dark as, or darker than, Ringelmann 1 or 20% opacity. [District Rule 4101]

10. The permittee shall calibrate, maintain and operate the wet scrubber according the manufacturer's specifications and recommendations. The permittee shall keep records on-site for a period of five years of the calibration and maintenance activities. [District Rule 2201]

11. PM10 emissions from scrubber vent shall not exceed 0.20 lb-PM10/hr. [District Rule 2201]

12. PM10 emission from scrubber vent shall not exceed 0.0075 lb-PM10 per ton of ammonium nitrate produced. [District Rule 2201]

13. Production of ammonium nitrate shall not exceed 636 tons per day nor 212,000 tons during any consecutive 12-month period. [District Rule 2201]

14. Operation of the ammonium nitrate unit shall not exceed 8,000 hours per calendar year. [District Rule 2201]

15. The permittee shall keep records of daily ammonium nitrate production. These records shall contain each month's total and a rolling total for the previous 12 months. [District Rule 2201]

16. Source testing to quantify PM10 emissions (lb-PM10/hr and lb-PM10/ton of ammonium nitrate produced) from scrubber vent shall be conducted within 60 days after initial start-up, and once every twelve (12) months thereafter, with equipment in operation at 90 percent or more of the rated capacity when the analysis is conducted. [District Rules 1081 and 2201]

17. {109} Source testing shall be conducted using the methods and procedures approved by the District. The District must be notified at least 30 days prior to any compliance source test, and a source test plan must be submitted for approval at least 15 days prior to testing. [District Rule 1081]

18. The following test methods shall be used PM10: EPA method 5 (front half and back half). Alternative test methods as approved by the District may also be used to address the source testing requirements of this permit. [District Rules 1081 and 2201]

19. {33} Sampling facilities for source testing shall be provided in accordance with the provisions of Rule 1081 (Source Sampling). [District Rule 1081]

20. {110} The results of each source test shall be submitted to the District within 60 days thereafter. [District Rule 1081]

21. All records required by this DOC shall be retained for a period of at least 5 years and shall be made available to the District, ARB, and USEPA upon request. [District Rules 1070 and 2201]

22. {3433} Disturbances of soil related to any construction, demolition, excavation, extraction, or other earthmoving activities shall comply with the requirements for fugitive dust control in District Rule 8021 unless specifically exempted under Section 4.0 of Rule 8021 or Rule 8011. [District Rules 8011 and 8021]

23. {3434} An owner/operator shall submit a Dust Control Plan to the APCO prior to the start of any construction activity on any site that will include 10 acres or more of disturbed surface area for residential developments, or 5 acres or more of disturbed surface area for non-residential development, or will include moving, depositing, or relocating more than 2,500 cubic yards per day of bulk materials on at least three days. [District Rules 8011 and 8021]

24. {3435} An owner/operator shall prevent or cleanup any carryout or trackout in accordance with the requirements of District Rule 8041 Section 5.0, unless specifically exempted under Section 4.0 of Rule 8041 (8/19/04) or Rule 8011(8/19/04). [District Rules 8011 and 8021]

25. {3436} Whenever open areas are disturbed, or vehicles are used in open areas, the facility shall comply with the requirements of Section 5.0 of District Rule 8051, unless specifically exempted under Section 4.0 of Rule 8051 or Rule 8011. [District Rules 8011 and 8051]

26. {3437} Any paved road or unpaved road shall comply with the requirements of District Rule 8061 unless specifically exempted under Section 4.0 of Rule 8061 or Rule 8011. [District Rules 8011 and 8061]

27. {3438} Water, gravel, roadmix, or chemical/organic dust stabilizers/suppressants, vegetative materials, or other District-approved control measure shall be applied to unpaved vehicle travel areas as required to limit Visible Dust Emissions to 20% opacity and comply with the requirements for a stabilized unpaved road as defined in Section 3.59 of District Rule 8011. [District Rule 8011 and 8071]

28. {3439} Where dusting materials are allowed to accumulate on paved surfaces, the accumulation shall be removed daily or water and/or chemical/organic dust stabilizers/suppressants shall be applied to the paved surface as required to maintain continuous compliance with the requirements for a stabilized unpaved road as defined in Section 3.59 of District Rule 8011 and limit Visible Dust Emissions (VDE) to 20% opacity. [District Rule 8011 and 8071]

29. {3440} On each day that 50 or more Vehicle Daily Trips or 25 or more Vehicle Daily Trips with 3 axles or more will occur on an unpaved vehicle/equipment traffic area, permittee shall apply water, gravel, roadmix, or chemical/organic dust stabilizers/suppressants, vegetative materials, or other District-approved control measure as required to limit Visible Dust Emissions to 20% opacity and comply with the requirements for a stabilized unpaved road as defined in Section 3.59 of District Rule 8011. [District Rule 8011 and 8071]

30. {3441} Whenever any portion of the site becomes inactive, Permittee shall restrict access and periodically stabilize any disturbed surface to comply with the conditions for a stabilized surface as defined in Section 3.58 of District Rule 8011. [District Rules 8011 and 8071]

31. {3442} Records and other supporting documentation shall be maintained as required to demonstrate compliance with the requirements of the rules under Regulation VIII only for those days that a control measure was implemented. Such records shall include the type of control measure(s) used, the location and extent of coverage, and the date, amount, and frequency of application of dust suppressant, manufacturer's dust suppressant product information sheet that identifies the name of the dust suppressant and application instructions. Records shall be kept for one year following project completion that results in the termination of all dust generating activities. [District Rules 8011, 8031, and 8071]

S-7616-37-0

UREA STORAGE AND HANDLING OPERATION CONSISTING OF FOUR 20,000-TON STORAGE CAPACITY ENCLOSED UREA STORAGE DOMES EACH WITH ONE UREA TRANSFER TOWER, WITH EACH TRANSFER TOWER SERVED BY ONE DUST COLLECTOR; ENCLOSED UREA RECLAIM BUILDING WITH RECLAIM HOPPERS AND GRIZZLIES; ENCLOSED, TUBULAR RECLAIM CONVEYOR (THAT TRANSFERS MATERIAL TO UREA TRANSFER TOWER #5); UREA TRANSFER TOWER #5 SERVED BY DUST COLLECTOR; ENCLOSED, TUBULAR LOADOUT FEED CONVEYOR (THAT TRANSFERS MATERIAL TO LOADOUT BUILDING); UREA LOADOUT BUILDING SERVED BY BAGHOUSE DUST COLLECTOR, WITH RAIL LOADOUT CONVEYOR, ONE TRUCK AND ONE TRAIN LOADOUT WEIGH SYSTEM, ONE TRUCK AND ONE TRAIN LOADING SPOUT AND VENT SYSTEM

1. Prior to the District's issuance of a Final Determination of Compliance, the District and HECA shall enter into a mitigation agreement that fully mitigates the indirect emissions associated with construction and operation of the HECA facility, as determined appropriate and necessary by the District to comply with Rule 9110 and 40 CFR Part 93 Subpart B requirements, and feasible mitigation requirements under CEQA. [Rule 9110, 40 CFR Part 93 Subpart B, and Public Resources Code 21000-21177: California Environmental Quality Act]

2. The permittee shall enter into an Air Quality Mitigation Settlement Agreement with the District prior to issuance of the Final Determination of Compliance, or such other time that is mutually agreeable. [Rule 9110, 40 CFR Part 93 Subpart B, and Public Resources Code 21000-21177: California Environmental Quality Act]

3. Permittee shall submit an application to comply with Rule 2520 - Federally Mandated Operating Permits within twelve months of commencing operation. [District Rule 2520]

4. Permittee shall submit an application to comply with Rule 2540 - Acid Rain Program within twelve months of commencing operation. [District Rule 2540]

5. Prior to initial operation of S-7616-17, -18, -19, -20, -22, -23, -25, -26, -27, -28, -29, -30, -31, -32, -33, -34, -36, -37, -38, -39, and -40, permittee shall provide PM10/PM2.5 emission reduction credits for the following quantity of emissions: 1st quarter: 39,538 lb, 2nd quarter: 39,538 lb, 3rd quarter: 39,538 lb, and 4th quarter: 39,538 lb. Offsets shall be provided at the applicable offset ratio specified in Table 4-2 of Rule 2201 (as amended 4/21/11). SOx ERCs may be used to offset PM10/PM2.5 increases at an interpollutant ratio of 1.0 lb-SOx: 1.0 lb-PM10. [District Rule 2201]

6. ERC certificate numbers C-1058-2, C-1058-5, S-3275-5, S-3273-2, S-3305-1, S-3557-1, and/or S-3605-1 (or a certificate split from these certificates) shall be used to supply the required offsets, unless a revised offsetting proposal is received and approved by the District, upon which this Determination of Compliance shall be reissued, administratively

specifying the new offsetting proposal. Original public noticing requirements, if any, shall be duplicated prior to reissuance of this Determination of Compliance. [District Rule 2201]

7. {98} No air contaminant shall be released into the atmosphere which causes a public nuisance. [District Rule 4102]

8. Operation shall include the following dust collectors serving the following operations: urea bucket elevator to conveyor, five urea transfer towers, urea loading building vent. [District Rule 2201]

9. All conveyors shall be fully enclosed and shall vent only to dust collectors. [District Rule 2201]

10. All transfer towers, conveyors, urea domes, and urea handling buildings shall be dust-tight (to prevent visible emissions in excess of 5% opacity) and shall vent only to dust collectors. [District Rule 2201]

11. Each dust collector shall be equipped with dust-tight (to prevent visible emissions in excess of 5% opacity) provisions to return collected material to process equipment. [District Rule 2201]

12. Each dust collector shall be equipped with operational differential pressure indicators, and during fabric collector operation read in the proper range specified by the manufacturer. [District Rule 2201]

13. The differential pressure across each compartment of the dust collectors shall be checked and the results recorded quarterly. If the differential pressure across each compartment of the dust collectors is not within the proper range specified by the manufacturer, corrective action is required prior to further operation of the equipment. Corrective action means that the cause of the improper pressure differential is corrected before operation of the equipment is resumed. [District Rule 2201]

14. Each dust collector shall automatically activate whenever process equipment served is activated. [District Rule 2201]

15. Material shall not be conveyed or crushed unless ventilation system and dust collectors are operating and functioning properly. [District Rule 2201]

16. Permittee shall maintain daily records of the hours of operation of material unloading at the enclosed truck receiving hoppers and records shall be made available for District inspection upon request. [District Rule 2201]

17. Airflow for the following dust collector(s) shall not exceed: urea transfer tower 1: 1,500 cfm; urea transfer tower 2: 1,500 cfm; urea transfer tower 3: 1,500 cfm; urea transfer tower 4: 1,500 cfm; urea transfer tower 5: 1,500 cfm; urea loading building: 20,000 cfm. [District Rule 2201]

18. Particulate matter emissions from the dust collectors shall not exceed 0.001 grains/dscf in concentration. [District Rule 2201]

19. PM10 emissions shall not exceed any of the following emissions for the following operations: urea transfer tower 1: 0.3 lb/day; urea transfer tower 2: 0.3 lb/day; urea transfer tower 3: 0.3 lb/day; urea transfer tower 4: 0.3 lb/day; urea transfer tower 5: 0.3 lb/day; urea loading building: 4.1 lb/day. [District Rule 2201]

20. PM10 emissions shall not exceed any of the following emissions for the following operations: urea transfer tower 1: 113 lb/yr; urea transfer tower 2: 28 lb/yr; urea transfer tower 3: 56 lb/yr; urea transfer tower 4: 28 lb/yr; urea transfer tower 5: 27 lb/yr; urea loading building baghouse: 357 lb/yr. [District Rule 2201]

21. The maximum process rates of material on a weight basis shall not exceed any of the following: urea bucket elevator to conveyor: 1,720 ton/day; urea transfer tower 1: 1,720 ton/day; urea transfer tower 2: 1,720 ton/day; urea transfer tower 3: 1,720 ton/day; urea transfer tower 4: 1,720 ton/day; urea transfer tower 5: 1,720 ton/day; urea loading building: 1,720 ton/day. [District Rule 2201]

22. The maximum process rates of material on a weight basis shall not exceed any of the following: urea transfer tower 1: 627,800 ton/yr; urea transfer tower 2: 156,950 ton/yr; urea transfer tower 3: 313,900 ton/yr; urea transfer tower 4: 156,950 ton/yr; urea transfer tower 5: 627,800 ton/yr; urea loading building baghouse: 627,800 ton/yr. [District Rule 2201]

23. Dust collector filters shall be completely inspected annually while not in operation for tears, scuffs, abrasives or holes which might interfere with PM collection efficiency and shall be replaced as needed. [District Rule 2201]

24. Visible emissions from the operation shall be checked and record results quarterly. If visible emissions are observed, corrective action is required prior to further loading. Corrective action means that visible emissions are eliminated before next loading event. [District Rule 2201]

25. Records of dust control device maintenance, inspection, and repairs shall be maintained. The records shall include identification of equipment, date of inspection, corrective action taken, and identification of individual performing inspection. [District Rule 2201]

26. Testing for particulate matter concentration for each dust collector shall be conducted within 60 days after achieving the maximum production rate, not later than 180 days after initial startup of such facility, and within 12 calendar months of the date the previous performance test was required to be completed thereafter. If the results of the most recent performance test demonstrate that emissions from the affected facility are 50 percent or less of the applicable emissions standard, a new performance test must be conducted within 24 calendar months of the date that the previous performance test was required to be completed. [District Rule 1081]

27. Testing for compliance with particulate matter concentration limit shall be conducted using EPA method 5. The sampling time and sample volume for each run shall be at least 60 minutes and 0.85 dscm (30 dscf). Sampling shall begin no less than 30 minutes after startup and shall terminate before shutdown procedures begin. A minimum of three valid test runs are needed to comprise a PM performance test. [District Rule 1081]

28. Testing for the opacity standards for the operations shall be conducted within 60 days after achieving the maximum production rate, not later than 180 days after initial startup of such facility, and within 90 operating days of the date the previous performance test was required to be completed thereafter. If all 6-minute average opacity readings in the most recent performance test are equal to or less than half the applicable opacity limit, a new performance test must be conducted within 12 calendar months of the date that the previous performance test was required to be completed. [District Rule 1081]

29. Source testing to determine opacity shall be conducted using EPA method 9. [District Rule 1081]

30. The permittee shall conduct monthly visual observations of all process and control equipment. If any deficiencies are observed, the necessary maintenance must be performed as expeditiously as possible. [District Rule 1081]

31. Permittee shall conduct testing for compliance with the particulate matter concentration limit and particulate matter concentration limit within 60 days after achieving the maximum production rate, not later than 180 days after initial startup of such facility. [District Rule 1081]

32. Permittee shall provide the District at least 30 days prior notice of any performance test, except as specified under other subparts, to afford the Administrator the opportunity to have an observer present. [District Rule 1081]

33. Permittee shall maintain a logbook (written or electronic) with the records specified in this document on-site and make it available upon request. [District Rule 1081]

34. All records required by this DOC shall be retained for a period of at least 5 years and shall be made available to the District, ARB, and USEPA upon request. [District Rules 1070 and 2201]

35. {3433} Disturbances of soil related to any construction, demolition, excavation, extraction, or other earthmoving activities shall comply with the requirements for fugitive dust control in District Rule 8021 unless specifically exempted under Section 4.0 of Rule 8021 or Rule 8011. [District Rules 8011 and 8021]

36. {3434} An owner/operator shall submit a Dust Control Plan to the APCO prior to the start of any construction activity on any site that will include 10 acres or more of disturbed surface area for residential developments, or 5 acres or more of disturbed surface area for non-residential development, or will include moving, depositing, or relocating more

than 2,500 cubic yards per day of bulk materials on at least three days. [District Rules 8011 and 8021]

37. {3435} An owner/operator shall prevent or cleanup any carryout or trackout in accordance with the requirements of District Rule 8041 Section 5.0, unless specifically exempted under Section 4.0 of Rule 8041 (8/19/04) or Rule 8011(8/19/04). [District Rules 8011 and 8021]

38. {3436} Whenever open areas are disturbed, or vehicles are used in open areas, the facility shall comply with the requirements of Section 5.0 of District Rule 8051, unless specifically exempted under Section 4.0 of Rule 8051 or Rule 8011. [District Rules 8011 and 8051]

39. {3437} Any paved road or unpaved road shall comply with the requirements of District Rule 8061 unless specifically exempted under Section 4.0 of Rule 8061 or Rule 8011. [District Rules 8011 and 8061]

40. {3438} Water, gravel, roadmix, or chemical/organic dust stabilizers/suppressants, vegetative materials, or other District-approved control measure shall be applied to unpaved vehicle travel areas as required to limit Visible Dust Emissions to 20% opacity and comply with the requirements for a stabilized unpaved road as defined in Section 3.59 of District Rule 8011. [District Rule 8011 and 8071]

41. {3439} Where dusting materials are allowed to accumulate on paved surfaces, the accumulation shall be removed daily or water and/or chemical/organic dust stabilizers/suppressants shall be applied to the paved surface as required to maintain continuous compliance with the requirements for a stabilized unpaved road as defined in Section 3.59 of District Rule 8011 and limit Visible Dust Emissions (VDE) to 20% opacity. [District Rule 8011 and 8071]

42. {3440} On each day that 50 or more Vehicle Daily Trips or 25 or more Vehicle Daily Trips with 3 axles or more will occur on an unpaved vehicle/equipment traffic area, permittee shall apply water, gravel, roadmix, or chemical/organic dust stabilizers/suppressants, vegetative materials, or other District-approved control measure as required to limit Visible Dust Emissions to 20% opacity and comply with the requirements for a stabilized unpaved road as defined in Section 3.59 of District Rule 8011. [District Rule 8011 and 8071]

43. {3441} Whenever any portion of the site becomes inactive, Permittee shall restrict access and periodically stabilize any disturbed surface to comply with the conditions for a stabilized surface as defined in Section 3.58 of District Rule 8011. [District Rules 8011 and 8071]

44. {3442} Records and other supporting documentation shall be maintained as required to demonstrate compliance with the requirements of the rules under Regulation VIII only for those days that a control measure was implemented. Such records shall include the type of control measure(s) used, the location and extent of coverage, and the date, amount,

and frequency of application of dust suppressant, manufacturer's dust suppressant product information sheet that identifies the name of the dust suppressant and application instructions. Records shall be kept for one year following project completion that results in the termination of all dust generating activities. [District Rules 8011, 8031, and 8071]

S-7616-38-0

2,922 BHP CUMMINS MODEL QSK60-G6 INTERIM TIER 4 (OR THE HIGHEST TIER RATING APPLICABLE AT THE TIME OF INSTALLATION, WHICHEVER TIER IS HIGHER) CERTIFIED DIESEL-FIRED EMERGENCY STANDBY IC ENGINE POWERING A 2,000 KW CUMMINS MODEL DQKC ELECTRIC GENERATOR, #1 (OR EQUIVALENT)

1. Prior to the District's issuance of a Final Determination of Compliance, the District and HECA shall enter into a mitigation agreement that fully mitigates the indirect emissions associated with construction and operation of the HECA facility, as determined appropriate and necessary by the District to comply with Rule 9110 and 40 CFR Part 93 Subpart B requirements, and feasible mitigation requirements under CEQA. [Rule 9110, 40 CFR Part 93 Subpart B, and Public Resources Code 21000-21177: California Environmental Quality Act]

2. The permittee shall enter into an Air Quality Mitigation Settlement Agreement with the District prior to issuance of the Final Determination of Compliance, or such other time that is mutually agreeable. [Rule 9110, 40 CFR Part 93 Subpart B, and Public Resources Code 21000-21177: California Environmental Quality Act]

3. Permittee shall submit an application to comply with Rule 2520 - Federally Mandated Operating Permits within twelve months of commencing operation. [District Rule 2520]

4. Permittee shall submit an application to comply with Rule 2540 - Acid Rain Program within twelve months of commencing operation. [District Rule 2540]

5. Prior to initial operation of S-7616-17, -18, -19, -20, -22, -23, -25, -26, -27, -28, -29, -30, -31, -32, -33, -34, -36, -37, -38, -39, and -40, permittee shall provide PM10/PM2.5 emission reduction credits for the following quantity of emissions: 1st quarter: 39,538 lb, 2nd quarter: 39,538 lb, 3rd quarter: 39,538 lb, and 4th quarter: 39,538 lb. Offsets shall be provided at the applicable offset ratio specified in Table 4-2 of Rule 2201 (as amended 4/21/11). SOx ERCs may be used to offset PM10/PM2.5 increases at an interpollutant ratio of 1.0 lb-SOx: 1.0 lb-PM10. [District Rule 2201]

6. ERC certificate numbers C-1058-2, C-1058-5, S-3275-5, S-3273-2, S-3305-1, S-3557-1, and/or S-3605-1 (or a certificate split from these certificates) shall be used to supply the required offsets, unless a revised offsetting proposal is received and approved by the District, upon which this Determination of Compliance shall be reissued, administratively specifying the new offsetting proposal. Original public noticing requirements, if any, shall be duplicated prior to reissuance of this Determination of Compliance. [District Rule 2201]

7. {98} No air contaminant shall be released into the atmosphere which causes a public nuisance. [District Rule 4102]

8. {14} Particulate matter emissions shall not exceed 0.1 grains/dscf in concentration. [District Rule 4201]

9. {15} No air contaminant shall be discharged into the atmosphere for a period or periods aggregating more than three minutes in any one hour which is as dark as, or darker than, Ringelmann 1 or 20% opacity. [District Rule 4101]

10. {1898} The exhaust stack shall vent vertically upward. The vertical exhaust flow shall not be impeded by a rain cap (flapper ok), roof overhang, or any other obstruction. [District Rule 4102]

11. {3395} Only CARB certified diesel fuel containing not more than 0.0015% sulfur by weight is to be used. [District Rules 2201 and 4801 and 17 CCR 93115]

12. This engine shall be equipped with an operational non-resettable elapsed time meter or other APCO approved alternative. [District Rule 4702, 17 CCR 93115, and 40 CFR 60 Subpart IIII]

13. This engine shall be operated and maintained in proper operating condition as recommended by the engine manufacturer or emissions control system supplier. [District Rule 4702 and 40 CFR 60 Subpart IIII]

14. {3807} An emergency situation is an unscheduled electrical power outage caused by sudden and reasonably unforeseen natural disasters or sudden and reasonably unforeseen events beyond the control of the permittee. [District Rule 4702]

15. Emissions from this IC engine shall not exceed any of the following limits: 0.5 g-NOx/bhp-hr, 2.6 g-CO/bhp-hr, or 0.3 g-VOC/bhp-hr. [District Rule 2201 and 13 CCR 2423 and 17 CCR 93115]

16. Emissions from this IC engine shall not exceed 0.07 g-PM10/bhp-hr based on USEPA certification using ISO 8178 test procedure. [District Rules 2201 and 4102 and 13 CCR 2423 and 17 CCR 93115]

17. The engine EPA Tier rating shall be the highest applicable Tier rating at the time of installation. [District Rules 2201 and 2410, and 13 CCR 2423 and 17 CCR 93115]

18. This engine shall be operated only for testing and maintenance of the engine, required regulatory purposes, and during emergency situations. Operation of the engine for maintenance, testing, and required regulatory purposes shall not exceed 50 hours per calendar year. [District Rules 4702 and 2410, and 17 CCR 93115]

19. {3489} The permittee shall maintain monthly records of emergency and non-emergency operation. Records shall include the number of hours of emergency operation, the date and number of hours of all testing and maintenance operations, and the purpose of the operation (for example: load testing, weekly testing, rolling blackout, general area power outage, etc.). For units with automated testing systems, the operator may, as an alternative to keeping records of actual operation for testing purposes, maintain a readily

accessible written record of the automated testing schedule. [District Rule 4702 and 17 CCR 93115]

20. {3475} All records shall be maintained and retained on-site for a minimum of five (5) years, and shall be made available for District inspection upon request. [District Rule 4702 and 17 CCR 93115]

21. The permittee shall obtain written District approval for the use of any equivalent equipment not specifically approved by this Determination of Compliance. Approval of the equivalent equipment shall be made only after the District's determination that the submitted design and performance of the proposed alternate equipment is equivalent to the specifically authorized equipment. [District Rule 2201]

22. The permittee's request for approval of equivalent equipment shall include the make, model, manufacturer's maximum rating, manufacturer's guaranteed emission rates, equipment drawing(s), and operational characteristics/parameters. [District Rule 2201]

23. Alternate equipment shall be of the same class and category of source as the equipment authorized by the Determination of Compliance. [District Rule 2201]

24. No emission factor and no emission shall be greater for the alternate equipment than for the proposed equipment. No changes in the hours of operation, operating rate, throughput, or firing rate may be authorized for any alternate equipment. [District Rule 2201]

25. The air quality modeled impacts of the proposed alternative equivalent equipment shall not result in any more adverse impacts than the equipment it replaces. [District Rule 2201]

26. {3433} Disturbances of soil related to any construction, demolition, excavation, extraction, or other earthmoving activities shall comply with the requirements for fugitive dust control in District Rule 8021 unless specifically exempted under Section 4.0 of Rule 8021 or Rule 8011. [District Rules 8011 and 8021]

27. {3434} An owner/operator shall submit a Dust Control Plan to the APCO prior to the start of any construction activity on any site that will include 10 acres or more of disturbed surface area for residential developments, or 5 acres or more of disturbed surface area for non-residential development, or will include moving, depositing, or relocating more than 2,500 cubic yards per day of bulk materials on at least three days. [District Rules 8011 and 8021]

28. {3435} An owner/operator shall prevent or cleanup any carryout or trackout in accordance with the requirements of District Rule 8041 Section 5.0, unless specifically exempted under Section 4.0 of Rule 8041 (8/19/04) or Rule 8011(8/19/04). [District Rules 8011 and 8021]

29. {3436} Whenever open areas are disturbed, or vehicles are used in open areas, the facility shall comply with the requirements of Section 5.0 of District Rule 8051, unless specifically exempted under Section 4.0 of Rule 8051 or Rule 8011. [District Rules 8011 and 8051]

30. {3437} Any paved road or unpaved road shall comply with the requirements of District Rule 8061 unless specifically exempted under Section 4.0 of Rule 8061 or Rule 8011. [District Rules 8011 and 8061]

31. {3438} Water, gravel, roadmix, or chemical/organic dust stabilizers/suppressants, vegetative materials, or other District-approved control measure shall be applied to unpaved vehicle travel areas as required to limit Visible Dust Emissions to 20% opacity and comply with the requirements for a stabilized unpaved road as defined in Section 3.59 of District Rule 8011. [District Rule 8011 and 8071]

32. {3439} Where dusting materials are allowed to accumulate on paved surfaces, the accumulation shall be removed daily or water and/or chemical/organic dust stabilizers/suppressants shall be applied to the paved surface as required to maintain continuous compliance with the requirements for a stabilized unpaved road as defined in Section 3.59 of District Rule 8011 and limit Visible Dust Emissions (VDE) to 20% opacity. [District Rule 8011 and 8071]

33. {3440} On each day that 50 or more Vehicle Daily Trips or 25 or more Vehicle Daily Trips with 3 axles or more will occur on an unpaved vehicle/equipment traffic area, permittee shall apply water, gravel, roadmix, or chemical/organic dust stabilizers/suppressants, vegetative materials, or other District-approved control measure as required to limit Visible Dust Emissions to 20% opacity and comply with the requirements for a stabilized unpaved road as defined in Section 3.59 of District Rule 8011. [District Rule 8011 and 8071]

34. {3441} Whenever any portion of the site becomes inactive, Permittee shall restrict access and periodically stabilize any disturbed surface to comply with the conditions for a stabilized surface as defined in Section 3.58 of District Rule 8011. [District Rules 8011 and 8071]

35. {3442} Records and other supporting documentation shall be maintained as required to demonstrate compliance with the requirements of the rules under Regulation VIII only for those days that a control measure was implemented. Such records shall include the type of control measure(s) used, the location and extent of coverage, and the date, amount, and frequency of application of dust suppressant, manufacturer's dust suppressant product information sheet that identifies the name of the dust suppressant and application instructions. Records shall be kept for one year following project completion that results in the termination of all dust generating activities. [District Rules 8011, 8031, and 8071]

S-7616-39-0

2,922 BHP CUMMINS MODEL QSK60-G6 INTERIM TIER 4 (OR THE HIGHEST TIER RATING APPLICABLE AT THE TIME OF INSTALLATION, WHICHEVER TIER IS HIGHER) CERTIFIED DIESEL-FIRED EMERGENCY STANDBY IC ENGINE POWERING A 2,000 KW CUMMINS MODEL DQKC ELECTRIC GENERATOR, #2 (OR EQUIVALENT)

1. Prior to the District's issuance of a Final Determination of Compliance, the District and HECA shall enter into a mitigation agreement that fully mitigates the indirect emissions associated with construction and operation of the HECA facility, as determined appropriate and necessary by the District to comply with Rule 9110 and 40 CFR Part 93 Subpart B requirements, and feasible mitigation requirements under CEQA. [Rule 9110, 40 CFR Part 93 Subpart B, and Public Resources Code 21000-21177: California Environmental Quality Act]

2. The permittee shall enter into an Air Quality Mitigation Settlement Agreement with the District prior to issuance of the Final Determination of Compliance, or such other time that is mutually agreeable. [Rule 9110, 40 CFR Part 93 Subpart B, and Public Resources Code 21000-21177: California Environmental Quality Act]

3. Permittee shall submit an application to comply with Rule 2520 - Federally Mandated Operating Permits within twelve months of commencing operation. [District Rule 2520]

4. Permittee shall submit an application to comply with Rule 2540 - Acid Rain Program within twelve months of commencing operation. [District Rule 2540]

5. Prior to initial operation of S-7616-17, -18, -19, -20, -22, -23, -25, -26, -27, -28, -29, -30, -31, -32, -33, -34, -36, -37, -38, -39, and -40, permittee shall provide PM10/PM2.5 emission reduction credits for the following quantity of emissions: 1st quarter: 39,538 lb, 2nd quarter: 39,538 lb, 3rd quarter: 39,538 lb, and 4th quarter: 39,538 lb. Offsets shall be provided at the applicable offset ratio specified in Table 4-2 of Rule 2201 (as amended 4/21/11). SOx ERCs may be used to offset PM10/PM2.5 increases at an interpollutant ratio of 1.0 lb-SOx: 1.0 lb-PM10. [District Rule 2201]

6. ERC certificate numbers C-1058-2, C-1058-5, S-3275-5, S-3273-2, S-3305-1, S-3557-1, and/or S-3605-1 (or a certificate split from these certificates) shall be used to supply the required offsets, unless a revised offsetting proposal is received and approved by the District, upon which this Determination of Compliance shall be reissued, administratively specifying the new offsetting proposal. Original public noticing requirements, if any, shall be duplicated prior to reissuance of this Determination of Compliance. [District Rule 2201]

7. {98} No air contaminant shall be released into the atmosphere which causes a public nuisance. [District Rule 4102]

8. {14} Particulate matter emissions shall not exceed 0.1 grains/dscf in concentration. [District Rule 4201]

9. {15} No air contaminant shall be discharged into the atmosphere for a period or periods aggregating more than three minutes in any one hour which is as dark as, or darker than, Ringelmann 1 or 20% opacity. [District Rule 4101]

10. {1898} The exhaust stack shall vent vertically upward. The vertical exhaust flow shall not be impeded by a rain cap (flapper ok), roof overhang, or any other obstruction. [District Rule 4102]

11. {3395} Only CARB certified diesel fuel containing not more than 0.0015% sulfur by weight is to be used. [District Rules 2201 and 4801 and 17 CCR 93115]

12. This engine shall be equipped with an operational non-resettable elapsed time meter or other APCO approved alternative. [District Rule 4702, 17 CCR 93115, and 40 CFR 60 Subpart IIII]

13. This engine shall be operated and maintained in proper operating condition as recommended by the engine manufacturer or emissions control system supplier. [District Rule 4702 and 40 CFR 60 Subpart IIII]

14. {3807} An emergency situation is an unscheduled electrical power outage caused by sudden and reasonably unforeseen natural disasters or sudden and reasonably unforeseen events beyond the control of the permittee. [District Rule 4702]

15. Emissions from this IC engine shall not exceed any of the following limits: 0.5 g-NOx/bhp-hr, 2.6 g-CO/bhp-hr, or 0.3 g-VOC/bhp-hr. [District Rule 2201 and 13 CCR 2423 and 17 CCR 93115]

16. Emissions from this IC engine shall not exceed 0.07 g-PM10/bhp-hr based on USEPA certification using ISO 8178 test procedure. [District Rules 2201 and 4102 and 13 CCR 2423 and 17 CCR 93115]

17. The engine EPA Tier rating shall be the highest applicable Tier rating at the time of installation. [District Rules 2201 and 2410, and 13 CCR 2423 and 17 CCR 93115]

18. This engine shall be operated only for testing and maintenance of the engine, required regulatory purposes, and during emergency situations. Operation of the engine for maintenance, testing, and required regulatory purposes shall not exceed 50 hours per calendar year. [District Rules 4702 and 2410, and 17 CCR 93115]

19. {3489} The permittee shall maintain monthly records of emergency and non-emergency operation. Records shall include the number of hours of emergency operation, the date and number of hours of all testing and maintenance operations, and the purpose of the operation (for example: load testing, weekly testing, rolling blackout, general area power outage, etc.). For units with automated testing systems, the operator may, as an alternative to keeping records of actual operation for testing purposes, maintain a readily

accessible written record of the automated testing schedule. [District Rule 4702 and 17 CCR 93115]

20. {3475} All records shall be maintained and retained on-site for a minimum of five (5) years, and shall be made available for District inspection upon request. [District Rule 4702 and 17 CCR 93115]

21. The permittee shall obtain written District approval for the use of any equivalent equipment not specifically approved by this Determination of Compliance. Approval of the equivalent equipment shall be made only after the District's determination that the submitted design and performance of the proposed alternate equipment is equivalent to the specifically authorized equipment. [District Rule 2201]

22. The permittee's request for approval of equivalent equipment shall include the make, model, manufacturer's maximum rating, manufacturer's guaranteed emission rates, equipment drawing(s), and operational characteristics/parameters. [District Rule 2201]

23. Alternate equipment shall be of the same class and category of source as the equipment authorized by the Determination of Compliance. [District Rule 2201]

24. No emission factor and no emission shall be greater for the alternate equipment than for the proposed equipment. No changes in the hours of operation, operating rate, throughput, or firing rate may be authorized for any alternate equipment. [District Rule 2201]

25. The air quality modeled impacts of the proposed alternative equivalent equipment shall not result in any more adverse impacts than the equipment it replaces. [District Rule 2201]

26. {3433} Disturbances of soil related to any construction, demolition, excavation, extraction, or other earthmoving activities shall comply with the requirements for fugitive dust control in District Rule 8021 unless specifically exempted under Section 4.0 of Rule 8021 or Rule 8011. [District Rules 8011 and 8021]

27. {3434} An owner/operator shall submit a Dust Control Plan to the APCO prior to the start of any construction activity on any site that will include 10 acres or more of disturbed surface area for residential developments, or 5 acres or more of disturbed surface area for non-residential development, or will include moving, depositing, or relocating more than 2,500 cubic yards per day of bulk materials on at least three days. [District Rules 8011 and 8021]

28. {3435} An owner/operator shall prevent or cleanup any carryout or trackout in accordance with the requirements of District Rule 8041 Section 5.0, unless specifically exempted under Section 4.0 of Rule 8041 (8/19/04) or Rule 8011(8/19/04). [District Rules 8011 and 8021]

29. {3436} Whenever open areas are disturbed, or vehicles are used in open areas, the facility shall comply with the requirements of Section 5.0 of District Rule 8051, unless specifically exempted under Section 4.0 of Rule 8051 or Rule 8011. [District Rules 8011 and 8051]

30. {3437} Any paved road or unpaved road shall comply with the requirements of District Rule 8061 unless specifically exempted under Section 4.0 of Rule 8061 or Rule 8011. [District Rules 8011 and 8061]

31. {3438} Water, gravel, roadmix, or chemical/organic dust stabilizers/suppressants, vegetative materials, or other District-approved control measure shall be applied to unpaved vehicle travel areas as required to limit Visible Dust Emissions to 20% opacity and comply with the requirements for a stabilized unpaved road as defined in Section 3.59 of District Rule 8011. [District Rule 8011 and 8071]

32. {3439} Where dusting materials are allowed to accumulate on paved surfaces, the accumulation shall be removed daily or water and/or chemical/organic dust stabilizers/suppressants shall be applied to the paved surface as required to maintain continuous compliance with the requirements for a stabilized unpaved road as defined in Section 3.59 of District Rule 8011 and limit Visible Dust Emissions (VDE) to 20% opacity. [District Rule 8011 and 8071]

33. {3440} On each day that 50 or more Vehicle Daily Trips or 25 or more Vehicle Daily Trips with 3 axles or more will occur on an unpaved vehicle/equipment traffic area, permittee shall apply water, gravel, roadmix, or chemical/organic dust stabilizers/suppressants, vegetative materials, or other District-approved control measure as required to limit Visible Dust Emissions to 20% opacity and comply with the requirements for a stabilized unpaved road as defined in Section 3.59 of District Rule 8011. [District Rule 8011 and 8071]

34. {3441} Whenever any portion of the site becomes inactive, Permittee shall restrict access and periodically stabilize any disturbed surface to comply with the conditions for a stabilized surface as defined in Section 3.58 of District Rule 8011. [District Rules 8011 and 8071]

35. {3442} Records and other supporting documentation shall be maintained as required to demonstrate compliance with the requirements of the rules under Regulation VIII only for those days that a control measure was implemented. Such records shall include the type of control measure(s) used, the location and extent of coverage, and the date, amount, and frequency of application of dust suppressant, manufacturer's dust suppressant product information sheet that identifies the name of the dust suppressant and application instructions. Records shall be kept for one year following project completion that results in the termination of all dust generating activities. [District Rules 8011, 8031, and 8071]

S-7616-40-0

556 BHP CUMMINS MODEL CFP-15E-F40 INTERIM TIER 4 (OR THE HIGHEST TIER RATING APPLICABLE AT THE TIME OF INSTALLATION, WHICHEVER TIER IS HIGHER) CERTIFIED DIESEL-FIRED EMERGENCY STANDBY IC ENGINE POWERING A FIREWATER PUMP (OR EQUIVALENT)

1. Prior to the District's issuance of a Final Determination of Compliance, the District and HECA shall enter into a mitigation agreement that fully mitigates the indirect emissions associated with construction and operation of the HECA facility, as determined appropriate and necessary by the District to comply with Rule 9110 and 40 CFR Part 93 Subpart B requirements, and feasible mitigation requirements under CEQA. [Rule 9110, 40 CFR Part 93 Subpart B, and Public Resources Code 21000-21177: California Environmental Quality Act]

2. The permittee shall enter into an Air Quality Mitigation Settlement Agreement with the District prior to issuance of the Final Determination of Compliance, or such other time that is mutually agreeable. [Rule 9110, 40 CFR Part 93 Subpart B, and Public Resources Code 21000-21177: California Environmental Quality Act]

3. Permittee shall submit an application to comply with Rule 2520 - Federally Mandated Operating Permits within twelve months of commencing operation. [District Rule 2520]

4. Permittee shall submit an application to comply with Rule 2540 - Acid Rain Program within twelve months of commencing operation. [District Rule 2540]

5. Prior to initial operation of S-7616-17, -18, -19, -20, -22, -23, -25, -26, -27, -28, -29, -30, -31, -32, -33, -34, -36, -37, -38, -39, and -40, permittee shall provide PM10/PM2.5 emission reduction credits for the following quantity of emissions: 1st quarter: 39,538 lb, 2nd quarter: 39,538 lb, 3rd quarter: 39,538 lb, and 4th quarter: 39,538 lb. Offsets shall be provided at the applicable offset ratio specified in Table 4-2 of Rule 2201 (as amended 4/21/11). SOx ERCs may be used to offset PM10/PM2.5 increases at an interpollutant ratio of 1.0 lb-SOx: 1.0 lb-PM10. [District Rule 2201]

6. ERC certificate numbers C-1058-2, C-1058-5, S-3275-5, S-3273-2, S-3305-1, S-3557-1, and/or S-3605-1 (or a certificate split from these certificates) shall be used to supply the required offsets, unless a revised offsetting proposal is received and approved by the District, upon which this Determination of Compliance shall be reissued, administratively specifying the new offsetting proposal. Original public noticing requirements, if any, shall be duplicated prior to reissuance of this Determination of Compliance. [District Rule 2201]

7. {98} No air contaminant shall be released into the atmosphere which causes a public nuisance. [District Rule 4102]

8. {14} Particulate matter emissions shall not exceed 0.1 grains/dscf in concentration. [District Rule 4201]

9. {15} No air contaminant shall be discharged into the atmosphere for a period or periods aggregating more than three minutes in any one hour which is as dark as, or darker than, Ringelmann 1 or 20% opacity. [District Rule 4101]

10. {1898} The exhaust stack shall vent vertically upward. The vertical exhaust flow shall not be impeded by a rain cap (flapper ok), roof overhang, or any other obstruction. [District Rule 4102]

11. {3395} Only CARB certified diesel fuel containing not more than 0.0015% sulfur by weight is to be used. [District Rules 2201 and 4801 and 17 CCR 93115]

12. This engine shall be equipped with an operational non-resettable elapsed time meter or other APCO approved alternative. [District Rule 4702, 17 CCR 93115, and 40 CFR 60 Subpart IIII]

13. This engine shall be operated and maintained in proper operating condition as recommended by the engine manufacturer or emissions control system supplier. [District Rule 4702 and 40 CFR 60 Subpart IIII]

14. {3807} An emergency situation is an unscheduled electrical power outage caused by sudden and reasonably unforeseen natural disasters or sudden and reasonably unforeseen events beyond the control of the permittee. [District Rule 4702]

15. Emissions from this IC engine shall not exceed any of the following limits: 1.5 g-NOx/bhp-hr, 2.6 g-CO/bhp-hr, or 0.14 g-VOC/bhp-hr. [District Rule 2201 and 13 CCR 2423 and 17 CCR 93115]

16. Emissions from this IC engine shall not exceed 0.01 g-PM10/bhp-hr based on USEPA certification using ISO 8178 test procedure. [District Rules 2201 and 4102 and 13 CCR 2423 and 17 CCR 93115]

17. The engine EPA Tier rating shall be the highest applicable Tier rating at the time of installation. [District Rules 2201 and 2410, and 13 CCR 2423 and 17 CCR 93115]

18. This engine shall be operated only for testing and maintenance of the engine, required regulatory purposes, and during emergency situations. For testing purposes, the engine shall only be operated the number of hours necessary to comply with the testing requirements of the National Fire Protection Association (NFPA) 25 - "Standard for the Inspection, Testing, and Maintenance of Water-Based Fire Protection Systems". Total hours of operation for all maintenance, testing, and required regulatory purposes shall not exceed 100 hours per calendar year. [District Rule 4702 and 2410, and 17 CCR 93115]

19. {3489} The permittee shall maintain monthly records of emergency and non-emergency operation. Records shall include the number of hours of emergency operation, the date and number of hours of all testing and maintenance operations, and the purpose of the operation (for example: load testing, weekly testing, rolling blackout, general area power

outage, etc.). For units with automated testing systems, the operator may, as an alternative to keeping records of actual operation for testing purposes, maintain a readily accessible written record of the automated testing schedule. [District Rule 4702 and 17 CCR 93115]

20. {3475} All records shall be maintained and retained on-site for a minimum of five (5) years, and shall be made available for District inspection upon request. [District Rule 4702 and 17 CCR 93115]

21. The permittee shall obtain written District approval for the use of any equivalent equipment not specifically approved by this Determination of Compliance. Approval of the equivalent equipment shall be made only after the District's determination that the submitted design and performance of the proposed alternate equipment is equivalent to the specifically authorized equipment. [District Rule 2201]

22. The permittee's request for approval of equivalent equipment shall include the make, model, manufacturer's maximum rating, manufacturer's guaranteed emission rates, equipment drawing(s), and operational characteristics/parameters. [District Rule 2201]

23. Alternate equipment shall be of the same class and category of source as the equipment authorized by the Determination of Compliance. [District Rule 2201]

24. No emission factor and no emission shall be greater for the alternate equipment than for the proposed equipment. No changes in the hours of operation, operating rate, throughput, or firing rate may be authorized for any alternate equipment. [District Rule 2201]

25. The air quality modeled impacts of the proposed alternative equivalent equipment shall not result in any more adverse impacts than the equipment it replaces. [District Rule 2201]

26. {3433} Disturbances of soil related to any construction, demolition, excavation, extraction, or other earthmoving activities shall comply with the requirements for fugitive dust control in District Rule 8021 unless specifically exempted under Section 4.0 of Rule 8021 or Rule 8011. [District Rules 8011 and 8021]

27. {3434} An owner/operator shall submit a Dust Control Plan to the APCO prior to the start of any construction activity on any site that will include 10 acres or more of disturbed surface area for residential developments, or 5 acres or more of disturbed surface area for non-residential development, or will include moving, depositing, or relocating more than 2,500 cubic yards per day of bulk materials on at least three days. [District Rules 8011 and 8021]

28. {3435} An owner/operator shall prevent or cleanup any carryout or trackout in accordance with the requirements of District Rule 8041 Section 5.0, unless specifically exempted under Section 4.0 of Rule 8041 (8/19/04) or Rule 8011(8/19/04). [District Rules 8011 and 8021]

29. {3436} Whenever open areas are disturbed, or vehicles are used in open areas, the facility shall comply with the requirements of Section 5.0 of District Rule 8051, unless specifically exempted under Section 4.0 of Rule 8051 or Rule 8011. [District Rules 8011 and 8051]

30. {3437} Any paved road or unpaved road shall comply with the requirements of District Rule 8061 unless specifically exempted under Section 4.0 of Rule 8061 or Rule 8011. [District Rules 8011 and 8061]

31. {3438} Water, gravel, roadmix, or chemical/organic dust stabilizers/suppressants, vegetative materials, or other District-approved control measure shall be applied to unpaved vehicle travel areas as required to limit Visible Dust Emissions to 20% opacity and comply with the requirements for a stabilized unpaved road as defined in Section 3.59 of District Rule 8011. [District Rule 8011 and 8071]

32. {3439} Where dusting materials are allowed to accumulate on paved surfaces, the accumulation shall be removed daily or water and/or chemical/organic dust stabilizers/suppressants shall be applied to the paved surface as required to maintain continuous compliance with the requirements for a stabilized unpaved road as defined in Section 3.59 of District Rule 8011 and limit Visible Dust Emissions (VDE) to 20% opacity. [District Rule 8011 and 8071]

33. {3440} On each day that 50 or more Vehicle Daily Trips or 25 or more Vehicle Daily Trips with 3 axles or more will occur on an unpaved vehicle/equipment traffic area, permittee shall apply water, gravel, roadmix, or chemical/organic dust stabilizers/suppressants, vegetative materials, or other District-approved control measure as required to limit Visible Dust Emissions to 20% opacity and comply with the requirements for a stabilized unpaved road as defined in Section 3.59 of District Rule 8011. [District Rule 8011 and 8071]

34. {3441} Whenever any portion of the site becomes inactive, Permittee shall restrict access and periodically stabilize any disturbed surface to comply with the conditions for a stabilized surface as defined in Section 3.58 of District Rule 8011. [District Rules 8011 and 8071]

35. {3442} Records and other supporting documentation shall be maintained as required to demonstrate compliance with the requirements of the rules under Regulation VIII only for those days that a control measure was implemented. Such records shall include the type of control measure(s) used, the location and extent of coverage, and the date, amount, and frequency of application of dust suppressant, manufacturer's dust suppressant product information sheet that identifies the name of the dust suppressant and application instructions. Records shall be kept for one year following project completion that results in the termination of all dust generating activities. [District Rules 8011, 8031, and 8071]

APPENDIX B
BACT Guidelines

San Joaquin Valley
Unified Air Pollution Control District

Best Available Control Technology (BACT) Guideline 1.4.8*

Last Update 9/1/2006

Refinery Flare

Pollutant	Achieved in Practice or contained in the SIP	Technologically Feasible	Alternate Basic Equipment
CO	Engineered flare, with air or steam assisted combustion, staged combustion, and/or equivalent District approved controls. Flare shall be equipped with a flare gas recovery system for non-emergency releases.		
NOx	Engineered flare, with air or steam assisted combustion, staged combustion, and/or equivalent District approved controls. Flare shall be equipped with a flare gas recovery system for non-emergency releases.	Engineered flare or enclosed burner with air or steam assisted combustion, staged combustion, and/or equivalent District approved controls, and having demonstrated emissions of NOx of less than 0.068 lb/MM Btu. Flare shall be equipped with a flare gas recovery system for non-emergency releases.	
PM10	Engineered flare designed for and operated without visible emissions, except as allowed by 40CFR 60.18(c)(1) and District Rule 4101 and equipped with air or steam assisted combustion, staged combustion, and/or equivalent District approved controls. Flare shall be equipped with a flare gas recovery system for non-emergency releases. Pilot and sweep fuel shall be natural gas, treated refinery gas or LPG.		
SOx	Flare shall be equipped with a flare gas recovery system for non-emergency releases. Pilot and purge gas shall be natural gas, treated refinery gas or LPG.		

VOC	Engineered flare designed with a VOC destruction efficiency of ≥ 98%. Flare design shall include air or steam assisted combustion, staged combustion, and/or equivalent District approved controls. Flare shall be equipped with a flare gas recovery system for non-emergency releases, a continuous pilot or District approved alternative and a method for detecting flame. Pilot and sweep fuel shall be natural gas, treated refinery gas or LPG.	Enclosed ground level flare or any other engineered flare designed with a VOC destruction efficiency of ≥ 98.5%. Flare design shall include air or steam assisted combustion, staged combustion, and/or equivalent District approved controls. Flare shall be equipped with a flare gas recovery system for non-emergency releases, a continuous pilot or District approved alternative and a method for detecting flame. Pilot and sweep fuel shall be natural gas, treated refinery gas or LPG.

BACT is the most stringent control technique for the emissions unit and class of source. Control techniques that are not achieved in practice or contained in s a state implementation plan must be cost effective as well as feasible. Economic analysis to demonstrate cost effectiveness is required for all determinations that are not achieved in practice or contained in an EPA approved State Implementation Plan.

***This is a Summary Page for this Class of Source**

San Joaquin Valley
Unified Air Pollution Control District

Best Available Control Technology (BACT) Guideline 8.2.1*

Last Update 3/25/1995

Petroleum Coke Handling - Receiving, Storage, and Loadout = or > 1,000 tons coke per day

Pollutant	Achieved in Practice or contained in the SIP	Technologically Feasible	Alternate Basic Equipment
PM10	Adequate moisture content of coke received, and loaded out, to prevent visible emissions in excess of 5% opacity. Water and surfactant applied to storage piles.		

BACT is the most stringent control technique for the emissions unit and class of source. Control techniques that are not achieved in practice or contained in s a state implementation plan must be cost effective as well as feasible. Economic analysis to demonstrate cost effectiveness is required for all determinations that are not achieved in practice or contained in an EPA approved State Implementation Plan.

***This is a Summary Page for this Class of Source**

San Joaquin Valley
Unified Air Pollution Control District

Best Available Control Technology (BACT) Guideline 8.4.1*

Last Update 10/20/1992

Dry Material Storage and Conveying Operation, 100 tons/day

Pollutant	Achieved in Practice or contained in the SIP	Technologically Feasible	Alternate Basic Equipment
PM10	Storage, augers, elevators, conveyors all enclosed and vented to a fabric filter baghouse		

BACT is the most stringent control technique for the emissions unit and class of source. Control techniques that are not achieved in practice or contained in s a state implementation plan must be cost effective as well as feasible. Economic analysis to demonstrate cost effectiveness is required for all determinations that are not achieved in practice or contained in an EPA approved State Implementation Plan.

***This is a Summary Page for this Class of Source**

San Joaquin Valley
Unified Air Pollution Control District

Best Available Control Technology (BACT) Guideline 8.4.2*

Last Update 9/29/1992

Wet Material Storage and Conveying Operation, 200 tons/day

Pollutant	Achieved in Practice or contained in the SIP	Technologically Feasible	Alternate Basic Equipment
PM10	Enclosed storage with sufficient moisture so visible emissions are less than 5% opacity from any single emission point		

BACT is the most stringent control technique for the emissions unit and class of source. Control techniques that are not achieved in practice or contained in s a state implementation plan must be cost effective as well as feasible. Economic analysis to demonstrate cost effectiveness is required for all determinations that are not achieved in practice or contained in an EPA approved State Implementation Plan.

***This is a Summary Page for this Class of Source**

San Joaquin Valley
Unified Air Pollution Control District

Best Available Control Technology (BACT) Guideline 8.4.3*

Last Update 4/2/2012

Dry Material Handling Operation - Mixing, Blending, Milling, or Storage

Pollutant	Achieved in Practice or contained in the SIP	Technologically Feasible	Alternate Basic Equipment
PM10	Mixer, augers, elevators, conveyors all enclosed and vented to a fabric filter baghouse, or equivalent (99% or greater control efficiency)		

BACT is the most stringent control technique for the emissions unit and class of source. Control techniques that are not achieved in practice or contained in s a state implementation plan must be cost effective as well as feasible. Economic analysis to demonstrate cost effectiveness is required for all determinations that are not achieved in practice or contained in an EPA approved State Implementation Plan.

***This is a Summary Page for this Class of Source**

San Joaquin Valley
Unified Air Pollution Control District

Best Available Control Technology (BACT) Guideline 4.12.1*

Last Update 11/26/2006

Chemical Plants - Valves & Connectors

Pollutant	Achieved in Practice or contained in the SIP	Technologically Feasible	Alternate Basic Equipment
VOC	Leak defined as a reading of methane in excess of 100 ppmv above background when measured per EPA Method 21 and Maintenance Program pursuant to District Rule 4455		

BACT is the most stringent control technique for the emissions unit and class of source. Control techniques that are not achieved in practice or contained in s a state implementation plan must be cost effective as well as feasible. Economic analysis to demonstrate cost effectiveness is required for all determinations that are not achieved in practice or contained in an EPA approved State Implementation Plan.

***This is a Summary Page for this Class of Source**

San Joaquin Valley
Unified Air Pollution Control District

Best Available Control Technology (BACT) Guideline 4.12.2*

Last Update 11/27/2006

Chemical Plants Pump and Compressor Seals

Pollutant	Achieved in Practice or contained in the SIP	Technologically Feasible	Alternate Basic Equipment
VOC	Leak defined as a reading of methane in excess of 500 ppmv above background when measure per EPA Method 21 and an Inspection and Maintenance Program pursuant to District Rule 4455		

BACT is the most stringent control technique for the emissions unit and class of source. Control techniques that are not achieved in practice or contained in s a state implementation plan must be cost effective as well as feasible. Economic analysis to demonstrate cost effectiveness is required for all determinations that are not achieved in practice or contained in an EPA approved State Implementation Plan.

***This is a Summary Page for this Class of Source**

San Joaquin Valley
Unified Air Pollution Control District

Best Available Control Technology (BACT) Guideline 7.2.6*

Last Update 11/1/2000

Petroleum Refineries and Chemical Plants - Diesel Fuel Processing, Sulfur Recovery Plant, = or > 20 tons Sulfur/day

Pollutant	Achieved in Practice or contained in the SIP	Technologically Feasible	Alternate Basic Equipment
SOx	Sulfur Recovery Unit with tail gas treating unit to treat gas to = or < 10 ppmv H2S (based on a three-hour, moving average) and a standby incinerator - except during startup and shutdown.	Sulfur recovery unit with two tail gas treating units in parallel (one as standby) to treat gas to = or < 10 ppmv H2S (based on a three-hour, moving average) and a standby incinerator - except during startup and shutdown.	

BACT is the most stringent control technique for the emissions unit and class of source. Control techniques that are not achieved in practice or contained in s a state implementation plan must be cost effective as well as feasible. Economic analysis to demonstrate cost effectiveness is required for all determinations that are not achieved in practice or contained in an EPA approved State Implementation Plan.

***This is a Summary Page for this Class of Source**

San Joaquin Valley
Unified Air Pollution Control District

Best Available Control Technology (BACT) Guideline 3.1.1*

Last Update 7/10/2009

Emergency Diesel IC engine

Pollutant	Achieved in Practice or contained in the SIP	Technologically Feasible	Alternate Basic Equipment
CO	Latest EPA Tier Certification level for applicable horsepower range		
NOX	Latest EPA Tier Certification level for applicable horsepower range		
PM10	0.15 g/hp-hr or the Latest EPA Tier Certification level for applicable horsepower range, whichever is more stringent. (ATCM)		
SOX	Very low sulfur diesel fuel (15 ppmw sulfur or less)		
VOC	Latest EPA Tier Certification level for applicable horsepower range		

BACT is the most stringent control technique for the emissions unit and class of source. Control techniques that are not achieved in practice or contained in s a state implementation plan must be cost effective as well as feasible. Economic analysis to demonstrate cost effectiveness is required for all determinations that are not achieved in practice or contained in an EPA approved State Implementation Plan.

***This is a Summary Page for this Class of Source**

San Joaquin Valley
Unified Air Pollution Control District

Best Available Control Technology (BACT) Guideline X.Y.Z

Emission Unit: Combustion Turbine Generator – Fired on Hydrogen-Rich Syngas and Natural Gas, Uniform and Variable Load, With or Without Heat Recovery

Industry Type: Integrated Gasification Combined Cycle Power Plant

Last Update: November xx, 2010

Equipment Rating: Power Output > 50 MW

Pollutant	Achieved in Practice or contained in SIP	Technologically Feasible	Alternate Basic Equipment
NOx		1. Selective catalytic reduction designed to achieve 2.0 ppmvd-NOx @ 15% O_2 (3-hour rolling average) or 2.5 ppmvd-NOx @ 15% O_2 (1-hour average), but does not exceed 4.0 ppmvd-NOx @ 15% O_2 (3-hour rolling average), except during startup/shutdown. 2. Selective catalytic reduction designed to achieve 3.0 ppmvd-NOx @ 15% O_2 (3-hour rolling average), but does not exceed 4.0 ppmvd-NOx @ 15% O_2 (3-hour rolling average), except during startup/shutdown. 3. Selective catalytic reduction that achieves 4.0 ppmvd-NOx @ 15% O_2 (3-hour rolling average), except during startup/shutdown.	
VOC		1. Oxidation catalyst that achieves 1.0 ppmvd-VOC @ 15% O2 when firing on hydrogen-rich fuel exclusively; and is designed to achieve 1.5 ppmvd-VOC @ 15% O2 but does not exceed 2.0 ppmvd-VOC when firing on fuel containing natural gas. 2. Oxidation catalyst that achieves 1.0 ppmvd-VOC @ 15% O2 when firing on hydrogen-rich fuel exclusively; and 2.0-VOC ppmvd @ 15% O2 when firing on fuel containing natural gas.	

CO		1. Oxidation catalyst that achieves 3.0 ppmvd-CO @ 15% O2 when firing on hydrogen-rich fuel exclusively; and is designed to achieve 4.0 ppmvd @ 15% O2 but does not exceed 5.0 ppmvd @ 15% O2 when firing on fuel containing natural gas. 2. Oxidation catalyst that achieves 3.0 ppmvd-CO @ 15% O2 when firing on hydrogen-rich fuel exclusively and 5.0 ppmvd @ 15% O2 when firing on fuel containing natural gas.	
PM10	Air inlet cooler/filter, lube oil vent coalescer (or equal), and either PUC-regulated natural gas, non-PUC regulated gas with no more than 0.75 grains-S/100 dscf, or 0.0003 lb-SOx/MMBtu when firing on H2-rich fuel exclusively.		
SOx	PUC-regulated natural gas or non-PUC regulated natural with no more than 0.75 grains-S/100 dscf, or 0.0003 lb-SOx/MMBtu when firing on H2-rich fuel exclusively		

BACT is the most stringent control technique for the emissions unit and class of source. Control techniques that are not achieved in practice or contained in a state implementation plan must be cost effective as well as feasible. Economic analysis to demonstrate cost effectiveness is required for all determinations that are not achieved in practice or contained in an EPA approved State Implementation Plan.

***This is a Summary Page for this Class of Source - Permit Specific BACT Determinations on Next Page(s)**

San Joaquin Valley
Unified Air Pollution Control District

Best Available Control Technology (BACT) Guideline X.Y.Z

Emission Unit: Coal/Coke Gasification CO2 Recovery System

Industry Type: Integrated Gasification Combined Cycle Power Plant

Equipment Rating: All

Last Update: December xx, 2009

Pollutant	Achieved in Practice or contained in SIP	Technologically Feasible	Alternate Basic Equipment
CO		Capture, compression, and transportation of the exhaust stream in a pipeline for injection (during normal operation); venting allowed when transportation system is unavailable due to upset condition up to 504 hr per rolling 12-month period.	
VOC		Capture, compression, and transportation of the exhaust stream in a pipeline for injection (during normal operation); venting allowed when transportation system is unavailable due to upset condition up to 504 hr per rolling 12-month period.	

BACT is the most stringent control technique for the emissions unit and class of source. Control techniques that are not achieved in practice or contained in a state implementation plan must be cost effective as well as feasible. Economic analysis to demonstrate cost effectiveness is required for all determinations that are not achieved in practice or contained in an EPA approved State Implementation Plan.

***This is a Summary Page for this Class of Source - Permit Specific BACT Determinations on Next Page(s)**

San Joaquin Valley
Unified Air Pollution Control District

Best Available Control Technology (BACT) Guideline X.Y.Z

Emission Unit: Nitric acid unit
Equipment Rating: up to 501 tons of nitric acid produced per day (expressed as 100 percent nitric acid)

Industry Type: Fertilizer manufacturing
Last Update: January xx, 2013

Pollutant	Achieved in Practice or contained in SIP	Technologically Feasible	Alternate Basic Equipment
NOx	Extended absorption and/or catalytic reduction, with NOx emissions no greater than 0.50 lb/ton of nitric acid produced (expressed as 100 percent nitric acid), on a 24-hour rolling average basis	Extended absorption and/or catalytic reduction, with NOx emissions no greater than 0.20 lb/ton of nitric acid produced (expressed as 100 percent nitric acid), on a 24-hour rolling average basis	

BACT is the most stringent control technique for the emissions unit and class of source. Control techniques that are not achieved in practice or contained in a state implementation plan must be cost effective as well as feasible. Economic analysis to demonstrate cost effectiveness is required for all determinations that are not achieved in practice or contained in an EPA approved State Implementation Plan.

***This is a Summary Page for this Class of Source - Permit Specific BACT Determinations on Next Page(s)**

San Joaquin Valley
Unified Air Pollution Control District

Best Available Control Technology (BACT) Guideline X.Y.Z

Emission Unit: Ammonium nitrate unit

Industry Type: Fertilizer manufacturing

Equipment Rating: up to 636 tons per day of ammonium nitrate solution produced

Last Update: January xx, 2013

Pollutant	Achieved in Practice or contained in SIP	Technologically Feasible	Alternate Basic Equipment
PM10		Wet scrubber system with PM10 emissions limited to no more than 0.0075 lb-PM10/ton of ammonium nitrate produced	

BACT is the most stringent control technique for the emissions unit and class of source. Control techniques that are not achieved in practice or contained in a state implementation plan must be cost effective as well as feasible. Economic analysis to demonstrate cost effectiveness is required for all determinations that are not achieved in practice or contained in an EPA approved State Implementation Plan.

***This is a Summary Page for this Class of Source - Permit Specific BACT Determinations on Next Page(s)**

APPENDIX C
Top Down BACT Analyses

Top Down BACT Analysis for the Combustion Turbine Generator (S-7616-26)

1. BACT Analysis for NO_X Emissions:

a. Step 1 - Identify all control technologies

The new SJVUAPCD BACT Clearinghouse guideline (number to be determined later), identifies technologically feasible BACT for NO_X emissions from combustion turbine generators that are fired on hydrogen-rich syngas and natural gas as follows:

1) Selective catalytic reduction designed to achieve 2.0 ppmvd-NOx @ 15% O_2 (3-hour rolling average) or 2.5 ppmvd-NOx @ 15% O_2 (1-hour average), but does not exceed 4.0 ppmvd-NOx @ 15% O_2 (3-hour rolling average), except during startup/shutdown.
2) Selective catalytic reduction designed to achieve 3.0 ppmvd-NOx @ 15% O_2 (3-hour rolling average), but does not exceed 4.0 ppmvd-NOx @ 15% O_2 (3-hour rolling average), except during startup/shutdown.
3) Selective catalytic reduction that achieves 4.0 ppmvd-NOx @ 15% O_2 (3-hour rolling average), except during startup/shutdown.

No other control alternatives are identified as achieved in practice or alternate basic equipment for this class and category of source are listed.

b. Step 2 - Eliminate technologically infeasible options

All the options identified in Step 1 are technologically feasible when firing on hydrogen-rich fuel, however when firing on natural gas, only the 4.0 ppmvd-NOx is technologically feasible as explained below.

The MHI 501 GAC® is a new turbine model designed to optimally fire on hydrogen-rich fuel, and it will fire on natural gas as a backup fuel only on a very limited basis. The backup natural gas firing will occur only during startup and shutdown of the combustion turbine and during periods of unplanned equipment outages up to 336 hours per year—periods when hydrogen gas is not available because the hydrogen-producing equipment is out of service. Conditions will limit the firing on natural gas to CTG startups (with firing on natural gas not to exceed 5 total hours per calendar year), CTG shutdowns (with firing on natural gas not to exceed 10 hours per calendar year), or during periods of unplanned equipment outages (with firing on natural gas not to exceed 336 hours per calendar year).

The fact that the turbine will fire primarily on hydrogen-rich fuel requires that the turbine be equipped with a diffusion-type combustor, as opposed to dry-low NOx (DLN) combustor technology, which is typically installed in modern combined-cycle units using natural gas fuel. With a diffusion-type combustor, NOx emissions will be controlled with diluent injection of nitrogen and a selective catalytic reduction (SCR) system.

Available DLN combustor technologies are designed for natural gas (methane-based) fuels, and this type of technology is not technically practical for syngas (hydrogen/CO-

based) fuels used by an IGCC combustion turbine due to the potential for explosion hazard in the combustion section due primarily to the high hydrogen content of the syngas. No manufacturer makes DLN combustions that can be used for a combustion turned fueled by petroleum coke or coal-derived syngas. Research is ongoing to develop DLN for syngas-fueled combustion turbines; however, such combustor technology is not a technically feasible control option for this unit.

Post-combustion reduction of NOx from the flue gas will be achieved with selective catalytic reduction (SCR). The SCR process involves the injection of ammonia (NH3) into the exhaust gas stream upstream of a specialized catalyst module to promote the conversion of NOx and NH3 to nitrogen and water. SCR will be used when firing hydrogen-rich fuel or natural gas.

The applicant has provided vendor guarantees that the SCR system reduces NOx emissions from the HRSG stack gases by up to 92 percent when firing hydrogen-rich fuel, and up to 94 percent when firing natural gas. The maximum NOx reductions that SCRs can typically achieve are 90 to 95 percent.[43] HECA will optimize the SCR system to achieve NOx reductions of this magnitude.

[44] Without the SCR, the MHI turbine can achieve exhaust emission levels of [redacted] (at 15 percent oxygen) NOx over a 3-hour average (excluding start-up, shut-down and upset periods) when firing 100 percent hydrogen-rich fuel with diluent injection. For natural gas combustion, emission levels of [redacted] (at 15 percent oxygen) NOx from the turbine exhaust are achieved with diluent injection. The applicant requests operation of the combined-cycle unit on natural gas fuel for a limited period of up to 2 weeks per year when the gasifier is unavailable, and during start up and shut down. The higher emission rate from the combustion of natural gas is caused by the difference in combustion characteristics of natural gas compared to the hydrogen-rich fuel in the diffusion burners.

Since the highest guaranteed control level available to the permittee for which they can secure for natural gas firing is [redacted] and the highest quoted control in practice is no better than [redacted], the emission level of [redacted] can be feasibly controlled to a level as low as [redacted] ppmvd-NOx. Therefore, for the backup natural gas firing, the lower 2.0 ppmvd-NOx @ 15% O_2 (3-hour rolling average) or 2.5 ppmvd-NOx @ 15% O_2 (1-hour average) and the 3.0 ppmvd-NOx @ 15% O_2 (3-hour rolling average) are deemed to be not technologically feasible.

c. Step 3 - Rank remaining options by control effectiveness

1) Selective catalytic reduction designed to achieve 2.0 ppmvd-NOx @ 15% O_2 (3-hour rolling average) or 2.5 ppmvd-NOx @ 15% O_2 (1-hour average), but does not exceed 4.0 ppmvd-NOx @ 15% O_2 (3-hour rolling average), except during startup/shutdown.

---

43 This guarantee is better than the NOx control specified in EPA's AP-42 Section 3.1 (Stationary Gas Turbines),which states that the NOx removal efficiency of an SCR system in good working order is typically from 65 to 90 percent.

44 The removed sections in this page contain information describing the uncontrolled emissions for the combustion turbine generator that has been designated confidential information per the applicant's request, and such information will be kept separate from public record.

2) Selective catalytic reduction designed to achieve 3.0 ppmvd-NOx @ 15% O_2 (3-hour rolling average), but does not exceed 4.0 ppmvd-NOx @ 15% O_2 (3-hour rolling average), except during startup/shutdown.
3) Selective catalytic reduction that achieves 4.0 ppmvd-NOx @ 15% O_2 (3-hour rolling average), except during startup/shutdown.

Note: As explained in Step 2 above, the three options identified above are technologically feasible when firing on hydrogen-rich fuel. However, for natural gas firing the two most-effective options were deemed to be not technologically feasible in Step 2.

d. Step 4 - Cost Effectiveness Analysis

A cost effective analysis must be performed for all control options in the list from Step 3 in the order of their ranking to determine the cost effective option with the lowest emissions.

The applicant has proposed the highest ranked control option that had been deemed technologically feasible for each fuel source. Therefore, a cost effectiveness analysis is not required.

e. Step 5 - Select BACT

BACT for NO_X emissions from this combustion turbine generator is the use of selective catalytic reduction (SCR) that achieves 2.5 ppmvd-NOx @ 15% O_2 (1-hour average), except during startup/shutdown when firing on hydrogen-rich fuel. When firing on the backup natural gas, BACT is the use of SCR that achieves 4.0 ppmvd-NOx @ 15% O_2 (3-hour rolling average), except during startup/shutdown. The applicant proposes the options identified as BACT. Therefore, BACT for NO_X emissions is satisfied.

2. BACT Analysis for SOx Emissions:

a. Step 1 - Identify all control technologies

The new SJVUAPCD BACT Clearinghouse guideline (number to be determined later), identifies achieved in practice BACT for SO_X emissions from combustion turbine generators that are fired on hydrogen-rich syngas and natural gas as follows:

1) PUC-regulated natural gas or non-PUC regulated natural gas with no more than 0.75 grains-S/100 dscf, or 0.003 lb-SOx/MMBtu when firing on hydrogen-rich fuel

No technologically feasible alternatives or control alternatives identified as alternate basic equipment for this class and category of source are listed.

b. Step 2 - Eliminate technologically infeasible options

There are no technologically infeasible options to eliminate from step 1.

c. Step 3 - Rank remaining options by control effectiveness

No ranking needs to be done because the applicant has proposed the achieved in practice option.

d. Step 4 - Cost Effectiveness Analysis

The applicant has proposed the only control achieved in practice in the ranking list from Step 3. Therefore, per SJVUAPCD BACT policy, the cost effectiveness analysis is not required.

e. Step 5 - Select BACT

BACT for SO_X emissions from this combustion turbine generator is PUC-regulated natural gas or non-PUC regulated natural gas with no more than 0.75 grains-S/100 dscf, or 0.003 lb-SOx/MMBtu when firing on hydrogen-rich fuel. The applicant has proposed to install a combustion turbine generator that will be fired on PUC-regulated natural gas with no more than 0.75 grains-S/100 dscf, or hydrogen-rich fuel with emissions no more than 0.003 lb-SOx/MMBtu; therefore BACT for SO_X emissions is satisfied.

3. BACT Analysis for PM10 Emissions:

a. Step 1 - Identify all control technologies

The new SJVUAPCD BACT Clearinghouse guideline (number to be determined later), identifies achieved in practice BACT for PM10 emissions from combustion turbine generators that are fired on hydrogen-rich syngas and natural gas as follows:

1) Air inlet cooler/filter, lube oil vent coalescer (or equal), and either PUC-regulated natural gas, non-PUC regulated natural gas with no more than 0.75 grains-S/100 dscf, or 0.003 lb-SOx/MMBtu when firing on hydrogen-rich fuel exclusively

No technologically feasible alternatives or control alternatives identified as alternate basic equipment for this class and category of source are listed.

b. Step 2 - Eliminate technologically infeasible options

There are no technologically infeasible options to eliminate from step 1.

c. Step 3 - Rank remaining options by control effectiveness

No ranking needs to be done because the applicant has proposed the achieved in practice option.

d. Step 4 - Cost Effectiveness Analysis

The applicant has proposed the only control achieved in practice in the ranking list from Step 3. Therefore, per SJVUAPCD BACT policy, the cost effectiveness analysis is not required.

e. Step 5 - Select BACT

BACT for PM10 emissions from this combustion turbine generator is air inlet cooler/filter, lube oil vent coalescer (or equal), and either PUC-regulated natural gas, non-PUC regulated natural gas with no more than 0.75 grains-S/100 dscf, or 0.003 lb-SOx/MMBtu when firing on hydrogen-rich fuel exclusively. The applicant has proposed to install a combustion turbine generator with an air inlet cooler/filter, lube oil vent coalescer (or equal), and PUC-regulated natural gas with no more than 0.75 grains-S/100 dscf, or 0.003 lb-SOx/MMBtu when firing on hydrogen-rich fuel exclusively; therefore BACT for SO_X emissions is satisfied.

4. BACT Analysis for CO Emissions:

a. Step 1 - Identify all control technologies

The new SJVUAPCD BACT Clearinghouse guideline (number to be determined later), identifies technologically feasible BACT for CO emissions from combustion turbine generators that are fired on hydrogen-rich syngas and natural gas as follows:

1) Oxidation catalyst that achieves 3.0 ppmvd-CO @ 15% O2 when firing on hydrogen-rich fuel exclusively; and is designed to achieve 4.0 ppmvd @ 15% O2 but does not exceed 5.0 ppmvd @ 15% O2 when firing on fuel containing natural gas.
2) Oxidation catalyst that achieves 3.0 ppmvd-CO @ 15% O2 when firing on hydrogen-rich fuel exclusively and 5.0 ppmvd @ 15% O2 when firing on fuel containing natural gas.

No other control alternatives are identified as achieved in practice or alternate basic equipment for this class and category of source are listed.

b. Step 2 - Eliminate technologically infeasible options

When firing on the primary fuel, hydrogen rich-fuel, the options identified in Step 1 are technologically feasible. However, when firing on natural gas, the lower 4.0 ppmvd-CO has not been proven to be technologically feasible as explained below.

The MHI 501 GAC® is a new turbine model designed to optimally use hydrogen-rich fuel, and natural gas as a backup fuel. The backup natural gas firing will occur only during startup and shutdown of the combustion turbine and during periods of unplanned equipment outages (up to 336 hours per year).

The permittee requests to fire the turbine/HRSG on natural gas for a limited period of time up to 336 hours per year when the gasifier is unavailable, and during startup and shutdown. The higher emission rate from combustion on natural gas is caused by the difference in characteristics of natural gas compared to the hydrogen-rich fuel in the diffusion burners. As is explained in the BACT evaluation of NOx emissions above, dry-low NOx (DLN) technology is not technologically feasible for the primary fuel, hydrogen-rich fuel. Thus it is also not feasible for the limited use of the natural gas backup fuel. As a result, highest-control option identified in Step 1 above is not proven to be technologically feasible. Therefore, this option is identified as infeasible only for the backup fuel, natural gas.

c. Step 3 - Rank remaining options by control effectiveness

1) Oxidation catalyst that achieves 3.0 ppmvd-CO @ 15% O2 when firing on hydrogen-rich fuel exclusively; and 5.0 ppmvd @ 15% O2 when firing on fuel containing natural gas.

d. Step 4 - Cost Effectiveness Analysis

A cost effective analysis must be performed for all control options in the list from Step 3 in the order of their ranking to determine the cost effective option with the lowest emissions.

The applicant has proposed the highest ranked technologically feasible option. Therefore, a cost effectiveness analysis is not required.

e. Step 5 - Select BACT

BACT for CO emissions from the proposed combustion turbine generator is the use of oxidation catalyst that achieves 3.0 ppmvd-CO @ 15% O2 when firing on hydrogen-rich fuel exclusively and that achieves 5.0 ppmvd @ 15% O2 when firing on fuel containing natural gas. The applicant has proposed to install a combustion turbine generator equipped with an oxidation catalyst that achieves 3.0 ppmvd-CO @ 15% O2 when firing on hydrogen-rich fuel exclusively and that achieves 5.0 ppmvd @ 15% O2 when firing on fuel containing natural gas, except during startup/shutdown; therefore BACT for CO emissions is satisfied.

5. BACT Analysis for VOC Emissions:

a. Step 1 - Identify all control technologies

The new SJVUAPCD BACT Clearinghouse guideline (number to be determined later), identifies technologically feasible BACT for VOC emissions from combustion turbine generators that are fired on hydrogen-rich syngas and natural gas as follows:

1) Oxidation catalyst that achieves 1.0 ppmvd-VOC @ 15% O2 when firing on hydrogen-rich fuel exclusively; and is designed to achieve 1.5 ppmvd-VOC @ 15% O2 but does not exceed 2.0 ppmvd-VOC when firing on fuel containing natural gas.
2) Oxidation catalyst that achieves 1.0 ppmvd-VOC @ 15% O2 when firing on hydrogen-rich fuel exclusively; and 2.0-VOC ppmvd @ 15% O2 when firing on fuel containing natural gas.

No other control alternatives are identified as achieved in practice or alternate basic equipment for this class and category of source are listed.

b. Step 2 - Eliminate technologically infeasible options

When firing on the primary fuel, hydrogen rich-fuel, the options identified in Step 1 are technologically feasible. However, when firing on natural gas, the lower 1.5 ppmvd-VOC option has not been proven to be technologically feasible as explained below.

The MHI 501 GAC® is a new turbine model designed to optimally use hydrogen-rich fuel, and natural gas as a backup fuel. The backup natural gas firing will occur only during startup and shutdown of the combustion turbine and during periods of unplanned equipment outages (up to 336 hours per year).

The permittee requests to fire the turbine/HRSG on natural gas for a limited period of time up to 336 hours per year when the gasifier is unavailable, and during startup and shutdown. The higher emission rate from combustion on natural gas is caused by the difference in characteristics of natural gas compared to the hydrogen-rich fuel in the diffusion burners. As is explained in the BACT evaluation of NOx emissions above, dry-low NOx (DLN) technology is not technologically feasible for the primary fuel, hydrogen-rich fuel. Thus it is also not feasible for the limited use of the natural gas backup fuel. As a result, highest-control option identified in Step 1 above is not proven to be technologically feasible. Therefore, this option is identified as infeasible only for the backup fuel, natural gas.

c. Step 3 - Rank remaining options by control effectiveness

1) Oxidation catalyst that achieves 1.0 ppmvd-VOC @ 15% O2 when firing on hydrogen-rich fuel exclusively and 2.0-VOC ppmvd @ 15% O2 when firing on fuel containing natural gas.

d. Step 4 - Cost Effectiveness Analysis

A cost effective analysis must be performed for all control options in the list from Step 3 in the order of their ranking to determine the cost effective option with the lowest emissions.

The applicant has proposed the highest ranked technologically feasible option. Therefore, a cost effectiveness analysis is not required.

e. Step 5 - Select BACT

BACT for VOC emissions from the proposed combustion turbine generator is the use of oxidation catalyst that achieves 1.0 ppmvd-VOC @ 15% O2 when firing on hydrogen-rich fuel exclusively and that achieves 2.0 ppmvd-VOC @ 15% O2 when firing on fuel containing natural gas. The applicant has proposed to install a combustion turbine generator equipped with an oxidation catalyst that achieves 1.0 ppmvd-VOC @ 15% O2 when firing on hydrogen-rich fuel exclusively and that achieves 2.0 ppmvd-VOC @ 15% O2 when firing on fuel containing natural gas, except during startup/shutdown; therefore BACT for VOC emissions is satisfied.

Top Down BACT Analysis for the PM10 emissions from:

- **Rail Unloading and Transfer System (S-7616-17)**
- **Truck Unloading and Transfer System (S-7616-18)**
- **Feedstock Grinding/Crushing and Drying System (S-7616-20)**

1. BACT Analysis for PM10 Emissions:

a. Step 1 - Identify all control technologies

The project consists of the following operations, which will handle coal and petroleum coke, that trigger BACT for PM10 emissions:

- Rail unloading vent (emission point #17 of the Rail Unloading and Transfer System, S-7616-17)
- Truck unloading vent (emission point #20 of the Truck Unloading and Transfer System, S-7616-18)
- Feedstock bunkers vent and feedstock crusher vent (emission points #21 and #19 of the Feedstock Grinding/Crushing and Drying System, S-7616-20)

The applicable BACT requirements for the proposed operations are covered by the following BACT guidelines:

- SJVUAPCD BACT Clearinghouse guideline 8.2.1 lists BACT requirements for Petroleum Coke Handling – Receiving, Storage, and Loadout.

- SJVUAPCD BACT Clearinghouse guideline 8.4.1 lists BACT requirements for Dry Material Storage and Conveying Operation.

- SJVUAPCD BACT Clearinghouse guideline 8.4.3 lists BACT requirements for Dry Material Handling – Mixing, Blending, Milling, or Storage.

These guidelines identify achieved in practice BACT for PM10 emissions that apply to the operation as follows:

Petroleum coke handling – receiving, storage, and loadout (Guideline 8.2.1):

1) Adequate moisture content of coke received, and loaded out, to prevent visible emissions in excess of 5% opacity. Water and surfactant applied to storage piles.

Dry material storage and conveying operation (Guideline 8.4.1):

1) Storage, augers, elevators, conveyors all enclosed and vented to a fabric filter baghouse

Dry material handling – mixing, blending, milling, or storage (Guideline 8.4.3):

1) Mixer, augers, elevators, conveyors all enclosed and vented to a fabric filter baghouse

No technologically feasible alternatives or control alternatives identified as alternate basic equipment for this class and category of source are listed.

b. Step 2 - Eliminate technologically infeasible options

There are no technologically infeasible options to eliminate from step 1.

c. Step 3 - Rank remaining options by control effectiveness

No ranking needs to be done because the applicant has proposed the most effective control option identified above for each of the process areas.

d. Step 4 - Cost Effectiveness Analysis

The applicant has proposed the most effective control options identified in Step 3 that is applicable to each of the process areas. Therefore, per SJVUAPCD BACT policy, a cost effectiveness analysis is not required.

e. Step 5 - Select BACT

BACT requirements for PM10 emissions from the rail unloading vent, the truck unloading vent, the feedstock bunkers vent, and the feedstock crusher vent are the following: storage silos, mixers, augers, elevators, conveyors shall be fully enclosed and vented to a fabric filter baghouse(s); the petroleum coke shall contain adequate moisture to prevent visible emissions in excess of 5% opacity. The applicant has proposed that the dry material storage silos, crusher, augers, elevators, and conveyors all be enclosed and vented to fabric filter baghouse, and the petroleum coke will be required to contain adequate moisture content to prevent visible emissions in excess of 5% opacity. Therefore, BACT for PM10 emissions is satisfied.

Top Down BACT Analysis for the PM10 emissions from:

- **Gasification Solids Material Handling System (S-7616-22)**
- **Urea Storage and Handling Operation (S-7616-37)**

1. BACT Analysis for PM10 Emissions:

a. Step 1 - Identify all control technologies

The project consists of the following material handling operations that trigger BACT for PM10 emissions:

- Gasification solids load-out system (emission point #29 of the Gasification Solids Handling System, S-7616-22)
- Urea loading vent (emission point # 23 of the Urea Storage and Handling Operation, S-7616-37)

The applicable BACT requirements for the proposed operations are covered by the following BACT guidelines:

SJVUAPCD BACT Clearinghouse guideline 8.4.1 lists BACT requirements for Dry Material Storage and Conveying Operation.

SJVUAPCD BACT Clearinghouse guideline 8.4.2 lists BACT requirements for Wet Material Storage and Conveying Operation.

SJVUAPCD BACT Clearinghouse guideline 8.4.3 lists BACT requirements for Dry Material Handling – Mixing, Blending, Milling, or Storage.

These guidelines identify achieved in practice BACT for PM10 emissions that apply to the operation as follows:

Dry material storage and conveying operation (Guideline 8.4.1):

1) Storage, augers, elevators, conveyors all enclosed and vented to a fabric filter baghouse

Wet material storage and conveying operation (Guideline 8.4.2):

1) Enclosed storage with sufficient moisture so visible emissions are less than 5% opacity from any single emission point

Dry material handling – mixing, blending, milling, or storage (Guideline 8.4.3):

1) Mixer, augers, elevators, conveyors all enclosed and vented to a fabric filter baghouse

No technologically feasible alternatives or control alternatives identified as alternate basic equipment for this class and category of source are listed.

b. Step 2 - Eliminate technologically infeasible options

There are no technologically infeasible options to eliminate from step 1.

c. Step 3 - Rank remaining options by control effectiveness

No ranking needs to be done because the applicant has proposed the most effective control option identified above for each of the process areas.

d. Step 4 - Cost Effectiveness Analysis

The applicant has proposed the most effective control options identified in Step 3 that is applicable to each of the process areas. Therefore, per SJVUAPCD BACT policy, a cost effectiveness analysis is not required.

e. Step 5 - Select BACT

BACT requirements for PM10 emissions from the gasification solids load-out system (of the gasification solids handling system, S-7616-22) and the urea loading vent (of the urea storage and handling operation, S-7616-37) are the following: storage, mixers, augers, elevators, conveyors shall be fully enclosed and vented to fabric filter baghouse(s); the stored wet material shall contain adequate moisture to prevent emissions in excess of 5% opacity. The applicant has proposed that all storage, mixers, augers, elevators, conveyors be enclosed and vented to fabric filter baghouse(s), and the wet material storage area will be required to contain adequate moisture content to prevent visible emissions in excess of 5% opacity. Therefore, BACT for PM10 emissions is satisfied.

Top Down BACT Analysis for the Fugitive Emissions Associated with: Gasification System (S-7616-21) and Sulfur Recovery Unit (S-7616-23)

1. BACT Analysis for VOC Emissions:

a. Step 1 - Identify all control technologies

The SJVUAPCD BACT Clearinghouse guideline 4.12.1 applies to chemical plant valves and connectors and guideline 4.12.2 applies to chemical plant pump and compressor seals. Guideline 4.12.1 identifies achieved the following as practice BACT for VOC emissions for valves and connectors:

1) Leak defined as a reading of methane in excess of 100 ppmv above background when measure per EPA Method 21 and an Inspection and Maintenance Program pursuant to District Rule 4455

Guideline 4.12.2 identifies the following as achieved in practice BACT for VOC emissions for pump and compressor seals:

1) Leak defined as a reading of methane in excess of 500 ppmv above background when measure per EPA Method 21 and an Inspection and Maintenance Program pursuant to District Rule 4455

No other control alternatives are identified as technologically feasible or alternate basic equipment for this class and category of source by these guidelines.

b. Step 2 - Eliminate technologically infeasible options

There are no technologically infeasible options to eliminate from step 1.

c. Step 3 - Rank remaining options by control effectiveness

1) Leak defined as a reading of methane in excess of 100 ppmv above background for valves and connectors when measure per EPA Method 21 and an Inspection and Maintenance Program pursuant to District Rule 4455. Leak defined as a reading of methane in excess of 500 ppmv above background for pump and compressor seals when measure per EPA Method 21 and an Inspection and Maintenance Program pursuant to District Rule 4455

d. Step 4 - Cost Effectiveness Analysis

A cost effective analysis must be performed for all control options in the list from Step 3 in the order of their ranking to determine the cost effective option with the lowest emissions.

The applicant has proposed the highest ranked technologically feasible option. Therefore, a cost effectiveness analysis is not required.

e. Step 5 - Select BACT

BACT for VOC emissions a leak defined as a reading of methane in excess of 100 ppmv above background for valves and connectors and in excess of 500 ppmv above background for pump and compressor seals when measure per EPA Method 21 and an Inspection and Maintenance Program pursuant to District Rule 4455. The applicant has proposed to these control measures; therefore BACT for VOC emissions is satisfied.

Top Down BACT Analysis for the Sulfur Recovery Unit (S-7616-23)

1. BACT Analysis for SO_X Emissions:

a. Step 1 - Identify all control technologies

The SJVUAPCD BACT Clearinghouse guideline 7.2.6, identifies achieved in practice BACT for SOx emissions from sulfur recovery plants that process 20 tons/day of sulfur or more as follows:

1) Sulfur recovery unit with tail gas treating unit to treat gas to = or < 10 ppmv H2S (based on a three-hour, moving average) and a standby incinerator - except during startup and shutdown.

The guideline also identified the following as technologically feasible BACT:

In addition, the guideline identifies technologically feasible BACT for SOx emissions as follows:

2) Sulfur recovery unit with two tail gas treating units in parallel (one as standby) to treat gas to = or < 10 ppmv H2S (based on a three-hour, moving average) and a standby incinerator - except during startup and shutdown

No other control alternatives are identified as alternate basic equipment for this class and category of source.

b. Step 2 - Eliminate technologically infeasible options

There are no technologically infeasible options to eliminate from step 1.

c. Step 3 - Rank remaining options by control effectiveness

1a) Sulfur recovery unit with two tail gas treating units in parallel (one as standby) to treat gas to = or < 10 ppmv H2S (based on a three-hour, moving average) and a standby incinerator - except during startup and shutdown

1b) Sulfur recovery unit with tail gas treating unit to treat gas to = or < 10 ppmv H2S (based on a three-hour, moving average) and a standby incinerator - except during startup and shutdown

d. Step 4 - Cost Effectiveness Analysis

A cost effective analysis must be performed for all control options in the list from Step 3 in the order of their ranking to determine the cost effective option with the lowest emissions.

The difference between the two options identified in Step 3 is the fact that the first control option calls for an second tail gas treating unit (to serve as standby) to treat the gas. Under normal operating conditions, the gas stream from the sulfur recovery unit will be treated in the tail gas treating unit then transported by pipeline to the CO2 vent system

(S-7616-25) for custody transfer point at Elk Hills Field for CO2 enhanced oil recovery (EOR) and sequestration. A tail gas thermal oxidizer, as required by both control options, will also be included as a control device to provide for safe and efficient destruction of the hydrogen sulfide in the vent gas during startups and shutdowns.

In this case, the addition of a backup tail gas treating unit will not achieve any additional control since there are typically no SRU emissions to atmosphere as the treated stream will be transported by pipeline for EOR and sequestration. Additionally, scheduled TGU maintenance shutdowns will be planned to coincide with process block shutdowns so there are no excess process emissions. In the event of any unscheduled TGU curtailment or operating problems, the SRU tail gas can be redirected into the CO2 product stream up to the limits contained in the CO2 product specifications for S-7616-25, and/or the process block can be curtailed or shutdown to accommodate maintenance necessary to restore the TGU operations.

With all these built in control measures, the inclusion of a second tail gas treating unit would not achieve any additional control. Therefore, the emission reduction due to a second tail gas treating unit will be zero, so this alternate control will automatically be cost ineffective, and it can be eliminated from consideration.

e. Step 5 - Select BACT

BACT for SOx emissions from the sulfur recovery plant is the use of a sulfur recovery unit with tail gas treating unit to treat gas to = or < 10 ppmv H2S (based on a three-hour, moving average) and a standby incinerator, except during startup and shutdown. The applicant has proposed to install a sulfur recovery unit with tail gas treating unit to treat gas to = or < 10 ppmv H2S (based on a three-hour, moving average) and a standby incinerator, except during startup and shutdown; therefore BACT for SOx emissions is satisfied.

Top Down BACT Analysis for the CO2 Recovery System (S-7616-24)

1. BACT Analysis for CO and VOC Emissions:

a. Step 1 - Identify all control technologies

The SJVUAPCD BACT Clearinghouse guideline that was approved for project S-1093741, identifies technologically feasible BACT for CO and VOC emissions from a coal/coke gasification CO2 recovery system as follows:

1) Capture, compression, and transportation of the exhaust stream in a pipeline for injection (during normal operation); venting allowed when transportation system is unavailable due to upset condition up to 504 hr (or equivalent) per rolling 12-month period

No other control alternatives are identified as achieved in practice or as alternate basic equipment for this class and category of source.

b. Step 2 - Eliminate technologically infeasible options

There are no technologically infeasible options to eliminate from step 1.

c. Step 3 - Rank remaining options by control effectiveness

1) Capture, compression, and transportation of the exhaust stream in a pipeline for injection (during normal operation); venting allowed when transportation system is unavailable due to upset condition up to 504 hr (or equivalent) per rolling 12-month period

d. Step 4 - Cost Effectiveness Analysis

A cost effective analysis must be performed for all control options in the list from Step 3 in the order of their ranking to determine the cost effective option with the lowest emissions.

The applicant has proposed the highest ranked technologically feasible option. Therefore, a cost effectiveness analysis is not required.

e. Step 5 - Select BACT

BACT for CO and VOC emissions from the CO2 recovery system is the capture, compression, and transportation of the exhaust stream in a pipeline for injection (during normal operation), with venting allowed when transportation system is unavailable due to upset condition up to 504 hr (or equivalent) per rolling 12-month period. The applicant has proposed the capture, compression, and transportation of the exhaust stream in a pipeline for injection (during normal operation), with venting up to 504 hr (or equivalent) per rolling 12-month period when the transportation system is unavailable due to upset conditions; therefore BACT for CO and VOC emissions is satisfied.

Top Down BACT Analysis for Natural Gas-Fired Auxiliary Boiler (S-7616-25)

1. BACT Analysis for NO_X Emissions:

a. Step 1 - Identify all control technologies

The District adopted District Rule 4320 on October 16, 2008. The NO_X emission limit requirements in District Rule 4320 are lower than the current BACT limits; therefore a project specific BACT analysis will be performed to determine BACT for this project. District Rule 4320 includes a compliance option that limits oilfield steam generators with heat input ratings greater than 20 MMBtu/hr to 7 ppm @ 3% O_2. This emission limit is Achieved in Practice control technology for the BACT analysis. District Rule 4320 also contains an enhanced schedule option that allows applicants additional time to meet the requirements of the rule. The enhanced schedule NO_X emission limit requirement is 5 ppmv @ 3% O_2. Since this is an enhanced option in the rule, it will be considered the Technologically Feasible control technology for the BACT analysis.

The SJVUAPCD BACT Clearinghouse Guideline 1.1.2 has been rescinded. Therefore a new BACT analysis is required. The following are possible control technologies:

1. 7 ppmvd @ 3% O2 - Achieved in Practice.
2. 5 ppmvd @ 3% O2 with SCR – Technologically Feasible

b. Step 2 - Eliminate Technologically Infeasible Options

None of the above listed technologies are technologically infeasible.

c. Step 3 - Rank Remaining Control Technologies by Control Effectiveness

1. 7 ppmvd @ 3% O2 - Achieved in Practice.
2. 5 ppmvd @ 3% O2 with SCR – Technologically Feasible

d. Step 4 - Cost Effectiveness Analysis

The applicant has proposed the highest ranked technologically feasible option in the list in Step 3. Therefore, a cost effectiveness analysis is not required.

e. Step 5 - Select BACT

BACT for NO_X emissions from the proposed auxiliary boiler is controlling emissions to 5 ppmv-NOx @ 3% O_2. The applicant has proposed a boiler with emissions controlled to 5 ppmv-NOx @ 3% O_2 with the use of selective catalytic reduction; therefore BACT for NO_X emissions is satisfied.

2. BACT Analysis for VOC, SOx, CO, and PM_{10} Emissions:

a. Step 1 - Identify all control technologies

The SJVUAPCD BACT Clearinghouse guideline 1.1.2 identifies achieved in practice and technologically feasible BACT for Steam Generator $\geq$ 20 MMBtu/hr, at an oil field as follows:

1. Natural gas fuel with LPG backup

b. Step 2 - Eliminate Technologically Infeasible Options

The above listed technology is technologically feasible.

c. Step 3 - Rank Remaining Control Technologies by Control Effectiveness

1. Natural gas fuel with LPG backup

d. Step 4 - Cost Effectiveness Analysis

Only one control technology identified and this technology is achieved in practice, therefore, cost effectiveness analysis not necessary.

e. Step 5 - Select BACT for VOC, SOx, CO, and PM_{10}

BACT is the use of natural gas with LPG backup. The applicant has proposed the use of PUC-quality natural gas; therefore, BACT for VOC, SOx, CO, and PM_{10} emissions is satisfied.

Top Down BACT Analysis for the Cooling Towers (S-7616-27, -28, -29)

1. BACT Analysis for PM10 Emissions:

a. Step 1 - Identify all control technologies

The SJVUAPCD BACT Clearinghouse guideline 8.3.10, identifies technologically feasible BACT for PM10 emissions from cooling towers – induced draft, evaporative cooling as follows:

1) Cellular Type Drift Eliminator

No other control alternatives are identified as achieved in practice or alternate basic equipment for this class and category of source.

b. Step 2 - Eliminate technologically infeasible options

There are no technologically infeasible options to eliminate from step 1.

c. Step 3 - Rank remaining options by control effectiveness

No ranking needs to be done because the applicant has proposed the only option listed in the guideline.

d. Step 4 - Cost Effectiveness Analysis

The applicant has proposed the only control in the ranking list from Step 3. Therefore, per SJVUAPCD BACT policy, the cost effectiveness analysis is not required.

e. Step 5 - Select BACT

BACT for PM10 emissions from this cooling tower is cellular type drift eliminator. The applicant has proposed to install a cellular type drift eliminator with a drift rate of 0.0005%; therefore BACT for PM10 emissions is satisfied.

Top Down BACT Analysis for Flares (S-7616-30, -31, and -32):

1. BACT Analysis for NO_X Emissions:

a. Step 1 - Identify all control technologies

The SJVUAPCD BACT Clearinghouse guideline 1.4.8 identifies the following as achieved in practice BACT for NOx emissions from a refinery flare:

- Engineered flare, with air or steam assisted combustion, staged combustion, and/or equivalent District approved controls. Flare shall be equipped with a flare gas recovery system for non-emergency releases.

In addition, the guideline identifies the following as technologically feasible BACT for NOx emissions:

- Engineered flare or enclosed burner with air or steam assisted combustion, staged combustion, and/or equivalent District approved controls, and having demonstrated emissions of NOx of less than 0.068 lb/MMBtu. Flare shall be equipped with a flare gas recovery system for non-emergency releases.

No other control alternatives are identified as alternate basic equipment for this class and category of source.

b. Step 2 - Eliminate technologically infeasible options

There are no technologically infeasible options to eliminate from step 1.

The applicant has proposed the most effective control option identified above. Each of the proposed engineered flares will comply with 0.068 lb-NOx/MMBtu emission limit and will be equipped with an enclosed burner that is equipped with District-approved controls that will result in smokeless operation as described below. The flare systems will be designed, constructed, and commissioned by a qualified engineering firm with extensive experience with this type of equipment. The flare tips selected will likewise be engineered by qualified suppliers. Carbon present in relief gases sent to each of the three flares is expected to be almost all in the oxidized (CO, CO2) state rather than in a reduced (hydrocarbon) state. The lack of reduced carbon is expected to result in virtually no smoke formation over the expected range of flaring events. Therefore, the flare tip suppliers have indicated that no assist steam or air is necessary to achieve smokeless combustion, and this proposal is deemed as District-approved controls that are equivalent to a flare with air or steam assisted combustion or staged combustion. Normal operation of the gasification flare will include flaring during gasifier startup operations. No flaring (other than pilot gas combustion) is planned during normal operation.

The flares will also be equipped with a system of pressure relief valves/pressure control valves to prevent non-emergency releases of gases into the flare headers. These systems are determined to be as effective and appropriate means for reducing emissions as the flare gas recovery system for non-emergency releases as specified in the

applicable BACT determination. The configurations and measures are described in more detail below:

Gasification Flare (S-7616-30-0)

The gasification flare will be used to safely dispose of gas streams during gasifier startup, shutdown, and unplanned upset emergency events such as short-term emergency combustion turbine outages. The gasification flare will be the device to provide any necessary relief service to the gasifier, shift reactor discharge, and treated hydrogen rich gas from the Rectisol unit. Since the gasifier and shift reactor discharge process streams have some sulfur content during normal operations, the relief devices associated with these process streams include a pressure control valve arrangement that works to minimize flare emissions. Following is a discussion on how the relief valve/control valve configuration at these sources is operated to minimize emissions.

Following nitrogen purging the gasifier is warmed up using natural gas on a combustion burner. Following warm up, gasification of the natural gas is started by introducing oxygen. The syngas produced is essentially sulfur-free. The clean syngas is routed from the gasifier or the shift reactor discharge to the gasification flare through a startup line and pressure controller arrangement as shown in Figure 1. Following a successful startup, a tight shutoff valve is closed on the startup line at both the gasifier and shift reactor discharge to prevent leakage through the start-up pressure controller and a smaller parallel valve set that includes a control valve and a tight seal “chopper” valve is placed in service. The pressure controller/chopper valve configuration works to stop any non-emergency process leakage from the scrubber overhead relief valve into the flare system during normal operations.

Because it is a tight shutoff arrangement, any flow through the device is not expected except during an actual flaring event. The pressure controller/chopper valve arrangement can handle smaller flare events and provides additional assurance that the process pressure is maintained sufficiently below the relief valve set point. This greater difference in pressure afforded to the relief valve results in a tighter seal at the relief valve and lower likelihood that minor variations in operating pressure will cause a leak or lift. Reducing relief valve lifts also reduces the potential for any re-seating and leakage problems.

Figure 1 Syngas Relief Valve Configuration [45]

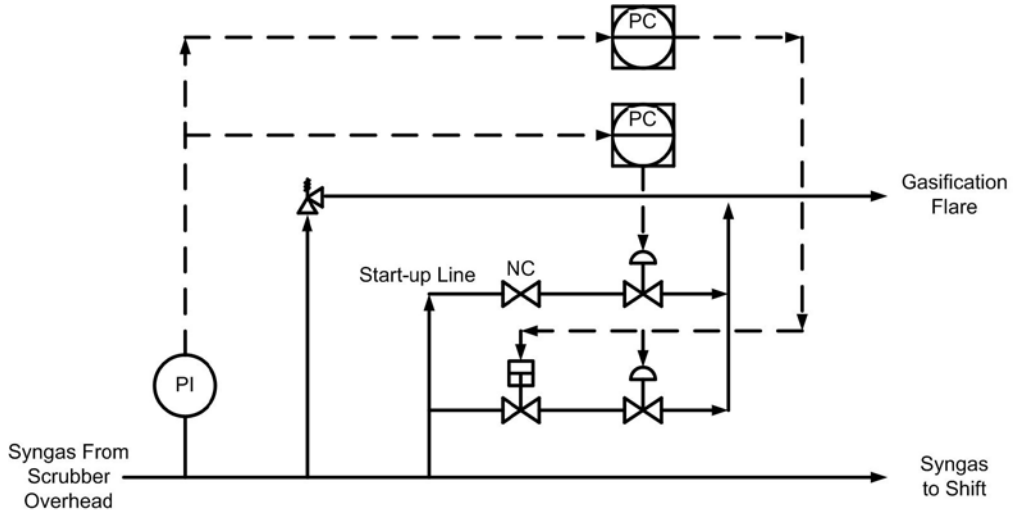

SRU Flare (S-7616-31-0):

The sulfur recovery unit (SRU) flare will be used to safely dispose of gas streams during startup and shutdown and unplanned upsets or emergency events. The SRU flare will be the device providing any necessary relief service to the acid gas system and the sour water stripper. During startups and shutdowns and most flaring events, the acid gas is routed to a caustic scrubber via a pressure controller (as shown in Figure 2) where the sulfur compounds are absorbed by the caustic solution. After scrubbing, the gas is routed to the elevated SRU flare stack via the SRU flare knockout drum. Fresh and spent caustic tanks and pumps are provided to allow delivery of fresh caustic and disposal of spent caustic. Since the pressure relief valve set point is set higher than the control valve set point, the relief valve will only be utilized during infrequent emergency events.

The pressure controller/caustic wash configuration also works to reduce any process leakage during normal operations that might cause the issuance of air contaminants. The pressure controller provides additional assurance that the process pressure is maintained sufficiently below the relief valve set point. This greater difference in pressure results in a tighter seal at the relief valve and lower likelihood that minor variations in operating pressure will cause a leak or lift. Eliminating non-emergency relief valve lifts reduces the potential for any re-seating and leakage problems.

[45] The shift reactor discharge shown is shown in the figure. Gasifier is similar.

Figure 2 SRU Flare Configurations

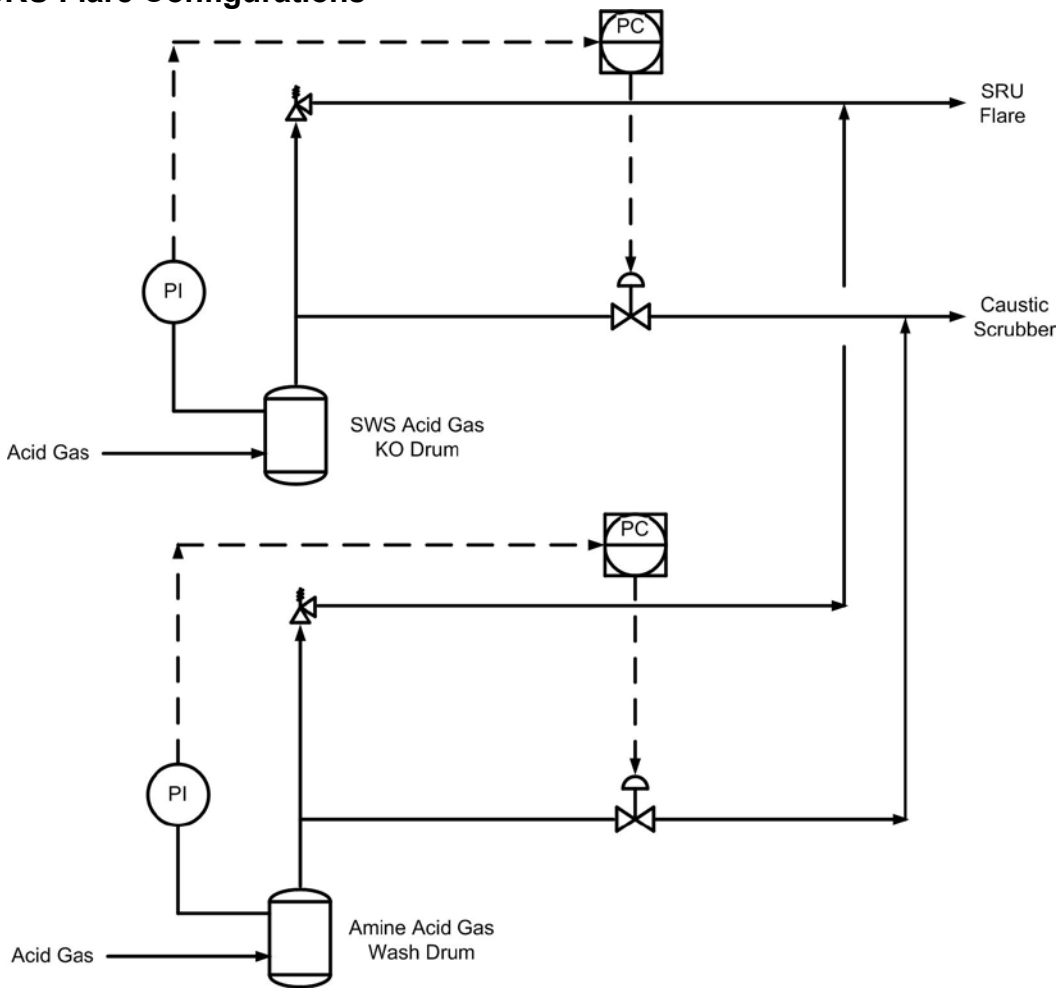

Rectisol Flare (S-7616-32-0)

The Rectisol flare will be used to safely dispose of low-temperature gas streams during unplanned upsets or emergency events. Cold reliefs and vents from the AGR unit and its associated refrigeration unit are collected in the Rectisol flare header. The Rectisol flare header is used only in emergencies or upsets and contains gases that can be below the freezing point of water. For this reason, the Rectisol flare header gases are segregated from the wet gases in the gasification flare header.

Therefore, the proposed systems are deemed an equivalent control to that provided by a flare gas recovery system for non-emergency releases.

c. Step 3 - Rank remaining options by control effectiveness

1) Engineered flare or enclosed burner with air or steam assisted combustion, staged combustion, and/or equivalent District approved controls, and having demonstrated emissions of NOx of less than 0.068 lb/MMBtu. Flare shall be equipped with a flare gas recovery system for non-emergency releases.

2) Engineered flare, with air or steam assisted combustion, staged combustion, and/or equivalent District approved controls. Flare shall be equipped with a flare gas recovery system for non-emergency releases.

d. Step 4 - Cost Effectiveness Analysis

The applicant has proposed the most effective control options identified in Step 3 that is applicable to the proposed flares. Therefore, per SJVUAPCD BACT policy, a cost effectiveness analysis is not required.

e. Step 5 - Select BACT

BACT for NOx emissions for each flare is the use of an engineered flare or enclosed burner with air or steam assisted combustion, staged combustion, and/or equivalent District approved controls, and having demonstrated emissions of NOx of less than 0.068 lb/MMBtu. Flare shall be equipped with a flare gas recovery system for non-emergency releases. As is explained in step 2, the applicant's proposal satisfies these requirements; therefore BACT for NOx emissions is satisfied for each of the flare.

2. BACT Analysis for CO Emissions:

a. Step 1 - Identify all control technologies

The SJVUAPCD BACT Clearinghouse guideline 1.4.8, identifies achieved in practice BACT for CO emissions from a refinery flare as follows:

1) Engineered flare, with air or steam assisted combustion, staged combustion, and/or equivalent District approved controls. Flare shall be equipped with a flare gas recovery system for non-emergency releases.

No other control alternatives are identified as technologically feasible or alternate basic equipment for this class and category of source.

b. Step 2 - Eliminate technologically infeasible options

There are no technologically infeasible options to eliminate from step 1.

c. Step 3 - Rank remaining options by control effectiveness

1) Engineered flare, with air or steam assisted combustion, staged combustion, and/or equivalent District approved controls. Flare shall be equipped with a flare gas recovery system for non-emergency releases.

d. Step 4 - Cost Effectiveness Analysis

The applicant has proposed the most effective control options identified in Step 3 that is applicable to the flares. The flares will result in smokeless operation (as is explained in the BACT analysis for NOx emissions), which constitutes District-approved controls that

are equivalent to air or steam assisted combustion or staged combustion. The flares will also be equipped with a series of control valves and relief valves (as described in the BACT analysis for NOx emissions section) that will maintain a tight shutoff arrangement where no unintended flow is expected, except during actual flaring events. These arrangements are deemed controls equivalent to a flare gas recovery system that minimizes non-emergency releases. Therefore, per SJVUAPCD BACT policy, a cost effectiveness analysis is not required since the applicant is proposing the most effective option.

e. Step 5 - Select BACT

BACT for CO emissions is the use of an engineered flare with air or steam assisted combustion, staged combustion, and/or equivalent District approved controls. Flare shall be equipped with a flare gas recovery system for non-emergency releases. As is explained in step 4, the applicant's proposal satisfies these BACT requirements; therefore BACT for CO emissions is satisfied.

3. BACT Analysis for PM10 Emissions:

a. Step 1 - Identify all control technologies

The SJVUAPCD BACT Clearinghouse guideline 1.4.8, identifies achieved in practice BACT for PM10 emissions from a refinery flare as follows:

1) Engineered flare designed for and operated without visible emissions, except as allowed by 40 CFR 60.18(c)(1) and District Rule 4101 and equipped with air or steam assisted combustion, staged combustion, and/or equivalent District approved controls. Flare shall be equipped with a flare gas recovery system for non-emergency releases. Pilot and sweep fuel shall be natural gas, treated refinery gas or LPG.

No other control alternatives are identified as technologically feasible or alternate basic equipment for this class and category of source.

b. Step 2 - Eliminate technologically infeasible options

There are no technologically infeasible options to eliminate from step 1.

c. Step 3 - Rank remaining options by control effectiveness

1) Engineered flare designed for and operated without visible emissions, except as allowed by 40 CFR 60.18(c)(1) and District Rule 4101 and equipped with air or steam assisted combustion, staged combustion, and/or equivalent District approved controls. Flare shall be equipped with a flare gas recovery system for non-emergency releases. Pilot and sweep fuel shall be natural gas, treated refinery gas or LPG.

d. Step 4 - Cost Effectiveness Analysis

The applicant has proposed the most effective control options identified in Step 3 that is applicable to the flares. The flares will result in smokeless operation (as is explained in the BACT analysis for NOx emissions), which constitutes District-approved controls that are equivalent to air or steam assisted combustion or staged combustion. The flares will also be equipped with a series of control valves and relief valves (as described in the BACT analysis for NOx emissions section) that will maintain a tight shutoff arrangement where no unintended flow is expected, except during actual flaring events. These arrangements are deemed controls equivalent to a flare gas recovery system that minimizes non-emergency releases. Additionally, the flares will have a continuous pilot that will be fired on PUC-quality natural gas. Therefore, per SJVUAPCD BACT policy, a cost effectiveness analysis is not required since the applicant is proposing the most effective option.

e. Step 5 - Select BACT

BACT for PM10 emissions is the use of an engineered flare with air or steam assisted combustion, staged combustion, and/or equivalent District approved controls. Flare shall

be equipped with a flare gas recovery system for non-emergency releases. As is explained in step 4, the applicant's proposal satisfies these BACT requirements; therefore BACT for PM10 emissions is satisfied.

4. BACT Analysis for SOx Emissions:

a. Step 1 - Identify all control technologies

The SJVUAPCD BACT Clearinghouse guideline 1.4.8, identifies achieved in practice BACT for SOx emissions from a refinery flare as follows:

1) Flare shall be equipped with a flare gas recovery system for non-emergency releases. Pilot and purge gas shall be natural gas, treated refinery gas or LPG.

No other control alternatives are identified as technologically feasible or alternate basic equipment for this class and category of source.

b. Step 2 - Eliminate technologically infeasible options

There are no technologically infeasible options to eliminate from step 1.

c. Step 3 - Rank remaining options by control effectiveness

1) Flare shall be equipped with a flare gas recovery system for non-emergency releases. Pilot and purge gas shall be natural gas, treated refinery gas or LPG.

d. Step 4 - Cost Effectiveness Analysis

The applicant has proposed the most effective control options identified in Step 3 that is applicable the flares. The flares will also be equipped with a series of control valves and relief valves (as described in the BACT analysis for NOx emissions section) that will maintain a tight shutoff arrangement where no unintended flow is expected, except during actual flaring events. These arrangements are deemed controls equivalent to a flare gas recovery system that minimizes non-emergency releases. Additionally, the flares will have a continuous pilot that will be fired on PUC-quality natural gas. Therefore, per SJVUAPCD BACT policy, a cost effectiveness analysis is not required since the applicant is proposing the most effective option.

e. Step 5 - Select BACT

BACT for SOx emissions is the use of a flare with a flare gas recovery system for non-emergency releases. Pilot and purge gas shall be natural gas. As is explained in step 4, the applicant's proposal satisfies these BACT requirements; therefore BACT for SOx emissions is satisfied.

5. BACT Analysis for VOC Emissions:

a. Step 1 - Identify all control technologies

The SJVUAPCD BACT Clearinghouse guideline 1.4.8, identifies achieved in practice BACT for VOC emissions from a refinery flare as follows:

1) Engineered flare designed with a VOC destruction efficiency of ≥ 98%. Flare design shall include air or steam assisted combustion, staged combustion, and/or equivalent District approved controls. Flare shall be equipped with a flare gas recovery system for non-emergency releases, a continuous pilot or District approved alternative and a method for detecting flame. Pilot and sweep fuel shall be natural gas, treated refinery gas or LPG.

In addition, the guideline identifies technologically feasible BACT for NOx emissions as follows:

1) Enclosed ground level flare or any other engineered flare designed with a VOC destruction efficiency of ≥ 98.5%. Flare design shall include air or steam assisted combustion, staged combustion, and/or equivalent District approved controls. Flare shall be equipped with a flare gas recovery system for non-emergency releases, a continuous pilot or District approved alternative and a method for detecting flame. Pilot and sweep fuel shall be natural gas, treated refinery gas or LPG.

No other control alternatives are identified as alternate basic equipment for this class and category of source.

b. Step 2 - Eliminate technologically infeasible options

There are no technologically infeasible options to eliminate from step 1.

c. Step 3 - Rank remaining options by control effectiveness

1) Enclosed ground level flare or any other engineered flare designed with a VOC destruction efficiency of ≥ 98.5%. Flare design shall include air or steam assisted combustion, staged combustion, and/or equivalent District approved controls. Flare shall be equipped with a flare gas recovery system for non-emergency releases, a continuous pilot or District approved alternative and a method for detecting flame. Pilot and sweep fuel shall be natural gas, treated refinery gas or LPG.

2) Engineered flare designed with a VOC destruction efficiency of ≥ 98%. Flare design shall include air or steam assisted combustion, staged combustion, and/or equivalent District approved controls. Flare shall be equipped with a flare gas recovery system for non-emergency releases, a continuous pilot or District approved alternative and a method for detecting flame. Pilot and sweep fuel shall be natural gas, treated refinery gas or LPG.

d. Step 4 - Cost Effectiveness Analysis

The applicant has proposed the most effective control options identified in Step 3 that is applicable to the flares. The applicant proposes engineered flares designed with a VOC destruction efficiency of 99%. The flares will result in smokeless operation (as is explained in the BACT analysis for NOx emissions), which constitutes District-approved controls that are equivalent to air or steam assisted combustion or staged combustion. The flares will also be equipped with a series of control valves and relief valves (as described in the BACT analysis for NOx emissions section) that will maintain a tight shutoff arrangement where no unintended flow is expected, except during actual flaring events. These arrangements are deemed controls equivalent to a flare gas recovery system that minimizes non-emergency releases. Additionally, the flares will have a continuous pilot that will be fired on PUC-quality natural gas. Therefore, per SJVUAPCD BACT policy, a cost effectiveness analysis is not required since the applicant is proposing the most effective option.

e. Step 5 - Select BACT

BACT for VOC emissions is the use of an enclosed ground level flare or any other engineered flare designed with a VOC destruction efficiency of ≥ 98.5%. Flare design shall include air or steam assisted combustion, staged combustion, and/or equivalent District approved controls. Flare shall be equipped with a flare gas recovery system for non-emergency releases, a continuous pilot or District approved alternative and a method for detecting flame. Pilot and sweep fuel shall be natural gas, treated refinery gas or LPG. As is explained in step 4, the applicant's proposal satisfies these BACT requirements; therefore BACT for VOC emissions is satisfied.

Top Down BACT Analysis for a 56 MMBtu/hr Natural Gas-Fired Ammonia Synthesis Startup Heater (S-7616-33)

1. BACT Analysis for NO_X Emissions:

a. Step 1 - Identify all control technologies

The District adopted District Rule 4320 (Advanced Emissions Reduction Options for Boilers, Steam Generators, and Process Heaters Greater than 5.0 MMBtu/hr) on October 16, 2008. The NO_X emission limit requirements in District Rule 4320 are lower than the limits in formerly-applicable BACT Guideline 1.1.2 (Boiler: > 20 MMBtu/hr, natural gas fired, base-loaded or with small load swings), so the BACT guideline was rescinded. Therefore, a project-specific BACT analysis will be performed to determine BACT for the proposed natural gas-fired ammonia synthesis startup heater in this project.

District Rule 4320 includes a compliance option that limits units with heat input ratings greater than 20 MMBtu/hr to 7 ppm @ 3% O_2 for the standard NOx schedule. The rule also contains an enhanced schedule option that allows applicants additional time to meet the requirements of the rule. The enhanced schedule NO_X emission limit is 5 ppmv @ 3% O_2. These levels will be considered as BACT control options for NOx.

Because of the proposed limited use of the proposed startup heater[46] and the applicant's proposal to pay an annual emission fee as allowed in Rule 4320 Section 5.1.2, a third NOx control of 9 ppm @ 3% O2 is proposed. This value is based on the option in Rule 4320 Table 1, Category E that is the NOx emissions level available to units limited to 30 billion Btu/year, which the proposed unit will meet. Therefore, the 9 ppmvd-NOx option will also be included among the possible control technologies to be included in the analysis, and it will be deemed to be the Achieved in Practice option while the lower values will be deemed Technologically Feasible.

Thus, the following controls are identified as possible control technologies:

1. 5 ppmvd @ 3% O2 with SCR - Technologically Feasible
2. 7 ppmvd @ 3% O2 - Technologically Feasible.
3. 9 ppmvd @ 3% O2 - Achieved in Practice

b. Step 2 - Eliminate Technologically Infeasible Options

None of the above listed technologies are technologically infeasible.

c. Step 3 - Rank Remaining Control Technologies by Control Effectiveness

1. 5 ppmvd @ 3% O2 with SCR - Technologically Feasible
2. 7 ppmvd @ 3% O2 - Technologically Feasible.
3. 9 ppmvd @ 3% O2 - Achieved in Practice

[46] The startup heater will be limited to no more than 7.7 billion Btu/year heat input , which is equivalent to140 hours at full capacity.

d. Step 4 - Cost Effectiveness Analysis

A cost effective analysis is required for technologically feasible control options that are not proposed. The applicant is proposing a NO_X limit of 9 ppmvd @ 3% O_2; therefore, a cost effective analysis is required for the 5 ppmv-NOx and the 7 ppmv-NOx levels, which would be achieved with SCR.

SCR to Achieve 5 and 7 ppmv-NOx:

Assumptions:

In order to determine the cost effectiveness of the two lower emission levels, the cost effectiveness of the two lower emission levels must be compared to the industry standard. Industry standard for a boiler/heater is assumed to be a NO_X emission rate of 15 ppmv @ 3% O_2 (0.018 lb/MMBtu) in accordance with District Rule 4306.

Calculations:

In order to calculate the annual emission reductions for each of the BACT emissions levels identified as Technologically Feasible, the unit's maximum annual emissions at each of the rates needs to be calculated as shown below to compare them to the industry standard level of 15 ppmv-NOx.

The maximum annual emissions are calculated by multiplying the maximum annual heat input rate limit of 7700 MMBtu/yr (which will be imposed on S-7616-33 as a limit) and the emissions factor for each of the corresponding controls. The potential emissions at each of the three emission levels are calculated as follows:

Industrial Standard (15 ppmv-NOx)	= (7,840 MMBtu/yr)(0.018 lb/MMBtu) = 141.1 lb-NOx/yr
Technically Feasible (7 ppmv-NOx)	= (7,840 MMBtu/yr)(0.008 lb/MMBtu) = 62.7 lb-NOx/yr
Technically Feasible (5 ppmv-NOx)	= (7,840 MMBtu/yr)(0.0062 lb/MMBtu) = 48.6 lb-NOx/yr

Cost Analysis:

In order to control emissions down to 7 ppm-NOx or 5 ppm-NOx, a selective catalytic reduction (SCR) system which includes a forced draft system will need to be installed. The applicant has provided documentation estimating the capital cost at the SCR at $300,000 and the cost of a forced draft system at $216,000, for a total capital cost of $516,000.

Total Estimated Capital Cost: **$516,000**

Equivalent Annual Capital Cost (Capital Recovery)

$$A = P \frac{i(1+i)^n}{(1+i)^n - 1} \quad \text{where;}$$

A = Equivalent Annual Control Equipment Capital Cost
P = Present value of the control equipment, including installation cost
i = interest rate (use 10%, or demonstrate why alternate is more representative of the specific operation).
n = equipment life (assume 10 years or demonstrate why alternate is more representative of the specific operation)

Where

P = $516,000
i = 10%,
n = 10 years
A = $83,977

Total annualized cost = $83,977/yr [47]

<u>NOx Reduction due to Selective Catalytic Reduction system:</u>

Total reduction for 7 ppm-NOx control = Emissions $_{15\ ppm}$ – Emissions $_{5\ ppm}$
= 141.1 lb-NOx/yr – 62.7 lb-NOx/yr
= 78.4 lb-NOx/yr
= 0.039 ton-NO_X/yr

Total reduction for 5 ppm-NOx control = Emissions $_{15\ ppm}$ – Emissions $_{5\ ppm}$
= 141.1 lb-NOx/yr – 48.6 lb-NOx/yr
= 92.5 lb-NOx/yr
= 0.046 ton-NO_X/yr

<u>Cost effectiveness:</u>

Cost effectiveness = Cost of control / Emission reduction

Cost effectiveness of 7 ppm-NOx control = $83,997/yr / 0.039 ton-NOx/yr
= $2,153,769 /ton-NOx reduced

Cost effectiveness of 5 ppm-NOx control = $83,997/yr / 0.046 ton-NOx/yr
= $1,826,022 /ton-NOx reduced

The cost of the SCR is greater than the $24,500/ton-NOx cost effectiveness threshold of the District BACT policy. Therefore the use of SCR with ammonia injection to achieve NOx emissions of 5 ppm-NOx and 7 ppm-NOx is not cost effective and is not required as BACT.

[47] As is shown below, due to the limited use of the startup heater, the cost of the SCR system alone makes the SCR system cost ineffective, so the additional operating costs associated with the SCR were not included in the total annualized cost.

The applicant proposes the remaining NOx control for BACT, 9 ppmv.

e. Step 5 - Select BACT

BACT for NO_X emissions for the proposed startup heater is 9 ppmvd @ 3% O_2. The applicant has proposed a NO_X limit of 9 ppmvd @ 3% O_2; therefore BACT for NO_X emissions is satisfied.

2. BACT Analysis for VOC, SOx, CO, and PM_{10} Emissions:

a. Step 1 - Identify all control technologies

The District adopted District Rule 4320 (Advanced Emissions Reduction Options for Boilers, Steam Generators, and Process Heaters Greater than 5.0 MMBtu/hr) on October 16, 2008. The NO_X emission limit requirements in District Rule 4320 are lower than the limits in formerly-applicable BACT Guideline 1.1.2 (Boiler: > 20 MMBtu/hr, natural gas fired, base-loaded or with small load swings), so the BACT guideline was rescinded. Therefore, a project-specific BACT analysis will be performed to determine BACT for this project.

The SJVUAPCD BACT Clearinghouse guideline 1.1.2 identifies the following technologies for the control of VOC, SOx, CO, and PM10.

1. Natural gas fuel with LPG backup

b. Step 2 - Eliminate Technologically Infeasible Options

The above listed technology is technologically feasible.

c. Step 3 - Rank Remaining Control Technologies by Control Effectiveness

1. Natural gas fuel with LPG backup

d. Step 4 - Cost Effectiveness Analysis

Only one control technology identified and this technology is achieved in practice, therefore, cost effectiveness analysis not necessary.

e. Step 5 - Select BACT for VOC, SOx, CO, and PM_{10}

BACT is the use of natural gas with LPG backup. The applicant has proposed the use of PUC-quality natural gas; therefore, BACT for VOC, SOx, CO, and PM_{10} emissions is satisfied.

Top Down BACT Analysis for the Nitric Acid Plant (S-7616-35)

1. BACT Analysis for NOx Emissions:

a. Step 1 - Identify all control technologies

A BACT guideline prepared for the SJVUAPCD BACT Clearinghouse that was approved for this project identifies the following control technologies for NOx emissions for nitric acid plants:

1. Extended absorption and/or catalytic reduction, with NOx emissions no greater than 0.20 lb/ton of nitric acid produced (expressed as 100 percent nitric acid), on a 24-hour rolling average basis – Technologically Feasible
2. Extended absorption and/or catalytic reduction, with NOx emissions no greater than 0.50 lb/ton of nitric acid produced (expressed as 100 percent nitric acid), on a 24-hour rolling average basis – Achieved in Practice

b. Step 2 - Eliminate technologically infeasible options

There are no technologically infeasible options to eliminate from step 1.

c. Step 3 - Rank remaining options by control effectiveness

1. Extended absorption and/or catalytic reduction, with NOx emissions no greater than 0.20 lb/ton of nitric acid produced (expressed as 100 percent nitric acid), on a 24-hour rolling average basis
2. Extended absorption and/or catalytic reduction, with NOx emissions no greater than 0.50 lb/ton of nitric acid produced (expressed as 100 percent nitric acid), on a 24-hour rolling average basis

d. Step 4 - Cost Effectiveness Analysis

A cost effective analysis must be performed for all control options in the list from Step 3 in the order of their ranking to determine the cost effective option with the lowest emissions.

The applicant has proposed the highest ranked technologically feasible option. Therefore, a cost effectiveness analysis is not required.

e. Step 5 - Select BACT

BACT for NOx for the nitric acid plant is extended absorption and/or catalytic reduction, with NOx emissions no greater than 0.20 lb/ton of nitric acid produced (expressed as 100 percent nitric acid), on a 24-hour rolling average basis. The applicant has proposed catalytic reduction, with NOx emissions no greater than 0.20 lb/ton of nitric acid produced (expressed as 100 percent nitric acid), on a 24-hour rolling average basis. Therefore, BACT for NOx is satisfied.

Top Down BACT Analysis for the Ammonium Nitrate Unit (S-7616-36)

1. BACT Analysis for PM10 Emissions:

a. Step 1 - Identify all control technologies

A BACT guideline prepared for the SJVUAPCD BACT Clearinghouse that was approved for this project identifies the following control technologies for PM10 emissions for ammonium nitrate units:

1. Wet scrubber system with PM10 emissions limited to no more than 0.0075 lb-PM10/ton of ammonium nitrate produced – Technologically Feasible
2. Wet scrubber system – Achieved in Practice

b. Step 2 - Eliminate technologically infeasible options

There are no technologically infeasible options to eliminate from step 1.

c. Step 3 - Rank remaining options by control effectiveness

1. Wet scrubber system with PM10 emissions limited to no more than 0.0075 lb-PM10/ton of ammonium nitrate produced
2. Wet scrubber system

d. Step 4 - Cost Effectiveness Analysis

A cost effective analysis must be performed for all control options in the list from Step 3 in the order of their ranking to determine the cost effective option with the lowest emissions.

The applicant has proposed the highest ranked technologically feasible option. Therefore, a cost effectiveness analysis is not required.

e. Step 5 - Select BACT

BACT for PM10 for the ammonium nitrate unit is the use of a wet scrubber system with PM10 emissions limited to no more than 0.0075 lb-PM10/ton of ammonium nitrate produced. The applicant has proposed the use of a wet scrubber system with PM10 emissions limited to no more than 0.0075 lb-PM10/ton of ammonium nitrate produced. Therefore, BACT for PM10 is satisfied.

Top Down BACT Analysis for the Emergency IC Engines (S-7616-38, -39, -40)

1. BACT Analysis for NOx, CO, VOC, PM10, and SOx Emissions:

a. Step 1 - Identify all control technologies

The SJVUAPCD BACT Clearinghouse guideline 3.1.1 identifies achieved in practice BACT for emissions from emergency diesel IC engines as follows:

Pollutant	Achieved in Practice
CO, NOx, VOC	Latest EPA Tier Certification level for applicable horsepower range
PM10	0.15 g/hp-hr or the Latest EPA Tier Certification level for applicable horsepower range, whichever is more stringent. (ATCM)
SOx	Very low sulfur diesel fuel (15 ppmw sulfur or less)

No technologically feasible alternatives or control alternatives identified as alternate basic equipment for this class and category of source are listed.

b. Step 2 - Eliminate technologically infeasible options

There are no technologically infeasible options to eliminate from Step 1.

c. Step 3 - Rank remaining options by control effectiveness

No ranking needs to be done because only one control option is listed in Step 1.

d. Step 4 - Cost Effectiveness Analysis

The applicant has proposed the only control option listed for each pollutant. Therefore, a cost effectiveness analysis is not required.

e. Step 5 - Select BACT

BACT for CO, NOx, VOC emissions for these emergency standby diesel IC engines is the latest EPA Tier Certification level for the applicable horsepower range. The applicant has proposed to install three interim Tier 4 engines, which will be the latest EPA Tier Certification level for the applicable horsepower range at the time of installation.

BACT for PM10 is 0.15 g/hp-hr, or the latest EPA Tier Certification level for the applicable horsepower range, whichever is more stringent. The applicant is proposing engines that meet this requirement. Engines S-7616-38 and -39 will be limited to 0.07 g-PM10/bhp-hr, and engine S-7616-40 will be limited to 0.01 g-PM10/bhp-hr.

BACT for SOx is the use of very low sulfur diesel fuel (15 ppmw sulfur or less). The applicant is proposing the use of CARB-certified diesel fuel that is rated at 15 ppmw sulfur or less. Therefore, BACT is satisfied for these pollutants.

APPENDIX D
Process Flow Diagrams

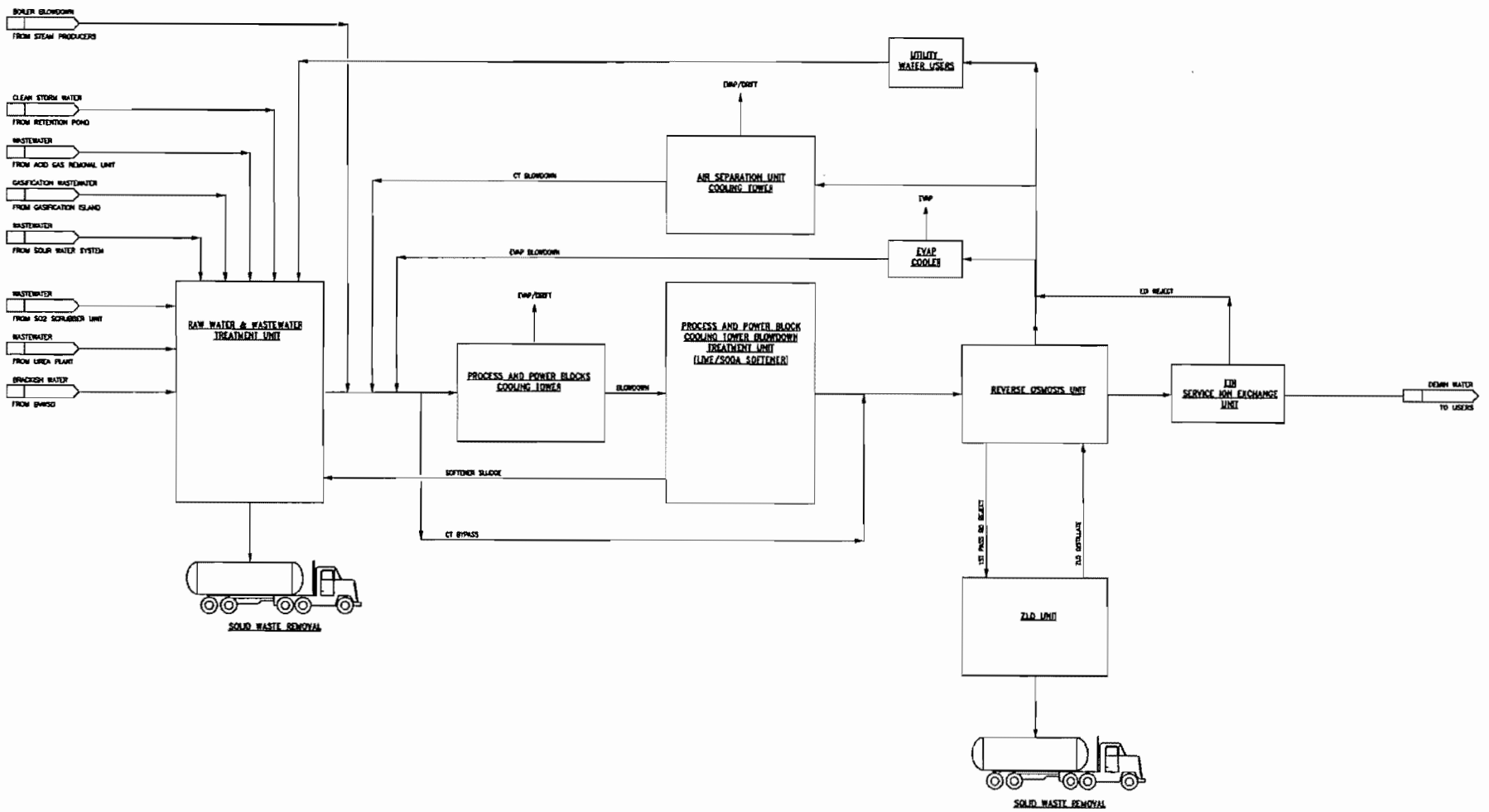

FLOW DIAGRAM: RAW WATER/WASTEWATER/ DEMIN WATER TREATMENT PLANT

April 2012 — Hydrogen Energy California (HECA)
28068052 — Kern County, California

URS

FIGURE 2-11

Source:
Fluor; HECA-SCS, 2012 AFC Update, Flow Diagram Raw Water/Wastewater/Demin Water Treatment Plant; Drawing No: A4UV-090-25-SK-0001, Rev. 0 (2/27/12)

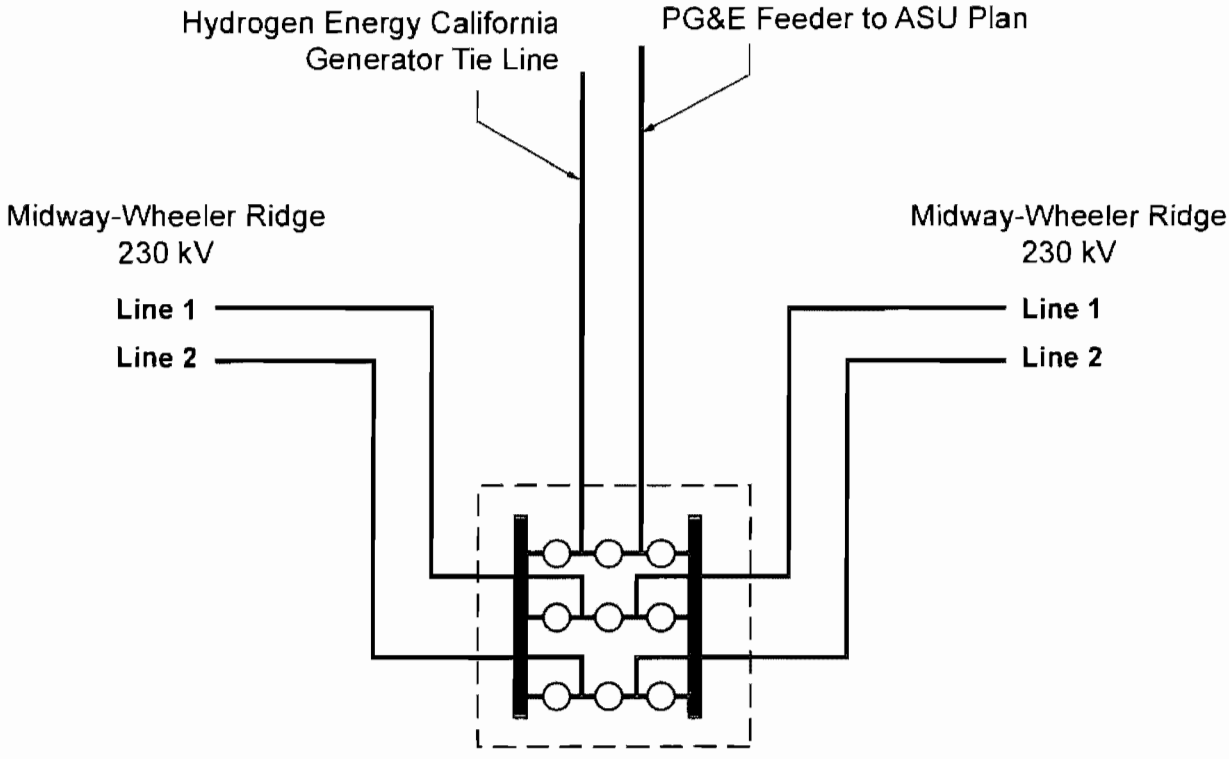

Proposed 230 kV Switching Station
(at Olean Avenue and Elk Valley Road)

Schematic: No Scale

OVERALL SINGLE-LINE DIAGRAM

April 2012
28068052

Hydrogen Energy California (HECA)
Kern County, California

URS

FIGURE 2-12

4/26/12 v.a.; T:\HECA-SCS 2012\GRAPHICS 2012\2.0_Proj Description\2-12_overall_single_line.ai

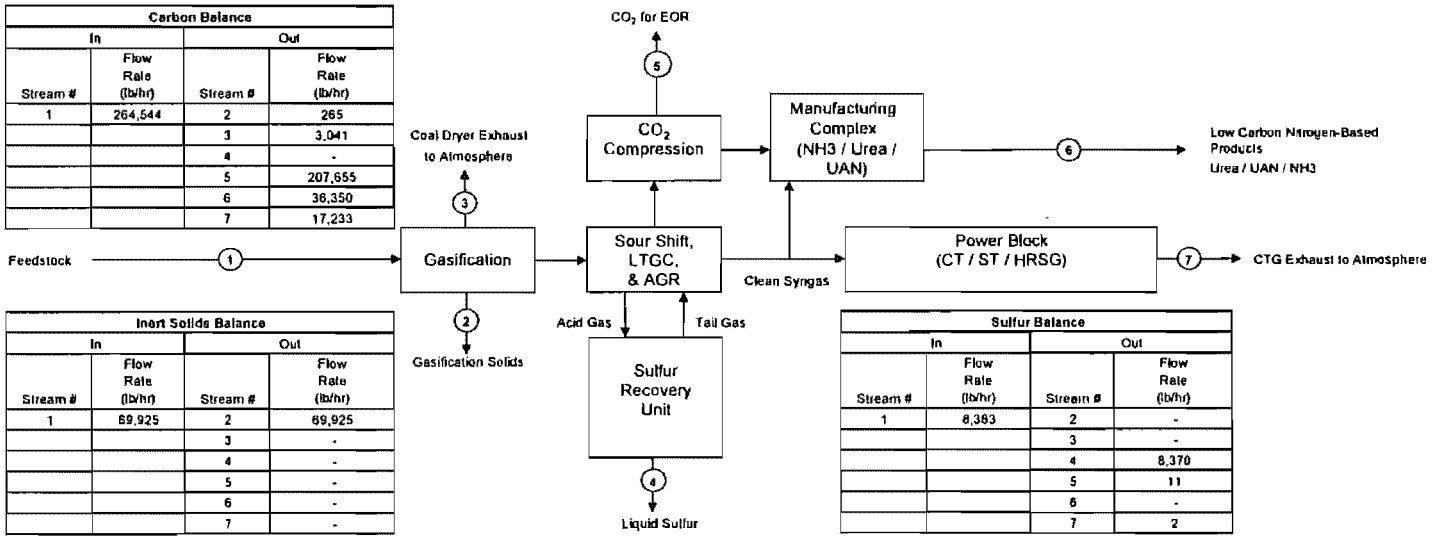

Carbon Balance

In		Out	
Stream #	Flow Rate (lb/hr)	Stream #	Flow Rate (lb/hr)
1	264,544	2	265
		3	3,041
		4	-
		5	207,655
		6	36,350
		7	17,233

Inert Solids Balance

In		Out	
Stream #	Flow Rate (lb/hr)	Stream #	Flow Rate (lb/hr)
1	69,925	2	69,925
		3	-
		4	-
		5	-
		6	-
		7	-

Sulfur Balance

In		Out	
Stream #	Flow Rate (lb/hr)	Stream #	Flow Rate (lb/hr)
1	8,383	2	-
		3	-
		4	8,370
		5	11
		6	-
		7	2

Notes:
1. Only inert solids contained in the Feedstock is shown in the solids balance. All other feedstock components are excluded.
2. A water balance is provided in drawing A4UV-090-25-SK-0001.

Source: Fluor, 2012

HECA OVERALL COMPONENT BALANCES

April 2012
28068052

Hydrogen Energy California (HECA)
Kern County, California

URS

FIGURE 2-13

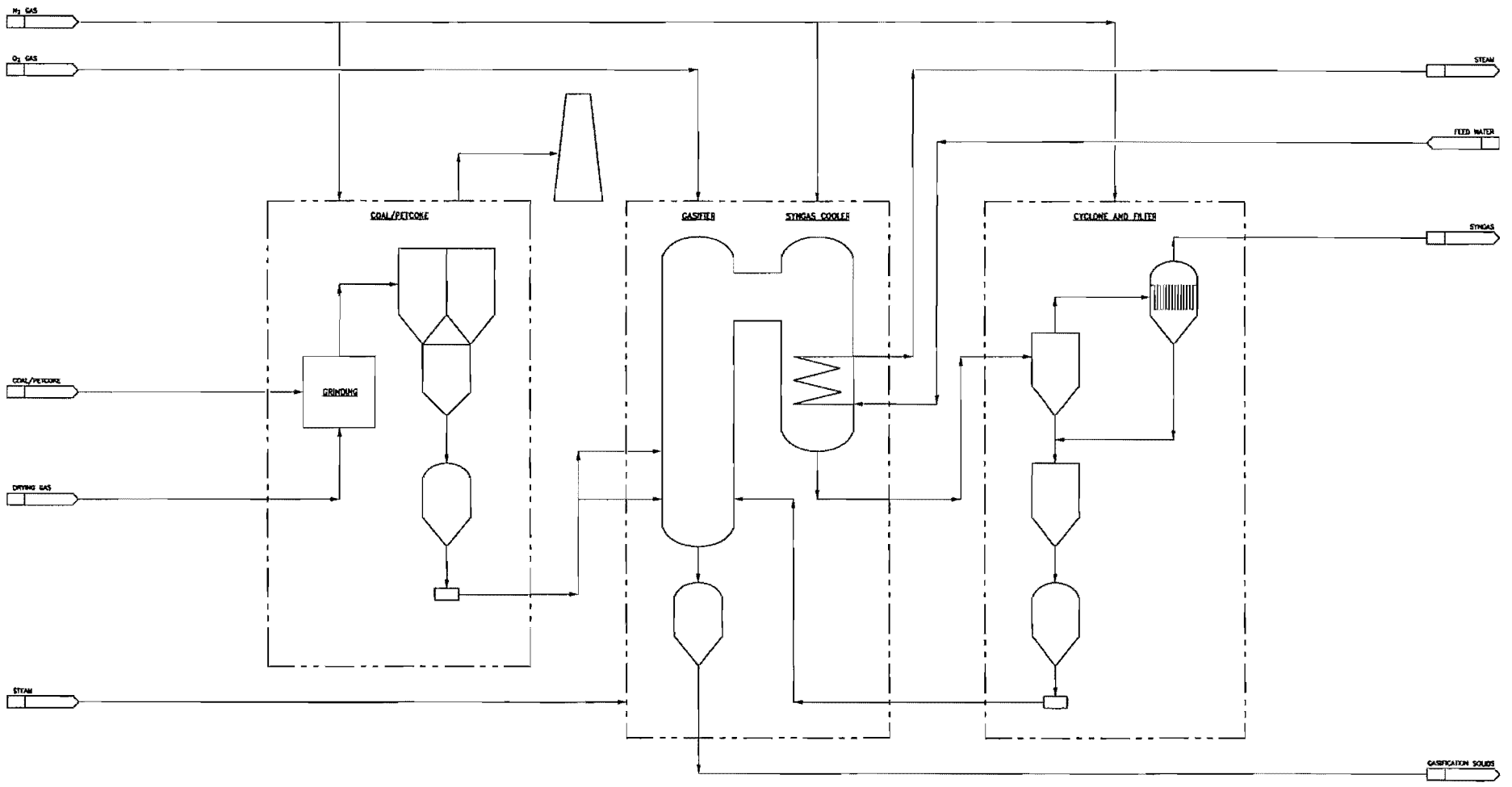

Sources:
Fluor; HECA-SCS, 2012 AFC Update; Flow Diagram Gasification Process, Drawing No: A4UV-010-25-SK-0002, Rev. 0 (2/14/12)
Mitsubishi Heavy Industries, Ltd.

FLOW DIAGRAM
GASIFICATION PROCESS

April 2012
28068052

Hydrogen Energy California (HECA)
Kern County, California

URS

FIGURE 2-14

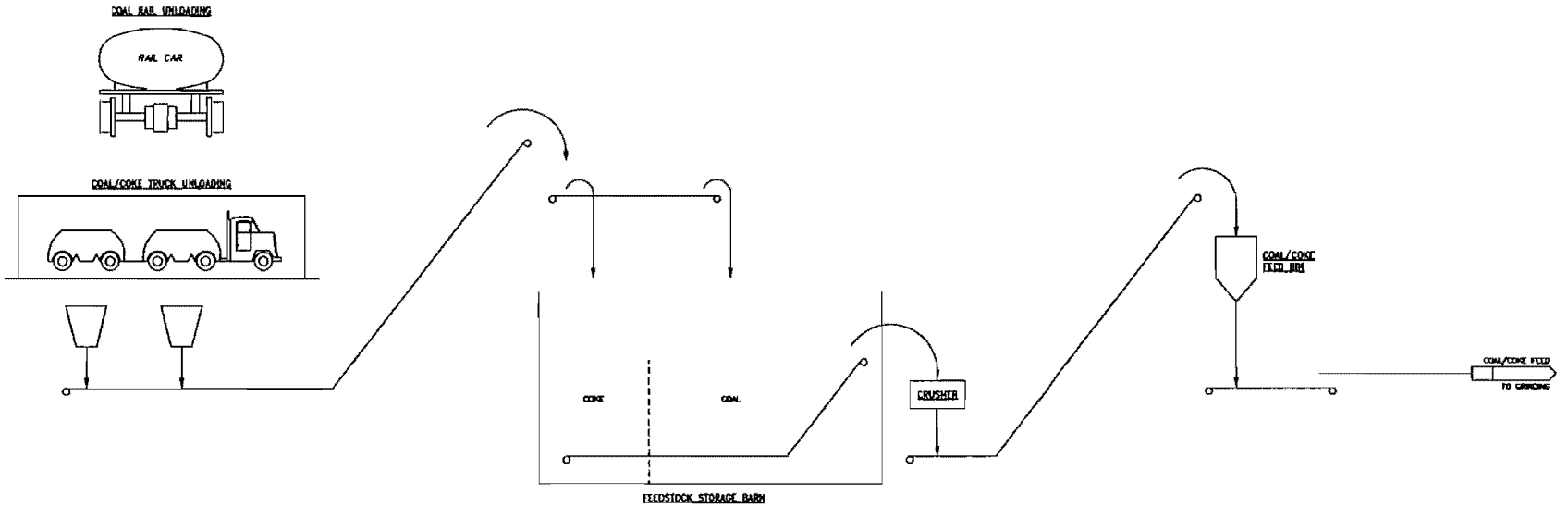

Source:
Fluor; HECA-SCS, 2012 AFC Update, Flow Diagram Feedstock Handling and Storage;
Drawing No: A4UV-010-25-SK-0001, Rev. 0 (2/14/12)

FLOW DIAGRAM
FEEDSTOCK HANDLING AND STORAGE

April 2012 — Hydrogen Energy California (HECA)
28068052 — Kern County, California

URS

FIGURE 2-15

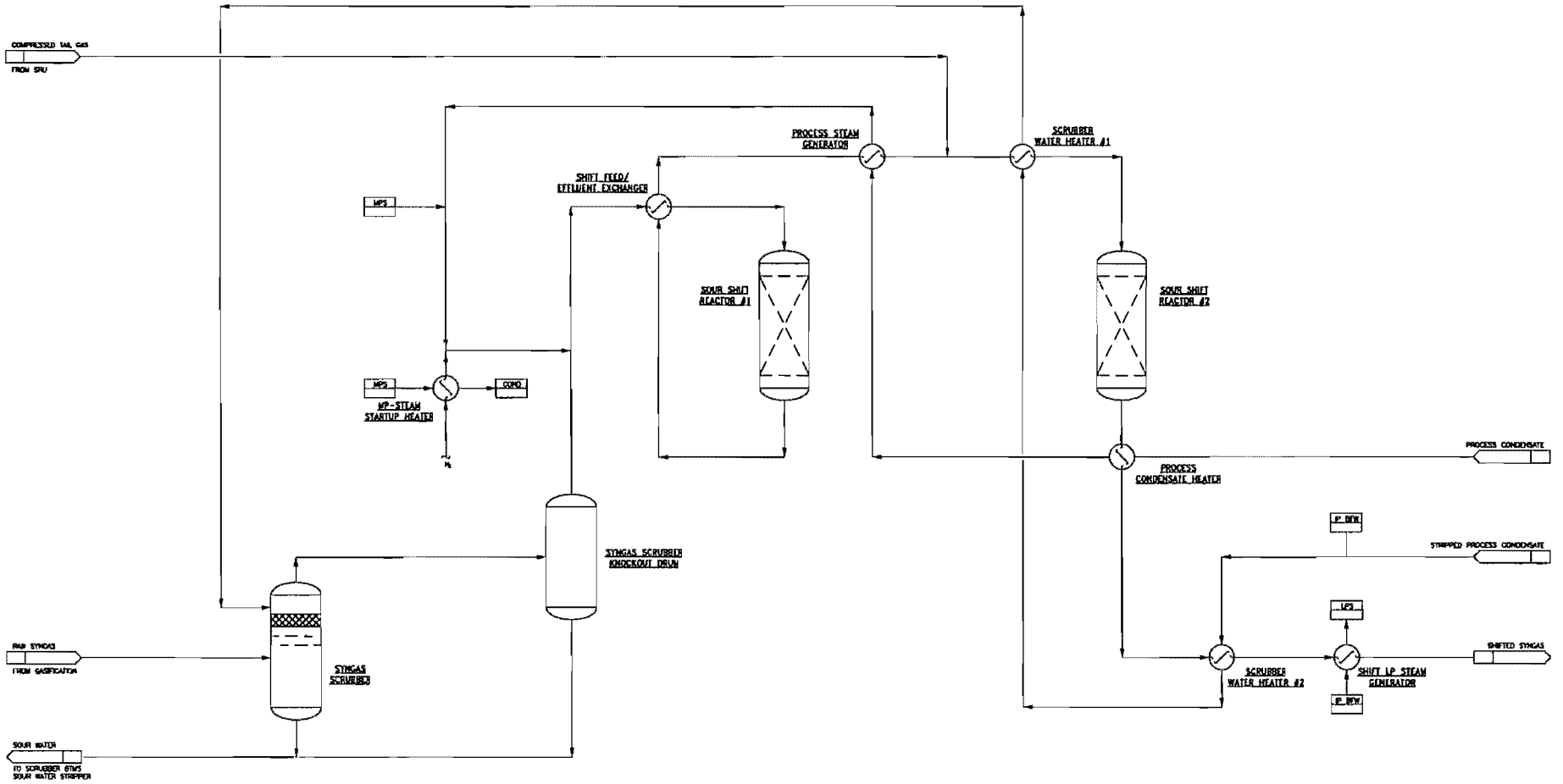

Source:
Fluor; HECA-SCS, 2012 AFC Update; Flow Diagram Sour Shift System, Drawing No: A4UV-020-25-SK-0001, Rev. 0 (2/14/12)

FLOW DIAGRAM
SOUR SHIFT SYSTEM

April 2012
28068052

Hydrogen Energy California (HECA)
Kern County, California

URS

FIGURE 2-16

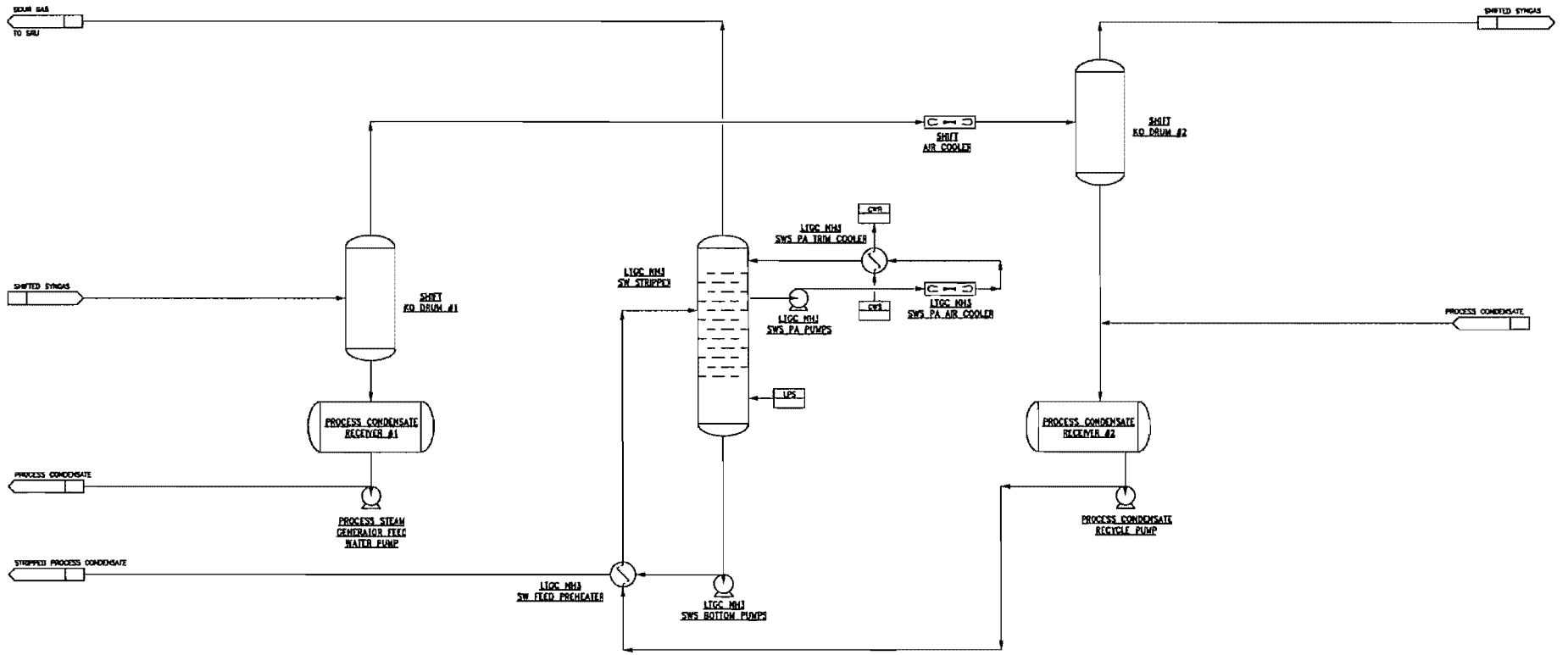

Source:
Fluor, HECA-SCS, 2012 AFC Update, Flow Diagram Low Temperature Gas Cooling,
Drawing No: A4UV-020-25-SK-0002, Rev. 0 (2/14/12)

FLOW DIAGRAM
LOW TEMPERATURE GAS COOLING (LTGC)

April 2012 — Hydrogen Energy California (HECA)
28068052 — Kern County, California

URS

FIGURE 2-17

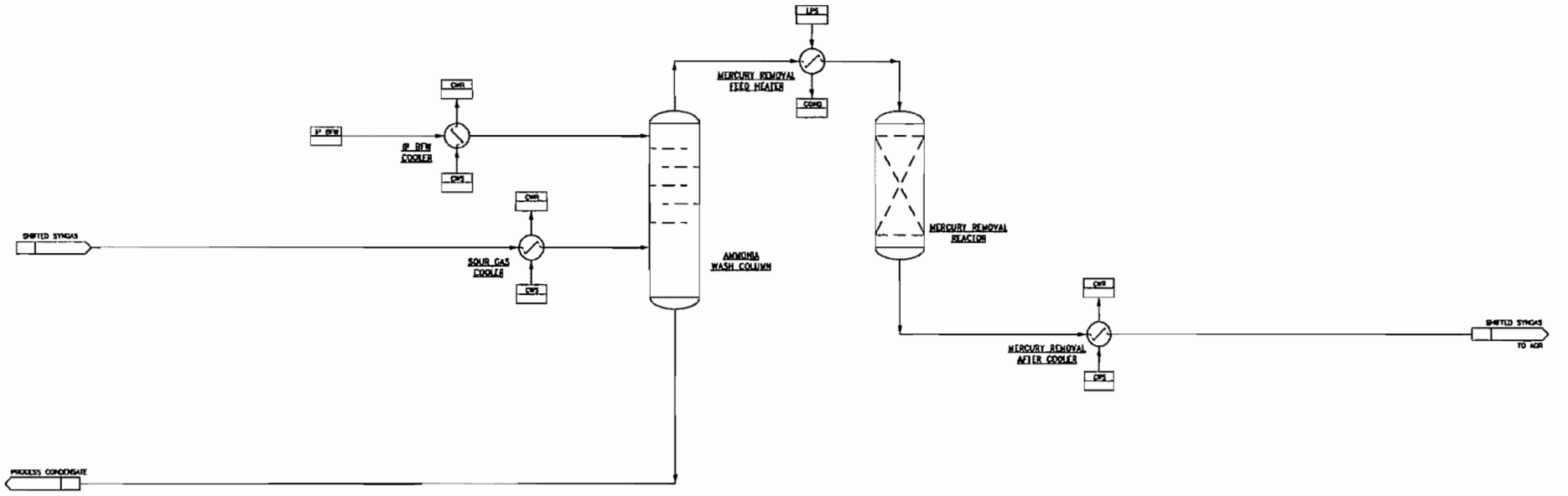

Source:
Fluor; HECA-SCS, 2012 AFC Update; Flow Diagram Wash Column and Mercury Removal;
Drawing No. AAUV-020-25-SK-0003, Rev. 0 (2/14/12)

FLOW DIAGRAM
WASH COLUMN AND MERCURY REMOVAL

April 2012
28068052

Hydrogen Energy California (HECA)
Kern County, California

URS

FIGURE 2-18

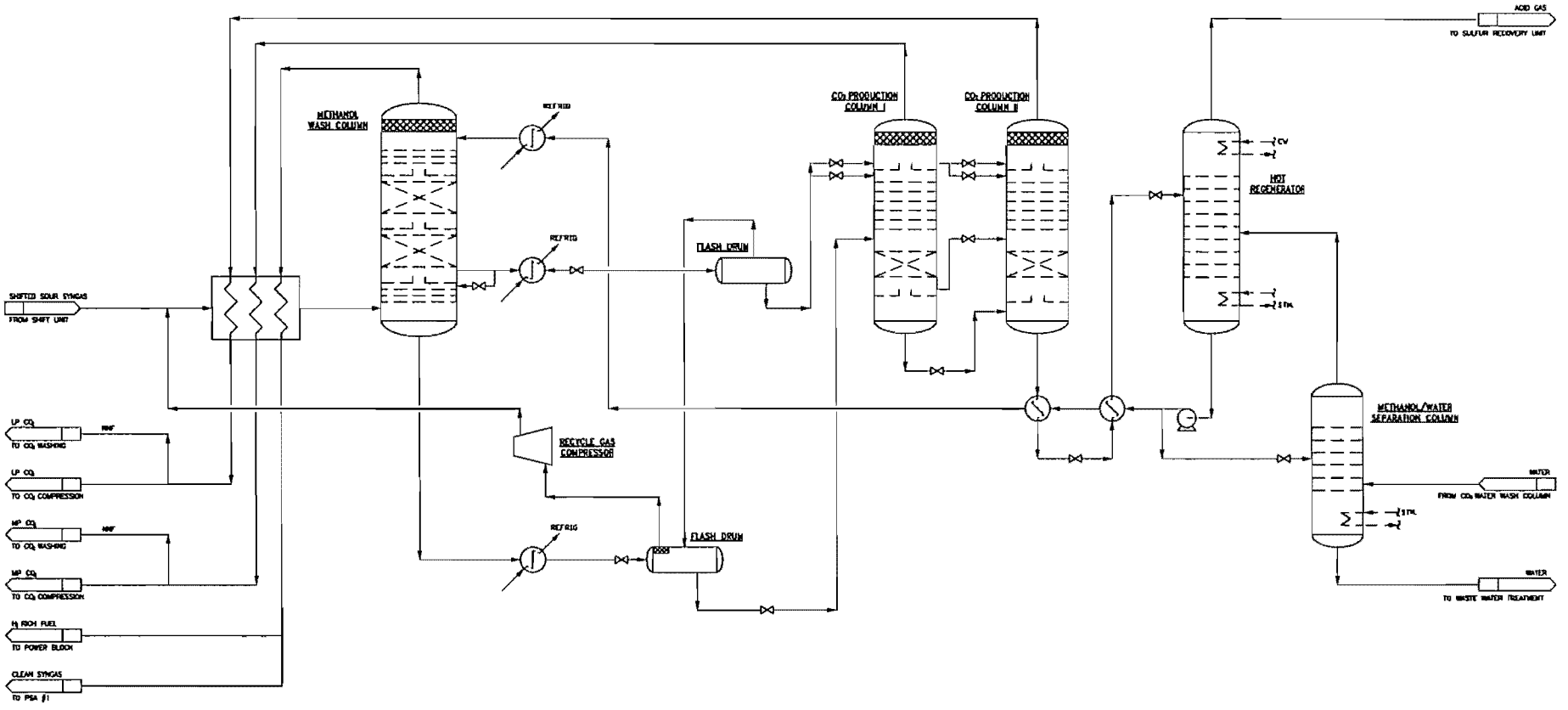

ABBREVIATION:

CW - COOLING WATER
REFRIG- REFRIGERANT
STM - STEAM

Source:
Fluor; HECA-SCS, 2012 AFC Update; Flow Diagram Rectisol Acid Gas Removal,
Drawing No: A4UV-030-25-SK-0001, Rev. 0 (2/14/12)

FLOW DIAGRAM
RECTISOL ACID GAS REMOVAL

April 2012 — Hydrogen Energy California (HECA)
28068052 — Kern County, California

URS

FIGURE 2-19

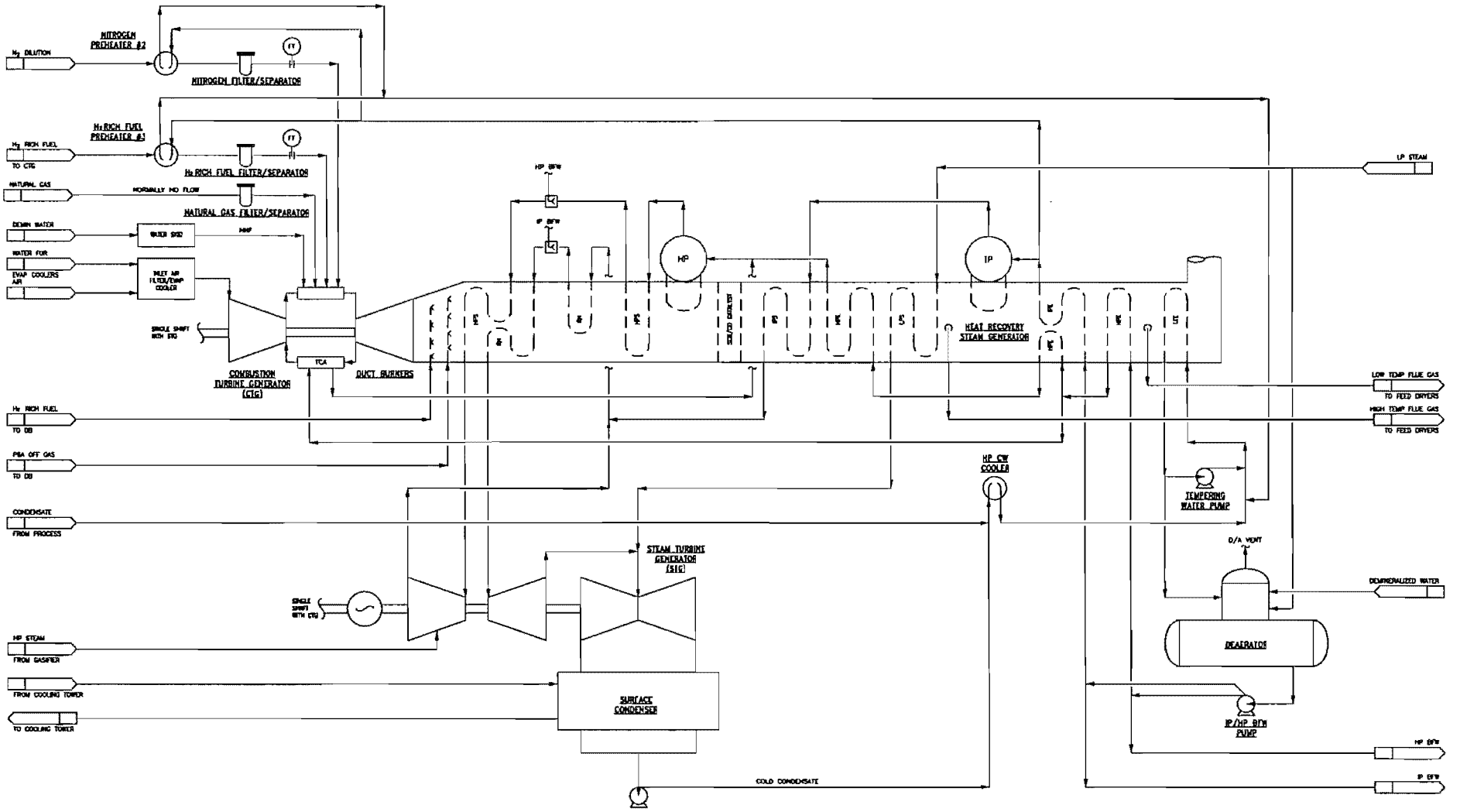

Source:
Fluor; HECA-SCS, 2012 AFC Update, Flow Diagram Power Block Systems;
Drawing No. A4UV-070-25-SK-0001, Rev. 0 (2/14/12)

FLOW DIAGRAM
POWER BLOCK SYSTEMS

April 2012
28068052

Hydrogen Energy California (HECA)
Kern County, California

URS

FIGURE 2-20

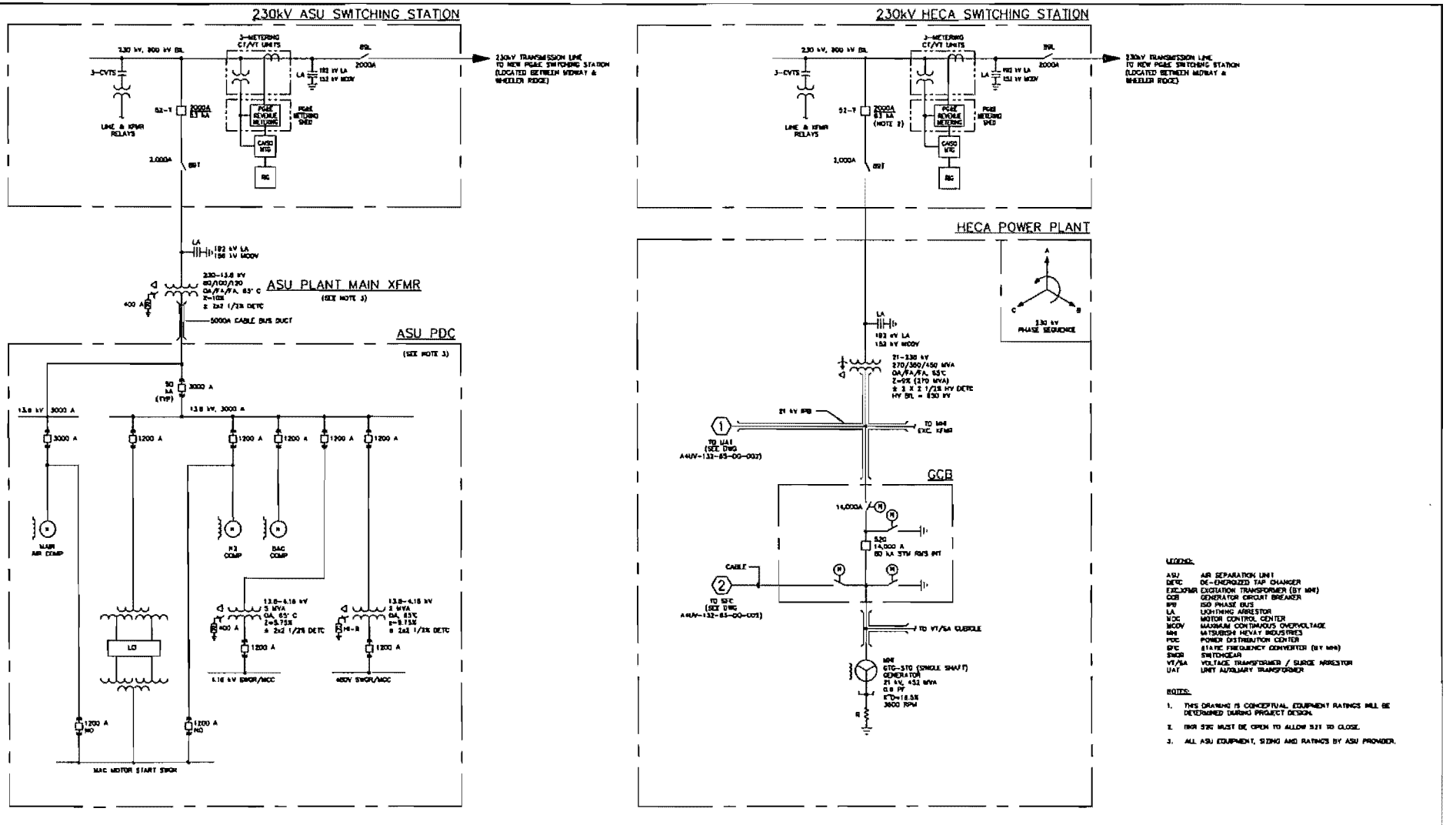

Source
Fluor; HECA-SCS, 2012 AFC Update; Electrical Overall One Line Diagram; Drawing No. A4UV-132-65-DG-0001, Rev. A (2/08/12)

ELECTRICAL
OVERALL ONE-LINE DIAGRAM (1)

April 2012
28068052

Hydrogen Energy California (HECA)
Kern County, California

URS

FIGURE 2-21

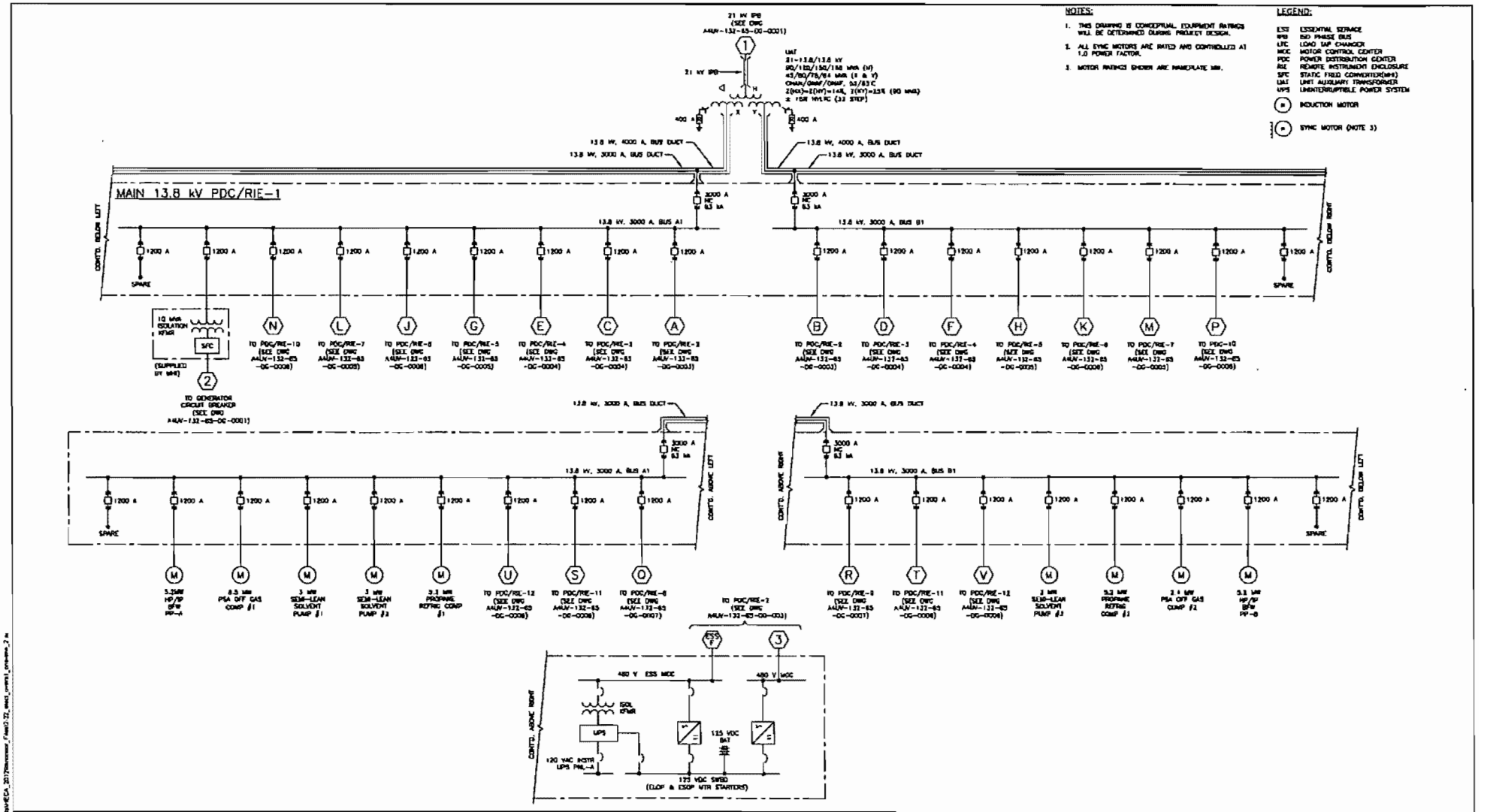

Source:
Floor; HECA-SCS, 2012 AFC Update. Electrical Overall One Line Diagram.
Drawing No: A4UV-132-65-DG-0002, Rev. A (2/08/12)

ELECTRICAL
OVERALL ONE-LINE DIAGRAM (2)

April 2012
28068052

Hydrogen Energy California (HECA)
Kern County, California

URS

FIGURE 2-22

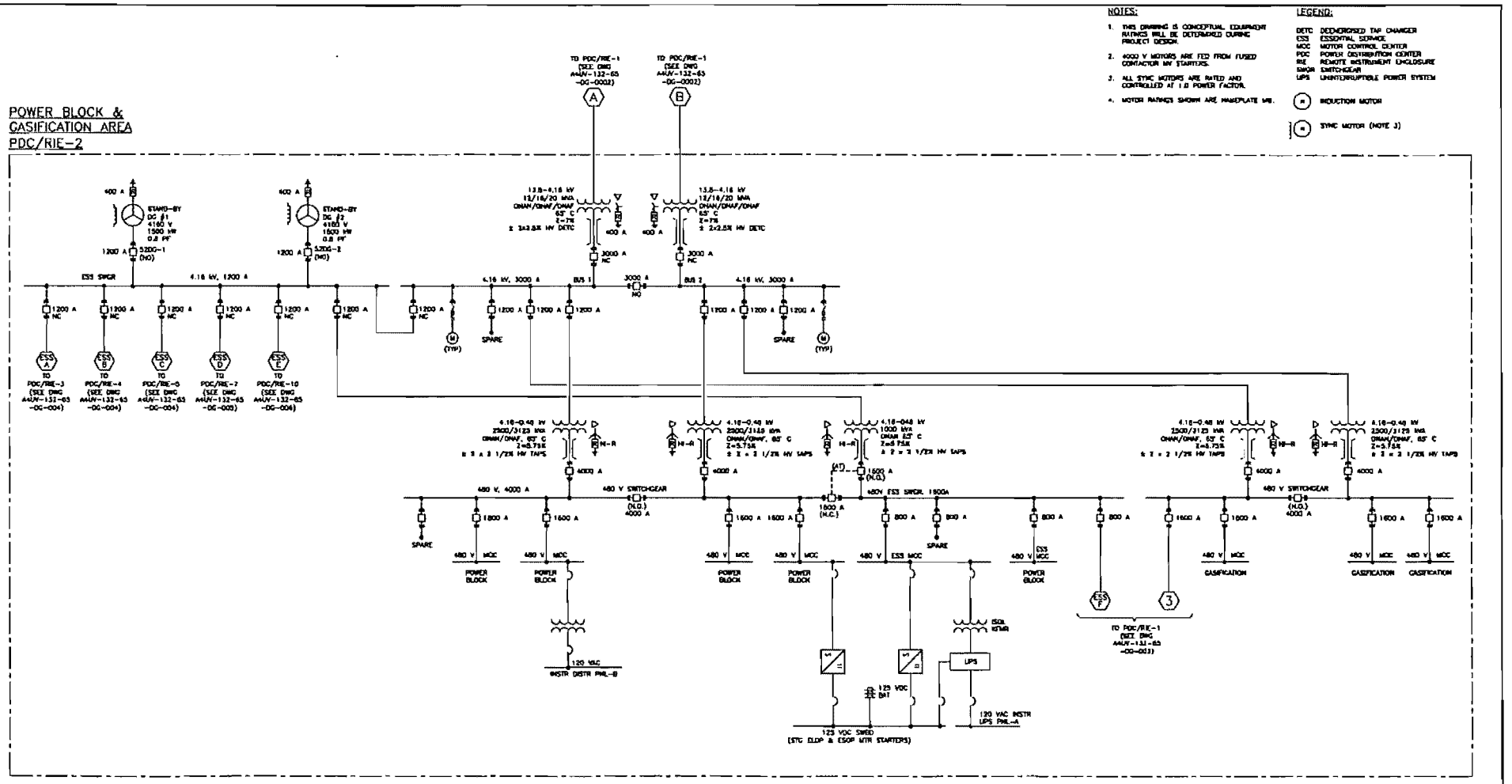

Source:
Fluor; HECA-SCS, 2012 AFC Update; Electrical Overall One Line Diagram; Drawing No: A4UV-132-65-DG-0003, Rev. A (2/08/12)

ELECTRICAL
OVERALL ONE-LINE DIAGRAM (3)

April 2012
28068052

Hydrogen Energy California (HECA)
Kern County, California

URS

FIGURE 2-23

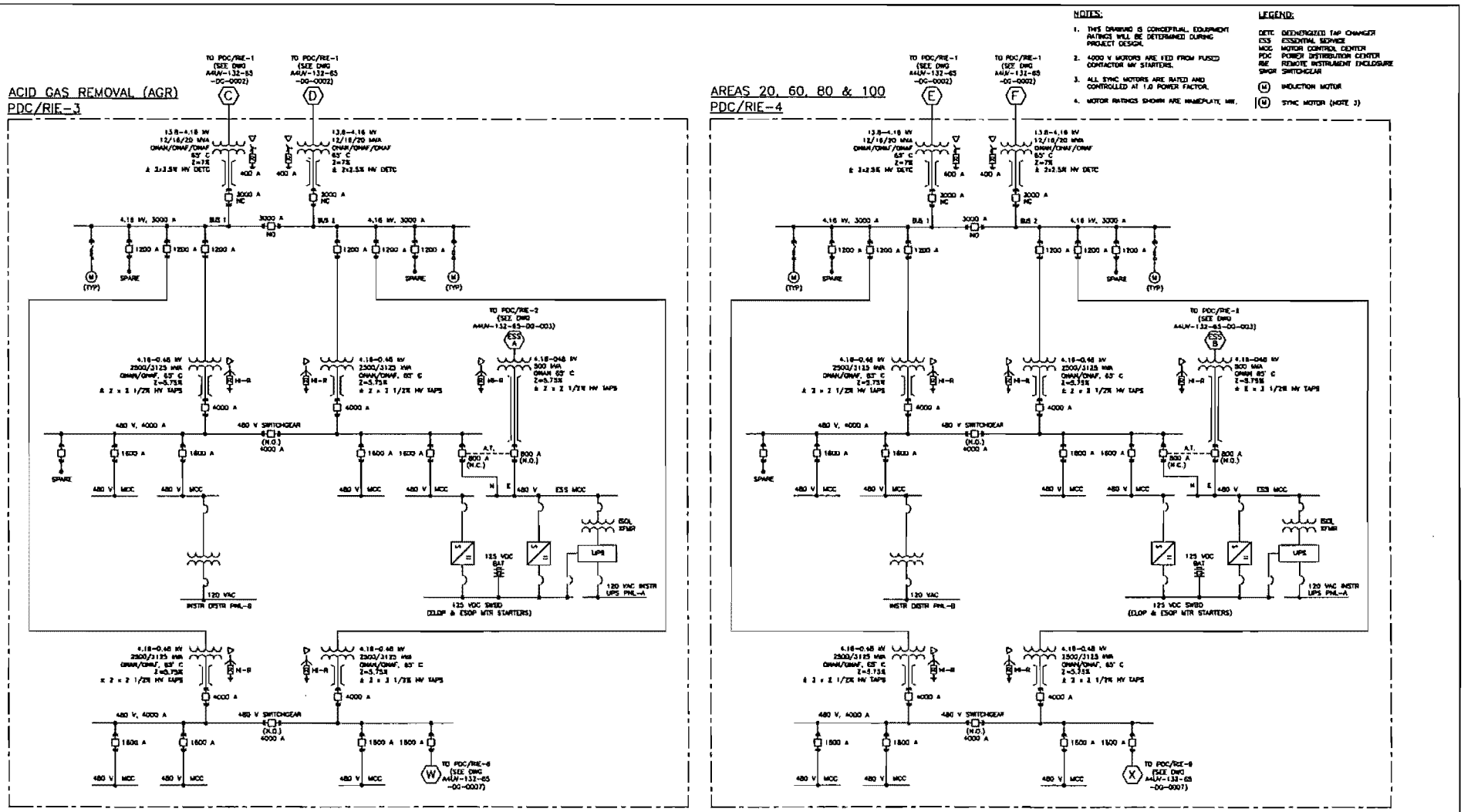

Source:
Fluor; HECA-SCS, 2012 AFC Update; Electrical Overall One Line Diagram;
Drawing No: A4UV-132-65-DG-0004, Rev. A (2/08/12)

ELECTRICAL
OVERALL ONE-LINE DIAGRAM (4)

April 2012
26068052

Hydrogen Energy California (HECA)
Kern County, California

URS

FIGURE 2-24

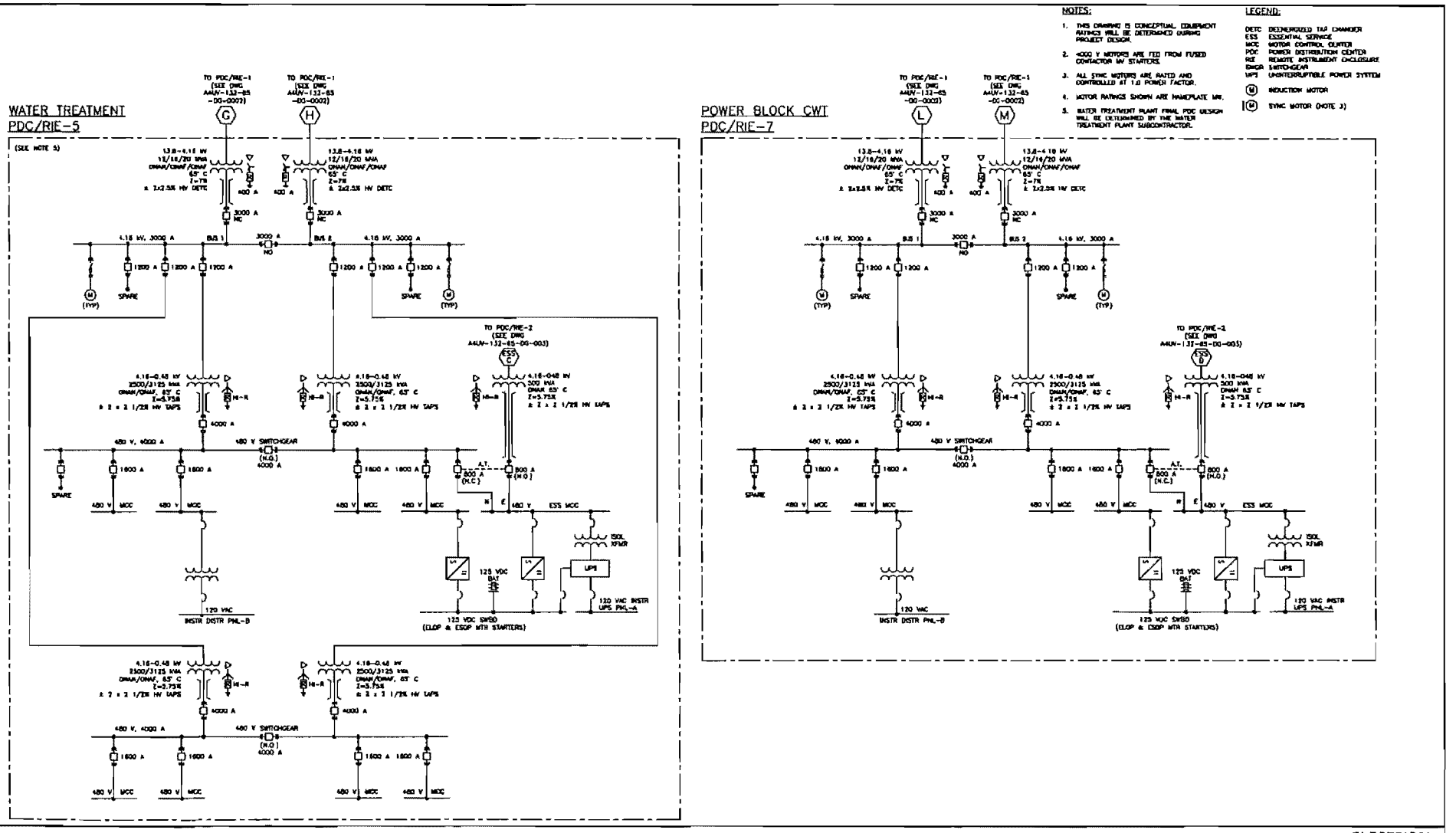

Source:
Fluor; HECA-SCS, 2012 AFC Update; Electrical Overall One Line Diagram;
Drawing No: A4UV-132-65-DG-0005, Rev. A (2/08/12)

ELECTRICAL
OVERALL ONE-LINE DIAGRAM (5)

April 2012
28068052

Hydrogen Energy California (HECA)
Kern County, California

URS

FIGURE 2-25

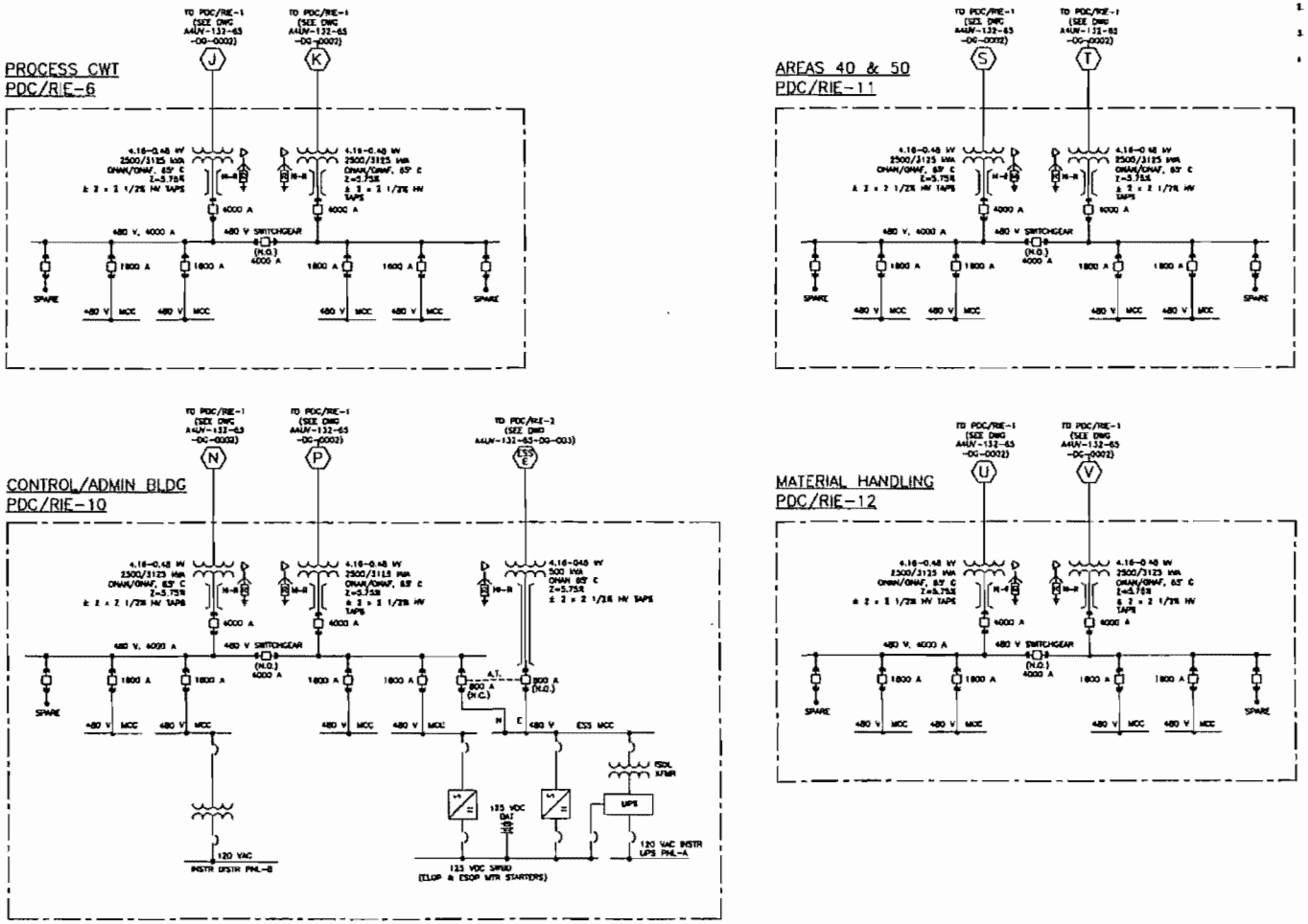

NOTES:

1. THIS DRAWING IS CONCEPTUAL. EQUIPMENT RATINGS WILL BE DETERMINED DURING PROJECT DESIGN.
2. 4000 V MOTORS ARE FED FROM FUSED CONTACTOR MV STARTERS.
3. ALL SYNC MOTORS ARE RATED AND CONTROLLED AT 1.0 POWER FACTOR.
4. MOTOR RATINGS SHOWN ARE NAMEPLATE MR.

LEGEND:

DETC	DEENERGIZED TAP CHANGER
ESS	ESSENTIAL SERVICE
MCC	MOTOR CONTROL CENTER
PDC	POWER DISTRIBUTION CENTER
RIE	REMOTE INSTRUMENT ENCLOSURE
SWGR	SWITCHGEAR
UPS	UNINTERRUPTIBLE POWER SYSTEM
(M)	INDUCTION MOTOR
(M)	SYNC MOTOR (NOTE 3)

Source:
Fluor; HECA-SCS, 2012 AFC Update; Electrical Overall One Line Diagram;
Drawing No: A4UV-132-65-DG-0006, Rev. A (2/09/12)

ELECTRICAL
OVERALL ONE-LINE DIAGRAM (6)

April 2012
28058052

Hydrogen Energy California (HECA)
Kern County, California

URS

FIGURE 2-26

NOTES:

1. THIS DRAWING IS CONCEPTUAL. EQUIPMENT RATINGS WILL BE DETERMINED DURING PROJECT DESIGN.
2. ALL SYNC MOTORS ARE RATED AND CONTROLLED AT 1.0 POWER FACTOR.
3. MOTOR RATINGS SHOWN ARE NAMEPLATE MW.

LEGEND:

ESS	ESSENTIAL SERVICE
LCI	LOAD COMMUTATED INVERTER
MCC	MOTOR CONTROL CENTER
PDC	POWER DISTRIBUTION CENTER
RIE	REMOTE INSTRUMENT ENCLOSURE
SWGR	SWITCHGEAR
(M)	INDUCTION MOTOR
(M)	SYNC MOTOR (NOTE 3)

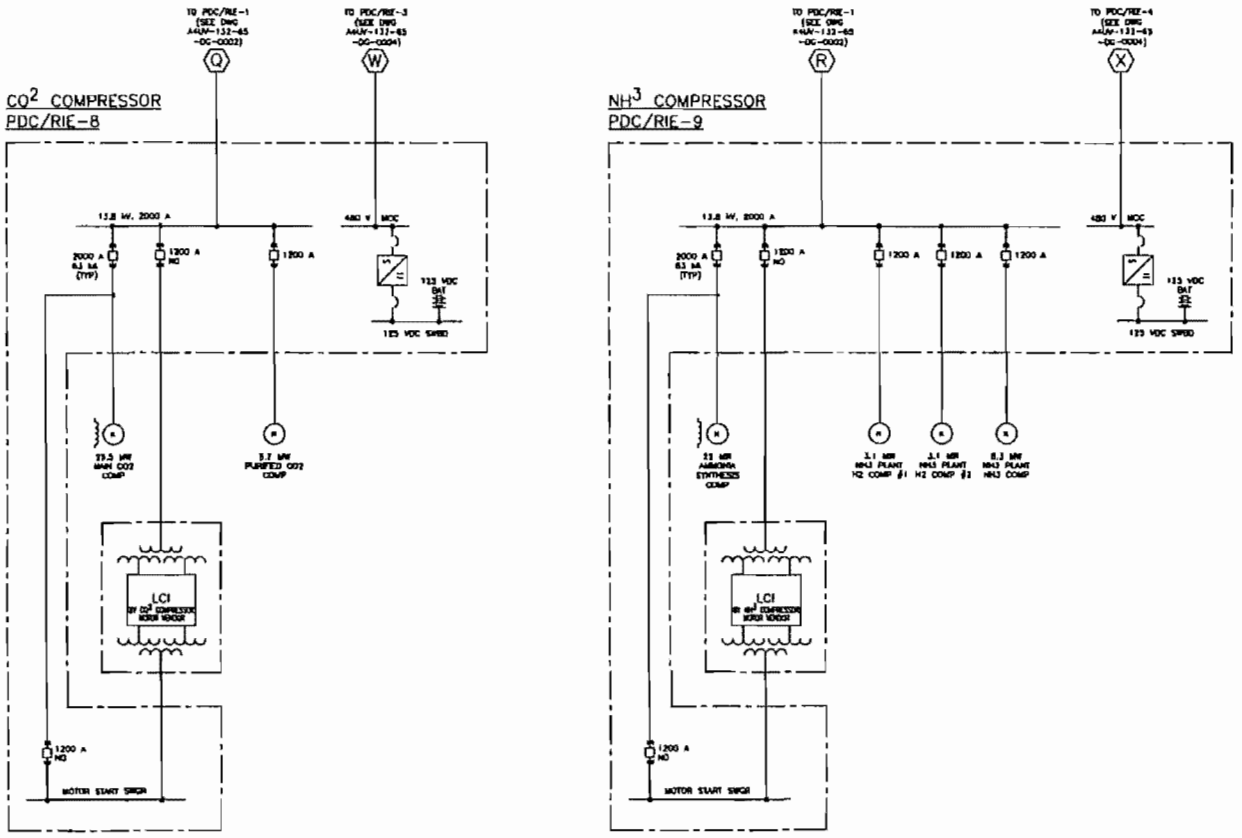

Source:
Fluor; HECA-SCS, 2012 AFC Update; Electrical Overall One Line Diagram;
Drawing No: A4UV-132-65-DG-0007, Rev. A (2/08/12)

ELECTRICAL
OVERALL ONE-LINE DIAGRAM (7)

April 2012
28068052

Hydrogen Energy California (HECA)
Kern County, California

URS

FIGURE 2-27

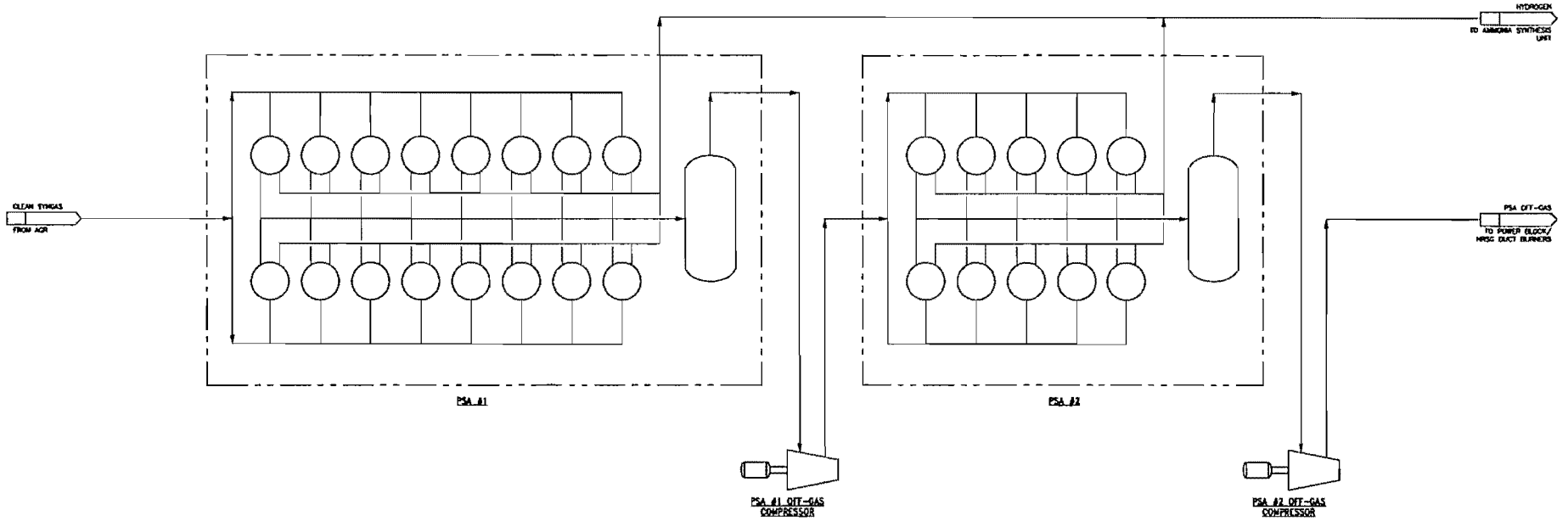

Source:
Fluor; HECA-SCS, 2012 AFC Update, Flow Diagram PSA and Off-Gas Compression Systems;
Drawing No. A4UV-060-25-SK-0001, Rev. 0 (2/14/12)

FLOW DIAGRAM
PSA AND OFF-GAS COMPRESSION SYSTEMS

April 2012
28068052

Hydrogen Energy California (HECA)
Kern County, California

URS

FIGURE 2-28

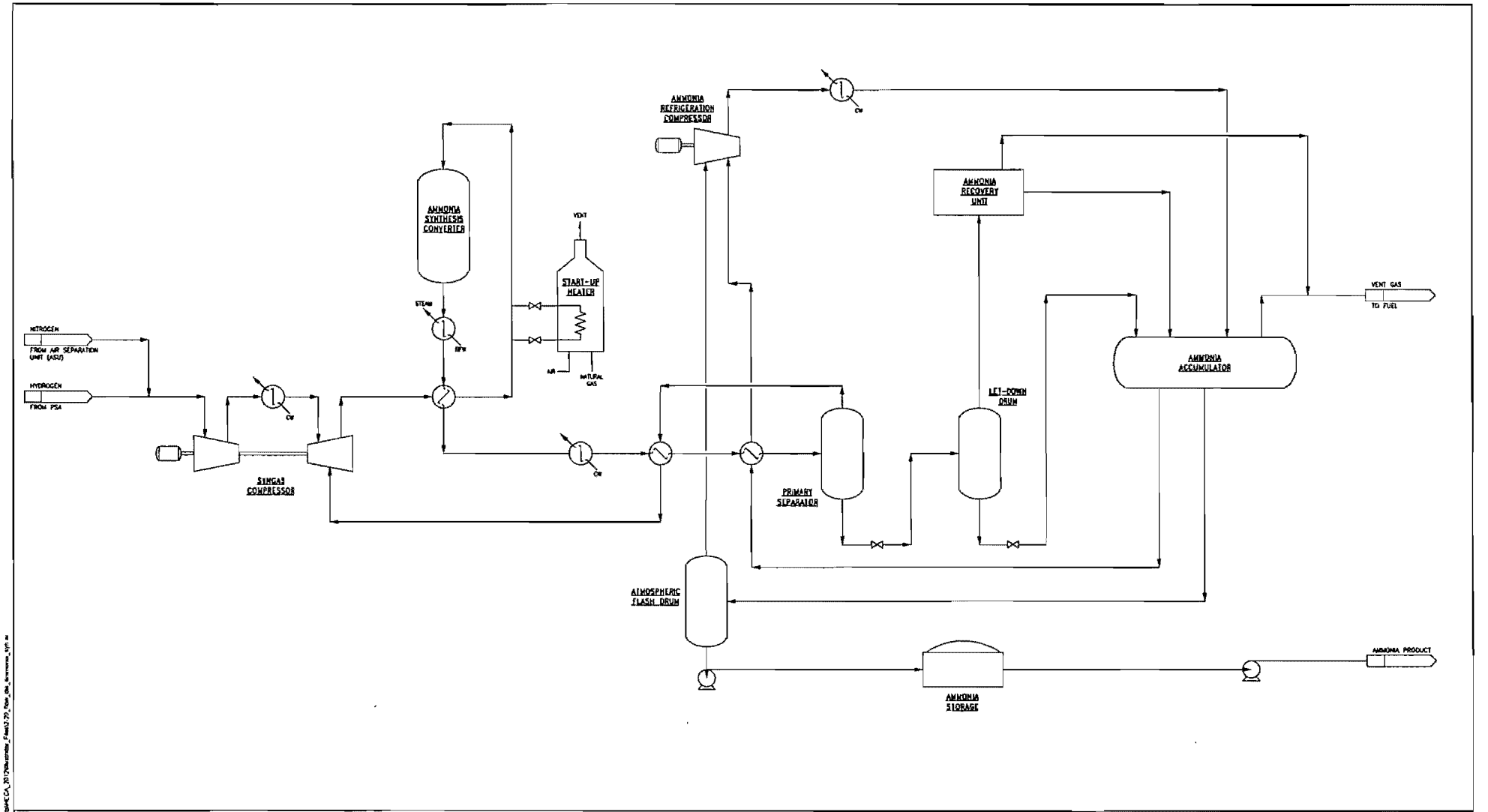

Source:
Flow: HECA-SCS, 2012 AFC Update; Flow Diagram Ammonia Synthesis Unit.
Drawing No. A4UV-080-25-SK-0001, Rev. 1 (3/29/12)

FLOW DIAGRAM
AMMONIA SYNTHESIS UNIT

April 2012
28068052

Hydrogen Energy California (HECA)
Kern County, California

URS

FIGURE 2-29

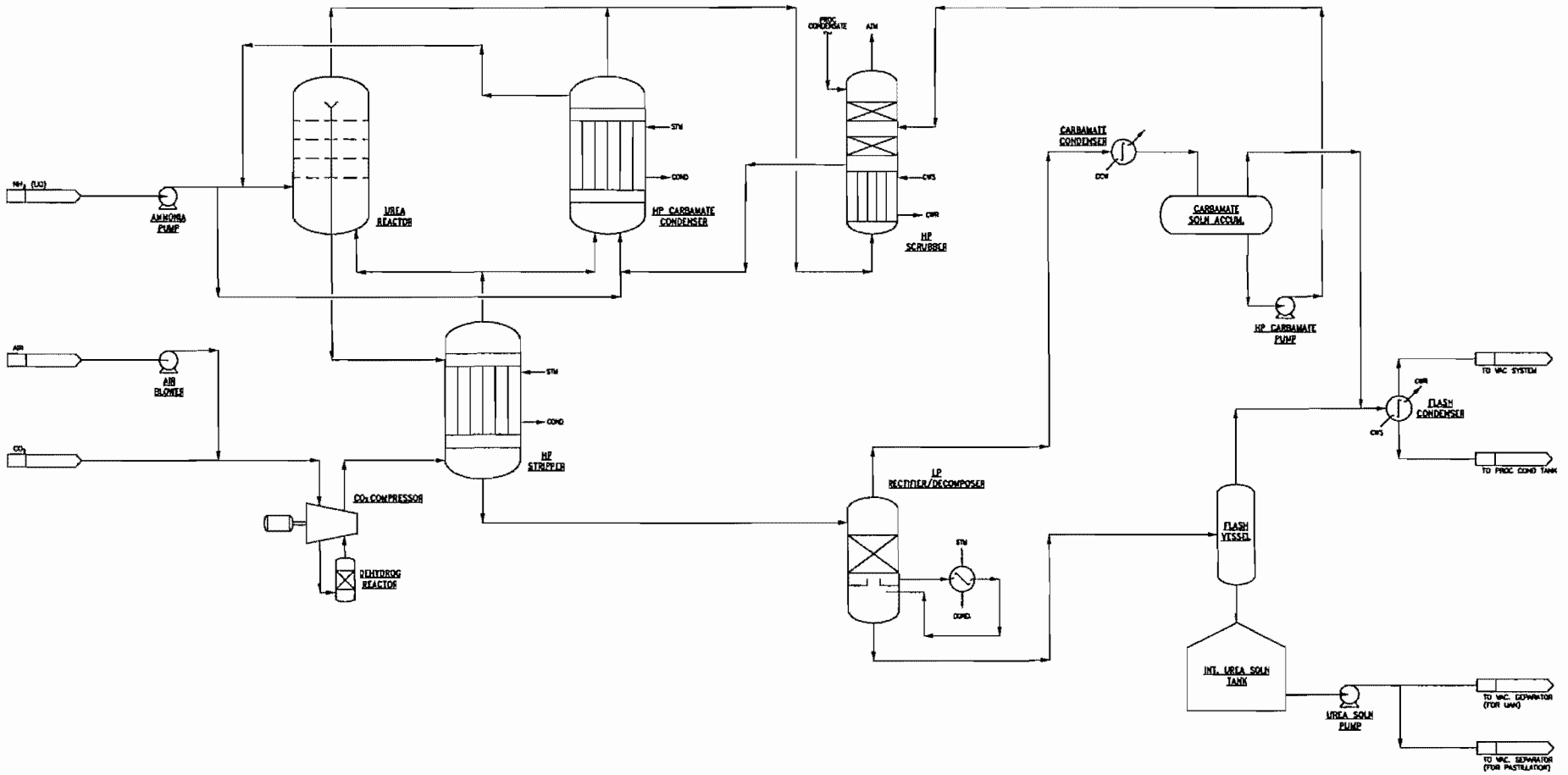

Source:
Floor; HECA-SCS, 2012 AFC Update; Flow Diagram Urea Unit - Synthesis;
Drawing No: A4UV-080-25-SK-0002, Rev. 0 (2/14/12)

FLOW DIAGRAM
UREA UNIT - SYNTHESIS

April 2012
28068052

Hydrogen Energy California (HECA)
Kern County, California

URS

FIGURE 2-30

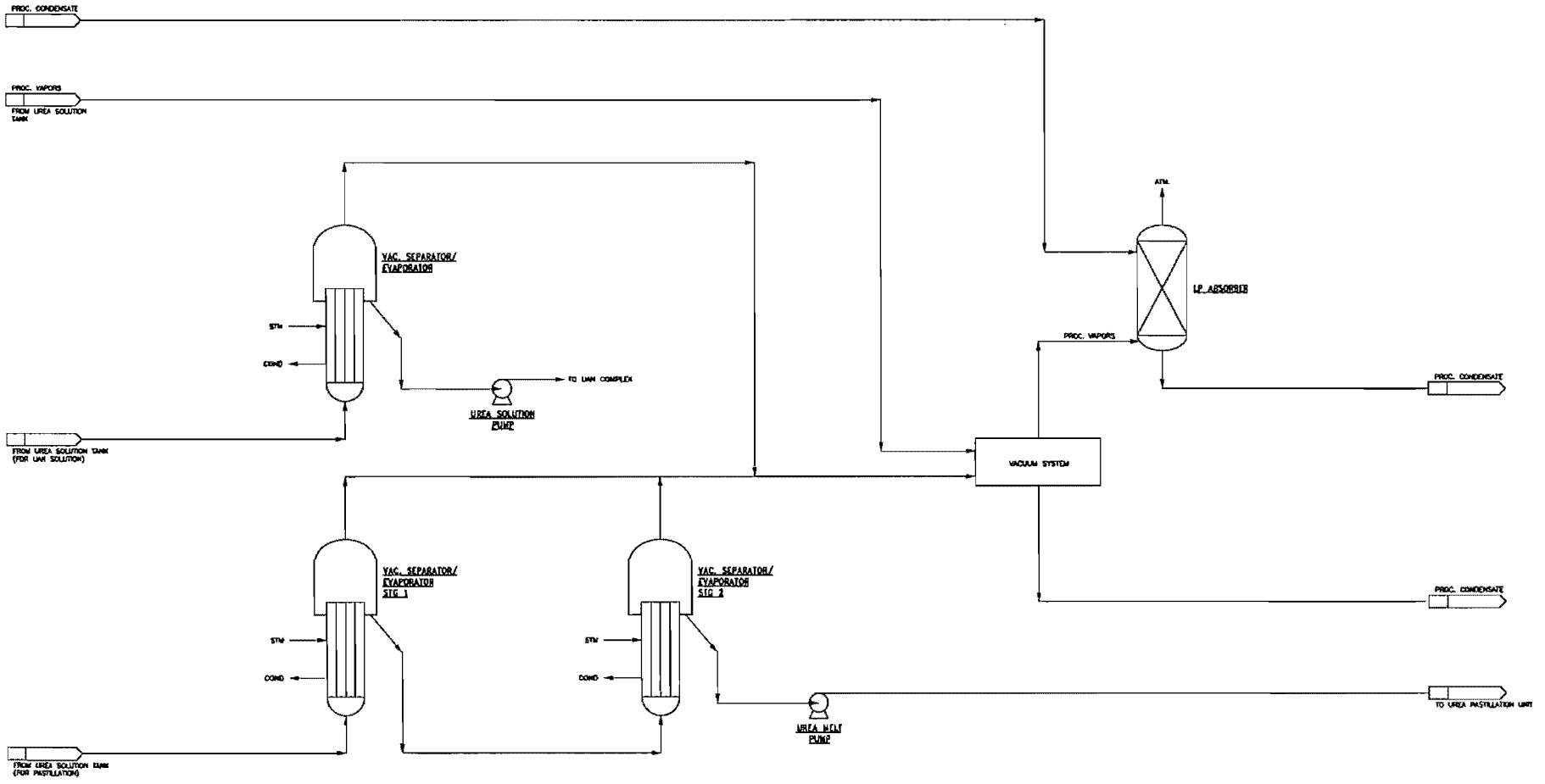

Source
Fluor; HECA-SCS, 2012 AFC Update; Flow Diagram Urea Unit - Concentration;
Drawing No. A4UV-080-25-SK-0003, Rev. 0 (2/14/12)

FLOW DIAGRAM
UREA UNIT - CONCENTRATION

April 2012
28068052

Hydrogen Energy California (HECA)
Kern County, California

URS

FIGURE 2-31

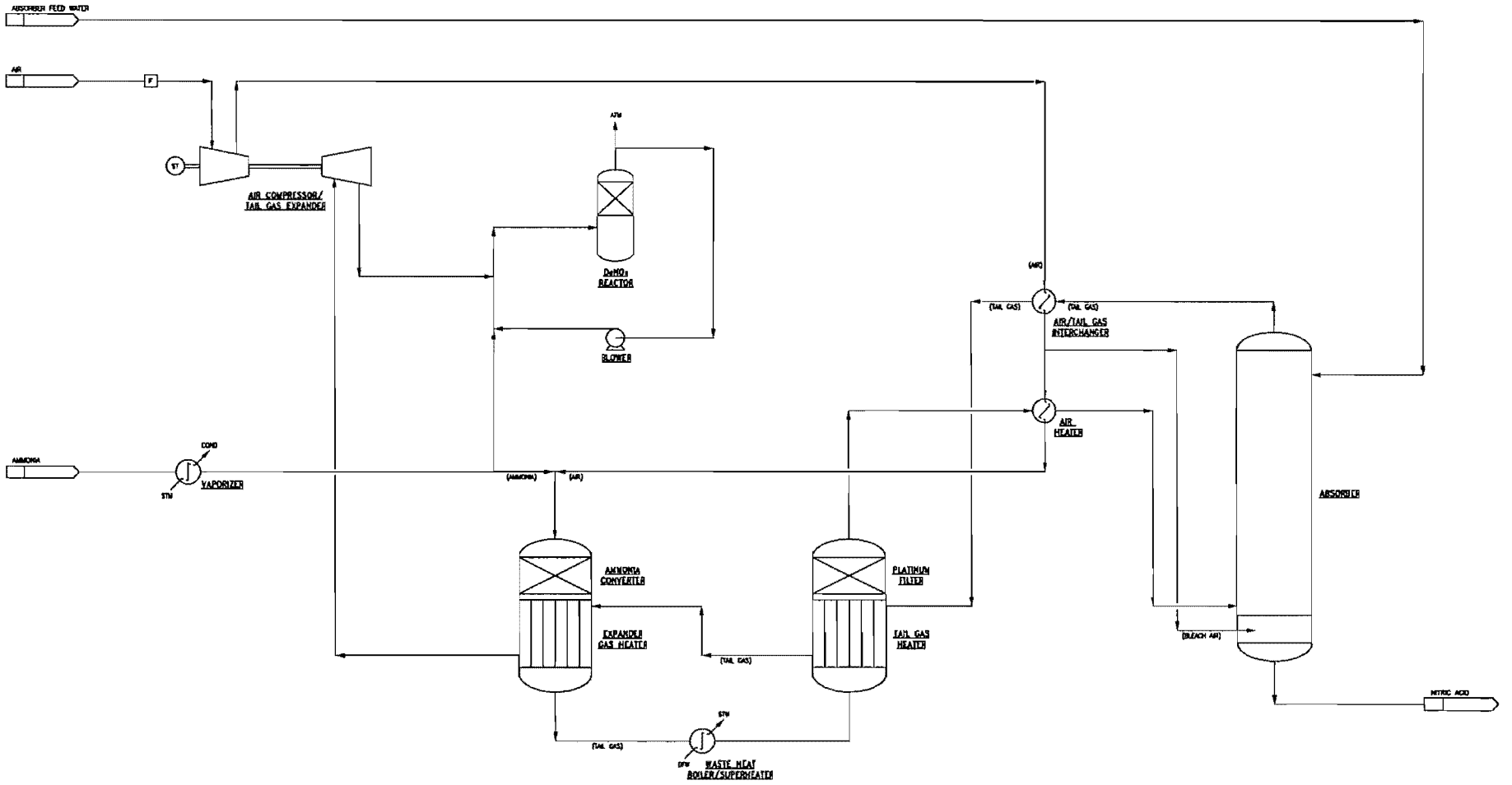

Source:
Fluor; HECA-SCS, 2012 AFC Update; Flow Diagram Nitric Acid Unit;
Drawing No. A4UV-080-25-SK-0004, Rev. 0 (2/14/12)

FLOW DIAGRAM
NITRIC ACID UNIT

April 2012
28068052

Hydrogen Energy California (HECA)
Kern County, California

URS

FIGURE 2-32

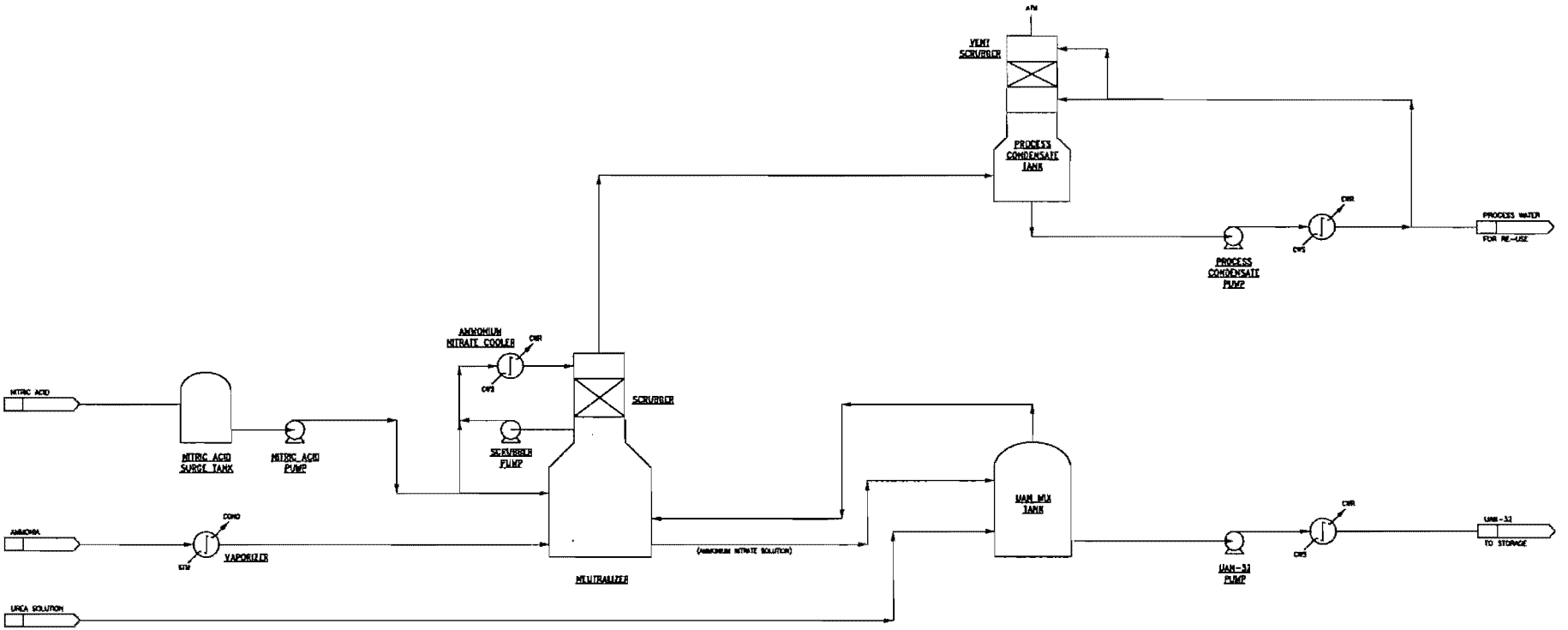

Source:
Fluor, HECA-SCS, 2012 AFC Update, Flow Diagram Ammonium Nitrate/UAN Units;
Drawing No. A4UV-080-25-SK-0005, Rev. 0 (2/14/12)

FLOW DIAGRAM
AMMONIUM NITRATE/UAN UNITS

April 2012
28068052

Hydrogen Energy California (HECA)
Kern County, California

URS

FIGURE 2-33

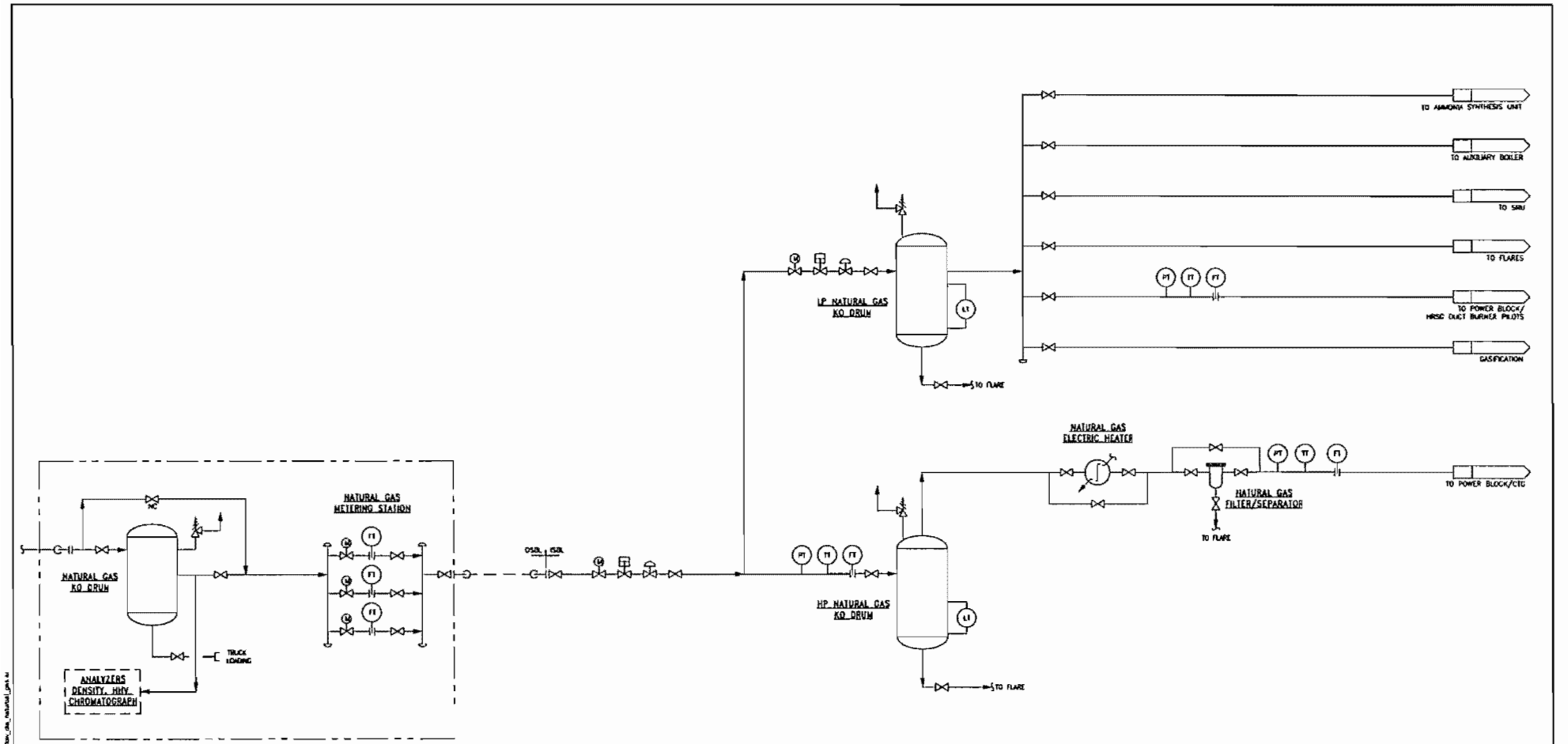

Source:
Fluor; HECA-SCS, 2012 AFC Update; Flow Diagram Natural Gas System;
Drawing No: A4UV-100-25-SK-0004, Rev. 1 (3/29/12)

FLOW DIAGRAM
NATURAL GAS SYSTEM

April 2012
28068052

Hydrogen Energy California (HECA)
Kern County, California

URS

FIGURE 2-34

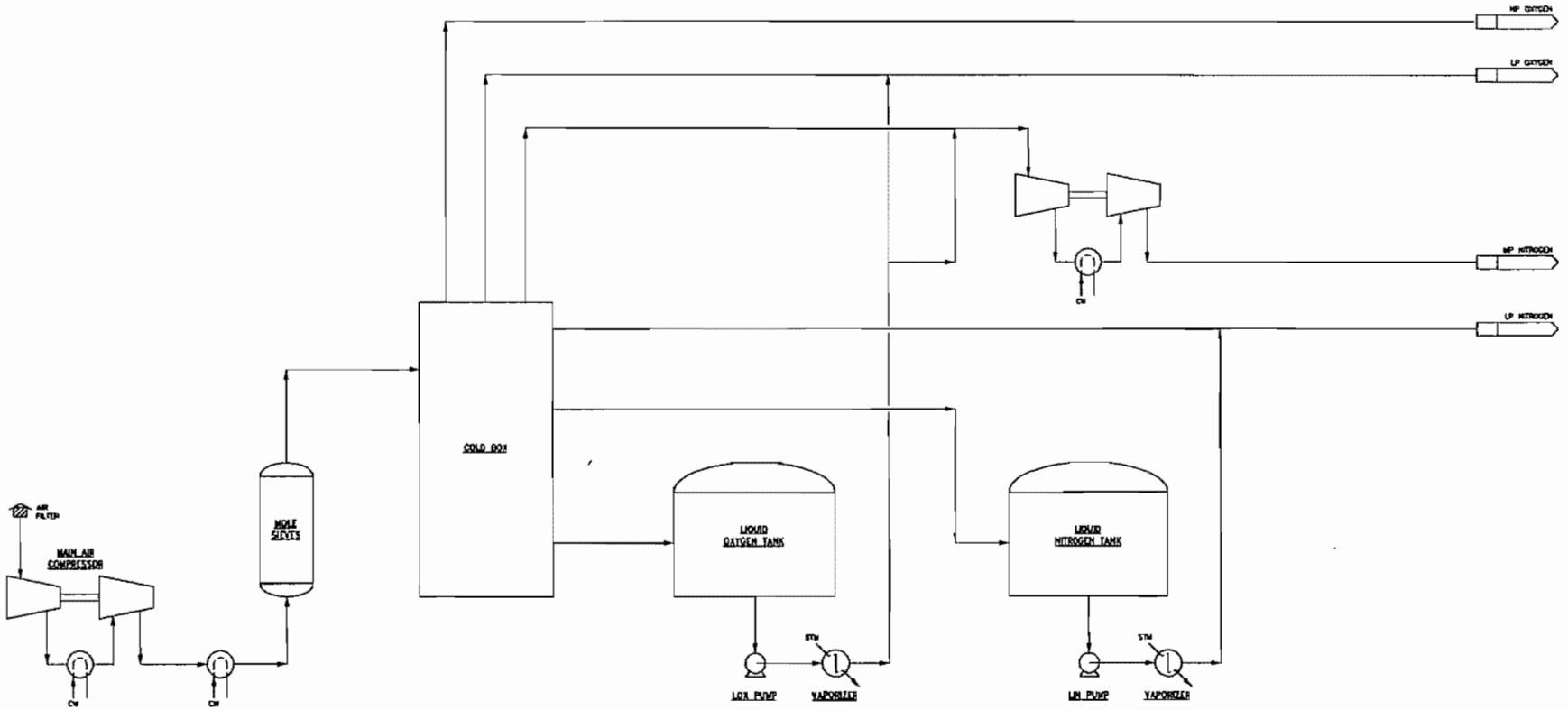

Source
Fluor; HECA-SCS, 2012 AFC Update; Flow Diagram Air Separation Unit,
Drawing No. A4UV-150-25-SK-0001, Rev. 0 (2/14/12)

FLOW DIAGRAM
AIR SEPARATION UNIT

April 2012
28068052

Hydrogen Energy California (HECA)
Kern County, California

URS

FIGURE 2-35

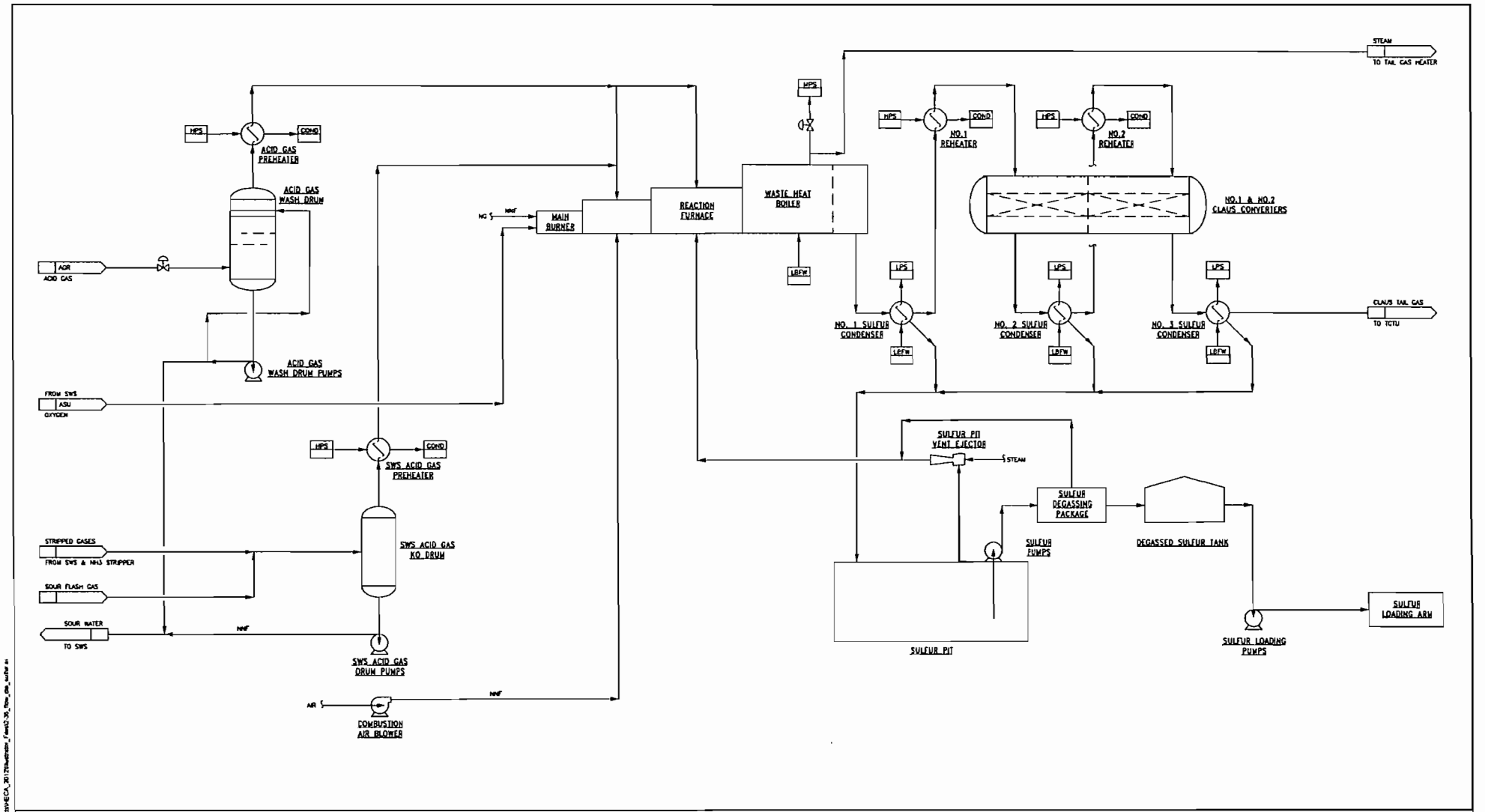

Source:
Fluor; HECA-SCS, 2012 AFC Update; Flow Diagram Sulfur Recovery Unit;
Drawing No: A4UV-050-25-SK-0001, Rev. 1 (3/29/12)

FLOW DIAGRAM
SULFUR RECOVERY UNIT

April 2012
28068052

Hydrogen Energy California (HECA)
Kern County, California

URS

FIGURE 2-36

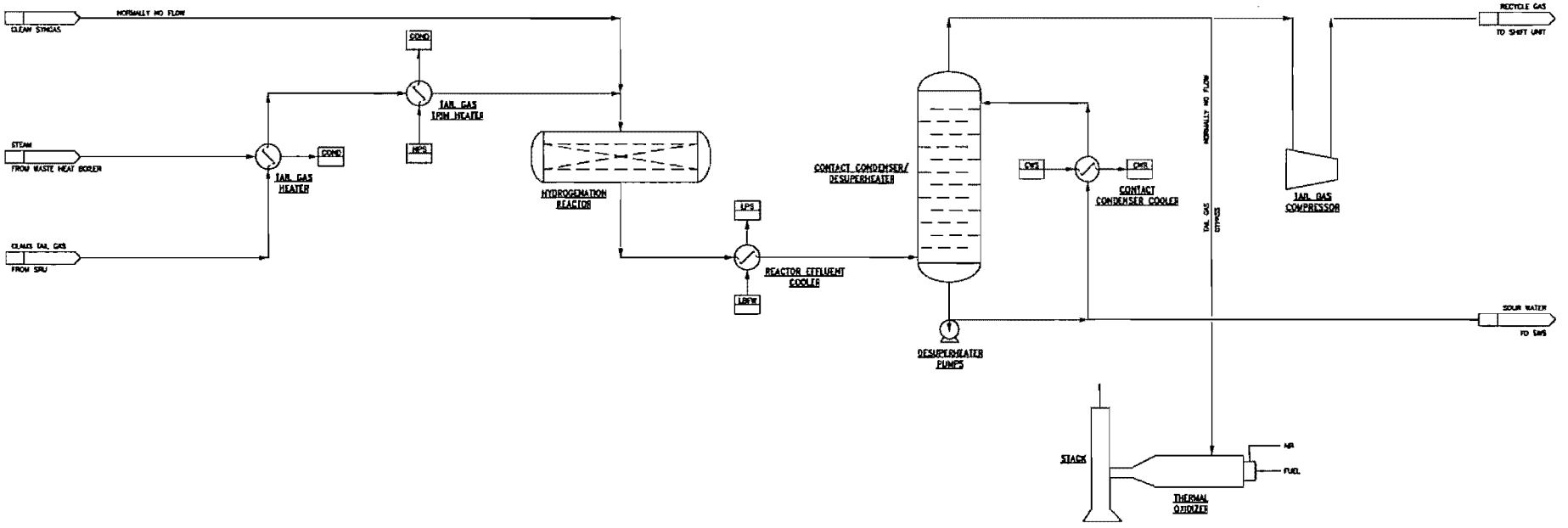

Source:
Fluor; HECA-SCS, 2012 AFC Update; Flow Diagram Tail Gas Treating Unit;
Drawing No: A4UV-050-25-SK-0002, Rev. 0 (2/14/12)

FLOW DIAGRAM
TAIL GAS TREATING UNIT

April 2012
28068052

Hydrogen Energy California (HECA)
Kern County, California

URS

FIGURE 2-37

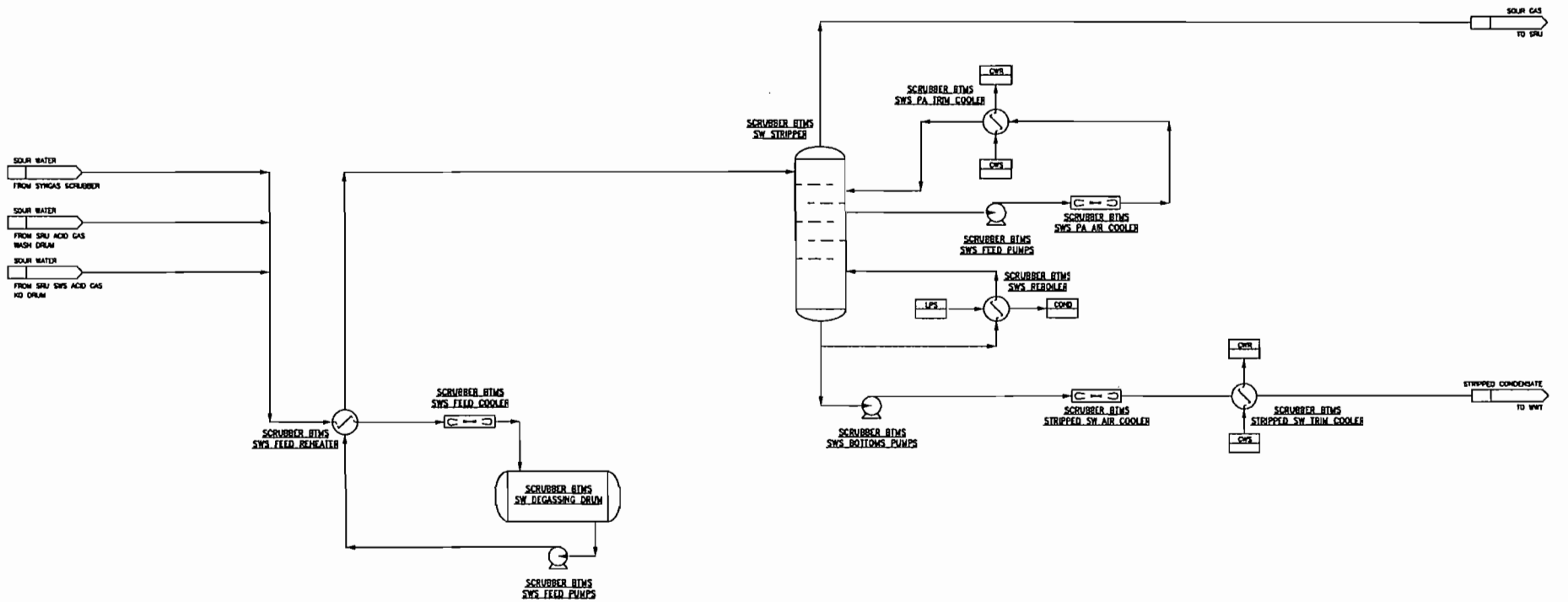

Source:
Fluor; HECA-SCS, 2012 AFC Update; Flow Diagram Scrubber Bottoms Sour Water Stripper;
Drawing No: A4UV-020-25-SK-0004, Rev. 0 (2/14/12)

FLOW DIAGRAM
SCRUBBER BOTTOMS SOUR WATER STRIPPER

April 2012
28068052

Hydrogen Energy California (HECA)
Kern County, California

URS

FIGURE 2-38

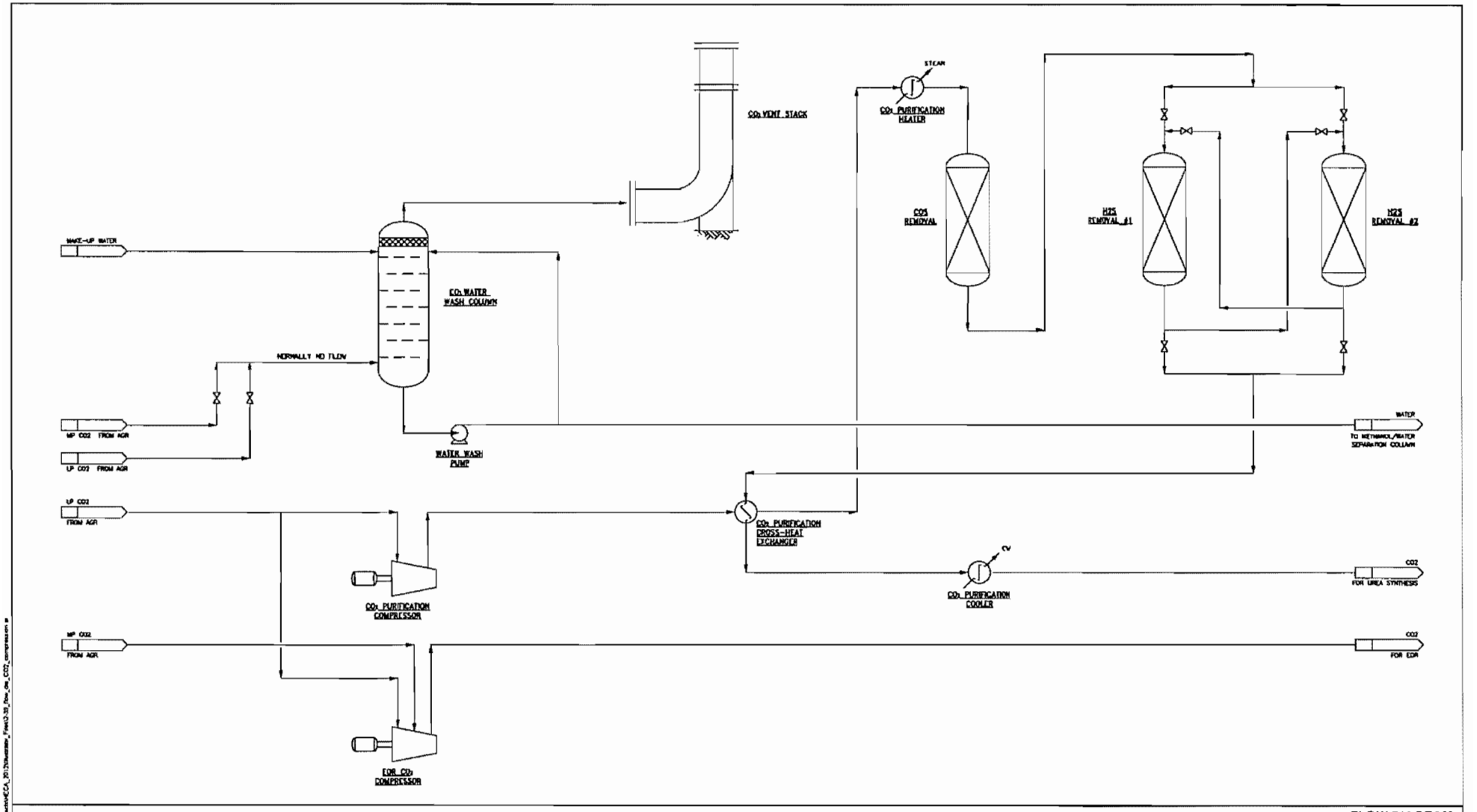

Source:
Fluor; HECA-SCS, 2012 AFC Update; Flow Diagram CO2 Compression and Purification Systems;
Drawing No. A4UV-040-25-SK-0001, Rev. 0 (2/14/12)

FLOW DIAGRAM
CO_2 COMPRESSION AND PURIFICATION SYSTEMS

April 2012
28068052

Hydrogen Energy California (HECA)
Kern County, California

URS

FIGURE 2-39

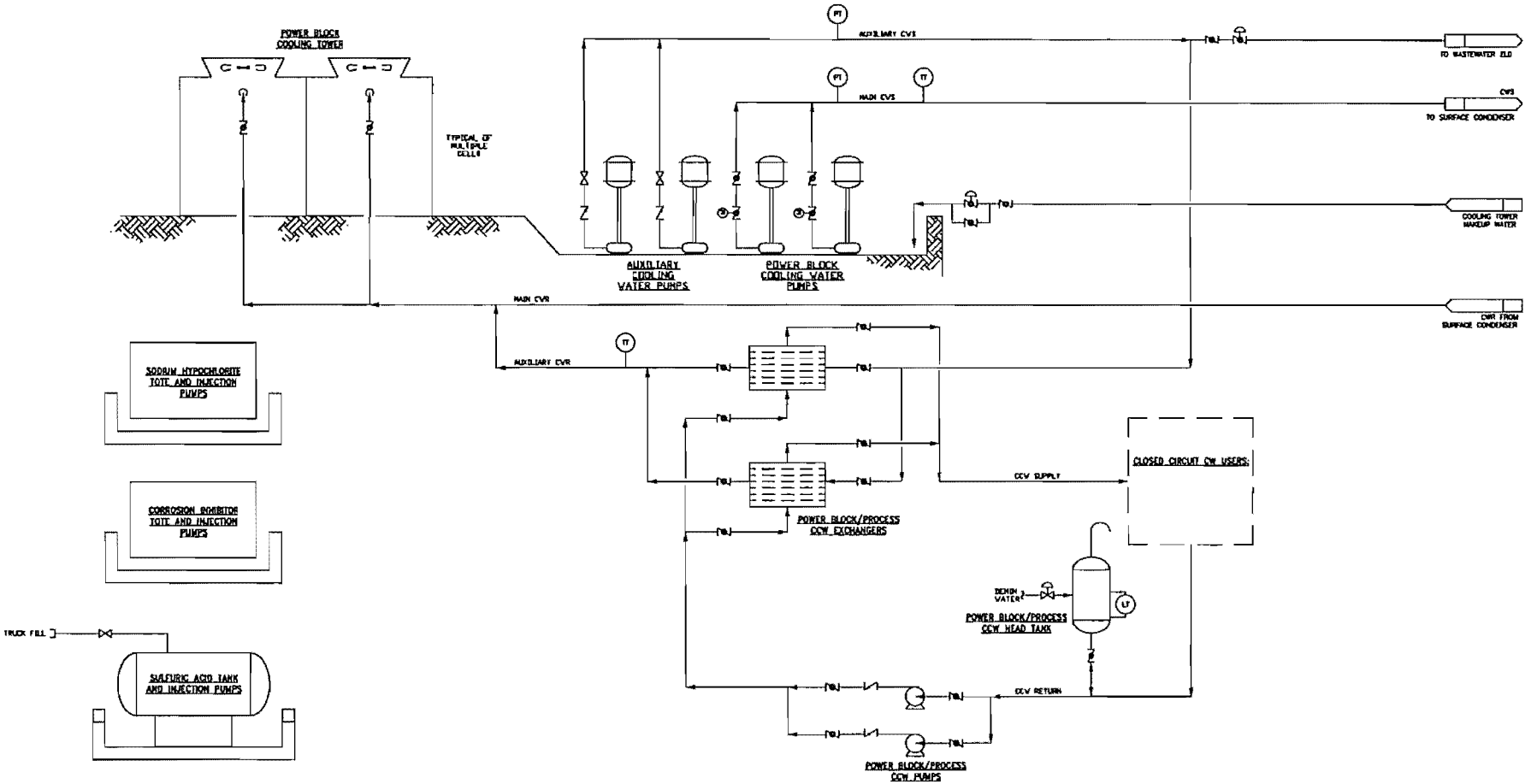

Source:
Fluor; HECA-SCS, 2012 AFC Update, Flow Diagram Power Block Cooling Water System,
Drawing No. A4UV-100-25-SK-0005, Rev. 0 (2/14/12)

FLOW DIAGRAM
POWER BLOCK COOLING WATER SYSTEM

April 2012 — Hydrogen Energy California (HECA)
28068052 — Kern County, California

URS

FIGURE 2-40

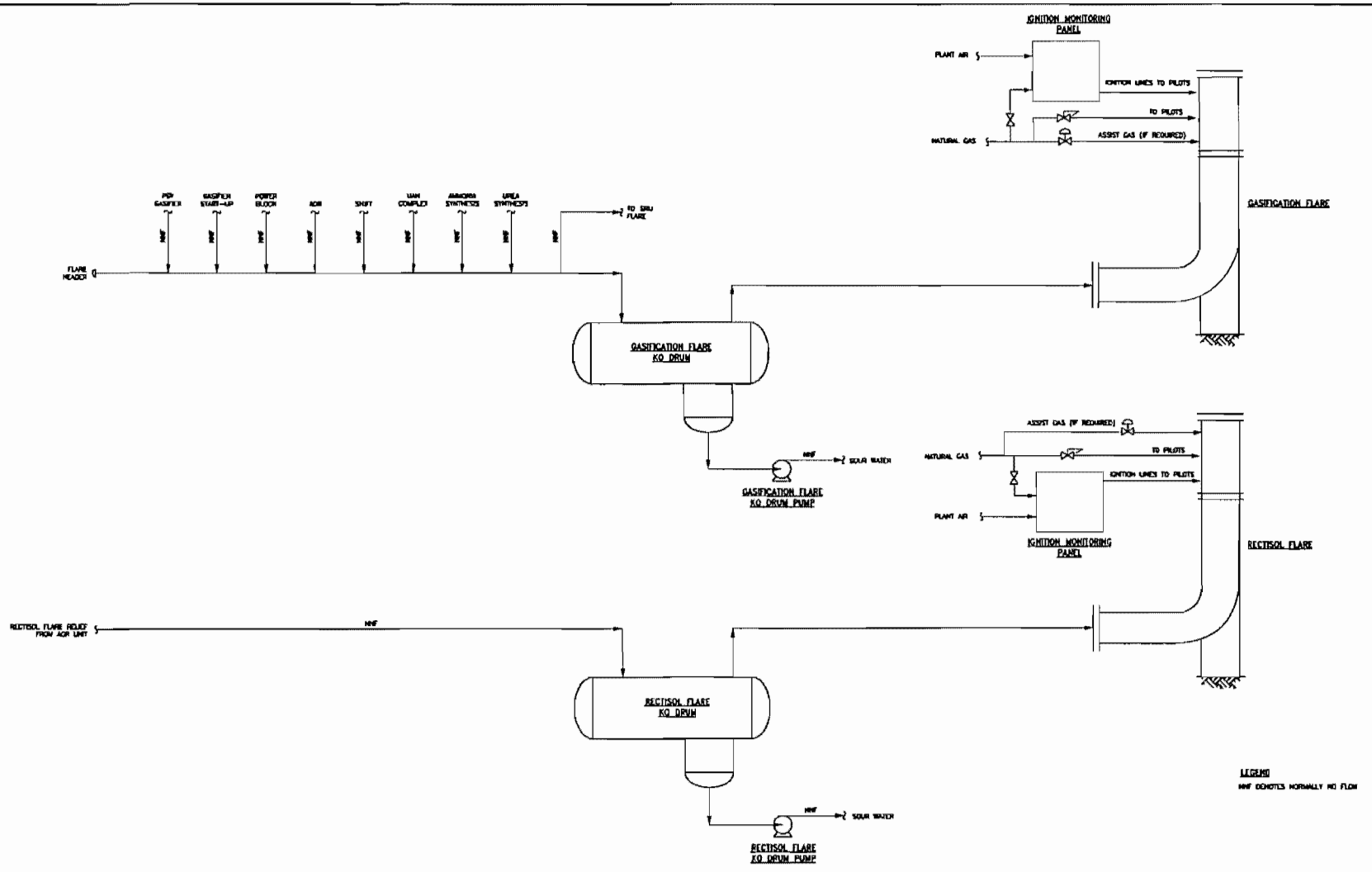

Source:
Fluor; HECA-SCS, 2012 AFC Update; Flow Diagram Gasification and Rectisol Flare Systems;
Drawing No A4UV-100-25-SK-0001, Rev. 0 (2/14/12)

FLOW DIAGRAM
GASIFICATION AND RECTISOL FLARE SYSTEMS

April 2012
28068052

Hydrogen Energy California (HECA)
Kern County, California

URS

FIGURE 2-41

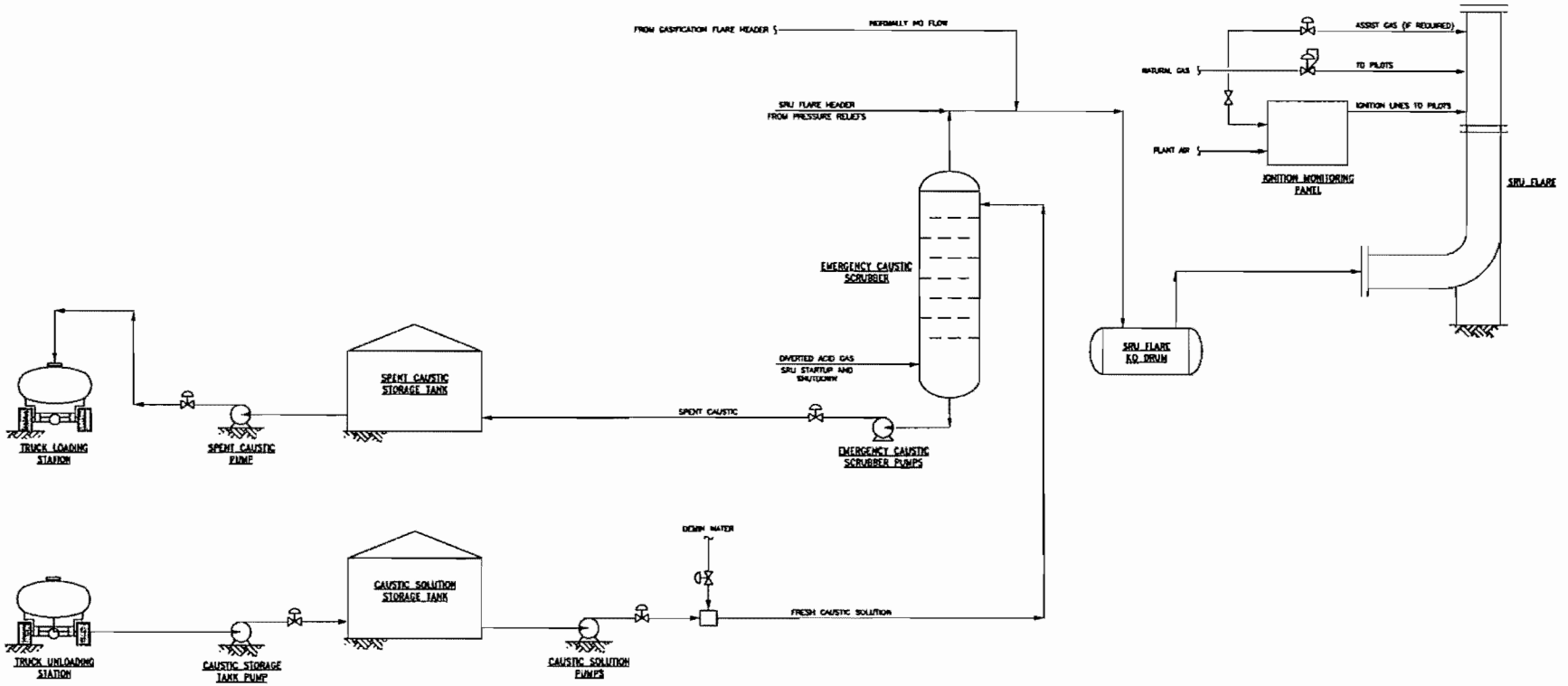

Source:
Fluor; HECA-SCS, 2012 AFC Update; Flow Diagram SRU Flare System;
Drawing No: A4UV-100-25-SK-0002, Rev. 0 (2/14/12)

FLOW DIAGRAM
SRU FLARE SYSTEM

April 2012
28068052

Hydrogen Energy California (HECA)
Kern County, California

URS

FIGURE 2-42

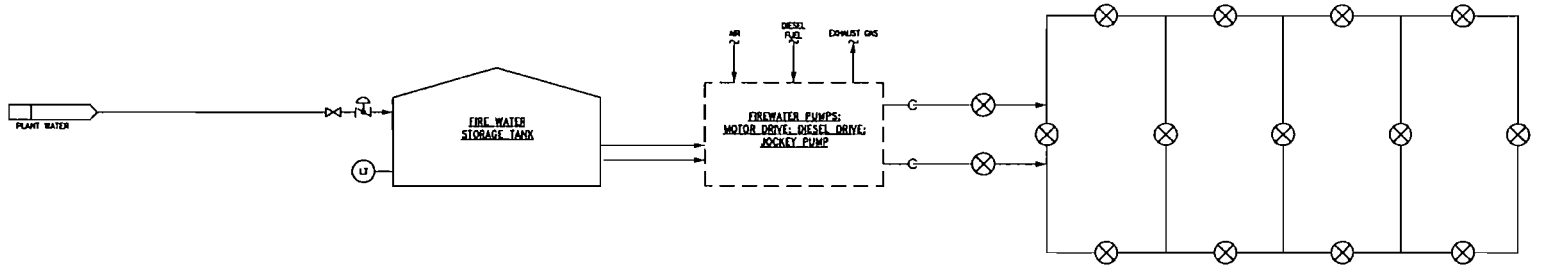

BUILDING FIRE PROTECTION:

- CONTROL ROOM
- ADMINISTRATION
- WAREHOUSE/SHOP
- EMERGENCY RESPONSE & MEDICAL CENTER

FIRE WATER LOOP:

- ——— PIPE
- ——— HOSE STATIONS
- ——— MONITORS
- ——— ACTIVATED VALVES

FIREWATER VALVE HOUSES

- POWER BLOCK COOLING TOWER
- GASIFICATION COOLING TOWER
- STG LUBE OIL & BEARINGS
- CTG MAIN TRANSFORMER
- ASU COOLING TOWER

Source:
Fluor; HECA-SCS, 2012 AFC Update; Flow Diagram Fire Water System;
Drawing No. A4UV-100-25-SK-0003, Rev. 0 (2/14/12)

FLOW DIAGRAM
FIRE WATER SYSTEM

April 2012
28068052

Hydrogen Energy California (HECA)
Kern County, California

URS

FIGURE 2-43

APPENDIX E
Fugitive Emission Calculations

HECA - Total VOC Content of the Gas in Each Process Area	Process Area 1	2	3	4	5	6	7	8	9	10	11	12	13	14	15	16	17	18	19	20	21
	Methanol	Syn Gas		Shifted Syn Gas	Propylene	Sour Water	H_2S Laden Methanol	CO_2 Laden Methanol	Acid Gas	Ammonia-Laden Gas	Sulfur	TGTU Process Gas	Low NH3 Concen-tration	Moderate NH3 Concen-tration	High NH3 Concen-tration	Low CO2 Concen-tration	Moderate CO2 Concen-tration	High CO2 Concen-tration	NO2	HNO3	PSA Off Gas
Total weight percentage of VOC in the gas in each process area	99.70%	0.25%	0.00%	0.00%	100.00%	0.08%	79.11%	72.40%	4.22%	2.13%	0.00%	0.29%	0.00%	0.00%	0.00%	0.00%	0.00%	0.41%	0.00%	0.00%	0.03%

Note: The following compounds are included as VOCs, although not all compounds are found in the gas in each process area: CH3OH, C3H6, COS, and HCN.

Compound	Wt % Methanol Stream	Syn Gas		Shifted Syn Gas Stream	Propylene Stream	Sour Water Stream	H_2S Laden Methanol Stream	CO_2 Laden Methanol Stream	Acid Gas Stream	Ammonia-Laden Gas Stream	Sulfur Stream	TGTU Process Gas Stream	Low NH3 Concen-tration	Moderate NH3 Concen-tration	High NH3 Concen-tration	Low CO2 Concen-tration	Moderate CO2 Concen-tration	High CO2 Concen-tration	NO2	HNO3	PSA Off Gas
CO_2	0.00%	8.02%		59.90%	0.00%	1.98%	15.60%	27.30%	49.80%	60.60%	0.00%	65.30%	5.77%	37.50%	0.76%	18.90%	37.50%	97.80%	0.00%	0.00%	14.70%
CO	0.00%	43.30%		2.97%	0.00%	0.010%	0.01%	0.01%	2.05%	0.22%	0.00%	2.46%	0.00%	0.00%	0.00%	0.00%	0.00%	0.01%	0.00%	0.00%	8.58%
CH_4	0.00%	0.59%		0.60%	0.00%	0.00%	0.000%	0.010%	0.000%	0.010%	0.00%	0.00%	0.00%	0.00%	0.00%	0.00%	0.00%	0.01%	0.00%	0.00%	3.10%
H_2S	0.00%	0.58%		0.62%	0.00%	0.05%	0.92%	0.0000%	28.50%	1.35%	0.02%	1.99%	0.00%	0.00%	0.00%	0.00%	0.00%	1.56%	0.00%	0.00%	0.00%
NH_3	0.00%	0.14%		0.11%	0.00%	0.70%	0.00%	0.00%	0.00%	20.20%	0.00%	0.00%	15.60%	49.20%	98.00%	31.30%	49.20%	0.00%	0.00%	0.00%	0.00%
SO2	0.00%	0.00%		0.00%	0.00%	0.00%	0.00%	0.00%	3.12%	0.00%	0.00%	0.38%	0.00%	0.00%	0.00%	0.00%	0.00%	0.00%	0.00%	0.00%	0.00%
HCl	0.00%	0.00%		0.00%	0.00%	0.05%	0.00%	0.00%	0.00%	0.00%	0.00%	0.00%	0.00%	0.00%	0.00%	0.00%	0.00%	0.00%	0.00%	0.00%	0.00%
NHO3	0.00%	0.00%		0.00%	0.00%	0.00%	0.00%	0.00%	0.00%	0.00%	0.00%	0.00%	0.00%	0.00%	0.00%	0.00%	0.00%	0.00%	0.00%	56.20%	0.00%
NO2	0.00%	0.00%		0.00%	0.00%	0.00%	0.00%	0.00%	0.00%	0.00%	0.00%	0.00%	0.00%	0.00%	0.00%	0.00%	0.00%	0.00%	7.28%	0.00%	0.00%
Other	0.26%	47.20%		35.80%	0.00%	97.10%	4.35%	0.27%	12.40%	15.60%	100.00%	29.60%	78.60%	13.30%	1.26%	49.70%	13.30%	0.26%	92.70%	43.80%	73.60%
VOC COS	0.00%	0.24%		0.00%	0.00%	0.08%	0.01%	0.00%	2.71%	2.09%	0.00%	0.29%	0.00%	0.00%	0.00%	0.00%	0.00%	0.01%	0.00%	0.00%	0.00%
CH_3OH	99.70%	0.00%		0.00%	0.00%	0.00%	79.10%	72.40%	1.51%	0.00%	0.00%	0.00%	0.00%	0.00%	0.00%	0.00%	0.00%	0.40%	0.00%	0.00%	0.03%
C_3H_6	0.00%	0.00%		0.00%	100.00%	0.00%	0.00%	0.00%	0.00%	0.00%	0.00%	0.00%	0.00%	0.00%	0.00%	0.00%	0.00%	0.00%	0.00%	0.00%	0.00%
HCN	0.00%	0.01%		0.00%	0.00%	0.00%	0.00%	0.00%	0.00%	0.04%	0.00%	0.00%	0.00%	0.00%	0.00%	0.00%	0.00%	0.00%	0.00%	0.00%	0.00%
Total	99.98%	100.08%	0.00%	100.00%	100.00%	99.97%	99.99%	99.99%	100.09%	100.11%	100.02%	100.02%	99.97%	100.00%	100.02%	99.90%	100.00%	100.05%	99.98%	100.00%	100.01%
Percentage of VOC of the entire gas stream *	99.70%	0.25%	0.00%	0.00%	100.00%	0.08%	79.11%	72.40%	4.22%	2.13%	0.00%	0.29%	0.00%	0.00%	0.00%	0.00%	0.00%	0.41%	0.00%	0.00%	0.03%

* Per District policy (SSP-2015), VOC emissions are not assessed to components handling fluid streams with a VOC content of 10% or less by weight.

Equipment Type	Service	Emission Factor ** (kg/hr/source)	Emission Factor (lb/hr/source)	Control Efficiency **
Valves	Gas	0.00597	0.0132	92%
Valves	Light liquid	0.00403	0.0089	88%
Valves	Heavy liquid	0.00023	0.0005	0%
Pump seals	Light liquid	0.0199	0.0439	75%
Pump seals	Heavy liquid	0.00862	0.0190	0%
Compressor seals	Gas	0.228	0.5027	0%
Pressure relief valves	Gas	0.104	0.2293	0%
Connectors	All	0.00183	0.0040	93%
Open-ended lines	All	0.0017	0.0037	0%
Sampling connectors	All	0.015	0.0331	0%

** Notes:
** Emission factors and control efficiencies are from EPA's 1995 "Protocol for Equipment Leak Emission Estimates".
** Emission factors are from Table 2-1 (SOCMI Average Emission Factors)
** Control efficiencies are from Table 5-2 (Control Effectiveness for an LDAR Program at a SOCMI Process Unit)
** The permittee proposes to implement an LDAR program for the process stream identified as #1, 5, 7-10, and 13-21 so the control efficiencies will apply to those stream.

COMPONENT COUNT	Process Area 1	2	3	4	5	6	7	8	9	10	11	12	13	14	15	16	17	18	19	20	21
	Methanol	Syn Gas		Shifted Syn Gas	Propylene	Sour Water	H_2S Laden Methanol	CO_2 Laden Methanol	Acid Gas	Ammonia-Laden Gas	Sulfur	TGTU Process Gas	Low NH3 Concen-tration	Moderate NH3 Concen-tration	High NH3 Concen-tration	Low CO2 Concen-tration	Moderate CO2 Concen-tration	High CO2 Concen-tration	NO2	HNO3	PSA Off Gas
Valves - Gas	0	69	0	342	36	0	0	0	122	98	0	66	197	6	147	20	6	506	5	0	164
Valves - Light Liquid	257	0	0	0	546	0	290	285	0	0	0	0	105	2	206	107	0	0	0	68	0
Valves - Heavy Liquid	0	0	0	0	0	366	0	0	0	0	17	0	0	0	0	0	0	0	0	0	0
Pumps - Light Liquid	4	0	0	0	0	0	6	6	0	0	0	0	6	0	4	6	0	0	0	2	0
Pumps - Heavy Liquid	0	0	0	0	0	8	0	0	0	0	0	0	0	0	0	0	0	0	0	0	0
Compressors	0	0	0	0	2	0	0	0	0	0	0	5	0	0	0	0	0	12	0	0	5
Connectors	824	208	0	1024	1642	958	962	932	388	252	118	276	826	44	886	400	34	1446	34	188	540
Total	1085	277	0	1366	2226	1332	1258	1223	510	350	135	347	1134	52	1243	533	40	1964	39	258	709

CALCULATED EMISSIONS (BY COMPONENT) (lb/day)

Valves - Gas	0	21.7955788	0	108.0302601	0.9097285	0	0	0	3.0829688	2.476483	0	20.847945	4.9782365	0.1516214	3.7147247	0.5054047	0.1516214	12.78674	0.1263512	0	4.1443188
Valves - Light Liquid	6.5760393	0	0	0	13.970885	0	7.42043345	7.29249495	0	0	0	0	2.6867087	0.0511754	5.2710665	2.7378841	0	0	0	1.6887883	0
Valves - Heavy Liquid	0	0	0	0	0	4.454038	0	0	0	0	0.206882	0	0	0	0	0	0	0	0	0	0
Pumps - Light Liquid	1.05292651	0	0	0	0	0	1.5793897	1.5793897	0	0	0	0	1.5793898	0	1.0529265	1.5793898	0	0	0	0.5264633	0

Pumps - Heavy Liquid	0	0	0	0	0	3.648734	0	0	0	0	0	0	0	0	0	0	0	0	0	0	0
Compressors	0	0	0	0	24.127381	0	0	0	0	0	0	60.318403	0	0	0	0	0	144.76417	0	0	60.318403
Connectors	5.58497619	20.13999736	0	99.15075625	11.129285	92.76018	6.52032415	6.31698763	2.6298189	1.708027	11.42558	26.724227	5.598532	0.2982269	6.005205	2.7111535	0.230448	9.8008199	0.230448	1.2742421	3.6600572
Total (lb-VOC/day):	13.21	41.94	0.00	207.18	50.14	100.86	15.52	15.19	5.71	4.18	11.63	107.89	14.84	0.50	18.04	7.53	0.38	167.35	0.38	3.49	68.12

CALCULATED EMISSIONS (BY COMPOUND) (lb/day)	Process Area																				
	1	2	3	4	5	6	7	8	9	10	11	12	13	14	15	16	17	18	19	20	21
	Methanol	Syn Gas		Shifted Syn Gas	Propylene	Sour Water	H_2S Laden Methanol	CO_2 Laden Methanol	Acid Gas	Ammonia-Laden Gas	Sulfur	TGTU Process Gas	Low NH3 Concen-tration	Moderate NH3 Concen-tration	High NH3 Concen-tration	Low CO2 Concen-tration	Moderate CO2 Concen-tration	High CO2 Concen-tration	NO2	HNO3	PSA Off Gas
CO_2	0	3.363233208		124.1014288	0	1.997086	2.42114299	4.14656215	2.8449683	2.535813	0	70.452546	0.8564334	0.1878839	0.1219338	1.4238943	0.143276	183.86999	0	0	10.014049
CO	0	18.15810448		6.153276187	0	0.010086	0.00155201	0.00151889	0.1171121	0.009206	0	2.6541082	0	0	0	0	0	0.0167352	0	0	5.8449345
CH_4	0	0.247419899		1.243086098	0	0	0	0.00151889	0	0.000418	0	0	0	0	0	0	0	0.0167352	0	0	2.1118062
H_2S	0	0.243226342		1.284522302	0	0.050431	0.14278536	0	1.8281445	0.056491	0.002326	2.1470225	0	0	0	0	0	2.6106869	0	0	0
NH_3	0	0.058709807		0.227899118	0	0.706041	0	0	0	0.845271	0	0	2.3154872	0.2465037	15.723044	2.3580894	0.1879782	0	0	0	0
SO2	0	0		0	0	0	0	0	0.178239	0	0	0.4099842	0	0	0	0	0	0	0	0	0
HCl	0	0		0	0	0.050431	0	0	0	0	0	0	0	0	0	0	0	0	0	0	0
NHO3	0	0		0	0	0	0	0	0	0	0	0	0	0	0	0	0	0	0	1.9610955	0
NO2	0	0		0	0	0	0	0	0	0	0	0	0	0	0	0	0	0	0.025975	0	0
Other	0.03435625	19.79359195		74.17080386	0	97.93793	0.67512641	0.04100998	0.7083857	0.652784	11.63246	31.93561	11.666493	0.0666362	0.2021534	3.7443145	0.0508152	0.4351145	0.3307529	1.5283982	50.138365
VOC COS	0	0.100645383		0	0	0.08069	0.00115674	0	0.1548165	0.087456	0	0.3128827	0	0	0	0	0	0.0167352	0	0	0
CH_3OH	13.1743002	0		0	0	0	12.2764366	10.9967436	0.0862631	0	0	0	0	0	0	0	0	0.6694069	0	0	0.0204368
C_3H_8	0	0		0	50.13726	0	0	0	0	0	0	0	0	0	0	0	0	0	0	0	0
HCN	0	0.004193558		0	0	0	0	0	0	0.001674	0	0	0	0	0	0	0	0	0	0	0
VOC (lb/day) *	13.1743002	~~0.10483894~~	0	0	50.13726	~~0.08069~~	12.2775933	10.9967436	~~0.2410796~~	~~0.08913~~	0	~~0.3128827~~	0	0	0	0	0	~~0.6861421~~	0	0	~~0.0204368~~
CO (lb/day)	0	18.15810448	0	6.153276187	0	0.010086	0.00155201	0.00151889	0.1171121	0.009206	0	2.6541082	0	0	0	0	0	0.0167352	0	0	5.8449345

* Per District policy (SSP-2015), VOC emissions are not assessed to components handling fluid streams with a VOC content of 10% of less by weight.

CALCULATED EMISSIONS (BY COMPOUND) (ton/yr)	Process Area																				
	1	2	3	4	5	6	7	8	9	10	11	12	13	14	15	16	17	18	19	20	21
	Methanol	Syn Gas		Shifted Syn Gas	Propylene	Sour Water	H_2S Laden Methanol	CO_2 Laden Methanol	Acid Gas	Ammonia-Laden Gas	Sulfur	TGTU Process Gas	Low NH3 Concen-tration	Moderate NH3 Concen-tration	High NH3 Concen-tration	Low CO2 Concen-tration	Moderate CO2 Concen-tration	High CO2 Concen-tration	NO2	HNO3	PSA Off Gas
CO_2	0	0.61379006	0	22.64851076	0	0.364468	0.4418586	0.75674759	0.5192067	0.462786	0	12.85759	0.1562991	0.0342888	0.0222529	0.2598607	0.0261479	29.869773	0	0	1.8275639
CO	0	3.313854067	0	1.122972904	0	0.001841	0.00028324	0.0002772	0.021373	0.00168	0	0.4843747	0	0	0	0	0	0.0030542	0	0	1.0667005
CH_4	0	0.045154132	0	0.226863213	0	0	0	0.0002772	0	7.64E-05	0	0	0	0	0	0	0	0.0030542	0	0	0.3854046
H_2S	0	0.044388807	0	0.23442532	0	0.009204	0.02605833	0	0.2971364	0.01031	0.000425	0.3918316	0	0	0	0	0	0.4764504	0	0	0
NH_3	0	0.01071454	0	0.041591589	0	0.128852	0	0	0	0.154262	0	0	0.4225764	0.0449869	2.8694556	0.4303513	0.034306	0	0	0	0
SO2	0	0	0	0	0	0	0	0	0.0325286	0	0	0.0748221	0	0	0	0	0	0	0	0	0
HCl	0	0	0	0	0	0.009204	0	0	0	0	0	0	0	0	0	0	0	0	0	0	0
NHO3	0	0	0	0	0	0	0	0	0	0	0	0	0	0	0	0	0	0	0	0.3578999	0
NO2	0	0	0	0	0	0	0	0	0	0	0	0	0	0	0	0	0	0	0.0047404	0	0
Other	0.00627002	3.612330531	0	13.53617171	0	17.87367	0.12321057	0.00748432	0.1292804	0.119133	2.122923	5.8282489	2.129135	0.0121611	0.036893	0.6833374	0.0092738	0.0794084	0.0603624	0.2789327	9.1502517
VOC COS	0	0.018367782	0	0	0	0.014726	0.00021111	0	0.028254	0.015961	0	0.0571011	0	0	0	0	0	0.0030542	0	0	0
CH_3OH	2.40430978	0	0	0	0	0	2.24044967	2.0069057	0.015743	0	0	0	0	0	0	0	0	0.1221668	0	0	0.0037297
C_3H_8	0	0	0	0	9.1500499	0	0	0	0	0	0	0	0	0	0	0	0	0	0	0	0
HCN	0	0.000765324	0	0	0	0	0	0	0	0.000305	0	0	0	0	0	0	0	0	0	0	0
VOC (ton/yr)	2.40430978	~~0.019133107~~	0	0	9.1500499	~~0.014726~~	2.24066078	2.0069057	~~0.043997~~	~~0.016286~~	0	~~0.0571011~~	0	0	0	0	0	~~0.1252209~~	0	0	~~0.0037297~~
CO (ton/yr)	0	3.313854067	0	1.122972904	0	0.001841	0.00028324	0.0002772	0.021373	0.00168	0	0.4843747	0	0	0	0	0	0.0030542	0	0	1.0667005

Based on the location of the stream identified above, steams #1, 2, 4 through 10, will be assessed to the gasification system permit (S-7616-21); streams #11 through 12 will be assessed to the sulfur recovery system permit (S-7616-23); and steams #13 through 21 will be assessed to the ammonia synthesis unit (S-7616-33). Therefore, fugitive emissions in the amounts listed below will be assessed to those units as:

PE fugitive	VOC (lb/day)	VOC (lb/yr)	CO (lb/day)	CO (lb/yr)
S-7616-21	86.59	31,604	24.451	8,925
S-7616-23	0.00	0	2.654	969
S-7616-33	0.00	0	5.862	2,140

CO2 (lb/day)	CO2 (lb/yr)
141.41	51,615
70.453	25,715
176.417	64,392

CH4 (lb/day)	CH4 (lb/yr)
1.492	545
0.000	0
0.000	0

Carbon dioxide (CO2), methane (CH4), nitrous oxide (N2O), sulfur hexafluoride (SF6), hydrofluorocarbons (HFCs), perfluorocarbons (PFCs), and other fluorinated greenhouse gases are classified as greenhouse gases.

APPENDIX F
Emission Information

Table 3-5
CTG/HRSG and Coal Drying Stack Emissions During Start-Up and Shut-Down

CTG/HRSG Start-Up							
Step	**Duration (hours)**	**Units**	**SO_2**	**NO_X**	**CO**	**$PM_{10}/PM_{2.5}$**	**VOC**
1. CTG ignition and synchronization, 20 percent load on natural gas	0.5	lb/hr	2.1	67.1	2270	15.0	65
		lb	1.0	33.6	1135	7.5	32.4
2. HRSG/STG warm-up, ramp CTG to 40 percent load on natural gas	2	lb/hr	2.4	107.2	1044	13.1	13
		lb	4.8	214	2088	26.3	26.8
3. CTG fuel change-over, 40 percent load on syngas, start-up PSA/ammonia/urea units	50	lb/hr	2.4	66.6	81	13	4.6
		lb	120	3329	4052	657	232
Tons/Start-Up			**0.06**	**1.79**	**3.64**	**0.35**	**0.15**
Coal Drying Start-Up							
Step	**Duration (hours)**	**Units**	**SO_2**	**NO_X**	**CO**	**$PM_{10}/PM_{2.5}$**	**VOC**
2. HRSG/STG warm-up, ramp CTG to 40 percent load on natural gas	2	lb/hr	0.3	15.1	147.4	0.9	1.9
		lb	0.7	30.3	294.7	1.9	3.8
3. CTG fuel change-over, 40 percent load on syngas	50	lb/hr	0.3	9.4	11.5	0.9	0.7
		lb	16.9	470	573	47	33
Tons/Start-Up			**0.01**	**0.25**	**0.43**	**0.02**	**0.02**

Table 3-5
CTG/HRSG and Coal Drying Stack Emissions During Start-Up and Shut-Down

CTG/HRSG Shut-Down							
Step	**Duration (hours)**	**Units**	**SO_2**	**NO_X**	**CO**	**$PM_{10}/PM_{2.5}$**	**VOC**
1. PSA, ammonia, and urea unit shut-down; gasifier to 60 percent; CTG to 40 percent load on syngas	4	lb/hr	2.4	66.6	81.0	13	4.6
		lb	9.6	266	324	52.6	18.5
2. CTG fuel change-over, 40 percent load on natural gas, gasifier depressurization	3	lb/hr	2.7	122	1191	15.0	15.3
		lb	8.2	367	3574	45.0	45.9
3. Minimum plant load, 20 percent load on natural gas	2	lb/hr	2.1	67.1	2270	15.0	64.8
		lb	4.2	134	4539	30.0	129.7
Tons/Shut-Down			**0.01**	**0.38**	**4.22**	**0.06**	**0.10**
Coal Drying Shut-Down							
Step	**Duration (hours)**	**Units**	**SO_2**	**NO_X**	**CO**	**$PM_{10}/PM_{2.5}$**	**VOC**
1. PSA, ammonia, and urea plant shut-down; gasifier to 60 percent; CTG to 40 percent load on syngas	4	lb/hr	0.3	9.4	11.5	0.9	0.7
		lb	1.4	37.6	45.8	3.8	2.6
Tons/Start-Up			**0.00**	**0.02**	**0.02**	**0.00**	**0.00**

Source: HECA, 2012.
Notes:
Basis: Start-up/shut-down procedures provided by MHI.
Coal drying starts at Step 2, above.
$PM_{10}/PM_{2.5}$ emission rate based on 0.001 grain/dscf
CTG/HRSG = Combustion turbine generator/heat recovery steam generator
NH_3 = ammonia
PSA = Pressure Swing Adsorption
NO_X = nitrogen oxides
CO = carbon monoxide
VOC = volatile organic compounds
PM_{10} = particulate matter less than 10 microns
$PM_{2.5}$ = particulate matter less than 2.5 microns
SO_2 = sulfur dioxide

Table 3-7
Duration and Criteria Pollutant Emissions for Commissioning of the CTG/HRSG on Natural Gas

Test Phase	Hours of Operation	CTG Load	SCR/CO Status	SO_X (lb)	NO_X (lb)	CO (lb)	VOC (lb)	PM_{10} (lb)
First fire	4	FSNL	Not operating	8.4	268.4	9,080	260	60
Rotor run-in	12	20%	Not operating	25.2	805	27,240	780	180
Steam blows	168	40%	Not operating	520.8	15,657	152,544	1,966	2,520
Restoration	N/A	N/A	N/A	N/A	N/A	N/A	N/A	N/A
Initial steam turbine roll	24	40%	Not operating	74.4	2,237	21,792	281	360
NO_X tuning with water injection and initial STG loading	16	40%	Not operating	49.6	174	6057.6	112	240
NO_X tuning with water injection and initial STG loading	16	80%	Not operating	76.8	6,259	5,512	60.8	240
Finalize NO_X control constants	40	40%	Not operating	124	436	15,144	280	600
Finalize NO_X control constants	40	60%	Not operating	160	11,922	14,460	243.2	600
Finalize NO_X control constants	96	80%	Not operating	460.8	37,555	33,072	364.8	1,440
GTG water wash and contractual emission and simple cycle performance testing	16	80%	Not operating	76.8	6,259	5,512	60.8	240
Install SCR and oxidation catalyst	24	80%	Testing	112.8	818	624	142	360
CEMS drift and source testing	64	80%	Operating	300.8	2,182	1,664	377.6	960
Functional testing demonstration hours (six starts)	315	20% to 40%	Operating	859.95	24,466	48,857	1965.6	4,438
Functional testing demonstration hours (six shut-downs)	54	20% to 40%	Operating	139.32	4830.84	50,898	1180.98	810
Functional testing steady state hours	48	80%	Operating	225.6	1,637	1248	283.2	720

Table 3-7
Duration and Criteria Pollutant Emissions for Commissioning of the CTG/HRSG on Natural Gas (Continued)

Test Phase	Hours of Operation	CTG Load	SCR/CO Status	SO_X (lb)	NO_X (lb)	CO (lb)	VOC (lb)	PM_{10} (lb)
GTG water wash and preparation for performance testing	N/A	N/A	N/A	N/A	N/A	N/A	N/A	N/A
Continuous operation test	192	80%	Operating	902.4	6,547	4992	1132.8	2880
	1,129	**Total (lb)**		**4,118**	**122,055**	**398,696**	**9,490**	**16,648**
		Total (ton)		**2.1**	**61.0**	**199.3**	**4.7**	**8.3**

Source: HECA 2012.

Notes:
CEMS = continuous emissions monitoring system
CO = carbon monoxide
CTG = combustion turbine generator
HRSG = heat-recovery steam generator
N/A = not applicable
NO_X = nitrogen oxides
PM_{10} = particulate matter less than 10 microns in diameter
SCR = selective catalytic reduction
SO_X = sulfur oxides
VOCs = volatile organic compounds

Table 3-9
Duration and Criteria Pollutant Emissions for Commissioning of the CTG/HRSG on Hydrogen-Rich Fuel (Continued)

Test Phase	Hours of Operation	CTG Load	SCR/CO Status	SO_X (lb)	NO_X (lb)	CO (lb)	VOC (lb)	PM_{10} (lb)
GTG water wash and contractual emission and simple cycle performance testing on H_2-rich fuel	24	100%	Operating	72	689	226	89	360
Duct burner testing on H_2-rich syngas	48	100%	Operating	192	1,397	744	187	720
Duct burner testing on PSA off-gas	48	60%	Operating	240	893	653	125	720
Source testing @ 100% H_2-rich syngas (duct fired, H_2-rich + PSA)	16	100%	Operating	80	470	344	66	240
Source testing @ 70% H_2-rich syngas (duct fired, PSA only)	16	70%	Operating	64	298	218	42	240
IGCC performance and operating test	96	70% to 100%	Operating	432	2,304	1,690	326	1,440
	1,182	**Total (lb)**		**3,652**	**41,665**	**265,571**	**8,825**	**17,016**
		Total (ton)		**1.8**	**20.8**	**132.8**	**4.4**	**8.5**

Source: HECA 2012.

Notes:
CEMS = continuous emissions monitoring system
CO = carbon monoxide
CTG = combustion turbine generator
HRSG = heat-recovery steam generator
H_2 = hydrogen
lb = pound
N/A = not applicable
NO_X = nitrogen oxides
PM_{10} = particulate matter less than 10 microns in diameter
SCR = selective catalytic reduction
SO_X = sulfur oxides
VOC = volatile organic compound

Basis: MHI GT - Model: M501GAC

With PSA Off-gas and H2-rich Gas Duct Firing

Maximum Emissions based on Case 1 - On-peak with duct-firing at 97F ambient

CGT Max Fuel Input =	2583	x 10^6 Btu/hr (HHV) of syngas
Duct Firing Max Fuel Input =	278	x 10^6 Btu/hr (HHV) of PSA Off-gas and H2-rich syngas
HRSG stack gas =	255,463	lbmol/hr, dry, corrected to 15% O2

Total HRSG Flue Gas Emission Rates with Duct Firing of PSA Off-gas and H2-rich syngas		
	Emission Factors lb/10^6 Btu (HHV)	Basis
NOx	0.011	2.5 ppmc
CO	0.008	3 ppmc
VOC	0.0015	1 ppmc
$PM_{10}/PM_{2.5}$	0.008	filterable (front-half) + condensible (back half)
SO2**	0.0002	2 ppmv total sulfur in syngas, 10 ppmv sulfur in PSA Off-gas
NH3		5 ppmc ammonia slip

Notes: Emission Factors are based on the maximum emissions from all of the cases examined (On-peak and Off-peak)
ppmc denotes ppm by volume, dry, corrected to 15% O2
** Maximum SO2 emission occurs for OFF-peak, 97 deg F (Case 2)

Maximum short-term emissions from HRSG stack, normal operations on peak

HRSG Emissions		
	lb/hr	Basis
NOx	25.0	Case 1 (ON Peak, 97 deg Ambient)
CO	18.3	Case 1 (ON Peak, 97 deg Ambient)
VOC	3.5	Case 1 (ON Peak, 97 deg Ambient)
$PM_{10}/PM_{2.5}$	12.8	Case 3 (ON Peak, 39 deg Ambient)
SO2**	4.1	Case 2 (OFF Peak, 97 deg Ambient)
NH3	18.5	Case 1 (ON Peak, 97 deg Ambient)

	Exhaust gas (lbmol/hr)	Exit velocity (m/s)	Exhaust flow (ft3/sec)	Exit velocity (ft/sec)
min HRSG fluegas to HRSG stack during ON peak (Case 1) =	187,092	16.40	22,356.58	53.81
Min HRSG fluegas to HRSG stack during OFF Peak (Case 2) =	126,704	12.44	16,952.70	40.80
HRSG fluegas to HRSG stack during ON Peak (Case 3) =	176,804	17.35	23,655.98	56.94

Annual average emissions from HRSG Stack

Basis: Case 5 (ON Peak, Avg. Ambient)

HRSG Emissions	
	lb/hr
NOx	24.9
CO	18.2
VOC	3.5
$PM_{10}/PM_{2.5}$	12.8
SO2*	4.1
NH3	18.4

	Exhaust gas (lbmol/hr)	Exit velocity (m/s)
HRSG fluegas to HRSG stack (Case 5) =	171,498	16.83

Maximum short-term emissions from coal dryer stack

Coal Dryer Emissions		
	lb/hr	Basis
NOx	4.4	Case 1 (ON Peak, 97 deg Ambient)
CO	3.2	Case 1 (ON Peak, 97 deg Ambient)
VOC	0.6	Case 1 (ON Peak, 97 deg Ambient)
$PM_{10}/PM_{2.5}$	1.4	Case 3 (ON Peak, 39 deg Ambient)
SO2	0.8	Case 2 (OFF Peak, 97 deg Ambient)
NH3	3.2	Case 1 (ON Peak, 97 deg Ambient)

*Baghouse PM control to 0.001 gr/dscf

	Exhaust gas (lbmol/hr)	Exit velocity (m/s)
Min HRSG fluegas to coal dryer (Case 4) =	28,788	5.84

Note: Coal dryer emission rates are relatively constant for both On- and OFF-peak operation.

Annual average emissions from coal dryer stack

Basis: Case 5 (ON Peak, Avg. Ambient)

Coal Dryer Emissions	
	lb/hr
NOx	4.2
CO	3.1
VOC	0.6
$PM_{10}/PM_{2.5}$	1.4
SO2	0.7
NH3	3.1

*Baghouse PM control to 0.001 gr/dscf

	Exhaust gas (lbmol/hr)	Exit velocity (m/s)
HRSG fluegas to coal dryer (Case 5) =	29,102	5.90

APPENDIX G
Calculation Methodology for General Conformity Mitigation Agreement

HECA	ALT 1 - TRAIN			ALT 2 - TRUCKS		
	NOx	PM10	VOC	NOx	PM10	VOC
2013 Construction	49.9	20.6	5.5	49.9	20.6	5.5
2014 Construction	69	18.5	11.9	69	18.5	11.9
2015 Construction	68.6	21.1	12.4	68.6	21.1	12.4
2016 Construction	45.8	16.9	8.4	45.8	16.9	8.4
2017 Construction	10.06	3.66	1.34	10.06	3.66	1.34
2017 Operation	12.13	1.34	0.6	13.38	2.66	0.97
2018 Operation and beyond	36.4	4	1.8	40.1	8	2.9
District CEQA Thresholds	10	15	10	10	15	10
Conformity Threshold	10	100	10	10	100	10

Notes: Emissions mitigated to satisfy CEQA & Conformity requirements
"Operation" emissions in this table exclude stationary source emissions

	Per Year (Construction)	For 10 years (Operation)
NOx and VOC $/ton (ISR)	$ 9,350	$ 93,500
PM10 $/ton (ISR)	$ 9,011	$ 90,110

Conformity & CEQA

Construction: 363.66 tons, total (NOx+VOC+PM10), for years over threshold

Total Fees
$ 3,507,757

Operation: 40.1 tons/yr (NOx), max year

Total Fees
$ 3,899,324

(Conformity + CEQA) Construction + Operation:

Total Fees
$ 7,407,081

APPENDIX H
Hazardous Air Pollutant Summary

Table 5-2
HECA Total Toxic Air Contaminant Annual Emission Rates

Compound	CAS #	Annual Rate (TPY)	CTG/ Stack (lb/yr)	Cool Dryer Stack (lb/yr)	Cooling Tower (Power Block) (lb/yr)	Cooling Tower (Process Area) (lb/yr)	Cooling Tower (ASU) (lb/yr)	Auxiliary Boiler (lb/yr)	Ammonia Plant Start-up Heater (lb/yr)	Emergency Generators (lb/yr)	Fire Water Pump (lb/yr)	Gasification Flare (lb/yr)	SRU Flare (lb/yr)	Rectisol Flare (lb/yr)	TG Thermal Oxidizer (lb/yr)	CO_2 Vent (lb/yr)	Manu-facturing Complex (lb/yr)	On-Site Truck (lb/yr)	On-Site Train (lb/yr)	Fugitives (lb/yr)
Acetaldehyde	75-07-0	2.15E-02	3.66E+01	6.46E+00																
Ammonia*	7664-41-7	1.57E+02	1.56E+05	2.75E+04				1.03E+03									1.18E+05			1.14E+04
Antimony	7440-36-0	1.32E-02	2.24E+01	3.95E+00																
Arsenic	7440-38-2	2.88E-02	4.88E+01	8.61E+00	5.33E-02	8.70E-02	2.40E-02	8.89E-02	1.47E-03			1.43E-02	7.75E-04	3.78E-03	2.13E-02					
Benzene	71-43-2	2.94E-02	4.88E+01	8.61E+00				9.33E-01	1.54E-02			1.50E-01	8.14E-03	3.97E-02	2.24E-01					
Beryllium	7440-41-7	3.11E-03	5.28E+00	9.33E-01				5.33E-03	8.80E-05			8.56E-04	4.65E-05	2.27E-04	1.28E-03					
Cadmium	7440-43-9	1.15E-01	1.95E+02	3.44E+01				4.89E-01	8.07E-03			7.85E-02	4.26E-03	2.08E-02	1.17E-01					
Carbon Disulfide	75-15-0	5.50E-01	9.35E+02	1.65E+02																
Carbonyl Sulfide	463-58-1	2.69E+00														5.32E+03				5.94E+01
Chromium	7440-47-3	6.55E-03	1.04E+01	1.83E+00				6.22E-01	1.03E-02			9.99E-02	5.42E-03	2.64E-02	1.49E-01					
Chromium (hexavalent)	18540-29-9	1.83E-03	3.11E+00	5.49E-01																
Cobalt	7440-48-4	3.14E-03	5.28E+00	9.33E-01				3.73E-02	6.16E-04			5.99E-03	3.25E-04	1.59E-03	8.95E-03					
Copper*	7440-50-8	2.93E-04			1.03E-02	1.69E-02	4.66E-03	3.78E-01	6.23E-03			6.06E-02	3.29E-03	1.61E-02	9.06E-02					
Cyanides	57-12-5	6.87E-02	1.16E+02	2.04E+01																1.15E+00
Fluoride*	1101	1.44E-03			9.31E-01	1.52E+00	4.20E-01													
Formaldehyde	50-00-0	2.28E-01	3.46E+02	6.10E+01				3.33E+01	5.50E-01			5.35E+00	2.91E-01	1.42E+00	7.99E+00					
Hexane	110-54-3	5.87E-01						8.00E+02	1.32E+01			1.28E+02	6.97E+00	3.40E+01	1.92E+02					
Hydrochloric Acid	7647-01-0	1.55E-01	2.64E+02	4.66E+01																
Hydrogen Fluoride (hydrofluoric acid)	7664-39-3	5.98E-01	1.02E+03	1.79E+02																
Hydrogen Sulfide	7783-06-4	2.64E+00														3.01E+03				2.28E+03
Lead	7439-92-1	6.70E-03	1.14E+01	2.01E+00																
Manganese	7439-96-5	1.67E-02	2.11E+01	3.73E+00	2.66E+00	4.33E+00	1.20E+00	1.69E-01	2.79E-03			2.71E-02	1.47E-03	7.18E-03	4.05E-02					
Mercury	7439-97-6	7.71E-03	1.03E+01	4.98E+00				1.16E-01	1.91E-03			1.85E-02	1.01E-03	4.91E-03	2.77E-02					
Methanol	67-56-1	7.09E+00																		1.42E+04
Methyl Bromide (Bromomethane)	74-83-9	5.70E-01	9.70E+02	1.71E+02																
Methylene Chloride (Dichloromethane)	75-09-2	2.63E-02	4.47E+01	7.89E+00																
Naphthalene	91-20-3	3.01E-02	5.08E+01	8.97E+00				2.71E-01	4.47E-03			4.35E-02	2.36E-03	1.15E-02	6.50E-02					
Nickel	7440-02-0	5.35E-03	7.93E+00	1.40E+00				9.33E-01	1.54E-02			1.50E-01	8.14E-03	3.97E-02	2.24E-01					
Nitric Acid*	7697-37-2	8.19E-01																		1.64E+03
Phenol	108-95-2	4.40E-01	7.48E+02	1.32E+02																

Table 5-2
HECA Total Toxic Air Contaminant Annual Emission Rates (Continued)

Compound	CAS #	Annual Rate (TPY)	CTG/ Stack (lb/yr)	Coal Dryer Stack (lb/yr)	Cooling Tower (Power Block) (lb/yr)	Cooling Tower (Process Area) (lb/yr)	Cooling Tower (ASU) (lb/yr)	Auxiliary Boiler (lb/yr)	Ammonia Plant Start-up Heater (lb/yr)	Emergency Generators (lb/yr)	Fire Water Pump (lb/yr)	Gasification Flare (lb/yr)	SRU Flare (lb/yr)	Rectisol Flare (lb/yr)	TG Thermal Oxidizer (lb/yr)	CO_2 Vent (lb/yr)	Manu-facturing Complex (lb/yr)	On-Site Truck (lb/yr)	On-Site Train (lb/yr)	Fugitives (lb/yr)
Propylene*	115-07-1	6.33E+00																		1.27E+04
Selenium	7782-49-2	6.77E-03	1.14E+01	2.01E+00	4.43E-02	7.23E-02	2.00E-02	1.07E-02	1.76E-04			1.71E-03	9.30E-05	4.53E-04	2.56E-03					
Sulfuric Acid and Sulfates*	7664-93-9	1.14E+00	1.93E+03	3.41E+02																
Toluene	108-88-3	1.50E-03	6.71E-01	1.18E-01				1.51E+00	2.49E-02			2.43E-01	1.32E-02	6.42E-02	3.62E-01					
Vanadium*	7440-62-2	7.50E-04						1.02E+00	1.69E-02			1.64E-01	8.91E-03	4.34E-02	2.45E-01					
Diesel Particulate Matter*	DPM	7.72E-02								4.51E+01	1.84E+00							1.48E+01	9.26E+01	
2-Methylnaphthalene	91-57-6	7.83E-06						1.07E-02	1.76E-04			1.71E-03	9.30E-05	4.53E-04	2.56E-03					
3-Methylchloranthrene	56-49-5	5.87E-07						8.00E-04	1.32E-05			1.28E-04	6.97E-06	3.40E-05	1.92E-04					
7,12-Dimethylbenz(a)anthracene	57-97-6	5.22E-06						7.11E-03	1.17E-04			1.14E-03	6.20E-05	3.02E-04	1.71E-03					
Acenaphthene	83-32-9	5.87E-07						8.00E-04	1.32E-05			1.28E-04	6.97E-06	3.40E-05	1.92E-04					
Acenaphthylene	208-96-8	5.87E-07						8.00E-04	1.32E-05			1.28E-04	6.97E-06	3.40E-05	1.92E-04					
Anthracene	120-12-7	7.83E-07						1.07E-03	1.76E-05			1.71E-04	9.30E-06	4.53E-05	2.56E-04					
Benz(a)anthracene	56-55-3	2.81E-05	4.68E-02	8.25E-03				8.00E-04	1.32E-05			1.28E-04	6.97E-06	3.40E-05	1.92E-04					
Benzo(a)pyrene	50-32-8	3.91E-07						5.33E-04	8.80E-06			8.56E-05	4.65E-06	2.27E-05	1.28E-04					
Benzo(b)fluoranthene	205-99-2	5.87E-07						8.00E-04	1.32E-05			1.28E-04	6.97E-06	3.40E-05	1.92E-04					
Benzo(g,h,i)perylene	191-24-2	3.91E-07						5.33E-04	8.80E-06			8.56E-05	4.65E-06	2.27E-05	1.28E-04					
Benzo(k)fluoranthene	207-08-9	5.87E-07						8.00E-04	1.32E-05			1.28E-04	6.97E-06	3.40E-05	1.92E-04					
Chrysene	218-01-9	5.87E-07						8.00E-04	1.32E-05			1.28E-04	6.97E-06	3.40E-05	1.92E-04					
Dibenzo(a,h)anthracene	53-70-3	3.91E-07						5.33E-04	8.80E-06			8.56E-05	4.65E-06	2.27E-05	1.28E-04					
Dichlorobenzene	106-46-7	3.91E-04						5.33E-01	8.80E-03			8.56E-02	4.65E-03	2.27E-02	1.28E-01					
Fluoranthene	206-44-0	9.78E-07						1.33E-03	2.20E-05			2.14E-04	1.16E-05	5.67E-05	3.20E-04					
Fluorene	86-73-7	9.13E-07						1.24E-03	2.05E-05			2.00E-04	1.08E-05	5.29E-05	2.98E-04					
Indeno(1,2,3-cd)pyrene	193-39-5	5.87E-07						8.00E-04	1.32E-05			1.28E-04	6.97E-06	3.40E-05	1.92E-04					
Phenanathrene	85-01-8	5.54E-06						7.55E-03	1.25E-04			1.21E-03	6.59E-05	3.21E-04	1.81E-03					
Pyrene	129-00-0	1.63E-06						2.22E-03	3.67E-05			3.57E-04	1.94E-05	9.44E-05	5.33E-04					
Total Combined HAPs and TACs (tpy)		**181.47**	**81.44**	**14.37**	**0.00**	**0.00**	**0.00**	**0.93**	**0.01**	**0.02**	**0.00**	**0.07**	**0.00**	**0.02**	**0.10**	**4.17**	**59.17**	**0.01**	**0.05**	**2.11E+01**
Total HAPs* (tpy)		**15.94**	**2.46**	**0.44**	**0.00**	**0.00**	**0.00**	**0.42**	**0.01**	**0.00**	**0.00**	**0.07**	**0.00**	**0.02**	**0.10**	**4.17**	**0.00**	**0.00**	**0.00**	**8.25E+00**

Note:
* Denotes pollutants that are not listed as Federal HAPs. These pollutants are not included in the HAP total provided. As shown, combined annual HAP emissions are less than 25 tons per year. Additionally, individual HAP emissions are below 10 tons per year.
ASU = Air Separation Unit
CAS = Chemical Abstracts Service Registry Number
HAPs = hazardous air pollutant
lb/yr = pounds per year
TACs = toxic air contaminants

APPENDIX I
Greenhouse Gas BACT Analysis

Greenhouse Gas (GHG)
Best Available Control Technology (BACT) Analysis

Facility Name:	Hydrogen Energy California, LLC	Date: February 5, 2013
Mailing Address:	30 Monument Square, Suite 235 Concord, MA 01742	
Contact Person:	Marisa Mascaro	
Telephone:	(978) 287-9529	
Application #:	S-7616-17-0 through '-40-0	
Project #:	S-1121903	
Deemed Complete:	August 30, 2012	

I. Proposal

Hydrogen Energy California, LLC (HECA) is seeking approval from the San Joaquin Valley Air Pollution Control District (SJVAPCD) for the installation of a power generation facility that uses integrated gasification combined cycle (IGCC), a technology that turns a fuel blend consisting of 75 percent western sub-bituminous coal and 25 percent petroleum coke (petcoke) into a synthesis gas (syngas). The facility will gasify the fuel blend to produce hydrogen-rich syngas and capture a stream that is comprised primarily of carbon dioxide (CO2), a greenhouse gas, and transport it by pipeline to a neighboring oilfield for enhanced oil recovery (EOR) and sequestration.

This document presents the Greenhouse Gas (GHG) Best Available Control Technology (BACT) analysis for the project, which is required due to Rule 2410 (Prevention of Significant Deterioration). Rule 2410 requires new major sources of air pollution to apply BACT for each "regulated pollutant" for which the potential to emit is significant. This document establishes BACT for GHGs from the project. BACT for other pollutants is analyzed in the Rule 2201 BACT discussion.

For the purposes of Rule 2410, GHG includes the following six component pollutants: carbon dioxide (CO2), methane (CH4), nitrous oxide (N2O), sulfur hexafluoride (SF6), hydrofluorocarbons, and perfluorocarbons. Of these six GHGs, CO2 is the dominant GHG emitted for facilities where most of the emissions result from fuel combustion. This is the case for the proposed project, which will, however, produce smaller emissions of CH4, N2O, and SF6. Accordingly, this BACT analysis focuses on the CO2 emissions from the project, but also addresses CH4, N2O, and SF6 emissions.

Rule 2410 requires proposed new projects with carbon dioxide equivalent (CO2e) emissions greater than 75,000 tons per year, and GHGs on a mass basis greater than 100 tons per year (for steam electrical generating units) to demonstrate the use of BACT for their GHG emissions in the pre-construction review.

The proposed project emissions will exceed these thresholds as shown in the table below.[48] The table below presents the annual CO2e emissions from all stationary sources at HECA during the early operations phase. This operational phase represents the maximum total project annual CO2e emissions. Calculation for the annual CO2e emissions shown in the table below are found in Appendix I-A.

Table 1: Maximum Annual CO2e Emissions for Facility S-7616 (Early Operations)

Emission Source	Permitted CO2e Emissions (tonne/yr)	Permitted CO2e Emissions (ton/yr)	Percentage of Total CO2e
Combustion Turbine Generator (S-7616-26-0)	313,793	345,957	58.06%
CO2 Recovery and Vent System (S-7616-24-0)	174,113	191,960	32.21%
Natural Gas-Fired Auxiliary Boiler (S-7616-25-0)	24,667	27,195	4.56%
Nitric Acid Unit (S-7616-35-0)	12,741	14,047	2.36%
Tail Gas Thermal Oxidizer (S-7616-23-0)	5,925	6,532	1.10%
Gasification Flare (S-7616-30-0)	3,966	4,373	0.73%
SRU Flare (S-7616-31-0)	510	562	0.09%
Rectisol Flare (S-7616-32-0)	3,766	4,152	0.70%
Ammonia Synthesis Plant Startup Heater (S-7616-33-0)	415	458	0.08%
Urea Absorbers (S-7616-34-0)	117	129	0.02%
Diesel-Fired Emergency Engines Powering Electrical Generators (S-7616-38-0 and -39-0)	304	335	0.06%
Diesel-Fired Emergency Engine Powering Firewater Pump (S-7616-40-0)	29	32	0.01%
Fugitives - Gasification Block and Manufacturing Complex	82	90	0.02%
230 kV Circuit Breakers	78	86	0.01%
18 kV Circuit Breakers	8	9	0.001%
Total CO2e/yr for Stationary Sources	**540,514**	**595,917**	**100.00%**

Therefore, BACT is required for GHGs pursuant to Rule 2410. Please note that BACT is also required for NO2, CO, PM, and PM10 pursuant to Rule 2410. BACT for NO2, CO, PM, and PM10 is addressed in Rule 2201 compliance.

II. Process Description

[48] GHG emissions are calculated in units of metric tons [(tonne) = 2,205 lb] and short tons [(ton) = 2,000 lb]. GHG emissions are calculated in units of metric tons under the GHG Reporting Program, and are quantified as short tons for PSD purposes.

A. Project Description

The proposed project will remove and capture 90 percent of the carbon from the syngas, and its transport as a pure CO2 stream for use in EOR. This practice results in sequestration (storage) of the CO2 in a secure geologic formation. CO2 will be transported for use in EOR in the adjacent Elk Hills Oil Field (EHOF), which is owned and operated by Occidental of Elk Hills Inc (OEHI). The OEHI EOR project will be separately permitted by OEHI through the Department of Conservation, Division of Oil, Gas, and Geothermal Resources, and with SJVAPCD.

The project incorporates a gasification process to convert petcoke and coal into syngas. The primary components of syngas are carbon monoxide (CO) and hydrogen, and the syngas is further processed in a gas treatment unit to remove acid gases (primarily CO2) to produce hydrogen-rich fuel. The treatment of syngas is classified as a pre-combustion treatment process that has advantages over a post-combustion treatment process used for pulverized coal power plants. In the pre-combustion treatment process, the treatment and removal of CO2 and sulfur in syngas occurs at higher pressures and lower volumetric flow rates, which increases the CO2 capture efficiency, in comparison to post-combustion treatment of exhaust gas in a conventional power plant. The gasification process includes all the facilities required to capture and remove CO2 and other constituents from the hydrogen fuel, and delivers the CO2 to OEHI at sufficient pressure and in a suitable physical state for EOR and sequestration.

The removal of CO2 results in hydrogen-rich fuel production with low GHG emissions. The applicant indicates that the proposed project was sited in close proximity to a facility that would purchase and use the CO2 for EOR. The sale of CO2 for EOR improves the economics of producing low-carbon electricity and nitrogen-based products. The term IGCC generally refers to the use of gasification technology to produce fuel for generation of electricity in a combined-cycle power block. However, products other than power may also be co-produced in an IGCC plant, as is the case for the proposed project.

The proposed project will produce electricity for delivery to the electrical grid controlled by the California Independent System Operator. This is accomplished using a combined-cycle turbine that combusts hydrogen-rich fuel as its primary fuel and natural gas for use as a back-up fuel and during startups and shutdowns.

The combined cycle power block will generate approximately 431 MW of gross power, and will provide approximately 300 MW output of baseload electricity to the grid. The remaining power will be used on-site to meet the facility's internal loads, and routed to the manufacturing complex for nitrogen-based product manufacturing. The power block will consist of:

- One Mitsubishi Heavy Industries (MHI) 501 GAC® combustion turbine generator (CTG) that will be fueled with hydrogen-rich fuel from the gasification plant, and natural gas as a backup fuel;

- Heat-recovery steam generator (HRSG) with duct firing on a combination of hydrogen-rich fuel and pressure swing adsorption (PSA) off-gas; and

- Condensing steam turbine-generator.

An integrated manufacturing complex on the HECA site will produce approximately 1 million tons per year of low-carbon nitrogen-based products, including urea, UAN, and anhydrous ammonia for use in agricultural, transportation, and industrial applications. The manufacturing complex will use the hydrogen-rich fuel from the gasification unit with the majority of the CO2 removed to create nitrogen-based products with a lower carbon footprint than a facility for the manufacture of similar products using traditional fossil-fuel sources such as natural gas.

The primary source of GHG emissions from the proposed project is the combustion (oxidation) of the remaining carbon present in the hydrogen-rich fuel stream in the combined-cycle turbine. The GHG emissions resulting from the combustion of the hydrogen-rich fuel are limited, because this fuel has only 10 percent of the carbon from the raw syngas, with the remaining 90 percent captured in the CO2 stream, transported to OEHI for EOR and sequestration, as is explained later in this analysis. A secondary source of emissions will occur intermittently from the gasification block when captured CO2 needs to be vented during plant startups and shutdowns, or when the CO2 compression, transportation, or injection system is unavailable.

B. Project Purpose and Design

Generally, BACT is evaluated for the facility as proposed. It does not regulate the purpose or objective for the proposed facility. The PSD BACT requirements are not meant to be used to redefine the design of the source when considering available control alternatives. Therefore, it is important to clearly state the fundamental purpose and design of the proposed project. The discussion in this section is intended to describe the project objectives in order to provide perspective in determining the range of possible control alternatives that are considered in this BACT analysis, as well as some key project design features.

The purpose of the project is not merely the generation of electricity and nitrogen-based products. The following are key interrelated elements of the project design and purpose according to the applicant:

- Provide baseload electricity to help meet power needs.

- Enhance the production and availability of nitrogen-based fertilizer products.

- Mitigate impacts related to climate change by reducing average annual GHG emissions relative to those emitted from a conventional power plant and/or nitrogen-based product manufacturing facility by capturing, at a rate of 90 percent, and sequestering CO2.

- Use captured CO2 for EOR to produce additional oil reserves.

- Demonstrate advanced solid-fuel–based technologies and prove carbon capture and sequestration as a viable method for reducing the carbon footprint of power generation and manufacturing.

Each of these elements is critical to the objectives of the project and the design of the source. These are legitimate business goals, important to the project sponsors. They are not incidental, but essential project components. Key project features related to GHG emissions are described below.

Feedstock. Large amounts of petcoke are produced in California and exported overseas. Petcoke and coal are raw materials that are historically inexpensive (per British thermal unit [Btu]) and widely available in the U.S. A purpose of this project is to use these readily available traditional solid raw materials/fuels, and demonstrate their use for the generation of clean, low-carbon electricity.

Hydrogen. Hydrogen is one of the cleanest-burning fuels that can be combusted to generate electricity, especially with regard to GHG emissions. A number of demonstration projects employing similar technology have become operational; however, hydrogen use for this purpose has not yet been demonstrated in a large-scale application. The project promotes clean-fuel production and electricity generation, as well as reduction of GHGs through the use of low-carbon fuels. The proposed project will produce clean, gaseous, hydrogen-rich fuel, a key element of the proposed project.

EOR. The project is designed to remove and capture 90 percent of the carbon from the feedstock fuels (as is explained later in this analysis), prior to combustion in the turbine or use in the manufacturing of nitrogen-based products. The CO2 that is captured from the syngas will be used for EOR in the Elk Hills Oil Field (EHOF) in Kern County, California. This capture step is significant as a demonstration for U.S. Department of Energy (DOE) funding under their “Clean Coal Power Initiative,” as well as integral to the financial objectives of the project.

Part of DOE’s purpose, aim, and goals in supporting this project are: “to accelerate the development of advanced coal technologies with carbon capture and storage at

commercial-scale. These projects will help to enable commercial deployment to ensure the United States has clean, reliable, and affordable electricity and power."[49]

The HECA facility has been designed with the above objectives in mind. Other means of electrical generation, such as the construction of a conventional natural-gas combined cycle power plant, or a wind- or solar-generating facility, would not satisfy this project's fundamental business and technology demonstration goals.

The extent to which carbon capture reduces CO2 emissions from the facility is illustrated in the graph below. This figure represents the early operations or maximum permitted emissions. As shown, a substantial majority of CO2 generated from the gasification process during normal plant operations will be captured product. This product will be transported to OEHI and used for EOR, resulting in sequestration of the CO2; or used in urea production.

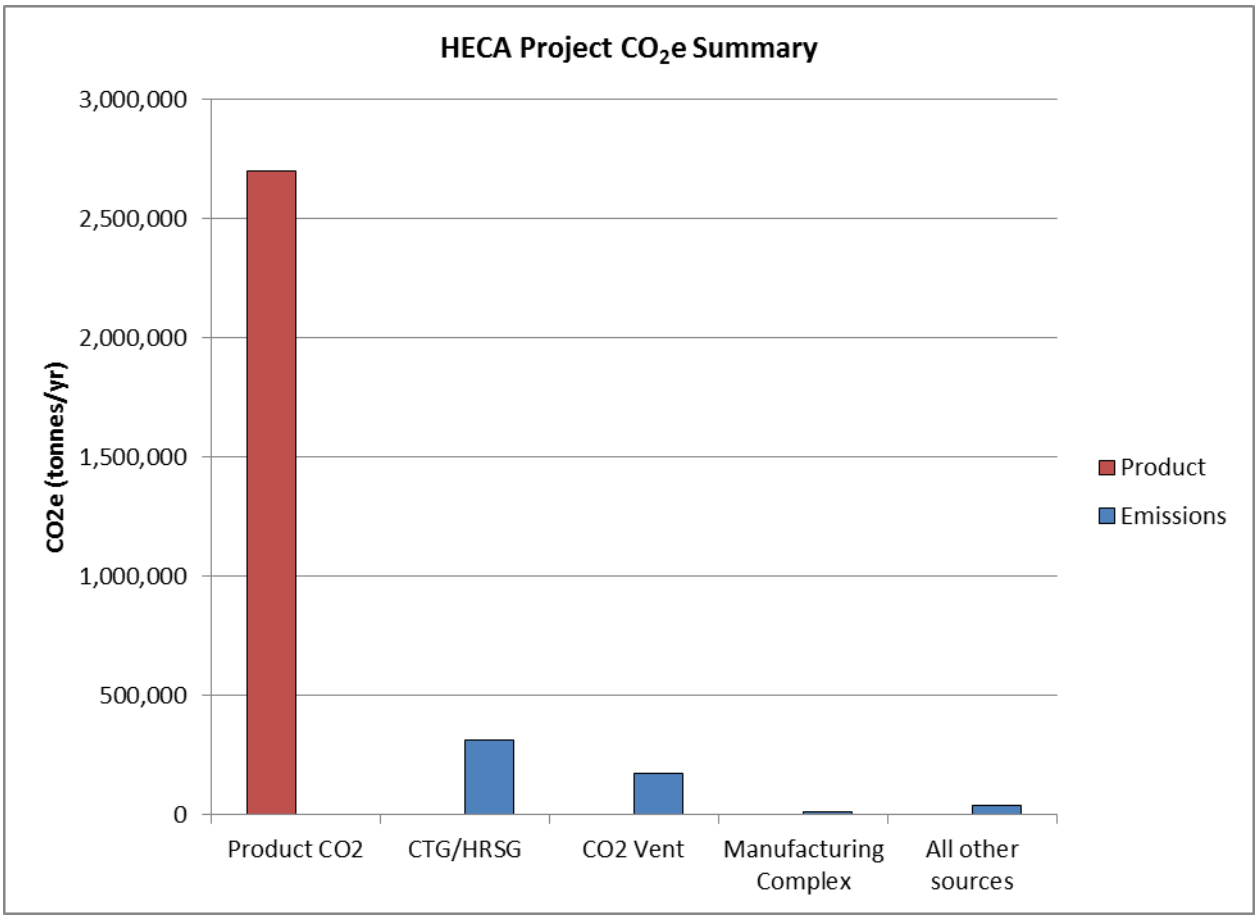

C. Overview of Emissions

[49] http://www.fossil.energy.gov/recovery/projects/ccpi.html .

The GHG emissions from the project will be predominantly from the turbine exhaust from the combustion of uncaptured carbon in the hydrogen-rich fuel or from venting of CO2 during startup and shutdown of the facility and when the CO2 compression, transportation, or injection system is unavailable (as is shown Table 1). Emissions from the proposed project are at their lowest when the entire gasification and hydrogen-production facility is operating, and the CTG and HRSG are operating on hydrogen-rich fuel. However, the CTG will need to fire on natural gas at times (during CTG startups, CTG shutdowns, or during periods of unplanned equipment outages).[50]

There are two factors that are important to a BACT determination for an IGCC/carbon capture and sequestration (CCS) project that directly affect the majority of the potential GHG emissions from such a facility:

- The amount of carbon in the combustion fuel to the turbine and HRSG
- The amount of carbon captured and sequestered from the gasification process as a percentage of the carbon in the syngas

The operation will capture 90 percent of the carbon in the raw syngas, a level which has not been achieved by any other power generation facilities. The removal of carbon, and its subsequent sequestration in EOR and use in the integrated fertilizer manufacturing complex, ensures that the generation of electric power and nitrogen-based products start from a very low carbon syngas, ultimately lowering the GHGs associated with the generation of these products.

GHG BACT is also proposed with the selection and operation of equipment units capable of combusting fuels that are inherently low in carbon content. The proposed project will achieve low GHG emissions by using hydrogen-rich fuel or Public Utilities Commission (PUC)-regulated natural gas as backup fuel to produce electricity. As shown in Table 5 in this analysis, both of these fuels are recognized as low in carbon content.

Although the GHG BACT will be based on the worst case scenario, which occurs during early operations, it should be noted that GHG emissions are expected to decrease during mature and steady-state operations. GHG emissions were estimated for three HECA operating scenarios, as described below:

- Early operations, which are expected to last approximately 2 years, during which time the availability of hydrogen-rich fuel will be approximately 65 to 75 percent. During this period, all sources are expected to be operated at

[50] Firing of the turbine on natural gas backup fuel will be limited to a maximum of 5 hr/yr during startup events, 10 hr/yr during shutdown events, and 336 hr/yr of unplanned equipment outages.

maximum operating conditions, including two plant startups and shutdowns. The CO2 vent is included with maximum permitted venting emissions of up to 504 hours at full capacity.

- Mature operations, which are expected to occur after the first 2 years of commercial operation, when the availability of hydrogen-rich fuel will be approximately 85 percent. At this stage, significantly less venting is expected to occur. Thus, CO2 vent emissions are estimated based on approximately 10 days of venting at 50 percent capacity (or 120 hours of venting at 100 percent capacity). All other sources are operated at maximum operating conditions, including two plant startups and shutdowns.

Table 1 in section I of this analysis presents the annual CO2e emissions from all stationary sources at the facility during the early operations phase, which represent the maximum total project annual CO2e emissions.

As is explained in section V.A of this evaluation, one of the methods to demonstrate the GHG efficiency of the project that has been proposed is the use limiting the CO2 emissions associated with the combustion turbine generator as measured by the standards set forth by the California Senate Bill (SB) 1368 Greenhouse Gases Emission Performance Standard. SB 1368 requires a standard of 1,100 pounds CO2 per megawatt hour (lb/MWh) for publicly-owned utilities.[51] That standard calculates the GHG emissions and electricity production following CEC's "Regulations Establishing and Implementing a Greenhouse Gases Emission Performance Standard for Local Publicly Owned Electric Utilities". Although such standard is not a SJVAPCD requirement, in order to help demonstrate compliance with GHG BACT requirements, section V.A of the evaluation will limit CO2 emission to 400 lb-CO2/MWh for the combustion turbine generator as one of the various requirements to demonstrate with the GHG BACT.

Table 2 below shows compliance with the proposed limit. The early, worst-case, potential emissions are less than one-half of those from a typical natural-gas combined cycle power plant. In summary, the project's GHG emissions will be well below both the 1,100 lb CO2/MWh threshold requirement of SB 1368, and the New Source Performance Standards of 1,000 lb-CO2/MWh threshold proposed by EPA.[52]

[51] http://www.energy.ca.gov/emission_standards/documents/sb_1368_bill_20060929_chaptered.pdf
[52] USEPA, Standards for Performance for Greenhouse Gas Emissions for New Stationary Sources: Electric Utility Generating Units, 40 CFR 60, April 13, 2012.

Table 2: HECA Annual CO2 Emissions for SB1368 Emission Performance Standard	
Operating Parameters	**Early Operations (Maximum Permitted)**
Natural Gas Operation, hours per year	351
Hydrogen-rich Fuel Operation, hours per year	8,108
Intermittent CO_2 Venting, hours per year	504
Electricity Generated, MWh	2,699,860
Source	**CO2 Emissions (Metric Tonne/year)**
CTG/HRSG Hydrogen-Rich Fuel and PSA Off-gas	171,953 + 11,036 + 86,163 = 269,182
CTG/HRSG Natural Gas	44,610
CO_2 Vent	174,113
Fugitives	38
Total CO2 Annual Emissions (tonne)	**487,943**
CO2 lb/MWh	398.5

Notes:
- 1 metric ton (tonne) = 2,205 lb
- Early operations maximum permitted emissions include 2 periods of startup and shutdown, natural gas use in the CTG and 504 hours of CO2 venting.
- The fugitive CO_2 emissions are from all process areas, therefore overestimate the emissions from the sequestration process.

D. Project Design Features Relevant to GHG BACT

This section discusses some of the overall process design features of the proposed project that will help minimize the proposed facility's GHG emissions.

The MHI oxygen-blown dry-feed gasification technology was identified as the best fit to meet the specific requirements of the project, and to meet key decision criteria, including the lifecycle cost of electricity and reducing technology risk through demonstrated commercial operation with similar feedstock (petcoke and coal), at similar capacity and operating conditions. As part of the design evaluation, the applicant evaluated other gasification technologies, including those of Shell, ConocoPhillips, and General Electric (as explained later in section V.A).

The Mitsubishi's MHI 501 GAC® syngas turbine for this project was selected due to its higher efficiency. MHI's oxygen-blown dry-feed design was chosen because it is more thermally efficient than slurry feed, and the system has been proven to be reliable and economic. Further information on the efficiency of this turbine relative to other turbines that were considered is presented in the energy-efficient turbine discussion in the Top Down BACT Analysis for combined cycle power generating system (S-7616-26-0).

Additionally, the facility proposes to increase its energy efficiency by incorporating heat integration into the process design. Significant heat is generated by the gasification process, and several other plant exothermic chemical reactions. This heat is integrated with, and reused in, other processes that require energy. A significant amount of this heat is used to generate steam at multiple pressure levels. This steam satisfies the requirements of the gas processing units and other users, with the excess steam sent to the power block for electricity generation.

The following outlines the processes from which heat is recovered and reused for the proposed project:

- Heat is recovered from the gas turbine exhaust and used to generate steam in the HRSG. This steam is primarily used to generate power in the steam turbine generator (STG). A portion of the HRSG flue gas is used to dry the coal and petcoke feedstock upstream of the gasifier unit, instead of using process steam or fuel in a fire heater.

- Heat is recovered from the gasifier by generating steam in the syngas cooler. This steam is used as a source of hydrogen for the gasifier and the shift unit, and also to generate power in the STG.

- Heat is recovered as steam from the shift reaction and recycled to provide hydrogen for the shift reaction. Additional recovered steam and hot water in the shift unit are used for stripping steam, Rectisol® solvent regeneration, boiler feed water heating, syngas heating, and also to generate power in the STG.

- Heat is recovered from the ammonia unit and used to generate steam. This steam provides heat for the urea process and hydrogen for the shift unit.

- Heat is recovered from the UAN unit and used to generate steam. This steam is used to provide hydrogen for the shift unit.

- Heat is recovered from the urea unit and used to generate steam. This steam is used to generate power in the STG.

- Heat is recovered from the sulfur recovery unit (SRU) and used to generate steam. This steam is used mainly in the Rectisol® unit for solvent regeneration and other purposes.

- PSA off-gas is recovered and used as duct-burner fuel to generate additional steam in the HRSG. This steam is used to generate power in the STG.

Furthermore, below are the principle uses of the steam generated from the recovered heat:

- Steam is used for power generation in the steam turbine generator.
- Steam is added to the syngas in the gasification process, a main source of hydrogen for syngas.
- Steam is added to the syngas to enable the water-gas shift reaction, thereby generating more hydrogen while converting CO to CO2, to facilitate CO2 removal from the syngas for sequestration.
- Steam is added to process streams and used for heating in the air separation unit, the urea unit, the acid gas removal unit, the sour water strippers, and water treatment area.

The proposed HECA design features described above are consistent with the major GHG BACT criteria specified in the EPA regulations and guidance; that is, energy efficiency through an integrated facility design that promotes capture and reuse of waste heat in many areas, energy efficiency for major plant processes, and energy efficiency as a criterion for selection of individual equipment. Adoption of this design will enable HECA to produce electricity, a CO2 stream for EOR/sequestration, and nitrogen-based products on a scale that would otherwise be possible only with substantially higher GHG emissions to the atmosphere

III. GHG BACT Background

A. GHG BACT Applicability

The proposed facility constitutes a new major PSD source. The project CO2e emissions are estimated to be approximately 596,000 tons per year as shown in Table 1 in this analysis. Therefore, Rule 2410 is applicable and GHG BACT will apply to the proposed project.

B. GHG BACT Selection

1. EPA Guidance

The requirement for BACT for GHG emissions is relatively new, only becoming applicable to new projects beginning in January 2011. Therefore, there is little precedent as to what has been deemed acceptable as GHG BACT for many source categories. However, USEPA has issued several guidance documents to assist in development of appropriate GHG BACT analyses for facilities with some equipment and processes in common with HECA. These include:

- *PSD and Title V Permitting Guidance For Greenhouse Gases*, USEPA Office of Air and Radiation, originally proposed in November 2010, updated March 2011 [53]

- *Available and Emerging Technologies for Reducing Greenhouse Gas Emissions from Industrial, Commercial, and Institutional Boilers*, USEPA Sector Policies and Programs Division, Office of Air Quality Planning and Standards, October 2010 [54]

- *Available and Emerging Technologies for Reducing Greenhouse Gas Emissions from the Nitric Acid Production Industry*, USEPA, Office of Air and Radiation, December 2010 [55]

In addition, EPA has published preliminary comments to GHG BACT analyses and that are submitted by states at: http://www.epa.gov/nsr/ghgcomment.html.

These sources, other applications, and draft permits were reviewed to identify the appropriate strategies and control technologies to be included in a GHG BACT. Based on EPA guidance and determinations to date, the major points of evaluation that should be addressed in a GHG BACT analysis include:

- **Equipment energy efficiency.** As stated in page 21 of the EPA March 2011 guidance, EPA believes it is important to evaluate the overall energy efficiency of the source. In general, a more energy-efficient technology burns less fuel than a less energy-efficient technology to achieve the same output. Thus, considering the most energy-efficient technologies helps reduce the products of combustion, both GHGs and criteria pollutants.

- **Process GHG efficiency.** Traditionally, BACT has been evaluated on an emission-unit by emission-unit basis. With GHGs, EPA is further requiring that the overall efficiency of a facility be evaluated.[56] For example, the proposed project's main GHG efficiency will occur through the capture and storage of 90 percent of the CO2 from the raw syngas, plus the designed heat integration of the total facility. The more energy-efficient the process, the less energy will be required, resulting in less GHG emissions.

[53] http://www.epa.gov/nsr/ghgdocs/ghgpermittingguidance.pdf
[54] http://www.epa.gov/nsr/ghgdocs/iciboilers.pdf
[55] http://www.epa.gov/nsr/ghgdocs/nitricacid.pdf
[56] *PSD and Title V Permitting Guidance For Greenhouse Gases*, USEPA Office of Air and Radiation, originally proposed in November 2010, updated March 2011, p. 23.

Also, according to *PSD and Title V Permitting Guidance For Greenhouse Gases,* for new sources triggering PSD review, the Clean Air Act (CAA) and EPA rules provide discretion for permitting authorities to evaluate BACT on a facility-wide basis by taking into account operations and equipment which affect the performance of the overall facility. The term "facility" and "source" used in applicable provision of the (CAA) and EPA rules encompass the entire facility and are not limited to individual emission units.

- **Emission limits.** EPA has stated in various comment letters that they expect total CO2e per year emission limits on all permitted sources. In many cases, this limit is set to the full potential to emit of the unit. Nonetheless, it is an imposed emission limit, and the associated monitoring, recordkeeping and reporting requirements are imposed to ensure compliance with the limit.

  Thus, following each summary of the BACT requirement for each of the principal units, there is a discussion of how the GHG emission limits or BACT requirements will be demonstrated.

- **Potentially applicable controls.** EPA is expecting an evaluation of each potentially applicable control measure. This includes switching to a less carbon-intensive fuel, energy efficiency measures (as discussed above), and for the largest sources, add-on controls such as carbon capture and sequestration. However, EPA expects energy efficiency measures (specific to the source under review) to be the predominant resultant BACT determination. For example, to date it is not known of any facilities that have been required to use any add-on controls as GHG BACT.

- **More thorough review for larger sources.** At most facilities, a few types of emissions units within a facility typically result in the vast majority of the GHG emissions. Although BACT is required for all sources of a pollutant under PSD review, the level of detail of the analysis is typically scaled proportional to the magnitude of the emissions. In the GHG BACT analysis for projects such as this one, small emission sources such as the infrequently used emergency engines typically require minimal discussion compared to the larger sources of GHG emissions.

IV. Top Down BACT Process

The top down process calls for all available control technologies for a given pollutant to be identified and ranked in descending order of control effectiveness. The applicant should first examine the highest-ranked option. The top-ranked options should be established as BACT unless the applicant demonstrates to the satisfaction of the permitting authority that technical considerations, or energy, environmental, or economic impacts justify a conclusion that the top-ranked technology is not "achievable" in that case. If the most effective control strategy is eliminated in this fashion, then the next most effective alternative should be evaluated, and so on, until an option is selected as BACT.

The five-step BACT evaluation process is as follows:

Step 1: Identify all available control technologies.
Step 2: Eliminate technically infeasible options.
Step 3: Rank remaining control technologies.
Step 4: Evaluate most effective controls and document results.
Step 5: Select the BACT.

The top down BACT analyses for the units emitting GHG at the facility follow.

V. Top Down BACT Analyses

A. Top Down BACT Analysis for Combined Cycle Power Generating System (S-7616-26-0)

As stated earlier in this analysis, the project is designed to generate electricity through the combustion of low-carbon fuel in a combustion turbine generator. After removal of the majority of the carbon from the syngas in the acid gas recovery (AGR) system, the project combustion turbine will fire a hydrogen-rich fuel to generate electricity. Natural gas serves as a backup fuel to allow continuing export of electrical power when hydrogen-rich fuel is not available, and during startup or shutdown[57]. Excess heat in the turbine exhaust will be recovered as steam in the HRSG and used to generate additional electricity with a steam turbine in combined-cycle mode. Produced power will be used on-site to meet the facility's internal load, routed to the manufacturing complex for nitrogen-based product manufacturing, and exported to the electrical grid. Net electrical generation will be approximately 300 MW. A portion of the HRSG flue gas will be used to dry the coal and petcoke, and this exhaust stream will be emitted from the feedstock dryer stack. The following analysis discusses the GHG emissions generated from the CTG/HRSG and the interconnected feedstock dryer.[58]

Step 1: Identify all available control options.

The following technologies have been identified as possible GHG emission controls for this source:

1. Capture of 90% of the pre-combustion CO2 through carbon capture and sequestration (CCS) and firing on hydrogen-rich fuel
2. Energy-efficient turbine design
3. Post-combustion CO2 capture and sequestration (CCS)
4. Firing on natural gas backup fuel limited to startups, shutdowns, and unplanned equipment outages

Each of these control options and their feasibility for this project are discussed below.

[57] Firing of the turbine on natural gas backup fuel will be limited to a maximum of 5 hr/yr during startup events, 10 hr/yr during shutdown events, and 336 hr/yr of unplanned equipment outages.

[58] During normal operation of the CTG/HRSG and some phases of the startup and shutdown activities, a portion of the treated HRSG flue gas will be diverted to the feedstock drying system, filtered through a baghouse, then exhausted from the feedstock dryer stack. As a result, the emissions from the HRSG and feedstock dryer stacks are interconnected.

1. Capture of 90% of the pre-combustion CO2 through carbon capture and sequestration (CCS) and firing on hydrogen-rich fuel

CO2 is a product of combustion generated by carbon-containing fuel. Virtually all the carbon in a fuel becomes CO2 in the combustion exhaust. Therefore, fuels that have lower carbon content, relative to their overall heating value, emit less CO2. The proposed project generates syngas from coal and petcoke feedstock, and removes 90 percent of the carbon (as explained later in this section) to generate a hydrogen-rich fuel, with a lower carbon content, which is then used to fuel the turbine. The plant will be designed to capture 90 percent of the carbon in the total syngas flow, which will exceed the capture proposed for similar facilities, as discussed below.

There are currently two existing operational IGCC facilities in the United States: Duke Energy, Wabash River Generating Station in West Terre Haute, Indiana; and Tampa Electric Company, Polk Power Station in Mulberry, Florida—neither facility employs pre- or post-combustion CCS.[59]

Of the recently permitted IGCC facilities, the Summit Texas Clean Energy Project IGCC Facility in Odessa, Texas, claims that 90 percent of the CO2 in the syngas will be captured for CCS in EOR.[60] For the Taylorville Energy Center near Taylorville, Illinois, there is no requirement for pre- or post-combustion CCS, and the Illinois Environmental Protection Agency determined that "there is no basis for concluding the BACT limit for carbon capture should be 90 percent, which is wholly arbitrary and not supported by material in the record."[61]

The Hyperion Energy Center and the South Dakota Department of Environment and Natural Resources both agreed that CCS was not BACT because it was not feasible due to high costs. The Hyperion Energy Center will use imported solid fuels (petcoke and/or coal) to generate power in its operating "maximum coke design" scenario. The Indiana Gasification Project in Rockport, Indiana, which will generate synthetic natural gas from Illinois coal, is proposing to capture 90

[59] CCS in EOR is not identified in the operating permit for the Wabash River Generating Station, Section A, Source Summary, http://permits.air.idem.in.gov/24473f.pdf, nor is it identified in the PSD document for Polk Power Station, Section 1.1, Introduction, http://www.dep.state.fl.us/air/emission/construction/polk/psd-1.pdf .

[60] Texas Clean Energy Project Final EIS, Volume 1, Chapter 3, Section 3.3.4.4, Greenhouse Gases, http://www.netl.doe.gov/technologies/coalpower/cctc/EIS/final%20eis%20pdf/TCEP%20FEIS%20V1%20Chapter%203.pdf .

[61] Illinois Environmental Protection Agency, Bureau of Air Permit Section, Responsiveness Summary for Public Questions and Comments on the Construction Permit Application from Christian County Generation for the Taylorville Energy Center in Taylorville, Illinois, April 2012, p. 131, http://www.epa.state.il.us/public-notices/2011/christian-county-generation/responsiveness-summary.pdf .

percent of the CO2 from the SNG, although only 80 percent of that CO2 will be used in EOR and ultimately sequestered, while the remainder will be vented.[62]

Thus, the 90 percent CO2 capture rate that the applicant proposes meets or exceeds other similar facility capture rates when CO2 capture has been proposed. DOC conditions will require that the capture of 90 percent of the pre-combustion CO2 through carbon sequestration shall be demonstrated by monitoring the flow rate and carbon content in the captured CO2 stream and the flow and carbon content of the hydrogen-rich fuel combusted in the CTG/HRSG. Thus, the proposed capture and sequestration significantly reduces GHG emissions over other IGCC facilities that do not sequester CO2.

A portion of clean, hydrogen-rich fuel from the acid gas recovery (AGR) unit will be sent to the pressure swing adsorption (PSA) unit to generate a high-purity hydrogen gas stream for use as a feedstock to the ammonia synthesis unit. The offgas from the PSA unit will be compressed and sent to the HRSG for use as duct-burner fuel. The combustion turbine exhaust gas, supplemental hydrogen-rich fuel for duct-firing, and PSA offgas for duct-firing are used as energy input into the HRSG. Typical compositions of the hydrogen-rich fuel stream and PSA off-gas at HECA are shown in the table below. These low fuel-carbon levels represent the practical limits feasible for use in the proposed turbine and duct burners.

---

[62] Hyperion Energy Center, BACT Analysis for Emissions of Carbon Dioxide, March 2009, Section 3.4; Step 4- Evaluate More Effective Control Options, and Appendices A and B, a copy is found at: http://yosemite.epa.gov/oa/eab_web_docket.nsf/Filings%20By%20Appeal%20Number/3FCA842905FE83E78525771A0060F6A3/$File/Exhibit%2035%20CO2%20BACT%20Analysis...3.19.pdf . See also Statement of Basis, Construction Deadline Extension Request for the PSD Permit #28.0701-PSD Hyperion Energy Center, South Dakota Dept. of Environment and Natural Resources, Section 5.6.1; GHG BACT for Process Heaters. http://denr.sd.gov/Hyperion/Air/20110214sb.pdf .

For use of solid fuels, see attached Hyperion Energy Center PSD Permit Application, December 2007, Section 2.1.2; IGCC Power Plant Overview, Page 7, and Section 2.3.1, Feedstock Receiving, Storage, and Preparation, Page 21. http://denr.sd.gov/Hyperion/Air/20071220HyperionApplication.pdf

On page 784 of the document Notice of Public Comment Period for PSD Permit, full venting with no CO2 capture is 6.43 million tons/year and when 80% will go for EOR 1.29 million tons/year is vented. On page 785 of the document "the AGR unit will remove at least 90% of the CO2 in the syngas for liquefaction and sale." http://permits.air.idem.in.gov/30464d.pdf

Table 4: Typical Syngas Fuel Composition		
Component	**H2-rich fuel mole (%)**	**PSA off-gas mole (%)**
Hydrogen	83.8	23.8
Carbon monoxide	1.9	9.1
Carbon dioxide	1.5	7.1
Methane	1.1	5.0
Nitrogen	11.6	54.4
Argon	0.1	0.6
Source: HECA, 2012.		

The proposed HECA fuel treatment process constitutes pre-combustion carbon capture. The use of this process reduces the carbon content of the fuel to the combustion turbine/HRSG, and results in exceptionally low GHG emissions compared with comparable equipment using conventional fossil-fuels levels. The project will capture 90 percent of the carbon in the syngas whenever the gasification system is operating. The captured carbon will be sold as CO2 for EOR, resulting in sequestration, and therefore will not be emitted to the atmosphere. Due to the close proximity of a buyer for the CO2 product for EOR, pre-combustion carbon capture resulting in sequestration is a feasible option for the proposed project.

In addition to the use of hydrogen-rich fuel, the turbine will also be capable of firing on natural gas as a backup fuel (during startups, shutdowns, or during unplanned equipment outages). The project needs the flexibility to fire on natural gas for periods when the gasification system is shutdown or upset, and for facility startups and shutdowns. Natural gas also has lower-carbon content relative to most other fossil fuels.

The table below illustrates CO2 emission factors for a variety of conventional fuels, compared to the fuels proposed for this project.

Table 5: CO2 Typical Emission Factors from Stationary Combustion Sources by Fuel	
Fuel	**lb-CO2/MMBtu**
Petroleum coke [a]	225
Coal [a]	210
Distillate oil [a]	161
Natural gas [b]	116
HECA H2-rich fuel and PSA off-gas [c]	25

Notes:
a. U.S. Energy Information Administration, http://www.eia.doe.gov/oiaf/1605/coefficients.html
b. Project estimates (includes only CO2 in HRSG exhaust stream for the combination of hydrogen-rich fuel and PSA off-gas expected to be used annually)
c. HECA, 2012.

As the CO2 emission factors in the table above indicate, the hydrogen-rich fuel and PSA off-gas will result in lower CO2 emission rates than units using other conventional fossil fuels. Although coal and petcoke cannot be used directly in the HECA combustion turbine, their comparison helps further illustrate how the project's conversion of these solid fuel feedstocks to an inherently low-carbon, hydrogen-rich fuel allows these solid fuels to be used in a way that results in less GHG emissions. The flexibility to use natural gas as a backup fuel, the lowest-carbon conventional fossil fuel, is important to improve the availability and reliability of the proposed facility.

As shown in Table 2 in this analysis, the maximum CO2 power-related emissions, including emissions from natural-gas operation, startup, shutdown, and CO2 venting, would be approximately 400 lb/MWh during early operations, and upon completion of the early operations, these CO2 emissions will decrease. These early, maximum emissions are less than one-half of those from a typical natural gas combined-cycle power plant, and approximately one-sixth to one-tenth of those from pulverized coal power plants.[63]

Therefore, the use of low-carbon, hydrogen-rich fuel, with 90 percent of carbon removed, and natural gas as a backup fuel is an effective method of reducing CO2 emissions. It is technically feasible and is inherent to the design of the proposed facility.

[63] The typical performance of a natural gas combined cycle turbine is 1000 lb CO2/MW-hr, as described in 40 CFR Part 60, Standards of Performance for Greenhouse Gas Emissions for New Stationary Sources: Electric Utility Generating Units (http://www.epa.gov/ttn/atw/nsps/electric/fr13ap12.pdf).
The Department of Energy report "Carbon Dioxide Emissions from the Generation of Electric Power in the United States", July 2000, states that in 1999 coal plants in the US emit up to 2215 lb CO2/MW-hr. (ftp://ftp.eia.doe.gov/environment/co2emiss00.pdf).

2. Energy-efficient turbine design

Another key component for reducing CO2e emissions is energy efficiency. Because CO2 emissions are directly related to the amount of fuel fired, the more efficient the combustion process, the lower the fuel quantity required, and the lower the GHG emissions that result.

Combined-cycle combustion-turbine generators use an inherently energy-efficient design. A typical configuration is the use of a combustion turbine to generate electricity, with the waste heat in the exhaust used to generate steam in the HRSG. This steam is then expanded in a steam turbine to generate additional electricity.

The proposed MHI 501 GAC® turbine for this project includes operation on both hydrogen-rich fuel and natural gas as backup fuel. The MHI G-Class turbines have been among the best for economic, efficient, reliable, clean power generation for many years, and MHI has continued to evolve its "G" class technology, with the performance of the current 501 GAC® improved compared with its predecessor. Although this will be the first commercial application of this turbine in hydrogen-rich fuel service for electricity generation, the operating experience of the MHI G-Class turbines in conventional natural-gas combined-cycle service and the MHI 701DA in the Fukushima demonstration IGCC project are key to its selection by the applicant for this project.

GE and Siemens offer F-class hydrogen gas turbines, and their offers are expected to be approximately 2 percent less efficient compared to the MHI 501 GAC® hydrogen-rich turbine, because the G-class turbine is a newer, more-efficient design.[64] The applicant contacted vendors to determine available turbines for hydrogen fuel service. They found that next-generation turbines such as J-Class turbines are not available for the project, because they have not been offered by turbine suppliers for hydrogen-rich fuel. HECA is using the most efficient turbine currently offered by vendors for hydrogen-rich fuel service.

Because the proposed system is designed to optimize IGCC heat integration on hydrogen-rich fuel, operation of the CTG/HRSG using the alternate natural-gas fuel will be somewhat less efficient than a typical natural-gas combined-cycle application. Nevertheless, the specific turbine system is designed specifically for, and required for, the primary operation of the facility—an IGCC with hydrogen-rich fuel.

[64] *Gas Turbine World*, January-February 2012 issue, pp. 28-33.

3. Post-combustion CO2 capture and sequestration (CCS)

The project provides pre-combustion carbon capture and sequestration. As a result, the exhaust stream from the proposed combustion turbine, when firing the hydrogen-rich fuel, will have substantially lower CO2 content than standard fossil fuels. The lower exhaust CO2 content makes "post-combustion" CO2 capture considerably less practical and less achievable than for a high-CO2 stream. The capture of the CO2 from the turbine exhaust is significantly more difficult than in the pre-combustion synthesis gas stream for two predominant reasons: low concentration and low pressure.

Lower concentrations and low pressures mean that a very large volume of gas needs to be treated in order to recover each pound of CO2. This fact is even more relevant for the proposed HECA turbine when firing its primary fuel, hydrogen-rich syngas. These same process factors decrease the driving force for the CO2 to be adsorbed into a solvent. Low-pressure systems entail higher energy demands because solvents designed to absorb significant CO2 at low pressures are difficult from the standpoint of subsequent desorption to regenerate and reuse the solvent. Also, a low-pressure absorption system would create a low-pressure CO2 stream, which would require even greater energy demand for compression to transport the CO2 for EOR.

Post-combustion carbon capture is a relatively new concept and is still in the developmental phase and not yet widely practiced—and never on a hydrogen-rich fuel-combustion turbine exhaust. At the Florida Power and Light natural gas power plant in Bellingham, Massachusetts, a post-combustion carbon capture system called an Econamine FG process was operated from 1991 to 2005. Although the Econamine process claims it can capture CO2 from turbine exhaust with low CO2 and high oxygen concentrations, the CO2 content of the natural-gas exhaust stream is approximately 10 times higher than the hydrogen-fuel exhaust at HECA.[65] The hydrogen-rich exhaust stream for the HECA project has an extremely low CO2 content.

Although chemical solvent/scrubbing systems have been used commercially at some industrial facilities, the implementation of post-combustion CO2 capture systems with this combustion turbine is not considered a commercially available option at this time. No potentially viable technology systems have been tested in post-combustion service at a scale similar to that of the proposed turbine exhaust stream. Developments are generally at an early stage, and the risks to successful commercialization are still high.

[65] See HECA Amendment to the AFC Appendix E-6, page 4 of 15. The natural gas GHG emission factor is 116.98 lb/MMBtu, and the hydrogen-rich syngas emission factor is 17.7 lb/MMBtu.

Although post-combustion carbon capture has been conducted for natural gas turbines on a limited, trial basis, HECA intends to use natural gas only as a backup fuel (only during startups, shutdowns, and during unplanned equipment outages when hydrogen-rich fuel is unavailable) for the turbine. Thus, the extremely limited operations with natural gas would not justify the cost of post-combustion carbon capture.

The fact that the HECA facility will have a Rectisol® acid gas removal (AGR) system and a commercial outlet for captured CO2 does not sufficiently improve the feasibility of carbon capture and sequestration for post-combustion systems. Rectisol® would not be capable of capturing CO2 in the low-pressure turbine exhaust. Rectisol® only works in very high-pressure systems where the high partial pressure of the CO2 allows it to be physically captured by the solvent.

No recently permitted IGCC facilities propose the use of post-combustion capture and sequestration. Based on the lack of any commercial demonstrations of carbon capture on a hydrogen-rich fuel turbine exhaust, the very low concentrations of CO2 in the turbine exhaust when firing the primary fuel, and the limited secondary natural gas fuel usage, post-combustion CO2 capture for the turbine is deemed technically infeasible. Thus, this technology can be removed from consideration.

4. Firing on PUC-quality natural gas backup fuel limited to startups, shutdowns, and unplanned equipment outages

Firing on the backup natural gas fuel is necessary during startup and shutdown of the combustion turbine, and during periods of unplanned gasification equipment outages for up to 336 hours per year (equivalent to 2 weeks per year) when hydrogen-rich fuel is unavailable. Because only two facility startups and shutdowns are planned per year, emissions from all sources will be minimized by limiting the number and hours of plant startups and shutdowns. DOC conditions will provide such limits. GHG emissions during startup and shutdown are based on the amount of fuel burned; thus, minimizing the duration of these events will minimize the GHG emissions. Natural gas usage in the turbine is based on a total of 15 hours in startup and shutdown mode per year, plus 336 hours of normal turbine operation, with no natural-gas duct firing.[66]

[66] Firing of the turbine on natural gas backup fuel will be limited to a maximum of 5 hr/yr during startup events, 10 hr/yr during shutdown events, and 336 hr/yr of unplanned equipment outages.

Step 2: Eliminate technically infeasible options.

As is explained in Step 1 above, post-combustion carbon capture and sequestration can be eliminated as technically infeasible.

Step 3: Rank remaining control options.

The most effective remaining control options for the reduction of GHG emissions are listed below in the order of effectiveness:

1) Capture of 90% of the pre-combustion CO2 through carbon sequestration and firing on hydrogen-rich fuel
2) Energy-efficient turbine design
3) Firing on PUC-quality natural gas backup fuel limited to startups, shutdowns, and unplanned equipment outages

Step 4: Evaluate most effective controls and document results.

All of the controls identified in Step 3 are proposed as GHG BACT. Therefore, there is no need to evaluate the effectiveness of these options further. GHG BACT for this source will be all of the following:

- Capture of 90% of the pre-combustion CO2 through carbon sequestration and firing on hydrogen-rich fuel
- Energy-efficient turbine design
- Firing on PUC-quality natural gas backup fuel limited to startups, shutdowns, and unplanned equipment outages

Step 5: Select BACT.

The following controls will be required as GHG BACT:

- Capture of 90% of the pre-combustion CO2 through carbon sequestration and firing on hydrogen-rich fuel
- Energy-efficient turbine design
- Firing on PUC-quality natural gas backup fuel limited to startups, shutdowns, and unplanned equipment outages

DOC conditions will require that the capture of 90 percent of the pre-combustion CO2 through carbon sequestration shall be demonstrated by monitoring the flow rate and carbon content in the captured CO2 stream and the flow and carbon content of the hydrogen-rich fuel combusted in the CTG/HRSG. The installation of proposed energy-efficient turbine model will be specified on the DOC. Additionally, firing on

PUC-quality natural gas will be required as backup fuel, and such operation will be limited to startups, shutdowns, and unplanned equipment outages.

Emissions from the low-carbon fuel used in the CTG/HRSG shall also be demonstrated through compliance with SB 1368 (Greenhouse Gases Emission Performance Standard), whereby HECA will calculate the CO2 emissions per MWh from power production to compare against the Emission Performance Standards of 1,100 lb/MWh. The maximum CO2 power-related emissions, based on the SB 1368 calculation methodology, will be limited to 400 lb/MWh.

Therefore, compliance with this BACT requirement is expected.

B. Top Down BACT Analysis for CO2 Recovery and Vent System (S-7616-24-0)

In addition to removing sulfur from the syngas, the plant's acid gas removal (AGR) system will capture 90 percent of the carbon in the raw syngas during steady-state operation, and separate it into a high-purity CO2 product stream. This CO2 stream is an important product of the facility. A portion of the captured CO2 will be used in the production of urea, and the majority will be compressed and transported by pipeline to the customer, OEHI, which will use it for EOR in the nearby existing Elk Hills Oil Field (EHOF), resulting in sequestration. The proposed project site was selected in part due to its close proximity to EHOF. The sale of this product for use in EOR is important to the project economics, and sequestration in connection with EOR is an inherent part of the basic design purpose of this project.

Because the CO2 product from this facility is an inherent part of the project's economics, the plant will be designed to provide reliability of the purification and compression facilities needed to deliver it to the transfer point for use by OEHI. However, it is not possible to guarantee 100 percent availability of the pipeline and EOR systems. The CO2 stream will need to be vented during breakdowns, malfunctions, and/or upsets, such as outages of the CO2 compressor or pipeline; or when OEHI is unable to accept the CO2 stream, and during gasifier startup and shutdowns as detailed in the table that follows. The CO2 vent exhaust stream will be nearly 100 percent CO2, with small amounts of other compounds such as CO, VOCs, and H2S.

Approximately 2.6 million tonnes/yr of CO2 will be transported and sold to OEHI. The sale of this stream for EOR and sequestration provides long-term geological storage of the CO2, while also increasing the oil production at EHOF.

Venting duration will be limited to 504 hours per calendar year (equivalent to a total of 21 days), which is based on the types of events that could occur over any 1-year period during early operation: (A) gasification block cold startups; (B) unplanned outages of the CO_2 compressor; (C) unplanned outages of the CO_2 pipeline; and (D) CO_2 off-taker unable to accept. The scenarios shown in the table below were developed by the applicant to provide a conservative estimate of the venting emissions that may be required during the early operations and mature operations. Safe operation of the HECA project is a key factor in considering whether to shut down the gasifier during short, unplanned CO_2 transportation system events. Shutting down the entire gasification block and restarting it increases the risk of upsets, and must be considered when evaluating whether to vent CO_2 or shut down the gasification block.

Table 6: Venting Scenarios				
Scenario for Early Operation				
	Event	**Events per yr**	**Duration or Time to Repair (days per event)**	**Duration of CO_2 Vent Operation (days/year)** [67]
A	Cold Gasification Block startup	2	3	6
B	CO_2 Compressor unplanned outage	4	2	8
C	CO_2 Pipeline unplanned outage	1	1	1
D	CO_2 off-taker unable to accept	2	3	6
Total Days:				21
Source: HECA, 2012.				

The CO2 compressor will use power generated by the CTG/HRSG, so no additional GHG emissions are associated with this source. The flow rate during these periods of venting will be measured and will be included in the HECA overall recordkeeping requirements under the project's applicable CEC and DOC.

This section of the BACT analysis discusses potential controls for the CO2 vent stream during the intermittent periods when the CO2 product stream cannot be delivered to OEHI.

Step 1: Identify all available control options.

As explained above, the vent stack will allow for infrequent venting of produced CO2 when the CO2 EOR injection system is unavailable or unable to export due to breakdowns, malfunctions, and/or upset conditions; or during gasifier shutdowns and subsequent restarts. The CO2 vent exhaust stream will consist mostly of CO2, with trace levels of certain criteria pollutants and other compounds.

The following technologies have been identified as possible GHG emission controls for this source:

1. Minimize venting of CO2 stream (when injection system is unavailable due to upset condition with such cumulative periods not exceeding 504 hours per calendar year) and good operating practices of the compression and transportation system

[67] The flow rate of CO2 during venting will vary depending on the operations at the manufacturing complex and power block. Venting is expected to occur at 50 to 85 percent of the maximum designed CO2 venting rate.

2. Storage of the CO2 stream in tanks or vessels (when injection system is unavailable due to upset condition with such cumulative periods not exceeding 504 hours per calendar year).

Each of these control options and their feasibility for this project are discussed below.

1. Minimize venting of CO2 stream and good operating practices of the compression and transportation system

GHG emissions from this source are proposed to be controlled by limiting venting to periods when the compression and transportation systems are unavailable and during gasifier startups and shutdowns, with such time not to exceed 504 hour per calendar year (equivalent to 21 days, with scenarios itemized in the venting scenarios table above).

Additionally, the use of good operating practices will minimize interruptions to the compression and transportation systems. These practices include regular maintenance of the compression and transportation system. According to the applicant, efforts to assure a high reliability include selection of a compressor with a proven record in similar service, and selection of the Rectisol® acid gas removal technology, which has been in use for decades in facilities worldwide.

2. Storage of the CO2 stream in tanks or vessels

For periods when the pipeline cannot receive the CO2 stream, there are no other alternative CO2 storage options. Building tanks for short-term storage of this product would not be practical or safe. Even compressed to 200 pounds per square inch gauge (psig) (the pressure of a standard propane tank car), the plant's daily production of CO2 would require storage space equivalent to more than 2,000 pressurized railcars (assuming 30,000 gallons each).[68] The only reasonable storage option for large volumes of CO2 is underground geological structures.

[68] Rail cars can hold 30,000 gal and operate at up to 200 psig. From the Ideal Gas Law, 1 lb-mol of any gas @ 14.7 psia and 60 deg F has a volume of about 379 ft^3. MW of CO_2 is about 44 lb/lbmol.

Density of CO_2 at 60 deg F and 200 psig (about 215 psia) = 1 lbmol/379 ft^3 x 44 lb/ lbmol x 215 psia/14.7 psia = 1.70 lb/ft^3

CO_2 maximum production is about 18.3 million lb per day. => CO_2 = 18.3x10^6 lb/day/1.70 lb/ft^3 x 7.48 gal/ft^3/30,000 gal/car = 2684 rail cars/day

Therefore, not venting the gas is not an option as venting is required by the process for safety reasons to prevent potentially dangerous overpressure. The only technology to safely handle this large flow volume in the event of a malfunction is a simple, direct path to atmosphere with no encumbrances. This path is the CO2 vent pipe as designed. Any alternative other than a direct vent would only increase the risk of potentially creating high pressure. This includes alternative compression for storage. Therefore, it is technically infeasible to safely store the CO2 stream on the HECA site.

Step 2: Eliminate technically infeasible options.

As is explained in Step 1, the storage of the vent stream in tanks or vessels can be eliminated as a technically infeasible.

Step 3: Rank remaining control options.

The most effective remaining control options for the reduction of GHG emissions are listed below in the order of effectiveness:

1) Capture, compression, and transportation of the CO2 stream in a pipeline for injection (during normal operation); venting of CO2 stream when injection system is unavailable due to upset condition with such cumulative periods not exceeding 504 hours per calendar year; and the use good operating practices.

Step 4: Evaluate most effective controls and document results.

As discussed above, the only feasible GHG control alternative for this emissions source the capture, compression, the transportation of the CO2 stream in a pipeline for injection (during normal operations), and the venting of the CO2 stream when the injection system is unavailable due to upset conditions with such cumulative periods not to exceed 504 hours per calendar year, and the use of good operating practices on the CO2 and transportation system.

Therefore, this is proposed as the most effective control technology.

Step 5: Select the BACT.

The following controls will be required as GHG BACT for the CO2 recovery and vent system:

- Capture, compression, and transportation of the CO2 stream in a pipeline for injection (during normal operation); venting of CO2 stream when injection system is unavailable due to upset condition with such cumulative periods not

exceeding 504 hours per calendar year; and the use of good operating practices on the CO2 and transportation system.

DOC conditions will limit the venting only to periods when the compression and transportation system is unavailable or CO2 delivery system is unavailable due to cold gasification block startup, CO2 compressor unplanned outage, CO2 pipeline unplanned outage, or CO2 off-taker unable to accept, and such venting shall not exceed 504 hours per rolling 12-month period. Additionally, the daily flow rate of the CO2 vent will be limited though the use of daily emission limits for CO and VOC. Compliance with the limits shall be monitored with a non-resettable, totalizing mass or volumetric flow measure and through speciated vent stream composition source tests required upon startup and during each venting occurrence exceeding 500,000 scf/day.

Therefore, compliance with BACT requirements is expected.

C. Top Down BACT Analysis for Natural Gas-Fired Auxiliary Boiler (S-7616-25-0)

The auxiliary boiler is a pre-engineered package boiler that will provide steam for pre-startup equipment warm-up and for other miscellaneous purposes when steam from the gasification process or HRSG is not available. The auxiliary boiler will be designed to burn PUC-quality natural gas at the design maximum fuel flow rate of 213 MMBtu/hr (high heating value), but will have a much lower average firing rate.[69] The significant heat efficiency and process integration steps discussed in section II.D (Project Design Features Relevant to GHG BACT) of this analysis allow for the auxiliary boiler to be off during normal steady-state, full plant operation.

Step 1: Identify all available control options.

The following technologies have been identified as possible GHG emission controls for this source:

1. Post-combustion CO2 capture and sequestration
2. Energy-efficient facility design features that allow limited boiler operation;
3. Firing on lower-carbon fuels
4. Energy-efficiency design features (air preheater, economizer, condensate recovery, etc.)
5. Periodic burner tuning

Each of these control options and their feasibility for this project are discussed below.

1. Post-combustion CO2 capture and sequestration;

As discussed under the analysis for the combustion turbine generator, post-combustion CO2 capture is a relatively new concept, which is rarely used on combustion systems. Unlike the gasification acid gas removal (AGR) system, which generates a concentrated CO2 stream ideal for capture, capture of the CO2 from the boiler exhaust is significantly more difficult because the CO2 is at a low concentration and low pressure.

CO2 post-combustion capture systems for small- to medium-sized combustion systems are not economically viable as supported by the EPA GHG BACT guidance document, which recommends that carbon capture and sequestration (CCS) only needs to be considered in a BACT analysis for very large CO2

[69] The average annual firing, allowing for startups, shutdowns, and partial load situations, will be limited by DOC condition to 466 billion Btu per calendar year, which is equivalent to an average of 53.3 MMBtu/hr over the course of a year.

sources and industrial facilities with high-purity CO2 streams (cement production, iron and steel, etc.).[70]

Therefore, post-combustion CO2 capture for the small, limited-use auxiliary boiler is not a technically feasible option. Thus, this technology can be removed from consideration.

2. Energy-efficient facility design features that allow limited boiler operation

The overall heat integration and energy efficiency measures incorporated into the plant design effectively eliminate the need for any auxiliary boiler firing during normal steady-state operation. As is explained in section II of this analysis, the facility is designed to recover the heat from various units, and steam generated in used in various processes at the facility.

These integrated plant design characteristics are the most significant measures in reducing GHG emissions from this source. Due to the proposed plant design features, the auxiliary boiler will operate in standby service most of the time. Therefore, the limited operation of the boiler (which is identified as a control option below) is enabled through the energy-efficient facility design.

By proposing an energy-efficient facility design, the proposed boiler will only need to operate on a limited basis. The auxiliary boiler's annual fuel firing rate will be limited to 466 billion Btu per year, which is equivalent to 25 percent capacity annually. DOC conditions will restrict the annual firing rate of the boiler to 466 billion Btu per year.

3. Firing on lower-carbon fuels

CO2 is a product of combustion generated with any carbon-containing fuel. The preferential use of natural gas in the auxiliary boiler, a lower-carbon fuel, is a highly effective method of reducing CO2 emissions versus use of solid fuels. The proposed project auxiliary boiler will fire natural gas as a lower-carbon fuel. Firing on hydrogen-rich fuel is infeasible because this fuel stream will be unavailable during most of the periods when this boiler would be in use (startups, shutdowns, upsets). Also, because reliability of this boiler is important for emergency situations, the use of more reliable natural gas is preferred, even if hydrogen-rich fuel had been available.

[70] *PSD and Title V Permitting Guidance For Greenhouse Gases*, March 2011, USEPA Office of Air and Radiation, pp. 35 - 36. http://www.epa.gov/nsr/ghgdocs/ghgpermittingguidance.pdf .

4. Energy-efficiency design features

Another opportunity for reducing GHG emissions is to maximize the energy efficiency of the boiler. Because CO2 emissions are a direct result of the amount and rate of fuel fired (for a given fuel), a more efficient boiler requires less fuel and produces lower GHG emissions than a less efficient one.

Three energy efficiency measures have been identified that may be applied to this combustion source.

4a. Economizer

An economizer is used to recover additional heat from the boiler exhaust to preheat boiler feed water. This reduces the heat energy required from fuel combustion to heat the boiler water.

4b. Condensate recovery

As the boiler steam is used in the heat exchanger, it condenses. When hot condensate is returned to the boiler as feedwater, the boiler heating load is reduced and the thermal efficiency increases.

4c. Inlet air trim controls

Inlet air trim controls can limit excess air by using a stack CO or oxygen (O2) monitor and automatically adjusting inlet air. Limiting the excess air enhances efficiency and reduces emissions by reducing the volume of air that needs to be heated in the combustion process.

The auxiliary boiler is proposed to include a heat recovery economizer and condensate recovery, but not inlet air controls. Optimizing excess air can be a cost-effective measure on large boilers, but it is not cost effective for small boilers or limited use boilers. According to the USEPA's Boiler White Paper, manufacturers estimate that a 1 percent thermal efficiency increase can be achieved with oxygen trim control.[71] The firing of this auxiliary boiler is limited to no more than 213 MMBtu/hr and 466 billion Btu per year, which is equivalent to an annual average firing rate of 53.3 MMBtu/hr. At this rate, an improvement of 1 percent thermal efficiency (resulting in 1 percent lower firing) would reduce annual GHG emissions by only about 270 ton per year. Due to the small size of

[71] *Available and Emerging Technologies for Reducing Greenhouse Gas Emissions from Industrial, Commercial, and Institutional Boilers*, USEPA, October 2010, p. 14.

this boiler and the overall small emissions from this source, the application of inlet air controls is not justified, and is not considered further in this analysis.

4d. Heat exchanger

One other possible boiler energy efficiency step would be to install a heat exchanger for recovery of the heat from boiler blowdown. However, the relatively small size of this boiler and its infrequent operation does not justify the incremental costs for this measure.

The auxiliary boiler make and model have not yet been selected; however, based on vendor experience, and the boiler features specified, such as an economizer (boiler feed water heater) and condensate recovery, it is expected that the boiler efficiency will be approximately 90 to 92 percent, lower heating value (equivalent to about 81 to 83 percent, higher heating value).

5. Periodic boiler tuning

A combustion system can drift over time from its optimum setting. Therefore, tuning of the boiler at least twice per calendar year is deemed a technically feasible option. Although the boiler tuning requirements of SJVAPCD Rule 4320 (Advanced Emission Reduction Options for Boilers, Steam Generators, and Process Heaters Greater than 5.0 MMBtu/hr) only apply to low-use units instead of compliance with all the emission limits of the rule, tuning twice per calendar year has been shown to be technically feasible, so this control will be carried forward for consideration.

Step 2: Eliminate technically infeasible options.

As is explained in Step 1, post-combustion CO2 capture and sequestration and inlet air trim controls can be eliminated as technically infeasible.

Step 3: Rank remaining control technologies.

It is proposed that all of the remaining control options identified by implemented to reduce GHG emissions. Therefore, there is no need to rank the control technologies.

- Limited operation (annual fuel firing rate limited to 466 billion Btu per year)
- Firing on a lower-carbon fuel (PUC-quality natural gas)
- Energy-efficiency measures (economizer and condensate recovery)
- Tuning the boiler twice per calendar year

Step 4: Evaluate most effective controls and document results.

All of the controls identified in Step 3 are proposed as GHG BACT. Therefore, there is no need to evaluate the effectiveness of these options further. GHG BACT for this source will be all of the following:

- Limited operation (annual fuel firing rate limited to 466 billion Btu per year)
- Firing on a lower-carbon fuel (PUC-quality natural gas)
- Energy-efficiency measures (economizer and condensate recovery)
- Tuning the boiler twice per calendar year

Step 5: Select the BACT.

The following controls will be required as GHG BACT:

- Limited operation (annual fuel firing rate limited to 466 billion Btu per year)
- Firing on a lower-carbon fuel (PUC-quality natural gas)
- Energy-efficiency measures (economizer and condensate recovery)
- Tuning the boiler twice per calendar year

DOC conditions will require all of the above technologies, thus GHG BACT for this unit will be satisfied. Conditions will require that the boiler be fired solely on PUC-quality natural gas and that it be equipped with an economizer and a condensate recovery system. The boiler shall also be required to be equipped with a fuel flow meter and will require recordkeeping to demonstrate compliance with the annual fuel firing rate limit of 466 billion Btu per year. Conditions will also require that the boiler be tuned twice per calendar year.

Therefore, compliance with BACT requirements is expected.

D. Top Down BACT Analysis for Tail Gas Thermal Oxidizer (S-7616-23-0)

Associated with the operation of the sulfur recovery process, the project will incorporate a thermal oxidizer on the tail-gas treating unit. The thermal oxidizer will serve as a control device to oxidize any remaining H2S (after scrubbing) and other vent gas that is generated during startup, shutdown, and times of non-delivery of CO2 product. In addition, miscellaneous oxidizing streams from the gasification area (e.g., atmospheric tank vents and miscellaneous equipment vents) are directed to the thermal oxidizer during operation to prevent nuisance odors. The thermal oxidizer operates at high temperatures, and provides sufficient residence time in order to ensure essentially complete oxidation of reduced sulfur compounds, e.g. H2S to SO2.

The thermal oxidizer will continuously fire at a firing rate limited to 13 MMBtu/hr to maintain the required operating temperature for proper thermal destruction. The thermal oxidizer fires an additional 80 MMBtu/hr of natural gas for the periodic oxidation of vent gas during SRU startups (which will be limited to 48 hours per year). The GHG emissions from this source represent approximately 1.1 percent of the total CO2e that will be emitted from the facility (as shown in Table 1). The following sections briefly analyze potential GHG controls for this source.

Step 1: Identify all available control options.

The following technologies have been identified as possible GHG emission controls for this source:

1. Post-combustion CO2 capture and sequestration
2. Use of lower-carbon fuel
3. Limited operation
4. Energy-efficient design

Each of these control options and their feasibility for this project are discussed below.

1. Post-combustion CO2 capture and sequestration

Post-combustion CO2 capture and sequestration is not technically feasible for the thermal oxidizer for the same reason it is not feasible for the combustion turbine and auxiliary boiler as explained in the previous sections. This source is even smaller than the combustion turbine and auxiliary boiler, and it would be even more difficult, expensive, and uncertain to attempt implementation of the technology for these services. Therefore, this option can be eliminated as technically infeasible.

2. Use of lower-carbon fuel

Because the hydrogen-rich fuel that is generated at the facility and used in the combustion turbine, it is not available during startups. Thus, firing on hydrogen is not a suitable failsafe fuel source for the thermal oxidizer. The applicant proposes to fire on another lower-carbon fuel, PUC-quality natural gas, instead.

3. Limited operation

Continuous operation of the thermal oxidizer to control miscellaneous oxidizing streams from the gasification area (e.g., atmospheric tank vents and miscellaneous equipment vents) are directed to the thermal oxidizer during operation to prevent nuisance odors. During these instances the thermal oxidizer will be limited to firing of 13 MMBtu/hr of natural gas. Venting associated with startup operations of the SRU will fire an additional 80 MMBtu/hr of natural gas, but such operation will be limited to 48 hours per year by DOC condition. This will limit the GHG emissions associated with this unit.

4. Energy-efficient design

The thermal oxidizer will be a very small source as it accounts for approximately 1.1 percent of the total CO2e generated by the project. The thermal oxidizer will not be equipped with air inlet controls or heat recovery because it has only a simple, small burner, which precludes these control options as technically or economically feasible measures for this unit. No applicable energy-efficiency measures are identified to carry forth in the BACT analysis.

Step 2: Eliminate technically infeasible options.

As is explained in Step 1, the use of a lower-carbon fuel (such as hydrogen-rich fuel), a more energy-efficient design, and post combustion CO2 capture and sequestration can be eliminated as a technically infeasible.

Step 3: Rank remaining control options.

It is proposed that all of the remaining control options identified by implemented to reduce GHG emissions. Therefore, there is no need to rank the control technologies.

- Firing on PUC-quality natural gas
- Sulfur recovery unit startup venting limited to 48 hour per calendar year

Step 4: Evaluate most effective controls and document results.

All of the controls identified in Step 3 are proposed as GHG BACT. Therefore, there is no need to evaluate the effectiveness of these options further. GHG BACT for this source will be all of the following:

- Firing on PUC-quality natural gas
- Sulfur recovery unit startup venting limited to 48 hours per calendar year

Step 5: Select the BACT.

The following controls will be required as GHG BACT:

- Firing on PUC-quality natural gas
- Sulfur recovery unit startup venting limited to 48 hours per calendar year

Compliance with these BACT requirements will be ensured with DOC conditions that require that the unit be fired solely on PUC-quality natural gas, by limiting the venting from SRU startups to 48 hours per calendar year, and require that the fuel flow rate to the thermal oxidizer be monitored.

Therefore, compliance with BACT requirements is expected.

E. Top Down BACT Analysis for Flares (S-7616-30-0, -31-0, and -32-0)

Although the project is designed to avoid flaring during steady-state operations, flares are needed for safe operations in upset conditions and to protect the operators and equipment. The project employs three pressure-relief systems and their corresponding flares (one flare primarily serving the gasification block, another primarily serving the sulfur recovery unit, and a third primarily serving the Rectisol unit) for this purpose. All three flares are conventional pipe, elevated flares, with natural gas-fired pilots. Vessels, towers, heat exchangers, and other equipment are connected to piping systems that will discharge gases and vapors to a relief system in order to prevent excessive pressure from building up in the equipment, and to allow safe venting of gases during routine startup, shutdown, or emergency upset events. During typical, non-startup plant operation, the three flares will be operated in a standby mode with only minimal emissions from the natural-gas pilot flames. The flares will also be used occasionally to dispose of excess startup and shutdown gases in a safe manner. Any time the flares are used, GHG emissions will be generated, although the total annual CO2e emissions from these flares are expected to be approximately 1.5 percent of the facility total.

Step 1: Identify all available control options.

The following technologies have been identified as possible GHG emission controls for this source:

1. Minimization of flaring and preparation of a flare minimization plan; and
2. Flare gas recovery system.

Each of these control options and their feasibility for this project are discussed below.

1. Minimization of flaring and preparation of a flare minimization plan

The principal method to minimize GHG emissions from the flares is to minimize the amount of material vented to the flares. As described above, the flares are used to safely dispose of gases containing VOCs and hazardous air pollutant constituents. Any time these gases are combusted in the flares, emissions of CO2, CH4, and N2O are generated. Flare minimization is equally important to minimizing criteria pollutants, and has been incorporated into the base facility design and the DOC conditions. The DOC conditions will limit flaring by limiting the annual volume of gas sent to each flare, and the durations of planned flaring events. Compliance with these conditions will be verified through non-resettable total flow meters for each flare. In addition to the fuel used for the pilot, each flare will be limited to the following planned operations:

- Gasification block flare: planned use limited to 74,914 MMBtu per year (21,936 MMBtu/yr of natural gas (including pilot gas); 9,544 MMBtu/yr of unshifted syngas; and 43,434 MMBtu/yr of shifted gas);

- Sulfur recovery unit flare: planned use limited to 36 MMBtu/hr of natural gas assist for 40 hours per year during startups and shutdowns;

- Rectisol unit flare: planned use limited to 430 MMBtu/hr of natural gas assist for 40 hours per year during startups and shutdowns.

The permittee will be required to submit a Flare Minimization Plan that complies with SJVAPCD Rule 4311, which will contain technical specifications of each flare, including process flow diagrams, and a description of equipment, processes, or procedures that will be implemented to eliminate or minimize flaring. It will also include an evaluation of preventive measures to reduce flaring that may be expected to occur during planned major maintenance activities, including startup and shutdown, and an evaluation of these measures.

The permittee plans two facility startups and shutdowns per year; emissions from the flares will be minimized by the fuel usage limits. GHG emissions during startup and shutdown are based on the amount of fuel flared. Therefore, minimizing the duration of these events will also minimize the GHG emissions.

2. Flare gas recovery

Flare gas recovery has been implemented at some facilities that produce and use internally generated fuel gas streams such as petroleum refineries. However, a flare gas recovery for the HECA facility is not feasible, for the following reasons.

First, unlike a refinery, which can and does need to operate sections of the plant while other sections are down for maintenance, HECA's planned maintenance will occur during an entire plant shutdown, while no gases are being produced. Flaring at the proposed HECA facility will be an infrequent occurrence, limited to breakdowns, malfunctions, and/or upsets. Planned flaring occurs during gasifier startup and shutdown, which is estimated to occur for approximately 40 hours per year for the Rectisol® and SRU flares; and about 28 hours for the gasification flare.

Another significant difference is that refineries can recover some flare gas into their fuel gas cleanup system, which typically operate at less than 100 psig. In contrast, the HECA facility's analogous gas cleanup system, the AGR, operates at the much higher pressure of approximately 900 psig. This would significantly

increase the equipment and operating costs of a flare gas recovery compressor, versus those at refineries. Further, during some of the flaring events, the flared material may not be suitable for routing to the AGR system, or the AGR system itself may be in the process of startup, in an upset, or otherwise not ready to receive the gases.

Given the extremely infrequent nature of events producing flared gases available for recovery and the lack of a reasonably compatible outlet for recovered gases at the time of flaring events, flare gas recovery compression is judged not to be feasible for the HECA facility.

Step 2: Eliminate technically infeasible options.

As is explained in Step 1, the use of a flare gas recovery system can be eliminated as a technically infeasible.

Step 3: Rank remaining control technologies.

After eliminating the infeasible technologies for the thermal oxidizer, the remaining control option is:

1. Minimization of flaring and the preparation of a flare minimization plan.

Step 4: Evaluate most effective controls and document results.

The only control identified in Step 3 is proposed. Therefore, there no need to further evaluate the controls further.

Step 5: Select the BACT.

The following controls will be required as GHG BACT:

- Minimization of flaring and the preparation of a flare minimization plan.

DOC conditions will limit the planned flaring, and a flare minimization plan will be required for each flare to limit the GHG emissions.

Therefore, compliance with BACT requirements is expected.

F. Top Down BACT Analysis for Nitric Acid Unit (S-7616-35-0)

The nitric acid plant is the largest source of GHG emissions within the fertilizer manufacturing complex. Its CO2e emissions are approximately 2.4 percent of the total facility CO2e emissions as shown in Table 1. Nitrous oxide (N2O) emissions are a byproduct of the process stream in nitric acid production, and are considered "industrial process" emissions, resulting from ammonia oxidation.[72] There are several factors that affect N2O formation, including combustion conditions in the oxidizing unit, catalyst, and burner design. The uncontrolled default N2O emission factor used for nitric acid plants from the Intergovernmental Panel on Climate Change guidelines for U.S. facilities is 9 kilograms per metric ton (tonne) of nitric acid (HNO3) produced (18 pounds N2O per ton of HNO3).[73] This value was used by EPA in the development of the recent U.S. GHG inventory.[74]

Step 1: Identify all available control technologies.

A review of the USEPA guidance document "Available and Emerging Technologies for Reducing Greenhouse Gas Emissions from the Nitric Acid Production Industry"[75] provided a description of the available controls for N2O at nitric acid plants. These controls are distinguished by the location of the control measure within the nitric acid production process. The following technologies have been identified as possible GHG emission controls for this source:

1. Primary controls (suppression of N2O formation)
2. Secondary controls (catalytic N2O decomposition in the oxidation reactor)
3. Tertiary controls (catalytic reduction or catalytic decomposition)

Each of these control options and their feasibility for this project are discussed below.

---

72 *Available and Emerging Technologies for Reducing Greenhouse Gas Emissions from the Nitric Acid Production Industry*, USEPA, Office of Air and Radiation, December 2010. http://www.epa.gov/nsr/ghgdocs/nitricacid.pdf.

73 *2006 IPCC Guidelines for National Greenhouse Gas Inventories, Volume 3, Industrial Processes and Product Use*. Intergovernmental Panel on Climate Change, ISBN 4-88788-032-4. http://www.ipccnggip.iges.or.jp/public/2006gl/vol3.html.

74 *Inventory of U.S. Greenhouse Gas Emissions and Sinks: 1990 – 2008*. EPA 430-R-10-006. Washington, D.C. April 15, 2010. http://epa.gov/climatechange/emissions/downloads10/508_Complete_GHG_1990_2008.pdf.

75 http://www.epa.gov/nsr/ghgdocs/nitricacid.pdf

1. **Primary control (suppression of N2O formation)**

   Primary control reduces the amount of N2O formed in the ammonia oxidation step. This can be done by modifying the catalyst used in the oxidation process and/or modifying the operating conditions of this process. Primary controls are categorized as the suppression of N2O formation, and include modifications to reactor design and catalysts; emission reduction is expected to be between 30 and 85 percent. According to the EPA guidance document, data from 14 European units with improved oxidation catalyst showed emissions in the range of 7.2 – 19.4 pounds N2O per ton of HNO3.[76]

2. **Secondary control (catalytic N2O decomposition in the oxidation reactor)**

   Secondary control reduces N2O immediately after it is formed in the ammonia oxidation step. Secondary controls are categorized as catalytic decomposition of N2O (to nitrogen [N2] and O2) in the oxidation reactor, where they selectively remove N2O. Reduction efficiencies for secondary controls range from 70 to 90 percent. The EPA guidance document reports that many secondary catalysts can achieve emission rates lower than 3 pounds of N2O per ton of HNO3.[77]

3. **Tertiary control (catalytic reduction or catalytic decomposition)**

   Tertiary control reduces N2O by installation of a catalytic reactor either upstream or downstream of the tail-gas expansion unit following ammonia oxidation. Tertiary controls are categorized as catalytic reduction or catalytic decomposition in a catalytic reactor following the ammonia oxidation process.

   Catalytic reduction:

   An example of tertiary catalytic reduction is non-selective catalytic reduction (NSCR), which has the advantage of reducing both nitrogen oxides (NOx) and N2O emissions. According to the EPA guidance document, this type of control has a reduction efficiency of 80 to 95 percent. In its guidance document, EPA reports that 14 process trains in the U.S. use NSCR. These facilities have installed NSCR to control NOx emissions; and as an additional benefit, NSCR reduces N2O emissions. The guidance document states that only one U.S. plant with NSCR had emission test data which measured 0.43 pound N2O per ton of HNO3.[78]

---

[76] Available and Emerging Technologies for Reducing Greenhouse Gas Emissions from the Nitric Acid Production Industry, p. 10.

[77] Available and Emerging Technologies for Reducing Greenhouse Gas Emissions from the Nitric Acid Production Industry, p. 12.

[78] Available and Emerging Technologies for Reducing Greenhouse Gas Emissions from the Nitric Acid Production Industry, p. 13.

Catalytic decomposition:

Tertiary catalytic decomposition technology achieves the decomposition of N2O to form N2 and O2 (as in secondary controls); but due to its placement following ammonia oxidation, it can achieve higher removal efficiencies for N2O than the secondary control. In addition, this technology does not require any reducing agents or additives, and no undesirable by-products are formed. The EPA guidance document reports that most tertiary catalytic decomposition controls can achieve emission rates of less than 1.0 lb of N2O per ton of HNO3.[79]

There is only one known N2O BACT determination for a nitric acid plant in the U.S., nitrogen facility in Green County, Tennessee, which proposed tertiary catalytic decomposition for control of N2O.[80] Although a GHG BACT determination was not required for the Southeast Idaho Energy project, because it received a Permit to Construct in November 2009, it included use of tertiary catalytic decomposition for N2O reduction that controlled N2O emissions to 3.4 pounds per of HNO3.[81]

The permittee proposes that the N2O emissions for the proposed nitric acid plant will be treated in a tertiary reduction system, based on its location at the end of the tail gas heat recovery system. Primary and secondary reduction occurs in the nitric acid unit equipment without any catalysis simply by the high process temperature. In the tertiary reduction, a reducing catalyst that uses high temperature rather than a reducing agent converts 95 percent of the remaining N2O emission to N2 and nitric oxide.

The estimated HECA nitric acid plant uncontrolled emission rate is 11.25 pounds N2O per ton of HNO3.[82] The oxidation catalyst is expected to achieve a 95 percent reduction in N2O, resulting in a controlled emission rate of 0.54 pound N2O per ton HNO3. DOC conditions will limit emissions and require testing to ensure compliance with this limit.

Step 2: Eliminate technically infeasible options.

---

79 Available and Emerging Technologies for Reducing Greenhouse Gas Emissions from the Nitric Acid Production Industry, p. 15.

80 USEPA Region IV letter to Division of Air Pollution Control Technology in Tennessee regarding U.S. Nitrogen facility, August 2011, nitric acid plant items 2 and 3.
http://www.epa.gov/nsr/ghgdocs/20110808usnitrogen.pdf

81 *Air Quality Permit to Construct Number P-2009.0127*, Southeast Idaho Energy, LLC, American Falls, Idaho. Idaho Department of Environmental Quality, November 30, 2009.
http://www.deq.idaho.gov/media/492273-se_idaho_energy_power_county_ptc_1109_statement.pdf

82 Documentation was provided by the permittee in a memo dated 8/1/12 to the SJVAPCD based on vendor estimates.

None of the controls listed in step 1 were eliminated as technically infeasible.

Step 3: Rank remaining control technologies.

Based on the controlled emission rates of N2O per ton of HNO3 produced that were discussed in step 1, the identified controls are ranked by effectiveness as follows:

1) Tertiary control (catalytic reduction or catalytic decomposition
2) Secondary control (catalytic N2O decomposition in the oxidation reactor)
3) Primary control (suppression of N2O formation)

Step 4: Evaluate most effective controls and document results.

The most effective control technology is tertiary control. The applicant proposes the use of tertiary catalytic using catalytic decomposition to reduce the N2O emissions from the nitric acid unit by 95 percent, to a controlled emission rate of 0.54 pound N2O per ton of HNO3.

This emission rate is lower than the average performance standard of the top 10 percent most efficient installations with tertiary controls (excluding units with NSCR) of 2.2 pounds N2O per ton HNO3.[83] Because of the low emission rate proposed by HECA, and the fact that the only previous nitric acid plant GHG BACT determination concluded that BACT was this same technology, the proposed BACT is believed to be the best control technology available, and no further analysis of control technologies is performed for the nitric acid plant.

Therefore, this proposal is deemed BACT for the nitric acid plant.

Step 5: Select the BACT.

The following will be required as GHG BACT for the nitric acid plant:

- Tertiary control (catalytic decomposition).

DOC conditions will require that the nitric acid be equipped with tertiary catalytic decomposition system, and conditions will limit N2O emissions. The proposed controlled N2O emission rate of 0.54 pound N2O per ton of HNO3 will be required to be tested using source test methods approved by the District to demonstrate compliance with the BACT level.

Therefore, compliance with BACT requirements is expected.

[83] Available and Emerging Technologies for Reducing Greenhouse Gas Emissions from the Nitric Acid Production Industry

.

G. Top Down BACT Analysis for Urea Absorbers (S-7616-34-0)

Purified and compressed CO2 and liquid ammonia are reacted in the urea unit to create a concentrated urea solution, which is pumped to the urea pastillation unit.

The off-gases from the urea synthesis process, consisting of inerts (CO2, nitrogen, and water) present in the CO2 feed, process air, and unreacted ammonia are cleaned before being vented in the high-pressure (HP) scrubber, which operates at an elevated pressure. The off-gases are scrubbed first with process water, and second with clean, cold water. In this way, nearly all of the ammonia is scrubbed from the gas. Low pressure off-gases are cleaned in the low-pressure (LP) scrubber, which operates at close to atmospheric pressure. Here, the off-gas is scrubbed with clean, cold water to reduce the ammonia content in the vent.

Emissions associated with the HP and LP urea absorbers are in the form of ammonia (which are reduced by the wet scrubber) and CO2. GHG emissions from the absorbers are minor amounts of CO2, with CO2e emissions expected to be approximately 129 tons per year, which is approximately 0.02 percent of the facility total.

Step 1: Identify all available control options.

The following technologies have been identified as possible GHG emission controls for this source:

1. CO2 capture and recovery system
2. Implementation of good operating practices

Each of these control options and their feasibility for this project are discussed below.

1. CO2 capture and recovery system

Due to the low level of CO2 emissions, capture and recovery of the stream is not feasible. CO2 emissions from these operations are expected to be approximately 0.02 percent of the facility total.

Thus, this technology can be removed from consideration.

2. **Implementation of good operating practices**

   Emissions of CO2 are restricted by implementing good operating practices, in order to maintain the feed stream. CO2 is a feed for the production of urea, and is therefore a valuable commodity.

Step 2: Eliminate technically infeasible options.

As is explained in Step 1, a CO2 capture and recovery system can be eliminated as technically infeasible.

Step 3: Rank remaining control options.

1. Implementation of good operating practices.

Step 4: Evaluate most effective controls and document results.

The most effective control for the reduction of GHG emissions is proposed. Therefore, there is no need to evaluate the effectiveness of these options further.

Step 5: Select BACT.

The following controls will be required as GHG BACT:

- Implementation of good operating practices.

DOC conditions will require that permittee maintain the urea absorbers in good operating condition and that it be operated in a manner to minimize emissions of air contaminants into the atmosphere.

Therefore, compliance with BACT requirements is expected.

H. Top Down BACT Analysis for Ammonia Synthesis Plant Startup Heater (S-7616-33-0)

A 56.0 MMBtu/hr natural gas-fired startup heater is provided in the ammonia synthesis unit to raise the catalyst bed temperatures during initial plant commissioning, or during startup after a plant maintenance outage.

The ammonia synthesis unit also contains an ammonia refrigeration system to provide the chilling required for cooling the converter effluent stream and the ammonia product stream, and to recover and condense ammonia vapor from the ammonia storage tanks.

Operation of the ammonia synthesis plant startup heater will be limited to 7.84 billion Btu/yr, which is equivalent to 140 hr/yr at full load. In addition, the heater will only combust a lower-carbon fuel, PUC-quality natural gas. Due to the low use of this unit, add-on controls are not feasible. HECA proposes that the SJVAPCD DOC conditions reflect this limited use, and that GHG BACT for this heater be determined to be limited usage. Compliance with this limit will be demonstrated by monitoring the natural gas flow rate to the heater.

Step 1 - Identify potential control technologies

The following technologies have been identified as possible GHG emission controls for this source:

1. Intermittent use of the startup heater
2. Firing on natural gas

Each of these control options and their feasibility for this project are discussed below.

Each of these methods, and their feasibility for this project, are discussed below.

1. Intermittent use of the startup heater

Operation of the heater will be limited to 7.84 billion Btu/hr, which is equivalent to 140 hr/yr at full load.

2. Firing on natural gas

The heater will be fired on PUC-quality natural gas.

Step 2 - Eliminate technically infeasible options

None of the technologies identified in Step 1 were eliminated as technically feasible options.

Step 3 - Rank remaining options by control effectiveness

It is proposed that all of the remaining control options identified be implemented to reduce GHG emissions. Therefore, there is no need to rank the control technologies.

- Intermittent use of the startup heater
- Firing on natural gas

Step 4: Evaluate most effective controls and document results.

All of the controls identified in Step 3 are proposed as GHG BACT. Therefore, there is no need to evaluate the effectiveness of these options further. GHG BACT for this source will be all of the following:

- Intermittent use of the startup heater
- Firing on natural gas

Step 5 - Select BACT

The following controls will be required as GHG BACT:

- Intermittent use of the startup heater
- Firing on natural gas

DOC conditions will limit the firing rate of the heater to 7.84 billion Btu/hr and will require that the boiler fire solely on PUC-quality natural gas.

I. Top Down BACT Analysis for Diesel-Fired Emergency IC Engines (S-7616-38-0, -39-0, and -40-0)

The applicant proposes three emergency engines for this project: two diesel-fired engines driving standby generators which are each rated 2,922 brake horsepower and one diesel-fired engine driving a fire water pump rated at 556 brake horsepower.

These emergency diesel-fired engines will emit GHG emissions (CO2, CH4, and N2O) because they combust hydrocarbon fuel. However, because their use is limited to emergency situation and routine maintenance, inspection, and testing, their total annual CO2e emissions are very small (approximately 0.06 percent of the total project CO2e emissions as shown in Table 1).

The use of diesel fuel is standard for emergency engines because it is the most reliable fuel for emergency scenarios when supplies of other fuels may be unavailable. The use of electric motors or natural gas-fired engines is not appropriate because either energy source could be interrupted in certain emergency scenarios. Therefore, the only achievable approach to reducing GHGs from the emergency generator and firewater pump engines is to limit their use, and to use efficient engines. The applicant proposes both measures.

The applicant will use new engines meeting the latest efficiency and pollutant performance standards. Specifically, regarding criteria pollutants, these standby diesel-fired engines will be required to meet the latest EPA Tier Certification level that is applicable for the horsepower range for each engine at the time of installation.

Based on the proposed emission levels, the standby firewater pump engine will be limited to no more than 100 hours per year for reliability testing and maintenance purposes. The standby electric generators will each be limited to no more than 50 hours per year of operation. This limited use will be required as DOC conditions.

Step 1: Identify all available control technologies.

Potentially applicable GHG control technologies for the emergency engines include:

1. Limited operation
2. Installation the latest EPA Tier certification level

Each of these methods, and their feasibility for this project, are discussed below.

1. **Limited operation**

   The engines will be operated only for testing and maintenance of the engine, required regulatory purposes, and during emergency situations. To ensure that the engines are operating properly in case of an emergency, operation of the engines for maintenance, testing, and required regulatory purposes will be limited to no more than 100 hours per calendar year for the firewater pump engine and will be limited to no more than 50 hours per calendar year for the electric generator engines.

2. **Installation of the latest EPA Tier certification level**

   The proposed engines that are installed shall meet the latest EPA Tier certification level engine that applies for the proposed engines at the time of installation as required by the DOC.

Step 2: Eliminate technically infeasible options.

None of the controls identified in Step 1 were eliminated as technically infeasible.

Step 3: Rank remaining control technologies.

It is proposed that all of the remaining control options identified by implemented to reduce GHG emissions. Therefore, there is no need to rank the control technologies.

- Limited operation
- Installation the latest EPA Tier certification level

Step 4: Evaluate most effective controls and document results.

All of the controls identified in Step 3 are proposed as GHG BACT. Therefore, there is no need to evaluate the effectiveness of these options further. GHG BACT for this source will be all of the following:

- Limited operation
- Installation the latest EPA Tier certification level

Step 5: Select the BACT.

The following controls will be required as GHG BACT:

- Limited operation
- Installation the latest EPA Tier certification level

Operation of engines will be limited to emergencies and during maintenance, testing, and required regulatory purposes not to exceed 100 hours per calendar year for the firewater pump engine and not to exceed 50 hours per calendar year for the electric generator engines. BACT will also be the installation of the latest EPA Tier certification level that is applicable at the time of installation will be required.

Compliance with these requirements will be ensured with DOC conditions requiring that each engine be equipped with an hour meter, that the permittee maintain records of the operation of the engines. Conditions will also require that the engines installed be the latest EPA Tier certification levels at the time of installation.

J. Top Down BACT Analysis for Fugitive Emissions (Attributed to Units S-7616-21-0, ’-23-0, and ’-33-0)

It is estimated that there will be approximately 90 tons of CO2e per year of emissions from project equipment and pipe component leaks, such as pumps, valves, flanges, and compressors, after implementation of the leak detection and repair (LDAR) program, which is approximately 0.02 percent of the total facility CO2e. This emission estimate includes contributions from components in both CO2 and CH4 services, and will be approximately 0.02 percent of total facility emissions. The fugitive emissions will be associated primarily with the gasification block and the manufacturing complex, and they will be assessed to units S-7616-21-0 (gasification system), ’-23-0 (sulfur recovery system), and ’-33-0 (ammonia synthesis unit/fertilizer manufacturing complex).

The LDAR program will be implemented in select process areas to maximize emission reductions. LDAR is the primary established method for controlling fugitive emissions from various pieces of equipment, such as valves and seals. LDAR will be implemented to hazardous air pollutants, VOCs, and NH3 on fugitive components in the gasification block, SRU, and manufacturing complex. These areas include streams that contain CO2 and CH4. The use of LDAR, although not specific for GHG emissions, has the secondary benefit of reducing GHG from these process units.

Because total fugitive emissions of CO2e from equipment components are so small (approximately 0.02 percent of the facility total as shown in Table 1), relative to the overall facility emissions, further control of fugitive emissions would have minimal additional benefit. It is proposed that the same LDAR program as outlined in the SJVAPCD DOC be BACT for fugitive emissions of GHG.

Step 1: Identify all available control options.

The following technologies have been identified as possible GHG emission controls for this source:

1. Leak detection and repair (LDAR) program

1. Leak detection and repair (LDAR) program

Fugitive emissions of VOC, CO, NH3, H2S, and trace hazardous air pollutants (HAPs) and greenhouse gases (GHGs) may occur in some areas of the facility due to leaks in the piping and components. Fugitive emissions are associated primarily with the gasification block and the manufacturing complex. The LDAR program will be implemented in select process areas to maximize emission

reductions. LDAR is the primary established method for controlling fugitive emissions from various pieces of equipment, such as valves and seals.

The following process streams at the facility have been identified:

Process stream #	Description
1	Methanol
2	Syngas
3	--
4	Shifted syngas
5	Propylene
6	Sour water
7	H2S-laden methanol
8	CO2-laden methanol
9	Acid gas
10	Ammonia-laden gas
11	Sulfur
12	TGU process gas
13	Low NH3 concentration
14	Moderate NH3 concentration
15	High NH3 concentration
16	Low CO2 concentration
17	Moderate CO2 concentration
18	High CO2 concentration
19	NO2
20	HNO3 (Nitric acid)
21	PSA off gas

The LDAR program will be implemented on a selected process areas with the largest potential fugitive VOC, toxic air contaminant (TAC), and GHG emissions: streams #1, 5, 7 through 10, and 13 through 21 (methanol, propylene, H2S-laden methanol, CO2-laden methanol, acid gas, ammonia laden gas, low NH3 concentration, moderate NH3 concentration, high NH3 concentration, low CO2 concentration, moderate CO2 concentration, high CO2 concentration, NO2, nitric acid (HNO3), and PSA off gas). These streams were selected because they had the largest uncontrolled emission estimates for methanol, propylene, H2S, GHG, and ammonia.

Step 2: Eliminate technically infeasible options.

None of the controls identified in Step 1 were eliminated as technically infeasible.

Step 3: Rank remaining control options.

The most effective control option for the reduction of GHG emissions is:

1. Leak detection and repair (LDAR) program

Step 4: Evaluate most effective controls and document results.

Since the only control identified in Step 3 is proposed, there is no need to evaluate the effectiveness of these options further. GHG BACT for this source will be:

- Leak detection and repair (LDAR) program

Step 5: Select BACT.

The following controls will be required as GHG BACT:

- Leak detection and repair (LDAR) program

DOC conditions will require that process streams identified in Step 1 (methanol, propylene, H2S-laden methanol, CO2-laden methanol, acid gas, ammonia laden gas, low NH3 concentration, moderate NH3 concentration, high NH3 concentration, low CO2 concentration, moderate CO2 concentration, high CO2 concentration, NO2, nitric acid (HNO3), and PSA off gas) be subject to the LDAR program.

Therefore, compliance with BACT requirements is expected.

K. Top Down BACT Analysis for Circuit Breakers (not subject to District permit requirements)

The facility's circuit breakers will have the potential to emit a very small amount of GHG, in the form of sulfur hexafluoride (SF6). Circuit breakers do not emit SF6 directly, but they do have the potential for fugitive emissions (leaks). The proposed project site will include a switchyard with approximately 8 circuit breakers, with a total SF6 inventory of approximately 1,600 pounds (less than 1 ton) of SF6 in the enclosed-pressure breakers according to the applicant. SF6 is a gaseous dielectric used in the breakers. Leakage is expected to be minimal. Even assuming a 0.5 percent annual leak rate, its potential emissions are equivalent to 95 tons per year CO2e, which is less than 0.02 percent of the facility total CO2e (as shown in Table 1). Nevertheless, this small source has been considered for purposes of this GHG BACT analysis.

Step 1: Identify all available control technologies.

Potentially applicable GHG control technologies considered for the circuit breakers include:

1. Use of state-of-the art circuit breakers that use SF6 technology with a leak detection system
2. Use of non-GHG dielectric material in the circuit breakers.

Each of these methods, and their feasibility for this project, are discussed below.

1. Use state-of-the-art circuit breakers using SF6 technology with a leak detection system

A proposed alternative is to use state-of-the-art SF6 technology with leak detection to limit fugitive emissions. In comparison to older SF6 circuit breakers, modern breakers are designed as a totally enclosed-pressure system with far lower potential for SF6 emissions. The best modern equipment can be guaranteed to leak at a rate of no more than 0.5 percent per year (by weight). This leak rate meets the current maximum leak rate standard established by the International Electrotechnical Commission.[84]

In addition, the effectiveness of leak-tight closed systems can be enhanced by equipping them with a density alarm that provides a warning when 10 percent of the SF6 (by weight) has escaped. The use of an alarm identifies potential leak

[84] The IEC standard identifying the maximum allowable leakage rate of 0.5 percent per year came from the IEC standard 62271-1. That standard is summarized in this summary provided by USEPA: http://www.epa.gov/electricpower-sf6/documents/conf06_blackman.pdf

problems before the bulk of the SF6 has escaped, so that it can be addressed proactively to prevent further release of the gas and maintain the insulation value in the circuit breakers.

The use of enclosed-pressure SF6 circuit breakers with leak detection is feasible for this location. HECA has proposed to use this equipment because of its performance benefits.

2. Use a non-GHG dielectric material in the circuit breakers

Another alternative is to substitute another, non-GHG substance for SF6 as the dielectric material in the breakers. One alternative available is the use of a dielectric oil or compressed air ("air blast") circuit breaker, which historically were used in high-voltage installations prior to the development of SF6 breakers. This type of technology is feasible, although SF6 has become the predominant insulator and arc-quenching substance in circuit breakers today because of its superior capabilities.

This type of circuit breaker would require significantly larger equipment to replicate the same insulating and arc-quenching capabilities of the SF6 breakers. The larger oil/air-blast breakers would require that additional land be devoted to the project, would generate additional noise, and would increase the risks of accidental releases of dielectric fluid and/or associated fires.

Although oil/air-blast breakers are theoretically feasible, they are not preferred versus the choice of SF6 breakers because of their negative characteristics and the fact that the use of the latest SF6 breakers only results in very small GHG emissions. This conclusion is supported by the most recent report released by the USEPA SF6 Partnership, which states: "no clear alternative exists for this gas that is used extensively in circuit breakers, gas-insulated substations, and switchgear, due to its inertness and dielectric properties."[85] Research and development efforts have focused on finding substitutes for SF6 that have comparable insulating and arc-quenching properties in high-voltage applications.[86] Although some progress has reportedly been made in medium- or low-voltage applications, most studies have concluded "that there is no

[85] *SF6 Emission Reduction Partnership for Electric Power Systems 2007 Annual Report*, December 2008, p. 1, www.epa.gov/electricpower-sf6 .

[86] See National Institute of Standards and Technology (NIST), Electricity Division (Electronics and Electrical Engineering Laboratory) and Process Measurements Division (Chemical Science and Technology Laboratory), *NIST Technical Note 1425: Gases for Electrical Insulation and Arc Interruption: Possible Present and Future Alternatives to Pure SF6*, November 1997; http://www.epa.gov/electricpowersf6/documents/new_report_final.pdf. See also U.S. Climate Change Technology Program, Technology Options for the Near and Long Term, November 2003, § 4.3.5, "Electric Power System and Magnesium: Substitutes for SF6," http://www.climatetechnology.gov/library/2003/tech-options/tech-options-4-3-5.pdf

replacement gas immediately available to use as an SF6 substitute"[87] for high-voltage applications.

Step 2: Eliminate technically infeasible options.

None of the controls identified in Step 1 were eliminated as technically infeasible.

Step 3: Rank remaining control technologies.

The most effective remaining control options for the reduction of GHG emissions are listed below in the order of effectiveness:

1. Use of non-GHG dielectric material in the circuit breakers
2. Use of state-of-the art circuit breakers that use SF6 technology with a leak detection system

Step 4: Evaluate most effective controls and document results.

Although there is minimal reduction in GHG emissions from the use of non-GHG dielectric material circuit breakers over modern circuit breakers, the negative characteristics of the circuit breaker that use non-GHG dielectric material (as described in Step 1) and the minimal reduction in GHG emissions, the applicant's proposal to use modern circuit breakers that use SF6 technology along with a leak detection system is determined to be the most effective control. Thus, state-of-the art SF6 technology with a leak detection system will be the most effective GHG control for the circuit breakers in this project.

Step 5: Select the BACT.

The following controls will be required as GHG BACT:

- Use of state-of-the art circuit breakers that use SF6 technology with a leak detection system

DOC conditions will require the use of state-of-the-art SF6 technology circuit breakers with a leak detection system.

[87] T. Olsen (Manager, Siemens Power Transmission & Distribution), Siemens Electrical Distribution Products Catalog 2006, "Medium Voltage Equipment: Special Applications & Technical Information," at 13-29 (summarizing the results of the NIST study referenced in the preceding footnote), http://www.sea.siemens.com/SpeedFax06/Speedfax06files/06Speedfaxpdfs/06Speedfax_13/13_28-29.pdf .

VI. BACT Determination Summary

Table 7 below summarizes the BACT proposed as a result of this GHG BACT analysis. The proposed project was designed to minimize GHG emissions. This is done primarily through the capture of 90 percent of the carbon in the raw syngas in a high-purity CO2 stream for use in EOR and subsequent sequestration. This ensures that a low-carbon fuel is used as the basis for generation of nitrogen-based products and electric power. The CO2-power-related emissions would be less than or equal to 400 lb/MWh, compared with the SB 1368 emission performance standard of 1,100 lb/MWh. Also, many additional design features have been implemented that conserve and reuse thermal energy, and in so doing, reduce GHG emissions from the proposed project.

Table 7: Summary of Proposed GHG BACT Limits for HECA		
Emission Source	**Proposed GHG BACT controls**	**Compliance with GHG BACT controls demonstration method**
HECA Project (Entire Facility)	• Energy-efficient facility design, plus controls listed below.	The facility CO2e potential emissions will be limited to 595,917 tons-CO2e/yr. The permittee will be required to monitor the facility's CO2e and maintain such records onsite.
Combustion Turbine Generator (S-7616-26-0)	• Capture of 90% of the pre-combustion CO2 through carbon sequestration and firing on hydrogen-rich fuel • Energy-efficient turbine design • Firing on PUC-quality natural gas backup fuel limited to startups, shutdowns, and unplanned equipment outages	DOC conditions will require that the capture of 90 percent of the pre-combustion CO2 through carbon sequestration shall be demonstrated by monitoring the flow rate and carbon content in the captured CO2 stream and the flow and carbon content of the hydrogen-rich fuel combusted in the CTG/HRSG. The installation of proposed energy-efficient turbine model will be specified on the DOC. Additionally, firing on PUC-quality natural gas will be required as backup fuel, and such operation will be limited to startups, shutdowns, and unplanned equipment outages. Emissions from the low-carbon fuel used in the CTG/HRSG shall also be demonstrated through compliance with SB 1368 (Greenhouse Gases Emission Performance Standard), whereby the permittee will calculate the CO2 emissions per MWh from power production to compare against the Emission Performance Standards of 1,100 lb/MWh. The maximum CO2 power-related emissions, based on the SB 1368 calculation methodology, will be limited to 400 lb/MWh.
CO2 Recovery and Vent System (S-7616-24-0)	• Capture, compression, and transportation of the CO2 stream in a pipeline for injection (during normal operation); venting of CO2 stream when injection system is unavailable due to upset condition with such cumulative periods not exceeding 504 hours per calendar year; and the use of good operating practices on the CO2 and transportation system.	DOC conditions will limit the venting only to periods when the compression and transportation system is unavailable or CO2 delivery system is unavailable due to cold gasification block startup, CO2 compressor unplanned outage, CO2 pipeline unplanned outage, or CO2 off-taker unable to accept, and such venting shall not exceed 504 hours per rolling 12-month period. Additionally, the daily flow rate of the CO2 vent will be limited through the use of daily emission limits for CO, CO2 and VOC. Compliance with the limits shall be monitored with a non-resettable, totalizing mass or volumetric flow measure and through speciated vent stream composition source tests required upon startup and during each venting occurrence exceeding 500,000 scf/day.

Natural Gas-Fired Auxiliary Boiler (S-7616-25-0)	• Limited operation (annual fuel firing rate limited to 466 billion Btu per year) • Firing on a lower-carbon fuel (PUC-quality natural gas) • Energy-efficiency measures (economizer and condensate recovery) • Tuning the boiler twice per calendar year	DOC conditions will require that the boiler be fired solely on PUC-quality natural gas and that it be equipped with an economizer and a condensate recovery system. The boiler shall also be required to be equipped with a fuel flow meter and will require recordkeeping to demonstrate compliance with the annual fuel firing rate limit of 466 billion Btu per year. Conditions will also require that the boiler be tuned twice per calendar year.
Nitric Acid Unit (S-7616-35-0)	• Tertiary control (catalytic decomposition) and N2O emission rate limited to 0.54 lb-N2O/ton of HNO3 produced	DOC conditions will require that the nitric acid be equipped with tertiary catalytic decomposition system, and conditions will limit N2O emissions. The proposed controlled N2O emission rate of 0.54 pound N2O per ton of HNO3 produced will be required to be tested to demonstrate compliance with the BACT level.
Tail Gas Thermal Oxidizer (S-7616-23-0)	• Firing on PUC-quality natural gas • Sulfur recovery unit startup venting limited to 48 hours per calendar year	DOC conditions will require that the unit be fired solely on PUC-quality natural gas, that venting from SRU startups to be limited to 48 hours per calendar year, and that the fuel flow rate to the thermal oxidizer be monitored.
Flares (S-7616-30-0, -31-0, -32-0)	• Minimization of flaring and the preparation of a flare minimization plan. • Limited venting	DOC conditions will limit the planned flaring as follows: • Gasification block flare: 74,914 MMBtu per year (21,936 MMBtu/yr of natural gas (including pilot gas); 9,544 MMBtu/yr of unshifted syngas; and 43,434 MMBtu/yr of shifted gas); • Sulfur recovery unit flare: 36 MMBtu/hr of natural gas assist for 40 hours per year during startups and shutdowns; • Rectisol unit flare: 430 MMBtu/hr of natural gas assist for 40 hours per year during startups and shutdowns. A flare minimization plan will be required for each flare to limit the GHG emissions.

Ammonia Synthesis Plant Startup Heater (S-7616-33-0)	• Intermittent use of the startup heater (annual firing rate limited to 7.84 billion Btu/yr) • Firing on PUC-quality natural gas	DOC conditions will limit the firing rate of the heater to 7.84 billion Btu/yr and will require that the boiler fire solely on PUC-quality natural gas.
Urea Absorbers (S-7616-34-0)	• Implementation of good operating practices.	DOC conditions will require that permittee maintain the urea absorbers in good operating condition and that it be operated in a manner to minimize emissions of air contaminants into the atmosphere.
Diesel-Fired Emergency Engines Powering Electrical Generators (S-7616-38-0 and -39-0)	• Limited operation (limited to emergencies and during maintenance, testing, and required regulatory purposes not to exceed 50 hours per calendar year) • Installation the latest EPA Tier certification level	Operation of engines will be limited to emergencies and during maintenance, testing, and required regulatory purposes not to exceed 50 hours per calendar year for the electric generator engines. BACT will also be the installation of the latest EPA Tier certification level that is applicable at the time of installation will be required.
Diesel-Fired Emergency Engine Powering Firewater Pump (S-7616-40-0)	• Limited operation (limited to emergencies and during maintenance, testing, and required regulatory purposes not to exceed 100 hours per calendar year) • Installation the latest EPA Tier certification level	Operation of engine will be limited to emergencies and during maintenance, testing, and required regulatory purposes not to exceed 100 hours per calendar year for the firewater pump engine. BACT will also be the installation of the latest EPA Tier certification level that is applicable at the time of installation will be required.
Fugitive Emissions - Gasification Block and Manufacturing Complex (included on permits S-7616-21, -23 and -33)	• Leak detection and repair (LDAR) program	Components serving the following streams associated with this unit shall be subject to a leak detection and repair (LDAR) program: methanol, propylene, H2S-laden methanol, CO2-laden methanol, acid gas, ammonia laden gas, low NH3 concentration, moderate NH3 concentration, high NH3 concentration, low CO2 concentration, moderate CO2 concentration, high CO2 concentration, NO2, nitric acid (HNO3), and PSA off gas
Circuit Breakers (conditions will be included on DOC S-7616-26)	• Use of state-of-the art circuit breakers that use SF6 technology with a leak detection system	DOC conditions will require the use of state-of-the-art SF6 technology circuit breakers with a leak detection system.

APPENDIX I-A
FACILITY CO2e CALCULATIONS

Hydrogen Energy California LLC *11/1/2012*
HECA Project

GHG emissions are numerically depicted as metric tons (tonne) of carbon dioxide equivalents (CO_2e). CO_2e represents CO_2 plus the additional

Natural Gas GHG Emission Factors						Diesel GHG Emission Factors				
CO_2 =	52.87	kg/MMBtu =	116.56	lb/MMBtu		CO_2 =	10.15	kg/gal =	22.38	lb/gal
CH_4 =	0.0009	kg/MMBtu =	0.0020	lb/MMBtu		CH_4 =	0.0004	kg/gal =	0.001	lb/gal
N_2O =	0.0001	kg/MMBtu =	0.00022	lb/MMBtu		N_2O =	0.0001	kg/gal =	0.0002	lb/gal

CO_2, CH_4, and N_2O emission factors are taken from Appendix C of the California Climate Action Registry (CCAR) General Reporting Protocol Version 3.1 (Jan 2009)

Combustion Turbine Generator (S-7616-26-0)
Turbine - Burning Hydrogen-Rich Fuel - released to HRSG and Coal Dryer Stacks

Operating Hours		8108	hr/yr		Syngas GHG Emission Factors *		
Heat Input (HHV)		2,537	MMBtu/hr		CO_2 =	17.7	lb/MMBtu
					CH_4 =	0.03	lb/MMBtu
CO_2 =	165,228	tonne/yr			* Based on composition of syngas		
CH_4 =	291	tonne/yr =	6,117	tonne CO_2e/yr			
N_2O =	2.06	tonne/yr =	638	tonne CO_2e/yr	Total tonne CO_2e/yr =		171,983

HRSG heat input rate is based Case 5, average ambient temperature and peak load.

Operating hours include startup and shutdown operations

Although N2O emissions are expected to be lower than from the combustion of natural gas, N2O emissions were conservatively estimated using the natural gas emission factor.

Combustion Turbine Generator (S-7616-26-0)
Duct burner - Burning Hydrogen-Rich Fuel - released to HRSG and Coal Dryer Stacks

Operating Hours		8000	hr/yr		Syngas GHG Emission Factors		
Heat Input (HHV)		165	MMBtu/hr		CO_2 =	17.7	lb/MMBtu
					CH_4 =	0.03	lb/MMBtu
CO_2 =	10,603	tonne/yr			* Based on composition of syngas		
CH_4 =	19	tonne/yr =	393	tonne CO_2e/yr			
N_2O =	0.13	tonne/yr =	41	tonne CO_2e/yr	Total tonne CO_2e/yr =		11,036

Duct burner heat input rate is based Case 5, average ambient temperature and peak load.

Duct burner not operated during turbine startup and shutdown

Although N2O emissions are expected to be lower than from the combustion of natural gas, N2O emissions were conservatively estimated using the natural gas emission factor.

Combustion Turbine Generator (S-7616-26-0)
Duct burner - Burning PSA Offgas - released to HRSG and Coal Dryer Stacks

Operating Hours		8,000	hr/yr		PSA Offgas GHG Emission Factors **		
Heat Input (HHV)		149	MMBtu/hr		CO_2 =	153.6	lb/MMBtu
					CH_4 =	0.3	lb/MMBtu
CO_2 =	83,053	tonne/yr			** Based on composition of PSA offgas		
CH_4 =	146	tonne/yr =	3,073	tonne CO_2e/yr			
N_2O =	0.12	tonne/yr =	37	tonne CO_2e/yr	Total tonne CO_2e/yr =		86,163

Duct burner heat input rate is based Case 5, average ambient temperature and peak load.

Duct burner not operated during turbine startup and shutdown

Although N2O emissions are expected to be lower than from the combustion of natural gas, N2O emissions were conservatively estimated using the natural gas emission factor.

Combustion Turbine Generator (S-7616-26-0)
Turbine - Burning Natural Gas - released to HRSG Stack

Operating Hours	351	hr/yr
Heat Input (HHV)	2,401	MMBtu/hr

CO_2 =	44,568	tonne/yr				
CH_4 =	0.76	tonne/yr =	16	tonne CO_2e/yr		
N_2O =	0.08	tonne/yr =	26	tonne CO_2e/yr	Total tonne CO_2e/yr =	44,610

HRSG heat input rate is assumed to be the maximum heat input rate firing natural gas. Hours of operation include startup and shutdown.

Tail Gas Thermal Oxidizer (S-7616-23-0)

Process Vent Disposal Emissions

Operating Hours	8,314	hr/yr
Heat Input	13	MMBtu/hr

CO_2 =	5,716	tonne/yr				
CH_4 =	0.10	tonne/yr =	2.0	tonne CO_2e/yr		
N_2O =	0.0108	tonne/yr =	3.4	tonne CO_2e/yr	Total tonne CO_2e/yr =	5,721

SRU Startup Waste Gas Disposal

Operating Hours	48	hr/yr
Heat Input	80	MMBtu/hr

CO_2 =	203	tonne/yr				
CH_4 =	0.003	tonne/yr =	0.07	tonne CO_2e/yr		
N_2O =	0.00038	tonne/yr =	0.119	tonne CO_2e/yr	Total tonne CO_2e/yr =	203

GHG emissions from thermal oxidizer are estimated using GHG emission factors for natural gas combustion for the assist gas.

CO_2 Recovery and Vent System (S-7616-24-0)

Operating Hours	504	hr/yr		
CO_2 Emission Rate	761,400	lb/hr		
			Total tonne CO_2e/yr =	174,113

Assumes 504 hours per year venting at full rate.

Natural Gas-Fired Auxiliary Boiler (S-7616-25-0)

Operating Hours	2,188	hr/yr *	* 466 billion Btu/hr / 213 MMBtu/hr = 2188 hr/yr
Heat Input	213	MMBtu/hr	

CO_2 =	24,644	tonne/yr				
CH_4 =	0	tonne/yr =	9	tonne CO_2e/yr		
N_2O =	0.05	tonne/yr =	14	tonne CO_2e/yr	Total tonne CO_2e/yr =	24,667

Gasification Flare (S-7616-30-0)

Pilot Operation

Operating Hours	8,760	hr/yr	
Heat Input	0.5	MMBtu/hr	natural gas pilot

CO_2 =	232	tonne/yr				
CH_4 =	0.00	tonne/yr =	0.1	tonne CO_2e/yr		
N_2O =	0.0004	tonne/yr =	0.1	tonne CO_2e/yr	Total tonne CO_2e/yr =	232

Flaring Events

Total Operation	70,534	MMBtu/yr	(Total operation = NG startup + Unshifted syngas startup + Shifted syngas startup + Shifted syngas shutdown) =17556+9544+24130+19304 70534

CO_2 =	3,730	tonne/yr				
CH_4 =	0.1	tonne/yr =	1	tonne CO_2e/yr		
N_2O =	0.01	tonne/yr =	2	tonne CO_2e/yr	Total tonne CO_2e/yr =	3,734

GHG emissions from flaring events are conservatively estimated using GHG emission factors for natural gas combustion.

SRU Flare (S-7616-31-0)						
Pilot Operation						
Operating Hours		8,760	hr/yr			
Heat Input		0.3	MMBtu/hr	natural gas pilot		
CO_2 =	139	tonne/yr				
CH_4 =	0.00	tonne/yr =	0.0	tonne CO_2e/yr		
N_2O =	0.0003	tonne/yr =	0.08	tonne CO_2e/yr	Total tonne CO_2e/yr =	139
Flaring Events - natural gas assist for acid gas venting during startup						
Operating Hours		40	hr/yr			
Heat Input		36	MMBtu/hr			
Throughput (inerts) - acid gas venting during startup						
CO_2 =		140000	scf/hr			
CO_2 =		16,240	lb/hr			
CO_2 =	371	tonne/yr				
CH_4 =	0.001	tonne/yr =	0.03	tonne CO_2e/yr		
N_2O =	0.00014	tonne/yr =	0.045	tonne CO_2e/yr	Total tonne CO_2e/yr =	371
Throughtput (inerts) provided from design engineers.						

Rectisol Flare (S-7616-32-0)						
Pilot Operation						
Operating Hours		8,760	hr/yr			
Heat Input		0.3	MMBtu/hr	natural gas pilot		
CO_2 =	139	tonne/yr				
CH_4 =	0.00	tonne/yr =	0.0	tonne CO_2e/yr		
N_2O =	0.0003	tonne/yr =	0.08	tonne CO_2e/yr	Total tonne CO_2e/yr =	139
Flaring Events						
Operating Hours		40	hr/yr			
Vent gas flow		4542	lb-mole/hr			
CO_2 =	3,627	tonne/yr				
CH_4 =		tonne/yr =		tonne CO_2e/yr		
N_2O =		tonne/yr =		tonne CO_2e/yr	Total tonne CO_2e/yr =	3,627
GHG emissions from flaring event based on 100% carbon content of the gas during startup.						

Ammonia Synthesis Plant Startup Heater (S-7616-33-0)						
Operating Hours		140	hr/yr	=7.84 billion Btu/yr / 56 MMBtu/yr = 140 hr/yr		
Heat Input		56	MMBtu/hr			
CO_2 =	415	tonne/yr				
CH_4 =	0	tonne/yr =	0	tonne CO_2e/yr		
N_2O =	0.00	tonne/yr =	0	tonne CO_2e/yr	Total tonne CO_2e/yr =	415

Urea Absorbers (S-7616-34-0)						
Operating Hours		8,052	hr/yr			
CO_2		32	lb/hour			
CO_2 =	117	tonne/yr				
CH_4 =		tonne/yr =	0	tonne CO_2e/yr		
N_2O =		tonne/yr =	0	tonne CO_2e/yr	Total tonne CO_2e/yr =	117
Emission rate provided by project engineers.						

Nitric Acid Unit (S-7616-35-0)						
Operating Hours		8,052	hr/yr			
N_2O uncontrolled		10.78	lb/ton NHO3			
Production rate		501	ton/day			
N_2O uncontrolled		225	lb/hour			
destruction efficiency		95	%			
N_2O controlled		11.25	lb/hour			
CO_2 =		tonne/yr				
CH_4 =		tonne/yr =	0	tonne CO_2e/yr		
N_2O =	41	tonne/yr =	12,741	tonne CO_2e/yr	Total tonne CO_2e/yr =	12,741

Emission factor and destruction efficiency provided by design engineer.

Diesel-Fired Emergency Engines Powering Electrical Generators (S-7616-38-0 and -39-0)						
Operating Hours		100	hr/yr	* 50 hr/yr/engine x 2 engines		
Heat Input		2,922	Bhp			
CO_2 =	3,341	lb/hr =	152	tonne CO_2/yr		
CH_4 =	0.13	lb/hr =	0.125	tonne CO_2e/yr		
N_2O =	0.03	lb/hr =	0.4630	tonne CO_2e/yr	Total tonne CO_2e/yr* =	304

The following conversions were used to convert from lb/gallon to lb/hp-hour; and then multiplying by the rated horsepower rating: 1 gallon/137,000 Btu; and 7,000 Btu/hp-hour.

* Total tonnes CO_2e per year represent the contributions from both generators.

Diesel-Fired Emergency Engine Powering Firewater Pump (S-7616-40-0)						
Operating Hours		100	hr/yr			
Heat Input		556	Bhp			
CO_2 =	636	lb/hr =	29	tonne CO_2/yr		
CH_4 =	0.03	lb/hr =	0.024	tonne CO_2e/yr		
N_2O =	0.01	lb/hr =	0.0881	tonne CO_2e/yr	Total tonne CO_2e/yr =	29

The following conversions were used to convert from lb/gallon to lb/hp-hour; and then multiplying by the rated horsepower rating: 1 gallon/137,000 Btu; and 7,000 Btu/hp-hour.

Fugitives - Gasification Block						
Operating Hours		8,760	hr/yr			
CO_2 =	38.9	tpy	37.79	tonne CO_2e/yr		
CH_4 =	0.27	tpy	5.56	tonne CO_2e/yr		
					Total tonne CO_2e/yr =	43

Detailed emission calculations are provided in Appendix M, Public Health.

Fugitives - Manufacturing Complex						
Operating Hours		8,760	hr/yr			
CO_2 =	32.2	tpy	31.27	tonne CO_2e/yr		
CH_4 =	0.39	tpy	7.92	tonne CO_2e/yr		
					Total tonne CO_2e/yr =	39

Detailed emission calculations are provided in Appendix M, Public Health.

230 kV Circuit Breakers

Number of Circuit Breaker	6	
SF_6 capacity	240	lb/breaker

Annual Leakage rate		0.5%				
SF_6 =	0.003	tonne/yr =	78	tonne CO_2e/yr	Total tonne CO_2e/yr =	78

SF6 GWP = 23,900 http://www.epa.gov/electricpower-sf6/faq.html)
Sources: SF6 inventory and maximum leakage rates from electrical equipment suppliers

18 kV Circuit Breakers

Number of Circuit Breaker		2				
SF_6 capacity		73	lb/breaker			
Annual Leakage rate		0.5%				
SF_6 =	0.000	tonne/yr =	8	tonne CO_2e/yr	Total tonne CO_2e/yr =	8

SF6 GWP = 23,900 http://www.epa.gov/electricpower-sf6/faq.html)
Sources: SF6 inventory and maximum leakage rates from electrical equipment suppliers

Total tonne CO_2e/yr for Stationary Sources=	**540,514**

APPENDIX J
Notification of Federal Land Managers

Re: HECA Application (Kern County, California) Nearest NPS Class I area is Sequoia NP 120 km away

Tonnie_Cummings · Cleveland Holladay 07/23/2012 02:43 PM
Judy_Rocchio, Annie_Esperanza

Cleveland Holladay HECA Application (Kern County, California) Nearest NPS Class I area is Seq

Tonnie_Cummings *Hi Cleve– Hope you're doing well.*

Hi Cleve--

Hope you're doing well.

Thanks for the opportunity to review Hydrogen Energy California's (HECA) application to construct an Integrated Gasification Combined-Cycle polygeneration project west of Bakersfield. According to the application, proposed emissions are: 164 TPY NOx, 275 TPY CO, 90 TPY PM10, 80 TPY PM2.5, 35 TPY VOC and 29 TPY SO2. Given that the Q/D for Sequoia NP is 3, and that all NOx, VOC, SO2 and PM10 emissions will be offset, we do not expect the HECA project to substantially affect air quality at the park. Therefore, the NPS does not intend to provide formal comments on the application.

--Tonnie

Tonnie Cummings
Air Resources Specialist
National Park Service, Pacific West Region
612 E. Reserve Street
Vancouver, WA 98661
Phone: 360-816-6201
Fax: 360-816-6365
Email: Tonnie_Cummings@nps.gov

Cleveland Holladay <Holladay.Cleveland@epamail.epa.gov>

07/20/2012 02:44 PM

To: Tonnie_Cummings@nps.gov

cc:

Subject: HECA Application (Kern County, California) Nearest NPS Class I area is Sequoia NP 120 km away

RE: HECA Application
McCorison, Mike -FS
to:
Cleveland Holladay
08/02/2012 03:44 PM
Cc:
"Worn, Katherine -FS", "Procter, Trent -FS", "Delgado, Arturo -FS", "Nick, Andrea -FS"
Hide Details
From: "McCorison, Mike -FS" <mmccorison@fs.fed.us>
To: Cleveland Holladay/R9/USEPA/US@EPA,
Cc: "Worn, Katherine -FS" <kworn@fs.fed.us>, "Procter, Trent -FS" <tprocter@fs.fed.us>, "Delgado, Arturo -FS" <adelgado@fs.fed.us>, "Nick, Andrea -FS" <anick@fs.fed.us>

Cleveland,
Thank you for making this application available to us. We understand that this application is being filed because of change in plant ownership. We've reviewed the application you made available and feel that our cited remarks "that a revised San Rafael AQRV analysis will not be necessary for this project" are still valid.

Thank you

Mike Mc Corison
Air Resource Specialist
Angeles National Forest
office 626-574-5286
cell 626-437-0624

From: Cleveland Holladay [mailto:Holladay.Cleveland@epamail.epa.gov]
Sent: Friday, July 20, 2012 2:30 PM
To: McCorison, Mike -FS
Subject: HECA Application

Mike,

I have uploaded the Hydrogen Energy California, LLC (HECA) PSD application for your information and comment. The HECA project will be located near the unincorporated community of Tubman in western Kern County, California. The closest US Forest Service Class I areas to the project are the San Rafael WA at 60 km to the southwest and Domelands WA 105 km to the east.

The applicant states in Section 6.2.1 at the bottom of the first paragraph that "On April 18, 2012, the U.S. Forest Service confirmed that a revised AQRV analysis would not be required for the HECA Project.

You may access the uploaded information by going to google.docs and logging into [redacted] word [redacted] to google.com first and then to documents which is in the bottom row (images,gmail, more etc. are along that row too)but above google logo. There should then be a log-in page where you can copy in [redacted] en the password.

Let me know if you have further comments or need addtional information.

Thanks,

APPENDIX K
Ambient Air Quality Impact and Health Risk Report

San Joaquin Valley
Air Pollution Control District

District Rule 2201, *New Source Review (NSR)* &
District Rule 4201, *Nuisance* &
District Rule 2410, *Prevention of Significant Deterioration (PSD)*

Ambient Air Quality Impact
&
Health Risk Assessment Report

For

Hydrogen Energy California LLC
Region S – 7616
Project #S-1121903

February 2013

Prepared by

Permit Services Department
Technical Services

This page left intentionally blank

Table of Contents

Executive Summary 1
1 Purpose of this Document 3
2 Applicant 3
3 Project Location 3
4 Project Description 5
4.1 New Permitted Equipment 5
4.2 Existing Permitted Equipment 6
5 SJVAPCD Attainment Status 7
6 District Rule 2410 - Air Quality Impacts 8
6.1 Introduction 8
6.2 National Ambient Air Quality Standard (NAAQS) Analysis 8
6.2.1 Additional Modeling Requirements 9
6.3 Identification of Modeling Documentation 10
6.4 Background Ambient Air Quality 11
6.5 Modeling Methodology for Class II areas 13
6.5.1 Model Selection 13
6.5.2 Meteorological Inputs 14
6.5.3 Land Characteristics 15
6.5.4 Receptors Grid 17
6.5.5 Load Screening and Stack Parameter 17
6.5.6 Good Engineering Practice (GEP) Analysis 19
6.6 NAAQS and Class II Increment Consumption Analysis 20
6.6.1 Pollutants with Significant Emission Rates 20
6.6.2 Preliminary Analysis: Project-only impacts (Normal Operations & Startup) 21
6.6.3 Cumulative Impact Analysis / Increment 22
6.7 Class I & II Area Analysis 28
6.7.1 Class I Area Significant Impact Level (SIL) Analysis 28
6.7.2 Air Quality Related Values (AQRV) 29
6.7.3 Class I Increment Consumption Analysis 30
7 Other Impact Analysis 31
7.1 Soils and Vegetation 31
7.2 Visibility Impairment 32
7.3 Growth 33

8 District Rule 2201 – Air Quality 35
8.1 Introduction 35
8.2 NAAQS and CAAQS Analysis 35
8.2.1 Additional Modeling Requirements 36
8.2.2 Background Ambient Air Quality 36
8.2.3 Modeling Methodology 37
8.2.4 Land Characteristics 39
8.2.5 Receptors Grid 40
8.2.6 Load Screening and Source Parameters 41
8.2.7 Good Engineering Practice (GEP) Analysis 43
8.2.8 Preliminary Analysis 44
8.2.9 Refined Analysis 46
9 District Rule 4201 – *Nuisances (Health Risk Analysis)* 50
9.1 Prioritization 50
9.2 Screening and Refined Assessment 51
9.3 Modeling Methodology 51
9.3.1 Model Selection 52
9.3.2 Land Characteristics 53
9.3.3 Sensitive Receptors Grid 54
9.3.4 Health Risk Analysis 56
9.3.5 HRA Significant Thresholds 57
9.3.6 Health Risk Analysis Results 57
10 Report Summary 61
10.1 District Rule 2410 - Prevention of Significant Deterioration (PSD) 61
10.2 District Rule 2201 - New Source Review (NSR) 61
10.3 Rule 4102 – Nuisance (HRA) 61
Appendix K-A – Rule 2410 Thresholds 63
Appendix K-B – Class I Areas 66
Appendix K-C – Cumulative Sources 70

Listing of Tables

Table 5-1 CAAQS/NAAQS Attainment Status for SJVAPCD 7
Table 6-1 Modeling Documentation..... 10
Table 6-2 CAAQS, NAAQS, & Background Concentration 12
Table 6-3 Source Stack Parameters 18
Table 6-4 Pollutant Emitted in Significant Amounts..... 20
Table 6-5 Project Significant Impact – Class II..... 21
Table 6-6 In-Stack NO2/NOx Ratios for Nearby Sources..... 24
Table 6-7 In-Stack NO2/NOx Ratios for Project Units..... 25
Table 6-8 Compliance with Class II PSD Increments and NAAQS 27
Table 6-9 Class I Significant Impact Levels..... 28
Table 6-10 Class I Air Quality Screening Analysis 29
Table 6-11 Class II Air Quality Screening Analysis 30
Table 7-1 Soils and Vegetation Results 31
Table 7-2 Class II Visibility Results 33
Table 8-1 CAAQS, NAAQS, & Background Concentration 37
Table 8-2 Source Stack Parameters 42
Table 8-3 Daily Emissions By Permit ID..... 44
Table 8-4 In-Stack NO2/NOx Ratios for Project Units..... 47
Table 8-5 Refined AAQA Results..... 49
Table 9-1 Source Stack Parameters 56
Table 9-2 HRA Results..... 57
Table 9-3 Risk by Permit Unit..... 58

Listing of Figures

Figure 3-1 Facility Location 4
Figure 6-1 100km Radius of Project Site..... 10
Figure 6-2 Nearby Monitoring Sites..... 13
Figure 6-3 Nearby Meteorological Dataset..... 15
Figure 6-4 Bakersfield Meadows Field Airport..... 16
Figure 6-5 Onsite Structures (Blue Objects)..... 20
Figure 8-1 Bakersfield Meadows Field Airport..... 40
Figure 8-2 Onsite Structures (Blue Objects)..... 44
Figure 9-1 Bakersfield Meadows Field Airport..... 54
Figure 9-2 Sensitive Receptor Locations..... 55

Acronyms & Abbreviations

AAQIR	Ambient Air Quality Impact Report
ACC	Air Cooled Condenser
Act	Clean Air Act [42 U.S.C. Section 7401 et seq.]
Agency	U.S. Environmental Protection Agency
AQRV	Air Quality Related Value
BACT	Best Available Control Technology
BDT	Bone Dry Tons
BTU	British thermal units
CAA	Clean Air Act [42 U.S.C. Section 7401 et seq.]
CBI	Confidential Business Information
CEMS	Continuous Emissions Monitoring System
CFR	Code of Federal Regulations
CO	Carbon Monoxide
District	San Joaquin Valley Air Pollution Control District
EPA	U.S. Environmental Protection Agency
ESA	Endangered Species Act
FLM	Federal Land Manager
FWS	U.S. Fish and Wildlife Service
GAQM	40 CFR part 51, Appendix W- *Guideline on Air Quality Models*
GEP	Good Engineering Practice
hp	Horsepower
HRSG	Heat Recovery Steam Generator
kW	Kilowatt
m	Meter
MMBTU	Million British Thermal Units
MW	Megawatts of Electrical Power
NAAQS	National Ambient Air Quality Standards
NLCD92	USGS 1992 National Land Cover
NO	Nitrogen Oxide or Nitric Oxide
NO2	Nitrogen Dioxide
NOx	Oxides of Nitrogen (NO + NO2)
NP	National Park
NSPS	New Source Performance Standards, 40 CFR part 60
NSR	New Source Review
PM	Total Particulate Matter
$PM_{2.5}$	Particulate Matter less than 2.5 micrometers (µm) in diameter
PM_{10}	Particulate Matter less than 10 micrometers (µm) in diameter
ppb	parts per billion
ppm	parts per million
PSD	Prevention of Significant Deterioration
PTE	Potential to Emit
RBLC	U.S. EPA RACT/BACT/LAER Information Clearinghouse
SJVAPCD	San Joaquin Valley Air Pollution Control District
SCFM	Standard Cubic Feet per Minute
SIA	Significant Impact Area

SIL	Significant Impact Level
SO2	Sulfur Dioxide
SOx	Oxides of Sulfur
tpy	tons per year
USGS	United States Geological Survey
WA	Wilderness Area

Executive Summary

Hydrogen Energy California LLC (HECA LLC) has submitted an application to San Joaquin Valley Air Pollution Control District (SJVAPCD) for Determination of Compliance (DOC) for an Integrated Gasification Combined-Cycle (IGCC) polygeneration project (hereafter referred to as HECA or the Project). As described below, the proposed Project will be classified as a Major facility, as this term is defined in District Rule 2201; and a Major Stationary Source under District Rule 2410.

The HECA site will be approximately 7 miles west of the outermost edge of the City of Bakersfield, and 1.5 miles northwest of the unincorporated community of Tupman in western Kern County, California. The legal description is as follows: Section 10 of Township 30 South, Range 24 East, in Kern County. The associated Assessor's Parcel Numbers (APNs) for the Project site are as follows:

- Part of 159-040-02,
- Part of 159-040-16, and
- Part of 159-040-18.

HECA is also acquiring an additional 653 acres of land adjacent to the Project Site, herein referred to as "Controlled Area." HECA LLC will own this property, and have control over public access and future land use by erecting a physical fence around the property. For the purposes of the Air Quality analysis, impacts were determined outside of both the Project Site and the Controlled Area. The associated APNs of the Controlled Area are as follows:

- 159-040-04,
- 159-040-11,
- 159-040-17,
- 159-190-09,
- Remnant part of 159-040-02,
- Remnant part of 159-040-16, and
- Remnant part of 159-040-18.

The proposed DOC application is consistent with the requirements of District Rules 2201, 4201, and 2410 for the following reasons:

- The proposed emission limits will not cause or contribute to any exceedance of the National Ambient Air Quality Standards (NAAQS) for NO2, SO2, CO, and PM10. There is no NAAQS set for Total Particulate Matter (PM);

- The proposed emission limits will not cause or contribute to any exceedance of the California Ambient Air Quality Standards (CAAQS) for NO2, SO2, CO, PM10, and PM2.5. There is no CAAQS set for Total Particulate Matter (PM);

- The facility will not adversely impact soils and vegetation, or air quality, visibility, and deposition in Class I areas, which are parks or wilderness areas given special protection under the Clean Air Act (CAA);

- The facility's toxic emissions will not cause an impact above the District's significant threshold level of 10 in one million or 1.0 for either the Acute or Chronic Hazard Indices.

1 Purpose of this Document

This document serves as the Ambient Air Quality Impact and Health Risk Assessment Report for the proposed construction DOC of the HECA facility. This document describes the basis for the proposed modeling, including requirements under the District's Rule 2201 New Source Review and District Rule 4201Nuisance and/or District Rule 2410 Prevention of Significant Deterioration.

2 Applicant

- **Project Site Location:**
  Hydrogen Energy California, LLC
  Section 10 Township 30S Range 24E
  Kern County, California

- **Mailing Address:**
  Hydrogen Energy California, LLC
  30 Monument Square, Suite 235
  Concord, MA 01742

- **Owner Contact:**
  Marisa Mascaro
  Executive Vice President, Legal and Regulatory Affairs
  Hydrogen Energy California LLC
  30 Monument Square, Suite 235
  Concord, MA 01742
  Phone: (978) 278-9529
  MMascaro@scsenergyllc.com

- **Project Consultant:**
  Julie Mitchell
  Air Quality and Public Health Scientist
  URS Corporation
  4225 Executive Square, Suite 1600
  La Jolla, CA 92037
  Phone: (858) 812-9292
  Fax: (858) 812-9293
  julie.mitchell@urs.com

3 Project Location

The HECA facility is located approximately 7 miles west of the outermost edge of the City of Bakersfield, and 1.5 miles northwest of the unincorporated community of Tupman in western Kern County, California. The legal description is as follows: Section 10 of Township 30 South, Range 24 East, in Kern County. The facility is bordered on the north by Adohr Road, on the east by Tupman Road, on the south by the California Aqueduct and State Route (SR) 273, and on the west by agricultural parcels. The city of Tupman is located within the jurisdiction of the San Joaquin Valley Air pollution Control District (SJVAPCD).

The map on the following page shows the approximate location of the proposed project.

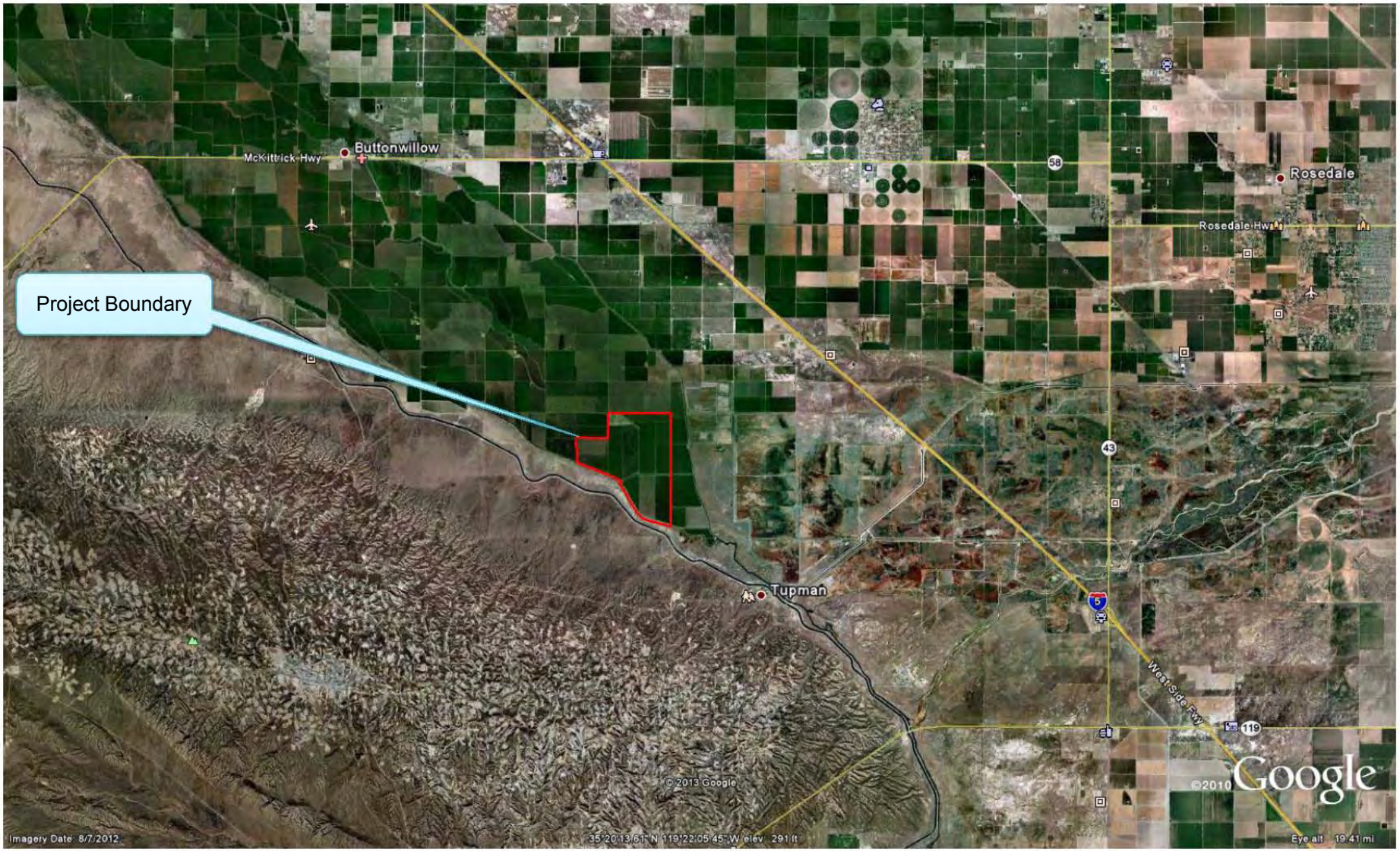

Figure 3-1 Facility Location

4 Project Description

This application is for an Integrated Gasification Combined-Cycle (IGCC) polygeneration operation and a low-carbon nitrogen-based products manufacturing operation. The Project will gasify a 75 percent coal and 25 percent petroleum coke (petcoke) fuel blend to produce synthesis gas (syngas). Syngas produced via gasification will be purified to hydrogen rich fuel, which will be used to generate low-carbon base load electricity in a combined cycle power block, low-carbon nitrogen-based products in an integrated manufacturing complex, and carbon dioxide (CO2) for use in enhanced oil recovery (EOR) at a neighboring oil production field.

HECA has proposed to employ the most stringent emissions control equipment available for the types of processes and equipment that will comprise the Project, and will fully offset its emissions of nonattainment pollutants and their precursors. In addition, the Project's methods for production of electric power and nitrogen-based products will have a significantly lower carbon footprint than would be possible using traditional processes based on fossil fuel. This low-carbon footprint is accomplished by capturing more than 90 percent of the carbon in the syngas and transporting it as CO2 for use in enhanced oil recovery (EOR), which results in simultaneous sequestration of this gas stream in a secure geological formation. The location of this sequestration will be the adjacent Elk Hills Oil Field (EHOF), which is owned and operated by Occidental of Elk Hills, Inc. (OEHI). The OEHI EOR Project will be separately permitted by OEHI through the Department of Conservation, Division of Oil, Gas, and Geothermal Resources, and SJVAPCD. Accordingly, equipment and emissions associated with EOR at the OEHI site are not addressed in this application.

4.1 New Permitted Equipment

The following is a cross-walk table that provides a basic listing of the proposed units from the permit application and the proposed District Permit IDs.

Applicant Proposed Unit ID[2]	Applicant Process Name	District Permit ID[1]	District Unit Description
1	Combined Cycle Combustion Turbine	26-0	Combustion Turbine Generator
2	Coal Dryer		
3	Auxiliary Boiler	25-0	NG Fired Auxiliary Boiler
4	Power Block Cooling Tower	29-0	Cooling Tower Serving Power Block
5	Process Cooling Tower	27-0	Cooling Tower Serving Power Block and Process Units
6	Air Separation Unit Cooling Tower	28-0	Cooling Tower Serving Air Separation Unit
7	Gasification Flare	30-0	Gasification Flare
8	Rectisol Flare	32-0	Rectisol Flare
9	SRU Flare	31-0	SRU Flare

Applicant Proposed Unit ID[2]	Applicant Process Name	District Permit ID[1]	District Unit Description
10	Tail Gas Thermal Oxidizer	23-0	Sulfur Recovery System's Tail Gas Thermal Oxidizer
11	CO2 Vent	24-0	CO2 Recovery and Vent System
12	Standby Diesel Generator 1	38-0	Diesel-Fired Emergency Engine Powering Electrical Generator
13	Standby Diesel Generator 2	39-0	Diesel-Fired Emergency Engine Powering Electrical Generator
14	Firewater Pump	40-0	Diesel-Fired Emergency Engine Powering Firewater Pump
15	Ammonia Start-Up Heater	33-0	Ammonia Synthesis Plant
16	Nitric Acid Unit	35-0	Nitric Acid Unit
17	Urea Pastillation Unit	34-0	Urea Unit
18	Ammonium Nitrate Unit	36-0	Ammonium Nitrate Unit
19	Dry material handling system	17-0	Coal Handling
		18-0	Petcoke Handling
	Fugitive emissions	19-0	Rec. & Blending
		20-0	Grinding
		21-0	Gasification System
		22-0	Gasification Solid Handling
		23-0	Sulfur Recovery Unit
		37-0	Urea Storage and Handling Operation

1 - The District Permit IDs start at unit 17-0 as units from the previous application have been cancelled.
2 - From Section 3.1 of the Permit Application documentation

4.2 Existing Permitted Equipment

No permitted units exist at this facility; therefore this analysis will only consider the proposed equipment from the Project's permit application.

5 SJVAPCD Attainment Status

District rules are intended to address issues of air quality in attainment and non-attainment areas, attainment areas are areas that meet the National Ambient Air Quality Standards (NAAQS). Table 5-1 describes which pollutants are covered specifically by District Rules 2201/4201 and/or 2410 within the San Joaquin Valley air basin.

Table 5-1 CAAQS/NAAQS Attainment Status for SJVAPCD

Pollutant		Attainment Status		District Rule
		Federal	State	
Lead (Pb)		No Designation (Classification)	Attainment	2201 / 4201 / 2410
Nitrogen Dioxide (NO2)		Attainment (Unclassified)	Attainment	2201 / 4201 / 2410
Sulfur Dioxide (SO2)		Attainment (Unclassified)	Attainment	2201 / 4201 / 2410
Carbon Monoxide (CO)		Attainment (Unclassified)	Attainment (Unclassified)	2201 / 4201/ 2410
Sulfuric Acid Mist (H2SO4)[1]		N/A	N/A	2201 / 4201
Particulate Matter (PM) [1]		N/A	N/A	2201 / 4201
Particulate Matter under 2.5 micrometers diameter (PM2.5)		Nonattainment	Nonattainment	2201 / 4201
Particulate matter under 10 micrometers diameter (PM10)		Attainment	Nonattainment	2201 / 4201 / 2410
Ozone	1-hour	N/A	Nonattainment (Severe)	2201 / 4201
	3-Hour	Nonattainment (Extreme)	Nonattainment	2201 / 4201
Greenhouse Gases (GHG)[1]		N/A	Unclassified	2410
Hydrogen Sulfide		N/A		2201 / 4201
Sulfates		N/A	Attainment	2201 / 4201
Visibility Reducing Particles		N/A	Unclassified	2201 / 4201
Vinyl Chloride		N/A	Attainment	2201 / 4201

[1] There is no national ambient air quality standard (NAAQS) for PM, H2SO4 or GHG. However, in addition to other pollutants for which no NAAQS have been set, PM, H2SO4 and GHG are listed as regulated pollutants with a defined applicability threshold under the PSD regulations (40 CFR 52.21).

6 District Rule 2410 - Air Quality Impacts

District Rules 2410 require an examination of the impacts of the proposed project on ambient air quality. The project must demonstrate, using air quality models, the facility's emissions of the applicable regulated air pollutants (NO2, SO2, CO, PM10) would not cause or contribute to a violation of:

(1) The applicable NAAQS,
(2) The applicable PSD increments (Appendix K-A),
(3) The applicable Soil & Vegetation concentration, and;
(4) Impact the visibility at Class I & II areas

These sections of this report include a discussion of the relevant background data and air quality modeling, and the District's conclusion that the Project will not cause or contribute to an exceedance of the applicable NAAQS or applicable PSD increments and is otherwise consistent with District Rule 2410 requirements.

6.1 Introduction

Under District regulation, a permit evaluation for a project that triggers PSD new Major Source, or PSD Major Modification (District Rule 2410) must include an air quality analysis demonstrating that the facility's emissions of the applicable regulated air pollutants will not cause or contribute to a violation of the applicable NAAQS or applicable PSD increments.

Please Note: A PSD increment for a pollutant applies only to areas that meet the corresponding NAAQS. Modeling analyses for each criteria pollutant emitted above the applicable significant emission rate (SER) are conducted and the results of this analysis are presented in this report.

6.2 National Ambient Air Quality Standard (NAAQS) Analysis

If a preliminary analysis shows that the ambient concentration impact resulting from the project's emissions is greater than the Significant Impact Level (SIL), then a full or cumulative impact analysis is required for that pollutant. The cumulative impact analysis can include nearby pollution sources in the modeling, and adds a monitored background concentration to account for sources not explicitly included in the model. The cumulative impact analysis must demonstrate that the project will not cause or contribute to a NAAQS or increment violation. If a preliminary analysis shows that the ambient concentration impact of the project by itself is less than the Significant Impact Level (SIL), then further analysis is generally not required.

Required model inputs characterize the various emitting units, meteorology, and the land surface, and define a set of receptors (spatial locations at which to estimate concentrations, typically out to 50 km from the facility). Modeling should be performed in accordance with District and EPA's Guideline on Air Quality Modeling, in Appendix W to 40 CFR Part 51 (GAQM or Appendix W). AERMOD with its default settings is the standard model choice, with CALPUFF available for complex wind situations.

6.2.1 Additional Modeling Requirements

The follow are additional general modeling requirements that should be considered as per District Rule 2410 compliance.

- Include a Good Engineering Practice (GEP) stack height analysis, to ensure that
  a) Downwash is properly considered in the modeling, and
  b) Stack heights used as inputs to the modeling are no greater than GEP height, so as to disallow artificial dispersion from the use of overly tall stacks.
- Include initial "load screening," in which a variety of source operating loads and ambient temperatures are modeled, to determine the worst-case scenario for use in the rest of the modeling.
- Include an analysis of the impact on nearby Class I areas, generally those within 100 km of a project site, though the relevant Federal Land Manager (FLM) may specify additional or fewer areas. Figure 6-1 displays the 100km radius from the project site and Appendix K-B provides a complete list of Class I areas located within 100 km of the SJVAPCD boundaries. This analysis includes the:
  - NAAQS analysis
  - PSD increments analysis, and
  - Air Quality Related Values (AQRV) analysis
    - AQRVs are defined by the FLM, and typically limit visibility degradation and the deposition of sulfur and nitrogen. Generally, CALPUFF is the standard model choice for Class I analyses, since it can handle visibility chemistry as well as the typically large distances (over 50 km) to Class I areas.
- Include an impact analysis, showing the Project's effect on visibility, soils, vegetation, and growth.
  - The visibility analysis is independent of the Class I visibility AQRV analysis.

Figure 6-1 100km Radius of Project Site

6.3 Identification of Modeling Documentation

The modeling analysis is comprised of the documents listed in Table 6-1 below

Table 6-1 Modeling Documentation

Short Name	Citation
PSD Application	**Determination of Compliance Application and Supplemental Information for the Prevention of Significant Deterioration (PSD) Permit Application" Document Dated May 2012**
FLM1	**Email sent from URS to FLM on 4/17/2012. Updated Q/d analysis.**
FLM2	**Email sent from FLM to URS confirming that no AQRV analyses**
Class II	**Email sent from URS to EPA IX & the District on 10/30/2012 w/ Class II analysis**

The following briefly discusses each of the cited documents:

The PSD Application included the main document and supporting appendices discussing the proposed Project and the analyses performed in support of the compliance with District Rules 2201, 4201, and 2410. In addition to the supporting documents electronic model inputs and outputs were provided.

The FLM1 email sent by URS to the FLMs was an updated Q/d analysis for the updated emissions from the Project that shows that the Q/d is below the FLM screening level of 10. The FLM2 email from the FLM to USR provided confirmation that an AQRV analysis would not be required since the Q/d values were below the screening level of 10.

The Class II email and documentation sent by USR to EPA Region IX & the District described the methodology used and the results derived from Class II visibility analysis. The visibility analysis used a Level 1 analysis to perform the Class II visibility analysis.

6.4 Background Ambient Air Quality

District regulations require the air quality analysis to contain air quality monitoring data as needed to assess ambient air quality in the area for applicable regulated pollutants for which there are NAAQS that may be affected by the Project. In addition, for demonstrating compliance with the NAAQS, a background concentration is added to represent those sources not explicitly included in the modeling, as determined by the District, so that the total concentration accounts for all contributions to current air quality.

Ambient air concentrations of ozone (O3), CO, NO2, SO2, PM10 and PM2.5 are recorded at monitoring stations throughout the San Joaquin Valley. In order to select the appropriate monitoring station the area surrounding the project site must be first evaluated. The area immediately surrounding the Project site can be characterized as being rural with farmland to northwest, north, east (near the project site and non-developed areas further out) and mountains to the west and south of the project site, see Figure 6-2. The only major industrial sources are located south of the project site consisting of oil & gas production (~ 4.0 km) and power generation operations (~ 8.0 km).

The monitoring station in Kern County that is closest to the Project Site is the Shafter–Walker Street Station located within 13 miles (21 kilometers) from the Project Site. This station measures ozone (O3) and NOX/NO2 concentrations, and is the most representative station to characterize background conditions for these pollutants near HECA.

The Bakersfield — 5558 California Avenue station is the next closest station and the closest that measures all pollutants except SO2 and CO. This station is located approximately 20 miles (32 kilometers) to the east of the Project site, and provides the best representation of the background levels for PM10 and PM2.5 for the area near HECA. In addition, it is the only station that measures these pollutants with adequate data capture within the San Joaquin Valley portion of Kern County.

The Bakersfield — Golden State Highway station is the only station in Kern County that measures CO. This station was closed early in 2010; thus the most recent measurements available for this station are for 2007–2009, as 2010 data did not have suitable data capture.

The only station in the SJVAB that monitors SO2 is the CARB station at First Street in Fresno, located approximately 102 miles (164 kilometers) to the north. Sulfur dioxide data have only

been recorded in Fresno County for 6 of the last 10 years (2003, 2007, 2008, 2009, 2010, 2011), a practice that is justified by the low levels that have been recorded for this pollutant where and when measurements have been made.

Table 6-2 below describes the maximum background concentrations, from the most recent available 3 year period of data collection, for which there are NAAQS that may be affected by the Project's emissions. Use of this method effectively assumes that the highest recently recorded pollutant concentrations for each averaging period are occurring during every such period over the 5-year meteorological input record. This static high background is then paired with modeled results.

Table 6-2 NAAQS, & Background Concentration

Ambient Air Quality Standards			
Pollutant	**Averaging Time**	**National Standards Concentration**	**Background Concentration** ($\mu g/m^3$)
Respirable Particulate Matter (PM10)	24 Hour	150 $\mu g/m^3$	264[5]
Fine Particulate Matter (PM2.5)	24 Hour[1]	35 $\mu g/m^3$	196
	Annual Arithmetic Mean	15 $\mu g/m^3$	22
Carbon Monoxide (CO)	1 Hour	35 ppm (40 mg/m^3)	4,581
	8 Hour	9 ppm (10 mg/m^3)	2,485
Nitrogen Dioxide (NO2)	1 Hour[2]	188 $\mu g/m^3$	140
	Annual Arithmetic Mean	100 $\mu g/m^3$	26
Sulfur Dioxide (SO2)[3]	1 Hour	196 $\mu g/m^3$	42
	3 Hour[4]	1300 $\mu g/m^3$	26
	24 Hour	365 $\mu g/m^3$	13

1 - The PM2.5 24-hr value is the 98th percentile averaged over three years rather than the maximum
2 - The NO2 1-hr value is the 98th percentile averaged over three years rather than the maximum
3 - The SO2 annual standard is replaced by the more stringent SO2 1-hour standard
4 – No primary standard exist for SO2 3-hour standard. Value used is for the secondary standard
5 – The value used represents the maximum value including those exceptional events that EPA has not acted on. Therefore this value is only used for modeling and should not be used to represent compliance with the NAAQS at the monitoring site.

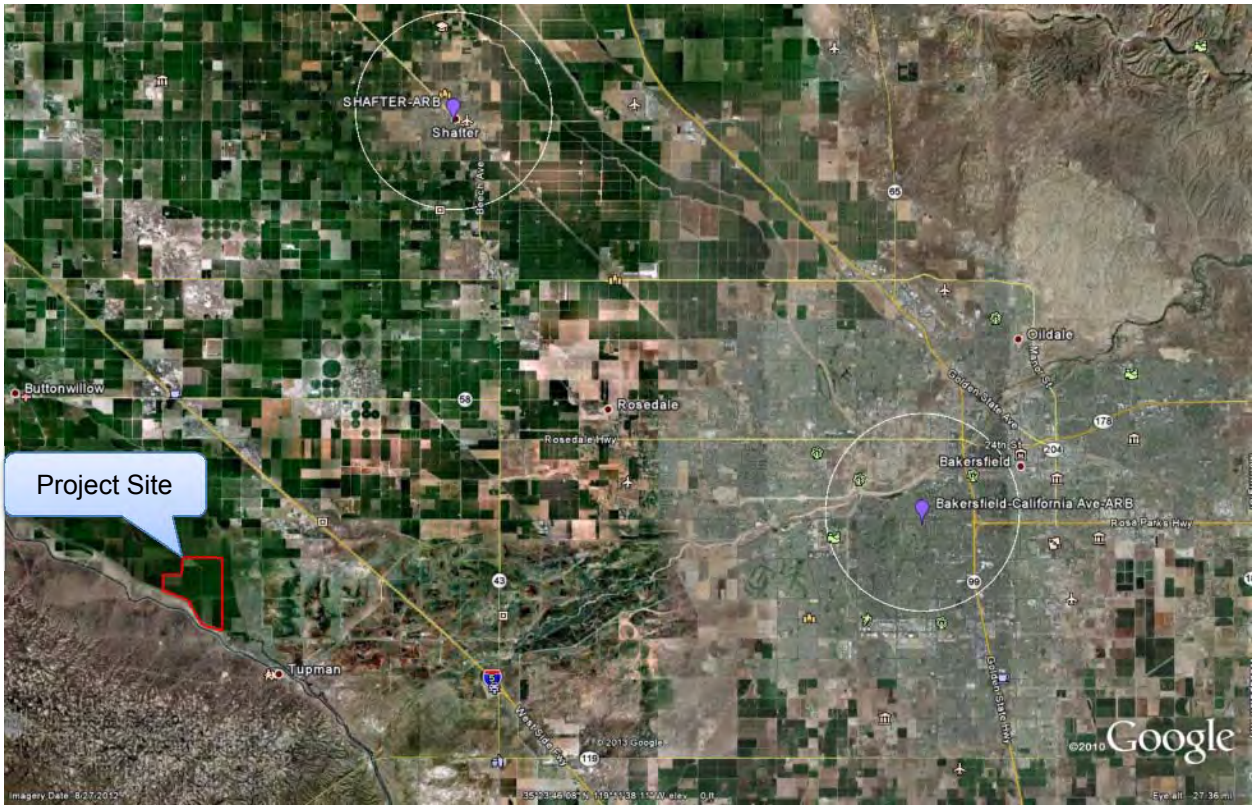

Figure 6-2 Nearby Monitoring Sites

6.5 Modeling Methodology for Class II areas

The applicant modeled and the District reviewed the impact of the project on the NAAQS and PSD Class II increments using AERMOD in accordance with District guidance and EPA's GAQM (Appendix W of 40 CFR Part 51). HECA is designated as a PSD source for three criteria pollutants: CO, NO2, and PM10. A project's impacts may be compared to the significant impact levels (SILs) as a screening modeling exercise that helps determine whether the project may cause or contribute to a violation of the NAAQS. The modeling analyses included the maximum air quality impacts during normal operations and startups and shut-downs, as well as a variety of conditions to determine worst-case short-term air impacts.

6.5.1 Model Selection

As discussed in the PSD Application, the model selected for analyzing air quality impacts in Class II areas is EPA's preferred dispersion model AERMOD [Ver. 12060], along with AERMAP for terrain processing and AERMET for meteorological data processing. This is in accordance with the default recommendations in the District guidance and EPA's GAQM, Section 4.2.2 on Refined Analytical Techniques.

6.5.2 Meteorological Inputs

6.5.2.1 Surface Data

AERMOD requires representative meteorological data in order to accurately simulate air quality impacts. SJVAPCD provided the surface meteorological data collected for a five-year consecutive period (from 2006 – to 2010) at the Bakersfield Meadows Field Airport meteorological station maintained by the FAA.

The District processed these data using EPA's AERMET data processor and the District meteorological data processing guidance (http://www.valleyair.org/busind/pto/Tox_Resources/AirQualityMonitoring.htm#modeling_guidance). The meteorological station is located on the northern end of the city of Bakersfield, within 20 miles (32.2 kilometers) east-northeast of the Project Site, with no intervening structures, hills, or water bodies that might significantly affect meteorological conditions. The project site, the meteorological site and the "area of interest" are located inland and close to each other.

For analyzing the representativeness of the meteorological dataset, the area of interest includes:

- the SIA where screening modeling predicts the Project's pollutant impact to be greater than the SILs, and
- Also includes the sources and receptors used in the modeling.

Other nearby surface meteorological sites were examined, but the Bakersfield Meadows Field Airport station had sufficient data completeness, is the closest, and is the most representative with no intervening high ground between the Project site and the meteorological tower. District believes that the chosen from 2006 – to 2010 Bakersfield Meadows Field Airport data is the most representative for the proposed project analysis. Further discussion of the meteorological data used in the analysis is given in the following section on land characteristics. **Please Note**: The other nearby sites (Fellows and Missouri Triangle) are considered prognostic datasets generated from MM5 data and at the current time are not acceptable by EPA.

Figure 6-3 Nearby Meteorological Dataset

6.5.2.2 Upper Air Data

For upper air data, the District selected (from 2006 – to 2010) the upper air site located in Oakland, California, located approximately 227 miles (366 km) northwest of the Project site as being the most representative site available that had data complete enough to use. No other upper air meteorological monitoring stations are located in the San Joaquin Valley Air Basin.

6.5.3 Land Characteristics

Land characteristics are used in the AERMOD modeling system in three ways:

1) via elevation within AERMOD to assess plume interaction with the ground;
2) via a choice of rural versus urban algorithm within AERMOD; and
3) via specific values of AERMET parameters that affect turbulence and dispersion, namely surface roughness length, Bowen ratio, and albedo. The surface roughness length is related to the height of obstacles to the wind flow and is an important factor in determining the magnitude of mechanical turbulence. The Bowen ratio is an indicator of surface moisture. The albedo is the fraction of total incident solar radiation reflected by the surface back to space without absorption.

The applicant used terrain elevations from United States Geological Survey (USGS) National Elevation Dataset (NED) data at a horizontal resolution of 30 meters, for receptor heights in AERMOD, which uses them to assess plume distance from the ground for each receptor. All coordinates were referenced to UTM North American Datum 1983 (NAD83, Zone 11). The AERMOD, receptor elevations were interpolated among the NED nodes according to standard AERMAP procedure.

The applicant used surface roughness values in the modeling inputs developed by SJVAPCD. The District followed EPA's “AERMOD Implementation Guide” (2009 version) and the District’s Guidance entitled “Procedure for Downloading & Processing NCDC Meteorological Data” in using EPA's AERSURFACE processor with the National Land Cover Data 1992 archive to determine surface characteristics for AERMET. The surface roughness characteristics are representative of the area surrounding the site where the meteorological data is collected. The District also used the criteria described in Section 3 (Representativeness) from EPA’s Meteorological Monitoring Guidance for Regulatory Modeling Applications (2000). AERSURFACE uses a Land Use data base from 1992. In addition, SJVAPCD reviewed recent aerial photos for the area, which show that the Bakersfield Meadows Field Airport meteorological tower is surrounded by a light industrial, residential, and rural area.

Figure 6-4 Bakersfield Meadows Field Airport

The applicant did a qualitative comparison of the following factors:

- Proximity
- Height of measurement
- Surface characteristics

The Bakersfield Airport is the closest full-time meteorological recording station to the Project Site. The terrain immediately surrounding the Project Site can be categorized as a fairly flat, or gradually sloping rural area in a region with developed oil wells. The terrain around the Bakersfield Airport also consists of relatively flat, or gradually sloping rural or suburban areas.

Thus, the land use and the location with respect to near-field terrain features are similar. Both are located in areas of medium surface roughness (as opposed to low surface roughness like bodies of water or grassy prairies, or high surface roughness like highly urbanized cities or forests). Both locations are on the valley floor and are at approximately the same elevation. Additionally, there are no significant terrain features separating the Bakersfield Airport from the Project Site that would cause significant differences in wind or temperature conditions between these respective areas.

6.5.4 Receptors Grid

Receptors in the model are geographic locations at which the model estimates concentrations. The applicant placed receptors such that they have good area coverage and are closely spaced enough so that the maximum model concentrations can be found. At larger distances, spacing between receptors may be greater than it is close to the source, since concentrations vary less with increasing distance. The spatial extent of the receptors is limited by the applicable range of the model (roughly 50 km for AERMOD), and possibly by knowledge of the distance at which impacts fall to negligible levels. Receptors need be placed only in ambient air, that is, locations to which the public has access, and that are not inside the project boundary.

The applicant used a Cartesian coordinate receptor grid to provide adequate spatial coverage surrounding the project area, to identify the extent of significant impacts, and to identify the maximum impact location. In the analyses, the applicant placed receptors using the following telescoping grid out to 10 km, as seen in Figure 4-1 & 4-2 of the Project application.

- 25-meter spacing along the property line and extending from the property line out 100 meters;
- 50-meter spacing from 100 to 250 meters beyond the property line;
- 100-meter spacing from 250 to 500 meters beyond the property line;
- 250-meter spacing from 500 meters to 1 kilometer beyond the property line;
- 500-meter spacing from 1 to 2 kilometers beyond the property line; and
- 1,000-meter spacing from 2 to 10 kilometers beyond the property line.

During the refined modeling analysis for operational Project emissions, if a maximum predicted concentration for a particular pollutant and averaging time was located within the portion of the receptor grid with spacing greater than 25 meters, a supplemental dense receptor grid was placed around the original maximum concentration point, and the model was rerun. The dense grid used 25-meter spacing and extended to the next grid point in all directions from the original point of maximum concentration. The only dense refined receptor grid that was needed in the current modeling analysis occurred for 24-hour SO2 operational modeling, where a dense grid was placed in the hills southwest of the Project site. Details may be seen in the model input files included in the electronic files submitted with this PSD Application.

6.5.5 Load Screening and Stack Parameter

The applicant performed initial “load screening” modeling, in which nine source operating loads and ambient temperatures were modeled, to determine the “worst case” stack parameter scenario for use in the rest of the modeling, whenever normal operations are considered. At a

minimum two loads should be considered: a minimum load of 50% and a maximum load of 100%. The choice of "worst case" can be different for each pollutant and averaging time, because different pollutants' emissions respond differently to temperature and flow rate.

For all pollutants and averaging times, screening modeling was performed with maximum emissions and the most conservative stack parameters for each source, regardless of whether all equipment will run at the same time in this worst-case stack parameter and emissions configuration. This methodology was performed to determine conservative worst-case off-site impacts without the need of sensitivity modeling for each piece of equipment or time period. Normally, all sources will not run at the same time with their worst-case stack parameters and emissions. For example, the emergency ancillary equipment (generators, firewater pump) will not all be tested at the same time during a start-up sequence. However, if the most conservative impact scenario complied for the CAAQS and NAAQS, the equipment was kept in the modeling with maximum emissions and the most conservative stack parameters to eliminate the need for sensitivity modeling iterations. Modeled source parameters are listed in the PSD Application, Appendix D. A detailed explanation of each of the modeling scenarios is included in the Section 4.1 of the PSD Application.

More refined modeling was completed for several pollutants to more accurately depict the activities occurring concurrently for short averaging times. Sensitivity modeling was completed for CO 1-hour, and it was determined that the CTG/HRSG shut-down scenario (20 percent load burning natural gas) gave higher impacts than the CTG/HRSG starting up scenario. However, the maximum CO 8-hour impact was determined to occur during CTG/HRSG start-up mode when other sources are operating for that duration of time. It was determined that the coal dryer gave higher short-term SO2 impacts in operations mode than in start-up or shut-down mode, while all other maximum pollutant impacts for the coal dryer occurred during coal dryer start-up mode. Finally, maximum NO2 1-hour NAAQS impacts occur when the CTG/HRSG and coal dryer are operating in on-peak power mode rather than off-peak power mode.

Table 6-3 Source Stack Parameters

Source	Operating Condition Associated with Emission Rate	Stack Ht.	Temperature	Exit Velocity	Stack Diameter
		(ft)	*(°F)*	*(ft/sec)*	*(ft)*
HRSG Stack	Normal On-Peak Emissions (Case 1)	213	200	53.81	23
Coal Dryer	Normal On-Peak Emissions (Case 1)	305	200	19.16	16
Tail Gas Thermal Oxidizer Stack	Normal operations	165	1200	50.93	2.5
Auxiliary Boiler	Normal operations	80	300	30.18	4.5
Rectisol® Flare	Annualized emissions, start-up flaring	217.83	1831.73	65.62	0.87
Gasification Flare	Annualized emissions, start-up and shut-down flaring	219.63	1831.73	65.62	1.22

SRU Flare	Normal Operations, Pilot	215	1831.73	65.62	0.32
Nitric Acid Plant Stack	Normal operations	145	239	17.11	8
Emergency Diesel Generator 1	Annualized emissions	20	760	221.05	1.2
Emergency Diesel Generator 2	Annualized emissions	20	760	221.05	1.2
Emergency Diesel Firewater Pump	Annualized emissions	20	850	155.91	0.7
Ammonia Synthesis Plant Start-up Heater	Annualized emissions	80	300	18.71	3.5

6.5.6 Good Engineering Practice (GEP) Analysis

The applicant performed a Good Engineering Practice (GEP) stack height analysis, to ensure that:

a) downwash is properly considered in the modeling, and
b) stack heights used as inputs to the modeling are no greater than GEP height, so as to disallow artificial dispersion from the use of overly tall stacks.

As is typical, the GEP analysis was performed with EPA's BPIP (Building Profile Input Program) software, which uses building dimensions and stack heights as inputs. All stacks in the HECA Project will be less than or equal to the GEP default height of 65 meters, except for the coal dryer, three flares (SRU, Gasification, Rectisol), and the CO2 vent. Based on the analysis, the applicant showed that the GEP stack height for the Coal Dryer and CO2 Vent were greater than 65 m (213 ft), which is greater than the planned actual height of 92.9 m (304.8 ft) and 79.2 m (259.8 ft).

The flares are not within 5 times L (138.5 meters) of the gasification structure or any other structure that is large enough to create downwash for the flares in BPIP. It is important to note that the flares will be built at 76.2 meters tall for safety from a project engineering perspective. However, a 65-meter stack height, or GEP, was used to calculate specific effective stack heights for each flare modeling scenario based on the flare's heat release rate during that modeling scenario. The effective stack height is the height of the stack plus the height above the stack where the flare flame ends and a plume can begin. The effective stack parameters were calculated using the SCREEN3 technique, and were input into the AERMOD model. Therefore, the lower 65 meter stack height was used as the stack height in the calculation of the effective stack heights for the flares, rather than the actual stack height.

The applicant also showed that the GEP stack height for the other equipment was similarly greater than the planned heights. So, for all emitting units, the applicant used the planned actual stack heights for inputs in AERMOD modeling, and included wind direction-specific Equivalent Building Dimensions to properly account for downwash.

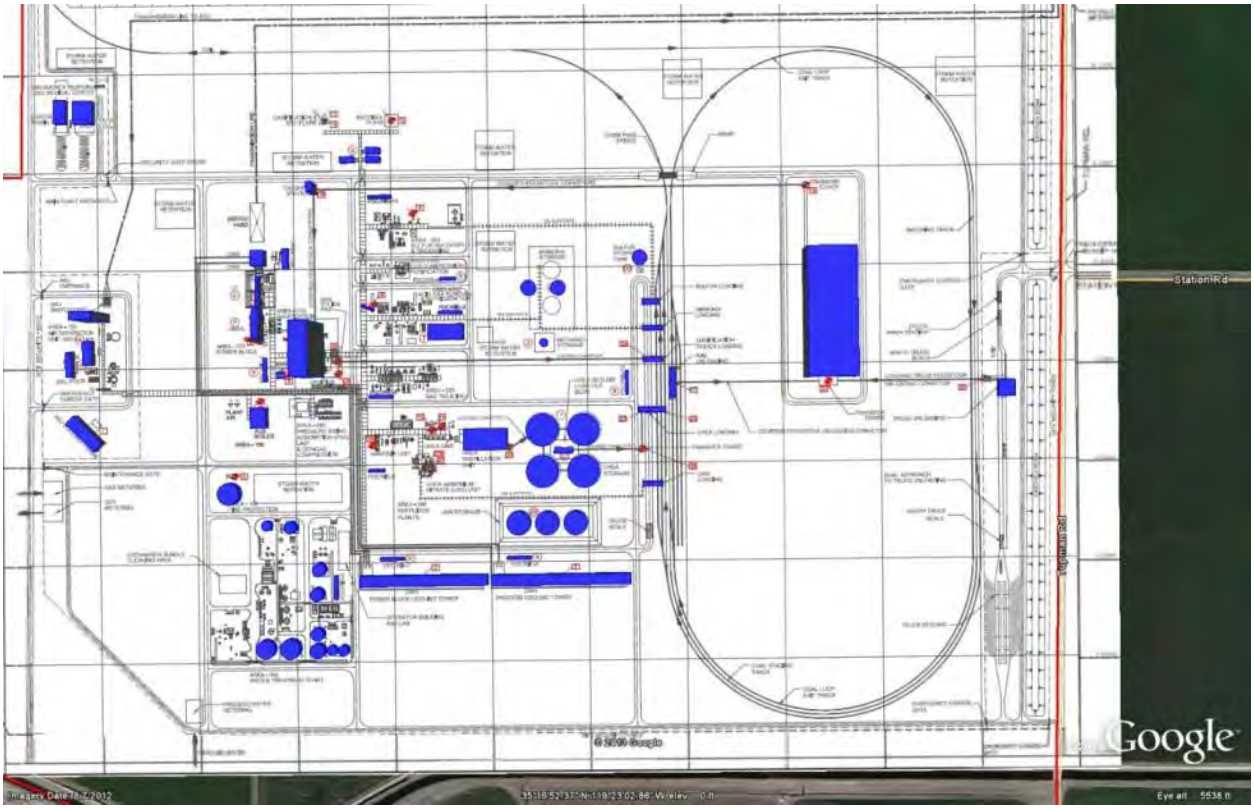

Figure 6-5 Onsite Structures (Blue Objects)

6.6 NAAQS and Class II Increment Consumption Analysis

6.6.1 Pollutants with Significant Emission Rates

District Rule 2410 requires an air quality impact analysis be performed for each regulated pollutant (for which there is a NAAQS) that a major source has the potential to emit in a significant amount, i.e. an amount greater than the Significant Emission Rate for the pollutant.

Applicable project emissions and the Significant Emission Rates are shown in Table 6-4 (provided by the processing engineer). As shown in Table 6-4 below, the District does not expect the project to result in significant amount of emissions of SOx or Lead. However, based on the information provided by the processing engineer it is expected that the project will result in significant amount of emissions of CO, NOx, PM2.5 and PM10. Therefore, this project triggers the air impact analyses for CO, NOx, and PM10 only.

Table 6-4 Pollutant Emitted in Significant Amounts

Criteria Pollutant	Project Emissions	Significant Emission Rate	PSD applicable?
	tons/year	*tons/year*	
CO	272	100	Yes
NOX	159	40	Yes
PM10	89	15	Yes

Criteria Pollutant	Project Emissions	Significant Emission Rate	PSD applicable?
	tons/year	*tons/year*	
PM2.5	79	10	Non-Attainment
SO2	30	40	No
Pb	0.0	0.6	No

6.6.2 Preliminary Analysis: Project-only impacts (Normal Operations & Startup)

EPA has established Significant Impact Levels (SIL) to characterize air quality impacts, see the Table 6-5 below or Appendix K-A. SIL is the ambient concentration for a given pollutant and averaging period which the resulting concentration from the facility's emissions must stay below in order for the source to be considered to have an insignificant impact. For maximum modeled concentrations below the SIL, further air quality analysis for the pollutant is generally not required. For maximum concentrations that exceed the SIL, District Rule 2410 requires a cumulative modeling analysis which incorporates the combined impact of nearby sources of air pollution to determine compliance with the NAAQS and PSD increments.

Table 6-5 below, shows the results of the preliminary or Project-only analysis based on normal operations for the project. The project impacts are significant only for 1-hour NO2 and 1-hour CO, and the District has determined that cumulative impact analysis or cumulative screening analysis are required for only these two pollutants.

Table 6-5 Project Significant Impact – Class II

NAAQS Pollutant & Averaging Time	Project-only Modeled Impact	Significant Impact Level (SIL)	Project Impact Significant?	Significant Monitoring Concentration (SMC) (µg/m3)
	ug/m3	*µg/m3*		
CO, 1-hour	2,625	2000	Yes	---
CO, 8-hour	368	500	No	575
NO2, 1-hour	24	7.5	Yes	---
NO2, annual	0.6	1	No	14
PM10, 24-hour	3	5	No	10
PM10, annual	0.7	1	No	---

PM10 24-hour, PM10 annual, CO 8-hour, and NO2 annual modeled impacts from the Project operations are less than the applicable SIL. The modeled CO 1-hour impact is greater than the SIL of 2,000 µg/m3. A refined scenario (cumulative screening analysis) was conducted which included permitted and non-permitted sources (on site mobile) and concentrations from a conservative background site. This refined analysis indicated that the CO 8-hour concentration would be 7,244 µg/m3 (maximum modeled 2,663 µg/m3 + 4,581 µg/m3 background) which would be significantly less than the NAAQS of 40,000 µg/m3. Therefore no additional cumulative impact analysis was warranted.

The NO2 1-hour concentration greater than the SIL of 7.5 µg/m3 and required that a cumulative impact and a PSD increment analysis.

Significant Monitoring Concentrations (SMC) are applicable to PSD pollutants only, and are compared to the same modeled pollutant concentrations from the Project as were compared to the SIL. As noted in Table 6-5 above, the SMCs are higher than SILs. And HECA's estimated impacts are lower than all applicable SMCs, therefore, monitoring is not required. Currently, no SMC exists for NO2 1-hour.

6.6.3 Cumulative Impact Analysis / Increment

A cumulative NAAQS or PSD increment impact analysis considers impacts from nearby sources in addition to impacts from the Project itself. In addition, for demonstrating compliance with the NAAQS, the applicant added a background concentration to represent those sources not explicitly included in the modeling. As a result, the total accounts for all contributions to current air quality. In this case, the cumulative impact analyses submitted demonstrated compliance with the NO2 1-hour NAAQS.

For demonstrating compliance with the PSD increment, only increment-consuming sources need to be included, because the increment concerns only changes occurring since the applicable baseline date. In this analysis, there is no CO 1-hour and 8-hour, and NO2 1-hour PSD increment; therefore, no PSD increment analysis is required.

The Project's maximum modeled impacts for PM10 24-hour and annual, and NO2 annual are below the applicable SILs. Therefore, an increment consumption analysis is not required and is assumed to be insignificant and no preconstruction monitoring or additional impact analyses are required.

6.6.3.1 Nearby Source Emission Inventory

For both the PSD increment and NAAQS analyses, there may be a large number of sources that could potentially be included, so judgment must be applied to exclude small and/or distant sources that have only a negligible contribution to total concentrations. Only sources with a significant concentration gradient in the vicinity of the source need be included; the number of such sources is expected to be small except in unusual situations. (GAQM 8.2.3)

SJVAPCD provided a list of all stationary sources within the District and within ~75 km of the project. A comprehensive procedure was used to determine which sources were included in the emissions inventory.

It should be noted that short-term maximum emission rates rather than annual emission rates determine the distance over which a facility might have a significant impact for short-term standards (e.g., hourly NO2). Peak rates that occur during startup determine the HECA significant impact area for hourly pollutants.

The applicant identified numerous units (371 permitted units) nearby for inclusion in the emissions inventory for the cumulative analysis, based on discussions with SJVAPCD. The

non-HECA facilities and their hourly NO2 emissions are included in the cumulative compliance demonstration; see Appendix K-C for a complete listing of facilities and units.

These facilities are large enough and close enough to the Project site to have the potential to directly impact the Project's significant impact area.

Current EPA NO2 guidance suggests that emphasis on determining which nearby sources to include in the nearby source inventory could be limit on the area within about 10 kilometers of the project location in most cases, which indicates that the HECA inventory is adequate for performing these cumulative analyses (p.16 of "Additional Clarification Regarding Application of Appendix W Modeling Guidance for the 1-hour NO2 National Ambient Air Quality Standard", Memorandum from Tyler Fox, EPA Air Quality Modeling Group to EPA Regional Air Division Directors, March 1, 2011).

Nevertheless, as an additional factor, the applicant also considered emission levels and distance as factors for determining which sources with small emissions and/or at large distances would be reasonable to exclude from the analysis. The applicant proposed that NO2 sources with a ratio less than 2.0 (based on the ratio of annual emissions to the distance to the limits of significant impact) be eligible for exclusion from the relevant inventories. This ratio was used to classify those that clearly should be included and those that could be clearly excluded.

Therefore, taking into consideration the current EPA guidance suggesting a focus on sources within 10 km, the District concludes that the combination of a representative background monitored concentration, and the additional consideration of emission levels and distance, provide sufficient justifications for the inventory used in the cumulative analysis.

6.6.3.2 PM2.5-Specific Issues

The District is current in non-attainment for the PM2.5 NAAQS and therefore no analysis is required under District Rule 2410.

6.6.3.3 NO2-Specific Issues

While the new 1-hour NO2 NAAQS is defined relative to ambient concentrations of NO2, the majority of NOx emissions from stationary sources are in the form of nitric oxide (NO) rather than NO2. Appendix W notes that the impact of an individual source on ambient NO2 depends in part "on the chemical environment into which the source's plume is to be emitted" (see Appendix W, Section 5.1.j). Because of the role NOx chemistry plays in determining ambient impact levels of NO2 based on modeled NOx emissions, Section 5.2.4 of Appendix W recommends a three-tiered screening approach for NO2 modeling. Later guidance documents issued by EPA expand on this approach. Tier 1 assumes full conversion of NO to NO2. Tiers 2 and 3 are refinements of the amount of conversion of NO to NO2. The applicant used the Tier 3 Plume Volume Molar Ratio Method (PVMRM) option in AERMOD, which simulates the interaction of NO with ambient O3 to form NO2. The PVMRM determines the conversion rate for NOx to NO2 based on a calculation of the NOx emitted into the plume, and the number of O3 moles contained within the volume of the plume between the source and receptor. In addition to requiring monitored ozone, the method requires specification of an in-stack NO2/NOX ratio. The following presents a discussion of

the in-stack NO2/NOx ratios used in PVMRM for the proposed emissions units and nearby sources for the cumulative impact analysis.

A. In-Stack NO2/NOx Ratio

Defining source-specific in-stack NO2/NOx ratios is part of the refinement of the Tier 3 PVMRM. An in-stack NO2/NOx ratio of 0.50 is the default value and can be used without further justification. This applies not only for the proposed permitted source but also for the other sources used in the cumulative impacts analysis. As discussed in Section 6.6.3.1, numerous facilities (with 371 emission units among them), see Appendix K-C, were included in the cumulative impacts analysis. For the proposed permit units and units in the cumulative impacts analysis, the applicant did not use the default value of 0.50, except for the Covanta Delano Inc Fluidized bed combustors (2 units), Mt. Poso Cogen Fluidized bed combustor, Rio Bravo Jasmin Solid Fuel combustor, Rio Bravo Poso Solid Fuel combustor.

Table 6-6 In-Stack NO2/NOx Ratios for Nearby Sources

Source Type	Fuel	In-stack Ratio Used
Boilers/Steam generators	Biomass, NG, Vapor	0.1
Turbines (including cogeneration, simple-/ combined-cycle, and gas compressor applications)	NG	0.1032 (small turbines) 0.17 (large turbines)
Emergency turbine	Diesel	0.1
Other cogeneration sources	Solid Fuel, Multi-Fuel	0.01
Process Heaters/Dryers	NG, Vapor	0.32 / 0.1 (heaters or both) / (dryers)
IC engines (including those acting as gas turbine starters or powering pumps)	Diesel	0.2
	NG	0.1
IC engines (acting as compressors)	Diesel	0.2
	NG	0.6
Ovens	NG	0.32

For the emergency generators, firewater pump, ammonia startup heater, and auxiliary boiler, the NO2/NOX in-stack ratios were obtained from the SJVAPCD 2010 draft guidance document, Assessment of Non-Regulatory Options in AERMOD Specifically OLM and PVMRM and the CAPCOA Modeling Compliance of the Federal 1-hour NO2 NAAQS. For the emergency generators and fire water pump, an in-stack ratio of 0.2 was used from the “IC Engines (Diesel)” category. The ammonia start-up heater used an in-stack ratio of 0.32 from the “Heaters (NG)” category. For the auxiliary boiler, an in-stack ratio of 0.1 was used from the “Boilers (NG)” category.

Limited information is available regarding in-stack NO2/NOX ratios for thermal oxidizers and flares. The exhaust from the thermal oxidizer or flares will have very little to no residence time in the stack, so almost no conversion of nitrogen oxide (NO) to NO2 is expected. For these sources, it was conservatively assumed that 10 percent of the NOX will be NO2.

No data exist for the NO2/NOX in-stack ratio for turbines burning hydrogen-rich fuel or the associated coal dryer. The turbine vendor expects the NO2/NOX in-stack ratio will be similar to turbines that burn natural gas. Based on the in-stack NO2/NOX ratio of 0.091 for a natural gas turbine as determined by SJVAPCD guidance, and accounting for the conversion of NO to NO2 across the oxidation catalyst that could be as high as 20 percent (NO2/NOX ratio 0.2), HECA proposes to use the conservative NO2/NOX in-stack ratio of 0.3 for all turbine and coal dryer operating conditions. Neither the turbine nor oxidation catalyst vendor could provide written documentation regarding the NO2/NOX in-stack ratio, although this ratio was their professional engineering estimate. Emissions from the nitric acid plant will be cleaned before being discharged to the atmosphere by catalytic decomposition and reduction of both nitrous oxide (N2O) and NOX. The N2O emissions are treated in a tertiary reduction system, in a reducing catalyst that uses high temperature rather than a reducing agent, to convert 95 percent of the remaining N2O emission to molecular nitrogen (N2) and nitric oxide (NO). The NOX emissions (including the NO formed in the N2O converter) are then reduced in one or more selective catalytic reduction (SCR) unit(s), with injected ammonia as a reducing agent, as is typical for NOX control in flue gas systems. The nitric acid unit vendor and Project design engineers estimate that approximately 50 percent of the NO converts to NO2 in the exhaust, therefore an in-stack ratio of 0.5 was used. Table 6-7 presents the resulting PVMRM in-stack NO2/NOx ratios.

Table 6-7 In-Stack NO2/NOx Ratios for Project Units

Source / Emission Units	NO2 / NOx Ratio
HRSG Stack	0.2
Coal Dryer	0.3
Tail Gas Thermal Oxidizer Stack	0.1
Auxiliary Boiler	0.1
Rectisol® Flare	0.1
Gasification Flare	0.1
SRU Flare	0.1
Nitric Acid Plant Stack	0.5
Emergency Diesel Generator 1	0.2
Emergency Diesel Generator 2	0.2
Emergency Diesel Firewater Pump	0.2
Ammonia Synthesis Plant Start-up Heater	0.32

1. Proposed Units
   The in-stack ratios used for the proposed units were based on the best available data known at the time the project was proposed and modeled. Currently there is still limited or no data available for some of the processes/fuel types that are proposed at the facility.

2. Nearby Sources for Cumulative Impacts Analysis
   The applicant performed a full impacts analysis, which included the 371 emission units at several nearby facilities. In-stack ratios for these emission units were based on data gathered by the District on historical source test conducted nation-wide.

B. NO2 monitor representativeness/conservativeness
   As mentioned above, the applicant chose the Shafter–Walker Street Station monitor for background NO2 concentrations. This monitor is 13 miles from the HECA site.

C. O3 background Monitor Representativeness
   The applicant has indicated that since O3 is a regionally-formed pollutant, the nearness of the monitoring site to the Project is the most important criterion for representativeness. The Shafter–Walker Street Station monitor is 13 miles away from the HECA site, and the District agrees that it is adequately representative.

D. Missing O3 data procedure
   Ozone data used in this analysis was prepared by the District using a monthly hour of the day fill method. This provides a reasonable and conservative procedure for filling in missing ozone values.

E. Combining Modeled and Monitored Values
   The applicant proposed to combine each modeled concentration with the background concentration from the corresponding hour ("hour-by-hour" approach) pairing. The applicant correctly used the first highest values from the distribution for each temporal combination. (The EPA March 2011 memo's "first-tier" approach uses the 98th percentile of the annual distribution of daily maximum 1-hour values averaged across the most recent three years of monitored data as a uniform background contribution but also mentions the above procedure as a suggested temporal pairing option on p.20.) This procedure is based on a conservative assumption.

   The District believes that the applicant's overall approach to the 1-hour NO2 analysis for the HECA, including the emission inventory, background concentrations of NO2 and O3, and method for combining model results with monitored values, is adequately conservative.

6.6.3.4 Startup and Shutdown Analyses

The emission scenario used in the NO2 1-hour SIL and NAAQS cumulative modeling was developed following guidance from the March 2011 USEPA Memo. For this modeling, the CTG/HRSG and coal dryer operate in normal on-peak power mode. Start-up emissions for

the CTG/HRSG are limited to 105 hours per year, while shut-down emissions are limited to 18 hours per year. Start-up emissions for the coal dryer are limited to 104 hours per year, with shut-down emissions at 8 hours per year. Annualized maximum 1-hour NO2 start-up/shut-down emission rates for these two sources are lower than their normal maximum NO2 1-hour rates; therefore, the maximum normal NO2 1-hour emission rates for the CTG/HRSG and coal dryer were used.

Similarly, the SRU flare and tail gas thermal oxidizer have maximum impacts during normal operations with pilot and process vent disposal, respectively, rather than during an annualized start-up period. The Rectisol® and gasification flares were included with maximum annualized start-up flaring emission rates, which are higher than their normal emission rate during pilot mode.

The auxiliary boiler and nitric acid unit operations were included at their peak hourly emission rate. The ammonia plant start-up heater also was included with an annualized start-up 1-hour NO2 emission rate. Finally, all three ancillary diesel engines, including the two emergency diesel generators and firewater pump, were included in the modeling with annualized emission rates. Mobile sources were not included in this modeling scenario.

The model results are shown in Table 6-8 for the cumulative impacts analysis. The results demonstrate that emissions from HECA will also comply with the 1-hour NO2 NAAQS during startup and shutdown conditions.

6.6.3.5 Results of the Cumulative Impacts Analysis

The results of the PSD cumulative impacts analysis for HECA's operations for the 1-hr NO2 are shown in Table 6-8. The analysis demonstrates that emissions from HECA will not cause or contribute to exceedance of the NAAQS for 1-hour NO2 or for any applicable PSD increments. As discussed above, HECA's maximum modeled concentrations are below the SILs for annual NO2, 24-hour PM10, and annual PM10; therefore, a cumulative impacts analysis was not required to demonstrate compliance for these pollutants/averaging times.

The District also considered additional information to ensure that the Project would not be responsible for causing a new NAAQS exceedance outside this modeling area. The District considered sources within the County of Kern (no sources of interest were located outside of the county) that were not included, but which had been evaluated for inclusion/exclusion, in the cumulative impacts modeling above. The District concluded that these sources are either small enough or distant enough that the Project's expected emissions along with emissions from these sources would not create any new NAAQS exceedance in the modeling area outside of the SIA.

Table 6-8 Compliance with Class II PSD Increments and NAAQS

NAAQS Pollutant & Averaging Time	All Sources Modeled Impact	PSD Increment Consumption	Background Concentration	Cumulative impact w/ background	NAAQS *(ug/m3)*	PSD Increment
NO2, 1-hr	(Paired)	NA	(Hourly)	126.4	188 (100 ppb)	NA

1 - There are no PSD increments defined for 1-hour NO2.

6.7 Class I & II Area Analysis

6.7.1 Class I Area Significant Impact Level (SIL) Analysis

Per USEPA Region IX request, a Class I Area SIL modeling analysis was completed to demonstrate compliance with the Class I SILs. Class I Areas are certain national parks, wilderness areas, and national monuments that are protected by the most stringent PSD requirements. The nearest Class I Area to the Project site is the San Rafael Wilderness Area, which is approximately 60 kilometers southwest of the HECA site.

Modeling was conducted for the NO2 annual, PM2.5 24-hour and annual, and PM10 24-hour and annual Class I SILs. The Class I SILs are presented in the table below. Modeling for the Class I PM2.5 SILs was completed, because the San Rafael Wilderness Area is in Santa Barbara County, which is an unclassified/attainment area for PM2.5. Class I SILs for NO2 1-hour, and CO 1-hour, and 8-hour do not exist. Impacts due to HECA operations without mobile sources were modeled, using the same modeling scenarios as described previously. The AERMOD model was applied for the Class I SIL modeling analyses, which used a receptor grid extending out 50 kilometers from the Project site, the same receptor grid used in the NO2 1-hour NAAQS cumulative analysis. The AERMOD model has been evaluated for estimating impacts out to 50 kilometers, and it is believed that this is the maximum extent of the model's reliability; therefore, receptors did not extend beyond 50 kilometer into the San Rafael Wilderness Area. However, this modeling approach, with receptors out to 50 kilometers, gave an understanding of whether the model predicted Class I SILs would be contained inside the 50-kilometer grid.

Table 6-9 Class I Significant Impact Levels

Pollutant	Averaging Period	Class I Significant Impact Level (SIL) *(µg/m3)*
NO2	Annual	0.1
PM10	24 hour	0.32
	Annual	0.2
PM2.5	24 hour	0.07
	Annual	0.06

The Figure 6-1 through 6-5 of the PSD application indicates that the maximum concentrations for NO2, PM10, and PM2.5 would fall within 2 to 3 km from the facility boundary and the model predicted that the concentrations would fall below the Class I SIL out 20 to 30 kilometers southwest of HECA, in the direction toward San Rafael Wilderness Area, as shown on Figures 6-4 and 6-5. Therefore, modeled concentrations due to HECA operations in the vicinity of San Rafael Wilderness would be expected to be well below the Class I significance levels and compliance with the Class I SILs would be achieved. Therefore, since the SILs are not expected to be exceeded in the Class I Area, a Class I Area increment analysis is not required.

6.7.2 Air Quality Related Values (AQRV)

6.7.2.1 Class I Areas

Class I Areas are certain national parks, wilderness areas, and national monuments that are protected by the most stringent PSD requirements. There are three Class I areas near the project site and are listed below, with only one being located within 100 km of the Project site:

- San Rafael Wilderness (60 km)
- Domelands Wilderness Area (105 km)
- Sequoia National Park (120 km)

Based on the most recent Federal Land Managers' Air Quality Related Values (AQRV) Work Group (FLAG) published guidance[2] the following screening approach is used to determine whether a more refined Class I Air Quality Analysis is required. This approach, which only applies to projects located more than 50 km from a Class I area, requires adding all of the visibility-related emissions (SO2, NOx, PM10 and sulfuric acid mist) from a project (based on 24-hour maximum allowable emissions expressed in units of tons per year) and dividing the sum by the distance between the project and the Class I area. If the result is less than 10, the project is presumed to have negligible impacts to Class I AQRVs. On April 18, 2012, the U.S. Forest Service confirmed that Class I AQRV analyses would not be required for the HECA Project. The table below shows that the Project's emissions, based on emissions from the project engineer, are well below the FLAG screening criteria. This would confirm that the Q/d submitted to the FLM is still below 10 and therefore, no further Class I AQRV analysis is required.

Table 6-10 Class I Air Quality Screening Analysis

Pollutant	**Annual Emission** *(lbs)*	**Annual Emission** *(Tons)*
SO2	59,436	29.72
PM10	178,863	89.43
NOx	317,310	158.66
Sulfuric Acid Mist	0	0.00
Total Tons per Year		**277.80**
Class I Areas		
San Rafael Wilderness	Distance (km) From Project	60.00
	Q/d	4.63
	Class I Analysis Required	NO
Domelands Wilderness Area	Distance (km) From Project	105
	Q/d	2.65
	Class I Analysis Required	NO
Sequoia National Park	Distance (km) From Project	120.00
	Q/d	2.32
	Class I Analysis Required	NO

[2] "Screening Procedure for the Impacts of Air Pollution Sources on Plants, Soils, and Animals," EPA 450/2-81-078, December 1980

6.7.2.2 Class II Areas

National Park Service (NPS) PSD guidance states that projects should not degrade air quality and/or visibility in Class II areas. Class II areas are defined as the following areas when greater than 10,000 acres, and in existence since 1977:

- National monuments;
- National primitive areas;
- National preserves;
- National recreation areas;
- National wild and scenic rivers;
- National wildlife refuges;
- National lakeshores and seashores; and
- National parks and wilderness areas.

The nearest parks that fit the Class II area definition are:

- Sequoia National Forest, 54 kilometers away, and
- Los Padres National Forest, 49 kilometers away from HECA.

Since both of these parks are approximately 50 kilometers or farther from HECA, and the Q/d is less than 6, per the FLAG guidance screening technique, impacts would be less than significant. Therefore, no Class II Area visibility analysis would be required.

Table 6-11 Class II Air Quality Screening Analysis

Pollutant	Annual Emissions *(lbs)*	Annual Emissions *(Tons)*
SO2	59,436	29.72
PM10	178,863	89.43
NOx	317,310	158.66
Sulfuric Acid Mist	0	0.00
Total Tons per Year		**277.80**
Class II Areas		
Sequoia National Forest	Distance (km) From Project	54.00
	Q/d	5.14
	Class II Analysis Required	NO
Los Padres National Forest	Distance (km) From Project	49.00
	Q/d	5.67
	Class II Analysis Required	NO

6.7.3 Class I Increment Consumption Analysis

The District requires an analysis addressing Class I increment impacts for the applicable pollutants regardless of the results of the Class I AQRV analysis. As noted in Section 6.7.2.1 the screening analysis indicated the impacts from the proposed units would be below the Class I SIL for NO2, PM10, and PM2.5 and therefore a Class I increment analysis is not required.

7 Other Impact Analysis

In addition to assessing the ambient air quality impacts expected from a proposed new source, District Rule 2410 requires that the District evaluate other potential impacts on:

1) Soils and vegetation,
2) Growth; and
3) Visibility impairment.

The depth of the analysis generally depends on existing air quality, the quantity of emissions, and the sensitivity of local soils, vegetation, and visibility in the source's impact area.

7.1 Soils and Vegetation

The additional impact analysis includes consideration of potential impacts to soils and vegetation associated with the HECA's emissions. This component generally includes:

- a screening analysis to determine if maximum modeled ground-level concentrations of project pollutants could have an impact on plants; and
- a discussion of soils and vegetation that may be affected by proposed project emissions and the potential impacts on such soils and vegetation associated with such emissions.

The applicant presented its discussion of the potential impacts on soils and vegetation in Section 6.3 of its PSD application. Section 6.3 included a discussion of the existing setting, nitrogen deposition potential, modeled impacts, and biological resources (including observed vegetation communities/land cover types and plants).

The Section 6.3 presents the use of EPA's "Screening Procedure for the Impacts of Air Pollution Sources on Plants, Soils and Animals" (1980) to determine if maximum modeled ground-level concentrations of NO2, SO2, PM10, H2S and CO from the Project could have an impact on plants, soils, and animals. In addition, the applicant submitted information that included a discussion of the Project location and adjacent areas, the observed vegetation communities/land cover types, the observed plants, and soil types as part of the description of the various vegetation communities/land cover types and plant habitat observed within the project study area. The modeled impacts of NO2, SO2, PM10, H2S and CO emissions from the facility, individually, and in addition to the background concentrations of NO2, SO2, PM10, H2S and CO, are well below the minimum impact levels/screening concentrations identified in the Screening Procedure for sensitive plants. The following table summarizes information in this regard from Section 6.3 of the PSD application (Table 6-2, p. 6-15).

Table 7-1 Soils and Vegetation Results

Pollutant	Modeled Averaging Time	Predicted Concentration *(µg/m3)*	Background Concentration *(µg/m3)*	Total Concentration *(µg/m3)*	USEPA AQRV Screening Concentration *(µg/m3)*	USEPA AQRV Screening Averaging Time
SO2	1-Hour	50	42	92	917	1-Hour
	3-Hour	29	26	55	786	3-Hour

Pollutant	Modeled Averaging Time	Predicted Concentration *(µg/m3)*	Background Concentration *(µg/m3)*	Total Concentration *(µg/m3)*	USEPA AQRV Screening Concentration *(µg/m3)*	USEPA AQRV Screening Averaging Time
	Annual	0.1	13	13.1	18	Annual
NO2	1-Hour	185	140	325	3,760	4 and 8-Hour
					564	Weekly
	Annual	1.5	26	27.5	94	Annual
PM10	24-Hour	4.9	264	268.9	N/A	24-Hour
	Annual	0.8	54	54.8	N/A	N/A
CO	8-Hour	371	2,485	2,856	1,800,000	N/A
H2S	1-Hour	23	N/A	23	28,000	4-Hour

For most types of soils and vegetation, ambient concentrations of criteria pollutants below the secondary NAAQS will not result in harmful effects because the secondary NAAQS are set to protect public welfare, including animals, plants, soils, and materials. The modeled maximum concentrations of SO2, NO2, PM2.5 and PM10 are also significantly below the secondary NAAQS that have been established by EPA:

- secondary 3-hour NAAQS for SO2 = 1,300 µg/m3
- secondary annual NAAQS for NO2 = 100 µg/m3
- secondary annual NAAQS for PM2.5 = 15 µg/m3
- secondary 24-hour NAAQS for PM2.5 = 35 µg/m3, and
- secondary 24-hour NAAQS for PM10 = 150 µg/m3

In summary, based on the District's consideration of the information and analysis provided by the applicant, and other relevant information, the District does not believe that emissions associated with the Project will generally result in adverse impacts to soils or vegetation.

7.2 Visibility Impairment

The additional impact analysis also evaluates the potential for visibility impairment (e.g., plume blight) associated with HECA. Using procedures from EPA's Workbook for Plume Visual Impact Screening and Analysis, the potential for visibility impairment is characterized for:

- Class I areas located within 50 km of the proposed HECA; and
- Class II areas identified as potentially sensitive state or federal parks, forests, monuments, or recreation areas.

There are no Federal Class I areas located within 50 km of the Project site; the nearest Class I area is San Rafael Wilderness (60 km away). For Class II areas, the applicant evaluated visibility impairment for two federal Class II areas within ~50 km of the project site. The FLM

evaluated the Q/d analysis and determined that the impact from the project would be less than significant. EPA Region IX since has requested that a Class II visibility analysis be performed for the following areas:

- Sequoia National Forest, 54 kilometers away, and
- Los Padres National Forest, 49 kilometers away from HECA.

Because EPA has not yet established a quantitative visibility impairment threshold for Class II areas (similar to what exists for Class I areas), the applicant proposed a threshold and methodology to demonstrate whether the two Class II areas would be affected by visibility impairment from the Project. The applicant concluded that the results of the Level 1 VISCREEN screening analysis for these two areas are below the established Class I threshold.

Table 7-2 Class II Visibility Results

Maximum Visual Impacts Inside Area Screening Criteria Are Not Exceeded								
Background	Theta	Azimuth	Distance	Alpha	Delta E		Contrast	
					Criteria	Plume	Criteria	Plume
SKY	10	142	15	27	2	1.765	0.05	0.013
SKY	140	142	15	27	2	0.532	0.05	-0.012
TERRAIN	10	84	11	84	2	1.932	0.05	0.019
TERRAIN	140	84	11	84	2	0.291	0.05	0.01

7.3 Growth

The growth component of the additional impact analysis involves a discussion of general commercial, residential, industrial, and other growth associated with the HECA. This analysis considers emissions generated by growth that will occur in the area due to the source. In conducting this review, the applicant focused on residential, commercial and industrial growth that is likely to occur to support the source under review including, for example, employment expected during construction and operations and potential growth impacts associated with such employment, such as impacts to local population and housing needs.

For the periods of construction and plant operations, the applicant provided a discussion of potential growth impacts in Section 6.4 of its PSD application submitted to the District in May 2012. This information included a discussion of the socioeconomics of the project. Topics included population, housing, economic base, and employment.

During the construction and commissioning phase, the applicant estimates a required 200 Full-time workers, with a peak workforce of 2,500 workers in the 49 month of construction. During construction, these workers are expected to temporarily lodge within the project vicinity; following construction, the nonlocal workers are expected to return to their existing residences. During commercial operations, 200 full-time employees are expected. It is anticipated that approximately **60** percent of operations employees will originate from the **Kern** County labor

force. The remaining employees will originate from outside **Kern** County. Of the **40** percent non-local workers (**80** workers), it is assumed for the purposes of this analysis that half (**40** employees) will relocate to **Kern** County.

Based on U.S. Census data for 2010, the population of Kern County is 839,631; therefore, the Project will not cause any significant population increases or associated growth (U.S. Census Bureau, 2012). The other half (40 employees) will commute on a daily or weekly basis. The Project's impacts with regard to land use planning and public policy will be minimal. The Project is consistent with the development standards for the Exclusive Agriculture zoning district. The use of the 453-acre Project Site will change from agricultural use to power generation and manufacturing of low-nitrogen- based products.

In summary, based on our consideration of the information and analysis provided by the applicant, the District does not expect the Project to result in any significant growth.

8 District Rule 2201 – Air Quality

District Rule 2201 requires an examination of the impacts of the proposed project on ambient air quality. The project must demonstrate, using air quality models, the facility's emissions of the regulated air pollutants would not cause or contribute to a violation of:

(1) the applicable NAAQS,
(2) the applicable CAAQS

These sections of this report include a discussion of the relevant background data and air quality modeling, and District's conclusion that the Project will not cause or contribute to an exceedance of the applicable NAAQS or CAAQS, and is otherwise consistent with District Rule 2201 requirements.

8.1 Introduction

Under District regulation, a permit evaluation for a project that triggers public notice (District Rule 2201) must include an air quality analysis demonstrating that the facility's emissions of the regulated air pollutants will not cause or contribute to a violation of the applicable NAAQS or CAAQS. Public notice is triggered when an application which includes a new emissions unit or modified unit with a Potential to Emit greater than 100 pounds during any one day for any one affected pollutant. Once public notice is triggered all units including those that do not trigger public notice are assessed.

The air quality assessment is evaluated for all regulated criteria pollutants irrelevant of the District's attainment status.

8.2 NAAQS and CAAQS Analysis

If an analysis demonstrates that the ambient concentration impact resulting from the project's emissions plus a monitored background concentration is less than the NAAQS and/or CAAQS, then further analysis is generally not required. If a preliminary analysis demonstrates that the ambient concentration impact resulting from the project's emissions plus a monitored background concentration is greater than the NAAQS and/or CAAQS, additional analysis is required. In this case, the ambient concentration impact of the project by itself is compared to the Significant Impact Level (SIL) to determine if the project's ambient concentration contributes significantly to a violation of a NAAQS and/or CAAQS.

Required model inputs characterize the various emitting units, meteorology, and the land surface, and a define set of receptors (spatial locations at which to estimate concentrations, typically out to 2-10 km from the facility). Modeling should be performed in accordance with District guidance and EPA's Guideline on Air Quality Modeling, in Appendix W to 40 CFR Part 51 (GAQM or Appendix W).

8.2.1 Additional Modeling Requirements

The following are additional general modeling requirements that should be considered as per District Rule 2201 compliance.

- Include a Good Engineering Practice (GEP) stack height analysis, to ensure that
  c) Downwash is properly considered in the modeling, and
  d) Stack heights used as inputs to the modeling are no greater than GEP height, so as to disallow artificial dispersion from the use of overly tall stacks.
- May include initial "load screening," in which a variety of source operating loads and ambient temperatures are modeled, to determine the worst-case scenario for use in the rest of the modeling for NAAQS & CAAQS.
- At a minimum source parameters based on normal operating conditions should be used

8.2.2 Background Ambient Air Quality

District regulations require the air quality analysis to contain air quality monitoring data as needed to assess ambient air quality in the area for regulated pollutants for which there are NAAQS and/or CAAQS that may be affected by the source. In addition, for demonstrating compliance with the NAAQS and/or CAAQS, a background concentration is added to represent those sources not explicitly included in the modeling, as determined by the District, so that the total concentration accounts for all contributions to current air quality.

Ambient air concentrations of ozone (O3), NO2, PM10 and PM2.5 are recorded at monitoring stations throughout the San Joaquin Valley. In order to select the appropriate monitoring station the area surrounding the project site must be first evaluated. The area immediately surrounded the Project site can be characterized as being rural with farmland to northwest, north, east (near the project site and non-developed areas further out) and mountains to the west and south of the project site, see Figure 6-2 in Section 6.4 above. The only major industrial sources are located south of the project site consisting of oil & gas production (~ 4.0 km) and power generation operations (~ 8.0 km).

The monitoring station in Kern County that is closest to the Project Site is the Shafter–Walker Street Station located within 13 miles (21 kilometers) from the Project Site. This station measures ozone (O3) and NOX/NO2 concentrations, and is the most representative station to characterize background conditions for these pollutants near HECA.

The Bakersfield ─ 5558 California Avenue station is the next closest station and the closest that measures all pollutants except SO2 and CO. This station is located approximately 20 miles (32 kilometers) to the east of the Project site, and provides the best representation of the background levels for PM10 and PM2.5 for the area near HECA. In addition, it is the only station that measures these pollutants with adequate data capture within the San Joaquin Valley portion of Kern County.

The Bakersfield ─ Golden State Highway station is the only station in Kern County that measures CO. This station was closed early in 2010; thus the most recent measurements available for this station are for 2007–2009, as 2010 data did not have suitable data capture.

The only station in the SJVAB that monitors SO2 is the CARB station at First Street in Fresno, located approximately 102 miles (164 kilometers) to the north. Sulfur dioxide data have only been recorded in Fresno County for 6 of the last 10 years (2003, 2007, 2008, 2009, 2010, 2011), a practice that is justified by the low levels that have been recorded for this pollutant where and when measurements have been made.

Table 8-1 below describes the maximum background concentrations, from the most recent available 3 year period of data collection, for which there are NAAQS & CAAQS that may be affected by the Project's emissions. Use of this method effectively assumes that the highest recently recorded pollutant concentrations for each averaging period are occurring during every such period over the 5-year meteorological input record. This static high background is then paired with modeled results.

Table 8-1 CAAQS, NAAQS, & Background Concentration

Ambient Air Quality Standards				
Pollutant	**Averaging Time**	**California Standards**	**National Standards Primary**	**Background Concentration** ($\mu g/m^3$)
		Concentration		
Respirable Particulate Matter (PM10)	24 Hour	50 $\mu g/m^3$	150 $\mu g/m^3$	264[5]
	Annual Arithmetic Mean	20 $\mu g/m^3$	--	54
Fine Particulate Matter (PM2.5)	24 Hour[1]	--	35 $\mu g/m^3$	196
	Annual Arithmetic Mean	12 $\mu g/m^3$	15 $\mu g/m^3$	22
Carbon Monoxide (CO)	1 Hour	23 mg/m^3	40 mg/m^3	4,581
	8 Hour	10 mg/m^3	10 mg/m^3	2,485
Nitrogen Dioxide (NO2)	1 Hour[2]	339 $\mu g/m^3$	188 $\mu g/m^3$	140
	Annual Arithmetic Mean	57 $\mu g/m^3$	100 $\mu g/m^3$	26
Sulfur Dioxide (SO2)[3]	1 Hour	655 $\mu g/m^3$	196 $\mu g/m^3$	42
	3 Hour[4]	---	1300 $\mu g/m^3$	26
	24 Hour	105 $\mu g/m^3$	365 $\mu g/m^3$	13

1 - The PM2.5 24-hr value is the 98th percentile averaged over three years rather than the maximum
2 - The NO2 1-hr value is the 98th percentile averaged over three years rather than the maximum
3 - The SO2 annual standard is replaced by the more stringent SO2 1-hour standard
4 – No primary standard exist for SO2 3-hour standard. Value used is for the secondary standard
5 – The value used represents the maximum value including those exceptional events that EPA has not acted on. Therefore this value is only used for modeling and should not be used to represent compliance with the NAAQS at the monitoring site.

8.2.3 Modeling Methodology

The applicant modeled the impact of the project on the NAAQS and/or CAAQS using AERMOD in accordance with District guidance and EPA's GAQM (Appendix W of 40 CFR Part 51). Unlike requirements for PSD no screening method is available. The modeling analyses included the maximum air quality impacts during normal operations using the appropriate emissions during each averaging period.

8.2.3.1 Model Selection

As discussed in the PSD Application, the model selected for analyzing air quality impacts in Class II areas is EPA's preferred dispersion model AERMOD [Ver. 12060], along with AERMAP for terrain processing and AERMET for meteorological data processing. This is in accordance with the default recommendations in the District guidance and EPA's GAQM, Section 4.2.2 on Refined Analytical Techniques.

8.2.3.2 Meteorological Inputs

8.2.3.2.1 Surface Data

AERMOD requires representative meteorological data in order to accurately simulate air quality impacts. SJVAPCD provided the surface meteorological data collected for a five-year consecutive period (from 2006 – to 2010) at the Bakersfield Meadows Field Airport meteorological station maintained by the FAA.

The District processed these data using EPA's AERMET data processor and the District meteorological data processing guidance (http://www.valleyair.org/busind/pto/Tox_Resources/AirQualityMonitoring.htm#modeling_guidance). The meteorological station is located on the northern end of the city of Bakersfield, within 20 miles (32.2 kilometers) east-northeast of the Project Site, with no intervening structures, hills, or water bodies that might significantly affect meteorological conditions. The project site, the meteorological site and the "area of interest" are located inland and close to each other.

For analyzing the representativeness of the meteorological dataset, the area of interest includes:

- the SIA where screening modeling predicts the Project's pollutant impact to be greater than the SILs, and
- Also includes the sources and receptors used in the modeling.

Other nearby surface meteorological sites were examined, but the Bakersfield Meadows Field Airport station had sufficient data completeness, is the closest, and is the most representative with no intervening high ground between the Project site and the meteorological tower. District believes that the chosen from 2006 – to 2010 Bakersfield Meadows Field Airport data is the most representative for the proposed project analysis. Further discussion of the meteorological data used in the analysis is given in the following section on land characteristics. **Please Note**: The other nearby sites (Fellows and Missouri Triangle) are considered prognostic datasets generated from MM5 data and at the current time are not acceptable by EPA; even though the District would allow their used for the purpose of District Rule 2201. The District accepts the use of the selected meteorological data to streamline the process of assessing the NAAQS & CAAQS.

8.2.3.2.2 Upper Air Data

For upper air data, the District selected (from 2006 – to 2010) the upper air site located in Oakland, California, located approximately 227 miles (366 km) northwest of the Project site as being the most representative site available that had data complete enough to use. No other upper air meteorological monitoring stations are located in the San Joaquin Valley Air Basin.

8.2.4 Land Characteristics

Land characteristics are used in the AERMOD modeling system in three ways:

1) via elevation within AERMOD to assess plume interaction with the ground;
2) via a choice of rural versus urban algorithm within AERMOD; and
3) via specific values of AERMET parameters that affect turbulence and dispersion, namely surface roughness length, Bowen ratio, and albedo. The surface roughness length is related to the height of obstacles to the wind flow and is an important factor in determining the magnitude of mechanical turbulence. The Bowen ratio is an indicator of surface moisture. The albedo is the fraction of total incident solar radiation reflected by the surface back to space without absorption.

The applicant used terrain elevations from United States Geological Survey (USGS) National Elevation Dataset (NED) data at a horizontal resolution of 30 meters, for receptor heights in AERMOD, which uses them to assess plume distance from the ground for each receptor. All coordinates were referenced to UTM North American Datum 1983 (NAD83, Zone 11). The AERMOD, receptor elevations were interpolated among the NED nodes according to standard AERMAP procedure.

The applicant used surface roughness values in the modeling inputs developed by SJVAPCD. The District followed EPA's “AERMOD Implementation Guide” (2009 version) and the District’s Guidance entitled “Procedure for Downloading & Processing NCDC Meteorological Data” in using EPA's AERSURFACE processor with the National Land Cover Data 1992 archive to determine surface characteristics for AERMET. The surface roughness characteristics are representative of the area surrounding the site where the meteorological data is collected. The District also used the criteria described in Section 3 (Representativeness) from EPA’s Meteorological Monitoring Guidance for Regulatory Modeling Applications (2000). AERSURFACE uses a Land Use data base from 1992. In addition, SJVAPCD reviewed recent aerial photos for the area, which show that the Bakersfield Meadows Field Airport meteorological tower is surrounded by a light industrial, residential, and rural area.

Figure 8-1 Bakersfield Meadows Field Airport

The applicant did a qualitative comparison of the following factors from the Meteorological Monitoring Guidance (p.3-3) recommended for consideration for siting:

- Proximity
- Height of measurement
- Surface

The Bakersfield Airport is the closest full-time meteorological recording station to the Project Site. The terrain immediately surrounding the Project Site can be categorized as a fairly flat, or gradually sloping rural area in a region with developed oil wells. The terrain around the Bakersfield Airport also consists of relatively flat, or gradually sloping rural or suburban areas. Thus, the land use and the location with respect to near-field terrain features are similar. Both are located in areas of medium surface roughness (as opposed to low surface roughness like bodies of water or grassy prairies, or high surface roughness like highly urbanized cities or forests). Both locations are on the valley floor and are at approximately the same elevation. Additionally, there are no significant terrain features separating the Bakersfield Airport from the Project Site that would cause significant differences in wind or temperature conditions between these respective areas.

8.2.5 Receptors Grid

Receptors in the model are geographic locations at which the model estimates concentrations. The applicant placed receptors such that they have good area coverage and are closely

spaced enough so that the maximum model concentrations can be found. At larger distances, spacing between receptors may be greater than it is close to the source, since concentrations vary less with increasing distance. The spatial extent of the receptors is limited by the applicable range of the model (roughly 50 km for AERMOD), and possibly by knowledge of the distance at which impacts fall to negligible levels. Receptors need be placed only in ambient air, that is, locations to which the public has access, and that are not inside the project boundary.

The applicant used a Cartesian coordinate receptor grid to provide adequate spatial coverage surrounding the project area, to identify the extent of significant impacts, and to identify the maximum impact location. In the analyses, the applicant placed receptors using the following telescoping grid out to 10 km, as seen in Figure 4-1 & 4-2 of the Project application:

- 25-meter spacing along the property line and extending from the property line out 100 meters;
- 50-meter spacing from 100 to 250 meters beyond the property line;
- 100-meter spacing from 250 to 500 meters beyond the property line;
- 250-meter spacing from 500 meters to 1 kilometer beyond the property line;
- 500-meter spacing from 1 to 2 kilometers beyond the property line; and
- 1,000-meter spacing from 2 to 10 kilometers beyond the property line.

During the refined modeling analysis for operational Project emissions, if a maximum predicted concentration for a particular pollutant and averaging time was located within the portion of the receptor grid with spacing greater than 25 meters, a supplemental dense receptor grid was placed around the original maximum concentration point, and the model was rerun. The dense grid used 25-meter spacing and extended to the next grid point in all directions from the original point of maximum concentration. The only dense refined receptor grid that was needed in the current modeling analysis occurred for 24-hour SO2 operational modeling, where a dense grid was placed in the hills southwest of the Project site. Details may be seen in the model input files included in the electronic files submitted with this PSD Application.

8.2.6 Load Screening and Source Parameters

The applicant performed initial “load screening” modeling, in which nine source operating loads and ambient temperatures were modeled, to determine the “worst case” stack parameter scenario for use in the rest of the modeling, whenever normal operations are considered. At a minimum two loads should be considered: a minimum load of 50% and a maximum load of 100%. The choice of “worst case” can be different for each pollutant and averaging time, because different pollutants’ emissions respond differently to temperature and flow rate.

For all pollutants and averaging times, screening modeling was performed with maximum emissions and the most conservative stack parameters for each source, regardless of whether all equipment will run at the same time in this worst-case stack parameter and emission configuration. This methodology was performed to determine conservative worst-case off-site impacts without the need of sensitivity modeling for each piece of equipment or time period. Normally, all sources will not run at the same time with their worst-case stack parameters and

emissions. For example, the emergency ancillary equipment (generators, firewater pump) will not all be tested at the same time during a start-up sequence. However, if the most conservative impact scenario complied for the CAAQS and NAAQS, the equipment was kept in the modeling with maximum emissions and the most conservative stack parameters to eliminate the need for sensitivity modeling iterations. Modeled source parameters are listed in the PSD Application, Appendix D. A detailed explanation of each of the modeling scenarios is included in the Section 4.1 of the PSD Application.

More refined modeling was completed for several pollutants to more accurately depict the activities occurring concurrently for short averaging times. Sensitivity modeling was completed for CO 1-hour, and it was determined that the CTG/HRSG shut-down scenario (20 percent load burning natural gas) gave higher impacts than the CTG/HRSG starting up scenario. However, the maximum CO 8-hour impact was determined to occur during CTG/HRSG start-up mode when other sources are operating for that duration of time. It was determined that the coal dryer gave higher short-term SO2 impacts in operations mode than in start-up or shut-down mode, while all other maximum pollutant impacts for the coal dryer occurred during coal dryer start-up mode. Finally, maximum NO2 1-hour NAAQS impacts occur when the CTG/HRSG and coal dryer are operating in on-peak power mode rather than off-peak power mode.

Table 8-2 Source Stack Parameters

Source	Operating Condition Associated with Emission Rate	Stack Ht.	Temperature	Exit Velocity	Stack Diameter
		(ft)	*(°F)*	*(ft/sec)*	*(ft)*
HRSG Stack	Normal On-Peak Emissions (Case 1)	213	200	53.81	23
Coal Dryer	Normal On-Peak Emissions (Case 1)	305	200	19.16	16
Tail Gas Thermal Oxidizer Stack	Normal operations	165	1200	50.93	2.5
Auxiliary Boiler	Normal operations	80	300	30.18	4.5
Rectisol® Flare	Annualized emissions, start-up flaring	217.83	1831.73	65.62	0.87
Gasification Flare	Annualized emissions, start-up and shut-down flaring	219.63	1831.73	65.62	1.22
SRU Flare	Normal Operations, Pilot	215	1831.73	65.62	0.32
Nitric Acid Plant Stack	Normal operations	145	239	17.11	8
Emergency Diesel Generator 1	Annualized emissions	20	760	221.05	1.2
Emergency Diesel Generator 2	Annualized emissions	20	760	221.05	1.2
Emergency Diesel Firewater Pump	Annualized emissions	20	850	155.91	0.7
Ammonia Synthesis Plant Start-up Heater	Annualized emissions	80	300	18.71	3.5

8.2.7 Good Engineering Practice (GEP) Analysis

The applicant performed a Good Engineering Practice (GEP) stack height analysis, to ensure that:

a) downwash is properly considered in the modeling, and
b) stack heights used as inputs to the modeling are no greater than GEP height, so as to disallow artificial dispersion from the use of overly tall stacks.

As is typical, the GEP analysis was performed with EPA's BPIP (Building Profile Input Program) software, which uses building dimensions and stack heights as inputs. All stacks in the HECA Project will be less than or equal to the GEP default height of 65 meters, except for the coal dryer, three flares (SRU, Gasification, Rectisol), and the CO2 vent. Based on the analysis, the applicant showed that the GEP stack height for the Coal Dryer and CO2 Vent were greater than 65 m (213 ft), which is greater than the planned actual height of 92.9 m (304.8 ft) and 79.2 m (259.8 ft).

The flares are not within 5 times L (138.5 meters) of the gasification structure or any other structure that is large enough to create downwash for the flares in BPIP. It is important to note that the flares will be built at 76.2 meters tall for safety from a project engineering perspective. However, a 65-meter stack height, or GEP, was used to calculate specific effective stack heights for each flare modeling scenario based on the flare's heat release rate during that modeling scenario. The effective stack height is the height of the stack plus the height above the stack where the flare flame ends and a plume can begin. The effective stack parameters were calculated using the SCREEN3 technique, and were input into the AERMOD model. Therefore, the lower 65 meter stack height was used as the stack height in the calculation of the effective stack heights for the flares, rather than the actual stack height.

The applicant also showed that the GEP stack height for the other equipment was similarly greater than the planned heights. So, for all emitting units, the applicant used the planned actual stack heights for inputs in AERMOD modeling, and included wind direction-specific Equivalent Building Dimensions to properly account for downwash.

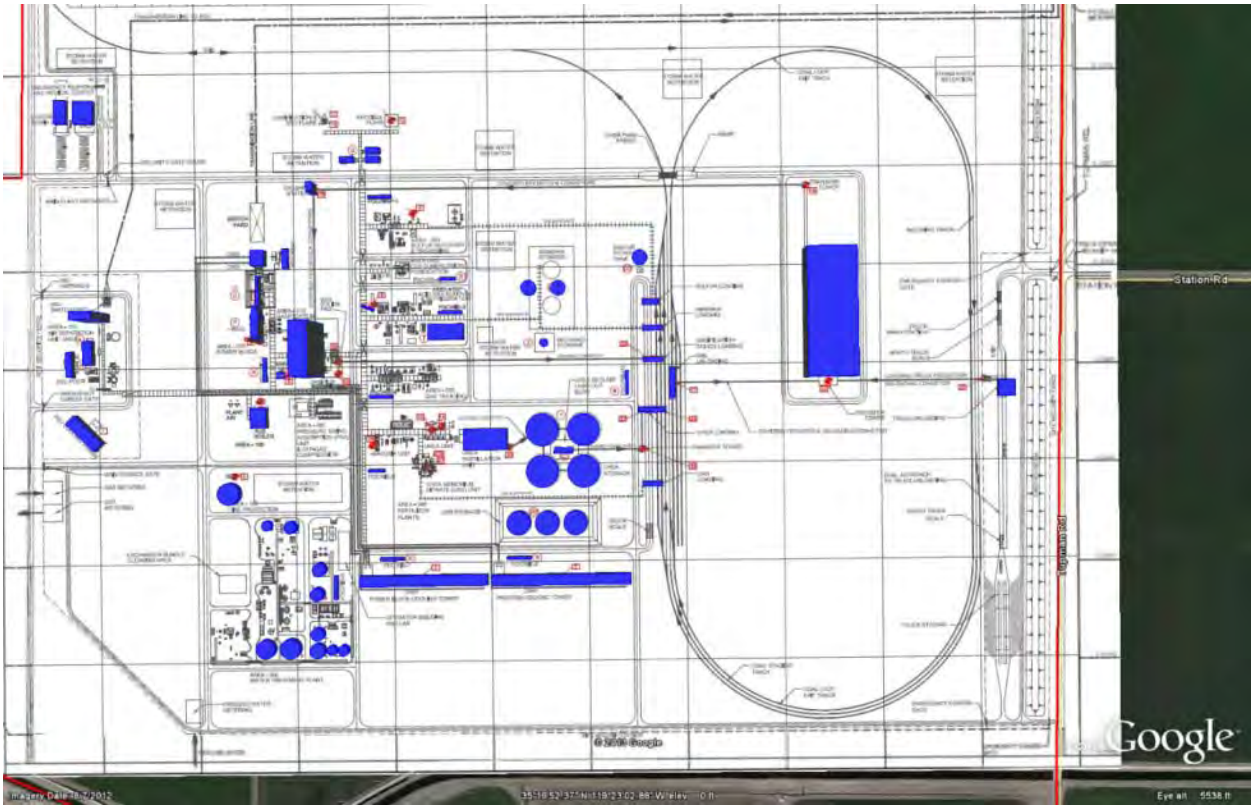

Figure 8-2 Onsite Structures (Blue Objects)

8.2.8 Preliminary Analysis

District Rule 2201 requires an air quality impact analysis be performed when a unit or project triggers public notice. Public Notice is triggered when an application which include a new emissions unit with a Potential to Emit greater than 100 pounds during any one day for any one affected pollutant. This threshold is used as a screening tool to determine which projects need further review.

Applicable project emissions are shown in Table 8-3 (provided by the processing engineer). As shown in Table 8-3 below, several units are above the public notice threshold of 100 lbs per day. Therefore, this project triggers a refined ambient air quality analysis (AAQA) for units under the current application.

Table 8-3 Daily Emissions By Permit ID

Permit ID	Unit Description	Lbs / Day					Public Notice Triggered
		SO2	NOx	CO	PM10	VOC	
Public Notice Thresholds		*100 lbs of Any Pollutant*					
17-0	Coal Handling				4		NO
18-0	Petcoke Handling				17		NO
19-0	Rec. & Blending				1		NO
20-0	Grinding				5		NO
21-0	Gasification System			25		87	NO

Permit ID	Unit Description	Lbs / Day					Public Notice Triggered
		SO2	NOx	CO	PM10	VOC	
Public Notice Thresholds		*100 lbs of Any Pollutant*					
22-0	Gasification Solid Handling				4		NO
23-0	Sulfur Recovery Unit	52	536	449	17	12	YES
24-0	CO2 Recovery and Vent System			11,817		270	YES
25-0	NG Fired Auxiliary Boiler	15	31	189	26	20	YES
26-0	CTG/HRSG stack	113	818	624	360	142	YES
26-0	Feedstock dryer stack	22	106	77	34	14	YES
27-0	Cooling Tower Serving Power Block and Process Units				88		NO
28-0	Cooling Tower Serving Air Separation Unit				8		NO
29-0	Cooling Tower Serving Power Block				52		NO
30-0	Gasification Flare	19	2,399	29,335	26	11	YES
31-0	SRU Flare	442	59	70	3	1	YES
32-0	Rectisol Flare	120	234	276	10	5	YES
33-0	Ammonia Synthesis Plant	4	15	55	7	5	NO
34-0	Urea Unit				0		NO
35-0	Nitric Acid Unit		100				YES
36-0	Ammonium Nitrate Unit				5		NO
37-0	Urea Storage and Handling Operation				6		NO
38-0	Diesel-Fired Emergency Engines Powering Electrical Generators	1	77	402	11	46	YES
39-0	Diesel-Fired Emergency Engines Powering Electrical Generators	1	77	402	11	46	YES
40-0	Diesel-Fired Emergency Engine Powering Firewater Pump	0	44	77	0	4	NO

8.2.9 Refined Analysis

A refined analysis demonstrates that the ambient concentration impact resulting from the project's emissions plus a monitored background concentration is less than the NAAQS and/or CAAQS, further analysis is generally not required. If a preliminary analysis demonstrates that the ambient concentration impact resulting from the project's emissions plus a monitored background concentration is greater than the NAAQS and/or CAAQS, additional analysis is required. In this case, the ambient concentration impact of the project by itself is compared to the Significant Impact Level (SIL) to determine if the project's ambient concentration contributes significantly to a violation of a NAAQS and/or CAAQS

8.2.9.1 NO2-Specific Issues

While the new 1-hour NO2 NAAQS is defined relative to ambient concentrations of NO2, the majority of NOx emissions from stationary sources are in the form of nitric oxide (NO) rather than NO2. Appendix W notes that the impact of an individual source on ambient NO2 depends in part "on the chemical environment into which the source's plume is to be emitted" (see Appendix W, Section 5.1.j). Because of the role NOx chemistry plays in determining ambient impact levels of NO2 based on modeled NOx emissions, Section 5.2.4 of Appendix W recommends a three-tiered screening approach for NO2 modeling. Later guidance documents issued by EPA expand on this approach. Tier 1 assumes full conversion of NO to NO2. Tiers 2 and 3 are refinements of the amount of conversion of NO to NO2. The applicant used the Tier 3 Plume Volume Molar Ratio Method (PVMRM) option in AERMOD, which simulates the interaction of NO with ambient O3 to form NO2. The PVMRM determines the conversion rate for NOx to NO2 based on a calculation of the NOx emitted into the plume, and the number of O3 moles contained within the volume of the plume between the source and receptor. In addition to requiring monitored ozone, the method requires specification of an in-stack NO2/NOX ratio. The following presents a discussion of the in-stack NO2/NOx ratios used in PVMRM for the proposed emissions units and nearby sources for the cumulative impact analysis.

A. In-Stack NO2/NOx Ratio

Defining source-specific in-stack NO2/NOx ratios is part of the refinement of the Tier 3 PVMRM. An in-stack NO2/NOx ratio of 0.50 is the default value and can be used without further justification.

For the emergency generators, firewater pump, ammonia startup heater, and auxiliary boiler, the NO2/NOX in-stack ratios were obtained from the SJVAPCD 2010 draft guidance document, Assessment of Non-Regulatory Options in AERMOD Specifically OLM and PVMRM and the CAPCOA Modeling Compliance of the Federal 1-hour NO2 NAAQS. For the emergency generators and fire water pump, an in-stack ratio of 0.2 was used from the "IC Engines (Diesel)" category. The ammonia start-up heater used an in-stack ratio of 0.32 from the "Heaters (NG)" category. For the auxiliary boiler, an in-stack ratio of 0.1 was used from the "Boilers (NG)" category.

Limited information is available regarding in-stack NO2/NOX ratios for thermal oxidizers and flares. The exhaust from the thermal oxidizer or flares will have very little

to no residence time in the stack, so almost no conversion of nitrogen oxide (NO) to NO2 is expected. For these sources, it was conservatively assumed that 10 percent of the NOX will be NO2.

No data exist for the NO2/NOX in-stack ratio for turbines burning hydrogen-rich fuel or the associated coal dryer. The turbine vendor expects the NO2/NOX in-stack ratio will be similar to turbines that burn natural gas. Based on the in-stack NO2/NOX ratio of 0.091 for a natural gas turbine as determined by SJVAPCD guidance, and accounting for the conversion of NO to NO2 across the oxidation catalyst that could be as high as 20 percent (NO2/NOX ratio 0.2), HECA proposes to use the conservative NO2/NOX in-stack ratio of 0.3 for all turbine and coal dryer operating conditions. Neither the turbine nor oxidation catalyst vendor could provide written documentation regarding the NO2/NOX in-stack ratio, although this ratio was their professional engineering estimate. Emissions from the nitric acid plant will be cleaned before being discharged to the atmosphere by catalytic decomposition and reduction of both nitrous oxide (N2O) and NOX. The N2O emissions are treated in a tertiary reduction system, in a reducing catalyst that uses high temperature rather than a reducing agent, to convert 95 percent of the remaining N2O emission to molecular nitrogen (N2) and nitric oxide (NO). The NOX emissions (including the NO formed in the N2O converter) are then reduced in one or more selective catalytic reduction (SCR) units, with injected ammonia as a reducing agent, as is typical for NOX control in flue gas systems. The nitric acid unit vendor and Project design engineers estimate that approximately 50 percent of the NO converts to NO2 in the exhaust, therefore an in-stack ratio of 0.5 was used. Table 8-4 presents the resulting PVMRM in-stack NO2/NOx ratios.

Table 8-4 In-Stack NO2/NOx Ratios for Project Units

Source / Emission Units	NO2 / NOx Ratio
HRSG Stack	0.2
Coal Dryer	0.3
Tail Gas Thermal Oxidizer Stack	0.1
Auxiliary Boiler	0.1
Rectisol® Flare	0.1
Gasification Flare	0.1
SRU Flare	0.1
Nitric Acid Plant Stack	0.5
Emergency Diesel Generator 1	0.2
Emergency Diesel Generator 2	0.2
Emergency Diesel Firewater Pump	0.2
Ammonia Synthesis Plant Start-up Heater	0.32

The in-stack ratios used for the proposed units were based on the best available data known at the time the project was proposed and modeled. Currently there is still limited or no data available for some of the processes/fuel types that are proposed at the facility.

B. NO2 monitor representativeness/conservativeness
As mentioned above, the applicant chose the Shafter–Walker Street Station monitor for background NO2 concentrations. This monitor is 13 miles from the HECA site.

C. O3 background Monitor Representativeness
The applicant has indicated that since O3 is a regionally-formed pollutant, the nearness of the monitoring site to the Project is the most important criterion for representativeness. The Shafter–Walker Street Station monitor is 13 miles away from the HECA site, and the District agrees that it is adequately representative.

D. Missing O3 data procedure
Ozone data used in this analysis was prepared by the District using a monthly hour of the day fill method. This provides a reasonable and conservative procedure for filling in missing ozone values.

E. Combining Modeled and Monitored Values
The applicant proposed to combine each modeled concentration with the background concentration from the corresponding hour ("hour-by-hour" approach) pairing. The applicant correctly used the first highest values from the distribution for each temporal combination. (The EPA March 2011 memo's "first-tier" approach uses the 98th percentile of the annual distribution of daily maximum 1-hour values averaged across the most recent three years of monitored data as a uniform background contribution but also mentions the above procedure as a suggested temporal pairing option on p.20.) This procedure is based on a conservative assumption.

The District believes that the applicant's overall approach to the 1-hour NO2 analysis for the HECA, including the emission inventory, background concentrations of NO2 and O3, and method for combining model results with monitored values, is adequately conservative..

8.2.9.2 Refined AAQA Results

The results of the refined AAQS analysis for HECA's operations are shown in Table 8-5. The analysis demonstrates that emissions from HECA will not cause or contribute to exceedance of a NAAQS and/or CAAQS for any affected pollutant.

The District also considered additional information to ensure that the Project would not be responsible for causing a new NAAQS and/or CAAQS exceedance outside this modeling area. The District also considered the emission reduction credits being surrendered by the applicant if the project exceeds any NAAQA, CAAQS, and SIL threshold when making its determination. The District concludes the Project's expected emissions would not create any new NAAQS and/or CAAQS exceedances.

Table 8-5 Refined AAQA Results

NAAQS Pollutant & Averaging Time	Modeled Impacts	Background	Total	NAAQS / CAAQS		Significant Impact Level (SIL)	Project Impact Significant?	
	ug/m3	*ug/m3*	*ug/m3*	*ug/m3*		*µg/m3*	**AAQS**	**SILx**
CO, 1-hour	2,663	4,581	7,244	23,000	40,000	2000	No	No
CO, 8-hour	371	2,485	2,856	10,000	10,000	500	No	No
NO2, 1-hour	111 (27)					7.5	Yes	No
NO2, 1-hour (CAAQS)	185	140	325	---	339		No	No
NO2, 1-hour (NAAQS)	126	(Paired)	126	188	---		No	No
NO2, annual (CAAQS)	1.5	26	27	---	57	1	No	No
NO2, annual (NAAQS)	0.3	26	27	100	---	1	No	No
SO2, 1-hour	50	42	92	196	655	7.8	No	No
SO2, 3-hour	29	26	55	1,300	---	25	No	No
SO2, 24-hour	6	13	19	365	105	5	No	No
PM10, 24-hour	4.9	264	269	50	150	5	Yes	No
PM10, annual	0.8	54	55	20	---	1.0	Yes	No
PM2.5, 24-hour	3.1	196	199	35	---	1.2[1]	Yes	Yes
PM2.5, annual	0.6	22	23	15	15	0.3	Yes	Yes

As noted in Table 8-5, all pollutants except PM2.5 24-hour and annual are below either the NAAQS/CAAQS or the SIL thresholds. As per District Rule 2201, mitigation may be considered when evaluating a projects ambient air quality impact. To ensure, to the maximum extent possible, that a facility's emissions do not adversely impact air quality the District requires that it fully offsets any air quality impact. Therefore, since emissions from PM2.5 24-hour and annual exceed the NAAQS/CAAQS and SIL thresholds HECA will be required to fully offset, down to zero, their PM2.5 emissions.

9 District Rule 4201 – *Nuisances (Health Risk Analysis)*

District Rule 4201 requires that an assessment be performed on a unit by unit basis, Project basis and on a facility-wide basis to show complies with Assembly Bill 2588 Air Toxic "Hot Spots" Act requirements, better known as AB2588. If a preliminary analysis (Prioritization) demonstrates that

- A unit's prioritization score is less than the District's significance threshold and;
- The project's prioritization score is less than the District's significance threshold and;
- The facility's total prioritization score is less than the District's significance threshold then generally no further analysis is required.

The District's significant prioritization score threshold is defined as being equal to or greater than1.0. If a preliminary analysis demonstrates that either the unit(s) or the project's or the facility's total prioritization score is greater than the District threshold, a screening or a refined assessment is required using District approved models including but not limited to District screening assessment tools, AERMOD, and CARB's HARP program. Required model inputs characterize the various emitting units, meteorology, and the land surface, and define a set of receptors (spatial locations at which to estimate concentrations, typically out to 2-5 km from the facility). Modeling should be performed in accordance with District, OEHHA, and EPA's Guideline on Air Quality Modeling, in Appendix W to 40 CFR Part 51 (GAQM or Appendix W).

If a refined assessment is greater than one in a million but less than 10 in one million for carcinogenic impacts (Cancer Risk) and less than 1.0 for the Acute and Chronic hazard indices(Non-Carcinogenic) on a unit by unit basis, Project basis and on a facility-wide basis the proposed application is considered less than significant. For unit's that exceed a cancer risk of 1 in one million Toxic Best Available Control Technology (TBACT) must be implemented. In most cases Best Available Control Technology (BACT) is considered TBACT.

Carcinogenic impacts greater than 10 in one million or greater than 1.0 for either the Acute or Chronic hazard indices is considered significant and may not be permitable. In special circumstance the Air Pollution Control Office may approve a project determined to be significant; if it can be demonstrated that the project is essential to public safety and more harm to the public may occur from denying the project than from approving it.

9.1 Prioritization

The prioritization methodology used by the District was developed by the Facility Prioritization Guidelines of the AB 2588 Risk Assessment Committee of the California Air Pollution Control Officers Association in 1990. The guidance document can be downloaded from ARB at http://www.arb.ca.gov/ab2588/RRAP-IWRA/priguide.pdf.

The prioritization methodology has two basic methods that can be used to determine a source's potential impact on nearby receptors. The first is the "Emissions and Potency" method which relies on the quantity of a specific pollutant and the pollutant's specific potency (tendency to cause harm) in conjunction with the distance a source is from a receptor to calculate a score or potential for exposure.

The second method, “Dispersion Adjustment”, is similar to the first method except that the stack height is also included as a parameter in the calculations to derive the prioritization score. Both prioritization methodologies look at three aspects of exposure 1) Acute short term non-carcinogenic risk [1-24 hours], 2) Chronic long term non-carcinogenic risk [24 hours to 1 year], and 3) Carcinogenic risk over a 70 year period.

For the purpose of this assessment the word carcinogenic refers to those compounds that have been identified by the Office of Environmental Health hazard Assessment (OEHHA) as having the potential of cause cancer.

The applicant did not perform a prioritization and instead conducted a refined assessment. This is consistent with District procedures since the project is considered a new major source. This would ensure that the exposures from toxic pollutants are fully evaluated, to actual receptors, in the vicinity of the project site.

9.2 Screening and Refined Assessment

If modeling is required after implementing a screening technique, two modeling options may be available depending on the reviewing agencies requirements. The first option is a screening model that uses conservative modeling assumptions to estimate impacts or it may be a spreadsheet that was derived from a screening/refined model using conservative assumptions.

The second option is to use a refined model which will require more resources and time. This is due to the facility and source specific information required to perform a given run.

The determination of which option is used will mainly be based on the following:

1. Is there a screening method available for the scenario under review?
2. Is the conservative screening method acceptable to the reviewing agency?
3. Is the meteorological data used to develop the screening method acceptable?
4. Are the source parameters used in the screening method acceptable?

If the answers to all the questions above are “Yes”, the screening method, for the most part, would be the best choice.

The applicant did not perform a screening assessment and instead conducted a refined assessment. This is consistent with District procedures since the project is considered a new major source. This would ensure that the exposures from toxic pollutants are fully evaluated, to actual receptors, in the vicinity of the project site.

9.3 Modeling Methodology

The applicant modeled the impact of the project using AERMOD in accordance with District OEHHA, and CARB guidance. The modeling analyses included the maximum air quality impacts during normal operations using maximum hourly emissions for the acute HI, annual average emissions for the chronic HI, and annual emissions for the cancer risk.

9.3.1 Model Selection

The District requires that AERMOD and HARP be used to analyze health impacts in the areas, along with AERMAP for terrain processing and meteorological data processed by the SJVAPCD. As discussed in the PSD Application the applicant followed these recommendations.

9.3.1.1 Meteorological Inputs

9.3.1.1.1 Surface Data

AERMOD requires representative meteorological data in order to accurately simulate air quality impacts. SJVAPCD provided the surface meteorological data collected for a five-year consecutive period (from 2006 – to 2010) at the Bakersfield Meadows Field Airport meteorological station maintained by the FAA.

The District processed these data using EPA's AERMET data processor and the District meteorological data processing guidance (http://www.valleyair.org/busind/pto/Tox_Resources/AirQualityMonitoring.htm#modeling_guidance). The meteorological station is located on the northern end of the city of Bakersfield, within 20 miles (32.2 kilometers) east-northeast of the Project Site, with no intervening structures, hills, or water bodies that might significantly affect meteorological conditions. The project site, the meteorological site and the "area of interest" are located inland and close to each other.

For analyzing the representativeness of the meteorological dataset, the area of interest includes:

- the SIA where screening modeling predicts the Project's pollutant impact to be greater than the SIL, and
- Also includes the sources and receptors used in the modeling.

Other nearby surface meteorological sites were examined, but the Bakersfield Meadows Field Airport station had sufficient data completeness, is the closest, and is the most representative with no intervening high ground between the Project site and the meteorological tower. District believes that the chosen from 2006 – to 2010 Bakersfield Meadows Field Airport data is the most representative for the proposed project analysis. Further discussion of the meteorological data used in the analysis is given in the following section on land characteristics. **Please Note**: The other nearby sites (Fellows and Missouri Triangle) are considered prognostic datasets generated from MM5 data and at the current time are not acceptable by EPA; even though the District would allow their used for the purpose of District Rule 2201. The District accepts the use of the selected meteorological data to streamline the process of assessing exposure to toxic pollutants.

9.3.1.2 Upper Air Data

For upper air data, the District selected the (from 2006 – to 2010) upper air site located in Oakland, California, located approximately 227 miles (366 km) northwest of the Project site as being the most representative site available that had data complete enough to use. No other upper air meteorological monitoring stations are located in the San Joaquin Valley Air Basin.

9.3.2 Land Characteristics

Land characteristics are used in the AERMOD modeling system in three ways:

1) via elevation within AERMOD to assess plume interaction with the ground;
2) via a choice of rural versus urban algorithm within AERMOD; and
3) via specific values of AERMET parameters that affect turbulence and dispersion, namely surface roughness length, Bowen ratio, and albedo. The surface roughness length is related to the height of obstacles to the wind flow and is an important factor in determining the magnitude of mechanical turbulence. The Bowen ratio is an indicator of surface moisture. The albedo is the fraction of total incident solar radiation reflected by the surface back to space without absorption.

The applicant used terrain elevations from United States Geological Survey (USGS) National Elevation Dataset (NED) data at a horizontal resolution of 30 meters, for receptor heights in AERMOD, which uses them to assess plume distance from the ground for each receptor. All coordinates were referenced to UTM North American Datum 1983 (NAD83, Zone 11). The AERMOD, receptor elevations were interpolated among the NED nodes according to standard AERMAP procedure.

The applicant used surface roughness values in the modeling inputs developed by SJVAPCD. The District followed EPA's “AERMOD Implementation Guide” (2009 version) and the District’s Guidance entitled “Procedure for Downloading & Processing NCDC Meteorological Data” in using EPA's AERSURFACE processor with the National Land Cover Data 1992 archive to determine surface characteristics for AERMET. The surface roughness characteristics are representative of the area surrounding the site where the meteorological data is collected. The District also used the criteria described in Section 3 (Representativeness) from EPA’s Meteorological Monitoring Guidance for Regulatory Modeling Applications (2000). AERSURFACE uses a Land Use data base from 1992. In addition, SJVAPCD reviewed recent aerial photos for the area, which show that the Bakersfield Meadows Field Airport meteorological tower is surrounded by a light industrial, residential, and rural area.

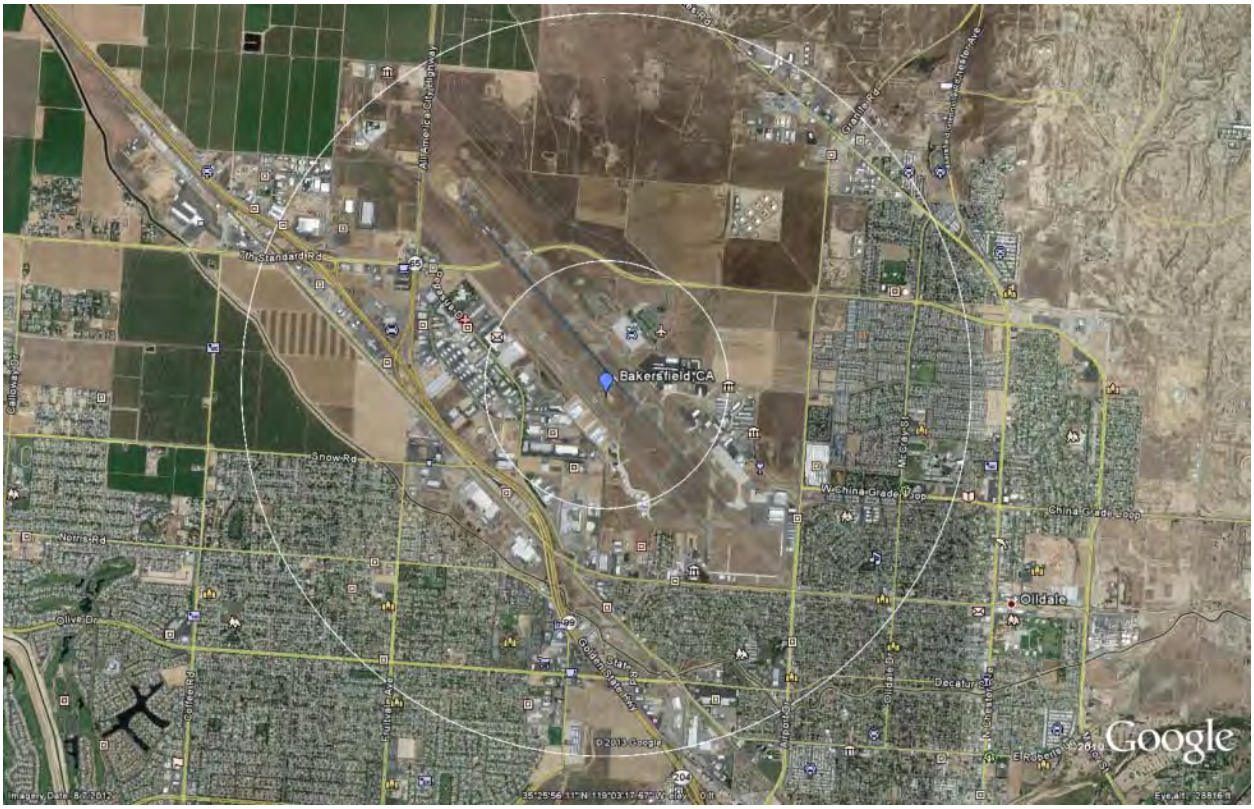

Figure 9-1 Bakersfield Meadows Field Airport

The applicant did a qualitative comparison of the following factors from the Meteorological Monitoring Guidance (p.3-3) recommended for consideration for siting:

- Proximity
- Height of measurement
- Surface

The Bakersfield Airport is the closest full-time meteorological recording station to the Project Site. The terrain immediately surrounding the Project Site can be categorized as a fairly flat, or gradually sloping rural area in a region with developed oil wells. The terrain around the Bakersfield Airport also consists of relatively flat, or gradually sloping rural or suburban areas. Thus, the land use and the location with respect to near-field terrain features are similar. Both are located in areas of medium surface roughness (as opposed to low surface roughness like bodies of water or grassy prairies, or high surface roughness like highly urbanized cities or forests). Both locations are on the valley floor and are at approximately the same elevation. Additionally, there are no significant terrain features separating the Bakersfield Airport from the Project Site that would cause significant differences in wind or temperature conditions between these respective areas

9.3.3 Sensitive Receptors Grid

Sensitive receptors are defined as infants and children, the elderly, the chronically ill, and any other members of the general population who are more susceptible to the effects of exposure to environmental contaminants than the population at large. Additionally, the District includes in

the definition of sensitive receptors locations occupied by groups of individuals that may be more susceptible than the general population to health risks from a chemical exposure and therefore include schools (public and private), day-care facilities, convalescent homes, parks, and hospitals.

Two sensitive receptors exist within 6 miles of the Project (6 miles is the extent of the modeling receptor grid): Elk Hills elementary school, 1.3 miles to the southeast; and the Tule Elk State Natural Reserve, located 1,700 feet to the east of the Project Site. Figure 9-2, Sensitive Receptor Located, shows the location of these sensitive receptors, plus the locations of the nearest residences. A total of 118 residences near the Project Site were included in the modeling. The closest residential neighborhood is in the unincorporated community of Tupman, approximately 2 miles southeast of the Project boundary. There are also additional single-family residences in the immediate Project vicinity, including residences approximately 1,400 feet to the east and 3,300 feet to the southeast of the Project Site. The HRA approach treats all receptors as sensitive receptors.

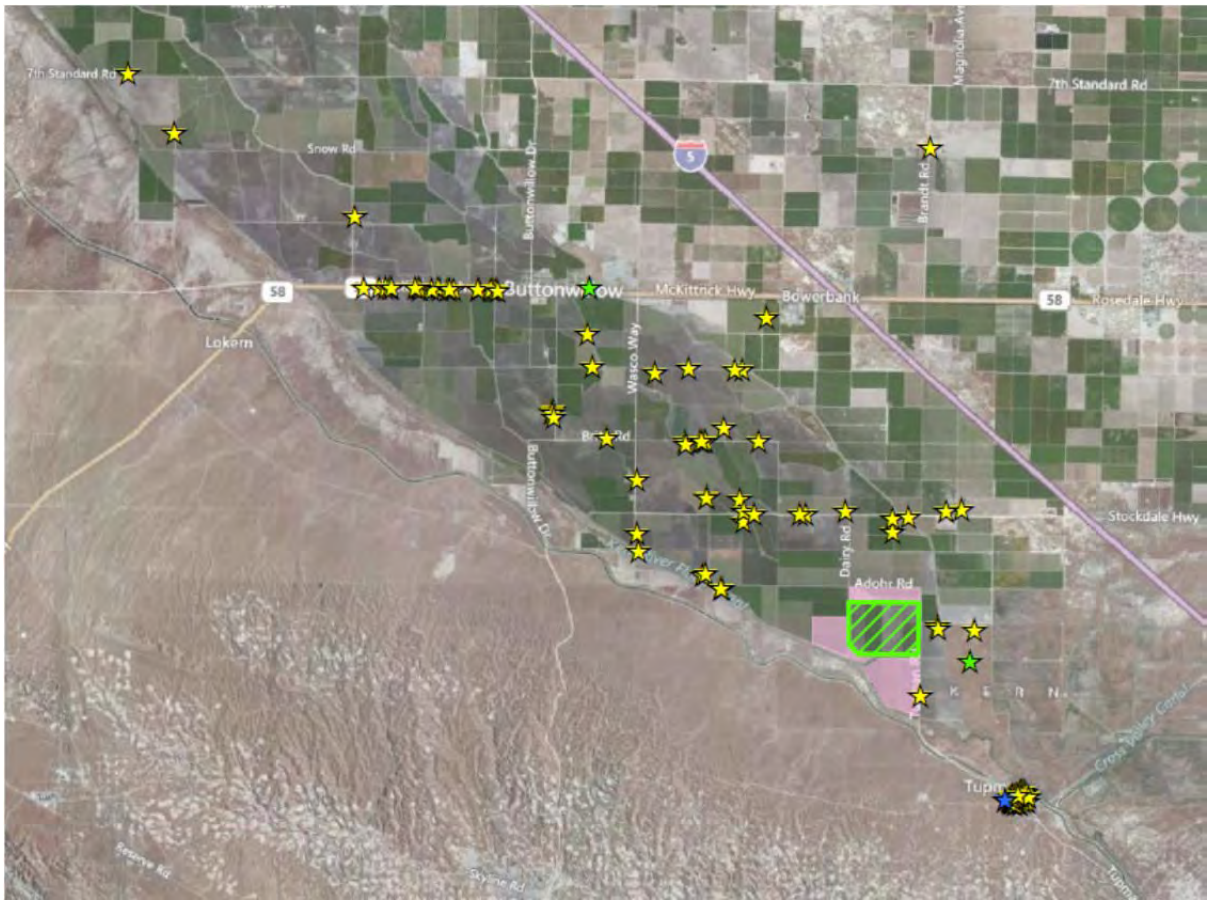

Figure 9-2 Sensitive Receptor Locations

9.3.3.1 Source Parameters

Modeling was performed using the source parameters in the tables below to conservatively estimate the Project's impacts.

Table 9-1 Source Stack Parameters

Source	Operating Condition Associated with Emission Rate	Stack Ht.	Temperature	Exit Velocity	Stack Diameter
		(ft)	*(°F)*	*(ft/sec)*	*(ft)*
HRSG Stack	Normal On-Peak Emissions (Case 1)	213	200	53.81	23
Coal Dryer	Normal On-Peak Emissions (Case 1)	305	200	19.16	16
Tail Gas Thermal Oxidizer Stack	Normal operations	165	1200	50.93	2.5
Auxiliary Boiler	Normal operations	80	300	30.18	4.5
Rectisol® Flare	Annualized emissions, start-up flaring	217.83	1831.73	65.62	0.87
Gasification Flare	Annualized emissions, start-up and shut-down flaring	219.63	1831.73	65.62	1.22
SRU Flare	Normal Operations, Pilot	215	1831.73	65.62	0.32
Nitric Acid Plant Stack	Normal operations	145	239	17.11	8
Emergency Diesel Generator 1	Annualized emissions	20	760	221.05	1.2
Emergency Diesel Generator 2	Annualized emissions	20	760	221.05	1.2
Emergency Diesel Firewater Pump	Annualized emissions	20	850	155.91	0.7
Ammonia Synthesis Plant Start-up Heater	Annualized emissions	80	300	18.71	3.5

9.3.4 Health Risk Analysis

Adverse health effects are expressed in terms of cancer or non-cancer health risks. Cancer risk is typically reported as "lifetime cancer risk," which is the estimated maximum increase in the risk of developing cancer caused by long-term exposure to a pollutant identified as being a carcinogen by the OEHHA. The calculation of cancer risk conservatively assumes an individual is exposed continuously to the maximum pollutant concentrations 24 hours per day for 70 years. Although such continuous lifetime exposure to maximum Toxic Air Contaminants (TAC) levels is highly unlikely, the goal of the approach is to produce a conservative worst-case estimate of potential cancer risk.

Non-cancer risk is typically reported as a Hazard Index (HI). The HI is calculated for each target organ as a fraction of the maximum acceptable exposure level or REL for an individual pollutant. The REL is generally the level at (or below) which no adverse health effects are

expected. The HIs are calculated for both short-term (acute) and long-term (chronic) exposures to non-carcinogenic substances by adding the ratios of predicted concentrations to RELs for all pollutants.

Both cancer and non-cancer risk estimates produced by the HRA represent incremental risks (i.e., risks due to the modeled sources only) and do not include potential health risks posed by existing background concentrations. The HARP model performs all of the necessary calculations to estimate the potential lifetime cancer risk, and the acute and chronic non-cancer HIs due to the Project's TAC emissions. The acute 8-hour HI is calculated directly from the predicted concentrations of acetaldehyde, arsenic, formaldehyde, manganese, and mercury.

9.3.5 HRA Significant Thresholds

A Project-related emissions are considered significant when the predicted increase in lifetime cancer risk exceeds 10 in 1 million (10×10^{-6}) and non-carcinogenic acute and chronic health effects, exposure affects a single target organ, exceed a value of 1.0.

9.3.6 Health Risk Analysis Results

The Estimated Cancer Risk, Acute and Chronic Non-Cancer HI due to HECA operation is presents the results of the HRA at the point of maximum impact, maximally exposed individual resident (MEIR), MEIW, and nearest sensitive receptor.

Table 9-2 HRA Results

Location	Cancer Risk	Chronic Hazard Index	Acute Hazard Index
Point of maximum impact	8.97 E^{-6}	0.42	0.88
UTM Location	283,967 3,911,925	283,959 3,911,625	282,663 3,912,844
Off-Site Worker (Tule Elk State Reserve Ranger Station)	1.9 E^{-6}	0.13	0.23
UTM Location	285,106 3,911,707	285,106 3,911,707	285,106 3,911,707
Maximum Impacted Sensitive Receptor	3.83 E^{-6}	0.29	0.33
UTM Location	283,989 3,910,951	283,989 3,910,951	284,401 3,912,477
Maximum Impacted Sensitive Receptor (School)	0.96 E^{-6}	0.07	0.11
UTM Location	285,878 3,908,605	285,878 3,908,605	285,878 3,908,605

The results from the HRA indicate that the impacts from the Project's emissions are below the District Significant Threshold of 10 in 1 million for the .cancer risk and below 1.0 for the acute and chronic hazard indices.

As noted in Table 9-3, all units except unit 26 have a cancer risk below 1 in a million. As required by District Policy any unit that has a cancer risk greater than 1 in a million must implement Toxic Best Available Control Technology (TBACT).

Table 9-3 Risk by Permit Unit

Permit ID#	Model Name	Cancer Risk	TBACT Required
21	GASFUG1	0.00E+00	
21	GASFUG2	0.00E+00	
21	GASFUG3	0.00E+00	
21	SHIFT1	0.00E+00	
21	SHIFT2	0.00E+00	
21	AGRFUG	0.00E+00	
Unit Total		0.00E+00	No
23	TGTOSTK	3.95E-09	
23	SRUFUG1	0.00E+00	
23	SRUFUG2	0.00E+00	
23	SWSFUG	0.00E+00	
Unit Total		3.95E-09	No
24	CO2_VENT	0.00E+00	
Total		0.00E+00	No
25	AUX_BOIL	3.45E-08	
Unit Total		3.45E-08	No
26	HRSGSTK	2.76E-06	
26	COALDRY	9.15E-07	
Unit Total		3.68E-06	Yes
27	PRCOOL1	7.92E-10	
27	PRCOOL2	9.76E-10	
27	PRCOOL3	9.90E-10	
27	PRCOOL4	1.01E-09	
27	PRCOOL5	1.02E-09	
27	PRCOOL6	1.03E-09	
27	PRCOOL7	1.03E-09	
27	PRCOOL8	1.03E-09	
27	PRCOOL9	1.02E-09	
27	PRCOOL10	1.00E-09	
27	PRCOOL11	9.81E-10	

Permit ID#	Model Name	Cancer Risk	TBACT Required
27	PRCOOL12	9.54E-10	
27	PRCOOL13	9.26E-10	
Unit Total		1.28E-08	No
28	ASUCOOL1	4.05E-10	
28	ASUCOOL2	4.08E-10	
28	ASUCOOL3	4.12E-10	
28	ASUCOOL4	4.15E-10	
Unit Total		1.64E-09	No
29	PWCOOL1	5.33E-10	
29	PWCOOL2	5.45E-10	
29	PWCOOL3	5.50E-10	
29	PWCOOL4	5.59E-10	
29	PWCOOL5	5.64E-10	
29	PWCOOL6	5.68E-10	
29	PWCOOL7	5.69E-10	
29	PWCOOL8	5.66E-10	
29	PWCOOL9	5.60E-10	
29	PWCOOL10	5.50E-10	
29	PWCOOL11	5.38E-10	
29	PWCOOL12	5.24E-10	
Unit Total		6.63E-09	No
30	GF_FLARE	2.29E-09	
Unit Total		2.29E-09	No
31	SRUFLARE	1.57E-10	
Unit Total		1.57E-10	No
32	RC_FLARE	6.63E-10	
Unit Total		6.63E-10	No
33	NH3HEATR	1.88E-09	
Unit Total		1.88E-09	No
34	UREAPAST	0.00E+00	
34	U_HPABS	0.00E+00	
34	U_LPABS	0.00E+00	
34	UREAFUG1	0.00E+00	
34	UREAFUG2	0.00E+00	
Unit Total		0.00E+00	No
35	NACID	0.00E+00	
Unit Total		0.00E+00	No
36	UANFUG	0.00E+00	
36	NH3FUG1	0.00E+00	

Permit ID#	Model Name	Cancer Risk	TBACT Required
36	NH3FUG2	0.00E+00	
Unit Total		0.00E+00	No
38	EMERGEN1	4.48E-08	
Unit Total		4.48E-08	No
39	EMERGEN2	5.52E-08	
Unit Total		5.52E-08	No
40	FWP	4.67E-09	
Unit Total		4.67E-09	No
Facility Total		3.83E-06	

10 Report Summary

10.1 District Rule 2410 - Prevention of Significant Deterioration (PSD)

District Rule 2410 requires that an Ambient Air Quality Analysis (AAQA) be conducted for the purpose of determining whether a new PSD Major Stationary Source or PSD Major Modification at an existing source will cause or make worse a violation of a National Ambient Air Quality Standard (AAQS). Therefore, the project must demonstrate, using air quality models, the facility's emissions of the regulated air pollutants would not cause or contribute to a violation of:

1) the applicable NAAQS or
2) the applicable PSD increments
3) the applicable AQRV
4) the applicable Visibility
5) the applicable Soil & Vegetation

As previously discussed in the evaluation above, this project is subject to PSD requirements, and the District is required to perform a PSD analysis.

As presented in the Sections 6 & 7 of this document, the proposed project will not cause or contribute significantly to a violation of the National Ambient Air Quality Standard (AAQS), has demonstrated compliance other modeling requirement under District Rule 2410, and no further discussion is required.

10.2 District Rule 2201 - New Source Review (NSR)

Section 4.14 of District Rule 2201 requires that an Ambient Air Quality Analysis (AAQA) be conducted for the purpose of determining whether a new or modified Stationary Source will cause or make worse a violation of a State or National ambient Air Quality Standard (AAQS). An AAQA is required to be performed for all New Source Review (NSR) public notice projects. As previously discussed in the evaluation above, this project requires that a public notice be performed before issuance of the Determination of Compliance. Therefore, the District has reviewed the AAQA for this project.

As presented in Section 8 of this document, the proposed project will not cause or contribute significantly to a violation of the State and National Ambient Air Quality Standard (AAQS) for NOx, CO, PM10, PM2.5, SOx, or other affected pollutant. The impacts from the Projects PM2.5 will be fully offset down to zero and therefore will comply with District Rule 2201 and no further discussion is required.

10.3 Rule 4102 – Nuisance (HRA)

Rule 4102 prohibits discharge of air contaminants which could cause injury, detriment, nuisance or annoyance to the public. Public nuisance conditions are not expected as a result of this operation, provided the equipment is well maintained. Therefore, compliance with this rule is expected.

California Health & Safety Code 41700 (Health Risk Assessment)

District Policy APR 1905 – *Risk Management Policy for Permitting New and Modified Sources* specifies that for an increase in emissions or a change in mode or time of operation associated with a proposed new source or modification, the District perform an analysis to determine the possible impact to the nearest resident or worksite.

The acute and chronic hazard indices were less than 1.0 and the cancer risk associated with the project equals or exceeds one in one million.

BACT for toxic emission control (T-BACT) is required if the cancer risk for a unit equals or exceeds one in one million.

For this project T-BACT is triggered (PM_{10} and VOC) for unit 26. T-BACT is satisfied with BACT for PM_{10} and VOC.

Therefore, in accordance with the District Risk Management Policy, the project is approved with Toxic Best Available Control Technology (T-BACT) requirements and compliance with the District's Risk Management Policy is expected.

Appendix K-A – Rule 2410 Thresholds

District Rule 2410 Thresholds											
Pollutant	Averaging Period	NAAQS (ug/m^3)	Comment	SMC (ug/m3)	SER[a] (Tons/Yr)	SILs (ug/m3)			Increments (ug/m^3)		
						Class I	Class II	Class III	Class I	Class II	Class III
PM2.5	Annual	15[d5]	annual mean, averaged over 3 years		10	0.06	0.3[e]	0.3	1	4	8
	24-Hour	35[d1]	98th percentile, averaged over 3 years	4		0.07	1.2[e]	1.2	2	9	18
PM10	Annual	150[d4]			15	0.32	1[e]		4	17[d1]	34
	24-Hour	--	Not to be exceeded more than once per year on average over 3 years	10		0.2	5[e]		8	30[d2]	60
Carbon Monoxide (CO)	8-Hour	10,000[d2]	Not to be exceeded more than once per year	575	100		500				
	1-Hour	40,000[d2]					2000				
Nitrogen Oxide (NO2)	Annual	100[d5]	Annual Mean	14	40	[f]			2.5	25[d1]	50
	1-Hour	188[d1]	98th percentile, averaged over 3 years			0.1	7.5[e]				
Sulfur Dioxide (SO2)	Annual	80[d1]			40	0.08	1		2	20[d1]	40
	24-Hour	365[d2]		13		0.2	5		5	91[d2]	182
	3-Hour	1300[d2]	Not to be exceeded more than once per year			1	25		25	512[d2]	700
	1-Hour	196[d3]	99th percentile of 1-hour daily maximum concentrations, averaged over 3 years			[f]	7.8[e]				
Ozone (VOC)[b]			Annual fourth-highest daily maximum 8-hr concentration, averaged over 3 years		40 (VOCs)		[b]				
Lead	Rolling 3-month average Quarterly		Not to be exceeded	0.1	0.6						
Asbestos					0.007						

District Rule 2410 Thresholds											
Pollutant	**Averaging Period**	**NAAQS (ug/m^3)**	**Comment**	**SMC (ug/m3)**	**SER[a] (Tons/Yr)**	**SILs (ug/m3)**			**Increments (ug/m^3)**		
Fluorides	24-Hour			0.25	3						
Sulfuric Acid Mist					7						
Total Reduced Sulfur Compounds (including H2S)	1-Hour			10	10						
Hydrogen Sulfide	1-Hour			0.2	10						

a) Significant means any emissions rate or any net emissions increase associated with a major stationary source or major modification, which would construct within 10 kilometers of a Class I area, and have an impact on such area equal to or greater than 1 µg/m3, (24-hour average).

b) a net emissions increase of 100 tons or more per year of VOC is subject to PSD; however, ozone is currently evaluated at a regional level within DAQ and is not further evaluated within the confines of PSD.

c) No Class I SIL available.

d) 1= H1H, 2=H2H, 3=H4H, 4=H6H, 5=H8H

e) Interim SIL

f) Proposed not yet final

Appendix K-B – Class I Areas

Within 100 km of the District Boundaries

Class I Areas
Within 100 Km of the
San Joaquin Valley APCD boundaries

National Wilderness Area

San Gabriel
San Rafael
Domeland
John Muir
Ansel Adams
Kaiser
Hoover
Emigrant
Mokelumne
Desolation
Phillip Burton
Pinnacles
Ventana

National Parks

Sequoia
Kings Canyon
Yosemite

National Seashore

Point Reyes

National Monument

Pinnacles

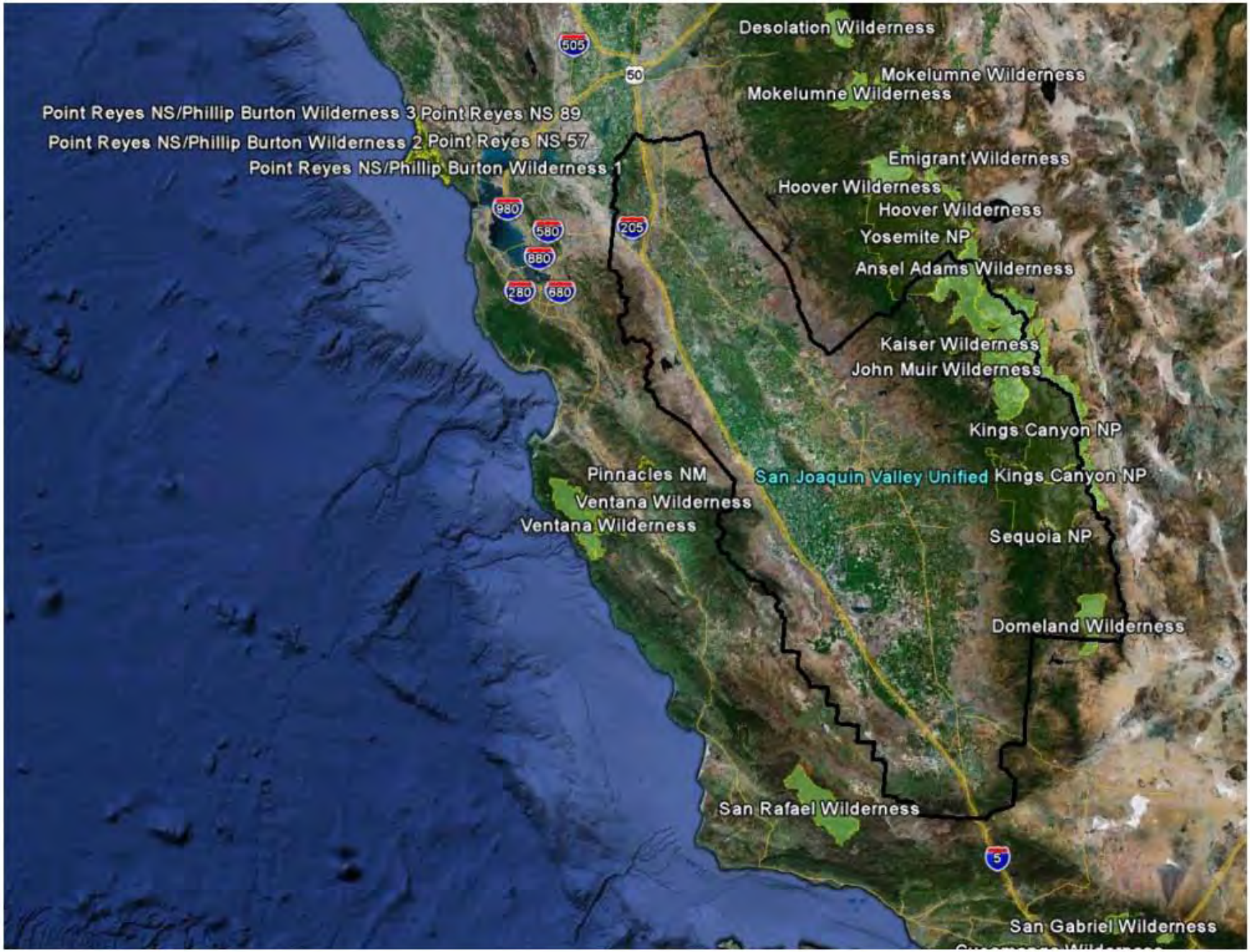
Desolation Wilderness
Mokelumne Wilderness
Mokelumne Wilderness
Point Reyes NS/Phillip Burton Wilderness 3 Point Reyes NS 89
Point Reyes NS/Phillip Burton Wilderness 2 Point Reyes NS 57
Point Reyes NS/Phillip Burton Wilderness 1
Emigrant Wilderness
Hoover Wilderness
Hoover Wilderness
Yosemite NP
Ansel Adams Wilderness
Kaiser Wilderness
John Muir Wilderness
Kings Canyon NP
Pinnacles NM
San Joaquin Valley Unified
Kings Canyon NP
Ventana Wilderness
Ventana Wilderness
Sequoia NP
Domeland Wilderness
San Rafael Wilderness
San Gabriel Wilderness
505
50
980
580
205
880
280
680
5

Appendix K-C – Cumulative Sources

Listing of Nearby Sources

Facility ame	Short Equip Description	Eqp Rating	Rating Units	Fuel	In-stack Ratio (NO2/NOx)	NOx Emissions Lb-Hour	HS (m)	TS (K)	VS (m/s)	DS (m)
Energy	Boiler/Steam Gen	62.5	MMBtu/hr	NG	0.1	6.13	7.32	421.89	5.51	1.07
Energy	Boiler/Steam Gen	62.5	MMBtu/hr	NG	0.1	6.13	7.32	421.89	5.51	1.07
Energy	Boiler/Steam Gen	62.5	MMBtu/hr	NG	0.1	6.13	7.32	421.89	5.51	1.07
Energy	Boiler/Steam Gen	62.5	MMBtu/hr	NG	0.1	6.13	7.32	421.89	5.51	1.07
Energy	Boiler/Steam Gen	62.5	MMBtu/hr	NG	0.1	2.25	7.32	421.89	5.51	1.07
Energy	Boiler/Steam Gen	62.5	MMBtu/hr	NG	0.1	2.25	7.32	421.89	5.51	1.07
Energy	Boiler/Steam Gen	62.5	MMBtu/hr	NG	0.1	2.25	7.32	421.89	5.51	1.07
Energy	Boiler/Steam Gen	62.5	MMBtu/hr	NG	0.1	2.25	7.32	421.89	5.51	1.07
Energy	Boiler/Steam Gen	62.5	MMBtu/hr	NG	0.1	2.25	7.32	421.89	5.51	1.07
Energy	Boiler/Steam Gen	62.5	MMBtu/hr	NG	0.1	2.25	7.32	421.89	5.51	1.07
Energy	Boiler/Steam Gen	62.5	MMBtu/hr	NG	0.1	2.25	7.32	421.89	5.51	1.07
Energy	Boiler/Steam Gen	62.5	MMBtu/hr	NG	0.1	2.20	7.32	421.89	5.51	1.07
Energy	Boiler/Steam Gen	62.5	MMBtu/hr	NG	0.1	2.20	7.32	421.89	5.51	1.07
Energy	Boiler/Steam Gen	62.5	MMBtu/hr	NG	0.1	2.20	7.32	421.89	5.51	1.07
Energy	Boiler/Steam Gen	62.5	MMBtu/hr	NG	0.1	2.20	7.32	421.89	5.51	1.07
Energy	Boiler/Steam Gen	62.5	MMBtu/hr	NG	0.1	2.25	7.32	421.89	5.51	1.07
Energy	Boiler/Steam Gen	62.5	MMBtu/hr	NG	0.1	2.13	7.32	421.89	5.51	1.07
Energy	Boiler/Steam Gen	62.5	MMBtu/hr	NG	0.1	2.25	7.32	421.89	5.51	1.07
Energy	Boiler/Steam Gen	62.5	MMBtu/hr	NG	0.1	2.13	7.32	421.89	5.51	1.07
Energy	Boiler/Steam Gen	62.5	MMBtu/hr	NG	0.1	2.25	7.32	421.89	5.51	1.07
Energy	Boiler/Steam Gen	62.5	MMBtu/hr	NG	0.1	2.25	7.32	421.89	5.51	1.07
Energy	Boiler/Steam Gen	62.5	MMBtu/hr	NG	0.1	2.13	7.32	421.89	5.51	1.07
Energy	Boiler/Steam Gen	62.5	MMBtu/hr	NG	0.1	2.13	7.32	421.89	5.51	1.07
Energy	Boiler/Steam Gen	62.5	MMBtu/hr	NG	0.1	2.13	7.32	421.89	5.51	1.07
Energy	Boiler/Steam Gen	62.5	MMBtu/hr	NG	0.1	2.25	7.32	421.89	5.51	1.07
Energy	Boiler/Steam Gen	62.5	MMBtu/hr	NG	0.1	2.25	7.32	421.89	5.51	1.07
Energy	Boiler/Steam Gen	62.5	MMBtu/hr	NG	0.1	2.25	7.32	421.89	5.51	1.07
Energy	Boiler/Steam Gen	62.5	MMBtu/hr	NG	0.1	2.13	7.32	421.89	5.51	1.07
Energy	Boiler/Steam Gen	62.5	MMBtu/hr	NG	0.1	2.13	7.32	421.89	5.51	1.07
Energy	Boiler/Steam Gen	62.5	MMBtu/hr	NG	0.1	2.13	7.32	421.89	5.51	1.07
Energy	Turbine-Small	2.5	MW	NG	0.1032	4.96	13.00	710.22	6.15	1.57
Energy	Turbine-Large	75	MW	NG	0.17	17.66	15.24	367.44	13.03	3.42

Facility ID	Permit Number	Short Facility Name	Short Equip Description	Eqp Rating	Rating Units	Fuel	In-stack Ratio (NO2/NOx)	NOx Emissions Lb-Hour	HS (m)	TS (K)	VS (m/s)	DS (m)
1135	225	AeraEnergy	Turbine-Large	75	MW	NG	0.17	17.66	15.24	367.44	13.03	3.42
1135	226	AeraEnergy	Turbine-Large	75	MW	NG	0.17	17.66	15.24	367.44	13.03	3.42
1547	148	AeraEnergy	Turbine-Large	21.45	MW	NG	0.17	7.93	15.24	367.44	13.03	3.42
1547	149	AeraEnergy	Turbine-Large	21.45	MW	NG	0.17	2.61	15.24	367.44	13.03	3.42
1547	151	AeraEnergy	Turbine-Large	21.45	MW	NG	0.17	2.59	15.24	367.44	13.03	3.42
1547	459	AeraEnergy	Turbine-Small	4	MW	NG	0.1032	5.93	13.00	710.22	6.15	1.57
1547	879	AeraEnergy	Turbine-Small	3.2	MW	NG	0.1032	2.70	13.00	710.22	6.15	1.57
1547	880	AeraEnergy	Turbine-Small	3.2	MW	NG	0.1032	2.70	13.00	710.22	6.15	1.57
1547	881	AeraEnergy	Turbine-Small	3.2	MW	NG	0.1032	2.70	13.00	710.22	6.15	1.57
1543	33	AeraEnergy	Flare	3,600	MMBtu/hr	NG	0.1	170.04	87.30	1273.00	20.00	10.52
1547	414	AeraEnergy	Flare	60	MMBtu/hr	NG	0.1	7.00	19.68	1273.00	20.00	1.36
1548	134	AeraEnergy	Flare	625	MMBtu/hr	NG	0.1	42.50	33.48	1273.00	20.00	4.38
1548	144	AeraEnergy	Flare	167	MMBtu/hr	vapor	0.1	14.17	23.90	1273.00	20.00	2.27
1548	389	AeraEnergy	Flare	223	MMBtu/hr	NG	0.1	15.17	25.52	1273.00	20.00	2.62
1548	424	AeraEnergy	Flare	825	MMBtu/hr	NG	0.1	56.10	36.39	1273.00	20.00	5.04
1543	5	AeraEnergy	Turbine-Small	13.6	MMBtu/hr	NG	0.17	4.44	13.00	710.22	6.15	1.57
1547	1068	AeraEnergy	IC Engine_Turb	140	BHP	diesel	0.2	3.09	3.00	622.00	53.20	0.08
1547	1069	AeraEnergy	IC Engine_Turb	140	BHP	diesel	0.2	3.09	3.00	622.00	53.20	0.08
1547	1070	AeraEnergy	IC Engine_Turb	140	BHP	diesel	0.2	3.09	3.00	622.00	53.20	0.08
1547	1060	AeraEnergy	Turbine-Small	3.5	MW	NG	0.1032	6.28	13.00	710.22	6.15	1.57
1547	1061	AeraEnergy	Turbine-Small	3.5	MW	NG	0.1032	6.28	13.00	710.22	6.15	1.57
1547	1062	AeraEnergy	Turbine-Small	3.5	MW	NG	0.1032	6.28	13.00	710.22	6.15	1.57
1250	1	BadgerCkLtd	Turbine-Large	48.5	MW	NG	0.17	6.16	15.24	367.44	13.03	3.42
2049	1	BearMtnLtd	Turbine-Large	48	MW	NG	0.17	5.99	15.24	367.44	13.03	3.42
4692	10	Bellanave	IC Engine_Pump	375	BHP	diesel	0.2	5.38	3.00	622.00	76.60	0.13
4692	13	Bellanave	IC Engine_Pump	400	BHP	diesel	0.2	5.73	3.00	622.00	76.60	0.13
4692	14	Bellanave	IC Engine_Pump	400	BHP	diesel	0.2	5.73	3.00	622.00	76.60	0.13
4692	15	Bellanave	IC Engine_Pump	400	BHP	diesel	0.2	5.73	3.00	622.00	76.60	0.13
4692	19	Bellanave	IC Engine_Pump	385	BHP	diesel	0.2	2.28	3.00	622.00	76.60	0.13
4692	20	Bellanave	IC Engine_Pump	385	BHP	diesel	0.2	2.28	3.00	622.00	76.60	0.13
4692	21	Bellanave	IC Engine_Pump	385	BHP	diesel	0.2	2.28	3.00	622.00	76.60	0.13
4692	22	Bellanave	IC Engine_Pump	385	BHP	diesel	0.2	2.28	3.00	622.00	76.60	0.13

Facility ID	Permit Number	Short Facility Name	Short Equip Description	Eqp Rating	Rating Units	Fuel	In-stack Ratio (NO2/NOx)	NOx Emissions Lb-Hour	HS (m)	TS (K)	VS (m/s)	DS (m)
4692	23	Bellanave	IC Engine_Pump	385	BHP	diesel	0.2	2.28	3.00	622.00	76.60	0.13
4692	24	Bellanave	IC Engine_Pump	385	BHP	diesel	0.2	2.28	3.00	622.00	76.60	0.13
1246	19	BerryPetro	Boiler/Steam Gen	62.5	MMBtu/hr	NG	0.1	2.25	7.32	421.89	5.51	1.07
1246	252	BerryPetro	Boiler/Steam Gen	62.5	MMBtu/hr	NG	0.1	2.25	7.32	421.89	5.51	1.07
1246	253	BerryPetro	Boiler/Steam Gen	62.5	MMBtu/hr	NG	0.1	2.25	7.32	421.89	5.51	1.07
1246	254	BerryPetro	Boiler/Steam Gen	62.5	MMBtu/hr	NG	0.1	2.25	7.32	421.89	5.51	1.07
2265	1	Berry	Turbine-Large	38.7	MW	NG	0.17	8.29	15.24	450.78	13.03	3.42
1246	255	BerryPetro	Flare		MMBtu/hr	Vapor	0.1	2.03	18.80	1273.00	20.00	1.17
4751	7	BidartDairy	IC Engine_Pump	360	BHP	Diesel	0.2	5.16	3.00	622.00	76.60	0.13
4751	9	BidartDairy	IC Engine_Pump	200	BHP	Diesel	0.2	2.87	3.00	622.00	59.90	0.10
33	402	BigWest	IC Engine_Comp	450	HP	Diesel	0.2	6.85	3.00	622.00	66.50	0.15
33	17	BigWest	Boiler/Steam Gen	92	MMBtu/hr	NG	0.32	2.85	20.00	373.00	10.00	0.61
33	348	BigWest	Boiler/Steam Gen	200	MMBtu/hr	NG	0.32	2.20	20.00	373.00	10.00	0.91
33	59	BigWest	Boiler/Steam Gen	42	MMBtu/hr	NG	0.32	5.48	20.00	373.00	10.00	0.30
33	61	BigWest	Boiler/Steam Gen	78.8	MMBtu/hr	NG	0.32	10.25	20.00	373.00	10.00	0.61
34	42	BigWest	Boiler/Steam Gen	98	MMBtu/hr	NG	0.32	3.53	20.00	373.00	10.00	0.61
33	11	BigWest	Process Heaters_Dryers	12.8	MMBtu/hr	NG	0.32	4.61	20.00	366.33	10.00	1.22
33	12	BigWest	Process Heaters_Dryers		MMBtu/hr	Vapor	0.32	19.22	20.00	366.33	10.00	1.22
33	13	BigWest	Process Heaters_Dryers		MMBtu/hr	NG	0.32	6.72	20.00	366.33	10.00	1.22
33	338	BigWest	Process Heaters_Dryers		MMBtu/hr	NG	0.32	3.50	20.00	366.33	10.00	1.22
33	49	BigWest	Process Heaters_Dryers	161.4	MMBtu/hr	NG	0.32	4.01	20.00	366.33	10.00	1.22
33	52	BigWest	Process Heaters_Dryers	86.8	MMBtu/hr	NG	0.32	15.62	20.00	366.33	10.00	1.22
33	53	BigWest	Process Heaters_Dryers	65	MMBtu/hr	NG	0.32	8.87	20.00	366.33	10.00	1.22
33	55	BigWest	Process Heaters_Dryers	233	MMBtu/hr	NG	0.32	2.56	20.00	366.33	10.00	1.22

Facility ID	Permit Number	Short Facility Name	Short Equip Description	Eqp Rating	Rating Units	Fuel	In-stack Ratio (NO2/NOx)	NOx Emissions Lb-Hour	HS (m)	TS (K)	VS (m/s)	DS (m)
33	56	BigWest	Process Heaters_Dryers		MMBtu/hr	NG	0.32	21.73	20.00	366.33	10.00	1.22
33	8	BigWest	Process Heaters_Dryers	209	MMBtu/hr	NG	0.32	4.64	20.00	366.33	10.00	1.22
33	9	BigWest	Process Heaters_Dryers	142.6	MMBtu/hr	NG	0.32	5.13	20.00	366.33	10.00	1.22
34	1	BigWest	Process Heaters_Dryers	96	MMBtu/hr	NG	0.32	3.45	20.00	366.33	10.00	1.22
34	2	BigWest	Process Heaters_Dryers	38.3	MMBtu/hr	NG	0.32	6.90	20.00	366.33	10.00	1.22
34	3	BigWest	Process Heaters_Dryers	35	MMBtu/hr (TWO)	NG	0.32	12.60	20.00	366.33	10.00	1.22
3984	2	BowmanAsphalt	Process Heaters_Dryers		MMBtu/hr	NG	0.1	6.50	10.00	310.78	10.00	0.46
40	3	CentralRes	Flare		MMBtu/hr	NG	0.1	18.72	17.57	1273.00	20.00	0.45
723	1	ChalkCliffLtd	Turbine-Large	49	MW	NG	0.17	7.95	15.24	450.78	13.03	3.42
1129	47	Chevron	Turbine-Small	3.5	MW	NG	0.1032	7.60	13.00	710.22	6.15	1.57
1129	48	Chevron	Turbine-Small	3.5	MW	NG	0.1032	7.60	13.00	710.22	6.15	1.57
1129	49	Chevron	Turbine-Small	3.5	MW	NG	0.1032	7.60	13.00	710.22	6.15	1.57
1129	53	Chevron	Turbine-Small	3.5	MW	NG	0.1032	6.38	13.00	710.22	6.15	1.57
1129	54	Chevron	Turbine-Small	3.5	MW	NG	0.1032	6.38	13.00	710.22	6.15	1.57
3317	1	Chevron	IC Engine_Comp	1200	HP	NG	0.6	2.08	6.40	691.33	9.66	0.51
3317	2	Chevron	IC Engine_Comp	1200	HP	NG	0.6	2.08	6.40	691.33	9.66	0.51
1127	22	Chevron	Boiler/Steam Gen	62.5	MMBtu/hr	NG	0.1	2.25	7.32	421.89	5.51	1.07
1127	29	Chevron	Boiler/Steam Gen	62.5	MMBtu/hr	NG	0.1	2.25	7.32	421.89	5.51	1.07
1127	30	Chevron	Boiler/Steam Gen	62.5	MMBtu/hr	NG	0.1	2.25	7.32	421.89	5.51	1.07
1127	31	Chevron	Boiler/Steam Gen	62.5	MMBtu/hr	NG	0.1	2.25	7.32	421.89	5.51	1.07
1127	34	Chevron	Boiler/Steam Gen	62.5	MMBtu/hr	NG	0.1	2.25	7.32	421.89	5.51	1.07
1127	35	Chevron	Boiler/Steam Gen	62.5	MMBtu/hr	NG	0.1	2.25	7.32	421.89	5.51	1.07
1127	36	Chevron	Boiler/Steam Gen	62.5	MMBtu/hr	NG	0.1	2.25	7.32	421.89	5.51	1.07
1127	70	Chevron	Boiler/Steam Gen	62.5	MMBtu/hr	NG	0.1	2.25	7.32	421.89	5.51	1.07
1128	16	Chevron	Boiler/Steam Gen	62.5	MMBtu/hr	NG	0.1	2.25	7.32	421.89	5.51	1.07
1128	18	Chevron	Boiler/Steam Gen	62.5	MMBtu/hr	NG	0.1	2.25	7.32	421.89	5.51	1.07
1128	19	Chevron	Boiler/Steam Gen	62.5	MMBtu/hr	NG	0.1	2.25	7.32	421.89	5.51	1.07

Facility ID	Permit Number	Short Facility Name	Short Equip Description	Eqp Rating	Rating Units	Fuel	In-stack Ratio (NO2/NOx)	NOx Emissions Lb-Hour	HS (m)	TS (K)	VS (m/s)	DS (m)
1128	21	Chevron	Boiler/Steam Gen	62.5	MMBtu/hr	NG	0.1	2.25	7.32	421.89	5.51	1.07
1128	25	Chevron	Boiler/Steam Gen	62.5	MMBtu/hr	NG	0.1	2.25	7.32	421.89	5.51	1.07
1128	26	Chevron	Boiler/Steam Gen	62.5	MMBtu/hr	NG	0.1	2.25	7.32	421.89	5.51	1.07
1128	28	Chevron	Boiler/Steam Gen	62.5	MMBtu/hr	NG	0.1	2.25	7.32	421.89	5.51	1.07
1128	29	Chevron	Boiler/Steam Gen	62.5	MMBtu/hr	NG	0.1	2.25	7.32	421.89	5.51	1.07
1128	30	Chevron	Boiler/Steam Gen	62.5	MMBtu/hr	NG	0.1	2.25	7.32	421.89	5.51	1.07
1128	31	Chevron	Boiler/Steam Gen	62.5	MMBtu/hr	NG	0.1	2.25	7.32	421.89	5.51	1.07
1128	32	Chevron	Boiler/Steam Gen	62.5	MMBtu/hr	NG	0.1	2.25	7.32	421.89	5.51	1.07
1128	33	Chevron	Boiler/Steam Gen	62.5	MMBtu/hr	NG	0.1	2.25	7.32	421.89	5.51	1.07
1128	34	Chevron	Boiler/Steam Gen	62.5	MMBtu/hr	NG	0.1	2.25	7.32	421.89	5.51	1.07
1128	36	Chevron	Boiler/Steam Gen	62.5	MMBtu/hr	NG	0.1	2.25	7.32	421.89	5.51	1.07
1128	38	Chevron	Boiler/Steam Gen	62.5	MMBtu/hr	NG	0.1	2.25	7.32	421.89	5.51	1.07
1128	48	Chevron	Boiler/Steam Gen	62.5	MMBtu/hr	NG	0.1	2.25	7.32	421.89	5.51	1.07
1128	57	Chevron	Boiler/Steam Gen	62.5	MMBtu/hr	NG	0.1	2.25	7.32	421.89	5.51	1.07
1128	58	Chevron	Boiler/Steam Gen	62.5	MMBtu/hr	NG	0.1	2.25	7.32	421.89	5.51	1.07
1128	75	Chevron	Boiler/Steam Gen	62.5	MMBtu/hr	NG	0.1	2.25	7.32	421.89	5.51	1.07
1128	77	Chevron	Boiler/Steam Gen	62.5	MMBtu/hr	NG	0.1	2.25	7.32	421.89	5.51	1.07
1128	159	Chevron	Boiler/Steam Gen	62.5	MMBtu/hr	NG	0.1	2.25	7.32	421.89	5.51	1.07
1128	941	Chevron	Boiler/Steam Gen	62.5	MMBtu/hr	NG	0.1	2.25	7.32	421.89	5.51	1.07
1131	62	Chevron	Boiler/Steam Gen	62.5	MMBtu/hr	NG	0.1	2.25	7.32	421.89	5.51	1.07
1131	63	Chevron	Boiler/Steam Gen	62.5	MMBtu/hr	NG	0.1	2.25	7.32	421.89	5.51	1.07
1131	64	Chevron	Boiler/Steam Gen	62.5	MMBtu/hr	NG	0.1	2.25	7.32	421.89	5.51	1.07
1131	66	Chevron	Boiler/Steam Gen	62.5	MMBtu/hr	NG	0.1	2.25	7.32	421.89	5.51	1.07
1131	67	Chevron	Boiler/Steam Gen	62.5	MMBtu/hr	NG	0.1	2.25	7.32	421.89	5.51	1.07
1131	68	Chevron	Boiler/Steam Gen	62.5	MMBtu/hr	NG	0.1	2.25	7.32	421.89	5.51	1.07
1131	69	Chevron	Boiler/Steam Gen	62.5	MMBtu/hr	NG	0.1	2.25	7.32	421.89	5.51	1.07
1131	70	Chevron	Boiler/Steam Gen	62.5	MMBtu/hr	NG	0.1	2.25	7.32	421.89	5.51	1.07
1131	73	Chevron	Boiler/Steam Gen	62.5	MMBtu/hr	NG	0.1	2.25	7.32	421.89	5.51	1.07
1131	78	Chevron	Boiler/Steam Gen	62.5	MMBtu/hr	NG	0.1	2.25	7.32	421.89	5.51	1.07
1131	82	Chevron	Boiler/Steam Gen	62.5	MMBtu/hr	NG	0.1	2.25	7.32	421.89	5.51	1.07
1131	95	Chevron	Boiler/Steam Gen	62.5	MMBtu/hr	NG	0.1	2.25	7.32	421.89	5.51	1.07
1131	98	Chevron	Boiler/Steam Gen	62.5	MMBtu/hr	NG	0.1	2.25	7.32	421.89	5.51	1.07

Facility ID	Permit Number	Short Facility Name	Short Equip Description	Eqp Rating	Rating Units	Fuel	In-stack Ratio (NO2/NOx)	NOx Emissions Lb-Hour	HS (m)	TS (K)	VS (m/s)	DS (m)
1131	99	Chevron	Boiler/Steam Gen	62.5	MMBtu/hr	NG	0.1	2.25	7.32	421.89	5.51	1.07
1131	859	Chevron	Boiler/Steam Gen	62.5	MMBtu/hr	NG	0.1	2.25	7.32	421.89	5.51	1.07
1131	879	Chevron	Boiler/Steam Gen	62.5	MMBtu/hr	NG	0.1	2.25	7.32	421.89	5.51	1.07
1131	881	Chevron	Boiler/Steam Gen	62.5	MMBtu/hr	NG	0.1	2.25	7.32	421.89	5.51	1.07
1131	883	Chevron	Boiler/Steam Gen	62.5	MM	NG	0.1	2.25	7.32	421.89	5.51	1.07
1131	884	Chevron	Boiler/Steam Gen	62.5	MM	NG	0.1	2.25	7.32	421.89	5.51	1.07
1131	908	Chevron	Boiler/Steam Gen	62.5	MM	NG	0.1	2.25	7.32	421.89	5.51	1.07
1131	912	Chevron	Boiler/Steam Gen	62.5	MMBtu/hr	NG	0.1	2.25	7.32	421.89	5.51	1.07
1131	987	Chevron	Boiler/Steam Gen	62.5	MMBtu/hr	NG	0.1	2.25	7.32	421.89	5.51	1.07
1131	997	Chevron	Boiler/Steam Gen	62.5	MMBtu/hr	NG	0.1	2.25	7.32	421.89	5.51	1.07
1131	999	Chevron	Boiler/Steam Gen	62.5	MMBtu/hr	NG	0.1	2.25	7.32	421.89	5.51	1.07
1141	19	Chevron	Boiler/Steam Gen	62.5	MMBtu/hr	NG	0.1	2.25	7.32	421.89	5.51	1.07
1141	26	Chevron	Boiler/Steam Gen	62.5	MMBtu/hr	NG	0.1	2.25	7.32	421.89	5.51	1.07
1141	31	Chevron	Boiler/Steam Gen	62.5	MMBtu/hr	NG	0.1	2.25	7.32	421.89	5.51	1.07
1141	38	Chevron	Boiler/Steam Gen	62.5	MMBtu/hr	NG	0.1	2.25	7.32	421.89	5.51	1.07
1141	43	Chevron	Boiler/Steam Gen	62.5	MMBtu/hr	NG	0.1	2.25	7.32	421.89	5.51	1.07
1141	44	Chevron	Boiler/Steam Gen	62.5	MMBtu/hr	NG	0.1	2.25	7.32	421.89	5.51	1.07
1141	45	Chevron	Boiler/Steam Gen	62.5	MMBtu/hr	NG	0.1	2.25	7.32	421.89	5.51	1.07
1141	51	Chevron	Boiler/Steam Gen	62.5	MMBtu/hr	NG	0.1	2.25	7.32	421.89	5.51	1.07
1141	67	Chevron	Boiler/Steam Gen	62.5	MMBtu/hr	NG	0.1	2.25	7.32	421.89	5.51	1.07
1141	368	Chevron	Boiler/Steam Gen	62.5	MMBtu/hr	NG	0.1	2.25	7.32	421.89	5.51	1.07
1141	369	Chevron	Boiler/Steam Gen	62.5	MMBtu/hr	NG	0.1	2.25	7.32	421.89	5.51	1.07
1141	370	Chevron	Boiler/Steam Gen	62.5	MMBtu/hr	NG	0.1	2.25	7.32	421.89	5.51	1.07
1141	371	Chevron	Boiler/Steam Gen	62.5	MMBtu/hr	NG	0.1	2.25	7.32	421.89	5.51	1.07
1141	372	Chevron	Boiler/Steam Gen	62.5	MMBtu/hr	NG	0.1	2.25	7.32	421.89	5.51	1.07
1141	373	Chevron	Boiler/Steam Gen	62.5	MMBtu/hr	NG	0.1	2.25	7.32	421.89	5.51	1.07
1141	374	Chevron	Boiler/Steam Gen	62.5	MMBtu/hr	NG	0.1	2.25	7.32	421.89	5.51	1.07
1141	380	Chevron	Boiler/Steam Gen	62.5	MMBtu/hr	NG	0.1	2.25	7.32	421.89	5.51	1.07
1141	402	Chevron	Boiler/Steam Gen	62.5	MMBtu/hr	NG	0.1	2.25	7.32	421.89	5.51	1.07
1141	516	Chevron	Boiler/Steam Gen	62.5	MMBtu/hr	NG	0.1	2.25	7.32	421.89	5.51	1.07
1141	549	Chevron	Boiler/Steam Gen	62.5	MMBtu/hr	NG	0.1	2.25	7.32	421.89	5.51	1.07
1141	550	Chevron	Boiler/Steam Gen	62.5	MMBtu/hr	NG	0.1	2.25	7.32	421.89	5.51	1.07

Facility ID	Permit Number	Short Facility Name	Short Equip Description	Eqp Rating	Rating Units	Fuel	In-stack Ratio (NO2/NOx)	NOx Emissions Lb-Hour	HS (m)	TS (K)	VS (m/s)	DS (m)
1141	551	Chevron	Boiler/Steam Gen	62.5	MMBtu/hr	NG	0.1	2.25	7.32	421.89	5.51	1.07
1141	552	Chevron	Boiler/Steam Gen	62.5	MMBtu/hr	NG	0.1	2.25	7.32	421.89	5.51	1.07
1141	553	Chevron	Boiler/Steam Gen	62.5	MMBtu/hr	NG	0.1	2.25	7.32	421.89	5.51	1.07
1141	554	Chevron	Boiler/Steam Gen	62.5	MMBtu/hr	NG	0.1	2.25	7.32	421.89	5.51	1.07
1141	555	Chevron	Boiler/Steam Gen	62.5	MMBtu/hr	NG	0.1	2.25	7.32	421.89	5.51	1.07
1141	556	Chevron	Boiler/Steam Gen	62.5	MMBtu/hr	NG	0.1	2.25	7.32	421.89	5.51	1.07
1141	557	Chevron	Boiler/Steam Gen	62.5	MMBtu/hr	NG	0.1	2.25	7.32	421.89	5.51	1.07
1141	558	Chevron	Boiler/Steam Gen	62.5	MMBtu/hr	NG	0.1	2.25	7.32	421.89	5.51	1.07
1127	148	Chevron	Turbine-Large	22.3	MW	NG	0.17	5.58	15.24	450.78	13.03	3.42
1127	149	Chevron	Turbine-Large	22.3	MW	NG	0.17	5.58	15.24	450.78	13.03	3.42
1128	366	Small turbine	Turbine-Small	2.7	MW	NG	0.1032	10.45	13.00	367.44	6.15	1.57
1128	367	Chevron	Turbine-Small	2.7	MW	NG	0.1032	10.45	13.00	367.44	6.15	1.57
1128	368	Chevron	Turbine-Small	2.7	MW	NG	0.1032	10.45	13.00	367.44	6.15	1.57
1128	369	Chevron	Turbine-Small	2.7	MW	NG	0.1032	10.45	13.00	367.44	6.15	1.57
1128	370	Chevron	Turbine-Small	2.7	MW	NG	0.1032	11.58	13.00	367.44	6.15	1.57
1128	371	Chevron	Turbine-Small	2.7	MW	NG	0.1032	11.58	13.00	367.44	6.15	1.57
1128	372	Chevron	Turbine-Small	2.7	MW	NG	0.1032	11.59	13.00	367.44	6.15	1.57
1128	373	Chevron	Turbine-Small	2.7	MW	NG	0.1032	11.59	13.00	367.44	6.15	1.57
1128	374	Chevron	Turbine-Small	2.7	MW	NG	0.1032	11.59	13.00	367.44	6.15	1.57
1128	375	Chevron	Turbine-Small	2.7	MW	NG	0.1032	11.59	13.00	367.44	6.15	1.57
1128	376	Chevron	Turbine-Small	2.7	MW	NG	0.1032	11.59	13.00	367.44	6.15	1.57
1128	377	Chevron	Turbine-Small	2.7	MW	NG	0.1032	11.59	13.00	367.44	6.15	1.57
1131	970	Chevron	Turbine-Small	3.725	MW	NG	0.1032	6.76	13.00	367.44	6.15	1.57
1131	973	Chevron	Turbine-Small	3.725	MW	NG	0.1032	6.76	13.00	367.44	6.15	1.57
1131	974	Chevron	Turbine-Small	3.725	MW	NG	0.1032	6.71	13.00	367.44	6.15	1.57
1131	1037	Chevron	Turbine-Large	20	MW	NG	0.17	4.58	15.24	710.22	13.03	3.42
1131	1038	Chevron	Turbine-Small	58.2	MMBtu/hr,	NG	0.1032	7.51	15.24	367.44	13.00	3.42
1131	1039	Chevron	Turbine-Small	58.2	MMBtu/hr,	NG	0.1032	7.51	15.24	367.44	13.00	3.42
1131	1079	Chevron	Turbine-Small	4.1	MW	NG	0.1032	4.48	13.00	367.44	6.15	1.57
1128	116	Chevron	Flare	167	MMBtu/hr	vapor	0.1	19.98	23.90	1273.00	20.00	2.27
1141	513	Chevron	Flare	167	MMBtu/hr	Vapor	0.1	16.68	23.90	1273.00	20.00	2.27
1141	514	Chevron	Flare	167	MMBtu/hr	Vapor	0.1	16.68	23.90	1273.00	20.00	2.27

Facility ID	Permit Number	Short Facility Name	Short Equip Description	Eqp Rating	Rating Units	Fuel	In-stack Ratio (NO2/NOx)	NOx Emissions Lb-Hour	HS (m)	TS (K)	VS (m/s)	DS (m)
75	11	CovDelanoInc	Fluidized bed-bio	315	MMBtu/hr	biomass	0.5	31.50	30.48	383.00	25.00	2.00
75	6	CovDelanoInc	Fluidized bed-bio	400	MMBtu/hr	biomass	0.5	40.00	30.48	383.00	25.00	2.00
724	1	DAIOildaleInc	Turbine-Large	22.1	MW	NG	0.17	7.11	15.24	367.44	13.03	3.42
1119	1	DblCLtd	Turbine-Large	25	MW	NG	0.17	4.04	15.24	450.78	13.03	3.42
1119	2	DblCLtd	Turbine-Large	25	MW	NG	0.17	4.04	15.24	450.78	13.03	3.42
3523	1	Elk	Turbine-Large	250.5	MMBtu/hr	NG	0.17	38.00	36.60	345.00	12.50	5.49
3523	2	Elk	Turbine-Large	250.5	MMBtu/hr	NG	0.17	38.00	36.60	345.00	12.50	5.49
1328	1	ExxonMobil	Boiler/Steam Gen	62.5	MMBtu/hr	NG	0.1	2.25	7.32	421.89	5.51	1.07
1328	2	ExxonMobil	Boiler/Steam Gen	62.5	MMBtu/hr	NG	0.1	2.25	7.32	421.89	5.51	1.07
1328	3	ExxonMobil	Boiler/Steam Gen	62.5	MMBtu/hr	NG	0.1	2.25	7.32	421.89	5.51	1.07
705	1	FarmersCoopGin	Process Heaters_Dryers		MMBtu/hr	NG	0.32	2.02	12.19	310.78	23.00	0.46
2076	9	Frito	Turbine-Small	6	MW	NG	0.1032	12.48	9.75	367.44	6.15	1.57
2076	17	Frito	Oven	9.56	MMBtu/hr	NG	0.32	2.35	9.75	427.44	0.07	0.66
2076	18	Frito	Oven	20	MMBtu/hr	NG	0.32	3.40	9.75	427.44	0.07	0.66
1118	1	HiSierraLtd	Turbine-Large	24	MW	NG	0.17	4.04	15.24	450.78	13.03	3.42
1118	2	HiSierraLtd	Turbine-Large	24	MW	NG	0.17	4.04	15.24	450.78	13.03	3.42
1120	1	KernFrontLtd	Turbine-Large	25	MW	NG	0.17	4.04	15.24	450.78	13.03	3.42
1120	2	KernFrontLtd	Turbine-Large	25	MW	NG	0.17	4.04	15.24	450.78	13.03	3.42
1678	1	KernMedCtr	Boiler/Steam Gen	16.8	MMBtu/hr	NG	0.1	2.45	10.00	373.00	10.00	0.30
37	114	KernOil&RefCo	Turbine-Small	4.968	MW	NG	0.1032	3.51	13.00	367.44	6.15	1.57
37	1	KernOil&RefCo	Process Heaters_Dryers	120	MMBtu/hr	NG	0.32	4.32	20.00	366.33	10.00	1.22
88	1	KernRvrCogen	Turbine-Large	75	MW	NG	0.17	67.90	15.24	450.78	13.03	3.42
88	2	KernRvrCogen	Turbine-Large	75	MW	NG	0.17	67.90	15.24	450.78	13.03	3.42
88	3	KernRvrCogen	Turbine-Large	75	MW	NG	0.17	23.03	15.24	367.44	13.03	3.42
88	4	KernRvrCogen	Turbine-Large	75	MW	NG	0.17	67.90	15.24	450.78	13.03	3.42
3412	1	LaPalomaGen	Turbine-Large	262	MW	NG	0.17	21.31	36.60	345.00	12.50	5.49
3412	2	LaPalomaGen	Turbine-Large	262	MW	NG	0.17	21.31	36.60	345.00	12.50	5.49
3412	3	LaPalomaGen	Turbine-Large	262	MW	NG	0.17	21.31	36.60	345.00	12.50	5.49
3412	4	LaPalomaGen	Turbine-Large	262	MW	NG	0.17	21.31	36.60	345.00	12.50	5.49

Facility ID	Permit Number	Short Facility Name	Short Equip Description	Eqp Rating	Rating Units	Fuel	In-stack Ratio (NO2/NOx)	NOx Emissions Lb-Hour	HS (m)	TS (K)	VS (m/s)	DS (m)
172	1	LiveOakLtd	Turbine-Large	48	MW	NG	0.17	5.78	15.24	367.44	13.03	3.42
1251	1	McKittrickLtd	Turbine-Large	48	MW	NG	0.17	6.16	15.24	367.44	13.03	3.42
2592	1	Mid-SetCogen	Turbine-Large	39.86	MW	NG	0.17	18.26	15.24	450.78	13.03	3.42
91	3	MtPosoCogen	Fluidized bed-other	49.9	MW	multi-fuel	0.5	58.60	15.24	450.78	13.03	3.42
3340	1	LostHillsPetro	Flare		MMBtu/hr	NG	0.1	16.53	30.27	1273.00	20.00	3.67
5141	5	OasisDairy	IC Engine_Pump	275	BHP	Diesel	0.2	2.15	3.00	622.00	57.50	0.13
1216	87	Oxy	Flare	44.58	MMBtu/hr		0.1	3.03	18.79	1273.00	20.00	1.17
1216	88	Oxy	Flare	44.58	MMBtu/hr		0.1	3.03	18.79	1273.00	20.00	1.17
2234	52	Large turbine	Turbine-Large	25	HP	NG	0.17	4.11	30.48	477.59	41.17	2.29
2234	53	Oxy	Turbine-Large	25	HP	NG	0.17	4.11	30.48	477.59	41.17	2.29
382	675	Oxy	Heater	12	MMBtu/hr	NG	0.32	0.43	6.40	422.04	13.17	0.46
382	676	Oxy	Heater	12	MMBtu/hr	NG	0.32	0.43	6.40	422.04	13.17	0.46
382	422	Oxy	IC Engine	310	HP	Diesel	0.2	3.10	3.00	622.00	57.41	0.13
2234	44	Oxy	IC Engine	773	HP	NG	0.1	3.41	6.40	638.15	6.45	0.51
2234	46	Oxy	IC Engine	793	HP	NG	0.1	3.50	6.40	638.15	6.45	0.51
2234	87	Oxy	IC Engine_Comp	88	HP	NG	0.6	2.11	6.40	638.15	6.45	0.51
382	677	Oxy	Heater	12	MMBtu/hr	NG	0.32	0.43	6.40	422.04	13.17	0.46
382	678	Oxy	Heater	12	MMBtu/hr	NG	0.32	0.43	6.40	422.04	13.17	0.46
382	679	Oxy	Heater	12	MMBtu/hr	NG	0.32	0.43	6.40	422.04	13.17	0.46
382	680	Oxy	Heater	12	MMBtu/hr	NG	0.32	0.43	6.40	422.04	13.17	0.46
382	681	Oxy	Heater	12	MMBtu/hr	NG	0.32	0.43	6.40	422.04	13.17	0.46
2234	10	Oxy	IC Engine_Comp	5500	HP	NG	0.6	20.01	12.19	657.59	23.73	0.91
2234	11	Oxy	IC Engine_Comp	5500	HP	NG	0.6	20.01	12.19	657.59	23.73	0.91
2234	12	Oxy	IC Engine_Comp	2000	HP	NG	0.6	7.72	12.19	655.37	8.49	0.91
2234	123	Oxy	IC Engine_Comp	1834	HP	NG	0.6	0.28	6.40	644.26	23.54	0.51
2234	124	Oxy	IC Engine_Comp	1834	HP	NG	0.6	0.28	6.40	644.26	23.54	0.51
2234	127	Oxy	IC Engine_Comp	1834	HP	NG	0.6	0.28	6.40	644.26	23.54	0.51
2234	128	Oxy	IC Engine_Comp	1834	HP	NG	0.6	0.28	6.40	644.26	23.54	0.51
2234	129	Oxy	IC Engine_Comp	1834	HP	NG	0.6	0.28	6.40	644.26	23.54	0.51
2234	130	Oxy	IC Engine_Comp	1834	HP	NG	0.6	0.28	6.40	644.26	23.54	0.51

Facility ID	Permit Number	Short Facility Name	Short Equip Description	Eqp Rating	Rating Units	Fuel	In-stack Ratio (NO2/NOx)	NOx Emissions Lb-Hour	HS (m)	TS (K)	VS (m/s)	DS (m)
2234	131	Oxy	IC Engine_Comp	1834	HP	NG	0.6	0.28	6.40	644.26	23.54	0.51
2234	132	Oxy	IC Engine_Comp	1834	HP	NG	0.6	0.28	6.40	644.26	23.54	0.51
2234	133	Oxy	IC Engine_Comp	1834	HP	NG	0.6	0.28	6.40	644.26	23.54	0.51
2234	134	Oxy	IC Engine_Comp	1834	HP	NG	0.6	0.28	6.40	644.26	23.54	0.51
2234	135	Oxy	IC Engine_Comp	1834	HP	NG	0.6	0.28	6.40	644.26	23.54	0.51
2234	136	Oxy	IC Engine_Comp	1834	HP	NG	0.6	0.28	6.40	644.26	23.54	0.51
2234	15	Oxy	IC Engine_Comp	5500	HP	NG	0.6	20.01	12.19	657.59	23.73	0.91
2234	16	Oxy	IC Engine_Comp	5500	HP	NG	0.6	20.01	12.19	657.59	23.73	0.91
2234	17	Oxy	IC Engine_Comp	5500	HP	NG	0.6	20.01	12.19	657.59	23.73	0.91
2234	18	Oxy	IC Engine_Comp	2000	HP	NG	0.6	7.72	12.19	655.37	8.49	0.91
2234	182	Oxy	IC Engine_Comp	1680	HP	NG	0.6	0.26	6.40	644.26	23.54	0.51
2234	183	Oxy	IC Engine_Comp	1680	HP	NG	0.6	0.26	6.40	644.26	23.54	0.51
2234	184	Oxy	IC Engine_Comp	1680	HP	NG	0.6	0.26	6.40	644.26	23.54	0.51
2234	185	Oxy	IC Engine_Comp	1680	HP	NG	0.6	0.26	6.40	644.26	23.54	0.51
2234	186	Oxy	IC Engine_Comp	1680	HP	NG	0.6	0.26	6.40	644.26	23.54	0.51
2234	187	Oxy	IC Engine_Comp	1680	HP	NG	0.6	0.26	6.40	644.26	23.54	0.51
2234	188	Oxy	IC Engine_Comp	1834	HP	NG	0.6	0.28	6.40	644.26	23.54	0.51
2234	189	Oxy	IC Engine_Comp	1834	HP	NG	0.6	0.28	6.40	644.26	23.54	0.51
2234	190	Oxy	IC Engine_Comp	1834	HP	NG	0.6	0.28	6.40	644.26	23.54	0.51
2234	191	Oxy	IC Engine_Comp	1834	HP	NG	0.6	0.28	6.40	644.26	23.54	0.51
2234	192	Oxy	IC Engine_Comp	1834	HP	NG	0.6	0.28	6.40	644.26	23.54	0.51
2234	193	Oxy	IC Engine_Comp	1834	HP	NG	0.6	0.28	6.40	644.26	23.54	0.51
2234	27	Oxy	IC Engine_Comp	4000	HP	NG	0.6	14.55	12.19	649.26	17.15	0.91
2234	28	Oxy	IC Engine_Comp	4000	HP	NG	0.6	14.55	12.19	649.26	17.15	0.91
2234	29	Oxy	IC Engine_Comp	1000	HP	NG	0.6	1.59	6.40	691.48	9.66	0.51
2234	30	Oxy	IC Engine_Comp	1000	HP	NG	0.6	1.59	6.40	691.48	9.66	0.51
2234	31	Oxy	IC Engine_Comp	1000	HP	NG	0.6	1.59	6.40	691.48	9.66	0.51
382	32	Oxy	IC Engine_Comp	4000	HP	NG	0.6	14.55	12.19	649.26	19.33	0.91
382	62	Oxy	IC Engine_Comp	4000	HP	NG	0.6	14.55	12.19	649.26	19.33	0.91
382	63	Oxy	IC Engine_Comp	4000	HP	NG	0.6	14.55	12.19	649.26	19.33	0.91
2234	48	Oxy	IC Engine_Comp	490	HP	NG	0.6	0.78	4.57	644.26	14.56	0.30
2234	57	Oxy	IC Engine_Comp	1000	HP	NG	0.6	1.59	6.40	644.26	9.66	0.51

Facility ID	Permit Number	Short Facility Name	Short Equip Description	Eqp Rating	Rating Units	Fuel	In-stack Ratio (NO2/NOx)	NOx Emissions Lb-Hour	HS (m)	TS (K)	VS (m/s)	DS (m)
2234	58	Oxy	IC Engine_Comp	1000	HP	NG	0.6	1.59	6.40	644.26	9.66	0.51
2234	59	Oxy	IC Engine_Comp	1000	HP	NG	0.6	1.59	6.40	644.26	9.66	0.51
2234	60	Oxy	IC Engine_Comp	650	HP	NG	0.6	1.03	6.40	638.15	6.45	0.51
2234	61	Oxy	IC Engine_Comp	1000	HP	NG	0.6	1.59	6.40	644.26	9.66	0.51
2234	62	Oxy	IC Engine_Comp	2000	HP	NG	0.6	7.72	12.19	655.37	8.49	0.91
2234	63	Oxy	IC Engine_Comp	1000	HP	NG	0.6	1.59	6.40	644.26	9.66	0.51
2234	64	Oxy	IC Engine_Comp	650	HP	NG	0.6	1.03	6.40	644.26	6.45	0.51
2234	65	Oxy	IC Engine_Comp	650	HP	NG	0.6	1.03	6.40	644.26	6.45	0.51
2234	66	Oxy	IC Engine_Comp	650	HP	NG	0.6	1.03	6.40	644.26	6.45	0.51
2234	67	Oxy	IC Engine_Comp	1000	HP	NG	0.6	1.59	6.40	644.26	9.66	0.51
382	670	Oxy	IC Engine_Comp	1000	HP	NG	0.6	3.31	6.40	644.26	9.66	0.51
382	671	Oxy	IC Engine_Comp	1000	HP	NG	0.6	3.31	6.40	644.26	9.66	0.51
382	672	Oxy	IC Engine_Comp	1000	HP	NG	0.6	3.31	6.40	644.26	9.66	0.51
2234	68	Oxy	IC Engine_Comp	1000	HP	NG	0.6	1.59	6.40	644.26	9.66	0.51
2234	69	Oxy	IC Engine_Comp	1000	HP	NG	0.6	1.59	6.40	644.26	9.66	0.51
2234	70	Oxy	IC Engine_Comp	1000	HP	NG	0.6	1.59	6.40	644.26	9.66	0.51
2234	71	Oxy	IC Engine_Comp	1000	HP	NG	0.6	1.59	6.40	644.26	9.66	0.51
2234	72	Oxy	IC Engine_Comp	1000	HP	NG	0.6	1.59	6.40	644.26	9.66	0.51
2234	73	Oxy	IC Engine_Comp	1000	HP	NG	0.6	1.59	6.40	644.26	9.66	0.51
2234	74	Oxy	IC Engine_Comp	1000	HP	NG	0.6	1.59	6.40	644.26	9.66	0.51
2234	75	Oxy	IC Engine_Comp	2000	HP	NG	0.6	7.72	12.19	644.26	8.49	0.91
2234	76	Oxy	IC Engine_Comp	2000	HP	NG	0.6	7.72	12.19	644.26	8.49	0.91
2234	77	Oxy	IC Engine_Comp	2000	HP	NG	0.6	7.72	12.19	644.26	8.49	0.91
2234	78	Oxy	IC Engine_Comp	1000	HP	NG	0.6	1.59	6.40	644.26	9.66	0.51
2234	79	Oxy	IC Engine_Comp	1000	HP	NG	0.6	1.59	6.40	644.26	9.66	0.51
2234	80	Oxy	IC Engine_Comp	1000	HP	NG	0.6	3.97	6.40	644.26	9.66	0.51
2234	81	Oxy	IC Engine_Comp	1000	HP	NG	0.6	3.97	6.40	644.26	9.66	0.51
2234	82	Oxy	IC Engine_Comp	1500	HP	NG	0.6	5.95	6.40	644.26	16.16	0.51
2234	83	Oxy	IC Engine_Comp	1500	HP	NG	0.6	5.95	6.40	644.26	16.16	0.51
2234	84	Oxy	IC Engine_Comp	490	HP	NG	0.6	0.78	4.57	644.26	14.56	0.30
2234	85	Oxy	IC Engine_Comp	490	HP	NG	0.6	0.78	4.57	644.26	14.56	0.30
2234	86	Oxy	IC Engine_Comp	490	HP	NG	0.6	0.78	4.57	644.26	14.56	0.30

Facility ID	Permit Number	Short Facility Name	Short Equip Description	Eqp Rating	Rating Units	Fuel	In-stack Ratio (NO2/NOx)	NOx Emissions Lb-Hour	HS (m)	TS (K)	VS (m/s)	DS (m)
2234	9	Oxy	IC Engine_Comp	5500	HP	NG	0.6	20.01	12.19	657.59	23.73	0.91
73	2	OildaleEnergy	Turbine-Large	43	MW	NG	0.17	38.77	15.24	367.44	13.03	3.42
2896	2	PacifiProcSys	Flare	83.3	MMBtu/hr (SIX)	NG	0.1	8.50	20.82	1273.00	20.00	1.60
2896	7	PacifiProcSys	Flare	10	MMscf/day	NG	0.1	28.33	30.27	1273.00	20.00	3.67
892	4	PactivCorp	Process Heaters_Dryers		MMBtu/hr	NG	0.32	2.24	13.00	310.78	10.00	0.46
377	19	ParamtFarms	Process Heaters_Dryers	550.5	MMBtu/hr	NG	0.1	42.43	13.00	310.78	10.00	0.46
377	20	ParamtFarms	Process Heaters_Dryers	23.33	MMBtu/hr	NG	0.32	5.20	13.00	310.78	10.00	0.46
377	21	ParamtFarms	Process Heaters_Dryers	3	MMBtu/hr	NG	0.32	13.18	13.00	310.78	10.00	0.46
377	3	ParamtFarms	Process Heaters_Dryers	396	MMBtu/hr	NG	0.1	32.95	13.00	310.78	10.00	0.46
377	47	ParamtFarms	Process Heaters_Dryers	13.4	MMBtu/hr	NG	0.32	0.76	13.00	310.78	10.00	0.46
713	1	ParamtFarms	Process Heaters_Dryers	27	MMBtu/hr	NG	0.32	36.31	13.00	310.78	10.00	0.46
287	1	PetroProdTest	Flare	41.5	MMBtu/hr	Propane	0.1	5.83	18.60	1273.00	20.00	1.13
1372	26	Plains	Boiler/Steam Gen	32	MMBtu/hr	NG	0.1	5.12	7.32	421.89	5.51	1.07
1372	77	Plains	Boiler/Steam Gen	33.3	MMBtu/hr	Vapor	0.1	2.27	7.32	421.89	5.51	1.07
1372	187	Plains	Turbine-Small	3.27	MW	NG	0.1032	9.58	13.00	367.44	6.15	1.57
1372	188	Plains	Turbine-Small	3.27	MW	NG	0.1032	9.58	13.00	367.44	6.15	1.57
1372	194	Plains	Turbine-Small	4.72	MW	NG	0.1032	7.21	13.00	367.44	6.15	1.57
71	14	Plains	Process Heaters_Dryers	105	MMBtu/hr	NG	0.32	3.15	12.19	310.78	2.78	1.82
71	4	Plains	Process Heaters_Dryers	80	MMBtu/hr	NG	0.32	2.40	12.19	310.78	2.56	1.89
1751	3	RioBravoJasmin	Solid Fuel combustor	36	MW	solid fuel	0.5	77.82	30.48	383.00	25.00	2.00
883	3	RioBravoPoso	Solid Fuel combustor	36	MW	solid fuel	0.5	77.82	30.48	383.00	25.00	2.00
36	99	SanJoaquinRefin	Boiler/Steam Gen	12.6	MMBtu/hr	NG	0.1	5.77	20.00	373.00	10.00	0.30

Facility ID	Permit Number	Short Facility Name	Short Equip Description	Eqp Rating	Rating Units	Fuel	In-stack Ratio (NO2/NOx)	NOx Emissions Lb-Hour	HS (m)	TS (K)	VS (m/s)	DS (m)
36	51	SanJoaquinRefin	Flare	103.4	MMBtu/hr	NG	0.1	3.45	21.67	1273.00	20.00	1.78
36	1	SanJoaquinRefin	Process Heaters_Dryers	79.2	MMBtu/hr	NG	0.32	5.80	20.00	366.33	10.00	1.22
3746	1	Sunrise	Turbine-Large	160	MW	NG	0.17	48.79	36.60	345.00	12.50	5.49
3746	2	Sunrise	Turbine-Large	160	MW	NG	0.17	48.79	36.60	345.00	12.50	5.49
511	1	SycamoreCogen	Turbine-Large	75	MW	NG	0.17	67.90	15.24	450.78	13.03	3.42
511	2	SycamoreCogen	Turbine-Large	75	MW	NG	0.17	23.03	15.24	450.78	13.03	3.42
511	3	SycamoreCogen	Turbine-Large	75	MW	NG	0.17	67.90	15.24	450.78	13.03	3.42
511	4	SycamoreCogen	Turbine-Large	75	MW	NG	0.17	67.90	15.24	450.78	13.03	3.42
44	5	TricorRef	Boiler/Steam Gen	99.9	MMBtu/hr	NG	0.1	3.10	13.00	373.00	10.00	0.61
44	1	TricorRef	Process Heaters_Dryers	61	MMBtu/hr	NG	0.32	0.60	13.00	310.78	10.00	0.46
44	145	TricorRef	Process Heaters_Dryers	64.3	MMBtu/hr	NG	0.32	3.21	13.00	310.78	10.00	0.46
44	2	TricorRef	Process Heaters_Dryers	40	MMBtu/hr	NG	0.32	5.84	13.00	310.78	10.00	0.46
1737	157	Vintage	Flare	41.7	MMBtu/hr	Vapor	0.1	8.67	18.61	1273.00	20.00	1.13
1737	168	Vintage	Process Heaters_Dryers	5	MMBtu/hr (TWO)	Vapor	0.32	2.26	13.00	310.78	10.00	0.46
4294	1	WorldOil	Process Heaters_Dryers	4	MMBtu	NG	0.32	12.88	7.62	394.11	10.00	0.46

BEFORE THE ENERGY RESOURCES CONSERVATION AND DEVELOPMENT COMMISSION OF THE STATE OF CALIFORNIA
1516 NINTH STREET, SACRAMENTO, CA 95814
1-800-822-6228 – WWW.ENERGY.CA.GOV

AMENDED APPLICATION FOR CERTIFICATION FOR THE HYDROGEN ENERGY CALIFORNIA PROJECT

Docket No. 08-AFC-08A
PROOF OF SERVICE
(Revised 2/11/13)

SERVICE LIST:

APPLICANT
SCS Energy, LLC
Marisa Mascaro
30 Monument Square, Suite 235
Concord, MA 01742
mmascaro@scsenergyllc.com

Tiffany Rau
2629 Manhattan Avenue, PMB# 187
Hermosa Beach, CA 90254
trau@heca.com

Hydrogen Energy California, LLC
George Landman
Director of Finance and
Regulatory Affairs
500 Sansome Street, Suite 750
San Francisco, CA 94111
glandman@heca.com

CONSULTANT FOR APPLICANT
URS Corporation
Dale Shileikis, Vice President
Energy Services Manager
Major Environmental Programs
One Montgomery Street, Suite 900
San Francisco, CA 94104-4538
dale_shileikis@urscorp.com

COUNSEL FOR APPLICANT
Michael J. Carroll
Marc T. Campopiano
Latham & Watkins, LLP
650 Town Center Drive, 20th Fl.
Costa Mesa, CA 92626-1925
michael.carroll@lw.com
marc.campopiano@lw.com

INTERESTED AGENCIES
California ISO
e-recipient@caiso.com

Department of Conservation
Office of Governmental and
Environmental Relations
(Department of Oil, Gas &
Geothermal Resources)
Marni Weber
801 K Street, MS 2402
Sacramento, CA 95814-3530
marni.weber@conservation.ca.gov

INTERVENORS
California Unions for Reliable Energy
Thomas A. Enslow
Marc D. Joseph
Adams Broadwell Joseph & Cardozo
520 Capitol Mall, Suite 350
Sacramento, CA 95814
tenslow@adamsbroadwell.com

Association of Irritated Residents
Tom Frantz
30100 Orange Street
Shafter, CA 93263
tfrantz@bak.rr.com

Kern-Kaweah Chapter
of the Sierra Club
Andrea Issod
Matthew Vespa
85 Second Street, 2nd Floor
San Francisco, CA 94105
andrea.issod@sierraclub.org
matt.vespa@sierraclub.org

INTERVENORS (Cont'd)
Environmental Defense Fund (EDF)
Timothy O'Connor, Esq.
123 Mission Street, 28th Floor
San Francisco, CA 94105
toconnor@edf.org

Natural Resources Defense Council
George Peridas
111 Sutter Street, 20th Fl.
San Francisco, CA 94104
gperidas@nrdc.org

Kern County Farm Bureau, Inc.
Benjamin McFarland
801 South Mt. Vernon Avenue
Bakersfield, CA 93307
bmcfarland@kerncfb.com

HECA Neighbors
c/o Chris Romanini
P.O. Box 786
Buttonwillow, CA 93206
roman93311@aol.com

ENERGY COMMISSION STAFF
*Robert Worl
Project Manager
robert.worl.energy.ca.gov

*John Heiser
Associate Project Manager
john.heiser@energy.ca.gov

*Lisa DeCarlo
Staff Counsel
lisa.decarlo@energy.ca.gov

*Indicates Change

ENERGY COMMISSION –
PUBLIC ADVISER
Blake Roberts
Assistant Public Adviser
publicadviser@energy.ca.gov

COMMISSION DOCKET UNIT
CALIFORNIA ENERGY
COMMISSION – DOCKET UNIT
Attn: Docket No. 08-AFC-08A
1516 Ninth Street, MS-4
Sacramento, CA 95814-5512
docket@energy.ca.gov

OTHER ENERGY COMMISSION
PARTICIPANTS (LISTED FOR
CONVENIENCE ONLY):

After docketing, the Docket Unit will provide a copy to the persons listed below. Do not send copies of documents to these persons unless specifically directed to do so.

KAREN DOUGLAS
Commissioner and Presiding Member

ANDREW McALLISTER
Commissioner and Associate Member

Raoul Renaud
Hearing Adviser

Galen Lemei
Adviser to Presiding Member

Jennifer Nelson
Adviser to Presiding Member

David Hungerford
Adviser to Associate Member

Patrick Saxton
Adviser to Associate Member

Eileen Allen
Commissioners' Technical
Adviser for Facility Siting

DECLARATION OF SERVICE

I, Dale Shileikis, declare that on February 14, 2013, I served and filed copies of the attached Preliminary Determination of Compliance, dated February 7, 2013. This document is accompanied by the most recent Proof of Service, which I copied from the web page for this project at: http://www.energy.ca.gov/sitingcases/hydrogen_energy/.

The document has been sent to the other persons on the Service List above in the following manner:

(*Check one*)

For service to all other parties and filing with the Docket Unit at the Energy Commission:

_X_ I e-mailed the document to all e-mail addresses on the Service List above and personally delivered it or deposited it in the US mail with first class postage to those persons noted above as "hard copy required"; OR

____ Instead of e-mailing the document, I personally delivered it or deposited it in the US mail with first class postage to all of the persons on the Service List for whom a mailing address is given.

I declare under penalty of perjury under the laws of the State of California that the foregoing is true and correct, and that I am over the age of 18 years.

Dated: 2/14/13