PROJECT UPDATES AND RESPONSE TO CALIFORNIA ENERGY COMMISSION DATA REQUESTS 99 TO 135

ORANGE GROVE PROJECT (07-SPPE-2)

Submitted by

ORANGE GROVE ENERGY, L.P.

1900 East Golf Road, Suite 1030
Schaumburg, IL 60173

January 2008

ORANGE GROVE ENERGY, L.P.
1900 East Golf Road, Suite 1030, Schaumburg, IL 60173 (847) 908-2800

January 4, 2008

Ms. Felicia Miller
Project Manager
California Energy Commission
Energy Facilities Siting Division
1516 Ninth Street, MS 15
Sacramento, CA 95814-5512

Ref: Project Updates and Response to California Energy Commission Data Requests 99 to 135 for the Orange Grove Power Plant Project (07-SPPE-2)

Dear Ms. Miller:

Please find enclosed one copy and one original of the referenced document related to the Orange Grove Project Small Power Plant Exemption Application. The enclosed copy is for your use. The enclosed original (wet signature) is for you to file with the Docket office. An electronic copy of this submittal has also been sent to the Docket office directly. Electronic copies, along with proof of service declaration, have been sent to each of the individuals on the attached proof of service list.

If you have questions regarding the enclosures, please call Joe Stenger at (805) 528-6868, or me at (847) 908-2876.

Sincerely,

Stephen Thome
Vice President of Development
Orange Grove Energy, L.P.

Enclosures (1 original, 1 copy):
Project Updates and Response to California Energy Commission Data Requests 99 to 135, Orange Grove Project (07-SPPE-2)

Attachment:
Proof of Service

TABLE OF CONTENTS PAGE NO.

1.0 INTRODUCTION 1

2.0 PROJECT AND FACILITY DESCRIPTION UPDATES 1

2.1 OVERVIEW 1

2.2 COOLING WATER SOURCE 2

2.3 SITE GRADING AND LAYOUT 6

2.4 OTHER DESIGN REFINEMENTS 7

2.5 TRANSMISSION SYSTEM 8

3.0 ENVIRONMENTAL INFORMATION 8

3.1 OVERVIEW 8

3.2 AIR QUALITY 9

3.2.1 Construction Emissions 9

3.2.2 Construction Impact Analyses 10

3.2.3 Commissioning Emissions 12

3.2.4 Commissioning Impact Analyses 12

3.2.5 Operation Emissions 15

3.2.6 Operation Impact Analyses 16

3.3 WATER RESOURCES 17

3.4 BIOLOGICAL RESOURCES 18

3.5 TRAFFIC AND TRANSPORTATION 20

3.6 VISUAL RESOURCES 21

3.7 PUBLIC HEALTH 21

3.7.1 TAC Emission Estimates 21

3.7.2 Health Risk Assessments 21

4.0 CONCLUSIONS 22

Appendices

APPENDIX 1.1	ORANGE GROVE PROJECT 07-SPPE-2 RESPONSES TO DATA REQUESTS SET NO. 2
APPENDIX 2.2	FPUD WASTEWATER TREATMENT PLANT NO. 1 IMPROVEMENTS FOR RECLAIMED WATER PICKUP
APPENDIX 2.3	DESIGN DRAWINGS
APPENDIX 2.4	TRACK CHANGES APPLICATION TABLE 2.3-1, MAJOR PLANT EQUIPMENT; TABLE 2.6-1, PLANT OPERATIONS WATER REQUIREMENTS; AND TABLE 1 OF APPENDIX 6.13-A, MAJOR EQUIPMENT
APPENDIX 2.5	INTERCONECTION SYSTEM IMPACT STUDY
APPENDIX 3.2-A	EMISSION CALCULATION DATA
APPENDIX 3.2-B	AIR MODELING INPUT TABLES
APPENDIX 3.2-C	SPECIFICATIONS FOR THE BLACK-START ENGINE
APPENDIX 3.2-D	SPECIFICATIONS FOR THE FIREPUMP ENGINE
APPENDIX 3.2-E	MODELING FILES (COMPACT DISK)
APPENDIX 3.3	FPUD WATER AGREEMENT
APPENDIX 3.4-A	BIOLOGICAL RESOURCES REPORT FOR THE FPUD RECLAIMED WATER PICKUP LOCATION
APPENDIX 3.4-B	FIRE PROTECTION FUEL MODIFICATION ZONE MEMORANDUM OF UNDERSTANDING AND BIOLOGICAL OPINION
APPENDIX 3.6	REVISED PHOTOSIMULATIONS
APPENDIX 3.7-A	TAC EMISSION CALCULATION DATA

1.0 INTRODUCTION

The purpose of this document is to provide an update of project developments and responses to the California Energy Commission's (CEC's) Data Requests 99 to 135 for the Orange Grove Project in San Diego County, California. This *Project Updates and Response to CEC Data Requests 99 to 135* augments and updates the *Response to California Energy Commission September 5, 2007 Data Requests* (referred to herein as the "Response to Data Requests Set No. 1") submitted to the CEC by Orange Grove Energy, LP (Orange Grove Energy) on October 8, 2007, and the *Small Power Plant Exemption (SPPE) Application* (referred to herein as the "Application") filed with the California Energy Commission for the Orange Grove Project on July 19, 2007.

Specific responses to CEC Data Requests 99 to 135 are provided in Appendix 1.1. Updated project information, including design developments and related changes in environmental impacts, are described in Sections 2.0 and 3.0. Where the data request responses in Appendix 1.1 are supported by updated project information or revised environmental impact evaluations, Appendix 1.1 provides relevant cross-references to Sections 2.0 and 3.0.

The project updates presented herein do not result in any significant environmental impact. Instead, the project updates either do not have a substantial affect on the overall conclusions of the environmental analyses presented in the Application or, in some cases, will materially reduce the levels of impact addressed in the Application. For example, a key project development has been the securing of a reclaimed water source for use in the air inlet chiller cooling system, as already discussed with CEC staff. The use of reclaimed water for cooling will substantially reduce the project's fresh water consumption. This and other project design updates are presented in Section 2.0. Updates to the project's environmental impact analyses are presented in Section 3.0.

2.0 PROJECT AND FACILITY DESCRIPTION UPDATES

2.1 OVERVIEW

Project and facility description updates include:

- An alternative source of water has been obtained for power plant cooling.
- Site grading details and the facility layout have been refined based on detailed topographic surveys that have been completed.
- Other design refinements have occurred as detailed engineering has progressed.
- The Interconnection System Impact Study has been completed and additional details of the transmission line interconnection to the Pala Substation have been developed.

Each of these developments is described in the following sections.

2.2 COOLING WATER SOURCE

Orange Grove Energy has secured a source of recycled water for power plant cooling through an option agreement with the Fallbrook Public Utility District (FPUD). Through the option agreement, Orange Grove Energy has obtained rights to purchase up to 45 acre-feet per year (AFY) of tertiary treated reclaim water. The water quality profile is provided in Table 2.2-1. This water is currently being discharged to the Pacific Ocean via pipeline to a submarine outfall, known as the Oceanside Ocean Outfall, owned and operated by the City of Oceanside. Under Orange Grove Energy's option agreement with FPUD, Orange Grove Energy has rights to a take-or-pay obligation for the reclaim water for 25 years, to accommodate the 25-year operation of the project.

Remainder of page kept intentionally blank.

Table 2.2-1: FPUD Plant No. 1 Effluent

Month	TDS (mg/L)	G&O (mg/L)	Boron (mg/L)	Iron (mg/L)	Manganese (mg/L)	Calcium (mg/L)	Magnesium (mg/L)	Potassium (mg/L)	Sodium (mg/L)	Nitrate (mg/L)	Chloride (mg/L)	Sulfate (mg/L)	Nitrite (mg/L)	Fluoride (mg/L)	Ammonia (mg/L)	TKN (mg/L)	Total Phosphorus (mg/L)	MBAS (MG/l)	Sodium Adsorption Ratio
Jan	768	<5.0	0.261	0.027	0.021	79.2	33.9	14.3	132	24.8	154	237	5.7	0.23	6.8	8.2	0.82	0.07	
Feb	830	<5.0	0.346	0.114	0.062	82.3	32.1	15	144	13.4	166	227	1.7	0.25	13.9	14.6	0.49	0.06	
Mar	822	<5.0	0.288	0.102	0.032	70.1	31.9	13.5	135	18.5	172	252	2.9	0.2	8.68	9.24	0.45	0.15	
Apr	786	<5.0	0.365	0.277	0.038	62.1	32	14.2	132	18.4	178	223	2.6	0.26	9.7	9.8	1.2	0.1	
May	980	<5.0	0.42	0.048	0.053	73.8	32	13.6	145	10.7	177	233	1.3	0.35	12.4	17.5	1.04	0.17	
Jun	610	<5.0	0.334	0.071	0.037	66.2	28.9	13.5	136	17.3	160	232	6.9	0.3	9.3	11.5	<.02	0.08	
Jul	850	<5.0	0.415	0.033	0.046	76.5	32	16.9	156	9.5	179	255	3.5	0.3	13.7	13.8	1.58	0.04	
Aug	860	<5.0	0.354	0.049	0.033	83.6	30.9	16.3	142	10.5	194	283	6.1	0.31	12.1	14.2	1.96	0.04	
Sep	850	<5.0	0.365	0.058	0.033	60.6	27.7	15.5	134	15.4	165	227	3.8	0.27	9.1	11.8	2.22	0.05	
Oct	840	<5.0	0.377	0.037	0.04	66.2	28.5	15.3	138	11.8	181	240	2.9	0.27	11.5	13.6	2.07	0.05	
Nov	830	8	0.44	0.063	0.03	71.2	31.9	16.6	142	9.0	161	241	2.4	0.26	11.2	18.8	2.09	0.06	
Dec	490	<5.0	0.323	0.091	0.028	79.6	30.7	18.3	154	1.9	97	229	<.04	0.28	14.9	18.5		<.02	
Avg.	**793**	**<5.0**	**0.357**	**0.081**	**0.038**	**72.6**	**31.0**	**15.3**	**141**	**13.4**	**165**	**240**	**3.6**	**0.27**	**11.1**	**13.5**	**1.39**	**0.08**	
Jan	860	<5.0	0.330	0.279	0.043	69.6	32.5	15.8	147	20.9	172	251	1.7	0.41	8.5	9.6	2.17	0.08	
Feb	780	<5.0	0.340	0.180	0.038	72.9	30.7	16.8	155	9.3	162	222	1.5	0.23	17.2	18.2	0.02	0.1	
Mar	720	<5.0	0.294	0.056	0.037	68.4	28.7	15.6	138	2.1	157	224	0.56	0.35	15.9	16	0.83	0.07	
Apr	710	<5.0	0.344	0.060	0.017	57.7	24.1	13.1	123	35.8	145	207	2.8	0.16	10.9	15.4	1.2	0.05	
May	740	<5.0	0.335	0.045	0.027	65.8	29.8	16.2	135	54	159	208	1.3	0.25	4.5	8.5	3.45	0.09	
Jun	960	<5.0	0.365	0.065	0.028	65.1	24.3	15.1	136	26.1	151	204	5.9	0.2	8.9	11.9	0.92	0.07	
Jul	720	<5.0	0.360	0.023	0.04	66	26	18	130	5.6	150	210	2.2	0.49	7.2	11	3.6	0.11	
Aug	720	<5.0	0.340	0.030	0.029	59	24	16	120	3.2	140	230	2.0	0.39	9.7	15	3.5	0.11	3.4
Sep	730	<0.9	0.360	0.039	0.037	55	23	16	120	2.3	160	220	1.1	0.48	12	20	1.4	0.25	
Oct	670	<0.95	0.410	0.066	0.033	68	27	19	140	4.7	150	190	1.0	0.43	9.5	14	1.3	0.09	

Month	TDS (mg/L)	G&O (mg/L)	Boron (mg/L)	Iron (mg/L)	Manganese (mg/L)	Calcium (mg/L)	Magnesium (mg/L)	Potassium (mg/L)	Sodium (mg/L)	Nitrate (mg/L)	Chloride (mg/L)	Sulfate (mg/L)	Nitrite (mg/L)	Fluoride (mg/L)	Ammonia (mg/L)	TKN (mg/L)	Total Phosphorus (mg/L)	MBAS (MG/l)	Sodium Adsorption Ratio
Nov	680	<1.1	0.350	0.047	0.031	60	25	17	120	7.9	140	180	1.4	0.29	10	12	3.2	0.11	
Dec	680	<1.1	0.350	0.040	0.035	63	25	16	130	6.5	150	200	1.8	0.26	8.6	11	2.8	0.07	
Avg.	**746**	**<5.0**	**0.348**	**0.078**	**0.033**	**64.2**	**26.7**	**16.2**	**133**	**14.9**	**153**	**212**	**1.9**	**0.33**	**10.2**	**13.6**	**2.03**	**0.1**	
Jan	670	<1.2	0.400	0.035	0.018	60	25	17	130	8.8	160	180	0.99	0.35	8.1	3.4	2.3	0.13	
Feb	760	1.2	0.400	0.075	0.029	65	27	16	130	4.3	160	220	1.0	0.60	14	17	2.2	0.21	
Mar	810	<1.2	0.380	0.047	0.023	70	30	18	140	3.9	160	240	<1.8	0.36	9.7	17	2.9	0.1	
Apr	690	<1.2	0.430	0.026	0.025	60	25	17	140	5.4	170	200	1.3	0.3	10	12	1.3	0.19	
May	780	<1.2	0.440	0.034	0.019	69	27	19	140	5.1	160	230	3.1	0.35	10	11	0.64	0.09	
Jun	760	1.3	0.350	0.054	0.016	68	26	15	110	7.4	150	240	<.15	0.62	3.6	3.9	3	0.09	
Jul	830	<1.1	0.360	0.031	0.012	68	26	17	130	9.2	150	200	0.64	0.45	5.2	7.8	4.6	0.14	
Aug	810	<1.2	0.410	0.041	0.025	64	26	17	140	12	150	170	<.15	0.29	3.1	4.5	4.1	0.13	
Sep	820	1.2	0.370	0.028	0.03	65	26	17	130	13	150	220	0.81	0.43	0.77	3.1	4.8	0.13	
Oct	830	19	0.380	0.041	0.028	63	25	17	120	15	160	180	<.15	0.45	0.34	2.2	5.3	0.11	
Avg.	**776**	**<5.0**	**0.392**	**0.041**	**0.023**	**65.2**	**26.3**	**17.0**	**131**	**8.4**	**157**	**208**	**1.3**	**0.42**	**6.5**	**8.2**	**3.11**	**0.13**	

The 45 AFY of recycled water secured through the option agreement is more than adequate to provide 100 percent of the amount of water that will be needed to operate the project's Air Inlet Chiller Cooling System for the maximum permitted hours of operation for any given year. The water will be trucked to the site and offloaded into a 150,000 gallon cooling tower makeup water tank (see Section 2.3). The water will be picked up from the FPUD Wastewater Treatment Plant No. 1 located on the west side of Alturas Road in Fallbrook (Figure 2.1). The water haul route from the FPUD property will be north on Alturas Road, then east on Ammunition Road, then south on Mission Road, and then east on SR 76 to Pala Del Norte Road, then north on Pala Del Norte Road to the project site. The haul route is shown in Figure 2.2. The return route will use these same roads. The round trip haul distance is 31.2 miles.

Orange Grove Energy will purchase a new 10-wheel, tank-on-chassis water truck (no trailer) for hauling of reclaim water. The truck will be fueled with ultra low-sulfur diesel fuel and will have a capacity of approximately 4,000 gallons. The instantaneous water use rate for the cooling system with both turbines running at summer design conditions is 65.7 gallons per minute (gpm). Due to the Orange Grove Project being a peaking plant, operations would normally occur only during hours of high demand, typically 12 hours or less each day that the plant operates. For 12 hours of operation at summer design conditions, the daily cooling water demand would be 47,300 gallons (65.7 gpm x 60 minutes per hour x 12 hours = 47,300 gallons). The cycle time for the 31.2 mile round trip haul, including travel, loading and unloading, will be approximately one hour. Based on use of a 4,000 gallon water truck, operations for a 12-hour day at summer design conditions will require a total of 12 water haul round trips. Based on typical peaker plant usage in the San Diego Gas & Electric (SDG&E) service area, water hauling is only expected to occur about 60 days per year.

Water hauling will normally occur during daylight hours since the 150,000 gallon cooling tower makeup water storage tank will provide substantial storage capacity for peak operating days and water hauling can be continued as needed on days when the plant is running less hours, or at lower capacity or cooler temperatures. For short durations during the year, expected to be limited to a few days or less at a time when the plant is operating at maximum capacity for longer hours, the once-per-hour haul cycle may need to occur on a 24-hour a day basis.

Only minimal improvements are needed at the reclaim water pickup site, and the required minimal improvements will be within FPUD property. Figure 2.3 shows the location of the required improvements. Appendix 2.2 provides layouts prepared by FPUD for the improvements. The pickup location will be approximately 500 feet west of Alturas Road and will be accessed via an existing driveway that traverses FPUD property from Alturas Road. An existing graded earth driveway will be smoothed and paved to 24-feet wide, and an approximately 100- to 125-foot diameter turn-around will be graded and paved at the west end of the driveway. There is an existing pipeline at the pickup point and a concrete loading pad, riser, and 6-inch meter will be installed. The improvements will be completed by FPUD and will not require permits. (Mike Page, FPUD Engineering Manager, personal communication with TRC, December 12, 2007 and January 3, 2008). All work will occur within disturbed areas. Total grading for construction of the improvements will be approximately 500 cubic yards (cy) of excavation and 500 cy of fill. Potential environmental impacts are addressed in Section 3.0.

Contact information for FPUD related to the reclaim water option agreement is as follows:

Keith Lewinger
General Manager
Fallbrook Public Utility District
990 East Mission Road
Fallbrook, CA 92028
(760) 728-1125
keith@fpud.com

2.3 SITE GRADING AND LAYOUT

A detailed topographic survey of the project site and surrounding area has been completed and the project grading and layout has been refined based on the detailed survey data. The refined Project grading and layout are provided in the design drawings in Appendix 2.3. The project design drawings in Appendix 2.3 update and augment the preliminary design drawings provided in the Application and the Responses to Data Requests Set No. 1.

The estimated surface disturbance footprint for the refined site layout is summarized in Table 2.3-1.

Table 2.3-1: Estimated Construction Disturbance Footprint

FACILITY/ITEM	ESTIMATED DISTURBANCE FOOTPRINT (ACRES)
Onsite Grading and Facilities	8.1
Project Driveways (2)	1.1
Water Pipeline	0.0 (1)(2)
Gas Pipeline	0.0 (1)(2)
Electric Interconnection (Underground)	0.2 (2)
Construction Laydown	5.0
Fuel Modification Zone (Fire Protection)	1.2
TOTAL	**15.6**

(1) Disturbance will be within the footprint of other facilities.
(2) Portions of the linear facilities that occur in the roadbed (i.e. pavement or shoulders) of Pala del Norte Road and SR 76 and the driveway of the existing Pala substation are not included since these roadways are developed areas that provide no habitat.

2.4 OTHER DESIGN REFINEMENTS

Project design work has continued since the Application and the Responses to Data Requests Set No. 1 were submitted. Plans for the project have been refined based on the detailed survey work, input from regulatory agencies, input from the local community planning group, and the normal progression of project engineering. None of the refinements that have occurred materially affect the overall conclusions of the environmental analyses presented in the Application and supplemented by Responses to Data Requests Set No. 1. The refinements that have occurred are reflected in the updated project design drawings in Appendix 2.3 and in refined environmental evaluations provided in Section 3.0. The refinements that have occurred include the following:

- Refinements have been made to plant equipment. Appendix 2.4 provides a "track changes" version of Table 2.3-1, Major Plant Equipment, Table 2.6-1, Plant Operations Water Requirements, and Table 1 (from Appendix 6.13-A), Major Equipment with changes from the Application shown.
- The southern project access driveway, which connects the Site to SR 76, has been re-aligned as a result of comments received from a representative of the local community planning group and comments from SDG&E. This southern access driveway will be used for site ingress and/or egress during construction, but will be used only in the event of an emergency during operations. Routine ingress/egress during operations will be via the project driveway from Pala Del Norte Road. The refined alignment is shown in Drawing Y100 in Appendix 2.3.
- The project landscaping plan has been refined based on input from San Diego County Department of Planning and Land Use and the local community planning group, and as a result of development of a fire protection plan in accordance with County requirements. Refinements to the landscaping plan include the following:
    - For fire prevention, the "small areas of native plants" originally intended for aesthetics at the entrances to site driveways and outside the plant administration building described in Section 2.2.4 of the Application have been eliminated from the project design.
    - Additional vegetation screening has been added north of SR 76.
    - Cut and fill slopes will be planted as required by the County.

  These additions to project landscaping, and the realignment of the southern access driveway described above, will help to soften views of the site facilities by passing motorists. The refined landscaping plan is shown in Drawing L100 in Appendix 2.3.

- The project stormwater control design has been refined to assure compliance with San Diego County storm water control requirements. The Application included a stormwater retention/detention basin sized to retain the runoff from the 50-yr storm event, with infiltration and evaporation of the retained storm flow. Geotechnical work conducted since the Application was submitted shows that the infiltration rate in the area of the proposed stormwater management basin is lower than expected. As a result, the stormwater control design has been modified to instead use a stormwater detention basin sized to detain runoff for the 100-yr storm event. The basin will be designed with a

County approved sediment storage area for stormwater quality, even though much of the sedimentation will occur before the stormwater enters the area stormwater inlets onsite as the runoff travels over the crushed rock surfacing. In addition to the stormwater control design change to a detention basin, the project stormwater conveyance pipe sizing criteria has been changed from the 25-year, 24-hour storm sizing described in the Application to a 50-year, 24-hour storm to meet County standards. The updated stormwater control design is reflected in the design drawings in Appendix 2.3.

- The trailer-mounted demineralizer system for water treatment has been reduced from a two-trailer system to a single trailer system. Resin bead (zeolite) polishing is no longer included. These refinements, as well as the reverse osmosis treatment system added to the design as described in Responses to Data Requests Nos. 65, 66 and 67, and other refinements to the plant water management systems, are reflected in the revised water balance and flow diagram in Appendix 2.3 and the reduced project water demand shown in Table 2.6-1 in Appendix 2.4.
- Fire protection water flow for the facility has been raised from the 1,000 gpm flow described in the Application to 3,000 gpm. The firewater storage reservoir has been increased to 360,000 gallons to maintain the same two hour firewater storage capacity for the increased design flow. The increased firewater storage capacity is reflected in the design updates in Appendix 2.3.

2.5 TRANSMISSION SYSTEM

The Interconnection System Impact Study for the project was completed on October 22, 2007. A copy is included in Appendix 2.5.

Design work has continued on the electrical transmission line interconnection. Drawings E-19 and E-20 in Appendix 2.3 provide an updated route and details for the underground electrical transmission line interconnection. Drawing E-100 in Appendix 2.3 provides a refined one-line diagram. Drawing E-20 in Appendix 2.3 supersedes Figure 3.1-1 in the Application. Drawing E-100 in Appendix 2.3 supersedes Exhibit 76-1 in the Responses to Data Requests Set No. 1.

The 69 kilovolt (kV) underground transmission line will include three single conductor 1750 kcmil XLPE cables installed in a duct bank consisting of four 6-inch Direct Burial Utility Duct (DB-100) conduits and one 4-inch polyvinyl chloride (PVC) DB-100 conduit for communications cables.

3.0 ENVIRONMENTAL INFORMATION

3.1 OVERVIEW

This section updates the environmental information provided in the Application and the Response to Data Requests Set No. 1 to account for the project updates described in Chapter 2.0 and in response to certain CEC data requests as identified in Appendix 1.1. Environmental information is updated in the following sections:

- Section 3.2 – Air Quality
- Section 3.3 – Water Resources
- Section 3.4 – Biological Resources
- Section 3.5 – Traffic and Transportation
- Section 3.6 – Visual Resources
- Section 3.7 – Public Health

The following areas of environmental impact analysis provided in the Application and the Responses to Data Requests Set No. 1 have been evaluated in conjunction with the preparation of this submittal and found not to require updates because the project developments described in Section 2.0 do not result in material changes from previously submitted information, or in the case of cultural resources, because requisite information is fully addressed in Appendix 1.1:

- Geologic Hazards and Resources
- Agriculture and Soils
- Cultural Resources
- Paleontological Resources
- Land Use
- Socioeconomics
- Noise
- Waste management
- Hazardous materials handling
- Worker safety

3.2 AIR QUALITY

The emission estimates and the air quality impact analyses have been updated in this document to reflect project refinements described in Section 2.0 and certain data requests from CEC staff. The following sections summarize the updated emission estimates for the construction, commissioning and operational phases of the project. Each section is coupled with an updated impact analysis which summarizes the results of the respective emission modeling. Appendices 3.2-A and 3.2-B provide detailed data from which these summaries were drawn.

3.2.1 Construction Emissions

The construction emission estimates have been updated to refine the fugitive dust emission calculations for earth moving activities during site preparation. Additionally, emission estimates are provided for material handling and storage and fugitive dust from vehicles traveling on unpaved roads. Details on the construction emissions calculations are provided in Appendix 3.2-A, Tables 3.2A-1 through 10.

Table 3.2-1 – Summary of Onsite Construction Maximum Daily Emissions (1)

Construction Activity/Pollutant	VOC	CO	NOx	SOx	PM10	PM2.5
Combustion Emissions (lb/day)	14.27	59.65	132.82	0.11	5.80	-
Earth Moving (lb/day)	-	-	-	-	12.09	4.02
Material Handling (2) (lb/day)	-	-	-	-	0.84	0.01
Unpaved Roadway (3) (lb/day)	-	-	-	-	21.71	2.17
Maximum Daily Emission (lb/day)	**14**	**60**	**133**	**0.1**	**40.4**	**6.2**
Significant Thresholds (4)	**75**	**550**	**250**	**250**	**100**	**55**
Exceed Significant Threshold?	**No**	**No**	**No**	**No**	**No**	**No**

(1) Reference Appendix 3.2-A - Table 3.2-A-8 to 3.2-A-10 for detailed calculations.
(2) No additional soil will be imported to the site; material handling emissions are for aggregates.
(3) Construction parking area will be paved with crushed rocks and located a short distance from the highway. Emissions from the parking area are negligible compared to those from site construction equipment.
(4) San Diego County Guidelines for Determining Significance.

Table 3.2-2 – Summary of Onsite Total Project Construction Emissions (1)

Construction Activity/Pollutant	VOC	CO	NOx	SOx	PM10	PM2.5
Combustion Emissions (lb)	836	2,319	4,034	4	294	-
Earth Moving (lb)	-	-	-	-	337	95
Material Handling (lb)	-	-	-	-	20	2
Unpaved Roadway (lb)	-	-	-	-	216	22
Total Project Emissions (Ton)	**0.42**	**1.16**	**2.02**	**0**	**0.43**	**0.06**

(1) Reference Appendix 3.2-A - Table 3.2A-8 to 3.2A-10 for detailed calculations.

Table 3.2-3 – Summary of Total Off-Site Construction Vehicle Combustion Emissions (1)

Construction Activity/Pollutant	VOC	CO	NOx	SOx	PM10
Water Line Construction Emissions (lb)	413	1,275	2,158	2.11	162
Gas Line Construction Emissions (lb)	258	726	1,164	1.16	90

(1) Reference Appendix 3.2-A - Table 3.2A-7 for detailed calculations.

Table 3.2-4 – Summary of Construction Related On-Road Vehicle Emissions (1)

Construction Activity/Pollutant	VOC	CO	NOx	SOx	PM10	PM2.5
Workers Commute & Delivery Trucks Exhaust (lb)	197	1,713	590	0	33	31
Workers Commute & Delivery Trucks Dust Entrainment (lb)	-	-	-	-	147	31

(1) Reference Appendix 3.2-A - Table 3.2A-3 and 3.2A-5 for detailed calculations.

3.2.2 Construction Impact Analyses

The impacts associated with onsite construction emissions shown in Table 3.2-1 and 3.2-2 were assessed using the Environmental Protection Agency (EPA) approved air dispersion modeling system, AERMOD (Version 07026). Meteorological data collected within one mile of the

project at Gregory Canyon for years 2002 and 2003 were re-processed and provided by the San Diego Air Pollution Control District (SDAPCD) using AERMET (Version 06341).

Construction modeling followed the methodology described in Data Response No. 8 and Exhibit 8-1 of the Responses to Data Requests Set No. 1. Since construction equipment and operation will move continuously around the site, construction related emission sources were modeled as volume sources. The fuel combustion emissions from construction equipment were grouped into four volume sources (COMB1 to COMB4) equally distributed on the site. The fugitive dust emissions from earth moving, material handling and traveling on unpaved roads were modeled as thirteen distinct volume sources (FUG01 to FUG13) randomly placed on the project site.

Modeling receptors were placed at 25-meter intervals along the property boundary and a 100-meter grid was employed from the property boundary extending to 1,500 meters. A typical construction workday from 7:00 AM to 6:00 PM was used in the modeling. The ozone limiting method (OLM) was applied for the one-hour NO_2 impact assessment only. The modeled impacts associated with construction activities are presented below. Modeling files are provided in Appendix 3.2-E.

Table 3.2-5 – Air Modeling Results for Onsite Construction Activities (1)

Pollutant	Averaging Time	2002 µg/m^3	2003 µg/m^3	Background µg/m^3	Total µg/m^3	CAAQS	NAAQS
NO_2	1 HR	133.21	131.98	150.5	283.7	470(1)	-
	Annual	0.78	0.70	33.9	34.7	56	100
CO	1 HR	121.43	184.97	7,214	7,399	23,000	40,000
	8 HR	21.51	26.99	4,135	4,162	10,000	10,000
SO_2	1 HR	0.25	0.38	110	110.4	655	-
	3 HR	0.10	0.16	52.4	52.6	-	1,300
	24 HR	0.004	0.005	23.6	23.6	105	365
	Annual	0.001	0.001	10.5	10.5	-	80
PM_{10}(2)	24 HR	3.92	4.22	57.0 (3)	61.2	50	150
	Annual	0.25	0.27	27.5 (3)	27.8	20	-
$PM_{2.5}$	24 HR	1.50	1.15	67.3 (3)	68.8	-	35
	Annual	0.09	0.08	14.1 (3)	14.2	12	15

(1) The CAAQS 1-HR maximum NO_2 standard for was amended to 338 µg/m^3 by CARB; however, the standard has not been adopted by the California Office of Administrative Law.
(2) Maximum second highest values.
(3) Background concentration exceeds ambient air quality standard.

As summarized above, except for particulate matter (PM), the predicted concentrations for all pollutants at all applicable averaging periods will be below the current ambient air quality standards. In the case of PM emissions, the background concentrations, which are based on the highest sample value collected in downtown Escondido during the last three years, already exceed the ambient air quality standard. However, the predicted PM^{10} concentration is within the significance incremental threshold of 5 micrograms per cubic meter (µg/m^3) for the 24-hour

standard and 1 μg/m^3 for the annual standard. For PM$^{2.5}$, the estimated emission rate is below the significance threshold of 10 tons per year (tpy) or 55 pounds per day (lb/day).

3.2.3 Commissioning Emissions

The commissioning emissions for the project were previously estimated using a proxy case of the turbine operating at 30% load, but these are now updated using a range of start up operating conditions provided by GE. Detailed emission estimates are provided in Table 3.2A-11 of Appendix 3.2-A. The following is a summary of the emission estimates.

Table 3.2-6 – Summary of Commissioning Emissions (1)

Commissioning Emissions (Tons)	NOx	CO	VOC	PM10	PM2.5	SOx
Planned (Each Turbine)	0.635	0.24	0.015	0.05	0.05	0.015
Planned (Total)	1.27	0.48	0.03	0.10	0.10	0.03
Permitted (Total)	4.24	1.61	0.11	0.32	0.32	0.09

(1) Reference Appendix 3.2-A - Table 3.2A-11 for detailed calculations

As stated in previous project documents, the planned commissioning duration is expected to be about 60 hours for each turbine. However, to account for potentially longer testing requirements, 200 hours of commissioning for each turbine will be provisioned in the permit. It is important to note that commissioning emissions are worst-case one-time emissions that will occur within a short four week window.

3.2.4 Commissioning Impact Analyses

Previously, commissioning impacts were evaluated using a proxy case of the turbine operating at 30% load. For this project update, more extensive evaluations were completed using all 35 cases of turbine operating conditions that can occur during start-up. With the one-hour maximum concentration being most relevant, the NO_2 and CO impacts evaluated for all 35 cases are presented in Table 3.2-7 and 3.2-8.

Case 100 in Tables 3.2-7 and 3.2-8 represent the turbine being operated at full load, with water injection for NOx control and inlet air cooling with SPRINT. Cases 101 to 109 are variations of Case 100 with reduced load. Cases 110 to 116 are with the turbines operating at various loads with water injection, but without SPRINT. Cases 117 to 134 are with the turbines operating at various loads with no water injection. The complete GE profiles for all 35 cases are provided in Appendix 3.2-A.

Remainder of page kept intentionally blank.

Table 3.2-7 – Air Modeling NO_2 Results for Project Commissioning

Operating Condition	Exhaust Temp (F)	Exhaust Flow Rate (ACFM)	Max. Hourly Emissions (lb/hr)	Conc. (µg/m^3) 2003 Met Data	Conc. (µg/m^3) 2002 Met Data	Highest Predicted + Background(1) Conc. (µg/m^3)
CASE100	840.3	595,698	43	130.2	119.4	281
CASE101	863.0	544,702	38	120.7	112.7	271
CASE102	852.5	530,207	36	118.4	109.6	269
CASE103	845.1	515,655	35	119.0	109.1	269
CASE104	836.8	500,872	33	116.1	105.3	267
CASE105	827.3	485,641	32	116.7	104.6	267
CASE106	818.4	470,761	30	113.3	100.3	264
CASE107	807.2	455,610	29	113.6	99.2	264
CASE108	798.9	440,804	28	113.4	97.6	264
CASE109	795.2	425,338	26	108.8	92.3	259
CASE110	811.8	413,887	25	106.2	89.5	257
CASE111	803.8	397,987	23	101.1	83.7	252
CASE112	798.0	381,480	22	100.0	81.2	250
CASE113	793.1	364,541	21	98.6	78.4	249
CASE114	789.1	349,313	19	91.8	71.3	242
CASE115	789.6	333,731	18	89.2	68.5	240
CASE116	794.4	317,669	17	86.2	65.4	237
CASE117	807.5	313,363	50	254.4	192.8	405
CASE118	807.8	311,899	50	254.9	193.2	405
CASE119	809.3	305,992	47	241.4	185.2	392
CASE120	810.3	300,089	44	227.6	176.8	378
CASE121	812.2	293,857	41	213.5	168.2	364
CASE122	814.0	287,384	38	199.2	159.3	350
CASE123	817.2	280,710	35	184.6	149.9	335
CASE124	820.1	273,893	33	175.0	144.6	325
CASE125	822.9	266,981	30	160.8	134.5	311
CASE126	814.6	260,686	27	148.6	124.2	299
CASE127	804.2	254,392	25	141.4	118.2	292
CASE128	794.6	248,114	22	127.8	106.8	278
CASE129	785.0	241,765	20	119.4	99.7	270
CASE130	777.3	235,468	18	110.2	92.0	261
CASE131	768.4	229,098	16	100.6	83.8	251
CASE132	763.3	225,807	15	95.6	79.6	246
CASE133	763.1	225,724	15	95.6	79.7	246
CASE134	763.1	225,724	15	95.6	79.7	246

(1) Background concentration is based on the highest reading (150.5 µg/m^3) in the last three years from the nearest monitoring station in downtown Escondido.

Table 3.2-8 – Air Modeling CO Results for Project Commissioning

Operating Condition	Exhaust Temp (F)	Exhaust Flow Rate (ACFM)	Max. Hourly Emissions (lb/hr)	Conc. (µg/m^3) 2003 Met Data	Conc. (µg/m^3) 2002 Met Data	Highest Predicted + Background(1) Conc. (µg/m^3)
CASE100	840.3	595,698	43.90	133.0	121.9	7,347
CASE101	863.0	544,702	16.41	52.1	48.7	7,266
CASE102	852.5	530,207	27.40	90.1	83.4	7,304
CASE103	845.1	515,655	26.32	89.5	82.0	7,303
CASE104	836.8	500,872	12.61	44.4	40.2	7,258
CASE105	827.3	485,641	13.87	50.6	45.3	7,265
CASE106	818.4	470,761	23.03	87.0	77.0	7,301
CASE107	807.2	455,610	21.91	85.8	74.9	7,300
CASE108	798.9	440,804	10.43	42.2	36.4	7,256
CASE109	795.2	425,338	11.41	47.7	40.5	7,262
CASE110	811.8	413,887	18.64	79.1	66.7	7,293
CASE111	803.8	397,987	17.59	77.3	64.0	7,291
CASE112	798.0	381,480	8.28	37.6	30.6	7,252
CASE113	793.1	364,541	8.93	41.9	33.3	7,256
CASE114	789.1	349,313	14.55	70.3	54.6	7,284
CASE115	789.6	333,731	13.60	67.4	51.7	7,281
CASE116	794.4	317,669	6.33	32.1	24.4	7,246
CASE117	807.5	313,363	6.94	35.3	26.8	7,249
CASE118	807.8	311,899	11.99	61.1	46.3	7,275
CASE119	809.3	305,992	11.67	59.9	46.0	7,274
CASE120	810.3	300,089	5.67	29.3	22.8	7,243
CASE121	812.2	293,857	5.51	28.7	22.6	7,243
CASE122	814.0	287,384	5.34	28.0	22.4	7,242
CASE123	817.2	280,710	5.17	27.3	22.1	7,241
CASE124	820.1	273,893	5.00	26.5	21.9	7,241
CASE125	822.9	266,981	4.83	25.9	21.6	7,240
CASE126	814.6	260,686	4.64	25.5	21.4	7,240
CASE127	804.2	254,392	4.45	25.2	21.0	7,239
CASE128	794.6	248,114	4.26	24.8	20.7	7,239
CASE129	785.0	241,765	4.07	24.3	20.3	7,238
CASE130	777.3	235,468	3.89	23.8	19.9	7,238
CASE131	768.4	229,098	3.71	23.3	19.4	7,237
CASE132	763.3	225,807	3.61	23.0	19.2	7,237
CASE133	763.1	225,724	3.61	23.0	19.2	7,237
CASE134	763.1	225,724	3.61	23.0	19.2	7,237

(1) Background concentration is based on the highest reading (7,214 µg/m^3) in the last three years from the nearest monitoring station in downtown Escondido.

As shown in Table 3.2-7, Case 118 is where the predicted NO_2 concentration is the highest at 193.2 µg/m^3. OLM is not applied for these analyses and the results are still below the one hour CAAQS NO_2 standard of 470 µg/m^3.

Case 100 is where the predicted CO concentration is the highest. As expected, the CO results are far below the AAQS threshold. Except for the NO_2 emission, this case is where all other pollutants have the highest emission rate. Therefore, the refined impact analyses for the commission period are conducted using this case for all pollutants other than NO_2. The results are presented below.

Table 3.2-9 – Air Modeling Summary for Project Commissioning

Pollutant	Averaging Time	2002 µg/m^3	2003 µg/m^3	Back-ground µg/m^3	Max Total µg/m^3	Most Stringent of AAQS	Meets AAQS
NO_2 (Case 118)	1 HR	191.61	252.83	150.5	403.3	470	Yes
NO_2 (with OLM)	1 HR	101.31	110.60	150.5	261.1	470	Yes
CO (Case 100)	1 HR	121.89	132.95	7,214	7,347	23,000	Yes
	8 HR	25.28	27.77	4,135	4,163	10,000	Yes
SO_2 (Case 100)	1 HR	2.78	3.03	110	113.0	655	Yes
	3 HR	0.93	1.01	52.4	53.4	1,300	Yes
	24 HR	0.12	0.11	23.6	23.7	105	Yes
PM_{10} (Case 100)	24 HR	0.31	0.30	57.0	57.3	50	(1)
$PM_{2.5}$ (Case 100)	24 HR	0.31	0.30	67.3	67.6	35	(2)

(1) Highest measured ambient concentration in the last three years is above the CAAQS; however, the highest predicted incremental increase is below the significant threshold of 5 µg/m^3.
(2) Highest measured ambient concentration in the last three years is above the CAAQS; however, the estimated emission rates are below the significance thresholds of 10 tpy or 55 lb/day.

3.2.5 Operation Emissions

The emissions for the operational phase were updated to reflect changes that result from the proposed use of tertiary treated water for cooling, the desire for water conservation and the need to have adequate fire protection capability. The specification on the black-start generator has also been revised. The following tables summarize the various emission rates for the facility in the operational phase. Both the average and the maximum permitted annual facility emissions are also provided. Appendix 3.2-A includes detailed calculations for each emission source.

Table 3.2-10 – Summary of Maximum Hourly Operational Emissions (1)

Pollutant	NOx	CO	VOC	$PM_{10/2.5}$ (2)	SOx
Turbines (lb/hr)	19.66	21.26	2.77	5.77	1.88
Black-Start Engine (lb/hr)	1.39	1.85	0.31	0.04	0.008
Fire-Pump Engine (lb/hr)	1.58	0.31	0.00	0.04	0.001
Chiller Cooling Tower (lb/hr)	-	-	-	0.20	-
Maximum Facility Hourly (lb/hr)	**22.62**	**23.42**	**3.08**	**6.05**	**1.89**

(1) Reference Tables 3.2A-12 to 15 for detailed calculations and notes.
(2) Over 99% of PM10 emissions are PM2.5 for natural gas combustion source (CARB); therefore, these values are applicable to both PM10 and PM2.5.

Table 3.2-11 – Summary of Maximum Daily Operational Emissions (1)

Pollutant	NOx	CO	VOC	$PM_{10/2.5}$	SOx
Turbines (lb/day)	213.7	267.4	28.2	89.6	31.2
Black-Start Engine (lb/day)	1.39	1.85	0.31	0.04	0.008
Fire-Pump Engine (lb/day)	1.58	0.31	0.00	0.04	0.001
Chiller Cooling Tower (lb/day)	-	-	-	4.69	-
Maximum Facility Daily (lb/day)	**216.67**	**269.56**	**28.51**	**94.37**	**31.21**

(1) Reference Tables 3.2A-12 to 15 for detailed calculations and notes.

Table 3.2-12 – Summary of Operational Emissions (1)

Pollutant	NOx	CO	VOC	$PM_{10/2.5}$	SOx
Turbines (lb/yr)	11,448	14,725	1,335	5,508	1,974
Black-Start Engine (lb/yr)	19.39	25.90	4.27	0.56	0.12
Fire-Pump Engine (lb/yr)	81.94	15.92	0.01	1.94	0.05
Chiller Cooling Tower (lb/yr)	-	-	-	625	-
Maximum Facility Annual (lb/yr)	35,514	45,672	3,943	18,178	6,336
Maximum Facility Annual (T/yr)	17.76	22.84	1.97	9.09	3.17
Average Facility Annual (T/yr)	**5.77**	**7.38**	**0.67**	**3.07**	**0.99**

(1) Reference Tables 3.2A-12 to 15 for detailed calculations and notes.

3.2.6 Operation Impact Analyses

The air quality impacts associated with the operation of the facility were evaluated using AERMOD and the re-processed meteorological data provided by SDAPCD. The updated emissions were incorporated. Additionally, refinements in certain parameters such as the final grading elevation and stack diameters were also incorporated. The results are summarized below. The modeling inputs are provided in Appendix 3.2-B and the modeling files are included on compact disk (Appendix 3.2-E).

Remainder of page kept intentionally blank.

Table 3.2-13 – Summary of Modeling Results for Facility Operation

Pollutant	Average Time	50% Load		75% Load		100% Load		Back-ground µg/m³	Max Total µg/m³	Most Stringent AAQS µg/m³
		2002 µg/m³	2003 µg/m³	2002 µg/m³	2003 µg/m³	2002 µg/m³	2003 µg/m³			
NO_2	1 HR	141.02	**152.16**	140.99	152.15	140.97	152.14	150.5	302.7	470
	Annual	0.18	0.18	0.24	0.24	**0.31**	0.30	33.9	34.2	100
CO	1 HR	93.62	113.70	91.52	112.67	93.58	**120.26**	7,214	7,334	23,000
	8 HR	16.42	19.02	20.67	25.07	25.46	**31.08**	4,135	4,166	10,000
SO_2	1 HR	7.21	8.79	7.88	9.71	8.32	**10.64**	110	120.6	655
	3 HR	2.49	2.61	3.54	3.81	4.60	**4.90**	52.4	57.3	105
	24 HR	0.29	0.35	0.40	0.52	0.53	**0.70**	23.6	24.3	1,300
	Annual	0.03	0.03	0.04	0.04	**0.06**	0.05	10.5	10.6	80
PM_{10}	24 HR	0.99	1.19	1.26	1.62	1.52	**2.01**	57.0(2)	59.0	50
	Annual	0.10	0.09	0.13	0.12	**0.16**	0.15	27.5(2)	27.7	20
$PM_{2.5}$ (1)	24 HR	0.99	1.19	1.26	1.62	1.52	**2.01**	67.3(2)	69.3	35
	Annual	0.10	0.09	0.13	0.12	**0.16**	0.15	14.1(2)	14.3	12

(1) Over 99% of PM10 emissions are PM2.5 for natural gas combustion source (CARB)
(2) Background concentrations are above the AAQS.

As shown above, except for PM, the predicted impacts for all pollutants at all applicable averaging periods will be below the current most stringent ambient air quality standards. In the case of PM emissions, the existing background concentrations, which are based on the highest reading monitored in downtown Escondido during the last three years, already exceed the ambient air quality standard. However, the predicted PM concentrations are below the significance incremental threshold of 5.0 µg/m³ for the 24-hour standard and 1.0 µg/m³ for the annual standard.

3.3 WATER RESOURCES

A revised project water balance is provided in Drawing 2.C-1 in Appendix 2.3. A revised Table 2.6-1 from the Application, Plant Operations Water Requirements, is provided in Appendix 2.4. The project average overall water consumption has been reduced to 109 AFY, which is an approximately 7 percent reduction compared to the 117.3 AFY average consumption described in the Application. This overall water use reduction is due primarily to the addition of a reverse osmosis water treatment system as described in the Responses to Data Requests Nos. 65, 66 and 67. Considering that the project now also will use reclaimed water for the full amount of project water consumption attributable to the Air Inlet Chiller Cooling System, and considering the approximately 7 percent reduction in overall water consumption, the project's fresh water consumption will be approximately 40 percent less (47 AFY less) than the 117.3 AFY described in the Application.

A copy of the water option agreement with FPUD for the reclaimed water is provided in Appendix 3.3. The reclaimed water quality is provided in Table 2.2-1. Under the terms of the water agreement option, upon Orange Grove Energy's exercise of the option, FPUD is required

to provide the project with disinfected tertiary recycled water that will meet the requirement of California Code of Regulations Title 22 Sections 60301.230 and 60306(a).

FPUD is a public agency treating and serving water, recycled water and wastewater within a 28,000 acre service area in northwestern San Diego County. FPUD owns and operates a water reclamation facility which treats wastewater and serves tertiary treated recycled water within the District's service area, and by contract to customers outside the District. The water will be delivered to Orange Grove Energy at FPUD's Wastewater Treatment Plant No. 1 located near the intersection of Ammunition Road and Alturas Road (See Section 2.2). Use of the reclaimed water from FPUD will have no adverse impact on water resources and no impact on other water users. The reclaimed water that will be provided to Orange Grove Energy is currently being discharged to the Pacific Ocean via a pipeline connecting the FPUD water reclamation plant and other regional water treatment plants with a submarine outfall located offshore of Oceanside. Section 2.2 describes the minor improvements that will be required at the FPUD to provide a filling station for a project water truck to pick up the reclaimed water. The water will be trucked to the site and offloaded into a cooling tower makeup water storage tank.

3.4 BIOLOGICAL RESOURCES

The use of reclaimed water for cooling described in Section 2.2 will not affect biological resources. The reclaimed water that will be obtained from FPUD is currently being discharged to the Pacific Ocean via a pipeline to a submarine outfall offshore of Oceanside. The water will be trucked to the power plant site. The cooling tower makeup water storage tank that will be used to store the water at the power plant site will fit into the site footprint without additional disturbance compared to the project already analyzed in the Application and Responses to Data Requests Set No. 1. At the FPUD wastewater reclamation plant, where the water will be obtained, only minimal infrastructure improvements will be required, and all such improvements will be on disturbed land. The minimal improvements that will be required are addressed in Section 2.2. A biology report for the location of the FPUD wastewater reclamation plant improvements is provided in Appendix 3.4-A.

The refined site layout described in Section 2.3 and included in the project design drawings in Appendix 2.3 results in minor changes to the acreage of project disturbance for various habitat types. Figure 3.4-1 provides the biological habitat boundaries from Figure 6.6-4 of the Application with the maximum limits of project disturbance superimposed. Site features within the limits of disturbance are shown in detail in Drawings Y100, C150 and L100 in Appendix 2.3. Acreages of disturbance for project construction are summarized in Table 3.4-1.

Table 3.4-1: Vegetation Communities Construction Impacts

Habitat/ Vegetation Community	Onsite Grading and Facilities (Acres)	Site Access (Acres)	Fuel Modification Zone (1) (Acres)	Linear Facilities Impact(2) (Acres)	Construction Laydown (Acres)	Total (Acres)
Orchard	7.79	0.72	0.56	0.02	2.47	11.56
Nonnative Grassland	0.06	0.24	0.46	0.06	2.5	3.32
Diegan Coastal Sage Scrub	0.27	0.11	0.13	0.00	0.00	0.51
Disturbed	0.00	0.00	0.02	0.13	0.00	0.15
Urban Developed area	0.00	0.00	0.00	0.02	0.03	0.05
TOTAL	8.12	1.07	1.17	0.23	5.00	15.59

(1) Includes areas where brush will be cleared for fire protection in conformance with County requirements and the project Fire Protection Plan. Fuel modification for 30 feet on both sides of existing Pala Del Norte Road is permitted under an existing multi-agency Memorandum of Understanding (MOU) and United States Fish and Wildlife Service (USFWS) Biological Opinion (BO) included in Appendix 3.4-B. The acreages in this table reflect the fuel modification zone beyond the 30-foot wide zone covered by the MOU and BO on the sides of Pala Del Norte Road.

(2) Includes the gas pipeline, the water pipeline and the electric transmission line interconnection, except that portions of the linear facilities that occur in the roadbed (i.e., pavement or shoulders) of Pala Del Norte Road and SR 76 are not included since these roadways provide no habitat.

Based on discussions with San Diego County Department of Planning and Land Use (DPLU), the County will require 1:1 compensation for the disturbance to Diegan coastal sage scrub instead of the 2:1 ratio outlined in their guidelines, because the amount of disturbance is less than one acre. DPLU will coordinate with the USFWS regarding a de minimis determination of impacts to Diegan coastal sage scrub and therefore exemption from the DPLU Habitat Loss Permit. The County will also require 0.5:1 compensation for the disturbance to nonnative grassland based on their guidelines. Orange Grove Energy proposes to include this compensation as part of the proposed project. Orange Grove Energy will mitigate the 0.5 acres of impact to Diegan coastal sage scrub at a 1:1 ratio through off-site mitigation. At this time Orange Grove Energy is researching California Department of Fish and Game (CDFG) approved mitigation banks in San Diego County (http://www.dfg.ca.gov/habcon/conplan/mitbank/catalogue/catalogue.html) and will coordinate with DPLU for approval. Orange Grove Energy will consult with DPLU to determine acceptable mitigation for the impact to non-native grassland. At this time, it is expected that mitigation for impact to non-native grassland will be accomplished through seeding of lands disturbed by project construction laydown that occurs outside of the plant footprint and fuel modification zones.

Section 6.6 in the Application identified two Parry's tetracoccus (Tetracoccus dioicus) populations located outside the northern and eastern boundaries of the project site. These populations will not be impacted by the project. Since the Application was submitted, an additional population of 10 individuals of Parry's tetracoccus was observed. This additional population is within the area of proposed disturbance and will be impacted by project development. The location is shown in the northwestern corner of the site in Figure 3.4-1. Although this plant species has no federal or state listing status, it is considered sensitive by the California Native Plant Society (List 1B) and the County of San Diego (List A).

Orange Grove Energy will consult with DPLU to determine acceptable mitigation for the impact to the additional population. At this time, it is expected that mitigation for these impacts will be accomplished by salvaging and replanting the plants in a suitable location.

3.5 TRAFFIC AND TRANSPORTATION

There are no updates to project traffic and transportation conditions since the Responses to Data Requests Set No. 1 were submitted, except for the hauling of reclaim water to the site from FPUD Wastewater Treatment Plant No. 1. As described in Section 2.2, water hauling will occur using a 10-wheel tank-on-chassis truck (no trailer) approximately once per hour when the plant is running. Based on typical peaker plant usage in the SDG&E service area, water hauling is only expected to occur about 60 days per year.

The water haul route is shown in Figures 2.2 and 2.3. The roads to be used are summarized in Table 3.5-1. There are no geometric constraints or other identified conditions that could significantly affect the safe use of this route for the size and type of trucks to be used.

Table 3.5-1: Summary of Haul Route Characteristics

Street	Classification	Average Daily Traffic	No. of Lanes (2-dir)	Lane Width (ft)	Posted Speed Limit (mph)
Alturas Road	Not Classified	---	2	10-12	35
Ammunition Road	Collector Road	---	2-4(1)	11-16	NPS
Mission Road					
• Ammunition Road to Rocky Crest Road	Major Road	---	4(1)	11-12	35
• Rocky Crest Road to Winter Haven Road	Major Road	---	4(1,3)	11-12	50
• Winter Haven Road to SR-76	Major Road	---	2(2)	12	50
SR 76					
• Mission Road to Old Highway 395	Expressway/Major Road	19,145	2(2,4)	12-14	NPS(5)
• Old Highway 395 to I-15 NB Ramps	Expressway/Major Road	9,439	4(2)	12	NPS(5)
• I-15 NB Ramps to Pala Del Norte Road	Expressway/Major Road	9,213	2(2,4)	11-16	NPS(5)
Pala del Norte Road	Not Classified/Private	---	2	11	NPS

SR = State Route
--- = Counts not currently available
NPS = no posted speed
(1) Continuous left-turn lane
(2) Intermittent left-turn lane
(3) Raised median
(4) Intermittent turnouts
(5) Default 55 mph

The one trip per hour generated by water hauling will be a de minimis addition to existing traffic loads and will not materially affect existing levels of service. It will add incrementally to cumulative traffic impacts, and this impact will be mitigated to a level that is less than significant through traffic impact fees.

3.6 VISUAL RESOURCES

The refined project layout and changes to the landscaping plan described in Section 2.3 and 2.4 will affect the visual appearance of the plant. Additional visual screening has been added to the landscaping plan along the north side of SR 76, and the southern driveway to the plant has been realigned, with both of these changes designed to reduce the visibility of the plant to motorists on SR 76. Revised photosimulations of the plant from key observation points (KOPs) are provided in Appendix 3.6. These revised photosimulations replace Figures 6.13-17 through 6.13-25 provided in the Responses to Data Requests Set No. 1. A revised Table 1 from Appendix 6.13-A of the Application, characterizing visual aspects of major project equipment, is provided in Appendix 2.4. The project updates to not materially change the analysis of visual impacts presented in the Application, with the exception of changes to the project images in the photosimulations. The primary changes are that the power plant will be somewhat more visible to travelers as they pass KOP 1, and somewhat less noticeable from other nearby locations on SR 76 because of the added vegetation screening north of SR 76 and the realigned southern project driveway.

3.7 PUBLIC HEALTH

Due to a change of specification in the emergency firewater pump engine and the black-start generator, as well as refinements made to certain stack parameters and the final grade level elevation, the previously submitted health risk assessment has been updated. The following sections provide the updated calculations for the engines and the health assessment results for the project.

3.7.1 TAC Emission Estimates

With the specifications on the black-start and firewater pump engines changed, the heat rates and therefore the toxic air contaminants (TAC) emissions have changed. These emissions are recalculated in tables presented in Appendix 3.7-A using emission factors from EPA AP-42 Chapter 3 dated April 2000. The polyaromatic hydrocarbons (PAHs) emissions were speciated using emission factors from CARB CATEF (2000). Since the run-time for the backup engines are inherently low, the impacts associated with these emission changes are minimal. The TAC emissions associated with the turbines remain unchanged.

3.7.2 Health Risk Assessments

Due to minor changes to TAC emissions and exhaust characteristics of the backup engines, as well as certain refinements to stack diameters and a change to the final site grade elevation, the health risk assessment (HRA) is updated. Previous discussions with the SDAPCD resulted in the accepted use of the EPA ISC air dispersion model embodied in the CARB HARP software to the conduct the HRA. Additionally, three years of meteorological data from the Escondido

monitoring station have been approved for use with HARP. Applicable HRA files are included in the compact disc in Appendix 3.2-E. A summary of the results is shown below.

Table 3.7-1 – HARP Health Risk Assessment Results

Risk Criteria	Highest predicted risk based on ISC 3.0 dispersion modeling and Escondido Met Data			Risk Threshold (2)	Meet Limit?
	Offsite(1)	Residence	Worker		
Cancer Risk with T-BACT	1.71 E-6	0.095 E-6	8.98 E-10	10.0 E-6	Yes
Chronic Health Hazard Index	0.0389	0.00217	0.00012	1.0	Yes
Acute Health Hazard Index	1.56	0.415	0.237	1.0	Yes

(1) Offsite predictions are based on maximum health risk based on a potential residential type receptor outside the property boundary.
(2) Applies only to residential and worker risks

4.0 CONCLUSIONS

The information provided in this *Project Updates and Response to CEC Data Requests 99 to 135* updates and augments information provided in the Application and the Responses to Data Requests Set No. 1. The project updates are a result of input received from regulatory agencies and the public, and natural progression of project planning and engineering. The updates presented herein do not result in significant environmental impacts and, in fact, help to reduce environmental impacts in some resource areas such as water resources and visual resources. The Orange Grove Project, as amended with this submittal, includes mitigation for potentially significant impacts to reduce impacts to levels that are less than significant.

FIGURES

FIGURE 2.1 - FPUD WASTEWATER TREATMENT PLANT LOCATION
FIGURE 2.2 - RECLAIM WATER HAUL ROUTE
FIGURE 2.3 - RECLAIM WATER PICKUP LOCATION
FIGURE 3.4-1 – SITE BIOLOGICAL RESOURCES

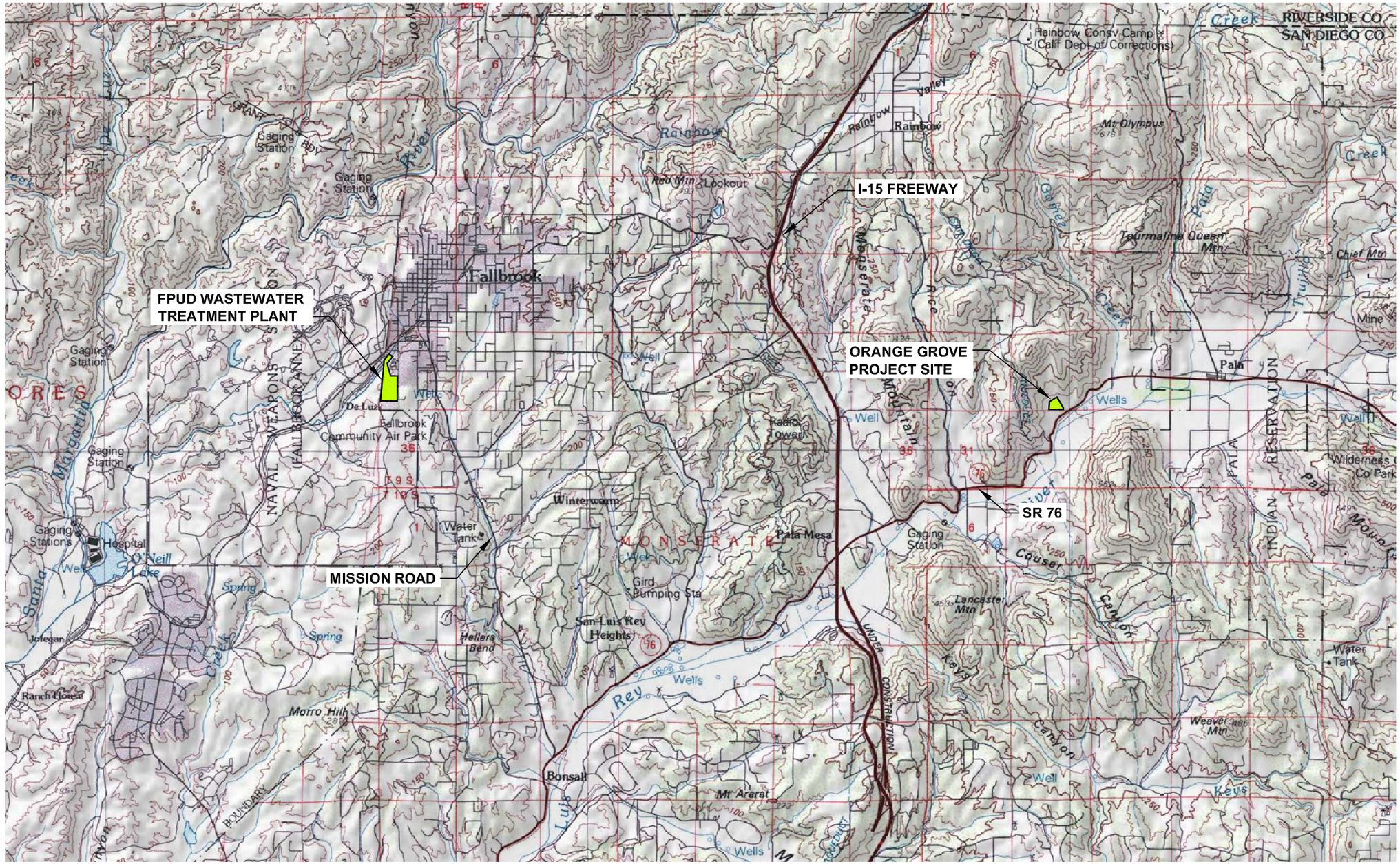

N

SOURCE:

United States Geological Survey
7.5 Minute Topographic Map, 2000:
Morro Hill, Bonsall, Temecula,
and Fallbrook Quadrangles

0 1 3/4 3 1/2 MILES

TRC

PROJECT: 125158

FACILITY:

ORANGE GROVE PROJECT
SAN DIEGO COUNTY, CALIFORNIA

FPUD WASTEWATER TREATMENT PLANT LOCATION

FIGURE 2.1

MS=1:1 L:\Graphics\ProjectsByNumber\29-xxxx\29-0319\290319-FPUD-FIG2.1.dwg Dec 17, 2007 - 4:11pm rcollins

LEGEND

RECLAIM WATER HAUL ROUTE

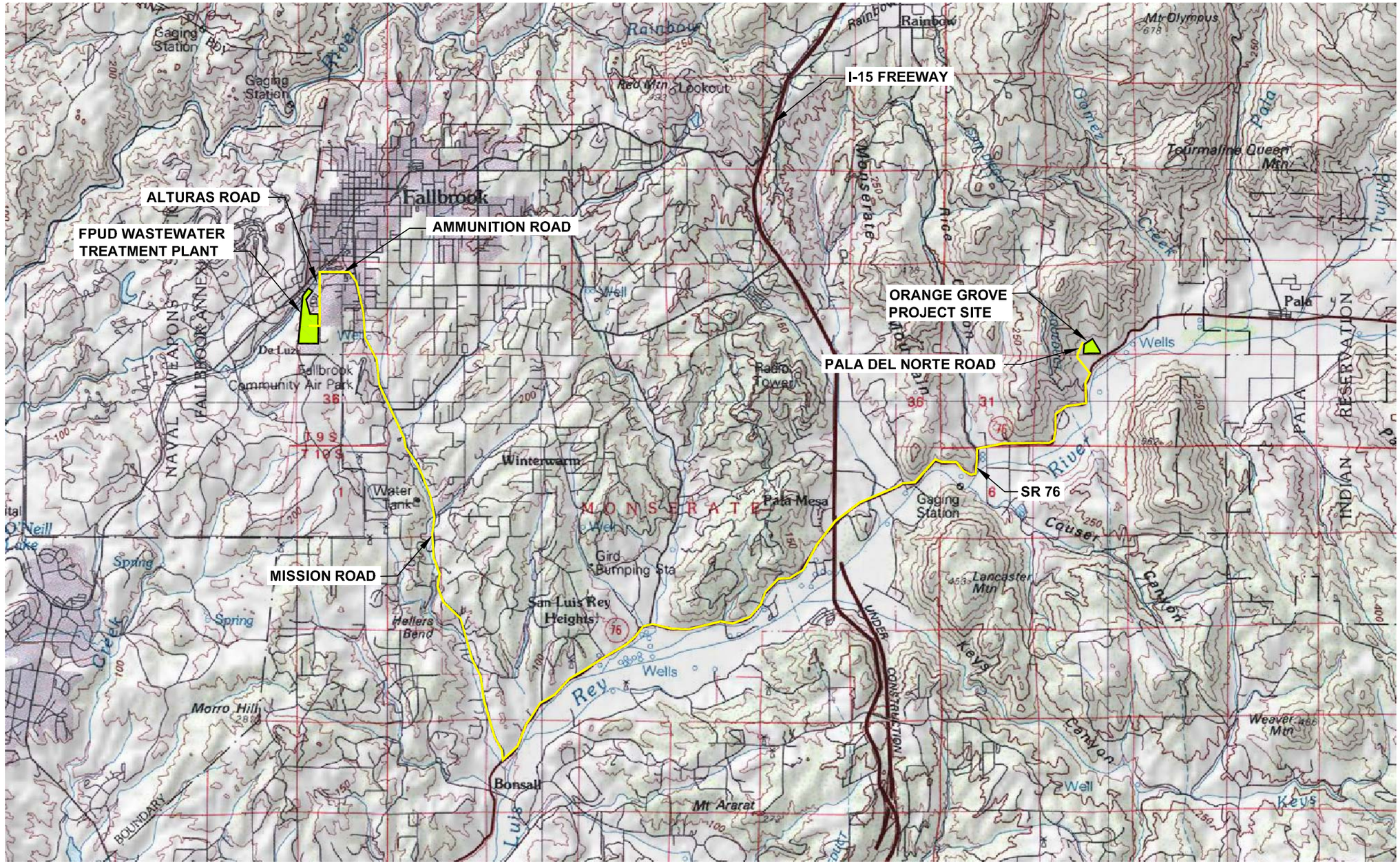

N

SOURCE:

United States Geological Survey 7.5 Minute Topographic Map, 2000: Morro Hill, Bonsall, Temecula, and Fallbrook Quadrangles

0 1 1/2 3 MILES

TRC

PROJECT: 125158

FACILITY:

ORANGE GROVE PROJECT
SAN DIEGO COUNTY, CALIFORNIA

RECLAIM WATER HAUL ROUTE

FIGURE 2.2

MS=1:1 L:\Graphics\ProjectsByNumber\29-xxxx\29-0319\290319-HAUL ROUTE-FIG2.2.dwg Dec 17, 2007 - 4:09pm rcollins

MS=1:1 L:\Graphics\ProjectsByNumber\29-xxxx\29-0319\290319-PICK-UP LOCATION-FIG2.3.dwg Dec 17, 2007 - 4:14pm rcollins

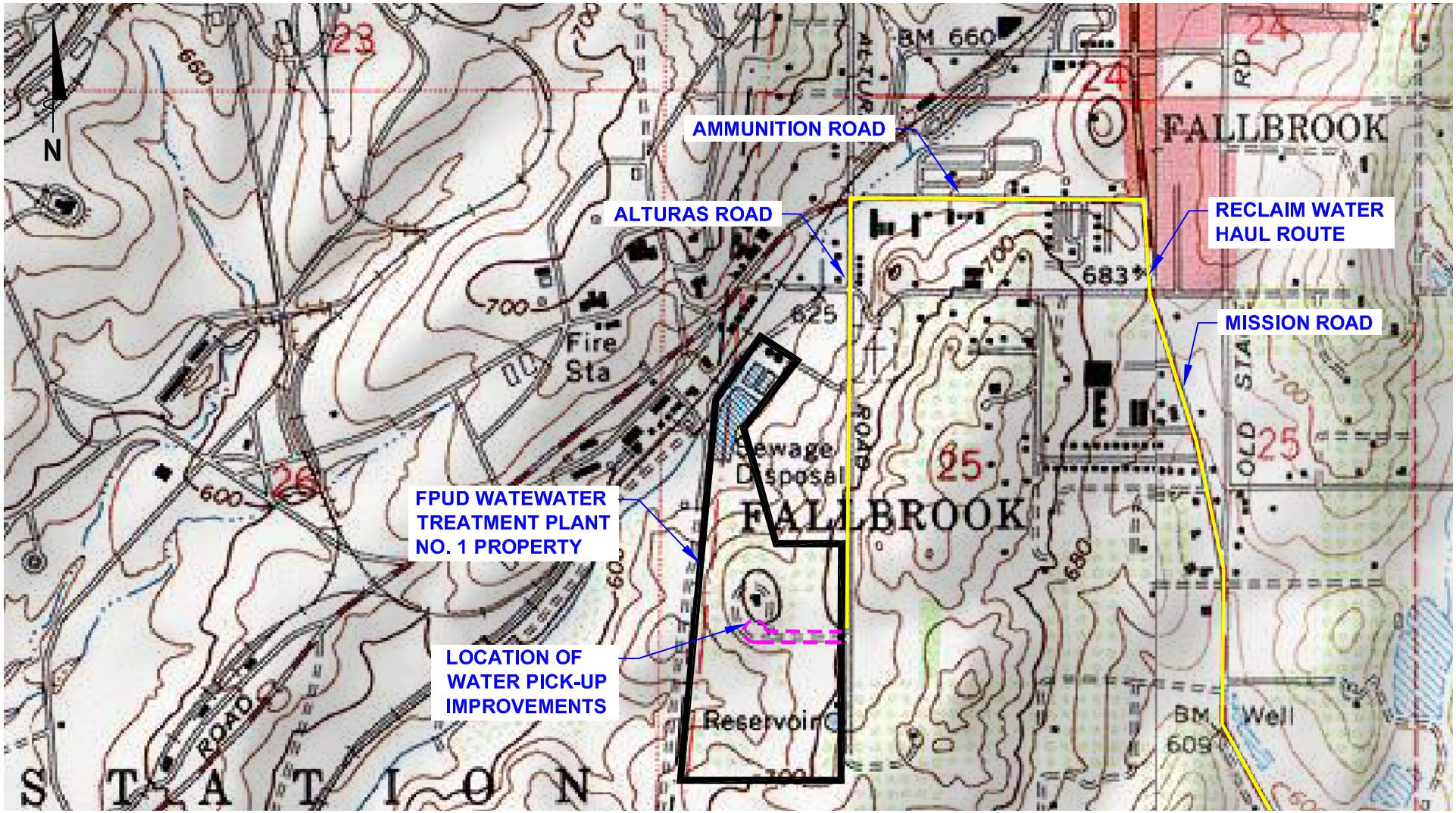

SCALE (FEET)

0 1,000

SOURCE:

United States Geological Survey
7.5 Minute Topographic Map, 2000:
Temecula and Fallbrook Quadrangles

TRC

PROJECT: 125158

FACILITY:

ORANGE GROVE PROJECT
SAN DIEGO COUNTY, CALIFORNIA

RECLAIM WATER PICKUP LOCATION

FIGURE 2.3

LEGEND

- FOUND MONUMENT AS NOTED
- SET 1" IRON PIPE WITH "POSMAS" PLUG UNLESS NOTED OTHERWISE
- PROPERTY LINE
- 400 — EXISTING CONTOUR
- 380 — PROPOSED MAJOR CONTOUR
- 383 — PROPOSED MINOR CONTOUR
- GAS — PROPOSED GAS LINE
- UGE — PROPOSED UNDERGROUND ELECTRICAL
- E — ELECTRIC LINE
- T — TELEPHONE (COMMUNICATIONS) LINE
- PROPOSED RCP STORMWATER PIPE
- W — PROPOSED WATERLINE
- OHE — EXISTING T&D LINE
- X — EXISTING FENCE
- EXISTING ROAD
- X — PROPOSED FENCE
- PARCEL LINE
- DRAINAGE PATH
- EXISTING ORCHARD LINE
- PROPOSED RIP RAP
- PROPOSED CRUSHED ROCK SURFACE
- PROPOSED ROAD SURFACE
- PROPOSED CONCRETE
- PROPOSED NATIVE GROUND COVER
- PROPOSED LANDSCAPING
- FUEL MODIFICATION ZONE A
- FUEL MODIFICATION ZONE B
- ROADWAY FUEL MODIFICATION ZONE
- LIMIT OF DISTURBED AREA (PLANT CONSTRUCTION)
- ENGELMANN OAK (QUERCUS ENGELMANNII)
- PARRY'S TETRACOCCUS (TETRACOCCUS DIOICUS)
- OPEN COAST LIVE OAK WOODLAND (71161)
- DIEGAN COASTAL SAGE SCRUB (32500) (MOSTLY REVEGETATED & DISTURBED)
- ORCHARD (18100)
- NONNATIVE GRASSLANDS (42200)
- DISTURBED (11300)
- URBAN/DEVELOPED (12000)

SITE SCREENING LEGEND

- CL — COAST LIVE OAK OR ENGELMAN OAK POTENTIAL MATURE SIZE
- EO — ENGELMANN OAK POTENTIAL MATURE SIZE
- TY — TOYON POTENTIAL MATURE SIZE
- SS — SUGAR SUMAC POTENTIAL MATURE SIZE
- SHRUBS OF AT LEAST 1 GALLON MIN. SIZE OR TREES OF A 5 GALLON MIN. SIZE PER SECTION 87.417(B) OF THE COUNTY OF SAN DIEGO GRADING ORDINANCES.

EXISTING VEGETATION COMMUNITIES CONSTRUCTION IMPACTS

Habitat/Vegetation Community	Onsite Grading and Facilities (Acres)	Site Access (Acres)	Fuel Modification Zone(1) (Acres)	Linear Facilities Impact(2) (Acres)	Construction Laydown (Acres)	Total (Acres)
Orchard	7.79	0.72	0.56	0.02	2.47	11.56
Nonnative Grassland	0.06	0.24	0.46	0.06	2.50	3.32
Diegan Coastal Sage Scrub	0.27	0.11	0.13	0.00	0.00	0.51
Disturbed	0.00	0.00	0.02	0.13	0.00	0.15
Urban Developed Area	0.00	0.00	0.00	0.02	0.03	0.05
TOTAL	8.12	1.07	1.17	0.23	5.00	15.59

(1) Includes areas where brush will be cleared for fire protection in conformance with County requirements and the project Fire Protection Plan. Fuel modification for 30 feet on both sides of existing Pala Del Norte Road is permitted under an existing multi-agency Memorandum of Understanding (MOU) and US Fish and Wildlife Service Biological Opinion (BO) included in Appendix 3.4-2. The acreages in this table reflects the fuel modification zone beyond the 30-foot wide zone allowed for under the MOU and BO.

(2) Includes the gas pipeline, the water pipeline and the electric transmission line interconnection, except that portions of the linear facilities that occur in the roadbed (i.e., pavement or shoulders) of Pala Del Norte Road and SR 76 and the driveway of the existing Pala substation are not included since these roadways provide no habitat.

NOTES:

Landscaping Plan provided by by Sega, dated 9/12/07.

SCALE (FEET)
0 80 120

REV.	DATE	BY	APP.	DESCRIPTION
	01/04/2008			ISSUED FOR RESPONSES TO DATA REQUEST SET NO. 2
	12/18/2007			DRAFT- ISSUED FOR REVIEW

DESIGNED J.S. DATE 12/18/07
DRAWN BY R.C. DATE 12/18/07
CHECKED - DATE -

TRC
21 TECHNOLOGY DRIVE
IRVINE, CALIFORNIA 92618
(949) 727-9336

TRC

PROJECT: 125158
FACILITY: ORANGE GROVE PROJECT
SAN DIEGO COUNTY , CALIFORNIA
DATE: 12/18/07 SHEET: 1 of 1

TITLE: SITE BIOLOGICAL RESOURCES

DRAWING No. FIGURE 3.4-1 -

J:\Graphics\Projects\Auriant\25-xxx\08-0119\Biology Study\SITE BIOLOGICAL RESOURCES.dwg Jan 05, 2008 - 12:14pm cmilkins

APPENDIX 1.1

REPSONSE TO DATA REQUESTS SET NO. 2

Technical Area: Air Quality
Author: William Walters

BACKGROUND

WATER SOURCE ALTERNATIVE

The applicant's water source alternative will require a significant amount of delivery truck traffic and will create a potentially significant secondary source of emissions during plant operation. Additionally, the water quality may impact the cooling tower particulate emissions. Staff needs additional information to address air quality issues related to the alternative water source.

DATA REQUEST

99. Please provide a description of the water trucks that will be used, including; water capacity, and number of trailers (single or tandem).

RESPONSE

The water truck will be a new 10-wheel, tank-on-chassis model, with no trailer. See Section 2.2 in the main text of this submittal for additional details on water hauling.

100. Please indicate if the applicant will buy the water tanker trucks (new or used), or if the water trucking be contracted to another party.

RESPONSE

Orange Grove Energy intends to purchase a new water truck,.

101. Please provide the round trip route and distance.

RESPONSE

The round trip route is shown in Figure 2.2 in the main text section of this submittal. The round trip distance is 31.2 miles.

102. Please quantify the total maximum daily and annual trips and indicate whether the expected peak delivery levels will coincide with expected peak operating intervals for the power plant.

RESPONSE

Water hauling is described in Section 2.2 in the main text of this submittal. For normal operations, the maximum number of round trips is expected to be 12 per

day. As described in Section 2.2, there may be rare instances with unusual operations where 24 trips per day may occur. The maximum annual cooling water use would be 39.7 acre-feet if both turbines were operated for the maximum permitted number of hours at summer design conditions. This would require 3,152 water truck trips if such a year were ever to occur.

103. Please quantify the criteria pollutant water truck emissions.

RESPONSE

Using the highest (most conservative) South Coast Air Quality Management District (SCAQMD) emission factors for delivery trucks (Emfac 2007 Version 2.3) with model years ranging from 1982 to 2008, which represents the commitment of a new water truck scenario, the estimated criteria pollutant emissions from water truck deliveries based on a 31.2 mile round trip are:

Pollutant	EF (lb/Mile)	Hourly (lb/hr)	Daily (lb/day)	Annual (lb/yr)
CO	0.00569435	0.178	2.14	561
NOx	0.00589869	0.184	2.21	580
ROG	0.00088403	0.028	0.34	88
SOx	0.00002716	0.001	0.01	3
PM10	0.00027657	0.009	0.11	28
PM2.5	0.00020187	0.006	0.07	19

Actual emissions are expected to be even less since the turbines will not be operated near the permitted level, and inlet air cooling may not be on at all time.

104. Please provide the water Total Dissolved Solids (TDS) content, and the resulting cooling tower recirculating water TDS content.

RESPONSE

The tertiary treated water quality profile for 2005 to 2007 is provided in Table 2-1 in the main text of this submittal. The average TDS are 793, 746, and 776 parts per million (ppm) for years 2005, 2006 and 2007, respectively. The highest TDS reading was in May 2005 at 980 ppm. For equipment specification purposes, the project design has been refined to use a starting TDS value of 1,186 ppm, and 4 cycles of concentration. The resulting TDS is expected to be at a maximum of 4,594 ppm.

105. Please quantify the hourly, daily, and annual cooling tower particulate emissions resulting for this water supply.

RESPONSE

Further evaluation of the cooling water system resulted in a need to update the cooling tower flow rate to 8,500 gallons per minute (gpm). At 0.001%, the drift rate is 0.085 gpm.

PM10 Emission = (TDS/1e6) (drift rate)(density)(operating hours)

Maximum
Hourly: PM10 Emission = (4,594/1e6)(0.085 gpm)(60)(8.34)(1) = 0.195 lb/hr
Daily: PM10 Emission = (4,594/1e6)(0.085 gpm)(60)(8.34)(24) = 4.69 lb/day
Annually: PM10 Emission = (4,594/1e6)(0.085 gpm)(60)(8.34)(3,200) = 625.3 lb/yr

106. Please identify any proposals to mitigate (e.g. types of trucks that emit at lower levels) water truck emissions.

RESPONSE

The trucking of tertiary treated water is in itself an environmental mitigation measure for water reclamation and fresh water conservation. In addition, Orange Grove Energy will commit to commissioning a new delivery truck running on ultra-low sulfur diesel for this purpose in order to limit emissions.

BACKGROUND

DISPERSION MODEL - VERSION OF DISPERSION MODEL

The applicant used a dated version of the AERMOD dispersion modeling system. The last update was performed in January of 2007, which would have given the applicant adequate time to use this latest version of the modeling system for the Small Power Plant Exemption (SPPE) application provided in July 2007. In consultation with the San Diego Air Pollution Control District (SDAPCD), staff has determined that SDAPCD will require an air quality impact analysis using the latest version of AERMOD modeling system (AERMOD/AERMET/AERMAP) be used for that analysis. To insure consistency that air quality impacts are adequately assessed, the applicant must revise the modeling to the latest version of the AERMOD modeling system.

DATA REQUEST

107. Please revise the construction and operating impact analysis using the latest version of the AERMOD modeling system.

RESPONSE

All prior modeling were in fact completed using the latest version of AERMOD (Version 07026 – 01/26/2007), AERMAP (version 06341 – 12/07/2006), and AERMET (version 06341 –12/07/2006). BEEST Suite 9.63 from BEE-LINE software was used, which was updated with the latest version of AERMOD. The header for all submitted modeling files clearly identified that AERMOD Version 07026 was used.

While the Gregory Canyon meteorological data provided by the SDAPCD was pre-processed with an earlier version of AERMET (version 04300 – 10/26/2004), it was the latest data available from the agency at the time. A recent re-run of the modeling using the re-processed meteorological data did not show any difference in the maximum impacts for the project.

Please refer to new modeling completed for this project in Section 3.2.1 in the main text of this submittal.

BACKGROUND

CONSTRUCTION EMISSION CALCULATIONS – COMPLETENESS

The fugitive dust emissions provided as a response to Data Request 5 should include emissions for onsite activities, in addition to only soil excavation. Included should be scraper travel, dozer and grader emissions using AP-42 emission factors. The response to Data Request 5 appears to underestimate the fugitive dust emissions for this project that will occur from the significant soil movement requirements necessary to level the site.

DATA REQUEST

108. Please provide particulate emissions estimates for all construction activities including truck and construction employee travel over unpaved roads/surfaces, scraper travel emissions, dozer fugitive emissions, and motor grader fugitive dust emissions using appropriate AP-42 calculation procedures.

RESPONSE

Please refer to updated emission estimates in Section 3.2.1 in the main text of this submittal.

BACKGROUND

CONSTRUCTION EMISSION CALCULATIONS – EMISSION FACTORS

The on-road construction equipment emissions estimate provided as a response to the Data Response 6 appears to be underestimated, as it incorrectly uses delivery vehicle emission factors for heavy duty diesel trucks, such as concrete trucks, dump trucks, and

water trucks. The emission estimate needs to be corrected using proper emission factors.

DATA REQUEST

109. Please revise the on-road vehicle emission estimates to reflect expected use of heavy duty diesel trucks during the project construction phase. We recommend using the latest South Coast Air Quality Management District on-road emission factors, appropriate for heavy-heavy duty truck travel required during construction.

RESPONSE

Please refer to updated emission estimates in Section 3.2.1 in the main text of this submittal.

BACKGROUND

CONSTRUCTION EMISSION DISPERSION MODELING

There are major differences between the response to Data Request 8 when it is compared with the emissions presented In Data Response Exhibit 3-1 and the emissions modeled. A review of the model indicates the values are inconsistent, and in some cases the error is as much as a factor of 24. The modeled construction emissions need to match the construction emission estimate. In addition, the response showed a problematic NO2 exceedance based on the current standard of 470 µg/m3. The modeling was overly conservative and needs to be revised to use the ozone limiting method (NOx OLM), with or without the plume volume molar ratio method (PVMRM), option in AERMOD to provide more reasonable NO2 impact results.

DATA REQUEST

110. Please correct the construction emission modeling, using the latest version of the AERMOD modeling system, so that it correctly matches the final construction emission estimate on an hourly, daily, and annual basis.

RESPONSE

The latest AERMOD modeling system was used in prior analyses. Please refer to new modeling completed for this project in Section 3.2.2 in the main text of this submittal.

111. Please revise the 1-hour NOx modeling incorporating NOx OLM, with or without PVMRM, using appropriate hourly ozone data obtained from the San Diego Air Pollution Control District (District) or the California Air Resource Board.

RESPONSE

Please refer to the new modeling completed for this project in Section 3.2.2 in the main text of this submittal where NOx OLM is applied to just the 1-hour NOx modeling without PVMRM.

BACKGROUND

GAS TURBINE BEST AVAILABLE CONTROL TECHNOLOGY (BACT) LEVELS FOR VOC

The response to Data Request 10 indicates that the proposed BACT VOC emissions concentration will be 2.0 ppm, but the revised emission estimate provided in Exhibit 28-1, Table 28-2 seems to indicate an emission basis of approximately 0.75 ppm. Staff needs clarification of the BACT VOC emission concentration limit and hourly emissions basis for the gas turbines.

DATA REQUEST

112. Please provide the calculation of the VOC hourly emissions provided in Exhibit 28-1 of the first round of data responses based on the requested BACT VOC emission concentration limit of 2.0 ppm. While we are aware that the turbine manufacturer may have provided VOC hourly emissions data, please note that we need a response reflecting calculation for a consistent, specific BACT limit.

RESPONSE

A review of the data shows that the emission rates provided by GE were indeed based on a volatile organic compound (VOC) limit of 2.0 parts per million by volume (ppmv) at the turbine exit. The emission estimates provided in Table 28-2 reflect a reduction of VOC anticipated from the use of the oxidation catalyst. Orange Grove Energy will, however, forgo this reduction for the purpose of permitting.

Please refer to updated emission estimates completed for this project in Section 3.2.5 in the main text of this submittal.

BACKGROUND

GAS TURBINE BEST AVAILABLE CONTROL TECHNOLOGY (BACT) LEVELS FOR AMMONIA

The response to Data Request 11 indicates that the ammonia slip emissions are requested to be 10 ppm. Staff notes that the proposed MMC Chula Vista (07-AF-4 project, a project also currently undergoing licensing that also uses LM6000 gas turbines, is proposing an ammonia limit of 5 ppm. Staff needs the applicant to justify the 10 ppm ammonia slip limit requested for the Orange Grove project.

DATA REQUEST

113. Please justify, in consideration of the 5 ppm ammonia slip limit request from the MMC Chula Vista project, the requested gas turbine ammonia slip emission limit of 10 ppm for the Orange Grove project.

RESPONSE

Orange Grove Energy's specifications to the SCR system vendor includes the 5 ppm ammonia slip limit.

BACKGROUND

GAS TURBINE INITIAL COMMISSIONING EMISSIONS

Staff needs the data responses regarding the gas turbine initial commissioning emissions (Data Request 12 and 13) to be augmented to fully evaluate the initial commissioning impact analysis. Specifically, the duration of commissioning needs to be clarified and the exhaust parameters and emissions for each type of initial commissioning test are needed to evaluate the initial commissioning impacts.

DATA REQUEST

114. Please confirm the information regarding commissioning test duration given in the SPPE application is the requested worst-case duration and the information provided in the response to Data Request 12 is a more-likely or best-case scenario.

RESPONSE

A more detailed emission and modeling analysis was submitted to the SDAPCD and was copied to the California Energy Commission in November. Sections 3.2.3 and 3.2.4 in the main text of this submittal provide a recap for this analysis.

115. The information provided for Data Response 13 provides a proxy for the worst case commissioning emissions and exhaust parameters. Staff cannot confirm this proxy adequately covers the worst-case conditions for all of the commissioning tests. Please provide the expected exhaust parameters (temperature and velocity), and criteria pollutant emission rates for each of the initial commissioning tests identified in the response to Data Request 12.

RESPONSE

Refer to response to Data Request 114.

BACKGROUND

FIRE PUMP ENGINE DESIGN/EMISSIONS

The initial responses to Data Requests 16 and 17 appear to provide incorrect information based on the related firewater pump engine information provided in the accompanying Exhibit 16-1, 17-1, and 28-1. Staff needs clarification on this information.

DATA REQUEST

116. Please confirm the emissions from the firewater pump engine, as shown in Exhibit 28-1, Table 28-3 were in fact increased, in contrast to the statement made in the response to Data Request 16 that emissions weren't impacted, based on the increase in requested engine horsepower.

RESPONSE

The statement in Data Request 16 was made to reference that previous emission factors were still valid. Staff is correct in the assessment that the emissions shown in Table 28-3 have indeed increased.

117. The basis for the SO_X emissions from the firewater pump engine was not corrected to ultra low sulfur (15 ppm sulfur) diesel fuel, as noted to be the fuel type in the response to Data Request 17. Please confirm the acceptability of staff making that emission rate correction.

RESPONSE

Please note that the fire water pump engine specifications have changed to accommodate updated fire protection needs (See Appendix 3.2-D in this submittal). The manufacturer has provided emission data for ultra-low sulfur diesel fuel. Please refer to updated emission estimates completed for this project in Section 3.2.5 in the main text of this submittal.

BACKGROUND

COOLING TOWER EMISSIONS

Staff's review of the cooling tower emission information provided in the response to Data Requests indicate the responses provide more reasonable estimates than found in the SPPE application for the cooling tower recirculating flow, drift fraction, and emission rate. However, errors have been identified in the emission calculation, which would require additional confirmation of the drift fraction and water quality calculations.

DATA REQUEST

118. The applicant's response to Data Request 18 provides a specification for the drift eliminator. The District does not require that cooling towers get an air permit;

therefore, in order to verify the drift fraction proposal, staff will incorporate a cooling tower design condition to be verified during construction that will confirm that the proper drift eliminator has been selected for the project. Please confirm that the applicant can stipulate to the drift fraction provided (0.001%) in the response to Data Request 18.

RESPONSE

Orange Grove Energy stipulates to a drift fraction of 0.001% for the cooling tower.

119. The applicant's response to Data Request 19 and Exhibit 28-1 Table 28-4 appear to provide incorrect hourly and maximum daily PM10 emission levels from the cooling tower. Staff's review would indicate the correct hourly and maximum daily emissions would be 0.078 Ib/hour and 1.87 Ibs/day. Please confirm these values or otherwise provide corrected calculations.

RESPONSE

Please reference Data Response 105 for updated emission estimates.

120. The applicant's response to Data Request 21 provides a recirculating water TDS concentration of 2,590 ppm. Staff cannot duplicate the calculation for this value based on the applicant's assumption of five cycles of concentration and the water quality information provided in Exhibit 21-1. Please provide the calculation for the recirculating water TDS concentration.

RESPONSE

The previous TDS concentration of 2,590 ppm of the cooling water blowdown was based on an average potable water TDS concentration from Jan 2005 to Oct 2007 of 518 ppm (Fallbrook Water District) and 5 cycles of concentration. Please reference Data Response 105 for updated emission estimates.

BACKGROUND

OPERATING EMISSIONS DISPERSION MODELING – EMISSION INPUTS

Staff has identified errors in the applicant's revised modeling in response to Data Request 27 related to the emission inputs. Specifically, the 8-hour CO and 24-hour SO2 emission inputs for the gas turbines appear to be too high by a factor of 2. Additionally, the 24-hour PM10 emission modeling emission inputs for the cooling tower are incorrect (daily rate is too low based on the incorrect daily number given in Exhibit 28-1, Table 28-4) and the annual cooling tower emissions are modeling incorrectly as the third cooling tower cell was omitted. Staff requires these incorrect inputs to be corrected when the applicant revises the modeling analysis.

DATA REQUEST

121. When remodeling the operating emissions, using the current version of the AERMOD modeling system, please correct the 8-hour CO and 24-hour SO2 emission inputs for the gas turbines, the 24-hour PM10 emission inputs for the cooling tower, and add the third cooling tower cell for the annual PM10 modeling.

RESPONSE

Please refer to new modeling completed for this project in Section 3.2.6 in the main text of this submittal.

BACKGROUND

OPERATING EMISSIONS – REVISED EMISSION VALUES

The applicant's data response Exhibit 28-1 provides revised gas turbine hourly emissions for all of the criteria pollutants. The revision for the SOx emission rate, based on fuel sulfur content, was explained in other data responses; however, the revisions to the NOx, CO, VOC, and PM emission rates were not explained. Staff needs additional information to understand the rationale behind all of these emission rate revisions.

DATA REQUEST

122. Please explain the rationale for the gas turbine hourly emission rate revisions for NOx, CO, VOC, and PM10.

RESPONSE

The revised gas turbine hourly emission rates in Exhibit 28-1 are based on refined emission data obtained from GE using site specific annual average ambient conditions and specific fuel value as provided by San Diego Gas & Electric (SDG&E).

BACKGROUND

AIR QUALITY PERMIT APPLICATION

The proposed project will require an air quality permit from the SDAPCD. Staff will need to coordinate with the District to keep apprised of any air quality issues determined by the District during their permit review.

DATA REQUEST

123. Please provide a copy of the permit application materials, other than direct copies of SPPE application materials, which have been submitted to the SDAPCD.

RESPONSE

A copy of the application filed with the SDAPCD and subsequent addendum are provided as Exhibit 123-1 and Exhibit 123-2 in this appendix.

124. Until the case has been decided by the Commission, please provide copies of all substantive materials submitted to and received by the SDAPCD within a week of their submittal/receipt.

RESPONSE

Orange Grove Energy will continue to submit a copy of all substantive materials to the CEC as it did with the updated modeling for the commissioning phase of the project. With Exhibit 123-1, CEC has all substantive materials previously submitted to SDAPCD.

Technical Area: Biological Resources
Author: Susan Sanders

BACKGROUND

Pages 6.6-18 of the application state that the federally threatened coastal California gnatcatcher has "moderate to high potential to occur within 1 mile of the Site or within 1,000 feet of Project linear corridors". The SPPE application also documents records for this species within three miles of the project site. Sage scrub habitat, which could support this species, occurs at the project site and will be impacted by construction. Project biologists did not detect gnatcatchers during the two site visits. However, the U.S. Fish and wildlife Service (USFWS) typically considers a listed species to be present in an area (if the project site is within the range of the species and if suitable habitat is present) unless they have the results of protocol-level surveys documenting absence.

DATA REQUEST

125. a. Please provide results of surveys for coastal California gnatcatchers, conducted in accordance with the USFWS survey guidelines (Coastal California Gnatcatcher (*Polioptila californica californica*) Presence/Absence Survey Guidelines, February 28, 1997), or provide confirmation that the USFWS considers such surveys unnecessary to assess the impacts of the proposed project.

b. If survey results indicate the gnatcatcher is present on the site and/or surrounding area, please discuss the project's impact, if any, and a corresponding mitigation proposal.

RESPONSE

a. Focused surveys for coastal California gnatcatchers (*Polioptila californica californica*) are currently being conducted in accordance with the USFWS Presence/Absence Survey Guidelines dated February 28, 1997. Surveys commenced on December 5, 2007. Between July 1 and March 14 the protocol requires a minimum of 9 surveys at least two weeks apart. As of the date of this submittal, a total of 3 surveys have been completed for the project site and no gnatcatchers have been detected. The surveys are scheduled for completion by March 26, 2008.

Surveys are also being conducted for the gas and water pipelines. As of this submittal a total of 1 survey has been completed for the pipelines, conducted on December 21, 2007. Unfavorable weather conditions have delayed completion of the 2nd survey. One pair of gnatcatchers was observed within 500 feet of Pala

Road (SR-76), the proposed alignment of the gas line, within a patch of prickly pear cactus (*Opuntia* sp.).

b. A survey report will be prepared according to the USFWS guidelines following completion of the surveys. Any expected project impacts and proposed mitigation will be addressed at that time. A copy of this report will be provided to CEC upon completion.

BACKGROUND

Page 2-2 of the application states: "Project construction will disturb a total of approximately 15.8 acres; 8.5 acres onsite and 7.3 acres adjacent ot the site … native planting will occur following construction, so that the long-term disturbance for the Project will be only approximately 5 acres and there will be a net increase in native habitat area". Table 6.6-5 on page 6.6-39 of the application specifies that the following acreage of new native habitat will be created in the project area:

- 4.4 acres of Diegan coastal sage scrub habitat
- 4.8 acres of native plant ground stabilization (e.g., grass and shrubs)
- 1 acre native plant landscaping (i.e., trees and shrubs)

Figure 2.2-8 in the SPPE application provides a Preliminary Landscape Plan showing cost live or Englemann oaks, toyon, and sugar sumac planted at various locations on the eastern and southern perimeter fencing for visual screening, and notes that cut and fill slopes constructed during grading will be hydroseeded with Coastal sage scrub/grassland seed mixture to stabilize soils and minimize erosion.

In reviewing this figure, it is not possible for staff to determine how this landscaping plan accomplishes restoration of 4.4 acres of coastal sage scrub, 4.8 acres of native plant ground stabilization, and 1 acre of native plant landscaping. Appendix 2-A provides a list of native trees, shrubs and grasses that might be used (and does not include toyon or sugar sumac, two of the three species specified in the landscaping plan), but does not provide any additional information except to state in a footnote that: "Native species selected for planting will be finalized in consultation with DPLU considering the Project Fire Protection Plan and County requirements.

Landscaping and erosion control, even using native species, is generally not considered compensatory mitigation for habitat loss by resource agencies such as USFWS and California Department of Fish and Game (CDFG). Coastal sage scrub is one of the most intractable vegetation types to restore, and cannot be accomplished by hydroseeding a native grass/shrub seed mixture. Oaks and native shrubs planted for aesthetic purposes and visual screening do not provide adequate habitat values to be considered compensatory mitigation, nor can they be considered part of a self-sustaining, natural ecosystem, particularly if they are irrigated and maintained as ornamental landscaping.

DATA REQUEST

126. Please provide a native plant restoration plan that would mitigate for construction impacts to 15.8 acres, including loss of 0.6 acres of Diegan coastal sage scrub, and that would fulfill the goals stated in the application (to have a net increase in "*native habitat area*"). Please consult with USFWS and CDFG in preparation of this plan to satisfy concerns they may have relating to compensatory mitigation for federal and state listed species that could be affected by the proposed project.

RESPONSE

The precise acreages of project disturbance and planting with native species have been refined based on an updated site layout, and the updated acreages are presented in Section 3.4 in the main text of this submittal. The proposed native landscaping is a project design feature to avoid introducing exotic plants to the project site and surrounding areas where construction disturbances will occur and mitigation of natural habitat impact is not a primary intended purpose. Native habitat restoration is not the goal of this planting, although it will ultimately result in a net increase of native vegetation since the area that will disturbed by project construction consists almost exclusively of non-native habitat. In addition, as described in Section 3.4 in the main text of this submittal, based on discussions with the County of San Diego, the project design has been modified to include compensation at a 1:1 ratio for the de minimis amount of impact to native habitat (i.e. Diegan coastal sage scrub) that will occur. USFWS and CDFG will be consulted regarding any potential impacts to federal and state listed species and compensatory mitigation through project permitting with DPLU.

Other than the Diegan coastal sage scrub, the only surface disturbance that may require habitat impact mitigation is the disturbance to non-native grassland, which DPLU requires to be offset at a ratio of 0.5:1 as described in Section 3.4 in the main text of this submittal. The majority of the construction laydown area that will be disturbed by project construction lies outside of the plant footprint and fuel modification zones and provides adequate acreage to offset the impact to non-native grassland at a ratio greater than that required by DPLU. It is anticipated that Orange Grove Energy will reseed this area with native grasses, shrubs and trees to accomplish the necessary offset for disturbance to non-native grassland. Orange Grove Energy will coordinate with DPLU to accomplish the required habitat mitigation in accordance with DPLU requirements.

BACKGROUND

The application does not discuss the location of laydown or staging areas for either the gas or water pipeline construction, but staff believes that such areas will be needed

along the alignments to park vehicles/equipment and store pipes and other materials during construction. In the description of biological resource survey field methods on page 6.6-22, the application states that biological resource surveys were conducted by:

- "Slowly driving Pala Del Norte Road, a paved road that parallels the western boundary of the Site before turning north and upslope of the Site. This method was chosen over walking linear transects of the proposed water corridor due to the open visibility of habitat on either side of the road;
- Driving multiple slow passes on SR 76 between the Site and Rice Canyon Road. This method was chosen over walking linear transects of the proposed gas corridor due to the open visibility of habitat on either side of the road and for safety reasons.

Based on this description of field methods, there has not been an on-foot biological survey for areas associated with pipeline construction, yet such surveys would be needed to detect rare plants or adequately assess potential impacts to listed species and other sensitive biological resources. Habitat for a number of listed species, including arroyo toad, least Bell's vireo, and southwestern willow flycatcher, occur near the project area, and staff believes the project has potential to affect listed species.

Staff also needs to know if the gas pipeline will be installed under the paved surface of the SR 76, or on the shoulder some distance form edge of pavement. If the latter, it is important to know how far from the edge of pavement construction is proposed because of sensitive resources immediately adjacent to SR 76. Page 2.35 of the application states: "the natural gas and water pipelines will be installed underground within the roadbed and shoulders of SR 76 and Pala Del Norte Road, respectively". But page 6.6-36 of the application states: "The gas pipeline lateral … will be installed within the existing limits of disturbance of SR 76, as far out of traffic lanes as practicable." Staff needs clarification as to how far from the edge of pavement gas pipeline construction is proposed, and to have some more detail on construction locations for both pipelines.

DATA REQUEST

127. Please provide a detailed figure, similar in scale to the map in figure 6.6-4 of the application that depicts the alignment of the gas pipeline with respect to sensitive biological resources, such as mature trees and riparian habitat. This figure should also show the location of proposed staging/laydown areas for the gas and water pipelines.

RESPONSE

Exhibit 127-1 in this appendix includes a map depicting the alignment of the gas pipeline with respect to sensitive biological resources. The staging/laydown areas for the gas and water pipelines will occur at the project construction laydown area adjacent to and south of the site. Biological resources for this laydown area are

fully addressed in conjunction with site construction impacts. There will be no separate staging/laydown areas for the gas pipeline or water pipeline.

DATA REQUEST

128. Please provide survey results from recent field surveys documenting that a qualified biologist has adequately surveyed the proposed staging/laydown sites and all other potential impact areas associated with pipeline construction.

RESPONSE

A sensitive biological resources survey for the gas and water pipelines was conducted by qualified biologist Karen Wilson. The survey results and potential impacts are outlined in a report provided as Exhibit 127-1.

Technical Area: Cultural Resources
Author: Dorothy Torres

BACKGROUND

Figure 1a, submitted in the Confidential Report, does not include the location of all previously recorded cultural resources within 200 feet of the project site or within 50 feet of the centerlines of the linear facilities. These previously recorded or identified cultural resources were discussed in the original Confidential Report and in information compiled by the California Historical Resources Information System (CHRIS), but their locations are not plotted on Figure 1a. To ensure that all impacts to cultural resources are appropriately mitigated, it is necessary that these locations be plotted on a map to show their spatial relationship to the proposed project so staff can include mitigation, if necessary, in the analysis.

DATA REQUEST

129. Please up-date Figure 1a with location of the following cultural resources and provide a copy of the figure to staff:

    a. SDI-13769, SDI-773, and SDI-13762
    b. Butterfield Stage Line Route and Route East Stage Line.

    RESPONSE

    The location of resource SDI-13769 is already depicted on Figure 1a of the Supplemental Archaeological Survey Report (October 2007). It is at the far right hand edge of the figure approximately one-third of the way down the page.

    Resource SDI-773, as mapped by the Information Center, is approximately 0.50-mile west of the west edge of Figure 1a and well beyond any project facilities. Please reference the Records Center Report submitted previously by Orange Grove Energy for the site record form and location maps for this resource.

    Resource SDI-13762 is also referred to as SDI-13767H, PS-S-2 and P-37-013762, as evidenced in the CHRIS archaeological site record for Permanent Trinomial Site No. CA-SDI-13767H that was previously provided to CEC staff under confidential cover. The location is shown in the upper right corner in Figure 1b of the Supplemental Survey Report (October 2007) as CA-SDI-13767.

    The Butterfield Stage Line Route is depicted in Exhibit 129-1 that will be submitted to CEC under separate confidential cover. The primary Butterfield Stage route was parallel to modern State Route 79 between, for example,

Temecula and Aguanaga. Along this section, the stage route would have been, at its closest, approximately 6 miles north of the Orange Grove project site. Additional stage routes were west of the project area along modern Highway 15 and along the route of modern Mission Road (S13).

References:

Office of County Assessor, 1955, "Map Showing Roads & Trails in Use from 1769 – 1885", on file South Coastal Information Center [Exhibit 129-2; to be submitted to CEC under separate confidential cover];

Beck, W. and Y. Haase, 1974, "Historical Atlas of California" (52. The Butterfield Overland Mail Route), University of Oklahoma Press;

Conkling, R.P and R.P. Conkling, 1947, "Map of the Butterfield Overland Mail Route: over the southern route 1858 – 1861 and the lines followed over the central route 1861 -1869", Arthur H. Clark, Co., Glendale, CA.

We are not aware of any "East Stage Line" in the project vicinity. The historical routes and trails map provided by South Coast Information Center does not show any East Stage Line in the project vicinity.

BACKGROUND

Figure 1a in the Confidential Report indicates the location of many archeological sites previously identified near the proposed gas line route. Whether these archeological sites are within 50 feet of the gas line route, it does not seem reasonable to assume that archeological sites located on the north side of Highway 76 may not extend to the south side which is the proposed gas pipeline route. It is essential that sites that may exist in the part of the gas line route be identified prior to construction to allow avoidance or mitigation including data recovery.

DATA REQUEST

130. Please provide an archaeological testing plan to verify the presence or absence of cultural material at previously recorded sites north of Highway 76 to determine whether they extend under the roadway to the south side of Highway 76. If locations of some of these sites are indeterminate, please state. The testing plan needs to address the following previously recorded archaeological sites: SDI-683, SDI-14609, SDI-12585, SDI-744 A, 744B2, SDI-786, SDI-13004, 13768, 13769; SDI-13005; SDI-13766, Locus A, and SDI-13007.

RESPONSE

Archaeological survey along the north and south sides of Highway 76 to assess the potential effects of the proposed gas line for the Orange Grove Project has located a single cultural resource, site CA-SDI-683, which is located at the edge of the survey corridor, away from planned disturbance. Please see previous response to Data Request No. 48. The highway has cut through the landform on which site SDI-683 is located. Pedestrian archaeological survey did not locate any features or cultural deposit immediately adjacent the road cut nor along the opposite side of the highway at this location.

The locations of sites SDI-14609, SDI-12585, SDI-744 A, 744B2, SDI-786, SDI-13004, 13768, 13769; SDI-13005; SDI-13766, Locus A, could not be determined based on the pedestrian survey along the highway. The survey did not find these resources within the 50-foot survey corridor for the Project gas line.

Site SDI-13007H is a sheet refuse scatter on the north side of the highway. The site has been evaluated as not eligible for listing in the California Register of Historical Resources. (Please see previous response to Data Request No. 48 and Supplemental Archaeological Survey Report, Section 4.3 (October 2007)). The area on the south side of Highway 76, opposite the location of site SDI-13007, has been graded and filled and there is no evidence of cultural remains in this area apart from modern refuse discarded along the highway. Archaeological testing on the south side of the highway in the access road would not be effectual. No project related development would occur south of Highway 76 at this location.

Archaeological testing at site SDI-683 is not warranted because all observed cultural remains associated with the site are well north of the proposed gas line alignment and the topographic setting of the resource, above the level of the highway, precludes encroachment on the site by construction equipment. Construction of Highway 76 has cut through the resource down to decomposed bedrock at this location.

The locations of sites SDI-14609, SDI-12585, SDI-744 A, 744B2, SDI-786, SDI-13004, 13768, 13769; SDI-13005; SDI-13766, Locus A, could not be determined based on the inventory pedestrian survey along the highway and there is no evidence of cultural material along the hill slopes at these locations. Inasmuch as these sites are reported to comprise primarily bedrock milling features, archaeological testing (excavation) would not contribute to their re-discovery unless there was evidence of substantial alluvial fill or artificial fill over these locations; there is no such evidence.

Orange Grove Energy has already proposed archaeological monitoring during construction of the gas line between way points 704 and 709, in part because the location of previously reported archaeological sites along this portion of the route are undetermined (see Supplemental Archaeological Survey Report, Section 4.2 (October 2007)). Since the gas line would be installed in either the south road shoulder or within the pavement of the highway, archaeological testing would be required within the highway prism to address the presence/absence of cultural remains that would be affected by trenching for the gas line. Testing south of the highway and not along the gas line alignment would not address the relevant question of whether trenching, per se, would affect any cultural remains beneath the highway pavement or shoulder. Given present highway conditions, making test excavations at numerous locations in the highway along the gas line would be hazardous from a safety perspective and might require closing one lane of the highway to allow testing in or adjacent the roadway consistent with Caltrans' *Manual of Temporary Traffic Controls for Construction and Maintenance Work Zones*. Whether Caltrans would allow such activity is uncertain. Orange Grove Energy believes that during gas line construction, archaeological monitoring, with monitors authorized to halt or redirect earth disturbing construction activities, and evaluation of the significance of any cultural resources encountered, is an effective approach that affords adequate protection to any cultural resources that might be found during pipeline trenching.

BACKGROUND

The original Confidential Report states that significant sites that may be impacted by the project will be avoided. Since the location of some of the previously recorded sites could not be verified by the project, and the known location of other archeological sites is not precise, staff needs clarification on how the project plans to avoid these sites. Staff also needs additional information on which sites may be significant. If avoidance of significant sites is not possible, staff must provide mitigation measures, so any unavoidable impacts must be identified for staff's analysis.

DATA REQUESTS

131. Please provide a list of each archaeological site noted in the Confidential Report indicating the significance or lack thereof, for each site.

RESPONSE

Archaeological sites discussed in the text of the Confidential Report (October 2007) are CA-SDI-683, SDI-13006, SDI-13007H and SDI-13766. The reported locations of other sites are illustrated on Figures 1a and 1b of the Confidential Report and include SDI-744A, SDI-744B1, SDI-744B2, SDI-786, SDI-12584, SDI-12585, SDI-13004, SDI-13005, SDI-13006, SDI-13007, SDI-13766, SDI-

13767, SDI-13768, SDI-13769, and SDI-14069. To Orange Grove Energy's knowledge none of these resources has been formally evaluated for listing in the National Register of Historic Places or in the California Register of Historical Resources (CRHR). Orange Grove Energy has proposed, based on available information, that site CA-13007H is not eligible for listing in the CRHR because it does not meet any of eligibility criteria for listing in the CRHR. Inasmuch as the Project will avoid, to the best of Orange Grove Energy's knowledge and intent, impacts to all of these resources except site SDI-13007H, evaluation of the historic significance of the resources is not necessary to implement an effective historic preservation strategy based on avoidance of all but the one site. Applicant assumes that all sites are considered historically significant (i.e., CRHR eligible) unless evaluated otherwise and with Lead Agency concurrence.

132. Please provide a detailed discussion of the methods that the project would use to avoid known archaeological sites, in general, and in particular, addressed to any known probably significant sites that the project could impact adversely.

RESPONSE

As documented in the Supplemental Archaeological Survey Report (October 2007) specific discussion of the management of sites SDI-683, SDI-13006, SDI-13007H and SDI-13766 is considered. Site SDI-683 is 50 feet (or more) north of the potential gas pipeline trench. SDI-683 would be treated as though it were eligible for listing in the CRHR and an archaeological monitor would be present during construction in the vicinity of the site to ensure that the site is not affected by pipeline trenching and related activities.

The reported location of site SDI-13006 has been closely inspected on several occasions for evidence of the ceramic sherds reported to have been found there. None of the sherds has been found, no other Native American artifacts have been found within 100 meters of the location, and there is no evidence of anthropogenic soils or other cultural remains. The site has been determined to not exist. The DPR 523 form for the site has been updated to indicate that there is no evidence of the site at the reported location. Applicant has proposed that an archaeological monitor be present during ground disturbing activities during construction of the power plant. In the event cultural remains are found anywhere at the plant site the monitor will have the authority to halt or redirect construction activities that have the potential to adversely affect any find. Work in the area would be suspended until such time as any discovered resource is evaluated for listing in the CRHR and proper treatment of any adverse impacts resolved in accordance with an approved treatment plan.

Orange Grove Energy does not propose to avoid site SDI-13007H. This is a sparse scatter of historic era refuse that has been evaluated in Section 4.3 of the Supplement Archaeological Survey Report (October 2007) as not meeting any of the eligibility criteria for listing in the CRHR. Should the Lead Agency concur, this site would require no further protection per the California Environmental Quality Act as it would not qualify as "historically significant" as discussed in the Supplemental Archaeological Survey Report (page 8). Archaeological monitoring would take place in this area during earth disturbing construction activities to ensure that characterization of the resource is correct. Should unanticipated additional remains be encountered work in the area would be suspended until such time as any discovered resource is evaluated for listing in the CRHR and proper treatment of any adverse impacts resolved in accordance with an approved treatment plan.

Applicant believes site SDI-13766 can be avoided by project activities. Installation of an underground electrical line can be accomplished by directional boring beneath the site. The area on the eastern margins of the site, as it was originally reported, has been graded to subsoil, there is no evidence of an in situ cultural deposit, and the bore pits can be placed in areas away from previously report loci, which are reportedly bedrock milling features. The western margin of the site is defined by an arroyo. The western bore pit would be placed adjacent to Pala Del Norte road, outside the boundaries of the site and in an area disturbed by existing access roads. Once the proposed precise location of the two bore pits has been finalized, a qualified archaeologist will inspect the area for a radius of 15 meters beyond the maximum limits disturbance of each pit. If appropriate, as determined by the qualified archaeologist, a shovel test pit or similar excavation would be made using archaeological methods to determine the presence/absence of archaeological remains at the location of one or both of the bore pits. Should unanticipated remains be discovered the area would not be used for the bore pits until determination is made regarding the historical significance of any remains and a management plan has been approved, or the bore pits would be relocated, if feasible.

133. Please provide a Department of Parks and Recreation detail form for any archaeological site that the project is likely to impact.

RESPONSE

DPR 523 forms have been provided for all archaeological sites in the area covered by the Records Search Report submitted to the CEC under confidential cover. Records for three resources (SDI-13006, SDI-13007H, and SDI-13766) have been updated consistent with California Historical Resources Information

System instructions and are provided in Appendix 1 of the Supplemental Archaeological Survey Report (October 2007).

BACKGROUND

Pages 1 and 2 of the Confidential Report submitted in the first round of data requests recommends boring under site SDI-13766, since the applicant could not identify the location of previously recorded loci. Staff needs firm boundary location information for this site to ensure that the directional boring proposed as an avoidance measure would be effective.

DATA REQUESTS

134. Please provide a test plan that recommends a strategy for determining the boundaries of previously identified loci [of SDI-13766] at the project site.

RESPONSE

Please see the response to Data Request 132. Previously identified loci are boulder features that manifest bedrock milling features or cupules. Some of these features (loci) appear to have been covered by boulders, dirt, and debris that has been scraped and pushed off the slope to the east. Whether the loci remain in their original location cannot be determined without using heavy equipment to uncover the area where they are reported to have been found. By definition, if the bore pits are placed in any location lacking any in situ boulders and beyond the push piles of rocks and debris, the bore pits will have avoided the reported loci. In the response to Data Request 132 above Orange Grove Energy has proposed that additional precautions be taken, including specific examination of the proposed bore pit locations by a qualified archaeologist before they are excavated, and archaeological monitoring of earth disturbing construction activities at the plant site.

BACKGROUND

Information from the California Historical Resources Information System (CHRIS) identifies a cultural resource study that was previously conducted at the project site and in the area of the water line route. This information is necessary for staff to complete this analysis.

DATA REQUEST

135. Please provide a copy of the cultural resources study report identified as “Alter 92-04” on the CHRIS map that illustrates survey locations.

RESPONSE

A copy of the requested report will be provided to CEC as Exhibit 135-1 to be submitted under separate confidential cover.

EXHIBIT 123-1

SDAPCD AIR QUALITY PERMIT APPLICATION

21 Technology Drive
Irvine, CA 92618
949.727.9336 PHONE
949.727.7399 FAX
www.TRCsolutions.com

Via Courier

September 1, 2007

Mr. John Annicchiarico
San Diego APCD
10124 Old Grove Road
San Diego, CA 92123-1649

Subject: Permit Application – J-Power Orange Grove Peaker Station, Pala, CA

Dear Mr. Annicchiarico:

In response to a Request for Offers (RFO) from the San Diego Gas & Electric (SDG&E), Orange Grove Energy, L.P. (O.G. Energy) has proposed to construct a 99.6 MW peaker facility in Pala, CA. Since this project meets the California Energy Commission's (CEC) criteria for a small power facility exemption (SPPE), O.G. Energy hereby submits applications for authority to construct directly to your office. The company has also filed the SPPE application with the CEC on July 19.

O.G. Energy is a limited partnership owned by J Power USA Development Co., LTD through intermediate entities. This project involves the installation of two (2) natural gas-fired turbines (GE LM6000PC SPRINT 49.8 MW) and the necessary auxiliary equipment for the facility. Attached are the required application forms, filing fees, equipment specifications, site plans and a compliance evaluation for this project.

O.G. Energy has committed to a start-up date for the facility of June 1, 2008 to meet the ensuing summer demand. This means that construction of facility will have to begin no later than January 1, 2008. We therefore respectfully request your expeditious review of this application package and issuance of the authority to construct.

We committed to work closely with the District to meet the goals of this project, so please do not hesitate to contact us with any questions or additional data needs.

Sincerely,

Charles Diep

Charles Diep, P.E.
Senior Project Manager

cc: Arthur Carbonell - SDAPCD

Attachment

COUNTY OF SAN DIEGO, CALIFORNIA

MISCELLANEOUS RECEIPT

R 336801

Received From J-Power USA Development Co. Inc $21,548.-

(IF BY CHECK, DRAFT OR OTHER ORDER, SUBJECT TO THE SAME BEING HONORED AND PAID)

For APP# 985708 / 985709

Project ____ Task ____ Award ____ EXP ____ ORG ____

- [ ] Cash $ ____
- [x] Check No. 2370 21,548.-
- [ ] Money Order No. ____
- [ ] Draft No. ____
- [ ] County Warrant No. ____

Department APCD

By Victoria Loftis

Date 9-6-07

CUSTOMER'S COPY

AUD 200 (REV. 2/06)

APCD 116 (Rev. 04/07)

SAN DIEGO AIR POLLUTION CONTROL DISTRICT
10124 OLD GROVE ROAD, SAN DIEGO CA 92131-1649
PHONE (858) 586-2600 • FAX (858) 586-2601

PERMIT / REGISTRATION APPLICATION

SUBMITTAL OF THIS APPLICATION DOES NOT GRANT PERMISSION TO CONSTRUCT OR TO OPERATE EQUIPMENT EXCEPT AS SPECFIED IN RULE 24(d)

IMPORTANT REMINDERS: Read instructions on the reverse side of this form prior to completing this application. Please ensure that all of the following are included before you submit the application:
☐ Appropriate Permit Fee ☐ Completed Supplemental Form(s) ☐ Signature on Application

REASON FOR SUBMITTAL OF APPLICATION: (check the appropriate item and enter Application (AP) or Permit to Operate (PO) number if required)

1. ☒ New Installation 2. ☐ Existing Unpermitted Equipment or Rule 11 Change 3. ☐ Modification of Existing Permitted Equipment
4. ☐ Amendment to Existing Authority to Construct or AP 5. ☐ Change of Equipment Location 6. ☐ Change of Equipment Ownership
7. ☐ Change of Permit Conditions 8. ☐ Change Permit to Operate Status to Inactive 9. ☐ Banking Emissions
10. ☐ Registration of Portable Equipment 11. ☐ Other (Specify) _____
12. List affected AP/PO#(s): _____

APPLICANT INFORMATION

13. Name of Business (DBA) Orange Grove Energy, L.P.
14. Nature of Business Peaker Power Generation
15. Does this organization own or operate any other APCD permitted equipment at this or any other adjacent locations in San Diego County? ☐Yes ☒No
If yes, list assigned location ID's listed on your PO's _____
16. Type of Ownership ☐ Corporation ☐ Partnership ☐ Individual Owner ☐ Government Agency ☒ Other Limited Partnership
17. Name of Legal Owner (if different from DBA) _____

		A. Equipment Owner	B. Authority to Construct (if different from A)
18.	Name	Orang Grove Energy, L.P.	
19.	Mailing Address	1900 East Golf Road, Suite 1030	
20.	City	Schaumburg	
21.	State	IL Zip 60173	Zip
22.	Phone	(847) 908-2800 FAX (847) 908-2888	( ) FAX ( )

		C. Permit to Operate (if different from A)	D. Billing Information (if different from A)
23.	Name		
24.	Mailing Address		
25.	City		
26.	State	Zip	Zip
27.	Phone	( ) FAX ( )	( ) FAX ( )

EQUIPMENT/PROCESS INFORMATION: Type of Equipment: ☒ Stationary ☐ Portable.
If portable, will operation exceed 12 consecutive months at the same location ☐ Yes ☐ No

28. Equipment Location Address 10300 Pala Road City Pala Parcel No. 110-072-26
29. State CA Zip 92059 Phone (847) 908-2800 FAX (847) 908-2888
30. Site Contact Steve Thome Title Vice President Phone (720) 221-7954
31. General Description of Equipment/Process 99.6 MW Peak energy generating facility consisting of two (2) GE LM6000PC SPRINT natural gas-fired combustion turbine generators - with selective catalytic reduction (SCR) and oxidation catalyst control systems.
32. Application Submitted by ☐ Owner ☐ Operator ☐ Contractor ☒ Consultant Affiliation TRC, Irvine - CA

EXPEDITED APPLICATION PROCESSING: ☐ **I hereby request Expedited Application Processing and understand that:**

33. a) Expedited processing will incur additional fees and permits will not be issued until the additional fees are paid in full (see Rule 40(d)(8)(iv) for details).
b) Expedited processing is contingent on the availability of qualified staff. c) Once engineering review has begun this request cannot be cancelled.
d) Expedited processing does not guarantee action by any specific date nor does it guarantee permit approval.

I hereby certify that all information provided on this application is true and correct.

34. SIGNATURE _____ Date 23 AUGUST 2007
35. Print Name Steve Thome Title Vice President
36. Company Orange Grove Energy, L.P. Phone (720) 221-7954 E-mail Address SThome@JPowerUSA.com

APCD USE ONLY

AP # 985708 ID # _____ Cust. No. _____ Sector: _____ UTM's X _____ Y _____ SIC _____
Receipt # 326801 Date 9/6/07 Amt Rec'd $ 21,548 Fee Code _____
Engineering Contact _____ Fee Code _____ AP Fee $ _____ T&M Renewal Fee $ _____
Refund Claim # _____ Date _____ Amt $ _____
Application Generated By NV# _____ NC # _____ Other _____ Date _____ Inspector _____

APCD 116 (Rev. 04/07)

SAN DIEGO AIR POLLUTION CONTROL DISTRICT
10124 OLD GROVE ROAD, SAN DIEGO CA 92131-1649
PHONE (858) 586-2600 • FAX (858) 586-2601

PERMIT / REGISTRATION APPLICATION

SUBMITTAL OF THIS APPLICATION DOES NOT GRANT PERMISSION TO CONSTRUCT OR TO OPERATE EQUIPMENT EXCEPT AS SPECFIED IN RULE 24(d)

IMPORTANT REMINDERS: Read instructions on the reverse side of this form prior to completing this application. Please ensure that all of the following are included before you submit the application:
☐ Appropriate Permit Fee ☐ Completed Supplemental Form(s) ☐ Signature on Application

REASON FOR SUBMITTAL OF APPLICATION: (check the appropriate item and enter Application (AP) or Permit to Operate (PO) number if required)

1. ☒ New Installation 2. ☐ Existing Unpermitted Equipment or Rule 11 Change 3. ☐ Modification of Existing Permitted Equipment
4. ☐ Amendment to Existing Authority to Construct or AP 5. ☐ Change of Equipment Location 6. ☐ Change of Equipment Ownership
7. ☐ Change of Permit Conditions 8. ☐ Change Permit to Operate Status to Inactive 9. ☐ Banking Emissions
10. ☐ Registration of Portable Equipment 11. ☐ Other (Specify) _____
12. List affected AP/PO#(s): _____

APPLICANT INFORMATION

13. Name of Business (DBA) Orange Grove Energy, L.P.
14. Nature of Business Peaker Power Generation
15. Does this organization own or operate any other APCD permitted equipment at this or any other adjacent locations in San Diego County? ☐Yes ☒No
If yes, list assigned location ID's listed on your PO's _____
16. Type of Ownership ☐ Corporation ☐ Partnership ☐ Individual Owner ☐ Government Agency ☒ Other Limited Partnership
17. Name of Legal Owner (if different from DBA) _____

		A. Equipment Owner	B. Authority to Construct (if different from A)
18.	Name	Orang Grove Energy, L.P.	
19.	Mailing Address	1900 East Golf Road, Suite 1030	
20.	City	Schaumburg	
21.	State	IL Zip 60173	Zip
22.	Phone	(847) 908-2800 FAX (847) 908-2888	( ) FAX ( )

		C. Permit to Operate (if different from A)	D. Billing Information (if different from A)
23.	Name		
24.	Mailing Address		
25.	City		
26.	State	Zip	Zip
27.	Phone	( ) FAX ( )	( ) FAX ( )

EQUIPMENT/PROCESS INFORMATION: Type of Equipment: ☒ Stationary ☐ Portable.
If portable, will operation exceed 12 consecutive months at the same location ☐ Yes ☐ No

28. Equipment Location Address 10300 Pala Road City Pala Parcel No. 110-072-26
29. State CA Zip 92059 Phone (847) 908-2800 FAX (847) 908-2888
30. Site Contact Steve Thome Title Vice President Phone (720) 221-7954
31. General Description of Equipment/Process One (1) natural gas-fire black start generating turbine and one (1) diesel-fired fire water engine generator.
32. Application Submitted by ☐ Owner ☐ Operator ☐ Contractor ☒ Consultant Affiliation TRC, Irvine - CA

EXPEDITED APPLICATION PROCESSING: ☐ **I hereby request Expedited Application Processing and understand that:**

33. a) Expedited processing will incur additional fees and permits will not be issued until the additional fees are paid in full (see Rule 40(d)(8)(iv) for details).
b) Expedited processing is contingent on the availability of qualified staff. c) Once engineering review has begun this request cannot be cancelled.
d) Expedited processing does not guarantee action by any specific date nor does it guarantee permit approval.

I hereby certify that all information provided on this application is true and correct.

34. SIGNATURE _____ Date 23 August 2007
35. Print Name Steve Thome Title Vice President
36. Company Orange Grove Energy, L.P. Phone (720) 221-7954 E-mail Address SThome@JPowerUSA.com

APCD USE ONLY

AP # 985709 ID # _____ Cust. No. _____ Sector: _____ UTM's X _____ Y _____ SIC _____
Receipt # _____ Date _____ Amt Rec'd $ _____ Fee Code _____
Engineering Contact _____ Fee Code _____ AP Fee $ _____ T&M Renewal Fee $ _____
Refund Claim # _____ Date _____ Amt $ _____
Application Generated By NV# _____ NC # _____ Other _____ Date _____ Inspector _____

SAN DIEGO AIR POLLUTION CONTROL DISTRICT

SUPPLEMENTAL APPLICATION INFORMATION
FEE SCHEDULE 34A-J

San Diego APCD Use Only
Appl. No.:
ID No.:

INTERNAL COMBUSTION ENGINES

Company Name: ORANGE GROVE ENERGY, LP

Equipment Address: 10300 PALA ROAD, PALA, CA 92059

Reason for submitting application:

☐ Existing Unit, Date of Installation _____ ☐ Compliance with 2004 Diesel Engine ATCM

☐ Replacement of Existing Unit; ☒ New or Additional Unit

A. EQUIPMENT DESCRIPTION

Engine Mfr.: CATERPILLAR Model: G3516B LE S/N: _____

Engine hp Rating: 1,818 Fuel Type: ☐ diesel* ☒ natural gas ☐ gasoline

Combination of fuels (specify) _____

Engine Equipment: ☐ turbocharger ☐ aftercooler ☐ 4-degree retard of fuel injection

☐ exhaust gas recirculation ☒ lean burn

☐ pre-chamber combustion ☒ air/fuel controller

☐ diesel particulate filter (attach manufacturer's specification for efficiency, and/or ARB verification.)

☐ other add-on control technology (attach manufacturer's specification for efficiency, and/or ARB verification.)

(Specify) _____

☐ crankcase (blow-by) emission control equipment

(Specify) _____ Model _____

Describe any in stack emission control and/or monitoring devices. (i.e., catalytic converter)

_____

_____

* Diesel fuel must be Certified California Diesel (CARB Diesel).

B PROCESS DESCRIPTION

Engine Drives: ☐ compressor _____ cfm ☐ pump _____ gpm

☐ generator _____ kw ☐ other (specify) _____

Equipment is: ☐ portable ☒ stationary ☐ continuous service

☐ peak shaving electrical supply ☐ cogeneration

☒ emergency electrical supply ☐ used at any time

C. OPERATING SCHEDULE (typical)

	Hours/day	Days/week	Weeks/year
Average	0.5	1	12
Maximum	0.5	1	12

Equipped with a non-resettable hour meter? ☐ yes ☒ no

D. FUEL CONSUMPTION AND EMISSIONS (@100% Load)

Liquid Fuel: 8.7 gal/hr _____ gal/wk 226 gal/yr

Gaseous Fuel: _____ gal/hr _____ gal/wk _____ gal/yr

_____ ____/hr _____ ____/wk _____ ____/yr

Exhaust Emission*:	LB/HR	g/HP-HR	g/HR	PPM
Carbon Monoxides (CO)		2.5		
Nitrogen Oxides (NOx)		0.5		
Hydrocarbons (HC) (Non CH4)		5.4		
Sulfur Oxides (SOx) @ 12% CO2		-		
Particulate Matter (PM)		0.055		

*Please attach manufacturer's specifications or source of exhaust emission data.

Exhaust Temperature 974 ^{o}F

Fuel Supplier: SDG&E

Fuel Sulfur Content: _____ % Sulfur (% wt. as S. (Liquid Fuel))

Fuel Sulfur Content: _____ % Sulfur (% vol. as H2S (Gaseous Fuel))

Engine year of manufacture: _____

CARB Certification No.: _____

EPA Certification No.: _____

E. RULE 1200 TOXICS EVALUATION:

FACILITY SITE MAP Please provide a copy of a **Thomas Bros. Map** showing the geographic location of your facility. This helps by making it possible for the District to use a Geographic Information System to identify community residents and workers who may be impacted by emissions from your facility.

PLOT PLAN Please also provide a **facility plot plan or diagram** (need not be to scale as long as distances of key features from reference points are shown) showing the **location of emission point(s)** at the facility, property lines, and the **location** and **dimensions of buildings** (estimated height, width, and length) that are closer than 100 ft. from the emission point. This diagram helps by making it possible for the District to efficiently set-up the inputs for a health risk evaluation. Inaccurate information may adversely affect the outcome of the evaluation.

EMISSION POINT DATA Determine if your emission source(s) are ducted sources or if they are unducted/fugitive sources and provide the necessary data below. (**Examples** of commonly encountered emission points: **Ducted or Stack Emissions -** an exhaust pipe or stack, a roof ventilation duct; **Unducted Emissions -** anything not emitted through a duct, pipe, or stack, for instance, an open window or an outdoor area or volume.)

1. Ducted or Stack Emissions (For 1 or more emission points). Estimate values if you are unsure.

Parameter	Point #1	Point #2	Point #3	Point #4	Point #5	Point #6
Height of Exhaust above ground (ft)	15					
Stack Diameter (or length/width) (ft)	1.5					
Exhaust Gas Temperature* (°F)	974					
Exhaust Gas Flow (actual cfm or fps)	11,923					
Is Exhaust Vertical (Yes or No)	Y					
Raincap? (None, Flapper Valve, Raincap)	None					
Distance to Property Line (+/- 10 ft)	720					

* Use "70 °F" or "Ambient" if unknown

2. Unducted Emissions (For 1 or more emission points). Estimate if you are unsure.

Describe how unducted gases, vapors, and/or particles get into the outside air. Provide a brief description of the process or operation for each unducted emission point. If unducted emissions come out of building openings such as doors or windows, estimate the **size of the opening** (example – 3 ft x 4 ft window).

If unducted emissions originate outside your buildings, estimate the **size of the emission zone** (example - paint spraying 2' x 2' x 2' bread boxes).

_____

_____

_____

_____

_____

_____

_____

_____

RECEPTOR DATA A receptor is a residence or business whose occupants could be exposed to toxic emissions from your facility. In order to estimate the risk to nearby receptors, please provide the distance from the emission point to the nearest residence and to the nearest business.

Distance to nearest residence _____ ft

Distance to nearest business _____ ft

Distance to nearest school _____ft

Name of Preparer: CHARLES DIEP **Title:** CONSULTANT

Phone No.: (____)_____ E-mail: CDIEP@TRCSolutions.com **Date:** 9/1/2007

NOTE TO APPLICANT:

Before acting on an application for Authority to Construct or Permit to Operate, the District may require further information, plans, or specifications. Forms with insufficient information may be returned to the applicant for completion, which will cause a delay in application processing and may increase processing fees. The applicant should correspond with equipment and material manufacturers to obtain the information requested on this supplemental form.

SAN DIEGO AIR POLLUTION CONTROL DISTRICT

SUPPLEMENTAL APPLICATION INFORMATION
FEE SCHEDULE 34A-J

San Diego APCD Use Only
Appl. No.:
ID No.:

INTERNAL COMBUSTION ENGINES

Company Name: ORANGE GROVE ENERGY, LP

Equipment Address: 10300 PALA ROAD, PALA, CA 92059

Reason for submitting application:

☐ Existing Unit, Date of Installation _____ ☐ Compliance with 2004 Diesel Engine ATCM

☐ Replacement of Existing Unit; ☒ New or Additional Unit

A. EQUIPMENT DESCRIPTION

Engine Mfr.: NATIONAL DIESEL CORP Model: BF6M2012C S/N: _____

Engine hp Rating: 173 Fuel Type: ☒ diesel* ☐ natural gas ☐ gasoline

Combination of fuels (specify) _____

Engine Equipment: ☒ turbocharger ☒ aftercooler ☐ 4-degree retard of fuel injection

☐ exhaust gas recirculation ☐ lean burn

☐ pre-chamber combustion ☐ air/fuel controller

☐ diesel particulate filter (attach manufacturer's specification for efficiency, and/or ARB verification.)

☐ other add-on control technology (attach manufacturer's specification for efficiency, and/or ARB verification.)

(Specify) _____

☐ crankcase (blow-by) emission control equipment

(Specify) _____ Model _____

Describe any in stack emission control and/or monitoring devices. (i.e., catalytic converter)

_____

_____

* Diesel fuel must be Certified California Diesel (CARB Diesel).

B PROCESS DESCRIPTION

Engine Drives: ☐ compressor _____ cfm ☐ pump _____ gpm

☒ generator 129 kw ☐ other (specify) _____

Equipment is: ☐ portable ☒ stationary ☐ continuous service

☐ peak shaving electrical supply ☐ cogeneration

☐ emergency electrical supply ☐ used at any time

C. OPERATING SCHEDULE (typical)

	Hours/day	Days/week	Weeks/year
Average	0.5	1	52
Maximum	0.5	1	52

Equipped with a non-resettable hour meter? ☐ yes ☒ no

D. FUEL CONSUMPTION AND EMISSIONS (@100% Load)

Liquid Fuel: 8.7 gal/hr 4.35 gal/wk 226 gal/yr

Gaseous Fuel: _____ gal/hr _____ gal/wk _____ gal/yr

_____ ____/hr _____ ____/wk _____ ____/yr

Exhaust Emission*:	LB/HR	g/HP-HR	g/HR	PPM
Carbon Monoxides (CO)		0.40		
Nitrogen Oxides (NOx)		3.90		
Hydrocarbons (HC) (Non CH4)		0.10		
Sulfur Oxides (SOx) @ 12% CO2		-		
Particulate Matter (PM)		0.09		

*Please attach manufacturer's specifications or source of exhaust emission data.

Exhaust Temperature 950 ^{o}F

Fuel Supplier: _____

Fuel Sulfur Content: _____ % Sulfur (% wt. as S. (Liquid Fuel))

Fuel Sulfur Content: _____ % Sulfur (% vol. as H2S (Gaseous Fuel))

Engine year of manufacture: _____

CARB Certification No.: _____

EPA Certification No.: _____

E. RULE 1200 TOXICS EVALUATION:

FACILITY SITE MAP Please provide a copy of a **Thomas Bros. Map** showing the geographic location of your facility. This helps by making it possible for the District to use a Geographic Information System to identify community residents and workers who may be impacted by emissions from your facility.

PLOT PLAN Please also provide a **facility plot plan or diagram** (need not be to scale as long as distances of key features from reference points are shown) showing the **location of emission point(s)** at the facility, property lines, and the **location** and **dimensions of buildings** (estimated height, width, and length) that are closer than 100 ft. from the emission point. This diagram helps by making it possible for the District to efficiently set-up the inputs for a health risk evaluation. Inaccurate information may adversely affect the outcome of the evaluation.

EMISSION POINT DATA Determine if your emission source(s) are ducted sources or if they are unducted/fugitive sources and provide the necessary data below. (**Examples** of commonly encountered emission points: **Ducted or Stack Emissions -** an exhaust pipe or stack, a roof ventilation duct; **Unducted Emissions -** anything not emitted through a duct, pipe, or stack, for instance, an open window or an outdoor area or volume.)

1. Ducted or Stack Emissions (For 1 or more emission points). Estimate values if you are unsure.

Parameter	Point #1	Point #2	Point #3	Point #4	Point #5	Point #6
Height of Exhaust above ground (ft)	12					
Stack Diameter (or length/width) (ft)	0.33					
Exhaust Gas Temperature* (°F)	950					
Exhaust Gas Flow (actual cfm or fps)	1,000					
Is Exhaust Vertical (Yes or No)	Y					
Raincap? (None, Flapper Valve, Raincap)	None					
Distance to Property Line (+/- 10 ft)	660					

* Use "70 °F" or "Ambient" if unknown

2. Unducted Emissions (For 1 or more emission points). Estimate if you are unsure.

Describe how unducted gases, vapors, and/or particles get into the outside air. Provide a brief description of the process or operation for each unducted emission point. If unducted emissions come out of building openings such as doors or windows, estimate the **size of the opening** (example – 3 ft x 4 ft window).

If unducted emissions originate outside your buildings, estimate the **size of the emission zone** (example - paint spraying 2' x 2' x 2' bread boxes).

_____

_____

_____

_____

_____

_____

_____

_____

RECEPTOR DATA A receptor is a residence or business whose occupants could be exposed to toxic emissions from your facility. In order to estimate the risk to nearby receptors, please provide the distance from the emission point to the nearest residence and to the nearest business.

Distance to nearest residence _____ ft

Distance to nearest business _____ ft

Distance to nearest school _____ft

Name of Preparer: CHARLES DIEP **Title:** CONSULTANT

Phone No.: (____)_____ E-mail: CDIEP@TRCSolutions.com **Date:** 9/1/2007

NOTE TO APPLICANT:

Before acting on an application for Authority to Construct or Permit to Operate, the District may require further information, plans, or specifications. Forms with insufficient information may be returned to the applicant for completion, which will cause a delay in application processing and may increase processing fees. The applicant should correspond with equipment and material manufacturers to obtain the information requested on this supplemental form.

SAN DIEGO APCD

APPLICATIONS FOR AUTHORITY TO CONSTRUCT

PERMIT COMPLIANCE EVALUATION

ORANGE GROVE PROJECT

Submitted by

ORANGE GROVE ENERGY, L.P.

1900 East Golf Road, Suite 1030

Schaumburg, IL 60173

August 2007

TABLE OF CONTENTS

1.0 Project Background 2
1.1 Process Description 2
2.0 Equipment Description 3
2.1 Permit Equipment Description 4
2.2 Permit Exempt Equipment 4
2.3 Facility Operating Parameters 4
3.0 Emission Calculations 6
3.1 Criteria Pollutants 6
3.2 Estimated TAC Emissions 10
4.0 Regulatory Compliance 12
4.1 New Source Review (NSR) / Prevention of significant Deterioration (PSD) 12
4.1.1 BACT 13
4.1.2 Air Quality Impact Analysis (AQIA) 13
4.1.3 PSD Evaluation 14
4.1.4 Public Notice and Comments 14
4.2 Prohibitory Rules 14
4.3 Source Specific Requirements 14
4.4 New Source Review – Toxic Air Contaminants 15
4.5 Title IV - Federal Acid Rain Program 16
4.6 Title V – Federal Operating Permit 16
5.0 Recommendations 17

SECTION APPENDICES

Appendix A – Site Plans A1
Appendix B – BACT Determination B1
Appendix C – Rule 1200 Health Risk Assessment C1
Appendix D – HARP Data D1

1.0 PROJECT BACKGROUND

In response to the San Diego Gas & Electric (SDG&E) request, Orange Grove Energy has proposed to construct a peak shaving generating facility (the Project) in the northern San Diego area in order to provide energy reliability in this area of the SDG&E service territory. Orange Grove Energy will be responsible for the construction and operation of the power facility and ancillary facilities. The associated infrastructure such as the natural gas pipeline and the water pipeline will be constructed and transferred back to the respective utilities.

1.1 Process Description

The Project is proposed to supply electric power locally during times of high demand. This will generally occur during daylight hours in the summer months. While the facility will be capable of 24/7 operations, typical operation will be 12 to 16 hours per day. It is requested that the facility be allowed up to 500 total start-ups per calendar year for both turbines and up to six (6) total start-ups per day. Each start-up is presumed to have a corresponding shut down. The facility is expected to operate at an annual capacity factor of 23 to 46 percent. The facility will be capable of operating either one or two units up to a combined total of 6,400 total hours per calendar year.

To meet the best available control technology (BACT) requirement, the gas turbines will be controlled with water injection to reduce NOx emissions. In addition, the turbines will also be controlled with selective catalytic reduction (SCR) systems and oxidation catalyst packages. These control systems will be mounted directly in the combustion turbine exhausts.

The stack nitrogen oxides (NO_X) emissions will be controlled to 2.5 parts per million by volume dry (ppmvd) corrected to 15 percent oxygen (O_2). Ammonia will be used as the reducing agent with the SCR catalyst for NO_X in the exhaust gas stream and the ammonia slip will be limited to 10 ppmvd corrected to 15 percent O_2. Carbon monoxide (CO) and volatile organic compounds (VOC) will be controlled to 6 ppmvd and 2 ppmvd respectively at 15 percent O_2 with the oxidation catalyst system. Fuel for the combustion turbines will be pipeline quality natural gas.

The facility will have black-start capability using a natural gas-fired combustion turbine and generator. Other major pieces of equipment at the facility are described in Section 2. The performance data for the turbines are provided below.

Table 1-1 – Expected Facility Performance

PARAMETER	UNITS	PROJECT VALUE
Gross Power Output	KW	100,757
Net Power Output	KW	96,020
Fuel Consumption	MMBTU/hr HHV	953.8
Net Heat Rate	Btu/kWh HHV	9,938
Annual Operating Hours	Total for both Turbines	6,400

2.0 EQUIPMENT DESCRIPTION

The facility will generate electricity using two GE LM6000PC SPRINT combustion turbine generators (CTG). The LM6000 turbine is based on the GE CF6-80C2 flight engine which powers current-generation wide-body aircraft, and consists of: a five-stage low pressure compressor; a 14-stage high pressure compressor with six variable-geometry stages; an annular combustor with 30 fuel nozzles; a two-stage air-cooled high-pressure turbine; and a five-stage low-pressure turbine with active clearance control for improved efficiency. There are over 600 power generation packages in service which have accumulated more than 10 million hours of operation with a 97.7% availability factor.

The CTG combustion air initially flows through an air inlet filter system and chilled water cooling coils. The air is then compressed to an approximately 2:1 compression ratio in the gas turbine low-pressure compressor section before entering the high-pressure compressor, where it is compressed to an approximately 15:1 compression ratio. Overall compression ratio is approximately 30:1, which greatly improves efficiency. The compressed air then flows to the CTG combustor. High pressure natural gas fuel is injected into the combustor section and ignited. Thermal energy produced by the combustion is converted into mechanical energy in the turbine section of the unit; the high pressure turbine drives the high pressure compressor while the low pressure turbine drives the low pressure compressor and the generator. Power is transmitted from the low pressure turbine to the low pressure compressor via a shaft that runs through the hollow high pressure turbine and high pressure compressor assemblies. The generator is connected via a shaft to the low pressure compressor. Demineralized water is injected into the combustion zone in order to modulate combustion temperatures and reduce the formation of NOx to approximately 25 ppmvd, corrected to 15 percent O_2.

The air inlet system will protect the gas turbines, generators and equipment compartments from the effects of airborne dirt and foreign object damage. The air inlet housing for each turbine will be equipped with a three stage inlet filtering system which provides capture efficiency exceeding 99.9% of particles 5.0 microns and above, and a chilled water coil section sized to provide 46 ºF inlet air to the low pressure compressor section on the design summer day of 86 ºF and 70.5 ºF WB.

The chilled water is provided by a common package that will service both turbines. The chiller package consists of equipment necessary to cool the inlet air to the gas turbines and maintain the desired output during hot day conditions. The system will have two 2,535-ton chiller skids. Each chiller skid will have a chilled water pump system to deliver 38 °F water to the inlet air coil for each turbine. Chiller condensers are water cooled using a circulating water system and cooling tower to provide for the best combination of power generation, heat rate (fuel efficiency) and low noise emissions during operation in warm or hot ambient conditions. The chiller refrigerant will be CFC-free.

The nominal net generating capacity of both units will be approximately 96.020 MW at 86.0 °F.

2.1 Permit Equipment Description

1. Turbine 1, GE, LM6000PC-SPRINT, 50.0 MW, natural gas-fired, with demineralized water injection, selective catalytic reduction (SCR) and oxidation catalyst system, and a continuous NOx emission monitoring system (CEMS).
2. Turbine 2, GE, LM6000PC-SPRINT, 50.0 MW, natural gas-fired, with demineralized water injection, selective catalytic reduction (SCR) and oxidation catalyst system, and a continuous NOx emission monitoring system (CEMS).
3. Black-start engine generator, Caterpillar, G3516B LE, 1,818 BHP natural gas-fired.
4. Emergency fire pump engine generator, National Diesel Corp., BF6M2012C, 173 BHP diesel-fired.

2.2 Permit Exempt Equipment

- Three (3) Fuel gas compressors (12 MSCFD, 700 PSIG, 600 HP)
- One (1) Ammonia storage tank (10,000 gallons, 19% ammonia)
- One (1) Chiller and cooling tower package (2,535-Tons, CFC free)
- One (1) Water demineralization system (150 GPM)
- Water and wastewater storage tanks

2.3 Facility Operating Parameters

The proposed startup and operating limits for the Project are outlined as follows:

1. One-time startup and commissioning of turbines and SCR systems – 400 hours total
   - 200 hours per unit with emissions controlled by the injection of demineralized water into the turbine combustion chamber (approximately 25 ppmvd NO_X and 25 ppmvd CO, both corrected to 15% O_2) and the oxidation catalyst bed.
2. Annual operation of the turbines – 6,400 hours total combined
   - 5,960 hours of fully controlled emissions
   - 40 hours of emissions controlled at the CTGs (water injection and oxidation catalyst) only for annual maintenance and testing.
   - 500 combined startups composed of 10 minutes of uncontrolled emissions (water injection only; no additional NOx reduction by SCR system) and 30 minutes of linearly decreasing controlled emissions as the CO and NOx catalyst become effective.
   - 500 combined shutdowns composed of 8 minutes of uncontrolled emissions (water-injected CTG only).

3. Equipment readiness testing emissions

- Diesel-driven firewater pump engine generator tested weekly for 30 minutes
- Black start natural gas fired engine generator tested monthly for one (1) hour
- Each CTG, to the extent not operated in the previous two weeks, will be started once per month and operated for one (1) hour. These hours of operation will be counted toward the annual operating limit.

3.0 EMISSION CALCULATIONS

Based on the operating parameters specified in the previous section, criteria pollutants and toxic air contaminants (TAC) are calculated and provided below.

3.1 Criteria Pollutants

At 100% load, the emission profile for each of the turbines are provided by the equipment supplier and presented below.

Table 3-1 Turbine Emission Factor (100% Load)

Base Load Emissions Per Turbine		NOx	CO	VOC	PM10	SO_2
Steady State Uncontrolled (lb/hr)		39.75	24.20	3.32	3.00	0.83
Steady State Controlled (lb/hr)		3.98	5.81	1.11	3.00	0.83
Start/Stop Emissions Per Turbine	Minutes	NOx	CO	VOC	PM10	SO_2
Startup Emissions (lb/event)	10	3.00	5.60	1.10	0.67	0.14
Warm-up Emissions (lb/event)	30	10.93	7.50	1.11	1.50	0.41
Shutdown Emissions (lb/event)	8	2.20	3.70	0.60	0.53	0.11
Startup Emissions / Hour / Turbine	Hour	NOx	CO	VOC	PM10	SO_2
Startup	0.167	3.00	5.60	1.10	0.67	0.14
Warm-up	0.500	10.93	7.50	1.11	1.50	0.41
Steady State Controlled	0.333	1.33	1.94	0.37	1.00	0.28
Total Hourly Emission / Turbine	1.000	15.26	15.04	2.58	3.17	0.83
Shutdown Emissions / Hour / Turbine	Hour	NOx	CO	VOC	PM10	SO_2
Steady State Controlled	0.867	3.45	5.04	0.96	2.60	0.72
Shutdown	0.133	2.20	3.70	0.60	0.53	0.11
Total Hourly Emission / Turbine	1.000	5.65	8.74	1.56	3.13	0.83

(1) *Steady state uncontrolled emissions are based upon the GE performance data*
(2) *Steady state controlled emissions are based on projected emission control efficiency*
(3) *Startup and shutdown emissions are based on GE data at ISO conditions*
(4) *Warm-up emissions are based on linear emission reduction ramp*
(5) *Calculations are based upon the annual average ambient temperature of 72 °F*
(6) *VOC emissions are based on 40% of GE calculated HC emissions to account for the oxidation catalyst.*

During the commissioning of the turbines, ammonia injection required by the SCR system will not necessarily be activated. As such, the emissions are anticipated to be higher during this period. No more than 400 hours of commissioning for both turbines will be required. The maximum uncontrolled NOx emissions during this period are therefore calculated below.

Table 3-2 Estimated Commissioning Emissions (2 Turbines)

Commissioning Emissions (lbs)	Hours	NOx	CO	VOC	PM10	SO_2
Uncontrolled Operation	**400**	**15,900**	**9,680**	**1,328**	**1,200**	**332**
	Tons	**8.0**	**4.8**	**0.7**	**0.6**	**0.2**

For the operational phase of the facility, the associated maximum hourly, daily and annual emissions for the CTG are calculated below using the emission profiles presented above.

	Both Turbines
• Maximum daily start-ups:	6
• Maximum daily shut-downs:	6
• Total daily operating hours:	32 hours
• Total annual start-ups:	500
• Total annual shut-downs:	500
• Total annual operating hours:	6,400 hours

Table 3-3 Estimated Normal Operating Emissions (2 Turbines)

Maximum Hourly Emissions	Hours	NOx	CO	VOC	PM10	SO_2
Startup Event	0.167	3.00	5.60	1.10	0.67	0.14
Warm-up Event	0.500	10.93	7.50	1.11	1.50	0.41
Steady State	1.333	5.31	7.75	1.48	4.00	1.11
Total Maximum Hourly (lb/hr)	**2.00**	**19.24**	**20.85**	**3.69**	**6.17**	**1.66**
Maximum Daily Emissions	Hours	NOx	CO	VOC	PM10	SO_2
Startup Event	1.00	18.00	33.60	6.60	4.02	0.84
Warm-up Event	3.00	65.58	45.00	6.66	9.00	2.46
Shutdown Event	0.80	13.20	22.20	3.60	3.18	0.66
Steady State Controlled	27.20	108.26	158.03	30.19	81.60	22.58
Total Maximum Daily (lb/day)	**32.00**	**205.04**	**258.83**	**47.05**	**97.80**	**26.54**
Maximum Annual Emissions	Hours	NOx	CO	VOC	PM10	SO_2
Startup Event	83.33	1,500	2,800	550	335	70
Warm-up Event	250.00	5,465	3,750	555	750	205
Shutdown Event	66.67	1,100	1,850	300	265	55
Steady State Uncontrolled	40	1,590	968	133	120	33
Steady State Controlled	5,960	23,721	34,628	6,616	17,880	4,947
Total Maximium Annual Daily (lb/yr)	**6,400**	**33,376**	**43,996**	**8,153**	**19,350**	**5,310**
	Tons	**16.69**	**22.00**	**4.08**	**9.68**	**2.66**

In addition to the turbines, emissions from the planned operation (for testing) of the black-start turbine generator and the emergency fire water pumps are provided below.

Black Start Engine Generator

The Caterpillar natural gas fired black start generator will operate only during black start conditions, and only for routine testing and maintenance. Black starts are anticipated to occur two times per year. Routine testing and maintenance will occur on a monthly basis. The Caterpillar ICE will operate 30 minutes during each maintenance event, 12 events per year, for a total of 7 hours per year of operation. For the purposes of these calculations the operations

are characterized as 14 hours per year of operation, with each operational hour consisting of one-half hour of operation and one-half hour of non-operation.

Controlled emission guarantees for the Caterpillar Black start ICE were obtained from Caterpillar for NO_X and CO. Guaranteed emission rates of total hydrocarbon were obtained from Caterpillar and are assumed to be 100 percent VOC. AP-42 Fifth Edition, Section 3.2, dated August 2000, emission factors were used to calculate SO_2 and PM_{10} emission rates.

The maximum fuel flow rate to the Caterpillar ICE is 10.5 MMBtu per hour for standby power, using heat exchanger cooling. The fuel flow rate was converted to standard cubic feet (SCF) per hour using a heat content of 1,050 Btu/SCF (10,020 SCF/hr).

A sample calculation for maximum hourly NO_X emission rates are provided below. CO and VOC emission calculations are identical with the exception of the emission factors.

Maximum Hourly (NO_X) = guaranteed NOX rate (g/bhp-hr) X engine rating (bhp) / 453.6 g/lb X 30/60 minutes

Maximum Hourly (NO_X) = 0.5 (g/bhp-hr) X 1,449 (bhp) / 453.6 g/lb X 30/60 minutes = 0.797 lb/hr

Annual emissions were calculated assuming 14 one-half hour operating events per year. A sample calculation of annual NO_X emissions is provided below. The calculations of emissions for the remaining criteria pollutants are identical with the exception of the hourly emission rate.

Annual (NO_X) = hourly emission rate (lb/hr) X 14 hr/yr

Annual (NO_X) = 0.797 (lb/hr) X 14 hr/yr / 2,000 lb/ton = 11.16 lb/yr

A summary of emission for the black start engine is provided in the Table 3-4 below.

<u>Emergency Fire Water Pump Engine Generator</u>

An emergency diesel fuel fire water pump engine from National Diesel Corp. or from a comparable supplier will be utilized at the facility. Other than for emergency response, the equipment will only be operated for testing and maintenance reason. It is anticipated that the engine will be operated for 30 minutes for each maintenance event on a weekly basis. For the purposes of these calculations the operations are characterized as 52 hours per year of operation, with each operational hour consisting of one-half hour of operation and one-half hour of non-operation.

The emission calculations are similar to those for the black start generator. Table 3-5 below summarizes the annual average emission rates of criteria pollutants for the firewater pump engine generator.

Table 3-4 Estimated Planned Operation Emissions (Black-Start Engine Generator)

Parameters					
Made & Model	Caterpillar G3516B LE				
Rated Horsepower	1,449	BHP			
Maximum Engine Power	1,818	BHP			
Total Efficiency	79.7	%			
Fuel Consumption	7,261	Btu/bhp-hr			
Exhaust Flow Rate	11,923	ACFM			
Exhaust Temperature	974	°F			
Stack Diameter	1.50	Feet			
Stack Height (12 ft building + 3 ft stack)	15	Feet			
Test Frequency	14	per Year			
Test Duration	1	Hour			
Expected Annual Non-Emergency Usage	14	Hours/Year			
Black Start Engine Generator	NOx	CO	VOC	PM10	SO2
Emission Factor (g/HP/hr)	0.50	2.50	5.40		
Emision Rates (lb/hr)	0.797	3.985	8.607	0.055	0.005
Annual Emissions (lb/yr)	**11.16**	**55.79**	**120.50**	**0.77**	**0.07**

(1) *PM10 & SO2 emission factors from EPA AP-42.*

(2) *PM10 emission rate includes filterable and condensable emissions.*

Table 3-5 Estimated Planned Operation Emissions (Emergency Fire Pump Engine Generator)

Parameters					
Made & Model	National Diesel Corporation (NDC) - BF6M2012C				
Rated Horsepower	173	BHP			
Exhaust Flow Rate	1,000	ACFM			
Exhaust Temperature	950	°F			
Stack Diameter	0.33	Feet			
Stack Height (8 ft building + 4 ft stack)	12	Feet			
Test Frequency	52	Weeks/Year			
Test Duration	30	Minutes			
Expected Annual Non-Emergency Usage	52	Hours/Year			
Emergency Water Pump	NOx	CO	VOC	PM10	SO2
Emission Factor (g/HP/hr)	3.90	0.40	0.10	0.09	0.15
Emision Rates (lb/hr)	0.74	0.08	0.02	0.02	0.029
Annual Emissions (lb/yr)	**38.59**	**3.96**	**0.99**	**0.89**	**1.48**

The following table summarizes the annual emissions for the facility for year one as well as year two and thereafter. Year one emissions will be higher due to the commissioning phase of the project.

Table 3-6 Estimated Annual Facility Emissions

Source	Hours	NOx	CO	VOC	PM10	SO2
CTG Commission (Yr 1 Only) - lb/yr	400	15,900	9,680	1,328	1,200	332
CTG 1 - lb/yr	3,200	16,688	21,998	4,077	9,675	2,655
CTG 2 - lb/yr	3,200	16,688	21,998	4,077	9,675	2,655
Black Start Engine Generator - lb/yr	14	11	56	121	1	0
Firewater Pump Engine Generator - lb/yr	26	19	2	0	0	1
Year 1 Total	(lb/yr)	49,306	53,733	9,602	20,551	5,643
	(Tons/yr)	**24.65**	**26.87**	**4.80**	**10.28**	**2.82**
Source	**Hours**	**NOx**	**CO**	**VOC**	**PM10**	**SO2**
CTG 1 - lb/yr	3,200	16,688	21,998	4,077	9,675	2,655
CTG 2 - lb/yr	3,200	16,688	21,998	4,077	9,675	2,655
Black Start Engine Generator - lb/yr	14	11	56	121	1	0
Firewater Pump Engine Generator - lb/yr	26	39	4	1	1	1
Year 2 and After Total	(lb/yr)	33,426	44,055	8,275	19,352	5,312
	(Tons/yr)	**16.71**	**22.03**	**4.14**	**9.68**	**2.66**

3.2 Estimated TAC Emissions

For the purpose of demonstrating compliance with Rule 1200, TAC emissions are calculated for each source and presented in the following tables.

Table 3-7 Estimated TAC Emissions (Per Turbines)

Maximum fuel usage 396.1 MMBTU/hr
Maximum annual hours of op 3,200 hrs/yr

Pollutant	CAS	Emsn Factor (lb/MMBTU)	Emsn Factor (lb/MMCF)	Hourly Emsn (lb/hr)	Annual Emsn (lb/hr)
Ammonia	7664-41-7	5 ppm	5 ppm	2.94	9.41E+31
1,3-Butadiene	106-99-0	1.30E-07	1.33E-04	5.15E-05	1.65E-01
Acetaldehyde	75-07-0	4.99E-04	5.11E-01	1.98E-01	6.32E+02
Acrolein	107-02-8	6.77E-05	6.93E-02	2.68E-02	8.58E+01
Benzene	71-43-2	4.61E-05	4.72E-02	1.83E-02	5.84E+01
Ethylbenzene	100-41-4	5.57E-05	5.70E-02	2.21E-02	7.06E+01
Formaldehyde	50-00-0	6.71E-03	6.87E+00	2.66E+00	8.51E+03
Hexane	110-54-3	3.73E-04	3.82E-01	1.48E-01	4.73E+02
Propylene	115-07-1	1.95E-03	2.00E+00	7.72E-01	2.47E+03
Propylene oxide	75-56-9	5.73E-05	5.87E-02	2.27E-02	7.26E+01
Toluene	108-88-3	1.64E-04	1.68E-01	6.50E-02	2.08E+02
Xylenes	1330-20-7	6.11E-05	6.26E-02	2.42E-02	7.74E+01
Polycyclic Aromatic Hydrocarbons (PAH)					
Benzo(a)anthracene	56-55-3	1.31E-07	1.34E-04	5.19E-05	1.66E-01
Benzo(a)pyrene	50-32-8	8.95E-08	9.16E-05	3.55E-05	1.13E-01
Benzo(b)fluoranthene	205-99-2	6.56E-08	6.72E-05	2.60E-05	8.31E-02
Benzo(k)fluoranthene	207-08-9	6.56E-08	6.72E-05	2.60E-05	8.31E-02
Chrysene	218-01-9	1.46E-07	1.50E-04	5.78E-05	1.85E-01
Dibenz(a,h)anthracene	53-70-3	1.31E-07	1.34E-04	5.19E-05	1.66E-01
Indeno(1,2,3-cd)pyrene	193-39-5	1.31E-07	1.34E-04	5.19E-05	1.66E-01
Naphthalene	91-20-3	7.70E-06	7.88E-03	3.05E-03	9.76E+00
	Total PAH			**3.35E-03**	**1.07E+01**

(7) *Source - Emission factor source: CARB CATEF Database 1996 for turbines with SCR and CO control system. Ammonia emission factor is based on proposed emission limit.*

Table 3-8 Estimated TAC Emissions (Black-Start Engine Generator)

Rated Horsepower	1449	BHP
Expected non-emergency usage	12	hrs/yr
Fuel Consumption	7,261	BTU/BHP-hr
Fuel Usage	10.52	MMBTU/hr

Pollutant	CAS	Emsn Factor (lb/MMBTU)	Emsn Factor (lb/MMCF)	Hourly Emsn (lb/hr)	Annual Emsn (lb/hr)
1,3-Butadiene	106-99-0	4.05E-04	4.15E-01	4.26E-03	5.11E-02
Acetaldehyde	75-07-0	2.56E-03	2.62E+00	2.69E-02	3.23E-01
Acrolein	107-02-8	1.57E-04	1.61E-01	1.65E-03	1.98E-02
Benzene	71-43-2	2.53E-04	2.59E-01	2.66E-03	3.19E-02
Ethylbenzene	100-41-4	1.12E-04	1.15E-01	1.18E-03	1.41E-02
Formaldehyde	50-00-0	2.04E-02	2.09E+01	2.15E-01	2.58E+00
Propylene	115-07-1	1.18E-02	1.21E+01	1.24E-01	1.49E+00
Toluene	108-88-3	3.85E-04	3.94E-01	4.05E-03	4.86E-02
Xylenes	1330-20-7	9.42E-04	9.65E-01	9.91E-03	1.19E-01
Polycyclic Aromatic Hydrocarbons (PAH)					
Benzo(a)anthracene	56-55-3	9.69E-08	9.92E-05	1.02E-06	1.22E-05
Benzo(a)pyrene	50-32-8	3.79E-09	3.88E-06	3.99E-08	4.78E-07
Benzo(b)fluoranthene	205-99-2	7.79E-08	7.98E-05	8.20E-07	9.83E-06
Benzo(k)fluoranthene	207-08-9	1.18E-08	1.21E-05	1.24E-07	1.49E-06
Chrysene	218-01-9	2.20E-08	2.25E-05	2.31E-07	2.78E-06
Dibenz(a,h)anthracene	53-70-3	3.79E-09	3.88E-06	3.99E-08	4.78E-07
Indeno(1,2,3-cd)pyrene	193-39-5	1.06E-08	1.09E-05	1.12E-07	1.34E-06
Naphthalene	91-20-3	3.03E-05	3.10E-02	3.19E-04	3.83E-03
	Total PAH			**3.21E-04**	**3.85E-03**

(1) *Emission factor source: CARB CATEF Database 1996 for turbines without SCR and CO control system.*

Table 3-9 Estimated TAC Emissions (Emergency Fire Pump Engine Generator)

Rated Horsepower	173	BHP
Expected non-emergency usage	30	minutes/week
Fuel Consumption	52	weeks/year
Fuel Usage	26.00	hours/year

Pollutant	CAS	Emsn Factor (g/hp-hr)	Hourly Emsn (lb/hr)	Annual Emsn (lb/yr)
Diesel Particulate (PM100	9901	9.00E-02	1.71E-02	4.45E-01

4.0 REGULATORY COMPLIANCE

This section provides compliance evaluation of applicable District rules and regulations on the proposed project.

4.1 New Source Review (NSR) / Prevention of significant Deterioration (PSD)

Rule 20.1 – This rule contains general provisions that apply to any new emission units for which an ATC or a P/O is required. The major stationary source thresholds and PSD trigger levels as they appear in this rule and are shown below.

Table 4-1 - Major Stationary Source Thresholds

Air Contaminant	Thresholds (Ton/yr)	Project (Ton/yr) Year 2 & Thereafter	Project (Ton/yr) Year 1
Particulate Matter (PM10)	100	9.7	10.3
Oxides of Nitrogen (NOX)	50	16.7	24.7
Volatile Organic Compounds (VOC)	50	4.1	4.8
Oxides of Sulfur (SOX)	100	2.7	2.8
Carbon Monoxide (CO)	100	22.0	26.9
Lead (Pb)	100	0	0

(1) *Source: SDAPCD Rule 20.1 Table 20.1-6*

Table 4-2 - PSD Trigger Levels

Air Contaminant	PSD Trigger Levels (Ton/yr)	Project (Ton/yr) Year 2 & Thereafter	Project (Ton/yr) Year 1
Particulate Matter (PM10)	250	9.7	10.3
Oxides of Nitrogen (NOX)	250	16.7	24.7
Volatile Organic Compounds (VOC)	250	4.1	4.8
Oxides of Sulfur (SOX)	250	2.7	2.8
Carbon Monoxide (CO)	250	22.0	26.9

(1) *Source: SDAPCD Rule 20.1 Table 20.1-11*

Since the projected emissions for this project are below these thresholds, the proposed facility will be evaluated as a non-major stationary source under District Rule 20.2 (as opposed to Rule 20.3). Additionally, the projected project emissions are below the PSD trigger level of 250 ton/yr; therefore, PSD requirements will not apply to this project.

Rule 20.2 – This rule specifies new source standards for non-major stationary sources. Key requirements are specified below.

- Best Available Control Technology (BACT)
- Air Quality Impact Analysis (AQIA)

- Prevention of Significant Deterioration (PSD) Evaluation
- Public Notice and Comment

Since this project is not subject to new source review for major stationary source under Rule 20.3, emission offsets are not applicable.

4.1.1 BACT

As a NSR requirement under Rule 20.2, BACT applies to any new or modified source resulting in an emissions increase exceeding 10 lb/day. Since the projected emission rates for the CTG exceed this threshold, BACT applies. A BACT analysis is therefore provided in Appendix B. Since the projected emissions rates for the black start engine and the fire water engine are each projected to be below 10 lb/day, a BACT analysis is not required. However, a brief analysis is provided for the fire water engine in Appendix B.

Based on the analysis, the demineralized water injection system designed for the GE LM6000PC turbines reduces NOx emissions a great extent. In addition, the application of an ammonia based selective catalytic reduction (SCR) system for NOx reduction (90% reduction or 2.5 ppm) and the use of an oxidation catalyst that oxidizes CO (90% reduction or 6 ppm) which as well as volatile organic compounds (VOC), meet the most stringent BACT requirement for the proposed CTGs.

4.1.2 Air Quality Impact Analysis (AQIA)

An AQIA is required to assess impacts on ambient air quality for projects with proposed emission increases exceeding the AQIA thresholds shown in Table 4-3 below. If the proposed emissions exceed these thresholds, the project must show that it does not contribute significantly to an existing exceedance of any ambient air quality standard. As shown below however, the proposed project emissions are below the AQIA thresholds and requirements.

Table 4-3 - AQIA Emission Thresholds

Air Contaminant	Emission Thresholds			Project Emission Rates		
	lb/hr	lb/day	ton/yr	lb/hr	lb/day	ton/yr
CO	100	550	100	30	259	22.0
NOx	25	250	40	19.2 (2)	205	16.7
PM10	N/A	100	15	NA	98	9.7
SOx	25	250	40	1.65	26.5	2.66

(1) *Rule 20.3, Table 20.3-1.*

(2) *Maximum hourly emissions based on one turbine at start up condition and the other at steady state.*

4.1.3 PSD Evaluation

The proposed project does not belong to one of the 28 PSD source categories that have a 100 ton/yr PSD threshold. Even at this threshold, rather than the applicable 250 ton/yr threshold, the proposed project emissions are well under as shown in Table 4-2.

The PSD requirements also apply to any project expected to have a significant impact upon Class I or Class II areas, or significant emissions of non-criteria pollutants. Since the proposed emissions for the project is less than the AQIA emission threshold, the project is deemed to have less than significant impact. The proposed project will also not exceed the non-criteria pollutants emissions thresholds as listed in Table 20.1-8 of District Rule 20.1. In the filing of the SPPE to the CEC, air dispersion modeling results also show the air quality increments to be below the thresholds for all Class I and II areas.

4.1.4 Public Notice and Comments

Since the proposed project is not subject to the AQIA or PSD requirements described above, and the proposed VOC emissions are less than 250 lb/day and 40 tons/yr, public notice under Rule 20.2(d)(4) does not apply.

4.2 Prohibitory Rules

Rule 50 – Visible Emissions**.** This rule prohibits visible emissions as dark as, or darker than, Ringelmann No. 1 for periods greater than three minutes in any hour. The combustion turbines are not expected to violate this requirement with the exclusive use of pipeline quality natural gas.

Rule 51 – Nuisance**.** This rule prohibits the discharge from a facility of air pollutants that cause injury, detriment, nuisance, or annoyance to the public, or that damage business or property. The proposed facility is not expected to be a nuisance to the public.

Rule 52 – Particulate Matter Emission Standards. This rule prohibits PM emissions in excess of 0.10 grains per dry standard cubic foot (gr/dscf). The equipment vendor has assured compliance with this emission standard.

Rule 53 – Combustion Contaminants. Prohibits sulfur emissions, calculated as SO_2, in excess of 0.05 percent by volume (500 ppmv), and combustion particulate emissions in excess of 0.10 gr/dscf at 12 percent CO_2. The proposed use of commercial grade natural gas as regulated by the Public Utilities Commission will ensure compliance of the SO_2 standard (0.75 gr/100 SCF). Actual SDG&E pipeline quality natural gas will contain as low as 0.25 gr/100 SCF sulfur containing compounds.

4.3 Source Specific Requirements

Rule 20.5 – Power Plants. This rule establishes a procedure for coordinating SDAPCD review of power plant projects with the California Energy Commission (CEC) Application for Certification

(AFC) and Small Power Facility Exemption (SPPE) processes. Although not expressly stated in this rule, the CEC shall serve as the CEQA (California Environmental Quality Act of 1970) lead agency and make a determination that the Project can be built without causing significant adverse impacts. The SDAPCD evaluates the permit application submitted for the Project as with any other new source and proceed to issue the Authority to Construct and Permit to Operate for the project once a compliance determination is made.

Rule 62 – Sulfur Content of Fuels. This rule prohibits the burning of gaseous fuel with a sulfur content of more than 10 gr/100 SCF and liquid fuel with a sulfur content of more than 0.05 percent sulfur by weight. Based on the natural gas profile provided by SDG&E, the sulfur content of the natural gas is as low as 0.25 gr/100 SCF and it will meet this requirement.

Rule 69.3.1 – Stationary Gas Turbines. This rule limits NOx emissions from stationary gas turbines rated greater than or equal to 10 MW with post-combustion controls to 9 ppmv (at 15 percent O_2, corrected for efficiency). The proposed project will limit the NOx emission to 2.5 ppmv to meet the BACT requirement.

Rule 69.4.1 – Stationary Reciprocating Internal Combustion Engines. This rule limits CO, NOx, and VOC emissions from stationary reciprocating internal combustion engines rated greater than or equal to 50 BHP. Emergency equipment operating less than or equal to 52 hours per year for testing or maintenance purposes and less than or equal to 200 hours per year for any purpose are however exempt from the emission limits of Rule 69.4.1. This exemption applies to the emergency fire water pump proposed for this project.

Subpart KKKK - Standards of Performance for Stationary Combustion Turbines. This regulation applies to gas turbines with a heat input in excess of 1 MMBTU/hr that commence construction after February 18, 2005 and it therefore applies to this project. Subpart KKKK limits NOx and SO_2 emissions from new gas turbines based on power output. The limits for turbines greater than 30 MW are 0.39 lb NOx per MW-hr and 0.58 lb SO_2 per MW-hr. Data provided by the equipment vendor shows that these requirements will be met (~ 0.08 lb NOx per MW-hr and 0.017 lb SO_2 per MW-hr).

4.4 New Source Review – Toxic Air Contaminants

Rule 1200 – Toxic Air Contaminants – New Source Review. This rule provides a mechanism for evaluating the potential impact of toxic air contaminant (TAC, also called non-criteria pollutants) from new, modified, and relocated sources. The rule requires a demonstration that the source will not exceed the risk thresholds summarized in Table 4-4 below. As shown in this table, there risk thresholds applicable to this project is ten in a million (1×10^{-5}) for cancer risk, and 1.0 for both chronic and acute health hazard. With the use of an oxidation catalyst, the majority of the organic air contaminants will also be oxidized and eliminated, thus greatly reduces the risk associated with this project.

For this project, a health risk assessment (HRA) was completed using the California Air Resource Board (CARB) HARP software and the results are discussed in Appendix C. The

results are also summarized below and show that the project will meet the applicable risk thresholds.

Table 4-4 - Health Risk Thresholds

Risk Criterion	Risk Threshold With T-BACT	Highest Project Risk Values		
		Offsite	Residence	Worker
Cancer Risk with T-BACT	1×10^{-5}	1.25×10^{-6}	0.065×10^{-6}	0.0004×10^{-6}
Acute Noncarcinogenic Health Hazard Index	1.0	0.489	0.153	0.0308
Chronic Noncarcinogenic Health Hazard Index	1.0	0.0221	0.0010	0.00006

4.5 Title IV - Federal Acid Rain Program

Rule 1412 - Federal Acid Rain Program Requirements. This rule adopts, by reference, the federal requirements of 40 CFR Part 72, which requires that certain subject facilities comply with maximum operating emissions levels for SO_2 and NOx, and monitor SO_2, NOx, and carbon dioxide emissions and exhaust gas flow rates. The SDAPCD has received delegation from USEPA for Title IV implementation under its Title V Operating Permit program pursuant to Rule 1414. Sources such as this Project that use pipeline-quality natural gas as the exclusive fuel are exempt from many of the acid rain program requirements. However, the facility will be required to estimate SO_2 and CO_2 emissions from the Project and monitor NOx emissions with a certified CEMS, and thus must submit an acid rain permit application within 12 months after commencement of facility operations.

4.6 Title V – Federal Operating Permit

Rule 1414 – Federal Operating Permit. This rule requires new or modified major facilities, NSPS sources, NESHAP sources, and/or Phase II acid rain facilities to obtain an operating permit containing the federally enforceable requirements mandated by Title V of the 1990 Clean Air Act Amendments. A permit application for a new or modified source must be submitted to the SDAPCD within 12 months of commencing operation. The application must present a process description, all new stationary sources at the facility, applicable regulations, estimated emissions, associated operating conditions, alternative operating scenarios, a facility compliance plan, and a compliance certification.

5.0 RECOMMENDATIONS

With compliance demonstrated in the previous section above, recommendation to issue the Authority to Construct and Permit to Operate is made with the following permit conditions.

1. The permittee shall comply with the applicable requirements in 40 CFR Parts 60, 72, 73, and 75.
2. The two turbines shall not operate more than a total of 6,400 unit operating hours per calendar year. Unit operating hour is defined in 40CFR72.2.
3. Net power output (net MW) to the grid shall not exceed 99.9 MW.
4. The unit shall be fired on Public Utility Commission (PUC) quality natural gas only. The permittee shall maintain quarterly records of sulfur content (grains/100 DSCF) and higher and lower heating values (Btu/DSCF) of the natural gas and provide such records to the District personnel upon request.
5. The permittee shall comply with all the applicable provisions of 40 CFR 73, including requirements to offset, hold and retire SO_2 allowances.
6. The turbines shall be equipped with continuous monitors to measure, calculate and record the following operational characteristics:

   A. Hours of operation (hours);

   B. Natural gas flow rate (KSCFH);

   C. Exhaust gas temperature (degrees Fahrenheit);

   D. SCR average temperature (degrees Fahrenheit);

   E. Ammonia injection rate (lbs/hour);

   F. Net power output to grid (MW);

   G. Water (for NOx control) injection rate (lb/hr).

   These parameters shall be continuously monitored. These monitors shall be calibrated and maintained in accordance with manufacturer's recommended procedures and a protocol approved by the District.
7. An operating log or data acquisition and handling system (DAHS) records shall be maintained either onsite, or at a District-approved alternate location to record each of the operational characteristics listed in this permit at least every 15 minutes.
8. Fuel, water injection (for NOx control), and ammonia flow meters shall be installed and maintained to measure the flow rate corrected for temperature and pressure. Calibration reports, correction factors and constants for the previous five years shall be maintained on site or at a District-approved alternate location and made available to the District within 48 hours after request. Fuel flow meters shall meet the applicable quality assurance requirements of 40 CFR Part 75, Appendix D, Section 2.1.6
9. A continuous emission monitoring system (CEMS) shall be maintained and calibrated to measure and record the concentrations of oxides of nitrogen (NOx) and carbon monoxide (CO) in the exhaust gas on a dry basis (ppmvd) corrected to 15% oxygen. The CEMS shall also measure the oxygen contact in the exhaust gas. The CEMS shall be in full operation at all times when the unit is in operation.

10. The oxides of nitrogen (NOx) and oxygen (O_2) CEMS shall be certified and maintained in accordance with applicable federal regulations including the requirements of sections 75.10 and 75.12 of Title 40, Code of Federal Regulations Part 75 (40 CFR 75), the performance specifications of Appendix A of 40 CFR 75, the quality assurance procedures of Appendix B of 40 CFR 75 and the CEMS protocol approved by the District. The carbon monoxide (CO) CEMS shall be certified and maintained in accordance with 40 CFR 60, Appendices B and F, unless otherwise specified in this permit.

11. For the purposes of this permit to operate, startup conditions shall be defined as the 30-minute time period starting when fuel flow begins. Shutdown conditions shall be defined as the 15-minute period preceding the moment at which fuel flow ceases. The data acquisition and handling system (DAHS), as required by 40 CFR 75, shall record these events.

12. An operating log or data acquisition and handling system (DAHS) records shall be maintained either on site or at a District-approved alternate location to record actual times and durations of all startups and shutdowns, quantity of fuel used (SCF) and energy generated (MW-hr), (monthly and annually by calendar year), hours of daily operation and total cumulative hours of operation (monthly and annually by calendar year).

13. The emissions of oxides of nitrogen (NOx), calculated as nitrogen dioxide, from the unit exhaust stack shall not exceed 5 parts per million volume on a dry basis (ppmvd) corrected to 15% oxygen and averaged over each clock hour and shall not exceed 2.5 ppmvd corrected to 15% oxygen and averaged over each rolling 3-clock hour period. Compliance with these limits shall be demonstrated continuously based on the CEMS data and based upon source testing calculated as the average of three subtests. This limit shall not apply during startup and shutdown periods.

14. The emissions of carbon monoxide (CO), from the unit exhaust stack shall not exceed 6 parts per million volume on a dry basis (ppmvd) corrected to 15% oxygen and averaged over each rolling 3-clock hour period. Compliance with this limit shall be demonstrated continuously based on the CEMS data and based upon source testing calculated as the average of three subtests. This limit shall not apply during startup and shutdown periods.

15. Emissions of volatile organic compounds (VOCs), calculated as methane, from the unit exhaust stack shall not exceed 2 parts per million volume on a dry basis (ppmvd) corrected to 15% oxygen. Compliance with this limit shall be demonstrated by source testing, calculated as the average of three subtests. This limit shall not apply during startup and shutdown conditions.

16. Ammonia emissions from the unit exhaust stack shall not exceed 10 parts per million volume on a dry basis (ppmvd) corrected to 15% oxygen. Compliance with this limit shall be demonstrated through source testing calculated as the average of three subtests. This limit shall not apply during startup and shutdown periods.

17. Any violation of any emission standard as indicated by the CEMS shall be reported to the District's Compliance Division within 96 hours after such occurrence

18. When the CEMS is not recording data and the unit is operating, hourly NOx emissions for the annual emission calculations shall be determined in accordance with 40 CFR 75 Appendix C. Additionally, hourly CO emissions for the annual emission calculations shall be determined using the hourly emission rate recorded by the CEMS during the most recent hours in which the unit operated 3 continuous hours at no less than 80% of full power rating. Alternate CO emission factors shall be determined from compliance source

test emissions data. The alternate hourly CO emission rate shall be reviewed and approved by the District, in writing.

19. Except for changes that are specified in the initial approved NOx monitoring protocol or a subsequent revision to that protocol that is approved in advance, in writing, by the District, the District shall be notified in writing at least thirty (30) days prior to any planned changes made in the CEMS/DAHS (including the programmable logic controller) software which affects the value of data displayed on the CEMS/DAHS monitors with respect to the parameters measured by their respective sensing devices or any planned changes to the software that controls the ammonia flow to the SCR. unplanned or emergency changes shall be reported to the District within 96 hours.

20. Except during startups and shutdowns the air pollution control system including the water injection system and the ammonia injection system serving the SCR shall be in operation in accordance with manufacturer's specifications at all times when the unit is in operation. All manufacturer's specifications shall be maintained on site or at a District-approved alternate location and made available to District personnel within 48 hours after request.

21. The permittee shall comply with all the applicable provisions of 40 CFR 73, including requirements to offset, hold and retire SO_2 allowances in the event of a breakdown in an automatic ammonia injection control system, the unit shall be shut down or a trained operator shall operate the ammonia injection control system manually and the breakdown shall be reported to the District Compliance Division pursuant to rule 98(b) (1) and 98(e).

22. A relative accuracy test audit (RATA) and all other required certification tests shall be performed and completed on the CEMS in accordance with 40 CFR part 75 Appendix A and B (performance specifications). At least 21 days prior to the test date, the permittee shall submit test protocol to the District for approval. Additionally, the District shall be notified a minimum of 21 days prior to the test so that observers may be present. Within 60 days of completion of this test, a written test report shall be submitted to the District for approval unless an extension is filed.

23. The CEMS shall be maintained and operated, and reports submitted, in accordance with the requirements of rule 19.2 Sections (d), (e), (f)(2), (f)(3), (f)(4) and (f)(5) and CEMS protocol approved by the District.

24. This unit shall be source tested to demonstrate compliance with the NOx, CO, VOC, and ammonia emission standards of this permit, using District approved methods. The source test and the NOx and CO RATA tests shall be conducted in accordance with the RATA frequency requirements of 40 CFR 75, Appendix B, Sections 2.3.1 and 2.3.3.

25. The source test protocol shall comply with the following requirements:

    A. Measurements of oxides of nitrogen (NOx), carbon monoxide (CO), and stack gas oxygen content (O_2%) shall be conducted in accordance with U.S. Environmental Protection Agency (EPA) Method 7E and District Source Test Method 100, or the Air Resources Board (ARB) Test Method 100, as approved by the EPA.

    B. Measurement of volatile organic compounds (VOC's) emissions shall be conducted in accordance with the San Diego Air Pollution Control District Methods 25A and/or 18.

    C. Measurements of ammonia emissions shall be conducted in accordance with Bay Area Air Quality Management District (BAAQMD) test method ST-1b.

    D. Source testing shall be performed at or above the normal load level, as specified in 40 CFR part 75 Appendix A Section 6.5.2.1.d, and at no less than 80% of the unit's rated

load unless it is demonstrated to the satisfaction of the District that the unit cannot operate under these conditions. If this demonstration is accepted, then emissions source testing shall be performed at the highest achievable continuous power level.

26. Within 60 days after completion of the renewal source test or RATA, a final test report shall be submitted to the District for review and approval.

27. Except as specified herein, all records required by this permit shall be maintained on site for a minimum of five years and made available to District personnel upon request. If this site becomes unmanned, the permittee shall submit an alternate site for the maintenance of records to District for approval.

28. Access, facilities, utilities and any necessary safety equipment for source testing and inspection shall be provided upon request of the Air Pollution Control District.

29. This Air Pollution Control District permit does not relieve the holder from obtaining permits or authorizations required by other governmental agencies.

30. The permittee shall, upon determination of applicability and written notification by the District, comply with all applicable requirements of the Air Toxics 'Hot Spots' Information and Assessment Act (California health and safety code section 44300 et. seq.).

Appendix A – Site Plans

Figure 1 – Site Location Map

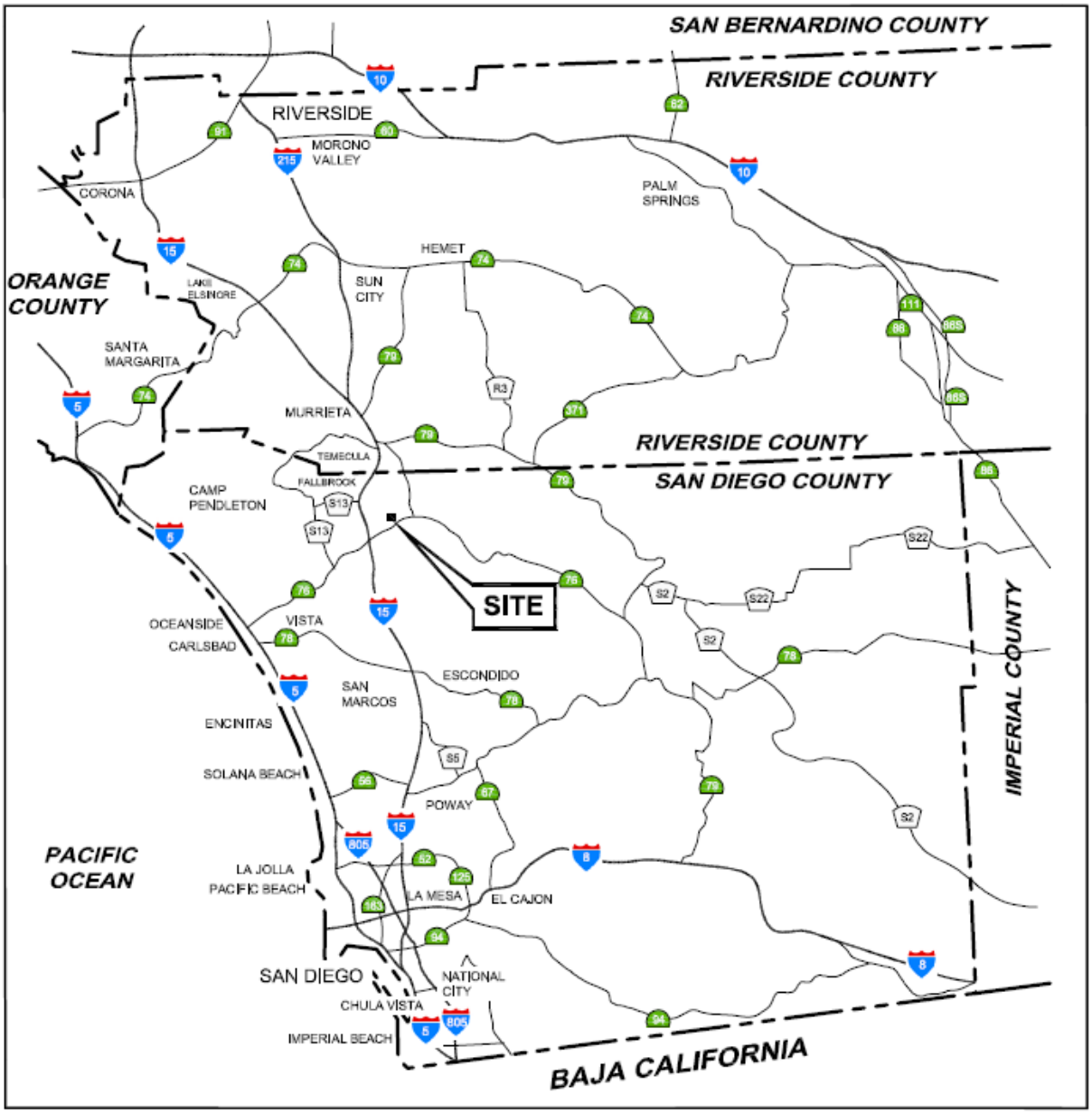

Figure 2 – Project Site Aerial Photo

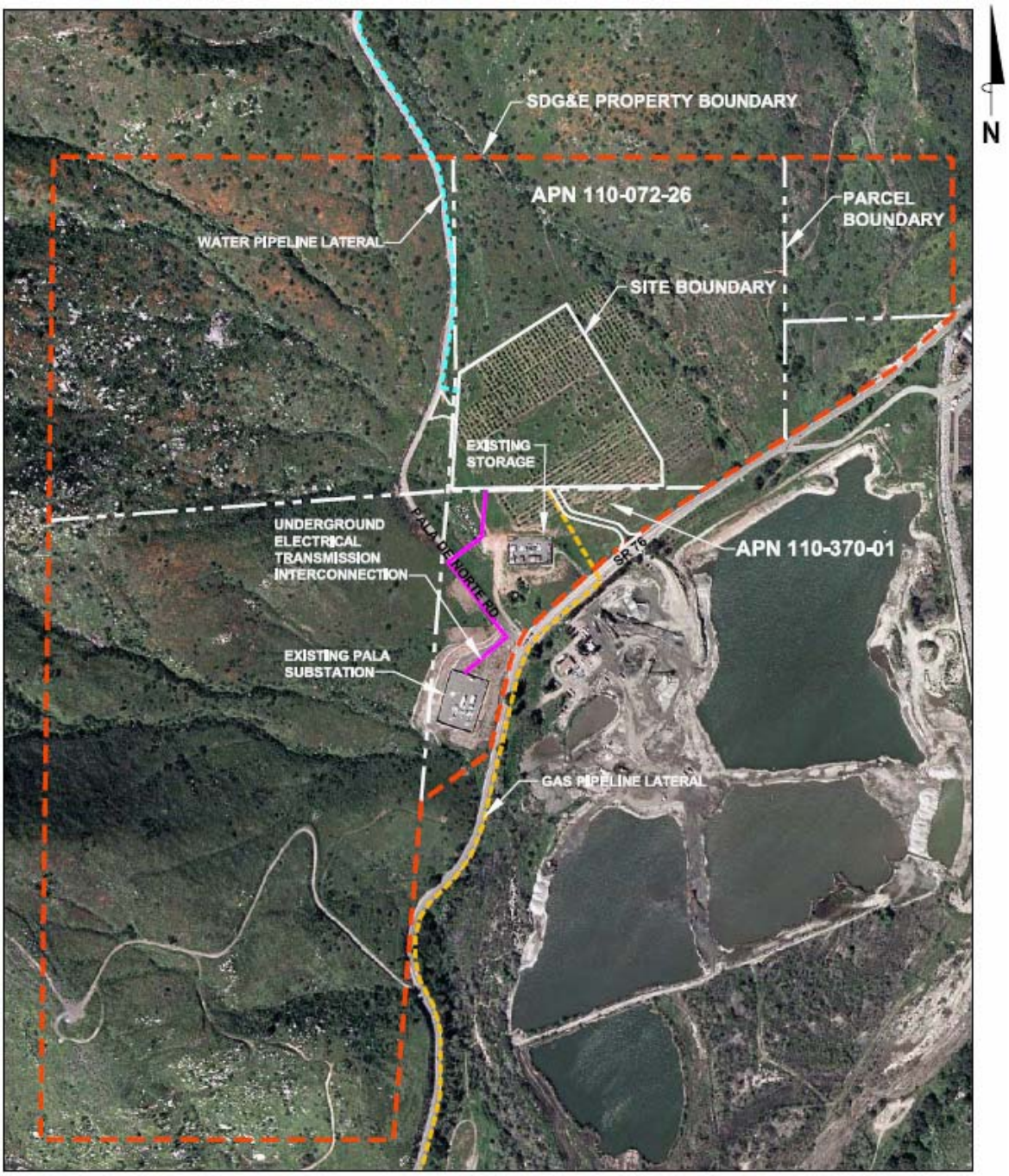

SOURCE:

Google Earth Professional, 2005.

APPROXIMATE SCALE (FEET)

0 600 1200

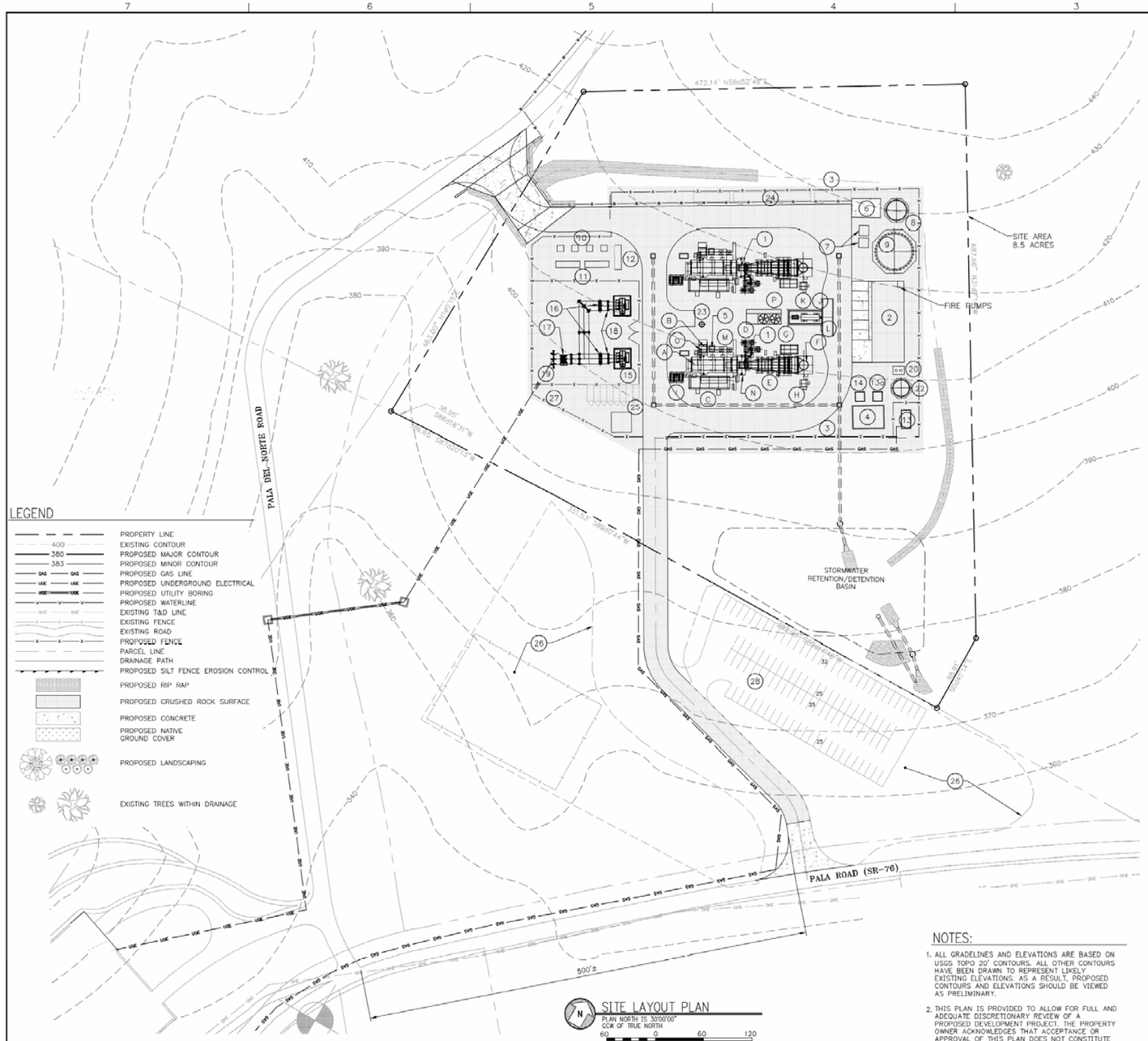

KEYNOTES:

1. COMBUSTION TURBINE (CT), GENERATOR, AND AUXILIARY EQUIPMENT. (FOR EACH UNIT).
   - A MAIN TURBINE GENERATOR SKID ENCLOSURE
   - B 15KV SWITCHGEAR
   - C AUXILIARY CT EQUIPMENT SKID
   - D TEMPERING AIR FANS
   - E EMISSION CONTROL SYSTEM–SCR
   - F STACK
   - G AMMONIA VAPORIZATION SKID
   - H CEMS ENCLOSURE WITH TRANSFORMER AND CAL GAS STORAGE
   - I CT FIN FAN COOLER
   - J AMMONIA STORAGE TANK (COMMON TO UNITS)
   - K AMMONIA FORWARDING PUMP SKID (COMMON TO UNITS)
   - L AMMONIA UNLOADING PAD, SPILL CONTAINMENT (COMMON TO UNITS)
   - M TURBINE REMOVAL SUPPORTS
   - N AIR INLET FILTER
   - O GENERATOR BUS DUCT
   - P INLET AIR CHILLER AND COOLING TOWERS (COMMON TO UNITS)
2. SERVICE BUILDING FOR CONTROL ROOM, ELECTRICAL EQUIPMENT, AND FIRE PUMPS.
3. SITE SECURITY CHAINLINK FENCE AND GATES.
4. FUEL GAS COMPRESSOR, SOUND WALL AND RELATED EQUIPMENT.
5. FUEL GAS FILTER/SEPARATOR EQUIPMENT.
6. TEMPORARY WATER TREATMENT TRAILER CONCRETE PAD.
7. DEMIN. WATER PUMP SKID AND RELATED EQUIPMENT.
8. DEMIN. WATER STORAGE TANK.
9. RAW WATER FIREWATER STORAGE TANK.
10. AUX. TRANSFORMERS.
11. 480V & 5KV CB SWITCHGEAR.
12. BLACKSTART GENERATOR.
13. GAS METERING STATION.
13a. COALESCING FILTER SKID.
14. FUEL GAS COMPRESSOR INTER–STAGE FIN–FAN COOLER.
15. 13.8KV–69KV STEP–UP TRANSFORMER.
16. 69KV DISCONNECT SWITCH AND SUPPORTS.
17. 69KV CIRCUIT BREAKER.
18. 69KV CIRCUIT SWITCHER.
19. 69KV DEAD–END STRUCTURE AND DISCONNECT SWITCH.
20. UNDERGROUND SANITARY SYSTEM.
21. GRADES SHOWN ARE FINISHED GRADE. 8" DEEP CRUSHED ROCK PAVEMENT INSIDE EXISTING SECURITY FENCE. STABLE DRIVING SURFACE AND POSITIVE DRAINAGE WILL BE MAINTAINED THROUGHOUT CONSTRUCTION. SUBSTATION CRUSHED ROCK PAVEMENT SHALL BE CLASS II MATERIAL.
22. WASTEWATER STORAGE TANK.
23. EMERGENCY CONTAINMENT TANK.
24. TEMPORARY CONSTRUCTION TRAILERS.
25. TEMPORARY CONNEXES/LOCK BOXES.
26. TEMPORARY CONSTRUCTION STAGING.
27. TEMPORARY CONSTRUCTION PRE–ASSEMBLY.
28. TEMPORARY CONSTRUCTION PARKING.

NOTES:

1. ALL GRADELINES AND ELEVATIONS ARE BASED ON USGS TOPO 20' CONTOURS. ALL OTHER CONTOURS HAVE BEEN DRAWN TO REPRESENT LIKELY EXISTING ELEVATIONS. AS A RESULT, PROPOSED CONTOURS AND ELEVATIONS SHOULD BE VIEWED AS PRELIMINARY.
2. THIS PLAN IS PROVIDED TO ALLOW FOR FULL AND ADEQUATE DISCRETIONARY REVIEW OF A PROPOSED DEVELOPMENT PROJECT. THE PROPERTY OWNER ACKNOWLEDGES THAT ACCEPTANCE OR APPROVAL OF THIS PLAN DOES NOT CONSTITUTE AN APPROVAL TO PERFORM ANY GRADING SHOWN HEREON, AND AGREES TO OBTAIN VALID GRADING PERMISSIONS BEFORE COMMENCING SUCH ACTIVITY.

REV.	DATE	DESCRIPTION	DWN	CHK
0	7–5–07	ISSUED FOR CEC PERMIT APPLICATION	BGG	WHR

Sealed Only When Signed in Blue Ink

Sega ®
Engineers – Architects – Technicians
Design – Construction – Field Service
16041 Foster
P.O. Box 1000
Stilwell, Kansas 66085–1000

J-POWER GROUP
J-POWER USA Development Co., Ltd

ORANGE GROVE PROJECT

SITE LAYOUT PLAN

DESIGN BY: B. ROMINES	CHECKED BY: J. BONDANK
DRAWN BY: B. GASPERS	DATE: 4–13–07
CLIENT I.D. JP000101	SEGA PROJECT NO. 07–098

CADD FILE NAME: 07098–C100.dwg

DRAWING NO. C100 — REV. 0

Appendix B – BACT Determination

BACT ASSESSMENT

As required by District new source review (NSR) rules, the application of best available control technology (BACT) is required for the proposed project. This BACT assessment is conducted to demonstrate compliance with this requirement for the proposed combustion turbines. This assessment considers all NOx and CO control technologies that are currently proposed or in use on natural-gas-fired combustion turbines with greater than 50 MMBtu/hour heat input. The following sources of information were reviewed:

- U.S. EPA BACT/Lowest Achievable Emission Rate Clearinghouse (U.S. EPA 1985) and updates
- CARB BACT Clearinghouse database and CARB BACT Guidelines for Power Plants (Adopted 7/22/99)
- Recent California Energy Commission (CEC) Applications for Certification

The table below lists selected recent NOx BACT proposals and determinations for natural-gas-fired advanced technology combustion turbines similar in size to the proposed turbines. Nearly all recent simple cycle turbine projects in California involving turbines of similar size to those proposed for this Project have had a NOx BACT level of 2.5 ppm dry volume (ppmvd) (at 15 percent oxygen), to be achieved by means of either low-NOx burners or water injection coupled with the use of SCR with ammonia injection. The combustion turbines in this Project will achieve the BACT concentration of 2.5 ppmvd at 15 percent O_2 using water injection and SCR.

Similarly, most recent simple cycle turbine projects have been approved with a CO emissions limit of 6 ppmvd and a ROC emissions limit of 2 ppmvd (both at 15 percent O_2), based on the use of an oxidation catalyst. The combustion turbines in this Project will achieve the same level of BACT concentration for CO and ROC. Exclusive use of natural gas fuel has been determined to be BACT for SOx and PM_{10} in all other comparable projects for several years.

Name	District	Rating	Make & Model	Emission Limit	Control(s)	Permit Date
Kings River	SJVAPCD	40+ each, 2 Turbine, 97 MW total	GE LM6000 PC SPRINT	3.0 ppm	Water Injection & SCR	5/04
Modesto Electric	SJVAPCD	40+ each, 2 Turbines, 95 MW total	GE LM6000 PC SPRINT	2.5 ppm	Water Injection & SCR	2/04
Riverside Energy	SCAQMD	40+ each, 2 Turbines, 96 MW total	GE LM6000 PC SPRINT NxGen	2.5 ppm	Water Injection & SCR	12/04
Niland	Imperial County APCD	40+ each, 2 Turbines, 95 MW total	GE LM6000 PD SPRINT	2.5 ppm	Dry Low NOx & SCR	10/06
San Francisco Electric Reliability	BAAQMD	40+ each, 3 Turbines, 145 MW total	GE LM6000 PC SPRINT	2.5 ppm	Water Injection & SCR	10/06
MMC Chula Vista	SDAPCD	40+ each, 1 Turbines, 45 MW	GE LM6000 PC SPRINT	2.5 ppm	Water Injection & SCR	05/07

1.0 ASSESSMENT OF NOX CONTROL TECHNOLOGIES

Based on a review of sources described above, the following NOx control technologies were evaluated to determine whether they are able to achieve BACT NOx levels in practice:

- DLE and EMx (SCONOx™)
- DLE and SCR with ammonia injection

1.1 EMx (SCONOx™)

SCONOx™ is a NOx reduction system originally produced by Goal Line Environmental Technologies (now distributed as EMx™ by EmeraChem) for gas turbine applications within an exhaust temperature range significantly below the design operating parameters of the simple cycle LM6000 proposed for the Project. This system uses a coated catalyst (potassium carbonate) to oxidize both NOx and CO and thereby reduce facility emissions. As demonstrated by an initial installation on several gas turbines where energy is recovered from the exhaust gas to produce steam, SCONOx™ is capable of achieving NOx emission concentrations of 2 ppm based on a maximum inlet concentration of 25 ppm, and 90 percent CO reduction based on a maximum inlet concentration of 50 ppm. Recent literature for EMx claims that a concentration of < 1.5 ppm NOx and < 1.0 ppm CO is achievable. However, the SCONOx™ technology has not been sufficiently demonstrated on higher exhaust temperature simple cycle peaking gas turbines such as those proposed for the Project.

The EMx™ (SCONOx™) system employs a single catalyst to simultaneously oxidize CO to CO_2 and NO to NO_2. NO_2 formed by the oxidation of NO is subsequently absorbed onto the catalyst surface through the use of a potassium carbonate absorber coating. The potassium carbonate catalyst coating reacts with NO_2 to form potassium nitrites and nitrates. Prior to saturation of the potassium carbonate coating, the catalyst must be regenerated. This regeneration is accomplished by passing a dilute hydrogen-reducing gas across the surface of the catalyst in the absence of oxygen. Hydrogen in the reducing gas reacts with the nitrites and nitrates to form water and elemental nitrogen. CO_2 in the regeneration gas reacts with potassium nitrites and nitrates to form potassium carbonate; this compound is the catalyst absorber coating present on the surface of the catalyst at the start of the oxidation/absorption cycle. Water vapor and elemental nitrogen are released to the atmosphere as part of the exhaust stream. Following regeneration, the EMx™ catalyst has a fresh coating of potassium carbonate, allowing the oxidation/absorption cycle to begin again. There is no net gain or loss of potassium carbonate after both the oxidation/absorption and regeneration cycles have been completed.

The EMx™ operates at a temperature range of 300 to 700°F and, therefore, must be installed in an appropriate temperature section of the exhaust stream. For installations above 450°F, the EMx™ catalyst is regenerated by introducing a small quantity of natural gas with a carrier gas, such as steam, over a steam reforming catalyst and then to the EMx™ catalyst. The reforming catalyst initiates the conversion of methane to hydrogen, and the conversion is completed over the EMx™ catalyst. The reformer catalyst works to partially reform the methane gas to hydrogen (2 percent by volume) to be used in the regeneration of the EMx™ catalysts. The reformer catalyst is placed upstream of the EMx™ catalyst in a steam reformer reactor. The reformer catalyst is designed for a minimum 50-percent conversion of methane to hydrogen.

Since the proposed combustion turbines operate between 837°F and 956°F, the EMx™ (SCONOx™) application is not appropriate for this high-temperature technology.

Potential advantages of the EMx™ (SCONOx™) process include:

- **No ammonia.** The EMx™ process does not use ammonia. This eliminates the ammonia storage and transportation safety issues and the potential for ammonia slip or ammonia-based particulate formation.
- **Carbon monoxide reduction.** EMx™ will reduce CO emissions as well as NOx emissions.

Potential disadvantages of the EMx™ process include:

- **Not suitable for exhaust temperatures of simple cycle gas turbine peaking applications**. EMx™ has been primarily installed on co-generation or combined cycle systems where the exhaust gas temperature is reduced by recovering energy to produce steam. The proposed Project will be a simple cycle peaking operation. As such, there will be no steam production, which is required to produce the EMx™ regeneration gas. In addition, peaking units require more rapid startups and more frequent load changes than typical cogeneration systems. The main concerns are the damper systems that would be required with EMx™ for the units and assuring proper regeneration gas distribution. The effectiveness and longevity of these damper systems have not been demonstrated on simple cycle gas turbines, and their cost of replacement would be substantial.
- **Catalyst "washing."** A proprietary catalyst washing system must be used and an on-line catalyst washing system design has not yet been fully developed. If an on-line catalyst washing system is not used, then the facility must be shut down for cleaning.
- **High capital and operating cost.** EMx™ is significantly more expensive than SCR with ammonia injection primarily due to the higher cost of initial and replacement catalyst. The EMx™ catalyst is a precious metal catalyst, which is very expensive. Because the low NOx emission rates attainable on gas turbines in co-generation/combined cycle systems with EMx™ have not been sufficiently demonstrated as "achieved in practice" on simple cycle gas turbine applications and due to the other factors discussed above, EMx™ does not represent BACT for this Project at this time.

1.2 SCR with Ammonia Injection

SCR with ammonia injection systems for reduction of NOx emissions have been widely used in simple cycle gas turbine applications for many years and are considered a proven technology. SCR systems are commercially available from several vendors, unlike EMx/SCONOx™, which is available from a single vendor. The SCR process involves the injection of ammonia into the flue gas stream via an ammonia injection grid upstream of a catalyst. The ammonia reacts with the NOx gases in the presence of the catalyst. The catalyst is not regenerated and requires periodic replacement. SCR vendors typically offer a 3-year guarantee on catalyst life. SCR with

ammonia injection systems have been used in numerous simple cycle applications including LM6000 Class units.

1.3 Dry Low Emissions Combustors

Water injection, steam injection, and Dry Low Emissions (DLE) combustion technologies are available and used to control LM6000 exhaust gas NOx emissions. For this Project, water injection will be used to lower the temperature in the combustion zone and reduce NOx formation. Virtually all gas turbine manufacturers are continuing to research and improve on these advanced combustion technologies because they represent the most cost-effective NOx reduction approach for some turbine users. Exploring NOx control through combustor design is attractive because there is essentially only one source of NOx formation in natural gas combustion as opposed to two sources with liquid or solid fuels. The source of NOx emission from natural gas turbines is the thermal NOx formation reaction, which is very dependent on combustor design. This reaction converts natural atmospheric nitrogen and oxygen to NOx at the high temperatures of combustion. Water injection results in NOx emission rates of 25 ppmvd (at 15 percent O_2) or less.

The Project will use water injection and SCR and ammonia injection designed to achieve a NOx emission limit of 2.5 ppm (at 15 percent O_2). As noted in the table above, this level of NOx is at or below other recent and similar projects and is considered to be BACT for this Project.

1.4 Other Technologies

Technologies that cannot achieve a NOx emissions limit of 2.5 ppmvd (at 15 percent O_2) in practice were not considered. These technologies include SCR without DLE and DLE without SCR.

2.0 ASSESSMENT OF CO CONTROL TECHNOLOGIES

The proposed Project is designed to achieve 6 ppm (at 15 percent O_2) with the use of natural gas and a CO oxidation catalyst (except during start up condition).

The following CO control technologies are evaluated:

- Combustion design/control
- Oxidation catalyst

2.1 Combustion Design/Control

Gas turbine combustion technology has significantly improved over recent years with respect to lowering CO emissions. For some installations, the turbines have been guaranteed by the manufacturer to achieve a CO rate of 9 ppm (at 15 percent O_2) without post-combustion control technologies under a wide range of operating conditions (60 percent to 100 percent load) and ambient conditions (15°F to 115°F).

2.2 Oxidation Catalyst

CO oxidizing catalysts have been used with natural-gas-fired turbines for over a decade when uncontrolled CO emission levels are unacceptably high. CO catalysts operate at elevated temperatures within the exhaust stream. CO oxidizing catalysts can be considered technically feasible for use in simple cycle peaking applications. Thus, installation of a CO oxidizing catalyst on the turbines is considered to be BACT for this Project.

3.0 ASSESSMENT OF ROC CONTROL TECHNOLOGIES

The proposed BACT level of 2 ppmvd (at 15 percent O_2) for ROC control with water injection, SCR, and an oxidation catalyst is consistent with the most stringent level among recent BACT determinations for simple cycle gas turbines and is therefore considered to be BACT for this Project.

4.0 ASSESSMENT OF SO_2 AND PM_{10} CONTROL TECHNOLOGIES

Sulfur dioxide and PM_{10} emissions will be controlled through the use of clean-burning pipeline quality natural gas as specified by the Public Utilities Commission. This control technology has been widely and uniformly implemented for control of SO_2 and PM_{10} emissions from combustion turbines in California and throughout the United States, and is considered to be BACT for this Project.

5.0 ASSESSMENT OF AMMONIA SLIP CONTROL TECHNOLOGIES

While a level of 5 ppmvd ammonia slip (at 15 percent O_2) can be achieved with the SCR system, a BACT level of 10 ppmvd is proposed for this project in favor of assuring NOx reduction by the SCR system. This is consistent with several projects referenced earlier where the lowest achievable emission rate (LAER) standard is not applicable.

6.0 BACT ASSESSMENT FOR EMERGENCY FIRE PUMP

The proposed emergency fire pump diesel engine complies with the requirements of CARB's Airborne Toxic Control Measure (ATCM) for Stationary Compression Ignition Engines as applicable to New Emergency Fire Pump Engines. BACT is defined as meeting the *Tier 3 EPA Certified Off-Road Emissions Standards*. These standards for compression ignited diesel fuel internal combustion engine are listed below. The comparison shows the proposed engine to meet the BACT requirement.

	Rating	(g/bhp-hr)			
		CO	VOC	NOx	PM
BACT	100 – 175 H.P.	8.5	1.0	6.9	0.38
Proposed Engine	173 H.P.	0.4	0.1	3.9	0.09

The proposed engine annual operating hours for maintenance/testing purposes conforms to those specified in the National Fire Protection Association (NFPA) guidance (Standards for Inspection, Testing, and Maintenance of Water-Based Fire Protection Systems).

Appendix C – Rule 1200 Health Risk Assessment

SDAPCD RULE 2100 HEALTH RISK ASSESSMENT

Pursuant to District Rule 2100 requirement, a health risk assessment (HRA) is prepared for the Orange Grove Project to demonstrate that it meets the excess health risk guidelines specified in this Rule.

1.0 Environmental Setting

The Project Site is comprised of 8.5 acres situated on a portion of a 202 acre Property owned by San Diego Gas & Electric (SDG&E). The land use within a 3-mile radius of the Project is rural and consists primarily of agricultural land and open space with scattered rural single-family housing.

The Site location is on a gentle slope surrounded by moderately steep hillsides to the north, east and west. Topographic renderings of the area are shown in Figure C-1 – Project Site Topography. Based on two years of monitoring data collected in 2002 and 2003 at an adjacent location (the proposed Gregory Canyon Landfill project), the prevailing wind in this area is generally north-east and east at an average wind speed over the two years of 4.17 knots (2.14 m/s). Wind roses for this set of data are provided at the back of this appendix.

Even though the meteorological data from Gregory Canyon is ideal for this Project, the HRA is completed with data from the nearest official San Diego Air Pollution Control District (SDAPCD) monitoring facility in Escondido (Surface Facility No. 72293, Upper Air Facility No. 3190). A detailed discussion on this approach is provided in Section 3.0. The Escondido monitoring facility is located approximately eight (8) miles directly south of Pala. Wind roses for the years 1998, 1999 and 2000 date are also provided at the end this appendix. Similarly, the Escondido wind data show that the wind direction is predominantly east. Average wind speed over the three year period is 1.7 m/s.

The Site location will be graded at approximately 410 feet above sea level. The exhaust stack for each of the CTG will be 80 feet above grade. Due to the hills that surround the site, the regional topography data in the form of digital elevation model (DEM) input files were utilized for the air dispersion modeling.

2.0 Sensitive Receptors

For health risk assessment, sensitive receptors are defined as groups of individuals (e.g. children, elderly and the chronically ill) that may be more susceptible to health risks from a chemical exposure. Sensitive receptors locations therefore include schools, day care facilities, convalescent homes, parks, and hospitals. Based on a survey of the vicinity, there are no potential sensitive receptors identified within 3,000 meters (1.86 miles) of the Site. The nearest schools are: 1) Vivian Banks Charter School approximately 2.0 miles west of the Site, 2) Vallecitos Elementary approximately 3.6 miles north-west of the Site, 3) Bonsall Union Elementary located approximately 4.5 miles south-west, and 4) Pauma Valley and Pauma Elementary approximately 7.1 miles south-east of the Site.

Figure C-1 – Project Site Topography (North & South-West Views)

TRC	Project: **Orange Grove Project**
	Map Source: Google Earth

Figure C-2 below identifies selected nearby residential and farm houses within close proximity to the Site, as well as non-residential sources, which include the adjacent nursery and the Pala Casino, the latter being approximately 1.0 mile east of the Project Site.

Figure C-2 – Residential and Non-Residential (Commercial) Receptors

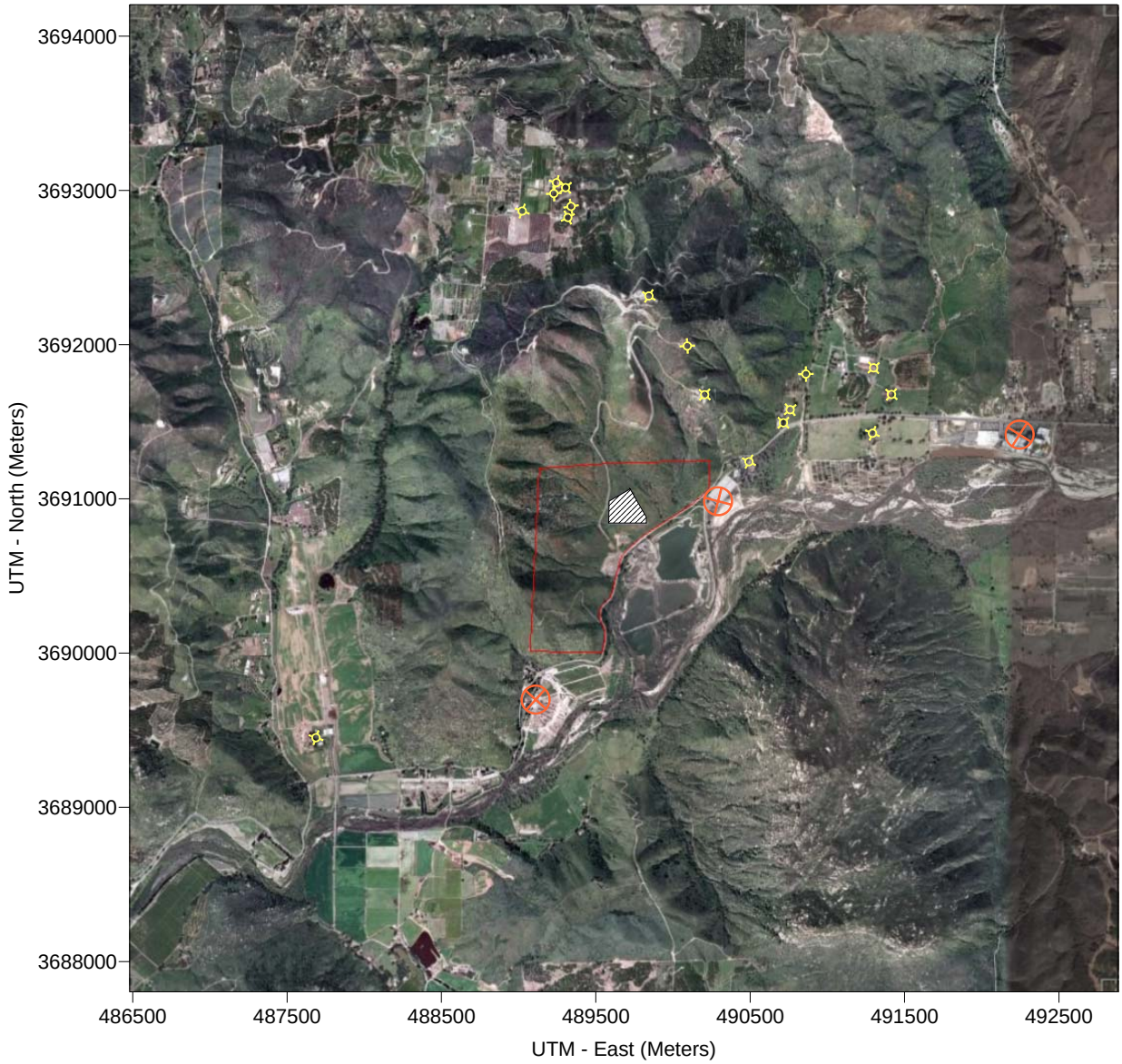

Note: There are no sensitive receptors (School, daycare facility, convalescent homes, and hospitals within the boundaries of this map.

⌖ Residential or Farm Houses

⊗ Commercial Establishments

N

TRC	Project: **Orange Grove Project - SPPE Application**
	Map Source: Google Earth – Coordinates NAD27

3.0 Health Risk Assessment

This section describes the health risk assessment approach and methodology for this Project. A discussion is provided on the significance criteria for cancer and non-cancer health risks. The conservative assumptions built into the HRA and associated uncertainties are also described.

3.1 Health Risk Assessment Methodology

The HRA conducted for this project uses procedures consistent with the Office of Environmental Health Hazard Assessment (OEHHA) *Air Toxics Hot Spots Program Risk Assessment Guidelines – The Air Toxics Hot Spots Program Guidance Manual for Preparation of Health Risk Assessments* (OEHHA October 2003). The OEHHA guidelines were developed to provide risk assessment procedures as required under the Air Toxics Hot Spots Information and Assessment Act of 1987, Assembly Bill 2588 (Health and Safety Code Sections 44360 et seq.). The Hot Spots law established a statewide program for the inventorying of air toxics emissions from individual facilities, as well as requirements for risk assessment and public notification of potential health risks.

Following the latest risk assessment guidelines developed by OEHHA, the HRA is conducted using the Hotspots Analysis and Reporting Program (HARP) Version 1.3 software. In addition to the inventorying module, the HARP software consists of an air dispersion module and a risk evaluation module. The HARP dispersion module is based on the Environmental Protection Agency (EPA) Industrial Source Complex Short Term Version 3 (ISCST3) air dispersion model.

Although ISCST3 has been used and recommended by EPA dating back to 1979, EPA transitioned its air dispersion modeling software recommendation on November 9, 2005 to AERMOD, a model developed jointly by the American Meteorological Society and EPA. Accordingly, the AERMOD dispersion model is used to evaluate the impacts of criteria pollutants for the SPPE filing to the CEC.

Recognizing the eventual need, the California Air Resource Board (CARB) recently issued a beta version of a file converter to accept AERMOD results into its HARP risk evaluation module. However, since this file converter has not been finalized and officially issued, and the associated methodology not formalized or recognized by OEHHA, a conservative approach is taken for this HRA by using the most currently approved CARB HARP software which uses ISCST3 instead of AERMOD air dispersion results.

Using the current version of HARP, the HRA is conducted with the following steps.

- Hazard Identification and Emission Quantification
- Exposure Assessment
- Dose-Response Assessment
- Risk Characterization

First, hazard identification was performed to determine the potential health effects that may be associated with Project emissions. The purpose was to identify whether pollutants emitted from the Project could be characterized as potential human carcinogens or associated with other types of adverse health effects. Following OEHHA's most recent publication (June 12, 2007),

the following table summarizes the list of hazardous air pollutants for this Project and the associated toxicity criteria for these pollutants.

Table C-1 – Toxicity Values Used for Health Risk Assessment

Compound	Sources of Emissions	Inhalation Cancer Potency Factor (mg/kg-day)$^{-1}$	Chronic REL (µg/m3)	Acute REL (µg/m3)
Diesel particulate (PM10)	Diesel fire water pump engine	1.10E+00	5.00E+00	--
Ammonia	Turbine stacks	--	2.00E+02	3.20E+03
1,3-Butadiene	Turbine, black start engine stacks	6.00E-01	2.00E+01	--
Acetaldehyde	Turbine, black start engine stacks	1.00E-02	9.00E+00	--
Acrolein	Turbine, black start engine stacks	--	6.00E-02	1.90E-01
Benzene	Turbine, black start engine stacks	1.00E-01	6.00E+01	1.30E+03
Ethylbenzene	Turbine, black start engine stacks	--	2.00E+03	--
Formaldehyde	Turbine, black start engine stacks	2.10E-02	3.00E+00	9.40E+01
Hexane	Turbine stacks	--	7.00E+03	--
Propylene	Turbine, black start engine stacks	--	3.00E+03	--
Propylene oxide	Turbine stacks	1.30E-02	3.00E+01	3.10E+03
Toluene	Turbine, black start engine stacks	--	3.00E+02	3.70E+04
Xylenes	Turbine, black start engine stacks	--	7.00E+02	2.20E+04
Polycyclic Aromatic Hydrocarbons (PAH):				
Benzo(a)anthracene	Turbine, black start engine stacks	3.90E-01	--	--
Benzo(a)pyrene	Turbine, black start engine stacks	3.90E+00	--	--
Benzo(b)fluoranthene	Turbine, black start engine stacks	3.90E-01	--	--
Benzo(k)fluoranthene	Turbine, black start engine stacks	3.90E-01	--	--
Chrysene	Turbine, black start engine stacks	3.90E-02	--	--
Dibenz(a,h)anthracene	Turbine, black start engine stacks	3.90E-01	--	--
Indeno(1,2,3-cd)pyrene	Turbine, black start engine stacks	3.90E-01	--	--
Naphthalene	Turbine, black start engine stacks	1.20E-01	9.00E+00	--

Second, an exposure assessment was conducted to estimate the extent of potential public exposure to Project emissions. Public exposure is evaluated in terms of the predicted short and long-term ground-level concentrations resulting from Project emissions, the pathway(s) of exposure, and the duration of exposure to the emissions. As discussed above, dispersion modeling was performed using the ISCST3 module within HARP to estimate the ground-level concentrations near the Project Site. The dispersion modeling methodology is further described in the following section.

Third, a dose-response assessment was performed using the HARP risk module to characterize the relationship between pollutant exposure and the incidence of an adverse health effect in

exposed populations. The dose-response relationship is expressed in terms of potency factors for cancer risk and reference exposure levels (REL) for acute and chronic non-cancer risks. As provided above in Table C-1, OEHHA publishes potency factors and REL for an extensive list of toxic air contaminants. These potency factors and REL are constantly updated by the OEHHA, and the most recent values as of June 12, 2007 were applied in this HRA. All exposure pathways available in HARP were included in this analysis. For the calculation of cancer risk, the duration of exposure to Project emissions was assumed to be 24 hours per day, 365 days per year, for 70 years, at all receptors.

Fourth, risk characterization was performed to integrate the health effects and public exposure information and provide quantitative estimates of health risks from Project emissions. Risk modeling was performed using HARP to estimate cancer and non-cancer health risks for the Project. The HARP model utilizes OEHHA equations and algorithms to calculate health risks based on input parameters such as emissions, "unit" ground-level concentrations, and toxicological data. The model input parameters and results of the HRA can be provided electronically upon request.

3.2 Air Dispersion Modeling Methodology

The HRA was conducted using worst-case emissions (short- and long-term) from all sources at the Project. Cancer and chronic non-cancer health effects were quantified using annual emission estimates for the turbines, the black start engine and the fire water pump. Acute health effects were estimated using the maximum hourly emissions for the two turbines, the black start engine, and the fire water pump, although it is unlikely that all of these sources would ever operate simultaneously. The maximum hourly emissions in pounds per hour and annual emissions in pounds per year were used as inputs to the HARP model.

Dispersion modeling was performed using the ISCST3 module in HARP and methods consistent with the recommended approaches (e.g., building downwash, meteorological and topographic data, etc.). The ISCST3 model uses the turbine, black start engine and fire water pump stack parameters to calculate the (Chi over Q) concentration per unit emissions. HARP then uses this information along with the emission rates (provided in the input file as described above) to calculated ground-level concentrations for each chemical species. Risk values were modeled for all sensitive receptors within 3.0 miles (~5 km) of the Project and all grid and census receptors within 6 miles (~10 km) of the Project, to assess potential health effects at these locations. Figure C- depicts the receptor grid points for dispersion modeling. Fence line receptor grid points were set at 25 meters apart. The grid points are 100 meters apart for areas within one (1) kilometer of the Site. From one (1) to five (5) kilometers, the grid points are 500 meters apart. A 1,000 meter spacing was used for areas within five (5) to ten (10) kilometers.

Figure C-3 – HARP Receptors Points

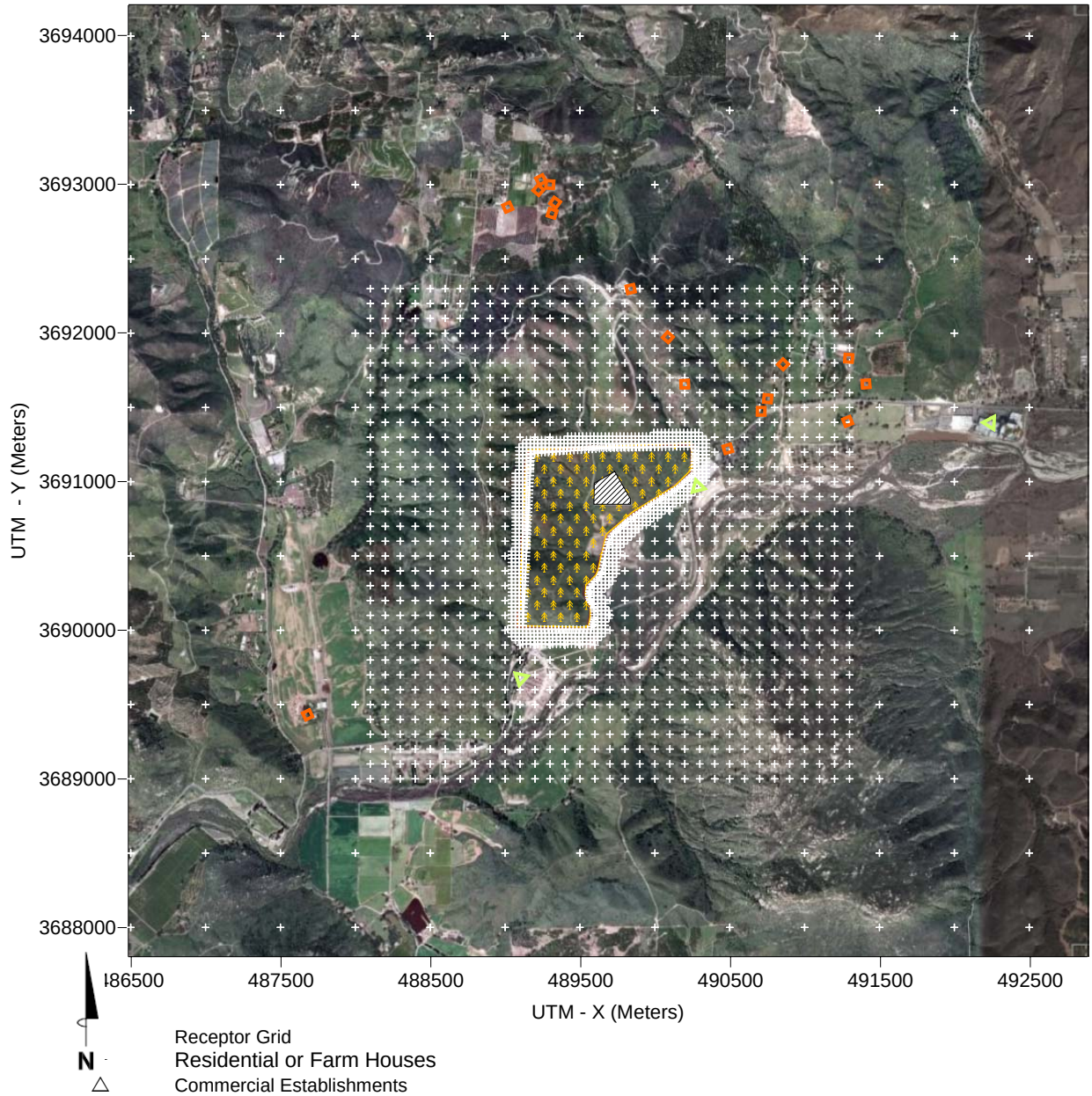

TRC	PROJECT: Orange Grove Project
	MAP SOURCE: Google Earth – Coordinates NAD27

3.3 Meteorological Data

For HRA using the HARP software, the District has recommended and provided meteorological data for direct input to the HARP ISCST3 module from the Escondido monitoring facility (Surface Facility No. 72293, Upper Air Facility No. 3190). Although the Gregory Canyon data is more representative of site conditions, it is insufficient to meet the three (3) years meteorological

data requirements specified by OEHHA for risk assessment. Wind roses (directional vectors) for the years 1998, 1999 and 2000 are provided behind this appendix. When compared to the wind roses for Gregory Canyon, the prevailing wind direction for the Escondido data is similarly predominately east. At an average wind speed of1.7 m/s (over the three-year period), it is less than the 2.1 m/s monitored for Gregory Canyon.

The lower averaged wind speed will generally have less dispersion; therefore, it is believed that the Escondido data will have higher predicted concentrations and risk estimates. The predicted impact would therefore be more conservative for this Project.

3.4 Calculation of Health Effects

Adverse health effects are expressed in terms of cancer or non-cancer health risks. Cancer risk is typically reported as "lifetime cancer risk." Lifetime cancer risk is the maximum estimated increase in risk of contracting cancer caused by long-term exposure to a pollutant suspected of being a carcinogen. Cancer risk is calculated by assuming that an individual is exposed continuously to pollutants for 24 hours per day for 70 years. Although the continuous lifetime exposure is unlikely, the goal of the approach is to produce a worst-case estimate of potential cancer risk. Non-cancer risk is typically evaluated based on the hazard index ("HI"). The HI is calculated for each target organ as a fraction based on the maximum acceptable exposure level to a pollutant. The acceptable exposure level is generally the level at (or below) which no adverse health effects are expected. The HI is calculated for short- (acute, HIA) and long-term (chronic, HIC) exposures.

Both cancer and non-cancer risk estimates provided in the HRA represent incremental risks (i.e., risks due to Project sources only) and do not include potential health risks posed by existing background concentrations. The HARP model performs all of the necessary calculations to estimate the potential lifetime cancer risk and HI posed by Project emissions.

3.5 Uncertainty with Health Risk Assessment

Sources of uncertainty in HRA include emissions estimates, dispersion modeling, exposure characteristics, and extrapolation of toxicity data in animals to humans. For this reason, assumptions used in HRA are designed to provide sufficient health protection to avoid underestimation of risk to the public. Some sources of uncertainty applicable to this HRA are discussed below.

The turbine emission rates of individual TAC were derived from emission factors published by CARB (1996). In the case of ammonia emissions, the estimate is based on the equipment supplier guarantee for the SCR system. Both the short- and long-term turbine emissions were developed assuming all turbines operated at the maximum load for the maximum number of annual operating hours requested for this application. Under actual operating conditions, the turbines may operate less and the average loads will be lower than 100 percent of capacity. Consequently, the emissions used for this HRA are likely to be higher than those that would occur under normal operation of the proposed gas turbine facility.

The dispersion models used in the HRA contain assumptions that tend to lead toward over-prediction of ground-level contaminant concentrations. For example, the modeling performed in the HRA assumed a conservation of mass (i.e., all of the pollutants emitted from the sources remained in the atmosphere while being transported downwind). During the transport of

pollutants from sources to receptors, none of the material was assumed to be converted or removed through chemical reaction or lost at the ground surface through reaction, gravitational settling, or turbulent impaction. In reality, these mechanisms work to reduce the level of pollutants remaining in the atmosphere during plume travel. Additionally for this Project, the meteorological data applied for modeling is known to have lower average wind velocity than actual site condition and would therefore produce higher concentrations and more conservative results.

The exposure characteristics assessed in the HRA included the assumption that all receptors (including residents) were exposed to turbine, black start engine, and fire water pump emissions continuously at the same location for 24 hours per day, 365 days per year, for 70 years. It is extremely unlikely that any resident would actually be subject to such continued, long-term exposure. The conservative exposure assumption tends to cause risks to be over estimated by the HRA methods used in this analysis.

The toxicity data used in the HRA contain uncertainties resulting from the extrapolation of health effects data from animals to humans. Typically, safety factors are applied when doing the extrapolation. Furthermore, the human population is much more diverse, both genetically and culturally, than bred experimental animals. The intraspecies variability among humans is expected to be much greater than in laboratory animals. With all of the uncertainty in the assumptions used to extrapolate toxicity data, significant measures are taken to ensure that there is sufficient health protection built into the health effects criteria used in assessments such as this one.

The conservatism introduced at each step in the HRA to compensate for all of these sources of uncertainty is compounded in the predicted health risks. Therefore, the actual risks resulting from exposure to emissions from the Project are expected to be well below the values presented in this analysis.

4.0 Emission Calculation and Methodology

Project operations were evaluated to determine whether particular substances will be used or generated that may cause adverse health effects if released to the air. The primary sources of potential emissions from routine operations are the natural-gas-fired CTG and the ammonia slip-stream from the SCR control system used to minimize emissions of NO_x. Secondary sources of potential emissions are the emergency diesel fire water pump engine and natural gas-fired black start engine, both of which will normally be operated only for short periods in test mode to ensure their operability and readiness.

The substances emitted from these sources (with associated toxicological information) are presented in Table C-1 – Toxicity Values Used for Health Risk Assessment. These potential air toxic species were identified in the California Air Toxics Emission Factor (CATEF) Version 1.2 database (CARB 1996), which contains air toxic emission factors calculated from source test data that have been collected for the Air Toxics Hot Spots Program (AB2588). All air toxic species associated with natural gas turbines equipped with SCR and CO catalyst and natural gas internal combustion engines for which cancer potency factors and/or chronic or acute REL have been established are included in Table C-1. In addition, ammonia emissions associated with potential ammonia slip from the turbine SCR system were also included, as well as diesel particulate emissions, which would only result from operation of the diesel internal combustion engine used to drive the facility fire pump.

As with the criteria pollutant annual turbine emissions were estimated by assuming that both turbines would operate simultaneously under full load conditions (100 percent load) for the entire 3,200 hours per year each, including startups, shutdowns and maintenance operations. The Project will accept permit conditions from the SDAPCD limiting the operation of each combustion turbine. Turbine stack parameters (i.e., exit temperature and velocity) for the full load condition were used in the HARP model to assess the hourly and annual ground-level impacts and health risks. Analyses were also completed for operating scenarios of 75% and 50%, but they were determined to not represent the worst-case condition. For both maximum hourly and annual emission rates, the maximum natural gas consumption rate of 396.1 MMBTU per hour per turbine was used. The maximum natural gas consumption rate for the black start engine of 10.5 MMBTU per hour was used. The black start engine is expected to be tested for one hour each month. Emergency diesel fire water pump emissions were estimated assuming that this equipment would run at its full rated capacity (173 hp) for half an hour per week for emergency preparedness. Actual emergency use of the black start engine and the emergency diesel fire water pump were not included.

Emission factors for the natural gas-fired turbines (with SCR and CO catalyst emission controls) and the black start internal combustion engine were obtained from the California ARB CATEF Database (CARB 1996). The emission factors from CATEF were in units of pounds per million cubic feet (lb/MMCF) of natural gas fuel usage, which were divided by the higher heating value of the natural gas (1024 BTU/SCF) to arrive at an emission factor in units of pounds per million British thermal units (lb/MMBTU), which was then multiplied by the BTU equivalent of the gas combusted per hour to obtain emissions in units of pounds per hour. The emission factors and estimated maximum hourly and annual turbine emissions are summarized in Table C-2 – Post-BACT Emission Rates. The emission factors and estimated maximum hourly and annual black start engine emissions are summarized in Table C-4 – Natural Gas Fired Black Start Engine Emission Rates.

An emission factor for the emergency diesel fire water pump for diesel particulate matter of 0.09 grams per horsepower-hour was provided by the prospective equipment vendor. The emission factors and estimated maximum hourly and annual emissions from the fire water pump are summarized in Table C-3 – Emergency Diesel-Fired Fire Water Pump Engine Emission Rates.

Table C-2 – Post-BACT Emission Rates for Each Turbine

Chemical Species	CAS	Emission Factor (lb/mmbtu)	Emission Factor (lb/mmscf)	Max. Hourly Emission per Turbine (lb/hr)	Annual Emission per Turbine (lb/yr)
Ammonia	7664417	10 ppm	10 ppm	5.88	1.88E+4
1,3-Butadiene	106990	1.30E-07	4.29E-07	1.70E-04	5.44E-01
Acetaldehyde	75070	4.99E-04	1.76E-04	6.97E-02	2.23E+02
Acrolein	107028	6.77E-05	3.62E-06	1.43E-03	4.59E+00
Benzene	71432	4.61E-05	3.26E-06	1.29E-03	4.13E+00
Ethylbenzene	100414	5.57E-05	3.20E-05	1.27E-02	4.06E+01
Formaldehyde	50000	6.71E-03	3.60E-04	1.43E-01	4.56E+02
Hexane	110543	3.73E-04	5.16E-04	2.04E-01	6.54E+02
Propylene	115071	1.95E-03	1.03E-03	4.06E-01	1.30E+03

Chemical Species	CAS	Emission Factor (lb/mmbtu)	Emission Factor (lb/mmscf)	Max. Hourly Emission per Turbine (lb/hr)	Annual Emission per Turbine (lb/yr)
Propylene oxide	75569	5.73E-05	2.86E-05	1.13E-02	3.63E+01
Toluene	108883	1.64E-04	1.34E-04	5.31E-02	1.70E+02
Xylenes	1330207	6.11E-05	6.38E-05	2.53E-02	8.09E+01
Polycyclic Aromatic Hydrocarbons (PAH)					
Benzo(a)anthracene	56553	1.31E-07	1.31E-07	5.19E-05	1.66E-01
Benzo(a)pyrene	50328	8.95E-08	8.95E-08	3.55E-05	1.13E-01
Benzo(b)fluoranthene	205992	6.56E-08	6.56E-08	2.60E-05	8.31E-02
Benzo(k)fluoranthene	207089	6.56E-08	6.56E-08	2.60E-05	8.31E-02
Chrysene	218019	1.46E-07	1.46E-07	5.78E-05	1.85E-01
Dibenz(a,h)anthracene	53703	1.31E-07	1.31E-07	5.19E-05	1.66E-01
Indeno(1,2,3-cd)pyrene	193395	1.31E-07	1.31E-07	5.19E-05	1.66E-01
Naphthalene	91203	7.70E-06	1.27E-06	5.03E-04	1.61E+00

Emission factor source: CARB CATEF Database 1996 for turbines with SCR and CO control system. Ammonia emission factor is based on proposed emission limit.

Table C-3 – Emergency Diesel-Fired Fire Water Pump Engine Emission Rates

Chemical Species	Emission Factor (g/hp-hr)	Emission Factor Source	Max. Hourly Emission (lb/hr)	Annual Emission (lb/yr)
Diesel Particulate (PM_{10})	0.09	Engine Manufacturer	1.71E-02	8.92E-01

Table C-4 – Natural Gas Fired Black Start Engine Emission Rates

Chemical Species	Emission Factor (lb/mmbtu)	Emission Factor (lb/mmbtu)	Max. Hourly Emission (lb/hr)	Annual Emission (lb/yr)
1,3-Butadiene	4.05E-04	4.15E-01	4.26E-03	5.12E-02
Acetaldehyde	2.56E-03	2.62E+00	2.69E-02	3.23E-01
Acrolein	1.57E-04	1.61E-01	1.65E-03	1.98E-02
Benzene	2.53E-04	2.59E-01	2.66E-03	3.19E-02
Ethylbenzene	1.12E-04	1.15E-01	1.18E-03	1.42E-02
Formaldehyde	2.04E-02	2.09E+01	2.15E-01	2.58E+00
Propylene	1.18E-02	1.21E+01	1.24E-01	1.49E+00
Toluene	3.85E-04	3.94E-01	4.05E-03	4.86E-02
Xylenes	9.42E-04	9.65E-01	9.91E-03	1.19E-01
PAH				
Benzo(a)anthracene	9.69E-08	9.92E-05	1.02E-06	1.22E-05
Benzo(a)pyrene	3.79E-09	3.88E-06	3.99E-08	4.78E-07
Benzo(b)fluoranthene	7.79E-08	7.98E-05	8.20E-07	9.84E-06
Benzo(k)fluoranthene	1.18E-08	1.21E-05	1.24E-07	1.49E-06
Chrysene	2.20E-08	2.25E-05	2.31E-07	2.77E-06
Dibenz(a,h)anthracene	3.79E-09	3.88E-06	3.99E-08	4.78E-07
Indeno(1,2,3-cd)pyrene	1.06E-08	1.09E-05	1.12E-07	1.34E-06
Naphthalene	3.03E-05	3.10E-02	3.19E-04	3.82E-03

Emission factor source: CARB CATEF Database 1996 for turbines without SCR and CO control system.

5.0 RISK ASSESSMENT RESULTS

The following section discusses the public health impacts resulting from the above estimated Project emissions, air dispersion modeling and HRA as conducted using CARB HARP 1.3. As discussed above, the significant long-term public health effects resulting from construction activities are not expected due to the short construction duration. For the operational phase of the Project, the carcinogenic and non-carcinogenic risks estimates are provided and described below.

5.1 Estimated Operational Carcinogenic Risks

The point of maximum impact ("PMI", i.e., incremental cancer risk) resulting from Project emissions is estimated to be 1.25 in 1 million (1.25×10^{-6}). The PMI is located on the western Property line of at an elevation of 980 feet above sea level with Universal Transverse Mercator (UTM) coordinates of 639,909 meters east, 3,679,360 meters north, as shown in Figure C-4 – Incremental Lifetime Cancer Risk to Residential Receptors Isopleths. This is approximately 490 feet above the tip of the CTG stacks. The innermost ring on Figure C-4 shows the limited area which HARP predicted an excess cancer risk of greater than one in a million (inner most ring).

This figure and others in this section are presented using North American Datum of 1927 (NAD27) coordinates to stay consistent with the DEM input files utilized for this project.

Figure C-4 – Incremental Lifetime Cancer Risk to Residential Receptors Isopleths

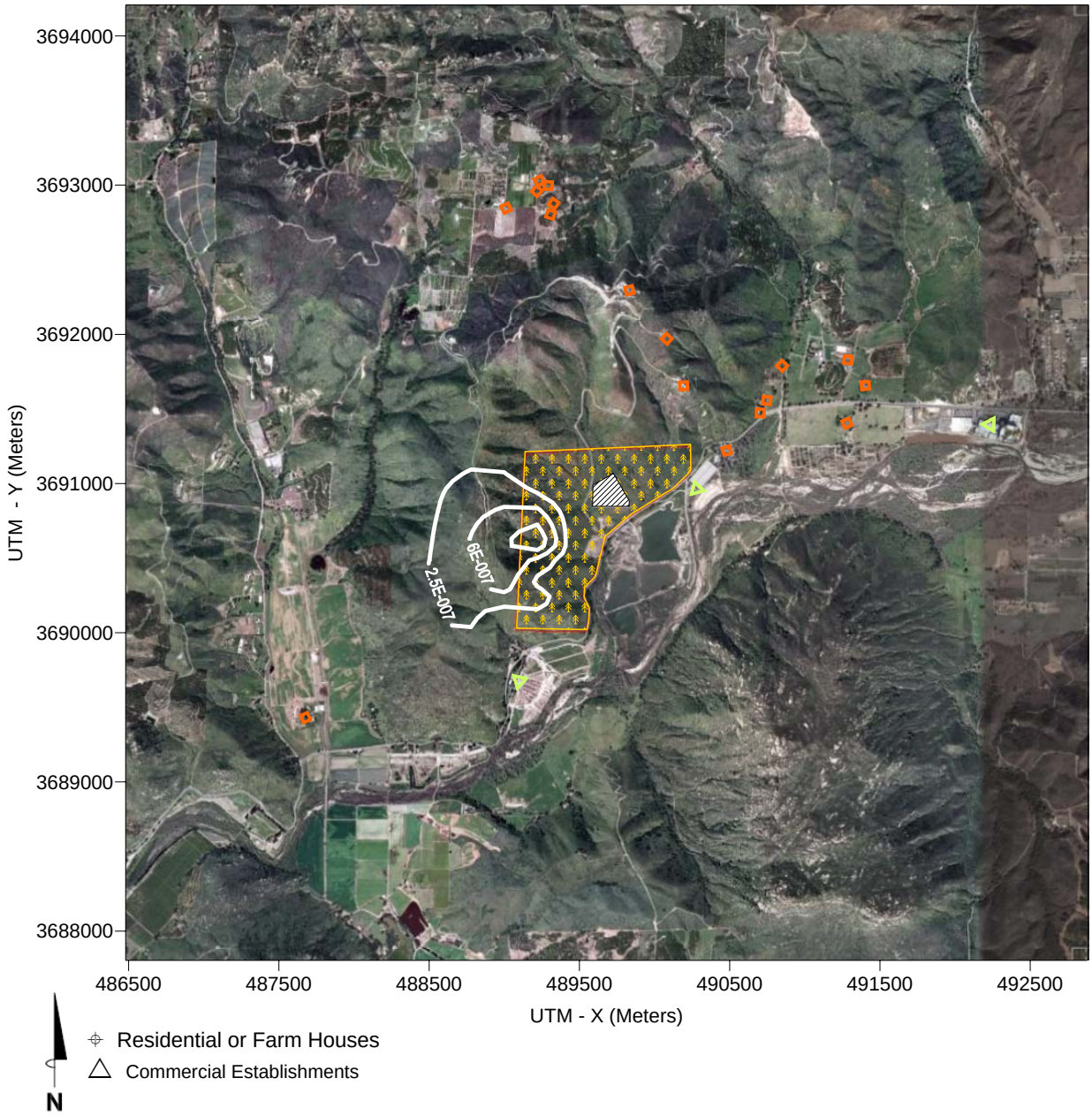

TRC	PROJECT: Orange Grove Project - SPPE Application
	MAP SOURCE: Google Earth – Coordinates NAD27

Figure C-5 – Incremental Lifetime Cancer Risk to Workers Isopleths

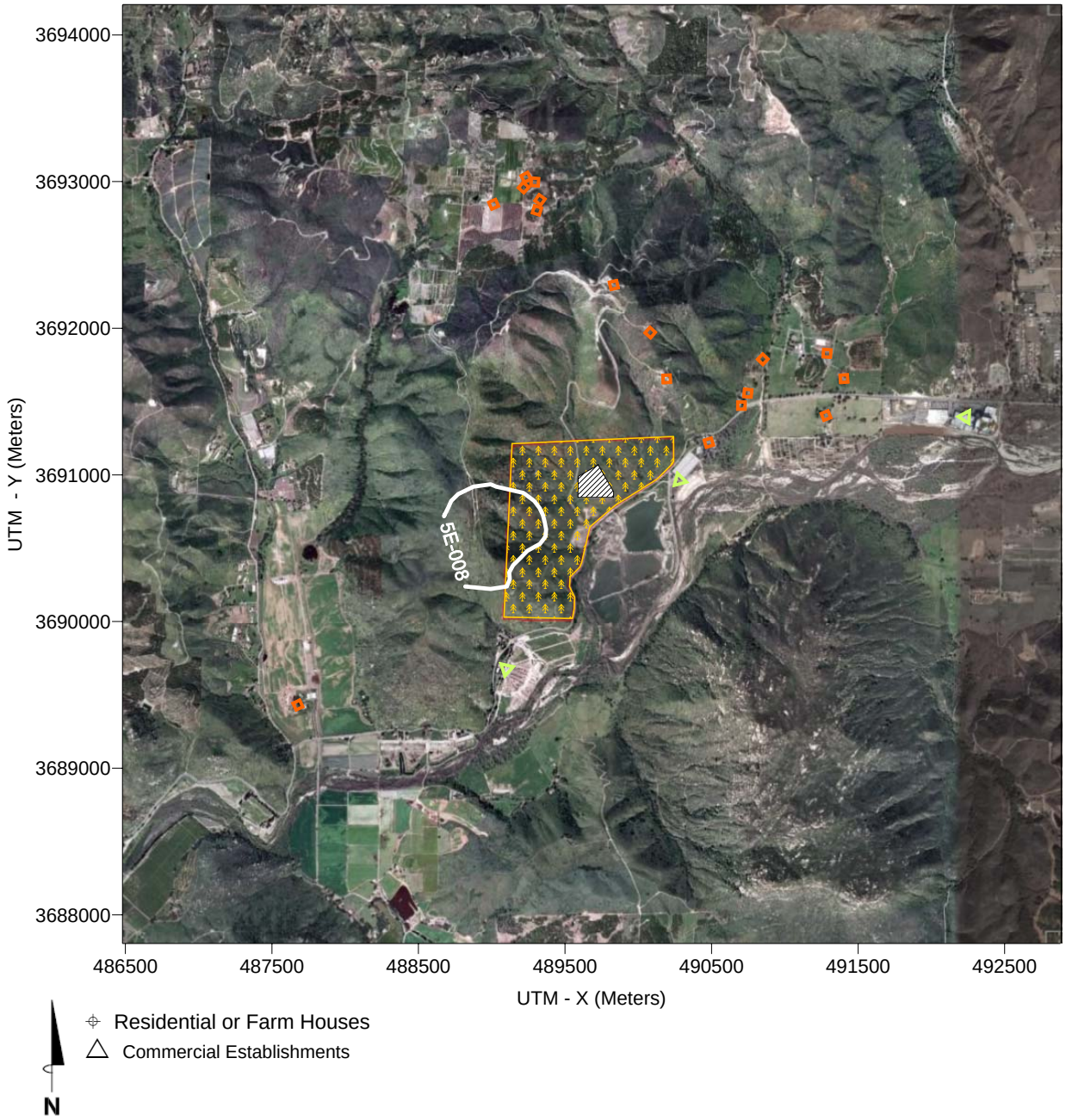

TRC	PROJECT: Orange Grove Project - SPPE Application
	MAP SOURCE: Google Earth – Coordinates NAD27

The highest predicted cancer risk for a residential source (maximum exposed individual – "MEIR") is located on the hill immediately north east of the facility (490,190 meters east, 3,691,694 meters north – NAD27); the maximum incremental cancer risk at this location is estimated to be 0.065 in one million. For non-residential exposure, the MEI for a worker (MEIW) is near zero at 4 in 10 billion (3.99×10^{-10}). This occurs at the outermost boundary of the Pala

Casino (490,240 meters east, 3,691,358 meters north). The following table summarizes the results.

Table C-5 – HARP Estimated Carcinogenic Risk

RECEPTOR TYPE	CARCINOGENIC RISK	LOCATION (UTM METERS)
Point of Maximum Impact (PMI)	1.25E-06	489,130 E : 3,690,783 N
Maximum Exposed Individual – Residential (MEIR)	6.53E-08	490,190 E : 3,691,694 N
Maximum Exposed Individual – Worker (MEIW)	3.99E-10	491,705 E : 3,691,358 N

As shown above, the estimated cancer risk at all locations is well below the significance criteria of 10 in one million. The Project emissions will therefore not pose a significant carcinogenic health risk to any sources potentially exposed to these emissions.

Estimated Operational Non-Carcinogenic Risks

For long-term chronic non-carcinogenic incremental risks, the HIC at the PMI resulting from Project emissions is estimated to be 0.022 in an unpopulated area near the center western boundary of the property (489,130 E : 3,690,783 N). The highest HIC affecting a residence is 0.001 which is at the closest residence approximately 2,100 feet (0.4 mile) on the hill north-east of the facility (490,190 E : 3,691,694 N). The highest HIC affecting a non-residential source is 0.00006. Chronic Hazard Index Isopleths are provided in Figure C-6.

Table C-6 – HARP Estimated Non-Carcinogenic Risks

RECEPTOR TYPE	HIC (CHRONIC)	LOCATION (UTM METERS)	HIA (ACUTE)	LOCATION (UTM METERS)
Point of Maximum Impact (PMI)	0.0221	489,130 E 3,690,783 N	0.489	489,830 E 3,691,233 N
Maximum Exposed Individual – Residential (MEIR)	0.00103	490,190 E 3,691,694 N	0.153	490,190 E 3,691,694 N
Maximum Exposed Individual – Worker (MEIW)	0.00006	491,705 E 3,691,358 N	0.0308	490,240 E 3,691,004 N

The maximum HIA resulting from Project emissions is estimated to be 0.489 at a location on the north boundary of the Property (UTM coordinates 489,830 meters east, 3,691,233 meters north). The highest residential exposure is 0.153 at the same residence identified for carcinogenic and chronic hazard risks. The highest non-residential exposure occurs at the nursery boundary across Pala Road at an HIA of 0.0308.

Figure C-6 – Chronic Hazard Index Isopleths

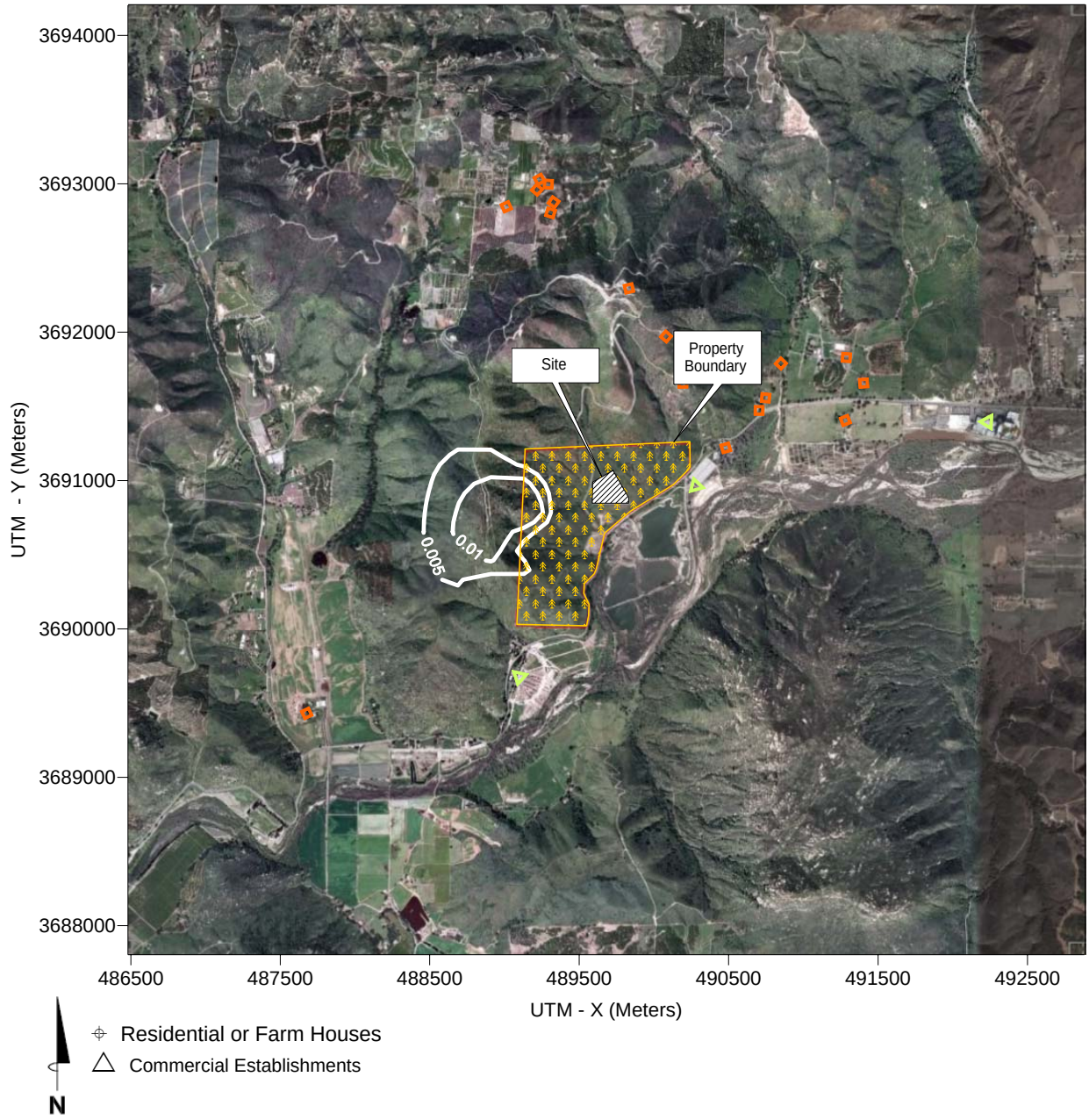

TRC	PROJECT: Orange Grove Project - SPPE Application
	MAP SOURCE: Google Earth – Coordinates NAD27

Figure C-7 – Acute Hazard Index Isopleths

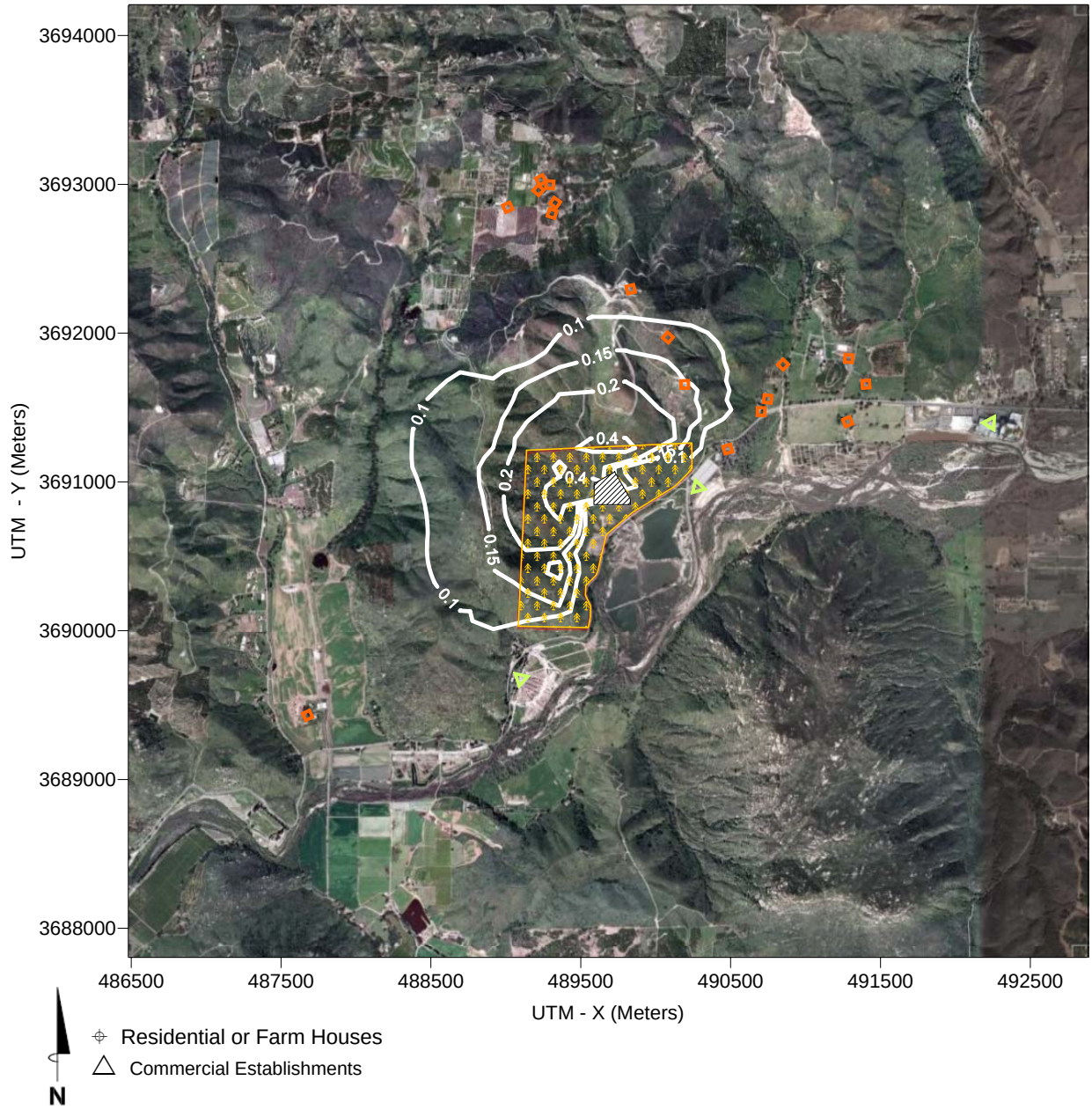

TRC	PROJECT: Orange Grove Project - SPPE Application
	MAP SOURCE: Google Earth – Coordinates NAD27

Figure C-6 shows that the estimated chronic and acute HI are both well below the significance criterion of one (1.0). It is thus concluded the Project's emissions will not pose a significant health risk to any populations potentially exposed to these emissions.

Figure C-8 – Flow Vector Wind Roses - Annual Met Data 2002 & 2003 – Gregory Canyon

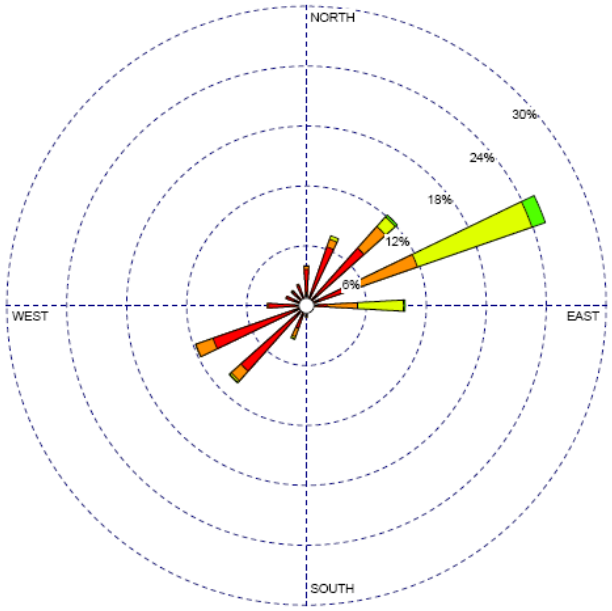

2002 – Calm Winds 2.64% - Avg. Wind Speed 4.38 Knots

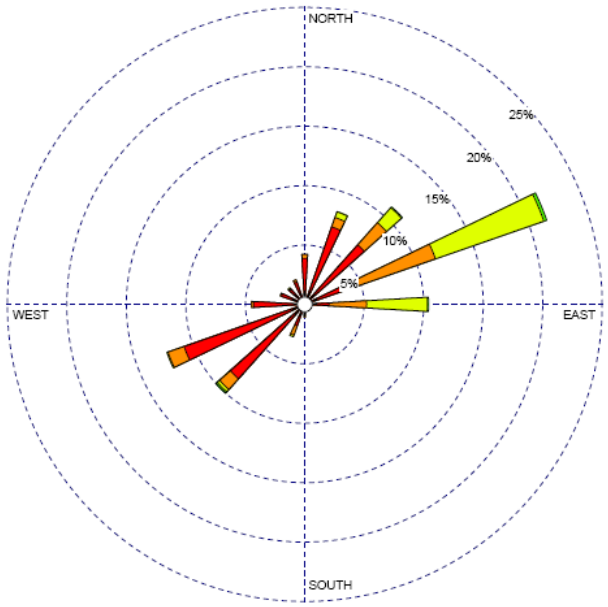

2003 – Calm Winds 6.21% - Avg. Wind Speed 3.96 Knots

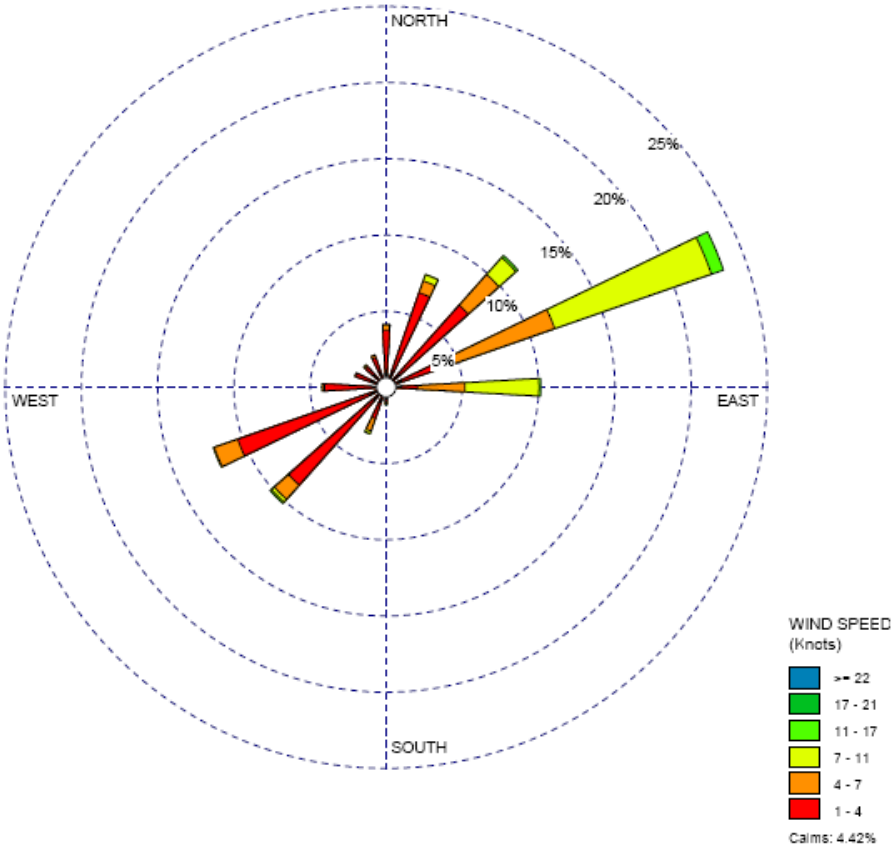

2002 & 2003 Combined – Calm Winds 4.42% - Avg. Wind Speed 4.17 Knots

Figure C9 – 1st Calendar Quarters 2002 & 2003 Flow Vector Wind Roses – Gregory Canyon

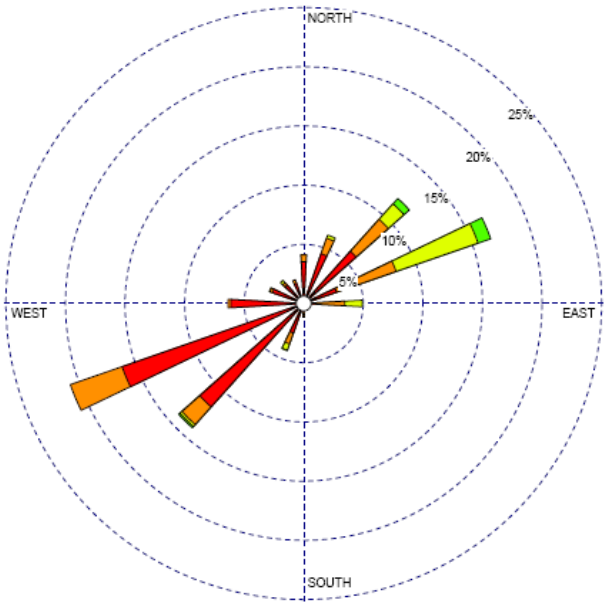

Q1 - 2002 – Calm Winds 1.16% - Avg. Wind Speed 4.07 Knots

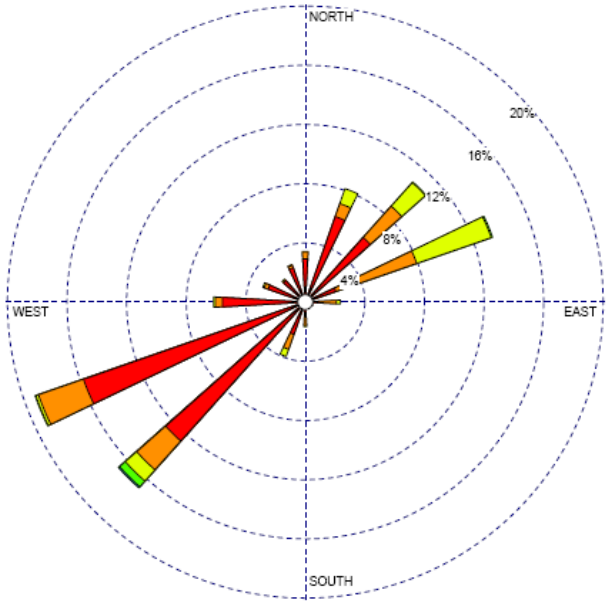

Q1 - 2003 – Calm Winds 5.23% - Avg. Wind Speed 3.66 Knots

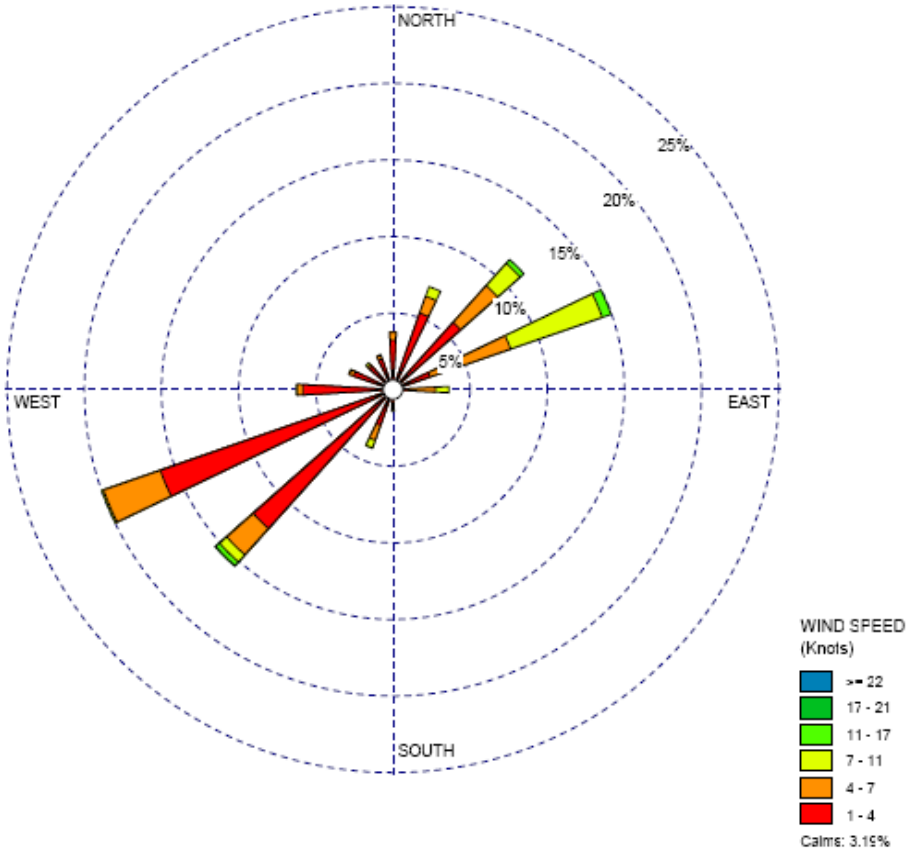

1st Calendar Quarter 2002 & 2003 Combined – Calm Winds 3.19% - Avg. Wind Speed 3.87 Knots

Figure C10 – 2nd Calendar Quarters 2002 & 2003 Flow Vector Wind Roses – Gregory Canyon

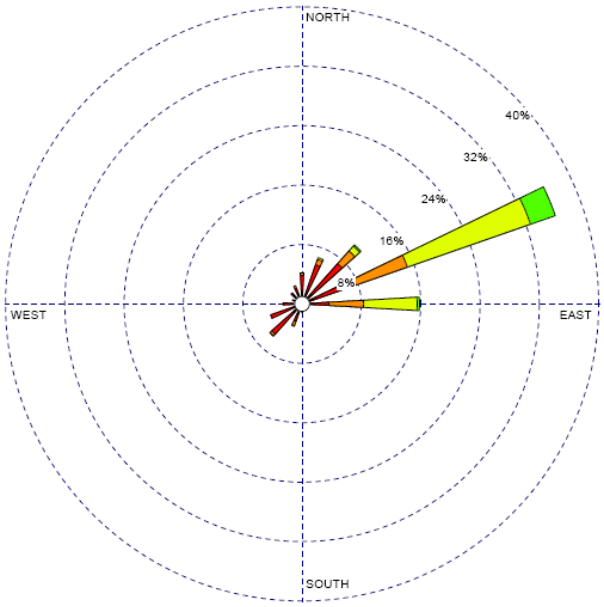

Q2 - 2002 – Calm Winds 2.20% - Avg. Wind Speed 5.06 Knots

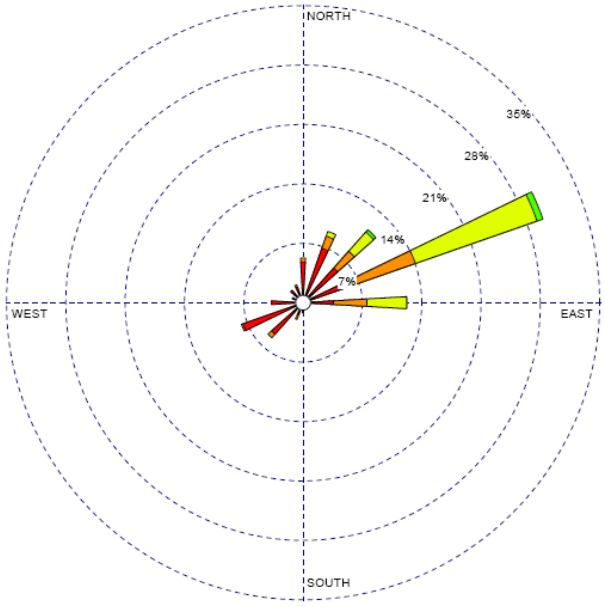

Q2 - 2003 – Calm Winds 4.72% - Avg. Wind Speed 4.44 Knots

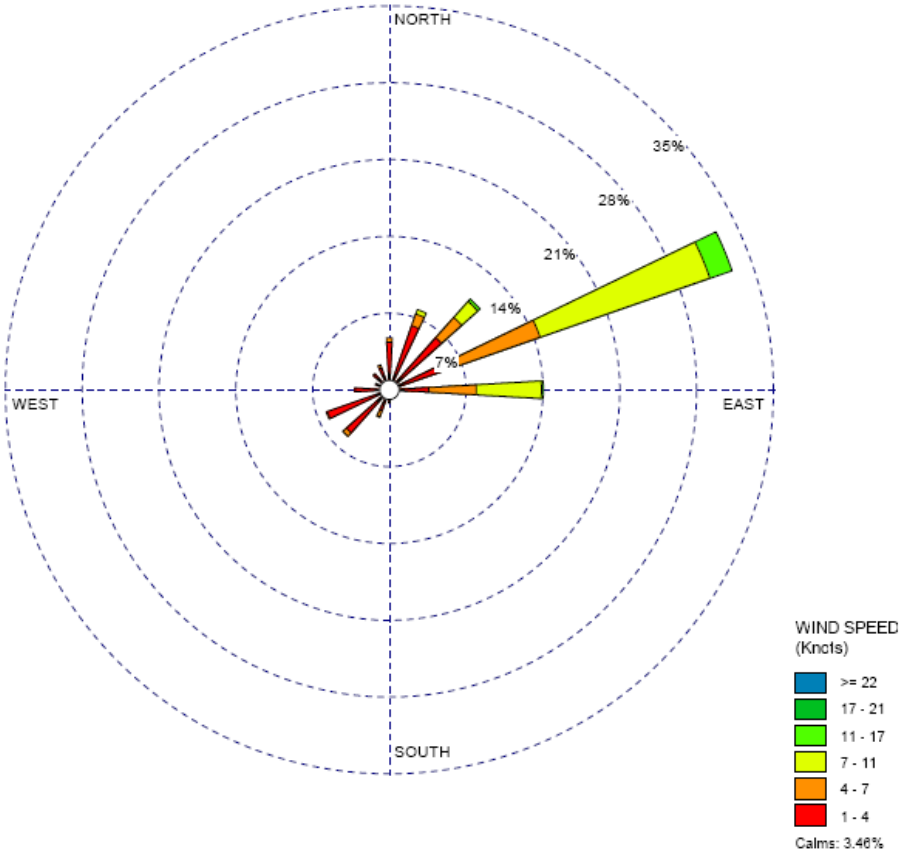

2nd Calendar Quarter 2002 & 2003 Combined – Calm Winds 3.46% - Avg. Wind Speed 4.75 Knots

Figure C11 – 3rd Calendar Quarters 2002 & 2003 Flow Vector Wind Roses – Gregory Canyon

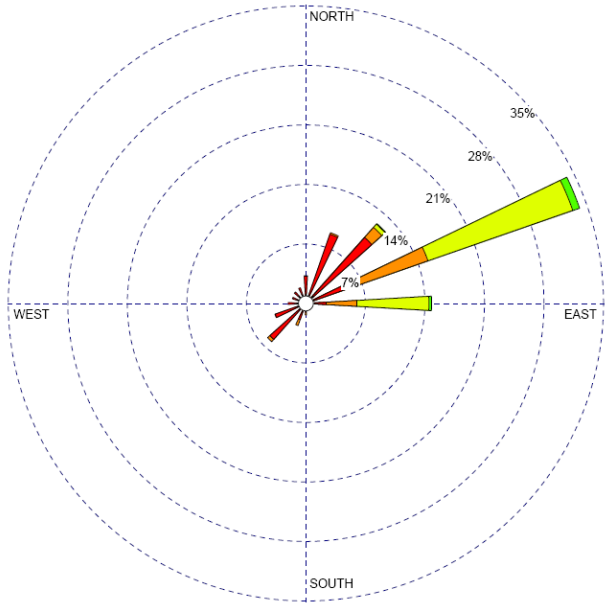

Q3 - 2002 – Calm Winds 3.22% - Avg. Wind Speed 4.70 Knots

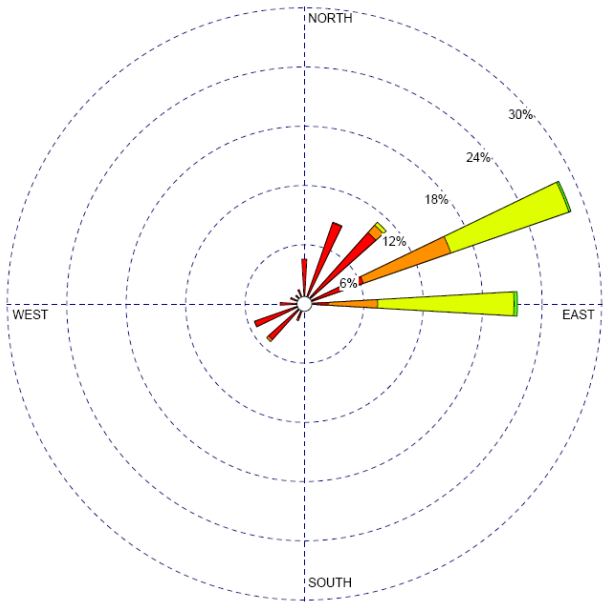

Q3 - 2003 – Calm Winds 5.07% - Avg. Wind Speed 4.46 Knots

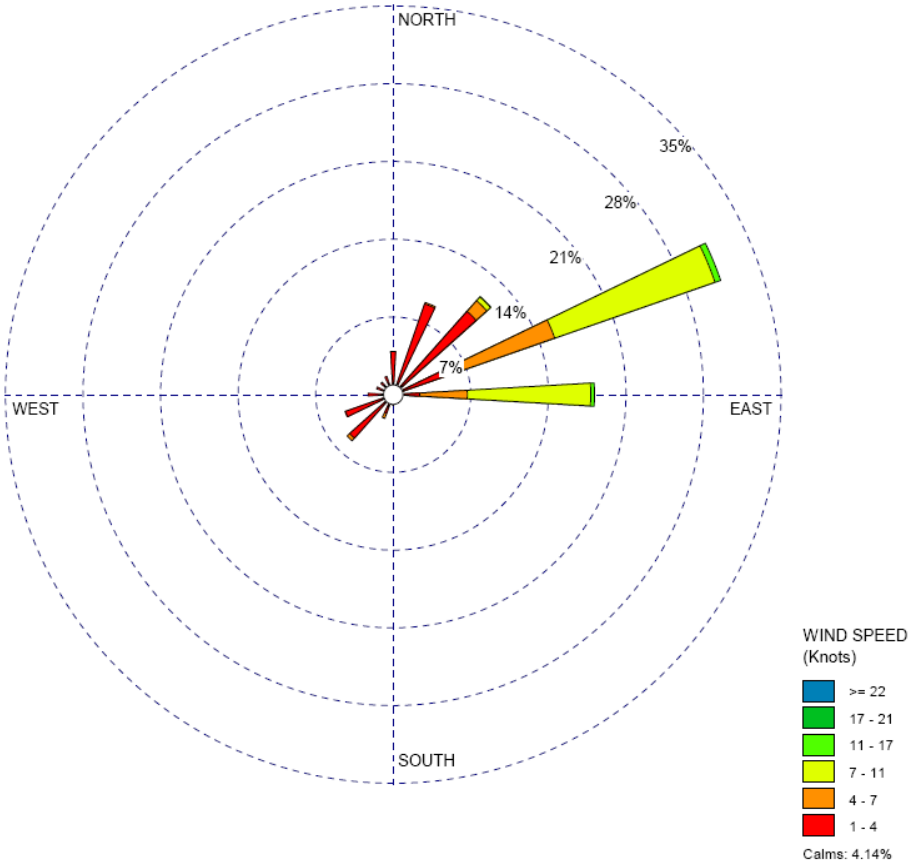

3rd Calendar Quarter 2002 & 2003 Combined – Calm Winds 4.14% - Avg. Wind Speed 4.58 Knots

Figure C-12 – 4th Calendar Quarters 2002 & 2003 Flow Vector Wind Roses – Gregory Canyon

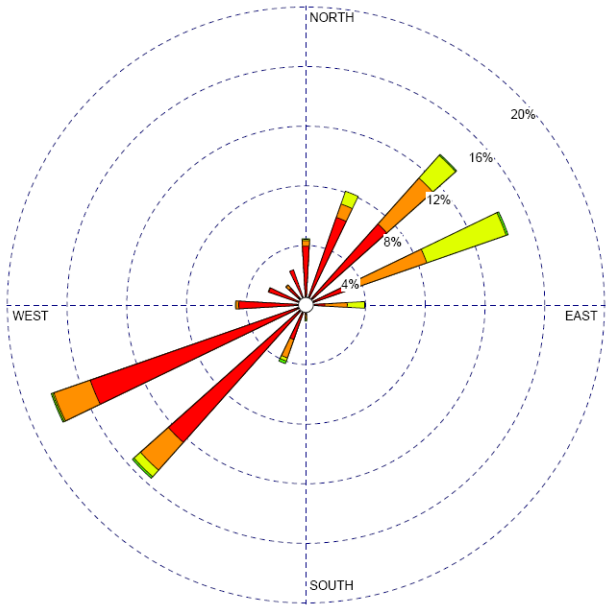

Q4 - 2002 – Calm Winds 3.94% - Avg. Wind Speed 3.68 Knots

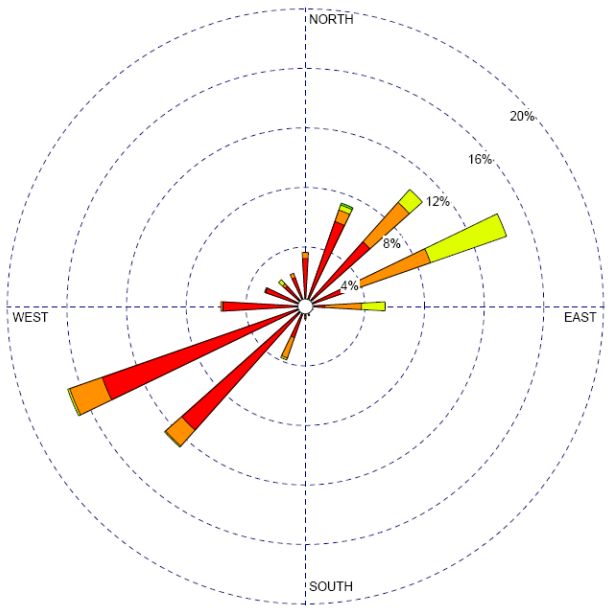

Q4 - 2003 – Calm Winds 9.78% - Avg. Wind Speed 3.30 Knots

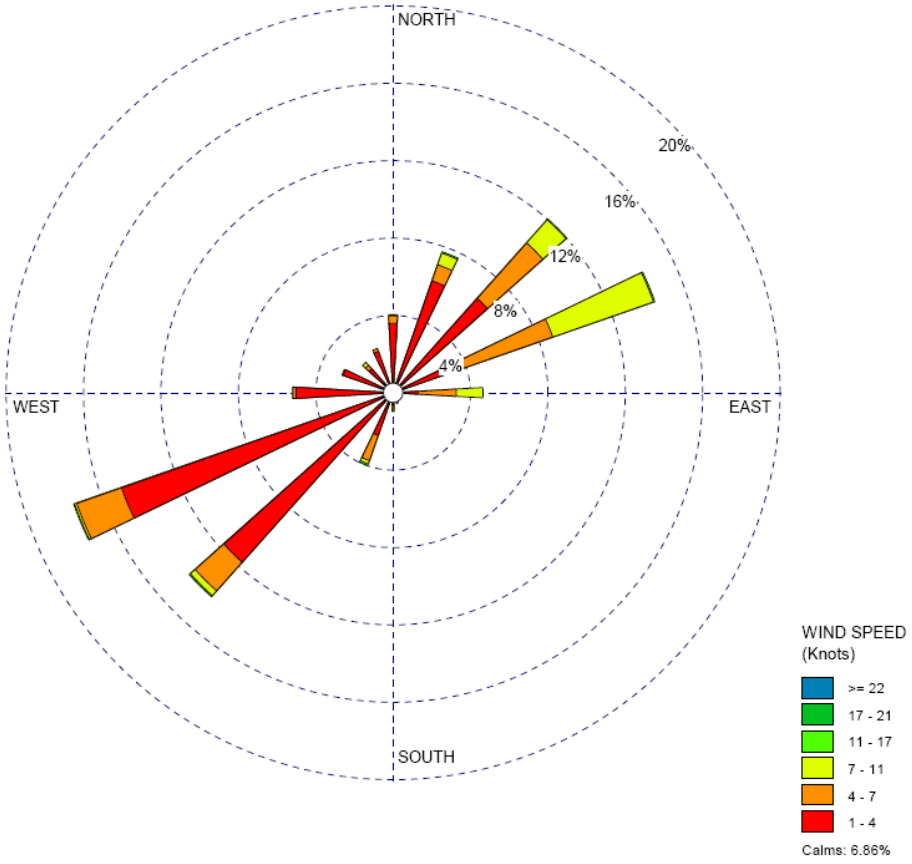

4th Calendar Quarter 2002 & 2003 Combined – Calm Winds 6.86% - Avg. Wind Speed 3.49 Knots

Figure C-13 – Escondido Wind Rose Year 2000

STATION NAME:
Escondido, CA (Station No. 72293)

GRAPH TYPE:
Wind Speed
Flow Vector (blowing to)

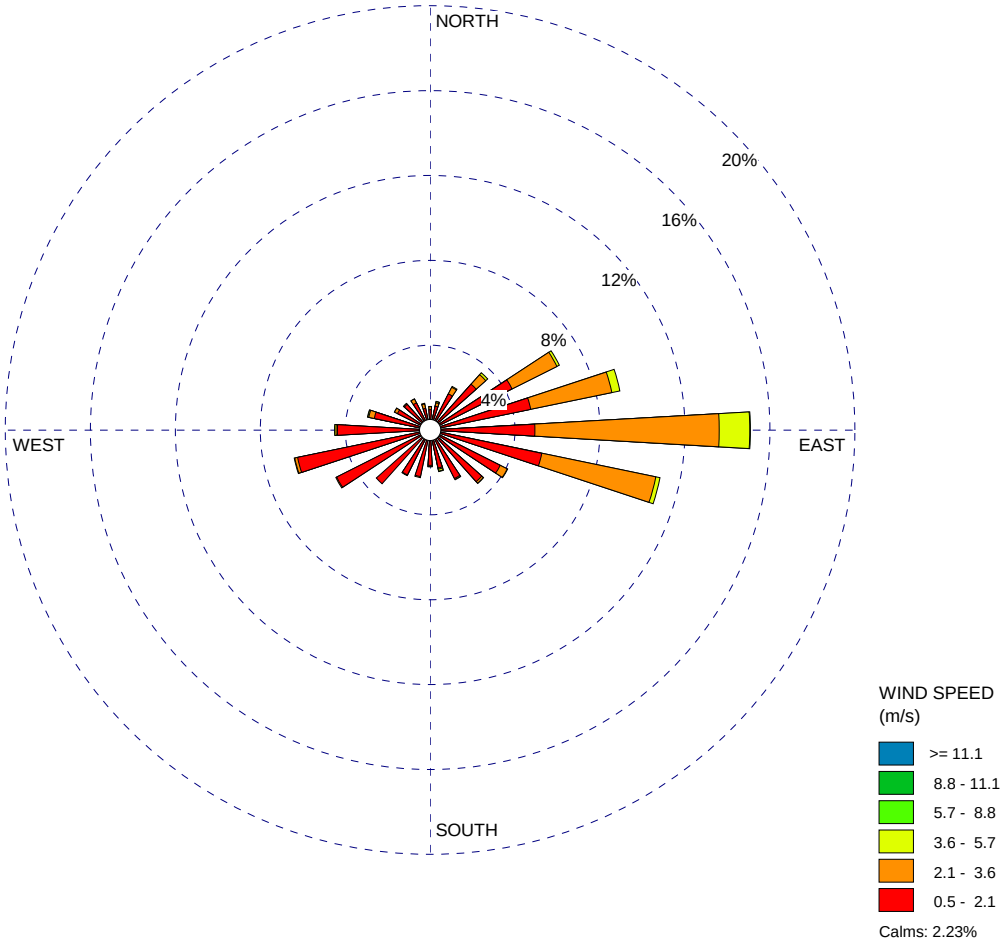

COMMENTS:	DATA PERIOD:	PROJECT NAME:	
	2000 **Jan 1 - Dec 31** **00:00 - 23:00**	**The Orange Grove Project**	
		PREPARED BY: **TRC**	
	CALM WINDS: **2.23%**	TOTAL COUNT: **8698 hrs.**	
	AVG. WIND SPEED: **1.61 m/s**	DATE: **3/20/2007**	PROJECT NO.:

Figure C-14 – Escondido Wind Rose Year 1999

STATION NAME:
Escondido, CA (Station No. 72293)

GRAPH TYPE:
Wind Speed
Flow Vector (blowing to)

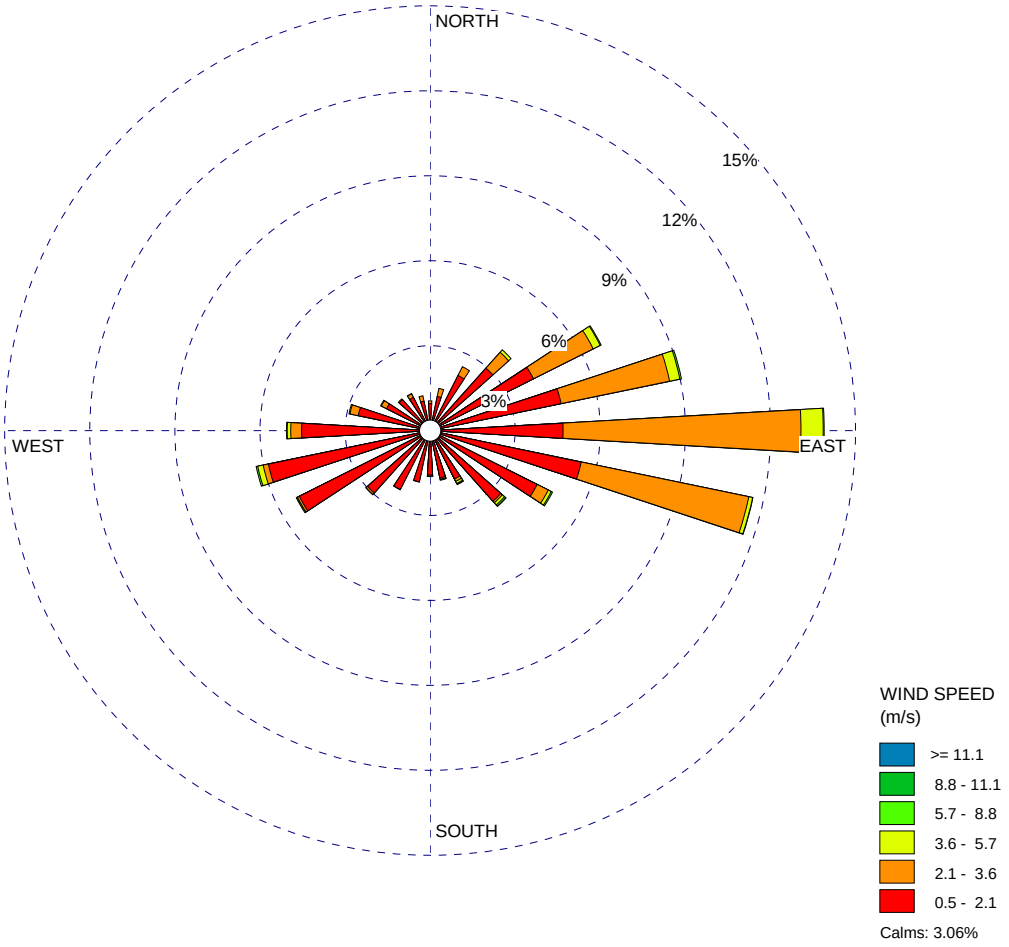

COMMENTS:	DATA PERIOD:	PROJECT NAME:	
	1999 **Jan 1 - Dec 31** **00:00 - 23:00**	**The Orange Grove Project**	
		PREPARED BY: **TRC**	
	CALM WINDS: **3.06%**	TOTAL COUNT: **8674 hrs.**	
	AVG. WIND SPEED: **1.62 m/s**	DATE: **3/20/2007**	PROJECT NO.:

Figure C-15 – Escondido Wind Rose Year 1998

STATION NAME:
Escondido, CA (Station No. 72293)

GRAPH TYPE:
Wind Speed
Flow Vector (blowing to)

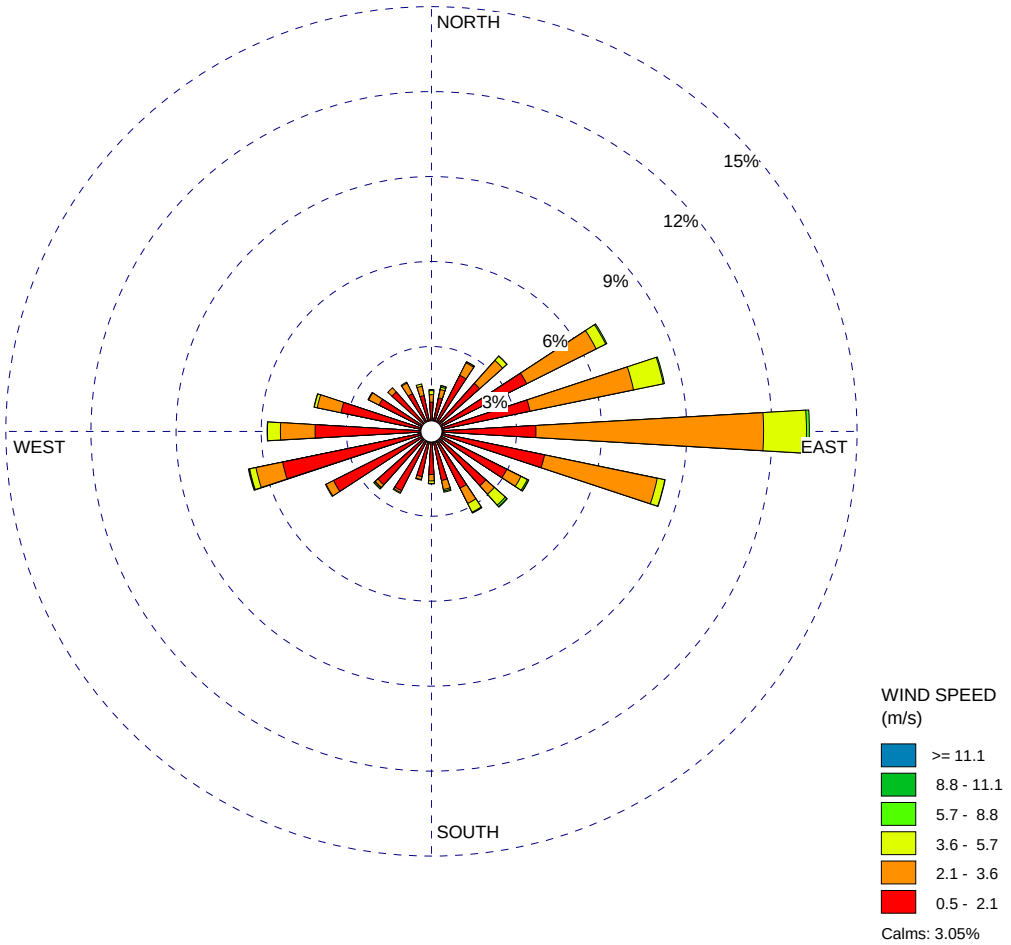

COMMENTS:	DATA PERIOD:	PROJECT NAME:	
	1998 **Jan 1 - Dec 31** **00:00 - 23:00**	**The Orange Grove Project**	
		PREPARED BY: **TRC**	
	CALM WINDS: **3.05%**	TOTAL COUNT: **8533 hrs.**	
	AVG. WIND SPEED: **1.86 m/s**	DATE: **3/20/2007**	PROJECT NO.:

Figure C-16 – Escondido Wind Rose - Years 1998 – 2000 Combined

STATION NAME:
Escondido, CA (Station No. 72293)

GRAPH TYPE:
Wind Speed
Flow Vector (blowing to)

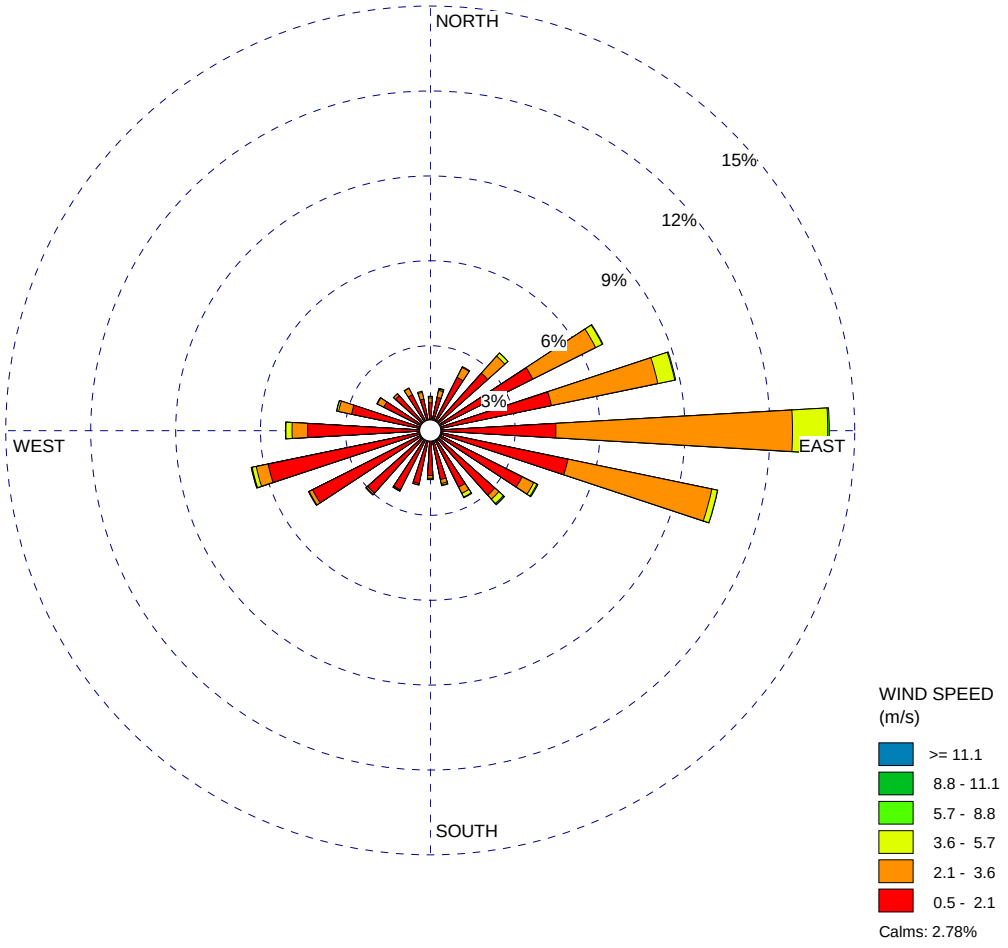

COMMENTS:	DATA PERIOD:	PROJECT NAME:	
	1998-2000 **Jan 1 - Dec 31** **00:00 - 23:00**	**The Orange Grove Project**	
		PREPARED BY: **TRC**	
	CALM WINDS: **2.78%**	TOTAL COUNT: **25905 hrs.**	
	AVG. WIND SPEED: **1.70 m/s**	DATE: **3/20/2007**	PROJECT NO.:

Appendix D – HARP Data

(These are provided electronically on an accompanied CD)

EXHIBIT 123-2

SDAPCD AIR QUALITY PERMIT APPLICATION ADDENDUM

21 Technology Drive
Irvine, CA 92618

949.727.9336 PHONE
949.727.7399 FAX

www.TRCsolutions.com

Via Email and U.S. Postal Mail

October 20, 2007

Ms. Camqui Nguyen
San Diego Air Pollution Control District
10124 Old Grove Road
San Diego, CA 92131-1649

Subject: Supplemental Data to Applications 985708 – 985711
Orange Grove Energy L.P. – Facility ID: 1611328A

Dear Ms. Nguyen:

This letter and the attached data are provided per your October 3 request to complete the above applications. The data are provided in the order that was presented in your application status letter.

1. The reason for proposing a simple cycle combustion turbine for this project is that this is a peaking and not a base load facility. This grid requirement is specified by San Diego Gas & Electric (SDG&E). A peaking power station is one that can be rapidly deployed when the electrical grid is in danger of running short and it is typically in operation no more than 20 percent of the available hours in a year.

   In order to enhance grid reliability, SDG&E requires the Orange Grove facility to have the capability of going from a 'cold iron' condition to full power within 10 minutes of a dispatch order. A combined-cycle facility would not be able to meet this requirement even using a once through steam generator (OTSG). Additionally, the large quantities of water required for a combined cycle facility would not be available for this project and there would be other environmental impacts that would compromise this project.

2. The emission factors for cold ambient temperature from GE are provided in Appendix 1.

3. The turbine fuel/heat consumption rate, stack outlet temperature and oxygen concentration are also available in the GE performance data sheet provided in Appendix 1.

4. Turbine commissioning – Only one turbine will be commissioned at any one time until the SCR and oxidation catalyst are operational. A detailed description of the commissioning process and associated emission calculations are provided in Appendix 2. The turbine commissioning is a one time, non-recurring event.

5. Engine generators – In the course of this project, the specifications of the black start engine and the emergency fire pump engine generator have changed. These specifications are provided in Appendix 3.

6. AQIA requirement – As provided in Appendix 2, the hourly and daily emissions from the turbines during the commissioning period are not expected to exceed the AQIA thresholds. However, air quality impacts analysis for the commissioning period was completed as part of the CEQA process and the results are provided in Appendix 4.

7. Health Risk Assessment (HRA) – As part of this supplemental data response, the TAC emissions have been revised using the emission factors referenced by the District. The HRA has also been updated using both ISC and AERMOD dispersion modeling results. The following are specific responses to the HRA items on the application status letter.

    a. The *.ems electronic file was exported from HARP and provided in the attached electronic files.

    b. Both Rule 1200 and the OEHHA HRA guidelines were referenced in the preparation of the HRA.

    c. The facility diagram was provided in Appendix A of the initial application which is labeled Drawing C100. This drawing identifies and shows the location of all the proposed sources and significant structures at the facility. It is again attached to this response document.

    d. The HRA was completed as part of the CEQA process back in April of this year. Orange Grove Energy (OGE) was aware of the methodology and software application that converts AERMOD results for HARP risk analysis; however, the software application was only released for beta review and OGE did not have sufficient assurances to rely on the methodology for the application submittal. In the interest of expediting these permit applications however, OGE is now also providing the health risk results based on AERMOD dispersion data using meteorological data from the Gregory Canyon project. All HRA related data and results are provided in Appendix 5.

    e. OEHHA HRA guidelines call for three (3) years of District certified meteorological data for use with HARP. District air monitoring staff concurs with the appropriateness of using the meteorological data from the Escondido monitoring station. OGE was later advised that the Gregory Canyon data exist, but they were not necessarily certified. For the same conformance reason cited in 7d, OGE used the certified meteorological data from the Escondido monitoring station to conduct the health risk assessment. As stated in data response 7d, the health risk results using meteorological data collected from Gregory Canyon are now provided as well.

    f. In addition to updating the TAC emission factors for the turbines and black start generator (EPA AP-42 April 2000), the TAC emissions for the firewater pump are

now also included. These TAC emissions are provided in Appendix 5. For polyaromatic hydrocarbons (PAHs), the CATEF, 2000 version emission factors were used to estimate emissions for specific PAH so that the associated health risk can be evaluated.

We trust that the supplemental data provided herein is adequate to deem the applications complete. Please do not hesitate to contact us with any additional questions or need of data. We would appreciate your expeditious evaluation and eventual approval of these applications.

Sincerely

Charles Diep, P.E.
Sr. Project Manager

cc: Steve Thome – Orange Grove Energy, L.P.
Felicia Miller – CEC

Appendix 1 – GE Performance Data

Estimated Average Engine Performance NOT FOR GUARANTEE, REFER TO PROJECT F&ID FOR DESIGN

GE Energy

Performance By: **Larry Salguero**
Project Info: **SDG&E CMS # 406759**

Engine: **LM6000 PC-SPRINT w/ FIGV at -5 Degrees**
Deck Info: **G0125O - 8fk.scp**
Generator: **BDAX 290ERT 60Hz, 13.8kV, 0.9PF (14839)**
Fuel: **Gas Fuel #10-1, 19000 Btu/lb,LHV**

Date: **04/24/2007**
Time: **4:32:55 PM**
Version: **3.5.9**

Case #	**100**	**101**	**102**	**103**	**104**	**105**	**106**	**107**	**108**	**109**	**110**	**111**
Ambient Conditions (Miramar Data)	**ASHRAE Record Max**			**ASHRAE 2% Hot Day Design Point**			**NOAA Average Annual**			**ASHRAE 99.6% Design Point**		
Dry Bulb, °F	102.0	102.0	102.0	85.0	85.0	85.0	62.6	62.6	62.6	27.0	27.0	27.0
Wet Bulb, °F	75.6	75.6	75.6	66.9	66.9	66.9	57.0	57.0	57.0	23.6	23.6	23.6
RH, %	30.0	30.0	30.0	39.0	39.0	39.0	71.6	71.6	71.6	60.0	60.0	60.0
Altitude, ft	410.0	410.0	410.0	410.0	410.0	410.0	410.0	410.0	410.0	410.0	410.0	410.0
Ambient Pressure, psia	14.480	14.480	14.480	14.480	14.480	14.480	14.480	14.480	14.480	14.480	14.480	14.480
Engine Inlet												
Comp Inlet Temp, °F	46.0	102.0	102.0	46.0	85.0	85.0	46.0	62.6	62.6	27.0	27.0	27.0
RH, %	95.0	30.0	30.0	95.0	39.0	39.0	95.0	71.6	71.6	60.0	60.0	60.0
Conditioning	CHILL	NONE	NONE	CHILL	NONE	NONE	CHILL	NONE	NONE	NONE	NONE	NONE
Tons or kBtu/hr	1882	0	0	1209	0	0	592	0	0	0	0	0
Pressure Losses												
Inlet Loss, inH20	5.00	5.00	5.00	5.00	5.00	5.00	5.00	5.00	5.00	5.00	5.00	5.00
Volute Loss, inH20	4.00	4.00	4.00	4.00	4.00	4.00	4.00	4.00	4.00	4.00	4.00	4.00
Exhaust Loss, inH20	12.00	12.00	12.00	12.00	12.00	12.00	12.00	12.00	12.00	12.00	12.00	12.00
Load, %	100	71	50	100	75	50	100	75	50	100	75	50
kW, Gen Terms	**50409**	**35939**	**25205**	**50409**	**37808**	**25205**	**50409**	**37808**	**25205**	**49405**	**37061**	**24714**
Est. Btu/kW-hr, LHV	**8533**	**9170**	**10251**	**8533**	**9045**	**10156**	**8533**	**9011**	**10127**	**8473**	**9001**	**10236**
										8602	**9139**	**10392**
Fuel Flow												
MMBtu/hr, LHV	430.1	329.6	258.4	430.1	342.0	256.0	430.1	340.7	255.2	418.6	333.6	253.0
lb/hr	22639	17345	13599	22639	17999	13472	22639	17930	13434	22032	17558	13315
NOx Control	**Water**	**Water**	**Water**	**Water**	**Water**	**Water**	**Water**	**Water**	**Water**	**Water**	**Water**	**Water**
Water Injection												
lb/hr	20240	13337	8399	20240	13901	11114	20240	12774	10478	21510	15958	10092
Temperature, °F	100.0	100.0	100.0	100.0	100.0	100.0	100.0	100.0	100.0	100.0	100.0	100.0
SPRINT	**LPC**	**LPC**	**LPC**	**LPC**	**LPC**	**OFF**	**LPC**	**LPC**	**OFF**	**HPC**	**OFF**	**OFF**
lb/hr	8287	8276	8276	8287	8783	0	8287	9372	0	3745	0	0
Control Parameters												
HP Speed, RPM	10436	10452	10093	10436	10349	10042	10436	10139	9861	10279	9909	9565
LP Speed, RPM	3600	3600	3600	3600	3600	3600	3600	3600	3600	3600	3600	3600
PS3 - CDP, psia	458.3	373.9	317.4	458.3	387.3	321.5	458.3	394.4	329.5	462.4	403.0	341.0
T3CRF - CDT, °F	971	999	928	971	972	965	971	916	916	950	907	840
T48IN, °R	2038	1998	1886	2038	1979	1881	2038	1924	1823	1982	1867	1726
T48IN, °F	1578	1538	1427	1578	1520	1422	1578	1464	1364	1522	1407	1267
Exhaust Parameters												
Temperature, °F	840.3	864.3	824.0	840.3	841.7	815.1	840.3	796.8	767.6	796.4	747.8	691.0
lb/sec	297.8	245.6	215.2	297.8	255.8	219.2	297.8	264.5	228.4	305.9	276.1	243.2
lb/hr	1072059	884261	774630	1072059	920744	789118	1072059	952080	822289	1101094	994064	875513
Energy, Btu/s- Ref 0 °R	100311	84460	71118	100311	86136	71352	100311	85503	71173	98511	84509	70213
Energy, Btu/s- Ref T2 °F	62403	49645	40792	62403	51073	41626	62403	50858	41571	61333	51219	41082
Cp, Btu/lb-R	0.2771	0.2782	0.2746	0.2771	0.2766	0.2719	0.2771	0.2739	0.2692	0.2730	0.2684	0.2640

Estimated Average Engine Performance NOT FOR GUARANTEE, REFER TO PROJECT F&ID FOR DESIGN

GE Energy

Performance By: **Larry Salguero**
Project Info: **SDG&E CMS # 406759**

Engine: **LM6000 PC-SPRINT w/ FIGV at -5 Degrees**
Deck Info: **G0125O - 8fk.scp**
Generator: **BDAX 290ERT 60Hz, 13.8kV, 0.9PF (14839)**
Fuel: **Gas Fuel #10-1, 19000 Btu/lb,LHV**

Date: **04/24/2007**
Time: **4:32:55 PM**
Version: **3.5.9**

Case #	**100**	**101**	**102**	**103**	**104**	**105**	**106**	**107**	**108**	**109**	**110**	**111**
Emissions (NOT FOR USE IN ENVIRONMENTAL PERMITS)												
NOx ppmvd Ref 15% O2	25	25	25	25	25	25	25	25	25	25	25	25
NOx as NO2, lb/hr	43	33	26	43	35	26	43	34	26	42	34	25
CO ppmvd Ref 15% O2	20	6	6	20	9	13	20	13	19	45	54	49
CO, lb/hr	21.23	4.84	3.54	21.23	7.81	8.40	21.23	11.03	12.06	46.45	43.80	30.08
CO2, lb/hr	57198.54	43864.04	34429.39	57198.54	45517.13	34130.54	57198.54	45354.17	34045.09	55659.07	44408.97	33741.86
HC ppmvd Ref 15% O2	2	2	2	2	2	2	2	2	2	6	8	7
HC, lb/hr	1.36	1.04	0.82	1.36	1.08	0.81	1.36	1.08	0.81	3.23	3.63	2.27
SOX as SO2, lb/hr	0.00	0.00	0.00	0.00	0.00	0.00	0.00	0.00	0.00	0.00	0.00	0.00
Maximum Emissions												
NOx ppmvd Ref 15% O2	**25.0**	**25.0**	**25.0**	**25.0**	**25.0**	**25.0**	**25.0**	**25.0**	**25.0**	**25.0**	**25.0**	**25.0**
NOx as NO2, lb/hr	**43**	**33**	**26**	**43**	**35**	**26**	**43**	**34**	**26**	**42**	**34**	**25**
CO ppmvd Ref 15% O2	**41.5**	**15.0**	**15.0**	**41.5**	**16.2**	**16.2**	**41.5**	**35.3**	**61.4**	**53.8**	**61.9**	**107.7**
CO, lb/hr	**43.90**	**12.15**	**9.52**	**43.90**	**13.60**	**10.17**	**43.90**	**29.57**	**38.49**	**55.38**	**50.70**	**66.77**
HC ppmvd Ref 15% O2	**10.0**	**10.0**	**10.0**	**10.0**	**10.0**	**10.0**	**10.0**	**10.0**	**10.0**	**16.7**	**23.6**	**19.5**
HC, lb/hr	**6.05**	**4.63**	**3.63**	**6.05**	**4.80**	**3.59**	**6.05**	**4.78**	**3.58**	**9.84**	**11.05**	**6.90**
VOC ppmvd Ref 15% O2	**2.0**	**2.0**	**2.0**	**2.0**	**2.0**	**2.0**	**2.0**	**2.0**	**2.0**	**3.4**	**4.7**	**3.9**
VOC, lb/hr	**1.21**	**0.93**	**0.73**	**1.21**	**0.96**	**0.72**	**1.21**	**0.95**	**0.72**	**1.97**	**2.22**	**1.38**
PM10, lb/hr (basesd on 0.2 gr/100scf sulfur)	**2.70**	**2.70**	**2.70**	**2.70**	**2.70**	**2.70**	**2.70**	**2.70**	**2.70**	**2.70**	**2.70**	**2.70**
SO2, lb/hr (based on 0.2 gr/100scf sulfur)	**0.23**	**0.18**	**0.14**	**0.23**	**0.19**	**0.14**	**0.23**	**0.19**	**0.14**	**0.23**	**0.18**	**0.14**
SO3, lb/hr (based on 0.2 gr/100scf sulfur)	**0.03**	**0.02**	**0.02**	**0.03**	**0.03**	**0.02**	**0.03**	**0.03**	**0.02**	**0.03**	**0.03**	**0.02**
Engine Exhaust												
Exhaust MW	28.0	28.0	28.1	28.0	28.0	28.2	28.0	28.1	28.3	28.2	28.3	28.5
Exhaust Flow, ACFM	596000	501392	424287	596000	512330	426832	596000	510427	427326	588278	507709	424315
Exhaust Flow, SCFM	228077	188866	164838	228077	196192	167025	228077	202269	173576	232897	209129	183445
Exhaust Flow, Btu/lb	337	344	331	337	337	326	337	323	312	322	306	289
Exhaust Flow, Calories/s	25278465	21283851	17921645	25278465	21706355	17980661	25278465	21546831	17935574	24824742	21296189	17693621
Inlet Flow Wet, pps	287.3	250.8	250.9	287.3	261.3	252.6	287.3	274.6	264.3	296.6	294.3	292.6
Inlet Flow Dry, pps	285.5	247.4	247.6	285.5	258.6	250.1	285.5	272.2	262.0	296.0	293.7	292.1
Shaft HP	68776	49149	34633	68776	51680	34633	68776	51680	34633	67411	50668	33969
Est. Gas Pressure at Baseplate, psig	**606.1**	**486.2**	**403.7**	**606.1**	**503.3**	**405.6**	**606.1**	**508.0**	**411.6**	**602.6**	**510.8**	**419.7**
XNENG	**1**	**1**	**1**	**1**	**1**	**1**	**1**	**1**	**1**	**1**		

Estimated Average Engine Performance NOT FOR GUARANTEE, REFER TO PROJECT F&ID FOR DESIGN

GE Energy

Performance By: **Larry Salguero**
Project Info:

Engine: **LM6000 PC-SPRINT w/ FIGV at -5 Degrees**
Deck Info: **G0125O - 8fk.scp** **09/25/2007**
Generator: **MEID 800LL04 60Hz, 13.8kV, 0.8PF (14849)** **9:13:43 AM**
Fuel: **Site Gas Fuel#900-1664, 20581 Btu/lb,LHV** **3.5.18**

Case #	**100**	**101**	**102**	**103**
Ambient Conditions				
Dry Bulb, °F	86.0	86.0	86.0	86.0
Wet Bulb, °F	70.5	70.5	70.5	70.5
RH, %	47.1	47.1	47.1	47.1
Altitude, ft	410.0	410.0	410.0	410.0
Ambient Pressure, psia	14.480	14.480	14.480	14.480
Engine Inlet				
Comp Inlet Temp, °F	46.0	86.0	86.0	86.0
RH, %	95.0	47.0	47.0	47.0
Conditioning	CHILL	NONE	NONE	NONE
Tons or kBtu/hr	1479	0	0	0
Pressure Losses				
Inlet Loss, inH20	5.00	5.00	5.00	5.00
Volute Loss, inH20	4.00	4.00	4.00	4.00
Exhaust Loss, inH20	12.00	12.00	12.00	12.00
kW, Gen Terms	**50269**	**37703**	**25135**	**15000**
Est. Btu/kW-hr, LHV	**8542**	**9048**	**10171**	**12778**
Fuel Flow				
MMBtu/hr, LHV	429.4	341.1	255.6	191.7
lb/hr	20863	16575	12421	9313
NOx Control	**Water**	**Water**	**Water**	**Water**
Water Injection				
lb/hr	19955	13137	10629	6237
Temperature, °F	100.0	100.0	100.0	100.0
SPRINT	**LPC**	**LPC**	**OFF**	**OFF**
lb/hr	8287	8755	0	0
Control Parameters				
HP Speed, RPM	10435	10366	10057	9719
LP Speed, RPM	3600	3600	3600	3600
PS3 - CDP, psia	457.6	386.5	320.8	261.5
T3CRF - CDT, °F	970	972	966	885
T48IN, °R	2038	1982	1885	1771
T48IN, °F	1578	1522	1425	1312
Exhaust Parameters				
Temperature, °F	840.7	844.4	818.4	789.8
lb/sec	297.2	254.8	218.3	184.0
lb/hr	1069986	917303	785986	662263
Energy, Btu/s- Ref 0 °R	100244	86211	71441	58392
Energy, Btu/s- Ref T2 °F	62370	51128	41703	33474
Cp, Btu/lb-R	0.2774	0.2774	0.2727	0.2697

Estimated Average Engine Performance NOT FOR GUARANTEE, REFER TO PROJECT F&ID FOR DESIGN

GE Energy

Performance By: **Larry Salguero**
Project Info:

Engine: **LM6000 PC-SPRINT w/ FIGV at -5 Degrees**
Deck Info: **G0125O - 8fk.scp** **09/25/2007**
Generator: **MEID 800LL04 60Hz, 13.8kV, 0.8PF (14849)** **9:13:43 AM**
Fuel: **Site Gas Fuel#900-1664, 20581 Btu/lb,LHV** **3.5.18**

Case #	**100**	**101**	**102**	**103**
Emissions (NOT FOR USE IN ENVIRONMENTAL PERMITS)				
NOx ppmvd Ref 15% O2	25	25	25	25
NOx as NO2, lb/hr	43	34	26	19
CO ppmvd Ref 15% O2	18	6	10	9
CO, lb/hr	18.37	5.37	6.00	4.13
CO2, lb/hr	56143.57	44644.87	33518.88	25166.75
HC ppmvd Ref 15% O2	2	2	2	2
HC, lb/hr	1.25	0.99	0.75	0.56
SOX as SO2, lb/hr	0.00	0.00	0.00	0.00
Maximum Emissions				
NOx ppmvd Ref 15% O2	**25**	**25**	**25**	
NOx as NO2, lb/hr	**43**	**34**	**26**	
CO ppmvd Ref 15% O2	**42**	**16**	**16**	
CO, lb/hr	**43.59**	**12.96**	**9.70**	
HC ppmvd Ref 15% O2	**10.00**	**10.00**	**10.00**	
HC, lb/hr	**6.00**	**4.77**	**3.57**	
VOC ppmvd Ref 15% O2	**2.00**	**2.00**	**2.00**	
VOC, lb/hr	**1.20**	**0.95**	**0.71**	
PM10, lb/hr	**2.70**	**2.70**	**2.70**	
Engine Exhaust				
Exhaust Avg. Mol. Wt., Wet Basis	28.0	28.0	28.2	28.3
Exhaust Flow, ACFM	595551	512439	427045	350478
Exhaust Flow, SCFM	227832	195845	166695	139843
Exhaust Flow, Btu/lb	337	338	327	317
Exhaust Flow, Calories/s	25261514	21725060	18003028	14714724
Inlet Flow Wet, pps	287.3	260.2	251.6	257.9
Inlet Flow Dry, pps	285.5	256.9	248.4	254.7
Shaft HP	68635	51610	34622	20965

Appendix 2 – Turbine Commissioning

Turbine Commissioning and Emissions

The commissioning of each turbine will take place under GE supervision. Commissioning will consist of the following test periods.

- First fire of the unit, where each unit is operated on fuel at speeds ranging from minimum idle to full speed at no load and not tied to the grid. Correct electrical phase rotation is established and systems are checked out and tuned (e.g. fuel gas compressors and the gas turbine fuel system). 1 x 12-hr day per unit.
- Synchronization, where the unit is tied to the grid and operated at low load (<15 MW with no water injection and SCR operation). Controls are tuned during this phase to establish reliable starting and stopping of the unit. 2 x 12-hr day per unit.
- Low-load to full-load operation (approximately 1.5 MW to full-load, no SCR operation). Water injection and watering schedule are established during this phase to establish the desired gas turbine emissions profile. The gas turbine and generator excitation system controls are tuned to provide desired response. 1 x 6-hrs day per unit.
- Low-load to full-load operation (> 15 MW to full-load), with water injection and SCR in operation. The SCR is commissioned and tuned. 1 x 6-hrs day per unit.
- Power augmentation equipment (SPRINT and inlet chilling systems) are commissioned and tuned. SCR is re-tuned if necessary to account for power augmentation equipment. 1 x 12-hr day per unit.

Only one unit will be commissioned at a time until both units can operate with functioning SCR systems. This will ensure methodical start-up and minimize instantaneous emissions. The test duration provided above represent likely and optimal conditions. A proposed maximum duration of 200 hours for each turbine was requested in the permit application. The following are emission estimates during the commissioning period using a worst case emission scenario of the turbine operating at 30% load without add-on controls.

Table 2-1 – Facility emission rates during the commissioning period

Turbine Commissioning	NOx	CO	VOC	PM10	SO_2
Emission Rate (15 MW Uncontrolled) - lb/hr	19.00	4.13	0.56	1.59	0.45
Max. Hourly (1 turbine any one time) – lb/hr	19.00	4.13	0.56	1.59	0.45
Max. Daily (12 hour commissioning day) - lb/day	228.00	49.56	6.72	19.07	5.36
Max. Annual (200 hours each turbine) - lb/yr	7,600	1,652	224	636	179
Max. Annual – tons/yr	3.80	0.83	0.11	0.32	0.09

(1) PM10 emissions were adjusted using proportional exhaust flow rates.

A comparison of these emission rates shows them to be below the AQIA thresholds as shown in Table 2-2. Therefore, the AQIA requirement is not required for this project pursuant to Rule 20.3 (2)(i). However, this analysis was completed for the CEQA process and the results are provided in Appendix 4.

Table 2-2 – Facility emission rates during the commissioning period

Air Contaminant	AQIA Thresholds			Commissioning Period		
	Lb/hr	Lb/day	Ton/yr	Lb/hr	Lb/day	Ton/yr
CO	100	550	100	4.13	49.56	0.83
NO_X	25	250	40	19.0	228	3.80
PM_{10}	N/A	100	15	1.59	19.07	0.32
SO_X	25	250	40	0.45	5.36	0.09

(1) Hourly emissions are based on commissioning only one turbine at any one time until the SCR and oxidation catalyst are operational

(2) Daily emissions are based on 12 hours work day.

Appendix 3 – Engines Specifications

SAN DIEGO AIR POLLUTION CONTROL DISTRICT

SUPPLEMENTAL APPLICATION INFORMATION
FEE SCHEDULE 34A-J

San Diego APCD Use Only
Appl. No.:
ID No.:

INTERNAL COMBUSTION ENGINES

Company Name: ORANGE GROVE ENERGY, LP

Equipment Address: 10300 PALA ROAD, PALA, CA 92059

Reason for submitting application:

☐ Existing Unit, Date of Installation _____ ☐ Compliance with 2004 Diesel Engine ATCM

☐ Replacement of Existing Unit; ☒ New or Additional Unit

A. EQUIPMENT DESCRIPTION

Engine Mfr.: Cummins Model: GTA38-G2 S/N: _____

Engine hp Rating: 965 Fuel Type: ☐ diesel* ☒ natural gas ☐ gasoline

Combination of fuels (specify) _____

Engine Equipment: ☒ turbocharger ☒ aftercooler ☐ 4-degree retard of fuel injection

☐ exhaust gas recirculation ☐ lean burn

☐ pre-chamber combustion ☐ air/fuel controller

☐ diesel particulate filter (attach manufacturer's specification for efficiency, and/or ARB verification.)

☐ other add-on control technology (attach manufacturer's specification for efficiency, and/or ARB verification.)

(Specify) _____

☐ crankcase (blow-by) emission control equipment

(Specify) _____ Model _____

Describe any in stack emission control and/or monitoring devices. (i.e., catalytic converter)

_____

_____

* Diesel fuel must be Certified California Diesel (CARB Diesel).

B PROCESS DESCRIPTION

Engine Drives: ☐ compressor _____ cfm ☐ pump _____ gpm

☒ generator 625 kw ☐ other (specify) _____

Equipment is: ☐ portable ☒ stationary ☐ continuous service

☐ peak shaving electrical supply ☐ cogeneration

☒ emergency electrical supply ☐ used at any time

C. OPERATING SCHEDULE (typical)

	Hours/day	Days/week	Weeks/year
Average	0.5	1	12
Maximum	0.5	1	12

Equipped with a non-resettable hour meter? ☐ yes ☒ no

D. FUEL CONSUMPTION AND EMISSIONS (@100% Load)

Liquid Fuel: _____ gal/hr _____ gal/wk _____ gal/yr

Gaseous Fuel: _____ gal/hr _____ gal/wk _____ gal/yr

4,437 CF/hr 4,437 CF/wk 62118 CF/yr

Exhaust Emission*:	LB/HR	g/HP-HR	g/HR	PPM
Carbon Monoxides (CO)	10.13	4.77		
Nitrogen Oxides (NOx)	37.22	17.53		
Hydrocarbons (HC) (Non CH4)	0.701	0.33		
Sulfur Oxides (SOx) @ 12% CO2	0.008			
Particulate Matter (PM)	0.080			

*Please attach manufacturer's specifications or source of exhaust emission data.

Exhaust Temperature 1123 ^{o}F

Fuel Supplier: SDG&E (0.75 gr S/100 SCF)

Fuel Sulfur Content: _____ % Sulfur (% wt. as S. (Liquid Fuel))

Fuel Sulfur Content: _____ % Sulfur (% vol. as H2S (Gaseous Fuel))

Engine year of manufacture: 2008

CARB Certification No.: _____

EPA Certification No.: _____

E. RULE 1200 TOXICS EVALUATION:

FACILITY SITE MAP Please provide a copy of a **Thomas Bros. Map** showing the geographic location of your facility. This helps by making it possible for the District to use a Geographic Information System to identify community residents and workers who may be impacted by emissions from your facility.

PLOT PLAN Please also provide a **facility plot plan or diagram** (need not be to scale as long as distances of key features from reference points are shown) showing the **location of emission point(s)** at the facility, property lines, and the **location** and **dimensions of buildings** (estimated height, width, and length) that are closer than 100 ft. from the emission point. This diagram helps by making it possible for the District to efficiently set-up the inputs for a health risk evaluation. Inaccurate information may adversely affect the outcome of the evaluation.

EMISSION POINT DATA Determine if your emission source(s) are ducted sources or if they are unducted/fugitive sources and provide the necessary data below. (**Examples** of commonly encountered emission points: **Ducted or Stack Emissions -** an exhaust pipe or stack, a roof ventilation duct; **Unducted Emissions -** anything not emitted through a duct, pipe, or stack, for instance, an open window or an outdoor area or volume.)

1. Ducted or Stack Emissions (For 1 or more emission points). Estimate values if you are unsure.

Parameter	Point #1	Point #2	Point #3	Point #4	Point #5	Point #6
Height of Exhaust above ground (ft)	15					
Stack Diameter (or length/width) (ft)	0.42					
Exhaust Gas Temperature* (°F)	1123					
Exhaust Gas Flow (actual cfm or fps)	6637					
Is Exhaust Vertical (Yes or No)	Y					
Raincap? (None, Flapper Valve, Raincap)	None					
Distance to Property Line (+/- 10 ft)	720					

* Use "70 °F" or "Ambient" if unknown

2. Unducted Emissions (For 1 or more emission points). Estimate if you are unsure.

Describe how unducted gases, vapors, and/or particles get into the outside air. Provide a brief description of the process or operation for each unducted emission point. If unducted emissions come out of building openings such as doors or windows, estimate the **size of the opening** (example – 3 ft x 4 ft window).

If unducted emissions originate outside your buildings, estimate the **size of the emission zone** (example - paint spraying 2' x 2' x 2' bread boxes).

_____

_____

_____

_____

_____

_____

_____

_____

RECEPTOR DATA A receptor is a residence or business whose occupants could be exposed to toxic emissions from your facility. In order to estimate the risk to nearby receptors, please provide the distance from the emission point to the nearest residence and to the nearest business.

Distance to nearest residence _____ ft

Distance to nearest business _____ ft

Distance to nearest school _____ft

Name of Preparer: Charles Diep **Title:** Consultant

Phone No.: (714) 608-1988 E-mail: CDiep@TRCSolutions.com **Date:** 10/25/2007

NOTE TO APPLICANT:

Before acting on an application for Authority to Construct or Permit to Operate, the District may require further information, plans, or specifications. Forms with insufficient information may be returned to the applicant for completion, which will cause a delay in application processing and may increase processing fees. The applicant should correspond with equipment and material manufacturers to obtain the information requested on this supplemental form.

CUMMINS CAL PACIFIC LLC.
1939 Deere Avenue
Irvine, CA 92606 United States
(949) 253-6000

July 12, 2007

Industrial Construction Company
0
Cleveland OH
Phone No.: 440-746-9200 x134
Fax No. :
Email : hkern@icconstruction.com
Attention: Hans Kern

Project Name: **Pala Black Start**
Quotation No: **TG39275.448**

Thank you for your inquiry, We are pleased to quote as follows:

Qty.	Notes	Model/Options	Description
ITEM A			
1	a	625GTA38GS2	NATURAL GAS GENSET
	a	L032	Rating - 60 Hertz,625KW Standby Power, 8.5:1 C/R
	a	308B	Voltage - 277/480, 139/240, 125°C Rise.....
	a	0	Exciter/Regulator - PMG, 1 Phase Sensor.....
	a	A292	Heater-Alternator, 120 Volt AC.....
	a	A275	Isochronous/Droop.....
	a	KP89	Circuit Breaker 1000A, 3 Pole, 600V, Thermo-Magnetic, UL.....
	a	H643	Engine Control-PCC 2100.....
	a	H527	Warning-Low Coolant Level.....
	a	H606	AC Control-with Meters.....
	a	E074	Engine Cooling - Radiator.....
	a	D041	Engine Air Cleaner - Normal Duty.....
	a	C002	Natural Gas Fuel.....
	a	(2) MM-2	Flexible Fuel Connector.....
	a	(2) SO1044	Fuel Strainer.....
	a	H426	Coolant Heater 8000W 480V/240……
	a	L029	Warranty - 2 Year Standby.....
	b	CN-2-6	Vibration Isolators - Gen Set (Price of 10).....
	a	1400-Dry	Battery - 12 Volt DC (Group 8D) (Price of 4).....
	a	Lube oil	Lube Oil.....
	a	Anti-Freeze	Anti-Freeze - 50/50.....
	b	Enclosure	Sound Attenuated Enclosure 42 dBA @ 400'
	e	S&T	Basic Start and Test
	d	NSCR	Three Way Catalytic Convertor and AFRC (shipped Loose)
	b	Battery Charger	Battery Charger

Option Notes:

a : Factory Assembled.
b : Assemble at CCP's facility.
c : Shipped loose Items. Assemble/Install by CCP at job site.
d : Shipped loose Items. Assemble/Install by customer at job site.
e : Start & Test perform by CCP.
f : Start & Test perform by customer.

Availability: Subject to manufacturer lead time.
Currently, manufacturing lead time is approximately 26 weeks from order acceptance

Clarifications and Exceptions:

This quote is based on our understanding of your verbal specifications, which are documented by our submittal package and by the above quotation. These specifications may or may not meet all jobsite requirements. Any additions or deletions that result from a project requirement that are not included in the Cummins Cal Pacific submittals or in the above quotation will be addressed by separate change order to be supplied by Cummins Cal Pacific and authorized by Purchaser prior to any changes being implemented

Air Pollution Control Permit:
This product is designed to meet the stringent air quality control standards of California Air Pollution Districts. However, these districts can and do change requirements from time to time.
Please note that permits to use this generator are the responsibility of the Purchaser, however, Cummins Cal Pacific can provide the following data in support of air quality procedures by the district noted below.

San Diego County Air Pollution Control District Permit
All engines installed over 50 horsepower require registration with the SDAPCD. The engine utilized in the generator proposed is current product and should be adequate for SDAPCD Permits to Construct issued before the end of 2007 at which time gensets 60 kW and under will require lower emissions. For permits issued beyond this date for this size product, a more advanced engine technology may be needed. If you would like a quotation which includes this new lower emission product, please let us know.

The California Air Resources Board (CARB), and the San Diego Air Pollution Control District (SDAPCD) have recently implemented new regulations in order to help control diesel particulate emissions. These regulations require that each generator installation be subject to various screening processes, by which the Air Pollution Control District will determine allowable emissions limits for that specific location. Based on the results of these screening processes, additional emissions control equipment, such as a diesel particulate filter, may be required. Most generator installations will not require any additional equipment, but as the supplier of a diesel generator, we have no way of knowing what the requirements will be, prior to the screenings being done. Therefore, we have not included, nor can we be accountable for additional equipment requirements resulting from these screenings.

If the specifics of add-on emissions control have been determined, please provide this detail, and we will provide a quote accordingly.

Permits and licenses: Permit and license costs (Air Pollution/Quality, Fire, Building, etc.) are not included in this quote. Cummins Cal Pacific, LLC. will provide information as may be necessary for the acquisition of permits and licenses, but Cummins Cal Pacific, LLC. does not assume any responsibility for obtaining any permits or licenses that may be required.

Shipment: This price is F.O.B. jobsite on truck curbside. Offloading and placement of the goods shall be solely your responsibility. All deliveries are Monday through Friday 6:00 a.m. to 5:00 p.m. (Deliveries outside normal business hours will be invoiced as necessary). All items shipped to site are the responsibility of the Purchaser, whether or not installed by Cummins Cal Pacific or by Purchaser.

Start & Test: Upon completion of installation by others, Start & Test will be performed per the Start & Test Scope of Work, which is a part of this quotation as described below:

The Scope of this test is as follows:

1) Confirm Product Under Test has been supplied to agreed Cummins Cal Pacific quotation.
2) Confirm proper installation of the Items Under Test and make recommended changes as appropriate.
3) Conduct Operational Tests to confirm control logic, load acceptance and steady state operation of Product Under Test.
4) Product Under Test will be loaded using available facility load.
5) It is assumed that training will be done at the time of the start & test. If additional sessions are necessary, we will be glad to quote this training at an additional cost.

Venting: Tank venting (indoor/outdoor), as may be required and (if not included above), is not included.
If the specifics of venting have been determined, please provide this detail, and we will quote accordingly.

Warranties: Product warranties are being supplied with this equipment from Cummins Power Generation and are described on CPG Bulletin # AB2001-01 12/2002. No other warranties are supplied beyond this warranty.

Not a Contractor: CUMMINS CAL PACIFIC, LLC. is a supplier of materials and related services; Cummins Cal Pacific, LLC. is not a contractor.

Invoicing: All invoices will be for product delivered and service provided. Partial invoicing will reflect percent of completion. Cummins Cal Pacific does not agree to the witholding of retention.

Credit: Credit is subject to Cummins Cal Pacific, LLC.'s approval in its sole discretion. This quote in no way constitutes approval of credit.

Terms and Conditions:

1. Payment terms are net 30 Days, subject to all of the Credit Terms contained in our Credit Application and this document. (1 ½% per month will be charged on past due accounts).
2. Partial shipments will be invoiced proportional to total quoted price, payable 30 days after shipment. Note: If your job conditions or schedule result in partial or incomplete shipment of products and equipment provided by Cummins Cal Pacific, LLC., you will be invoiced according to the dollar value of the shipped items. These invoices then become due and payable 30 days after shipment and not when the job is completed.
3. All purchase orders must reference our quotation.
4. All purchase orders must be acknowledged in writing by Cummins Cal Pacific, LLC. to be deemed accepted.
5. Purchase orders which are issued with a hold for release date are subject to re-evaluation at the time of release.
6. Unless mutually agreed upon in writing, Cummins Cal Pacific, LLC will not accept purchase orders which:
   a) specify delivery dates that are not subject to manufacturer's leadtimes.
   b) contain penalty clauses or liquidated damage clauses.
   c) require Cummins Cal Pacific, LLC. to indemnify and hold harmless the purchaser, unless the purchaser also agrees to indemnify and hold harmless Cummins Cal Pacific, LLC.
   d) require Cummins Cal Pacific, LLC. to pay any and all legal expenses for the purchaser in the event of a dispute.
   e) require Cummins Cal Pacific, LLC. to be responsible for system design work and/or guarantee that a performance standard for a system will be met.
   f) require completion and acceptance of the project by the owner before payment.
7. Start and Test may be invoiced separately at your request but it is subject to Cummins Cal Pacific, LLC.'s partial invoicing policy.
8. Provided CCP is ready for shipment and the purchaser can't take delivery, monthly storage fees at a rate of .5% of P.O value will be issued for material not accepted on the requested delivery date.
9. Notwithstanding anything in this agreement or under law, buyer and seller agree that seller's only liability for any breach of this agreement (or any defect in any item of property sold by seller) shall be limited to the replacement of the defective part or replacement of the defective product ; and buyer shall have no other right, claim or remedy against seller, including, but not limited to any right to recover consequential damages under any circumstance.

Validity of the Quote: This quote is valid for 30 days following the quote date. This quote may be modified and/or rescinded by Cummins Cal Pacific, LLC. at its sole discretion unless and until accepted on or before the quote date.

Note: The Terms and conditions of this quotation govern over any conflict between this quotation and customer's purchase order or other document, made either prior or subsequent to this quotation.

Thank you for this opportunity to quote Cummins Power Generation products. Please call if we may answer any, questions or be of further service.

Submitted by
Cummins Cal Pacific, LLC.

Tom S Golnick
Account Manager
Direct Cell: 619-778-1402
Office Phone: 949-253-6000
Fax: 760-941-4586
Email: tom.g.golnick@cummins.com

Accepted By:_____

Print Name:_____

Firm Name:_____

Customer P.O.:_____ Date:_____

Delivery Date Requested
by Purchaser _____

Note: If no delivery date is provided, Cummins Cal Pacific will hold placing material orders until such date is made available. It is the responsibility of Purchaser to supply a delivery date that is within factory lead times.

Gaseous Fuel Generator Set Model GFJB

KW(KVA) @ 0.8 P.F.						
Compression	60 HZ-1800 RPM			50 HZ-1500 RPM		
Ratio	Standby	Prime	Cont.	Standby	Prime	Cont
8.5:1	625(781)	565(706)	470(587)	515(643)	465(581)	385(481)

Notes:
(1) 21° C (90° F) or lower water temperature to the aftercooler or use of air to air aftercooler w/100ºF or lower air temperature to the radiator.
(2) 54° C (130° F) or lower water temperature to the aftercooler or use of air to air aftercooler w/130°F or lower air temperature to the radiator.

Fuel Application Guide	
Compression Ratio	8.5:1
Dry Processed Natural Gas	Yes
Propane (HD5)	Yes
All gases such as field gas, digester and sewage gas will require an analysis of the specified gas and pre-approval from CNGE. Consult your Cummins Distributor for details.	

Description

The Cummins NPower GF-series commercial generator set is a fully integrated power generation system providing optimum performance, reliability, and versatility for stationary standby or prime power applications.

A primary feature of the GF GenSet is strong motor-starting capability and fast recovery from transient load changes. The torque-matched system includes a heavy-duty Cummins 4-cycle spark ignited engine, an AC alternator with high motor-starting kVA capacity, and an electronic voltage regulator with three phase sensing for precise regulation under steady-state or transient loads. The GF GenSet accepts 100% of the nameplate standby rating in one step. *

The standard PowerCommand® digital electronic control is an integrated system that combines engine and alternator controls for high reliability and optimum GenSet performance.

Optional weather-protective housings and coolant heaters shield the generator set from extreme operating conditions. Environmental concerns are addressed by low exhaust emission engines, sound-attenuated housings, and exhaust silencers. A wide range of options, accessories, and services are available, allowing configuration to your specific power generation needs.

Every production unit is factory tested at rated load and power factor. This testing includes demonstration of rated power and single-step rated load pickup. Cummins NPower manufacturing facilities include quality standards, emphasizing our commitment to high quality in the design, manufacture, and support of our products. The generator is CSA certified. The PowerCommand control is UL508 Listed.

All Cummins NPower generator sets are backed by a comprehensive warranty program and supported by a worldwide network of 170 distributors and service branches to assist with warranty, service, parts, and planned maintenance support.

Features

Cummins Heavy-Duty Engine - Rugged 4-cycle industrial spark ignited engine delivers reliable power, low emissions, and fast response to load changes.

Alternator - Several alternator sizes offer selectable motor-starting capability with low reactance 2/3 pitch windings, low waveform distortion with non-linear loads, fault-clearing short-circuit capability, and class H insulation. The alternator electrical insulation system is UL1446 Recognized.

Control Systems - The PowerCommand electronic control is standard equipment and provides total genset system integration, including automatic remote starting/stopping, precise voltage regulation, alarm and status message display, AmpSentry™ protection, output metering, auto-shutdown at fault detection, and NFPA 110 compliance. PowerCommand control is Listed to UL508.

Cooling System - Standard cooling package provides reliable running at the rated power level, at up to 40°C ambient temperature.

Housings - Optional weather-protective housings are available.

Certifications - Generators are designed, manufactured, tested, and certified to relevant UL, NFPA, ISO, IEC, and CSA standards.

Warranty and Service - Backed by a comprehensive warranty and worldwide distributor service network.

*Adequate fuel pressure and volume must be provided. Engines must be equipped with a functioning jacket water heater.

Generator Set

The general specifications provide representative configuration details. Consult the outline drawing for installation design.

Specifications – General

See outline drawing 7209 -02B for installation design specifications. (Drawing# 7211-01C – for enclosed units)

Unit Width, in (mm)	90.5" (2299)
Unit Height, in (mm)	111" (2819)
Unit Length, in (mm)	186.5" (4737)
Unit Dry Weight, lb (kg)	18119 (8218)
Rated Speed, rpm	1800
Voltage Regulation, No Load to Full Load	±1.0%
Random Voltage Variation	±1.0%
Frequency Regulation	5%
Random Frequency Variation	±0.5%
Radio Frequency Interference	Optional PMG excitation operates in compliance with BS800 and VDE level G and N. Addition of RFI protection kit allows operation per MIL-STD-461 and VDE level K.

Rating Definitions

Standby Rating based on: Applicable for supplying emergency power for the duration of normal power interruption. No sustained overload capability is available for this rating. (Equivalent to Fuel Stop Power in accordance with ISO3046, AS2789, DIN6271 and BS5514). Nominally rated.

Prime (Unlimited Running Time) Rating based on: Applicable for supplying power in lieu of commercially purchased power. Prime power is the maximum power available at a variable load for an unlimited number of hours. A 10% overload capability is available for limited time. (Equivalent to Prime Power in accordance with ISO8528 and Overload Power in accordance with ISO3046, AS2789, DIN6271, and BS5514). This rating is not applicable to all generator set models.

Base Load (Continuous) Rating based on: Applicable for supplying power continuously to a constant load up to the full output rating for unlimited hours. No sustained overload capability is available for this rating. Consult authorized distributor for rating. (Equivalent to Continuous Power in accordance with ISO8528, ISO3046, AS2789, DIN6271, and BS5514). This rating is not applicable to all generator set models.

Site Derating Factors

Engine power available up to 3000' (m) at ambient temperatures up to 104°F (40°C). Above 3000' (m)derate at 4% per 1000 ft (305 m), and 1% per 10°F (2% per 11°C) above 104°F (40°C).

1) Data represents gross engine performance capabilities obtained and corrected in accordance with SAEJ1349 conditions of 29.61 in. Hg.(100KPa) barometric pressure [300 ft. (91m) altitude], 77°F (25°C) inlet air temperature, and 0.30 in Hg.(100KPa) water vapor pressure using dry processed natural gas fuel with 905 BTU per standard cubic foot (33.72 ki/l) lower heating value. Deration may be required due to altitude, temperature or type of fuel. Consult your local Cummins Distributor for details.

2) FUEL SYSTEM

Standard Carburetor – IMPCO Make

Low Pressure Dry Processed Natural Gas – (905 BTU/ft.² L.H.V.)

Running Pressure to Carburetor (After Regulation) – in. H_20 (mm H_20) …… 5 ~ 7 (127~177)

Running Pressure to Engine Mounted Regulator ~ in. H_20 (mm H_20) ……10 ~ 20 (254 ~ 508)

Minimum Gas Supply Pipe Size @ Engine – in. (mm)……2.0 (50.8)

Gas Supply Filter Pressure Rating – PSI (kPa)……100 (690)

The preceding pipe sizes are only suggestions and piping may vary with temperatures, distance from fuel supply and application of local codes. Gas must be available at adequate volume and pressure for engine at the regulator.

Engine

Cummins heavy-duty spark ignited engines use advanced combustion technology for reliable and stable power, low emissions, and fast response to sudden load changes.

Electronic governing is standard for applications requiring constant (isochronous) frequency regulation such as Uninterruptible Power Supply (UPS) systems, non-linear loads, or sensitive electronic loads. Optional coolant heaters are recommended for all emergency standby installations or for any application requiring fast load acceptance after start-up.

Specifications – Engine

Base Engine	Cummins Model GTA38G2
Displacement in^3 (L)	2300 (38)
Overspeed Limit, rpm	2100
Regenerative Power, kW	-
Cylinder Block Configuration	Cast iron with replacable wet cylinder liners
Cranking Current	550 amps at ambient temperature of 32°F (0°C)
Battery Charging Alternator	37 amps
Starting Voltage	24-volt, negative ground
Lube Oil Filter Types	Single spin-on canister-combination full flow with bypass
Standard Cooling System	104°F (40°C) ambient radiator

Fuel		**STANDBY**		
Fuel Consumption	Load	1/2	3/4	Full
(Approximate)	kW	312	469	625
	CFH	5605	7484	8268
Cooling				
Heat Rejection to Coolant*		38660 Btu/Min	679 kw	
Heat Rejection to Room		6107 Btu/Min	107kw	
Coolant Capacity (with radiator)		120 US/Gal	454L	
Coolant Flow Rate		411 Gal/Min	26 L/Min	
Maximum Coolant Friction Head		15 psi	103kPa	
Maximum Coolant Static Head		60 ft	18.3 m	
Radiator Fan Load		90 HP	67 kw	
Air				
Combustion Air		2257 cfm		
Maximum Air Cleaner Restriction		15" in H_20	381 mmHg	
Allternator Cooling Air		2060 cfm	58.3 cu m/min	
Radiator Cooling Air		71000cfm	33512 L/sec	
Maximum Restriction at Radiator Discharge (static)		0.5 in H_20	12.7 mm H_20	
Exhaust				
Gas Flow (Full Load)		6119 cfm	2888 L/sec	
Gas Temperature		1350°F	732 °C	
Maximum Back Pressure		2 in Hg	50 mm Hg	
Engine				
Gross Engine Power Output		965 bhp	720 kwm	
BMEP		185 psi	1276 kPa	
Piston Speed		1875 ft/min	9.5 m/s	

* Jacket water only. Contact factory for aftercooler heat rejections and coolant flows

Alternator

Several alternators are available for application flexibility based on the required motor-starting kVA and other requirements. Larger alternator sizes have lower temperature rise for longer life of the alternator insulation system. In addition, larger alternator sizes can provide a cost-effective use of engine power in across-the-line motor-starting applications and can be used to minimize voltage waveform distortion caused by non-linear loads.

Single-bearing alternators couple directly to the engine flywheel with flexible discs for drivetrain reliability and durability. No gear reducers or speed changers are used. Two-thirds pitch windings eliminate third-order harmonic content of the AC voltage waveform and provide the standardization desired for paralleling of generator sets. The standard excitation system is a self (shunt) excited system with the voltage regulator powered directly from the generator set output.

Alternator Application Notes

Separately Excited Permanent Magnet Generator (PMG) System - This option uses an integral PMG to supply power to the voltage regulator. A PMG system generally has better motor-starting performance, lower voltage dip upon load application, and better immunity from problems with harmonics in the main alternator output induced by non-linear loads. This option is recommended for use in applications that have large transient loads, sensitive electronic loads (especially UPS applications), harmonic content, or that require sustained short-circuit current (sustained 3-phase short circuit current at approximately 3 times rated for 10 seconds).

Alternator Sizes - On any given model, various alternator sizes are available to meet individual application needs. Alternator sizes are differentiated by maximum winding temperature rise, at the generator set standby or prime rating, when operated in a 40°C ambient environment. Available temperature rises range from 80°C to 150°C. Not all temperature rise selections are available on all models. Lower temperature rise is accomplished using larger alternators at lower current density. Lower temperature rise alternators have higher motor-starting kVA, lower voltage dip upon load application, and they are generally recommended to limit voltage distortion and heating due to harmonics induced by non-linear loads.

Alternator Space Heater - is recommended to inhibit condensation.

Available Output Voltages

Three Phase Reconnectable	Single Phase Non-Reconnectable	Three Phase Non-Reconnectable
[ ] 120/208	[ ] 120/240	[ ] 220/380
[ ] 127/220		[ ] 347/600
[ ] 139/240		
[ ] 120/240		
[ ] 240/416		
[ ] 254/440		
[ ] 277/480		

Specifications – Alternator

Design	Brushless, 4-pole, drip-proof revolving field
Stator	2/3 pitch
Rotor	Direct-coupled by flexible disc
Insulation System	Class H per NEMA MG1-1.65
Standard Temperature Rise	125°C standby
Exciter Type	PMG
Phase Rotation	A (U), B (V), C (W)
Alternator Cooling	Direct-drive centrifugal blower
AC Waveform Total Harmonic Distortion	<5% total no load to full linear load <3% for any single harmonic
Telephone Influence Factor (TIF)	<50 per NEMA MG1-22.43.
Telephone Harmonic Factor (THF)	<3

	80°C Alternator			**105°CAlternator**			**125°C Alternator**			
Voltage Ranges The broad range alternator can supply single phase output up to 2/3 of the set rated 3-phase KW at 1.0 power factor	110/190 thru 139/240 220/380 Thru 277/480 120/240*		347/600	110/190 thru 139/240 220/380 Thru 277/480 120/240		347/600	110/190 Thru 139/240 220/380 Thru 277/480 120/240*	120/208 Thru 139/240 240/416 Thru 277/480 120/240*	247/480	347/600
Motor Starting Maximum kVA (90% Sustained Voltage)	Broad Range 3866		600 V --	Broad Range 2944		600V --	Broad Range 2944	480V 2429	600V ---	
Alternator Data Sheet Numbers	311B			309B			309B		308B	
Full Load Current (Amps @ Standby Rating)	120/208 2169	127/220 2050		139/240 1879	220/380 1187	240/416 1084	254/440 1025	277/480 939	347/600 ---	

Notes:
1. The broad range alternators can supply single phase output up to 2/3 set rated 3-phase kW at 1.0 power factor.
2. The extended stack (full single phase output) and 4 lead alternators can supply single phase output up to full set rated 3-phase kW at 1.0 power factor.

Control System

PowerCommand Control with AmpSentry™ Protection

- The PowerCommand Control is an integrated generator set control system providing governing, voltage regulation, engine protection, and operator interface functions.
- PowerCommand Controls include integral AmpSentry protection. AmpSentry provides a full range of alternator protection functions that are matched to the alternator provided.
- Controls provided include Battery monitoring and testing features, and Smart-Starting control system.
- InPower PC-based service tool available for detailed diagnostics.
- Available with Echelon LonWorks™ network interface.
- NEMA 3R enclosure.
- Suitable for operation in ambient temperatures from -40C to +70C, and altitudes to 13,000 feet (5000 meters).
- Prototype tested; UL, CSA, and CE compliant.

AmpSentry AC Protection

- Overcurrent and short circuit shutdown
- Overcurrent warning
- Single & 3-phase fault regulation
- Over and under voltage shutdown
- Over and under frequency shutdown
- Overload warning with alarm contact
- Reverse power and reverse Var shutdown
- Excitation fault

Engine Protection

- Overspeed shutdown
- Low oil pressure warning and shutdown
- High coolant temperature warning and shutdown
- High oil temperature warning (optional)
- Low coolant level warning or shutdown
- Low coolant temperature warning
- High and low battery voltage warning
- Weak battery warning
- Dead battery shutdown
- Fail to start (overcrank) shutdown
- Fail to crank shutdown
- Redundant start disconnect
- Cranking lockout
- Sensor failure indication

Operator Interface

- OFF/MANUAL/AUTO mode switch
- MANUAL RUN/STOP switch
- Panel lamp test switch
- Emergency Stop switch
- Alpha-numeric display with pushbutton access, for viewing engine and alternator data and providing setup, controls, and adjustments
- LED lamps indicating genset running, not in auto, common warning, common shutdown
- (5) configurable LED lamps
- LED Bargraph AC data display (optional)

Alternator Data

- Line-to-line and line-to-neutral AC volts
- 3-phase AC current
- Frequency
- Total and individual phase kW and kVA

Engine Data

- DC voltage
- Lube oil pressure
- Coolant temperature
- Lube oil temperature (optional)

Other Data

- Genset model data
- Start attempts, starts, running hours
- KW hours (total and since reset)
- Fault history
- Load profile (hours less than 30% and hours more than 90% load)
- System data display (optional with network and other PowerCommand gensets or transfer switches

Voltage Regulation

- Integrated digital electronic voltage regulator
- 3-phase line to neutral sensing
- PMG (Optional)
- Single and three phase fault regulation
- Configurable torque matching

Control Functions

- Data logging on faults
- Fault simulation (requires InPower)
- Time delay start and cooldown
- Cycle cranking
- (4) Configurable customer inputs
- (4) Configurable customer outputs
- (8) Configurable network inputs and (16) outputs (with optional network)

Options

[ ] Power Transfer Control
[ ] Analog AC Meter Display
[ ] Thermostatically Controlled Space Heater

[ ] Key-type mode switch
[ ] Ground fault module
[ ] Engine oil temperature
[ ] Auxiliary Relays (3)

[ ] Echelon LonWorks interface
[ ] Digital input and output module(s) (loose)
[ ] Remote annunciator (loose)

Generator Set Options

Engine
[ ] 120/240 V, W coolant heaters
[ ] 120/240 V, W lube oil heater
[ ] Electronic governor

Cooling System
[ ] Heat exchanger cooling
[ ] Remote radiator cooling

Fuel System
[ ] Flexible fuel connector
[ ] Fuel strainer
[ ] Dual fuel systems

Alternator
[ ] 105°C rise alternator
[ ] 125°C rise alternator
[ ] 120/240 V, 100 W anti-condensation heater
[ ] Single phase

Exhaust System
[ ] GenSet mounted muffler
[ ] Heavy duty exhaust elbow
[ ] Slip on exhaust connection

Generator Set
[ ] AC entrance box
[ ] Batteries
[ ] Battery charger
[ ] Export box packaging
[ ] Main line circuit breaker
[ ] PowerCommand Network Communication Module (NCM)
[ ] Stage 1 housing w/silencer
[ ] Stage II housing w/silencer
[ ] Remote annunciator panel
[ ] Spring isolators
[ ] Weather protective enclosure with silencer
[ ] 2 year standby warranty
[ ] 5 year basic power warranty

Available Products and Services

A wide range of products and services is available to match your power generation system requirements. Cummins Power Generation products and services include:

- Diesel and Spark-Ignited Generator Sets
- Transfer Switches
- Bypass Switches
- Parallel Load Transfer Equipment
- Digital Paralleling Switchgear
- PowerCommand Network and Software
- Distributor Application Support
- Planned Maintenance Agreements

Warranty

All components and subsystems are covered by an express limited one-year warranty. Other optional and extended factory warranties and local distributor maintenance agreements are available. Contact your distributor/dealer for more information.

Certifications

CSA - This generator is CSA certified to product class 4215-01.

PTS - The Prototype Test Support (PTS) program verifies the performance integrity of the generator set design. Products bearing the PTS symbol have been subjected to demanding tests in accordance to NFPA 110 to verify the design integrity and performance under both normal and abnormal operating conditions including short circuit, endurance, temperature rise, torsional vibration, and transient response, including full load pickup.

See your distributor for more information

Cummins NPower LLC
875 Lawrence Drive
DePere, WI 54115
920.337.9750
Fax: 920.337.9746
www.npower.cummins.com

Cummins and PowerCommand are registered trademarks of Cummins Inc.
AmpSentry is a trademark of Cummins Inc.
LonWorks is a registered trademark of Echelon

Important: Backfeed to a utility system can cause electrocution and/or property damage. Do not connect generator sets to any building electrical system except through an approved device or after building main switch is open.

Natural Gas Engines

GTA38

EMISSION DATA
Sheet #ES2041A

Model:	GTA38	**Application:**	Generator Drive
Type:	4 Stroke, 60 Degree Vee, 12 Cylinder	**Rating:**	G1, G2, G3
Aspiration:	Turbocharged & Aftercooled	**Bore:**	6.25 in. (159mm)
Compression Ratio:	8.5:1	**Stroke:**	6.25 in. (159mm)
Fuel:	Natural Gas	**Displacement:**	2300 cu. in. (37.8L)

Performance Data	**GTA38-G1** Standby	**GTA38-G2** Standby	**GTA38-G3** Standby
BHP @ 1800 RPM	892	965	1045
Torque (ft-lbs)	2603	2816	3049
Fuel Flow (SCFH)	8350	8874	9498
Fuel Consumption (BTU/Hp-hr)	8472	8322	8226
Intake Air Flow (SCFM)	2094	2257	2420
Exhaust Mass Flow (lb/hr)	9627	10370	11120
Exhaust Flow (ACFM)	6161	6637	7117
Exhaust Temperature (°F)	1130	1123	1107

Exhaust Emissions Data				
THC	Total Hydrocarbons (gr/hp-hr)	2.71	2.77	2.82
NMHC	Non-Methane Hydrocarbons (gr/hp-hr)	0.32	0.33	0.34
NEHC	Non-Ethane Hydrocarbons (gr/hp-hr)	0.16	0.17	0.17
NOx	Oxides of Nitrogen (gr/hp-hr)	17.89	17.53	17.34
CO	Carbon Monoxide (gr/hp-hr)	4.87	4.77	4.70
CO2	Carbon Dioxide (%)	8.60	8.50	8.30
O2	Oxygen (%)	2.20	2.40	2.80

Test Conditions

Data was recorded during steady-state rated engine RPM (± 25) with full load (± 2 %) and standardized to the following conditions:

Fuel Specification:	Dry processed pipe line quality natural gas.
Fuel Temperature:	60°F ± 9° at Flow Transmitter
Fuel Pressure:	14.73 PSIA ±.5 PSIA at Flow Transmitter
Intake Air Temp:	77°F ± 9° at inlet
Barometric Pressure:	29.92 In. Hg ±1 In. Hg

All emissions data is a calculated average of engines tested under the conditions shown above. This data is subject to instrumentation, measurement, and engine-to-engine variability. Engine operation with excessive air intake or exhaust restrictions beyond published maximum limits, or with improper maintenance may result in elevated emission levels.

Specifications May Change Without Notice.

GEN FRAME SIZE	BASE	DIM A	DIM B	DIM C	DIM D	DIM CG	TOTAL WEIGHT (WET) LBS/KG
NEWAGE HC5 E	9191–50	165.1	28.0	70.1	29.68	107.2	20854/9459
NEWAGE HC5 F	9191–50	168.1	28.0	70.1	29.68	106.3	21171/9603
NEWAGE HC6 G	9191–51	172.2	34.0	66.2	24.60	104.6	21658/9824
NEWAGE HC6 H	9191–51	172.2	34.0	66.2	24.60	103.7	21989/9974
NEWAGE HC6 J	9191–51	172.2	34.0	66.2	24.60	102.8	22331/10129

ENGINE ENVELOPE

HEIGHT _____94.03
WIDTH _____62.51
LENGTH _____84.39

FLUID CAPACITIES

ENGINE OIL ____ 41 – 34 GAL
ENGINE COOLANT _____ 35.4 GAL
AFTERCOOLER COOLANT __24 QT

ENGINE SERVICE CONNECTIONS

GAS INLET _____ 2.00 NPT
ENGINE WATER OUTLET (2) __ 3 INCH
ENGINE WATER IN _____ 5 INCH
MAG PICK–UP _____5/8–18 UNF
OIL DRAIN PLUG _____1.00x18x0.5
EXHAUST STACK (2)_____ 5 INCH
AFTERCOOLER WATER IN _____ 2 NPT
AFTERCOOLER WATER OUT _____ 1.5
EXHAUST TEMP COUPLING ___0.25 NPT

NOTES
1) 3" REQ'D TO REMOVE OIL FILTER
2) 21" REQ'D TO REMOVE OIL DIPSTICK

NOTES:
1) ALL WEIGHTS AND DIMENSIONS ARE APPROXIMATE
2) NEWAGE HC6 GENERATOR SHOWN
3) WEIGHTS DO NOT INCLUDE AIR CLEANER, SILENCER, BATTERY BOX, BATTERIES, OR OPTIONAL EQUIPMENT
4) REFERENCE BASE 9191–51 SHOWN
5) GAUGE PANEL MAY VARY
6) APPROX.. WGT. OF ENCLOSURE = 2800 LBS
7) VIBRATION ISOLATORS, WHEN SPECIFIED, ARE INSTALLED BENEATH THE GENERATOR SET BASE AT EACH OF THE BASE MOUNTING HOLES. THE ISOLATORS ARE TYPICALLY 5.75 INCHES HIGH, BUT HAVE SOME ADJUST ABILITY FOR LEVELING. EACH ISOLATOR HAS TWO OPEN–ENDED SLOTS SPACED EVENLY ABOUT ITS MOUNTING BOLT AT 8 INCHES OF SEPARATION FOR SECURING THE ISOLATOR TO A MOUNTING PAD. THE SLOTS ARE .56 INCHES WIDE. THE INSTALLATION CONTRACTOR IS RESPONSIBLE FOR THE INSTALLATION OF THE ISOLATORS.
8) REQUIRES USE OF SPREADER BAR WHEN LIFTING UNIT TO PREVENT DAMAGE TO ENCLOSURE
9) BREAKER HOUSING 179–3488–07 SHOWN

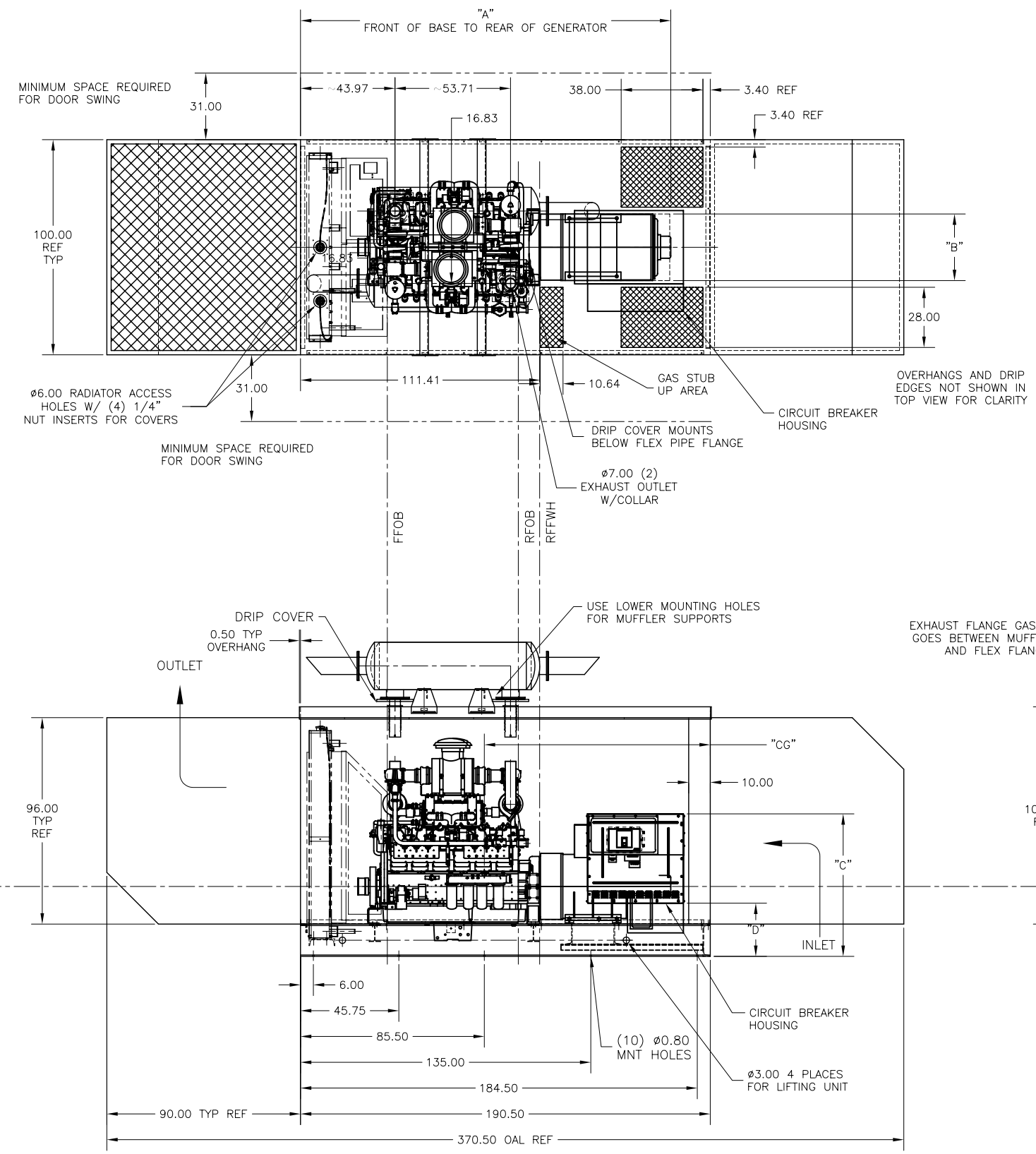

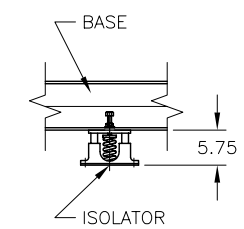

REV	DESCRIPTION OF REVISION	BY	DATE

This document, contains confidential and trade secret information, is the property of Cummins NPower, LLC and is given to the receiver in confidence. By receiving this document, the receiver agrees to treat the document in confidence and agrees that, except as authorized in writing by Cummins NPower, it will (1) not use the document or any copy thereof or the confidential or trade secret information therein, (2) not copy the document, (3) not disclose to others either the document or the confidential or trade secret information therein, and (4) upon demand by Cummins NPower return the document, or upon demand, destroy the document, all copies thereof, and all material copied therefrom. COPYRIGHT Cummins NPower, LLC

UNLESS OTHERWISE SPECIFIED ALL DIMENSION TOLERANCES ARE
ANGULAR DIMENSIONS ± 1° IMPERIAL UNITS METRIC UNITS
THIRD ANGLE PROJECTION

CUMMINS NPOWER, LLC
CORPORATE OFFICE
1600 BUERKLE ROAD
WHITE BEAR LAKE, MN
WWW.NPOWER.CUMMINS.COM

NPOWER SYSTEMS
DESIGN CENTER
875 LAWRENCE DRIVE
DEPERE, WISCONSIN

ENCLOSURE, GTA38 GEN SET
W/ 1.9 LEVEL ATTENUATION

DWG UNITS: DRAWN BY: ACB DATE: 19OCT2005
APPD BY: DATE:
EST WEIGHT: SCALE: 1/32 DO NOT SCALE SHEET 10F1 DRAWING NO: GFJA/JB/JC–03 REV:

SAN DIEGO AIR POLLUTION CONTROL DISTRICT

SUPPLEMENTAL APPLICATION INFORMATION
FEE SCHEDULE 34A-J

San Diego APCD Use Only
Appl. No.:
ID No.:

INTERNAL COMBUSTION ENGINES

Company Name: ORANGE GROVE ENERGY, LP

Equipment Address: 10300 PALA ROAD, PALA, CA 92059

Reason for submitting application:

☐ Existing Unit, Date of Installation _____ ☐ Compliance with 2004 Diesel Engine ATCM

☐ Replacement of Existing Unit; ☒ New or Additional Unit

A. EQUIPMENT DESCRIPTION

Engine Mfr.: Cummins Model: CFP6E-F35 S/N: _____

Engine hp Rating: 210 Fuel Type: ☒ diesel* ☐ natural gas ☐ gasoline

Combination of fuels (specify) _____

Engine Equipment: ☒ turbocharger ☒ aftercooler ☐ 4-degree retard of fuel injection

☐ exhaust gas recirculation ☐ lean burn

☐ pre-chamber combustion ☐ air/fuel controller

☐ diesel particulate filter (attach manufacturer's specification for efficiency, and/or ARB verification.)

☐ other add-on control technology (attach manufacturer's specification for efficiency, and/or ARB verification.)

(Specify) _____

☐ crankcase (blow-by) emission control equipment

(Specify) _____ Model _____

Describe any in stack emission control and/or monitoring devices. (i.e., catalytic converter)

_____

_____

* Diesel fuel must be Certified California Diesel (CARB Diesel).

B PROCESS DESCRIPTION

Engine Drives: ☐ compressor _____ cfm ☒ pump 3,000 gpm

☐ generator _____ kw ☐ other (specify) _____

Equipment is: ☐ portable ☒ stationary ☐ continuous service

☐ peak shaving electrical supply ☐ cogeneration

☒ emergency electrical supply ☐ used at any time

C. OPERATING SCHEDULE (typical)

	Hours/day	Days/week	Weeks/year
Average	0.5	1	52
Maximum	0.5	1	52

Equipped with a non-resettable hour meter? ☐ yes ☒ no

D. FUEL CONSUMPTION AND EMISSIONS (@100% Load)

Liquid Fuel: 5.1 gal/hr 5.1 gal/wk 265 gal/yr

Gaseous Fuel: _____ gal/hr _____ gal/wk _____ gal/yr

_____ ____/hr _____ ____/wk _____ ____/yr

Exhaust Emission*:	**LB/HR**	**g/HP-HR**	**g/HR**	**PPM**
Carbon Monoxides (CO)	0.10	0.447		
Nitrogen Oxides (NOx)	0.88	3.82		
Hydrocarbons (HC) (Non CH4)	0.023	0.10		
Sulfur Oxides (SOx) @ 12% CO2	0.001			
Particulate Matter (PM)	0.015	0.065		

*Please attach manufacturer's specifications or source of exhaust emission data.

Exhaust Temperature 917 ^{o}F

Fuel Supplier: TBD, e.g. BP (15 ppm S Diesel)

Fuel Sulfur Content: _____ % Sulfur (% wt. as S. (Liquid Fuel))

Fuel Sulfur Content: _____ % Sulfur (% vol. as H2S (Gaseous Fuel))

Engine year of manufacture: _____

CARB Certification No.: _____

EPA Certification No.: _____

E. RULE 1200 TOXICS EVALUATION:

FACILITY SITE MAP Please provide a copy of a **Thomas Bros. Map** showing the geographic location of your facility. This helps by making it possible for the District to use a Geographic Information System to identify community residents and workers who may be impacted by emissions from your facility.

PLOT PLAN Please also provide a **facility plot plan or diagram** (need not be to scale as long as distances of key features from reference points are shown) showing the **location of emission point(s)** at the facility, property lines, and the **location** and **dimensions of buildings** (estimated height, width, and length) that are closer than 100 ft. from the emission point. This diagram helps by making it possible for the District to efficiently set-up the inputs for a health risk evaluation. Inaccurate information may adversely affect the outcome of the evaluation.

EMISSION POINT DATA Determine if your emission source(s) are ducted sources or if they are unducted/fugitive sources and provide the necessary data below. (**Examples** of commonly encountered emission points: **Ducted or Stack Emissions -** an exhaust pipe or stack, a roof ventilation duct; **Unducted Emissions -** anything not emitted through a duct, pipe, or stack, for instance, an open window or an outdoor area or volume.)

1. Ducted or Stack Emissions (For 1 or more emission points). Estimate values if you are unsure.

Parameter	Point #1	Point #2	Point #3	Point #4	Point #5	Point #6
Height of Exhaust above ground (ft)	15					
Stack Diameter (or length/width) (ft)	0.33					
Exhaust Gas Temperature* (°F)	917					
Exhaust Gas Flow (actual cfm or fps)	1051					
Is Exhaust Vertical (Yes or No)	Y					
Raincap? (None, Flapper Valve, Raincap)	None					
Distance to Property Line (+/- 10 ft)	660					

* Use "70 °F" or "Ambient" if unknown

2. Unducted Emissions (For 1 or more emission points). Estimate if you are unsure.

Describe how unducted gases, vapors, and/or particles get into the outside air. Provide a brief description of the process or operation for each unducted emission point. If unducted emissions come out of building openings such as doors or windows, estimate the **size of the opening** (example – 3 ft x 4 ft window).

If unducted emissions originate outside your buildings, estimate the **size of the emission zone** (example - paint spraying 2' x 2' x 2' bread boxes).

_____

_____

_____

_____

_____

_____

_____

_____

RECEPTOR DATA A receptor is a residence or business whose occupants could be exposed to toxic emissions from your facility. In order to estimate the risk to nearby receptors, please provide the distance from the emission point to the nearest residence and to the nearest business.

Distance to nearest residence _____ ft

Distance to nearest business _____ ft

Distance to nearest school _____ft

Name of Preparer: Charles Diep **Title:** Consultant

Phone No.: (714) 608-1988 E-mail: CDIEP@TRCSolutions.com **Date:** 10/25/2007

NOTE TO APPLICANT:

Before acting on an application for Authority to Construct or Permit to Operate, the District may require further information, plans, or specifications. Forms with insufficient information may be returned to the applicant for completion, which will cause a delay in application processing and may increase processing fees. The applicant should correspond with equipment and material manufacturers to obtain the information requested on this supplemental form.

IDEAL

IDEAL EQUIPMENT COMPANY, Ltd.
PO Box 29429 Columbus Ohio 43229
Phone 614-939-5160 Fax 614-939-5161

September 17, 2007

Industrial Construction Company
10060 Brecksville Road
Brecksville, OH 44141

Attention: Hans Kern

Reference: Orange Grove Peaker Plant, Pala, California
ITT-AC Fire Pump Skid Package

With reference to the above, we are pleased to offer the following:

Engine Driven Fire Pump- 3000GPM:
One (1) Allis Chalmers model 12 x 10 x 18F, Series 8100, horizontal, centrifugal Fire Pump, UL listed and FM approved, rated 3000 GPM at 75 PSI. The Fire Pump is driven at 1770 RPM by a Cummins Model CFP6E-F35 diesel engine. The pump and engine will be mounted on a fabricated steel base plate, complete with flexible coupling and coupling guard.

Also included are the following:
(2) sets lead-acid batteries with battery racks and cables
(1) residential muffler (shipped loose for field installation)
(1) 300 gallon double wall fuel tank
(1) fuel tank, fuel spill alarm switch
(1) 10” outside test header with twelve (12), 2-1/2” brass angle hose valves with caps & chains. NST threads.
(1) ½” ball drip valve
(1) 8” pilot operated relief valve
(1) 8” x 12” enclosed cone
(1) ½” automatic air release valve
(1) 3-1/2” suction and discharge gauges
(1) ITT-AC Model 2SV-6 stage jockey pump rated 25 GPM @ 75 PSI. 2 HP, 3500 RPM, 480 volt, 3 phase, 60 cycle, TEFC motor.
(1) Cutler Hammer Jockey Pump Controller
Cutler Hammer Diesel Engine Fire Pump Controller with:

- All features required by NFPA #20
- Low fuel level alarm & switch
- Fuel spill at storage tank
- Three sets of alarm contacts for: engine running, switch off and common trouble.

Electric Fire Pump 3000 GPM:
We offer one (1) Allis Chalmers model 12x10x18F, Series 8100, horizontal split case, centrifugal Fire Pump, UL listed and FM approved, rated 3000 GPM at 75 PSI. 200 HP, 1785 rpm, 480 volt, 3 phase, 60 cycle, ODP motor.

Also included are the following:
(1) Cutler Hammer Model FD-30, Across-The-Line Type, Fire Pump Controller with 100,000 AIC, built in pressure recorder
(1) ¾" casing relief valve
(1) ½" automatic air release valve
(1) 3-1/2 suction and discharge gauges

Fire Pump Skid Package

(1) ITT-AC Skid Package consisting of the equipment listed above mounted, piped and wired including:

Condition Point: **3000GPM @ 75 PSI**

(1) Jockey pump piping: (2) gate valves and (1) check valve

(1) Fuel tank piping with cross bracing.

(2) 12" UL/FM OS&Y Flanged suction gate valve with tamper switch

(2) 12" UL/FM wafer style discharge check valve

(2) 12" UL/FM Model discharge wafer style butterfly isolation valve with tamper switch

(2) Concentric discharge increaser 125#

(1) Hose valve header connection 10" with: tee, elbow, manual drain valve, (1) UL/FM wafer style butterfly isolation valve (hose valve header, hose valve, caps & chains – **shipped loose for installation at the job site.**)

(1) steel perimeter skid base with all necessary hard copper sensing lines, pipe supports, and wiring for complete package.

(1) Common suction and discharge headers

(1) Piping for main relief valve and waste cone

(1) Single point power connection with all wiring complete at the factory

(1) All drains to common point

Unit to be factory primed and painted

All welding to be done by ASME Section 9 certified welders

State PE stamp and seismic calculations for zone 4

Estimated skid size is 38" long x 13" wide. Approximate weight 35, 000 lbs.

Total price, all the above: $

Price includes oil and anti-freeze for the engine, diesel fuel to be provided by others.

Price includes equipment start-up and assistance with the field acceptance test by our Local Distributor.

FOB: Factory, freight allowed to the job site.

Errors and omissions: This quotation is for the items listed or stated above.
No other items should be assumed or implied as being provided.

*Prices quoted are firm for thirty (30) days.
*Prices do not include any: federal, state, local or use taxes.
*Prices do not include any: permits, unloading, or rigging.

*Terms: Subject to credit approval. Terms inconsistent with ITT-AC standard terms and conditions which may appear on purchaser's formal order will not be binding on seller.

Progress Payments
10% to be included with purchase order
30% to accompany the approved submittal data
50% to be paid upon notification the equipment is ready for shipment
10% to be paid 30 days after shipment

*Warranty: Standard ITT-AC warranty applies.
*Submittals: 2-4 weeks after order hold for approval.
*Shipment: 14-18 weeks after full approval and full release for fabrication.

If you have any questions, please do not hesitate to contact our office.

Sincerely,

Bill Smith

Cummins Fire Power	**Engine Specification Sheet** **Cummins Fire Power** DePere, WI 54115 http://www.cumminsfirepower.com	**Basic Engine Model** **CFP6E-F35, F25, F15** Curve Number: **FR - 90847** Revision Date: **August 2006**

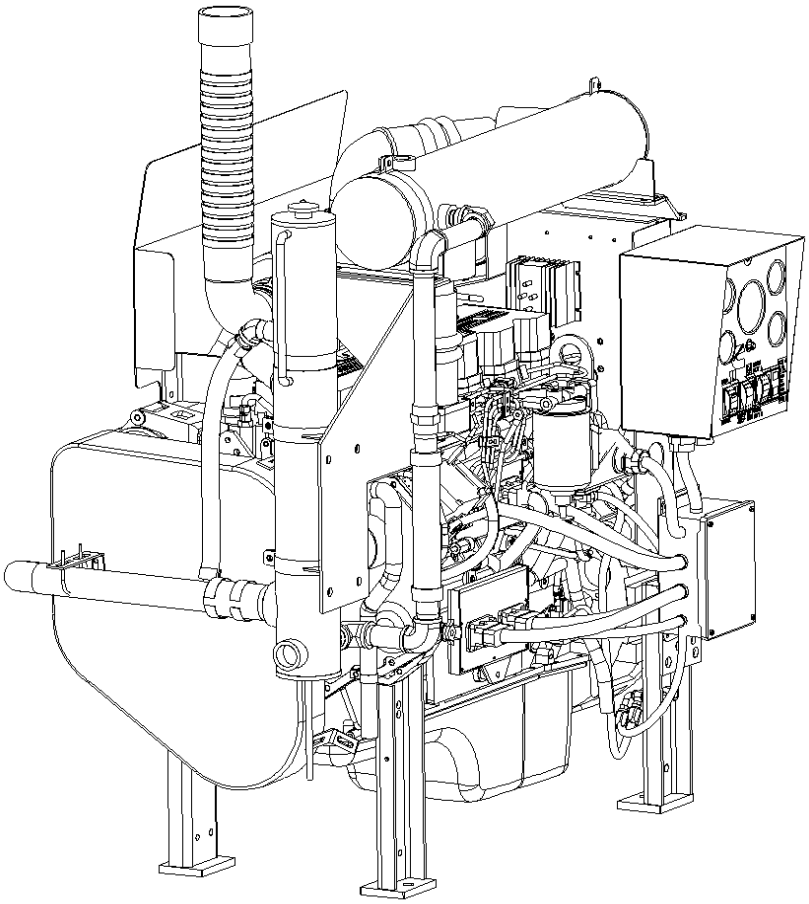

Equipment	Standard	Optional
Air Cleaner	Direct Mounted, Disposable, Indoor Service	Disposable, Treated for High Humidity, Indoor Service
Alternator	12V-DC, 95 AMPS; With Belt Guard	24V-DC, 45 AMPS; With Belt Guard
Cooling Loop	N/A	Maximum Pressure of 400 PSI
Exhaust Protection	Metal Guards on Manifolds and Turbo	N/A
Exhaust Flex Connection	SS Flex, NPT	SS Flex, 150# Flange
Flywheel Power Take-Off	Flywheel with Mounting for Coupler	●Drive Shaft System ●Stub Shaft
Fuel Connections	Fire Resistant Flexible Supply and Return Lines	N/A
Fuel Injection	Direct Injection	N/A
Fuel Filter	Primary Filter with Priming Pump	N/A
Engine Heater	120V-AC, 1500 Watts	240V-AC, 1500 Watts
Governor, Speed	Constant Speed	N/A
Heat Exchanger	Tube & Shell Type, 60 PSI with NPTF Connections	N/A
Instrument Panel	English and Metric, Tachometer, Hourmeter, Water Temperature, Oil Pressure & Two (2) Voltmeters	N/A
Junction Box	Integral with Instrument Panel; For DC Wiring Interconnection to Engine Controller	N/A
Lube Oil Cooler	Engine Water Cooled, Plate Type	N/A
Lube Oil Filter	Full Flow with By-Pass Valve	N/A
Lube Oil Pump	Gear Driven	N/A
Manual Start	On Instrument Panel	N/A
Overspeed Controls	Electronic with Reset & Test on Instrument Panel	N/A
Raw Water Solenoid Operation	Automatic from Engine Controller & from Emergency Local Control	N/A
Run-Stop Control	On Instrument Panel with Control Position Warning Light	N/A
Run Solenoid	12V-DC	24V-DC
Starters	12V-DC	24V-DC
Throttle Control	Adjustable Speed Control	N/A
Water Pump	Poly-Vee Belt Drive with Guard	N/A

Operating Speed (RPM)

Model	1760	2100	2350	2600
CFP6E-F35	210 (157)	232 (173)	246 (183)	225 (168)
CFP6E-F25	191 (142)	215 (160)	225 (168)	215 (160)
CFP6E-F15	175 (130)	200 (149)	200 (149)	200 (149)

Ratings are: HP (kW)

Specifications

Aspiration	Turbocharged and Charge Air Cooled
Rotation	Clockwise
Weight - lb (kg)	1511 (680)
Displacement - in^3 (litre)	359 (5.9)
Engine Type	4 Cycle; In-Line, 6 Cylinder
Engine Series	Cummins QSB5.9 Series
Exhaust Emissions	EPA/CARB Tier 2

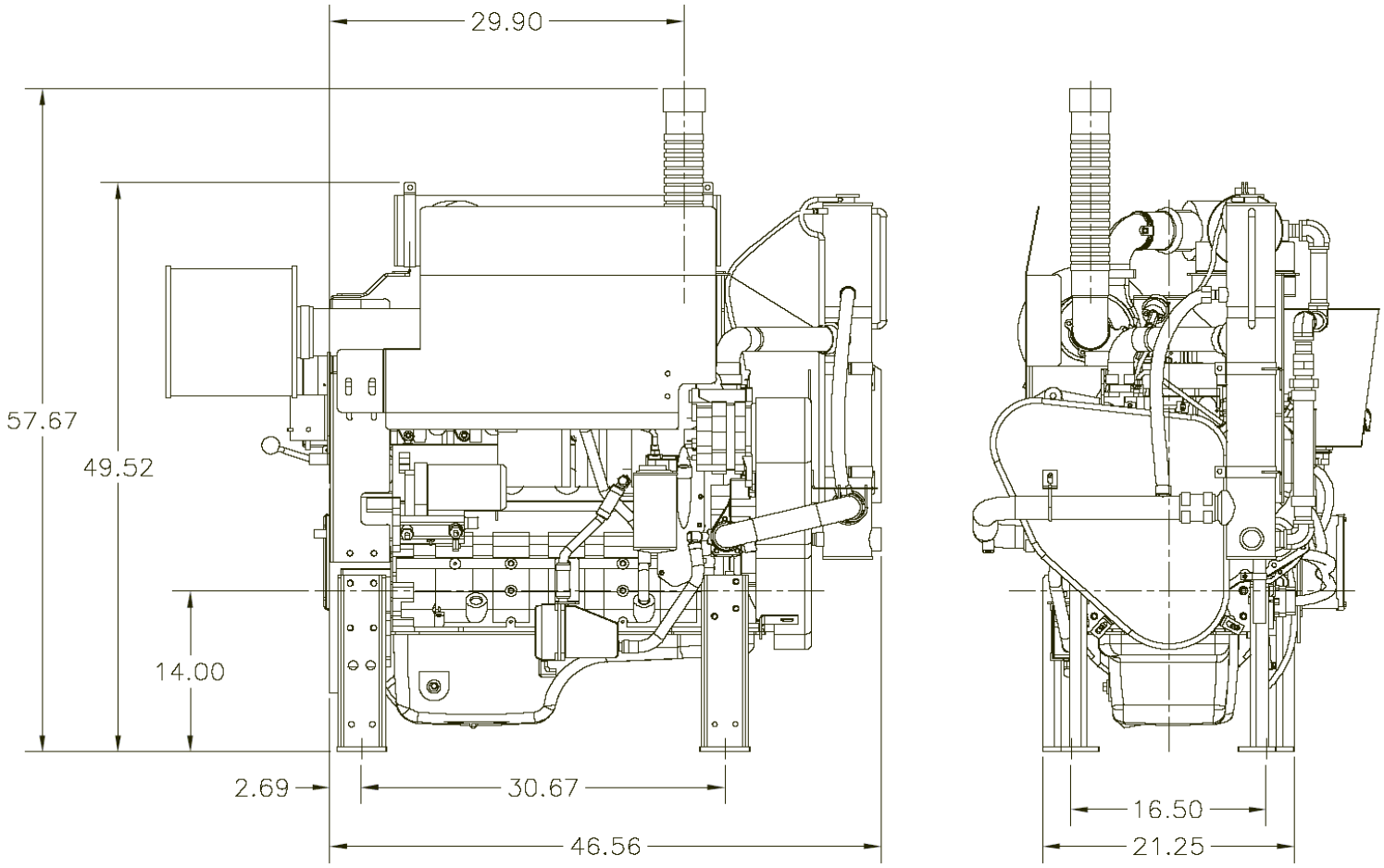

Engine Ratings Baselines

- Engines are rated at standard SAE conditions of 29.61 in. (7521 mm) Hg barometer and 77 °F (25°C) inlet air temperature (approximates 300ft. (91.4 m) above sea level) by the testing laboratory (see SAE Standard J1349).
- A deduction of 3 percent from engine horsepower rating at standard SAE conditions shall be made for diesel engines for each 1000 ft. (305 m) altitude above 300 ft. (91.4 m).
- A deduction of 1 percent from engine horsepower rating as corrected to standard SAE conditions shall be made for diesel engines for every 10°F above 77°F (24°C) ambient temperature.

Certified Power

This Cummins Fire Power fire pump driver is built to comply with NFPA-20, and is UL listed and FM approved. Although FM-UL Certified BHP ratings are shown at specific speeds, this Cummins engine can be applied at any intermediate speed. To determine the intermediate certified power, make a linear interpolation from the Cummins FM-UL certified power curve. Contact Cummins Fire Power or your pump OEM representative to obtain details.

* Subject to change without notification

For additional information, click the hyperlinks below.

CFP6E-F15
CFP6E-F25
CFP6E-F35

California ATCM Tier 2 Emission Data
EPA Tier 2 Emission Data

CFP6E-F35 Fire Pump Driver

Type: 4 Cycle; In-Line; 6 Cylinder
Aspiration: Turbocharged, Charge Air Cooled

15 PPM Diesel Fuel													
		Fuel Consumption		D2 Cycle Exhaust Emissions						Exhaust			
				Grams per BHP - HR			Grams per kW - HR			Temperature		Gas Flow	
RPM	BHP	Gal/Hr	L/hr	NMHC+NOx	CO	PM	NMHC+NOx	CO	PM	°F	°C	CFM	L/sec
1760	210	10.2	38.6	3.924	0.447	0.065	5.262	0.600	0.088	917	492	1051	496
2100	232	11.4	43.2							917	492	1207	570
2350	246	12.2	46.2							938	503	1328	627
2600	225	11.6	43.9							925	496	1380	651

The emissions values above are based on CARB approved calculations for converting EPA (500 ppm) fuel to CARB (15 ppm) fuel.

300-500 PPM Diesel Fuel													
		Fuel Consumption		D2 Cycle Exhaust Emissions						Exhaust			
				Grams per BHP - HR			Grams per kW - HR			Temperature		Gas Flow	
RPM	BHP	Gal/Hr	L/hr	NMHC+NOx	CO	PM	NMHC+NOx	CO	PM	°F	°C	CFM	L/sec
1760	210	10.2	38.61108	4.265	0.447	0.075	5.720	0.600	0.100	917	492	1051	496
2100	232	11.4	43.15356							917	492	1207	570
2350	246	12.2	46.18188							938	503	1328	627
2600	225	11.6	43.91064							925	496	1380	651

QSB5.9 Base Model Manufactured by Cummins Inc.
- Using fuel rating 90847

Reference EPA Standard Engine Family: 5CEXL0359ABE

No special options needed to meet current regulation emissions for all 50 states

Test Methods:

EPA/CARB Nonroad emissions recorded per 40CFR89 (ref. ISO8178-1) and weighted at load points prescribed in Subpart E, Appendix A, for Constant Speed Engines (ref. ISO8178-4, D2).

Diesel Fuel Specifications:

Cetane Number: 40-48
Reference: ASTM D975 No. 2-D

Reference Conditions:

Air Inlet Temperature: 25°C (77°F)
Fuel Inlet Temperature: 40°C (104°F)
Barometric Pressure: 100 kPa (29.53 in Hg)
Humidity: 10.7 g/kg (75 grains H_2O/lb) of dry air; required for NOx correctior
Restrictions: Intake Restriction set to a maximum allowable limit for clean filter; Exhaust Back Pressure set to maximum allowable limit.

Tests conducted using alternate test methods, instrumentation, fuel or reference conditions can yield different results.

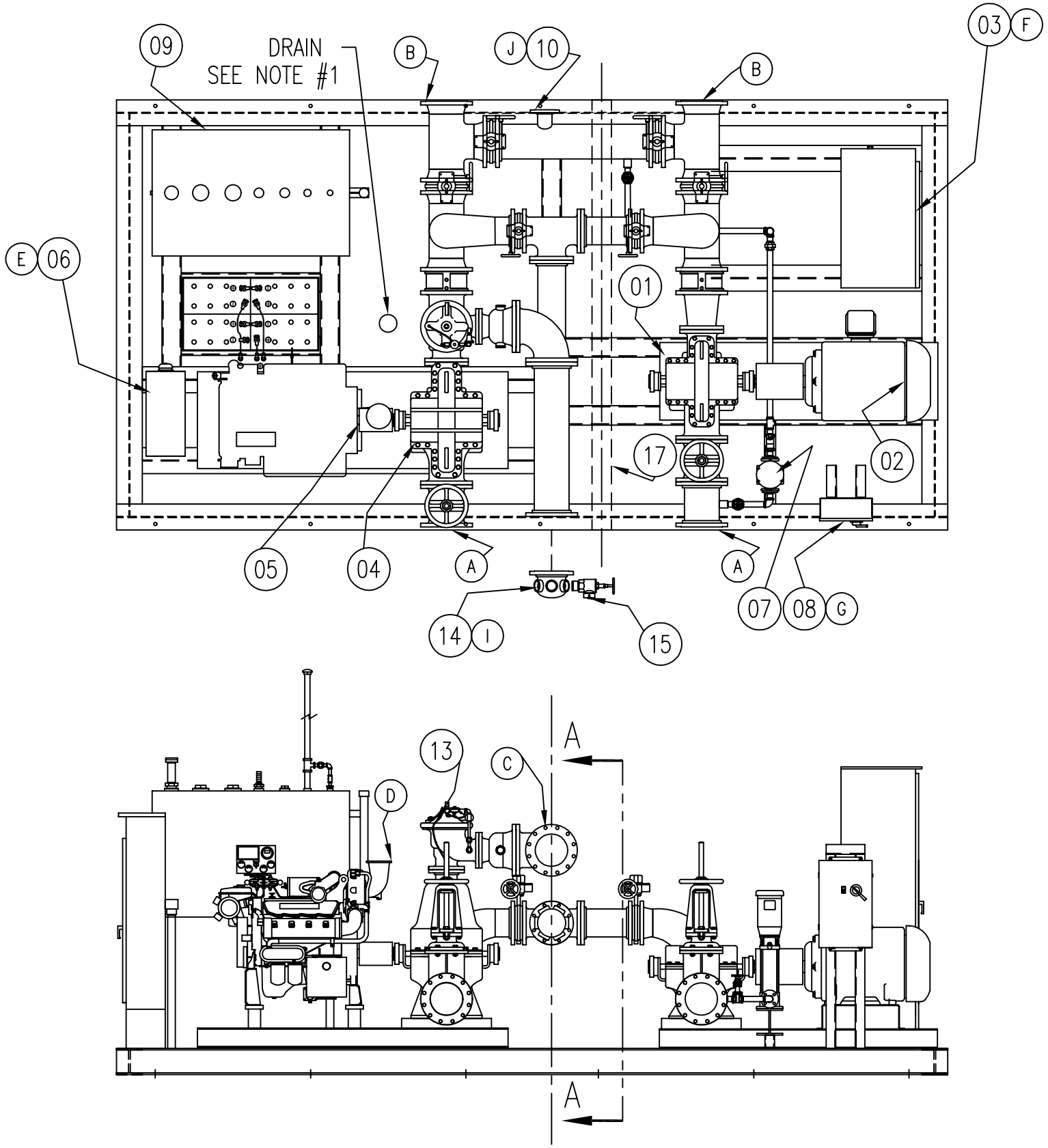

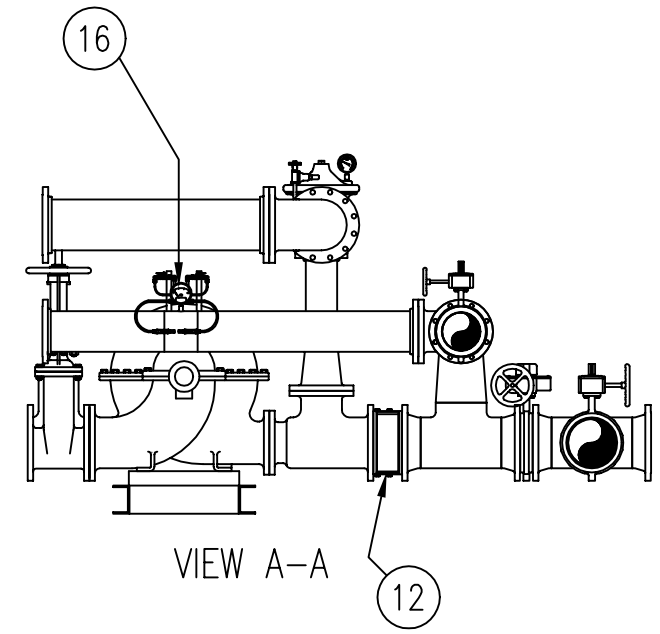

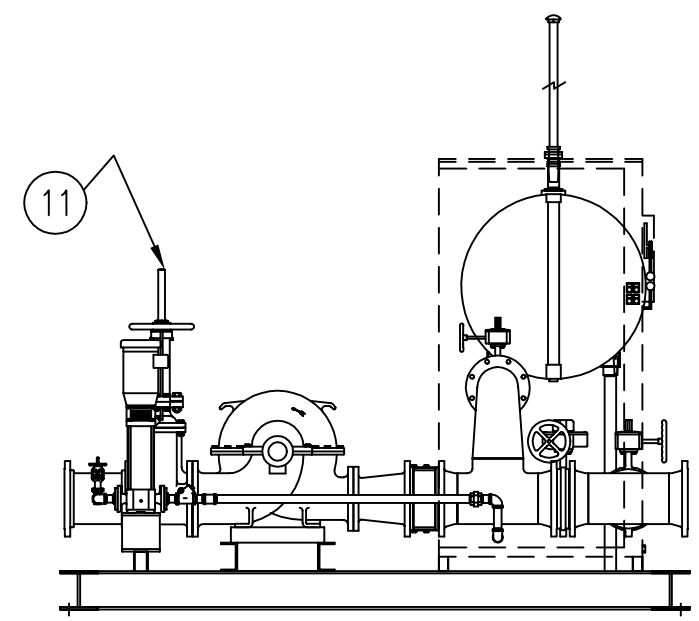

1) FIRE PUMP: ITT AC MODEL 8100
2) MOTOR
3) ELECTRIC FIRE PUMP CONTROLLER
4) FIRE PUMP: ITT AC MODEL 8100
5) ENGINE
6) DIESEL FIRE PUMP CONTROLLER
7) JOCKEY PUMP
8) JOCKEY PUMP CONTROLLER
9) FUEL TANK, DOUBLE WALL
10) SPRINKLER PIPING CONNECTION POINT
11) SUCTION VALVE: OS&Y GATE
12) DISCHARGE CHECK VALVE
13) RELIEF VALVE
14) HOSE HEADER
15) HOSE VALVE W/CAP & CHAINS 2 1/2" NST
16) FLOW METER
17) FIRE WALL TO BE INSTALLED IN THE FIELD BY OTHERS.

CUSTOMER CONNECTIONS:

A) SUCTION: TWO–FLANGED
B) DISCHARGE: TWO–FLANGED
C) RELIEF VALVE:FLANGED
D) ENGINE EXHAUST:FLANGED
E) DIESEL ENGINE CONTROLLER
F) ELECTRIC MOTOR CONTROLLER
G) JOCKEY CONTROLLER
H) ENGINE WATER JACKET HEATER
I) HOSE HEADER:FLANGED
J) PUMP HOUSE SPRINKLER: FLANGED

ITEMS SHIPPED LOOSE:

1) MUFFLER
2) FUEL TANK VENT PIPE
3) HOSE HEADER AND VALVES
4) ENGINE FLEX CONNECTOR

NOTES:

1) LOCATION OF CUSTOMER DRAIN THROUGH FLOOR.

8					4				
7					3				
6					2				
5					1	REMOVED OVERALL DIMENSION	10/06/00	JZ	
REVISION		DATE	BY	APP.	REVISION		DATE	BY	APP.

PROJECT NAME:
SKID MOUNTED SYSTEM
DUAL DRIVE

DWN.BY:	DATE:	CHKD.BY:	DATE:
RCS	05/10/00		

TOLERANCES UNLESS OTHERWISE SPECIFIED

DEC.:	FRAC.:	ANGLE:	SCALE:
± 0.25	± 1/4	±1/2°	1 : 44

PART NO.: 2MKT42

THIS DRAWING AND THE INFORMATION DEPICTED THEREIN IS THE PROPERTY OF ITT BELL & GOSSETT. COPIES ARE ISSUED IN STRICT CONFIDENCE AND SHALL NOT BE REPRODUCED OR COPIED, OR USED AS THE BASIS FOR THE MANUFACTURE OR SALE OF PRODUCTS WITHOUT PRIOR WRITTEN PERMISSION OF ITT BELL & GOSSETT.

ITT
AC PUMP
PACKAGED SYSTEMS GROUP
ITT FLUID TECHNOLOGY CORPORATION
MORTON GROVE, ILLINOIS 60053

Appendix 4 – AQIA Results

AQIA Results – Commissioning Period

The emissions for the commissioning phase were estimated based on the performance profile provided by GE (Appendix 1). The emission estimates were based on each turbine being commissioned separately and operating at less than 30% load (< 15 MW) without add-on control of the oxidation catalyst or the SCR system. The commissioning process and detailed emission calculations are provided in Appendix 2.

Long term (i.e. annual) modeling was not conducted because the commissioning period is not expected to last more than a few weeks. Modeling was completed using AERMOD and the meteorological data from the proposed Gregory Canyon Landfill Project approximately one (1) mile of the facility. Rural setting, building downwash, USGS 30-meter digitized elevation model (DEM)data, 25 and 100 meters data grids were applied to the modeling. Results of the air modeling are summarized below. The modeling files were provided to CEC staff and can be made available to the District upon request.

Other than SO_2, the background concentration presented is based on the highest measured concentration from the Escondido monitoring station for years 2004, 2005 and 2006. The SO_2 background concentration was not measured at this station and is obtained from the downtown San Diego monitoring station. Because the 24 hour background concentrations of PM_{10} and $PM_{2.5}$ exceed the respective California ambient air quality standard (CAAQS), compliance with Rule 20.3 (2)(i)(A), (B) & (C) is based on the predicted incremental increase concentration of the pollutant. In this case, the predicted incremental increase of 0.70 μg/m³ is below the significance threshold of 5 μg/m³ as established by the San Diego County DPLU CEQA Guideline and the Significant Impact Level found in EPA 40 CFR 51 Section 165. This suggests that this phase of the project will not cause additional violation or interfere with the attainment of the standards.

Table 4-1– AQIA results for the commissioning period

Pollutant	Averaging Time	2002 μg/m³	2003 μg/m³	Background μg/m³	Max Total μg/m³	Most Stringent of AAQS	Meets AAQS
NO_2	1 HR	110.61	138.44	150.5	289	338	Yes
CO	1 HR	24.04	30.09	7,214	7,244	23,000	Yes
CO	8 HR	9.51	8.94	4,135	4,145	10,000	Yes
SO_2	1 HR	2.62	3.28	110	113	655	Yes
SO_2	3 HR	1.66	1.73	52.4	54.1	1,300	Yes
SO_2	24 HR	0.25	0.20	23.6	24	105	Yes
PM_{10}	24 HR	0.70(1)	0.68	57.0	57.7	50	(2)
$PM_{2.5}$	24 HR	0.70(3)	0.68	67.3	68.0	35	(2)

(1) 3rd highest value

(2) Highest measured ambient concentration in the last three years is above the CAAQS; however, the highest measured ambient concentration in 2006 of 42 μg/m³ with the predicted increment would meet the CAAQS.

(3) Over 99% of PM_{10} emissions are $PM_{2.5}$ for natural gas combustion source (CARB)

(4) Highest measured ambient concentration in the last three years is above the CAAQS; however, the highest measured ambient concentration in 2006 of 31.8 μg/m³ with the predicted increment would meet the CAAQS.

Appendix 5 – Updated HRA Data and Results

Health Risk Assessment

The TAC emissions were revised with emission factors obtained from EPA AP-42 Chapter 3 (April 2000). Poly-aromatic hydrocarbons (PAH) emissions were speciated using emission factors from CARB CATEF (2000). The calculated TAC emissions are provided in the attached tables.

The updated emissions were then applied to the previously completed health risk assessment using ISC air dispersion modeling, Escondido meteorological data and HARP. The same methodology described in the initial permit application is applied. In addition, air dispersion modeling is also now completed using AERMOD and meteorological data collected for the Gregory Canyon Landfill project. The beta version of HARP converter was utilized to generate the necessary HARP files for health risk analysis. The results are provided in the table below. As shown, all the predicted health risk levels are below the applicable Rule 1200 risk limits.

The specific air modeling and HARP files are provided in the attached electronic files to this data response. These include the exported *.ems file requested by the District.

Table 5-1 – Risk assessment results using ISC and AERMOD modeling

Risk Criteria	Risk Threshold	Highest predicted risk based on ISC 3.0 dispersion modeling and Escondido Met Data			Highest predicted risk based on AERMOD dispersion modeling and Gregory Canyon Met Data		
		Offsite	Residence	Worker	Offsite	Residence	Worker
Cancer Risk with T-BACT	10.0 E-6	1.82 E-6	0.099 E-6	0.0005 E-6	1.06 E-6	0.126 E-6	0.051 E-6
Chronic Health Hazard Index	1.0	0.045	0.002	0.0001	0.026	0.003	0.001
NAD27 UTM Coordinates (m)		489136 E 3690804 N	490190 E 3691694 N	490240 E 3691004 N	489118 E 3690657 N	491248 E 3691386 N	489660 E 3690664 N
Acute Health Hazard Index	1.0	0.679	0.116	0.046	0.236	0.055	0.183
NAD27 UTM Coordinates (m)		489736 E 3690954 N	490190 E 3691694 N	489980 E 3690824 N	489118 E 3690907 N	491248 E 3691386 N	489660 E 3690664 N

(1) The UTM coordinates are the same for long term health analyses which include both cancer and chronic health effects.

(2) Offsite predictions are based on maximum health risk based on a potential residential type receptor outside the property boundary.

Toxic Air Contaminant Emissions - Each Turbine

Natural Gas Fuel Value	1024	BTU/SCF			
Max. Fuel Usage (HHV)	472.34	MMBTU/hr			
Max. Annual Operating Hours	3,200	hrs/yr			
Exhaust Flow Rate	595,551	ACFM	Exhaust (SCFM)	227,832	SCFM
Temperature	841	°F	Molar Wt Air	386.8	lb/lb-mole
Exhaust Stack Velocity	75	ft/s	Molar Wt NH3	17.04	lb/lb-mole
Stack Diameter	13	ft			
Stack Height	80	ft			

Pollutant	CAS	Emsn Factor (lb/MMBTU)	Emsn Factor (lb/MMCF)	Hourly Emsn (lb/hr)	Annual Emsn (lb/yr)
Ammonia	7664-41-7	10 ppm	10 ppm	6.02	1.93E+04
1,3-Butadiene	106-99-0	4.30E-07	4.20E-10	2.03E-04	6.50E-01
Acetaldehyde	75-07-0	4.00E-05	3.91E-08	1.89E-02	6.05E+01
Acrolein	107-02-8	6.40E-06	6.25E-09	3.02E-03	9.67E+00
Benzene	71-43-2	1.20E-05	1.17E-08	5.67E-03	1.81E+01
Ethylbenzene	100-41-4	3.20E-05	3.13E-08	1.51E-02	4.84E+01
Formaldehyde	50-00-0	7.10E-04	6.93E-07	3.35E-01	1.07E+03
Propylene oxide	75-56-9	2.90E-05	2.83E-08	1.37E-02	4.38E+01
Toluene	108-88-3	1.30E-04	1.27E-07	6.14E-02	1.96E+02
Xylenes	1330-20-7	6.40E-05	6.25E-08	3.02E-02	9.67E+01
Polycyclic Aromatic Hydrocarbons (PAH)					
Benzo(a)anthracene	56-55-3	1.31E-07	1.28E-10	6.19E-05	1.98E-01
Benzo(a)pyrene	50-32-8	8.95E-08	8.74E-11	4.23E-05	1.35E-01
Benzo(b)fluoranthene	205-99-2	6.56E-08	6.41E-11	3.10E-05	9.92E-02
Benzo(k)fluoranthene	207-08-9	6.56E-08	6.41E-11	3.10E-05	9.92E-02
Chrysene	218-01-9	1.46E-07	1.43E-10	6.90E-05	2.21E-01
Dibenz(a,h)anthracene	53-70-3	1.31E-07	1.28E-10	6.19E-05	1.98E-01
Indeno(1,2,3-cd)pyrene	193-39-5	1.31E-07	1.28E-10	6.19E-05	1.98E-01
Naphthalene	91-20-3	7.70E-06	7.52E-09	3.64E-03	1.16E+01
	Total PAH			**4.00E-03**	**1.28E+01**

Notes:

- Exhaust parameters based on 100% load, inlet air chilled, SPRINT on, dry bulb temperature of 86 °F.
- Ammonia emission rate based on BACT NH_3 limit of 10 ppmv @ 15% O_2.
- Non-PAH emission factors source: EPA AP-42, April 2000
- PAH emission factors source: CATEF, 2000 (www.arb.ca.gov/ei/catef/catef.htm)
- Emission factors obtained for natural gas-fired combustion with SCR and CO catalyst.

Toxic Air Contaminant Emissions - Black-Start Engine

Engine	Cummins Model GTA38-G2	
Engine Type	4 Stroke, 12 Cylinder, Natural Gas-Fired, Turbocharged, Aftercooled	
Rated Horsepower	965	BHP
Expected non-emergency usage	14	hrs/yr
Fuel Consumption	8,322	BTU/Hp-hr
Fuel Consumption	8,874	CFH
Natural Gas Fuel Value	1024	BTU/SCF
Exhaust Flow Rate	6,637	CFM
Temperature	1,123	°F
Stack Diameter	1.5	ft
Stack Height	15	ft

Pollutant	CAS	Emsn Factor (lb/MMBTU)	Emsn Factor (lb/MMCF)	Hourly Emsn (lb/hr) (1)	Annual Emsn (lb/yr)
1,3-Butadiene	106-99-0	2.67E-05	2.61E-08	1.16E-10	1.62E-09
Acetaldehyde	75-07-0	8.36E-03	8.16E-06	3.62E-08	5.07E-07
Acrolein	107-02-8	5.14E-03	5.02E-06	2.23E-08	3.12E-07
Benzene	71-43-2	4.40E-04	4.30E-07	1.91E-09	2.67E-08
Ethylbenzene	100-41-4	3.97E-05	3.88E-08	1.72E-10	2.41E-09
Formaldehyde	50-00-0	5.28E-02	5.16E-05	2.29E-07	3.20E-06
Methanol	67-56-1	2.50E-03	2.44E-06	1.08E-08	1.52E-07
n-Hexane	110-54-3	1.11E-03	1.08E-06	4.81E-09	6.73E-08
Phenol	108-95-2	2.40E-05	2.34E-08	1.04E-10	1.46E-09
Toluene	108-88-3	4.08E-04	3.98E-07	1.77E-09	2.48E-08
Xylenes	1330-20-7	1.84E-04	1.80E-07	7.97E-10	1.12E-08
Polycyclic Aromatic Hydrocarbons (PAH)					
Benzo(a)anthracene	56-55-3	9.69E-08	9.92E-05	4.40E-07	6.16E-06
Benzo(a)pyrene	50-32-8	3.79E-09	3.88E-06	1.72E-08	2.41E-07
Benzo(b)fluoranthene	205-99-2	7.79E-08	7.98E-05	3.54E-07	4.96E-06
Benzo(k)fluoranthene	207-08-9	1.18E-08	1.21E-05	5.37E-08	7.52E-07
Chrysene	218-01-9	2.20E-08	2.25E-05	9.98E-08	1.40E-06
Dibenz(a,h)anthracene	53-70-3	3.79E-09	3.88E-06	1.72E-08	2.41E-07
Indeno(1,2,3-cd)pyrene	193-39-5	1.06E-08	1.09E-05	4.84E-08	6.77E-07
Naphthalene	91-20-3	3.03E-05	3.10E-02	1.38E-04	1.93E-03

Notes:

- Exhaust parameters based on standby condition.
- Emission factors source: 2000 CATEF (www.arb.ca.gov/ei/catef/catef.htm)
- Emission factors for 4-stroke, lean-burn, > 650 HP natural gas-fired ICE with no controls

(1) Note that hourly emissions are based on 30 minutes of run time within the one hour time frame.

Toxic Air Contaminant Emissions - Black-Start Engine

Engine	Cummins Model GTA38-G2	
Engine Type	4 Stroke, 12 Cylinder, Natural Gas-Fired, Turbocharged, Aftercooled	
Rated Horsepower	965	BHP
Expected non-emergency usage	14	hrs/yr
Fuel Consumption	8,322	BTU/Hp-hr
Fuel Consumption	8,874	CFH
Natural Gas Fuel Value	1024	BTU/SCF
Exhaust Flow Rate	6,637	CFM
Temperature	1,123	°F
Stack Diameter	0.42	ft
Stack Height	15	ft

Pollutant	CAS	Emsn Factor (lb/MMBTU)	Emsn Factor (lb/MMCF)	Hourly Emsn (lb/hr) (1)	Annual Emsn (lb/yr)
1,3-Butadiene	106-99-0	4.05E-04	4.15E-01	1.84E-03	2.58E-02
Acetaldehyde	75-07-0	2.56E-03	2.62E+00	1.16E-02	1.63E-01
Acrolein	107-02-8	1.57E-04	1.61E-01	7.14E-04	1.00E-02
Benzene	71-43-2	2.53E-04	2.59E-01	1.15E-03	1.61E-02
Ethylbenzene	100-41-4	1.12E-04	1.15E-01	5.10E-04	7.14E-03
Formaldehyde	50-00-0	2.04E-02	2.09E+01	9.27E-02	1.30E+00
Propylene	115-07-1	1.18E-02	1.21E+01	5.37E-02	7.52E-01
Toluene	108-88-3	3.85E-04	3.94E-01	1.75E-03	2.45E-02
Xylenes	1330-20-7	9.42E-04	9.65E-01	4.28E-03	5.99E-02
Polycyclic Aromatic Hydrocarbons (PAH)					
Benzo(a)anthracene	56-55-3	9.69E-08	9.92E-05	4.40E-07	6.16E-06
Benzo(a)pyrene	50-32-8	3.79E-09	3.88E-06	1.72E-08	2.41E-07
Benzo(b)fluoranthene	205-99-2	7.79E-08	7.98E-05	3.54E-07	4.96E-06
Benzo(k)fluoranthene	207-08-9	1.18E-08	1.21E-05	5.37E-08	7.52E-07
Chrysene	218-01-9	2.20E-08	2.25E-05	9.98E-08	1.40E-06
Dibenz(a,h)anthracene	53-70-3	3.79E-09	3.88E-06	1.72E-08	2.41E-07
Indeno(1,2,3-cd)pyrene	193-39-5	1.06E-08	1.09E-05	4.84E-08	6.77E-07
Naphthalene	91-20-3	3.03E-05	3.10E-02	1.38E-04	1.93E-03
	Total PAH			**1.39E-04**	**1.94E-03**

Notes:

- Exhaust parameters based on standby condition.
- Emission factors source: 2000 CATEF (www.arb.ca.gov/ei/catef/catef.htm)
- Emission factors for 4-stroke, lean-burn, > 650 HP natural gas-fired ICE with no controls

(1) Note that hourly emissions are based on 30 minutes of run time within the one hour time frame.

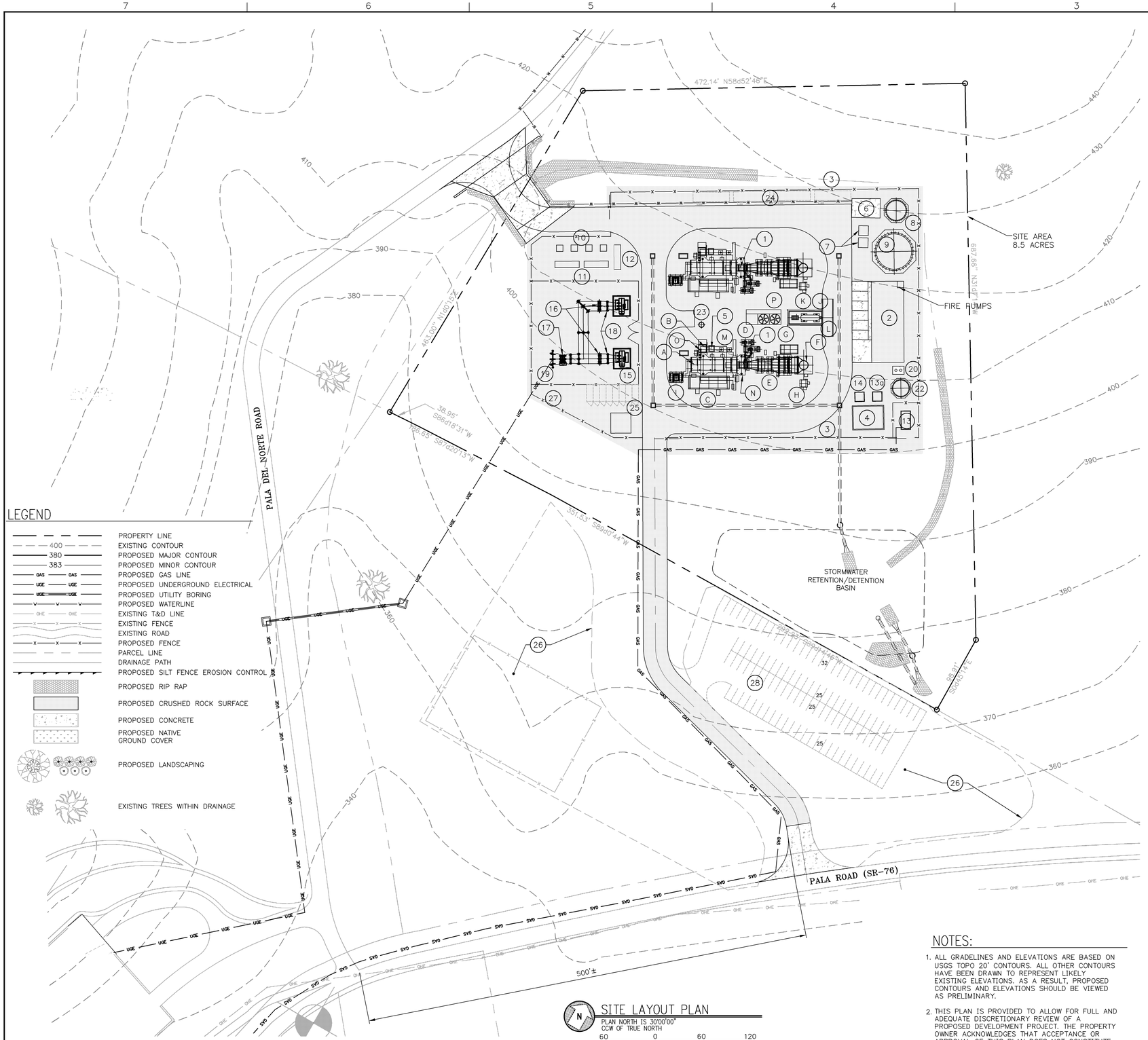

LEGEND

- PROPERTY LINE
- 400 EXISTING CONTOUR
- 380 PROPOSED MAJOR CONTOUR
- 383 PROPOSED MINOR CONTOUR
- GAS PROPOSED GAS LINE
- UGE PROPOSED UNDERGROUND ELECTRICAL
- UGE PROPOSED UTILITY BORING
- V PROPOSED WATERLINE
- OHE EXISTING T&D LINE
- EXISTING FENCE
- EXISTING ROAD
- X PROPOSED FENCE
- PARCEL LINE
- DRAINAGE PATH
- PROPOSED SILT FENCE EROSION CONTROL
- PROPOSED RIP RAP
- PROPOSED CRUSHED ROCK SURFACE
- PROPOSED CONCRETE
- PROPOSED NATIVE GROUND COVER
- PROPOSED LANDSCAPING
- EXISTING TREES WITHIN DRAINAGE

SITE LAYOUT PLAN

PLAN NORTH IS 30°00'00" CCW OF TRUE NORTH

60 0 60 120

SCALE IN FEET

KEYNOTES:

1. COMBUSTION TURBINE (CT), GENERATOR, AND AUXILIARY EQUIPMENT. (FOR EACH UNIT):
   - A MAIN TURBINE GENERATOR SKID ENCLOSURE
   - B 15KV SWITCHGEAR
   - C AUXILIARY CT EQUIPMENT SKID
   - D TEMPERING AIR FANS
   - E EMISSION CONTROL SYSTEM–SCR
   - F STACK
   - G AMMONIA VAPORIZATION SKID
   - H CEMS ENCLOSURE WITH TRANSFORMER AND CAL GAS STORAGE
   - I CT FIN FAN COOLER
   - J AMMONIA STORAGE TANK (COMMON TO UNITS)
   - K AMMONIA FORWARDING PUMP SKID (COMMON TO UNITS)
   - L AMMONIA UNLOADING PAD, SPILL CONTAINMENT (COMMON TO UNITS)
   - M TURBINE REMOVAL SUPPORTS
   - N AIR INLET FILTER
   - O GENERATOR BUS DUCT
   - P INLET AIR CHILLER AND COOLING TOWERS (COMMON TO UNITS)
2. SERVICE BUILDING FOR CONTROL ROOM, ELECTRICAL EQUIPMENT, AND FIRE PUMPS.
3. SITE SECURITY CHAINLINK FENCE AND GATES.
4. FUEL GAS COMPRESSOR, SOUND WALL AND RELATED EQUIPMENT.
5. FUEL GAS FILTER/SEPARATOR EQUIPMENT.
6. TEMPORARY WATER TREATMENT TRAILER CONCRETE PAD.
7. DEMIN. WATER PUMP SKID AND RELATED EQUIPMENT.
8. DEMIN. WATER STORAGE TANK.
9. RAW WATER FIREWATER STORAGE TANK.
10. AUX. TRANSFORMERS.
11. 480V & 5KV CB SWITCHGEAR.
12. BLACKSTART GENERATOR.
13. GAS METERING STATION.
13a. COALESCING FILTER SKID.
14. FUEL GAS COMPRESSOR INTER–STAGE FIN–FAN COOLER.
15. 13.8KV–69KV STEP–UP TRANSFORMER.
16. 69KV DISCONNECT SWITCH AND SUPPORTS.
17. 69KV CIRCUIT BREAKER.
18. 69KV CIRCUIT SWITCHER.
19. 69KV DEAD–END STRUCTURE AND DISCONNECT SWITCH.
20. UNDERGROUND SANITARY SYSTEM.
21. GRADES SHOWN ARE FINISHED GRADE. 8" DEEP CRUSHED ROCK PAVEMENT INSIDE EXISTING SECURITY FENCE. STABLE DRIVING SURFACE AND POSITIVE DRAINAGE WILL BE MAINTAINED THROUGHOUT CONSTRUCTION. SUBSTATION CRUSHED ROCK PAVEMENT SHALL BE CLASS II MATERIAL.
22. WASTEWATER STORAGE TANK.
23. EMERGENCY CONTAINMENT TANK.
24. TEMPORARY CONSTRUCTION TRAILERS.
25. TEMPORARY CONNEXES/LOCK BOXES.
26. TEMPORARY CONSTRUCTION STAGING.
27. TEMPORARY CONSTRUCTION PRE–ASSEMBLY.
28. TEMPORARY CONSTRUCTION PARKING.

NOTES:

1. ALL GRADELINES AND ELEVATIONS ARE BASED ON USGS TOPO 20' CONTOURS. ALL OTHER CONTOURS HAVE BEEN DRAWN TO REPRESENT LIKELY EXISTING ELEVATIONS. AS A RESULT, PROPOSED CONTOURS AND ELEVATIONS SHOULD BE VIEWED AS PRELIMINARY.
2. THIS PLAN IS PROVIDED TO ALLOW FOR FULL AND ADEQUATE DISCRETIONARY REVIEW OF A PROPOSED DEVELOPMENT PROJECT. THE PROPERTY OWNER ACKNOWLEDGES THAT ACCEPTANCE OR APPROVAL OF THIS PLAN DOES NOT CONSTITUTE AN APPROVAL TO PERFORM ANY GRADING SHOWN HEREON, AND AGREES TO OBTAIN VALID GRADING PERMISSIONS BEFORE COMMENCING SUCH ACTIVITY.

REV.	DATE	DESCRIPTION	DWN	CHK
0	7–5–07	ISSUED FOR CEC PERMIT APPLICATION	BGG	WHR

Sealed Only When Signed in Blue Ink

Sega®
Engineers – Architects – Technicians
Design – Construction – Field Service
16041 Foster
P.O. Box 1000
Stilwell, Kansas 66085–1000

J POWER GROUP
J-POWER USA
Development Co., Ltd

ORANGE GROVE PROJECT

SITE LAYOUT PLAN

DESIGN BY: B. ROMINES	CHECKED BY: J. BONDANK
DRAWN BY: B. GASPERS	DATE: 4–13–07
CLIENT I.D. JP000101	SEGA PROJECT NO. 07–098

CADD FILE NAME: 07098–C100.dwg

DRAWING NO. C100 — REV. 0

N:\2007\07098\DWGS\CE\07098–C100.dwg 7/5/07 2:04pm bgaspers

EXHIBIT 127-1

BIOLOGICAL ASSESSMENT OF THE WATER AND GAS PIPELINE ROUTES

1903 Wright Place
Suite 190
Carlsbad, CA 92008

760.603.1740 PHONE
760.603.1750 FAX

www.TRCsolutions.com

Introduction

The following is a habitat assessment of the gas and water pipeline alignments for the Orange Grove Project (project) along State Route 76 (SR 76) and Pala del Norte Road, respectively, near Pala, California. The proposed staging/laydown area for the gas and water pipelines is located at the project construction laydown area adjacent to and south of the project site. Biological resources for the staging/laydown area were fully addressed during surveys for the project site and the results of those surveys are presented in the Small Power Plant Exemption Application for the project submitted to the CEC in July 2007. Protocol-level coastal California gnatcatcher surveys are also in the process of being conducted, as outlined in the Response to Data Request Set 2. This habitat assessment addresses vegetation types along the gas and water pipeline alignments within 500 feet of the alignment and assesses whether suitable habitat is present within the alignments for sensitive federal, state, California Native Plant Society, and County of San Diego wildlife and plant species (refer to Table 6.6-1 and 6.6-2 in the SPPE Application dated July 2007).

Project Site and Utility Alignments Description

The power plant will be located on an approximately 8.5-acre site owned by San Diego Gas & Electric immediately north of SR76 and east of Pala del Norte Road. The power plant site and construction staging/laydown area are located on a former citrus orchard. The SDG&E Pala substation is located just south of the power plant site and west of Pala del Norte Road.

The proposed routing for the gas pipeline is from the eastern side of the project site south-southeast along a proposed driveway that will connect the site to SR76, and then in a roughly west to southwest direction approximately 2.0 miles along SR76 to an existing gas pipeline located just east of Rice Canyon Road. The gas pipeline will be installed within the pavement or on the road shoulder of SR76 and within the limits of grading disturbance along the project driveway. The proposed routing for the approximately 1.5 mile-long water pipeline is from the western side of the project site northwest to Pala del Norte Road, then north to an existing water main located on Pala del Norte Road. Once the water pipeline leaves the project site, it will be attached to a short bridge that will cross a dry drainage located between the project site and Pala del Norte Road and then will be installed in the pavement or on the road shoulder of Pala del Norte Road.

Habitat Descriptions

Habitat observed 500 feet either side of the gas and water pipelines were mapped on the attached Figure 1. The gas pipeline alignment will pass through a former citrus orchard and nonnative grasslands as it exits the project site south-southeast to SR76. From this location, areas adjacent to SR76 along the alignment to Rice Canyon Road consist of urban/developed and disturbed areas (primarily to the south of SR76), Diegan coastal sage scrub north of SR76, southern riparian forest and southern cottonwood-willow riparian forest associated with the San Luis Rey River to the south of SR76, ponds formed where ground water intercepted mine pits from a former aggregate mine south of SR76, agricultural lands to the north and south of SR76, and a few stands of open coast live oak woodland. A north-to-south-running roadside drainage ditch parallels the eastern side of Rice Canyon Road. The drainage ditch is ephemeral and vegetated with upland plant species, but drains to the San Luis Rey River to the south; therefore, it may be considered jurisdictional. Pipeline construction will not impact this drainage ditch.

Areas adjacent to Pala del Norte Road along the water pipeline alignment consist entirely of Diegan coastal sage scrub east and west of the road.

The following descriptions of habitats within the gas and water alignments and 500 feet either side are based primarily on habitat classifications from the Preliminary Description of the Terrestrial Natural Communities of California (Holland 1986) and revised by Thomas Oberbauer in Terrestrial Vegetation Communities in San Diego County Based on Holland's Descriptions (March 2005).

<u>Nonnative grassland (42200)</u>

Land that supports a dense to sparse cover of annual grasses with flowering culms approximately 1 meter high. Nonnative grasslands are often associated with numerous species of showy-flowered, native annual forbs ("wildflowers"), especially in years of favorable rainfall. Germination occurs with the onset of the late fall rains; growth, flowering, and seed-set occur from winter through spring. With a few exceptions, the plants are dead through the summer-fall dry season, persisting as seeds. Common grass and forb species found in nonnative grassland include wild oat (*Avena* spp.), brome (*Bromus* spp.), Italian ryegrass (*Lolium multiflorum*), vulpia (*Vulpia* spp.), filaree (*Erodium* spp.), California poppy (*Eschscholzia californica*), fascicled tarweed (*Deinandra fasciculata*), and lupine (*Lupinus* spp.).

<u>Orchard (18100)</u>

An area of land on which fruit or nut trees are cultivated. Vegetation between the trees in an orchard usually consists of nonnative grasses and annual forbs (usually nonnative species) or can consist of maintained bare ground or leaf litter.

<u>Diegan coastal sage scrub (32500)</u>

Consists of low, soft-woody subshrubs up to about 1 meter high that are most active in winter and early spring. Many of the taxa are facultatively drought-deciduous. Diegan

coastal sage scrub is dominated by California sagebrush (*Artemisia californica*), California buckwheat (*Eriogonum fasciculatum*), coastal goldenbush (*Isocoma menziesii*), laurel sumac (*Malosma laurina*), white sage (*Salvia apiana*), and California broom (*Lotus scoparius*).

Open Coast Live Oak Woodland (71161)

Coast live oak woodland has only one dominant tree species, coast live oak (*Quercus agrifolia*), which is evergreen and reaches 10 to 25 meters in height. The density of coast live oak may be low such that the canopy appears open. The shrub layer may include toyon (*Heteromeles arbutifolia*), poison oak (*Toxicodendron diversilobum*), laurel sumac, gooseberry (*Ribes* spp.), or blue elderberry (*Sambucus mexicana*). The understory is often composed of nonnative grasses and other nonnative weedy species.

Southern Riparian Forest (61300)

This is a dense, multi-storied vegetation type occurring along rivers and creeks that often supports Fremont cottonwood (*Populus fremontii* ssp. *fremontii*), western sycamore (*Platanus racemosa*), willow (*Salix* spp.), coast live oak, poison oak, and a variety of hydrophytic shrub and herbaceous plant species.

Southern Cottonwood-Willow Riparian Forest (61330)

A tall, open, broadleaved winter-deciduous riparian forest dominated by Fremont cottonwood and willow. This vegetation type occurs in the moist soils along rivers and streams that are subject to overflowing and receding floodwaters. Other species observed in southern cottonwood-willow riparian forest are mugwort (*Artemisia douglasiana*), mule fat (*Baccharis salicifolia*), and western sycamore.

Disturbed habitat (11300)

This includes areas that have been disturbed by previous human activities, including grading and/or repeated clearing, or that show evidence of being built upon. Disturbed areas do not have any present or future biological value for most species, other than those species adapted to living in an urban environment (e.g., house sparrow). Disturbed habitats often support weedy, nonnative vegetation or lack vegetation.

Urban/Developed (12000)

This is defined as any area that supports permanent man-made structures or human activities that preclude the establishment of native plant communities. Paved road, yards, facilities, houses, and outbuildings and any accompanying landscape vegetation are mapped as urban or developed.

Agriculture (18000)

Refers to land that supports active agricultural cultivation or cattle grazing. Agricultural land also includes land that is left fallow, but will be cultivated in the future.

Special-Status Species with the Potential to Occur along the Utility Alignments
Using the literature review conducted for the SPPE Application (refer to Table 6.6-1 and 6.6-2 in the SPPE Application dated July 2007), the following 5 plant species and 4 wildlife species were identified as having a high to moderate potential to occur within 500 feet of the gas and water pipeline alignments due to the presence of potentially suitable habitat:

Chaparral nolina (*Nolina cismontana*) is a native evergreen shrub in the lily family (Liliaceae) that blooms between May and June. This plant species is known to occur in chaparral and coastal sage scrub habitats at an elevation ranging from 140 to 1,275 meters and is typically found on sandstone or gabbro soils. This species is threatened by development, agriculture, road construction, and recreational activities and is CNPS-rated 1B.2 (rare, threatened, or endangered in California and elsewhere, and is fairly threatened in California). This plant is not federal or state listed; however, it is a List A species (plants rare, threatened, or endangered in California and elsewhere) according to the County of San Diego Department of Planning and Land Use Sensitive Plant List. No individuals of chaparral nolina were observed within the utility alignments; however, CNDDB records of this species were documented within the areas to the west, southwest, and south. This species has a high potential to occur.

Felt-leaved monardella (*Monardella hypoleuca* ssp. *lanata*) is a native rhizomatous perennial herb in the mint family (Lamiaceae) that blooms between June and August. This plant species is known to occur in chaparral and cismontane woodland habitat at an elevation ranging from 300 to 1,190 meters. This species is CNPS-rated 1B.2 (rare, threatened, or endangered in California and elsewhere, and is fairly threatened in California). This plant is not federal or state listed; however, it is a List A species (plants rare, threatened, or endangered in California and elsewhere) according to the County of San Diego Department of Planning and Land Use Sensitive Plant List. No individuals of felt-leaved monardella were observed within the utility alignments; however, CNDDB records of this species were documented approximately 0.90 mile to the east. This species has a moderate potential to occur.

Mesa horkelia (*Horkelia cuneata* ssp. *puberula*) is a native perennial herb in the rose family (Rosaceae) that blooms between February and September. This plant species is known to occur in chaparral, cismontane woodland, and coastal scrub habitat at an elevation ranging from 70 and 810 meters and is typically found in sandy or gravelly soils. This species is CNPS-rated 1B.1 (rare, threatened, or endangered in California and elsewhere, and is seriously threatened in California). This plant is not federal or state listed; however, it is a List A species (plants rare, threatened, or endangered in California and elsewhere) according to the County of San Diego Department of Planning and Land Use Sensitive Plant List. No individuals of mesa horkelia were observed within the utility alignments; however, CNDDB records of this species were documented approximately 0.90 mile to the east. This species has a moderate potential to occur.

Parry's tetracoccus (*Tetracoccus dioicus*) is native deciduous shrub in the spurge family (Euphorbiaceae) that blooms between April and May. This plant species is known to occur in chaparral and coastal sage scrub habitat at an elevation ranging from 165 to 1,000 meters and is typically found in chaparral on gabbro and metavolcanic soils. This species is threatened by agriculture and development and is CNPS-rated 1B.2 (rare, threatened, or endangered in California and elsewhere, and is fairly threatened in California). This plant is not federal or state listed; however, it is a List A species (plants rare, threatened, or endangered in California and elsewhere) according to the County of San Diego Department of Planning and Land Use Sensitive Plant List. Several individuals of Parry's tetracoccus were observed within the Project Site just east of the western drainage and just outside the northern and eastern boundaries of the Project Site. This species has a moderate to high potential to occur.

Robinson's peppergrass (*Lepidium virginicum* var. *robinsonii*) is a native annual herb in the mustard family (Brassicaceae) that blooms between January and July. This plant species is known to occur in chaparral and coastal sage scrub habitats at an elevation ranging from 1 to 500 meters. This species is CNPS-rated 1B.2 (rare, threatened, or endangered in California and elsewhere, and is fairly threatened in California). This plant is not federal or state listed; however, it is a List A species (plants rare, threatened, or endangered in California and elsewhere) according to the County of San Diego Department of Planning and Land Use Sensitive Plant List. No individuals of Robinson's peppergrass were observed within the utility alignments; however, CNDDB records of this species were documented approximately 0.45 mile to the northeast. This species has a moderate to high potential to occur.

Arroyo toad (*Bufo californicus*) is listed as USFWS Federally Endangered species and a San Diego County Group 1 (very high level of sensitivity) species. This toad prefers riparian habitats with sandy streambeds with cottonwood (*Populus* spp.), sycamore, and willow trees. Some populations occur in streams within coniferous forests. The stream setting usually has adjacent shallow pools where the toad may sit in the water while partially exposed above. No arroyo toads were observed within the utility alignments; however, CNDDB records document 9 occurrences of this species within a 10-mile radius of the project site, including an occurrence within 0.4 mile of the project site along the San Luis Rey River. This species has moderate to high potential to occur within the southern riparian forest and southern cottonwood-willow riparian forest habitat associated with the San Luis Rey River within 500 feet of the gas pipeline alignment (for breeding habitat) and a moderate to high potential to occur in suitable upland habitat (for non-breeding, upland habitat) within 500 feet of the gas pipeline alignment.

Coastal California gnatcatcher (*Polioptila californica californica*) is recognized by the U.S. Fish and Wildlife Service as a Federally Threatened species and is a CDFG Fully Protected California Special Concern Species. This species is an obligate, permanent

resident of coastal sage scrub below an elevation of 2,500 feet in southern California and Baja California. The coastal California gnatcatcher feeds on insects, spiders, and some seeds. CNNDB records include occurrences of this species within 3 miles the Project site. U.S. Fish and Wildlife Service protocol-level surveys (non-breeding) along the utility alignments were initiated mid-December 2007 and are scheduled for completion in March/April 2008. At the time of this report one pair of coastal California gnatcatchers was observed within 500 feet of the gas pipeline alignment during a survey. The coastal California gnatcatcher has a high potential to occur within 500 feet of the both the gas and water pipeline alignments.

Least Bell's vireo (*Vireo bellii pusillus*) is categorized as a Federally Endangered, State Endangered as identified by the USFWS and DFG and a San Diego County Group 2 (overall population decreasing) species. Least Bell's vireo is restricted to riparian habitat found mostly in coastal lowlands. The species is vulnerable to nest predation from the brown-headed cowbird (*Molothrus ater*). No least Bell's vireos were observed within the utility alignments; however, CNDDB records of this species are documented throughout the San Luis Rey River. This species has moderate to high potential to occur within the southern riparian forest habitat associated with the San Luis Rey River within 500 feet of the gas pipeline alignment.

Southwestern willow flycatcher (*Empidonax traillii extimus*) is categorized as a USFWS Federally Endangered species and a San Diego County Group 1 (very high level of sensitivity) species. This species uses cottonwood-willow riparian forest for foraging and nesting and feeds on insects by either aerially gleaning from trees, shrubs, and herbaceous vegetation or hawking larger insects by waiting on exposed forage perches and capturing insects in flight. No southwestern willow flycatchers were observed within the utility alignments; however, CNDDB records document sightings of this species within the San Luis Rey River. This species has moderate to high potential to occur within the southern riparian forest and southern cottonwood-willow riparian forest habitat within 500 feet of the gas pipeline alignment.

Closing

The gas and water pipelines will be constructed entirely within existing roadways except adjacent to the power plant site where they will be constructed within areas of disturbance that have already been addressed for site construction. Therefore, the pipelines will not result in any surface disturbance to habitat. Orange Grove Energy will coordinate with DFG and USFWS to convey the results of this habitat assessment and to determine if these agencies will require additional efforts for the pipeline routes.

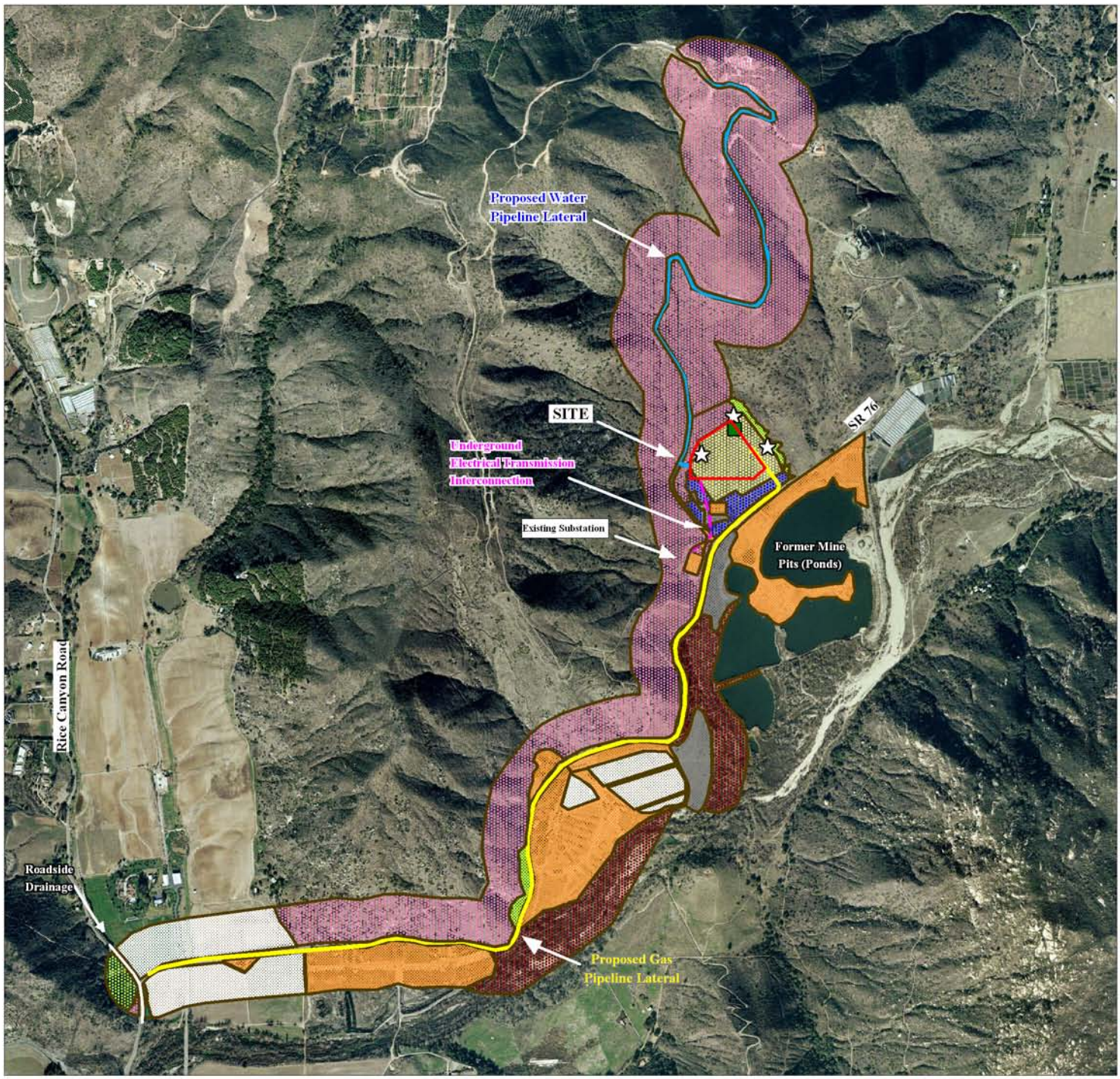

0 825 1,650
Feet

N

LEGEND

- Engelmann oak *(Quercus engelmannii)*
- Parry's tetracoccus *(Tetracoccus dioicus)*
- Open Coast Live Oak Woodland (71161)
- Diegan Coastal Sage Scrub (32500)
- Orchard (18100)
- Southern Cottonwood Willow Riparian Forest (61330)
- Nonnative Grasslands (42200)
- Disturbed (11300)
- Urban/Developed (12000)
- Agriculture (18000)
- Southern Riparian Forest (61300)

SOURCE:

Terrestrial Vegetation Community Code Based on Holland (1996), as Suggested by T. Oberbauer, (1996, Revised March 2005), DPLU, San Diego County.
Aerial : AirPhoto USA 2006

TRC	PROJECT: 125158	BIOLOGICAL RESOURCES - GAS AND WATER PIPELINES
	ORANGE GROVE PROJECT SAN DIEGO COUNTY, CALIFORNIA	FIGURE 1 TRC_Irvine\San Diego County\GIS DATA\Karen Wilson Data\Biology\Map gas water line.wor rev 12-30-07

EXHIBIT 129-1

BUTTERFIELD STAGE LINE ROUTE
(SUBMITTED UNDER CONFIDENTIAL COVER)

EXHIBIT 135-1

ALTER 92-04 CULTURLA RESOURCES STUDY REPORT
(SUBMITTED UNDER CONFIDENTIAL COVER)

APPENDIX 2.2

FPUD WASTEWATER TREATMENT PLANT NO. 1
IMPROVEMENTS FOR RECLAIMED WATER PICKUP

PROPOSED RECYCLED WATER ROAD & FILLING STATION

SCALE: 1" = 100'

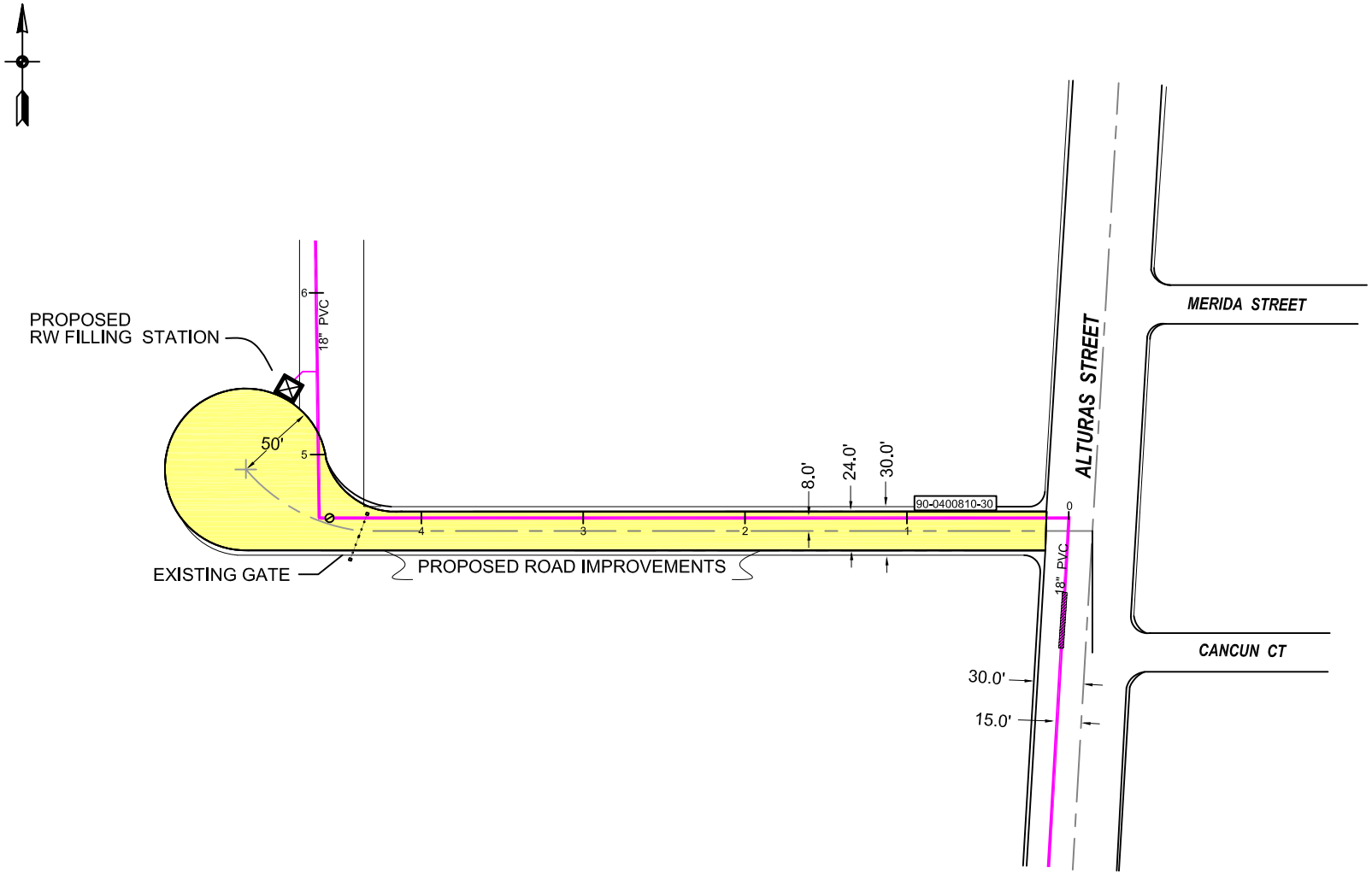

DISCLAIMER: By accepting this map, you agree that the Fallbrook Public Utility District assumes no liability or responsibility of any kind arising from use of this map. This map, its Data, and any calculations associated with this map is provided without warranty of any kind.

LEGEND

- Road Extent
- Recycled Water Line

PROPOSED FILLING STATION ROAD

0.01 0.005 0 0.01 0.02 0.03 0.04 Miles

0 50 100 200 300 400 Feet

Map Created by Todd Jester (12-14-07). X:\GIS\Data - Inside\Project Specific\RECLAIMED WATER ROAD_FILLING STATION\Filling_Station.mxd

Projection: California State Plane, NAD 83, Feet, Epoch 1991.35 Source: Eagle Aerial 2006, SANGIS,FPUD

Fallbrook Public Utility District

APPENDIX 2.3

DESIGN DRAWINGS

Y100 – Yard Layout Plan
C100 – Site Layout Plan
C150 – Construction Layout Plan
C300 – Grading and Drainage
C400 – Drainage Area Map
C500 – Erosion Control Plan
C501 – Erosion Control Plan Details
C502 – Erosion Control Plan Details
L100 – Site Landscaping Plan
GA100 – Facility Elevation View Looking North
GA101 – Facility Elevation View Looking East
E100 – Conceptual System One-Line
E19 – 69 kV Underground Transmission Line Routing Plan
E20 – 69 kV Underground Transmission Line Details
2B-1 – Process Flow Diagram
2C-1 – Water Balance – Design Basis Condition

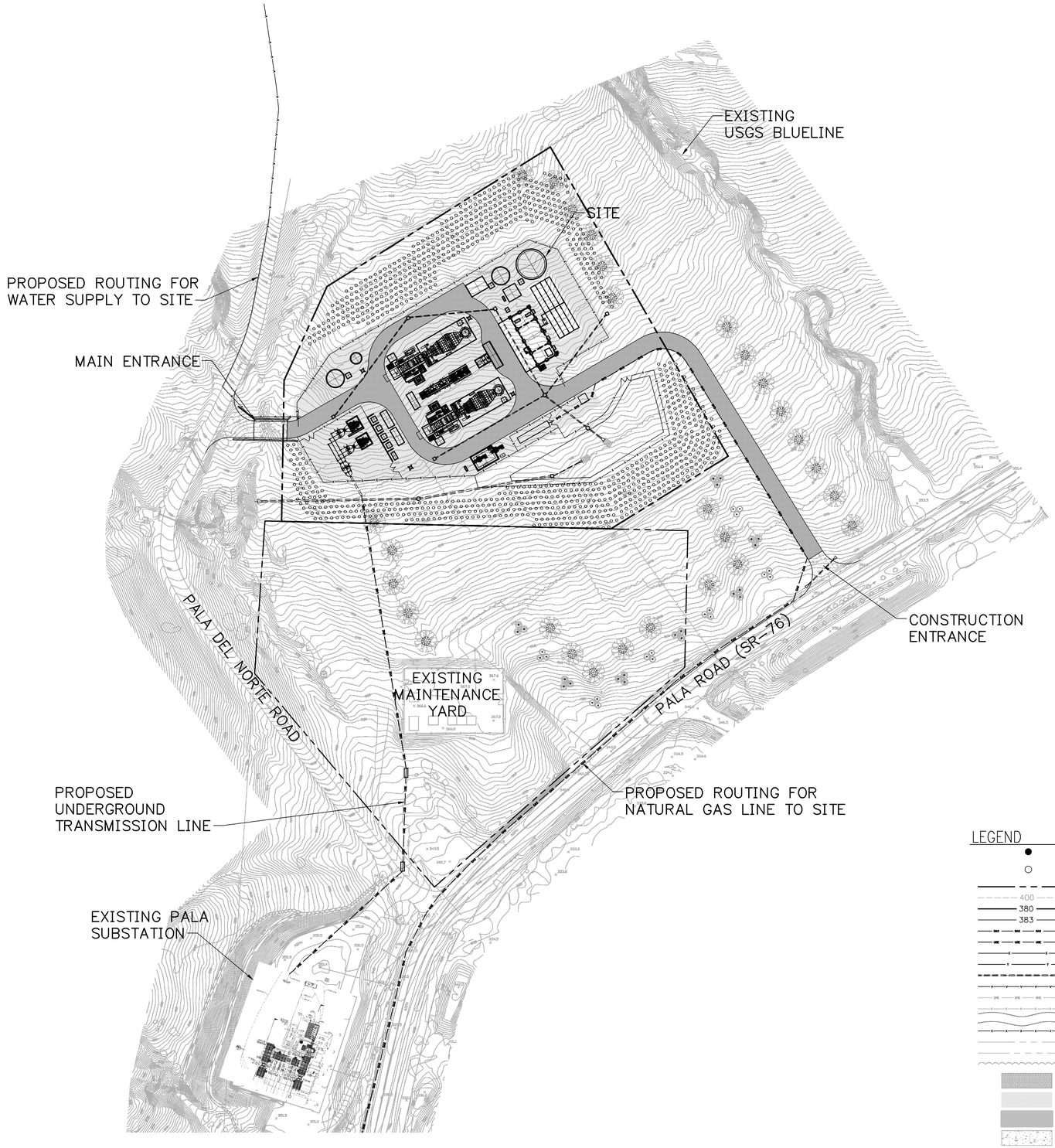

YARD LAYOUT PLAN

N

100 0 100 200

SCALE IN FEET

LEGEND

- FOUND MONUMENT AS NOTED
- SET 1" IRON PIPE WITH "POSMAS" PLUG UNLESS NOTED OTHERWISE
- PROPERTY LINE
- 400 EXISTING CONTOUR
- 380 PROPOSED MAJOR CONTOUR
- 383 PROPOSED MINOR CONTOUR
- PROPOSED GAS LINE
- PROPOSED UNDERGROUND ELECTRICAL
- ELECTRIC LINE
- TELEPHONE (COMMUNICATIONS) LINE
- PROPOSED RCP STORMWATER PIPE
- PROPOSED WATERLINE
- EXISTING T&D LINE
- EXISTING FENCE
- EXISTING ROAD
- PROPOSED FENCE
- PARCEL LINE
- DRAINAGE PATH
- EXISTING ORCHARD LINE
- PROPOSED RIP RAP
- PROPOSED CRUSHED ROCK SURFACE
- PROPOSED ROAD SURFACE
- PROPOSED CONCRETE
- PROPOSED NATIVE GROUND COVER
- PROPOSED LANDSCAPING

GENERAL NOTES:

1. THE LOCATION OF EXISTING UNDERGROUND UTILITIES ARE SHOWN IN AN APPROXIMATE WAY ONLY AND HAVE NOT BEEN INDEPENDENTLY VERIFIED BY THE OWNER OR ITS REPRESENTATIVE. THE CONTRACTOR SHALL VERIFY THE LOCATION AND DEPTH OF ALL UTILITIES PRIOR TO BEGINNING CONSTRUCTION IN ORDER TO PROVIDE FOR NON-INTERRUPTION OF SERVICE AND TO ENSURE PROPER CLEARANCES.
2. WHERE THE NEW IMPROVEMENTS ABUT EXISTING IMPROVEMENTS, THE CONTRACTOR SHALL BE RESPONSIBLE FOR MATCHING THE ELEVATION OF THE EXISTING IMPROVEMENTS.
3. ALL CONSTRUCTION PERFORMED ON THIS PROJECT SHALL CONFORM TO THE STANDARDS AND SPECIFICATIONS OF SAN DIEGO, CALIFORNIA. WHERE DISCREPANCIES EXIST BETWEEN THE PROJECT SPECIFICATIONS AND CITY STANDARDS, THE CONTRACTOR SHALL ABIDE BY THE GREATER OR MORE RESTRICTIVE REQUIREMENTS.
4. PLACEMENT OF CONCRETE SHALL COMPLY WITH THE REQUIREMENTS OF ACI 301. PLACEMENT OF REINFORCEMENT SHALL COMPLY WITH THE CRSI MANUAL OF STANDARD PRACTICE, LATEST EDITION.
5. PRECAST AND CAST-IN-PLACE CONCRETE FOR PAVING AND SITE STRUCTURES SHALL BE CLASS "V", PORTLAND CEMENT CONCRETE, WITH THE FOLLOWING PROPERTIES.

28-DAY COMPRESSIVE STRENGTH MIN.	4,500 PSI
WATER/CEMENT RATIO	0.45
MAXIMUM AGGREGATE SIZE	¾"
SLUMP	3" +/- 1"

6. ALL WELDED WIRE FABRIC (W.W.F.) SHALL CONFORM TO A185. NO ALUMINUM SHALL BE EMBEDDED IN ANY CONCRETE.
7. CONTRACTOR SHALL PROVIDE FOR CONTROL OF SURFACE EROSION DURING CONSTRUCTION AND UNTIL THE OWNER ACCEPTS THE WORK AS COMPLETE. THE CONTRACTOR SHALL PROVIDE BERMS, SILT FENCE, STRAW BALES, SILT BASINS, OR OTHER MEANS TO PREVENT EROSION FROM REACHING THE PUBLIC RIGHT-OF-WAY OR ADJACENT PROPERTY. IN THE EVENT THE PREVENTION MEASURES ARE NOT EFFECTIVE, THE CONTRACTOR SHALL REMOVE ANY DEBRIS AND EROSION AND RESTORE THE RIGHT-OF-WAY AND ADJACENT PROPERTY TO ORIGINAL OR BETTER CONDITION.
8. CONTRACTOR SHALL, BY HIS OWN INVESTIGATION AND PRIOR TO COMMENCING WORK, SATISFY HIMSELF AS TO THE SURFACE AND SUBSURFACE CONDITIONS TO BE ENCOUNTERED.
9. A TOPOGRAPHIC SURVEY WAS PREPARED BY PSOMAS SURVEYING DATED OCTOBER 2007. THE ENGINEER WILL NOT BE RESPONSIBLE FOR THE COMPLETENESS OR ACCURACY OF THE DATA AND NO EXPRESSED OR IMPLIED GUARANTEE IS GIVEN OF THE INTERPRETATION THEREOF.
10. THE OWNER SHALL EMPLOY AN INDEPENDENT ENGINEERING TESTING AGENCY TO VERIFY SOIL COMPACTION AND PAVEMENT MATERIAL PROPERTIES. THE CONTRACTOR SHALL ALLOW THE TESTING AGENCY TO PERFORM TESTING AND RETESTING AS NECESSARY TO VERIFY COMPLIANCE WITH THE PROJECT SPECIFICATIONS.
11. REFERENCE IS MADE TO THE SUBSURFACE EXPLORATION AND GEOTECHNICAL REPORT BY PSI AND DATED NOVEMBER 2007. NEITHER THE OWNER NOR THE ENGINEER WILL BE RESPONSIBLE FOR THE COMPLETENESS OR ACCURACY, NOR THE INTERPRETATION THEREOF. ALL SITE PREPARATION AND EARTHWORK CONSTRUCTION SHALL BE IN CONFORMANCE WITH THE GEOTECHNICAL RECOMMENDATIONS.
12. FOUNDATION DESIGNS ARE BASED ON THE GEOTECHNICAL ENGINEERING REPORT. ALL FOOTINGS AND PIERS SHALL BEAR AT THE ELEVATIONS SHOWN ON THE PLANS, DETAILS, SECTIONS, AND SCHEDULES. ALL SITE PREPARATION, REQUIREMENTS FOR EXCAVATIONS AND SLOPE STABILITY, STRUCTURAL FILL AND TRENCH BACKFILL, FOUNDATIONS, AND SUBGRADE PREPARATION FOR BUILDING FLOOR SLABS SHALL BE IN ACCORDANCE WITH THE GEOTECHNICAL ENGINEERING REPORT.
13. TOPSOIL AND ALL ORGANIC MATTER SHALL BE REMOVED FROM THE LOCATION OF PROPOSED IMPROVEMENTS. THE SUBGRADE SHALL BE PROOF ROLLED WITH A LOADED DUMP TRUCK OR APPROVED EQUIPMENT PRIOR TO BEGINNING FILLING OPERATIONS. UNSTABLE OR SPONGY AREAS SHALL BE OVEREXCAVATED AND REPLACED WITH COMPACTED FILL IN ACCORDANCE WITH THE GEOTECHNICAL REPORT.
14. COMPACTED FILL SHALL NOT CONTAIN ROCK LARGER THAN 6 INCHES.
15. COMPACTED FILL SHALL BE PLACED IN NO GREATER THAN 8 INCH LOOSE LIFTS AND COMPACTED TO AT LEAST 95% OF MAXIMUM DRY DENSITY AT ± 2% OPTIMUM MOISTURE CONTENT (BASED ON ASTM D1557 TEST). FIELD DENSITY TESTS SHALL BE TAKEN AT A FREQUENCY OF AT LEAST ONE TEST FOR EACH 2500 SQUARE FEET OF FILL LIFT. IN PAVEMENT AREAS, THE TESTING FREQUENCY MAY BE ONE FIELD DENSITY TEST FOR EACH 5000 SQUARE FEET OF FILL LIFT, BUT NO LESS THAN 3 TESTS PER LIFT.
16. CRUSHED ROCK PAVEMENT (ALSO CALLED CRUSHED ROCK BASE) SHALL BE COMPACTED WELL GRADED, CLASS II ROADBASE AND MEET THE REQUIREMENTS FOR SAN DIEGO COUNTY, IT SHALL BE PLACED IN LIFTS NO GREATER THAN 4" AND COMPACTED TO 95% OF MAXIMUM DRY DENSITY AS DETERMINED BY ASTM D698.
17. ALL SITE STRUCTURES SHALL BE DESIGNED FOR HS-20 LOADING.
18. ON ALL ELECTRICAL DRAWING LAYOUT PLANS, THE LOCATIONS OF SOME EQUIPMENT, GROUNDING, AND UNDERGROUND CONDUITS, AND DEVICES AT WHICH CONDUIT CIRCUITS TERMINATE ARE APPROXIMATE. THE CONTRACTOR SHALL INSTALL EACH CONDUIT CIRCUIT TO THE INTENDED EQUIPMENT TERMINATION POINT WITHOUT ADDITIONAL CHARGE TO THE OWNER, ALTHOUGH ITS FINAL LOCATION MAY SHIFT SOMEWHAT FROM THAT WHICH IS SHOWN.

REV.	DATE	DESCRIPTION	DWN	CHK
A	11-30-07	ISSUED FOR MILESTONE 4	BGG	WHR
B	12-19-07	ISSUED FOR AMENDED SPPE APPLICATION	BGG	WHR

Sealed Only When Signed in Blue Ink

Sega ®
Engineers – Architects – Technicians
Design – Construction – Field Service
16041 Foster
P.O. Box 1000
Stilwell, Kansas 66085-1000

ORANGE GROVE ENERGY L.P.
Schaumburg, IL

ORANGE GROVE POWER PLANT

YARD LAYOUT PLAN

PRELIMINARY

DESIGN BY: B. ROWINES	CHECKED BY: J. BONDANK
DRAWN BY: B. GASPERS	DATE: 9-12-07
CLIENT I.D. ICC00101	SEGA PROJECT NO. 07-201

CADD FILE NAME: 07201-Y100.dwg

DRAWING NO. Y100 REV. B

N:\2007\07201\dwgs\ce\07201-Y100.dwg 12/19/07 12:57pm dsessler

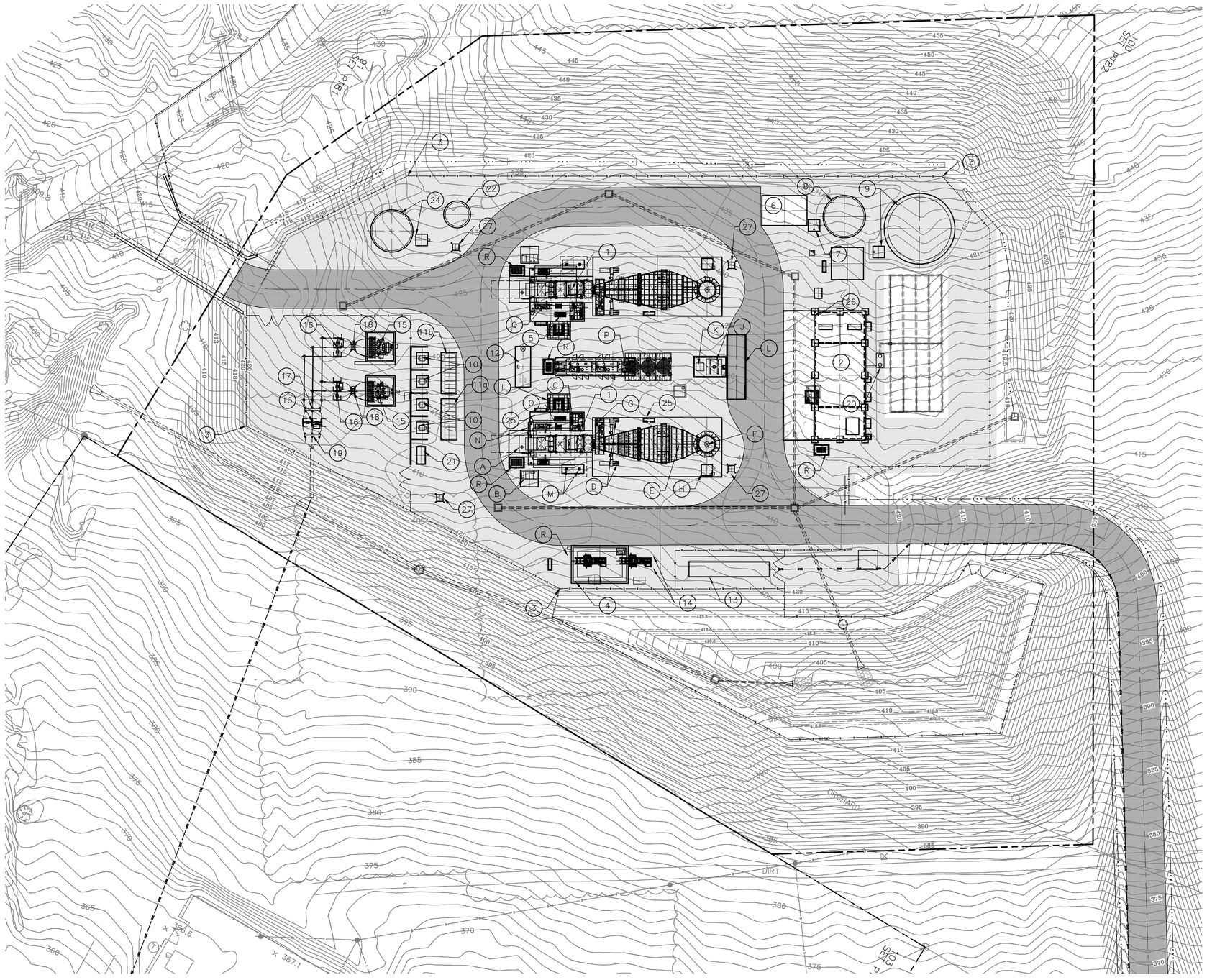

SITE LAYOUT PLAN

PLAN NORTH IS 29°55'46" CCW OF TRUE NORTH

40 0 40 80

SCALE IN FEET

EMISSION COORDINATES SYMBOL ⊗		
DESCRIPTION	NORTHING	EASTING
COMBUSTION TURBINE #1 (NORTH)	2075491	6298683
COMBUSTION TURBINE #2 (SOUTH)	2075387	6298743
DIESEL FIRE PUMP (±2')	2075517	6298766
BLACK START GENERATOR (±2')	2075379	6298582

KEYNOTES:

1. COMBUSTION TURBINE (CT), GENERATOR, AND AUXILIARY EQUIPMENT. (FOR EACH UNIT): (HEIGHT = 43' AT THE TOP OF VBV DUCT)
   - A MAIN TURBINE GENERATOR SKID ENCLOSURE
   - B 15KV SWITCHGEAR
   - C AUXILIARY CT EQUIPMENT SKID
   - D TEMPERING AIR FANS (2)
   - E EMISSION CONTROL SYSTEM–SCR (HEIGHT = ±33')
   - F STACK (HEIGHT = 80')
   - G AMMONIA VAPORIZATION SKID
   - H CEMS ENCLOSURE WITH TRANSFORMER AND CAL GAS STORAGE
   - I CT FIN FAN COOLER
   - J AMMONIA STORAGE TANK (COMMON TO UNITS)
   - K AMMONIA FORWARDING PUMP SKID (COMMON TO UNITS)
   - L AMMONIA UNLOADING PAD, SPILL CONTAINMENT (COMMON TO UNITS)
   - M TURBINE REMOVAL SUPPORTS
   - N AIR INLET FILTER (HEIGHT = 34')
   - O SPRINT SKID
   - P INLET AIR CHILLER AND COOLING TOWER (COMMON TO UNITS) (HEIGHT = 30')
   - Q WATER INJECTION SKID
   - R OILY DRAIN TANK
2. SERVICE BUILDING FOR CONTROL ROOM, ELECTRICAL EQUIPMENT, FIRE PUMPS, COMPRESSED AIR. (HEIGHT = 18')
3. SITE SECURITY CHAINLINK FENCE AND GATES.
4. FUEL GAS COMPRESSOR AND RELATED EQUIPMENT.
5. COALESCING FILTER SKID.
6. CONCRETE PAD FOR TEMPORARY WATER TREATMENT TRAILER.
7. DEMIN. WATER PUMP SKID AND RELATED EQUIPMENT.
8. DEMIN. WATER STORAGE TANK. (HEIGHT = 24')
9. RAW WATER FIREWATER STORAGE TANK. (HEIGHT = 44')
10. AUX. TRANSFORMERS.
11a. 5KV CB SWITCHGEAR.
11b. 480V CB SWITCHGEAR.
12. BLACKSTART GENERATOR.
13. SDG&E GAS METERING STATION.
14. FUEL GAS COMPRESSOR RECYCLE FIN–FAN COOLER.
15. 13.8KV–69KV STEP–UP TRANSFORMER.
16. 69KV DISCONNECT SWITCH AND SUPPORTS.
17. CT/VT METERING.
18. 69KV CIRCUIT SWITCHER.
19. 69KV POTHEAD.
20. UNDERGROUND SANITARY SYSTEM.
21. FIRE VALVE ENCLOSURE
22. WASTEWATER STORAGE TANK. (HEIGHT = 24')
23. NOT USED
24. COOLING TOWER MAKEUP TANK AND PUMP SKID. (HEIGHT = 30')
25. 480V MCC
26. DIESEL FIRE PUMP ROOM
27. YARD FIRE HYDRANTS

REV.	DATE	DESCRIPTION	DWN	CHK
A	10–23–07	ISSUED FOR REVIEW	BGG	WHR
B	10–30–07	ISSUED FOR REVIEW	BGG	WHR
C	11–8–07	ISSUED FOR WESTPOWER APPROVAL	BGG	WHR
D	11–19–07	ISSUED FOR AIR MODEL	BGG	WHR
E	11–29–07	RE–ISSUED FOR AIR MODEL	BGG	WHR
F	11–30–07	ISSUED FOR MILESTONE 4	BGG	WHR
G	12–19–07	ISSUED FOR AMENDED SPPE APPLICATION	BGG	WHR

Sealed Only When Signed in Blue Ink

Sega ®
Engineers – Architects – Technicians
Design – Construction – Field Service
16041 Foster
P.O. Box 1000
Stilwell, Kansas 66085–1000

ORANGE GROVE ENERGY L.P.
Schaumburg, IL

ORANGE GROVE POWER PLANT

SITE LAYOUT PLAN

PRELIMINARY

DESIGN BY: B. ROWINES	CHECKED BY: J. BONDANK
DRAWN BY: B. GASPERS	DATE: 9–12–07
CLIENT I.D. ICC00101	SEGA PROJECT NO. 07–201

CADD FILE NAME: 07201–C100.dwg

DRAWING NO. C100 REV. G

N:\2007\07201\dwgs\ce\07201–C100.dwg 12/19/07 12:46pm dsessler

CONSTRUCTION LAYOUT PLAN

PLAN NORTH IS 29°55'46" CCW OF TRUE NORTH

60 0 60 120

SCALE IN FEET

KEYNOTES:

1. TEMPORARY CONSTRUCTION TRAILERS.
2. TEMPORARY DOUBLE WIDE CONSTRUCTION TRAILERS.
3. TEMPORARY CONNEXES/LOCK BOXES.
4. TEMPORARY CONSTRUCTION STAGING AND PRE-ASSEMBLY.
5. TEMPORARY CONSTRUCTION ROAD AND PARKING (54,980 S.F.)
6. TEMPORARY CONSTRUCTION PARKING.
7. INSTALL CONCRETE WASHOUT FACILITY, SEE DETAIL DWG C502.
8. EXISTING STORAGE YARD.
9. TEMPORARY CONSTRUCTION ROAD (SEE TIRE WASH DETAIL DWG. C501) AND CULVERT.
10. CONSTRUCTION ENTRANCE.

TEMPORARY STORM DRAINAGE NOTES:

1. INSTALL 18" DIA. CLASS III RCP
   FLARED END SECTION
   FLOWLINE IN (N) = 381.00'
   INSTALL 83 L.F. 18" DIA.
   CLASS III RCP @ 1.0% MIN. SL.
   INSTALL 18" DIA. CLASS III RCP
   FLARED END SECTION

STORM DRAINAGE NOTES:

2. INSTALL 18" DIA. CLASS III RCP
   FLARED END SECTION
   FLOWLINE IN (NE) = 353.85'
   INSTALL 70 L.F. 18" DIA.
   CLASS III RCP @ 1.0% MIN. SL.
   INSTALL 18" DIA. CLASS III RCP
   FLARED END SECTION

LEGEND

- FOUND MONUMENT AS NOTED
- SET 1" IRON PIPE WITH "POSMAS" PLUG UNLESS NOTED OTHERWISE
- PROPERTY LINE
- 400 — EXISTING CONTOUR
- 380 — PROPOSED MAJOR CONTOUR
- 383 — PROPOSED MINOR CONTOUR
- GAS — PROPOSED GAS LINE
- UGE — PROPOSED UNDERGROUND ELECTRICAL
- E — ELECTRIC LINE
- T — TELEPHONE (COMMUNICATIONS) LINE
- PROPOSED RCP STORMWATER PIPE
- W — PROPOSED WATERLINE
- OHE — EXISTING T&D LINE
- X — EXISTING FENCE
- EXISTING ROAD
- X — PROPOSED FENCE
- PARCEL LINE
- DRAINAGE PATH
- EXISTING ORCHARD LINE
- PROPOSED RIP RAP
- PROPOSED CRUSHED ROCK SURFACE
- PROPOSED ROAD SURFACE
- PROPOSED CONCRETE
- PROPOSED NATIVE GROUND COVER
- PROPOSED LANDSCAPING
- TEMPORARY CONSTRUCTION ROAD/PARKING CRUSHED ROCK SURFACE

REV.	DATE	DESCRIPTION	DWN	CHK
A	11-28-07	ISSUED FOR REVIEW	BGG	JPL
B	11-30-07	ISSUED FOR MILESTONE 4	BGG	JPL
C	12-19-07	ISSUED FOR AMENDED SPPE APPLICATION	BGG	WHR

Sealed Only When Signed in Blue Ink

Sega ®

Engineers – Architects – Technicians
Design – Construction – Field Service

16041 Foster
P.O. Box 1000
Stilwell, Kansas 66085-1000

ORANGE GROVE ENERGY L.P.
Schaumburg, IL

ORANGE GROVE POWER PLANT
CONSTRUCTION LAYOUT PLAN

PRELIMINARY

DESIGN BY: J. LANSEL	CHECKED BY: B. ROMINES
DRAWN BY: B. GASPERS	DATE: 11-12-07
CLIENT I.D. ICC00101	SEGA PROJECT NO. 07-201

CADD FILE NAME: 07201-C150.dwg

DRAWING NO. C150 — REV. C

N:\2007\07201\dwgs\ce\07201-C150.dwg 12/19/07 12:46pm dsessler

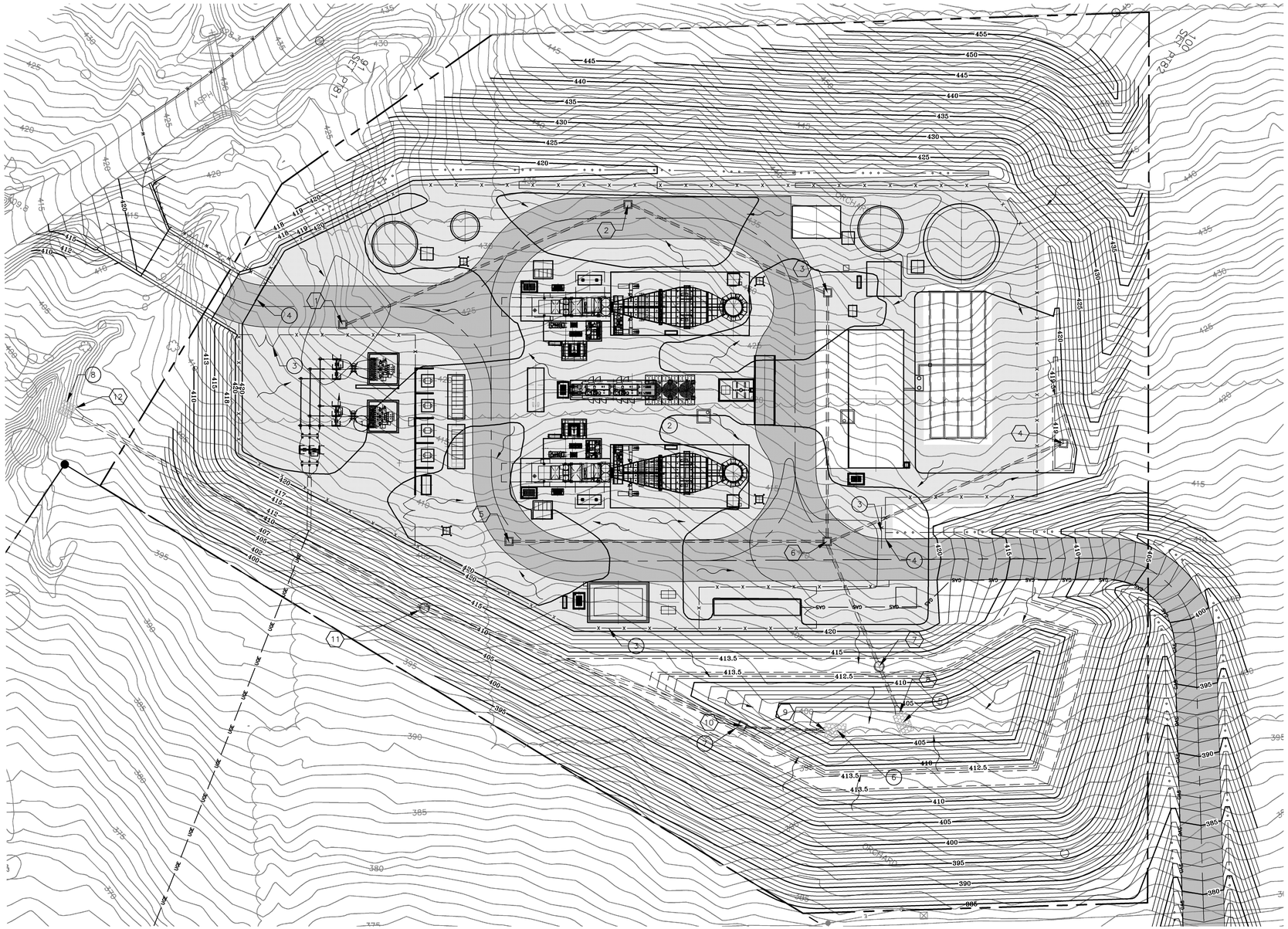

GRADING AND DRAINAGE PLAN

PLAN NORTH IS 30°00'00" CCW OF TRUE NORTH

40 0 40 80

SCALE IN FEET

GRADING NOTES:

1. ALL CONSTRUCTION SHALL MEET THE STANDARDS AND SPECIFICATIONS OF SAN DIEGO COUNTY, CALIFORNIA, LATEST EDITION.
2. ALL STORM SEWER LINES SHALL BE CLASS III RCP.
3. PIPE LENGTHS EXCLUDE END SECTIONS AND ARE MEASURED ALONG CENTERLINE OF PIPE FROM CENTER OF INSIDE FACE TO CENTER OF INSIDE FACE OF STRUCTURES.
4. MATCH GRADES AT EXISTING IMPROVEMENTS.
5. SLOPES SHALL BE MADE AT 3:1 MAXIMUM GRADE.
6. EROSION CONTROL STRUCTURES (SEE EROSION CONTROL PLAN) SHALL BE CONSTRUCTED PRIOR TO GRADING ACTIVITIES.
7. DRAINAGE CHANNELS SHALL BE MINIMUM 3' FLAT BOTTOM. ALL DRAINAGE CHANNELS SHALL HAVE 3:1 SIDE SLOPES.
8. NORTHING AND EASTING COORDINATES FOR MANHOLES, AREA INLETS, FIELD INLETS, AND JUNCTION BOXES ARE MEASURED TO CENTER OF STRUCTURE.
9. NORTHING AND EASTING COORDINATES FOR END SECTIONS ARE MEASURED TO FARTHEST EDGE OF THE END SECTION AT PIPE CENTERLINE.

CIVIL KEYNOTES:

1. INSTALL SUBSTATION 6" CRUSHED ROCK SURFACE.
2. INSTALL COMBUSTION TURBINE AREA COMPACTED 6" CRUSHED ROCK SURFACE.
3. INSTALL SITE SECURITY CHAINLINK FENCE WITH 30' MANUAL SLIDE GATES, SEE SITE DETAILS.
4. INSTALL 30' SLIDE GATE WITH GATE OPERATOR AND LOOP DETECTOR.
5. INSTALL MIN. 3.5' DEEP ½ TON RIPRAP. SEE DETAIL DWG. C803
6. INSTALL MIN. 4.5' DEEP 1 TON RIPRAP
7. INSTALL 100 YR. OUTLET CONTROL STRUCTURE SEE DWG. 503
8. INSTALL MIN. 3.0' DEEP ¼ TON RIPRAP. SEE DETAIL OUTLET STRUCTURE DWG. 503.

STORM DRAINAGE NOTES:

1. N:2075338.34
   E:6298444.48
   INSTALL GRATE INLET 220 L.F. 18" DIA.
   TOP EL. = 418.4' CLASS III RCP @ 0.5% SL.
   FLOWLINE OUT (N) = 412.4 (2)

2. N:2075516.99
   E:6298579.87
   INSTALL GRATE INLET 154 L.F. 18" DIA.
   TOP EL. = 419.0' CLASS III RCP @ 0.5% SL.
   FLOWLINE IN (S) = 411.3
   FLOWLINE OUT (E) = 410.8 (3)

3. N:2075533.88
   E:6298737.01
   INSTALL GRATE INLET 175 L.F. 18" DIA.
   TOP EL. = 419.25' CLASS III RCP @ 1.0% SL.
   FLOWLINE IN (W) = 410.0
   FLOWLINE OUT (SE) = 409.5 (6)

4. N:2075524.83
   E:6298939.55
   INSTALL GRATE INLET 181 L.F. 18" DIA.
   TOP EL. = 418.75' CLASS III RCP @ 0.5% SL.
   FLOWLINE OUT (SW) = 412.25' (6)

5. N:2075262.68
   E:6298627.25
   INSTALL GRATE INLET 225 L.F. 18" DIA.
   TOP EL. = 419.0' CLASS III RCP @ 0.5% SL.
   FLOWLINE OUT (NE) = 412.5' (6)

6. N:2075377.85
   E:6298826.72
   INSTALL GRATE INLET 93 L.F. 24" DIA.
   TOP EL. = 418.25' CLASS III RCP @ 3.0% SL.
   FLOWLINE IN (W–(5)) = 411.35'
   FLOWLINE IN (NE–(4)) = 411.35'
   FLOWLINE IN (NW–(3)) = 407.75'
   FLOWLINE OUT (SE) = 407.25' (7)

7. INSTALL MANHOLE TOP EL. 412.5'
   28 L.F. 24" DIA CLASS III RCP @ 4.0% SL.
   FLOWLINE IN (NW) = 404.5'
   FLOWLINE OUT (SE) = 404.0' (8)

8. INSTALL STORM DRAIN OUTLET STRUCTURE
   CLASS III RCP END SECTION
   FLOWLINE OUT (SE) = 403.0'

9. INSTALL DETENTION BASIN INLET STRUCTURE
   CLASS III RCP END SECTION AND INSTALL 52 L.F. 12" DIA RCP @ 0.5% SL.
   FLOWLINE IN (E) = 402.5' (10)

10. INSTALL STORMWATER CONTROL STRUCTURE TOP EL. 414.0'
    240 L.F. 36" DIA CLASS III RCP @ 1.0% SL.
    100 YR INLET EL. 412.5'
    FLOWLINE IN (E) = 402.25' (11)
    FLOWLINE OUT (W) = 401.75'

11. INSTALL MANHOLE TOP EL. = 413.5'
    280 L.F. 36" CLASS III RCP @ 1.0% SL.
    FLOWLINE IN (E) = 399.4'
    FLOWLINE OUT (W) = 398.9' (12)

12. INSTALL STORM DRAIN OUTLET STRUCTURE
    CLASS III RCP END SECTION
    FLOWLINE OUT (W) = 396.5'

LEGEND

	PROPERTY LINE
400	EXISTING CONTOUR
380	PROPOSED MAJOR CONTOUR
383	PROPOSED MINOR CONTOUR
GAS	PROPOSED GAS LINE
UGE	PROPOSED UNDERGROUND ELECTRICAL
	PROPOSED RCP STORMWATER PIPE
W	PROPOSED WATERLINE
OHE	EXISTING T&D LINE
X	EXISTING FENCE
	EXISTING ROAD
X	PROPOSED FENCE
	PARCEL LINE
	DRAINAGE PATH
	EXISTING ORCHARD LINE
	PROPOSED RIP RAP
	PROPOSED CRUSHED ROCK SURFACE
	PROPOSED CONCRETE
	PROPOSED NATIVE GROUND COVER
	PROPOSED LANDSCAPING
	EXISTING TREES WITHIN DRAINAGE
	DRAINAGE ARROWS

REV.	DATE	DESCRIPTION	DWN	CHK
A	10-11-07	ISSUED PRELIMINARY TO PSWSI	BGG	WHR
B	10-19-07	ISSUED FOR REVIEW	BGG	WHR
C	11-26-07	RE-ISSUED FOR REVIEW	BGG	WHR
D	11-30-07	ISSUED FOR MILESTONE 4	BGG	WHR

Sealed Only When Signed in Blue Ink

Sega ®

Engineers – Architects – Technicians
Design – Construction – Field Service

16041 Foster
P.O. Box 1000
Stilwell, Kansas 66085-1000

ORANGE GROVE ENERGY L.P.
Schaumburg, IL

PRELIMINARY

ORANGE GROVE POWER PLANT

GRADING AND DRAINAGE PLAN

DESIGN BY: B. ROMINES	CHECKED BY: B. ROMINES
DRAWN BY: B. GASPERS	DATE: 9-12-07
CLIENT I.D. ICC00101	SEGA PROJECT NO. 07-201

CADD FILE NAME: 07201-C300.dwg

DRAWING NO. C300 — REV. D

N:\2007\07201\dwgs\ce\07201-C300.dwg 11/30/07 3:07pm bgaspers

DRAINAGE AREA MAP

N

100 0 100 200

SCALE IN FEET

KEY:

(EX)	–	EXISTING STRUCTURES
CI	–	CURB INLET
SI	–	CURB INLET IN SUMP
DI	–	SINGLE DROP INLET
DI–2	–	DOUBLE DROP INLET
ES	–	PREFABRICATED END SECTION
JB	–	JUNCTION BOX
YI	–	YARD INLET
AI	–	AREA INLET
MH	–	MANHOLE
R	–	REDUCER
FI	–	FIELD INLET
BEND	–	PREFABRICATED VERTICAL BEND
T.D.	–	TRENCH DRAIN
G.I.	–	GRATE INLET
O.C.	–	DETENTION OUTLET CONTROL STRUCTURE
RCP	–	REINFORCED CONCRETE PIPE

DESIGN NOTES:

(a) TIME OF CONCENTRATION
12 MINUTES MAX.
5 MINUTES MIN.

(b) PIPE LENGTHS EXCLUDE END SECTIONS AND ARE MEASURED ALONG CENTERLINE OF PIPE FROM CENTER OF INSIDE FACE TO CENTER OF INSIDE FACE OF STRUCTURES.

(c) MANNING'S ROUGHNESS COEFFICIENT = 0.013 (CONCRETE)

LEGEND

- FOUND MONUMENT AS NOTED
- SET 1" IRON PIPE WITH "POSMAS" PLUG UNLESS NOTED OTHERWISE
- PROPERTY LINE
- 400 EXISTING CONTOUR
- 380 PROPOSED MAJOR CONTOUR
- 383 PROPOSED MINOR CONTOUR
- GAS PROPOSED GAS LINE
- UGE PROPOSED UNDERGROUND ELECTRICAL
- E ELECTRIC LINE
- T TELEPHONE (COMMUNICATIONS) LINE
- PROPOSED RCP STORMWATER PIPE
- W PROPOSED WATERLINE
- OHE EXISTING T&D LINE
- X EXISTING FENCE
- EXISTING ROAD
- X PROPOSED FENCE
- PARCEL LINE
- DRAINAGE PATH
- EXISTING ORCHARD LINE
- PROPOSED RIP RAP
- PROPOSED CRUSHED ROCK SURFACE
- PROPOSED ROAD SURFACE
- PROPOSED CONCRETE
- PROPOSED NATIVE GROUND COVER
- PROPOSED LANDSCAPING
- A / B C — A = AREA IN ACRES; B = BASIN DESIGNATION; C = COMPOSITE RUNOFF COEFFICIENT
- D — D = DESIGN POINT DESIGNATION
- DRAINAGE AREA LIMITS
- PROPOSED DISTURBED AREA

DRAINAGE AREA NOTES:

(OS) DRAINAGE WILL BE ROUTED AROUND SITE BY NORTH DITCH DRAINAGE CHANNEL.

OFF–SITE DRAINAGE–NORTH CHANNEL

DEVELOPMENT STAGE	STORM DRAINAGE AREA (ACRES)	PEAK RUNOFF RATE Q (CFS)	RUNOFF COEF. C.	AVERAGE CHANNEL VELOCITY V (FT/S)	AVERAGE DEPTH ELEVATION (FT.)
50 YEAR DESIGN STORM					
PRE–DEV.	6.8	11.27	0.61	2.75	420.77
PRE–DEV.	6.8	17.64	0.86	3.10	420.95±
100 YEAR DESIGN STORM					
PRE–DEV.	6.8	13.20	0.61	2.87	420.16±
POST–DEV.	6.8	19.83	0.86	3.20	421.00±

1. INLET FOR DRAINAGE AREA.
2. INLET FOR DRAINAGE AREA.
3. INLET FOR DRAINAGE AREA.
4. INLET FOR DRAINAGE AREA.
5. INLET FOR DRAINAGE AREA.
6. INLET FOR DRAINAGE AREA. DRAINAGE FROM AREAS 1, 2, 3, 4, AND 5 WILL BE ROUTED VIA STORM DRAIN HERE.
7. STORMWATER MANHOLE.
8. STORM DRAIN OUTLET AND DETENTION BASIN INLET STRUCTURE.
9. DETENTION BASIN OUTLET CONTROL STRUCTURE.
10. DETENTION BASIN EMERGENCY OUTLET STRUCTURE.
11. STORMWATER MANHOLE
12. STORMWATER OUTLET SEE DETAIL DWG. 801
13. AREAS SOUTH OF PARCEL LINE AND WITHIN "PROPOSED DISTURBED AREA" LINE ARE AREAS FOR "TEMPORARY CONSTRUCTION PARKING AND LAYDOWN."

ON–SITE STORMWATER DETENTION BASIN

DEVELOPMENT STAGE	STORM DRAINAGE AREA (ACRES)	PEAK RUNOFF RATE Q (CFS)	RUNOFF COEF. C.	DETENTION VOLUME V(FT³)	DESIGNED WATER SURFACE VOLUME (FT³)	WATER SURFACE ELEVATION (FT.)
50 YEAR DESIGN STORM						
PRE–DEV.	5.2	11.00	N/A	N/A	N/A	N/A
POST–DEV.	5.2	23.00	N/A	93000	75300	410.5(±)
100 YEAR DESIGN STORM						
PRE–DEV.	5.2	12.68	N/A	N/A	N/A	N/A
POST–DEV.	5.2	27.86	N/A	93000	83200	412.5(±)

NOTE: NOT INCLUDING ONE FOOT OF FREEBOARD FOR DETENTION BASIN

SUMMARY OF AREAS (ACRES):

1. IMPERVIOUS AREA (INCLUDES CONCRETE ENTRANCE SECTION) – 1.00
2. CRUSHED ROCK SURFACE AREA (INCLUDES VEHICULAR AREA) – 3.22
3. DETENTION BASIN DRAINAGE AREA – 5.20
4. VEHICULAR AREA – 1.47
5. TEMPORARY CONSTRUCTION PARKING AREA AND LAYDOWN – 5.73

50 YEAR DESIGN															
STRUCTURE		DIRECT RUNOFF						TOTAL RUNOFF	PIPE						
STRUCT NO. (Area No.)	TYPE	AREA (acres) A	RUNOFF COEF. C	C x A	K	i (in/hr)	Q (cfs)	TOTAL Q (CFS)	PIPE NO.	PIPE SIZE DIA. (inches)	PIPE SLOPE %	PIPE LENGTH (LF)	PIPE CAP. (CFS)	VELOCITY (ft/sec)	DEPTH OF FLOW (inches)
1	AI	0.90	0.52	0.47	1.1	7.5	3.86								
								3.86	1	18	0.5	220	7.99	4.24	9.21
2	AI	0.50	0.60	0.30	1.1	7.5	2.48								
								6.34	2	18	0.5	150	7.99	4.72	12.79
3	AI	0.46	0.59	0.27	1.1	7.5	2.24								
								8.58	3	18	1.0	175	11.30	6.67	12.75
4	AI	1.00	0.48	0.48	1.1	4.5	2.38								
								2.38	4	18	0.5	160	7.99	3.72	6.94
5	AI	0.52	0.61	0.32	1.1	7.5	2.62								
								2.62	5	18	0.5	225	7.99	3.84	7.38
6	AI	0.90	0.55	0.50	1.1	7.5	4.08								
								17.65	6	24	3	82	42.15	12.15	11.34
7	MH	NA	NA	NA	Na	NA	NA								
								17.65	7	24	4	25	48.67	13.51	10.41
8	OC	0.90	0.72	0.65	1.1	7.5	5.35								
								23.00							
9	OC	NA	NA	NA	Na	NA	NA								
								12.68 MAX	9	12	0.5	50	12.42	10.53	FULL
10	MH	NA	NA	NA	Na	NA	NA								
								SEE DB CALCS	10	36	1.0	240	71.74	7.22	[illegible]
11	MH	NA	NA	NA	Na	NA	NA								
								SEE DB CALCS	11	36	1.0	280	71.74	7.22	10.52

REV.	DATE	DESCRIPTION	DWN	CHK
A	11–30–07	ISSUED FOR MILESTONE 4	BGG	WHR

Sealed Only When Signed in Blue Ink

Sega ®
Engineers – Architects – Technicians
Design – Construction – Field Service
16041 Foster
P.O. Box 1000
Stilwell, Kansas 66085–1000

ORANGE GROVE ENERGY L.P.
Schaumburg, IL

ORANGE GROVE POWER PLANT
DRAINAGE AREA MAP

PRELIMINARY

DESIGN BY: B. ROWNES	CHECKED BY: J. BONDANK
DRAWN BY: B. GASPERS	DATE: 9–12–07
CLIENT I.D. ICC00101	SEGA PROJECT NO. 07–201
CADD FILE NAME: 07201–C400.dwg	
DRAWING NO. C400	REV. B

N:\2007\07201\dwgs\ce\07201–C400.dwg 12/19/07 12:47pm dsessler

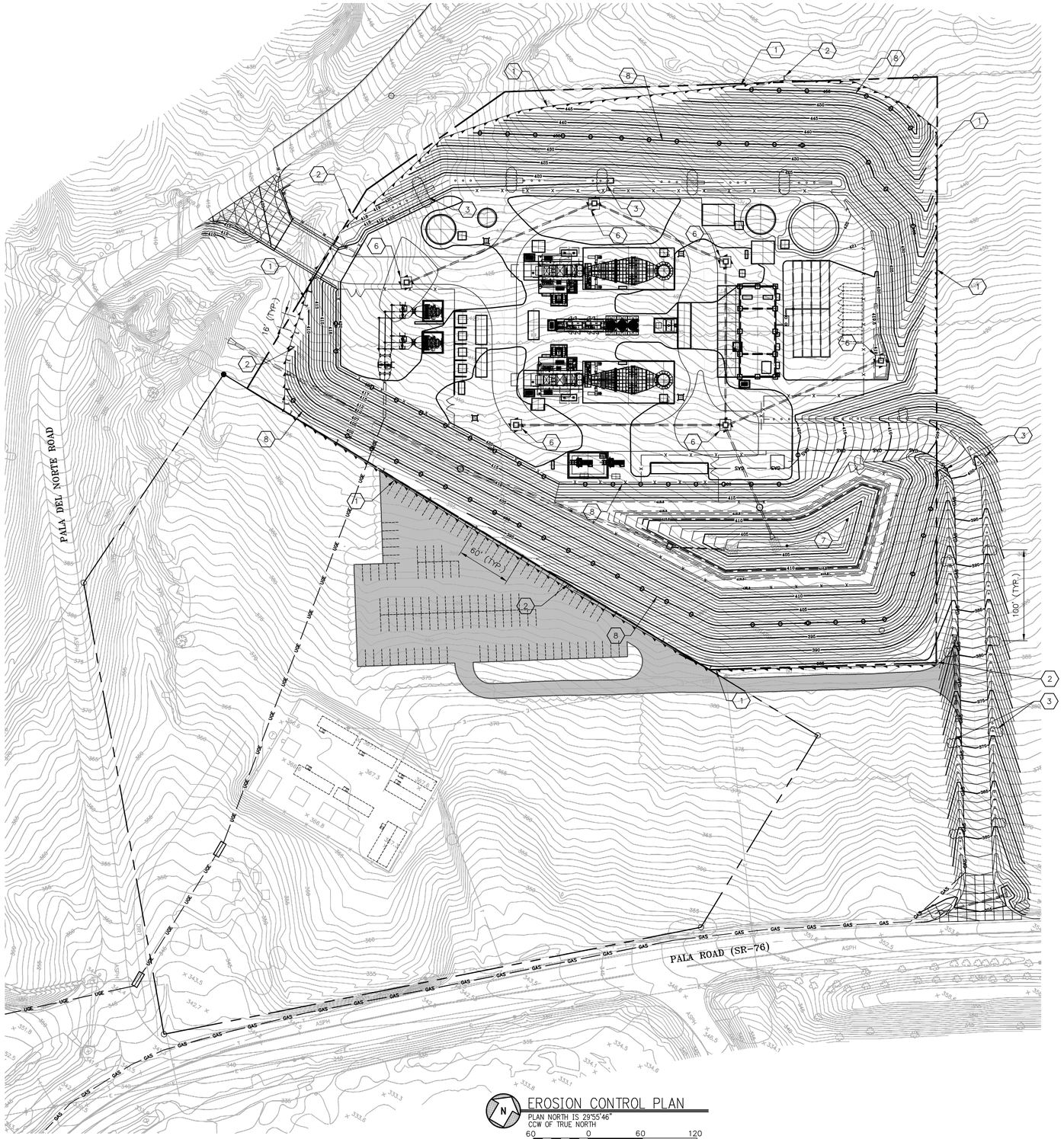

EROSION CONTROL PLAN

PLAN NORTH IS 29°55'46" CCW OF TRUE NORTH

60 0 60 120

SCALE IN FEET

EROSION CONTROL KEYNOTES:

1. INSTALL TEMPORARY LINEAR SEDIMENT BARRIER (TYPE SILT FENCE), SEE DETAIL DWG C501.
2. INSTALL CROSS BARRIER (SAND BAGS), SEE DETAIL DWG. C501
3. INSTALL TEMPORARY GRAVEL BAG BARRIER, SEE DETAIL DWG C501.
4. INSTALL TIRE WASH, SEE DETAIL DWG C501.
5. INSTALL CONCRETE WASHOUT FACILITY, SEE DETAIL DWG C502.
6. INSTALL DROP INLET PROTECTION, SEE DETAIL DWG C502.
7. INSTALL SEDIMENT TRAP RISER–STORMWATER DETENTION BASIN SHALL BE SEDIMENT SETTLING BASIN DURING CONSTRUCTION, SEE DETAIL DWG C502.
6. INSTALL TEMPORARY FIBER ROLL, SEE DETAIL DWG C502.

EROSION CONTROL NOTES:

1. SILT FENCE SHALL BE CLEANED AND REPAIRED WHEN SILT BUILD–UP REACHES 1/3 SILT FENCE HEIGHT.
2. CLEARING AND GRUBBING WORK SHALL COMPLY WITH THE SAN DIEGO COUNTY, CALIFORNIA STANDARDS AND SPECIFICATIONS LATEST EDITION.
3. NO VEGETATION OR CONSTRUCTION DEBRIS SHALL BE BURIED ON SITE AND NO BURNING PITS SHALL BE PLACED IN THE FUTURE RIGHT OF WAY OR LIKELY BUILDING LOCATIONS, OR SANITARY SEWER EASEMENTS. CONTRACTOR SHALL COORDINATE BURNING PIT AND BURIAL LOCATIONS WITH SAN DIEGO COUNTY, CALIFORNIA.
4. ALL DISTURBED AREAS THAT REMAIN ACTIVE FOR MORE THAN 21 DAYS SHALL BE STABILIZED BY SEEDING, SODDING, MULCHING, COVERING OR BY OTHER EQUIVALENT EROSION CONTROL MEASURES AS SOON AS PRACTICAL, BUT IN NO CASE MORE THAN 14 DAYS AFTER THE CONSTRUCTION ACTIVITY IN THAT PORTION OF THE SITE HAS TEMPORARILY OR PERMANENTLY CEASED.
5. PRIOR TO ANY GRADING, STRIPPING, EXCAVATING, FILLING OR ANY OTHER DISTURBANCE OF THE NATURAL GROUND COVER, THE CONTRACTOR SHALL INSTALL ALL EROSION AND SEDIMENT CONTROL MEASURES. THE CONTRACTOR SHALL MAINTAIN THESE DEVICES THROUGHOUT THE DURATION OF THE PROJECT AND UNTIL PERMANENT VEGETATION IS PROPERLY ESTABLISHED.
6. STOCKPILES SHALL BE LOCATED AWAY FROM SLOPES AND TRAFFIC ROUTES AND BE TEMPORARILY SEEDED AS SOON AS POSSIBLE, NO MORE THAN 30 WORKING DAYS OR 120 CALENDAR DAYS AFTER FORMATION OF THE STOCKPILE. SILT FENCE SHALL BE PLACED APPROPRIATELY AROUND THE STOCKPILE TO CONTROL EROSION.
7. THE SITE SHALL HAVE GRADED ROADS AND ACCESS DRIVES TO PARKING AREAS OF SUFFICIENT WIDTH AND LENGTH TO PREVENT SEDIMENT FROM BEING TRACKED ON TO PUBLIC ROADWAYS. ANY SEDIMENT REACHING A PUBLIC OR PRIVATE ROAD SHALL BE REMOVED. BULK CLEARING OF ACCUMULATED SEDIMENT SHALL BE RETURNED TO THE POINT OF LIKELY ORIGIN OR OTHER SUITABLE LOCATION BEFORE THE END OF EACH WORK DAY. CONSTRUCTION ENTRANCES SHALL BE ROCKED PRIOR TO ANY OTHER SITE WORK.
8. EROSION AND SEDIMENTATION CONTROLS AND SEEDING SHALL MEET THE STANDARDS AND SPECIFICATIONS OF SAN DIEGO COUNTY, CALIFORNIA.

LEGEND

- FOUND MONUMENT AS NOTED
- SET 1" IRON PIPE WITH "POSMAS" PLUG UNLESS NOTED OTHERWISE
- PROPERTY LINE
- 400 EXISTING CONTOUR
- 380 PROPOSED MAJOR CONTOUR
- 383 PROPOSED MINOR CONTOUR
- GAS PROPOSED GAS LINE
- UGE PROPOSED UNDERGROUND ELECTRICAL
- E ELECTRIC LINE
- T TELEPHONE (COMMUNICATIONS) LINE
- PROPOSED RCP STORMWATER PIPE
- W PROPOSED WATERLINE
- OHE EXISTING T&D LINE
- X EXISTING FENCE
- EXISTING ROAD
- X PROPOSED FENCE
- PARCEL LINE
- DRAINAGE PATH
- EXISTING ORCHARD LINE
- PROPOSED RIP RAP
- PROPOSED CRUSHED ROCK SURFACE
- PROPOSED ROAD SURFACE
- PROPOSED CONCRETE
- PROPOSED NATIVE GROUND COVER
- PROPOSED LANDSCAPING
- TEMPORARY GRAVEL BAG BARRIER
- CROSS BARRIER
- PROPOSED SILT FENCE EROSION CONTROL
- FIBER ROLL

REV.	DATE	DESCRIPTION	DWN	CHK
A	11–30–07	ISSUED FOR MILESTONE 4	BGG	WHR
B	12–19–07	ISSUED FOR AMENDED SPPE APPLICATION	BGG	WHR

Sealed Only When Signed in Blue Ink

Sega®
Engineers – Architects – Technicians
Design – Construction – Field Service
16041 Foster
P.O. Box 1000
Stilwell, Kansas 66085–1000

ORANGE GROVE ENERGY L.P.
Schaumburg, IL

ORANGE GROVE POWER PLANT

EROSION CONTROL PLAN

PRELIMINARY

DESIGN BY: B. ROWNES	CHECKED BY: J. BONDANK
DRAWN BY: B. GASPERS	DATE: 9–12–07
CLIENT I.D. ICC00101	SEGA PROJECT NO. 07–201

CADD FILE NAME: 07201–C500.dwg

DRAWING NO. C500 REV. B

N:\2007\07201\dwgs\ce\07201–C500.dwg 12/19/07 12:59pm dsessler

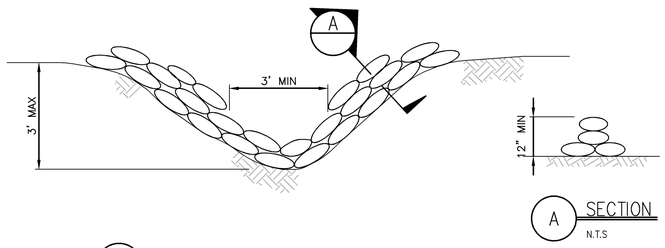

1 TYPICAL TEMPORARY GRAVEL BAG BARRIER
N.T.S

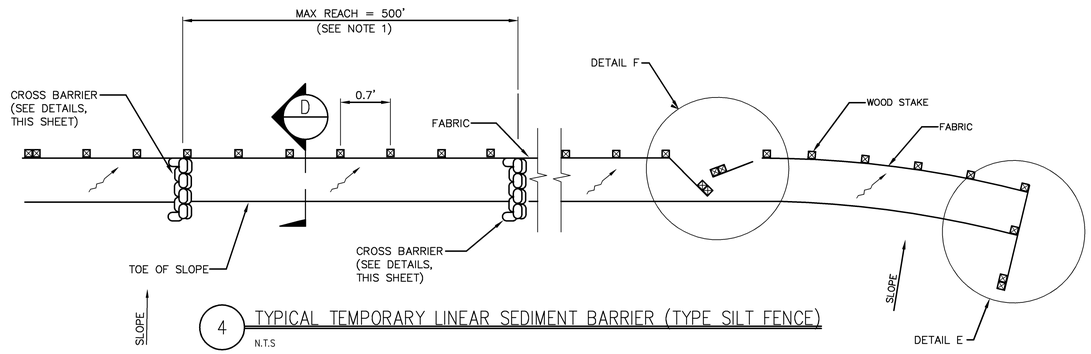

4 TYPICAL TEMPORARY LINEAR SEDIMENT BARRIER (TYPE SILT FENCE)
N.T.S

NOTE:
CONSTRUCT SEDIMENT BARRIER
AND CHANNELIZE RUNOFF TO
SEDIMENT TRAPPING DEVICE

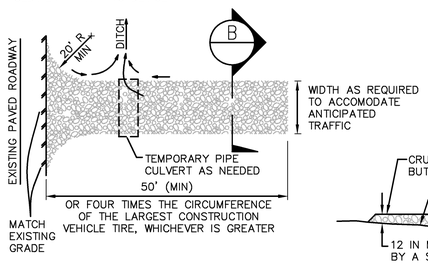

2 TYPICAL TIRE WASH
N.T.S

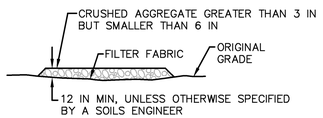

B SECTION
N.T.S

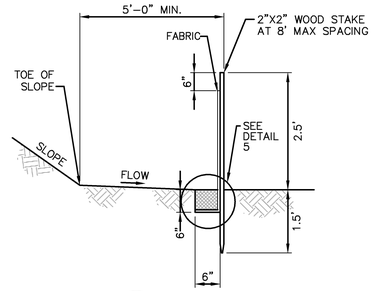

D SECTION
N.T.S

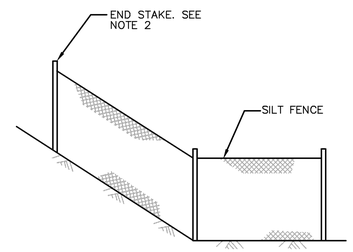

E END DETAIL
N.T.S

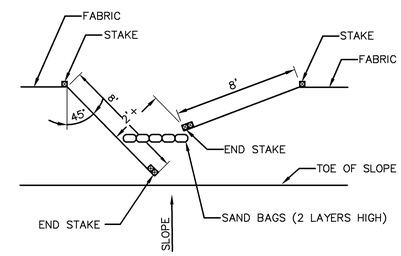

F OPTIONAL MAINTENANCE OPENING DETAIL
N.T.S.
(SEE NOTE 11)

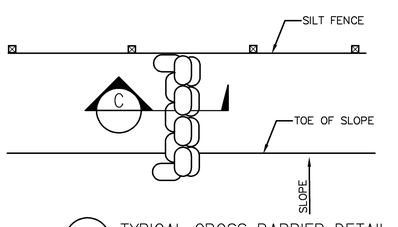

3 TYPICAL CROSS BARRIER DETAIL
N.T.S

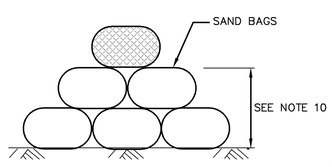

C SECTION
N.T.S

NOTES

1. CONSTRUCT THE LENGTH OF EACH REACH SO THAT THE CHANGE IN BASE ELEVATION ALONG THE REACH DOES NOT EXCEED 1/3 THE HEIGHT OF THE LINEAR BARRIER, IN NO CASE SHALL THE REACH LENGTH EXCEED 500 FEET.
2. THE LAST 8 FEET OF FENCE SHALL BE TURNED UP SLOPE.
3. STAKE DIMENSIONS ARE NOMINAL.
4. DIMENSIONS MAY VARY TO FIT FIELD CONDITION.
5. STAKES SHALL BE SPACED AT 8 FOOT MAXIMUM, AND SHALL BE POSITIONED ON DOWNSTREAM SIDE OF FENCE.
6. STAKES TO OVERLAP AND FENCE FABRIC TO FOLD AROUND EACH STAKE ONE FULL TURN. SECURE TO STAKE WITH 4 STAPLES.
7. STAKES SHALL BE DRIVEN TIGHTLY TOGETHER TO PREVENT POTENTIAL FLOW-THROUGH OF SEDIMENT AT JOINT. THE TOPS OF THE STAKES SHALL BE SECURED WITH WIRE.
8. FOR END STAKES, FENCE FABRIC SHALL BE FOLDED AROUND TWO STAKES ONE FULL TURN AND SECURED WITH 4 STAPLES.
9. MINIMUM 4 STAPLES PER STAKE. DIMENSIONS SHOWN ARE TYPICAL.
10. CROSS BARRIERS SHALL BE A MINIMUM OF 1/3, AND A MAXIMUM OF $\frac{1}{2}$ THE HEIGHT OF THE LINER BARRIER.
11. MAINTENANCE OPENINGS SHALL BE CONSTRUCTED IN A MANNER TO ENSURE SEDIMENT REMAINS BEHIND SILT FENCE.
12. JOINING SECTIONS SHALL NOT BE PLACED AT SUMP LOCATIONS.
13. SANDBAG ROWS AND LAYERS SHALL BE OFFSET TO ELIMINATE GAPS.

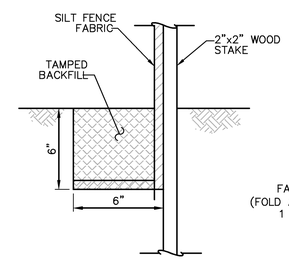

5 DETAIL
N.T.S

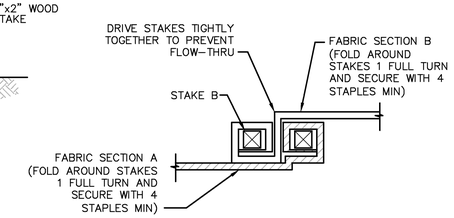

6 JOINING SECTION DETAIL (TOP VIEW)
N.T.S

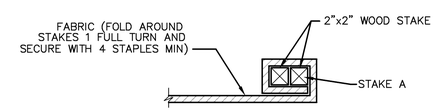

7 END STAKE DETAIL (TOP VIEW)
N.T.S

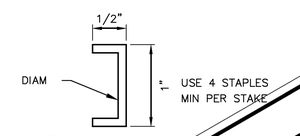

8 STAPLE DETAIL
N.T.S

TYPICAL TEMPORARY SILT FENCE
N.T.S.

REV.	DATE	DESCRIPTION	DWN	CHK
A	11-30-07	ISSUED FOR MILESTONE 4	BGG	WHR
B	12-19-07	ISSUED FOR AMENDED SPPE APPLICATION	BGG	WHR

Sealed Only When Signed in Blue Ink

Sega®
Engineers – Architects – Technicians
Design – Construction – Field Service
16041 Foster
P.O. Box 1000
Stilwell, Kansas 66085-1000

ORANGE GROVE ENERGY L.P.
Schaumburg, IL

ORANGE GROVE POWER PLANT
EROSION CONTROL PLAN
DETAILS

PRELIMINARY

DESIGN BY: B. ROWINES	CHECKED BY: J. BONDANK
DRAWN BY: B. GASPERS	DATE: 9-12-07
CLIENT I.D. ICC00101	SEGA PROJECT NO. 07-201
CADD FILE NAME: 07201-C501.dwg	
DRAWING NO. C501	REV. B

N:\2007\07201\dwgs\ce\07201-C501.dwg 12/19/07 12:55pm dsessler

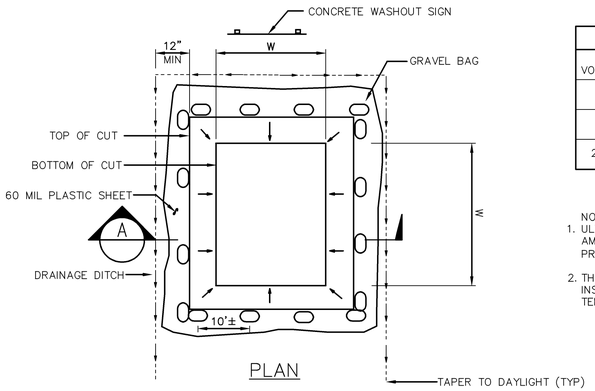

PLAN

PIT SIZING CHART		
APPROX. VOLUME OF SPOILS	MIN. WIDTH (W)	DEPTH (D)
5 CY OR LESS	3'	1.0'
5 TO 20 CY	10'	1.0'
20 CY OR MORE	15'	1.5'

NOTES:
1. ULTIMATE WASHOUT SIZE DETERMINED BY AMOUNT OF CONCRETE REQUIRED FOR PROJECT AREA AND/OR POUR LOCATION.
2. THE CONCRETE WASHOUT SIGN SHALL BE INSTALLED WITHIN 20 FEET OF THE TEMPORARY CONCRETE WASHOUT

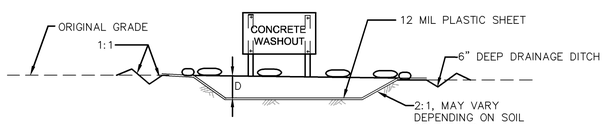

A SECTION
N.T.S

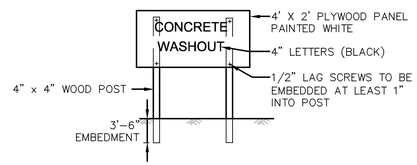

B SIGN ELEVATION DETAIL
N.T.S

1 TEMPORARY CONCRETE WASHOUT FACILITY
(BELOW GRADE)
N.T.S

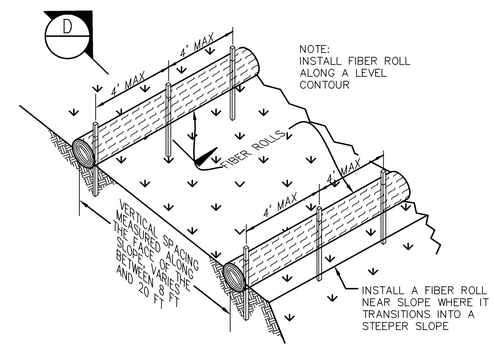

3 TYPICAL FIBER ROLL INSTALLATION
N.T.S

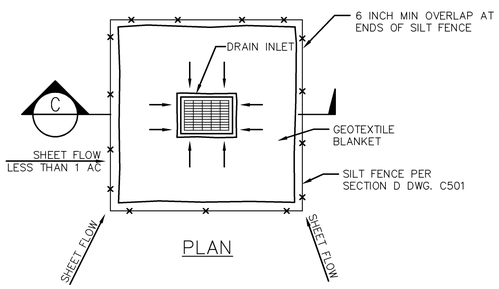

PLAN

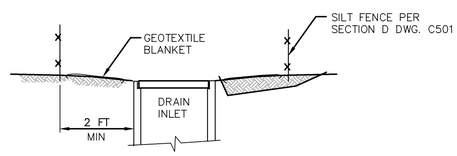

C SECTION
N.T.S

2 TYPICAL DROP INLET PROTECTION DETAIL
N.T.S

NOTES:
1. FOR USE IN AREAS WHERE GRADING HAS BEEN COMPLETED AND FINAL SOIL STABILIZATION AND SEEDING ARE PENDING.
2. NOT APPLICABLE IN PAVED AREAS.
3. NOT APPLICABLE WITH CONCENTRATED FLOWS.

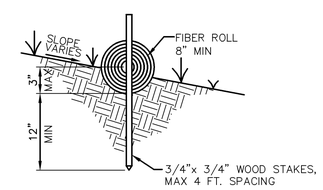

D ENTRENCHMENT DETAIL
N.T.S

REV.	DATE	DESCRIPTION	DWN	CHK
A	11-30-07	ISSUED FOR MILESTONE 4	BGG	WHR
B	12-19-07	ISSUED FOR AMENDED SPPE APPLICATION	BGG	WHR

Sealed Only When Signed in Blue Ink

Sega ®
Engineers – Architects – Technicians
Design – Construction – Field Service
16041 Foster
P.O. Box 1000
Stilwell, Kansas 66085-1000

ORANGE GROVE ENERGY L.P.
Schaumburg, IL

ORANGE GROVE POWER PLANT
EROSION CONTROL PLAN
DETAILS

PRELIMINARY

DESIGN BY: B. ROWINES	CHECKED BY: J. BONDANK
DRAWN BY: B. GASPERS	DATE: 9-12-07
CLIENT I.D. ICC00101	SEGA PROJECT NO. 07-201

CADD FILE NAME: 07201-C502.dwg

DRAWING NO. C502 | REV. B

N:\2007\07201\dwgs\ce\07201-C502.dwg 12/19/07 12:55pm dsessler

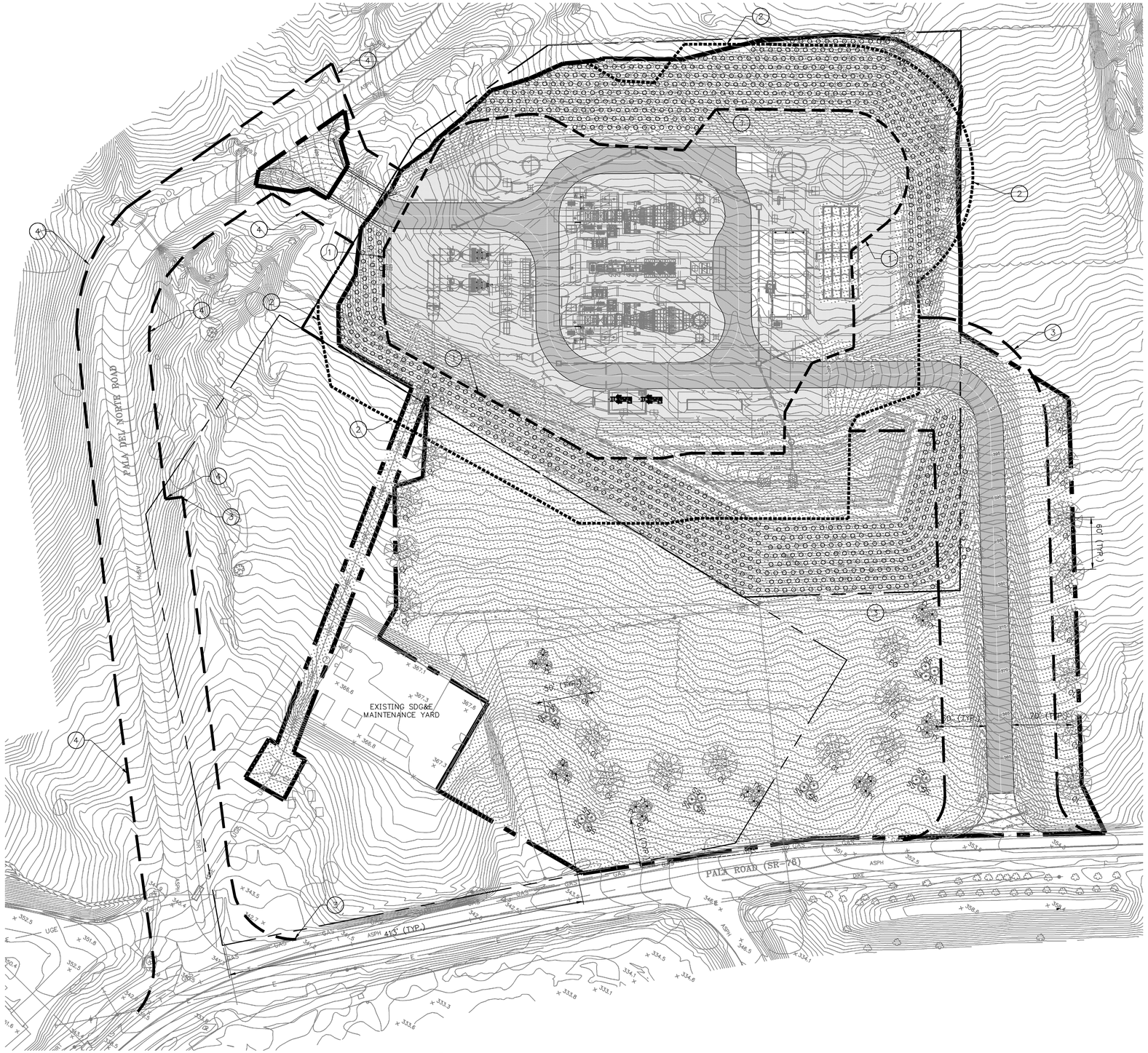

SITE LANDSCAPING PLAN

PLAN NORTH IS 29°55'46" CCW OF TRUE NORTH

60 0 60 120

SCALE IN FEET

KEYNOTES:

1. FUEL MODIFICATION ZONE A (DEFENSIBLE SPACE): 50' AROUND ALL SIDES OF ALL EQUIPMENT OR STRUCTURES. PLEASE REFERENCE THE FIRE PROTECTION PLAN FOR DETAILS.
2. FUEL MODIFICATION ZONE B: 50' TO 125' AROUND ALL SIDES OF EQUIPMENT OR STRUCTUES EXCEPT FOR SPECIAL PROVISIONS AT WEST SIDE OF FACILITY AS NEEDED TO MINIMIZE DISTURBANCE TO SENSITIVE HABITAT. PLEASE REFERENCE THE FIRE PROTECTION PLAN FOR DETAILS.
3. ROADWAY FUEL MODIFICATION ZONE: FROM EDGE OF ROADWAY TO 50' OUTSIDE EDGE OF ROADWAYS. PLEASE REFERENCE THE FIRE PROTECTION PLAN FOR DETAILS.
4. ROADWAY FUEL MODIFICATION ZONE: FROM EDGE OF ROADWAY TO 30' OUTSIDE EDGE OF ROADWAYS. PLEASE REFERENCE THE FIRE PROTECTION PLAN FOR DETAILS.

SITE SCREENING LEGEND

- CL — COAST LIVE OAK OR ENGELMAN OAK POTENTIAL MATURE SIZE
- EO — ENGELMANN OAK POTENTIAL MATURE SIZE
- TY — TOYON POTENTIAL MATURE SIZE
- SS — SUGAR SUMAC POTENTIAL MATURE SIZE
- SHRUBS OF AT LEAST 1 GALLON MIN. SIZE OR TREES OF A 5 GALLON MIN. SIZE PER SECTION 87.417(B) OF THE COUNTY OF SAN DIEGO GRADING ORDINANCES.

FACILITY/ITEM	ESTIMATED CONSTRUCTION DISTURBANCE FOOTPRINT
ONSITE FACILITIES	8.15 ACERS
PROJECT DRIVEWAYS (2)	1.13 ACERS
LINEAR FACILITIES	0.30 ACERS
CONSTRUCTION PARKING & LAYDOWN AREA (LANDSCAPING AFTER CONSTRUCTION)	5.73 ACERS
TOTAL	15.31 ACERS

LEGEND

- FOUND MONUMENT AS NOTED
- SET 1" IRON PIPE WITH "POSMAS" PLUG UNLESS NOTED OTHERWISE
- PROPERTY LINE
- 400 — EXISTING CONTOUR
- 380 — PROPOSED MAJOR CONTOUR
- 383 — PROPOSED MINOR CONTOUR
- GAS — PROPOSED GAS LINE
- UGE — PROPOSED UNDERGROUND ELECTRICAL
- E — ELECTRIC LINE
- T — TELEPHONE (COMMUNICATIONS) LINE
- PROPOSED RCP STORMWATER PIPE
- W — PROPOSED WATERLINE
- OHE — EXISTING T&D LINE
- X — EXISTING FENCE
- EXISTING ROAD
- X — PROPOSED FENCE
- PARCEL LINE
- DRAINAGE PATH
- EXISTING ORCHARD LINE
- PROPOSED RIP RAP
- PROPOSED CRUSHED ROCK SURFACE
- PROPOSED ROAD SURFACE
- PROPOSED CONCRETE
- PROPOSED NATIVE GROUND COVER
- FUEL MODIFICATION ZONE A
- FUEL MODIFICATION ZONE B
- ROADWAY FUEL MODIFICATION ZONE
- LIMIT OF DISTURBED AREA

REV.	DATE	DESCRIPTION	DWN	CHK
A	11-30-07	ISSUED FOR MILESTONE 4	BGG	WHR
B	12-11-07	ISSUED FOR TRC COMMENTS	BGG	WHR
C	12-17-07	ISSUED FOR FPP	BGG	WHR
D	12-18-07	ISSUED PER TRC COMMENTS	BGG	MJB
E	12-19-07	ISSUED FOR AMENDED SPPE APPLICATION	BGG	WHR
F	12-20-07	RE-ISSUED FOR AMENDED SPPE APPLICATION	BGG	WHR

Sealed Only When Signed in Blue Ink

Sega®
Engineers – Architects – Technicians
Design – Construction – Field Service
16041 Foster
P.O. Box 1000
Stilwell, Kansas 66085-1000

ORANGE GROVE ENERGY L.P.
Schaumburg, IL

ORANGE GROVE POWER PLANT

LANDSCAPING PLAN

PRELIMINARY

DESIGN BY: M. BLAKE	CHECKED BY: B. ROMINES
DRAWN BY: B. GASPERS	DATE: 9-12-07
CLIENT I.D. ICC00101	SEGA PROJECT NO. 07-201

CADD FILE NAME: 07201-L100.dwg

DRAWING NO. L100 REV. F

N:\2007\07201\dwgs\ce\07201-L100.dwg 12/20/07 1:32pm bgaspers

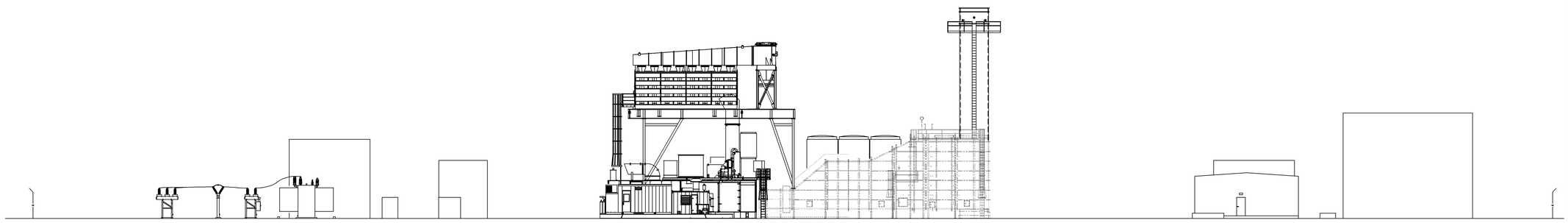

SITE ELEVATION
LOOKING NORTH

20 0 20 40
SCALE IN FEET

REV.	DATE	DESCRIPTION	DWN	CHK
A	6-18-07	PRELIMINARY	RLK	JKB
B	12-12-07	ISSUED FOR SPPE	RLK	JKB
C	12-19-07	ISSUED FOR AMENDED SPPE APPLICATION	BGG	JKB

Sealed Only When Signed in Blue Ink

Sega ®
Engineers – Architects – Technicians
Design – Construction – Field Service

16041 Foster
P.O. Box 1000
Stilwell, Kansas 66085-1000

ORANGE GROVE ENERGY L.P.
Schaumburg, IL

ORANGE GROVE POWER PLANT

ELEVATION
LOOKING NORTH

DESIGN BY: J. BONDANK	CHECKED BY: J. BONDANK
DRAWN BY: R. KUHNS	DATE: 6-18-07
CLIENT I.D. ICC00101	SEGA PROJECT NO. 07-201

CADD FILE NAME: 07201-GA100.dwg

DRAWING NO.	REV.
GA100	C

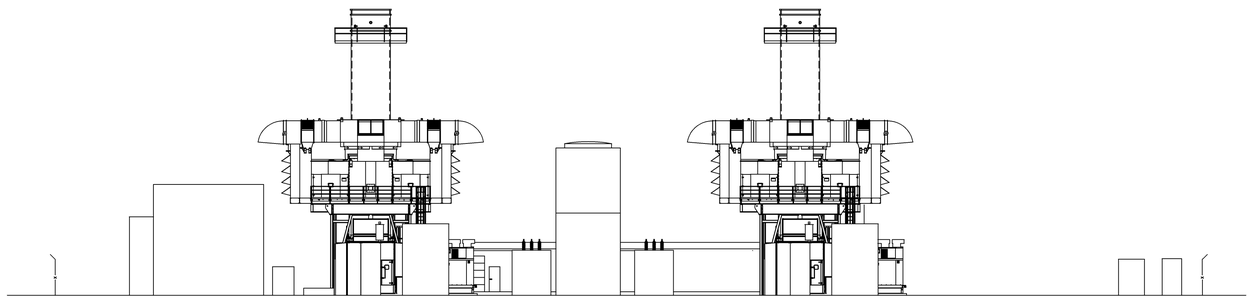

SITE ELEVATION
LOOKING EAST

20 0 20 40
SCALE IN FEET

REV.	DATE	DESCRIPTION	DWN	CHK
A	6-18-07	PRELIMINARY	RLK	JKB
B	12-12-07	ISSUED FOR SPPE	RLK	JKB
C	12-19-07	ISSUED FOR AMENDED SPPE APPLICATION	BGG	JKB

Sealed Only When Signed in Blue Ink

Sega ®

Engineers – Architects – Technicians
Design – Construction – Field Service

16041 Foster
P.O. Box 1000
Stilwell, Kansas 66085-1000

ORANGE GROVE ENERGY L.P.
Schaumburg, IL

ORANGE GROVE POWER PLANT

ELEVATION
LOOKING EAST

DESIGN BY: J. BONDANK	CHECKED BY: J. BONDANK
DRAWN BY: R. KUHNS	DATE: 6-18-07
CLIENT I.D. ICC00101	SEGA PROJECT NO. 07-201

CADD FILE NAME: 07201-GA101.dwg

DRAWING NO.	REV.
GA101	C

N:\2007\07201\dwgs\ee\07201-GA101.dwg 12/19/07 1:39pm dsessler

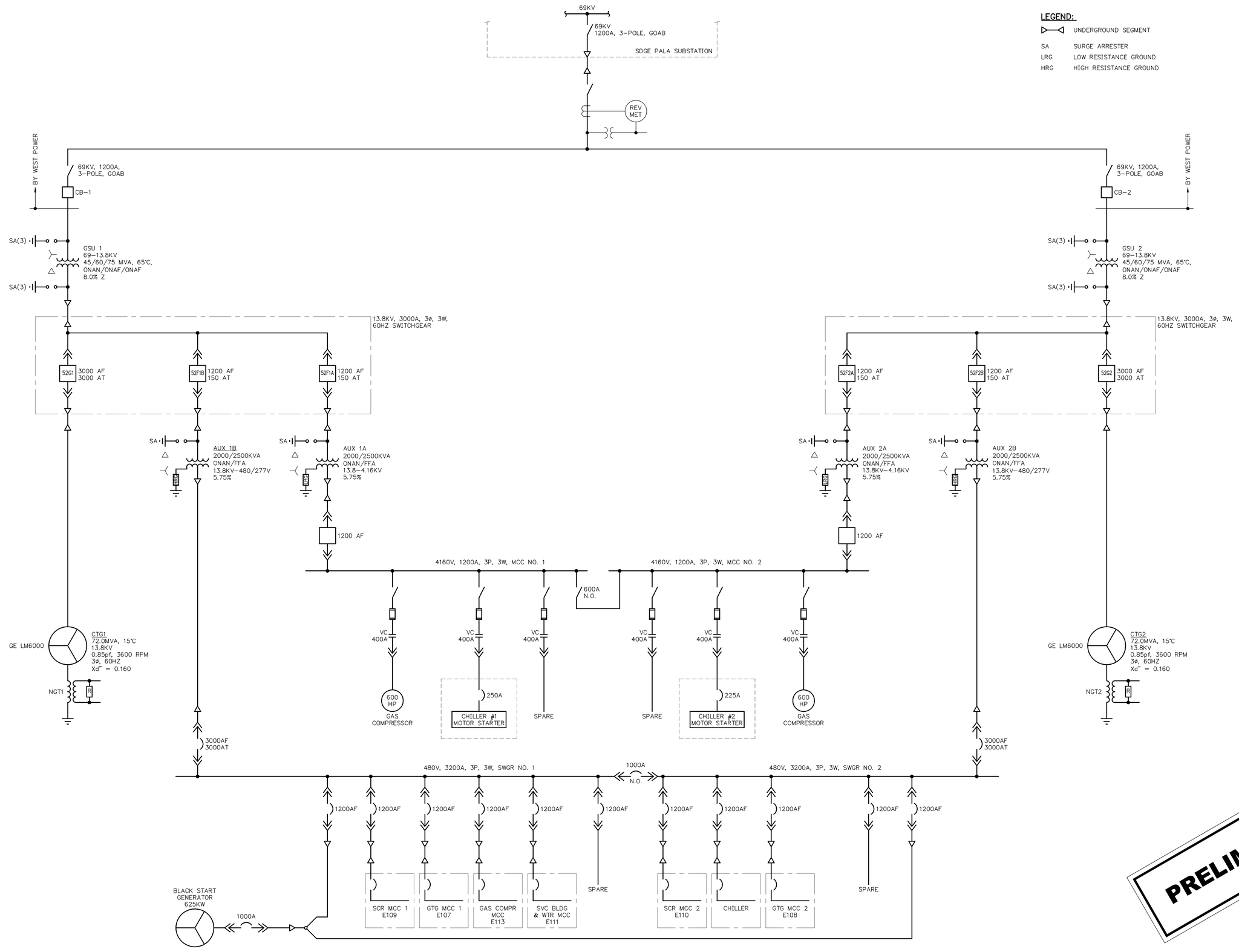

REV.	DATE	DESCRIPTION	DWN	CHK
A	5-11-07	PRELIMINARY	RLK	JKB
B	5-29-07	ISSUED FOR REVIEW	BGG	JKB
C	9-21-07	ISSUED PER CEC DATA REQUEST	BGG	JKB
D	11-26-07	RE-ISSUED FOR REVIEW	RLK	JKB
E	12-19-07	ISSUED FOR AMENDED SPPE APPLICATION	BGG	WHR

Sealed Only When Signed in Blue Ink

Sega ®
Engineers – Architects – Technicians
Design – Construction – Field Service
16041 Foster
P.O. Box 1000
Stilwell, Kansas 66085-1000

ORANGE GROVE ENERGY L.P.
Schaumburg, IL

ORANGE GROVE POWER PLANT
PLANT SYSTEM ONE-LINE

PRELIMINARY

DESIGN BY: JKB	CHECKED BY: JKB
DRAWN BY: RLK	DATE: 4-13-07
CLIENT I.D. JP000101	SEGA PROJECT NO. 07-0201
CADD FILE NAME: 07201-E100	
DRAWING NO. E100	REV. E

N:\2007\07201\dwgs\ee\07201-E100.dwg 12/19/07 1:22pm ghoppe

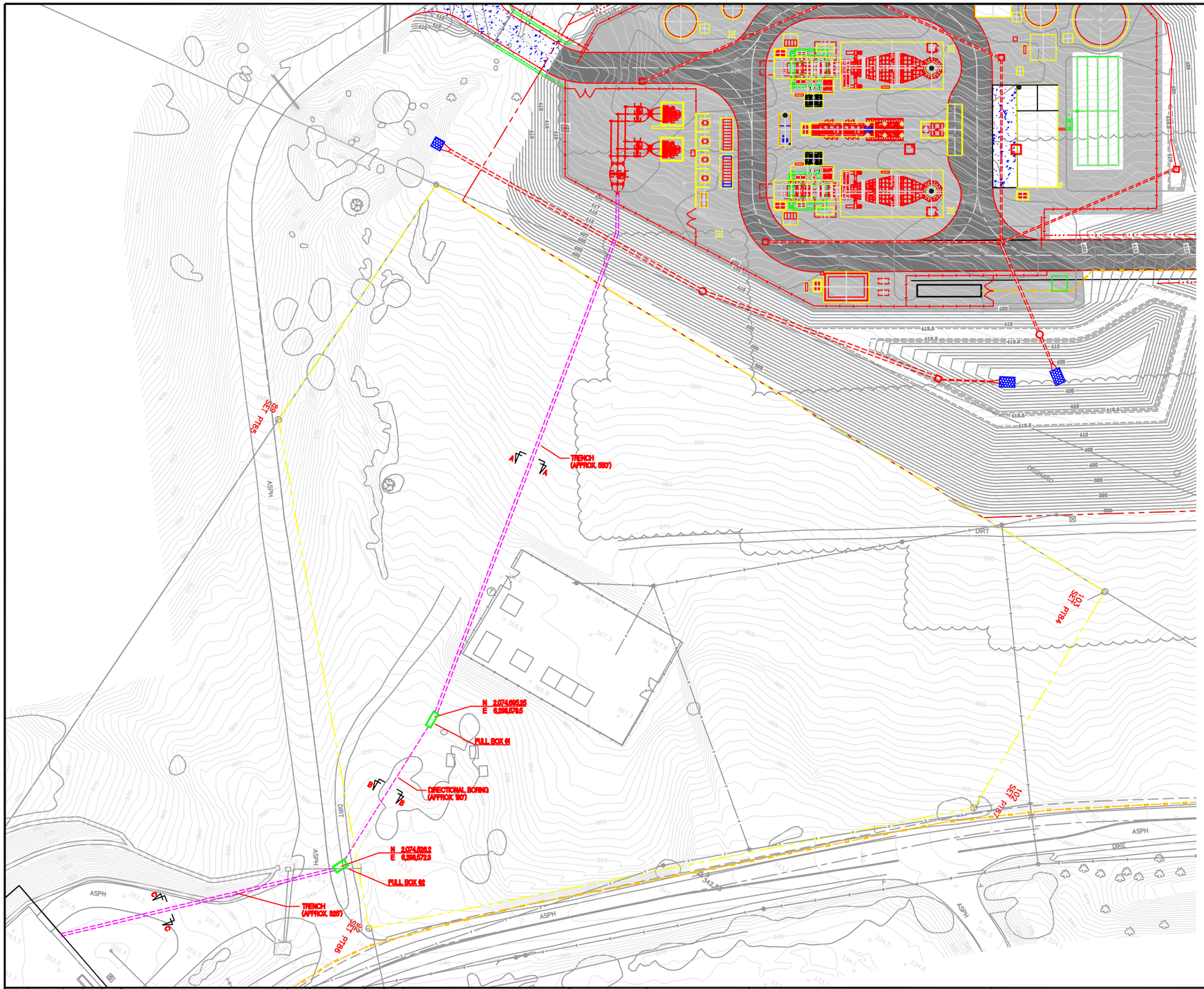

NOTES:

1. THE UNDERGROUND 69kV TRANSMISSION LINE IN THE TRENCH SECTIONS SHALL BE AT THE DEPTH SHOWN ON DETAILS A/E-20 C/E-20

2. THE UNDERGROUND 69kV TRANSMISSION LINE IN THE HORIZONTAL DIRECTIONAL BORING (HDD) SECTION SHALL BE AS SHOWN ON DETAIL B/E-20

3. CONDUIT BORINGS UNDER CREEK ARE TO BE LOCATED SUCH THAT THERE IS A MINIMUM OF 7'-0" BETWEEN THE CREEK BED AND THE TOP OF THE HIGHEST DUCT.

4. THE EXACT ROUTE OF THE TRENCH SECTION SHALL BE DETERMINED IN THE FIELD PRIOR TO CONSTRUCTION. THE STAKED ROUTE SHALL BE APPROVED BY ICC REPRESENTATIVES.

5. THE EXACT LOCATION OF THE HDD POINTS AND PULL BOXES SHALL BE STAKED AND INSPECTED BY ICC REPRESENTATIVES.

6. THE HDD PLAN SHALL BE APPROVED BY ICC PRIOR TO CONSTRUCTION.

REFERENCES:

E-20 69kV UNDERGROUND TRANSMISSION LINE, DETAILS

EMISSION COORDINATES SYMBOL ⊗

DESCRIPTION	NORTHING	EASTING
COMBUSTION TURBINE #1 (NORTH)	2075491	6298683
COMBUSTION TURBINE #2 (SOUTH)	2075387	6298743
DIESEL FIRE PUMP (±2')	2075517	6298766
BLACK START GENERATOR (±2')	2075379	6298582

SITE LAYOUT PLAN

PLAN NORTH IS 30°00'00" CCW OF TRUE NORTH

1"=50' 50' 0' 50' 100'

REV	DATE	BY	SUB	APP	DESCRIPTION	REV	DATE	BY	SUB	APP	DESCRIPTION
A	12-13-07	PE	PE		ISSUED FOR REVIEW						

DESIGNED BY
DRAWN BY
CHECKED BY
IN CHARGE
DATE

WestPower
Power Generation & Distribution Engineering
2930 Domingo Ave, Suite 101, Berkeley, CA 94705
Phone : (510) 351-5566 Fax : (510) 848-0505

ORANGE GROVE POWER PLANT
69kV UNDERGROUND TRANSMISSION LINE
ROUTING PLAN

CADD FILE NO | CADD DATE
SCALE 1"=50'
CONTRACT NUMBER | ACTIVITY CODE
DWG NO E-19 | REV A | PAGE NO

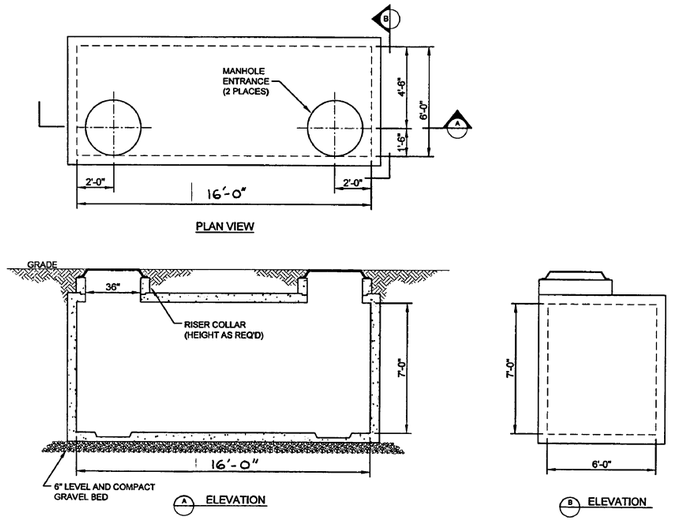

PULL BOX #1 DETAIL
SCALE: 1/4" = 1'-0"

NOTES:

- MANHOLE SECTIONS AND COVERS FROM DIFFERENT SUPPLIERS ARE NOT INTERCHANGEABLE.
- THE PREFERRED LOCATION FOR A 3325 MANHOLE IS IN NONVEHICULAR TRAFFIC AREAS (BEHIND CURBS, PARKWAY POSITION, ETC.).
- 3325 MANHOLES ARE DELIVERED BY THE SUPPLIER TO JOB SITE.
- LIFTING ANCHORS ARE NOT TO BE USED FOR CABLE PULLING.

BILL OF MATERIAL:

ITEM	DESCRIPTION	QUANTITY	CONSTR. STD OR PAGE NO.	STOCK NUMBER	ASSEMBLY UNIT
1	TOP SECTION, 4'-9"	1	3325.1	475902	3325MH
2	BASE SECTION, 4'-9"	1	3325.1		
3	SEALANT, PLASTIC MASTIC (D)	AS REQ'D	3306	631872	–
4	GRAVEL, 3/8" – 3/4" (B)	AS REQ'D	–	–	–

INSTALLATION:

A. ESTABLISH THE MANHOLE LOCATION PAYING PARTICULAR ATTENTION TO FOREIGN UTILITY PLACEMENTS. RELOCATING THE MANHOLE TO ANOTHER LOCATION REQUIRES APPROVAL FROM SERVICE PLANNING.

(B) PLACE GRAVEL 6" DEEP ON EXCAVATION BOTTOM AND SET MANHOLE LEVEL.

C. FOR 48" X 60" MANHOLE NECK AND COVER, SEE STANDARD 3332.

(D) USE MASTIC SEALING COMPOUND IN ALL SECTIONS (SEE STANDARD 3306).

E. INSTALL CONDUITS USING THE BOTTOM OUTSIDE (CLOSEST TO THE WALL) KNOCKOUTS FIRST.

F. USE #2 AWG BARE COPPER (STOCK NUMBER 812816) FOR GROUNDS WITH SERVICE POST CONNECTOR (STOCK NUMBER 262560).

G. ON INITIAL CABLE INSTALLATION, OCCUPY LOWEST CONDUIT OPENINGS FIRST.

REFERENCE:

(H) SEE STANDARD 3332 FOR MANHOLE NECK AND COVER TRAFFIC BEARING.

(I) SEE STANDARD 3365 FOR SLURRY BACKFILL.

© 1998 - 2005 San Diego Gas & Electric Company. All rights reserved. Removal of this copyright notice without permission is not permitted under law.

SERVICE GUIDE	Indicates Latest Revision	Completely Revised	New Page	Information Removed

REVISION	SDG&E ELECTRIC STANDARDS	
DATE 1-1-2000 APPD	MANHOLE, TUB TYPE 8' X 14' X 9'-6"	3325.2

SCOPE: THIS STANDARD SHOWS THE INSTALLATION AND MATERIAL REQUIREMENTS FOR A 3325 MANHOLE.

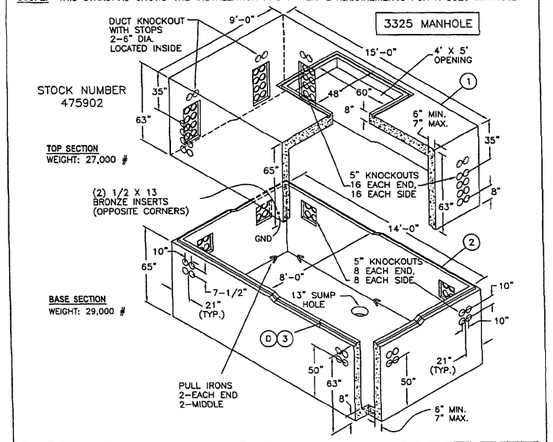

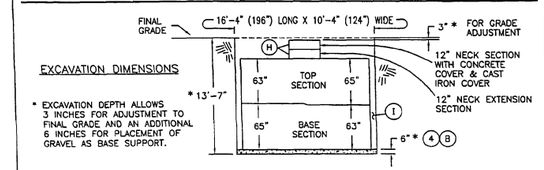

© 1998 - 2005 San Diego Gas & Electric Company. All rights reserved. Removal of this copyright notice without permission is not permitted under law.

SERVICE GUIDE	Indicates Latest Revision	Completely Revised	New Page	Information Removed

3325.1	SDG&E ELECTRIC STANDARDS	REVISION
	MANHOLE, TUB TYPE 8' X 14' X 9'-6"	DATE 1-1-2000 APPD

PULL BOX #2 DETAIL - SDG+E
NOT TO SCALE

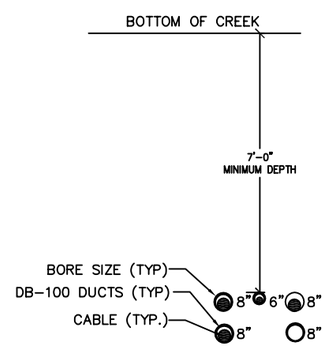

HORIZONTAL DRILLING DETAIL (BB E-19)
SCALE: 1/2" = 1'-0"

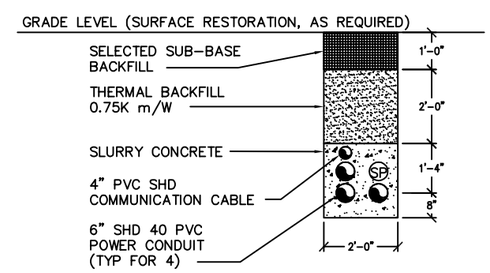

DUCT BANK DETAIL (AA E-19) (CC E-19)
SCALE: 1/2" = 1'-0"

REV	DATE	BY	SUB	APP	DESCRIPTION	REV	DATE	BY	SUB	APP	DESCRIPTION
A	12-13-07	PE			ISSUED FOR REVIEW						

DESIGNED BY
DRAWN BY
CHECKED BY
IN CHARGE
DATE

WestPower
Power Generation & Distribution Engineering
2930 Domingo Ave, Suite 101, Berkeley, CA 94705
Phone : (510) 351-5566 Fax : (510) 848-0505

ORANGE GROVE POWER PLANT
69kV UNDERGROUND TRANSMISSION LINE
DETAILS

CADD FILE NO	CADD DATE
SCALE NONE	
CONTRACT NUMBER	ACTIVITY CODE
DWG NO E-20	REV A / PAGE NO

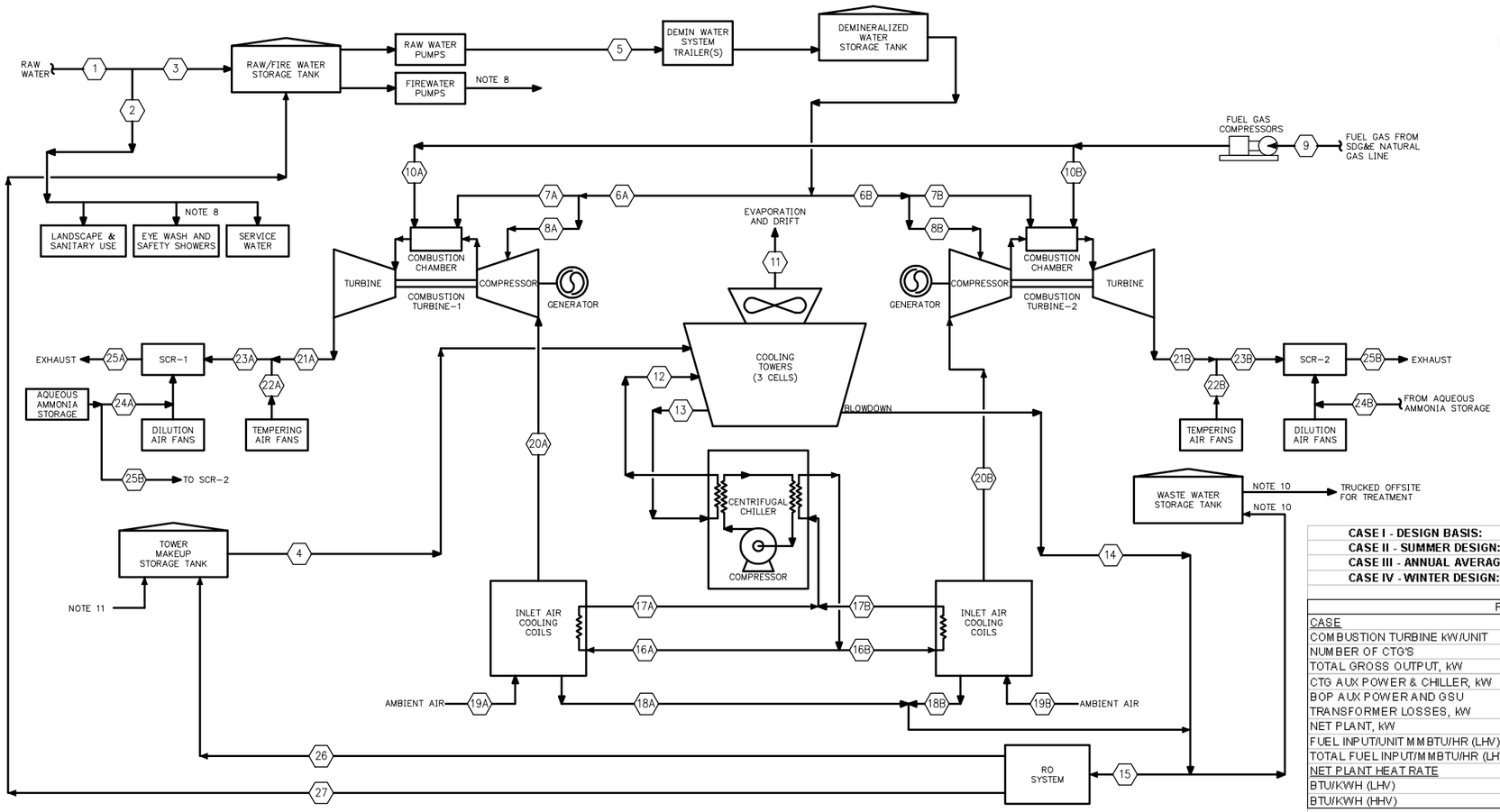

NOTES:

1. FUEL GAS LHV = 915 BTU/SCF.
2. THE VALUES LISTED ON THIS DRAWING ARE BASED ON LM 6000 SPRINT COMBUSTION TURBINES FIRING NATURAL GAS.
3. ELEVATION = 420 FT. ABOVE MEAN SEA LEVEL.
4. COOLING TOWER BLOWDOWN BASED ON 4 CYCLES OF CONCENTRATION.
5. EMISSIONS ARE GUARANTEED VALUES FOR COOLING TOWERS AT BASE LOAD OPERATION.
6. AUXILIARY LOADS ARE PRELIMINARY.
7. FLOWS INICATED ARE DERIVED FROM PRELIMINARY DOCUMENTS.
8. FLOW FOR FIREWATER PUMPS AND FOR EYE WASH AND SAFETY SHOWERS IS TYPICALLY ZERO.
9. BOP AUX POWER LOADS:
   A) TRANSFORMER LOSSES = 505 Kw
   B) GAS COMPRESSORS = 2 x 600 HP
   C) DEMIN PUMP = 2 x 7.5 HP
   D) AIR COMPRESSOR = 40 HP
   E) AREA LIGHTING, HVAC AND MISC LOADS = 115 Kw
   TOTAL = 1,555 Kw
10. FLOW TO AND FROM THE WASTE WATER STORAGE TANK IS TYPICALLY ZERO.
11. WATER SUPPLY IS TRUCKED IN FROM FALLBROOK PLANT.

CASE I - DESIGN BASIS:	86 F (DBT),	70.5 F (WBT),	47% RH	
CASE II - SUMMER DESIGN:	102 F (DBT),	70.5 F (WBT),	21% RH	
CASE III - ANNUAL AVERAGE:	65 F (DBT),	59.9 F (WBT),	75% RH	
CASE IV - WINTER DESIGN:	27 F (DBT),	22.4 F (WBT),	47% RH	

PERFORMANCE SUMMARY

CASE	I	II	III	IV
COMBUSTION TURBINE kW/UNIT	50,428	50,428	50,409	49,389
NUMBER OF CTG'S	2	2	2	2
TOTAL GROSS OUTPUT, kW	100,856	100,856	100,818	98,778
CTG AUX POWER & CHILLER, kW	3,415	3,420	2,115	955
BOP AUX POWER AND GSU TRANSFORMER LOSSES, kW	1,555	1,555	1,555	1,555
NET PLANT, kW	95,886	95,881	97,148	96,268
FUEL INPUT/UNIT MMBTU/HR (LHV)	430.1	430.1	430.1	418.5
TOTAL FUEL INPUT/MMBTU/HR (LHV)	860.2	860.2	860.2	837.0
NET PLANT HEAT RATE				
BTU/KWH (LHV)	8,971	8,972	8,855	8,694
BTU/KWH (HHV)	9,958	9,958	9,829	9,651

STREAM NO.	1				2				3				4				5				6 A/B				7 A/B			
CASE	I	II	III	IV	I	II	III	IV	I	II	III	IV	I	II	III	IV	I	II	III	IV	I	II	III	IV	I	II	III	IV
FLOW RATE (LB/HR)	105,147	105,147	105,147	95,133	30,042	30,042	30,042	20,028	75,105	75,105	75,105	75,105	52,206	52,206	26,103	0	75,105	75,105	75,105	75,105	28,527	28,527	28,527	25,361	20,240	20,240	20,240	21,615
FLOW RATE (GPM)	210	210	210	190	60	60	60	40	150	150	150	150	104	104	52	0	150	150	150	150	56.97	56.97	56.97	50.65	40.42	40.42	40.42	43.17
TEMP (F)	55	60	55	50	55	60	55	50	55	60	55	50	55	60	55	NA	70	75	70	65	70	75	70	65	100	100	100	100

STREAM NO.	8 A/B				9				10 A/B				11				12				13				14			
CASE	I	II	III	IV	I	II	III	IV	I	II	III	IV	I	II	III	IV	I	II	III	IV	I	II	III	IV	I	II	III	IV
FLOW RATE (LB/HR)	8,287	8,287	8,287	3,746	45,278	45,278	45,278	44,052	22,639	22,639	22,639	22,026	39,155	39,155	19,577	0	4,255,950	4,255,950	2,127,975	0	4,255,950	4,255,950	2,127,975	0	13,052	13,052	6,526	0
FLOW RATE (GPM)	16.55	16.55	16.55	7.48	-	-	-	-	-	-	-	-	78	78	39	0	8,500	8,500	4,250	0	8,500	8,500	4,250	0	26	26	13	0
TEMP (F)	100	100	100	100	77	77	77	77	151	151	151	151	-	-	-	-	87	87	87	NA	78	78	78	NA	78	78	78	NA

STREAM NO.	15				16 A/B				17 A/B				18 A/B				19 A/B				20 A/B			
CASE	I	II	III	IV	I	II	III	IV	I	II	III	IV	I	II	III	IV	I	II	III	IV	I	II	III	IV
FLOW RATE (LB/HR)	25,569	19,360	13,836	0	1,502,100	1,502,100	751,050	0	1,502,100	1,502,100	751,050	0	6,259	3,154	3,655	0	1,034,280	1,034,280	1,033,920	1,067,760	1,028,021	1,031,126	1,030,265	1,067,760
FLOW RATE (GPM)	51	39	28	0	3000	3000	1500	0	3000	3000	1500	0	12.5	6.3	7.3	0	-	-	-	-	-	-	-	-
TEMP (F)	78	78	78	NA	40	40	40	NA	51	51	51	NA	70	70	60	NA	85	102	65	27	46	46	46	27

STREAM NO.	21 A/B				22 A/B				23 A/B				24 A/B				25 A/B				26				27			
CASE	I	II	III	IV	I	II	III	IV	I	II	III	IV	I	II	III	IV	I	II	III	IV	I	II	III	IV	I	II	III	IV
FLOW RATE (LB/HR)	1,072,059	1,072,059	1,081,431	1,101,409	1,125	1,125	1,125	0	1,073,184	1,073,184	1,082,556	1,101,409	-	-	-	-	1,083,675	1,083,675	1,093,139	1,112,176	19,177	14,520	10,377	0	6,392	4,840	3,459	0
FLOW RATE (GPM)	-	-	-	-	-	-	-	-	-	-	-	-	0.4	0.4	0.4	0.4	-	-	-	-	38.3	29	20.7	0	13	10	7	0
TEMP (F)	840	840	840	796	91	107	70	32	787	790	783	837	-	-	-	-	787	790	783	837	78	78	78	NA	78	78	78	NA
EMISSIONS																												
NOx, PPMVD, 15% O2	25	25	25	25					25	25	25	25					2.5	2.5	2.5	2.5								
NOx, PPH	43	43	43	42					43	43	43	42					4.34	4.34	4.34	4.36								
CO, PPMVD, 15% O2	42	42	42	54					42	42	42	54					6.0	6.0	6.0	6.0								
CO, PPH	43.9	43.9	43.9	55.4					43.9	43.9	43.9	55.4					5.80	5.80	5.80	5.82								
PM 10 PARTICULATES	-	-	-	-					-	-	-	-					4.0	4.0	4.0	4.0								
NH3 SLIP, LB/HR PPMVD 15% O2	-	-	-	-					-	-	-	-					5.0	5.0	5.0	5.0								

REV.	DATE	DESCRIPTION	DWN	CHK
0	07-06-07	ISSUED – CEC PERMIT APPLICATION	SMG	LFB
1	12-10-07	ISSUED FOR SPPE ADDENDUM	SMG	SMT

Sealed Only When Signed in Blue Ink

Sega ®
Engineers – Architects – Technicians
Design – Construction – Field Service
16041 Foster
P.O. Box 1000
Stilwell, Kansas 66085-1000

J-POWER GROUP
J-POWER USA Development Co., Ltd

ORANGE GROVE PROJECT

PROCESS FLOW DIAGRAM

DESIGN BY: L. BEIL	CHECKED BY: L. BEIL
DRAWN BY: S. GOETZ	DATE: 6-6-07
CLIENT I.D. JP000101	SEGA PROJECT NO. 07-098

CADD FILE NAME: 07098-PROCESS FLOW DIAGRAM.dwg

DRAWING NO. FIGURE 2B-1 REV. 1

N:\2007\07098\engr\me\07098 Process Flow Diagram Rev 1.dwg 12/11/07 2:21pm sgoetz

REV.	DATE	DESCRIPTION	DWN	CHK
0	7-06-07	ISSUED – CEC PERMIT APPLICATION	SMG	LFB
1	12-10-07	ISSUED FOR SPPE ADDENDUM	SMG	SMT
2	12-18-07	RE-ISSUED FOR SPPE ADDENDUM	SMG	SMT

NOTES:

1. FLOW RATES ARE IN GALLONS PER MINUTE.
2. INTERMITTENT FLOWS ARE SHOWN AS DAILY AVERAGES.
3. CUMBUSTION TURBINE WATER WASH IS NORMALLY PERFORMED ONCE ANNUALLY FOR APPROXIMATELY 10 TO 15 MINUTES.
4. FIREWATER SYSTEM AND SAFETY SHOWERS NORMALLY HAVE NO FLOW.
5. WATER SUPPLY IS TRUCKED IN FROM FALLBROOK PLANT.

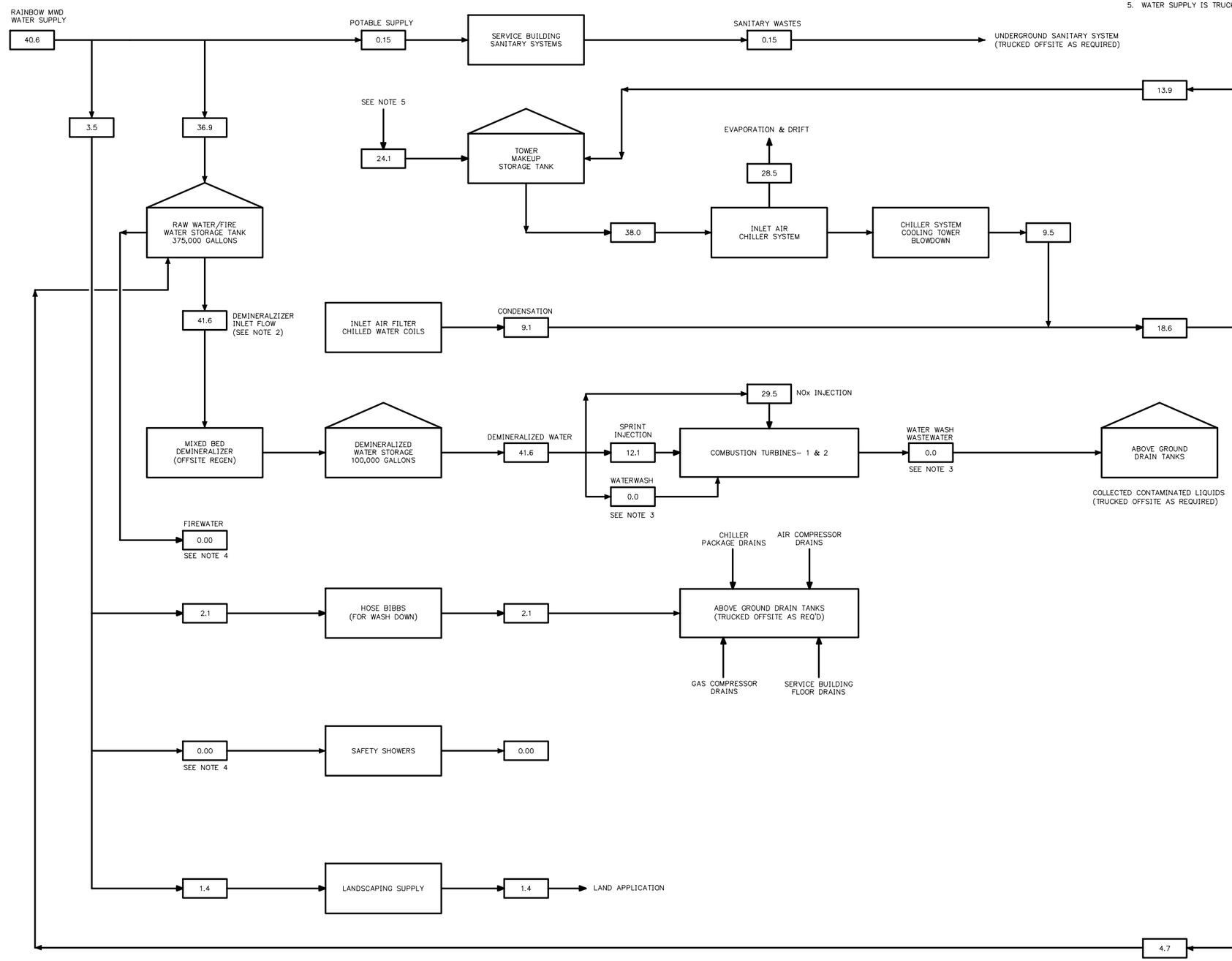

Sealed Only When Signed in Blue Ink

Sega ®

Engineers – Architects – Technicians
Design – Construction – Field Service

16041 Foster
P.O. Box 1000
Stilwell, Kansas 66085-1000

J-POWER GROUP
J-POWER USA Development Co., Ltd

ORANGE GROVE PROJECT

WATER BALANCE –
DESIGN BASIS CONDITION

DESIGN BY: L. BEIL	CHECKED BY: L. BEIL
DRAWN BY: S. GOETZ	DATE: 6-22-07
CLIENT I.D. JPO00101	SEGA PROJECT NO. 07-098

CADD FILE NAME: 07098-WATER BALANCE.dwg

DRAWING NO. FIGURE 2C-1 | REV. 2

N:\2007\07098\engr\me\07098 WATER BALANCE REV 2.dwg 12/18/07 12:28pm sgoetz

APPENDIX 2.4

TRACK CHANGES APPLICATION TABLE 2.3-1, MAJOR PLANT EQUIPMENT; TABLE 2.6-1, PLANT OPERATIONS WATER REQUIREMENTS; AND TABLE 1 OF APPENDIX 6.13-A, MAJOR EQUIPMENT

SPPE Application Table 2.3-1 – Major Plant Equipment (Rev. 1)

EQUIPMENT	NOMINAL CAPACITY	DESCRIPTION
Combustion Turbine Generators (2)	Approximately 50 MW gross	GE LM6000PC SPRINT
Emission Control System (2)	System designed to reduce NOx emission to 2.5 ppm and CO to 6 ppm	System consisting of ammonia selective catalytic reduction (SCR) and oxidation catalyst.
Aqueous Ammonia Storage Tank (1)	10,000 gallons	19% aqueous ammonia.
Chiller (1)	One ~~2,535~~2,845-ton chiller skid, with primary and secondary chilled water pumps.	Common chiller and 3-cell packaged cooling tower ~~package~~.
Fuel Gas Compressors (~~3~~2)	~~12~~ 21.8 MMSCFD; ~~700~~ 690 psig; 600 hp	~~Three 50~~Two 100% capacity ~~(one per CTG provides full capacity)~~ reciprocating compressors with one standby.
Demineralized Water Treatment System (~~2,~~ trailer mounted)	150 gpm ~~each~~ (treated water)	Demineralizer, regenerated off-site, with polishing, also regenerated off site.
Demineralized Water Storage Tank (1)	100,000 gallon	Field fabricated steel tank.
Raw Water/Firewater Storage Tank (1)	~~375,000~~535,000 gallon	Field fabricated steel tank.
Wastewater Storage Tank	40,000 gallons	Field-fabricated steel tank.
Continuous Emissions Monitoring System	O_2, NOx, CO	40 CFR Part 60 compliant CEMS system.
Generator Step Up Transformer (2)	40/60/75 MVA each	13.8 kV to 69 kV; outdoor; oil-filled (non-PCB); three-phase, two-winding per transformer.
Auxiliary Transformers (2)	~~–~~2,000/2,500 kVA each	13.8 kV to 4.16 kV; outdoor; oil-filled (non-PCB); three-phase.
Station Service Transformers (2)	~~–~~2,000/2,500 kVA each	13.8 kV to 480V; outdoor; oil-filled (non-PCB); three-phase.
Fire Water Pumps	Two, ~~1,000~~3,000 gpm fire pumps; one, 245 gpm jockey pump	One 100%-capacity, electric motor driven; one 100%-capacity, diesel engine driven; one pressure maintenance electric motor driven (jockey) pump.
Black-Start Generator (1)	600 kW/750 kVA; 480 V	Four-cycle natural gas fueled engine and generator package.
Containment Tanks (~~1~~2)	~~1,000~~630 gallons each	Normally empty tanks provided for containment of upset drainage from CTG systems.

SPPE Application Table 2.6-1 – Plant Operations Water Requirements (Rev. 1)

SERVICE	AVERAGE USE RATE (1)	MAXIMUM USE RATE (2)	ANNUAL USE(3)
Average Design Case (4)			
Demineralizer Systems treated water used for SPRINT Power Augmentation/ NOx Control	~~41.6~~36.9 gpm (raw water)	--	~~67.2~~64.4 AFY
Air Inlet Chiller Cooling System ~~Makeup~~	~~27.4~~24.1 gpm (raw water)	--	~~44.2~~38.7 AFY
Sanitary and wash down	2.3 gpm (raw water)	--	3.6 AFY
Landscape Drip	1.4 gpm (raw water)	--	2.3 AFY
Total	**~~72.7~~64.7 gpm (raw water**	**--**	**~~117.3~~109 AFY**
Maximum Design Case (5)			
Demineralizer Systems treated water used for SPRINT Power Augmentation/ NOx Control	--	150 gpm (raw water)	70.5 AFY
Air Inlet Chiller Cooling System ~~Makeup~~	--	~~88~~ 65.7 gpm (raw water)	~~51.9~~38.7 AFY
Sanitary and wash down	--	40 gpm (raw water)	6.6 AFY
Landscape Drip	--	20 gpm (raw water)	5.9 AFY
Total	**--**	**~~298~~ 275.7 gpm (raw water)**	**~~134.9~~121.7 AFY**

(1) Annual Use converted to gallons per minute.
(2) Instantaneous use rate with ongoing operations at the summer design condition.
(3) Annual use based on 3,200 hours of two CTGs and common Chiller System operations at the summer design condition.
(4) Average Design Case based on both units operating at full load at summer design condition.
(5) Maximum Design Case based on both units operating at full load on a 102 degree design day, concurrent with operation of the truck-mounted demineralizer system.

SPPE Application Appendix 6.13-A: Aesthetic Viewshed Study: Table 1 – Major Equipment (Rev. 1)

EQUIPMENT	HEIGHT (FEET)	LENGTH OR DIAMETER (FEET)	WIDTH (FEET)	MATERIAL TYPE
Combustion Turbine Generator Skid Enclosures (2)	~~49~~43	~~63~~57	~~50~~37	Various
Emission Control System -SCR (2)	~~30~~33	~~54~~89	~~20~~32	Carbon & Stainless Steel
Stacks (2)	80	~~13~~12.5	- - -	Carbon & Stainless Steel
Aqueous Ammonia Storage Tank (1)	- - -	~~10~~8	~~17~~27	Stainless Steel
Chiller System w/ Enclosure and Tower(1)	~~43~~30	~~64~~89	~~20~~32	Various
Fuel Gas Compressors (2~~3~~)	~~14~~11	~~29~~25	~~15~~14	Various
Demineralized Water Treatment System (~~2~~1, trailer mounted)	14	32	8	Carbon & Stainless Steel
Demineralized Water Storage Tank (1)	~~28~~22	~~25~~31	- - -	~~Stainless~~ Carbon Steel
Raw Water/Firewater Storage Tank (1)	40	~~40~~50	- - -	Carbon Steel
Wastewater Storage Tank	~~21~~22	~~18~~19	- - -	Carbon Steel
Generator Step-Up (GSU) Transformer	19	~~18~~23	~~11~~16	Steel / Copper
Switchyard Structures & Bus (2)	19	0.5	0.5	Steel / Copper
CTG Switchgear (2)	~~8~~9.5	~~12~~9	~~8~~11.5	Steel / Copper
CTG Auxiliary Skid (2)	~~13~~12	~~50~~17	~~14~~13	Various
CTG Fin-Fan Cooler (2)	15	16	13	Various
Plant Electrical Switchgear (2)	~~8~~9.5	~~30~~23	8	Steel / Copper
Blackstart Generator (1)	~~10~~13	~~31~~32	~~8~~12	Various

APPENDIX 2.5

INTERCONNECTION SYSTEM IMPACT STUDY

Interconnection System Impact Study

Generation Interconnection

J-Power USA

Orange Grove

October 22, 2007

Table of Contents

1. Executive Summary 4
2. Project and Interconnection Information 9
3. Study Assumptions 13
4. Power Flow Cases 14
   4.1 Commercial Operation Date (COD) 14
      4.1.1 2008 Heavy Summer 14
      4.1.2 2008-09 Light Winter 14
   4.2 Future Year (FY) 14
5. Study Criteria 15
   5.1 Thermal Steady-State Criteria 15
      5.1.1 Category A – All Facilities in Service 15
      5.1.2 Category B – Loss of Single Element 15
      5.1.3 Category C – Loss of Multiple Elements 15
   5.2 Short Circuit Breaker Duty Criteria 15
   5.3 Transient Stability Criteria 16
   5.4 Post-Transient Voltage Criteria 17
   5.5 Reactive Power Deficiency Criteria 17
6. Interconnection System Impact Study Results 19
   6.1 Steady State Power Flow Results 19
      6.1.1 Category A (N-0) Normal Violations 19
      6.1.2 Category B (N-1) Contingency Violations 19
      6.1.3 Category C (N-2) Contingency Violations 19
   6.2 Short Circuit Study Results 21
   6.3 Transient Stability Study Results 21
   6.4 Deliverability Assessment Results 25
   6.5 Post-Transient Voltage Analysis Results 25
   6.6 Reactive Power Deficiency Analysis Results 25
7. Mitigation 26
   7.1 TL 698E, Pala-Monserate Tap 26
   7.2 TL 698B, Monserate-Monserate Tap 26
   7.3 TL 691B, Monserate-Avocado Tap 26
   7.4 TL 6932, Lilac-Pala 26
   7.5 TL 683, Rincon-Lilac 27
   7.6 TL682, Warners-Rincon 27
   7.7 Maximum Output without Delivery Network Upgrades 27
8. Local Furnishing Bonds/Industrial Development Bonds 28
9. Estimated Costs 29
   9.1 Participating TO's Interconnection Facilities 31
   9.2 Reliability Network Upgrades 33
   9.3 Delivery Network Upgrades 33
   9.4 Other Issues 33
10. Estimated Time to Construct 34
11. Re-Study 37

List of Appendices

Appendix A - Definitions
Appendix B - CAISO Controlled Grid Generation Queue
Appendix C - Load and Resource Summary Tables
Appendix D - Contingency Lists
Appendix E - Power Flow Analysis Results
Appendix F - Power Flow Plots
Appendix G - Short Circuit Analysis Results
Appendix H - Transient Stability Modeling
Appendix I - Transient Stability Switching Sequences
Appendix J - Transient Stability Analysis Results
Appendix K - Transient Stability Plots
Appendix L - PTO’s Interconnection Facilities

1. Executive Summary

J-Power USA, the Interconnection Customer (IC), proposes to interconnect their 99 MW combustion turbine Orange Grove Project (Orange Grove or the Project) to the California Independent System Operator Corporation's (CAISO) Controlled Grid. The proposed in-service date is April 1, 2008 and the Commercial Operation Date (COD) is May 31, 2008. The proposed location of the project is in San Diego County, California; along Highway 76 (Pala Road), east of Interstate 15. The Point of Interconnection is at San Diego Gas & Electric's (SDG&E) Pala 69 kV Substation. The Orange Grove Project occupies Queue Position #201 in the CAISO Controlled Grid Generation Queue.

In accordance with Federal Energy Regulatory Commission (FERC) Large Generation Interconnection Procedures (LGIP), the CAISO and SDG&E performed an Interconnection System Impact Study (ISIS). Per mutual agreement with SDG&E, CAISO, and the IC, the Feasibility Study (IFS) for Orange Grove was waived, allowing the project to proceed directly to the ISIS. The ISIS determined:

A. Transmission system impacts caused solely by the Orange Grove Project

B. System reinforcements necessary to mitigate the adverse impacts of the Project under various system conditions

C. Maximum allowed output without Delivery Network Upgrades, under various system conditions

D. Non-binding, good faith estimate of cost and cost responsibility for Interconnection Facilities and Network Upgrades

E. Non-binding, good faith estimate of time to construct for Interconnection Facilities and Network Upgrades

This study is composed of a Commercial Operation Date (COD) and Future Year (FY) analysis. The COD analysis examines the effect of the Orange Grove Project on the bulk power grid at the time of its commercial operation date. The "furthest out" commercial operation date of higher-queued projects established the year of the FY analysis, 2012. To determine the system impacts caused by the addition of the Orange Grove Project, studies were performed using the following COD and FY power flow cases:

A. 2008 Heavy Summer COD

B. 2008-09 Light Winter COD

C. 2012 Heavy Summer FY

The studies performed in this ISIS included:

A. Steady State Power Flow Analysis

B. Short Circuit Analysis

C. Transient Stability Analysis

D. Local Furnishing Bonds (LFB) analysis

Typically, post-transient voltage and reactive power deficiency analyses are performed in this phase of system impact evaluation. Per mutual agreement with SDG&E, CAISO, and the IC, these analyses were waived for this project because no negative impact on voltage stability or reactive power is expected.

The power flow analysis concluded that the addition of the Orange Grove Project:

A. Did not cause any facilities to overload for Category A (normal) conditions.

B. Caused six (6) facilities to overload for Category B or C (emergency) conditions:

   a. TL 698E (Pala-Monserate Tap)

   b. TL 698B (Monserate-Monserate Tap)

   c. TL 691B (Monserate-Avocado Tap)

   d. TL 6932 (Lilac-Pala)

   e. TL 683 (Rincon-Lilac)

   f. TL 682 (Warners-Rincon)

C. Did not cause any voltage limit violations.

The short circuit analysis found no overstressed circuit breakers caused by the addition of the Orange Grove Project.

The transient stability analysis concluded that the WECC transmission system remained stable for all contingency simulations but there are frequency and voltage deviation violations at the 69 kV Pala load bus. The IC may have to implement a protection scheme which includes faster switching to separate from SDG&E's system. The study was performed with typical data for this kind of generator, since actual data was not available. When actual data is available, another transient stability analysis must be performed to determine if the IC must mitigate the impact of the generator.

The Orange Grove Project does not appear to cause an Impairment of the tax-exempt status of the interest on Local Furnishing Bonds.

Based on the proposed operating date, Point of Interconnection, and the results of the COD and FY analyses, this study identified Interconnection Facilities and Delivery Network Upgrades necessary to interconnect the Orange Grove Project at full output to the CAISO Controlled Grid.

The following Interconnection Facilities are needed to interconnect the Orange Grove Project to the Pala 69 kV bus via underground facilities:

A. Install one 69 kV circuit breaker.

B. Install underground cable termination and bus support stands and two 2000 amp disconnects in an existing line position.

C. Install approximately 150' of 3-6" conduit from the termination stand to the substation fence.

D. Install associated control and protection panels for the new line and add RTU points for control, monitoring, and alarming.

E. Install approximately 150' of cable from the termination stand to the substation fence.

The Delivery Network Upgrades recommended to mitigate the six (6) overloaded facilities are:

A. TL 698E (Pala-Monserate Tap): Reconductor from Pala to Monserate Tap with 636 KCM ACSS and replace Pala getaways with 3000 KCM Cu.

B. TL 698B (Monserate-Monserate Tap): Replace Monserate getaways with 3000 KCM Cu and reconductor one span with 636 KCM ACSS.

C. TL 691B (Monserate-Avocado Tap): Increase relay settings at Monserate.

D. TL 6932 (Lilac-Pala): Replace Pala getaways with 3000 KCM Cu and upgrade TL 6932 breaker at Lilac. (An existing project is scheduled to replace this breaker by December 2007. If SDG&E cancels the project, the upgrade will be the responsibility of the IC.)

E. TL 683 (Rincon-Lilac): Advance the reconductor of TL 683. (An existing project is currently scheduled to reconductor TL 683 in the year 2011 timeframe. If SDG&E cancels the project, the upgrade will be the responsibility of the IC.)

F. TL 682 (Warners-Rincon): Implement a Special Protection System (SPS) to monitor TL 682 and initiate tripping of TL 685 (Warners-Santa Ysabel) for overload of TL 682. Due to the 2008 COD requested by the IC, this SPS is recommended in lieu of a major reconductor of TL 682 to mitigate the overload.

The preliminary, non-binding, good faith estimate of cost and estimate of time to construct for the Interconnection Facilities and Network Upgrades are shown in Table 1.1.

Table 1.1: Estimated Cost and Estimated Time to Construct

Type of Upgrade[1]	Location	Description	Estimated Cost x 1,000[2]	Estimated Time to Construct[3]
PTO's Interconnection Facilities[4]	Pala Substation[5]	• Install one 69 kV circuit breaker • Install underground cable termination and bus support stands and two 2000 amp disconnects in an existing line position • Install 150' of 3-6" conduit from the termination stand to the substation fence • Install associated control and protection panels for the new line and add RTU points for control, monitoring, and alarming. • Install 150' of cable from the termination stand to substation fence.	$1,404	6 Months
Reliability Network Upgrades[6]	None[7]	None	$0	0
Delivery Network Upgrades[8]	TL 698E (Pala-Monserate Tap)	Reconductor from Pala to Monserate Tap with 636 KCM ACSS and replace Pala getaways with 3000 KCM Cu	$10,447	6 Months
	TL 698B (Monserate-Monserate Tap)	Replace Monserate getaways with 3000 KCM Cu and reconductor one span to 636 KCM ACSS	$278	6 Months
	TL 691B (Monserate-Avocado Tap)	Increase relay settings at Monserate	$5	1 Month
	TL 6932 (Lilac-Pala)	Replace Pala getaways with 3000 KCM Cu. (An existing project to replace the TL 6932 breaker at Lilac is scheduled for completion by December 2007.)	$276	6 Months
	TL 683 (Rincon-Lilac)	Advance the reconductor of TL 683 (needed after 2008)	To be determined[9]	To be determined[9]
Special Protection System (SPS)	TL 682 (Warners-Rincon)	• SPS to prevent overload of TL 682 • Monitor TL 682 • If TL 682 exceeds rating • Trip TL 685 (Warners-Santa Ysabel)	$44	6 Months
Total			**$12,454**	**6 Months**

Based on this study, there are no Reliability Network Upgrades attributed to the interconnection of the Orange Grove Project. This assumes a higher-queued project, Queue Position #173, extends the 69 kV Main Bus at the Pala Substation as part of

1 See Appendix A for the definitions of the types of upgrades as defined by the LGIP.
2 All costs estimates are preliminary, non-binding, good faith estimates in "as year spent" dollars. See Section 9 for details.
3 Estimated time to construct includes time for design, equipment procurement, and construction. The estimate assumes the process is continuous and excludes time for environmental review, permitting, and delays for outage coordination. See Section 10 for details.
4 The IC is obligated to fund the PTO's Interconnection Facilities.
5 If a higher-queued project (#173) delays its in-service date or withdraws from the Queue, the Orange Grove Project will be responsible for funding an additional $33K for PTO's Interconnection Facilities.
6 The IC is obligated to advance funds to SDG&E for Reliability Network Upgrades and will be reimbursed upon commercial operation of the plant.
7 If a higher-queued project (#173) delays its in-service date or withdraws from the Queue, the Orange Grove Project will be responsible for advancing an additional $85K for extending the 69 kV Pala Main Bus.
8 The IC may elect to advance funds to SDG&E for Delivery Network Upgrades and will be reimbursed upon commercial operation of the plant.
9 The estimated cost and timeframe of this advancement will be studied in the Interconnection Facilities Study phase.

its project upgrades. This is an upgrade of the PTO's existing facilities beyond the Point of Interconnection. If the higher-queued project delays its in-service date or withdraws from the Queue, the Orange Grove Project will be responsible for advancing $85K for this Reliability Network Upgrade.

If the higher-queued project, Queue Position #173, delays its in-service date or withdraws from the Queue, the Orange Grove Project will also be responsible for funding an additional $33K for the PTO's Interconnection Facilities. This additional cost is needed to 1) install bus work associated with a new line position created with the Main Bus Extension at the Pala Substation and 2) install an additional 50' (200' total) of cable from the termination stand to the substation fence. (No conduit installation will be needed.)

The preliminary, non-binding, good faith construction schedule estimate to design, procure, and construct the facilities typically begins after the signing of the Large Generator Interconnection Agreement (LGIA) and does not include the time required for environmental review and the permitting processes, if applicable. Required lead times depend on many factors, including whether an exemption(s) from the California Public Utilities Commission's (CPUC's) G.O. 131-D Permit to Construct (PTC) process, can be obtained. For example, absent an exemption, the process of obtaining a PTC could take one to two years, possibly even longer. SDG&E anticipates that the ability to obtain exemptions from the PTC process (in which case an Advice Letter filing with the CPUC should be sufficient for obtaining the CPUC's approval to proceed with construction) will be enhanced if the IC includes the full scope of the transmission and substation additions and upgrades in its application to the lead agency. Filing of the Advice Letter is dependent on the IC's licensing approval from the California Energy Commission (CEC). A delay in the CEC approval would delay the filing of the Advice Letter and result in a delay of the in-service date (see Section 10 for further details).

Considering the time needed to complete the Interconnection Facilities Study, the LGIA, construction of the Interconnection Facilities and Network Upgrades (including potential environmental review, permitting, design, procurement, and construction), the in-service date of April 1, 2008 does not appear to be feasible unless an expedited schedule is executed. Per Section 9 of the LGIP, an Engineering & Procurement (E&P) Agreement may be utilized prior to executing an LGIA. The E&P Agreement authorizes the Participating TO to commence engineering and procurement of long lead-time items necessary for the interconnection. The IC should consider this optional procedure to attempt to meet the in-service date.

Operating procedures which may include curtailing the output of the project during planned or extended forced outages may be required in order to operate reliably. However, identification of the operating procedures is outside the scope of this study.

2. Project and Interconnection Information

The Orange Grove Project is a 99 MW (net output to California ISO Controlled Grid) combustion turbine project. The proposed location of the project is in San Diego County, California, along Highway 76 (Pala Road), east of Interstate 15.

J-Power USA proposes the following milestone dates:

A. Proposed In-Service Date: April 1, 2008

B. Proposed Trial Operation Date: May 1, 2008

C. Proposed Commercial Operation Date: May 31, 2008

The requested point of interconnection is the 69 kV bus at SDG&E's Pala Substation. No alternative point of interconnection was identified.

A conceptual one-line diagram of the proposed interconnection is shown in Figure 2.1. Figures 2.2 and 2.3 show the transmission facilities in the area and the Project location.

Figure 2.1: Conceptual One-line Diagram

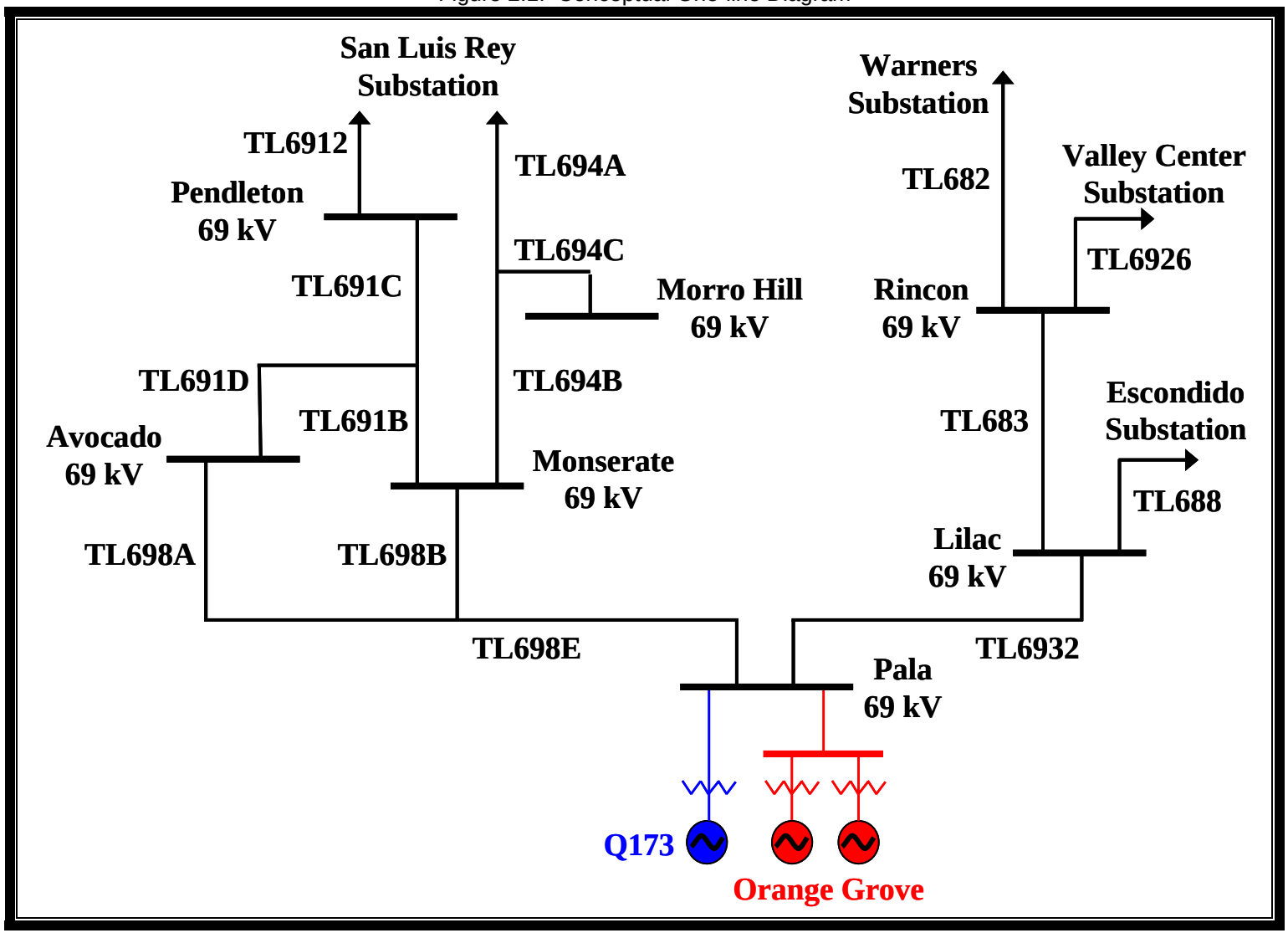

Figure 2.2: Project Vicinity Map

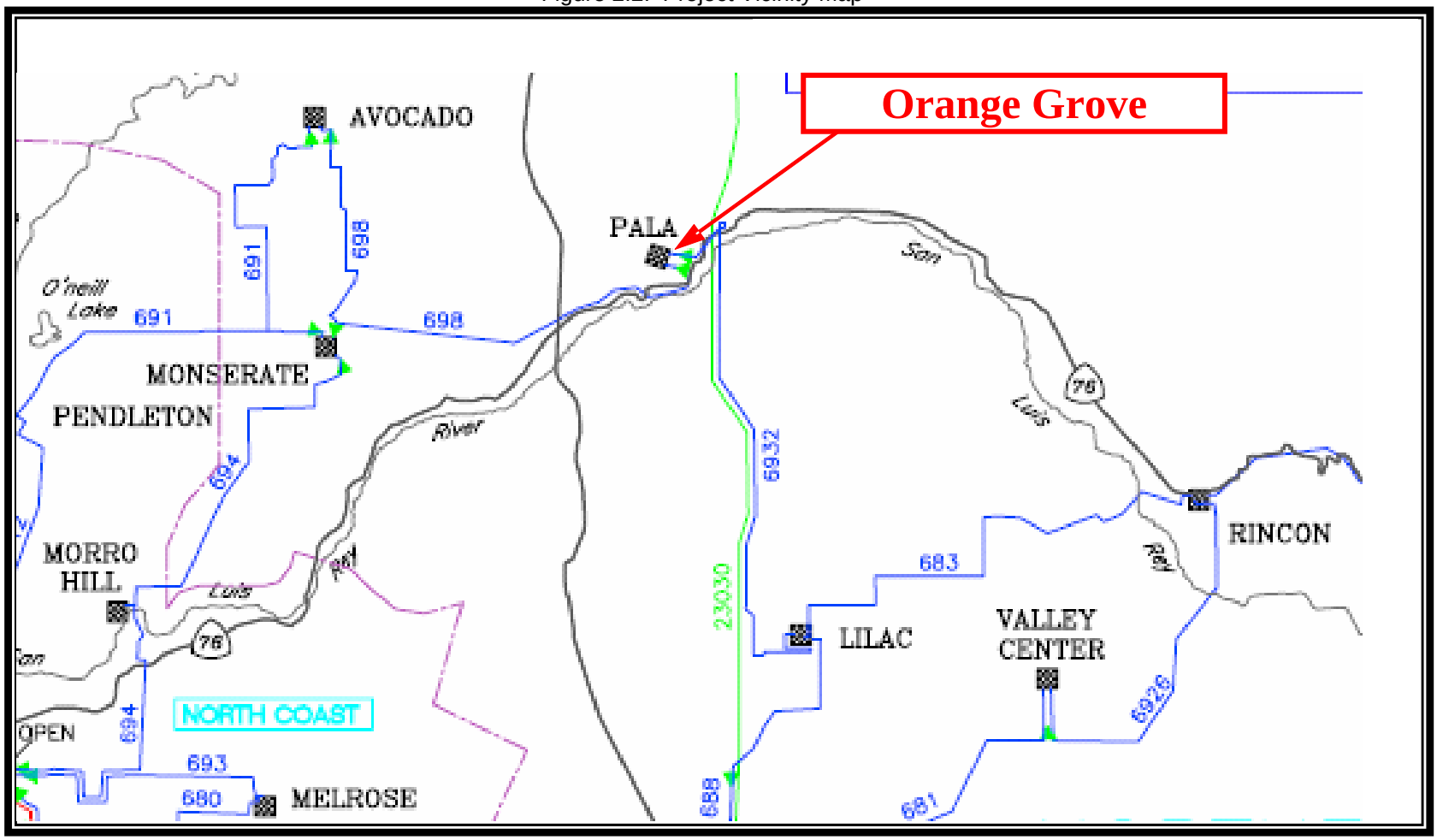

Figure 2.3: Site Map

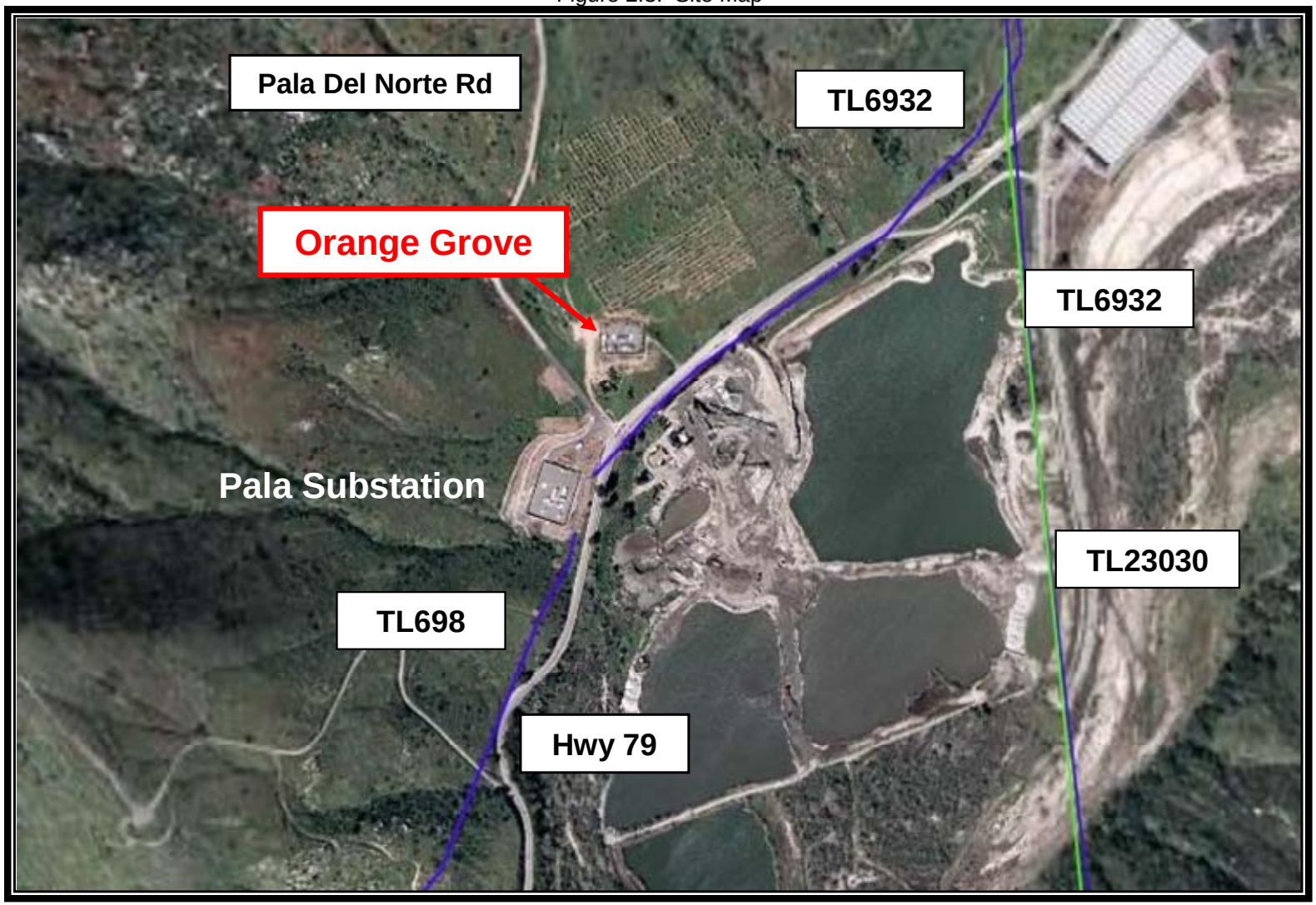

3. Study Assumptions

The CAISO and SDG&E conducted the ISIS using the following assumptions:

A. The Project consists of two combustion turbines with a 99 MW net output to the grid.

B. The proposed Commercial Operation Date (COD) is May 31, 2008.

C. The project will be connected to SDG&E's Pala 69 kV substation with one 69 kV generator transmission line. Each generator will be connected to the Orange Grove 69 kV bus with a three-phase 13.8/69 kV step-up transformer rated at 75 MVA with 8% impedance at 45 MVA.

D. Orange Grove occupies Queue Position #201 in the CAISO Controlled Grid Generation Queue (CAISO Queue). The Commercial Operation Date (COD) study examines operating conditions modeling higher-queued generation projects within the SDG&E network which will be in-service when Orange Grove is in-service. The COD study will evaluate the 2008 heavy summer and 2008/2009 light winter study periods. The Future Year (FY) study, or 'Queue' study, includes all higher-queued generation projects within the SDG&E network. The FY study will evaluate the 2012 heavy summer study period. The modeled CAISO Queue generation projects and the latest CAISO Queue are included in Appendix B. These generation projects will be modeled in the study cases, but may not necessarily be dispatched under all study conditions. Generation was dispatched to represent a "worst case analysis" by stressing the transmission system in a reasonable manner.

E. Special Protection Systems (SPS) were modeled in the power flow cases.

F. Table 3.1 identifies SDG&E transmission projects modeled in each of the power flow and short circuit cases.

Table 3.1: Modeled SDG&E Transmission Projects

Project	COD		FY
	2008 Heavy Summer	**2008-09 Light Winter**	**2012 Heavy Summer**
230 kV Otay Metro Powerloop	Yes	Yes	Yes
Silvergate Substation	No	Yes	Yes
Sunrise Powerlink 500 kV and associated plan of service	No	No	Yes

G. The power flow models include forecast peak and off-peak load conditions.

4. Power Flow Cases

Three (3) power flow cases were used to evaluate the addition of the Orange Grove Project. All cases were derived from the latest available CAISO/Western Electric Coordinating Council (WECC) full-loop power flow cases and developed with GE PSLF version 16 or higher.

4.1 Commercial Operation Date (COD)

The Commercial Operation Date (COD) analysis examines operating conditions modeling higher-queued generation projects within the SDG&E network which will be in-service when Orange Grove is in-service. Two power flow cases were developed for the COD analysis.

4.1.1 2008 Heavy Summer

The 2008 heavy summer case has a 1-in-10 year heat wave load forecast of 4,742 MW and SDG&E import level of 2,833 MW. The case is derived from the WECC "08hs3sa1" case. This case represents high load and high import level conditions. Generation within the immediate proximity of the project is fully dispatched.

4.1.2 2008-09 Light Winter

The 2008-09 light winter case has an off-peak load forecast of 1,778 MW (38% of peak) and SDG&E import level of 848 MW. The case is derived from the WECC "07lw1" case. This case represents low load and low import level conditions. Generation within the immediate proximity of the project is fully dispatched.

Both COD cases include SDG&E's updated model, all CAISO Queue generation within SDG&E's transmission system as shown in Appendix B, and all SDG&E transmission projects as shown in Table 3.1.

4.2 Future Year (FY)

The Future Year (FY) analysis includes all higher-queued generation projects within the SDG&E network. The FY power flow case is a 2012 heavy summer power flow case. The 2012 heavy summer case has a 1-in-10 year heat wave load forecast of 4,981 MW and SDG&E import level of 3,584 MW. The case is derived from the CAISO "CSRTP06" case. This case represents high load and high import level conditions as well as the expected impact of the California Solar Initiative (60 MW reduction) and the Demand Response Program (29 MW reduction). Generation within the immediate proximity of the project is fully dispatched.

The FY case includes SDG&E's updated model, all CAISO Queue generation within SDG&E's transmission system as shown in Appendix B, and all SDG&E transmission projects as shown in Table 3.1.

Load and resource summary tables for all power flow cases are included in Appendix C.

5. Study Criteria

The Western Electricity Coordinating Council (WECC) and North American Electric Reliability Council (NERC) planning criteria were used to evaluate the system impact.

5.1 Thermal Steady-State Criteria

All power flow analyses are conducted with the General Electric PSLF Version 16 software.

5.1.1 Category A – All Facilities in Service

Category A (N-0) normal overloads are those that exceed 100% of normal ratings that occur with all facilities in service.

5.1.2 Category B – Loss of Single Element

Category B emergency overloads are those that exceed 100% of emergency ratings that occur due to a Category B contingency. A Category B contingency is commonly referred to as an “N-1” event, where there is a loss of a single element. No loss of customer load is allowed for Category B contingencies.

A single transmission circuit outage with one generator already out of service and the system adjusted shall meet the performance requirements of the NERC Planning Standards for Category B contingencies.

5.1.3 Category C – Loss of Multiple Elements

Category C emergency overloads are those that exceed 100% of emergency ratings that occur due to a Category C contingency. A Category C contingency is commonly referred to as an “N-2” event, where there is a loss of two or more elements. Planned (controlled) interruption of customer load and/or generation may occur and contracted firm (non-recalled reserved) transfers may be curtailed.

5.2 Short Circuit Breaker Duty Criteria

Short circuit studies are performed to determine the maximum fault currents on various buses in the vicinity of the project. This study assesses the impact of increased fault duty resulting from the interconnection of the project. The Aspen Version 9.0 program is used to conduct the detailed short circuit studies with three line-to-ground (3LG) and single line-to-ground (LG) faults to examine the impact of the project on the system. Equipment that may become overstressed as a result of the added generation will be identified using the criteria in Table 5.1.

Table 5.1: SDG&E Short Circuit Breaker Duty Criteria Summary

Equipment	Disturbance	Criteria
Existing Generator Breakers	LG and 3LG faults	No fault exceeds 100% of the nameplate interrupting rating.
Existing Non-Generator Breakers ≤ 230 kV	LG and 3LG faults	No fault exceeds 115% of the nameplate interrupting rating.
Existing Non-Generator Breakers > 230 kV	LG and 3LG faults	No fault exceeds 100% of the nameplate interrupting rating.

5.3 Transient Stability Criteria

Transient stability analysis is a time-based simulation that assesses the performance of the power system during (and shortly following) a contingency. Transient stability studies were performed to ensure system stability following critical faults on the system.

The system is considered stable if the following conditions are met:

A. Machine Synchronism - All machines in the WECC interconnected system must remain in synchronism as demonstrated by relative rotor angles (unless modeling problems are identified and concurrence is reached that a problem does not really exist).

B. Simulation Time and System Damping

a. A stability simulation will be deemed to exhibit positive damping if a line defined by the peaks of the machine relative rotor angle swing curves tends to intersect a second line connecting the valleys of the curves with the passing of time.

b. Corresponding lines on bus voltage swing curves will likewise tend to intersect. A stability simulation, which satisfies these conditions, will be defined as stable.

c. Duration of a stability simulation run will be ten seconds unless a longer time is required to ascertain damping.

d. The transient performance analysis will start 3 cycles after the fault clearing and conclude at the end of the simulation.

e. A case will be defined as marginally stable if it appears to have zero percent damping and the voltage dips are within (or at) the WECC Reliability Criteria limits.

Performance of the transmission system is measured against the WECC Reliability Criteria and the NERC Planning Standards.

Table 5.2 is an excerpt from the NERC/WECC Reliability Criteria. The reliability and performance criteria were applied to the entire WECC transmission system.

Table 5.2: WECC Disturbance-Performance Table of Allowable Effects on Other Systems

NERC/WECC Categories	Transient Voltage Dip Standard	Minimum Transient Frequency Standard
A System normal	Nothing in addition to NERC	
B One element out-of-service	Not to exceed 25% at load buses or 30% at non-load buses. Not to exceed 20% for more than 20 cycles at load buses.	Not below 59.6Hz for 6 cycles or more at a load bus.
C Two or more elements out-of-service	Not to exceed 30% at any bus. Not to exceed 20% for more than 40 cycles at load buses.	Not below 59.0Hz for 6 cycles or more at a load bus.
D Extreme multiple-element outages	Nothing in addition to NERC	

5.4 Post-Transient Voltage Criteria

Table 5.3 is an excerpt from the NERC/WECC Planning Standards. The governor power flow is utilized to the post-transient voltage deviation criteria.

Table 5.3: WECC Disturbance-Performance Table of Allowable Effects on Other Systems

Performance Level/Category	Disturbance	Post Transient Voltage Deviation Criteria
B	Generator One Circuit One Transformer PDCI	Not to exceed 5% at any bus.*
C	Two Generators Two Circuits IPPDC	Not to exceed 10% at any bus.
* SCE allows deviation up to 7% on certain buses for N-1		

5.5 Reactive Power Deficiency Criteria

Table 5.4 summarizes the voltage support and reactive power criteria in the NERC/WECC Planning Standards.

Table 5.4: Reactive Power Deficiency Criteria Summary

Performance Level/Category	Disturbance	Reactive Power Deficiency Criteria
B	Generator One Circuit One Transformer PDCI	Governor power flow to reach convergence at 105% of SDG&E load level
C	Two Generators Two Circuits IPPDC	Governor power flow to reach convergence at 102.5% of SDG&E load level

6. Interconnection System Impact Study Results

6.1 Steady State Power Flow Results

Steady state power flow analysis, including Category A, B, and C contingencies, was performed for the COD 2008 heavy summer, COD 2008-09 light winter, and FY 2012 heavy summer power flow cases. A complete listing of all contingencies is included in Appendix D.

Some contingencies caused facilities to overload in the pre-project and the post-project scenarios. The impact of the Project on the pre-project overloads was minimal. The project is relatively a small generator and the mitigation measures for the pre-project overloads will be sufficient to accommodate the project. The IC is not responsible for mitigating overloads if they were pre-existing.

6.1.1 Category A (N-0) Normal Violations

There were no Category A normal overloads or voltage limit violations resulting from the interconnection of the project for any of the scenarios studied.

6.1.2 Category B (N-1) Contingency Violations

There were six (6) facilities that have Category B emergency overloads resulting from the interconnection of the project. Mitigation for these overloads is the responsibility of the Interconnection Customer.

There were no Category B voltage limit violations resulting from the interconnection of the project for any of the scenarios studied.

Table 6.1 shows the worst Category B overloads for all overloaded facilities for COD and FY scenarios.

6.1.3 Category C (N-2) Contingency Violations

There were four (4) facilities that have Category C emergency overloads resulting from the interconnection of the project. These facilities were already identified as having Category B overloads and the IC is obligated to mitigate these overloads.

There were no Category C voltage limit violations resulting from the interconnection of the project for any of the scenarios studied.

Table 6.2 shows the worst Category C overloads for all overloaded facilities for COD and FY scenarios.

Complete listings of all power flow analysis results are included in Appendix E. Selected power flow plots for normal and emergency conditions are included in Appendix F.

Table 6.1 Worst Category B Overloads

Worst Category B MVA1 pu Loading				Case Name					
Monitored Element	**Contingency Description**	**MVA1**	**MVA2**	**08hs-pre**	**08hs-pst**	**08lw-pre**	**08lw-pst**	**12hs-pre**	**12hs-pst**
LINE PALA 69kV-MNSRATTP 69kV ck1	line LILAC to PALA 69 ck 1	68	68	0.44	1.80	0.63	1.97	0.42	1.78
LINE MONSRATE 69kV-MNSRATTP 69kV ck1	line LILAC to PALA 69 ck 1	77	77	0.21	1.36	0.47	1.60	0.19	1.33
LINE MONSRATE 69kV-AVCADOTP 69kV ck1	line LILAC to PALA 69 ck 1	51	51			0.29	1.10		
LINE LILAC 69kV-PALA 69kV ck1	line AVOCADO to MNSRATTP 69 ck 1	71	71	0.42	1.73	0.60	1.89	0.40	1.71
LINE RINCON 69kV-LILAC 69kV ck1	line ASH-ASHTP-FELICITA-VC 69 ck 1	55	55					0.95	1.06
LINE WARNERS 69kV-RINCON 69kV ck1	line CREELMAN to SYCAMORE 69 ck 1	32	32					0.98	1.10
LINE WARNERS 69kV-RINCON 69kV ck1	line WIND-ML 500kV SPS6.2 trip ML-TJI	32	32	0.96	1.09				

Table 6.2 Worst Category C Overloads

Worst Category C MVA1 pu Loading				Case Name					
Monitored Element	**Contingency Description**	**MVA1**	**MVA2**	**08hs-pre**	**08hs-pst**	**08lw-pre**	**08lw-pst**	**12hs-pre**	**12hs-pst**
LINE PALA 69kV-MNSRATTP 69kV ck1	Lilac 69kV S Bus	68	68	0.17	1.22	0.47	1.81	0.21	1.18
LINE MONSRATE 69kV-MNSRATTP 69kV ck1	Lilac 69kV S Bus	77	77			0.34	1.47		
LINE LILAC 69kV-PALA 69kV ck1	PEN-ES #1+ PEN-ES #2 230KV	71	71	0.61	1.25	0.40	1.04	0.53	1.18
LINE WARNERS 69kV-RINCON 69kV ck1	CH-SX-SN+LC-EL 138/69 KV	32	32					0.90	1.02

6.2 Short Circuit Study Results

Three line-to-ground (3LG) and single line-to-ground (SLG) faults were simulated with and without the Orange Grove Project to determine if there are any overstressed circuit breakers caused by addition of the Project.

Study results indicate there are no circuit breaker fault duty limit violations attributable to the Project. The IC is not responsible for mitigating any pre-existing overstressed circuit breakers. SDG&E has various projects planned to eliminate the overstressed circuit breakers identified before the Project's proposed interconnection. The short circuit analysis results are included in Appendix G.

6.3 Transient Stability Study Results

The purpose of the transient stability study is to determine if the transmission system would be stable with the addition of the project. Project specific data provided by J-Power USA was used to create dynamic models for the transient stability study. Default data was used for the excitation system model due to unstable initialization of the IC provided data. Details of the machine dynamic models are included in Appendix H.

Transient stability analysis was performed for the following system contingencies for both the 2008 heavy summer and 2008-09 light winter cases for a study period of 10 seconds:

A. Three-phase fault on Pala 69 kV bus cleared after 6 cycles (no system elements removed post clearing).

B. Three-phase fault on Pala 69 kV bus cleared after 6 cycles by opening Pala-Lilac 69 kV transmission line.

C. Three-phase fault on Pala 69 kV bus cleared after 6 cycles by opening Pala-Monserate-Avocado 69 kV transmission line.

D. Three-phase fault on San Onofre 230 kV bus cleared after 6 cycles by tripping San Onofre units 2 and 3.

E. Three-phase fault on Palomar Energy 230 kV bus cleared after 6 cycles by tripping Palomar Energy units 1, 2, and 3.

F. Three-phase fault on Imperial Valley 500 kV bus cleared after 4 cycles by opening Imperial Valley-Miguel 500 kV transmission line.

Switching sequences for the transient stability simulations are included in Appendix I.

The transmission system was adequately damped and all generators remained synchronized for all transient stability simulations studied.

Frequency deviation violations were observed in both the pre and post-project cases at SDG&E's load bus (Pala 69 kV) and at Q173 13.8 kV generator bus for the three-phase faults on the Pala 69 kV bus in both heavy summer and light winter conditions. Additional frequency deviation violations were observed in the post-project cases at the Orange Grove 13.8 kV generator bus and voltage deviation violations were observed in the post-project cases at SDG&E's load bus (Pala 69 kV) for the same conditions. The frequency/voltage deviation violations were observed in the local area and did not migrate to adjacent systems. The frequency and voltage violations are shown in Table 6.3. Transient stability analysis results are shown in Appendix J and transient stability plots are shown in Appendix K.

Additional transient stability analysis was performed to determine if the Orange Grove Project would cause any transient stability violations without Q173. Frequency deviation violations were observed in post-project scenarios at the Orange Grove 69 kV, Orange Grove 13.8 kV, and Pala 69 kV buses without Q173 for the three-phase faults on the Pala 69 kV bus in both heavy summer and light winter conditions. The transient stability analysis results are shown at the end of Appendix J and transient stability plots are shown at the end of Appendix K.

The transient stability simulation is based on "typical" generator data for the proposed project because actual data is not yet available. The frequency/voltage concerns may be caused by incorrect modeling in the study. It is recommended that another transient stability analysis be performed to validate the system performance when the actual test data becomes available. This must occur before the Project is commercially operational. If the results with the actual test data are similar to the results with the typical data, the IC must implement a faster switching protection scheme to separate the generator from SDG&E's system.

The transient stability analysis concluded that the WECC transmission system remained stable for all contingency simulations but there are frequency and voltage deviation violations at the 69 kV Pala load bus. The IC may have to implement a protection scheme which includes faster switching to separate from SDG&E's system.

Table 6.3 Transient Stability Frequency and Voltage Violations

CASE NAME/SIMULATION	EXTNUM/NAME/BASEKV	TYPE	ID	AREA	ZONE	INITIAL	MIN/MAX	DELTA	PERCDIFF	ATTIME	DURATION (Seconds)	DURATION (Cycles)
08hs-pre_swt1_pa69	22623 PA49MW 13.8	fbug	1	22	225	60.000	59.138	0.862	1.437	1.254	0.113	6.750
08hs-pre_swt2_pa-li-tl6932	22623 PA49MW 13.8	fbug	1	22	225	60.000	58.987	1.013	1.689	1.254	0.150	9.000
08hs-pre_swt3_av-mn-pa-tl698	22623 PA49MW 13.8	vbug	1	22	225	0.985	0.663	0.322	32.655	1.179	0.038	2.250
08hs-pre_swt3_av-mn-pa-tl698	22623 PA49MW 13.8	fbug	1	22	225	60.000	58.986	1.014	1.690	1.254	0.150	9.000
08hs-pst_swt1_pa69	22623 PA49MW 13.8	fbug	1	22	225	60.000	59.055	0.945	1.575	1.254	0.150	9.000
08hs-pst_swt1_pa69	22624 PALA 69	fbul	1	22	225	60.000	59.393	0.607	1.012	1.292	0.113	6.750
08hs-pst_swt1_pa69	22627 PA99MW 69	fbus	1	22	225	60.000	59.391	0.609	1.014	1.292	0.113	6.750
08hs-pst_swt1_pa69	22628 PA99MWQ1 13.8	fbug	1	22	225	60.000	59.062	0.938	1.563	1.254	0.188	11.250
08hs-pst_swt1_pa69	22629 PA99MWQ2 13.8	fbug	1	22	225	60.000	59.062	0.938	1.563	1.254	0.188	11.250
08hs-pst_swt2_pa-li-tl6932	22623 PA49MW 13.8	fbug	1	22	225	60.000	59.058	0.942	1.570	1.329	0.188	11.250
08hs-pst_swt2_pa-li-tl6932	22624 PALA 69	fbul	1	22	225	60.000	59.188	0.812	1.354	1.329	0.188	11.250
08hs-pst_swt2_pa-li-tl6932	22627 PA99MW 69	fbus	1	22	225	60.000	59.184	0.816	1.360	1.329	0.188	11.250
08hs-pst_swt2_pa-li-tl6932	22628 PA99MWQ1 13.8	fbug	1	22	225	60.000	58.908	1.092	1.820	1.329	0.188	11.250
08hs-pst_swt2_pa-li-tl6932	22629 PA99MWQ2 13.8	fbug	1	22	225	60.000	58.908	1.092	1.820	1.329	0.188	11.250
08hs-pst_swt3_av-mn-pa-tl698	22623 PA49MW 13.8	vbug	1	22	225	1.005	0.700	0.305	30.372	1.217	0.038	2.250
08hs-pst_swt3_av-mn-pa-tl698	22623 PA49MW 13.8	fbug	1	22	225	60.000	59.052	0.948	1.580	1.329	0.225	13.500
08hs-pst_swt3_av-mn-pa-tl698	22624 PALA 69	vbul	1	22	225	1.016	0.698	0.319	31.358	1.217	0.075	4.500
08hs-pst_swt3_av-mn-pa-tl698	22624 PALA 69	fbul	1	22	225	60.000	59.218	0.782	1.303	1.329	0.188	11.250
08hs-pst_swt3_av-mn-pa-tl698	22627 PA99MW 69	vbus	1	22	225	1.017	0.698	0.318	31.311	1.217	0.075	4.500
08hs-pst_swt3_av-mn-pa-tl698	22627 PA99MW 69	fbus	1	22	225	60.000	59.215	0.785	1.309	1.329	0.188	11.250
08hs-pst_swt3_av-mn-pa-tl698	22628 PA99MWQ1 13.8	fbug	1	22	225	60.000	58.931	1.069	1.782	1.329	0.225	13.500
08hs-pst_swt3_av-mn-pa-tl698	22629 PA99MWQ2 13.8	fbug	1	22	225	60.000	58.931	1.069	1.782	1.329	0.225	13.500
08lw-pre_swt2_pa-li-tl6932	22623 PA49MW 13.8	fbug	1	22	225	60.000	58.941	1.059	1.764	1.254	0.150	9.000
08lw-pre_swt2_pa-li-tl6932	22624 PALA 69	fbul	1	22	225	60.000	59.398	0.602	1.003	1.254	0.113	6.750
08lw-pre_swt2_pa-li-tl6932	22627 PA99MW 69	fbus	1	22	225	60.000	59.398	0.602	1.003	1.254	0.113	6.750
08lw-pre_swt2_pa-li-tl6932	22628 PA99MWQ1 13.8	fbug	1	22	225	60.000	59.398	0.602	1.003	1.254	0.113	6.750
08lw-pre_swt2_pa-li-tl6932	22629 PA99MWQ2 13.8	fbug	1	22	225	60.000	59.398	0.602	1.003	1.254	0.113	6.750
08lw-pre_swt3_av-mn-pa-tl698	22623 PA49MW 13.8	fbug	1	22	225	60.000	58.973	1.027	1.711	1.254	0.113	6.750
08lw-pst_swt1_pa69	22623 PA49MW 13.8	fbug	1	22	225	60.000	59.036	0.964	1.607	1.254	0.150	9.000
08lw-pst_swt1_pa69	22624 PALA 69	fbul	1	22	225	60.000	59.402	0.598	0.997	1.292	0.113	6.750
08lw-pst_swt1_pa69	22627 PA99MW 69	fbus	1	22	225	60.000	59.401	0.599	0.999	1.292	0.113	6.750

CASE NAME/SIMULATION	EXTNUM/NAME/BASEKV	TYPE	ID	AREA	ZONE	INITIAL	MIN/MAX	DELTA	PERCDIFF	ATTIME	DURATION (Seconds)	DURATION (Cycles)
08lw-pst_swt1_pa69	22628 PA99MWQ1 13.8	fbug	1	22	225	60.000	59.071	0.929	1.549	1.254	0.150	9.000
08lw-pst_swt1_pa69	22629 PA99MWQ2 13.8	fbug	1	22	225	60.000	59.071	0.929	1.549	1.254	0.150	9.000
08lw-pst_swt2_pa-li-tl6932	22623 PA49MW 13.8	fbug	1	22	225	60.000	59.058	0.942	1.570	1.292	0.225	13.500
08lw-pst_swt2_pa-li-tl6932	22624 PALA 69	fbul	1	22	225	60.000	59.187	0.813	1.355	1.329	0.188	11.250
08lw-pst_swt2_pa-li-tl6932	22627 PA99MW 69	fbus	1	22	225	60.000	59.183	0.817	1.361	1.329	0.188	11.250
08lw-pst_swt2_pa-li-tl6932	22628 PA99MWQ1 13.8	fbug	1	22	225	60.000	58.906	1.094	1.824	1.329	0.188	11.250
08lw-pst_swt2_pa-li-tl6932	22629 PA99MWQ2 13.8	fbug	1	22	225	60.000	58.906	1.094	1.824	1.329	0.188	11.250
08lw-pst_swt3_av-mn-pa-tl698	22623 PA49MW 13.8	vbug	1	22	225	1.023	0.714	0.309	30.198	1.217	0.038	2.250
08lw-pst_swt3_av-mn-pa-tl698	22623 PA49MW 13.8	fbug	1	22	225	60.000	59.068	0.932	1.554	1.292	0.225	13.500
08lw-pst_swt3_av-mn-pa-tl698	22624 PALA 69	vbul	1	22	225	1.041	0.720	0.321	30.876	1.217	0.075	4.500
08lw-pst_swt3_av-mn-pa-tl698	22624 PALA 69	fbul	1	22	225	60.000	59.222	0.778	1.297	1.329	0.188	11.250
08lw-pst_swt3_av-mn-pa-tl698	22627 PA99MW 69	vbus	1	22	225	1.041	0.720	0.321	30.830	1.217	0.038	2.250
08lw-pst_swt3_av-mn-pa-tl698	22627 PA99MW 69	fbus	1	22	225	60.000	59.218	0.782	1.303	1.329	0.188	11.250
08lw-pst_swt3_av-mn-pa-tl698	22628 PA99MWQ1 13.8	fbug	1	22	225	60.000	58.931	1.069	1.782	1.329	0.188	11.250
08lw-pst_swt3_av-mn-pa-tl698	22629 PA99MWQ2 13.8	fbug	1	22	225	60.000	58.931	1.069	1.782	1.329	0.188	11.250

6.4 Deliverability Assessment Results

In accordance with LGIP section 3.3.3.1 of the LGIP, a Deliverability Assessment will be performed to determine the Project's ability to deliver its energy to the CAISO Controlled Grid under peak load conditions. The Deliverability Assessment will provide the IC with information as to the level of deliverability without Network Upgrades, and the information as to the required Network Upgrades to enable the Project to deliver the full output to the grid based on specified study assumptions. For more details of Deliverability Assessment including methodology and modeling requirements for deliverability base case, please refer to http://www.caiso.com/181c/181c902120c80.html.

As required by LGIP tariff language, deliverability results need to provide the following information of this project regarding deliverability:

A. The deliverability level without Network Upgrades.

B. The required Network Upgrades to support 100% deliverability.

6.5 Post-Transient Voltage Analysis Results

Per mutual agreement with SDG&E, CAISO, and the IC, the post-transient voltage analysis was waived for this project. No decrease in voltage stability is expected due to Orange Grove's relatively small size, interconnection voltage, location, and other projects in the area.

6.6 Reactive Power Deficiency Analysis Results

Per mutual agreement with SDG&E, CAISO, and the IC, the reactive power deficiency analysis was waived for this project. No negative impact on reactive power is expected due to the Project's relatively small size, interconnection voltage, location, and other projects in the area.

7. Mitigation

The power flow analyses identified six (6) facilities which require mitigation due to Category B emergency overloads resulting from the interconnection of the Project. Four (4) of these facilities also overload under Category C emergency conditions. The overloaded facilities are identified in Tables 6.1 and 6.2. Each of the overloaded facilities is listed with its corresponding mitigation measure. The mitigation measures are proposed to eliminate the Category B overloads and will also eliminate the Category C overloads.

7.1 TL 698E, Pala-Monserate Tap

This 69 kV line overloads under Category B and C conditions for numerous contingencies in the COD 2008 heavy summer, COD 2008-2009 light winter, and FY 2012 heavy summer cases. The greatest overload is due to the outage of TL 6932, Lilac-Pala. The mitigation for this overload is a reconductor of TL 698E from Pala to Monserate with 636 KCM ACSS and a replacement of the Pala getaways with 3000 KCM Cu.

7.2 TL 698B, Monserate-Monserate Tap

This 69 kV line overloads with the outage of TL 6932, Lilac-Pala, under Category B conditions in the COD heavy summer and light winter and the FY heavy summer cases. The line also overloads under Category C conditions with the outage of the Lilac South Bus in the COD light winter case. The pole line was upgraded for a distribution project. The IC is responsible for minimal upgrades which were not included in the distribution project – replacement of the getaways at Monserate with 3000 KCM Cu and reconductoring one span to 636 KCM ACSS.

7.3 TL 691B, Monserate-Avocado Tap

This 69 kV line overloads with the outage of TL 6932, Lilac-Pala, under Category B conditions in the COD light winter case. The limiting element is the relay setting at Monserate. Increasing the relay setting will mitigate this overload.

7.4 TL 6932, Lilac-Pala

This 69 kV line overloads under Category B and C conditions for numerous contingencies in the COD heavy summer and light winter and the FY heavy summer cases. The greatest overload is due to the outage of TL 691B, Monserate-Avocado Tap. The limiting elements for this line are the TL 6932 circuit breaker at Lilac and the Pala getaways. The mitigation for this overload is an upgrade of this breaker and a reconductor of the Pala getaways. At this time, the IC is only responsible for upgrading the Pala getaways because there is an existing project scheduled to replace this breaker by December 2007. If the existing project is canceled, the IC will be responsible for replacing this breaker.

7.5 TL 683, Rincon-Lilac

This 69 kV line overloads with the outage of TL 681, Ash-Ash Tap-Felicita-Valley Center, under Category B conditions in the FY heavy summer case. The recommended mitigation for this overload is a reconductor of TL 683. There is an existing project to reconductor this line. It is planned for the year 2011 timeframe. This overload does not exist in the 2008 analyses but is evident in 2012. The IC is responsible for advancing the reconductor project to eliminate the overload caused by the Orange Grove Project. The analysis shows that the reconductor is not needed in 2008. Further study is needed to establish the year the reconductor is needed, sometime between 2009 and 2012. This will be studied during the Facilities Study phase to determine when the absence of this project is detrimental to Orange Grove reliability.

7.6 TL682, Warners-Rincon

This 69 kV line overloads with two Category B contingencies - the outage of TL 6917, Creelman-Sycamore in the FY heavy summer and the outage of TL 50001, Imperial Valley-Miguel, with the SPS 6.2 in the COD heavy summer. The SPS 6.2 will trip the generation at Imperial Valley and the Miguel-Tijuana line in the summer. (A proposed substation is modeled as WIND so the existing TL 50001 is modeled as two sections, IV-WIND and WIND-ML.)

TL 682 also overloads with the “common structure” outage (Category C) of Carlton Hills-Sycamore-Santee 138 kV line and Los Coches-El Cajon 69 kV line in the FY heavy summer.

Due to the 2008 COD requested by the IC, a Special Protection System is recommended in lieu of a major reconductor to mitigate the overload of TL 682. The SPS would monitor TL 682 and initiate tripping of TL 685, Warners-Santa Ysabel, for overload of TL 682.

7.7 Maximum Output without Delivery Network Upgrades

The maximum generation output allowed without the need for Delivery Network Upgrades is 25 MW. Limiting the output of this project’s generation to 25 MW may not be an acceptable mitigation for this Interconnection Request. Per the LGIP 4.4.2, prior to the return of the executed Interconnection Facility Study Agreement to the CAISO, a 15 percent decrease in the generation output is permitted. A reduction in generation output to 25 MW is greater than permitted under this section, LGIP 4.4.2. If this lower generation level of 25 MW is pursued, the IC must request that the CAISO evaluate whether such a modification is a Material Modification. If it is determined that this reduction is not a Material Modification, the reduction in output will be acceptable. If it is deemed a Material Modification, this Interconnection Request must be withdrawn from the Queue and a new Interconnection Request for 25 MW must be submitted.

8. Local Furnishing Bonds/Industrial Development Bonds

SDG&E has financed or refinanced substantial portions of its wholly-owned transmission and distribution systems with proceeds from $687,000,000 of outstanding Local Furnishing Bonds ("LFBs") issued by the City of San Diego and the City of Chula Vista. This includes (without limitation) a portion of the costs of SDG&E's wholly-owned Miguel-Imperial Valley 500 kV transmission line and a portion of SDG&E's wholly-owned United States portion of the Miguel-Tijuana 230 kV transmission line. Interest on these LFBs is tax-exempt. If the proposed Project would impair the tax-exempt status of interest on these LFBs under the Internal Revenue Code, Treasury Regulations and applicable IRS private letter rulings (an "Impairment"), the IC would pay any costs SDG&E incurs in mitigating the Impairment.

The Orange Grove Project does not appear to cause an Impairment at this time. This conclusion may need to be revisited if there is any change in material facts which are relevant to determining whether an Impairment may arise.

SDG&E completed its assessment in the 2012 time period to determine whether (1) the Orange Grove Project will require SDG&E to acquire any facilities sooner, larger or of a different design than is needed for the purpose of providing electric service to SDG&E's retail electric customers, or (2) electric energy from the Orange Grove Project in combination with other local generation and SDG&E's share of electric energy from its remote generation, may cause an actual or deemed cumulative annual net outbound flow of electric energy from SDG&E's wholly-owned electric facilities in San Diego, Orange, and Imperial Counties in violation of the Encumbrances set forth in SDG&E's Appendix B to the Transmission Control Agreement with the CAISO (the "TCA"). Based on prior analyses where SDG&E utilized ABB's Grid View software, a market simulation tool, to model the net energy flow into the SDG&E service territory, electric generating plants used only for high peak load conditions will be dispatched relatively minimal hours per year. Per this assumption, SDG&E presently expects that (1) in connection with the Orange Grove Project, SDG&E will not need to acquire any facilities sooner, larger, or of a different design than is needed for the purpose of providing electric service to SDG&E's retail electric customers, and (2) the actual and deemed flows of electricity into and out of SDG&E's wholly-owned electric facilities in San Diego, Orange, and Imperial Counties are expected to remain in-bound on a net annual basis with the addition of the Orange Grove Project.

Also, if in the future electric energy produced by owners of existing and new generation facilities located in San Diego or Orange County and interconnecting to SDG&E's wholly-owned electric transmission and distribution system is not scheduled and dispatched for sale to SDG&E for service to its local furnishing customers, or if SDG&E is required to acquire facilities sooner, larger, or of a different design than is needed for the purpose of providing electric service to SDG&E's retail electric customers, SDG&E may be required to redeem or defease LFBs, as contemplated by the TCA. Under the CAISO Tariff and TCA, however, the CAISO is obligated to effect such remedial measures as might be available to avoid an Impairment that would otherwise trigger a redemption or defeasance. Such remedial measures, for example, might be undertaken by the CAISO through rejection of schedules or bid protocols sufficient to avoid net annual outbound flows resulting from the Orange Grove Project and other generation within the San Diego basin not utilized to service SDG&E's local furnishing customers, subject to the annual net importer limitation.

9. Estimated Costs

According to the CAISO LGIP study process, the role and responsibilities of SDG&E for this Interconnection System Impact Study are as follows:

A. Identify transmission constraints attributable to the proposed Orange Grove Project,

B. Develop and provide non-binding, good faith estimate of cost and cost responsibility for the Interconnection Facilities, Reliability Network Upgrades, and Delivery Network Upgrades identified in this study,

C. Determine fair and reasonable cost allocations across the various queued projects in the Future Year model with respect to the proposed project.

Cost estimates developed within this study are considered to be preliminary, non-binding, good faith and include the following assumptions:

A. Project concepts are based on representations from the Interconnection Customer.

B. Project concepts are based on mandatory reliability criteria from applicable reliability and regulatory authorities (NERC, WECC, and CAISO).

C. Project concepts are based on sound engineering judgment.

D. All costs are based on SDG&E construction methods and techniques.

E. All costs are in “as year spent” dollars.

F. All costs included in this report are valid for 90 days only.

Table 9.1 summarizes the scope of transmission reinforcements identified in this study and the associated preliminary, non-binding, good faith costs of construction of the facilities. The costs reflect a 2008 in-service date.

Table 9.1: Non-Binding, Good Faith Cost Estimate Summary[10]

Type of Upgrade[11]	Location	Description	Estimated Cost x 1,000
PTO's Interconnection Facilities[12]	Pala Substation[13]	• Install one 69 kV circuit breaker • Install underground cable termination and bus support stands and two 2000 amp disconnects in an existing line position • Install 150' of 3-6" conduit from the termination stand to the substation fence • Install associated control and protection panels for the new line and add RTU points for control, monitoring, and alarming. • Install 150' of cable from the termination stand to substation fence.	$1,404
Reliability Network Upgrades[14]	None[15]	None	$0
Delivery Network Upgrades[16]	TL 698E (Pala-Monserate Tap)	Reconductor from Pala to Monserate Tap with 636 KCM ACSS and replace Pala getaways with 3000 KCM Cu	$10,447
	TL 698B (Monserate-Monserate Tap)	Replace Monserate getaways with 3000 KCM Cu and reconductor one span to 636 KCM ACSS	$278
	TL 691B (Monserate-Avocado Tap)	Increase relay settings at Monserate	$5
	TL 6932 (Lilac-Pala)	Replace Pala getaways with 3000 KCM Cu. (An existing project to replace the TL 6932 breaker at Lilac is scheduled for completion by December 2007.)	$276
	TL 683 (Rincon-Lilac)	Advance the reconductor of TL 683 (needed after 2008)	To be determined[17]
Special Protection System (SPS)	TL 682 (Warners-Rincon)	• SPS to prevent overload of TL 682 • Monitor TL 682 • If TL 682 exceeds rating • Trip TL 685 (Warners-Santa Ysabel)	$44
Total			**$12,454**

[10] All costs estimates are preliminary, non-binding, good faith estimates in "as year spent" dollars. Taxes, landscaping, under grounding, walls, gates, driveways, CAISO metering, and environmental and licensing costs are not included. All Interconnection Facilities costs for ROW are assumed to be the responsibility of the Interconnection Customer. Network Upgrade costs exclude acquisition of new transmission Right-Of-Way (ROW) and substation land.

[11] See Appendix A for the definitions of the types of upgrades as defined by the LGIP.

[12] The IC is obligated to fund the PTO's Interconnection Facilities.

[13] If a higher-queued project (#173) delays its in-service date or withdraws from the Queue, the Orange Grove Project will be responsible for funding an additional $33K for PTO's Interconnection Facilities.

[14] The IC is obligated to advance funds to SDG&E for Reliability Network Upgrades and will be reimbursed upon commercial operation of the plant.

[15] If a higher-queued project (#173) delays its in-service date or withdraws from the Queue, the Orange Grove Project will be responsible for advancing an additional $85K for extending the 69 kV Pala Main Bus.

[16] The IC may elect to advance funds to SDG&E for Delivery Network Upgrades and will be reimbursed upon commercial operation of the plant.

[17] The estimated cost of this advancement will be studied in the Interconnection Facilities Study phase.

9.1 Participating TO's Interconnection Facilities

The PTO's Interconnection Facilities are all the facilities and equipment owned, controlled, or operated by SDG&E from the Point of Change of Ownership to the Point of Interconnection (see Figure 9.1). The Point of Interconnection is the 69 kV bus at the SDG&E Pala Substation. The Point of Change of Ownership is at the Pala Substation fence.

The following PTO's Interconnection Facilities are required for the Orange Grove Project's underground interconnection:

A. Install one 69 kV circuit breaker.

B. Install underground cable termination and bus support stands and two 2000 amp disconnects in an existing line position.

C. Install approximately 150' of 3-6" conduit from the termination stand to the substation fence.

D. Install associated control and protection panels for the new line and add RTU points for control, monitoring, and alarming.

E. Install approximately 150' of cable from the termination stand to the substation fence.

According to the current CAISO Tariff, the IC is obligated to fund $1,404K for the PTO's Interconnection Facilities. See Appendix L for the PTO's Interconnection Facilities in the Ultimate Arrangement and Section View of the Pala Substation.

If the higher-queued project, Queue Position #173, delays its in-service date or withdraws from the Queue, the Orange Grove Project will also be responsible for funding an additional $33K for the PTO's Interconnection Facilities. This additional cost is needed to 1) install bus work associated with a new line position created with the Main Bus Extension at the Pala Substation and 2) install an additional 50' (200' total) of cable from the termination stand to the substation fence. (No conduit installation will be needed.)

Figure 9.1: Interconnection Facilities & Reliability Network Upgrade

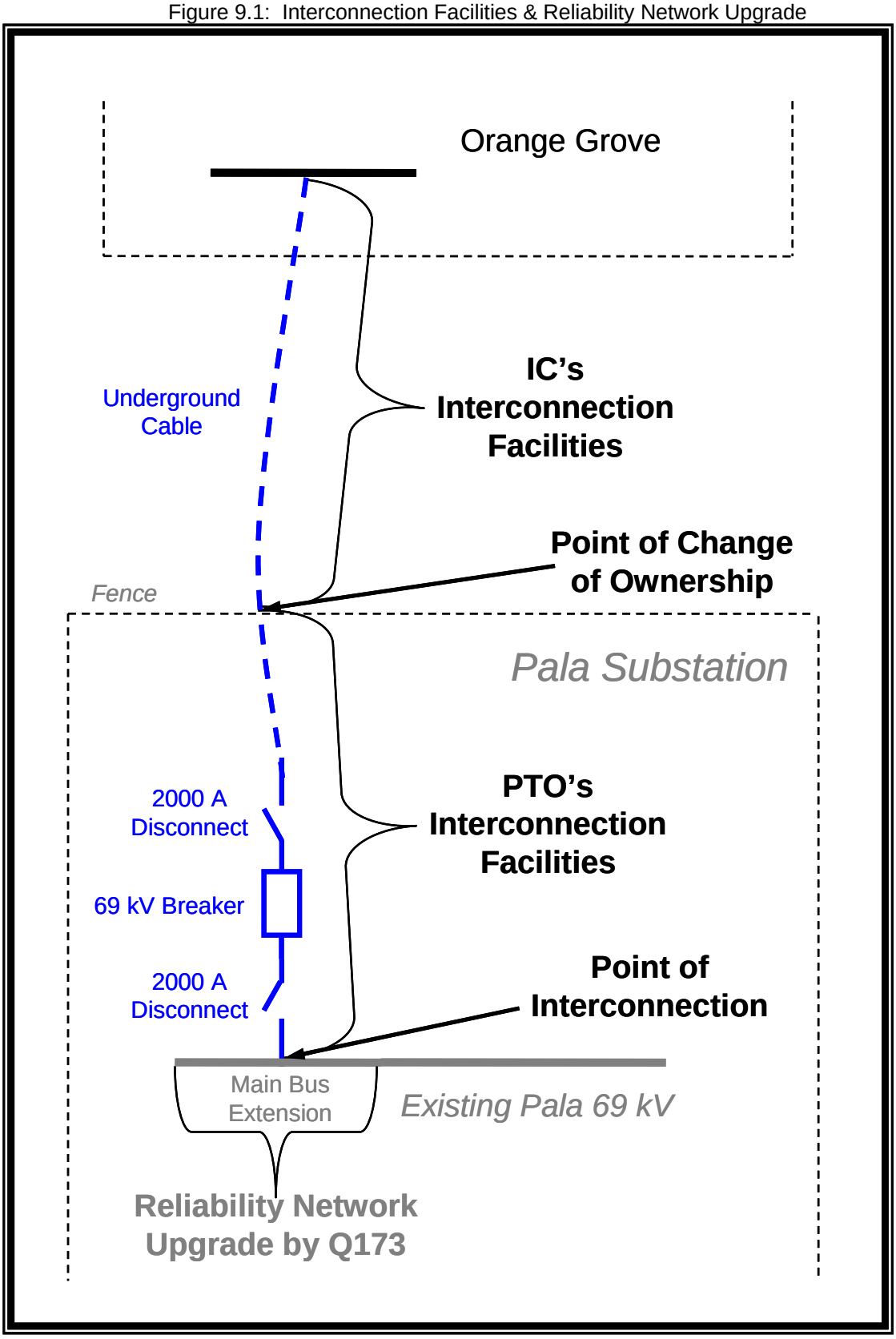

9.2 Reliability Network Upgrades

Based on this study, there are no Reliability Network Upgrades attributed to the interconnection of the Project. Although, if the higher-queued project, Queue Position #173, delays its in-service date or withdraws from the Queue, the Orange Grove Project will be responsible for extending the 69 kV Main Bus at the Pala Substation. This is an upgrade of the PTO's existing facilities beyond the Point of Interconnection (see Figure 9.1). The Project will be responsible for advancing $85K for this Reliability Network Upgrade.

9.3 Delivery Network Upgrades

The power flow analyses identified six (6) facilities requiring mitigation due to Category B emergency overloads resulting from the interconnection of the Project. The mitigation measures are proposed to eliminate the Category B overloads and will also eliminate the Category C overloads.

The Delivery Network Upgrades recommended to mitigate the overloaded facilities are:

A. TL 698E (Pala-Monserate Tap): Reconductor from Pala to Monserate Tap with 636 KCM ACSS and replace Pala getaways with 3000 KCM Cu.

B. TL 698B (Monserate-Monserate Tap): Replace Monserate getaways with 3000 KCM Cu and reconductor one span with 636 KCM ACSS.

C. TL 691B (Monserate-Avocado Tap): Increase relay settings at Monserate.

D. TL 6932 (Lilac-Pala): Replace Pala getaways with 3000 KCM Cu and upgrade TL 6932 breaker at Lilac. (An existing project is scheduled to replace this breaker by December 2007. If SDG&E cancels the project, the upgrade will be the responsibility of the IC.)

E. TL 683 (Rincon-Lilac): Advance the reconductor of TL 683. (An existing project is currently scheduled to reconductor TL 683 in the year 2011 timeframe. If SDG&E cancels the project, the upgrade will be the responsibility of the IC.)

F. TL 682 (Warners-Rincon): Implement a Special Protection System (SPS) to monitor TL 682 and initiate tripping of TL 685 (Warners-Santa Ysabel) for overload of TL 682. Due to the 2008 COD requested by the IC, this SPS is recommended in lieu of a major reconductor of TL 682 to mitigate the overload.

9.4 Other Issues

There are no other issues identified for the interconnection of the Orange Grove Project.

10. Estimated Time to Construct

The length of time that SDG&E needs to design, procure, and construct and/or upgrade a generation project's Interconnection Facilities, Reliability Network Upgrades, and Delivery Network Upgrades is a preliminary, non-binding, good-faith effort to estimate the total construction time. These estimates are dependent on many factors (when applicable), including but not limited to:

A. Whether an exemption can be obtained from the California Public Utilities Commission's (CPUC's) G.O. 131-D Certificate of Public Convenience and Necessity (CPCN) process.

B. Whether an exemption can be obtained from the CPUC's Permit to Construct (PTC) process.

C. Whether the IC includes the full scope of the transmission and substation additions and upgrades in its application to the lead agency for the California Environmental Quality Act (CEQA) review.

D. Whether the IC intends to fund the Delivery Network Upgrades.

E. Whether the IC chooses to build its own Interconnection Facilities.

The outcome of these processes and/or IC project/business decisions could increase cost and/or construction duration. Absent an exemption, the process of obtaining the CPUC's approval could take one to two years, or even longer.

SDG&E plans to file an Advice Letter with the CPUC once J-Power USA receives California Energy Commission approval with a finding of "no significant unavoidable environmental impacts" associated with SDG&E's activities. Construction by SDG&E will begin after the Advice Letter is received by the CPUC and the appropriate notice period has elapsed. SDG&E's experience is that the time frame for beginning construction on an unprotested Advice Letter is about 50 days from its filing. In addition to CPUC notification, other federal, state, and local permits may be required prior to beginning construction.

The estimated time to construct/upgrade the identified facilities summarized in Table 10.1 does not include the time needed for environmental review, permitting, and delays for outage coordination. The estimated time SDG&E needs to design, procure, and construct the facilities is listed in the table. The estimate assumes the design, equipment procurement, and construction process is continuous and also assumes timely scheduling of transmission system outages to perform the work. Outages may not be possible during periods of high system demand or emergency conditions. The design phase does not typically start until successful completion of the Large Generator Interconnection Agreement (LGIA).

The proposed in-service date of April 1, 2008 and commercial operation date of May 31, 2008 do not appear to be feasible considering the time needed to complete the Interconnection Facilities Study, the LGIA, and construction of the Interconnection Facilities

and Network Upgrades (including potential environmental review, permitting, design, procurement, and construction).

Table 10.1: Non-Binding, Good Faith Estimated Time to Construct[18]

Type of Upgrade[19]	Location	Description	Estimated Time to Construct
PTO's Interconnection Facilities[20]	Pala Substation[21]	• Install one 69 kV circuit breaker • Install underground cable termination and bus support stands and two 2000 amp disconnects in an existing line position • Install 150' of 3-6" conduit from the termination stand to the substation fence • Install associated control and protection panels for the new line and add RTU points for control, monitoring, and alarming. • Install 150' of cable from the termination stand to substation fence.	6 Months
Reliability Network Upgrades[22]	None[23]	None	0
Delivery Network Upgrades[24]	TL 698E (Pala-Monserate Tap)	Reconductor from Pala to Monserate Tap with 636 KCM ACSS and replace Pala getaways with 3000 KCM Cu	6 Months
	TL 698B (Monserate-Monserate Tap)	Replace Monserate getaways with 3000 KCM Cu and reconductor one span to 636 KCM ACSS	6 Months
	TL 691B (Monserate-Avocado Tap)	Increase relay settings at Monserate	1 Month
	TL 6932 (Lilac-Pala)	Replace Pala getaways with 3000 KCM Cu. (An existing project to replace the TL 6932 breaker at Lilac is scheduled for completion by December 2007.)	6 Months
	TL 683 (Rincon-Lilac)	Advance the reconductor of TL 683 (needed after 2008)	To be determined[25]
Special Protection System (SPS)	TL 682 (Warners-Rincon)	• SPS to prevent overload of TL 682 • Monitor TL 682 • If TL 682 exceeds rating • Trip TL 685 (Warners-Santa Ysabel)	6 Months
Total			**6 Months**

Per Section 9 of the LGIP, an Engineering & Procurement (E&P) Agreement may be utilized prior to executing an LGIA. The E&P Agreement authorizes the Participating TO to commence engineering and procurement of long lead-time items necessary for the interconnection. The IC should consider this optional procedure to meet the in-service date.

[18] Estimated time to construct includes time for design, equipment procurement, and construction. The estimate assumes the process is continuous and excludes time for environmental review, permitting, and delays for outage coordination.
[19] See Appendix A for the definitions of the types of upgrades as defined by the LGIP.
[20] The IC is obligated to fund the PTO's Interconnection Facilities.
[21] If a higher-queued project (#173) delays its in-service date or withdraws from the Queue, the Orange Grove Project will be responsible for additional PTO's Interconnection Facilities, estimated to take 6 months to construct.
[22] The IC is obligated to advance funds to SDG&E for Reliability Network Upgrades and will be reimbursed upon commercial operation of the plant.
[23] If a higher-queued project (#173) delays its in-service date or withdraws from the Queue, the Orange Grove Project will be responsible for extending the 69 kV Pala Main Bus, estimated to take 6 months to construct.
[24] The IC may elect to advance funds to SDG&E for Delivery Network Upgrades and will be reimbursed upon commercial operation of the plant.
[25] The estimated timeframe of this advancement will be studied in the Interconnection Facilities Study phase.

11. Re-Study

Potential for re-study of the ISIS exists and may be required due to a higher-queued project dropping out of the Queue or a modification of a higher-queued project, or any other effective change in information which necessitates a re-study. If this possibility materializes CAISO shall notify the IC in writing. Upon receipt of such notice, the IC shall provide CAISO, within ten (10) business days, a written request that the Participating TO either (i) terminate the study and withdraw the Interconnection Request; or (ii) continue the study. If the IC requests CAISO to continue the study, the IC shall pay an additional $10,000 deposit for the re-study along with providing written notice for the study to continue. Such re-study shall take no longer than sixty (60) calendar days from the date written notice is received to continue the study and payment of the additional $10,000 deposit. Study results will be shared for review. Comments will be incorporated and a final study report will be issued within eighty (80) calendar days following receipt of the IC's written notice to continue the study and payment of the additional $10,000 deposit. If SDG&E and/or the CAISO are unable to complete the ISIS within that additional eighty (80) calendar days time period, CAISO shall notify the IC and provide an estimated completion date with an explanation of the reasons why additional time is required. Any and all costs of a re-study shall be borne by the IC.

APPENDIX 3.2-A

EMISSION CALCULATION DATA

Table 3.2A - 1 - Onsite Off-Road Construction Equipment Activity Summary

	Equipment/Vehicle Type	Fuel	Hours/ day	(Weeks) Bi-Weekly Maximum Daily Number														
				1 - 2	3 - 4	5 - 6	7 - 8	9 - 10	11 - 12	13 - 14	15 - 16	17 - 18	19 - 20	21 - 22	23 - 24	25 - 26	27 - 28	29 - 30
Site Prep - Civil	977 Loader	D	8	1	1	1		1										
	D-8 Dozer	D	8	1	1	1												
	637 Scappers	D	8	2	2	2												
	824 Compactors	D	8	1	1	1												
	12 G Motor Grader	D	8			1		1	1									
	Water Truck	D	8	1	1	1												
	Skip Loader	D	8			1		1	1									
	613 Scraper	D	8					1	1									
	Lowbeds	D	12	2	1		1	1										
	End Dumps	D	8	6														
	Fuel Trucks	D	4	1	1	1		1	1									
Plant - Civil	Forklift	D	5			1	1		1		1		1	1				
	Backhoe	D	8				1	1	1	1	1			1				
	Compressor	D	4				2	1				1	1	1				
	Skiploader	D	8	1					1	1	1	1	1	1				
	Generator	D	8			1	1	1	1	1	1	1	1	1				
	Concrete Pump	D	4					1	1	1								
	Compact Equipment	G	4						1	2	2							
	Front-end loader	D	8							1	1	1						
Mech	Welding rigs	D	6				2	2	6	8	8	8	8	6	4	2		
	Backhoe	D	6					2	3	4	4	6	6	6	6	4	2	
	75 ton crane	D	6					1	2	2	2	2	1	1	1			
Electrical	Backhoe	D	6			2	2	1	1	1								
	Compressor	D	6			2	2	1	1	1	1							
	Front-end loader	D	6			1	1	1	1	1								
	15 ton crane	D	6			1	1	1	1	1	1	1	1	1	1	1		
	75 ton crane	D	6									1						

Table 3.2A - 2 - Offsite Construction Equipment Activity Summary

	Equipment/Vehicle Type	Fuel	Hours/ day	(Weeks) Bi-Weekly Maximum Daily Number														
				1 - 2	3 - 4	5 - 6	7 - 8	9 - 10	11 - 12	13 - 14	15 - 16	17 - 18	19 - 20	21 - 22	23 - 24	25 - 26	27 - 28	29 - 30
Water Line	Water Line Welding Rig	D	6				2	2	2	2	2	2	2	2	2			
	Water Line Backhoe	D	6			1	1	2	2	2	2	1	1	1	1			
	Water Line Compressor	D	3								1	1	1	1				
	Water Line Front-end loader	D	6					1	1	2	2	1						
	Water Line Compactor	D	6					2	2	2	2	2						
	Water Line 15 ton crane	D	6					1	1	1								
Gas Line	Gas Line Welding rigs	D	6					1	2	2	2	2	2	1	1			
	Gas Line Backhoe	D	6					1	2	2	2	1						
	Gas Line Compressor	D	4										1	1	1			
	Gas Line Front-end loader	D	5									1	1	1				
	Gas Line Compactor	D	4									2	2	2				
	Gas Line 15 ton crane	D	4					1	1	1	1	1						

Table 3.2A - 3 - Offsite On-Road Commute Activity Summary

	Motor Vehicles (Offsite)	Fuel	Miles/ Day	(Weeks) Bi-Weekly Maximum Daily Number															Total Unit Trips
				1 - 2	3 - 4	5 - 6	7 - 8	9 - 10	11 - 12	13 - 14	15 - 16	17 - 18	19 - 20	21 - 22	23 - 24	25 - 26	27 - 28	29 - 30	
Site & Plant - Civil	Construction Worker Commute	G	40	6	6	6	6	6	6										180
	On-Site Pickup Truck	G	30	1	1	1	1	1	1	1	1	1	1	1	2	2	2	2	95
	Dump Truck	D	20		1					1	1	1							20
	On-Site Water Truck	D	20	1	1	1	1	1	1	1	1	1	1	1					55
	Concrete Truck	D	20					1	2	2	1	1							35
	Delivery Truck	D	30	1		1		1		1	1	1	1	1	1	1	1	1	60
	Construction Worker Commute	G	40	2	2	3	4	5	6	8	8	6	6	6	15	15	15	15	580
Plant (Mech)	On-Site Pickup Truck	G	30			2	2	3	3	2	2	2	1	2	2	2	2	2	135
	Delivery Truck	D	30			1	1	1	1	1	1	1	1	1	1	1	1		60
	Construction Worker Commute	G	40	2	2	12	16	20	20	20	20	20	16	14	12	10	8	4	980
Plant (Elec)	On-Site Pickup Truck	G	30		1	4	4	3	3	3	3	3	3	3	3	2	2	2	195
	Dump Truck	D	20			2	2	1	1	1	1								40
	Concrete Truck	D	20			2	2	1	1	1									35
	Delivery Truck	D	30			1	1	1	1	1	1	1	1	1	1	1	1		60
	Construction Worker Commute	G	40		4	13	13	7	7	7	7	7	7	7	7	7	7	4	520
Gas Line	On-Site Pickup Truck	G	30					2	2	2	2	2	2	2	2				80
	Dump Truck	D	20						1	1	1	1	1	1					30
	On-Site Water Truck	D	20							1	1	1	1						20
	Delivery Truck	D	30					1	1	1	1	1	1						30
	Construction Worker Commute	G	40	2	2	2	2	4	8	8	8	8	8	4	4				300
Water Line	On-Site Pickup Truck	G	30			1	1	1	1	1	1	1	1	1	1	1	1	1	65
	Dump Truck	D	20					1	1	1	1	1	1	1					35
	On-Site Water Truck	D	20					1	1	1	1								20
	Delivery Truck	D	30				1	1	1	1	1	1	1	1					40
	Construction Worker Commute	G	40	2	2	4	6	12	12	12	12	12	12	10	6				510

Table 3.2A - 4 - Construction Related On-Road Mobile Source Exchaust Emission Summary

	Motor Vehicles / Offsite	Fuel	Miles/ Round Trip	Total Unit Trips [1]	Emission Factors [2][3]						Project Emissions (lb)					
					ROG (lb/mi)	CO (lb/mi)	NOx (lb/mi)	SOx (lb/mi)	PM10 (lb/mi)	PM2.5 (lb/mi)	ROG	CO	NOx	SOx	PM10	PM2.5
Site & Plant - Civil	Worker Commute	G	40	180	1.100E-3	1.050E-2	1.100E-3	0.000E+0	1.000E-4	1.000E-4	7.92	75.60	7.92	0.00	0.72	0.72
	On-Site Pickup Truck	G	30	95	1.100E-3	1.050E-2	1.100E-3	0.000E+0	1.000E-4	1.000E-4	3.14	29.93	3.14	0.00	0.29	0.29
	Dump Truck	D	20	20	**3.516E-3**	**1.361E-2**	**4.458E-2**	**4.136E-5**	**2.156E-3**	**1.900E-3**	**1.41**	**5.45**	**17.83**	**0.02**	**0.86**	**0.76**
	On-Site Water Truck	D	20	55	**3.516E-3**	**1.361E-2**	**4.458E-2**	**4.136E-5**	**2.156E-3**	**1.900E-3**	**3.87**	**14.98**	**49.04**	**0.05**	**2.37**	**2.09**
	Concrete Truck	D	20	35	**3.516E-3**	**1.361E-2**	**4.458E-2**	**4.136E-5**	**2.156E-3**	**1.900E-3**	**2.46**	**9.53**	**31.21**	**0.03**	**1.51**	**1.33**
	Delivery Truck	D	30	60	2.993E-3	2.195E-2	2.371E-2	2.565E-5	8.561E-4	7.393E-4	5.39	39.51	42.68	0.05	1.54	1.33
	Worker Commute	G	40	580	1.100E-3	1.050E-2	1.100E-3	0.000E+0	1.000E-4	1.000E-4	25.52	243.60	25.52	0.00	2.32	2.32
Plant (Mech)	On-Site Pickup Truck	G	30	135	1.100E-3	1.050E-2	1.100E-3	0.000E+0	1.000E-4	1.000E-4	4.46	42.53	4.46	0.00	0.41	0.41
	Delivery Truck	D	30	60	2.993E-3	2.195E-2	2.371E-2	2.565E-5	8.561E-4	7.393E-4	5.39	39.51	42.68	0.05	1.54	1.33
	Worker Commute	G	40	980	1.100E-3	1.050E-2	1.100E-3	0.000E+0	1.000E-4	1.000E-4	43.12	411.60	43.12	0.00	3.92	3.92
Plant (Elec)	On-Site Pickup Truck	G	30	195	1.100E-3	1.050E-2	1.100E-3	0.000E+0	1.000E-4	1.000E-4	6.44	61.43	6.44	0.00	0.59	0.59
	Dump Truck	D	20	40	**3.516E-3**	**1.361E-2**	**4.458E-2**	**4.136E-5**	**2.156E-3**	**1.900E-3**	**2.81**	**10.89**	**35.66**	**0.03**	**1.73**	**1.52**
	Concrete Truck	D	20	35	**3.516E-3**	**1.361E-2**	**4.458E-2**	**4.136E-5**	**2.156E-3**	**1.900E-3**	**2.46**	**9.53**	**31.21**	**0.03**	**1.51**	**1.33**
	Delivery Truck	D	30	60	2.993E-3	2.195E-2	2.371E-2	2.565E-5	8.561E-4	7.393E-4	5.39	39.51	42.68	0.05	1.54	1.33
	Worker Commute	G	40	520	1.100E-3	1.050E-2	1.100E-3	0.000E+0	1.000E-4	1.000E-4	22.88	218.40	22.88	0.00	2.08	2.08
Gas Line	On-Site Pickup Truck	G	30	80	1.100E-3	1.050E-2	1.100E-3	0.000E+0	1.000E-4	1.000E-4	2.64	25.20	2.64	0.00	0.24	0.24
	Dump Truck	D	20	30	**3.516E-3**	**1.361E-2**	**4.458E-2**	**4.136E-5**	**2.156E-3**	**1.900E-3**	**2.11**	**8.17**	**26.75**	**0.02**	**1.29**	**1.14**
	On-Site Water Truck	D	20	20	**3.516E-3**	**1.361E-2**	**4.458E-2**	**4.136E-5**	**2.156E-3**	**1.900E-3**	**1.41**	**5.45**	**17.83**	**0.02**	**0.86**	**0.76**
	Delivery Truck	D	30	30	2.993E-3	2.195E-2	2.371E-2	2.565E-5	8.561E-4	7.393E-4	2.69	19.75	21.34	0.02	0.77	0.67
	Worker Commute	G	40	300	1.100E-3	1.050E-2	1.100E-3	0.000E+0	1.000E-4	1.000E-4	13.20	126.00	13.20	0.00	1.20	1.20
Water Line	On-Site Pickup Truck	G	30	65	1.100E-3	1.050E-2	1.100E-3	0.000E+0	1.000E-4	1.000E-4	2.15	20.48	2.15	0.00	0.20	0.20
	Dump Truck	D	20	35	**3.516E-3**	**1.361E-2**	**4.458E-2**	**4.136E-5**	**2.156E-3**	**1.900E-3**	**2.46**	**9.53**	**31.21**	**0.03**	**1.51**	**1.33**
	On-Site Water Truck	D	20	20	**3.516E-3**	**1.361E-2**	**4.458E-2**	**4.136E-5**	**2.156E-3**	**1.900E-3**	**1.41**	**5.45**	**17.83**	**0.02**	**0.86**	**0.76**
	Delivery Truck	D	30	40	2.993E-3	2.195E-2	2.371E-2	2.565E-5	8.561E-4	7.393E-4	3.59	26.34	28.46	0.03	1.03	0.89
	Worker Commute	G	40	510	1.100E-3	1.050E-2	1.100E-3	0.000E+0	1.000E-4	1.000E-4	22.44	214.20	22.44	0.00	2.04	2.04
										Total (lb)	**197**	**1,713**	**590**	**0**	**33**	**31**

(1) Total unit trips is the sum of round trip per vehicle type over the life of the project

(2) SCAQMD Emfac 2007 (version 2.3) Emission factors for
On-Road Passenger Vehicles & Delivery Trucks (Scenario 2008)

(3) On-Road Heavy-Heavy-Duty Diesel Trucks (Scenario 2008)

Table 3.2A - 5 - On-Road Mobile Source Dust Entrainment on Paved[1] Surface Emission Summary

	Motor Vehicles / Offsite	Fuel	Avg Vehicle Weight (ton)	Silt Load-ing	Miles/ Round Trip	Total Unit Trips [2]	Emission Factors [3]		PM Emissions	
							PM10 (lb/mi)	PM2.5 (lb/mi)	PM10	PM2.5
Site & Plant - Civil	Worker Commute	G	2.7	0.037	40	180	1.00E-03	2.00E-04	7.20	1.44
	On-Site Pickup Truck	G	2.7	0.037	30	95	1.00E-03	2.00E-04	2.85	0.57
	Dump Truck	D	2.7	0.037	20	20	1.00E-03	2.00E-04	0.40	0.08
	On-Site Water Truck	D	30	0.037	20	55	1.00E-03	2.00E-04	1.10	0.22
	Concrete Truck	D	2.7	0.037	20	35	1.00E-03	2.00E-04	0.70	0.14
	Delivery Truck	D	2.7	0.037	30	60	1.00E-03	2.00E-04	1.80	0.36
	Worker Commute	G	2.7	0.037	40	580	1.00E-03	2.00E-04	23.20	4.64
Plant (Mech)	On-Site Pickup Truck	G	2.7	0.037	30	135	1.00E-03	2.00E-04	4.05	0.81
	Delivery Truck	D	2.7	0.037	30	60	1.00E-03	2.00E-04	1.80	0.36
	Worker Commute	G	2.7	0.037	40	980	1.00E-03	2.00E-04	39.20	7.84
Plant (Elec)	On-Site Pickup Truck	G	2.7	0.037	30	195	1.00E-03	2.00E-04	5.85	1.17
	Dump Truck	D	2.7	0.037	20	40	1.00E-03	2.00E-04	0.80	0.16
	Concrete Truck	D	2.7	0.037	20	35	1.00E-03	2.00E-04	0.70	0.14
	Delivery Truck	D	2.7	0.037	30	60	1.00E-03	2.00E-04	1.80	0.36
	Worker Commute	G	2.7	0.037	40	520	1.00E-03	2.00E-04	20.80	4.16
Gas Line	On-Site Pickup Truck	G	2.7	0.037	30	80	1.00E-03	2.00E-04	2.40	0.48
	Dump Truck	D	2.7	0.037	20	30	1.00E-03	2.00E-04	0.60	0.12
	On-Site Water Truck	D	30	0.037	20	20	1.00E-03	2.00E-04	0.40	0.08
	Delivery Truck	D	2.7	0.037	30	30	1.00E-03	2.00E-04	0.90	0.18
	Worker Commute	G	2.7	0.037	40	300	1.00E-03	2.00E-04	12.00	2.40
Water Line	On-Site Pickup Truck	G	2.7	0.037	30	65	1.00E-03	2.00E-04	1.95	0.39
	Dump Truck	D	2.7	0.037	20	35	1.00E-03	2.00E-04	0.70	0.14
	On-Site Water Truck	D	30	0.037	20	20	1.00E-03	2.00E-04	0.40	0.08
	Delivery Truck	D	2.7	0.037	30	40	1.00E-03	2.00E-04	1.20	0.24
	Worker Commute	G	2.7	0.037	40	510	1.00E-03	2.00E-04	20.40	4.08
								Total Project:	**153.20**	**30.64**

(1) Note that all roads traveled by construction vehicles are on paved surface except for the last 500 feet (0.1 mile) where the vehicles are parked. Speed sign will be posted here to limit speed to less than 15 MPH.

(2) Total unit trips is the sum of round trip per vehicle type over the life of the project

(3) From ARB Emission Inventory Methodology 7.9, Entrained Paved Road Dust (1997)

Table 3.2A - 6 - Onsite Construction Equipment Fuel Use & Emission Summary

	Equipment/Vehicle Type	Fuel	HP	Max. Daily Units	Max. Hr/dy	Gal/hr /Unit	Gal/dy	Project Days	Total Project (gal)	Emission Factors (1) ROG (lb/hr)	CO (lb/hr	NOx (lb/hr)	SOx (lb/hr	PM (lb/hr	CO2 (lb/hr)	Maximum Hourly Emissions ROG (lb/hr)	CO (lb/hr	NOx (lb/hr)	SOx (lb/hr	PM (lb/hr	CO2 (lb/hr)	Maximum 8-Hour Day Emissions ROG (lb)	CO (lb)	NOx (lb)	SOx (lb)	PM (lb)	CO2 (lb)	Maximum Project Emissions ROG (lb)	CO (lb)	NOx (lb)	SOx (lb)	PM (lb)	CO2 (lb)
Site Prep - Grading	977 Loader	D	190	1	8	10	80	16	1,280	0.1674	0.4680	1.7361	0.0017	0.0640	149	0.1674	0.4680	1.7361	0.0017	0.0640	149	1.339	3.744	13.889	0.013	0.512	1,192	21.422	59.90	222.2	0.21	8.19	19,069
	D-8 Dozer	D	335	1	8	20	160	18	2,880	0.3895	1.9869	3.5050	0.0026	0.1495	265	0.3895	1.9869	3.5050	0.0026	0.1495	265	3.116	15.895	28.040	0.021	1.196	2,119	56.09	286.12	504.7	0.37	21.53	38,142
	637 Scraper	D	650	2	8	30	480	8	3,840	0.6903	3.0787	6.6917	0.0056	0.2675	555	1.3807	6.1574	13.3835	0.0112	0.5349	1,111	11.045	49.259	107.068	0.089	4.279	8,884	88.36	394.07	856.5	0.71	34.23	71,075
	824 Compactors	D	300	1	8	15	120	10	1,200	0.0052	0.0263	0.0328	0.0001	0.0021	4	0.0052	0.0263	0.0328	0.0001	0.0021	4	0.041	0.211	0.263	0.001	0.017	35	0.41	2.11	2.6	0.01	0.17	345
	12 G Motor Grader	D	135	1	8	4	32	15	480	0.1956	0.7486	1.5300	0.0014	0.0864	124	0.1956	0.7486	1.5300	0.0014	0.0864	124	1.565	5.989	12.240	0.011	0.692	991	23.47	89.84	183.6	0.17	10.37	14,871
	Skip Loader	D	75	1	8	1	8	30	240	0.1384	0.4364	0.8116	0.0007	0.0737	59	0.1384	0.4364	0.8116	0.0007	0.0737	59	1.107	3.491	6.493	0.006	0.590	471	33.22	104.73	194.8	0.17	17.70	14,139
	613 Scraper	D	150	1	8	11	88	5	440	0.2636	0.9463	2.0299	0.0017	0.1150	148	0.2636	0.9463	2.0299	0.0017	0.1150	148	2.108	7.571	16.239	0.013	0.920	1,185	10.54	37.85	81.2	0.07	4.60	5,923
	End Dumps	D	-	6	8	5	240	5	1,200	0.0121	0.0356	0.0681	0.0001	0.0043	8	0.0725	0.2135	0.4088	0.0006	0.0258	46	0.580	1.708	3.270	0.005	0.206	366	2.90	8.54	16.4	0.02	1.03	1,830
	Water Truck	D	125	1	8	3.5	28	18	504	0.1570	0.5538	0.9885	0.0009	0.0842	81	0.1570	0.5538	0.9885	0.0009	0.0842	81	1.256	4.430	7.908	0.008	0.674	647	22.61	79.74	142.3	0.14	12.13	11,644
	Fuel Truck	D	-	1	4	5	20	20	400	0.1570	0.5538	0.9885	0.0009	0.0842	81	0.1570	0.5538	0.9885	0.0009	0.0842	81	0.628	2.215	3.954	0.004	0.337	323	12.56	44.30	79.1	0.08	6.74	6,469
														Total Site Preparation Emissions		**2.93**	**12.09**	**25.41**	**0.02**	**1.22**	**2,067**	**23**	**95**	**199**	**0.17**	**9.4**	**16,213**	**272**	**1,107**	**2,283**	**2**	**117**	**183,506**
														(For modeling purpose) Maximum Daily Site Preparation Emissions		**1.87**	**7.76**	**17.13**	**0.01**	**0.77**	**1,426**	**14**	**60**	**133**	**0.11**	**5.8**	**11,081**						
Plant - Civil	Forklift	D	72	1	5	2.5	12.5	30	375	0.0724	0.2304	0.4055	0.0004	0.0402	31	0.0724	0.2304	0.4055	0.0004	0.0402	31	0.362	1.152	2.027	0.002	0.201	156	10.86	34.56	60.8	0.05	6.03	4,684
	Backhoe	D	79	1	8	2.5	20	30	600	0.1083	0.3703	0.6510	0.0006	0.0595	52	0.1083	0.3703	0.6510	0.0006	0.0595	52	0.866	2.962	5.208	0.005	0.476	414	25.99	88.87	156.2	0.15	14.27	12,415
	Compressor	D	37	2	4	1.25	10	35	350	0.0833	0.2011	0.2037	0.0003	0.0203	20	0.1666	0.4023	0.4075	0.0005	0.0407	39	0.667	1.609	1.630	0.002	0.163	157	23.33	56.32	57.0	0.07	5.69	5,492
	Skip Loader	D	71	1	8	5	40	35	1,400	0.1384	0.4364	0.8116	0.0007	0.0737	59	0.1384	0.4364	0.8116	0.0007	0.0737	59	1.107	3.491	6.493	0.006	0.590	471	38.75	122.18	227.3	0.19	20.65	16,496
	Generator	D	37	1	8	1.25	10	40	400	0.1238	0.3024	0.3155	0.0004	0.0307	31	0.1238	0.3024	0.3155	0.0004	0.0307	31	0.991	2.419	2.524	0.003	0.246	245	39.63	96.76	101.0	0.13	9.84	9,799
	Concrete Pump	D	12	1	4	3.15	13	15	189	0.0161	0.0545	0.0924	0.0001	0.0070	7	0.0161	0.0545	0.0924	0.0001	0.0070	7	0.065	0.218	0.370	0.000	0.028	30	0.97	3.27	5.5	0.01	0.42	445
	Compact Equipment	D	99	2	4	5.0	40	15	598	0.0052	0.0263	0.0328	0.0001	0.0021	4	0.0103	0.0527	0.0657	0.0001	0.0042	9	0.041	0.211	0.263	0.001	0.017	35	0.62	3.16	3.9	0.01	0.25	518
	Front-end loader	D	147	1	8	7.4	59	15	888	0.1659	0.6383	1.3029	0.0012	0.0733	106	0.1659	0.6383	1.3029	0.0012	0.0733	106	1.327	5.106	10.423	0.010	0.587	851	19.91	76.60	156.3	0.14	8.80	12,758
Mech	Welding rigs	D	35	8	6	1.8	85	50	4,230	0.1344	0.3128	0.2792	0.0003	0.0308	26	1.0748	2.5025	2.2336	0.0027	0.2463	208	6.449	15.015	13.402	0.016	1.478	1,246	322.44	750.74	670.1	0.81	73.89	62,299
	Boom Lifts	D	79	6	6	4.0	143	50	7,161	0.0781	0.2542	0.4910	0.0004	0.0386	38	0.4684	1.5252	2.9461	0.0027	0.2319	228	2.811	9.151	17.676	0.016	1.391	1,371	140.53	457.56	883.8	0.80	69.57	68,529
	75 ton crane	D	250	2	6	12.6	151	40	6,043	0.1392	0.3881	1.3867	0.0013	0.0535	112	0.2784	0.7761	2.7735	0.0025	0.1070	224	1.670	4.657	16.641	0.015	0.642	1,346	66.82	186.27	665.6	0.61	25.67	53,836
Electrical	Backhoe	D	79	2	6	4.0	48	25	1,194	0.1083	0.3703	0.6510	0.0006	0.0595	52	0.2166	0.7406	1.3020	0.0012	0.1189	103	1.299	4.444	7.812	0.007	0.713	621	32.49	111.09	195.3	0.18	17.84	15,518
	Compressor	D	37	2	6	1.9	22	30	671	0.0833	0.2011	0.2037	0.0003	0.0203	20	0.1666	0.4023	0.4075	0.0005	0.0407	39	1.000	2.414	2.445	0.003	0.244	235	29.99	72.41	73.3	0.09	7.32	7,061
	Front-end loader	D	147	1	6	7.4	44	25	1,110	0.1659	0.6383	1.3029	0.0012	0.0733	106	0.1659	0.6383	1.3029	0.0012	0.0733	106	0.995	3.830	7.817	0.007	0.440	638	24.88	95.75	195.4	0.18	11.00	15,947
	15 ton crane	D	230	1	6	11.6	69	65	4,517	0.1392	0.3881	1.3867	0.0013	0.0535	112	0.1392	0.3881	1.3867	0.0013	0.0535	112	0.835	2.328	8.320	0.008	0.321	673	54.29	151.35	540.8	0.49	20.86	43,742
	75 ton crane	D	250	1	6	12.6	76	5	378	0.1392	0.3881	1.3867	0.0013	0.0535	112	0.1392	0.3881	1.3867	0.0013	0.0535	112	0.835	2.328	8.320	0.008	0.321	673	4.18	11.64	41.6	0.04	1.60	3,365
																												836	2,319	4,034	3.95	293.68	332,904
	Total Diesel (Gal)								**42,569**																		**Maximum Onsite Off-Road Construction Emisions (lb)**	**1,107**	**3,426**	**6,318**	**6**	**410**	**516,410**
																											(Ton)	**0.55**	**1.71**	**3.16**	**0.00**	**0.21**	**258.21**
																											Average Annual Hourly Emission Rate (lb/hr)	0.13	0.39	0.72	0.00	0.05	58.95

(1) SCAQMD Off-Road Mobile Source Emission Factors for Year 2008 (SCAQMD CEQA Analysis Guidance Handbook).

Table 3.2A - 7 - Offsite Construction Equipment Fuel Use & Emission Summary

	Equipment/Vehicle Type	Fuel	HP	Max. Daily Units	Max. Hr/dy	Gal/hr /Unit	Gal/dy	Project Days	Total Project (gal)	Emission Factors (1) ROG (lb/hr)	CO (lb/hr	NOx (lb/hr)	SOx (lb/hr	PM (lb/hr	CO2 (lb/hr)	Maximum Hourly Emissions ROG (lb/hr)	CO (lb/hr	NOx (lb/hr)	SOx (lb/hr	PM (lb/hr	CO2 (lb/hr)	Maximum 8-Hour Day Emissions ROG (lb)	CO (lb)	NOx (lb)	SOx (lb)	PM (lb)	CO2 (lb)	Maximum Project Emissions ROG (lb)	CO (lb)	NOx (lb)	SOx (lb)	PM (lb)	CO2 (lb)
Water Line	Welding Rig	D	35	2	6	1.8	21	90	1,904	0.1344	0.3128	0.2792	0.0003	0.0308	25.96	0.2687	0.6256	0.5584	0.0007	0.0616	51.92	1.612	3.754	3.350	0.004	0.369	311.5	145.10	337.83	301.5	0.36	33.25	28,035
	Backhoe	D	79	2	6	4.0	48	100	4,774	0.1083	0.3703	0.6510	0.0006	0.0595	51.73	0.2166	0.7406	1.3020	0.0012	0.1189	103.46	1.299	4.444	7.812	0.007	0.713	620.7	129.94	444.35	781.2	0.73	71.34	62,074
	Compressor	D	37	1	3	1.9	6	40	224	0.0833	0.2011	0.2037	0.0003	0.0203	19.61	0.0833	0.2011	0.2037	0.0003	0.0203	19.61	0.250	0.603	0.611	0.001	0.061	58.8	10.00	24.14	24.4	0.03	2.44	2,354
	Front-end loader	D	147	2	6	7.4	89	50	4,442	0.1659	0.6383	1.3029	0.0012	0.0733	106.32	0.3318	1.2766	2.6057	0.0024	0.1466	212.63	1.991	7.660	15.634	0.014	0.880	1,275.8	99.53	382.99	781.7	0.72	43.99	63,789
	Compactor	D	99	2	6	5.0	60	50	2,991	0.0052	0.0263	0.0328	0.0001	0.0021	4.31	0.0103	0.0527	0.0657	0.0001	0.0042	8.63	0.062	0.316	0.394	0.001	0.025	51.8	3.09	15.80	19.7	0.04	1.25	2,588
	15 ton crane	D	230	1	6	11.6	69	30	2,085	0.1392	0.3881	1.3867	0.0013	0.0535	112.16	0.1392	0.3881	1.3867	0.0013	0.0535	112.16	0.835	2.328	8.320	0.008	0.321	673.0	25.06	69.85	249.6	0.23	9.63	20,189
									16,419					**Maximum Site Emissions**		**1.05**	**3.28**	**6.12**	**0.01**	**0.41**	**508**	**6.05**	**19.10**	**36.123**	**0.03**	**2.37**	**2,992**	**413**	**1,275**	**2,158**	**2**	**162**	**179,028**
Gas Line	Welding rigs	D	35	2	6	1.8	21	80	1,692	0.1344	0.3128	0.2792	0.0003	0.0308	25.96	0.2687	0.6256	0.5584	0.0007	0.0616	51.92	1.612	3.754	3.350	0.004	0.369	311.5	128.98	300.30	268.0	0.32	29.56	24,920
	Backhoe	D	79	2	6	4.0	48	50	2,387	0.1083	0.3703	0.6510	0.0006	0.0595	51.73	0.2166	0.7406	1.3020	0.0012	0.1189	103.46	1.299	4.444	7.812	0.007	0.713	620.7	64.97	222.18	390.6	0.36	35.67	31,037
	Compressor	D	37	1	4	1.9	7	30	224	0.0833	0.2011	0.2037	0.0003	0.0203	19.61	0.0833	0.2011	0.2037	0.0003	0.0203	19.61	0.333	0.805	0.815	0.001	0.081	78.5	10.00	24.14	24.4	0.03	2.44	2,354
	Front-end loader	D	147	1	5	7.4	37	30	1,110	0.1659	0.6383	1.3029	0.0012	0.0733	106.32	0.1659	0.6383	1.3029	0.0012	0.0733	106.32	0.829	3.192	6.514	0.006	0.367	531.6	24.88	95.75	195.4	0.18	11.00	15,947
	Compactor	D	99	2	4	5.0	40	30	1,197	0.0052	0.0263	0.0328	0.0001	0.0021	4.31	0.0103	0.0527	0.0657	0.0001	0.0042	8.63	0.041	0.211	0.263	0.001	0.017	34.5	1.24	6.32	7.9	0.02	0.50	1,035
	15 ton crane	D	230	1	4	11.6	46	50	2,317	0.1392	0.3881	1.3867	0.0013	0.0535	112.16	0.1392	0.3881	1.3867	0.0013	0.0535	112.16	0.557	1.552	5.547	0.005	0.214	448.6	27.84	77.61	277.3	0.25	10.70	22,432
									8,926					**Maximum Site Emissions**		**0.88**	**2.65**	**4.82**	**0.00**	**0.33**	**402**	**4.67**	**13.96**	**24.301**	**0.02**	**1.76**	**2,025**	**258**	**726**	**1,164**	**1**	**90**	**97,724**

Table 3.2A-8 - Onsite Construction Fugitive Dust Emission Estimate
Earth Moving Activities

Parameters:

Material silt content (%), s:	40	% Geotechnical report
Material moisture content (%), M:	10	% Geotechnical report
Mean Vehicle Speed (mph), S:	5	mph
Water Suppression Control Efficiency:	90%	
Total Site Area:	8.50	Acres
Total Volume of Earthwork Cut & Fill:	112,000	Cubic Yards
Daily Maximum Cut & Fill:	7,467	Cubic Yards
Daily Scrapers VMT (miles):	30	(5 mph for 6 hours)
Daily Grader VMT (miles):	30	(About 0.16 miles in each direction)

Equations (EPA AP-42, Table 11.9-1)

	TSP ≤ 30 µm:	≤ 15 µm:
Bulldozing:	$\frac{5.7\ (s)^{1.2}}{(M)^{1.3}}$	$\frac{1.0\ (s)^{1.5}}{(M)^{1.4}}$
Grading:	$0.040\ (S)^{2.5}$	$0.051\ (S)^{2.0}$

Bulldozing, Excarvating & Compacting

Equipment/Vehicle Type	HP	Daily Units	Max. Hr/dy	Project Days	Scaling Factors		E.F. (1) (lb/hr)		Daily Emisions (lb/day)		Project Emisions (lb)	
					PM10	PM2.5	PM10	PM2.5	PM10	PM2.5	PM10	PM2.5
977 Loader	190	1	8	16	0.750	0.105	0.7554	0.2509	6.043	2.007	96.7	32.1
D-8 Dozer	335	1	8	18	0.750	0.105	0.7554	0.2509	6.043	2.007	108.8	36.1
824 Compactors	300	1	8	10	0.750	0.105	0.7554	0.2509	6.043	2.007	60.4	20.1
Total									**18.1**	**6.0**	**265.9**	**88.3**

(1) Estimated using AP-42, Table 11.9-1 bulldozing equations, scaling factors, with 90% control efficiency from water suppression

Motor Grading & Scrapers in Travel 0.00693

Equipment/Vehicle Type	HP	Daily Units	Max. Hr/dy	Project Days	Scaling Factors		E.F. (2) (lb/VMT)		Daily Emisions (lb/day)		Project Emisions (lb)	
					PM10	PM2.5	PM10	PM2.5	PM10	PM2.5	PM10	PM2.5
Scrapers	650	2	8	8	0.600	0.031	0.0765	0.00693	4.590	0.416	36.7	3.3
12 G Motor Grader	135	1	8	15	0.600	0.031	0.0765	0.00693	2.295	0.208	34.4	3.1

(2) Estimated using AP-42, Table 11.9-1 grading equations, scaling factors, with 90% control efficiency from water suppression

Summary

Activities	Notes	Daily Emisions (lb/day)		Project Emisions (lb)	
		PM10	PM2.5	PM10	PM2.5
Bulldozing & Excarvating	(This activity will have maximum daily emissions - to use for 24 hour modeling)	**12.086**	**4.015**	205.5	68.3
Scrapers in Travel		4.590	0.416	36.7	3.3
Compacting		6.043	2.007	60.4	20.1
Grading		2.295	0.208	34.4	3.1
			Total Project	**337.0**	**94.8**

Table 3.2A-9 - Onsite Construction Fugitive Dust Emission Estimate
Material Handling & Storage

Truck/Payloader drops $\mathbf{E = k(0.0032) \times (U/5)^{1.3} / (M/2)^{1.4}}$ Emission factor equation from AP-42 5th Edition Section 13.2.4, January 1995

E - Emission Factor
k = Particulate Size Multiplier (0.35 for PM10 & 0.053 for PM2.5)
U = Mean Wind Speed (4.8 MPH based on 2002/2003 Gregory Canyon Met Data)
M = Material Moisture Content (10% for site material based on geotechnical report)

Estimate of Materials for Entire Project

Total Earth Work - Cut/Fill	112,000	CY (Use density of 2,700 pounds/CY)
Total Cut & Moved (Maximum Drop Amount)	112,000	CY
Crushed Rock Aggregates (for Surfacing)	2,650	CY
Crushed Rock Aggregates (for backfill of utilities)	2,200	CY
Crushed Rock Aggregates (for construction parking)	1,100	CY

								PM10 Emissions				PM2.5 Emissions	
Material	Activity	Daily Amount (tons/day)	Project Amount (tons/project)	M (%)	U (mph)	k	E (lb/Ton)	lb/day	ton/year	k	E (lb/Ton)	lb/day	ton/year
Site Material	Loader into Dump Trucks	1,680	8,400	10	4.8	0.35	1.1E-04	1.9E-01	4.7E-04	0.053	1.7E-05	2.8E-02	7.1E-05
Site Material	Dump Trucks/Scaper Unloading	7,560	151,200	10	4.8	0.35	1.1E-04	8.4E-01	8.4E-03	0.053	1.7E-05	1.3E-01	1.3E-03
							Total Earth Work:	**1.031**	**0.009**			**0.156**	**0.001**
Aggregate	Dump Trucks Unloading	400	8,033	11	4.8	0.35	9.8E-05	3.9E-02	3.9E-04	0.053	1.5E-05	5.9E-03	5.9E-05
							Total Project Drop Emissions:		**0.009**				**0.001**

Notes:
Emission factor for uncontrolled PM2.5 was based on the controlled emission factor with an assumed control efficiency
Site material density is approximately 125 lb/CF (3,375 lb/CY) per geotechnical report; however, material expected to be less dense upon processing.
Emission estimates based on worst case scenario of all earth work being loaded onto dump truck; scrapers would not require this step
Moisture for aggregate is from AP-42 Table 13.2.4-1.
Dump trucks will operate 5 days, 8 round trips for 6 trucks.

Table 3.2A-10 - Fugitive Dust Emission Estimate
Un-Paved Roadway Emissions

Predictive Emission Factor Equation 1a from AP-42 5th EditionSection 13.2.2
Industrial Site Unpaved Roads dated November, 2006

$E = k (s, E = k (s/12)^a (W/3)^b$

Adjustment Factor Equation 2

Eext = E Eext = E[(365-P)/365]

E =	(emission factor, pounds of particulate emissions per vehicle mile traveled)	
k =	1.5	(base emission factor for pounds of PM10 per vehicle mile traveled)
=	0.15	(for PM2.5)
s (%) =	40	(road surface silt loading - Table 13.2.2-1 for Sand & Gravel Processing, Material Storage)
a =	0.9	(per Table 13.2.2-2. Constants for Equations 1a and 1b)
b =	0.45	(per Table 13.2.2-2. Constants for Equations 1a and 1b)
P =	42	(number of days/year with at least 0.01" of precipitation)
W =	(average weight (tons) of vehicle travelling road)	
Eext (lb/VMT) =	(annual size specific emissions factor for natural mitigation)	
	90%	Reduction due to twice daily watering
	0.16	Miles each direction onsite

Equipment	W (Tons)	Units	E (PM10) lb/VMT	E (PM2.5) lb/VMT	Eext (PM10) lb/VMT	Eext (PM2.5) lb/VMT	Daily Hours	Daily End-to-End Trips	VMT (Max Daily)	E - PM10 Controlled (lb/day)	E - PM2.5 Controlled (lb/day)	No. of Project Days	VMT (Project)	E- PM10 Controlled (Project - lb)	E PM2.5 Controlled (Project - lb)
End Dumps	30	6	12.493	1.249	11.056	1.106	6	12	11.520	14.39	1.44	5	58	64	6
Water Truck	30	1	12.493	1.249	11.056	1.106	4	8	1.28	1.60	0.16	18	23	25	3
Fuel Truck	25	1	11.509	1.151	10.185	1.018	2	4	0.64	0.74	0.07	20	13	13	1
Service Trucks	4	6	5.046	0.505	4.465	0.446	2	4	3.84	1.94	0.19	20	77	34	3
Aggregate Dumps	30	6	12.493	1.249	11.056	1.106	8	40	38.40	-	-	20	768	849	85
824 Compactor	20	1	10.410	1.041	9.212	0.921	8	16	2.56	2.66	0.27	10	26	24	2
									Totals:	**18.67**	**1.87**		**170**	**136**	**14**

(1) Historical meterological data is from NOAA document Comparative Climatic Data for the United Sytets through 2005, Table E for mean number of days with 0.01 inch of liquid or water equivelent

Table 3.2A-11 - Emission Estimates for the Commissioning of Turbines

	Hours		Emission Rate (lb/hr)[1]					Total Planned Emission (lb)					Total Permitted Emission (lb)				
Commissioning Stages	Planned	Permitted	NOx	CO	VOC	PM10[2]	SO_2[3]	NOx	CO	VOC	PM10	SO2	NOx	CO	VOC	PM10	SO2
First Fire - Minimum to full speed at no load (1 x 12 hr day) - *GE start-up cases 117-134*	12	40	30.10	5.44	0.36	1.20	0.29	361	65	4	14	3	1,204	218	14	48	12
Synchronization - Tied to grid, low load < 15 MW, no water injection or SCR (2 x 12 hr day) *GE start-up cases 117-134*	24	80	30.10	5.44	0.36	1.20	0.29	722	131	9	29	7	2,408	435	29	96	23
Low load to full load - 50 MW - water injection, no SCR (1 x 6 hr day) *GE start-up cases 110 - 116*	6	20	20.61	12.56	0.58	1.66	0.48	124	75	3	10	3	412	251	12	33	10
Low load to full load - 50 MW - water injection and SCR (1 x 6 hr day) *GE start-up cases 110 -116 with 90% NOx & 65% CO control*	6	20	2.06	4.40	0.58	1.66	0.48	12	26	3	10	3	41	88	12	33	10
Full load with Sprint - inlet cooling, water injection and SCR (1 x 12 hr day) *GE start-up case 100 with 90% NOx & 65% CO control*	12	40	4.35	15.37	1.21	2.70	1.00	52	184	15	32	12	174	615	48	108	40
							Total lbs (Each Turbine):	**1,272**	**482**	**34**	**96**	**28**	**4,239**	**1,607**	**115**	**319**	**94**
							Total lbs (Both Turbines):	**2,543**	**964**	**69**	**191**	**56**	**8,477**	**3,214**	**230**	**637**	**188**
							Total (Tons):	**1.27**	**0.48**	**0.03**	**0.10**	**0.03**	**4.24**	**1.61**	**0.11**	**0.32**	**0.09**

(1) Emission rate are based on the average of all the potential cases presented by GE.

(2) PM emissions are based on a GE guarantee of 2.7 lb/hr prorated by exhaust flowrate

(3) SO2 emissions are calculated using projected fuel consumption

Estimated Average Engine Performance NOT FOR GUARANTEE, REFER TO PROJECT F&ID FOR DESIGN

GE Energy

Performance By: **Jennifer Woods Mikolas**
Project Info: **Jpower - Perf Runs Over Guar Emissions Range**

Engine: **LM6000 PC-SPRINT w/ FIGV at -5 Degrees**
Deck Info: **G0125O - 8fk.scp** Date: **10/30/2007**
Generator: **MEID 800LL04 60Hz, 13.8kV, 0.9PF (14849)** Time: **4:06:43 PM**
Fuel: **Gas Fuel #10-1, 19000 Btu/lb,LHV** Version: **3.5.18**

			NOx, lbs	**CO, lbs**
Startup Ramp Rate:	12607 kW/min	Total Emissions at Startup	**3.1**	**1.1**

Case #	**100**	**101**	**102**	**103**	**104**	**105**	**106**	**107**	**108**	**109**	**110**	**111**	**112**	**113**	**114**	**115**	**116**	**117**	**118**	**119**	**120**	**121**	**122**	**123**	**124**	**125**	**126**	**127**	**128**	**129**	**130**	**131**	**132**	**133**	**134**
Ambient Conditions																																			
Dry Bulb, °F	86.0	86.0	86.0	86.0	86.0	86.0	86.0	86.0	86.0	86.0	86.0	86.0	86.0	86.0	86.0	86.0	86.0	86.0	86.0	86.0	86.0	86.0	86.0	86.0	86.0	86.0	86.0	86.0	86.0	86.0	86.0	86.0	86.0	86.0	86.0
Wet Bulb, °F	70.5	70.5	70.5	70.5	70.5	70.5	70.5	70.5	70.5	70.5	70.5	70.5	70.5	70.5	70.5	70.5	70.5	70.5	70.5	70.5	70.5	70.5	70.5	70.5	70.5	70.5	70.5	70.5	70.5	70.5	70.5	70.5	70.5	70.5	70.5
RH, %	47.0	47.0	47.0	47.0	47.0	47.0	47.0	47.0	47.0	47.0	47.0	47.0	47.0	47.0	47.0	47.0	47.0	47.0	47.0	47.0	47.0	47.0	47.0	47.0	47.0	47.0	47.0	47.0	47.0	47.0	47.0	47.0	47.0	47.0	47.0
Altitude, ft	410.0	410.0	410.0	410.0	410.0	410.0	410.0	410.0	410.0	410.0	410.0	410.0	410.0	410.0	410.0	410.0	410.0	410.0	410.0	410.0	410.0	410.0	410.0	410.0	410.0	410.0	410.0	410.0	410.0	410.0	410.0	410.0	410.0	410.0	410.0
Ambient Pressure, psia	14.480	14.480	14.480	14.480	14.480	14.480	14.480	14.480	14.480	14.480	14.480	14.480	14.480	14.480	14.480	14.480	14.480	14.480	14.480	14.480	14.480	14.480	14.480	14.480	14.480	14.480	14.480	14.480	14.480	14.480	14.480	14.480	14.480	14.480	14.480
Engine Inlet																																			
Comp Inlet Temp, °F	46.0	86.0	86.0	86.0	86.0	86.0	86.0	86.0	86.0	86.0	86.0	86.0	86.0	86.0	86.0	86.0	86.0	86.0	86.0	86.0	86.0	86.0	86.0	86.0	86.0	86.0	86.0	86.0	86.0	86.0	86.0	86.0	86.0	86.0	86.0
RH, %	95.0	47.0	47.0	47.0	47.0	47.0	47.0	47.0	47.0	47.0	47.0	47.0	47.0	47.0	47.0	47.0	47.0	47.0	47.0	47.0	47.0	47.0	47.0	47.0	47.0	47.0	47.0	47.0	47.0	47.0	47.0	47.0	47.0	47.0	47.0
Conditioning	CHILL	NONE	NONE	NONE	NONE	NONE	NONE	NONE	NONE	NONE	NONE	NONE	NONE	NONE	NONE	NONE	NONE	NONE	NONE	NONE	NONE	NONE	NONE	NONE	NONE	NONE	NONE	NONE	NONE	NONE	NONE	NONE	NONE	NONE	NONE
Tons or kBtu/hr	1476	0	0	0	0	0	0	0	0	0	0	0	0	0	0	0	0	0	0	0	0	0	0	0	0	0	0	0	0	0	0	0	0	0	0
Pressure Losses																																			
Inlet Loss, inH20	5.00	5.00	5.00	5.00	5.00	5.00	5.00	5.00	5.00	5.00	5.00	5.00	5.00	5.00	5.00	5.00	5.00	5.00	5.00	5.00	5.00	5.00	5.00	5.00	5.00	5.00	5.00	5.00	5.00	5.00	5.00	5.00	5.00	5.00	5.00
Volute Loss, inH20	4.00	4.00	4.00	4.00	4.00	4.00	4.00	4.00	4.00	4.00	4.00	4.00	4.00	4.00	4.00	4.00	4.00	4.00	4.00	4.00	4.00	4.00	4.00	4.00	4.00	4.00	4.00	4.00	4.00	4.00	4.00	4.00	4.00	4.00	4.00
Exhaust Loss, inH20	12.00	12.00	12.00	12.00	12.00	12.00	12.00	12.00	12.00	12.00	12.00	12.00	12.00	12.00	12.00	12.00	12.00	12.00	12.00	12.00	12.00	12.00	12.00	12.00	12.00	12.00	12.00	12.00	12.00	12.00	12.00	12.00	12.00	12.00	12.00
Time, min	10.0000	9.37	9.20	9.04	8.87	8.70	8.53	8.36	8.19	8.02	7.86	7.69	7.52	7.35	7.18	7.01	6.84	6.79	6.78	6.72	6.66	6.60	6.54	6.48	6.42	6.36	6.30	6.24	6.18	6.12	6.06	6.00	6.00	6.00	2
kW, Gen Terms	**50428**	**42526**	**40402**	**38276**	**36149**	**34024**	**31898**	**29767**	**27642**	**25515**	**23390**	**21264**	**19137**	**17010**	**14883**	**12756**	**10631**	**10000**	**9811**	**9063**	**8314**	**7565**	**6816**	**6066**	**5316**	**4566**	**3815**	**3064**	**2312**	**1560**	**807**	**55**	**37**	**37**	**37**
Est. Btu/kW-hr, LHV	**8530**	**8782**	**8879**	**9004**	**9139**	**9285**	**9460**	**9649**	**9891**	**10196**	**10449**	**10848**	**11352**	**11981**	**12829**	**13994**	**15633**	**15850**	**16049**	**16912**	**17925**	**19130**	**20587**	**22405**	**24720**	**27787**	**31967**	**38171**	**48458**	**68681**	**126864**	**1791884**	**2554175**	**2604638**	**2604638**
Guar. Btu/kW-hr, LHV	**8660**	**8916**	**9015**	**9141**	**9278**	**9426**	**9604**	**9795**	**10042**	**10351**	**10608**	**11013**	**11524**	**12164**	**13024**	**14207**	**15872**	**16092**	**16293**	**17169**	**18198**	**19422**	**20900**	**22746**	**25097**	**28210**	**32454**	**38752**	**49196**	**69727**	**128796**	**1819171**	**2593071**	**2644303**	**2644303**
Fuel Flow																																			
MMBtu/hr, LHV	430.1	373.5	358.7	344.6	330.3	315.9	301.7	287.2	273.4	260.1	244.4	230.7	217.2	203.8	190.9	178.5	166.2	158.5	157.5	153.3	149.0	144.7	140.3	135.9	131.4	126.9	122.0	116.9	112.0	107.1	102.4	97.7	95.2	95.2	95.2
lb/hr	22639	19656	18882	18138	17387	16626	15881	15116	14390	13692	12863	12140	11434	10726	10049	9395	8747	8342	8287	8066	7844	7617	7385	7153	6917	6678	6419	6155	5897	5639	5392	5141	5012	5009	5009
lb/min	377	328	315	302	290	277	265	252	240	228	214	202	191	179	167	157	146	139	138	134	131	127	123	119	115	111	107	103	98	94	90	86	84	83	83
scfm	7578	6580	6320	6071	5819	5566	5315	5060	4817	4582	4306	4064	3827	3591	3363	3145	2928	2792	2775	2701	2625	2549	2472	2394	2315	2236	2149	2060	1973	1887	1804	1721	1677	1677	1677
MMBtu	24.3	19.8	18.7	17.7	16.7	15.8	14.9	14.1	13.3	12.5	11.8	11.1	10.4	9.8	9.3	8.7	8.2	8.1	8.0	7.9	7.7	7.6	7.4	7.3	7.2	7.0	6.9	6.8	6.7	6.6	6.5	6.4	6.4	6.4	0.0
scf	25651.4	20901.9	19793.2	18727.5	17703.2	16722.3	15783.8	14885.3	14032.4	13219.8	12447.4	11721.2	11035.5	10389.9	9784.1	9216.6	8686.6	8540.0	8498.1	8333.5	8173.0	8017.1	7865.6	7718.6	7576.1	7438.4	7305.2	7177.2	7054.3	6936.6	6823.9	6716.3	6713.9	6713.9	0.0
NOx Control	**Water**	**Water**	**Water**	**Water**	**Water**	**Water**	**Water**	**Water**	**Water**	**Water**	**Water**	**Water**	**Water**	**Water**	**Water**	**Water**	**Water**	**NONE**	**NONE**	**NONE**	**NONE**	**NONE**	**NONE**	**NONE**	**NONE**	**NONE**	**NONE**	**NONE**	**NONE**	**NONE**	**NONE**	**NONE**	**NONE**	**NONE**	**NONE**
Water Injection																																			
lb/hr	20240	15801	14660	13572	12514	11522	10559	9561	8693	7875	9941	8948	8031	7127	6270	5504	4739	0	0	0	0	0	0	0	0	0	0	0	0	0	0	0	0	0	0
Temperature, °F	100.0	100.0	100.0	100.0	100.0	100.0	100.0	100.0	100.0	100.0	100.0	100.0	100.0	100.0	100.0	100.0	100.0	0.0	0.0	0.0	0.0	0.0	0.0	0.0	0.0	0.0	0.0	0.0	0.0	0.0	0.0	0.0	0.0	0.0	0.0
SPRINT	**LPC**	**LPC**	**LPC**	**LPC**	**LPC**	**LPC**	**LPC**	**LPC**	**LPC**	**LPC**	**OFF**	**OFF**	**OFF**	**OFF**	**OFF**	**OFF**	**OFF**	**OFF**	**OFF**	**OFF**	**OFF**	**OFF**	**OFF**	**OFF**	**OFF**	**OFF**	**OFF**	**OFF**	**OFF**	**OFF**	**OFF**	**OFF**	**OFF**	**OFF**	**OFF**
lb/hr	8287	8755	8755	8755	8755	8755	8755	8755	8755	8755	0	0	0	0	0	0	0	0	0	0	0	0	0	0	0	0	0	0	0	0	0	0	0	0	0
Control Parameters																																			
HP Speed, RPM	10436	10520	10447	10381	10309	10238	10178	10124	10044	9970	10001	9937	9867	9790	9714	9638	9563	9545	9538	9509	9481	9454	9425	9396	9367	9337	9297	9255	9208	9156	9088	9020	8987	8986	8986
LP Speed, RPM	3600	3600	3600	3600	3600	3600	3600	3600	3600	3600	3600	3600	3600	3600	3600	3600	3600	3600	3600	3600	3600	3600	3600	3600	3600	3600	3600	3600	3600	3600	3600	3600	3600	3600	3600
PS3 - CDP, psia	458.3	410.2	400.2	389.5	378.7	367.8	357.0	346.3	335.3	323.0	311.2	299.3	286.5	273.2	260.9	247.7	233.6	229.3	228.0	222.9	217.8	212.5	207.0	201.2	195.4	189.5	185.1	180.9	176.6	172.1	167.6	163.0	160.7	160.6	160.6
T3CRF - CDT, °F	971	999	988	976	962	947	934	920	905	892	954	937	919	901	884	866	849	843	841	835	829	822	816	809	802	795	787	778	770	761	753	745	740	740	740
T48IN, °R	2038	2029	2006	1985	1964	1942	1919	1893	1870	1852	1865	1840	1818	1794	1769	1747	1728	1739	1737	1729	1720	1712	1704	1696	1688	1680	1659	1637	1615	1593	1573	1551	1540	1539	1539
T48IN, °F	1578	1569	1546	1526	1505	1482	1460	1434	1411	1393	1405	1381	1358	1335	1310	1288	1268	1279	1277	1269	1261	1252	1244	1237	1228	1220	1200	1177	1155	1133	1113	1092	1080	1080	1080
Exhaust Parameters																																			
Temperature, °F	840.3	863.0	852.5	845.1	836.8	827.3	818.4	807.2	798.9	795.2	811.8	803.8	798.0	793.1	789.1	789.6	794.4	807.5	807.8	809.3	810.3	812.2	814.0	817.2	820.1	822.9	814.6	804.2	794.6	785.0	777.3	768.4	763.3	763.1	763.1
lb/sec	297.8	267.0	262.1	256.6	251.0	245.3	239.6	234.2	228.2	221.0	213.1	206.4	198.9	190.9	183.7	175.5	166.5	163.4	162.6	159.3	156.1	152.7	149.1	145.3	141.5	137.6	135.2	133.1	130.8	128.5	125.9	123.5	122.2	122.2	122.2
lb/hr	1072059	961095	943733	923672	903588	883233	862715	843039	821590	795586	767141	742965	715912	687277	661229	631877	599570	588189	585311	573595	562093	549629	536823	523065	509236	495338	486892	479138	470974	462563	453402	444439	439909	439820	439820
Energy, Btu/s- Ref 0 °R	100311	91884	89334	86802	84231	81583	79003	76368	73815	71181	69214	66488	63679	60804	58219	55597	52910	52107	51864	50880	49897	48861	47784	46678	45547	44400	43324	42243	41170	40086	39017	37934	37375	37360	37360
Energy, Btu/s- Ref T2 °F	62403	55070	53229	51503	49737	47903	46142	44296	42592	40974	40242	38464	36704	34937	33362	31867	30415	30190	30054	29510	28958	28388	27791	27200	26586	25958	25202	24418	23654	22890	22168	21424	21037	21026	21026
Cp, Btu/lb-R	0.2771	0.2788	0.2780	0.2773	0.2766	0.2758	0.2750	0.2742	0.2734	0.2730	0.2719	0.2712	0.2706	0.2700	0.2694	0.2691	0.2689	0.2673	0.2673	0.2673	0.2673	0.2673	0.2673	0.2674	0.2675	0.2675	0.2671	0.2665	0.2660	0.2655	0.2651	0.2646	0.2643	0.2643	0.2643
Emissions (NOT FOR USE IN ENVIRONMENTAL PERMITS)																																			
NOx ppmvd Ref 15% O2	25	25	25	25	25	25	25	25	25	25	25	25	25	25	25	25	25	79	78	76	73	70	67	65	62	59	56	53	50	47	44	41	40	40	40
NOx as NO2, lb/hr	43	38	36	35	33	32	30	29	28	26	25	23	22	21	19	18	17	50	50	47	44	41	38	35	33	30	27	25	22	20	18	16	15	15	15
NOx, lb/min	0.72	0.63	0.60	0.58	0.56	0.53	0.51	0.48	0.46	0.44	0.41	0.39	0.37	0.34	0.32	0.30	0.28	0.84	0.83	0.78	0.73	0.68	0.63	0.59	0.54	0.50	0.46	0.41	0.37	0.34	0.30	0.27	0.25	0.25	0.25
CO ppmvd Ref 15% O2	20	7	7	7	7	7	7	7	7	7	11	11	11	10	10	10	9	6	6	7	8	9	10	11	12	13	15	18	21	24	28	33	36	36	36
CO, lb/hr	21.23	6.78	6.57	6.27	6.00	5.78	5.41	4.98	4.71	4.41	6.53	6.01	5.66	5.22	4.69	4.33	3.83	2.44	2.49	2.72	2.93	3.13	3.35	3.59	3.86	4.16	4.52	5.01	5.62	6.34	7.07	7.94	8.44	8.45	8.45
CO, lb/min	0.35	0.11	0.11	0.10	0.10	0.10	0.09	0.08	0.08	0.07	0.11	0.10	0.09	0.09	0.08	0.07	0.06	0.04	0.04	0.05	0.05	0.05	0.06	0.06	0.06	0.07	0.08	0.08	0.09	0.11	0.12	0.13	0.14	0.14	0.14
CO2, lb/hr	57198.54	49688.16	47739.35	45866.93	43976.45	42062.26	40186.39	38260.76	36432.34	34670.15	32594.24	30772.52	28989.14	27204.22	25495.38	23842.55	22204.38	21187.93	21047.55	20489.04	19924.44	19350.70	18762.63	18174.85	17574.75	16967.88	16314.33	15649.22	14996.91	14345.58	13719.34	13084.32	12759.38	12751.30	12751.30
CO2, lb/min	953.31	828.14	795.66	764.45	732.94	701.04	669.77	637.68	607.21	577.84	543.24	512.88	483.15	453.40	424.92	397.38	370.07	353.13	350.79	341.48	332.07	322.51	312.71	302.91	292.91	282.80	271.91	260.82	249.95	239.09	228.66	218.07	212.66	212.52	212.52
HC ppmvd Ref 15% O2	2	2	2	2	2	2	2	2	2	2	2	2	2	2	2	2	2	2	2	2	2	2	2	2	2	2	2	2	2	3	3	4	4	4	4
HC, lb/hr	1.36	1.18	1.13	1.09	1.04	1.00	0.95	0.91	0.86	0.82	0.77	0.73	0.69	0.64	0.60	0.56	0.52	0.50	0.50	0.48	0.47	0.46	0.44	0.43	0.42	0.40	0.39	0.37	0.35	0.39	0.44	0.50	0.54	0.54	0.54
VOC ppmvd Ref 15% O2	2	2	2	2	2	2	2	2	2	2	2	2	2	2	2	2	2	2	2	2	2	2	2	2	2	2	2	2	2	2	2	2	3	3	3
VOC, lb/hr	1.21	1.05	1.01	0.97	0.93	0.89	0.85	0.81	0.77	0.73	0.69	0.65	0.61	0.57	0.54	0.50	0.47	0.44	0.44	0.43	0.42	0.41	0.39	0.38	0.37	0.36	0.34	0.33	0.31	0.30	0.29	0.31	0.33	0.33	0.33
VOC, lb/min	0.02	0.02	0.02	0.02	0.02	0.01	0.01	0.01	0.01	0.01	0.01	0.01	0.01	0.01	0.01	0.01	0.01	0.01	0.01	0.01	0.01	0.01	0.01	0.01	0.01	0.01	0.01	0.01	0.01	0.01	0.00	0.01	0.01	0.01	0.01
PM10, lb/hr	4.00	4.00	4.00	4.00	4.00	4.00	4.00	4.00	4.00	4.00	4.00	4.00	4.00	4.00	4.00	4.00	4.00	4.00	4.00	4.00	4.00	4.00	4.00	4.00	4.00	4.00	4.00	4.00	4.00	4.00	4.00	4.00	4.00	4.00	4.00
PM10, lb/min	0.07	0.07	0.07	0.07	0.07	0.07	0.07	0.07	0.07	0.07	0.07	0.07	0.07	0.07	0.07	0.07	0.07	0.07	0.07	0.07	0.07	0.07	0.07	0.07	0.07	0.07	0.07	0.07	0.07	0.07	0.07	0.07	0.07	0.07	0.07

Estimated Average Engine Performance NOT FOR GUARANTEE, REFER TO PROJECT F&ID FOR DESIGN

GE Energy

Performance By: **Jennifer Woods Mikolas**
Project Info: **Jpower - Perf Runs Over Guar Emissions Range**

Engine: **LM6000 PC-SPRINT w/ FIGV at -5 Degrees**
Deck Info: **G0125O - 8fk.scp** Date: **10/30/2007**
Generator: **MEID 800LL04 60Hz, 13.8kV, 0.9PF (14849)** Time: **4:06:43 PM**
Fuel: **Gas Fuel #10-1, 19000 Btu/lb,LHV** Version: **3.5.18**

			NOx, lbs	CO, lbs
Startup Ramp Rate:	12607 kW/min	Total Emissions at Startup	**3.1**	**1.1**

Case #	**100**	**101**	**102**	**103**	**104**	**105**	**106**	**107**	**108**	**109**	**110**	**111**	**112**	**113**	**114**	**115**	**116**	**117**	**118**	**119**	**120**	**121**	**122**	**123**	**124**	**125**	**126**	**127**	**128**	**129**	**130**	**131**	**132**	**133**	**134**
SOX as SO2, lb/hr	0.00	0.00	0.00	0.00	0.00	0.00	0.00	0.00	0.00	0.00	0.00	0.00	0.00	0.00	0.00	0.00	0.00	0.00	0.00	0.00	0.00	0.00	0.00	0.00	0.00	0.00	0.00	0.00	0.00	0.00	0.00	0.00	0.00	0.00	0.00
Total Emissions From Startup To Full Load																																			
NOx, lbs	**3.1**	2.6	2.5	2.4	2.3	2.2	2.1	2.1	2.0	1.9	1.8	1.8	1.7	1.6	1.6	1.5	1.5	1.5	1.4	1.4	1.3	1.3	1.3	1.2	1.2	1.2	1.1	1.1	1.1	1.0	1.0	1.0	1.0	1.0	0.0
CO, lbs	**1.1**	0.9	0.8	0.8	0.8	0.8	0.8	0.8	0.7	0.7	0.7	0.7	0.7	0.7	0.6	0.6	0.6	0.6	0.6	0.6	0.6	0.6	0.6	0.6	0.6	0.6	0.6	0.6	0.6	0.6	0.6	0.6	0.6	0.6	0.0
VOC, lbs	**0.1**	0.1	0.1	0.1	0.1	0.0	0.0	0.0	0.0	0.0	0.0	0.0	0.0	0.0	0.0	0.0	0.0	0.0	0.0	0.0	0.0	0.0	0.0	0.0	0.0	0.0	0.0	0.0	0.0	0.0	0.0	0.0	0.0	0.022	0.0
PM10, lbs	**0.5**	0.5	0.5	0.5	0.5	0.4	0.4	0.4	0.4	0.4	0.4	0.4	0.4	0.4	0.3	0.3	0.3	0.3	0.3	0.3	0.3	0.3	0.3	0.3	0.3	0.3	0.3	0.3	0.3	0.3	0.3	0.3	0.3	0.3	0.0
Maximum Emissions																																			
NOx ppmvd Ref 15% O2	**25**	**25**	**25**	**25**	**25**	**25**	**25**	**25**	**25**	**25**	**25**	**25**	**25**	**25**	**25**	**25**	**25**	**79**	**78**	**76**	**73**	**70**	**67**	**65**	**62**	**59**	**56**	**53**	**50**	**47**	**44**	**41**	**40**	**40**	**40**
NOx as NO2, lb/hr	**43**	**38**	**36**	**35**	**33**	**32**	**30**	**29**	**28**	**26**	**25**	**23**	**22**	**21**	**19**	**18**	**17**	**50**	**50**	**47**	**44**	**41**	**38**	**35**	**33**	**30**	**27**	**25**	**22**	**20**	**18**	**16**	**15**	**15**	**15**
CO ppmvd Ref 15% O2	**42**	**18**	**31**	**31**	**16**	**18**	**31**	**31**	**16**	**18**	**31**	**31**	**16**	**18**	**31**	**31**	**16**	**18**	**31**	**31**	**16**	**16**	**16**	**16**	**16**	**16**	**16**	**16**	**16**	**16**	**16**	**16**	**16**	**16**	**16**
CO, lb/hr	**43.90**	**16.41**	**27.40**	**26.32**	**12.61**	**13.87**	**23.03**	**21.91**	**10.43**	**11.41**	**18.64**	**17.59**	**8.28**	**8.93**	**14.55**	**13.60**	**6.33**	**6.94**	**11.99**	**11.67**	**5.67**	**5.51**	**5.34**	**5.17**	**5.00**	**4.83**	**4.64**	**4.45**	**4.26**	**4.07**	**3.89**	**3.71**	**3.61**	**3.61**	**3.61**
HC ppmvd Ref 15% O2	**10**	**10**	**10**	**10**	**10**	**10**	**10**	**10**	**10**	**10**	**10**	**10**	**10**	**10**	**10**	**10**	**10**	**10**	**10**	**10**	**10**	**10**	**10**	**10**	**10**	**10**	**10**	**10**	**10**	**10**	**10**	**11**	**12**	**12**	**12**
HC, lb/hr	**6.05**	**5.25**	**5.04**	**4.84**	**4.64**	**4.44**	**4.24**	**4.03**	**3.84**	**3.65**	**3.43**	**3.24**	**3.05**	**2.86**	**2.68**	**2.50**	**2.33**	**2.22**	**2.21**	**2.15**	**2.09**	**2.03**	**1.96**	**1.90**	**1.84**	**1.78**	**1.71**	**1.64**	**1.57**	**1.50**	**1.43**	**1.54**	**1.65**	**1.65**	**1.65**
VOC ppmvd Ref 15% O2	**2**	**2**	**2**	**2**	**2**	**2**	**2**	**2**	**2**	**2**	**2**	**2**	**2**	**2**	**2**	**2**	**2**	**2**	**2**	**2**	**2**	**2**	**2**	**2**	**2**	**2**	**2**	**2**	**2**	**2**	**2**	**2**	**3**	**3**	**3**
VOC, lb/hr	**1.21**	**1.05**	**1.01**	**0.97**	**0.93**	**0.89**	**0.85**	**0.81**	**0.77**	**0.73**	**0.69**	**0.65**	**0.61**	**0.57**	**0.54**	**0.50**	**0.47**	**0.44**	**0.44**	**0.43**	**0.42**	**0.41**	**0.39**	**0.38**	**0.37**	**0.36**	**0.34**	**0.33**	**0.31**	**0.30**	**0.29**	**0.31**	**0.33**	**0.33**	**0.33**
PM10, lb/hr	**4.00**	**4.00**	**4.00**	**4.00**	**4.00**	**4.00**	**4.00**	**4.00**	**4.00**	**4.00**	**4.00**	**4.00**	**4.00**	**4.00**	**4.00**	**4.00**	**4.00**	**4.00**	**4.00**	**4.00**	**4.00**	**4.00**	**4.00**	**4.00**	**4.00**	**4.00**	**4.00**	**4.00**	**4.00**	**4.00**	**4.00**	**4.00**	**4.00**	**4.00**	**4.00**
Exh Wght % Wet (NOT FOR USE IN ENVIRONMENTAL PERMITS)																																			
AR	1.2184	1.2129	1.2146	1.2162	1.2177	1.2193	1.2208	1.2225	1.2240	1.2253	1.2341	1.2358	1.2373	1.2389	1.2405	1.2419	1.2433	1.2539	1.2539	1.2540	1.2542	1.2543	1.2544	1.2545	1.2546	1.2548	1.2551	1.2556	1.2560	1.2564	1.2568	1.2572	1.2574	1.2574	1.2574
N2	71.6258	71.2996	71.3951	71.4823	71.5707	71.6568	71.7424	71.8385	71.9212	71.9943	72.5085	72.6049	72.6907	72.7779	72.8711	72.9503	73.0287	73.6433	73.6449	73.6513	73.6585	73.6649	73.6717	73.6771	73.6834	73.6902	73.7099	73.7322	73.7538	73.7755	73.7954	73.8168	73.8283	73.8286	73.8286
O2	14.4895	14.6245	14.8108	14.9685	15.1350	15.3088	15.4820	15.6803	15.8524	15.9827	16.2939	16.4743	16.6312	16.7863	16.9595	17.1001	17.2228	17.5529	17.5622	17.5979	17.6387	17.6745	17.7126	17.7431	17.7781	17.8163	17.9278	18.0538	18.1756	18.2990	18.4112	18.5329	18.5976	18.5994	18.5994
CO2	5.3354	5.1700	5.0586	4.9657	4.8669	4.7623	4.6581	4.5384	4.4344	4.3578	4.2488	4.1419	4.0493	3.9583	3.8558	3.7733	3.7034	3.6022	3.5960	3.5720	3.5447	3.5207	3.4951	3.4747	3.4512	3.4255	3.3507	3.2661	3.1842	3.1013	3.0259	2.9440	2.9005	2.8992	2.8992
H20	7.3261	7.6895	7.5174	7.3640	7.2065	7.0495	6.8935	6.7172	6.5651	6.4370	5.7116	5.5401	5.3885	5.2357	5.0704	4.9317	4.7991	3.9414	3.9366	3.9186	3.8979	3.8798	3.8605	3.8452	3.8274	3.8081	3.7516	3.6877	3.6258	3.5633	3.5064	3.4447	3.4119	3.4109	3.4109
SO2	0.0000	0.0000	0.0000	0.0000	0.0000	0.0000	0.0000	0.0000	0.0000	0.0000	0.0000	0.0000	0.0000	0.0000	0.0000	0.0000	0.0000	0.0000	0.0000	0.0000	0.0000	0.0000	0.0000	0.0000	0.0000	0.0000	0.0000	0.0000	0.0000	0.0000	0.0000	0.0000	0.0000	0.0000	0.0000
CO	0.0020	0.0007	0.0007	0.0007	0.0007	0.0007	0.0006	0.0006	0.0006	0.0006	0.0009	0.0008	0.0008	0.0008	0.0007	0.0007	0.0006	0.0004	0.0004	0.0005	0.0005	0.0006	0.0006	0.0007	0.0008	0.0008	0.0009	0.0010	0.0012	0.0014	0.0016	0.0018	0.0019	0.0019	0.0019
HC	0.0001	0.0001	0.0001	0.0001	0.0001	0.0001	0.0001	0.0001	0.0001	0.0001	0.0001	0.0001	0.0001	0.0001	0.0001	0.0001	0.0001	0.0001	0.0001	0.0001	0.0001	0.0001	0.0001	0.0001	0.0001	0.0001	0.0001	0.0001	0.0001	0.0001	0.0001	0.0001	0.0001	0.0001	0.0001
NOX	0.0028	0.0027	0.0026	0.0026	0.0025	0.0025	0.0024	0.0024	0.0023	0.0023	0.0022	0.0022	0.0021	0.0021	0.0020	0.0020	0.0019	0.0059	0.0058	0.0056	0.0053	0.0051	0.0049	0.0046	0.0044	0.0042	0.0039	0.0036	0.0033	0.0030	0.0027	0.0025	0.0024	0.0024	0.0024
Exh Mole % Dry (NOT FOR USE IN ENVIRONMENTAL PERMITS)																																			
AR	0.9647	0.9639	0.9631	0.9625	0.9619	0.9613	0.9606	0.9599	0.9592	0.9587	0.9579	0.9572	0.9567	0.9561	0.9555	0.9550	0.9546	0.9538	0.9538	0.9536	0.9535	0.9533	0.9532	0.9531	0.9529	0.9528	0.9523	0.9519	0.9514	0.9509	0.9505	0.9500	0.9498	0.9498	0.9498
N2	80.8723	80.7945	80.7300	80.6761	80.6191	80.5593	80.5000	80.4322	80.3736	80.3301	80.2558	80.1962	80.1447	80.0942	80.0377	79.9923	79.9536	79.8831	79.8799	79.8675	79.8533	79.8408	79.8276	79.8170	79.8048	79.7916	79.7527	79.7088	79.6663	79.6234	79.5845	79.5422	79.5198	79.5192	79.5192
O2	14.3230	14.5086	14.6621	14.7903	14.9258	15.0679	15.2089	15.3702	15.5097	15.6129	15.7894	15.9312	16.0536	16.1737	16.3081	16.4162	16.5082	16.6695	16.6773	16.7072	16.7413	16.7712	16.8030	16.8285	16.8576	16.8895	16.9824	17.0871	17.1883	17.2905	17.3834	17.4839	17.5373	17.5388	17.5388
CO2	3.8347	3.7292	3.6411	3.5675	3.4897	3.4081	3.3271	3.2345	3.1544	3.0952	2.9936	2.9122	2.8419	2.7729	2.6958	2.6338	2.5809	2.4873	2.4828	2.4657	2.4461	2.4290	2.4107	2.3961	2.3794	2.3611	2.3078	2.2476	2.1894	2.1306	2.0772	2.0194	1.9886	1.9877	1.9877
H20	0.0000	0.0000	0.0000	0.0000	0.0000	0.0000	0.0000	0.0000	0.0000	0.0000	0.0000	0.0000	0.0000	0.0000	0.0000	0.0000	0.0000	0.0000	0.0000	0.0000	0.0000	0.0000	0.0000	0.0000	0.0000	0.0000	0.0000	0.0000	0.0000	0.0000	0.0000	0.0000	0.0000	0.0000	0.0000
SO2	0.0000	0.0000	0.0000	0.0000	0.0000	0.0000	0.0000	0.0000	0.0000	0.0000	0.0000	0.0000	0.0000	0.0000	0.0000	0.0000	0.0000	0.0000	0.0000	0.0000	0.0000	0.0000	0.0000	0.0000	0.0000	0.0000	0.0000	0.0000	0.0000	0.0000	0.0000	0.0000	0.0000	0.0000	0.0000
CO	0.0022	0.0008	0.0008	0.0008	0.0007	0.0007	0.0007	0.0007	0.0006	0.0006	0.0009	0.0009	0.0009	0.0008	0.0008	0.0008	0.0007	0.0004	0.0005	0.0005	0.0006	0.0006	0.0007	0.0007	0.0008	0.0009	0.0010	0.0011	0.0013	0.0015	0.0017	0.0019	0.0021	0.0021	0.0021
HC	0.0003	0.0002	0.0002	0.0002	0.0002	0.0002	0.0002	0.0002	0.0002	0.0002	0.0002	0.0002	0.0002	0.0002	0.0002	0.0002	0.0002	0.0002	0.0002	0.0002	0.0002	0.0002	0.0002	0.0002	0.0002	0.0002	0.0002	0.0001	0.0001	0.0002	0.0002	0.0002	0.0002	0.0002	0.0002
NOX	0.0028	0.0027	0.0026	0.0026	0.0025	0.0025	0.0024	0.0023	0.0023	0.0022	0.0022	0.0021	0.0021	0.0020	0.0019	0.0019	0.0019	0.0057	0.0056	0.0054	0.0051	0.0049	0.0047	0.0045	0.0042	0.0040	0.0037	0.0034	0.0031	0.0029	0.0026	0.0024	0.0023	0.0023	0.0023
Exh Mole % Wet (NOT FOR USE IN ENVIRONMENTAL PERMITS)																																			
AR	0.8548	0.8488	0.8507	0.8524	0.8541	0.8558	0.8575	0.8593	0.8610	0.8624	0.8722	0.8741	0.8758	0.8775	0.8793	0.8809	0.8825	0.8943	0.8944	0.8945	0.8947	0.8948	0.8950	0.8951	0.8952	0.8954	0.8958	0.8963	0.8968	0.8973	0.8977	0.8982	0.8984	0.8984	0.8984
N2	71.6553	71.1533	71.3047	71.4428	71.5831	71.7204	71.8569	72.0106	72.1429	72.2596	73.0723	73.2280	73.3667	73.5078	73.6588	73.7873	73.9144	74.9033	74.9062	74.9170	74.9295	74.9404	74.9520	74.9613	74.9719	74.9836	75.0175	75.0558	75.0929	75.1304	75.1646	75.2015	75.2212	75.2218	75.2218
O2	12.6906	12.7773	12.9503	13.0975	13.2528	13.4146	13.5760	13.7608	13.9214	14.0443	14.3761	14.5469	14.6959	14.8437	15.0084	15.1428	15.2613	15.6303	15.6389	15.6716	15.7090	15.7418	15.7768	15.8047	15.8368	15.8718	15.9741	16.0897	16.2016	16.3148	16.4179	16.5298	16.5892	16.5909	16.5909
CO2	3.3976	3.2842	3.2160	3.1592	3.0986	3.0341	2.9699	2.8959	2.8314	2.7842	2.7256	2.6591	2.6015	2.5449	2.4809	2.4295	2.3860	2.3322	2.3282	2.3129	2.2953	2.2799	2.2635	2.2504	2.2353	2.2188	2.1707	2.1164	2.0637	2.0104	1.9619	1.9092	1.8811	1.8803	1.8803
H20	11.3970	11.9330	11.6751	11.4450	11.2083	10.9720	10.7368	10.4705	10.2405	10.0467	8.9508	8.6890	8.4572	8.2234	7.9699	7.7569	7.5533	6.2339	6.2265	6.1983	6.1660	6.1377	6.1076	6.0836	6.0559	6.0257	5.9373	5.8374	5.7407	5.6428	5.5537	5.4571	5.4057	5.4042	5.4042
SO2	0.0000	0.0000	0.0000	0.0000	0.0000	0.0000	0.0000	0.0000	0.0000	0.0000	0.0000	0.0000	0.0000	0.0000	0.0000	0.0000	0.0000	0.0000	0.0000	0.0000	0.0000	0.0000	0.0000	0.0000	0.0000	0.0000	0.0000	0.0000	0.0000	0.0000	0.0000	0.0000	0.0000	0.0000	0.0000
CO	0.0020	0.0007	0.0007	0.0007	0.0007	0.0007	0.0006	0.0006	0.0006	0.0006	0.0009	0.0008	0.0008	0.0008	0.0007	0.0007	0.0006	0.0004	0.0004	0.0005	0.0005	0.0006	0.0006	0.0007	0.0008	0.0009	0.0009	0.0011	0.0012	0.0014	0.0016	0.0018	0.0020	0.0020	0.0020
HC	0.0002	0.0002	0.0002	0.0002	0.0002	0.0002	0.0002	0.0002	0.0002	0.0002	0.0002	0.0002	0.0002	0.0002	0.0002	0.0002	0.0002	0.0002	0.0002	0.0002	0.0002	0.0002	0.0002	0.0002	0.0002	0.0002	0.0001	0.0001	0.0001	0.0002	0.0002	0.0002	0.0002	0.0002	0.0002
NOX	0.0025	0.0024	0.0023	0.0023	0.0022	0.0022	0.0022	0.0021	0.0021	0.0020	0.0020	0.0019	0.0019	0.0018	0.0018	0.0018	0.0017	0.0053	0.0052	0.0050	0.0048	0.0046	0.0044	0.0042	0.0040	0.0038	0.0035	0.0032	0.0030	0.0027	0.0025	0.0023	0.0021	0.0021	0.0021

Aero Energy Fuel Number	**10-1 (GEDEF)**	
	Volume %	**Weight %**
Hydrogen	0.0000	0.0000
Methane	84.5000	71.8447
Ethane	5.5800	8.8924
Ethylene	0.0000	0.0000
Propane	2.0500	4.7909
Propylene	0.0000	0.0000
Butane	0.7800	2.4027
Butylene	0.0000	0.0000
Butadiene	0.0000	0.0000
Pentane	0.1800	0.6883
Cyclopentane	0.0000	0.0000
Hexane	0.1700	0.7764
Heptane	0.0000	0.0000
Carbon Monoxide	0.0000	0.0000
Carbon Dioxide	0.6700	1.5628
Nitrogen	5.9300	8.8044
Water Vapor	0.0000	0.0000
Oxygen	0.1400	0.2374
Hydrogen Sulfide	0.0000	0.0000

Estimated Average Engine Performance NOT FOR GUARANTEE, REFER TO PROJECT F&ID FOR DESIGN

GE Energy

Performance By: **Jennifer Woods Mikolas**
Project Info: **Jpower - Perf Runs Over Guar Emissions Range**

Engine: **LM6000 PC-SPRINT w/ FIGV at -5 Degrees**
Deck Info: **G0125O - 8fk.scp** Date: **10/30/2007**
Generator: **MEID 800LL04 60Hz, 13.8kV, 0.9PF (14849)** Time: **4:06:43 PM**
Fuel: **Gas Fuel #10-1, 19000 Btu/lb,LHV** Version: **3.5.18**

			NOx, lbs	**CO, lbs**
Startup Ramp Rate:	12607 kW/min	Total Emissions at Startup	**3.1**	**1.1**

Case #	**100**	**101**	**102**	**103**	**104**	**105**	**106**	**107**	**108**	**109**	**110**	**111**	**112**	**113**	**114**	**115**	**116**	**117**	**118**	**119**	**120**	**121**	**122**	**123**	**124**	**125**	**126**	**127**	**128**	**129**	**130**	**131**	**132**	**133**	**134**
Ammonia	0.0000	0.0000																																	
Btu/lb, LHV	19000																																		
Btu/scf, LHV	946																																		
Btu/scf, HHV	1047																																		
Btu/lb, HHV	20996																																		
Fuel Temp, °F	77.0																																		
NOx Scalar	0.998																																		
Specific Gravity	0.65																																		
Engine Exhaust																																			
Exhaust Avg. Mol. Wt., Wet Basis	28.0	28.0	28.0	28.0	28.0	28.0	28.1	28.1	28.1	28.1	28.2	28.3	28.3	28.3	28.3	28.3	28.4	28.5	28.5	28.5	28.5	28.5	28.5	28.5	28.5	28.5	28.5	28.5	28.5	28.5	28.5	28.5	28.5	28.5	28.5
Exhaust Flow, ACFM	596000	544978	530476	515917	501126	485887	471000	455841	441028	425554	414097	398189	381673	364726	349490	333900	317830	313522	312057	306147	300241	294006	287530	280852	274032	267116	260818	254521	248240	241888	235587	229214	225922	225838	225838
Exhaust Flow, SCFM	228077	205379	201512	197078	192647	188176	183681	179356	174675	169025	162469	157209	151346	145155	139527	133217	126294	123284	122677	120208	117783	115158	112463	109570	106662	103742	101955	100312	98585	96807	94875	92985	92029	92010	92010
Exhaust Flow, Btu/lb	337	344	341	338	336	333	330	326	323	322	325	322	320	318	317	317	318	319	319	319	320	320	320	321	322	323	320	317	315	312	310	307	306	306	306
Exhaust Flow, Calories/s	25278465	23154756	22512243	21874216	21226141	20558822	19908726	19244683	18601325	17937490	17441918	16755063	16047026	15322722	14671250	14010450	13333349	13131012	13069618	12821864	12573969	12312889	12041595	11762964	11477945	11188782	10917584	10645329	10374772	10101635	9832256	9559442	9418495	9414844	9414844
Inlet Flow Wet, pps	287.3	259.6	259.6	260.0	260.2	260.1	259.8	259.4	259.2	260.3	252.1	253.0	254.8	256.8	258.0	259.9	261.9	262.3	262.5	263.0	263.4	263.9	264.3	264.7	265.0	265.3	265.2	265.0	264.8	264.6	264.4	264.0	263.9	263.8	263.8
Inlet Flow Dry, pps	285.5	256.4	256.3	256.7	256.9	256.8	256.5	256.1	256.0	257.0	248.9	249.8	251.6	253.5	254.7	256.6	258.6	259.0	259.1	259.6	260.0	260.5	260.9	261.3	261.7	261.9	261.8	261.7	261.5	261.3	261.0	260.7	260.5	260.5	260.5
Shaft HP	68776	58077	55202	52325	49448	46575	43703	40825	37957	35089	32226	29364	26504	23647	20793	17942	15097	14253	14000	13000	12000	11000	10000	9000	8000	7000	6000	5000	4000	3000	2000	1000	500	490	490
Generator Information																																			
Capacity kW	57499	57499	57499	57499	57499	57499	57499	57499	57499	57499	57499	57499	57499	57499	57499	57499	57499	57499	57499	57499	57499	57499	57499	57499	57499	57499	57499	57499	57499	57499	57499	57499	57499	57499	57499
Efficiency	0.983	0.982	0.981	0.981	0.980	0.980	0.979	0.978	0.977	0.975	0.973	0.971	0.968	0.965	0.960	0.953	0.944	0.941	0.940	0.935	0.929	0.922	0.914	0.904	0.891	0.875	0.853	0.822	0.775	0.697	0.541	0.073	0.100	0.100	0.100
Inlet Temp, °F	86.0	86.0	86.0	86.0	86.0	86.0	86.0	86.0	86.0	86.0	86.0	86.0	86.0	86.0	86.0	86.0	86.0	86.0	86.0	86.0	86.0	86.0	86.0	86.0	86.0	86.0	86.0	86.0	86.0	86.0	86.0	86.0	86.0	86.0	86.0
Gear Box Loss	N/A	N/A	N/A	N/A	N/A	N/A	N/A	N/A	N/A	N/A	N/A	N/A	N/A	N/A	N/A	N/A	N/A	N/A	N/A	N/A	N/A	N/A	N/A	N/A	N/A	N/A	N/A	N/A	N/A	N/A	N/A	N/A	N/A	N/A	N/A
TRQ48, Torque Limit Cold End	122777	105653	101476	97193	92955	88785	84667	80555	76402	72001	68604	64349	59935	55464	51081	46508	41789	40420	40004	38357	36718	35037	33353	31624	29906	28206	26853	25546	24244	22945	21660	20390	19754	19741	19741
Correct Control Parameters																																			
PS3JQA, psia	464.090	415.382	405.256	394.421	383.484	372.447	361.510	350.675	339.536	327.081	315.132	303.081	290.120	276.652	264.196	250.829	236.551	232.197	230.881	225.716	220.552	215.185	209.615	203.742	197.869	191.894	187.439	183.185	178.831	174.274	169.717	165.059	162.730	162.629	162.629
XN25R3, rpm	6302	6301	6285	6272	6255	6239	6228	6222	6200	6182	6070	6062	6053	6040	6027	6015	6006	6008	6007	6002	5999	5996	5993	5990	5987	5986	5979	5972	5963	5951	5926	5904	5894	5893	5893
8th Stage Bleed																																			
Flow, pps	0.0	0.0	0.0	0.0	0.0	0.0	0.0	0.0	0.0	0.0	0.0	0.0	0.0	0.0	0.0	0.0	0.0	0.0	0.0	0.0	0.0	0.0	0.0	0.0	0.0	0.0	0.0	0.0	0.0	0.0	0.0	0.0	0.0	0.0	0.0
Pressure, psia	0.000	0.000	0.000	0.000	0.000	0.000	0.000	0.000	0.000	0.000	0.000	0.000	0.000	0.000	0.000	0.000	0.000	0.000	0.000	0.000	0.000	0.000	0.000	0.000	0.000	0.000	0.000	0.000	0.000	0.000	0.000	0.000	0.000	0.000	0.000
Temperature, °R	0	0	0	0	0	0	0	0	0	0	0	0	0	0	0	0	0	0	0	0	0	0	0	0	0	0	0	0	0	0	0	0	0	0	0
CDP Bleed																																			
Flow, pps	0.0	0.0	0.0	0.0	0.0	0.0	0.0	0.0	0.0	0.0	0.0	0.0	0.0	0.0	0.0	0.0	0.0	0.0	0.0	0.0	0.0	0.0	0.0	0.0	0.0	0.0	0.0	0.0	0.0	0.0	0.0	0.0	0.0	0.0	0.0
Pressure, psia	0.000	0.000	0.000	0.000	0.000	0.000	0.000	0.000	0.000	0.000	0.000	0.000	0.000	0.000	0.000	0.000	0.000	0.000	0.000	0.000	0.000	0.000	0.000	0.000	0.000	0.000	0.000	0.000	0.000	0.000	0.000	0.000	0.000	0.000	0.000
Est. Gas Pressure at Baseplate, psig	**606.1**	**538.1**	**522.4**	**506.4**	**490.3**	**474.0**	**458.0**	**441.8**	**425.8**	**409.0**	**391.4**	**374.7**	**357.5**	**339.8**	**323.3**	**306.2**	**288.5**	**281.0**	**279.4**	**273.2**	**266.9**	**260.3**	**253.6**	**246.6**	**239.5**	**232.4**	**226.3**	**220.4**	**214.4**	**208.3**	**202.2**	**196.2**	**193.0**	**193.0**	**193.0**
CardPack	**8fk**	**8fk**	**8fk**	**8fk**	**8fk**	**8fk**	**8fk**	**8fk**	**8fk**	**8fk**	**8fk**	**8fk**	**8fk**	**8fk**	**8fk**	**8fk**	**8fk**	**8fk**	**8fk**	**8fk**	**8fk**	**8fk**	**8fk**	**8fk**	**8fk**	**8fk**	**8fk**	**8fk**	**8fk**	**8fk**	**8fk**	**8fk**	**8fk**	**8fk**	**8fk**
Exhaust CardPack	**7f5**	**7f5**	**7f5**	**7f5**	**7f5**	**7f5**	**7f5**	**7f5**	**7f5**	**7f5**	**7f5**	**7f5**	**7f5**	**7f5**	**7f5**	**7f5**	**7f5**	**7f5**	**7f5**	**7f5**	**7f5**	**7f5**	**7f5**	**7f5**	**7f5**	**7f5**	**7f5**	**7f5**	**7f5**	**7f5**	**7f5**	**7f5**	**7f5**	**7f5**	**7f5**
NSI	**304**	**305**	**0**	**0**	**0**	**0**	**0**	**0**	**0**	**0**	**439**	**439**	**439**	**439**	**439**	**439**	**439**	**439**	**439**	**439**	**439**	**439**	**439**	**439**	**439**	**439**	**439**	**439**	**439**	**439**	**439**	**439**	**439**	**439**	**439**
NSI	**1716**	**0**	**0**	**0**	**0**	**0**	**0**	**0**	**0**	**0**	**0**	**0**	**0**	**0**	**0**	**0**	**0**	**0**	**0**	**0**	**0**	**0**	**0**	**0**	**0**	**0**	**0**	**0**	**0**	**0**	**0**	**0**	**0**	**0**	**0**
NSI	**0**	**0**	**0**	**0**	**0**	**0**	**0**	**0**	**0**	**0**	**0**	**0**	**0**	**0**	**0**	**0**	**0**	**0**	**0**	**0**	**0**	**0**	**0**	**0**	**0**	**0**	**0**	**0**	**0**	**0**	**0**	**0**	**0**	**0**	**0**

Table 3.2A-12 - Turbine Emission Estimates During Operational Phase

Turbine Emissions Factors (100% Load)

Base Load Emissions Per Turbine		NOx	CO	VOC	PM10	SO_2
Steady State Uncontrolled (lb/hr)		43.00	18.37	1.25	2.70	1.00
Steady State Controlled (lb/hr)		4.30	6.12	0.42	2.70	1.00
Start/Stop Emissions Per Turbine	Minutes	NOx	CO	VOC	PM10	SO_2
Startup Emissions (lb/event)	10	3.00	5.60	1.10	0.67	0.14
Warm-up Emissions (lb/event)	30	10.93	7.50	1.11	1.50	0.41
Shutdown Emissions (lb/event)	8	2.20	3.70	0.60	0.53	0.11
Startup Emissions / Hour / Turbine	Hour	NOx	CO	VOC	PM10	SO_2
Startup	0.167	3.00	5.60	1.10	0.67	0.14
Warm-up	0.500	10.93	7.50	1.11	1.50	0.41
Steady State Controlled	0.333	1.43	2.04	0.14	0.90	0.33
Total Hourly Emission / Turbine	1.000	15.36	15.14	2.35	3.07	0.88
Shutdown Emissions / Hour / Turbine	Hour	NOx	CO	VOC	PM10	SO_2
Steady State Controlled	0.867	3.73	5.31	0.36	2.34	0.87
Shutdown	0.133	2.20	3.70	0.60	0.53	0.11
Total Hourly Emission / Turbine	1.000	5.93	9.01	0.96	2.87	0.98

Facility Turbine Emissions (2 Turbines)

Maximum Hourly Emissions	T1	T2	Hours	NOx	CO	VOC	PM10	SO_2
Startup Event	1	0	0.167	3.00	5.60	1.10	0.67	0.14
Warm-up Event	1	0	0.500	10.93	7.50	1.11	1.50	0.41
Steady State	1	1	1.333	5.73	8.16	0.56	3.60	1.33
Total Maximum Hourly (lb/hr)			**2.00**	**19.66**	**21.26**	**2.77**	**5.77**	**1.88**
Maximum Eight Hours Emissions			Hours	NOx	CO	VOC	PM10	SO_2
Startup Event	3	3	1.00	18.00	33.60	6.60	4.02	0.84
Warm-up Event	3	3	3.00	65.58	45.00	6.66	9.00	2.46
Shutdown Event	3	3	0.80	13.20	22.20	3.60	3.18	0.66
Steady State Controlled	1	1	11.20	48.16	68.58	4.67	30.24	11.21
Total Maximum Eight Hours (lb)			**16.00**	**144.94**	**169.38**	**21.53**	**46.44**	**15.17**
Maximum Daily Emissions			Hours	NOx	CO	VOC	PM10	SO_2
Startup Event	3	3	1.00	18.00	33.60	6.60	4.02	0.84
Warm-up Event	3	3	3.00	65.58	45.00	6.66	9.00	2.46
Shutdown Event	3	3	0.80	13.20	22.20	3.60	3.18	0.66
Steady State Controlled	1	1	27.20	116.96	166.55	11.33	73.44	27.23
Total Maximum Daily (lb/day)			**32.00**	**213.74**	**267.35**	**28.19**	**89.64**	**31.19**
Maximum Annual Emissions			Hours	NOx	CO	VOC	PM10	SO_2
Startup Event	250	250	83.33	1,500	2,800	550	335	70
Warm-up Event	250	250	250.00	5,465	3,750	555	750	205
Shutdown Event	250	250	66.67	1,100	1,850	300	265	55
Steady State Uncontrolled	20	20	40	1,720	735	50	108	40
Steady State Controlled	2980	2980	5,960	25,628	36,495	2,483	16,092	5,966
Total Maximium Annual Daily (lb/yr)			**6,400**	**35,413**	**45,630**	**3,938**	**17,550**	**6,336**
			Tons	**17.71**	**22.81**	**1.97**	**8.78**	**3.17**
Annual Average Emissions			Hours	NOx	CO	VOC	PM10	SO_2
Startup Event	100	100	33.33	600	1,120	220	134	28
Warm-up Event	100	100	100.00	2,186	1,500	222	300	82
Shutdown Event	100	100	26.67	440	740	120	106	22
Steady State Uncontrolled	4	4	8	344	147	10	22	8
Steady State Controlled	916	916	1,832	7,878	11,218	763	4,946	1,834
Total Maximium Annual Daily (lb/yr)			**2,000**	**11,448**	**14,725**	**1,335**	**5,508**	**1,974**
			Tons	**5.72**	**7.36**	**0.67**	**2.75**	**0.99**

Notes:
1. Uncontrolled emission data based on updated GE performance data provided 9/26/2007
2. Controlled emissions are based on targeted BACT thresholds of 2.5 ppm NOx, 6 ppm CO.
3. Oxidation catalyst presumed to have the same oxidation potential for CO and VOC.
4. Calculations are based on annual average ambient temperature of 70.5 °F
5. Maximum one hour emissions based on staggered startup of the turbines
6. Startup events are 10 minutes (0.167 hour) each
7. Warm-up events are 30 minutes (0.500 hour) each
8. Shutdown events are 8 minutes (0.130 hour) each
9. Startup and shutdown emissions are based on GE data at ISO conditions
10. Warm-up emissions are based on linear emission reduction ramp

Turbine Emissions Factors (75% Load)

Base Load Emissions Per Turbine		NOx	CO	VOC	PM10	SO_2
Steady State Uncontrolled (lb/hr)		34.00	12.96	0.99	2.32	0.80
Steady State Controlled (lb/hr)		3.40	4.32	0.33	2.32	0.80
Start/Stop Emissions Per Turbine	Minutes	NOx	CO	VOC	PM10	SO_2
Startup Emissions (lb/event)	10	3.00	5.60	1.10	0.67	0.14
Warm-up Emissions (lb/event)	30	10.93	7.50	1.11	1.50	0.41
Shutdown Emissions (lb/event)	8	2.20	3.70	0.60	0.53	0.11
Startup Emissions / Hour / Turbine	Hour	NOx	CO	VOC	PM10	SO_2
Startup	0.167	3.00	5.60	1.10	0.67	0.14
Warm-up	0.500	10.93	7.50	1.11	1.50	0.41
Steady State Controlled	0.333	1.13	1.44	0.11	0.77	0.27
Total Hourly Emission / Turbine	1.000	15.06	14.54	2.32	2.94	0.82
Shutdown Emissions / Hour / Turbine	Hour	NOx	CO	VOC	PM10	SO_2
Steady State Controlled	0.867	2.95	3.74	0.29	2.01	0.69
Shutdown	0.133	2.20	3.70	0.60	0.53	0.11
Total Hourly Emission / Turbine	1.000	5.15	7.44	0.89	2.54	0.80

Facility Turbine Emissions (2 Turbines)

Maximum Hourly Emissions	T1	T2	Hours	NOx	CO	VOC	PM10	SO_2
Startup Event	1	0	0.167	3.00	5.60	1.10	0.67	0.14
Warm-up Event	1	0	0.500	10.93	7.50	1.11	1.50	0.41
Steady State	1	1	1.333	4.53	5.76	0.44	3.10	1.06
Total Maximum Hourly (lb/hr)			**2.00**	**18.46**	**18.86**	**2.65**	**5.27**	**1.61**
Maximum Eight Hours Emissions			Hours	NOx	CO	VOC	PM10	SO_2
Startup Event	3	3	1.00	18.00	33.60	6.60	4.02	0.84
Warm-up Event	3	3	3.00	65.58	45.00	6.66	9.00	2.46
Shutdown Event	3	3	0.80	13.20	22.20	3.60	3.18	0.66
Steady State Controlled	1	1	11.20	38.08	48.38	3.70	26.02	8.91
Total Maximum Eight Hours (lb)			**16.00**	**134.86**	**149.18**	**20.56**	**42.22**	**12.87**
Maximum Daily Emissions			Hours	NOx	CO	VOC	PM10	SO_2
Startup Event	3	3	1.00	18.00	33.60	6.60	4.02	0.84
Warm-up Event	3	3	3.00	65.58	45.00	6.66	9.00	2.46
Shutdown Event	3	3	0.80	13.20	22.20	3.60	3.18	0.66
Steady State Controlled	1	1	27.20	92.48	117.50	8.98	63.19	21.63
Total Maximum Daily (lb/day)			**32.00**	**189.26**	**218.30**	**25.84**	**79.39**	**25.59**
Maximum Annual Emissions			Hours	NOx	CO	VOC	PM10	SO_2
Startup Event	250	250	83.33	1,500	2,800	550	335	70
Warm-up Event	250	250	250.00	5,465	3,750	555	750	205
Shutdown Event	250	250	66.67	1,100	1,850	300	265	55
Steady State Uncontrolled	20	20	40	1,360	518	40	93	32
Steady State Controlled	2980	2980	5,960	20,264	25,747	1,967	13,846	4,739
Total Maximium Annual Daily (lb/yr)			**6,400**	**29,689**	**34,666**	**3,411**	**15,289**	**5,101**
			Tons	**14.84**	**17.33**	**1.71**	**7.64**	**2.55**

Notes:
1. VOC emission factor based on the higher of estimated emission and the guaranteed levels.
2. PM10 emissions for partial load is adjusted by exhaust flowrate.
3. SO2 emissions calculated using projected fuel consumption.

Turbine Emissions Factors (50% Load)

Base Load Emissions Per Turbine		NOx	CO	VOC	PM10	SO_2
Steady State Uncontrolled (lb/hr)		26.00	9.70	0.75	1.94	0.60
Steady State Controlled (lb/hr)		2.60	3.23	0.25	1.94	0.60
Start/Stop Emissions Per Turbine	Minutes	NOx	CO	VOC	PM10	SO_2
Startup Emissions (lb/event)	10	3.00	5.60	1.10	0.67	0.14
Warm-up Emissions (lb/event)	30	10.93	7.50	1.11	1.50	0.41
Shutdown Emissions (lb/event)	8	2.20	3.70	0.60	0.53	0.11
Startup Emissions / Hour / Turbine	Hour	NOx	CO	VOC	PM10	SO_2
Startup	0.167	3.00	5.60	1.10	0.67	0.14
Warm-up	0.500	10.93	7.50	1.11	1.50	0.41
Steady State Controlled	0.333	0.87	1.08	0.08	0.65	0.20
Total Hourly Emission / Turbine	1.000	14.80	14.18	2.29	2.82	0.75
Shutdown Emissions / Hour / Turbine	Hour	NOx	CO	VOC	PM10	SO_2
Steady State Controlled	0.867	2.25	2.80	0.22	1.68	0.52
Shutdown	0.133	2.20	3.70	0.60	0.53	0.11
Total Hourly Emission / Turbine	1.000	4.45	6.50	0.82	2.21	0.63

Facility Turbine Emissions (2 Turbines)

Maximum Hourly Emissions	T1	T2	Hours	NOx	CO	VOC	PM10	SO_2
Startup Event	1	0	0.167	3.00	5.60	1.10	0.67	0.14
Warm-up Event	1	0	0.500	10.93	7.50	1.11	1.50	0.41
Steady State	1	1	1.333	3.47	4.31	0.33	2.58	0.79
Total Maximum Hourly (lb/hr)			**2.00**	**17.40**	**17.41**	**2.54**	**4.75**	**1.34**
Maximum Eight Hours Emissions			Hours	NOx	CO	VOC	PM10	SO_2
Startup Event	3	3	1.00	18.00	33.60	6.60	4.02	0.84
Warm-up Event	3	3	3.00	65.58	45.00	6.66	9.00	2.46
Shutdown Event	3	3	0.80	13.20	22.20	3.60	3.18	0.66
Steady State Controlled	1	1	11.20	29.12	36.21	2.80	21.68	6.67
Total Maximum Eight Hours (lb)			**16.00**	**125.90**	**137.01**	**19.66**	**37.88**	**10.63**
Maximum Daily Emissions			Hours	NOx	CO	VOC	PM10	SO_2
Startup Event	3	3	1.00	18.00	33.60	6.60	4.02	0.84
Warm-up Event	3	3	3.00	65.58	45.00	6.66	9.00	2.46
Shutdown Event	3	3	0.80	13.20	22.20	3.60	3.18	0.66
Steady State Controlled	1	1	27.20	70.72	87.95	6.80	52.66	16.21
Total Maximum Daily (lb/day)			**32.00**	**167.50**	**188.75**	**23.66**	**68.86**	**20.17**
Maximum Annual Emissions			Hours	NOx	CO	VOC	PM10	SO_2
Startup Event	250	250	83.33	1,500	2,800	550	335	70
Warm-up Event	250	250	250.00	5,465	3,750	555	750	205
Shutdown Event	250	250	66.67	1,100	1,850	300	265	55
Steady State Uncontrolled	20	20	40	1,040	388	30	77	24
Steady State Controlled	2980	2980	5,960	15,496	19,271	1,490	11,539	3,551
Total Maximium Annual Daily (lb/yr)			**6,400**	**24,601**	**28,059**	**2,925**	**12,966**	**3,905**
			Tons	**12.30**	**14.03**	**1.46**	**6.48**	**1.95**

Table 3.2A-13 - Black-Start Engine Generator Emissions

Parameters		
Engine	Cummins Model GTA38-G2	
Engine Type	4 Stroke, 12 Cylinder, Natural Gas-Fired, Turbocharged, Aftercooled	
Engine Control System	Three Way Catalytic Convertor and AFRC	
Rated Horsepower	965	BHP
Test Frequency	14	per Year
Test Duration	0.50	Hour
Expected Annual Non-Emergency Usage	7	Hours/Year
Fuel Consumption (1)	4,161	BTU/Hp-hr
Fuel Consumption (1)	4,437	CFH
Natural Gas Fuel Value	1024	BTU/SCF
Exhaust Flow Rate	6,637	CFM
Temperature	1,123	°F
Stack Diameter	1.17	ft
Stack Height	19.17	ft

Black Start Engine Generator	NOx	CO	VOC	PM10(4)	SO_2(5)
Emission Factor (g/HP/hr)(2)	1.50	2.00	0.33	-	-
Emission Factor (lb/MMBTU)	-	-	-	0.0100	0.0021
Emision Rates (lb/hr)(3)	1.39	1.85	0.31	0.040	0.008
Annual Emissions (lb/yr)	**19.39**	**25.90**	**4.27**	**0.56**	**0.12**

(1) Hourly fuel consumption is characterized by 1/2 hour of engine testing and 1/2 hour engine off.

(2) Emissions factors reflect NOx/VOC (90%) and CO (65%) control by 3-way catalytic convertor and AFRC

(3) Hourly emission is characterized by 1/2 hour of engine testing and 1/2 hour engine off.

(4) PM10 emission factor from EPA AP-42 for natural gas 4-stroke lean-burn engines and includes fliterable and condensable emisssions.

(5) SO2 factor derived from 0.75 gr S/100 scf, 1015 Btu/Scf natural gas.

Table 3.2A-14 - Emergency Diesel Fire Water Pump Emissions

Engine has been re-specified to accommodate high pressure requirement for fire protection

Parameters

Engine	Cummins Model CFP11E-F10 (1760 RPM)	
Engine Type	4 Stroke, 6 Cylinder, Ultralow Sulfur Diesel, Turbocharged, Charge Air Cooled	
Fuel Type	Ultra low sulfure diesel	
Rated Horsepower	373	BHP
Expected non-emergency usage	52	hrs/yr
Test Duration	30	Minutes
Test Frequency	52	Weeks/Year
Fuel Consumption [(1)]	8.9	Gal/hr
Fuel Density (s.g. = 0.845)	7.05	lb/gal
Exhaust Flow Rate	1,943	CFM
Temperature	917	°F
Stack Diameter	0.50	ft
Stack Height	18	ft

Expected Annual Non-Emergency Usage* 52 Hours/Year

* Each hour of operation is characterized by 1/2 hour on and 1/2 hour off.

Emergency Water Pump	NOx	CO	VOC	PM10	SO2**
Emission Factor (g/BHP/hr)	3.84	0.746	0.0007	0.091	-
Emision Rates (lb/hr)*	1.58	0.31	0.0003	0.04	0.001
Annual Emissions (lb/yr)	**81.94**	**15.92**	**0.01**	**1.94**	**0.05**

** SO2 emissions based on fuel consumption, 15 ppm ULSD, and complete combustion to SO2

Table 3.2A-15 - Cooling Tower Emission Estimates During Operational Phase

Notes: The PM emission estimates are updated below due to the following reasons:

- The use of tertiary water for cooling
- The need to conserve water

Parameters

Supplier: Tisdale

Made: BAC

Cells	3	
Cell Diameter	11.0	Feet
Exhaust Flow Rate (Each Cell)	229,950	CFM
Exhaust Temperature	83.7	°F
Vent height	29.75	Feet
Cooling tower flow rate (w)	8,500	gal/min
Total dissolved solids (TDS)	4,594	ppmw
Drift loss of circulating water (n)	0.085	gal/min
Density of water (d)	8.34	lb/gal
Maximum annual operating hours (T)	3,200	hours
Maximum daily operating hours (T)	24	hours

PM10 Emission (E) = (TDS/1E6) (n) (d) (60) (T)

PM10 Emissions (lb/day)	0.20	lb/hr
PM10 Emissions (lb/day)	4.69	lb/day
PM10 Emissions (lb/yr)	625	lb/yr

APPENDIX 3.2-B

AIR MODELING INPUT TABLES

Table 3.2B-1 - Construction Source Location and Parameters

Source Description	Source ID	UTM NAD 27 Easting (m)	UTM NAD27 Northing (m)	Base Elevation (m)	Release Height (m)	Horizontal Dimension (m)	Vertical Dimension (m)
Combustion	COMB01	489675	3690975	130	10	41.4	2.79
	COMB02	489775	3690975	125	10	41.4	2.79
	COMB03	489675	3690875	122	10	41.4	2.79
	COMB04	489775	3690875	118	10	41.4	2.79
Fugitive Sources	FUG01	489687	3690848	120	3	13.95	2.79
	FUG02	489687	3690929	127	3	13.95	2.79
	FUG03	489810	3690933	122	3	13.95	2.79
	FUG04	489806	3690865	117	3	13.95	2.79
	FUG05	489781	3690982	128	3	13.95	2.79
	FUG06	489685	3690899	124	3	13.95	2.79
	FUG07	490825	3690898	118	3	13.95	2.79
	FUG08	489780	3690896	121	3	13.95	2.79
	FUG09	489815	3690990	125	3	13.95	2.79
	FUG10	489747	3690948	127	3	13.95	2.79
	FUG11	489729	3690979	131	3	13.95	2.79
	FUG12	489730	3690889	123	3	13.95	2.79
	FUG13	489679	3690990	134	3	13.95	2.79

Table 3.2B-2 - Maximum PM Emission Rates of Construction Sources

Source ID	24-Hour PM10 (lb/hr)	Annual PM10 (lb/hr)	24-Hour PM2.5 (lb/hr)	Annual PM2.5 (lb/hr)
COMB01	0.0606	0.0117	0.0558	0.0108
COMB02	0.0606	0.0117	0.0558	0.0108
COMB03	0.0606	0.0117	0.0558	0.0108
COMB04	0.0606	0.0117	0.0558	0.0108
FUG01	0.102	0.004	0.019	0.0010
FUG02	0.102	0.004	0.019	0.0010
FUG03	0.102	0.004	0.019	0.0010
FUG04	0.102	0.004	0.019	0.0010
FUG05	0.102	0.004	0.019	0.0010
FUG06	0.102	0.004	0.019	0.0010
FUG07	0.102	0.004	0.019	0.0010
FUG08	0.102	0.004	0.019	0.0010
FUG09	0.102	0.004	0.019	0.0010
FUG10	0.102	0.004	0.019	0.0010
FUG11	0.102	0.004	0.019	0.0010
FUG12	0.102	0.004	0.019	0.0010
FUG13	0.102	0.004	0.019	0.0010

Table 3.2B-3 - Construction Combustion Source Emission Rates

Total

COMB01	CO (lb/hr)	NOx (lb/hr)	SOx (lb/hr)	PM10 (lb/hr)	PM2.5 (lb/hr)
1 Hour	7.76	17.13	0.01	0.77	0.71
3 Hour	7.76	17.13	0.01	0.77	0.71
8 Hour	7.48	16.64	0.01	0.73	0.67
24 Hour	2.49	5.55	0.005	0.24	0.22
Annual	0.39	0.72	0.001	0.05	0.04

Each Volume Source

COMB01	CO (lb/hr)	NOx (lb/hr)	SOx (lb/hr)	PM10 (lb/hr)	PM2.5 (lb/hr)
1 Hour	1.94	4.28	0.004		
3 Hour			0.004		
8 Hour	1.87				
24 Hour			0.001	0.061	0.056
Annual		0.180	0.0002	0.0117	0.0108

Table 3.2B-4 - Commissioning Phase Modeling Input

Exhaust Parameters	Flow (CFM)	Temp (°F)	Vel (FPS)	Dia. (ft)	Height (ft)
NOx (Cases 118)	311,899	807.8	42.38	12.5	80
CO, PM10 & SO2 (Case 100)	595,698	840.3	80.94	12.5	80

Modeled Emission Rate	NOx (1)	CO (2)	VOC (2)	PM10 (2)	SO2 (2)
Maximum 1-Hour	49.59	43.90			1.00
Maximum Average 3-Hour					1.00
Maximum Average 8-Hour		43.90			
Maximum Average 24-Hour				1.35	0.50

(1) Based on case 118
(2) Based on case 100

Table 3.2B-5 - Modeling Emission Data Summary (Turbines at 100% Load - Operational Phase)

Notes:
- Both turbines operating at 100% load. Inlet air chilled, SPRINT on.
- All emission factors based on updated GE performance data
- Maximum hourly turbine emissions based on one turbine at start-up & one at steady state.
- Fire water pump tested ½ hour per week, black start engine tested/run ½ hour 14 times per year.
- Cooling tower exhaust flowrate & temperature provided by supplier

Exhaust Parameters	Flow (CFM)	Temp (°F)	Vel (FPS)	Dia. (ft)	Height (ft)
Turbine 1	595,551	840.7	80.92	12.5	80
Turbine 2	595,551	840.7	80.92	12.5	80
Black Start Generator	6,637	1,123.0	103.53	1.17	19.17
Firewater Pump (Horizontal exhaust)	1,943	917.0	165.01	0.50	18.0
Chiller Evaporator - Cell 1	229,950	83.7	40.35	11	29.8
Chiller Evaporator - Cell 2	229,950	85.2	40.35	11	29.8
Chiller Evaporator - Cell 3	229,950	85.2	40.35	11	29.8

Maximum 1-Hour Emissions	NOx	CO	VOC	PM10	SO2
Turbine 1 (lb/hr)	4.30	6.12			1.00
Turbine 2 (lb/hr)	15.36	15.14			0.88
Black Start Generator (lb/hr)	1.39	1.85			0.008
Firewater Pump (lb/hr)	1.58	0.31			0.001
Chiller Evaporator (lb/hr)					
	22.62	23.42	-	-	1.89

Maximum Average 3-Hour Emissions	NOx	CO	VOC	PM10	SO2
Turbine 1 (lb/hr)					0.96
Turbine 2 (lb/hr)					0.96
Black Start Generator (lb/hr)					0.0028
Firewater Pump (lb/hr)					0.0003
Chiller Evaporator (lb/hr)					

Maximum Average 8-Hour Emission Rate	NOx	CO	VOC	PM10	SO2
Turbine 1 (lb/hr)		10.59			
Turbine 2 (lb/hr)		10.59			
Black Start Generator (lb/hr)		0.231			
Firewater Pump (lb/hr)		0.038			
Chiller Evaporator (lb/hr)					

Maximum Average 24-Hour Emission Rate	NOx	CO	VOC	PM10	SO2
Turbine 1 (lb/hr)				1.87	0.65
Turbine 2 (lb/hr)				1.87	0.65
Black Start Generator (lb/hr)				1.67E-03	3.51E-04
Firewater Pump (lb/hr)				1.56E-03	3.92E-05
Chiller Evaporator (lb/hr) Cell 1				6.51E-02	
Chiller Evaporator (lb/hr) Cell 2				6.51E-02	
Chiller Evaporator (lb/hr) Cell 3				6.51E-02	

Maximum Annual Emission Rate	NOx	CO	VOC	PM10	SO2
Turbine 1 (lb/hr)	2.02			1.00	0.36
Turbine 2 (lb/hr)	2.02			1.00	0.36
Black Start Generator (lb/hr)	2.21E-03			6.41E-05	1.35E-05
Firewater Pump (lb/hr)	9.35E-03			2.22E-04	5.59E-06
Chiller Evaporator (lb/hr) Cell 1				2.38E-02	
Chiller Evaporator (lb/hr) Cell 2				2.38E-02	
Chiller Evaporator (lb/hr) Cell 3				2.38E-02	

Metrics Units

Exhaust Parameters	Flow (CMS)	Temp (°K)	Vel (m/s)	Dia. (m)	Height (m)
Turbine 1	281.04	722.43	24.66	3.81	24.38
Turbine 2	281.04	722.43	24.66	3.81	24.38
Black Start Generator	3.13	879.26	31.55	0.36	5.84
Firewater Pump (Horizontal exhaust)	0.92	764.82	50.29	0.15	5.49
Chiller Evaporator - Cell 1	108.51	301.87	12.30	3.35	9.07
Chiller Evaporator - Cell 2	108.51	302.71	12.30	3.35	9.07
Chiller Evaporator - Cell 3	108.51	302.71	12.30	3.35	9.07

Maximum 1-Hour Emissions	NOx	CO	VOC	PM10	SO2
Turbine 1 (g/s)	0.54	0.77			0.13
Turbine 2 (g/s)	1.94	1.91			0.11
Black Start Generator (g/s)	0.17	0.23			0.00
Firewater Pump (g/s)	0.20	0.04			0.00
Chiller Evaporator (g/s)					

Maximum Average 3-Hour Emissions	NOx	CO	VOC	PM10	SO2
Turbine 1 (g/s)					0.12
Turbine 2 (g/s)					0.12
Black Start Generator (g/s)					0.000
Firewater Pump (g/s)					0.000
Chiller Evaporator (g/s)					

Maximum Average 8-Hour Emission Rate	NOx	CO	VOC	PM10	SO2
Turbine 1 (g/s)		1.34			
Turbine 2 (g/s)		1.34			
Black Start Generator (g/s)		0.029			
Firewater Pump (g/s)		0.005			
Chiller Evaporator (g/s)		-			

Maximum Average 24-Hour Emission Rate	NOx	CO	VOC	PM10	SO2
Turbine 1 (g/s)				0.23580	0.08
Turbine 2 (g/s)				0.23580	0.08
Black Start Generator (g/s)				2.11E-04	4.44E-05
Firewater Pump (g/s)				1.96E-04	4.95E-06
Chiller Evaporator (g/s) Cell 1				8.22E-03	
Chiller Evaporator (g/s) Cell 2				8.22E-03	
Chiller Evaporator (g/s) Cell 2				8.22E-03	

Average Annual Emission Rate	NOx	CO	VOC	PM10	SO2
Turbine 1 (g/s)	0.26	-	-	0.1265	0.05
Turbine 2 (g/s)	0.26	-	-	0.1265	0.05
Black Start Generator (g/s)	2.79E-04	0.00E+00	0.00E+00	8.09E-06	1.70E-06
Firewater Pump (g/s)	1.18E-03	0.00E+00	0.00E+00	2.80E-05	7.05E-07
Chiller Evaporator (g/s) Cell 1				3.00E-03	
Chiller Evaporator (g/s) Cell 2				3.00E-03	
Chiller Evaporator (g/s) Cell 2				3.00E-03	

Table 3.2B-6 - Modeling Emission Data Summary (Turbines at 75% Load - Operational Phase)

Notes:
- Both turbines operating at 75% load. Inlet air not chilled, SPRINT on.
- All emission factors based on updated GE performance data
- Maximum hourly turbine emissions based on one turbine at start-up & one at steady state.
- Fire water pump tested ½ hour per week, black start engine tested/run ½ hour 14 times per year.
- Cooling tower exhaust flowrate & temperature provided by supplier

Exhaust Parameters	Flow (CFM)	Temp (°F)	Vel (FPS)	Dia. (ft)	Height (ft)
Turbine 1	595,551	840.7	80.92	12.5	80
Turbine 2	595,551	840.7	80.92	12.5	80
Black Start Generator	6,637	1,123.0	103.53	1.17	19.17
Firewater Pump (Horizontal exhaust)	1,943	917.0	165.01	0.50	18.0
Chiller Evaporator - Cell 1	229,950	83.7	40.35	11	29.8
Chiller Evaporator - Cell 2	229,950	85.2	40.35	11	29.8
Chiller Evaporator - Cell 3	229,950	85.2	40.35	11	29.8

Maximum 1-Hour Emissions	NOx	CO	VOC	PM10	SO2
Turbine 1 (lb/hr)	3.40	4.32			0.80
Turbine 2 (lb/hr)	15.06	14.54			0.82
Black Start Generator (lb/hr)	1.39	1.85			0.008
Firewater Pump (lb/hr)	1.58	0.31			0.001
Chiller Evaporator (lb/hr)					

Maximum Average 3-Hour Emissions	NOx	CO	VOC	PM10	SO2
Turbine 1 (lb/hr)					0.80
Turbine 2 (lb/hr)					0.80
Black Start Generator (lb/hr)					0.0028
Firewater Pump (lb/hr)					0.0003
Chiller Evaporator (lb/hr)					

Maximum Average 8-Hour Emission Rate	NOx	CO	VOC	PM10	SO2
Turbine 1 (lb/hr)		9.32			
Turbine 2 (lb/hr)		9.32			
Black Start Generator (lb/hr)		0.231			
Firewater Pump (lb/hr)		0.038			
Chiller Evaporator (lb/hr)					

Maximum Average 24-Hour Emission Rate	NOx	CO	VOC	PM10	SO2
Turbine 1 (lb/hr)				1.65	0.53
Turbine 2 (lb/hr)				1.65	0.53
Black Start Generator (lb/hr)				1.67E-03	3.51E-04
Firewater Pump (lb/hr)				1.56E-03	3.92E-05
Chiller Evaporator (lb/hr) Cell 1					
Chiller Evaporator (lb/hr) Cell 2					
Chiller Evaporator (lb/hr) Cell 3					

Maximum Annual Emission Rate	NOx	CO	VOC	PM10	SO2
Turbine 1 (lb/hr)	1.69			0.87	0.29
Turbine 2 (lb/hr)	1.69			0.87	0.29
Black Start Generator (lb/hr)	2.21E-03			6.41E-05	1.35E-05
Firewater Pump (lb/hr)	9.35E-03			2.22E-04	5.59E-06
Chiller Evaporator (lb/hr) Cell 1					
Chiller Evaporator (lb/hr) Cell 2					
Chiller Evaporator (lb/hr) Cell 3					

Metrics Units

Exhaust Parameters	Flow (CMS)	Temp (°K)	Vel (m/s)	Dia. (m)	Height (m)
Turbine 1	281.04	722.43	24.66	3.81	24.38
Turbine 2	281.04	722.43	24.66	3.81	24.38
Black Start Generator	3.13	879.26	31.55	0.36	5.84
Firewater Pump (Horizontal exhaust)	0.92	764.82	50.29	0.15	5.49
Chiller Evaporator - Cell 1	108.51	301.87	12.30	3.35	9.07
Chiller Evaporator - Cell 2	108.51	302.71	12.30	3.35	9.07
Chiller Evaporator - Cell 2	108.51	302.71	12.30	3.35	9.07

Maximum 1-Hour Emissions	NOx	CO	VOC	PM10	SO2
Turbine 1 (g/s)	0.43	0.55			0.10
Turbine 2 (g/s)	1.90	1.84			0.10
Black Start Generator (g/s)	0.17	0.23			0.00
Firewater Pump (g/s)	0.20	0.04			0.00
Chiller Evaporator (g/s)					

Maximum Average 3-Hour Emissions	NOx	CO	VOC	PM10	SO2
Turbine 1 (g/s)					0.10
Turbine 2 (g/s)					0.10
Black Start Generator (g/s)					0.000
Firewater Pump (g/s)					0.000
Chiller Evaporator (g/s)					

Maximum Average 8-Hour Emission Rate	NOx	CO	VOC	PM10	SO2
Turbine 1 (g/s)		1.18			
Turbine 2 (g/s)		1.18			
Black Start Generator (g/s)		0.029			
Firewater Pump (g/s)		0.005			
Chiller Evaporator (g/s)					

Maximum Average 24-Hour Emission Rate	NOx	CO	VOC	PM10	SO2
Turbine 1 (g/s)				0.2088	0.07
Turbine 2 (g/s)				0.2088	0.07
Black Start Generator (g/s)				2.11E-04	4.44E-05
Firewater Pump (g/s)				1.96E-04	4.95E-06
Chiller Evaporator (g/s) Cell 1					
Chiller Evaporator (g/s) Cell 2					
Chiller Evaporator (g/s) Cell 3					

Average Annual Emission Rate	NOx	CO	VOC	PM10	SO2
Turbine 1 (g/s)	0.21	-	-	0.1102	0.04
Turbine 2 (g/s)	0.21	-	-	0.1102	0.04
Black Start Generator (g/s)	2.79E-04	0.00E+00	0.00E+00	8.09E-06	1.70E-06
Firewater Pump (g/s)	1.18E-03	0.00E+00	0.00E+00	2.80E-05	7.05E-07
Chiller Evaporator (g/s) Cell 1					
Chiller Evaporator (g/s) Cell 2					
Chiller Evaporator (g/s) Cell 3					

Table 3.2B-7 - Modeling Emission Data Summary (Turbines at 50% Load - Operational Phase)

Notes:
- Both turbines operating at 100% load. Inlet air not chilled, SPRINT off.
- All emission factors based on updated GE performance data
- Maximum hourly turbine emissions based on one turbine at start-up & one at steady state.
- Fire water pump tested ½ hour per week, black start engine tested/run ½ hour 14 times per year.
- Cooling tower exhaust flowrate & temperature provided by supplier

Exhaust Parameters	Flow (CFM)	Temp (°F)	Vel (FPS)	Dia. (ft)	Height (ft)
Turbine 1	595,551	840.7	80.92	12.5	80
Turbine 2	595,551	840.7	80.92	12.5	80
Black Start Generator	6,637	1,123.0	103.53	1.17	19.17
Firewater Pump (Horizontal exhaust)	1,943	917.0	165.01	0.50	18.0
Chiller Evaporator - Cell 1	229,950	83.7	40.35	11	29.8
Chiller Evaporator - Cell 2	229,950	85.2	40.35	11	29.8
Chiller Evaporator - Cell 3	229,950	85.2	40.35	11	29.8

Maximum 1-Hour Emissions	NOx	CO	VOC	PM10	SO2
Turbine 1 (lb/hr)	2.60	3.23			0.60
Turbine 2 (lb/hr)	14.80	14.18			0.75
Black Start Generator (lb/hr)	1.39	1.85			0.008
Firewater Pump (lb/hr)	1.58	0.31			0.001
Chiller Evaporator (lb/hr)					

Maximum Average 3-Hour Emissions	NOx	CO	VOC	PM10	SO2
Turbine 1 (lb/hr)					0.65
Turbine 2 (lb/hr)					0.65
Black Start Generator (lb/hr)					0.0028
Firewater Pump (lb/hr)					0.0003
Chiller Evaporator (lb/hr)					

Maximum Average 8-Hour Emission Rate	NOx	CO	VOC	PM10	SO2
Turbine 1 (lb/hr)		8.56			
Turbine 2 (lb/hr)		8.56			
Black Start Generator (lb/hr)		0.231			
Firewater Pump (lb/hr)		0.038			
Chiller Evaporator (lb/hr)					

Maximum Average 24-Hour Emission Rate	NOx	CO	VOC	PM10	SO2
Turbine 1 (lb/hr)				1.43	0.42
Turbine 2 (lb/hr)				1.43	0.42
Black Start Generator (lb/hr)				1.67E-03	3.51E-04
Firewater Pump (lb/hr)				1.56E-03	3.92E-05
Chiller Evaporator (lb/hr) Cell 1					
Chiller Evaporator (lb/hr) Cell 2					
Chiller Evaporator (lb/hr) Cell 2					

Maximum Annual Emission Rate	NOx	CO	VOC	PM10	SO2
Turbine 1 (lb/hr)	1.40			0.74	0.22
Turbine 2 (lb/hr)	1.40			0.74	0.22
Black Start Generator (lb/hr)	2.21E-03			6.41E-05	1.35E-05
Firewater Pump (lb/hr)	9.35E-03			2.22E-04	5.59E-06
Chiller Evaporator (lb/hr) Cell 1					
Chiller Evaporator (lb/hr) Cell 2					
Chiller Evaporator (lb/hr) Cell 3					

Metrics Units

Exhaust Parameters	Flow (CMS)	Temp (°K)	Vel (m/s)	Dia. (m)	Height (m)
Turbine 1	281.04	722.43	24.66	3.81	24.38
Turbine 2	281.04	722.43	24.66	3.81	24.38
Black Start Generator	3.13	879.26	31.55	0.36	5.84
Firewater Pump (Horizontal exhaust)	0.92	764.82	50.29	0.15	5.49
Chiller Evaporator - Cell 1	108.51	301.87	12.30	3.35	9.07
Chiller Evaporator - Cell 2	108.51	302.71	12.30	3.35	9.07
Chiller Evaporator - Cell 2	108.51	302.71	12.30	3.35	9.07

Maximum 1-Hour Emissions	NOx	CO	VOC	PM10	SO2
Turbine 1 (g/s)	0.33	0.41			0.08
Turbine 2 (g/s)	1.87	1.79			0.09
Black Start Generator (g/s)	0.17	0.23			0.00
Firewater Pump (g/s)	0.20	0.04			0.00
Chiller Evaporator (g/s)					

Maximum Average 3-Hour Emissions	NOx	CO	VOC	PM10	SO2
Turbine 1 (g/s)					0.08
Turbine 2 (g/s)					0.08
Black Start Generator (g/s)					0.000
Firewater Pump (g/s)					0.000
Chiller Evaporator (g/s)					

Maximum Average 8-Hour Emission Rate	NOx	CO	VOC	PM10	SO2
Turbine 1 (g/s)		1.08			
Turbine 2 (g/s)		1.08			
Black Start Generator (g/s)		0.029			
Firewater Pump (g/s)		0.005			
Chiller Evaporator (g/s)					

Maximum Average 24-Hour Emission Rate	NOx	CO	VOC	PM10	SO2
Turbine 1 (g/s)				0.1811	0.05
Turbine 2 (g/s)				0.1811	0.05
Black Start Generator (g/s)				2.11E-04	4.44E-05
Firewater Pump (g/s)				1.96E-04	4.95E-06
Chiller Evaporator (g/s) Cell 1					
Chiller Evaporator (g/s) Cell 2					
Chiller Evaporator (g/s) Cell 2					

Average Annual Emission Rate	NOx	CO	VOC	PM10	SO2
Turbine 1 (g/s)	0.18	-	-	0.0934	0.03
Turbine 2 (g/s)	0.18	-	-	0.0934	0.03
Black Start Generator (g/s)	2.79E-04	0.00E+00	0.00E+00	8.09E-06	1.70E-06
Firewater Pump (g/s)	1.18E-03	0.00E+00	0.00E+00	2.80E-05	7.05E-07
Chiller Evaporator (g/s) Cell 1					
Chiller Evaporator (g/s) Cell 2					
Chiller Evaporator (g/s) Cell 3					

APPENDIX 3.2-C

SPECIFICATIONS FOR THE BLACK-START ENGINE

CUMMINS CAL PACIFIC LLC.
1939 Deere Avenue
Irvine, CA 92606 United States
(949) 253-6000

July 12, 2007

Industrial Construction Company
0
Cleveland OH
Phone No.: 440-746-9200 x134
Fax No. :
Email : hkern@icconstruction.com
Attention: Hans Kern

Project Name: **Pala Black Start**
Quotation No: **TG39275.448**

Thank you for your inquiry, We are pleased to quote as follows:

Qty.	Notes	Model/Options	Description
ITEM A			
1	a	625GTA38GS2	NATURAL GAS GENSET
	a	L032	Rating - 60 Hertz,625KW Standby Power, 8.5:1 C/R
	a	308B	Voltage - 277/480, 139/240, 125°C Rise.....
	a	0	Exciter/Regulator - PMG, 1 Phase Sensor.....
	a	A292	Heater-Alternator, 120 Volt AC.....
	a	A275	Isochronous/Droop.....
	a	KP89	Circuit Breaker 1000A, 3 Pole, 600V, Thermo-Magnetic, UL.....
	a	H643	Engine Control-PCC 2100.....
	a	H527	Warning-Low Coolant Level.....
	a	H606	AC Control-with Meters.....
	a	E074	Engine Cooling - Radiator.....
	a	D041	Engine Air Cleaner - Normal Duty.....
	a	C002	Natural Gas Fuel.....
	a	(2) MM-2	Flexible Fuel Connector.....
	a	(2) SO1044	Fuel Strainer.....
	a	H426	Coolant Heater 8000W 480V/240……
	a	L029	Warranty - 2 Year Standby.....
	b	CN-2-6	Vibration Isolators - Gen Set (Price of 10).....
	a	1400-Dry	Battery - 12 Volt DC (Group 8D) (Price of 4).....
	a	Lube oil	Lube Oil.....
	a	Anti-Freeze	Anti-Freeze - 50/50.....
	b	Enclosure	Sound Attenuated Enclosure 42 dBA @ 400'
	e	S&T	Basic Start and Test
	d	NSCR	Three Way Catalytic Convertor and AFRC (shipped Loose)
	b	Battery Charger	Battery Charger

Option Notes:

a : Factory Assembled.
b : Assemble at CCP's facility.
c : Shipped loose Items. Assemble/Install by CCP at job site.
d : Shipped loose Items. Assemble/Install by customer at job site.
e : Start & Test perform by CCP.
f : Start & Test perform by customer.

Availability: Subject to manufacturer lead time.
Currently, manufacturing lead time is approximately 26 weeks from order acceptance

Clarifications and Exceptions:

This quote is based on our understanding of your verbal specifications, which are documented by our submittal package and by the above quotation. These specifications may or may not meet all jobsite requirements. Any additions or deletions that result from a project requirement that are not included in the Cummins Cal Pacific submittals or in the above quotation will be addressed by separate change order to be supplied by Cummins Cal Pacific and authorized by Purchaser prior to any changes being implemented

Air Pollution Control Permit:
This product is designed to meet the stringent air quality control standards of California Air Pollution Districts. However, these districts can and do change requirements from time to time.
Please note that permits to use this generator are the responsibility of the Purchaser, however, Cummins Cal Pacific can provide the following data in support of air quality procedures by the district noted below.

San Diego County Air Pollution Control District Permit
All engines installed over 50 horsepower require registration with the SDAPCD. The engine utilized in the generator proposed is current product and should be adequate for SDAPCD Permits to Construct issued before the end of 2007 at which time gensets 60 kW and under will require lower emissions. For permits issued beyond this date for this size product, a more advanced engine technology may be needed. If you would like a quotation which includes this new lower emission product, please let us know.

The California Air Resources Board (CARB), and the San Diego Air Pollution Control District (SDAPCD) have recently implemented new regulations in order to help control diesel particulate emissions. These regulations require that each generator installation be subject to various screening processes, by which the Air Pollution Control District will determine allowable emissions limits for that specific location. Based on the results of these screening processes, additional emissions control equipment, such as a diesel particulate filter, may be required. Most generator installations will not require any additional equipment, but as the supplier of a diesel generator, we have no way of knowing what the requirements will be, prior to the screenings being done. Therefore, we have not included, nor can we be accountable for additional equipment requirements resulting from these screenings.

If the specifics of add-on emissions control have been determined, please provide this detail, and we will provide a quote accordingly.

Permits and licenses: Permit and license costs (Air Pollution/Quality, Fire, Building, etc.) are not included in this quote. Cummins Cal Pacific, LLC. will provide information as may be necessary for the acquisition of permits and licenses, but Cummins Cal Pacific, LLC. does not assume any responsibility for obtaining any permits or licenses that may be required.

Shipment: This price is F.O.B. jobsite on truck curbside. Offloading and placement of the goods shall be solely your responsibility. All deliveries are Monday through Friday 6:00 a.m. to 5:00 p.m. (Deliveries outside normal business hours will be invoiced as necessary). All items shipped to site are the responsibility of the Purchaser, whether or not installed by Cummins Cal Pacific or by Purchaser.

Start & Test: Upon completion of installation by others, Start & Test will be performed per the Start & Test Scope of Work, which is a part of this quotation as described below:

The Scope of this test is as follows:

1) Confirm Product Under Test has been supplied to agreed Cummins Cal Pacific quotation.
2) Confirm proper installation of the Items Under Test and make recommended changes as appropriate.
3) Conduct Operational Tests to confirm control logic, load acceptance and steady state operation of Product Under Test.
4) Product Under Test will be loaded using available facility load.
5) It is assumed that training will be done at the time of the start & test. If additional sessions are necessary, we will be glad to quote this training at an additional cost.

Venting: Tank venting (indoor/outdoor), as may be required and (if not included above), is not included.
If the specifics of venting have been determined, please provide this detail, and we will quote accordingly.

Warranties: Product warranties are being supplied with this equipment from Cummins Power Generation and are described on CPG Bulletin # AB2001-01 12/2002. No other warranties are supplied beyond this warranty.

Not a Contractor: CUMMINS CAL PACIFIC, LLC. is a supplier of materials and related services; Cummins Cal Pacific, LLC. is not a contractor.

Invoicing: All invoices will be for product delivered and service provided. Partial invoicing will reflect percent of completion. Cummins Cal Pacific does not agree to the witholding of retention.

Credit: Credit is subject to Cummins Cal Pacific, LLC.'s approval in its sole discretion. This quote in no way constitutes approval of credit.

Terms and Conditions:

1. Payment terms are net 30 Days, subject to all of the Credit Terms contained in our Credit Application and this document. (1 ½% per month will be charged on past due accounts).
2. Partial shipments will be invoiced proportional to total quoted price, payable 30 days after shipment. Note: If your job conditions or schedule result in partial or incomplete shipment of products and equipment provided by Cummins Cal Pacific, LLC., you will be invoiced according to the dollar value of the shipped items. These invoices then become due and payable 30 days after shipment and not when the job is completed.
3. All purchase orders must reference our quotation.
4. All purchase orders must be acknowledged in writing by Cummins Cal Pacific, LLC. to be deemed accepted.
5. Purchase orders which are issued with a hold for release date are subject to re-evaluation at the time of release.
6. Unless mutually agreed upon in writing, Cummins Cal Pacific, LLC will not accept purchase orders which:
   a) specify delivery dates that are not subject to manufacturer's leadtimes.
   b) contain penalty clauses or liquidated damage clauses.
   c) require Cummins Cal Pacific, LLC. to indemnify and hold harmless the purchaser, unless the purchaser also agrees to indemnify and hold harmless Cummins Cal Pacific, LLC.
   d) require Cummins Cal Pacific, LLC. to pay any and all legal expenses for the purchaser in the event of a dispute.
   e) require Cummins Cal Pacific, LLC. to be responsible for system design work and/or guarantee that a performance standard for a system will be met.
   f) require completion and acceptance of the project by the owner before payment.
7. Start and Test may be invoiced separately at your request but it is subject to Cummins Cal Pacific, LLC.'s partial invoicing policy.
8. Provided CCP is ready for shipment and the purchaser can't take delivery, monthly storage fees at a rate of .5% of P.O value will be issued for material not accepted on the requested delivery date.
9. Notwithstanding anything in this agreement or under law, buyer and seller agree that seller's only liability for any breach of this agreement (or any defect in any item of property sold by seller) shall be limited to the replacement of the defective part or replacement of the defective product ; and buyer shall have no other right, claim or remedy against seller, including, but not limited to any right to recover consequential damages under any circumstance.

Validity of the Quote: This quote is valid for 30 days following the quote date. This quote may be modified and/or rescinded by Cummins Cal Pacific, LLC. at its sole discretion unless and until accepted on or before the quote date.

Note: The Terms and conditions of this quotation govern over any conflict between this quotation and customer's purchase order or other document, made either prior or subsequent to this quotation.

Thank you for this opportunity to quote Cummins Power Generation products. Please call if we may answer any, questions or be of further service.

Submitted by
Cummins Cal Pacific, LLC.

Tom S Golnick
Account Manager
Direct Cell: 619-778-1402
Office Phone: 949-253-6000
Fax: 760-941-4586
Email: tom.g.golnick@cummins.com

Accepted By:_____

Print Name:_____

Firm Name:_____

Customer P.O.:_____ Date:_____

Delivery Date Requested
by Purchaser _____

Note: If no delivery date is provided, Cummins Cal Pacific will hold placing material orders until such date is made available. It is the responsibility of Purchaser to supply a delivery date that is within factory lead times.

Gaseous Fuel Generator Set Model GFJB

KW(KVA) @ 0.8 P.F.						
Compression	60 HZ-1800 RPM			50 HZ-1500 RPM		
Ratio	Standby	Prime	Cont.	Standby	Prime	Cont
8.5:1	625(781)	565(706)	470(587)	515(643)	465(581)	385(481)

Notes:
(1) 21° C (90° F) or lower water temperature to the aftercooler or use of air to air aftercooler w/100ºF or lower air temperature to the radiator.
(2) 54° C (130° F) or lower water temperature to the aftercooler or use of air to air aftercooler w/130°F or lower air temperature to the radiator.

Fuel Application Guide	
Compression Ratio	8.5:1
Dry Processed Natural Gas	Yes
Propane (HD5)	Yes
All gases such as field gas, digester and sewage gas will require an analysis of the specified gas and pre-approval from CNGE. Consult your Cummins Distributor for details.	

Description

The Cummins NPower GF-series commercial generator set is a fully integrated power generation system providing optimum performance, reliability, and versatility for stationary standby or prime power applications.

A primary feature of the GF GenSet is strong motor-starting capability and fast recovery from transient load changes. The torque-matched system includes a heavy-duty Cummins 4-cycle spark ignited engine, an AC alternator with high motor-starting kVA capacity, and an electronic voltage regulator with three phase sensing for precise regulation under steady-state or transient loads. The GF GenSet accepts 100% of the nameplate standby rating in one step. *

The standard PowerCommand® digital electronic control is an integrated system that combines engine and alternator controls for high reliability and optimum GenSet performance.

Optional weather-protective housings and coolant heaters shield the generator set from extreme operating conditions. Environmental concerns are addressed by low exhaust emission engines, sound-attenuated housings, and exhaust silencers. A wide range of options, accessories, and services are available, allowing configuration to your specific power generation needs.

Every production unit is factory tested at rated load and power factor. This testing includes demonstration of rated power and single-step rated load pickup. Cummins NPower manufacturing facilities include quality standards, emphasizing our commitment to high quality in the design, manufacture, and support of our products. The generator is CSA certified. The PowerCommand control is UL508 Listed.

All Cummins NPower generator sets are backed by a comprehensive warranty program and supported by a worldwide network of 170 distributors and service branches to assist with warranty, service, parts, and planned maintenance support.

Features

Cummins Heavy-Duty Engine - Rugged 4-cycle industrial spark ignited engine delivers reliable power, low emissions, and fast response to load changes.

Alternator - Several alternator sizes offer selectable motor-starting capability with low reactance 2/3 pitch windings, low waveform distortion with non-linear loads, fault-clearing short-circuit capability, and class H insulation. The alternator electrical insulation system is UL1446 Recognized.

Control Systems - The PowerCommand electronic control is standard equipment and provides total genset system integration, including automatic remote starting/stopping, precise voltage regulation, alarm and status message display, AmpSentry™ protection, output metering, auto-shutdown at fault detection, and NFPA 110 compliance. PowerCommand control is Listed to UL508.

Cooling System - Standard cooling package provides reliable running at the rated power level, at up to 40°C ambient temperature.

Housings - Optional weather-protective housings are available.

Certifications - Generators are designed, manufactured, tested, and certified to relevant UL, NFPA, ISO, IEC, and CSA standards.

Warranty and Service - Backed by a comprehensive warranty and worldwide distributor service network.

*Adequate fuel pressure and volume must be provided. Engines must be equipped with a functioning jacket water heater.

Generator Set

The general specifications provide representative configuration details. Consult the outline drawing for installation design.

Specifications – General

See outline drawing 7209 -02B for installation design specifications. (Drawing# 7211-01C – for enclosed units)

Unit Width, in (mm)	90.5" (2299)
Unit Height, in (mm)	111" (2819)
Unit Length, in (mm)	186.5" (4737)
Unit Dry Weight, lb (kg)	18119 (8218)
Rated Speed, rpm	1800
Voltage Regulation, No Load to Full Load	±1.0%
Random Voltage Variation	±1.0%
Frequency Regulation	5%
Random Frequency Variation	±0.5%
Radio Frequency Interference	Optional PMG excitation operates in compliance with BS800 and VDE level G and N. Addition of RFI protection kit allows operation per MIL-STD-461 and VDE level K.

Rating Definitions

Standby Rating based on: Applicable for supplying emergency power for the duration of normal power interruption. No sustained overload capability is available for this rating. (Equivalent to Fuel Stop Power in accordance with ISO3046, AS2789, DIN6271 and BS5514). Nominally rated.

Prime (Unlimited Running Time) Rating based on: Applicable for supplying power in lieu of commercially purchased power. Prime power is the maximum power available at a variable load for an unlimited number of hours. A 10% overload capability is available for limited time. (Equivalent to Prime Power in accordance with ISO8528 and Overload Power in accordance with ISO3046, AS2789, DIN6271, and BS5514). This rating is not applicable to all generator set models.

Base Load (Continuous) Rating based on: Applicable for supplying power continuously to a constant load up to the full output rating for unlimited hours. No sustained overload capability is available for this rating. Consult authorized distributor for rating. (Equivalent to Continuous Power in accordance with ISO8528, ISO3046, AS2789, DIN6271, and BS5514). This rating is not applicable to all generator set models.

Site Derating Factors

Engine power available up to 3000' (m) at ambient temperatures up to 104°F (40°C). Above 3000' (m)derate at 4% per 1000 ft (305 m), and 1% per 10°F (2% per 11°C) above 104°F (40°C).

1) Data represents gross engine performance capabilities obtained and corrected in accordance with SAEJ1349 conditions of 29.61 in. Hg.(100KPa) barometric pressure [300 ft. (91m) altitude], 77°F (25°C) inlet air temperature, and 0.30 in Hg.(100KPa) water vapor pressure using dry processed natural gas fuel with 905 BTU per standard cubic foot (33.72 ki/l) lower heating value. Deration may be required due to altitude, temperature or type of fuel. Consult your local Cummins Distributor for details.

2) FUEL SYSTEM

Standard Carburetor – IMPCO Make

Low Pressure Dry Processed Natural Gas – (905 BTU/ft.² L.H.V.)

Running Pressure to Carburetor (After Regulation) – in. H_20 (mm H_20) …… 5 ~ 7 (127~177)

Running Pressure to Engine Mounted Regulator ~ in. H_20 (mm H_20) ……10 ~ 20 (254 ~ 508)

Minimum Gas Supply Pipe Size @ Engine – in. (mm)……2.0 (50.8)

Gas Supply Filter Pressure Rating – PSI (kPa)……100 (690)

The preceding pipe sizes are only suggestions and piping may vary with temperatures, distance from fuel supply and application of local codes. Gas must be available at adequate volume and pressure for engine at the regulator.

Engine

Cummins heavy-duty spark ignited engines use advanced combustion technology for reliable and stable power, low emissions, and fast response to sudden load changes.

Electronic governing is standard for applications requiring constant (isochronous) frequency regulation such as Uninterruptible Power Supply (UPS) systems, non-linear loads, or sensitive electronic loads. Optional coolant heaters are recommended for all emergency standby installations or for any application requiring fast load acceptance after start-up.

Specifications – Engine

Base Engine	Cummins Model GTA38G2
Displacement in^3 (L)	2300 (38)
Overspeed Limit, rpm	2100
Regenerative Power, kW	-
Cylinder Block Configuration	Cast iron with replacable wet cylinder liners
Cranking Current	550 amps at ambient temperature of 32°F (0°C)
Battery Charging Alternator	37 amps
Starting Voltage	24-volt, negative ground
Lube Oil Filter Types	Single spin-on canister-combination full flow with bypass
Standard Cooling System	104°F (40°C) ambient radiator

Fuel		**STANDBY**		
Fuel Consumption	Load	1/2	3/4	Full
(Approximate)	kW	312	469	625
	CFH	5605	7484	8268
Cooling				
Heat Rejection to Coolant*		38660 Btu/Min	679 kw	
Heat Rejection to Room		6107 Btu/Min	107kw	
Coolant Capacity (with radiator)		120 US/Gal	454L	
Coolant Flow Rate		411 Gal/Min	26 L/Min	
Maximum Coolant Friction Head		15 psi	103kPa	
Maximum Coolant Static Head		60 ft	18.3 m	
Radiator Fan Load		90 HP	67 kw	
Air				
Combustion Air		2257 cfm		
Maximum Air Cleaner Restriction		15" in H_20	381 mmHg	
Allternator Cooling Air		2060 cfm	58.3 cu m/min	
Radiator Cooling Air		71000cfm	33512 L/sec	
Maximum Restriction at Radiator Discharge (static)		0.5 in H_20	12.7 mm H_20	
Exhaust				
Gas Flow (Full Load)		6119 cfm	2888 L/sec	
Gas Temperature		1350°F	732 °C	
Maximum Back Pressure		2 in Hg	50 mm Hg	
Engine				
Gross Engine Power Output		965 bhp	720 kwm	
BMEP		185 psi	1276 kPa	
Piston Speed		1875 ft/min	9.5 m/s	

* Jacket water only. Contact factory for aftercooler heat rejections and coolant flows

Alternator

Several alternators are available for application flexibility based on the required motor-starting kVA and other requirements. Larger alternator sizes have lower temperature rise for longer life of the alternator insulation system. In addition, larger alternator sizes can provide a cost-effective use of engine power in across-the-line motor-starting applications and can be used to minimize voltage waveform distortion caused by non-linear loads.

Single-bearing alternators couple directly to the engine flywheel with flexible discs for drivetrain reliability and durability. No gear reducers or speed changers are used. Two-thirds pitch windings eliminate third-order harmonic content of the AC voltage waveform and provide the standardization desired for paralleling of generator sets. The standard excitation system is a self (shunt) excited system with the voltage regulator powered directly from the generator set output.

Alternator Application Notes

Separately Excited Permanent Magnet Generator (PMG) System - This option uses an integral PMG to supply power to the voltage regulator. A PMG system generally has better motor-starting performance, lower voltage dip upon load application, and better immunity from problems with harmonics in the main alternator output induced by non-linear loads. This option is recommended for use in applications that have large transient loads, sensitive electronic loads (especially UPS applications), harmonic content, or that require sustained short-circuit current (sustained 3-phase short circuit current at approximately 3 times rated for 10 seconds).

Alternator Sizes - On any given model, various alternator sizes are available to meet individual application needs. Alternator sizes are differentiated by maximum winding temperature rise, at the generator set standby or prime rating, when operated in a 40°C ambient environment. Available temperature rises range from 80°C to 150°C. Not all temperature rise selections are available on all models. Lower temperature rise is accomplished using larger alternators at lower current density. Lower temperature rise alternators have higher motor-starting kVA, lower voltage dip upon load application, and they are generally recommended to limit voltage distortion and heating due to harmonics induced by non-linear loads.

Alternator Space Heater - is recommended to inhibit condensation.

Available Output Voltages

Three Phase Reconnectable	Single Phase Non-Reconnectable	Three Phase Non-Reconnectable
[ ] 120/208	[ ] 120/240	[ ] 220/380
[ ] 127/220		[ ] 347/600
[ ] 139/240		
[ ] 120/240		
[ ] 240/416		
[ ] 254/440		
[ ] 277/480		

Specifications – Alternator

Design	Brushless, 4-pole, drip-proof revolving field
Stator	2/3 pitch
Rotor	Direct-coupled by flexible disc
Insulation System	Class H per NEMA MG1-1.65
Standard Temperature Rise	125°C standby
Exciter Type	PMG
Phase Rotation	A (U), B (V), C (W)
Alternator Cooling	Direct-drive centrifugal blower
AC Waveform Total Harmonic Distortion	<5% total no load to full linear load <3% for any single harmonic
Telephone Influence Factor (TIF)	<50 per NEMA MG1-22.43.
Telephone Harmonic Factor (THF)	<3

	80°C Alternator			**105°CAlternator**			**125°C Alternator**			
Voltage Ranges The broad range alternator can supply single phase output up to 2/3 of the set rated 3-phase KW at 1.0 power factor	110/190 thru 139/240 220/380 Thru 277/480 120/240*		347/600	110/190 thru 139/240 220/380 Thru 277/480 120/240		347/600	110/190 Thru 139/240 220/380 Thru 277/480 120/240*	120/208 Thru 139/240 240/416 Thru 277/480 120/240*	247/480	347/600
Motor Starting Maximum kVA (90% Sustained Voltage)	Broad Range 3866		600 V --	Broad Range 2944		600V --	Broad Range 2944	480V 2429	600V ---	
Alternator Data Sheet Numbers	311B			309B			309B		308B	
Full Load Current (Amps @ Standby Rating)	120/208 2169	127/220 2050		139/240 1879	220/380 1187	240/416 1084	254/440 1025	277/480 939	347/600 ---	

Notes:
1. The broad range alternators can supply single phase output up to 2/3 set rated 3-phase kW at 1.0 power factor.
2. The extended stack (full single phase output) and 4 lead alternators can supply single phase output up to full set rated 3-phase kW at 1.0 power factor.

Control System

PowerCommand Control with AmpSentry™ Protection

- The PowerCommand Control is an integrated generator set control system providing governing, voltage regulation, engine protection, and operator interface functions.
- PowerCommand Controls include integral AmpSentry protection. AmpSentry provides a full range of alternator protection functions that are matched to the alternator provided.
- Controls provided include Battery monitoring and testing features, and Smart-Starting control system.
- InPower PC-based service tool available for detailed diagnostics.
- Available with Echelon LonWorks™ network interface.
- NEMA 3R enclosure.
- Suitable for operation in ambient temperatures from -40C to +70C, and altitudes to 13,000 feet (5000 meters).
- Prototype tested; UL, CSA, and CE compliant.

AmpSentry AC Protection

- Overcurrent and short circuit shutdown
- Overcurrent warning
- Single & 3-phase fault regulation
- Over and under voltage shutdown
- Over and under frequency shutdown
- Overload warning with alarm contact
- Reverse power and reverse Var shutdown
- Excitation fault

Engine Protection

- Overspeed shutdown
- Low oil pressure warning and shutdown
- High coolant temperature warning and shutdown
- High oil temperature warning (optional)
- Low coolant level warning or shutdown
- Low coolant temperature warning
- High and low battery voltage warning
- Weak battery warning
- Dead battery shutdown
- Fail to start (overcrank) shutdown
- Fail to crank shutdown
- Redundant start disconnect
- Cranking lockout
- Sensor failure indication

Operator Interface

- OFF/MANUAL/AUTO mode switch
- MANUAL RUN/STOP switch
- Panel lamp test switch
- Emergency Stop switch
- Alpha-numeric display with pushbutton access, for viewing engine and alternator data and providing setup, controls, and adjustments
- LED lamps indicating genset running, not in auto, common warning, common shutdown
- (5) configurable LED lamps
- LED Bargraph AC data display (optional)

Alternator Data

- Line-to-line and line-to-neutral AC volts
- 3-phase AC current
- Frequency
- Total and individual phase kW and kVA

Engine Data

- DC voltage
- Lube oil pressure
- Coolant temperature
- Lube oil temperature (optional)

Other Data

- Genset model data
- Start attempts, starts, running hours
- KW hours (total and since reset)
- Fault history
- Load profile (hours less than 30% and hours more than 90% load)
- System data display (optional with network and other PowerCommand gensets or transfer switches

Voltage Regulation

- Integrated digital electronic voltage regulator
- 3-phase line to neutral sensing
- PMG (Optional)
- Single and three phase fault regulation
- Configurable torque matching

Control Functions

- Data logging on faults
- Fault simulation (requires InPower)
- Time delay start and cooldown
- Cycle cranking
- (4) Configurable customer inputs
- (4) Configurable customer outputs
- (8) Configurable network inputs and (16) outputs (with optional network)

Options

[ ] Power Transfer Control
[ ] Analog AC Meter Display
[ ] Thermostatically Controlled Space Heater

[ ] Key-type mode switch
[ ] Ground fault module
[ ] Engine oil temperature
[ ] Auxiliary Relays (3)

[ ] Echelon LonWorks interface
[ ] Digital input and output module(s) (loose)
[ ] Remote annunciator (loose)

Generator Set Options

Engine
[ ] 120/240 V, W coolant heaters
[ ] 120/240 V, W lube oil heater
[ ] Electronic governor

Cooling System
[ ] Heat exchanger cooling
[ ] Remote radiator cooling

Fuel System
[ ] Flexible fuel connector
[ ] Fuel strainer
[ ] Dual fuel systems

Alternator
[ ] 105°C rise alternator
[ ] 125°C rise alternator
[ ] 120/240 V, 100 W anti-condensation heater
[ ] Single phase

Exhaust System
[ ] GenSet mounted muffler
[ ] Heavy duty exhaust elbow
[ ] Slip on exhaust connection

Generator Set
[ ] AC entrance box
[ ] Batteries
[ ] Battery charger
[ ] Export box packaging
[ ] Main line circuit breaker
[ ] PowerCommand Network Communication Module (NCM)
[ ] Stage 1 housing w/silencer
[ ] Stage II housing w/silencer
[ ] Remote annunciator panel
[ ] Spring isolators
[ ] Weather protective enclosure with silencer
[ ] 2 year standby warranty
[ ] 5 year basic power warranty

Available Products and Services

A wide range of products and services is available to match your power generation system requirements. Cummins Power Generation products and services include:

- Diesel and Spark-Ignited Generator Sets
- Transfer Switches
- Bypass Switches
- Parallel Load Transfer Equipment
- Digital Paralleling Switchgear
- PowerCommand Network and Software
- Distributor Application Support
- Planned Maintenance Agreements

Warranty

All components and subsystems are covered by an express limited one-year warranty. Other optional and extended factory warranties and local distributor maintenance agreements are available. Contact your distributor/dealer for more information.

Certifications

CSA - This generator is CSA certified to product class 4215-01.

PTS - The Prototype Test Support (PTS) program verifies the performance integrity of the generator set design. Products bearing the PTS symbol have been subjected to demanding tests in accordance to NFPA 110 to verify the design integrity and performance under both normal and abnormal operating conditions including short circuit, endurance, temperature rise, torsional vibration, and transient response, including full load pickup.

See your distributor for more information

Cummins NPower LLC
875 Lawrence Drive
DePere, WI 54115
920.337.9750
Fax: 920.337.9746
www.npower.cummins.com

Cummins and PowerCommand are registered trademarks of Cummins Inc.
AmpSentry is a trademark of Cummins Inc.
LonWorks is a registered trademark of Echelon

Important: Backfeed to a utility system can cause electrocution and/or property damage. Do not connect generator sets to any building electrical system except through an approved device or after building main switch is open.

Miratech Corporation
4224 S. 76th E. Avenue, Tulsa, OK 74145

As represented by:

R.F. Partridge & Associates, Inc.
13875 Cerritos Corporate Drive Unit B
Cerritos, CA 90703
TEL: (562)802-7345 FAX: (562)802-3186

October 12, 2007

Catalyst and Air Fuel Ratio Product Submittal

For:

Cummins Cal Pacific
El Cajon, CA

ITEM #1
Qty. 1
Miratech Model # RHSS-4228-14-C1
Stainless Steel Catalyst/Silencer Combo

ITEM # 2
Qty. 1
Miratech Model# MECR-11-TK6
Air Fuel Ratio Controller

RCS/RHS
CATALYST-SILENCER HOUSINGS

MAJOR HORSEPOWER.

Better-Value Catalyst-Silencer Combos For Mid-Size Engines.

These days, you need all the competitive edge you can get. Today's business arena demands it. And anything that saves you time, money and space is a guaranteed advantage.

RCS/RHS Catalyst-Silencer Combos
Natural Gas, Propane Or Diesel Mid-Sized Engines

That's why MIRATECH developed RCS/RHS Catalyst-Silencer Combo Units for natural gas, propane and diesel stationary engines – rich-burn or lean-burn – in the 200 – 8000 hp range. These better designed, better built, better value housings bring together a cost-effective, high-performance catalytic converter and a noise abatement system offering your choice of two grades of silencing.

This eliminates the need for two separate units. Why pay for two systems when one will do both jobs? With RCS/RHS, you save money from Day One through simpler, faster installation and reduced mounting requirements.

Then, when the RCS/RHS is up and running, you can bank on easier, more economical, breathe-easy compliance with emission control regulations and noise reduction requirements.

Integrated single-unit design, durable fabrication, and easy maintenance-access also cut servicing time. That could mean thousands of dollars in maintenance savings over the life of each unit.

CONTACT MIRATECH.

For mid-sized stationary combustion engines used in power generation, gas and air compression, water, petroleum or liquids pumping and other industrial applications, RCS/RHS is the cost-cutting solution that gives you both emissions and noise compliance: twice the performance, twice the benefits, and twice the value.

To find out more about MIRATECH RCS/RHS Catalyst-Silencer Combos – and our full line of cost-effective, high-performance emissions solutions – simply give us a call. Or pay a visit to our website: www.miratechcorp.com

WHY MIRATECH?

- Advanced Technology
- Cost-Effective, Comprehensive Solutions
- Unsurpassed Experience & Expertise
- Fast, Responsive, Customer-Focused Service & Support
  - *Prevent Non-Compliance Fines*
  - *Improve Engine & Catalyst Performance*
  - *Cut Maintenance Costs*
  - *Maximize Catalyst Life*

EMISSIONS SOLUTIONS

- Non-Selective Catalytic Reduction
  - *3-Way Catalyst Systems*
  - *Oxidation Catalysts*
  - *HAPs Catalysts*
  - *Diesel Oxidation Catalysts*
- Catalyst Housings
  - *MN/MBA*
  - *IQ*
- Catalyst-Silencer Combos
  - *QCC/QCH*
  - *RCS/RHS*
- Active Regeneration Soot Traps
- SCR Catalyst Systems
- NX Analyzers
- Analysis-Controlled Injection Systems
- Air-Fuel Ratio Control Systems
- Service Contracts
- Technical Support & Training
- MIRATECH Catalyst Services
- Replacement Parts

MIRATECH EMISSIONS SOLUTIONS

4224 SOUTH 76TH EAST AVENUE • TULSA, OKLAHOMA 74145-4712 • 800.640.3141 • WWW.MIRATECHCORP.COM

[DOUBLE-DUTY: EMISSIONS COMPLIANCE & SILENCING IN ONE UNIT.]

RCS/RHS
CATALYST-SILENCER HOUSINGS

DESIGNED SMART. BUILT TOUGH.

MIRATECH catalytic converters are better designed and better built – so they work harder, longer, at less cost and with less maintenance. For example, we produce catalyst elements through chemisorption catalyst impregnation. *The result?* Long-lasting, cost-efficient, poison-resistant performance. We also encase our catalysts in double-walled metal monolith frames – in your choice of tough carbon steel or 304 stainless – and the patented MIRATECH banding and pinning process is your assurance of superior thermal durability and mechanical strength.

EMISSIONS: CONTROLLED.

RCS/RHS combos use the same catalyst elements used in the MIRATECH IQ Catalytic Converter. The distinctive Flat-Top Bonnet™ design – along with improved gasket material in the RCS/RHS - eliminates blow-by, sagging and telescoping, and maximizes exhaust-catalyst contact, for more efficient emissions control.

The RCS/RHS brings a wide range of pollutants within compliance – and keeps you on the right side of the non-compliance fine line: carbon monoxide (CO), volatile organics (VOCs) and other hazardous air pollutants (HAPs), particulates and soot, as well as oxides of nitrogen produced by rich-burn engines. Each unit comes with positive-seal slots for up to two catalyst elements – giving you an expandable emissions control capacity. Plus, the RCS/RHS gives you a wider compliance window for Air-Fuel Ratio Control.

TWO LEVELS OF SILENCING.

RCS/RHS housings give you two levels of noise abatement to chose from. RCS units cut noise by 25-30 dBA. When more noise reduction is needed, RHS – Hospital grade – units deliver as much as 30-35 dBA of silencing.

BREATHE EASY: FULL SUPPORT.

At MIRATECH, we offer full support for each and every product we ship – with professional field support, on-site training and technical services. If you have questions, we'll answer them. If there's a problem, we'll fix it, no *ifs, ands* or *buts*. And we'll respond promptly with solutions. For details on MIRATECH service contracts, technical and catalyst services, give us a call or visit www.miratechcorp.com

RCS/RHS: BUILT TOUGH

RCS/RHS CATALYST SYSTEM

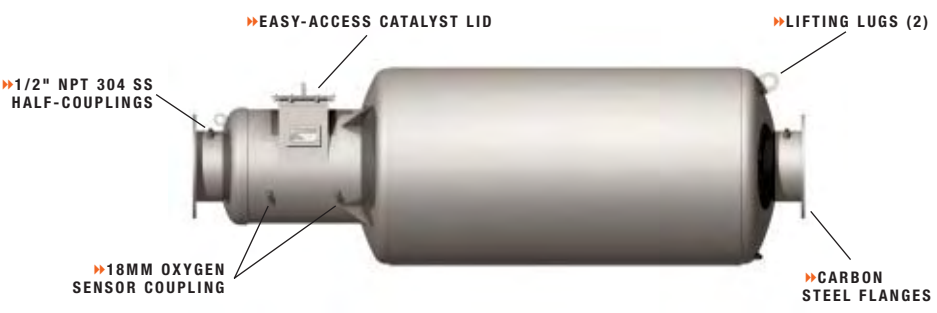

Your Choice: Carbon Steel Or 304 Stainless Outer Shell

EMISSIONS SOLUTIONS: CONTACT MIRATECH.

Whatever your emission control needs may be, count on MIRATECH for solutions. Contact us by phone, e-mail, or FAX – or simply visit our website: www.miratechcorp.com. *Ask for your FREE subscription to our useful, fact-filled electronic newsletter, THE EMISSIONS MONITOR.*

MIRATECH EMISSIONS SOLUTIONS
4224 SOUTH 76TH EAST AVENUE • TULSA, OKLAHOMA 74145-4712
800.640.3141 • www.miratechcorp.com

ONGOING Compliance

WHY MIRATECH RCS/RHS?

Twice The Performance: Emissions & Noise Control

APPLICATIONS

- Lean-Burn Or Rich-Burn Engines
  - *200-8000 hp*
- Natural Gas, LPG, Diesel Or Dual-Fuel
  - *Gas Compression*
  - *Power Generation (Backup Or Stand-By)*
  - *Air Compression*
  - *Liquid Or Petroleum Pumping*
  - *Irrigation Pumping*

FEATURES & BENEFITS

- Choose The System That Works Best For You:
  - *3-Way Catalyst*
  - *Natural Gas Oxidation*
  - *Diesel Oxidation*
- 2 Levels Of High Sound Attenuation:
  - *1 RCS: 25-30 dBA*
  - *2 RHS: 30-35 dBA*
- Integrated Single-Unit Design
  - *Saves Space; Reduces Installation & Maintenance Costs*
- Trunion Mount Design
  - *Faster, Easier Installation; Easier Maintenance*
- Fewer Components
  - *Reduced Part Costs*
- Flat-Top Bonnet™ Element Design, Improved Gasket Material
  - *Eliminates Blow-By & Enhances Catalyst Performance*
- Virtually Indestructible Metal-Monolith Element
  - *Patented Banding & Pinning Process*
  - *Superior Mechanical Strength, Thermal Durability & Handling Safety*
- Positive Seal Slots For Up To Two Catalyst Elements
  - *Expandable Emissions Control Capacity*
- 125# ANSI FF Flange Straddles Centerline – Easier Installation

MIR-RCS/RHS 04-04 REV 1
©COPYRIGHT 2004: MIRATECH CORPORATION

MIRATECH EMISSIONS SOLUTIONS

3-Way CATALYSTS

EMISSIONS: CONTROLLED.

Cost-Effective, Ongoing Compliance For Rich-Burn Industrial Engines.

If you run rich-burn stationary natural gas- or propane-fueled industrial engines, you face tough compliance rules – and stiff non-compliance fines – covering three types of exhaust emissions: carbon monoxide (CO), oxides of nitrogen (NOx), and hydrocarbons (HCs) including volatile organic compounds (VOCs) and a long list of EPA-classified hazardous air pollutants (HAPs).

MIRATECH Catalyst Manufacturing
Better Designed, Better Built

The good news? One cost-effective, high-performance, easy-maintenance catalyst element brings your operation within compliance – and removes the risk of non-compliance fines – on all three fronts: The MIRATECH 3-Way Catalyst.

Available in a wide range of sizes and shapes, the 3-Way Catalyst can be custom-tailored to fit virtually any space requirements, any brand of catalytic converter, and any budget.

For operators in gas compression, air compression, water, petroleum or liquids pumping, chillers and power generation, and a variety of other applications, it can be a breath of fresh air: an affordable, effective, no-hassle answer to industrial emissions rules.

CONTACT MIRATECH.

Ask any of the thousands of MIRATECH customers who know first-hand: the 3-Way Catalyst is the most advanced and cost-effective all-in-one Non-Selective Catalytic Reduction solution you can buy. To put the 3-Way Catalyst to work in your operation or to find out more about other MIRATECH Emissions Solutions, simply give us a call. Better yet, visit our website: www.miratechcorp.com

WHY MIRATECH?

- Advanced Technology
- Cost-Effective, Comprehensive Solutions
- Unsurpassed Experience & Expertise
- Fast, Responsive, Customer-Focused Service & Support
  - *Prevent Non-Compliance Fines*
  - *Improve Engine & Catalyst Performance*
  - *Cut Maintenance Costs*
  - *Maximize Catalyst Life*

EMISSIONS SOLUTIONS

- Non-Selective Catalytic Reduction
  - *3-Way Catalyst Systems*
  - *Oxidation Catalysts*
  - *HAPs Catalysts*
  - *Diesel Oxidation Catalysts*
- Catalyst Housings
  - *MN/MBA*
  - *IQ*
- Catalyst-Silencer Combos
  - *QCC/QCH*
  - *RCS/RHS*
- Active Regeneration Soot Traps
- SCR Catalyst Systems
- NX Analyzers
- Analysis-Controlled Injection Systems
- Air-Fuel Ratio Control Systems
- Service Contracts
- Technical Support & Training
- MIRATECH Catalyst Services
- Replacement Parts

MIRATECH EMISSIONS SOLUTIONS

4224 SOUTH 76TH EAST AVENUE • TULSA, OKLAHOMA 74145-4712 • 800.640.3141 • WWW.MIRATECHCORP.COM

3-Way CATALYSTS

THE 3-WAY ADVANTAGE.

The MIRATECH 3-Way Catalyst gives you a reliable, cost-effective total solution in rich-burn industrial engine emissions control – simultaneously cutting NOx, CO, hydrocarbons, VOCs and HAPs to compliance levels. And that keeps your operation on the right side of the non-compliance fine-line, with easy installation and maintenance, less impact on engine performance, and fewer headaches and hassles for you and your people.

BETTER DESIGNED, BETTER BUILT.

Nothing prevents nesting or resists vibration and shock better than the 3-Way Catalyst's corrugated metal foil construction – with the multi-layered honeycomb design adding durability. Chemisorption catalyst impregnation produces a cost-effective, long-lasting element that resists masking and catalyst "poisoning." And the patented MIRATECH banding and pinning process is your assurance of superior mechanical strength and high-temperature tolerance.

CATALYST SOLUTION GUIDE

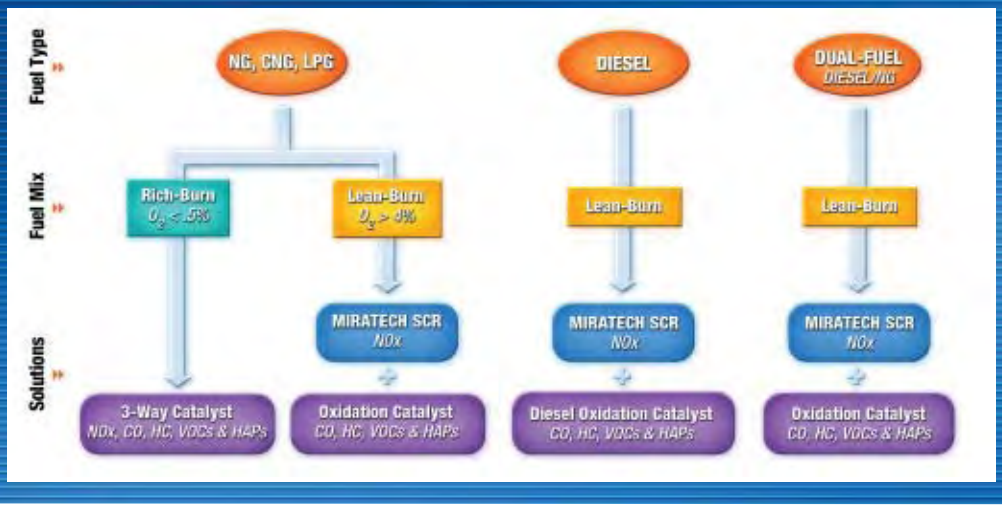

O_2: Oxygen / CO: Carbon Monoxide / NO_x: Oxides of Nitrogen / HC: Hydrocarbons / VOCs: Volatile Organic Compounds / HAPs: Hazardous Air Pollutants

UNCONTROLLED EMISSIONS: RICH-BURN & LEAN-BURN ENGINES

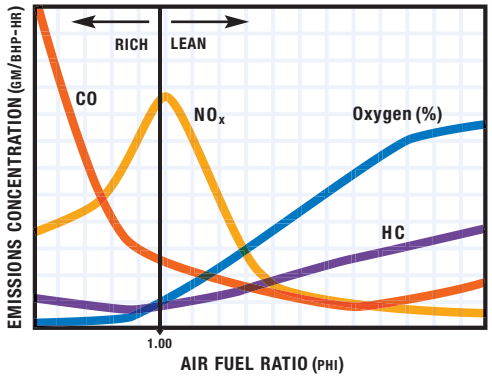

Each element is wrapped in tough 304 stainless steel for virtual indestructibility, as well as personnel safety. The hard outer band and "Easy-Grab" lift protects workers from injury and makes element insertion and removal quick and easy.

MIRATECH REPLACEMENTS.

MIRATECH manufactures replacement elements for our MBA, EQ and IQ catalytic converters, as well as our RCS/RHS Catalyst-Silencer combos. Custom designs to replace elements from other manufacturers – with the hallmark quality, performance and value of MIRATECH 3-Way, Oxidation and Diesel Oxidation Catalysts – are also available.

EMISSIONS SOLUTIONS: CONTACT MIRATECH.

Whatever your emission control needs may be, count on MIRATECH for solutions that pay off in benefits you can literally take to the bank. Contact us by phone, e-mail, or FAX – or simply visit our website: www.miratechcorp.com. *Ask for your FREE subscription to our useful, fact-filled electronic newsletter, THE EMISSIONS MONITOR.*

MIRATECH EMISSIONS SOLUTIONS
4224 SOUTH 76TH EAST AVENUE • TULSA, OKLAHOMA 74145-4712
800.640.3141 • www.miratechcorp.com

ONGOING Compliance

WHY MIRATECH 3-WAY CATALYSTS?

Cost-Effective, No-Hassle Total Emissions Compliance:

- NOx, CO, HC, VOCs, HAPs
- Better Designed, Better Built, Better Value

APPLICATIONS

- Rich-Burn Stationary Engines, Natural Gas, LPG
  - *Gas Compression*
  - *Air Compression*
  - *Water Pumps & Irrigation*
  - *Power Generation*
  - *Chillers*

FEATURES & BENEFITS

- Minimizes Catalyst Cost & Space Requirements
  - *Simultaneously Cuts NOx, CO, VOCs, Aldehydes & Other HAPs,*
  - *Prevents Non-Compliance Fines*
- Quick & Easy Element Insertion & Removal
- Flat-Top Bonnet™ Design Eliminates Blow-By & Enhances Catalyst Efficiency
- Resists Vibration & Shock
- Low Pressure-Drop
- Minimizes Impact On Engine Performance
- 304 Stainless Steel Metal Monolith: Virtually Indestructible & Safer For Workers
- Patented Banded & Pinned Construction:
  - *Superior Mechanical Strength & Thermal Durability*
- Independent Corrugated & Flat-Foil Construction Honeycomb Design:
  - *Prevents Nesting, Masking & "Poisoning"*
- One-Year Warranty

MIR-3 WAY 04-04 REV 1
©COPYRIGHT 2004: MIRATECH CORPORATION

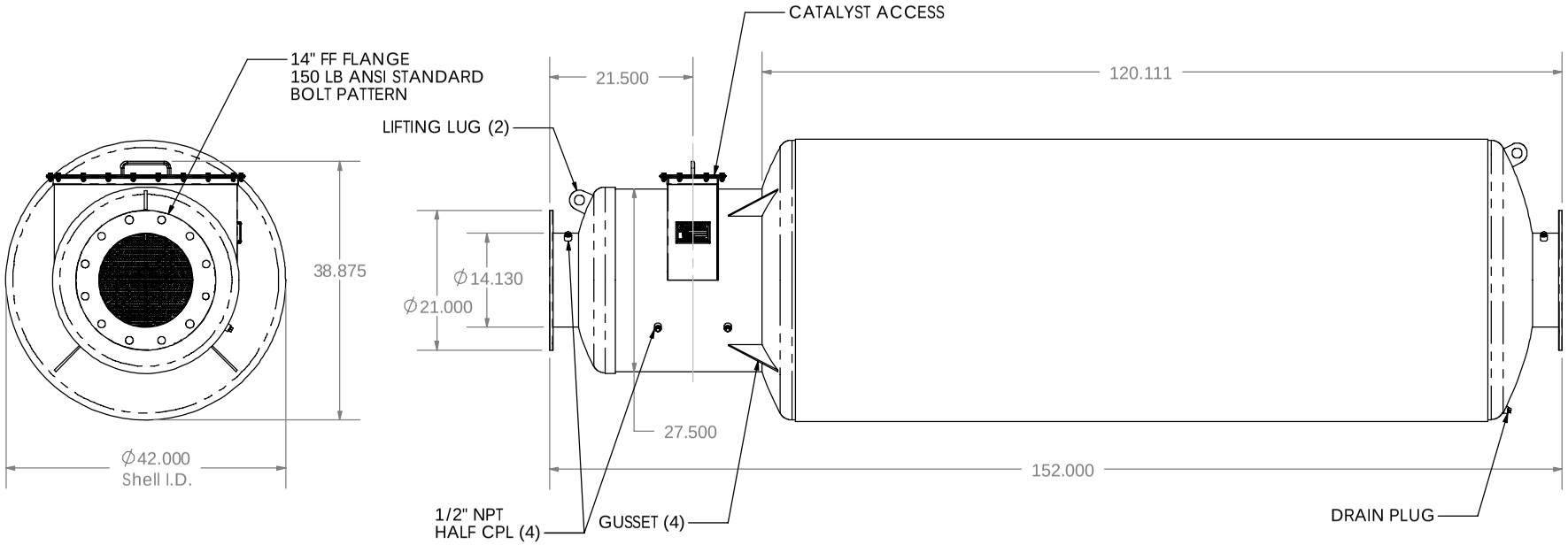

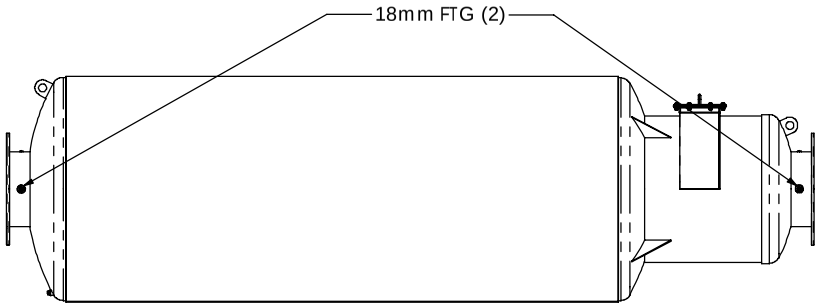

BACK SIDE DETAIL
SCALE 1:34

PROPRIETARY AND CONFIDENTIAL

THE INFORMATION CONTAINED IN THIS DRAWING IS THE SOLE PROPERTY OF MIRATECH CORPORATION. ANY REPRODUCTION IN PART OR AS A WHOLE WITHOUT THE WRITTEN PERMISSION OF MIRATECH CORPORATION IS PROHIBITED.

DIMENSIONS ARE IN INCHES

TOLERANCES: +/- 1/16" UNLESS OTHERWISE SPECIFIED

DRAWN	DATE
JWS	4/15/2004

DO NOT SCALE DRAWING

MIRATECH EMISSIONS SOLUTIONS

RHS-4228-14
Sales Drawing

SIZE	DWG. NO.	REV.
A	RHS-4228-14 SD	0

SCALE:1:24 | WEIGHT: 1407 lbs. with 1 Element | SHEET 1 OF 1

CC_23077 Mec-R FINAL.qxd 10/3/03 2:54 PM Page 1

Compliance Controls MEC-R
RICH-BURN AIR-FUEL CONTROL SYSTEM

If your business banks on revenues from rich-burn, spark-ignited, natural gas-fueled engines with catalytic converters, you face tough challenges EVERY DAY:

- **EMISSIONS CONTROL COMPLIANCE.**
  Variance by as little as *one percent* from the stoichiometric air-fuel ratio – the ratio at which all fuel is oxidized in engine combustion – will keep your catalytic converter from doing its job.
- **OPERATIONAL ISSUES.**
  In any competitive arena, your business suffers when you're not getting the benefits of today's most advanced technologies, and tomorrow's. But keeping up with technology can be costly – in dollars, time, headaches and hassles. And who can afford to keep *rocket scientists* on board to run engines day-to-day?
- **TROUBLESHOOTING & MAINTENANCE.**
  Engine misfires, ashed catalysts, overheating: these and other glitches not only impair engine performance and shorten your equipment's life span. They can also cost you plenty. Take one example. In mere seconds, the unburned fuel coughed into your exhaust stream by a misfiring cylinder can cause a hot catalyst *to burst into flame.*

Compliance Controls has the ideal solution:

THE MEC-R RICH-BURN AIR-FUEL CONTROL SYSTEM™

Compliance CONTROLS

CC_23077 Mec-R FINAL.qxd 10/3/03 2:54 PM Page 2

The best. Bar none.

THE MEC-R RICH-BURN AIR-FUEL CONTROL SYSTEM maximizes the efficiency of a three-way catalyst by maintaining a constant air-fuel ratio over varying engine loads, speeds, fuel quality, ambient temperatures and barometric pressures.

And the MEC-R works *without operator intervention.*

Easy to install, even easier to use, and equipped with a comprehensive 44-fault on-board diagnostics and troubleshooting system, the Windows®-based MEC-R redefines the state-of-the-art: in hardware, microprocessor power, control system software, operator interface options, adaptability to variable engine conditions and control requirements, software upgradeability, you name it.

DOLLARS & SENSE. Continuous emission control. Improved engine performance. Longer, more trouble-free equipment service-life. Fail-safe troubleshooting. Fast, easy installation. Easy, user-friendly operation, with minimal training. Network compatibility, with high-speed data transfer. Powerful smart-system features and benefits you won't find anywhere else. All with the flexibility to tailor solutions to your specific current and future wants and needs.

Business owners, financial officers, engineers, IT and operations managers alike can all agree: the Compliance Controls MEC-R Rich-Burn Air-Fuel Control System is simply the best value on the market, bar none.

ABOUT COMPLIANCE CONTROLS. Compliance Controls was formed by two of the best-known, most trusted leaders in industrial engine emissions control and equipment management solutions: MIRATECH Corporation and F.W. Murphy. Backed by our parent companies' distribution networks, Compliance Controls focuses exclusively on delivering and supporting MEC Air-Fuel Control System solutions tailored to our customers' specific requirements.

FEATURES

- >> Fast, easy, low-cost installation
- >> Fits virtually any gas-fueled, carbureted, rich-burn industrial engine – with any catalytic converter
- >> Windows® -based platform compatible with all computers
  Software can be installed on laptop, PC, Palm®-type handheld or network
- >> Adaptive valve-learn software
  Continually updates look-up tables for rapid transient response and continuous control in Open Loop mode
- >> At-a-glance on-screen dashboard graphics
  LED Driver (COMM Modules) for Power, Alarm & Shutdown, Controller Communication and more
- >> Comprehensive 44-fault diagnostics
  Continuous oxygen sensor health monitoring; detection of ashed catalysts, misfiring, overheating, valve sticking and more
- >> Data plotting for easy, accurate troubleshooting
- >> Alarm and shut down dry contacts
- >> Pre-catalyst closed loop, exhaust oxygen feedback control
- >> Post-catalyst exhaust oxygen feedback; cascade control for fast, real-time adaptation to changing catalyst performance
- >> Variable set-point for pre-catalyst and post-catalyst exhaust oxygen control – for real-time response to varying engine loads
- >> Catalyst temperature monitoring to protect the catalyst from engine fueling malfunctions
- >> Two-dimensional open-loop valve positioning, based on engine speed and load
  Maintains compliance even with critical oxygen sensor malfunction
- >> Drives up to two fuel-metering valves for "V" engine configurations
- >> Multiple valve control options:
  - Smart Valve Electronic Pressure Regulator
    Controls all engine fuel with full authority, with differential fuel pressure control in case of control system failure
  - Full Authority Valve
    Controls all engine fuel via butterfly valve
  - Trim Fuel Valve
    Adds supplemental fuel to the air intake system via system-controlled proportional fuel valve
- >> RS-485/ModBus® and CAN link communications support for high-speed data transmission

44-FAULT FAILSAFE DIAGNOSTICS

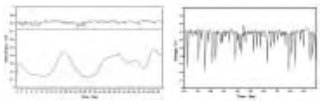

STICKING VALVE CONTINUOUS MISFIRE

BENEFITS

- >> Continuous, precise emissions control compliance
- >> Improved engine & emissions control performance
- >> Longer, more trouble-free equipment life
- >> Fail-safe troubleshooting & diagnostics, with automatic shutdowns
  - *Eliminates operator guesswork and look-see troubleshooting*
  - *Prevents costly equipment damage and failures*
  - *Better-managed maintenance costs; lower replacement costs*
- >> Fully automatic; no operator required in normal operation
- >> Minimal operator training
- >> Flexible network compatibility – with high-speed data transfer
- >> Responsive, full-service support: 24-7-365
- >> Software, upgrades and documentation available on disk or online

Visit Our Website. Or Give Us A Call.

To find out more about the MEC-R Rich-Burn Air-Fuel Control System, please visit our website: *www.compliancecontrols.com.* Or simply give us a call:
918-627-5050

Compliance CONTROLS

4224 S. 76th E. Ave. • Tulsa, OK 74145-4712 • *telephone* 918.627.5050 • *fax* 918.622.3928
www.compliancecontrols.com • info@compliancecontrols.com

MEC-R1-10.03

Compliance Controls, MEC-R and MEC-R Rich-Burn Air-Fuel Control System are registered trademarks of Compliance Controls, LLC.
© Copyright 2003: Compliance Controls, LLC

Emissions Control Equipment Specification Summary

Proposal Number: RFP-07-0931 Rev(4)
10/10/2007

Ref: nscr/silencer unit

APPLICATION

# of Engines:	1
Engine Operation:	Gas Compression
Fuel:	Natural Gas
Lubrication Oil:	0.6 wt% sulfated ash or less

Engine Data:

Engine:	Cummins GTA38
Power Output:	625 kW
Speed:	1,800 RPM
Design Exhaust Temp:	1,123 F
Design Exhaust Flow Rate:	6,637 acfm (cfm)

Catalytic Converter System Data:

Catalytic Converter Model:	RHSS-4228-14-C1
Inlet / Outlet Pipe Size:	14 inches
Overall Length:	152 inches
Diameter:	42/28 inches
Weight:	1,407 lbs
Converter Pressure Loss:	6.2 Inches of WC (Housing + Catalyst: Flange to Flange)
Sound Attenuation:	30-35 dba
Catalyst Section Internals:	304 SS
Shell / Body Construction:*	304 SS
Inlet / Outlet Connection:	Standard 125# ANSI Bolt Pattern Flanges -- FF
Instrumentation Ports:	1 inlet/1 outlet/2 catalyst (1/2" NPT)
Oxygen Sensor Ports:	1 inlet/1 outlet (18mm)
Temperature Limits:	750 - 1,250 degrees F (inlet); 1,350 degrees F (outlet)

Raw Engine Emission Outlet Data:

	g/bhp-hr	lb/MW-hr	ppmvd	ppmvd @ 15% O_2	lb/hr	g/kW-hr	tons/yr
NOx	17.53	51.83	2,431	703	32.39	23.51	3.24
CO	4.77	14.10	1,086	314	8.81	6.40	0.88
NMHC	0.33	0.98	131	38	0.61	0.44	0.06

Post System Emission Outlet Data:

	g/bhp-hr	lb/MW-hr	ppmvd	ppmvd @ 15% O_2	lb/hr	g/kW-hr	tons/yr
NOx	1.50	4.43	208	60	2.77	2.01	0.28
CO	2.00	5.91	455	132	3.70	2.68	0.37

% O_2	0.5
H_2O Assumption	16.0%

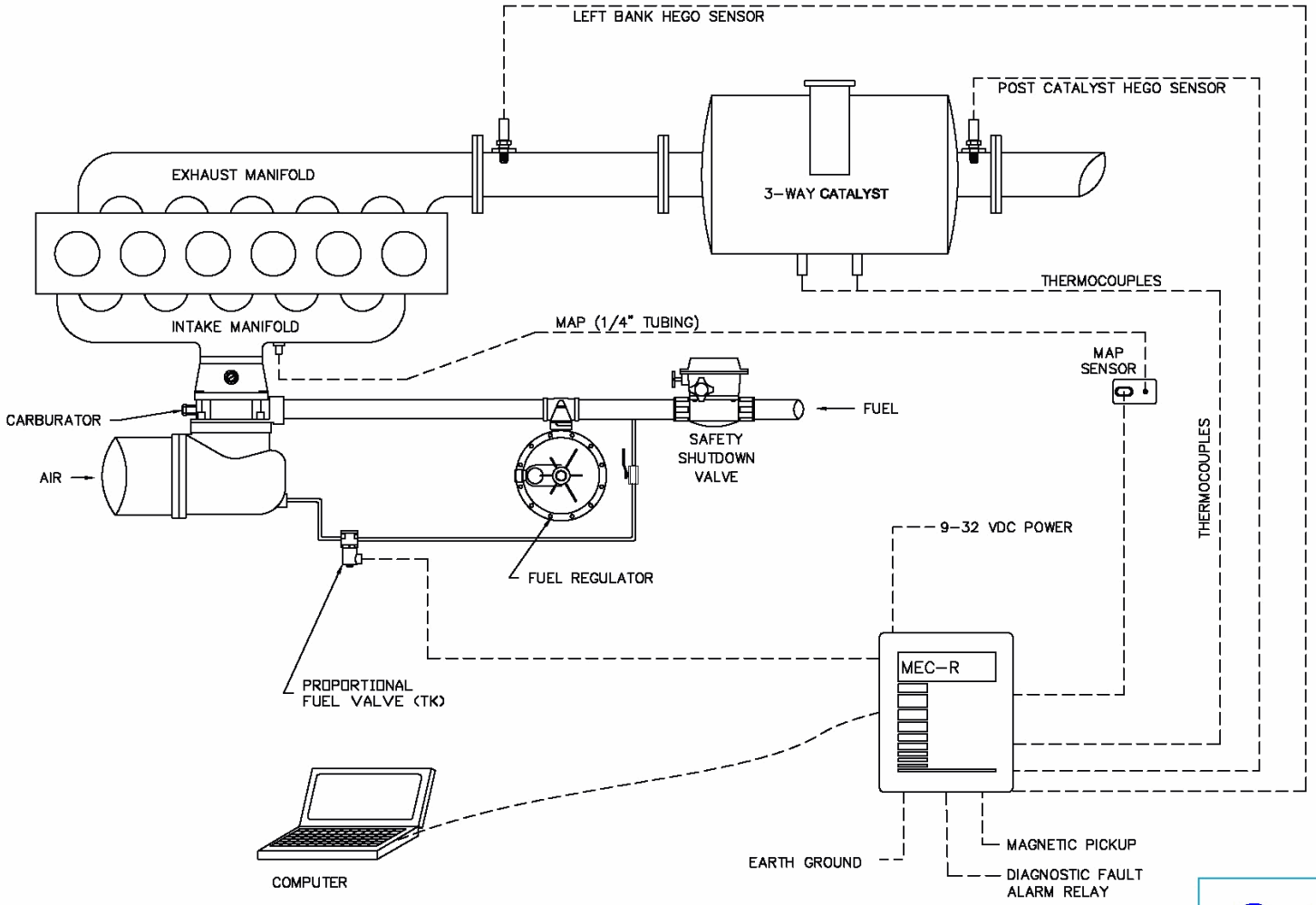

Compliance CONTROLS

PROPRIETARY AND CONFIDENTIAL

THE INFORMATION CONTAINED IN THIS DRAWING IS THE SOLE PROPERTY OF MIRATECH CORPORATION. ANY REPRODUCTION IN PART OR WHOLE WITHOUT THE WRITTEN PERMISSION OF MIRATECH CORPORATION IS PROHIBITED.

DIMENSIONS ARE APPROXINATE IN INCHES UNLESS OTHERWISE SPECIFIED

DO NOT SCALE DRAWING

DRAWN	DATE
NJH	1/18/06
REVIEWED BY	DATE
–	–

MECR-11-TK6 LAYOUT DRAWING

SIZE	DWG. NO.	REV.
A	MECR-11-TK6.DWG	0

SCALE: NTS | SHEET 1 OF 1

MIRATECH EMISSIONS SOLUTIONS

GENERAL TERMS AND CONDITIONS OF SALE

1. **Integration** The General Terms and Conditions of Sale contained herein shall be deemed a material part of any sale or proposed sale by MIRATECH Corporation ("Seller") to _____ ("Purchaser") and, unless and only to the extent specifically excluded therein, shall be a material part of any subsequent letter of authorization, contract, purchase order, sale or other agreement between Seller and Purchaser, with respect to all products, equipment, services and/or parts relating thereto (hereinafter referred to as the "Product").

2. **Compliance** To Seller's knowledge, Seller has complied with all applicable laws and regulations including, but not limited to, the Fair Labor Standards Act, the Civil Rights Act of 1964, the Equal Employment Opportunity Act of 1972, as respectively amended, Executive Orders 11246, 11375 and 11141 (Title 41, Chapter 60, Code of Federal Regulations), the Vietnam Era Veterans Readjustment Act of 1974, and all amendments thereto and regulations, rules and orders there under, as amended or superseded and all of the foregoing are made a part hereof by reference and incorporated herein as though fully set forth herein. Purchaser understands and agrees that the foregoing sentence is for Purchaser's information stating that which Seller strives to achieve and is not made as a covenant, warranty or representation and is not meant to create or permit, nor shall it be construed as creating or permitting any enforceable rights hereunder for Purchaser or any other person or entity. Seller shall in no event be responsible for any failure to comply with such Act resulting from the location, use, operation or maintenance of the Product or from alteration of the Product by personnel other than those employed by Seller or from an option or accessory to the Product which was available to Purchaser but omitted at Purchaser's direction, or from design or instructions furnished by Purchaser or its agents. Seller's responsibility hereunder is limited to modification or replacement of the Product so that the Product conforms to the applicable regulations or standards or, at Seller's option, to a refund of the purchase price less an allowance for normal depreciation upon the return of the Product to Seller at the point of shipment at Purchaser's expense. All standards promulgated with respect to noise or air control are specifically excluded hereunder.

3. **Title, Risk of Loss, Security Interest** Title and risk of loss or damage to the Product shall pass to Purchaser under tender of delivery F.O.B. the manufacturing facility unless expressly stipulated otherwise, regardless of when partial or final payment is to be made by Purchaser. Notwithstanding the foregoing, a purchase money security interest in the Product or any replacement thereof shall remain in Seller, regardless of mode of attachment to realty or other property, until full payment has been made therefore and collected by Seller.

4. **Inspection, Rejection, Remedy** Purchaser shall have the right to reasonable inspection of the Product after delivery to destination, which inspection shall be completed within ten (10) days of the date of delivery to destination. Any rejection by Purchaser as to part or all of the Product shall be in writing, specifically stating the non-conformities thereof. In such event, Seller shall have a reasonable period of time to determine the validity of and, if necessary, to correct the non-conformities forming the basis of the Purchaser's rejection or, at Seller's option and if appropriate, to replace part or all of the Product. Purchaser's failure to make rejection as herein stated, or to allow Seller to cure Purchaser's objections, shall be deemed to conclusively establish acceptance by Purchaser of the Product.

5. **Time, Forced Majeure** Seller may, from time to time, quote delivery dates to Purchaser. Such dates shall be interpreted as estimated and in no event shall such dates be construed as falling within the meaning of "time is of the essence." Seller shall not be liable for loss, damage, detention, or delay due to war, riots, civil insurrection or acts of the common enemy, fire, flood, severe weather conditions at Seller's premises or outside fabrication sites, strikes or other labor difficulties, acts of civil or military authority including governmental law, orders, priorities or regulations, acts of Purchaser, embargo, car shortage, wrecks or delay in transportation, inability to obtain necessary labor, materials or manufacturing facilities from usual sources, faulty forgings or castings, or other causes beyond the reasonable control of Seller. In the event of delay in performance due to any such cause, the date of delivery or time for completion shall be adjusted to reflect the actual length of time necessary to properly reflect the delay without change to the purchase price. In the event of such delay or default in delivery, Seller shall complete work in progress and/or make delivery as soon as reasonably practicable. Upon completion and delivery of the Product to Purchaser, after such delay in delivery, the obligation of Purchaser for payment shall be completely reinstated.

6. **Taxes** Prices quoted by Seller do not include any federal, state or local property, license, privilege, sales, use, excise, gross receipts or other like taxes which may now or hereafter be applicable to, measured by, or imposed upon this transaction, the Product, its sale, its value, its use or any services performed in connection therewith. Such taxes shall be paid by Purchaser or, if paid by Seller, shall be itemized separately to Purchaser, who shall make prompt payment therefore to Seller.

7.1 **Limited Warranty** Subject to the exclusions contained herein, Seller warrants that the Product shall be free of defects in material and workmanship for a period of twelve (12) months from the date the Product is placed in operation or eighteen (18) months from the date the Product is complete and ready for shipment, whichever shall first occur, and provided Purchaser shall, within such period, notify Seller in writing of such defect(s) and fully cooperate with Seller in pursuing the remedying thereof. Should any failure to conform to this warranty be reported to Seller within said period, Seller shall, upon Purchaser promptly notifying Seller in writing thereof, correct such nonconformity by suitable repair to the Product or, at Seller's option, furnish replacement parts F.O.B. Seller's point of shipment provided Purchaser has restored the Product to the "as shipped" condition prior to installation and has installed, maintained and operated the Product in accordance with standard industry practices and has complied with the specific recommendations of Seller respecting the Product. Accessories or other parts of the Product furnished by Seller, but manufactured by others, shall carry whatever warranty, if any, the manufacturers thereof have given to Seller and which can be passed on to Purchaser. Purchaser agrees to look solely to such other manufacturers or suppliers of such accessories or parts for any warranty, repair or product liability claims arising out of the performance, condition or use of such accessories or parts. Seller agrees to cooperate in furnishing assignments of its rights thereto to Purchaser from such manufacturers and suppliers. Seller shall not be liable for any repairs, replacements or adjustments to the Product or any costs of labor performed by Purchaser without Seller's prior written approval. Seller's warranty shall expire in the event the Product is misused, neglected or operated other than for its intended purpose. Unless specifically stated in writing, Seller makes no performance warranty of any kind respecting the Product, the effects of corrosion, erosion and normal wear and tear are specifically excluded from Seller's warranty. In the event performance warranties are expressly included, in writing, Seller's obligation shall be to correct non-conformities in the manner and for the period of time provided herein above.

Correction by Seller of non-conformities, whether patent or latent, in the manner and for the period of time provided above, shall constitute fulfillment of all liabilities of Seller for such non-conformities, whether based on contract, warranty, negligence, indemnity, strict liability or otherwise with respect to or arising out the Product. Seller shall in no event be liable for consequential damages.

7.2 **Limited Warranty, Conditions** Throughout the Warranty Period, Seller warrants that the Product will achieve the emissions levels set forth in the Proposal referenced in and attached to the Contract between Seller and Purchaser, subject to the conditions that

a. the Product is operated and maintained at all times in accordance with the Seller's written instructions;
b. the Purchaser's equipment is operated and maintained at all times in accordance with all manufacturer's instructions and guidelines;
c. the Purchaser's equipment, during operation, shall never exceed the raw emission rate, the flow rate or temperature levels set forth in the Proposal;
d. the Purchaser's equipment shall never fall below the lower temperature limits stated in the Proposal;
e. The Purchaser will operate the equipment so as to eliminate any NO_x fluctuations greater than 1% of the NO_x emission target;

Emissions levels, temperature and flow rates from Purchaser's equipment and the Product discharge point shall be tested at the Purchaser's expense, in accordance with a mutually agreed test procedure and protocol consistent with accepted industry practices.

If the above conditions are met and the Product fails to achieve the output performance stated in the Proposal within the Warranty Period, Seller will replace or modify and adjust its Product as needed to meet such output performance standards. Purchaser is required to notify the Seller in writing of the specific defect and provide Seller with complete documentation of the defect and satisfaction of all conditions, a – e, of this article. If Seller is unable to achieve the output performance standards under the Contract conditions within a mutually agreed to time period, Purchaser may rescind the sale, and Seller shall return the purchase price which shall be Purchaser's sole remedy for breach of the warranty made in this paragraph. In no event shall Seller be responsible for damages, consequential, punitive or otherwise.

7.3 **Limited Warranty, Insulated Carbon Steel** The Seller's warranty for any carbon steel housing that is insulated and exposed to an operating temperature of 900 degrees F is voided.

7.4 **Warranty Disclaimer** **SELLER MAKES NO OTHER WARRANTY OR REPRESENTATION OF ANY KIND WHATSOEVER, EXPRESSED OR IMPLIED, EXCEPT THAT OF GOOD TITLE TO THE PRODUCT, AND ALL IMPLIED WARRANTIES, INCLUDING ANY WARRANTY OF MERCHANTABILITY AND/OR FITNESS FOR A PARTICULAR PURPOSE, ARE HEREBY DISCLAIMED.**

Revision 3, created September 2005
MIRATECH Terms and Conditions Rev 3 dated September 2005.doc

8. **Set-off** Purchaser shall not have the right to retain, back charge, or set off against any amounts which may be or become payable by it to Seller or otherwise, for amounts which Seller may allegedly or in fact owe Purchaser whether arising hereunder or otherwise.

9. **Remedies Exclusive** The remedies of Purchaser set forth herein are exclusive. The total liability of Seller with respect to the performance and other matters related to the manufacture, sale, delivery, installation, repair or technical direction thereof, whether based on contract, warranty, negligence, indemnity, strict liability or otherwise shall in no event exceed the purchase price of the particular Unit of Product upon which such liability is based, and not the aggregate of all Products covered by any agreement or document between Seller and Purchaser. Seller shall, in no event, be liable to Purchaser, any successors in interest or any beneficiary or assignee of Purchaser, for any consequential, incidental, indirect, special or punitive damages or any defect in, or failure or malfunction of, the Product, whether based upon lost goodwill, lost profits or revenue, interest, work stoppage, impairment of other goods loss by reason of shutdown or non-operation, increased expenses of operation of Product, loss of use of power system, costs of purchase of replacement power or claims of Purchaser or customers of Purchaser for service interruption, whether or not such loss or damage is based on contract, warranty, negligence, indemnity, strict liability or otherwise. Purchaser warrants that the Product is purchased for, and will be used for, business purposes only by qualified and properly trained personnel.

10. **Governing Law – Venue** The rights and obligations of Purchaser and Seller shall be construed in accordance with and governed by the laws of the State of Oklahoma, notwithstanding any conflict of law provisions which would have the effect of making the law of another state applicable. Seller and Purchaser agree that venue respecting any and all disputes between Purchaser and Seller with regard to the Product shall be Tulsa County, Oklahoma.

11. **No Waiver** No waiver by Seller of any breach of any obligation of Purchaser set forth in the General Terms and Conditions herein shall be construed as a waiver of any succeeding breach of the same or of any covenant or condition, and in no event shall this provision itself be waived.

12. **Payment** Payment terms shall be as stated in the letter of authorization, purchase order or other agreement between Seller and Purchaser. Terms of payment are net ten (10) days from date of invoice, unless otherwise agreed in writing.

13.1 **Cancellation of Contract before Delivery** For standard products, a cancellation charge equal to, in the sole discretion of the Seller, not more than 50% of the original purchase price may be made for any cancellation of the Contract by Purchaser prior to Seller's delivery of the Product to Purchaser. For custom products, a cancellation charge equal to, in the sole discretion of the Seller, not more than 100% of the original purchase price may be made for any cancellation of the Contract by Purchaser prior to Seller's delivery of the Product to Purchaser. The parties agree that such cancellation charges represent Seller's liquidated damages arising out of cancellation of the Contract in lieu of actual damages, it being understood and agreed between the parties that Seller's actual damages would be impractical or extremely difficult, time consuming and expensive to ascertain. Seller's failure to impose a cancellation charge with respect to one or more cancellations by Purchaser and/or other customers shall not be deemed in any case a waiver of its right under the Contract to impose such a charge in connection with any other cancellation by Purchaser, and Purchaser may not rely on any representation of any person to the contrary.

13.2 **Returns** Subject to Purchaser's payment in advance of a restocking fee and any associated shipping and handling costs, Seller will accept return of a Product within 90 days following delivery of the Product to Purchaser if the Product is returned to Seller complete and uninstalled in new condition. The amount of such restocking fee will be determined in accordance with Seller's then current Return Material Authorization policy. Any return of a Product more than 90 days following delivery, including the terms thereof, shall be within the sole and absolute discretion of the Seller.

14. **Conflicting Provisions** In case of any conflict, the General Terms and Conditions contained herein shall supersede any and all specifications and/or other terms and conditions previously supplied by Purchaser in connection with or upon a letter of authorization, purchase order or any other agreement, as well as any custom, prior conduct or course of dealing. No agreement, oral representation or other understanding any way modifying or amending the General Terms and Conditions, or having the effect of enlarging the obligations of Seller hereunder, shall be binding upon the Seller unless such modification is clear, certain and in writing in the form of an amended letter of authorization, purchase order or other agreement duly executed by Purchaser and an authorized representative of Seller.

Revision 3, created September 2005
MIRATECH Terms and Conditions Rev 3 dated September 2005.doc

GENERAL TERMS AND CONDITIONS OF SALE

1. **Integration** The General Terms and Conditions of Sale contained herein shall be deemed a material part of any sale or proposed sale by Compliance Control, LLC ("Seller") to _____ ("Purchaser") and, unless and only to the extent specifically excluded therein, shall be a material part of any subsequent letter of authorization, contract, purchase order, acceptance agreement, sale or other agreement ("Contract") between Seller and Purchaser, with respect to all products, equipment, services and/or parts relating thereto (hereinafter referred to as the "Product").

2. **Compliance** To Seller's knowledge, Seller has complied with all applicable laws and regulations including, but not limited to, the Fair Labor Standards Act, the Civil Rights Act of 1964, the Equal Employment Opportunity Act of 1972, as respectively amended, Executive Orders 11246, 11375 and 11141 (Title 41, Chapter 60, Code of Federal Regulations), the Vietnam Era Veterans Readjustment Act of 1974, and all amendments thereto and regulations, rules and orders there under, as amended or superseded and all of the foregoing are made a part hereof by reference and incorporated herein as though fully set forth herein. Purchaser understands and agrees that the foregoing sentence is for Purchaser's information stating that which Seller strives to achieve and is not made as a covenant, warranty or representation and is not meant to create or permit, nor shall it be construed as creating or permitting any enforceable rights hereunder for Purchaser or any other person or entity. Seller shall in no event be responsible for any failure to comply with such law or regulation resulting from the location, use, operation or maintenance of the Product or from alteration of the Product by personnel other than those employed by Seller or from an option or accessory to the Product which was available to Purchaser but omitted at Purchaser's direction, or from design or instructions furnished by Purchaser or its agents. All standards promulgated with respect to noise or air control are specifically excluded hereunder.

3. **Title, Risk of Loss, Security Interest** Title and risk of loss or damage to the Product shall pass to Purchaser under tender of delivery F.O.B. Point of Shipment by Seller unless expressly stipulated otherwise, regardless of when partial or final payment is to be made by Purchaser. Notwithstanding the foregoing, a purchase money security interest in the Product or any replacement thereof shall remain in Seller, regardless of mode of attachment to realty or other property, until full payment has been made therefore and collected by Seller.

4. **Inspection, Rejection, Remedy** Purchaser shall have the right to reasonable inspection of the Product after delivery to destination, which inspection shall be completed within ten (10) days of the date of delivery to destination. Any rejection by Purchaser as to part or all of the Product shall be in writing, specifically stating the non-conformities thereof. In such event, Seller shall have a reasonable period of time to determine the validity of and, if necessary, to correct, the non-conformities forming the basis of the Purchaser's rejection or, at Seller's option and if appropriate, to replace part or all of the Product. Purchaser's failure to make rejection as herein stated, or to allow Seller to cure Purchaser's objections, shall be deemed to conclusively establish acceptance by Purchaser of the Product.

5. **Time, Force Majeure** Seller may, from time to time, quote delivery dates to Purchaser. Such dates shall be interpreted as estimated and in no event shall such dates be construed as falling within the meaning of "time is of the essence." Seller shall not be liable for loss, damage, detention, or delay due to war, riots, civil insurrection or acts of the common enemy, fire, flood, severe weather conditions at Seller's premises or outside fabrication sites, strikes or other labor difficulties, acts of civil or military authority including governmental law, orders, priorities or regulations, acts of Purchaser, embargo, car shortage, wrecks or delay in transportation, inability to obtain necessary labor, materials or manufacturing facilities from usual sources, faulty forgings or castings, or other causes beyond the reasonable control of Seller. In the event of delay in performance due to any such cause, the date of delivery or time for completion shall be adjusted to reflect the actual length of time necessary to properly reflect the delay without change to the purchase price. In the event of such delay or default in delivery, Seller shall complete work in progress and/or make delivery as soon as reasonably practicable. Upon completion and delivery of the Product to Purchaser, after such delay in delivery, the obligation of Purchaser for payment shall be completely reinstated.

6. **Taxes** Prices quoted by Seller do not include any federal, state or local property, license, privilege, sales, use, excise, gross receipts or other like taxes which may now or hereafter be applicable to, measured by, or imposed upon this transaction, the Product, its sale, its value, its use or any services performed in connection therewith. Such taxes shall be paid by Purchaser or, if paid by Seller, shall be itemized separately to Purchaser, who shall make prompt payment thereof to Seller.

Revision 1, created September 2005

7.1 **Limited Warranty** Subject to the exclusions contained herein, Seller warrants that the Engine Control Module and Terminal Connector Board (hereinafter referred to as "AFRC Module") shall be free of defects in material and workmanship for a period of eighteen (18) months from the date the AFRC Module is placed in operation or twenty four (24) months from the date the AFRC Module is complete and ready for shipment, whichever shall first occur, and provided Purchaser shall, within such period, notify Seller in writing of such defect(s) and fully cooperate with Seller in pursuing the remedying thereof. Should any failure to conform to this warranty be reported to Seller within said period, Seller shall, upon Purchaser's promptly notifying Seller in writing thereof, correct such nonconformity by suitable repair to the Product or, at Seller's option, furnish replacement parts F.O.B. original point of shipment provided Seller has documented that the Product was installed, maintained and operated in accordance with standard industry practices, the Sellers technical manual, and has complied with the specific recommendations of Seller respecting the Product. Accessories or other parts of the Product furnished by Seller, but manufactured by others, shall carry whatever warranty, if any, the manufacturers thereof have given to Seller and which can be passed on to Purchaser. Purchaser agrees to look solely to other such manufacturers or suppliers of such accessories or parts for any warranty, repair or product liability claims arising out of the performance, condition or use of such accessories or parts. Seller agrees to cooperate in furnishing assignments of its rights thereto to Purchaser from such manufacturers and suppliers. Seller shall not be liable for any repairs, replacements or adjustments to the Product or any costs of labor performed by Purchaser without Seller's prior written approval. Seller's warranty shall expire in the event the Product is misused, neglected or operated other than for its intended purpose. Unless specifically stated in writing, Seller makes no performance warranty of any kind respecting the Product; the effects of corrosion, erosion and normal wear and tear are specifically excluded from Seller's warranty. In the event performance warranties are expressly included, in writing, Seller's obligation shall be to correct non-conformities in the manner and for the period of time provided herein above.

7.2 **Warranty Disclaimer** **SELLER MAKES NO OTHER WARRANTY OR REPRESENTATION OF ANY KIND WHATSOEVER, EXPRESSED OR IMPLIED, EXCEPT THAT OF GOOD TITLE TO THE PRODUCT, AND ALL IMPLIED WARRANTIES, INCLUDING ANY WARRANTY OF MERCHANTABILITY AND/OR FITNESS FOR A PARTICULAR PURPOSE, ARE HEREBY DISCLAIMED.**

7.3 **Warranty Remedy** Correction by Seller of non-conformities, whether patent or latent, in the manner and for the period of time provided above, shall constitute fulfillment of all liabilities of Seller for such non-conformities, whether based on contract, warranty, negligence, indemnity, strict liability or otherwise with respect to or arising out the Product. Seller shall in no event be liable for consequential damages.

8. **Set-off** Purchaser shall not have the right to retain, back charge, or set off against any amounts which may be or become payable by it to Seller or otherwise, for amounts which Seller may allegedly or in fact owe Purchaser whether arising hereunder or otherwise.

9. **Remedies Exclusive** The remedies of Purchaser set forth herein are exclusive. The total liability of Seller with respect to the performance and other matters related to the manufacture, sale, delivery, installation, repair or technical direction thereof, whether based on contract, warranty, negligence, indemnity, strict liability or otherwise, shall in no event exceed the purchase price of the particular component of the Unit of Product upon which such liability is based, and not the aggregate of all Products covered by any agreement or document between Seller and Purchaser. Seller shall, in no event, be liable to Purchaser, any successors in interest or any beneficiary or assignee of Purchaser, for any consequential, incidental, indirect, special or punitive damages or any defect in, or failure or malfunction of, the Product or particular component of the Unit of Product, whether based upon lost goodwill, lost profits or revenue, interest, work stoppage, impairment of other goods, loss by reason of shutdown or non-operation, increased expenses of operation of Product, loss of use of power system, costs of purchase of replacement power or claims of Purchaser or customers of Purchaser for service interruption, whether or not such loss or damage is based on contract, warranty, negligence, indemnity, strict liability or otherwise. Purchaser warrants that the Product is purchased for, and will be used for, business purposes only by qualified and properly trained personnel.

10. **Governing Law – Venue** The rights and obligations of Purchaser and Seller shall be construed in accordance with and governed by the laws of the State of Oklahoma, notwithstanding any conflict of law provisions which would have the effect of making the law of another state applicable. Seller and Purchaser agree that venue respecting any and all disputes between Purchaser and Seller with regard to the Product shall be Tulsa County, Oklahoma.

11. **No Waiver** No waiver by Seller of any breach of any obligation of Purchaser set forth in the General Terms and Conditions herein shall be construed as a waiver of any succeeding breach of the same or of any covenant or condition, and in no event shall this provision itself be waived.

Revision 1, created September 2005

12. **Payment** Payment terms shall be as stated in the Contract between Seller and Purchaser. Terms of payment are net ten (10) days from date of invoice, unless otherwise agreed in writing.

13.1 **Cancellation of Contract before Delivery** A cancellation charge equal to, in the sole discretion of the Seller, not more than 25% of the original purchase price may be made for any cancellation of the Contract by Purchaser prior to Seller's delivery of the Product to Purchaser. The parties agree that such cancellation charge represents Seller's liquidated damages arising out of cancellation of the Contract in lieu of actual damages, it being understood and agreed between the parties that Seller's actual damages would be impractical or extremely difficult, time consuming and expensive to ascertain. Compliance Control's failure to impose a cancellation charge with respect to one or more cancellations by Purchaser and/or other customers shall not be deemed in any case a waiver of its right under the Contract to impose such a charge in connection with any other cancellation by Purchaser, and Purchaser may not rely on any representation of any person to the contrary.

13.2 **Returns** Subject to Purchaser's payment in advance of a restocking fee and any associated shipping and handling costs, Seller will accept return of a Product within 90 days following delivery of the Product to Purchaser if the Product is returned to Seller complete and uninstalled in new condition. The amount of such restocking fee will be determined in accordance with Seller's then current Return Material Authorization policy. Any return of a Product more than 90 days following delivery, including the terms thereof, shall be within the sole and absolute discretion of the Seller.

14. **Conflicting Provisions, Modification** In case of any conflict, the General Terms and Conditions contained herein shall supersede any and all specifications and/or other terms and conditions previously supplied by Purchaser in connection with or upon a letter of authorization, purchase order or any other agreement, as well as any custom, prior conduct or course of dealing. No agreement, oral representation or other understanding any way modifying or amending the General Terms and Conditions, or having the effect of enlarging the obligations of Seller hereunder, shall be binding upon the Seller unless such modification is clear, certain and in writing in the form of an amended letter of authorization, purchase order or other agreement duly executed by Purchaser and an authorized representative of Seller.

Revision 1, created September 2005

APPENDIX 3.2-D

SPECIFICAITONS FOR THE FIREPUMP ENGINE

IDEAL

IDEAL EQUIPMENT COMPANY, Ltd.
PO Box 29429 Columbus Ohio 43229
Phone 614-939-5160 Fax 614-939-5161

October 2, 2007
Rev.#1

Industrial Construction Company
10060 Brecksville Road
Brecksville, OH 44141

Attention: Hans Kern

Reference: Orange Grove Peaker Plant, Pala, California
ITT-AC Fire Pump Skid Package

With reference to the above, we are pleased to offer the following:

Engine Driven Fire Pump- 3000GPM @ 125 PSI:
One (1) Allis Chalmers model 12 x 10 x 18F, Series 8100, horizontal, centrifugal Fire Pump, UL listed and FM approved, rated 3000 GPM at 125 PSI. The Fire Pump is driven at 1770 RPM by a Cummins Model CFP11E-F10 diesel engine. The pump and engine will be mounted on a fabricated steel base plate, complete with flexible coupling and coupling guard.

Also included are the following:
(2) sets lead-acid batteries with battery racks and cables
(1) residential muffler (shipped loose for field installation)
(1) 500 gallon double wall fuel tank
(1) fuel tank, fuel spill alarm switch
(1) 10” outside test header with twelve (12), 2-1/2” brass angle hose valves with caps & chains. NST threads.
(1) ½” ball drip valve
(1) 8” pilot operated relief valve
(1) 8” x 12” enclosed cone
(1) ½” automatic air release valve
(1) 3-1/2” suction and discharge gauges
(1) ITT-AC Model 2SV-9 stage jockey pump rated 25 GPM @ 125 PSI. 3 HP, 3500 RPM, 480 volt, 3 phase, 60 cycle, TEFC motor.
(1) Cutler Hammer Jockey Pump Controller
Cutler Hammer Diesel Engine Fire Pump Controller with:

- All features required by NFPA #20
- Low fuel level alarm & switch
- Fuel spill at storage tank
- Three sets of alarm contacts for: engine running, switch off and common trouble.

Electric Fire Pump 3000 GPM:
We offer one (1) Allis Chalmers model 12x10x18F, Series 8100, horizontal split case, centrifugal Fire Pump, UL listed and FM approved, rated 3000 GPM at 125 PSI. 300 HP, 1785 rpm, 480 volt, 3 phase, 60 cycle, ODP motor.

Also included are the following:
(1) Cutler Hammer Model FD-30, Across-The-Line Type, Fire Pump Controller with 100,000 AIC, built in pressure recorder
(1) ¾" casing relief valve
(1) ½" automatic air release valve
(1) 3-1/2 suction and discharge gauges

Fire Pump Skid Package

(1) ITT-AC Skid Package consisting of the equipment listed above mounted, piped and wired including:

Condition Point: **3000GPM @ 125 PSI**

(1) Jockey pump piping: (2) gate valves and (1) check valve

(1) Fuel tank piping with cross bracing.

(2) 12" UL/FM OS&Y Flanged suction gate valve with tamper switch

(2) 12" UL/FM wafer style discharge check valve

(2) 12" UL/FM Model discharge wafer style butterfly isolation valve with tamper switch

(2) Concentric discharge increaser 125#

(1) Hose valve header connection 10" with: tee, elbow, manual drain valve, (1) UL/FM wafer style butterfly isolation valve (hose valve header, hose valve, caps & chains – **shipped loose for installation at the job site.**)

(1) steel perimeter skid base with all necessary hard copper sensing lines, pipe supports, and wiring for complete package.

(1) Common suction and discharge headers

(1) Piping for main relief valve and waste cone

(1) Single point power connection with all wiring complete at the factory

(1) All drains to common point

Unit to be factory primed and painted

All welding to be done by ASME Section 9 certified welders

State PE stamp and seismic calculations for zone 4

Estimated skid size is 38" long x 13" wide. Approximate weight 36, 000 lbs.

If you have any questions, please do not hesitate to contact our office.

Sincerely,

Bill Smith

Cummins Fire Power	**Engine Specification Sheet** **Cummins Fire Power** DePere, WI 54115 http://www.cumminsfirepower.com	**Basic Engine Model** **CFP11E-F20, F10** Curve Number: **FR - 20091** Revision Date: **August 2006**

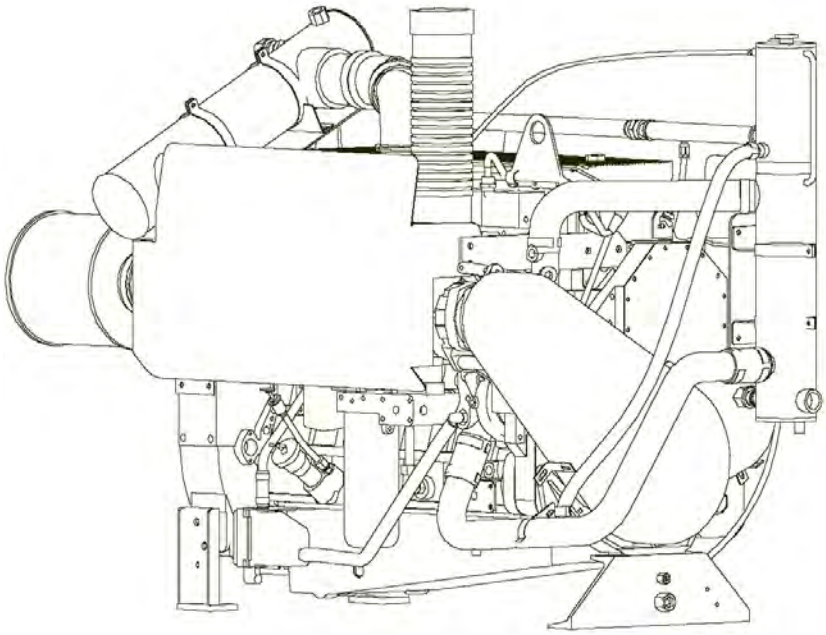

Equipment	Standard	Optional
Air Cleaner	Direct Mounted, Disposable, Indoor Service	Disposable, Treated for High Humidity, Indoor Service
Alternator	12V-DC, 100 Amps; With Belt Guard	24V-DC, 70 Amps; With Belt Guard
Cooling Loop	N/A	Maximum Pressure of 400 PSI
Exhaust Protection	Metal Guards on Manifolds and Turbo	N/A
Exhaust Flex Connection	SS Flex, NPT	SS Flex, 150# Flange
Flywheel Power Take-Off	Flywheel with Mounting for Coupler	●Drive Shaft System ●Stub Shaft
Fuel Connections	Fire Resistant Flexible Supply and Return Lines	N/A
Fuel Injection	Direct Injection	N/A
Fuel Filter	Primary Filter with Priming Pump	N/A
Engine Heater	120V-AC, 2250 Watts	240V-AC, 2250 Watts
Governor, Speed	Constant Speed	N/A
Heat Exchanger	Tube & Shell Type, 60 PSI with NPTF Connections	N/A
Instrument Panel	English and Metric, Tachometer, Hourmeter, Water Temperature, Oil Pressure & Two (2) Voltmeters	N/A
Junction Box	Integral with Instrument Panel; For DC Wiring Interconnection to Engine Controller	N/A
Lube Oil Cooler	Engine Water Cooled, Plate Type	N/A
Lube Oil Filter	Full Flow with By-Pass Valve	N/A
Lube Oil Pump	Gear Driven	N/A
Manual Start	On Instrument Panel	N/A
Overspeed Controls	Electronic with Reset & Test on Instrument Panel	N/A
Raw Water Solenoid Operation	Automatic from Engine Controller & from Emergency Local Control	N/A
Run-Stop Control	On Instrument Panel with Control Position Warning Light	N/A
Run Solenoid	12V-DC	24V-DC
Starters	12V-DC	24V-DC
Throttle Control	Adjustable Speed Control	N/A
Water Pump	Poly-Vee Belt Drive with Guard	N/A

Operating Speed (RPM)

Model	1470		1760		2100	
CFP11E-F20	364	(271)	424	(316)	360	(268)
CFP11E-F10	320	(239)	373	(278)	331	(247)

Ratings are: HP (kW)

Specifications

Aspiration……...Turbocharged and Charge Air Cooled
Rotation……..……..Clockwise
Weight - lb (kg)……..…… 2795 (1258)
Displacement - in^3 (litre)…… 660 (10.8)
Engine Type……4 Cycle; In-Line, 6 Cylinder
Engine Series……..Cummins QSM11 Series
Exhaust Emissions……..…EPA/CARB Tier 2

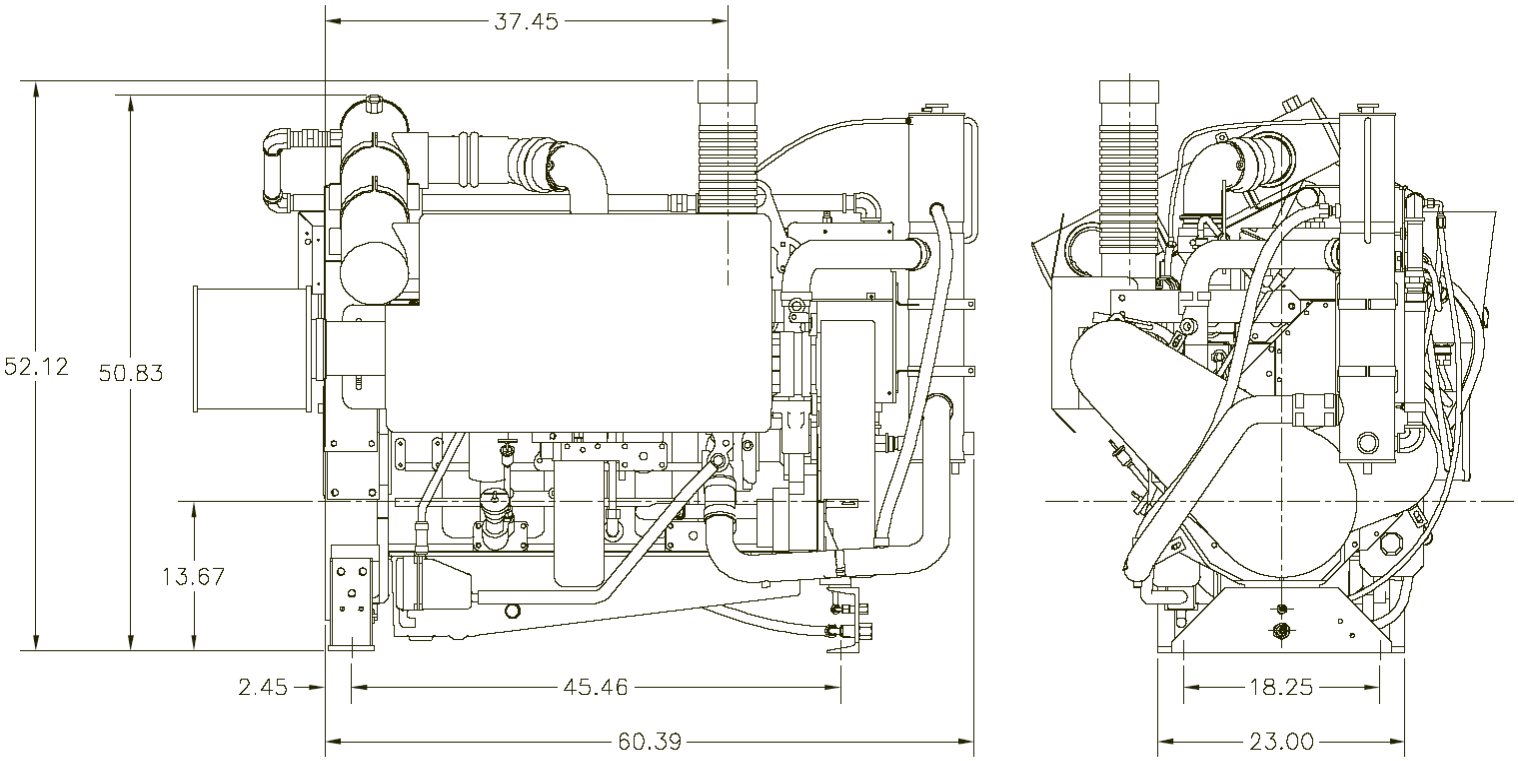

Engine Ratings Baselines

- Engines are rated at standard SAE conditions of 29.61 in. (7521 mm) Hg barometer and 77 °F (25°C) inlet air temperature (approximates 300ft. (91.4 m) above sea level) by the testing laboratory (see SAE Standard J1349).
- A deduction of 3 percent from engine horsepower rating at standard SAE conditions shall be made for diesel engines for each 1000 ft. (305 m) altitude above 300 ft. (91.4 m).
- A deduction of 1 percent from engine horsepower rating as corrected to standard SAE conditions shall be made for diesel engines for every 10°F above 77°F (24°C) ambient temperature.

Certified Power

This Cummins Fire Power fire pump driver is built to comply with NFPA-20, and is UL listed and FM approved. Although FM-UL Certified BHP ratings are shown at specific speeds, this Cummins engine can be applied at any intermediate speed. To determine the intermediate certified power, make a linear interpolation from the Cummins FM-UL certified power curve. Contact Cummins Fire Power or your pump OEM representative to obtain details.

For additional information, click the hyperlinks below.

CFP11E-F10

CFP11E-F20

California ATCM Tier 2 Emission Data
EPA Tier 2 Emission Data

CFP11E-F10 Fire Pump Driver

Type: 4 Cycle; In-Line; 6 Cylinder
Aspiration: Turbocharged, Charge Air Cooled

15 PPM Diesel Fuel													
		Fuel Consumption		D2 Cycle Exhaust Emissions						Exhaust			
				Grams per BHP - HR			Grams per kW - HR			Temperature		Gas Flow	
RPM	BHP	Gal/Hr	L/hr	NMHC+NOx	CO	PM	NMHC+NOx	CO	PM	°F	°C	CFM	L/sec
1470	320	15.1	57.2	3.841	0.746	0.091	5.151	1.000	0.123	946	508	1663	785
1760	373	17.8	67.4							917	492	1943	917
2100	331	16.0	60.6							779	415	1857	877

The emissions values above are based on CARB approved calculations for converting EPA (500 ppm) fuel to CARB (15 ppm) fuel.

300-500 PPM Diesel Fuel													
		Fuel Consumption		D2 Cycle Exhaust Emissions						Exhaust			
				Grams per BHP - HR			Grams per kW - HR			Temperature		Gas Flow	
RPM	BHP	Gal/Hr	L/hr	NMHC+NOx	CO	PM	NMHC+NOx	CO	PM	°F	°C	CFM	L/sec
1470	320	15.1	57.2	4.183	0.746	0.104	5.610	1.000	0.140	946	508	1663	785
1760	373	17.8	67.4							917	492	1943	917
2100	331	16.0	60.6							779	415	1857	877

QSM11 Base Model Manufactured by Cummins Inc.
- Using fuel rating 20091 (combination of FR2912 and FR 2940)

Reference EPA Standard Engine Family: 4CEXL0661AAD

No special options needed to meet current regulation emissions for all 50 states

Test Methods:

EPA/CARB Nonroad emissions recorded per 40CFR89 (ref. ISO8178-1) and weighted at load points prescribed in Subpart E, Appendix A, for Constant Speed Engines (ref. ISO8178-4, D2).

Diesel Fuel Specifications:

Cetane Number: 40-48
Reference: ASTM D975 No. 2-D

Reference Conditions:

Air Inlet Temperature: 25°C (77°F)
Fuel Inlet Temperature: 40°C (104°F)
Barometric Pressure: 100 kPa (29.53 in Hg)
Humidity: 10.7 g/kg (75 grains H_2O/lb) of dry air; required for NOx correctior
Restrictions: Intake Restriction set to a maximum allowable limit for clean filter; Exhaust Back Pressure set to maximum allowable limit.

Tests conducted using alternate test methods, instrumentation, fuel or reference conditions can yield different results.

The data was obtained by using two fuel ratings 2912 (for the 2100 rating) and 2940 (for the 1470 and 1760 ratings). The highest exhaust emissions for either fuel rating are stated above.

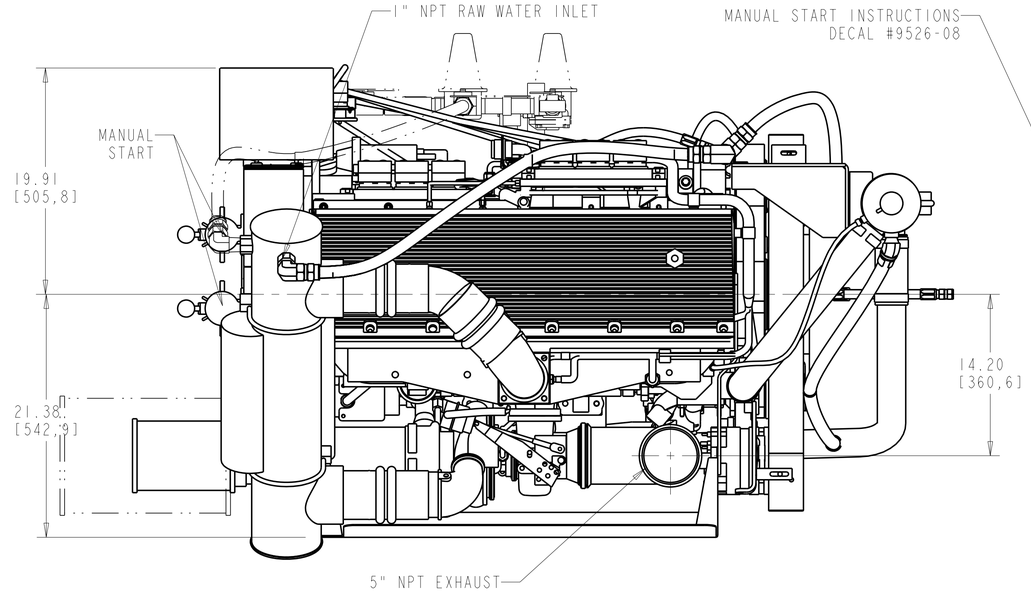

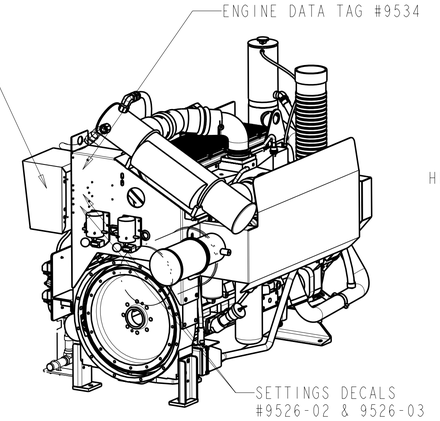

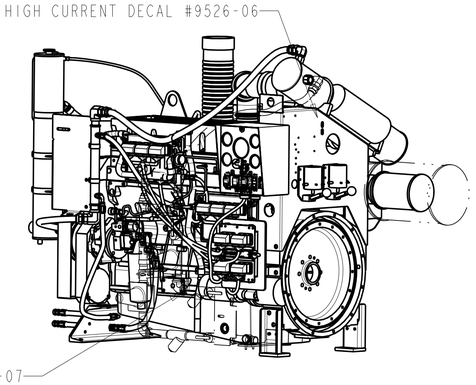

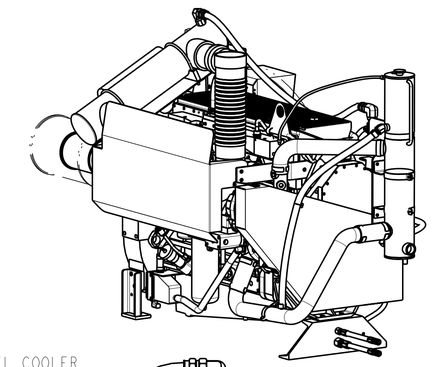

BILL OF MATERIAL			
ITEM	QTY	DESCRIPTION	PART NUMBER
1	1	ASSEMBLY, ENGINE, QSMII, FIREPUMP	8740
2	1	ASSEMBLY, MOUNTING, ENGINE, CFPIIE, FIREPUMP	8773
3	1	ASSEMBLY, HEAT EXCHANGER, CFPIIE, FIREPUMP	8792
4	1	ASSEMBLY, COOLANT HEATER, CFPIIE, FIREPUMP	8950
5	1	ASSEMBLY, CHARGE AIR COOLER, CFPIIE, FIREPUMP	8969
6	1	ASSEMBLY, OPERATORS STATION, CFPIIE, FIREPUMP	9510
7	1	ASSEMBLY, TURBO GUARD, CFPIIE, FIREPUMP	9515
8	1	ASSEMBLY, AIR CLEANER, CFPIIE, FIREPUMP	9518
9	1	ASSEMBLY, SENSOR PACKAGE, FIREPUMP	9572
10	1	ASSEMBLY, FUEL LINE, CFPIIE, FIREPUMP	9594
11	1	ASSEMBLY, PULLEY GUARD, CFPIIE, FIREPUMP	9631
12	1	COOLING LOOP, 1", UPPER HX ORIENTATION, FIREPUMP	9659
13	1	FUEL LINE, #10, 1/2" NPT x 12" LG	10233
14	1	FUEL LINE, #8, 3/8" NPT X 12" LG	10234
15	1	ASSEMBLY, CAC WATER CONNECTION, CFPIIE, FIREPUMP	11048
16	1	ASSEMBLY, MISC PIPING, CFPIIE, FIREPUMP	11049
17	1	ASSEMBLY, SECONDARY ECM, CFPIIE, FIREPUMP	11057
18	1	FLEX, EXHAUST, 5" W/ ELBOW, FIREPUMP	9514

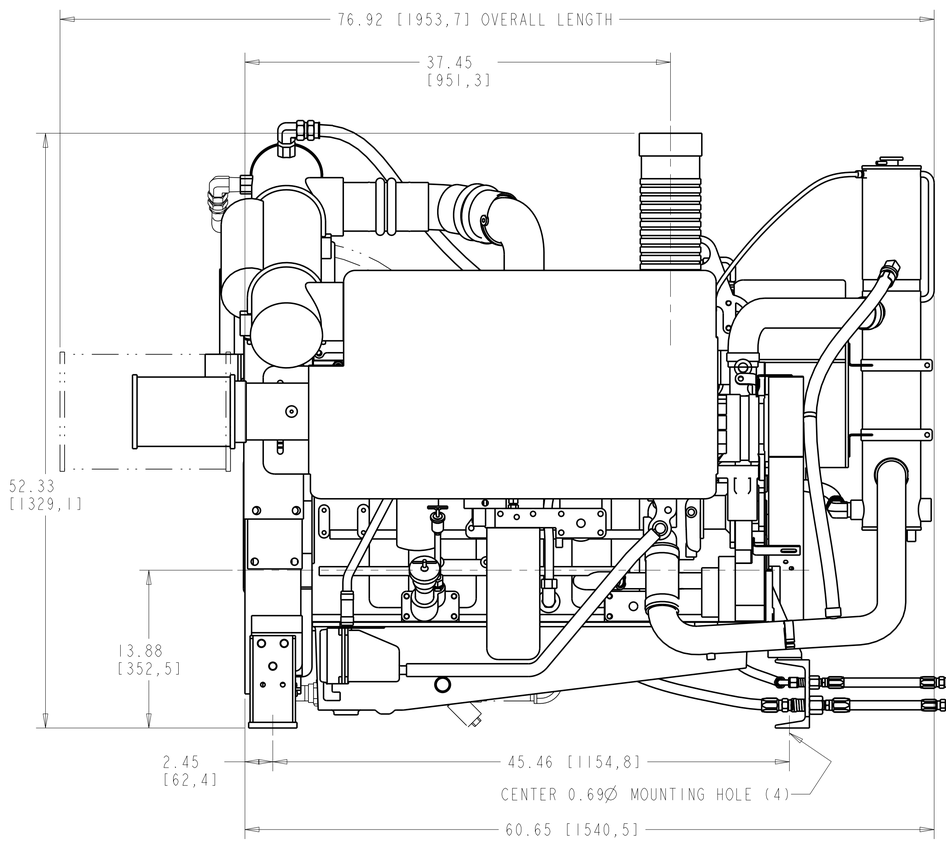

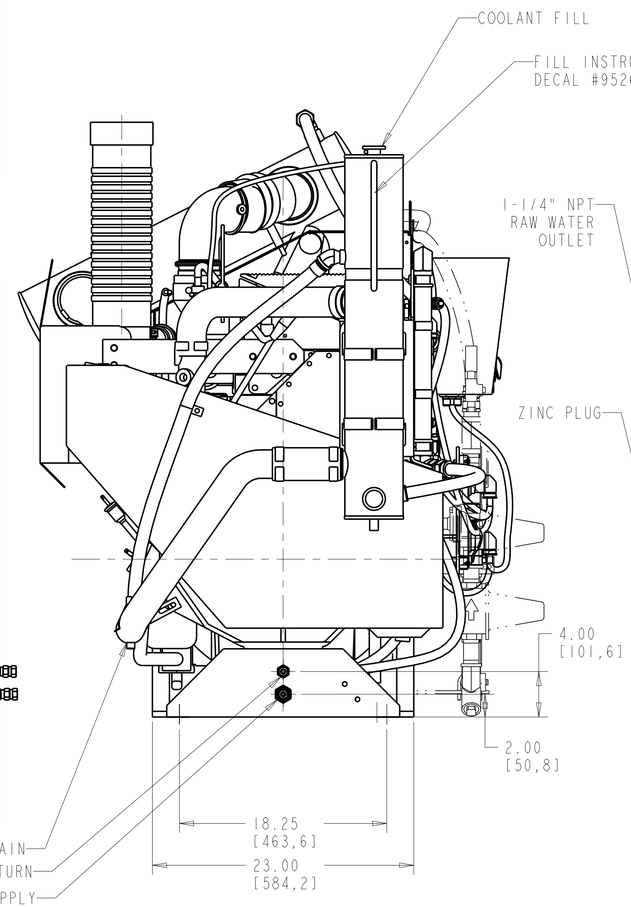

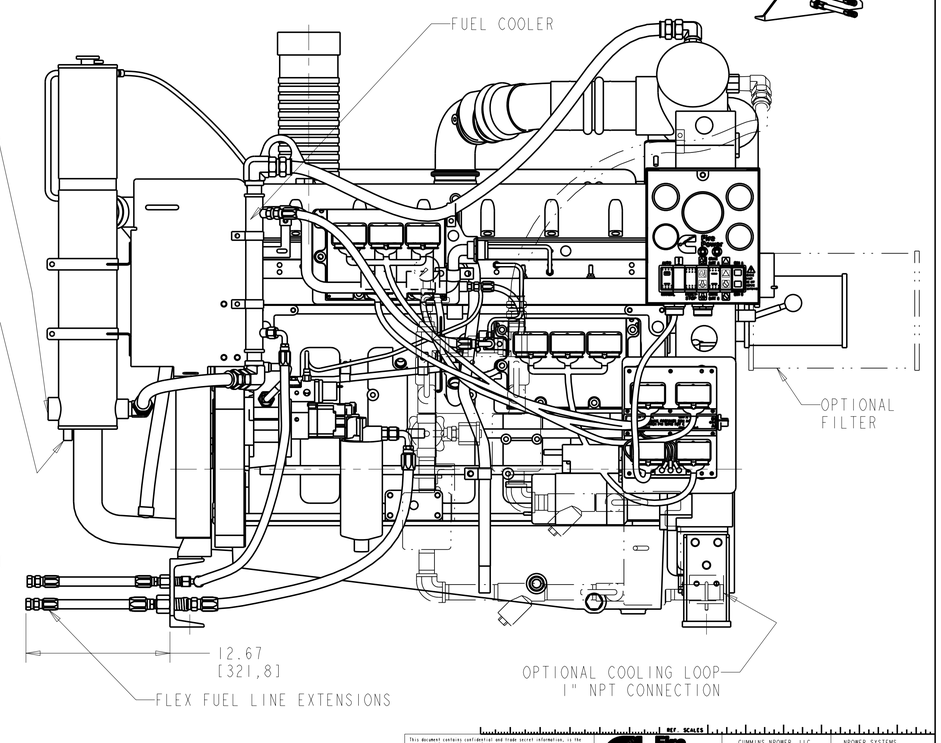

REV	DESCRIPTION OF REVISION	REV BY	DATE
G	REV PER OP STATION, AIR CLEANER	DAVE N	15DEC06

This document contains confidential and trade secret information, is the property of Cummins NPower, LLC and is given to the recipient in confidence. The recipient, by receiving and retaining of the document accepts the obligation to maintain the confidentiality of the information and to notify Cummins NPower, it will not use the document or any copy thereof of the confidential or trade secret information therein, (2) not copy the document, or any part thereof, or make any use of the confidential or trade secret information therein, and (4) upon completion of the recipient's use of the document, or upon demand, return the document, all copies thereof, and all material copied therefrom. COPYRIGHT Cummins NPower, LLC

UNLESS OTHERWISE SPECIFIED ALL DIMENSION TOLERANCES ARE:
ANGULAR DIMENSIONS ± 1°
THIRD ANGLE PROJECTION

IMPERIAL UNITS	METRIC UNITS
MACHINE TOLERANCES .XX ± 0.010 .XXX ± 0.005	MACHINE TOLERANCES X.X ± 0.2 X.XX ± 0.13
FORM TOLERANCES .XX ± 0.010 .XXX ± 0.005	FORM TOLERANCES X.X ± 0.2 X.XX ± 0.13
FOR TOLERANCES .XX ± 0.010 .XXX ± 0.005	FOR TOLERANCES X.X ± 0.2 X.XX ± 0.13

REF. SCALES

Fire Power

CUMMINS NPOWER, LLC
CORPORATE OFFICE
1600 BUERKLE ROAD
WHITE BEAR LAKE, MN
WWW.NPOWER.CUMMINS.COM

NPOWER SYSTEMS
DESIGN CENTER
835 LAWRENCE DRIVE
DEPERE, WISCONSIN

TITLE 1: ASSEMBLY, CFPIIE-F10/20
TITLE 2: FIREPUMP, QSMII

DWG UNITS: IN/LB/S	DRAWN BY: DAVE N		DATE: 22JUN2004
	APPD BY:		DATE:
EST WEIGHT: 2795.000	SCALE: 0.150	DO NOT SCALE / SHEET 1OF1	DRAWING NO: 8712 / REV: G

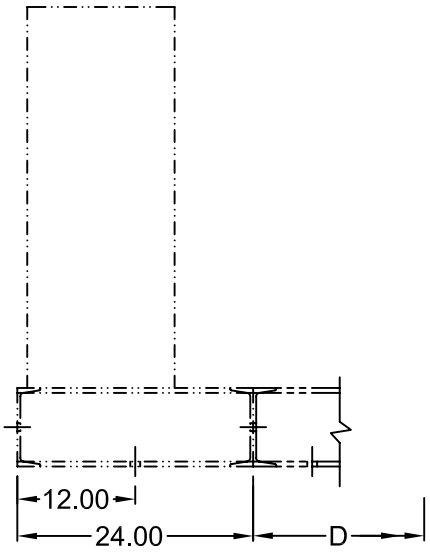

OPTIONAL: BASE MOUNTED CONTROLLER ADD 24" TO "BB" (LENGTH OF BASE) AND 2 ADDITIONAL 1.00 DIA HOLES

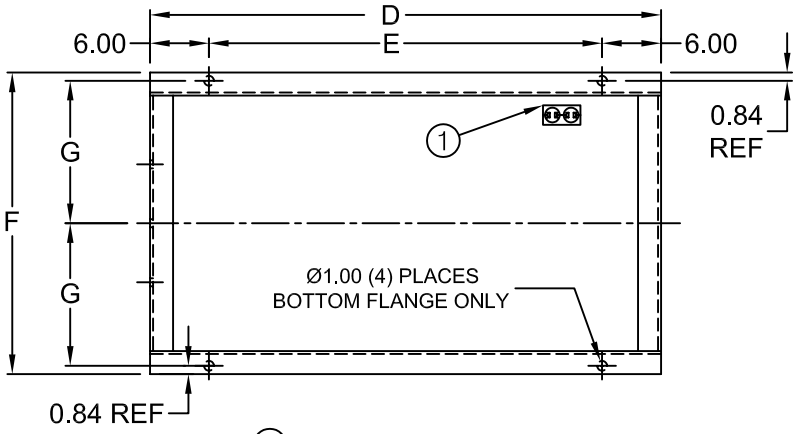

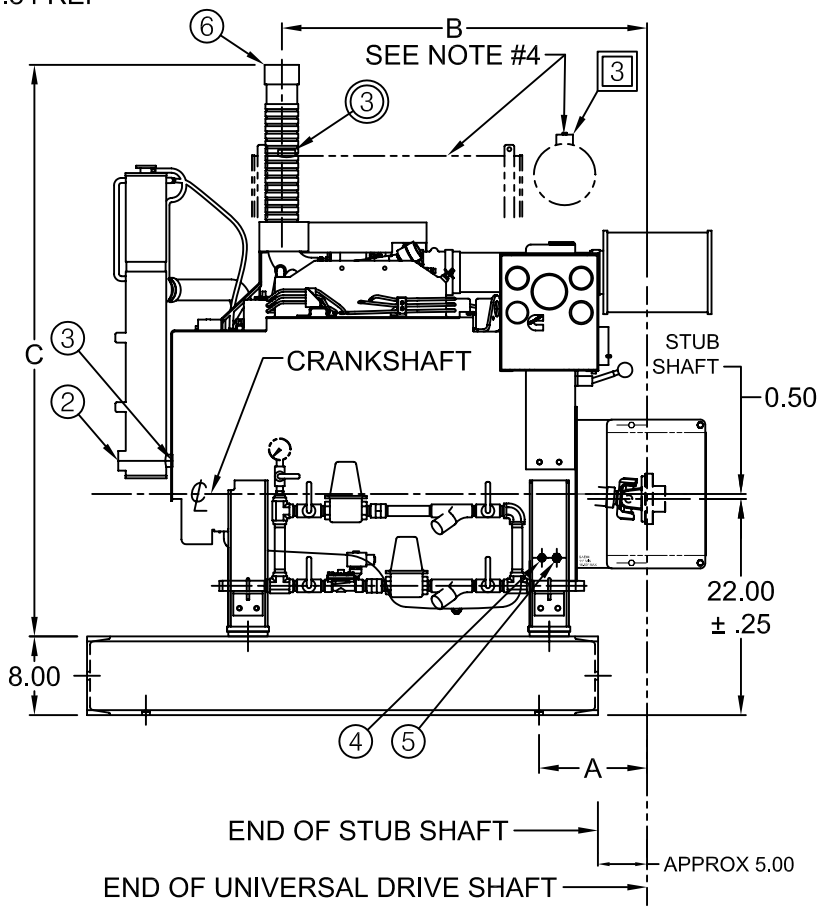

Item No.	Description	CFP33	CFP39/59/6E	CFP83/8E	CFP10/11E
6	Exhaust Outlet Conn.	3" NPTM	3" NPTM	4" NPTM	4"/ 5" NPTM
5	Fuel Supply Conn.	1/4" NPTF	1/4" NPTF	3/8" NPTF	1/2" NPTF
4	Fuel Return Conn	1/4" NPTF	1/4" NPTF	1/4" NPTF	3/8" NPTF
3	CFP11E Raw Water Inlet				1" NPTF
3	CFP8E Raw Water Inlet			1" NPTF	
3	CFP6E Raw Water Inlet		3/4" NPTF		
3	Raw Water Inlet	3/4" NPTF	3/4" NPTF	1" NPTF	1" NPTF
2	Raw Water Outlet	1" NPTF	1" NPTF	1-1/4" NPTF	1-1/4" NPTF
1	Heater Receptacle	120v	120v	120v	120v

See drawing 11537 for drive-shaft alignment instructions

NOTES

1. CFP6E, CFP8E, CFP83-F40, CFP11E REQUIRE UPPER CHARGE AIR HEAT EXCHANGER. RAW WATER PIPING TO JACKET WATER HEAT EXCHANGER IS PROVIDED.

ENGINE	"A"	"B"	"C"	"D"	"E"	"F"	"G"
CFP33-F10,20,30	13.80	31.41	53.69	40	28	24.69	11.50
CFP33-F25,35	14.93	32.14	53.69	40	28	24.69	11.50
CFP39	11	27.70	57.67	42.50	30.50	30.69	14.50
CFP59	11	37.15	57.67	52	40	30.69	14.50
CFP6E	11	37.15	57.67	52	40	30.69	14.50
CFP83	11	36.28	60.39	60	48	30.69	14.50
CFP8E	11	36.28	60.39	60	48	30.69	14.50
CFP11E	12.40	47.70	52.12	66	54	30.69	14.50

REV	DESCRIPTION OF REVISION	BY	DATE
A	REV PER "A,B,C" DIMENSION	DAVE N	22SEP2005

ALL RIGHTS TO MANUFACTURE, COPY OR DISPOSE OF THIS DRAWING OR ITS CONTENTS ARE RESERVED UNLESS OTHERWISE SPECIFIED IN WRITING BY CUMMINS NPOWER, LLC

UNLESS OTHERWISE NOTED
–
ALL DIMENSIONS ARE IN INCHES
–
APPLY MACHINE TOLERANCES
.X = ± 0.06
.XX = ± 0.010
.XXX = ± 0.001
–
APPLY WELDED TOLERANCES
.X = ± 0.25
.XX = ± 0.12
.XXX = ± 0.06

Fire Power

CUMMINS NPOWER
CORPORATE OFFICE
1600 BUERKLE ROAD
WHITE BEAR LAKE, MN
WWW.NPOWER.CUMMINS.COM

CUMMINS FIRE POWER
DESIGN CENTER
875 LAWRENCE DRIVE
DEPERE, WISCONSIN
WWW.CUMMINSFIREPOWER.COM

DWG SCALE: 1/20	DRAWN BY: DAVE N	DATE: 20JAN2005
PLOT SCALE:	APPD BY:	DATE:

DESCRIPTION
GENERAL LAYOUT, SHORT FRAME

REFERENCE:
ALL MODELS

DRAWING NUMBER:
GEN_SHORT_ALL

APPENDIX 3.2-E

MODELING FILES (COMPACT DISK)

APPENDIX 3.3

FPUD WATER AGREEMENT

OPTION AGREEMENT

This Option Agreement (this "Agreement"), dated as of December 10, 2007, is between **FALLBROOK PUBLIC UTILITY DISTRICT**, a public utility district, with offices and principal place of business located at 990 East Mission Road, Fallbrook, California 92028 ("Optionor"), and **ORANGE GROVE ENERGY, L.P.**, a Delaware limited partnership, with offices and a principal place of business located at 1900 East Golf Road, Suite 1030, Schaumburg, Illinois 60173 ("Optionee"). Optionor and Optionee shall sometimes be referred to herein individually as a "Party" and collectively as the "Parties".

RECITALS

A. Optionee is a Delaware limited partnership that currently is developing a power plant project (the "Project") outside of the District's service area. As part of this Project, Orange Grove requires recycled water for cooling water, and other activities within the boundary of the Project.

B. Optionor is a public agency treating and serving water, recycled water and wastewater within a 28,000 acre service area in northwestern San Diego County. Optionor owns and operates a Water Reclamation Facility which treats wastewater and serves tertiary treated recycled water ("Recycled Water") within the Optionor's service area and by contract to customers outside the district.

C. Orange Grove has requested to purchase up to 45 acre-feet per year of recycled water from the District. District will deliver into trucks supplied by Orange Grove said recycled water at the District's wastewater treatment plant #1 site ("Delivery Site") near the intersection of Ammunition Road and Alturus Road for a term of twenty-five (25) years and two (2) months. Orange Grove has determined that the 45 acre-feet of recycled water allows for an adequate supply of cooling water for the Project.

D. Optionor has agreed to grant to Optionee, and Optionee has agreed to acquire from Optionor, an exclusive option to purchase Recycled Water on the terms and conditions set forth in the Recycled Water Agreement attached as Exhibit A (the "Recycled Water Agreement") for the purpose of constructing, operating, using and maintaining the Project (the "Option"), on the terms and conditions set forth in this Agreement.

NOW, THEREFORE, for good and valuable consideration, the receipt and sufficiency of which are hereby acknowledged, Optionor and Optionee hereby agree as follows:

1. Definitions. The following terms, as used in this Agreement, shall have the definitions set forth below:

"*Agreement*" shall have the meaning set forth in the preamble to this Agreement.

"*Applicable Laws*" shall mean any and all applicable laws, ordinances, codes, statutes, rules, regulations, orders, decisions, decrees, edicts, directives, permits and approvals issued by any Governmental Authority.

"*Business Day*" shall mean any day other than (a) a Saturday or Sunday, or (b) a day on which banking and savings and loan institutions in San Diego, California are authorized or obligated by law or executive order to be closed.

"*Commencement Date*" shall have the meaning set forth in Section 6(a) of this Agreement.

"*Delivery Site*" shall have the meaning set forth in Recital C of this Agreement

"*Effective Date*" shall have the meaning set forth in Section 2 of this Agreement.

"*Exercise Date*" shall have the meaning set forth in Section 7(a) of this Agreement.

"*Option*" shall have the meaning set forth in Recital D of this Agreement.

"*Option Consideration*" shall have the meaning set forth in Section 4(a) of this Agreement.

"*Optionee*" shall have the meaning set forth in the preamble to this Agreement.

"*Optionee Default*" shall have the meaning set forth in Section 14(a) of this Agreement.

"*Optionor*" shall have the meaning set forth in the preamble to this Agreement.

"*Optionor Default*" shall have the meaning set forth in Section 13(a) of this Agreement.

"*Party*" or "*Parties*" shall have the meaning set forth in the preamble to this Agreement.

"*Project*" shall have the meaning set forth in Recital A of this Agreement.

"*Recycled Water Agreement*" shall have the meaning set forth in Recital D of this Agreement.

"*Term*" shall have the meaning set forth in Section 6(a) of this Agreement.

2. Effectiveness of Agreement. This Agreement shall be effective as of the time that this Agreement shall have been duly executed by both Optionor and Optionee. The date that this Agreement shall have become effective in accordance with this Section 2 shall be referred to herein as the "Effective Date".

3. Grant of Option.

(a) Optionor hereby grants to Optionee, and Optionee hereby acquires from Optionor, the Option, on the terms and conditions set forth in this Agreement.

(b) Upon Optionee's exercise of the Option in accordance with this Agreement, Optionor and Optionee shall execute the Recycled Water Agreement.

4. Option Consideration.

(i) Optionee shall have delivered to Optionor written notice of Optionee's exercise of the Option which notice shall be effective on a date set forth therein and no later than the Expiration Date; and

(ii) Optionee shall have delivered to Optionor a signed copy of the Recycled Water Agreement for Optionor's execution.

8. Optionee Covenants. Optionee agrees for the benefit of Optionor that:

(a) It shall not seek to obtain Recycled Water from any other third party during the Term; and

(b) It agrees to submit the Recycled Water Agreement and description of the facilities contained therein in its Small Power Plant Exemption application to the California Energy Commission.

9. Optionor Covenants. Optionor agrees for the benefit of Optionee that:

(a) It shall reserve the capability to provide Recycled Water to Optionee in the amounts contemplated under the Recycled Water Agreement for the term contemplated under the Recycled Water Agreement; and

(b) Upon exercise of the Option by the Optionee, it shall execute the Recycled Water Agreement within three (3) Business Days after the Exercise Date.

10. Optionor's Representations and Warranties. Optionor hereby represents and warrants, as of the Effective Date and the Exercise Date:

(a) Organization; Standing; Power; Authority. Optionor is a public utility district, duly organized and existing in the State of California, and has the requisite right, power and authority to execute, deliver and perform the terms and conditions of this Agreement and to consummate the transactions contemplated in the Agreement. Except for actions that may be necessary to satisfy the San Diego Regional Water Quality Control Board, Optionor has taken all corporate action necessary to authorize the execution, delivery and performance of the terms and conditions of the Agreement. The individual executing the Agreement has been duly authorized to do so. The performance by Optionor of Optionor's obligations and responsibilities under the Agreement will not violate or constitute a default under the terms and provisions of Optionor's bylaws or any material agreement, document or instrument to which Optionor is a party. All proceedings required to be taken by or on behalf of Optionor to authorize Optionor to execute, deliver and perform the terms and conditions of the Agreement have been duly and properly taken. No further consent of any person or entity, except possibly the San Diego Regional Water Quality Control Board, is required in connection with the execution and delivery of, or performance by Optionor of its obligations under the Agreement

(b) Enforceability. The Agreement constitute or shall constitute the valid and binding obligation of Optionor, enforceable against Optionor in accordance with their terms, except as such enforcement may be limited by (i) the effect of bankruptcy, insolvency, reorganization, receivership, conservatorship, arrangement, moratorium or other Applicable Laws affecting or relating to the rights of creditors generally, or (ii) the rules governing the availability of specific performance, injunctive relief or other equitable remedies and general principles of equity, regardless of whether considered in a proceeding in equity or at law.

11. Optionee's Representations and Warranties. Optionee hereby represents and warrants, as of the Effective Date and the Exercise Date:

(a) Organization; Standing; Power; Authority. Optionee is a Delaware limited partnership duly organized and existing in the State of Delaware, and has the requisite right, power and authority to execute, deliver and perform the terms and conditions of this Agreement, and to consummate the transactions contemplated in this Agreement. Optionee has taken all corporate action necessary to authorize the execution, delivery and performance of the terms and conditions of the Agreement. The individual executing the Agreement has been duly authorized to do so. The performance by Optionee of Optionee's obligations and responsibilities under the Agreement will not violate or constitute a default under the terms and provisions of Optionee's partnership agreement or any material agreement, document or instrument to which Optionee is a party or by which Optionee is bound or affected. All proceedings required to be taken by or on behalf of Optionee to authorize Optionee to execute, deliver and perform the terms and conditions of the Agreement have been duly and properly taken. No further consent of any person or entity is required in connection with the execution and delivery of, or performance by Optionee of its obligations under the Agreement.

(b) Enforceability. The Agreement constitute or shall constitute the valid and binding obligation of Optionee, enforceable against Optionee in accordance with their terms, except as such enforcement may be limited by (i) the effect of bankruptcy, insolvency, reorganization, receivership, conservatorship, arrangement, moratorium or other Applicable Laws affecting or relating to the rights of creditors generally, or (ii) the rules governing the availability of specific performance, injunctive relief or other equitable remedies and general principles of equity, regardless of whether considered in a proceeding in equity or at law.

12. Conditions Precedent to Exercise of Option. All of the following shall be conditions precedent to Optionee's exercise of the Option in accordance with this Agreement (any of which conditions Optionor may waive in its sole discretion):

(a) Optionor shall have received the Option Consideration; and

(b) No Optionee Default shall have occurred, and Optionee shall have performed, in all material respects, all covenants and obligations to be performed by Optionee under this Agreement.

13. Optionor Default.

(a) The occurrence of any of the following shall constitute an "Optionor Default" under this Agreement:

(i) The failure to perform any obligation or responsibility of Optionor set forth in this Agreement, provided that Optionor does not cure such failure within thirty (30) days after delivery of written notice of such failure to Optionor or, if such failure is not capable of being cured within said thirty (30) day period, then Optionor does not commence to cure such failure within thirty (30) days after delivery of written notice of such failure to Optionor or thereafter does not diligently prosecute such cure to completion.

(b) Upon the occurrence of any Optionor Default, Optionee shall have the right to pursue any and all remedies at law or in equity that are available to Optionee as a result of such Optionor Default, including but not limited to the right to pursue injunctive relief or specific performance of this Agreement and the Recycled Water Agreement.

14. Optionee Default.

(a) The occurrence of any of the following shall constitute an "Optionee Default" under this Agreement:

(i) The failure to pay the Option Consideration when due; or

(ii) The failure to perform any other obligation or responsibility of Optionee set forth in this Agreement, provided that Optionee does not cure such failure within thirty (30) days after delivery of written notice of such failure to Optionee or, if such failure is not capable of being cured within said thirty (30) day period, then Optionee does not commence to cure such failure within thirty (30) days after delivery of written notice of such failure to Optionee or thereafter does not diligently prosecute such cure to completion.

(b) Upon the occurrence of any Optionee Default, Optionor shall have the right to pursue any and all remedies at law or in equity that are available to Optionor as a result of such Optionee Default.

15. Assignment. Except as otherwise permitted herein, neither Party shall assign any right, title, interest or obligation under this Agreement to any person without the prior written consent of the other Party, which consent shall not be unreasonably withheld, conditioned or delayed. In connection with Optionee's collateral assignment of this Agreement to

16. Waiver of Performance. Either Party may waive the satisfaction or performance of any terms or conditions of this Agreement that have been included in this Agreement for its benefit, so long as such waiver is in writing, specifies the waived term or condition and delivered to the other Party.

17. Notices. All notices under this Agreement shall be in writing and shall be effective upon actual receipt whether delivered by personal delivery, legible facsimile or reputable overnight courier or sent by United States registered or certified mail, return receipt requested, postage prepaid, addressed to the Parties as follows:

If to Optionor:
Fallbrook Public Utility District
P.O. Box 2290
Fallbrook, California, 92088-2290
Attention: General Manager
Telephone: (760) 728-1125
Facsimile: (760) 728-5943

If to Optionee:
Orange Grove Energy, L.P.
1900 East Golf Road, Suite 1030
Schaumburg, Illinois 60173
Attention: Vice President of Asset Management
Telephone: (847) 908-2800
Facsimile: (847) 908-2888

With a copy to:
Morgan, Lewis & Bockius LLP
300 South Grand Avenue, Suite 220
Los Angeles, CA 90071-3132
Attention: Richard A. Shortz
Telephone: (213) 612-2526
Facsimile: (213) 612-2501

18. Amendments. This Agreement may be amended only by written agreement signed by both of the Parties.

19. Time of the Essence. Time and each of the terms and conditions of this Agreement are hereby expressly made of the essence.

20. Counterparts. This Agreement may be executed in counterparts, each of which shall be deemed an original and all of which shall constitute one and the same agreement.

21. Governing Law and Venue. This Agreement shall be governed by the laws of the State of California, without reference to its choice of law provisions. By execution and delivery of this Agreement, each of Optionor and Optionee hereby irrevocably and unconditionally accepts and submits to the personal jurisdiction of said courts.

22. Attorneys' Fees and Costs. In any action between the Parties seeking the enforcement of any of the terms or conditions of this Agreement, the prevailing Party in such action shall

delivery of this Agreement, each of Optionor and Optionee hereby irrevocably and unconditionally accepts and submits to the personal jurisdiction of said courts.

22. Attorneys' Fees and Costs. In any action between the Parties seeking the enforcement of any of the terms or conditions of this Agreement, the prevailing Party in such action shall be awarded, in addition to any damages or equitable relief, its reasonable attorney's fees and costs.

23. Prior Agreements. This Agreement supersedes any and all oral or written agreements between the Parties which are prior in time to this Agreement. Neither Optionor nor Optionee shall be bound by any prior understanding, agreement, promise, representation or stipulation, express or implied, not specified herein.

24. Further Assurance. Optionee and Optionor agree to execute all documents and instruments reasonably required in order to consummate the transactions contemplated in this Agreement.

25. Successors and Assigns. This Agreement shall be binding upon and shall inure to the benefit of the successors and assigns of the Parties.

26. Severability. If any portion of this Agreement is held to be unenforceable by a court of competent jurisdiction, the remainder of this Agreement shall remain in full force and effect. In the event any such provision of this Agreement is so held unenforceable, the Parties shall promptly renegotiate in good faith new provisions to restore this Agreement as near as possible to its original intent and effect.

27. Construction of Agreement. The language in all parts of this Agreement shall be in all cases construed simply according to its fair meaning and not strictly for or against either of the Parties. The language of this Agreement and all documents and instruments referred to in this Agreement have been prepared, examined, negotiated and revised by each Party and its legal counsel, and no implication shall be drawn and no provision shall be construed against any Party by virtue of the purported identity of the drafter of this Agreement. The section headings of this Agreement are for purposes of reference only and shall not be used for limiting or interpreting the meaning of any section of this Agreement. When required by the context, whenever the singular is used in this Agreement, the same shall include the plural, and the plural shall include the singular, the masculine gender shall include the feminine and neuter genders, and vice versa. As used in this Agreement, the term "Optionor" shall include the respective successors and assigns of Optionor, and the term "Optionee" shall include the successors and permitted assigns of Optionee.

28. No Partnership or Joint Venture. Optionor and Optionee shall not be partners or joint venturers with each other and nothing in this Agreement shall create or be deemed to create any partnership or joint venture between Optionor and Optionee.

[Signatures appear on following page.]

IN WITNESS WHEREOF, Optionor and Optionee hereby execute this Agreement as of the date first above written.

OPTIONOR

FALLBROOK PUBLIC UTILITY DISTRICT,
a public utility district

By: _____
Name: Keith Lewinger
Title: G.M.

OPTIONEE

ORANGE GROVE ENERGY, L.P.., a Delaware limited partnership

By: _____
Name: Stephen J. Thome
Title: Vice President

(a) Optionee shall pay to Optionor the sum of [redacted] in immediately available funds (the "Option Consideration"), as consideration for the Option.

(b) All Option Consideration paid to or for the benefit of Optionor shall be refunded by Optionor to Optionee in the event of an Optionor Default, as defined in Section 13.

5. Deposit of Option Consideration into Optionor's Account. No later than five (5) Business Days after the Effective Date, Optionee shall deposit the Option Consideration into the following Optionor's account:

[redacted]

6. Term of Option.

(a) The term of the Option ("Term") shall commence as of the date that Optionor receives the Option Consideration. The date upon which the Term actually commences shall be referred to herein as the "Commencement Date".

(b) The Term shall expire as of 5:00 p.m. Pacific time on the date that is one (1) year after the Commencement Date (the "Expiration Date", as may be extended pursuant to Section 6(c)), provided, however, that before the Expiration Date, the Term shall terminate immediately upon the occurrence of any of the following: (i) Optionee's exercise of the Option in accordance with this Agreement, (ii) the occurrence of any Optionee Default, or (iii) Optionee's delivery of written notice to Optionor that Optionee is declining to exercise the Option. In the event that the Expiration Date occurs as a result of the event set forth in this Section 6(b)(iii), Optionee's sole liability to Optionor shall be the forfeit of the Option Consideration.

(c) At Optionee's election, the Term may be extended for one additional one (1) year period upon the payment of an [redacted]n immediately available funds by Optionee to Optionor at any time prior to the one year anniversary of the Commencement Date.

7. Exercise of Option.

(a) Optionee shall be conclusively deemed to have irrevocably exercised the Option, without condition or qualification, upon the occurrence of all of the following (the "Exercise Date"):

EXHIBIT A TO OPTION AGREEMENT
RECYCLED WATER AGREEMENT

[See attached.]

ORANGE GROVE ENERGY, L.P. RECYCLED WATER AGREEMENT

This Recycled Water Agreement (this "Agreement") is entered into by and between the **FALLBROOK PUBLIC UTILITY DISTRICT**, a public utility district organized and operating pursuant to California Public Utility Code §15501 et seq. (hereinafter "District") and **ORANGE GROVE ENERGY** (hereinafter referred to as "Orange Grove"). This Agreement shall become effective execution by the parties.

R-E-C-I-T-A-L-S

A. Orange Grove is a limited partnership that currently is developing a power plant project (the "Project") outside of the District's service area. As part of this Project, Orange Grove requires recycled water for cooling water, and other activities within the boundary of the Project.

B. The District is a public agency treating and serving water, recycled water and wastewater within a 28,000 acre service area in northwestern San Diego County. The District owns and operates a Water Reclamation Facility which treats wastewater and serves tertiary treated recycled water within the District's service area and by contract to customers outside the District.

C. Orange Grove has requested to purchase up to 45 acre-feet per year of recycled water from the District. District will deliver into trucks supplied by Orange Grove said recycled water at the District's wastewater treatment plant #1 site ("Delivery Site") near the intersection of Ammunition Road and Alturus Road for a term of twenty-five (25) years and two (2) months. Orange Grove has determined that the 45 acre-feet of recycled water allows for an adequate supply of cooling water for the Project.

D. The District has agreed to sell tertiary recycled water to Orange Grove in accordance with all terms of this Agreement.

E. Orange Grove has agreed to purchase the recycled water from the District in accordance with all terms of this Agreement.

F. The term of this Agreement is twenty-five (25) years and two (2) months from the Agreement Start Date (as defined below).

C-O-V-E-N-A-N-T-S

1. Sale of Recycled Water by District. The District agrees to sell and Orange Grove agrees to purchase, commencing on the Agreement Start Date, no less than 45 acre feet per year of tertiary recycled water for a

term of 25 years and 2 months. The 45 acre feet per year shall be purchased on a take or pay basis on an annual basis commencing on the Agreement Start Date. This payment for the first 45 acre feet each year is not pro-ratable and shall be paid on the annual anniversary of the Agreement Start Date in advance of the next 12 month period during the entire term of this Agreement. Payment for the first year's 45 acre feet shall be made upon the Agreement Start Date and on an annual basis on the anniversary date thereafter. The last annual payment shall be pro-rated for 2 months. A late charge equivalent to one and one half percent (1½ %) per month shall be levied for each day (pro rated) the payment for the first 45 acre feet is paid following the due date (annual anniversary date of the Agreement Start Date). Any recycled water delivered in excess of 45 acre feet in any year shall be billed in the month following delivery.

2. Fees Paid to District and the Price For Recycled Water and Future Price Increases. The commodity price for the recycled water sold by the District to Orange Grove shall be at the rate set by the District Board of Directors from time to time, in its sole discretion. The commodity rate for customers inside the District as of October 15, 2007 is $1.78 per thousand gallons. The District makes no guarantee about future price increases and intends to sell recycled water to Orange Grove at a recycled water rate based on the rate established for customers inside the District's formal boundaries. The recycled water commodity rate to be paid by Orange Grove shall include a capacity charge/premium charge for payment to acquire new capacity equal to [redacted] of the commodity rate for customers inside the District. Orange Grove's total commodity rate shall therefore be [redacted] of the commodity rate paid by customers inside the District's boundaries. Orange Grove will also pay a monthly system access charge for the meter which is set for their use at the Delivery Site, currently $373.50 per month for a 6-inch meter. This monthly system access charge is subject to increases in the future and shall be at the rate set by the District Board of Directors, in its sole discretion and is payable regardless of the quantity of recycled water delivered. The monthly system access fee for each 12 month period shall be paid in advance on the Agreement Start Date of this agreement and on the anniversary of the Agreement Start Date thereafter. A late charge equivalent to one and one half percent (1½ %) per month shall be levied for each day (pro rated) the fee is paid following the due date (annual anniversary date of this agreement).

In addition to the price for the recycled water set by the District, an additional annual independent fixed fee of [redacted] for the guarantee of a long term supply as well as out of District transfer shall be paid by Orange Grove to the District above and beyond the rate charged for the recycled water. Both parties agree that this [redacted] annual fee is an independent fee paid to District for the guarantee of a long term supply and is payable

on the Agreement Start Date of this agreement and on the anniversary date of the Agreement Start Date thereafter. This [redacted] payment is not pro-ratable and shall be paid upon execution of this agreement and on the annual anniversary of this agreement in advance of the next 12 month period during the entire term of this Agreement. A late charge equivalent to one and one half percent (1½ %) per month shall be levied for each day (pro rated) the fee is paid following the due date (annual anniversary date of the Agreement Start Date).

3. Responsibility and Indemnity for Recycled Water after Delivery. Orange Grove recognizes that by entering into this Agreement, Orange Grove is solely responsible for the use and transportation of all recycled water once it is supplied to Orange Grove at the Point of Delivery, which is defined as Orange Grove water trucks at the District's Wastewater Treatment Plant #1 site near the intersection of Alturas Road and Ammunition Road. Once the recycled water is delivered at the Point of Delivery, the District shall have no liability for the transportation and use of the recycled water by Orange Grove. All liability for the transportation and use of the recycled water after receipt at the Delivery Site shall be assumed by Orange Grove. Orange Grove agrees to indemnify and hold the District harmless and defend the District and its directors, officers, employees, agents, and representatives from and against any and all claims, causes of action, suits, actions, damages, losses, costs, fees, expenses, fines, and penalties, of whatever type or nature, including all costs of defense and attorney fees, caused in whole or in part, or claimed to be caused in whole or in part by the action, inaction, passive or active negligence, or intentional misconduct of Orange Grove in the receipt, use and transportation of the recycled water after receipt at the Delivery Site

   For acts in the exclusive control of the District and occurring prior to delivery to Orange Grove, the District agrees to indemnify and hold Orange Grove harmless and defend Orange Grove and its directors, officers, employees, agents, and representatives from and against any and all claims, causes of action, suits, actions, damages, losses, costs, fees, expenses, fines, and penalties, of whatever type or nature, including all costs of defense and attorney fees, caused in whole or in part, or claimed to be caused in whole or in part by the action, inaction, passive or active negligence, or intentional misconduct of the District with respect to the District's obligations under this Agreement.

4. Quality of Recycled Water Delivered by District. District agrees that all recycled water sold to Orange Grove shall meet all requirements of the State of California for Title 22 tertiary treated recycled water. District shall be responsible for ensuring that all recycled water delivered or sold to Orange Grove at the Delivery Site meets all recycled water standards as defined by California Title 22.

5. Term of Agreement and Termination. Unless either of the parties is in breach of any term or provision of this Agreement, this Agreement shall remain in full force and effect for a term of 25 years and 2 months after the Agreement Start Date. Agreement Start Date shall commence after the completion of the New Facilities (as defined below) or four months after the execution of this agreement, whichever occurs last. Orange Grove's obligations to purchase the recycled water under this Agreement shall commence on the Agreement Start Date and continue for a period of 25 years and 2 months thereafter. Regardless of whether Orange Grove takes delivery of less than 45 acre feet in any year, Orange Grove must still pay for a minimum of 45 acre feet each year and pay system access fees for 12 months and the independent annual fee of [redacted] annually not later than each anniversary of the agreement and any and all fees owed for recycled water used in that year by Orange Grove. Orange Grove's choosing not to take delivery of recycled water for any period of time whatsoever, does not terminate the agreement nor the requirement to pay for a minimum of 45 acre feet of recycled water for the remaining years of the agreement nor the obligation to pay the monthly service charges nor the independent fee each year for the full 25 years and 2 months of the term of this agreement. Failure to pay the independent annual fee within 30 calendar days of the anniversary of the Agreement Start Date shall be construed as a breach of this agreement by Orange Grove and subject the agreement to cancellation by the District in its sole discretion, as well as remedies for breach in paragraph 6 below.

6. Remedies for Breach. In the event of a breach of any term or provision of this Agreement by either party, both parties shall have all rights and remedies granted by California law. Nothing contained in this Agreement shall be construed as limiting any of the rights and remedies of either parties upon any breach of a term or provision of this Agreement.

7. Installation of Improvements, Priority of Use. As a material term of this Agreement, Orange Grove shall pay for all new capital facilities that will be necessary to fill Orange Grove's trucks at the Delivery Site. These improvements include at a minimum, but are not limited to approximately 600 feet of 24' wide asphalt road way, water handling facilities including 6-inch meter necessary to fill the trucks, concrete loading pad, and other ancillary appurtenances as may be required by the District in its sole discretion (collectively, the "New Facilities"). It is anticipated that the trucks transporting the recycled water for Orange Grove will be able to turn within a 100' cul de sac, and that a 24' wide road would provide sufficient width for two trucks to pass each other coming in or out of the site. These improvements are currently estimated to cost [redacted] however in no case are the costs for the improvements limited to this amount. The District shall be responsible for

constructing the New Facilities. The District shall construct the New Facilities within four (4) months after the date of this Agreement. All improvements determined necessary by the District must be completed prior to commencing deliveries, and no hauling will be allowed until all necessary regulatory permits (if any) are acquired by Orange Grove. Within three (3) working days after execution of this agreement, Orange Grove shall deposit with the District the engineer's estimate of the aforementioned New Facilities. Such deposits shall solely be used for the costs of constructing the New Facilities. Upon completion of construction of the New Facilities, any amounts remaining will be returned to Orange Grove within thirty (30) days after the completion of construction and payment of all invoices relating to construction. If construction costs exceed the amount deposited by Orange Grove, Orange Grove shall pay such additional costs after being notified by the District of any such additional costs. Orange Grove acknowledges and agrees that the District shall be entitled to use the New Facilities. The District agrees that no third party shall have any right to use such New Facilities if such use would interfere in any way with Orange Grove's access. The District shall notify Orange Grove of any proposed third party use and obtain Orange Grove's acknowledgment and agreement that the proposed used will not interfere with Orange Grove's access. Such agreement shall not be unreasonably withheld. The Parties agree that the District shall own the New Facilities and the District agrees to pay for on-going maintenance and any further improvements of the New Facilities. The District shall construct the New Facilities and the Delivery Site to include a meter and secure access to the spigot.

8. Transportation Route between Delivery Site and Orange Grove's Power Plant. The parties agree that Merida Drive is a heavily traveled residential street in the vicinity of the Delivery Site. The parties also agree that local residents would not approve of additional truck traffic on Merida Drive. Therefore, if an Orange Grove water truck chooses to travel on Merida Drive, either to or from the Delivery Site, then Orange Grove agrees to pay an extra fee to the District of $1,000 per occurrence. A time/date stamped photograph of any such occurrence shall be sufficient evidence to require the $1,000 payment. Such fees shall be due and payable within 30 days of presentation of evidence of travel on Merida Drive by Orange Grove trucks.

9. Completion of CEQA Review and Other Permits Orange Grove shall be solely responsible for complying with all California Environmental Quality Act (CEQA) and National Environmental Protection Act (NEPA) requirements necessary for Orange Grove's receipt, use and transportation of the recycled water under this agreement, if applicable. Orange Grove shall also be solely responsible for any and all permits required under any state, federal or local law for its receipt, use and

transportation of recycled water under this agreement. No recycled water will be delivered to Orange Grove until all CEQA and NEPA certifications are complete and all necessary permits have been obtained by Orange Grove.

10. District's Representations and Warranties. District hereby represents and warrants, as of the Effective Date and the Exercise Date:

(a) Organization; Standing; Power; Authority. District is a public utility district, duly organized and existing in the State of California, and has the requisite right, power and authority to execute, deliver and perform the terms and conditions of this Agreement and to consummate the transactions contemplated in the Agreement. Except for actions that may be necessary to satisfy the San Diego Regional Water Quality Control Board, District has taken all corporate action necessary to authorize the execution, delivery and performance of the terms and conditions of the Agreement. The individual executing the Agreement has been duly authorized to do so. The performance by District of District's obligations and responsibilities under the Agreement will not violate or constitute a default under the terms and provisions of District's bylaws or any material agreement, document or instrument to which District is a party or by which District. All proceedings required to be taken by or on behalf of District to authorize District to execute, deliver and perform the terms and conditions of the Agreement have been duly and properly taken. No further consent of any person or entity, except possibly the San Diego Regional Water Quality Control Board, is required in connection with the execution and delivery of, or performance by District of its obligations under the Agreement.

(b) Enforceability. The Agreement constitute or shall constitute the valid and binding obligation of District, enforceable against District in accordance with their terms, except as such enforcement may be limited by (i) the effect of bankruptcy, insolvency, reorganization, receivership, conservatorship, arrangement, moratorium or other Applicable Laws affecting or relating to the rights of creditors generally, or (ii) the rules governing the availability of specific performance, injunctive relief or other equitable remedies and general principles of equity, regardless of whether considered in a proceeding in equity or at law.

11. Orange Grove's Representations and Warranties. Orange Grove hereby represents and warrants, as of the Effective Date and the Exercise Date:

(a) Organization; Standing; Power; Authority. Orange Grove is a Delaware limited partnership duly organized and existing in the State of Delaware, and has the requisite right, power and authority to execute, deliver and perform the terms and conditions of this Agreement, and to consummate the transactions contemplated in this Agreement. Orange Grove has taken all corporate action necessary to authorize the execution, delivery and performance of the terms and conditions of the Agreement. The individual executing the Agreement has been duly authorized to do so. The performance by Orange Grove of Orange Grove's obligations and responsibilities under the Agreement

will not violate or constitute a default under the terms and provisions of Orange Grove's partnership agreement or any material agreement, document or instrument to which Orange Grove is a party or by which Orange Grove is bound or affected. All proceedings required to be taken by or on behalf of Orange Grove to authorize Orange Grove to execute, deliver and perform the terms and conditions of the Agreement have been duly and properly taken. No further consent of any person or entity is required in connection with the execution and delivery of, or performance by Orange Grove of its obligations under the Agreement.

(b) Enforceability. The Agreement constitute or shall constitute the valid and binding obligation of Orange Grove, enforceable against Orange Grove in accordance with their terms, except as such enforcement may be limited by (i) the effect of bankruptcy, insolvency, reorganization, receivership, conservatorship, arrangement, moratorium or other Applicable Laws affecting or relating to the rights of creditors generally, or (ii) the rules governing the availability of specific performance, injunctive relief or other equitable remedies and general principles of equity, regardless of whether considered in a proceeding in equity or at law.

12. Miscellaneous Provisions.

A. California Law. California law shall govern all terms of this Agreement.

B. Venue. In the event any arbitration or litigation is commenced to enforce, interpret or invalidate any terms or provisions of this Agreement, the parties agree that venue shall lie only in the Superior Court for the North County Judicial District, County of San Diego, State of California.

C. Modification. This Agreement may not be altered in whole or in part except by a modification, in writing, executed by all the parties to this Agreement.

D. Attorney's Fees. In the event of any arbitration or legal or equitable proceeding to invalidate, enforce, challenge, or interpret any terms of this Agreement, the prevailing party shall be entitled to all attorney's fees and costs in addition to any other relief granted by law. The prevailing party shall also be entitled to recover all such fees and costs during any appeals and during any bankruptcy proceedings.

E. Entire Agreement. This Agreement, together with all exhibits attached to this Agreement contains all representations and the entire understanding between the parties with respect to the subject matter of this Agreement. Any prior correspondence, memoranda, or agreements, whether or nor such correspondence, memoranda, or agreements are in conflict with this Agreement, are intended to be replaced in total by this Agreement and its exhibits. The parties

mutually declare there are no oral understandings or promises not contained in this Agreement which contains the complete, integrated, and final agreement between the parties.

F. Binding Effect. This Agreement shall inure to the benefit of and be binding upon the parties and their respective purchasers, successors, heirs, and assigns.

G. Unenforceable Provisions. The terms and conditions and covenants of this Agreement shall be construed whenever possible as consistent with all applicable laws and regulations. To the extent that any provision of this Agreement, as so interpreted, is held to violate any applicable law or regulation, the remaining provisions shall nevertheless be carried into full force and effect and remain enforceable.

H. Representation of Capacity to Contract. Each party to this Agreement represents and warrants that he or she has the authority to execute this Agreement on behalf of the entity represented by that individual and that this Agreement is final and binding upon both parties.

I. Opportunity to be Represented by Independent Counsel. Each of the parties to this Agreement warrant and represent that they have been advised to consult independent legal counsel of their own choosing and have done so prior to executing this Agreement.

J. No Waiver. The failure of either party to enforce any term, covenant, or condition of this Agreement on the date it is to be performed shall not be construed as a waiver of either party's right to enforce this, or any other term, covenant, or condition of this Agreement. No waiver shall occur unless the waiver is stated expressly in writing and signed by the party waiving the right. No oral waivers shall be effective for any purpose.

K. Effective Date. The effective date of this Agreement executed in counterparts within the North County Judicial District, County of San Diego, State of California, is _____.

L. Counterparts and Facsimile Signatures. This Agreement may be executed in one or more counterparts, each of which shall be deemed an original, but all of which together shall constitute one and the same instrument. Facsimile signatures shall be permitted and shall be treated as original signatures for all purposes.

13. Assignment. Neither party shall assign its rights to this Agreement without the prior written consent of the other party; provided that Orange Grove shall be

permitted to collaterally assign its rights under this Agreement to the lenders providing financing to Orange Grove with respect to the Project.

14. Further Documents and Acts, Financing Cooperation. Each of the parties hereto agrees to cooperate in good faith with each other, and to execute and deliver such further documents and perform such other acts as may be reasonably necessary or appropriate to consummate and carry into effect the transactions contemplated under this Agreement The District agrees that such cooperation to execute further documents hereunder includes executing consents to collateral assignment and providing opinions of counsel as may be requested by the lenders providing financing to Orange Grove with respect to the Project.

Dated: _____, 2007 FALLBROOK PUBLIC UTILITY DISTRICT,

a Public Utility District

By:_____
Keith Lewinger, General Manager

Dated: _____, 2007 ORANGE GROVE ENERGY, L.P.,
a Delaware limited partnership

By:_____

Orange Grove Energy Recycled Water Agreement
List of Exhibits

1. Exhibit "A" Map of Orange Grove Energy "Project" Site

2. Exhibit "B" Plot of Location of the Fallbrook Public Utility District Treatment Plant and Tank Truck Filling Site, (Delivery Site).

APPENDIX 3.4-A

BIOLOGICAL RESOURCES REPORT
FOR THE FPUD RECLAIMED WATER PICKUP LOCATION

1903 Wright Place
Suite 190
Carlsbad, CA 92008

760.603.1740 PHONE
760.603.1750 FAX

www.TRCsolutions.com

December 19, 2007

Joe Stenger
TRC Solutions, Inc.
2666 Rodman Drive
Los Osos, CA 93402

Subject: Orange Grove Project: Water Filling Station, Fallbrook, San Diego County

Dear Joe:

The purpose of this letter is to summarize a biological assessment conducted on December 14, 2007 on Fallbrook Public Utility District (FPUD) property in Fallbrook, California. The survey was conducted to evaluate an area proposed for a water filling station and its associated access road and turn-around area for the Orange Grove Project.

Site Description and Biological Assessment

The proposed water filling station, access road, and turn-around area site are located on property owned by FPUD. Within the proposed project site, the eastern portion of the FPUD property is leased to a plant nursery and the remaining portion consists of dirt roads and open space that is routinely maintained. Because the proposed project site (excluding any dirt roads) is disked on a regular basis, vegetation within the proposed project site is very minimal. Vegetation observed in the area of proposed improvements is limited to some seedlings of mustard (*Brassica* sp.), nonnative grasses, and red-stem filaree (*Erodium cicutarium*). In addition, a few fennel (*Foeniculum vulgare*), which is a perennial herbaceous plant, have resprouted since the area was last disked. Vegetation to the west and north of the proposed project site consists of nonnative grasses, mustard, Russian thistle (*Salsola tragus*), western ragweed (*Ambrosia psilostachya*), and scattered ornamental trees, including eucalyptus (*Eucalyptus* sp.), yucca (*Yucca* sp.), and Peruvian pepper tree (*Schinus molle*). A poorly defined drainage is located outside and approximately 200 feet south of the proposed project site. Vegetation surrounding and lining the drainage includes eucalyptus, castor bean (*Ricinus communis*), fennel, and Bermuda grass (*Cynodon dactylon*). The proposed project site is bordered by the plant nursery to the east.

The project site can be accessed on existing dirt roads from either the FPUD facility

located approximately 0.25 mile to the north or from Alturas Road to the east, via an existing dirt road through the plant nursery. The road through the nursery would be improved and would serve as the only access road to the proposed water filling station.

Conclusion

The proposed project site consists of existing dirt roads and maintained area. Only a very small amount of vegetation was observed within the project site and was limited primarily to seedlings of nonnative herbaceous species. No sensitive plant or animal species and no nesting birds or nest structures were observed during the site assessment or were observed surrounding the project site.

Photographs of the proposed project site are included with this letter report and an aerial of the proposed project site with an overlay of the project footprint is attached. Please contact me at (760) 603-1740 if you have any questions.

Sincerely,

Karen D. Wilson

Karen D. Wilson
Lead Biologist

Attachment

Existing access road through a plant nursery on FPUD property, facing east-northeast. The access road will be improved and will serve as the only access road for the proposed project.

Existing access road through a plant nursery on FPUD property, facing west-southwest. The access road will be improved and will serve as the only access road for the proposed project. The photograph is taken from Alturas Road.

Approximate location of the proposed water filling station, facing north. The FPUD facilities are located approximately 0.25 mile to the north.

Overview of the approximate location of a portion of the proposed turn-around area, facing west.

Overview of the approximate locations of the proposed turn-around area and access road, facing east.

Overview of the approximate location of the proposed turn-around area and the existing dirt road, facing north.

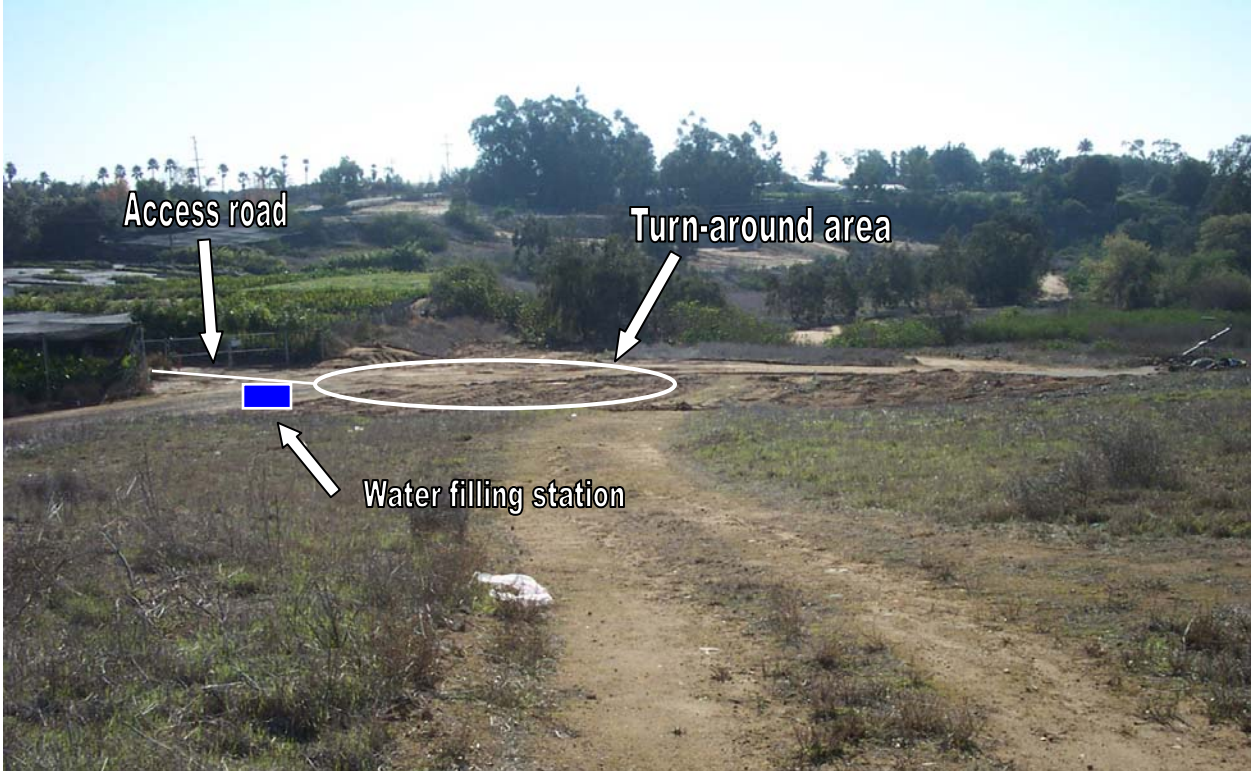

Overview of the approximate locations for the proposed turn-around area, access road, and water filling station, facing south. Note drainage in background

DISCLAIMER: By accepting this map, you agree that the Fallbrook Public Utility District assumes no liability or responsibility of any kind arising from use of this map. This map, its Data, and any calculations associated with this map is provided without warranty of any kind.

LEGEND

- Road Extent
- Recycled Water Line

PROPOSED FILLING STATION ROAD

0.01 0.005 0 0.01 0.02 0.03 0.04 Miles

0 50 100 200 300 400 Feet

Map Created by Todd Jester (12-14-07). X:\GIS\Data - Inside\Project Specific\RECLAIMED WATER ROAD_FILLING STATION\Filling_Station.mxd

Projection: California State Plane, NAD 83, Feet, Epoch 1991.35 Source: Eagle Aerial 2006, SANGIS,FPUD

Fallbrook Public Utility District

APPENDIX 3.4-B

FIRE PROTECTION FUEL MODIFICATION ZONE
MEMORANDUM OF UNDERSTANDING (MOU) AND BIOLOGICAL OPINION (BO)

MEMORANDUM OF UNDERSTANDING BETWEEN THE FISH AND WILDLIFE SERVICE OF THE UNITED STATES DEPARTMENT OF THE INTERIOR, THE CALIFORNIA DEPARTMENT OF FISH AND GAME, THE CALIFORNIA DEPARTMENT OF FORESTRY, THE SAN DIEGO COUNTY FIRE CHIEF'S ASSOCIATION AND THE FIRE DISTRICT'S ASSOCIATION OF SAN DIEGO COUNTY

A. INTRODUCTION

Many species of plants and wildlife in the County of San Diego have been listed and continue to be listed as threatened or endangered by the Secretary of the Interior pursuant to the federal Endangered Species Act and by the California Fish and Game Commission pursuant to the California Endangered Species Act. Additionally, many listed and species that may be listed in the future are protected in certain areas by agreements among jurisdictions and the wildlife agencies, pursuant to the state of California's Natural Communities Conservation Planning (NCCP) program. In light of these listings, officials of the California Department of Forestry, and the members of the San Diego County Fire Chief's Association and the Fire Districts Association of San Diego County have expressed concerns regarding their ability to continue to require the abatement of flammable vegetation within their respective jurisdictions in order to protect life, property and the environment from the threat of fire.

B. AUTHORITIES

This Memorandum of Understanding is hereby made and entered into by and between the California Department of Forestry, hereinafter referred to as "CDF"; the San Diego County Fire Chief's Association, hereinafter referred to as the "Fire Chiefs"; the Fire District Association of San Diego County, hereinafter referred to as the "Districts"; the Fish and Wildlife Service of the United States Department of the Interior, hereinafter referred to as the "Service"; and the California Department of Fish and Game, hereinafter referred to as "Department" under the authority of the Endangered Species Act of 1973, as amended (16 U.S.C. Section 1531 et. seq.) the Fish and Game Code Section 702 and the California Endangered Species Act, as amended (Fish and Game Code Section 2050, et. seq.).

C. PURPOSE

The purpose of this Memorandum of Understanding is to establish guidelines by which the CDF, Fire Chiefs and the Districts can continue to protect lives and property from the threat of fire by requiring the abatement of flammable vegetation pursuant to State Law, County and District ordinances and Cities' municipal codes and to establish a cooperative mechanism whereby the Service and Department may assess, minimize, and help account for potential adverse impacts to sensitive species and habitats resulting from vegetation abatement activities.

D. RECITALS

1. Fire Districts are responsible for assuring compliance with applicable provisions of their ordinances, the California Health and Safety Code and the California Public Resources Code sections 4290 & 4291 regarding the abatement of flammable vegetation.
2. Fire Departments of the Cities are responsible for assuring compliance with the Government Code and applicable provisions of their municipal codes regarding the abatement of flammable vegetation.
3. CDF is responsible for assuring compliance with applicable provisions of the California Public Resources Code sections 4290 & 4291 regarding the abatement of flammable vegetation.
4. The Service is responsible for enforcing the federal Endangered Species Act of 1973.
5. The Department is responsible for enforcing the California Endangered Species Act, and the Native Plant Protection Act. The Service and Department together administer the state NCCP program (NCCP Act of 1991.)
6. Areas immediately surrounding improvements to real property, whether such areas are undeveloped wildlands or are altered in some way, do not generally constitute core natural habitat areas, nor do they typically support sensitive species, by virtue of their proximity to human activities.
7. Uncontrolled wildfires pose a serious threat to human lives and property, but are generally part of the natural disturbance cycle of adjacent wildlands. The propensity of wildlands to carry fire to human developments usually necessitate the provision of fuel breaks in order to reduce or eliminate the likelihood of damage to property.
8. Properly maintained fuel modification zones and fire breaks will reduce the incidence of non-Natural fires spreading from developed areas to natural land and lower the potential impacts of unseasonable and frequent wildfires to listed species and their habitats."

NOW THEREFORE, the parties hereto mutually agree as follows:

Section I. General Terms and Conditions:

This MOU authorizes the take of species listed as threatened or endangered, or candidate species (under Chapter 1.5 of Division 3 of the Fish and Game Code) for management purposes necessitated by or incidental to those certain fire protection measures described herein.

The management purposes for which this MOU is issued are:

1. Mandatory fire protection measures in accordance with Section 4290 of the Public Resources Code, specifically:

(a) Measures necessary to implement minimum fire safety standards related to defensible space which are applicable to state responsibility are lands under the authority of CDF.

(b) Measures necessary to implement minimum safety standards related to fuel breaks and greenbelts.

(c) Other measures required by Section 4290 as determined by the Director of CDF.

2. Mandatory fire protection measures in accordance with Section 4291 of the Public Resource Code, specifically:

   (a) The maintenance around and adjacent to any building or structure in, upon, or adjoining any mountainous area or forest-covered lands, brush-covered lands, or grass-covered lands, or any land which is covered with flammable material, of a fire break made by removing and clearing away, for a distance of not less than 30 feet on each side of such building or structure or to the property line, whichever is nearer, all flammable vegetation or combustible growth.

   (b) The maintenance around and adjacent to any building or structure such as is described in (a) above, additional fire protection or fire break made by removing all brush, flammable vegetation, or combustible growth which is located from 30 feet to 100 feet from such a building or structure or to the property line, whichever is nearer, as may be required by the Director of Forestry and Fire Prevention upon a finding that, because of extra hazardous conditions, a firebreak of only 30 feet around such building or structure is not sufficient to provide reasonable fire safety, and including the maintenance of grass and other vegetation more than 30 feet from such building or structure and less than 18 inches in height where necessary to stabilize the soil and prevent erosion.

3. Mandatory fire protection measures in accordance with Section 4296.5 of Public Resource Code, specifically, upon order of the Director of Forestry and Fire Protection or the agency having primary responsibility for the fire protection of the area, the destruction, removal, or modification so as not to be flammable, of any vegetation or other flammable material on any railroad right-of-way on forest-covered, brush-covered, or grass-covered land.

4. Any measures as deemed necessary by the Fire Chief and in accordance with the Guideline section of this MOU.

Section II. GUIDELINE

The following guidelines may be implemented by individuals or entities owning or leasing property within the jurisdiction of the County and the Cities as well as by CDF, Fire Districts, and the Cities:

a. **Improved Property**. Property owners, their lessees, CDF, fire districts, and cities shall be permitted to clear all flammable vegetation within a one hundred (100) foot radius of all structures[1] using methods, such as mowing and trimming that leave the plant root structure intact to stabilize the soil. Clearing is not limited to these methods and discing, which exposes bare mineral soil, may be used if deemed necessary by the local fire chief. Where the distance from the structure to the property line of the parcel on which the structure is located is less than the distance required to be cleared, the adjacent owner, lessee, CDF, fire districts, or cities shall be permitted to establish the required fuel break. The removal of flammable vegetation does not apply to single specimens of trees, ornamental shrubbery, or similar plants which are used as ground cover, if the Chief of the local fire department determines that they do not form a means of rapidly transmitting fire from the native growth to any structures.

b. **Unimproved Property**. Property owners, their lessees, fire districts and cities shall be permitted to establish fuel breaks on unimproved property if such a fire break is deemed necessary based on written findings by the Chief of the local fire department to protect improved property, or public safety and welfare. The Chief of the local fire department shall deem such a fuel break necessary only if the subject property is located within an unusually high fuel loading area or within a high or very high hazard area as determined by California Department of Forestry Fire Severity Mapping. These findings shall be provided to the Department and Service upon their adoption by the Chief of the Fire Department at least ten (10) days prior to the issuance of abatement orders. If the Department of Service fail to respond within the ten-day period, the party may complete the abatement and not be in violation of this MOU. Clearing may be done using methods, such as mowing and trimming that leave the plant root structure intact to stabilize the soil. Clearing is not limited to these methods and discing, which exposes bare mineral soil, may be used if deemed necessary by the local fire chief.

c. **Areas previously cleared.** Areas that have been consistently cleared of vegetation over the last three years may continue to be cleared even though they are outside of the limits established in Sections a. and b. above.

---

[1]For the purposes of this MOU, the term "structure" does not include fences or similar barriers enclosing or separating areas of land.

d. **Roadway clearance.** Property owners, their lessees, fire districts, the County of San Diego, Cal Trans and cities shall be permitted to clear up to 30' along each side of established regularly traveled roadways. The required width will be at the discretion of the fire chief.

e. **Prior or Future Agreements.** The terms and guidelines in this MOU may be superseded by any other specific agreement entered into with the Service or the Department governing the removal of vegetation. This MOU shall not preclude revision of the flammable vegetation abatement guidelines contained herein when future regional and local conservation plans are adopted by the local jurisdictions.

f. **Federal Lands.** Land owned or controlled by Federal Multiple Use Land Management Agencies, will be handled on a "case by case" basis, with the federal agency that controls the subject lands to determine what clearing is appropriate.

g. Property owners, their lessees, fire districts, and cities shall continue to avoid vegetation removal in recognizable riparian (stream side) zones and vernal pool depressions, as these areas are naturally somewhat resistant to fire and are subject to separate federal and state regulations. If such removal is deemed necessary by the local fire chief, the Department and Service must be notified in writing and consulted at least ten (10) days prior to anticipated vegetation abatement. If the Department and Service fail to respond within the ten-day period, the party may complete the abatement and not be in violation of this MOU.

Section III NOTIFICATION OF LANDOWNERS

Fire agencies that require abatement of flammable vegetation clearance shall develop guidelines for this clearance. These guidelines shall be made available to the public, either through direct mail or a public notices, stating that the guidelines are available and the location where they can be obtained. The guidelines must include directions as to the minimum and maximum limits for vegetation clearing and acceptable clearing methods. Additionally, the following statement shall be included in the guidelines:

> Landowners who have received notice from the California Department of Fish and Game or U.S. Fish and Wildlife Service of the occurrence of rare, threatened, or endangered species on their property in areas subject to fuel break clearance must notify both agencies in writing at least 10 days prior to vegetation clearing. The agencies will have up to 10 days following such notification to (1) determine whether the proposed clearing complies with State and/or Federal endangered species requirements and (2) to suggest voluntary, alternative abatement measures if feasible and warranted. Failure of the agencies to respond within 10 days will allow the landowner to proceed with abatement

activities without further delay. Failure by landowners to provide adequate notification as described above may render landowners liable under State and Federal law.

Section IV. BIOLOGICAL SURVEYS

Property owners, their lessees, CDF, fire districts and cities shall not be required to perform biological surveys as a condition precedent to performance of the fire protection activities established by the guidelines set forth in Section 1.

Section V. PROJECT OFFICERS

a. Project Officer for the CDF is:

Ken. Miller, Ranger in Charge
California Department of Forestry
2249 Jamacha Rd.
El Cajon, California 92019

b. Project Officer for the Fire Chiefs is:

Erwin L. Willis, Fire Chief
Rancho Santa Fe Fire Protection District
P.O. Box 410
Rancho Santa Fe, CA 92067

c. Project Officer for the Districts is:

Ralph Steinhoff
North County Fire Protection District
315 East Ivy Street
Fallbrook, CA 92028

d. Project Officer for Service is:

Gail Kobetich, Field Supervisor
U.S. Fish and Wildlife Service, Carlsbad Field Office
2730 Loker Avenue West
Carlsbad, California 92008

e. Project Officer for the Department is:

Jacqueline Schafer, Director
Department of Fish and Game
1416 9th Street
Sacramento, California 95814

Section VI. SPECIAL TERMS AND CONDITIONS

The CDF, fire districts, cities, the Service and the Department shall comply with the Reasonable and Prudent Measures and the Terms and Conditions identified in Biological Opinion issued by the Service for this action. Take of listed species that is deliberate and results from an act outside the scope of the Project as defined in Section I is not authorized.

It is understood by the parties that the Service authorizes incidental take of the following federally listed threatened and endangered species: arroyo toad (Bufo microscaphys californicus), coastal California gnatcatcher (Polioptila californica), and Stephen's Kangaroo Rat (Dipodomys stephensi), which may be impacted by the fire protection activities established by the guidelines set forth in Section I. Furthermore, it is understood by the parties that the Department authorizes the take of species listed as threatened species or endangered species, or candidate species (under Chapter 1.5 of Division 3 of the Fish and Game Code) which may be impacted by the fire protection activities established by the guidelines set forth in Section I.

Any person who becomes aware of the take of an individual of a candidate or listed species as a result of that person's engaging in the permitted activity shall report the take to the Department as soon as practicable and shall make available the remains of any animal or plant taken to the Department of fish and Game upon demand.

Section VII. FINDINGS

1. Department Findings:
Pursuant to fish and Game Code Section 2081, the Department finds that implementation of the fire control, abatement, and protection measures contemplated by this MOU is not likely to result in jeopardy to the continued existence of the identified State listed or candidate species, if the terms and conditions of the MOU are fully implemented and adhered to. The Department finds, further, that by preventing or limiting the spread of fire to the identified species' habitat, this MOU will serve to protect the identified species from further degradation.

Section VIII. AMENDMENTS

Amendments to this MOU may be proposed by any of the parties and shall become effective upon being reduced to a written instrument executed by all of the parties. It is anticipated and understood by the parties that this MOU, specifically the arroyo toad (Bufo microscaphys californicus), coastal California gnatcatcher (Polioptila californica), and Stephen's Kangaroo Rat (Dipodomys stephensi), may be amended to include additional species that in the future are listed as threatened or endangered by the Secretary of the Interior or the California Fish and Game Commission. In addition, it is understood that this MOU may be amended to include additional parties.

Section IX. TERM OF AGREEMENT

This MOU shall become effective upon the date it is executed by the parties (execution date) and shall remain in effect for an initial period of one (1) year. Thereafter, this MOU shall be automatically extended from year to year on the aforementioned execution date unless the Service or the Department objects to the extension, in writing, within thirty (30) days prior to the expiration of this MOU. Any written objection must state the reason for the objection to the extension of this MOU. In the event a written objection is provided, the parties shall work cooperatively to resolve any problems so that the MOU may be extended.

IN WITNESS WHEREOF, each party hereto has caused this MOU to be executed by an authorized official on the day and year set forth opposite his or her signature.

U.S. FISH AND WILDLIFE SERVICE

By: Gail C. Kobetich Date: 2·26·97

Title: Gail Kobetich, Field Supervisor

SERVICE CONTRACT SUFFICIENCY REVIEW

By: _____ Date: _____

Title: _____

CALIFORNIA DEPARTMENT OF FISH AND GAME

By: _____ Date: 2/26/97

Title: Jacqueline Schafer, Director

CALIFORNIA DEPARTMENT OF FORESTRY, SAN DIEGO RANGER UNIT

BY: Stephen C. Dow Date: 2-26-97

Title: Ken Miller, Ranger in Charge

SAN DIEGO COUNTY FIRE CHIEF'S ASSOCIATION

By: E. L. Willis Date: 2-26-97

Title: Erwin L. Willis, President

FIRE DISTRICT'S ASSOCIATION OF SAN DIEGO COUNTY

By: Wayne Strange Date: 2/26/97

Title: Wayne Strange, President

United States Department of the Interior

FISH AND WILDLIFE SERVICE
Ecological Services
Carlsbad Field Office
2730 Loker Avenue West
Carlsbad, California 92008

February 26, 1997

To: Field Supervisor

From: Deputy Field Supervisor

Subject: Biological Opinion on Fish and Wildlife Service Participation in a Memorandum of Understanding with the San Diego County Fire Chief s Association Addressing Flammable Vegetation Abatement in San Diego County (1-6-97-FW-19)

This document represents the U.S. Fish and Wildlife Service's (Service) biological and conference opinions in accordance with section 7 of the Endangered Species Act of 1973, as amended (Act), and 50 CFR 402, concerning the effects on the species discussed below of signing a Memorandum of Understanding (MOU) with the San Diego County Fire Chiefs' Association (Fire Chiefs), the California Department of Fish and Game (Department), the Fire Districts' Association of San Diego County (Fire Districts), and the California Department of Forestry (CDF). The MOU is intended to establish standards for the abatement of flammable vegetation for the purpose of protecting public safety pursuant to State law, County and District ordinances, and city municipal codes. The standards are intended to provide adequate fire protection, while minimizing the impacts to federally listed species and rare habitats resulting from such vegetation removal. The parties to the MOU are mutually interested in an accounting of all anticipated and actual removal of coastal sage scrub vegetation so that it may be assessed at the county-wide level for its impacts to biological resources and that it may be approved by the Service and CDFG, thus obviating the need for permitting at the local level. The terms of the MOU are limited to existing urban-wildland interface within the county with the understanding that eventually all such interface will be brought into compliance with fire protection standards and perpetually maintained in such a condition as to no longer be regarded as natural habitat.

At issue with the Service's proposed participation in this agreement are potential direct and indirect impacts to the following federally listed endangered and threatened species:

Listed Species:

coastal California gnatcatcher *(Polioptila californica californica)*,
Stephen's kangaroo rat *(Dipodomys stephensi)*,
California red-legged frog *(Rana aurora draytonii)*,
southwestern arroyo toad *(Bufo microscaphus californicus)*,

Pacific pocketmouse (*Perognathus longimembris pacificus*)
Riverside fairy shrimp (*Streptocephalus wootoni*)
least Bell's vireo *(Vireo bellii pusillus)*
southwestern willow flycatcher *(Empidonax traillii extimus)*
San Diego fairy shrimp *(Branchinecta sandiegonensis)*
Laguna Mountains skipper *(Pyrgus ruralis lagunae)*
Quino checkerspot butterfly *(Euphydryas editha quino)*

San Diego button celery *(Eryngium aristulatum var. parishii)*
California Orcutt grass *(Orcuttia californica)*
San Diego mesa mint *(Pogogyne abramsii)*
Otay mesa mint *(Pogogyne nudiuscula)*
Orcutt's spineflower *(Chorizanthe orcuttiana)*
Del Mar manzanita *(Arctostaphylos glandulosa* ssp. *crassifolia)*
Encinitas baccharis *(Baccharis vanessae)*

Proposed Species:

Dehesa beargrass *(Nolina interrata)*
spreading navarretia *(Navarretia fossalis)*
San Diego thornmint *(Acanthomintha ilicifolia)*
thread-leaved brodiaea *(Brodiaea filifolia)*
Otay tarplant *(Hemizonia conjugens)*
willowy monardella *(Monardella linoides* ssp. *viminea)*

Other listed species that occur in San Diego County, including: desert pupfish *(Cyprinodon macularius)*, Mojave tui chub *(Gila bicolor mojavensis)*, tidewater goby *(Eucyclogobius newberryi)*, brown pelican *(Pelecanus occidentalis)*, California least tern *(Sterna antillarum browni)*, light-footed clapper rail *(Rallus longirostris levipes)*, western snowy plover *(Charadrius alexandrinus nivosus)*, American peregrine falcon *(Falco peregrinus anatum)*, bald eagle *(Haliaeetus leucocephalus)*, and peregrine falcon *(Falco peregrinus)* are not expected to be affected by implementation of the flammable vegetation abatement program and therefore are not addressed in this Biological Opinion.

This Biological Opinion was prepared using the following information: Multiple Species Conservation Program (MSCP) Resource Document; Multiple Habitat Conservation Program (MHCP) Files; State Assembly Bill No. 337 Chapter 1188 (Bates Bill); draft MOU between the Service, Department, CDF, Fire Chiefs, and Fire Districts; the SANDAG Analysis of Estimated Habitat Loss Due to Fire Clearing; other documents listed in the reference section; additional information obtained during consultation including field investigations, telephone conversations, and correspondence with the agencies listed above; and other information in Service files.

BIOLOGICAL OPINION

After reviewing the current status of the aforementioned listed species, the environmental baseline for the action area, the effects of the flammable vegetation abatement program, and cumulative effects, it is the Service's biological opinion that its participation in the MOU regarding flammable vegetation abatement in San Diego County, and implementation of this program, as proposed and in accordance with the measures required herein, is not likely to jeopardize the continued existence of the coastal California gnatcatcher, arroyo toad, Stephen's kangaroo rat (SKR), California red-legged frog, Laguna Mountains skipper, Quino checkerspot butterfly, Pacific pocketmouse, San Diego button celery, California Orcutt grass, San Diego mesa mint, Otay mesa mint, Riverside fairy shrimp, San Diego fairy shrimp, least Bell's vireo, southwestern willow flycatcher, Dehesa beargrass, spreading navarretia, San Diego thornmint, Del Mar manzanita, Encinitas baccharis, thread-leaved brodiaea, Orcutt's spineflower, Otay tarplant, and willowy monardella.

Critical habitat has been designated for the least Bell's vireo and proposed for the southwestern willow flycatcher within the action area. Since riparian zones will be avoided as part of this biological opinion, no critical habitat will be adversely modified or destroyed by implementation of the MOU.

DESCRIPTION OF THE PROPOSED ACTION

Background

In 1988, the CDF mapped San Diego County and established fire hazard severity zones of "very high", "high" and "moderate" for the county's unincorporated areas. Cities within San Diego County have established similar zones for their jurisdictions. Very High Fire Hazard Severity Zones are defined as "any geographic areas designated per Government Code Section 51178 to contain the type and condition of vegetation, topography, weather, and structure density to potentially increase the possibility of wildland conflagration fires". The Bates bill (State of California), enacted in 1992, requires that new development address fire protection issues within the footprint of the development. The MOU addressed herein derives from regular meetings among the Service, the Department, and the Fire Chiefs in 1995, held to discuss remedial actions for bringing all wildland-urban interfaces in the county into compliance with minimal fire protection standards, pursuant to state and local law. It was agreed that such a retroactive approach would best be accomplished by county-wide policies and standards. The Fire Chiefs are currently developing wildland-urban interface vegetation management standards that emulate the requirement for fire protection measures, including vegetation abatement, to occur within the property lines of lands proposed for development. The Service and the Department were requested to provide overall approval for the large-scale establishment of adequate and standardized fuel management practices. The Service and Department issued, under the authority of the Natural Community Conservation Planning (NCCP) program, a joint statement dated February 2, 1995, that exempted the loss of coastal sage scrub (CSS) vegetation

associated
with public health and safety from certain requirements of the NCCP program (i.e. mitigation). The MOU would concern both the CSS habitat and other habitats supporting listed species within fuel (vegetation) management zones.

Throughout southern California there are thousands of existing homes in areas designated as high and very high fire hazard severity zones. The Fire Chiefs and Fire Districts within San Diego County are mandated to provide for the safety of citizens by preventing and suppressing fire. As part of this mission, fire personnel work to ensure defensible space around structures, which often entails the removal of flammable vegetation to reduce the fuel loads near combustible structures. Since many existing structures in San Diego County abut natural habitat areas, providing defensible space can result in the modification or destruction of natural habitat.

Proposed Action

The proposed action is for the Service to enter into an MOU (Appendix 1) with the Fire Chiefs, Fire Districts, CDF, and Department and to participate in an advisory capacity in the annual planning and implementation of flammable vegetation abatement activities. However, it is understood among all involved parties that the Service's involvement will be limited to situations where native habitats are concerned. It is the goal of this agreement that all wildland-urban interface that is currently in non-compliance with fire protection regulations will eventually be brought into compliance and maintained thereafter as non-native habitat. It will be incumbent upon the Fire Chiefs, CDF, and the Fire Districts to notice, inspect, and enforce vegetation clearing standards with sufficient frequency to prevent the recovery of natural habitat in cleared areas. In this sense, the Service's active involvement will decrease over time. The specific objective of the MOU is to provide for the establishment of vegetation management guidelines that avoid and minimize potential adverse impacts to threatened and endangered species, while allowing the Fire Chiefs, Fire Districts and CDF to continue flammable vegetation abatement pursuant to the state of California fire protection policies and local County ordinances. Such guidelines will provide a uniform standard for compliance with state and municipal health and safety codes.

The activities addressed in this biological opinion include flammable native vegetation removal on parcels on the urban/wildland interface in San Diego County. The majority of the urban-wildland interface lies in the western portions of San Diego County, within the boundaries of the MSCP and MHCP planning areas. Vegetation abatement may include: (1) removal of all hazardous shrubs, trees, grasses and herbs located up to 100 feet from any occupied structure, and up to 30 feet of any roadway; (2) removal of vegetation on unimproved property in, instances
deemed necessary based on written findings by the Chief of the local fire department, with written notification to the Department and the Service.

By actively engaging the Service in the planning process for flammable vegetation abatement

through the MOU, the Fire Chiefs, CDF, and Fire Districts intend to minimize adverse impacts to
listed species while assuring fire protection to structures in areas at risk of fire. Measures to

avoid and minimize the effects to federally listed species resulting from this program are not specifically identified in the MOU. However, it states that the signatories shall comply with the "reasonable and prudent measures" and the "terms and conditions" identified in this Biological Opinion (BO), which set forth such avoidance and minimization measures. The intent of the MOU is for the Fire Chiefs, CDF, and Fire Districts to implement such measures to the extent that implementation does not detract from the State and locally mandated provision of fire protection.

Action Area

The action area is restricted to the wildland-urban interface on all non-federal lands within San Diego County, California at the time the MOU is signed. The environmental setting in which the Fire Districts implement vegetation abatement programs include both suburban and rural areas. Quantification of anticipated habitat losses from the proposed action on a county-wide basis is difficult. A general, GIS-based analysis performed by SANDAG (1995) for the MSCP and MHCP areas, combined with County habitat mapping efforts for the east county, indicate that 697,374 acres of the MSCP-MHCP and 915,674 acres of the east county are currently in natural habitats. Approximately 3,743 acres of the total 1,613,048 natural acreage (0.2%) lie within 100 feet of development.

Flammable Vegetation Abatement Guidelines

San Diego County has numerous fire districts, each of which operates under a different set of local ordinances concerning fire. All local ordinances, however generally, comply with State Public Resources Codes (SPRC) 4290 and 4291, which designate fuelbreak widths surrounding structures. The Bates Bill updated SPRC 4290 and 4291. The Bates Bill (Appendix 2), section 51182 addresses the establishment of fuelbreaks around occupied structures through removal of vegetation, providing for a 30-foot minimum width for vegetation removal around structures, and allowing for a fuelbreak between 30 and 100 feet in width, where 30 feet is deemed insufficient by the fire chief. Section 51184 exempts certain areas from the requirements of 51182: (1) Habitat for endangered or threatened species, (2) lands kept in a predominantly natural state as habitat, and (3) open space lands that are environmentally sensitive parklands. In accordance with the Bates Bill, the Fire Chiefs are developing Wildland/Urban Interface Standards for existing developing interface that reiterate the requirement for fire protective measures, including vegetation abatement, required to occur within the property lines of lands proposed for new development. An important component of this guidance will be the development of building setbacks sufficient to allow room for fire break establishment within property lines. Impacts and mitigation for habitat lost to future development would be addressed through the appropriate permitting and planning processes. Because future fire protection needs

are addressed in the Bates Bill, the MOU addresses vegetation abatement only around structures existing at the time of signature.

Section I of the MOU states that property owners and their lessees, CDF, fire districts, and cities shall be permitted to clear all flammable vegetation within a 100-foot radius of all dwelling structures using methods such as mowing and trimming that leave the plant root structure intact for soil stabilization. Discing will only be used when deemed necessary by the local fire chief. It is recognized that less than one hundred feet of clearing is biologically preferable, but the fire chiefs retain the ability to clear up to 100 feet at their discretion. The term "structure" does not include fences or similar barriers enclosing or separating areas of land. This is a departure from some districts' current firebreak establishment practices, which establish a fuelbreak based on property lines rather than the presence of existing structures.

Section II of the MOU, addressing notification of landowners, requires fire agencies to develop publicly available guidelines for flammable vegetation removal. Such guidelines will serve to educate and advise landowners of methods of vegetation removal or structure protection that minimize effects to native habitats and soil stability. Specific notices will specify the location on the property in which vegetation needs to be removed. Landowners who have received notice from the Department or the Service of the existence of rare, threatened, or endangered species on their properties, must notify the Department and/or the Service as applicable prior to clearing vegetation from their property. The Service or Department will have 10 days in which to address the issue. This clause is designed to minimize impacts to state and federal listed species.

Section III of the MOU releases property owners and their lessees, CDF, fire districts and cities from the obligation to perform biological surveys prior to performance of the fire protection activities established by the guidelines described above.

STATUS OF THE SPECIES

The following information on listed and proposed plant and animal species has been excerpted from notices in the United States Federal Register. More detailed accounts on species' biologies may be found in the references given below.

Endangered Animal Species

Arroyo toad

Bufo microscaphus californicus is restricted to rivers that have shallow, sandy or gravelly pools beside sandy terraces. Breeding occurs on larger streams and rivers with persistent water from late March to mid-June (Sweet 1989). Eggs are deposited and larvae develop in shallow pools with minimal current and little or no emergent vegetation and with sand or pea gravel substrate overlain with flocculent silt. After metamorphosis (June-July), the juvenile toads remain on the bordering gravel bars for a period of three to eight weeks, depending on site and year, until the

pool no longer persists (Sweet 1992). Juveniles and adults forage for insects on sandy stream terraces that have nearly complete closure of cottonwood, oak, or willow canopy and almost no grass or herbaceous cover. Adult toads excavate shallow burrows on the terraces where they shelter during the day when the surface is damp, or during longer intervals in the dry season (Sweet 1989). Arroyo toads have also been found up to one kilometer from drainages. Use of upland areas including chaparral, coastal sage scrub and oak woodland may occur for up to 10 months of the year. Toad use of such areas is probably related to foraging, refugia and movement between drainages (Karen Jensen, pers. comm. 1996).

Arroyo toads are especially sensitive to stream diversions due to the toad's breeding well after the normal rainy season. Water diversions that alter normal flows degrade habitat and adversely affect arroyo toads by leading to: 1) the early drying of breeding pools, causing breeding failure or loss of the larval population; 2) restriction of the period essential for rapid growth when newly-metamorphosed toads can forage on damp gravel bars; and 3) loss of damp subsurface soil that may result in high adult mortality during late summer and early fall (Sweet 1992).

Development in riparian wetlands has caused permanent losses of riparian habitats and is the most conspicuous factor in the decline of the arroyo toad (Sweet 1991). Habitat losses have resulted in the reduction and isolation of toad populations on drainages. Stream terraces have been converted to farming, road corridors, and residential and commercial uses, while the streams themselves have been channelized for flood control. Large stretches of riparian corridors have also been degraded or destroyed by cattle grazing and feral pig foraging. Horse and cattle grazing in riparian areas may also trample eggs and larvae of arroyo toads (Sweet 1991). Heavy equipment in yearly reconstruction of roads and stream crossings have had significant and repeated impacts to arroyo toads. The effects of direct damage to toad habitat to local populations can be exacerbated by exotic predators.

Arroyo toads were historically found along the drainages in southern California from San Luis Obispo to San Diego County and southward in northern Baja California. They have been extirpated from an estimated 75 percent of their former range in the United States. The arroyo toad was listed as endangered on December 19, 1994 (59 FR 64859) due to the above described threats.

Stephens' kangaroo rat

The present geographic range of Stephens' kangaroo rat includes the Anza, Perris, and San Jacinto Valleys and other areas of western Riverside and northwestern San Diego Counties. This geographic range is estimated to encompass approximately 287,000 hectares (708,641 acres), which is unusually small for rodents in general and kangaroo rats in particular. The majority of the Stephens' kangaroo rat's range occurs in western Riverside County, with the only other significant populations found at Camp Pendleton Marine Corps Base, the adjacent Fallbrook Naval Weapons Station, and sites around Lake Henshaw in northern San Diego County.

The Stephens' kangaroo rat feeds on both green vegetation, seeds, and, to a limited extent, insects. The spring growing season and increased availability of food coincide with the Stephens' kangaroo rat's reproductive peak. This species will create its own burrow system in areas with sandy soils and use existing burrow systems of gophers and ground squirrels in areas

of compacted soils. Field surveys and literature review by O'Farrell and Uptain (1989) documented 132 populations sites over the entire range of the Stephens' kangaroo rat, including previously known (77), new (47), and potential (8) populations. Of those populations previously identified in the California Department of Fish and Game 1973 Stephens' kangaroo rat survey report, 45 had been extirpated. Population disappearances were attributed to natural seasonal and annual population fluctuations, natural succession and maturation in plant communities, and habitat destruction associated with agricultural and urban development.

The Stephens' kangaroo rat is found almost exclusively in open, often disturbed, nonnative grasslands or in sparse shrublands with cover of less than approximately 30 percent (Hogan 1981). Stephens' kangaroo rat has been found on 36 types of well-drained soils, and more than 125 soils are thought to be potentially suitable for the species. Potentially suitable soils include those types capable of supporting annual grasses mixed with forbs and shrub species. Additionally, soils must exhibit compaction characteristics suitable for the establishment of burrows.

Stephens' kangaroo rat populations have a patchy distribution. This distribution appears to depend on soil type, vegetative stage, and slope (O'Farrell and Uptain 1989). These authors hypothesized that the species is adapted for existence in intermediate vegetative seral stages. Areas disturbed by farming, and subsequently allowed to go fallow, allow invasion by weedy species and rodents such as the Botta's gopher that facilitate colonization of the area by the Stephens' kangaroo rat. Apparently, without some process that maintains relatively open grass or forb lands, eventual succession or maturation of vegetative communities render habitat unsuitable for the Stephens' kangaroo rat.

Much of the habitat over the range of the species was historically converted to agriculture. Since about 1984, urban expansion has increased. These two land-use changes have contributed to the decline and fragmentation of Stephens' kangaroo rat populations and remain the primary threat to the continued existence of the species. The Stephens' kangaroo rat was federally listed as endangered in September 1988 (53 FR 38465).

Southwestern willow flycatcher

This subspecies *(Empidonax traillii extimus)* is composed of declining, widely separated populations on large riparian systems in the arid southwest. Its range includes southern Nevada, Arizona, New Mexico, southern Utah, southern Colorado, northern Mexico, and southern California. Small numbers of breeding pairs of southwestern willow flycatchers occur in southern California from the Owens Valley and south fork of the Kern River to northern San

Diego County (Garrett and Dunn 1981, Unitt 1984 and 1987, Zeiner et al. 1990). Breeding locations include the Santa Ynez River near Buellton, the Prado Basin riparian forest in Riverside County, and the Santa Margarita and San Luis Rey Rivers in San Diego County. The species breeds on the Santa Margarita River in northern San Diego County and may breed as far south as the San Dieguito River in this county (J. Lovio, unpubl. obs.). No records indicative of

local breeding have been made on rivers in southern San Diego County since the 1970's (Garrett and Dunn 1981, Unitt 1984), although suitable habitat remains on several reaches.

Southwestern willow flycatchers winter in Veracruz and Oaxaca, Mexico, and south to Panama (Ehrlich et al. 1988). They are one of the latest spring transients and virtually never arrive in, California before May 10. Migrants can be found in apparently suitable breeding habitat as late as June and cannot be assumed to be breeding birds (Garrett and Dunn 1981).

Southwestern willow flycatchers breeding at lower elevations require extensive riparian woodlands of predominantly willow *(Salix* spp) and cottonwood *(Populus fremontii)* along larger streams and rivers or smaller spring-fed or boggy areas with willows or alders *(Alnus* spp.*)* (Zeiner et al. 1990). This species typically requires dense willow thickets for nesting and roosting, but has also been known to nest in live oak and in saltcedar *(Tamarix* spp). Less exposed branches which are found along the margins of thickets and within clearings provide important singing posts and hunting perches. Serena (1982) found that activities such as cattle browsing displaced the willow flycatcher from otherwise suitable habitat in the Sierra Nevada. Breeding territories normally occur in association with water, such as languid streams, standing water, or seeps. Water is always present in the early stages of the breeding cycle but may not be present at later stages. Migrating willow flycatchers occur in a wide range of habitats (Small 1994).

Male willow flycatchers arrive on breeding grounds in late May to early June, with females arriving approximately 1 week later (Garrett and Dunn 1981). Peak egg laying occurs in June. The average clutch size is three to four eggs, which are incubated by the female for approximately 12 days. Nest abandonment and renesting attempts following parasitism by brown-headed cowbirds have been observed (Zeiner et al. 1990). Adults and fledglings remain, in general, on breeding areas through August; transients are seen in California through the middle of September (Zeiner et al. 1990).

The primary cause of southwestern willow flycatcher decline is considered to be loss of riparian habitats through alteration or destruction. Cattle grazing and brown-headed cowbird parasitism also appear to be significant factors related to decline (Serena 1982). Cowbird parasitism of willow flycatchers is frequent, particularly in the lowland populations, and seems to heavily impact nesting success (Gaines 1977). The southwestern willow flycatcher was listed as endangered in February, 1995 (60 FR 10694).

Critical habitat for this species has been proposed for the following drainages in San Diego

County (July, 1993; 58 FR 39506): Santa Margarita River, San Luis Rey River, San Dieguito River, San Diego River, and Tijuana River.

Pacific pocketmouse

Perognathus longimembris pacificus (PPM) is a small heteromyid rodent which was historically reported to occur within about 3 kilometers (2 miles) of the immediate coast at eight locations from Marina Del Rey and El Segundo in Los Angeles County south to the vicinity of the Mexican border in San Diego County. Erickson (1993) reported that *Perognathus longimembris pacificus* was historically recorded at two general locales on Camp Pendleton, the San Onofre Area and the Santa Margarita River Estuary.

The PPM is known to inhabit fine-grained, sandy substrates and inhabits coastal stands, coastal dunes, river alluvium, and coastal sage scrub vegetation on marine terraces (von Bloeker 193 1, Grinnell 1933, Meserve 1972, Erickson 1993). Known extant populations of this species are found on the Dana Point Headlands in Dana Point (Orange County) (Brylski 1993) and at Camp Pendleton (San Diego County). The results of trapping performed at Camp Pendleton in 1995 suggested that the core of the PPM population was confined to sandy soils with low vegetative cover. However, one site was an ecotone strip of sparse white sage-dominated scrub between coastal sage scrub and non-native grassland.

Little quantitative information is available on the ecology and life history of the Pacific pocket mouse. However, the attributes of the little pocket mouse *(Perognathus longimembris) and* available data on the *pacificus* subspecies suggest that this small rodent is facultatively or partially fossorial, relatively sedentary, primarily granivorous, and able to become torpid, estivate, or hibernate in response to adverse environmental conditions (Ingles 1965, Kenagy 1973, Federal Register 1994).

Perognathus longimembris pacificus was listed by the Service as an endangered species under the emergency provision of the Endangered Species Act on February 3, 1994, due to its imminent danger of extinction. This action became final in September of that year.

Riverside fairy shrimp

The Riverside fairy shrimp is a small freshwater crustacean in the Family Streptocephalidae of the Order Anostraca. The species was first collected in 1979 by Dr. Clyde Erickson and was identified as a new species in 1985 (Eng et al. 1990).

The Riverside fairy shrimp was listed as endangered on August 3, 1993 (58 FR 41391), after the Service determined that the present range and continued existence of the species was being

rapidly destroyed by habitat loss and degradation due to urban and agricultural development, off-road vehicle use, trampling, and other factors.

The northern range of the Riverside fairy shrimp is four vernal pools near Temecula, in Riverside County, and two populations in Orange County. It is found in a few pools on Naval Air Station Miramar, Camp Pendleton, and on Otay Mesa. In Baja California, Mexico it has been found in

Valle de las Palmas, and at Baja Mar north of Ensenada (Brown, Wier, and Belk 1993).

Least Bell's vireo

The breeding range of the least Bell's vireo is restricted to California and northern Baja California, Mexico. Its historic range was from near Red Bluff in Tehama County south through the San Joaquin Valley to the Kern River, the inner southern Coast Range, and the southern California valleys west of the deserts to the Mexican border (Steinhart 1990). In the desert region it once occurred along the Mojave River, in the Owens Valley, and in Death Valley National Monument (Small 1994). Currently, this subspecies persists only in the southern part of the former range: breeding pairs have been found during the 1990's in the counties of Inyo, Santa Barbara, San Bernardino, Ventura, Los Angeles, Orange, Riverside, and San Diego. However, the majority of the breeding pairs are concentrated from western Riverside County through San Diego County. The Santa Margarita River in northern San Diego County supports the highest local concentration (Small 1994, USFWS 1995).

Breeding habitat for the least Bell's vireo consists primarily of valley riparian habitats from near sea level on the coast to 1,500 feet above mean sea level (msl) in the interior (Small 1994). Areas with relatively dense riparian shrubs are required, preferably where flowing water exists, though desert breeders may nest along dry watercourses where mesquite and arrow weed are located nearby (Small 1994). Males establish breeding territories which range from 0.3 to 1.3 hectares (Collins et al., 1989, in Brown 1993). The territory is maintained mostly by male song. Nests are typically built within 1 meter of the ground in the fork of willows *(Salix* spp.), rose *(Rosa* spp.), mule fat *(Baccharis salicifolia)*, or other ground cover. Peak egg laying begins in May and continues into early June (Zeiner et al. 1990). Egg laying begins 1 to 2 days after nest completion and lasts 4 days. Suitable nesting habitat appears to be the primary aspect limiting numbers, with rates of cowbird parasitism being secondary (Brown 1993). As early as 1920, biologists reported that it was dffficult to find a least Bell's vireo nest that hadn't been parasitized by brown-headed cowbirds (Steinhart 1990). By 1930, populations of both *Vireo bellii pusillus* and *V. b. arizonae* began to decline throughout California and the rate of decline increased in the years of World War II onward (Gaines 1977, Goldwasser 1978 in Small 1994, USFWS 1995). Causes for decline included destruction of habitat due to river channelization, water diversions, lowered water tables, gravel mining, agricultural development, and brood-parasitism by the Brown-headed cowbird *(Molothrus ater)*. The self-introduction of the cowbird into California was facilitated by agricultural practices early in the 20th Century (Laymon 1987).

The least Bell's vireo was state listed as endangered in 1980 and federally listed as endangered in 1986, when the total state population was estimated at between 300 and 400 breeding pairs. Since then the state-wide population has increased to over 1000 pairs; much of this been attributed to habitat protection, active restoration and passive recovery of disturbed habitat, and programs of trapping and removing cowbirds form riparian habitats (Small 1994, USFWS 1995).

Laguna Mountains skipper

The Laguna Mountains skipper is a small butterfly within the skipper family (Hesperiidae). It is a small checkered skipper found in mountain meadow habitats in the Laguna and Palomar Mountains. This animal has a wing span of about 3 centimeters (cm) (1 inch) and is distinguished from the rural skipper *(P. ruralis ruralis)* by extensive white wing markings that give males an overall appearance of white rather than mostly black and by the banding patterns on the hind wings (Scott 1981; Levy 1994).

Cleveland's horkelia *(Horkelia clevelandii)* is the larval host plant of the Laguna Mountains skipper. Although a butterfly's distribution is primarily defined by the presence of its larval host plant, it may be further restricted by other physiological or ecological constraints. The Laguna Mountains skipper is currently found in a few open meadows of yellow pine forest between 1,500 and 2,000 meters (5,000 and 6,000 feet) in elevation. Historically, this species was found at elevations between 1,200 and 2,500 meters (4,000 to 6,000 feet) and it may have occurred throughout the higher elevations of San Diego County (Murphy 1990; Brown 1991; J. Brown, in litt., 1992; and references cited therein). However, it has been a rare species for the last 20 to 55 years.

The Laguna Mountains skipper is apparently bivoltine (two generations per year). The adult flight season occurs from April to May with a second brood flight in late June to late July (Brown 1991; Levy 1994). It is assumed that the life history of the Laguna Mountains skipper is similar to that of the nominate subspecies *(P. r. ruralis)*, which diapauses as full-grown larvae and adults live 10 to 20 days (J. Brown, in litt., 1992).

The Laguna Mountains skipper was listed as endangered on January 16, 1997 (62 FR 2313) due to habitat destruction and degradation from overgrazing and trampling of its larval host plant by domestic cattle. Fire management practices may have also contributed to the decline. Mountain meadows were historically subject to localized periodic fires, which maintained the vegetative diversity of the meadows. The larval host plant, Cleveland's horkelia may require fire to keep competitors reduced (Levy 1994). Cleveland's horkelia is itself a relatively rare species and only found in the Laguna, Cuyamaca, and San Jacinto Mountains of southwestern California, and northwestern Baja California, Mexico (Hickman 1993). Before 1994, the last known locality of a Laguna Mountains skipper population in the Laguna Mountains is in a campground area of the Forest (Murphy 1990; D. Hogan, pers. comm., 1993). Currently four of five populations of Laguna Mountains skipper are not subject to livestock grazing. The fifth

population occurs in the Mendenhall Valley. The USFS owned portions of this valley, where the magnitude of livestock grazing has been reduced. The Laguna Mountains skipper population was found to occupy both the private land and USFS land in this valley.

The Laguna Mountains skipper is currently found at three sites in the Mount Palomar region of San Diego County, California (Levy 1994). The population in the Laguna Mountains in San Diego County, California (Dr. John Brown, in litt., 1992) was not seen in 1994 (Levy 1994). It

was last seen in the Laguna Mountains occupying a small area along a fence in a USFS campground in 1986 (Murphy 1990; D. Hogan, pers. comm., 1993; Levy 1994) and was sighted here again in May of 1995 (Levy *in litt.* 1995). The population size of the Laguna Mountain population was estimated to be fewer than 100 individuals (Murphy 1990; Brown 199 1; J. Brown, in litt., 1992). The largest of the Palomar population is estimated to be 240 individuals (Levy 1994). The Laguna Mountains skipper was sighted and collected on Mount Palomar in 1991 by D. Lindsley (J. Brown, in litt., 1992; Dr. John Brown, pers. comm., 1993). Two additional Mount Palomar populations were located in 1994 (Levy 1994). It was sighted in the USFS campground in the Laguna Mountains, again, in 1995 by Dr. Levy. Historically, the Mount Palomar populations were small compared to the populations in the Laguna Mountains, where only five specimens have been reported in this century (J. Brown, in litt., 1992).

Quino checkerspot butterfly

The Quino checkerspot butterfly *(Euphydryas editha quino)* is a medium sized member of the brush-footed butterfly family (Nymphalidae). It has a wingspan of approximately 2.5 centimeters (1 inch) and the wings have a checkered pattern consisting of brown, red, beige, and black. The Quino checkerspot butterfly ranges from the Santa Monica Mountains in California south into extreme northwestern Baja California, Mexico. Adults have been found from sea level to about 900 meters (3,000 feet). The Quino checkerspot butterfly inhabits open grassland, and ecotone areas between grasslands and coastal sage scrub, chaparral, and sparse native woodlands.

The adults are on the wing from approximately mid-January to late April. The eggs hatch in about ten days and the larvae begin to feed immediately on the food plant, plantain *(Plantago* species) or perhaps owls-clover *(Castilleja exserta).* First instar larvae enter into an obligatory diapause as summer approaches and the food plants dry up. Extended periods of diapause may occur during times of drought. After termination of diapause, the larvae feed on the food plants and then enter their pupal stage. The adults emerge within two-four weeks, feed, disperse, reproduce, and then die.

Fifty to seventy-five percent of the range of the Quino checkerspot butterfly has been lost since 1900 as a result of habitat degradation or destruction. The animal also is endangered by over-grazing, poorly planned fire management practices, over-collection by butterfly collectors, off-road vehicles, and displacement of the larvae food plants and adult nectar sources by invasive

exotic vegetation.

The Quino checkerspot butterfly may have been one of the most abundant butterflies in coastal southern California until the 1980's. Currently, only seven or eight populations are known with the United States and one in Mexico. These populations are located in San Diego and western Riverside County. One of the populations in Riverside County currently is imperiled by a proposed residential project. The last individuals at a population at Otay Lake in San Diego were seen in 1990. In 1996, a small population was located on the western slope of Otay

Mountain, but the effects of a major brush fire on these animals will not be known until the 1997 flight season. The other known populations are based on sightings of five adults or less.

San Diego fairy shrimp

The San Diego fairy shrimp is a small freshwater crustacean in the Family Branchinectidae, of the Order Anostraca. The species was described by Michael Fugate in 1993 based on specimens collected on Del Mar Mesa, San Diego County, California, by Fugate and Marie Simovich (Service 1994c). The San Diego fairy shrimp is closely allied with, and has historically been misidentified as *Branchinecta lindahli,* a species widely distributed in western North America. This species was first collected (but identified then as *B. lindahli)* near Poway and at Ramona, California in 1962 (Service 1994c).

The San Diego fairy shrimp was listed as endangered on February 3, 1997 (62 FR 4925), after the Service determined that the continued survival of the species was threatened by habitat destruction from agricultural and urban development, alteration of wetland hydrology by draining, off-road vehicle activity, cattle grazing, and replacement by other fairy shrimp species that are habitat generalist. The San Diego fairy shrimp is restricted to vernal pool habitat, which has been eliminated from approximately 97% of its former extent in southern California. This fairy shrimp is found almost entirely in San Diego County, ranging from Camp Pendleton Marine Base, inland to Ramona and south through Del Mar Mesa, Proctor Valley, and Otay Mesa into northwestern Baja California, Mexico. In Baja California, it has been recorded at two localities (Valle de Palmas and Baja Mar, north of Ensenada). A single isolated female individual has been reported from vernal pools in Isla Vista, Santa Barbara County, California (Service 1994c).

Threatened Animal Species

California red-legged frog

Red-legged frogs breed from November to March with earlier breeding records occurring in southern localities (Storer 1925). Females deposit egg masses on emergent vegetation such that the egg masses float on the surface (Hayes and Miyamoto 1984). Eggs hatch within six to 14 days. The most significant egg mortality factor is salinity within complete mortality for eggs

exposed to salinity levels greater than 4.5 parts per thousand (Jennings and Hayes 1990). Larvae undergo metamorphosis in 3.5 to 7 months and sexual maturity is reached at three to four years (Jennings and Hayes 1990; Storer 1925). Adults may live up to eight to ten years (Jennings *et al.* 1992).

Habitat for the red-legged frog is distinct in its aquatic and riparian elements (Hayes and Jennings 1988; Jennings 1988). The adults require dense riparian vegetation associated with deep still or slowly moving water (Jennings *et al.* 1992). Heavily vegetated, terrestrial riparian areas may provide important wintering habitat, as they estivate in small mammal burrows and

moist leaf litter within riparian vegetation up to 26 meters (85 feet) from water's edge (Rathburn *et al.* 1993).

The geographic range of the red-legged frog has been reduced by 75 percent (Jennings *et al.* 1992). Historically, the range of the California red-legged frog was from Point Reyes inland and northward to Redding and southward to Northwestern Baja California, Mexico.

Habitat loss and alteration are primary factors in the decline of the red-legged frog. Wetland alterations include stream channelization, vegetation clearing, water diversions, and reservoirs. Reservoirs have the added impact in that they support and are sometimes stocked with exotic predators such as fish, crayfish, and bullfrogs. An additional indirect impact of development within the riparian corridor is increased siltation that can smother eggs and larvae.

Livestock grazing and off-road vehicle activities have also contributed to red-legged frog decline. Grazing contributes to the sedimentation and erosion into riparian and aquatic habitats (Lusby 1970; Winegar 1977; Jennings *et al.* 1992). Cattle often concentrate in riparian areas during the dry season (Marlow and Pogacnik 1985). Cattle will reduce or eliminate riparian and emergent vegetation by trampling and/or browsing (Gunderson 1988, Duff 1979). Additionally, removal of vegetation can raise water temperature levels and promote bullfrog breeding. Off-road vehicle use impacts red-legged frogs similarly to livestock grazing by damaging riparian vegetation and increasing siltation and erosion.

Currently, red-legged frogs are known from about 190 streams or drainages in 15 counties in central and southern California. In southern California, only four population localities are currently extant as compared with more than 80 historic locality records. This subspecies has been extirpated from San Diego County. The red-legged frog was listed as threatened on May 23, 1996 (61 FR 25813) due to past decline and current threats, including urban encroachment, reservoir construction, water diversion, and introduced predators and competitors.

Coastal California anatcatcher

The coastal California gnatcatcher (gnatcatcher) is a recognized subspecies of the California gnatcatcher *(Polioptila califomica* [Brewster]) and is endemic to coastal southern California and

northwestern Baja California, Mexico (American Ornithologists' Union 1983, 1989; Atwood 1980, 1988, 1990, 1991). It is a nonmigratory, resident species which is found on the coastal slopes of southern California, ranging from southern Ventura County, the Palos Verdes Peninsula in Los Angeles County southward through Orange, western Riverside, western San Bernardino, and San Diego counties into Baja California, Mexico to approximately 30 degrees North latitude near El Rosario (American Ornithologists' Union 1957; Atwood 1980, 1990; Phillips 1991; Banks and Gardner 1992).

The gnatcatcher was federally listed as threatened on March 30, 1993 (58 FR 16742). On December 10, 1993, pursuant to section 4(d) of the Endangered Species Act, the Service defined

specific conditions associated with certain land-use activities under which incidental take of the gnatcatcher and CSS habitat would not be a violation of section 9 of the Act (58 FR 65088).

The gnatcatcher typically occurs in or near sage scrub habitat, although it also uses to a much lesser extent chaparral, grassland, and riparian habitats where they occur adjacent to sage scrub habitat. While actual quantitative data may reveal relatively little use of other habitats, they may be critical during certain times of year for dispersal or as foraging areas during drought conditions. Breeding territories have also been documented in non-sage scrub habitat. Coastal sage scrub plant species are typically low-growing, drought-deciduous shrubs and sub-shrubs. Succulent plant species are also represented. Shrub species that typically dominate this habitat include California sagebrush *(Artemisia californica)*, California buckwheat *(Eriogonum fasciculatum)*, *sage (Salvia* spp.), laurel sumac *(Malosma laurina)*, lemonadeberry (*Rhus integrifolia)*, California encelia *(Encelia californica)*, goldenbush *(Isocoma* spp.), and cactus *(Opuntia* spp.) (Munz 1974; Kirkpatrick and Hutchinson 1980). Sage scrub often occurs in a patchy, or mosaic, distribution and patch size varies throughout the range of distribution for the gnatcatcher.

The gnatcatcher is primarily insectivorous and defends territories ranging in size from approximately 2 to 40 acres (Atwood 1990). Although gnatcatchers use a diverse range of plant species within sage scrub (Braden and Love 1995), quantitative data on bird densities relative to vegetation sub-associations are lacking. However, information suggests that small-scale differences in plant composition and/or structure may help explain discontinuities in gnatcatcher occurrence (Raabe 1995; Weaver 1995). Breeding birds have reached densities as high as one pair per five acres, but this is highly variable, with often more than 16 acres required per pair (Matson 1978, Atwood 1980, James 1993, Lovio 1993, unpublished data). Areal use requirements by gnatcatchers vary throughout the year with territorial behavior relaxing somewhat in the non-breeding season, which is often accompanied by an expansion in the area of use. These non-breeding areas are about 70 percent larger than breeding territories (Deeley 1996; Preston et. al. 1996).

Comprehensive studies by Atwood (1988, 1991), along with his 1990 status review of the gnatcatcher, have identified the extremes of the breeding season as being between February and August, although reproduction is concentrated in April and May. Clutch sizes range between three or four eggs, with the average egg number generally being four. Juvenile birds associate with their parents for several weeks (up to months) after fledgling and may disperse together in search of new territories (Woods 1921, Bent 1949). Gnatcatchers are persistent nest builders and often attempt multiple broods which is suggestive of a high reproductive potential. This is, however, offset by high rates of nest predation and brood parasitism. Gnatcatchers typically live for two to three years, although ages of up to five years have been recorded for some banded birds.

Multiple-year monitoring studies have provided preliminary data on local population dynamics. Pair numbers fluctuate significantly, even between consecutive years, and the magnitude of

fluctuations can exceed 100% (Erickson and Pluff 1995; Woehler et al. 1995). The underlying causes of these population fluctuations are complex and, as a result, not easily identified, but suggest that some local gnatcatcher populations may not be at saturation. Dramatic population changes (mostly increases) which have been documented since the end of the 1980's have been attributed to reproductive responses by gnatcatchers to variations in productivity of the sage scrub vegetation as mediated by climatic conditions, particularly rainfall (Woehler et al. 1995). Although plausible, this theory has not been rigorously tested. Additionally, monitoring of gnatcatcher reproduction performed at the Irvine Ecological Preserve from 1991-1995 documented a progressive increase in reproduction that corresponded with the end of a prolonged drought (Woehler et al. 1995). Although the direct link between rainfall and reproductive output has yet to be strongly supported by long-term data, the observed increase was corroborated by monitoring studies in other areas (Ogden 1993). Other local population increases correspond to spatial shifts following large-scale habitat loss or disturbance in surrounding landscapes, suggesting refugial use (Woehler et al. 1995). Despite the availability of refugia, however, the mortality resulting from catastrophic events (such as fire) may be protracted as studies reveal these abrupt population increases to be temporary, indicating an adjustment to carrying capacity.

Monitoring studies have collected reproductive data such as fledgling success in local gnatcatcher populations. The gnatcatcher may have productivity levels similar to that of other small songbird species, but the inter-year variability is relatively high (Ogden 1993). Productivity in terms of fledglings per breeding pair ranged from 2.6 to 4.8 in four studies conducted in various areas between 1992 and 1995 (Andros and Schroeder 1995; Atwood et al. 1995; Braden et al. 1995a; Galvin et al. 1995). These numbers indicate that some of the local gnatcatcher populations produce offspring at numbers exceeding the size of the breeding population in any given year (Woehler et al. 1995), however, productivity must be considered relative to mortality, which remains essentially unmeasured.

Although observed declines in numbers of gnatcatcher result from numerous factors, habitat destruction, fragmentation and adverse modification are the principal reasons for the gnatcatcher's current threatened status (58 FR 16742). Up to 90 percent of coastal sage scrub vegetation has been lost as a result of development and land conversion (Westman 1981a, 1981b; Barbour and Major 1977), and coastal sage scrub is considered to be one of the most depleted habitat types in the United States (Kirkpatrick and Hutchinson 1977, Axelrod 1978, Klopatek et al. 1979, Westman 1987, O'Leary 1990). In addition to agriculture and urbanization, the documented increase in fire frequency is also an important factor threatening the gnatcatcher in that it can render large areas of CSS unusable by birds for periods of several years, thus exacerbating the effects of habitat fragmentation. Frequent fires in a given area can also encourage invasion by exotic vegetation and can lead to habitat type-conversions.

Once considered to be a common species (Grinnell and Miller 1944), the gnatcatcher persists as a greater population of numerous, isolated sub-populations of different sizes within essentially the original confines of its range. The overall size of the greater population,

however, is assumed to have been reduced in proportion to the historical loss of the CSS

vegetation. The most current assessments of total population size of the gnatcatcher conservatively estimate 3500 birds remaining in the United States portion of the range. Approximately 2100 pairs occur within San Diego County (USFWS 1996).

Endangered Plant Species

San Diego button celery

Eryngium aristulatum var. *parishii* is a low, spreading or ascending perennial herb that is endemic to claypan and hardpan vernal pools between southwest Riverside County and northwestern coastal Baja California. In San Diego County it is known from Camp Pendleton, San Marcos, Otay Mesa, Miramar area, and Kearney Mesa. Although locations are widespread, many local populations are small remnants of the former extent and are largely still at risk of destruction. Threats include urbanization, agriculture, and off-road vehicle use. The button celery was listed as endangered on August 3, 1993 (5 8 FR 41384).

California Orcutt glass

Orcuttia californica is a member of the grass family (Poaceae). This small annual grass reaches about 10 centimeters (four inches) in height, is bright gray-green, and secretes sticky droplets that taste bitter. Inflorescences, borne from May through July, consist of seven spikelets arranged in two ranks, with the upper spikelets overlapping on a somewhat twisted axis.

Orcutt grass was listed as endangered on August 3, 1993 (58 FR 41391) after the Service determined that the present range and continued existence of the species was being rapidly destroyed by habitat loss and degradation due to urban and agricultural development, livestock grazing, off-road vehicle use, trampling, invasion from weedy non-native plants and other factors.

Orcuttia californica is endemic to vernal pool habitat, which is estimated to have been eliminated from approximately 97% of its former extent. This species has been reported from at least four locations in Los Angeles County. However, it is currently known from only a single locality near Santa Clarita, California (Curzan Mesa). An occurrence has been reported near Woodland Hills in Ventura County (93 FR 18432; pers. comm. to E. Bauder). It is also known from the Santa Rosa Plateau, Skunk Hollow and a site near Hemet (D. Bramlet unpublished data). It once occurred near Murrieta Hot Springs, but the population has been extirpated. In San Diego County, *0. californica* is found in two pools on Naval Air Station Miramar, near Carlsbad (in the same pool as *Eryngium. aristulatum* var. *parishii),* and in a two small pool groups on Otay Mesa. In Baja California, Mexico, *0. californica* has been found on Mesa de Colonet and in pools at San Quintin. Both these sites still have, *0. californica.*

San Diego Mesa Mint

Pogogyne abramsii is an annual herb in the mint family (Lamiaceae). The genus *Pogogyne* was first described by Bentham (1834 cited in Howell 1931) in his monographic study of the mint *family, Labiatarum Genera et Species.* John Thomas Howell (1931), in his monographic study of the genus *Pogogyne,* separated *P. nudiuscula* into two species: *P. nudiuscula and P. abramsii. Pogogyne abramsii* was diagnosed by hairs on the calyx and a different bract morphology from *P. nudiuscula.* Not only do the two species differ in the calyx pubescence and bract morphology, but also in the number of flowers per stem node. A major problem in determining the original range of these two species is that almost all of the herbarium collections that might prove useful are very vague on locality. Their sites are given as "mesas, San Diego"; "San Diego"; and "mesas near San Diego". *P. abramsii* can still be considered as all the current *Pogogyne* populations north of Mission Valley and south of Del Mar Mesa. The populations from the central mesa were probably *P. abramsii,* but with such limited herbaria records, this question will probably never be fully resolved.

As an herbaceous annual, *Pogogyne abramsii* occasionally reaches about a foot in height and blooms from about May to early July. Flowers are insect-pollinated and in areas surrounded by development and disturbance, the introduced honey bee *(Apis mellifera)* is a common pollinator. In areas of lower disturbance, the honey bee can often be replaced by bee flies (Bombyliidae), flower flies (Syrphidae) or ground dwelling bees (Anthophoridae)(Ellis and Mills 1991; McMillan unpublished data).

Pogogyne abramsii was listed as endangered on September 28, 1978 (43 FR 44812), after the U.S. Fish and Wildlife Service (Service) determined that the present range and continued existence of the species was being rapidly destroyed by highway construction, housing development, off-road vehicle use, illegal dumping, and agricultural conversion. It is known to exist on the coastal mesas in central San Diego County. Its northern range boundary is Del Mar Mesa, and it occurs south on Mira Mesa, Naval Air Station Miramar, and Kearney Mesa with a few populations in western Tierrasanta. *P. abramsii* populations were extirpated from the Linda Vista area, the vicinity of Balboa Park, Normal Heights, and the area surrounding San Diego State University. Most of these extirpated populations from the San Diego Mesa are labeled as *P. nudiuscula* on herbarium collections, however, these specimens have not been annotated and should be considered *P. abramsii* (S. McMillan, SDSU, unpublished data).

Otay Mesa Mint

Pogogyne nudiuscula is an annual herb in the mint family (Lamiaceae). Howell considered *P. nudiuscula* to be diagnosable from *P. abramsii* by having a glabrous calyx and bract with a different morphology. This is supported by current work (Jokerst 1993; McMillan unpublished data), and the species is also diagnosable by usually having at least six flowers per node on the stem.

Pogogyne nudiuscula can reach 30 centimeters (one foot) in height or more and blooms from May through June or early July. The plant is usually not very branched, and the vegetative and floral portions of the plant give off a strong, turpentine mint odor. Flowers are insect-pollinated and in areas surrounded by development and disturbance, the honey bee may be the most common pollinator. In areas of lower disturbance, honey bees can often be replaced by numerous types of butterflies (Lepidoptera) and more commonly, bee flies (Bombyliidae) and flower flies (Syrphidae) (McMillan unpublished data).

Pogogyne nudiuscula was listed as endangered on August 3, 1993 (58 FR 41391), after the Service determined that the present range and continued existence of the species was being rapidly destroyed by habitat loss and degradation due to urban and agricultural development, livestock grazing, off-road vehicle use, trampling, invasion from weedy non-native plants and other factors.

Pogogyne nudiuscula currently exists only in a small number of pools on Otay Mesa. Historically it was known to occur across the United States International border where the Tijuana International Airport is now located. No Tijuana populations of *P. nudiuscula* are known to exist today. *P. nudiuscula* was never known to occur further north than Otay Mesa (see explanation above).

Arctostaphylos glandulosa ssp. crassifolia (Del Mar manzanita)

The Del Mar manzanita is a white-flowered shrub that grows near the coast in southern maritime chaparral. This species is threatened by habitat destruction and fragmentation from agricultural, residential, and commercial development and fuel modification activities and was federally listed on October 7, 1996 as endangered (61 FR 52370). About 21,000 acres of southern maritime chaparral historically occurred in San Diego County (Oberbauer and Vanderwier 1991). Currently, about 2,500 acres of this habitat remain in the County (Oberbauer and Vanderwier 1991), representing a 90 percent reduction that is largely due to agricultural conversion and urbanization. Roberts (1993) estimated that about 88 percent of the remaining southern maritime chaparral in San Diego County contains Del Mar manzanita.

Del Mar manzanita is restricted to sandstone terraces and bluffs from Carlsbad south to Torrey Pines State Park, extending inland to Rancho Santa Fe and Del Mar Mesa in San Diego County, California. An additional population has been reported just south of the San Dieguito River southwest of Lake Hodges in San Diego County. This species has also been reported from five localities in northwestern Baja California, Mexico, from just east of Tijuana along the United States border to Cerro el Coronel and Mesa Descanseo about 31 miles north of Ensenada.

The majority of Del Mar manzanita populations are located in the United States. Twenty-six weakly defined populations have been identified in San Diego County. The majority of these populations occur within four miles of the coast. In 1982, it was estimated that there were about 15;300 to 16,500 individuals of this species distributed within 314 distinct stands. A stand may

represent from a single individual to as many as 500 individuals, and may cover up to 15 acres. The average stand is generally less than 2 acres in size, and contains 20 to 60 individuals. Other populations existed prior to 1982; however, these were not quantified before destruction. The 1982 figures likely reflect two-thirds to three-quarters of the historical extent of this species.

While 25 of the 26 populations in San Diego County are still extant, the majority of these populations have been greatly reduced and significantly fragmented by urban development since 1982. In the last decade, the species has suffered a 40 percent decline in the number of stands and over a 50 percent decline in the number of individuals. Currently, it is estimated that there are about 7,500 to 8,700 individuals remaining in San Diego County. A total of 197 stands remain, although the majority of these are distributed in fragmented habitat along the margins of residential development (Roberts 1993).

Chorizanthe orcuttiana (Orcutt's spineflower)

Chorizanthe orcuttiana a low, yellow-flowered annual of the buckwheat family (Polygonaceae), is restricted to sandy soils. Historically, *Chorizanthe orcuttiana* is known from 10 separate occurrences in San Diego County from Point Loma, Del Mar, Kearney Mesa, and Encinitas (CDFG 1992). Only two populations have been seen in recent years, one at Torrey Pines State Park and one in a City park in Encinitas. The Torrey Pines populations has not been relocated in the past few years possibly due to a changing composition of plant species and density after a 1984 burn. The population in Encinitas numbers nearly 1,500 individuals within an area of about 4 square meters. This population is threatened by proposed construction of recreational facilities. Due to their restricted distribution and small population size, *Chorizanthe orcuttiana* is also threatened with extinction by stochastic events. Genetic variability is reduced in small populations, making them vulnerable to extinction by a single human-caused or natural event such as drought or fire. *Chorizanthe orcuttiana* was federally listed as endangered on October 7, 1996 (61 FR 52370). A detailed account of the status, distribution, taxonomy, ecology, and reproductive characteristics of the species is presented in the final rule, which is hereby incorporated by reference.

Threatened Plant Species

Baccharis vanessae (Encinitas baccharis)

Baccharis vanessae, a member of the aster family (Asteraceae), is a dioecious, broom-like shrub associated with dense mixed chaparral. As currently understood, the historical distribution of this species included 18 populations scattered from the San Mateo Wilderness of northern San Diego County, California, south to Encinitas east through the Lake Hodges area to Mount Woodson and south to Poway and Los Penasquitos Canyon. Twelve of these populations are still extant and contain approximately 2,000 individuals. With the addition of recently discovered populations, fourteen populations currently exist. Four of these contain fewer than six individuals. Seven of the remaining fourteen populations are threatened by development.

The imminent threat facing this taxon and its associated habitats is the ongoing and future destruction and adverse modification of habitat by urban and agricultural development, recreational activities, trampling, and fuel modification activities. Due to their restricted distribution and small population size, *Baccharis vanessae* is also threatened with extinction by stochastic events. Genetic variability is reduced in small populations, making them vulnerable to extinction by a single human-caused or natural event such as drought or fire.

Baccharis vanessae was federally listed as threatened on October 7, 1996 (61 FR 52370). A detailed account of the status, distribution, taxonomy, ecology, and reproductive characteristics of the species is presented in the final rule, which is hereby incorporated by reference.

PROPOSED PLANT SPECIES

Acanthomintha ilicifolia (San Diego thornmint)

Acanthomintha ilicifolia is an annual aromatic herb of the mint family (Lamiaceae). Thornmint usually occurs on heavy clay soils within open patches of coastal sage scrub, chaparral, and native grassland of coastal San Diego County and south to San Telmo in northern Baja California, Mexico. This taxon is considered to be "one of the most restricted clay soil endemics" (Oberbauer 1991). It is frequently associated with gabbro soils derived from igneous rock, and it also occurs in calcareous marine sediments.

About 40 percent of the known 35 historic populations in the United States have been extirpated. Currently, about 40,000 individuals are distributed over 20 sites ranging from San Marcos east to Alpine and south to Otay Mesa in San Diego County (CNDDB 1995).

San Diego thornmint is currently proposed for Federal listing as endangered (60 Federal Register 40549). This species is threatened by development, agriculture, off-road activity, over collecting, stochastic extinction, trampling, and invasion of non-native species.

Brodiaea filifolia (thread-leaved brodiaea)

Brodiaea filifolia, a perennial, is a member of the lily family (Liliaceae). This species typically occurs on gentle hillsides, valleys, and floodplains in mesic, southern needlegrass grassland and alkali grassland plant communities in association with clay, loamy sand, or alkaline silty-clay soils (CDFG 1981). Sites of occupation are frequently intermixed with, or near, vernal pool complexes, such as in the vicinity of San Marcos (San Diego County), the Santa Rosa Plateau, and southwest of Hemet (Riverside County). Twenty-seven populations of this species are known to exist. The majority of the remaining populations are located on the Santa Rosa Plateau in southwestern Riverside County, and in the Vista-San Marcos-Carlsbad region of northwestern San Diego County. Nearly half of the latter population has been eliminated. Over the last 15 years, nearly 60 ha of occupied habitat containing over 80,000 plants have been eliminated in the cities of San Marcos and Vista. While the largest population on the Santa Rosa

Plateau is on

land owned by The Nature Conservancy, all other extant populations are on privately owned land. This species is threatened by habitat destruction, degradation, and fragmentation resulting from agriculture, urbanization, pipeline construction, alteration of wetland hydrology by draining or channelization, clay mining, off road vehicles, weed abatement, and encroachment by exotic plant species.

A detailed account of the status, distribution, taxonomy, ecology, and reproductive characteristics of the thread-leaved brodiaea is presented in the proposed rule to list this species as threatened (59 FR 64812) which is hereby incorporated by reference.

Hemizonia conjugens (Otay tarplant)

Hemizonia conjugens is an aromatic annual of the sunflower family (Asteraceae). This taxon is restricted to clay soils in coastal sage scrub and grassland habitats. In San Diego County, by 1991, an estimated 95 percent of the native perennial grasslands and 60 percent of coastal sage scrub had been lost to development (Oberbauer and Vanderwier 1991, San Diego Association of Governments 1995). This species currently has a very limited distribution consisting of 15 populations near Spring Valley in southern San Diego County and one population in Baja California, Mexico. It is threatened by variety of factors including urban and agricultural development, competition from non-native plant species, off-road vehicles, mining, grazing, and trampling by hikers. Due to these threats, *Hemizonia conjugens* has recently been proposed for Federal listing as endangered (60 FR 40549). Two of the major populations, containing about 70% of all known individuals, are within proposed development projects that would fragment the remaining habitat. The five remaining major populations (containing about 25% of all individuals) may be subject to edge effects.

Monardella linoides ssp. viminea (willowy monardella)

Monardella linoides ssp. *viminea* is a perennial herb of the mint family (Lamiaceae) that often grows in sandy washes and floodplains. This taxon was previously known from 27 occurrences in the United States. Approximately 6,000 individuals of this species from 20 populations are thought to be extant in the United States. All but one population of approximately 200 individuals occur between Penasquitos Canyon and Mission Gorge in San Diego County. Fifteen populations have fewer than 100 plants, and 6 of these contain fewer than 15 individuals. One population is known from northern Baja California, Mexico. The remaining populations are threatened by urban development, sand and gravel mining, off-road vehicles and fire. Due to these threats, *Monardella linoides* ssp. *viminea* was proposed for Federal listing as endangered (60 FR 40549).

Navarretia fossalis Moran (spreading navarretia)

Navarretia fossalis is a low, mostly spreading or ascending, annual herb in the phlox family (Polemoniaceae). This plant species was proposed for listing as threatened on December 15,

1994 (59 FR 64812) after the Service determined that *Navarretia fossalis* was declining as a result of habitat destruction and fragmentation from agricultural development, pipeline construction, alteration of wetland hydrology by draining or channelization, off-road vehicle activity, cattle and sheep grazing, weed abatement, fire suppression practices, and competition from alien plant species. *N. fossalis* is known from widely disjunct and restricted populations extending from the Santa Clarita region of Los Angeles County, east to the western lowlands of Riverside County, south through coastal and foothill San Diego County south to San Quintin, Baja California, Mexico. Fewer than 30 populations exist in the United States. Nearly 60 percent of these populations are concentrated in three locations: on Otay Mesa in southern San Diego County, along the San Jacinto River in western Riverside County, California, and near Hemet in Riverside County (Service 1994b).

In San Diego County, *Navarretia fossalis* appears to be a vernal pool endemic. In Riverside County, *N. fossalis* has been found in relatively undisturbed and moderately disturbed vernal pools and within larger vernal wetland plains near Hemet that are dominated by alkali grassland. The species also occurs in alkali playa habitats along the San Jacinto River.

Nolina interrata (Dehesa beargrass)

Nolina interrata is a member of the lily family (Liliaceae) and is restricted to clay soils formed from gabbro soils. This species grows in chaparral habitat commonly associated with *Adenostoma fasciculatum* (chamise) and *Salvia clevelandii* (Cleveland sage). The total population size of *Nolina interrata* is about 9,000 plants. There are nine populations in San Diego County, all within a 6 square mile area in the Dehesa Valley east of El Cajon, California. There are no records of extirpated populations. About one-third to one-half of the known populations are protected on a reserve managed by The Nature Conservancy. Another large population near Sycuan Peak has become part of a state-managed preserve. The remaining populations are all on private land. *Nolina interrata* is also known from two to three populations in Mexico, each with fewer than 25 individuals. This species is threatened by habitat destruction, degradation, and fragmentation resulting from urbanization, encroachment by exotic plant species, and disruption of a normal fire cycle. *Nolina interrata* was recently proposed for Federal listing as threatened (60 FR 51443).

EFFECTS OF THE ACTION

Implementation of the Fire Chiefs' vegetation abatement plans through participation in an MOU and issuance of an incidental take permit may adversely affect listed and proposed species in San Diego County. Within the Multiple Species Conservation Program (MSCP) and Multiple Habitat Conservation Program (MHCP) planning areas of San Diego County (subregions of the statewide NCCP program), approximately 2,876 acres out of 697,374 acres of natural habitats lie

within 100 feet of existing development (SANDAG Analysis). Within the eastern portion of San Diego County, approximately 867 acres out of 915,674 acres of natural habitats lie within 100 feet of structures (County of San Diego, 1996). Thus, an estimated 3,743 acres out of 1,613,048

acres of natural habitat (0.2%) lies within 100 feet of existing structures within San Diego County.

There are inadequate data on the distribution of listed and proposed species in proximity to existing human development at the scale of the entire county to support a numerical assessment of the proposed action on each species. Rather, this assessment is based on the narrow, linear, and peripheral nature of the proposed action.

In general, impacts resulting from vegetation removal activities are limited to narrow strips (typically 100 feet wide or less) along the urban/wildland interface. Impacts of fuelbreak creation and maintenance could include direct take such as killing or injuring individuals, or damaging plants that are present within the firebreak area. Fuelbreak creation could also result in habitat destruction and fragmentation and in harassment from actions involving vehicle access, human activity, and noise from vegetation clearing activities. Edge effects could increase due to an increase in the rate of introduction of weedy species, or by allowing easier access by predators and humans. Hydrology could be changed, affecting certain plant species and the animals dependent on affected plants. Territorial animals that must disperse to other areas or are forced to condense the size of a territory may have a decreased chance of becoming reproductively successful. If a displaced individual or pair disperses into the remaining areas of habitat, it may cause increased stress on the existing inhabitants. Territories may have to be more vigorously defended and territory boundaries may shift, ultimately affecting reproductive success.

Those species occurring in the most abundant vegetation communities along the wildland-urban interface would likely be affected most often by fuelbreak construction. The acreages of vegetation communities potentially affected along the existing interface throughout San Diego County was estimated by the San Diego Association of Governments (SANDAG), utilizing various city and county Geographic Information System (GIS) habitat databases. Due to limitations in small-scale interpretation of the databases (the GIS calculations could not distinguish portions of the interface with currently adequate fuelbreaks or which otherwise would not require vegetation clearance), a correction factor was necessary to account for over-estimations of natural habitats potentially lost to fuelbreaks. For lack of a better criterion for this adjustment, the correction factor was determined from the proportion of compliance with fuelbreak requirements on undeveloped lands (not restricted to native vegetation) in a sample fire district.

Vernal Pool Species

Seven federally listed or proposed species primarily restricted to vernal pools could be affected

by implementation of the vegetation abatement MOU: San Diego button-celery, spreading navarretia, California Orcutt grass, San Diego mesa mint, Otay mesa mint, San Diego fairy shrimp, and Riverside fairy shrimp. Although not quantified, some vernal pools may occur within 100 feet of occupied structures that may require fuel modification. However, the vegetation found in vernal pools is diminutive in size, and provides very little fuel, even in the

driest of conditions. Although not specifically addressed in the terms of the MOU, vernal pools have historically been avoided in the course of fuel management due to the small fuel loads within pools. However, because the pools are sometimes located within larger areas requiring fuel modification, some impacts may occur. Potential impacts to vernal pool species include trampling of plants and fairy shrimp if individuals enter the pools on foot. Additional impacts could result from vehicular access to pools.

The Service will make available to the Fire Chiefs and Fire Districts information about the location of any vernal pools within 100 feet of existing development. The fire departments will avoid clearing in vernal pools. To further reduce potential impacts to vernal pools, only hand-clearing methods will be used to remove flammable vegetation that occurs within 50 feet of a vernal pool. If an impact is determined to be unavoidable, the Fire Chiefs and Fire Districts will coordinate with the Service and the Department.

Due to avoidance of direct impacts and utilization of only hand clearing methods within 50 feet of vernal pools, impacts to vernal pool species will be avoided during implementation of the MOU.

Riparian Species

Although some riparian habitat lies within 100 feet of existing structures in San Diego County, vegetation abatement for purposes of fire protection has traditionally been unnecessary in riparian areas due to the relatively non-flammable nature of the vegetation.

Birds

The least Bell's vireo and southwestern willow flycatcher could be adversely affected by the implementation of the MOU in the event that vegetation management zones overlap with riparian habitat. Removal of nesting substrate could reduce available nesting areas for vireos or flycatchers or even cause direct take of nestlings if such activities occur during the nesting season. Harassment of birds inhabiting areas subject to vegetation removal or adjacent to such areas could also occur. However, it is the Service's opinion that, based on the avoidance of riparian habitat in fuel management, effects to riparian bird species as a result of this permit would likely be limited to harassment, such as from noise or dust from nearby activities, or harm resulting from reduction in adjacent upland foraging areas. Such effects are not likely to jeopardize least Bell's vireo or southwestern willow flycatcher. Direct killing of, or injury to, individual animals would be limited to accidental injury or death of animals that are temporarily utilizing upland areas. Further avoidance is anticipated by the lack of seasonal overlap between most anticipated

vegetation removal (late winter and early spring) and the occurrences of these migratory riparian birds (spring and summer).

Amphibians

Adults, tadpoles, and eggs of southwestern arroyo toads and red-legged frogs could be adversely affected by reduction of riparian vegetation, which could result in changes in water temperatures. Southwestern arroyo toads are water-dependent breeders, but also use adjacent upland habitat within one kilometer of water sources for up to ten months of the year. In upland areas subject to vegetation abatement, toads may be vulnerable to take for a brief period if their seasonal emergence from hibernation coincides with fuelbreak construction, but the nocturnal habits of this species will likely serve to minimize this possibility. It is also possible that toads may be effected in their upland phase by loss of protective cover, destruction of burrows, and mortality from crushing. Quantification of the number of toads or acreage of habitat potentially affected was not possible at the time of this analysis. It is the Service's opinion that the effects of the proposed action on red-legged frogs and southwestern arroyo toads will be minimal because: a) this opinion and the MOU provide for avoidance of riparian habitat types in fuel management; b) information on the arroyo toad suggests that upland habitat use is concentrated mostly in the more friable soils of alluvial terraces; c) few dwellings exist within or near such peripheral uplands on known arroyo toad drainages (USFWS 1994); d) fuelbreak construction activities will be restricted to surface vegetation for the protection of soil integrity; and e) there are no known extant populations of red-legged frogs in San Diego County.

Coastal Sage Scrub Species

Implementing vegetation abatement programs could affect hundreds of acres of coastal sage scrub and species associated with this vegetation community. The SANDAG and San Diego County GIS calculations determined that approximately 220,000 acres of coastal sage scrub occur in the county. Based on the SANDAG analysis, 745 acres of CSS will potentially be affected by fuelbreak construction.

California Gnatcatcher

Approximately 2,100 California gnatcatcher pairs have been estimated to reside in San Diego County. The California gnatcatcher inhabits coastal sage scrub areas that could be affected by the implementation of vegetation abatement activities. Disturbances to the gnatcatcher from the proposed activity are expected to occur in peripheral areas of the birds' territories, which will be rendered unusable for all or most life-history activities. Disturbance of this habitat strip will reduce the overall carrying capacity of coastal sage scrub areas and may affect the gnatcatcher through increased density of birds, reduction of

territory size, increased territorial defense behavior, and direct harassment from abatement activities. The Service has no direct measure of the number of gnatcatcher pairs that utilize the peripheries of CSS areas for nesting, foraging, or sheltering and which therefore will be subject to harm or harassment by vegetation removal. However, it is assumed that the number of pairs affected will be proportional to the estimated 745 acres of CSS habitat expected to be impacted by the proposed action. The effects to gnatcatchers resulting from 100-foot wide fuelbreaks is likely to be minimal, though, because the area of the firebreaks in most instances will represent only a small fraction of any single gnatcatcher territory and because the overall gnatcatcher densities and habitat quality at the edge of existing development are assumed to be lower than in the interiors of habitat stands. Because the California gnatcatcher is a sedentary species that occupies the same general area throughout the year, it is assumed that birds will not be able to compensate for home range area lost to vegetation removal. The gnatcatcher's requirement for at least moderate CSS vegetation structure will prevent it from finding suitable nesting habitat in regularly maintained vegetation removal zones. Fuel management zones that have not been cleared for several years may have CSS and gnatcatchers present, so established fuelbreaks should be maintained regularly within 3-year periods to prevent the recovery of CSS and potential further impacts to gnatcatchers.

Because the nesting season of the California gnatcatcher extends from early February through August, and nests are constructed in a variety of shrubs of the coastal sage scrub vegetation between 90 and 105 cm off of the ground, it is assumed that gnatcatchers may be harmed and harassed as a result of proposed activities and more rarely may be killed or injured. The timing of abatement activities could add to the adverse impact on California gnatcatcher. For example, abatement of vegetation during the gnatcatcher breeding season may have greater adverse effects on the species than abatement during the nonbreeding season.

Loss of CSS, disturbed CSS, and CSS/grassland through fire abatement activities will be monitored on an annual basis. The Service is involved in the State of California's Natural Community Conservation Planning (NCCP) program through the rule under section 4(d) of the Endangered Species Act associated with the threatened listing of the gnatcatcher. This special rule allows approval of projects of low impact in the interim period before specific subarea preserve plans are finalized under the NCCP framework, so long as cumulative losses do not exceed 5% of the remaining CSS and project approval does not preclude long-term preserve plans. Under NCCP guidelines, jurisdictions must track the cumulative acreage of CSS loss, including fuelbreaks, to monitor the allocation of the 5% interim allowance. To this end, the Service, Fire Districts, and Fire Chiefs will develop an effective tracking method for the loss of CSS from fuelbreak clearing. CSS lost due to vegetation abatement activities will be counted towards the allowable 5% loss until subarea preserve plans are finalized. However, such loss of CSS will be exempt from mitigation requirements of the NCCP in accordance with a special statement issued by the Department and Service on February 2, 1995. Vegetation abatement activities will be

considered in the development of subarea preserve plans.

The cutting, mowing or discing and subsequent maintenance of fuel breaks could result in the harm, harassment, and even the destruction of individual coastal California gnatcatchers. However, it is the Service's opinion that the impacts described above are

not likely to jeopardize the continued existence of the patcatcher for the following reasons:

1. Much of the CSS that may be disturbed or destroyed in the course of vegetation abatement around structures will be unoccupied or will be peripherally occupied by gnatcatchers.

2. The implementation of vegetation abatement will in some instances reduce the risk of wildland fire consuming extensive amounts of wildlife habitat. As large blocks of suitable habitat for gnatcatchers diminish and the extent of the urban-wildland/interface increases, fire management including vegetation abatement will became a more critical element in conservation planning and reserve management.

3. The estimated 745 acres of gnatcatcher habitat potentially affected by implementation of vegetation abatement programs is within the maximum allowable 5% CSS loss under the 4(d) rule.

Mountain Meadow Species

Laguna Mountains skipper *(Pyrgus ruralis lagunae)*

The Laguna Mountains skipper is found in several mountain meadows in the Laguna and Palomar Mountain ranges of San Diego County. Effects to the skipper potentially resulting from the construction and maintenance of firebreaks include direct death or injury to the early stages, damage or loss of food plants and adult nectar sources, and harassment of the adults. Quantification of the number of Laguna Mountain skippers or acreage of habitat potentially affected was not possible at the time of analysis. However, much of the meadow habitat utilized by the Laguna Mountains skipper is in areas where structures are limited and should not require clearing.

It is the Service's opinion that the potential adverse impacts described above are not likely to jeopardize the continued existence of the Laguna Mountains skipper because much of the meadow habitat where this species occurs is not likely to contain structures that require creation of fuelbreaks.

Grassland Species

Stephens Kangaroo Rat

The effects of the proposed action on SKR will be small to non-existent. There are few structures in the portion of San Diego County occupied by SKR, so little clearing will be done as outlined in the MOU in SKR habitat. SKR distribution is concentrated in Riverside County, and most of the habitat in San Diego occurs on Federal and rural lands

not affected by this MOU.

Quino checkerspot butterfly

The Quino checkerspot butterfly inhabits grasslands and ecotones between grasslands and coastal sage scrub, chaparral, and sparse native woodlands. Adverse impacts to the butterfly potentially resulting from the construction and maintenance of firebreaks could include direct death or injury to the early stages, damage or loss of food plants and adult nectar sources, harassment of the adults, and degradation of habitat which may result in increased invasive exotic vegetation. Quantification of the number of Quino checkerspot butterflies or acreage of habitat potentially affected was not possible at the time of analysis. However, checkerspot habitat is unlikely to occur near structures due to the prevalence of non-native plants and invertebrates in these areas.

It is the Service's opinion that the potential adverse impacts described above are not likely to jeopardize the continued existence of the SKR or quino checkerspot butterfly because much of the grassland and ecotone habitats where these species occur are not likely to occur near structures that require creation of fuelbreaks.

Narrow Endemic Species

Because narrow endemics exist in small, disjunct populations that may be few in number, disturbance in a single area could have a large impact on the viabilities of these species. Narrow endemic species of San Diego County include: thread-leaved brodiaea, Pacific pocket mouse, Encinitas baccharis, Orcutt's spineflower, willowy monardella, San Diego thornmint, Otay tarplant, Del Mar manzanita, and Dehesa beargrass.

Because of the scope of the proposed fuel reduction activities addressed in the MOU, it is not presently possible to quantify the potential adverse impacts to these species. Populations of these species occurring within 100 feet of structures would be vulnerable to fuel modification activities. To reduce the likelihood of such effects, the MOU states that the Service and the Department will notify landowners subject to vegetation abatement of the presence of listed or proposed species within 100 feet of their structures so that they may be avoided if possible. The Service and the Department will also address these species during the annual coordination with the Fire Chiefs and Fire Districts.

It is the Service's opinion that the potential adverse impacts described above are not likely to jeopardize the continued existence of narrow endemic species of San Diego for the following reasons:

1. Existing populations of narrow endemics will be identified by Service and Department surveys.

2. The landowner notification protocol will allow salvage or avoidance of populations of narrow endemic species that lie within 100 feet of structures.

CUMULATIVE EFFECTS

Cumulative effects include the impacts of future State, local or private actions that are reasonably certain to occur in the action area considered in this biological and conference opinion. Future federal actions that are unrelated to the proposed action are not considered cumulative to the proposed action because they require separate consultation pursuant to section 7 of the Act.

The majority of activities anticipated to affect these species within the foreseeable future are local urban development projects with no federal involvement. Local urban development is expected to be a continued impact because population growth analyses and estimates published by the Southern California Association of Governments (SCAG) for the 2010 and 2030 time horizons show substantial increase in the human population in the region. A large number of projects that lack a federal nexus are occurring or are proposed within the current range of the listed species addressed in this biological opinion. Future development should incorporate the guidelines set forth in the Bates Bill, which directs future safety-related vegetation abatement and fire management activities to be contained within development footprints, or be consistent with the requirements of regional planning efforts. These requirements and their impacts should be adequately addressed in the NEPA and CEQA review and documentation of the future projects.

The vegetation abatement activities will occur within the boundaries of several ongoing planning efforts under the NCCP, including the Multiple Species Conservation Plan, generated as part of San Diego's Clean Water Program; San Diego Association of Government's Multiple Habitat Conservation Program; and the County of San Diego's Multiple-Habitat Conservation and Open Space Plan. These planning efforts address the cumulative effects of future development by designing regionally based habitat preserves that afford permanent conservation of the listed species addressed herein.

CONCLUSION

After reviewing the current status of the listed or proposed species within the action area, environmental baseline effects of the MOU, and cumulative effects, it is the Service's biological

and conference opinion that participation in the MOU with the Fire Chiefs, Fire Districts, Department, and CDF is not likely to jeopardize the continued existence of the species addressed herein. In addition, no critical habitat designated for the least Bell's vireo or proposed for the southwestern willow flycatcher will be adversely modified or destroyed.

INCIDENTAL TAKE STATEMENT

Section 4(d) and 9 of the ESA prohibit the take of listed species without special exemption. Taking is defined as harassing, harming, pursuing, hunting, shooting, wounding, killing,

trapping, capturing, collecting, or attempting to engage in any such conduct. Harm is further defined to include significant habitat modification or degradation that results in death or injury to listed species by significantly impairing essential behavioral patterns, including breeding, feeding, or sheltering. Harass is defined as actions that create the likelihood of injury to listed species to such an extent as to significantly disrupt normal behavior patterns which include, but are not limited to, breeding, feeding or sheltering. Incidental take is any take of listed animal species that results from, but is not the purpose of, carrying out an otherwise lawful activity conducted by a Federal agency or a private applicant. Under the terms of sections 7(b)(4) and 7(o)(2) of the ESA, taking that is incidental to and not intended as part of the agency action is not considered to be prohibited taking under ESA provided that such taking is in compliance with this Incidental Take statement.

The measures described below are nondiscretionary, and must be implemented by the Service and the parties to the MOU so that they become binding conditions in order for the exemption in 7(o)(2) to apply. The Service has a continuing duty to regulate the activity covered by this incidental take statement. If the Service fails to require the San Diego Fire Chiefs and Fire Districts to adhere to the terms and conditions of the incidental take statement through the enforceable terms in the Memorandum of Understanding or fails to retain oversight to ensure compliance with these terms and conditions, the protective coverage of section 7(o)(2) may lapse.

Sections 7(b)(4) and 7(o)(2) of the ESA do not apply to the incidental take of listed plant species. However, protection of listed plants is provided to the extent that the ESA requires a Federal permit for removal or reduction to possession of endangered plants from areas under Federal jurisdiction, or for any act that would remove, cut, dig up, or damage or destroy any such species on any other area in knowing violation of any regulation of any State or in the course of any violation of a State criminal trespass law.

Amount or Extent of Take

The Service anticipates the modification of approximately 745 acres of California gnatcatcher habitat as a result of fuelbreak creation. The Service anticipates that a number of California gnatcatchers commensurate with this amount of peripheral habitat loss may be harmed (in the

case of nestlings) or harassed as a result of fuel modification activities.

The Service anticipates that no arroyo toads will likely be killed, but that an unquantifiable number may be harmed or harassed as a result of fuel modification activities in upland habitats peripheral to toad breeding drainages.

The Service anticipates no take in the form of harm or killing of least Bell's vireos or southwestern willow flycatchers from fuel modification activities due to the avoidance of riparian habitat required in the MOU. An unquantifiable number of least Bell's vireos may be subject to harassment from noise associated with upland vegetation abatement in areas adjacent

to riparian zones for short periods of time early in their breeding season.

The Service anticipates no take of red-legged frogs, San Diego fairy shrimp, or Riverside fairy shrimp as a result of implementation of the MOU due to riparian and vernal pool avoidance measures.

The Service anticipates no take of the Pacific pocket mouse from the proposed action due to its limited known distribution and unlikely occurrence adjacent to human dwellings.

The Service anticipates an unquantifiable number of SKR may be taken as a result of vegetation abatement activities in connection with fire protection.

The Service anticipates no take of Laguna Mountains skippers because of the limited number of structures within the grassland habitat occupied by this species.

The Service anticipates no take of the Quino checkerspot butterfly due to its highly restricted known distribution and unlikely occurrence adjacent to human dwellings.

Reasonable and Prudent Measures

The Service believes that the following Reasonable and Prudent Measures are necessary and appropriate to minimize take of the coastal California gnatcatcher, southwestern arroyo toad, southwestern willow flycatcher, or least Bell's vireo.

1. Measures shall be taken to minimize take associated with fuel abatement activities.

2. Measures shall be taken to minimize loss of habitat resulting from fuel abatement activities.

3. Measures shall be taken to collect and use data relevant to planning and implementation of fire management programs.

4. Measures shall be taken to assure compliance with the MOU commitments and the

terms and conditions of this BO.

Terms and Conditions

1. To implement Reasonable and Prudent Measure Number 1, the Service will implement the following terms and conditions:

   (a) The Service shall work with Fire Chiefs and Fire Districts to make available to property owners and vegetation abatement contractors information regarding

   vegetation abatement methods and fire hazard reduction methods that impacts to threatened, endangered, and other sensitive wildlife.

   (b) The Service shall, in coordination with the Department, make available to the Fire Chiefs and Fire Districts information and maps related to the distribution of riparian areas, vernal pools, and listed and proposed sensitive plants and wildlife, to facilitate avoidance and notification of potential impacts to sensitive species.

2. To implement Reasonable and Prudent Measure number 2, the Service will implement the following terms and conditions:

   (a) The Service shall work with the Department, Fire Chiefs and Fire Districts to establish an effective method for tracking habitat loss, and provide annual information on habitat loss due to vegetation abatement activities.

   (b) The Service shall require that the Fire Chiefs and Fire Districts continue to avoid entry into and immediately alongside riparian habitats and vernal pools using the best available habitat mapping, field personnel training, and guidance by the Service and the Department. Areas immediately adjacent to such habitats will be cleared using hand-clearing methods only.

   © The Service shall work with the Department to provide annual CSS identification training, including a training video, to the Fire Districts.

   (d) The Service shall require that each Fire District by December 31 of each calendar year, provide the Service's Carlsbad Field Office with a report listing the parcel numbers and approximate habitat acreage of CSS subject to vegetation abatement notification during the same calendar year.

   (e) The Service shall consider the CSS acreage lost to vegetation abatement as part of the 5% interim habitat loss provisions set forth under the gnatcatcher 4(d) rule.

3. To implement Reasonable and Prudent Measure number 3, the Service will implement the

following terms and conditions:

(a) The Service shall cooperate with Fire Chiefs, Fire Districts, and CDF in providing information and expertise regarding vegetation abatement and fire management plans to those entities responsible for managing large blocks of wildlife habitat within San Diego County.

(b) The Service shall work with each party to the MOU to support interagency efforts to collect and utilize data relevant to planning and implementation of fire management programs that address potential impacts to threatened, endangered and other sensitive plant and wildlife species.

© The Service shall require that the Fire Chiefs and Fire Districts assist entities responsible for wildlife reserves in the development of appropriate fire management plans.

(d) The Service shall work with Fire Chiefs and Fire Districts in advising Fire Department personnel during the annual planning for the implementation of the vegetation abatement program in matters related to threatened and endangered species.

4. To implement Reasonable and Prudent Measure number 4, the Service will implement the following terms and conditions:

(a) The Service shall fully meet its MOU commitments and assure by its participation in annual planning regarding vegetation abatement programs that the measures included in the MOU and this Biological Opinion are implemented to the full extent.

(b) The Service shall work cooperatively with local jurisdictions to ensure that future development is planned under the guidelines set forth in the Bates Bill, which directs future vegetation abatement activities and fire management activities to be contained within the development footprint unless it is otherwise provided for in an approved NCCP document. These requirements and their impacts should be adequately addressed in the NEPA and CEQA review and documentation of the future projects.

If at any time during the term of the MOU it becomes known to the Fire Districts and Fire Chiefs that the amount or extent of incidental take for any of the listed species addressed in this opinion has reached the stated limits, they shall immediately notify the Service in writing. If the incidental take limit is exceeded, the Service shall advise the Fire Districts and Fire Chiefs to cease the activities resulting in take and the Service shall re-initiate internal consultation immediately to avoid further violation of section 9 of the ESA. The Service shall request the Fire Districts and Fire Chiefs to provide an explanation of the taking.

Disposition of Sick, Injured and Dead Specimens

The Service's Carlsbad Office must be notified at (619) 431-9440 within three working days should any listed or proposed animal species be found dead or injured in or adjacent to areas subjected to vegetation abatement activities. Notification must include the date, time, location of the carcass, cause of death or injury, and any other pertinent information. If necessary, the Service will provide a protocol for the handling of dead or injured listed or proposed animals. In the event that the Fire Chiefs or the Fire Districts suspect that a species has been taken in

contravention of any federal, state, or local law, all relevant information shall be reported within 24 hours to the Carlsbad Office or to the Service's Division of law Enforcement, San Diego, California, at (619) 557-5063.

CONSERVATION RECOMMENDATIONS

Section 7(a)(1) of the ESA directs Federal agencies to utilize their authorities to further the purposes of the ESA by carrying out conservation programs for the benefit of endangered and threatened species. The term conservation recommendations are suggestions regarding discretionary agency activities to minimize or avoid adverse effects of a proposed action on listed species or critical habitat or regarding the development of information. The recommendations provided here relate only to the proposed action and do not necessarily represent complete fulfillment of the agency's 7(a)(1) responsibility for these species.

1. The Service should conduct surveys to verify the presence or absence of listed and proposed plant species in areas due for fuel modification activity.

2. The Service should work with the Department, the Fire Chiefs and the Fire Districts to coordinate and cooperate to the maximum extent practical in the development and implementation of fire management plans for the wildlife preserves that are being established in western San Diego County.

3. The Service should work with the Department, the Fire Chiefs and the Fire Districts to support, to the maximum extent possible, further data collection and investigations into the effects on sensitive plants and wildlife resulting from management activities, including vegetation abatement.

4. The Service should urge the Fire Chiefs and Districts to consider architectural and design guidelines that minimize the threat of fire to structures, when determining the amount of vegetation removal necessary for effective establishment of individual firebreaks.

REINTIATION NOTICE

This concludes formal consultation/conference on the proposed participation of the Service with San Diego County fire protection organizations in a Memorandum of Understanding regarding county-wide construction of fuelbreaks adjacent to wildlands. As provided in 50 CFR 402.16, reinitiation of formal consultation is required where discretionary Federal agency involvement or control over the action has been retained (or is authorized by law) and if: (1) the amount or extent of incidental take is exceeded; (2) new information reveals effects of the agency action that may affect listed species or critical habitat in a manner or to an extent not considered in this Biological/Conference Opinion; (3) the agency action is subsequently modified in a manner that causes an effect to the listed species or critical habitat not considered in this

Biological/Conference Opinion; or (4) a new species not covered by this opinion is listed or critical habitat designated that may be affected by the action. In instances where the amount or extent of incidental take is exceeded, any operations causing such take must cease pending reinitiation.

Any questions or comments should be directed to John Lovio or Nancy Gilbert at the Carlsbad Field Office at (619) 431-9440.

Literature Cited

Brown, J. W. and D. K. Faulkner. 1984. Distributional records of certain Rhopalocera in Baja California, Mexico, with the description of a new subspecies of *Papilio (Hericledes) astyalus* (Godart) (Lepidoptera: Papilionidae). *Bulletin of the Allyn Museum 83.*

Brown, J. W. 1991. Sensitive and Declining Butterfly Species (Insecta: Lepidoptera) in San Diego County, California. unpub. manuscript, Dudek and Associates, Inc., Encinitas CA.

Hickman, J. C. (ed.). 1993. *The Jepson Manual of higher Plants of California.* University of California Press, Berkeley. p. 955.

James, R. 1993. Coastal sage scrub. Page 95 *in*: Lowe, J.D. (editor). Resident bird counts 1992. Journal of Field Ornithology 64 (1; supplement).

Kulfan, M. and J. Kulfan. 1990(92). Changes of distribution of thermophilous butterflies in Slovakia. *Journal of research on the Lepidoptera* 29: 254-266.

Laymon, S.A. 1987. Brown-headed cowbirds in California: historical perspectives and management opportunities in riparian habitats. Western Birds 18(1):63-70.

Levy, J. N. 1994. *Status of the Laguna Mountains Skipper (Pyrgus ruralis lagunae J Scott).* Biological survey and analysis prepared for the Forest Service, U.S. Department of Agriculture.

Ligon, J. S. 196 *1. New Mexico Birds and Where to Find Them.* University of New Mexico Press.

Lovio, J.C. 1993. Diegan coastal sage scrub I. Pages 95-96 *in*: Lowe, J.D. (editor). Resident bird counts 1992. Journal of Field Ornithology 64 (1; supplement).

Lusby, G.C. 1970. Hydrologic and biotic effects of grazing vs. non-grazing near Grand Junction, Colorado. *Journal of Range Management* 23(4): 256-260.

Marlow, C.B. and T.M. Pogacnik. 1985. Time of grazing and cattle-induced damage to stream banks. **In:** *Riparian Ecosystems and Their Management: Reconciling Conflicting Uses.* R.R. Johnson, C.D. Ziebell, D.R. Patton, P.F. Folliott, and R.H. Hamre (technical coordinators), First North American Riparian Conference. U.S.D.A. Forest Service General Technical Report RM- 120. Pp. 279-284.

Matson, R.H. 1978. Undisturbed coastal sage scrub. Pages 106-107 *in*: Van Velzen, W.T. and A.C. Van Veizen (editors). Forty-first breeding bird census. American Birds 32 (1).

Mayfield, H.F. 1977. Brown-headed cowbird: agent of extermination? American Birds 31:107-113.

Moffat, M. and N. McPhillips. 1993. *Management for Butterflies in the Northern Great Plains: A Literature Review and Guidebook for Land Managers.* South Dakota Field Office, Ecological Services, U.S. Fish and Wildlife Service.

Monson, G. and A.R. Phillips. 198 1. Annotated checklist of the birds of Arizona. The University of Arizona Press, Tucson, Arizona. 240 pp.

Muiznieks, B.D., S.J. Sferra, T.E. Corman, M.K. Sogge, and T.J. Tibbitts. 1994. Arizona Partners in Flight southwestern willow flycatcher survey, 1993. Draft Report: Nongame and Endangered Wildlife Program, Arizona Game and Fish Department, Phoenix, Arizona. April 1994. 28 pp.

Murphy, D. D. 1990. A report on the California butterflies listed as candidates for endangered status by the United States Fish and Wildlife Service. Draft Report for the California Department of Fish and Game, Contract No. c-1755. 60 pp.

Royer, A. R. and G. M. Marone. 1992. Conservation status of the Dakota sldpper *(Hesperia dakotae)* in North and South Dakota. Report to the United States Fish and Wildlife Service, Denver, Colorado.

Scott, J. A. 1981. New Papilionidae and Hesperioidae from North America. *Papilio* (new series) 1: 1-12.

Thomas, C. D. and T. M. Jones. 1993. Partial recovery of a skipper butterfly *(Hesperia comma)* from population refuges: lessons for conservation in a fragmented landscape. *Journal of Animal Ecology* 62: 472-48 1.

Thomas, C. D., J. A. Thomas, and M. S. Warren. 1992. Distributions of occupied and vacant butterfly habitats in fragmented landscapes. *Ecology* 92: 563-567.

Unitt, P. 1984. The birds of San Diego County. Memoir 13, San Diego Society of Natural History.

Unitt, P. 1987. *Empidonax traillii* extimus: an endangered subspecies. Western Birds 18(3):137-162.

U.S. Fish and Wildlife Service. 1995. Draft least Bell's vireo recovery plan. Portland, Oregon.

APPENDIX 3.6

REVISED PHOTOSIMULATIONS

Figure 6.13-17 - KOP 1 Immediately After Construction

TRC	Project: **Orange Grove Project - SPPE Application**	
	Map Source: Sega, Inc. 2007.	

Figure 6.13-18 - KOP 1 Ten (10) Years After Construction

TRC	Project: **Orange Grove Project - SPPE Application**	
	Map Source: Sega, Inc. 2007.	

Figure 6.13-19 - KOP 1 Twenty (20) Years After Construction

TRC	Project: **Orange Grove Project - SPPE Application**	
	Map Source: Sega, Inc. 2007.	

Figure 6.13-20 - KOP 2 Immediately After Construction

TRC	Project: **Orange Grove Project - SPPE Application**	
	Map Source: Sega, Inc. 2007.	

Figure 6.13-21 - KOP 2 Ten (10) Years After Construction

TRC	Project: **Orange Grove Project - SPPE Application**	
	Map Source: Sega, Inc. 2007.	

Figure 6.13-22 - KOP 2 Twenty (20) Years After Construction

TRC	Project: **Orange Grove Project - SPPE Application**	
	Map Source: Sega, Inc. 2007.	

Figure 6.13-23 - KOP 3 Immediately After Construction

TRC	Project: **Orange Grove Project - SPPE Application**	
	Map Source: Sega, Inc. 2007.	

Figure 6.13-24 - KOP 3 Ten (10) Years After Construction

TRC	Project: **Orange Grove Project - SPPE Application**	
	Map Source: Sega, Inc. 2007.	

Figure 6.13-25 - KOP 3 Twenty (20) Years After Construction

TRC	Project: **Orange Grove Project - SPPE Application**	
	Map Source: Sega, Inc. 2007.	

APPENDIX 3.7-A

TAC EMISSION CALCULATION DATA

Toxic Air Contaminant Emissions - Each Turbine

Natural Gas Fuel Value	1024	BTU/SCF			
Max. Fuel Usage (HHV)	472.34	MMBTU/hr			
Max. Annual Operating Hours	3,200	hrs/yr			
Exhaust Flow Rate	595,551	ACFM	Exhaust (SCFM)	227,832	SCFM
Temperature	841	°F	Molar Wt Air	386.8	lb/lb-mole
Exhaust Stack Velocity	75	ft/s	Molar Wt NH3	17.04	lb/lb-mole
Stack Diameter	12.5	ft			
Stack Height	80	ft			

Pollutant	CAS	Emsn Factor (lb/MMBTU)	Emsn Factor (lb/MMCF)	Hourly Emsn (lb/hr)	Annual Emsn (lb/yr)
Ammonia	7664-41-7	5 ppm	5 ppm	3.01	9,635.39
1,3-Butadiene	106-99-0	4.30E-07	4.40E-04	2.03E-04	6.50E-01
Acetaldehyde	75-07-0	4.00E-05	4.10E-02	1.89E-02	6.05E+01
Acrolein	107-02-8	6.40E-06	6.55E-03	3.02E-03	9.67E+00
Benzene	71-43-2	1.20E-05	1.23E-02	5.67E-03	1.81E+01
Ethylbenzene	100-41-4	3.20E-05	3.28E-02	1.51E-02	4.84E+01
Formaldehyde	50-00-0	7.10E-04	7.27E-01	3.35E-01	1.07E+03
Propylene oxide	75-56-9	2.90E-05	2.97E-02	1.37E-02	4.38E+01
Toluene	108-88-3	1.30E-04	1.33E-01	6.14E-02	1.96E+02
Xylenes	1330-20-7	6.40E-05	6.55E-02	3.02E-02	9.67E+01
Polycyclic Aromatic Hydrocarbons (PAH)					
Benzo(a)anthracene	56-55-3	1.31E-07	1.34E-04	6.19E-05	1.98E-01
Benzo(a)pyrene	50-32-8	8.95E-08	9.16E-05	4.23E-05	1.35E-01
Benzo(b)fluoranthene	205-99-2	6.56E-08	6.72E-05	3.10E-05	9.92E-02
Benzo(k)fluoranthene	207-08-9	6.56E-08	6.72E-05	3.10E-05	9.92E-02
Chrysene	218-01-9	1.46E-07	1.50E-04	6.90E-05	2.21E-01
Dibenz(a,h)anthracene	53-70-3	1.31E-07	1.34E-04	6.19E-05	1.98E-01
Indeno(1,2,3-cd)pyrene	193-39-5	1.31E-07	1.34E-04	6.19E-05	1.98E-01
Naphthalene	91-20-3	7.70E-06	7.88E-03	3.64E-03	1.16E+01
	Total PAH			**4.00E-03**	**1.28E+01**

Notes:

- Exhaust parameters based on 100% load, inlet air chilled, SPRINT on, dry bulb temperature of 86 °F.
- Ammonia emission rate based on BACT NH_3 limit of 5 ppmv @ 15% O_2.
- Non-PAH emission factors source: EPA AP-42, April 2000
- PAH emission factors source: CATEF, 2000 (www.arb.ca.gov/ei/catef/catef.htm)
- Emission factors obtained for natural gas-fired combustion with SCR and CO catalyst.

Toxic Air Contaminant Emissions - Black-Start Engine

Engine	Cummins Model GTA38-G2	
Engine Type	4 Stroke, 12 Cylinder, Natural Gas-Fired, Turbocharged, Aftercooled	
Engine Control System	Three Way Catalytic Convertor and AFRC (~80% oxidation efficiency)	
Rated Horsepower	965	BHP
Expected non-emergency usage	14	hrs/yr
Fuel Consumption	4,161	BTU/Hp-hr
Fuel Consumption (1)	4,437	CFH
Natural Gas Fuel Value	1024	BTU/SCF
Exhaust Flow Rate (2)	6,637	CFM
Temperature	1,123	°F
Stack Diameter	1.17	ft
Stack Height	19.17	ft

Pollutant	CAS	Emsn Factor (lb/MMBTU) (3)	Emsn Factor (lb/MMCF)	Hourly Emsn (lb/hr) (4)	Annual Emsn (lb/yr)
1,3-Butadiene	106-99-0	2.67E-04	2.73E-01	2.43E-04	3.40E-03
Acetaldehyde	75-07-0	8.36E-03	8.56E+00	7.60E-03	1.06E-01
Acrolein	107-02-8	5.14E-03	5.26E+00	4.67E-03	6.54E-02
Benzene	71-43-2	4.40E-04	4.51E-01	4.00E-04	5.60E-03
Ethylbenzene	100-41-4	3.97E-05	4.07E-02	3.61E-05	5.05E-04
Formaldehyde	50-00-0	5.28E-02	5.41E+01	4.80E-02	6.72E-01
Methanol	67-56-1	2.50E-03	2.56E+00	2.27E-03	3.18E-02
n-Hexane	110-54-3	1.11E-03	1.14E+00	1.01E-03	1.41E-02
Phenol	108-95-2	2.40E-05	2.46E-02	2.18E-05	3.05E-04
Toluene	108-88-3	4.08E-04	4.18E-01	3.71E-04	5.19E-03
Xylenes	1330-20-7	1.84E-04	1.88E-01	1.67E-04	2.34E-03
Polycyclic Aromatic Hydrocarbons (PAH) (5)					
Benzo(a)anthracene	56-55-3	9.69E-08	9.92E-05	8.80E-08	1.23E-06
Benzo(a)pyrene	50-32-8	3.79E-09	3.88E-06	3.44E-09	4.82E-08
Benzo(b)fluoranthene	205-99-2	7.79E-08	7.98E-05	7.08E-08	9.91E-07
Benzo(k)fluoranthene	207-08-9	1.18E-08	1.21E-05	1.07E-08	1.50E-07
Chrysene	218-01-9	2.20E-08	2.25E-05	2.00E-08	2.80E-07
Dibenz(a,h)anthracene	53-70-3	3.79E-09	3.88E-06	3.44E-09	4.82E-08
Indeno(1,2,3-cd)pyrene	193-39-5	1.06E-08	1.09E-05	9.67E-09	1.35E-07
Naphthalene	91-20-3	3.03E-05	3.10E-02	2.75E-05	3.85E-04

Notes:
(1) Fuel consumption based on ½ hour of run time within a one hour time frame
(2) Exhaust parameters based on standby condition.
(3) Emission factors source: EPA AP-42
(4) Emission factors for 4-stroke, lean-burn, > 650 HP natural gas-fired ICE with 80% control applied from the use of 3-way catalytic converter.
(5) Emission factors source: 2000 CATEF (www.arb.ca.gov/ei/catef/catef.htm)

Toxic Air Contaminant Emissions - Emergency Diesel-Fired Water Pump

Engine	Cummins Model CFP11E-F10 (1760 RPM)	
Engine Type	4 Stroke, 6 Cylinder, Ultralow Sulfur Diesel, Turbocharged, Charge Air Cooled	
Fuel Type	Ultra low sulfure diesel	
Rated Horsepower	373	BHP
Expected non-emergency usage	52	hrs/yr
Fuel Consumption (1)	8.9	Gal/hr
Low SulfurDiesel Fuel Value (HHV)	138,490	BTU/gal
Heat Rate	1.233	MMBTU/hr
Exhaust Flow Rate	1,943	CFM
Temperature	917	°F
Stack Diameter	0.50	ft
Stack Height	18	ft

Pollutant	CAS	Emsn Factor (lb/MMBTU)	Emsn Factor (lb/Mgal)	Hourly Emsn (lb/hr)	Annual Emsn (lb/yr)
Benzene	71-43-2	9.33E-04	1.29E-01	1.15E-03	5.98E-02
Toluene	108-88-3	4.09E-04	5.66E-02	5.04E-04	2.62E-02
Xylenes	1330-20-7	2.85E-04	3.95E-02	3.51E-04	1.83E-02
Propylene	115-07-1	2.58E-03	3.57E-01	3.18E-03	1.65E-01
1,3-Butadiene	106-99-0	3.91E-05	5.41E-03	4.82E-05	2.51E-03
Formaldehyde	50-00-0	1.18E-03	1.63E-01	1.45E-03	7.56E-02
Acetaldehyde	75-07-0	7.67E-04	1.06E-01	9.45E-04	4.92E-02
Acrolein	107-02-8	9.25E-05	1.28E-02	1.14E-04	5.93E-03
Polycyclic Aromatic Hydrocarbons (PAH)					
Benzo(a)anthracene	56-55-3	1.68E-06	2.33E-04	2.07E-06	1.08E-04
Benzo(a)pyrene	50-32-8	1.88E-07	2.60E-05	2.32E-07	1.20E-05
Benzo(b)fluoranthene	205-99-2	9.91E-08	1.37E-05	1.22E-07	6.35E-06
Benzo(k)fluoranthene	207-08-9	1.55E-07	2.15E-05	1.91E-07	9.93E-06
Chrysene	218-01-9	3.53E-07	4.89E-05	4.35E-07	2.26E-05
Dibenz(a,h)anthracene	53-70-3	5.83E-07	8.07E-05	7.19E-07	3.74E-05
Indeno(1,2,3-cd)pyrene	193-39-5	3.75E-07	5.19E-05	4.62E-07	2.40E-05
Naphthalene	91-20-3	8.48E-05	1.17E-02	1.05E-04	5.44E-03

Notes:

- Emission factors source: EPA AP-42, April 2000
- Emission factors for 4-stroke, lean-burn, diesel-fired ICE with no controls

(1) Note that hourly emissions are based on 30 minutes of run time within the one hour time frame.