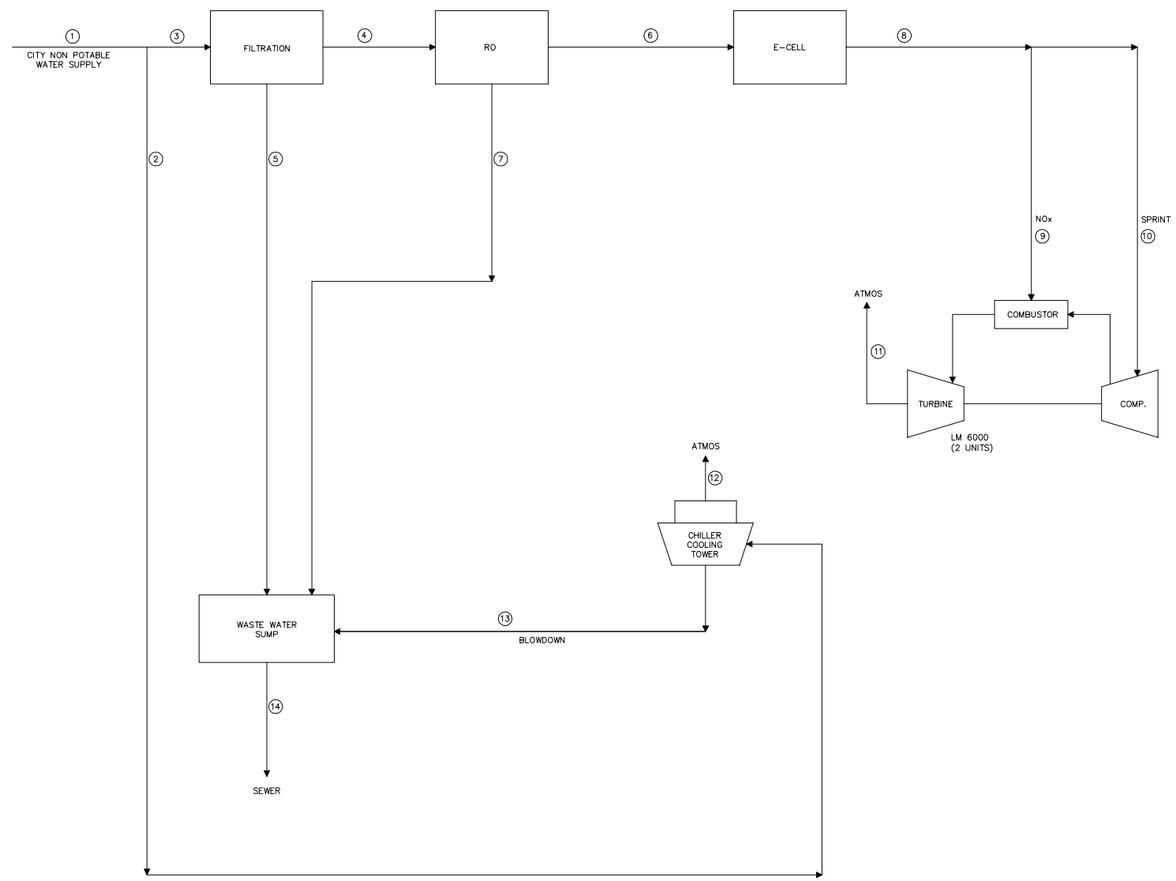

RIPON PLANT WATER BALANCE

POINT NO	FROM	TO	GPM (MAX)	GPM (AVG)
1	CITY NON POTABLE WATER SUPPLY	PLANT SERVICES	244	122
2	CITY NON POTABLE WATER	COOLING TOWER MARKEUP	85	43
3	CITY NON POTABLE WATER	FILTRATION INLET	159	79
4	FILTER PRODUCT	RO INLET	158	79
5	FILTER BACKWASH	PLANT SUMP	1 (AVG FLOW)	0.4
6	RO PRODUCT	E-CELL INLET	101	50
7	RO REJECT	PLANT SUMP	57	28
8	E-CELL PRODUCT (DI WATER)	CTG NOx & SPRINT INJECTION	101	50
9	E-CELL PRODUCT (DI WATER)	CTG NOx INJECTION	84	42
10	E-CELL PRODUCT (DI WATER)	CTG SPRINT INJECTION	17	8
11	DI WATER EVAPORATION	ATMOSPHERE	101	50
12	COOLING TOWER EVAPORATION	ATMOSPHERE	64	32
13	COOLING TOWER BLOWDOWN	PLANT SUMP	21	11
14	PLANT SUMP	CITY SANITARY SEWER	79	39

SYMBOL	DATE	REVISION DESCRIPTION	DRAWN	APP'D
C	4-1-03	GENERAL UPDATE	SK	CLM
B	12-27-02	REVISED FOR NON POTABLE WATER	LTW	CLM
A	11-15-02	ISSUED FOR PERMITTING	SK	CLM

PB Power, Inc.
A Parsons Brinckerhoff Company
303 SECOND STREET, SUITE 700 NORTH, SAN FRANCISCO, CALIFORNIA 94107

MID Modesto Irrigation District
ELECTRIC GENERATING STATION

MEGS

WATER BALANCE DIAGRAM

DR. SK
DES. CM
CHK.
APPROVED DATE
PRINCIPAL IN CHARGE DATE
DRAWING NO. M2.2
REV C
SHEET OF

NONE

N:\MEGS\MEGSm02-02.dwg

REGISTERED PROFESSIONAL ENGINEER
COLIN L. MORK
No. M025796
Exp. 6-30-03
MECHANICAL
STATE OF CALIFORNIA

FIGURE 4
WATER BALANCE
MID ELECTRIC GENERATION STATION

D062003005RDD_04 (6/19/03)

CH2MHILL