ABENGOA SOLAR
Mojave Solar LLC
13911 Park Avenue, Suite 206 Phone: 760.962.9200
Victorville, CA 92392 Fax: 760.962.9292

VIA EMAIL

Subject: **09-AFC-5C**
Description: **Monthly Compliance Report**
Date: **June 10, 2013**
Distribution: **Dale Rundquist, CEC; Carol Hammel-Smith, US DOE; Becky Jones, DFW; Ray Bransfield, FWS**

Dale Rundquist, CPM
California Energy Commission
1516 Ninth Street
Sacramento, CA 95814

Dear Mr. Rundquist,

The attached Monthly Compliance Report is submitted for your review as part of our ongoing reporting required by the California Energy Commission's Conditions of Certification for the Mojave Solar Project. This monthly report will be soon be added to a new archival site. You will be notified when it is available there and with the new access procedure.

Please direct any question to me.

Sincerely,
William "Bill" Grisolia
Compliance Management
41234 Harper Lake Road
Lockhart, California 92347
(303) 885-2036 Cell
(760) 962-9292 Fax

Attachment: Monthly Compliance Report

Introduction

During construction of the Mojave Solar Project, monthly compliance reports will be provided to the California Energy Commission (CEC) in accordance with condition of certification COMPLIANCE-6 of the License Decision, docket number 09-AFC-5C. This is the Monthly Compliance Report (MCR) for May 2013.

Construction activities in May included solar collector assembly, solar collector installation, erection of racks (structural steel), tank painting, steam generator trains installation, substation equipment installation, installation of HTF header supports and construction of various power block foundations for each plant.

The following table provides a summary of all areas covered in this report.

Mojave Solar Project Monthly Compliance Reporting	
Condition of Certification (COC) Topics	Appendix
Air Quality	See Appendix A
Biological Resources	See Appendix B
Cultural Resources	See Appendix C
Paleontological Resources	See Appendix D
Waste Management	See Appendix F
Worker Safety	See Appendix E
Soil and Water	See Appendix F
General Conditions	See Appendix F
Civil	See Appendix F
Structural	See Appendix F
Mechanical	See Appendix F
Electrical	See Appendix F
Transmission System Engineering	See Appendix F
Compliance Matrix	See Appendix G

Appendix A
Air Quality Resources

Mojave Solar Project
Monthly Compliance Report
San Bernardino County, California

May 2013 Reporting Period

CH2M HILL
2485 Natomas Park Drive
Suite 600
Sacramento, CA
95833-2937
Tel: 916.920.0300
Fax: 916.920.8463

June 7, 2013

Dale Rundquist
Compliance Project Manager
California Energy Commission
1516 Ninth Street
Sacramento, CA 95814

Subject: AQ-SC3, AQ-SC4, AQ-SC5, and WORKER SAFETY-8 Monitoring and Mitigation Activities at Mojave Solar Project (09-AFC-5C) for May 1 through May 31, 2013

Dear Mr. Rundquist:

This letter is to update you on the air quality construction monitoring occurring at the Mojave Solar Project (MSP) site during May 2013. Compliance with the WORKER SAFETY-8 condition was also monitored. Construction activities occurred May 1 through 30, 2013. Compliance monitoring was performed by Jose Manuel Bravo Romero of Abengoa; who is the full-time onsite Air Quality Construction Mitigation Manager (AQCMM). I, Christopher Waller of CH2M HILL, am the designated AQCMM delegate and visited the site on May 29, 2013, to ensure compliance with record keeping and conditional requirements.

Overview

Construction activities in May included underground tunnel excavation and wall formation, installation and assembly of field-fabricated tanks, solar field electrical wiring, fire protection system assembly within the Alpha and Beta cooling towers, heat transfer fluid (HTF) pipe installation, power block foundation construction, water well development and abandonment, field conductor assembly and installation, Beta crossing foundation construction, steam generator assembly, evaporation pond excavation and grading, excavation and foundation installation for the pipe safety valve, excavation for the administration and control building, and excavation and foundation construction for the bioremediation facilities. Construction was monitored for compliance with Conditions of Certification (COCs) AQ-SC3, AQ-SC4, AQ-SC5, and WORKER SAFETY-8. New equipment brought onsite during May was issued a tag in accordance with AQ-SC5a, and evaluated for compliance with AQ-SC5b through AQ-SC5d. A summary of the compliance with the Air Quality Construction Mitigation Plan (AQCMP) is provided in the following sections. Daily, weekly, and monthly observation logs and other site inspection forms are maintained onsite and available upon request.

Compliance Assessment

AQ-SC3 – Fugitive Dust Control

All of the AQ-SC3 COCs were in effect during May 2013. The following section summarizes each COC and describes the level of compliance.

- AQ-SC3a: Soil stabilizers on main access roads and delivery areas

  Soil stabilizers have been applied to finished access roads and delivery areas.

- AQ-SC3b: Watering of disturbed areas

  Watering of actively disturbed areas was performed for all construction activities with the potential to create airborne dust plumes. When necessary, watering was intensified as directed by the onsite AQCMM and construction managers.

- AQ-SC3c: Speed limits

  The required speed limits have been enforced onsite.

- AQ-SC3d: Speed limit signage

  Speed limit signage has been posted and is clearly visible at all site entrances.

- AQ-SC3e: Tire inspection and washing prior to exiting to paved roadway

  Although tire washing stations have not been installed, all construction vehicles are inspected for dirt and other debris prior to exiting to paved public roadways.

- AQ-SC3f: Tire washing station

  As stated above, no tire washing stations have been installed. However, tires of construction vehicles are inspected for dirt and other debris prior to exiting to paved public roadways.

- AQ-SC3g: Unpaved exit treatment

  Rumble plates are installed at all site exits.

- AQ-SC3h: Construction vehicles use approved entrances only

  When traveling between sites, construction vehicles use approved entrances only.

- AQ-SC3i: Run-off onto public roadways

  Earthmoving activities have resulted in run-off being directed away from paved public roadways. In addition, fiber rolls have been placed where the potential for run-off onto public roadways exist. Watering has not resulted in run-off onto public roadways.

- AQ-SC3j: Sweeping of paved roads within construction site

  Sweeping of paved roads within the site is performed as necessary.

- AQ-SC3k: Sweeping of public paved roadways with access to the MSP site

  Sweeping of Harper Lake Road is performed as necessary.

- AQ-SC3l: Stabilization of storage piles

  Significant earthmoving activities performed during May 2013 included underground tunnel excavation. The resulting storage piles remained active during the excavation activities and were frequently watered to mitigate the potential of dust plume formation. All other soil piles are temporary excavation spoils or grading excesses that are re-distributed prior to exceeding the 10-day limit for cover or treatment.

- AQ-SC3m: Stabilization of transported solid bulk material

  Transported solid bulk materials are sufficiently watered, and at least one foot of freeboard is provided during transportation.

- AQ-SC3n: Wind control techniques

  Wind fencing has been installed in Alpha East, Alpha West, and Beta along the eastern and western borders of each area. On multiple occasions, wind gusts exceeded the capacity of the wind controls resulting in the shut-down of certain construction activities due to dust and safety concerns.

- AQ-SC4 – Dust Plumes & WORKER SAFETY-8 – Site Worker Fugitive Dust Protection

  The following construction activities were performed during the May 1–May 31, 2013 reporting period:

  - Solar field electrical wiring
  - Field tank fabrication and installation
  - Installation of cooling tower components
  - Loop foundation excavation and construction
  - Fire protection system assembly
  - Substation and transmission line work
  - HTF pipe installation
  - Power block foundation construction
  - Underground tunnel excavation, compaction, and wall formation
  - Water well development and abandonment
  - PTC assembly and installation
  - Beta crossing foundation construction
  - STG auxiliary foundation reinforcement
  - Steam generator assembly (pipe welding)
  - Evaporation pond excavation and grading
  - Pipe safety valve foundation excavation and construction
  - Administration and control building foundation excavation
  - Bioremediation facility excavation and foundation construction

  Certain construction activities were suspended due to high wind conditions on multiple occasions in May 2013. During the stoppages, work within buildings and small miscellaneous outdoor construction activities continued. The following table summarizes the high wind events and the construction activities stopped during each event.

Table 1
May 2013 Construction Activity Stoppages due to High Wind Conditions

Date	Time	Description of Construction Activity Stoppage	Maximum Recorded Wind Speed (mph)
05/06/2013	12:00	Crane work stopped	26
05/07/2013	14:30	Field collector assembly stopped	27
05/14/2013	13:25	Field collector assembly stopped	26
05/16/2013	11:30	Field and power block work stopped	25
05/17/2013	08:00 / 10:00*	Steam drum lifting / field collector assembly stopped	25
05/22/2013	10:00	Field collector assembly stopped	24
05/23/2013	10:00	Steam drum lifting and field collector assembly stopped	24
05/28/2013	11:00	Field collector assembly stopped	26

*Steam drum lifting stopped at 08:00 and field collector assembly stopped at 10:00

Soil stabilization has been implemented on finished haul roads and delivery areas. Unfinished areas and haul roads without soil stabilizers are watered daily to mitigate against the formation of fugitive dust. A truck washing station has not been installed. However, rumble plates are installed at all site entrances/exits, and the tires of construction vehicles are inspected for dirt and other debris and swept clean as needed prior to exiting the site onto paved roadways.

AQ-SC5 – Diesel-Fueled Engine Control

Attachment 1 to this letter contains a list of equipment operated onsite during May 2013. The list contains equipment information including manufacturer, model, California Air Resources Board (CARB) Equipment Identification Number (EIN), engine model year, engine horsepower, and U.S. Environmental Protection Agency (USEPA) certified tier level.

The following list summarizes each COC for AQ-SC5 and describes the level of compliance.

- AQ-SC5a: Equipment Tags

  A visible air quality tag with a unique number (AQ #) was issued and adhered to all equipment that arrived onsite between May 1 and May 31, 2013.

- AQ-SC5b: USEPA Engine Tier Requirement

  All construction equipment that arrived onsite between May 1 and May 31, 2013 had Tier 3 engines, except for three pieces of equipment. Equipment that did not meet the engine tier requirements were removed from the site within 10 days of arrival in accordance with AQ-SC5b. The exceptions and corrective actions taken are described in the list below.

  - A Massey-Ferguson tractor (AQ # 420) with a Tier 1 engine arrived onsite on May 8 and was removed from the site on May 16. The equipment will not be brought onsite in the future.

- A Gradall forklift (AQ # 416) with a Tier 1 engine arrived onsite on May 9 and was removed from the site on May 10. The equipment will not be brought onsite in the future.
- A Caterpillar loader (AQ #411) with a Tier 2 engine arrived onsite on May 30 and was removed on June 5. The contractor was informed that the loader could not be used onsite until documentation of good faith effort is provided to the AQCMM.

- AQ-SC5c: Retrofit Control Termination

  No equipment with retrofit control technology was brought onsite.

- AQ-SC5d: Maintenance Records

  Maintenance records for all vehicles are available upon request.

- AQ-SC5e: "All diesel heavy construction equipment shall not idle for more than five minutes. "

  Idle time was monitored by the activity managers and AQCMM. This condition was met during this reporting period.

- AQ-SC5f: Electric motors

  The use of construction equipment with electric motors was not feasible for current construction activities.

Please feel free to call (714) 435-6268 for questions, clarifications, or additional information.

Sincerely,

CH2M HILL

Christopher Waller
Staff Environmental Engineer
AQCMM Delegate
christopher.waller@ch2m.com

Attachment: Construction Equipment for Mojave Solar Project

c: Jose Manuel Bravo Romero / Abengoa, AQCMM
Christopher Waller / CH2M HILL, AQCMM Delegate

Attachment 1
Construction Equipment for Mojave Solar Project

Construction Equipment for Mojave Solar Project – May 2013 Equipment Inventory									
Manufacturer	**Model**	**EIN**	**Engine Year**	**Horse Power**	**Engine Tier**	**Vehicle Type**	**Date Arrived**	**Date Left Site**	**Comments**
CATERPILLAR	950G	GH6Y78	2005	183	2	Rubber-Tired Loader	2011		GFE Received
DEERE	200D	KF4B33	2011	159	3	Excavator	2011		
CATERPILLAR	CS683E	TX8P94	2005	173	2	Roller	2011		GFE Received
CATERPILLAR	834B	VF5F83	2010	440	3	Rubber-Tired Dozer	2011		
CATERPILLAR	325DL	JB4V37	2006	168	2	Excavator	1/3/2012		GFE Received
DEERE	410J	BB3T68	2011	97	4	Tractor/Loader/Backhoe	1/5/2012		
SKYTRAK	8042	HY9R57	2008	110	3	Forklift	1/23/2012		
CATERPILLAR	651B	JA9X63	2006	540	3	Scraper	3/9/2012		
CATERPILLAR	651B	TR7R75	2006	540	3	Scraper	3/9/2012		
CASE	580_SM	BJ8N36	2007	95	2	Tractor/Loader/Backhoe	4/23/2012		GFE Received
DEERE	310J	DA4B63	2007	75.1	2	Tractor/Loader/Backhoe	4/23/2012		GFE Received
CATERPILLAR	631C	JW5C94	2010	452	3	Scraper	4/23/2012		
CATERPILLAR	140H	HM5E53	2005	165	2	Grader	6/19/2012		GFE Received
DEERE	328	AA9M73	2007	82	2	Skid Steer Loader	8/10/2012		GFE Received
SKYTRAK	8042	KP9P46	2007	110	3	Forklift	8/17/2012		
P&H	453-130	BY3X34	2008	139	3	Crane	9/5/2012		
CATERPILLAR	414E	WJ4X56	2006	92	2	Tractor/Loader/Backhoe	9/5/2012		GFE Received
A&L	210LJ	HK4M87	2011	84	4	Tractor/Loader/Backhoe	10/5/2012		
DEERE	310J	SS4K74	2011	84	4	Tractor/Loader/Backhoe	10/5/2012		
TEREX	RT230-1	TB3E79	2006	130	2	Crane	10/5/2012		GFE Received
GROVE	RT518	XE8V88	2008	142	3	Crane	10/5/2012		
TEREX	RT 780	KT4X64	2005	275	2	Crane	10/05/12		GFE Received
TEREX	RT665	NB5R93	2007	215	3	Crane	10/25/2012		

Construction Equipment for Mojave Solar Project – May 2013 Equipment Inventory									
Manufacturer	**Model**	**EIN**	**Engine Year**	**Horse Power**	**Engine Tier**	**Vehicle Type**	**Date Arrived**	**Date Left Site**	**Comments**
DEERE	310SJ	SP4F87	2011	100	4	Tractor/Loader/Backhoe	10/25/2012		
CATERPILLAR	450E	UB3H55	2008	136	3	Tractor/Loader/Backhoe	10/25/2012		
DIECI	45.17 Icarus	EP4W64	2013	195	4	Rough Terrain Forklift	11/1/2012		
DEERE	210LJ	JW3M53	2011	74	4	Tractor/Loader/Backhoe	11/14/2012		
JLG	G10-55A	WR3G83	2011	130	3	Forklift	11/14/2012		
SKY TRACK	10054	HB6Y56	2012	100	4	Rough Terrain Forklift	11/19/2012		
TEREX	RT780	HR3X86	2006	275	3	Crane	11/19/2012		
GROVE	RT650E	YH5P85	2007	165	3	Crane	11/19/2012		
GENIE	GTH-1056	BJ6A33	2012	139	4	Forklift	11/30/2012		
DEERE	410J	LX6M39	2011	99	4	Tractor/Loader/Backhoe	11/30/2012		
HYSTER	H120FT	NM9Y89	2011	74	4	Forklift	11/30/2012		
JLG	G9-43A	PW7E85	2011	99	4	Forklift	11/30/2012		
GENIE	1056	WG4N88	2010	139	3	Forklift	11/30/2012		
GRADALL	534D9	LG6P89	2011	99	3	Forklift	12/10/2012		
SKY TRAK	10054	YW7Y65	2008	110	3	Forklift	12/10/2012		
CATERPILLAR	315D	BX7C54	2011	115	3	Excavator	12/19/2012		
CATERPILLAR	430E	CT9E46	2011	110	3	Backhoe	12/19/2012		
CATERPILLAR	966H	CU4A75	2008	261	3	Loader	12/19/2012		
JLG	10054	AW6L59	2011	110	3	Forklift	12/27/2012		
NEW HOLLAND	B95	DS7V79	2007	95	3	Backhoe	12/27/2012		
TEREX	GTH1056	PP3H77	2011	116	3	Forklift	12/27/2012		
SKYJACK	8042	CE4F84	2008	110	3	Forklift	1/3/2013		
CATERPILLAR	321D	CK7S75	2011	147	3	Excavator	1/3/2013		

Construction Equipment for Mojave Solar Project – May 2013 Equipment Inventory									
Manufacturer	**Model**	**EIN**	**Engine Year**	**Horse Power**	**Engine Tier**	**Vehicle Type**	**Date Arrived**	**Date Left Site**	**Comments**
TEREX	RT 780	VA3N64	2005	275	3	Crane	1/3/2013		
CATERPILLAR	140M2	XA6E55	2012	264	3	Graders	1/3/2013		
SKYTRAK	8042	HE9X93	2008	110	3	Forklift	1/7/2013		
CATERPILLAR	420F	AE5W73	2012	99.9	3	Backhoe	1/9/2013		
HAMM	3307	GC6S79	2012	74	3	Roller	1/11/2013		
BOMAG	BW177DH	TJ4G76	2010	110	3	Roller	1/11/2013		
CATERPILLAR	420F	AX9E77	2012	99.9	3	Backhoe	1/15/2013		
BOBCAT	S160	KY3G93	2003	56	3	Skid steer	1/15/2013		
KOBELCO	SK70SR	TK3Y36	2005	55	3	Excavator	1/15/2013		
SKYTRAK	10054	WS4M75	2012	100	3	Forklift	1/16/2013		
INGERSOLL - RAND	SD40	WM7E75	2000	80	3	Roller	1/18/2013		
VOLVO	SD100D	AH4W67	2008	130	3	Roller	1/23/2013		
DEERE	210LJ	UC9P95	2011	99.9	3	Backhoe	1/23/2013		
KOMATSU	WA380-6	US8T79	2006	191	3	Loader	1/23/2013		
DEERE	710J	XF3R63	2008	123	3	Backhoe	1/23/2013		
KOMATSU	Fd100t-8	KP8W75	2009	173	3	Forklift	1/23/2013		
HYUNDAI	160D-7E	NG7L33	2011	160	3	Forklift	2/2/2013		
DEERE	410J	TF9M89	2007	98	3	Backhoe	2/2/2013		
SKY_TRAK	6036	WK4S78	2006	75	3	Forklift	2/2/2013		
CASE	850L_LGP	MB4W34	2011	99	3	Dozer	2/2/2013		
JLG	G10-55A	LK4C88	2010	101	3	Forklift	2/2/2013		
CATERPILLAR	430F	TP8K57	2012	115.2	3	Backhoe	2/2/2013		

Construction Equipment for Mojave Solar Project – May 2013 Equipment Inventory									
Manufacturer	**Model**	**EIN**	**Engine Year**	**Horse Power**	**Engine Tier**	**Vehicle Type**	**Date Arrived**	**Date Left Site**	**Comments**
DEERE	210LE	YW3W53	2006	78	3	Backhoe	2/5/2013		
DEERE	135D	YF8D78	2008	97	3	Excavator	2/5/2013		
SKYJACK	VR-843D	UK9H48	2008	110	3	Forklift	2/5/2013		
TEREX	PT100	TT7L43	2010	99.9	3	Loader	2/8/2013		
DEERE	310J	MU8F49	2011	93	3	Backhoe	2/8/2013		
CATERPILLAR	420F	PJ4S33	2012	99.9	3	Backhoe	2/8/2013		
CATERPILLAR	420F	SH5P56	2012	99.9	3	Backhoe	2/11/2013		
OTHER	TJ-5000	MR6P63	2011	220	3	Trucks	2/11/2013		
JLG	G10-55A	KS9K64	2012	250	3	Forklift	2/11/2013		
JLG	G10-55A	Ty9H64	2012	150	3	Aerial Lift	2/11/2013		
HYSTER	H120FT	NM9Y89	2011	74	3	Forklift	2/11/2013		
JLG	660SJ	PC5J79	2012	49	3	Aerial Lift	2/11/2013		
CATERPILLAR	TL943	VT9L56	2011	99	3	Forklift	2/11/2013		
GENIE	Z45/25J	DK3J49	2012	49	3	Aerial Lift	2/19/2013		
TEREX	RT780	VT7C39	2008	275	3	Cranes	2/19/2013		
JLG	400S	UV6D76	2006	49	3	Aerial Lift	2/19/2013		
CATERPILLAR	226B3	NS7R98	2011	61	3	Skid-steer-loaders	2/19/2013		
DEERE	135D	YF8D78	2008	97	3	Excavator	2/19/2013		
JLG	G6-42A	TJ4R94	2011	99	3	Forklift	2/19/2013		
GENIE	GTH-5519	JD8F98	2011	67	3	Forklift	3/16/2013		
JLG	10054	CW3C83	2012	85	3	Forklift	3/16/2013		
SKY-TRAK	10054	VA9U73	2008	110	3	Forklift	3/16/2013		
OTHER	XRM1254	EP7D46	2006	122	2	Aerial Lift	3/16/2013		GFE Received

Construction Equipment for Mojave Solar Project – May 2013 Equipment Inventory									
Manufacturer	**Model**	**EIN**	**Engine Year**	**Horse Power**	**Engine Tier**	**Vehicle Type**	**Date Arrived**	**Date Left Site**	**Comments**
TEREX	RT780	LP9U53	2007	275	3	Cranes	3/16/2013		
HITACHI	ZX300LC	PF9G47	2005	200	2	Excavator	3/16/2013		GFE Received
VOLVO	BL60	BK6U58	2012	83	3	Backhoes	3/18/2013		
JLG	G10-55A	NJ3A43	2013	130	3	Forklift	3/18/2013		
HYSTER	H360HD2	BF6N74	2012	155	3	Forklift	3/18/2013		
GRADALL	544D	MN3Y45	2005	200	2	Forklift	3/19/2013		GFE Received
CASE	580SM/2	SH8S69	2007	95	2	Backhoes	3/22/2013		On-site but not In use
CARELIFT	ZB20044-44	KV9A38	2011	160	3	Forklift	3/25/2013		
VOLVO	ECR88	RL9G83	2012	57	3	Excavator	3/28/2013		
JLG	G10-55A-CAB	WU9J47	2011	130	3	Forklift	3/28/2013		
CASE	580-SN	RT9H99	2011	97	3	Backhoes	3/29/2013		
JLG	G10-55A	WW6W44	2011	130	3	Forklift	3/29/2013		
CATERPILLAR	TL1255	SU4H58	2011	138	3	Forklift	3/29/2013		
HYSTER	H210	KH9A63	2004	195	2	Forklift	3/29/2013		GFE Received
JLG	G6-42A	JT4R94	2011	99	3	Forklift	3/16/2013		
JLG	G10-55A	UB3R85	2007	140	3	Forklift	3/26/2013		
GENIE	TH1056C	HX5Y45	2005	125	2	Forklift	3/29/2013		GFE Received
VOLVO	ERC145DL	RB7E53	2012	114	3	Excavator	4/2/2013		
INGERSOLL-RAND	SD45D/F	ES5C78	2006	80	2	Roller	4/2/2013		GFE Received
VOLVO	SD43D/F	TY8A44	2007	80	2	Paver	4/2/2013		GFE Received
CATERPILLAR	D8T	WJ8T88	2006	310	3	Tractors/Loaders/Backhoes	4/2/2013		

Construction Equipment for Mojave Solar Project – May 2013 Equipment Inventory									
Manufacturer	**Model**	**EIN**	**Engine Year**	**Horse Power**	**Engine Tier**	**Vehicle Type**	**Date Arrived**	**Date Left Site**	**Comments**
SKY-TRAK	10054	KB9Y73	2012	110	3	Forklift	4/2/2013		
DEERE	200D	AB7M73	2011	159	3	Excavator	4/2/2013		
LIEBHERR	LTM_1220-5.1	AD6Y38	2008	496	3	Crane	4/3/2013		
CATERPILLAR	345DL	EC8J65	2008	410	3	Excavator	4/3/2013		
VOLVO	L90G	UM9N34	2012	161	3	Tractors/Loaders/Backhoes	4/3/2013		
VOLVO	L90G	KR7W43	2012	161	3	Tractors/Loaders/Backhoes	4/3/2013		
VOLVO	SD-100D	VU9S58	2008	130	3	Roller	4/4/2013		
DEERE	JD450JLT	KM3W94	2010	77	3	Other	4/4/2013		
GRADALL	G6-42P	VH3R63	2005	99	2	Other	4/4/2013		GFE Received
GRADALL	G6-42A	AR6S85	2006	99.9	2	Forklift	4/4/2013		GFE Received
KOMATSU	PC400LC-7EO	TA7R86	2006	353	3	Backhoe	4/4/2013		
INGERSOLL-RAND	SD116DX	HT4J67	2007	160	3	Roller	4/4/2013		
OTHER	TJ-5000	VG9N57	2012	220	3	Truck	4/5/2013		
TEREX	RT-780	TH9R77	2005	275	2	Other	4/9/2013		GFE Received
MANITOWOC	16000	WC8X98	2010	500	3	Crane	4/11/2013		
TEREX	RT-230	SP8M78	2012	130	3	Crane	4/11/2013		
CATERPILLAR	328D	ME3U69	2010	204	3	Excavator	4/12/2013		
SANY-HEAVY-IND	SRC840_RT	VE4C37	2012	408	3	Crane	4/12/2013		
GENIE	Z45/25J-DSL-4WD	NK9E56	2006	48	2	Aerial Lift	4/17/2013		GFE Received
GENIE	GTH-1056	BG9E85	2012	139	3	Forklift	4/17/2013		
JLG	10054	JR6U95	2008	110	3	Forklift	4/17/2013		

Construction Equipment for Mojave Solar Project – May 2013 Equipment Inventory									
Manufacturer	**Model**	**EIN**	**Engine Year**	**Horse Power**	**Engine Tier**	**Vehicle Type**	**Date Arrived**	**Date Left Site**	**Comments**
DEERE	318D	LW3B46	2011	76.1	3	Tractors/Loaders/Backhoes	4/17/2013		
SKY-TRAK	SJ46AJ	MY4T53	2012	49	3	Aerial Lift	4/17/2013		
SKY_TRAK	10K_RCHLFT	KV5C43	2007	110	3	Forklifts	5/1/2013		
VOLVO	ECR305CL	VT9L86	2010	205	3	Excavator	5/2/2013		
DEERE	210LJ	UC3K76	2008	99	3	Backhoes	5/2/2013		
TEREX	RT345	JS3S84	2011	160	3	Cranes	5/6/2013		
MASSEY-FERGUSON	6255	GA8S84	2003	93	1	Tractor	5/8/2013	5/16/2013	Off Site
GRADALL	544D	EU9X67	2000	130	1	Forklifts	5/9/2013	5/10/2013	Off Site
BOBCAT	T190	WS8X94	2010	66	3	Loaders	5/13/2013		
CATERPILLAR	966H	WM3B35	2007	261	3	Loaders	5/17/2013		
SKY_TRAK	10K_RCHLFT	RA7A36	2007	110	3	Forklifts	5/20/2013		
CATERPILLAR	297C	BT6X94	2007	94	2	Loaders	5/30/2013	6/5/2013	Off Site

Appendix B
Biological Resources

Mojave Solar Project
Monthly Compliance Report
San Bernardino County, California

May 2013 Reporting Period

Biological Resources
Monthly Monitoring Report
Conditions of Certification
BIO-2, BIO-3, BIO-4, BIO-5, BIO-7, BIO-11, BIO-14, BIO-18

May 2013 Reporting Period

Prepared for:

Mojave Solar LLC
13911 Park Avenue, Suite 206
Victorville, California 92392

Prepared by:

CH2MHILL®

2485 Natomas Park Drive
Sacramento, California 95833

June 2013

Table of Contents

Section **Page**

Introduction 1
Status of Biological Staff 1

Ongoing Construction Monitoring 1
Construction Activities 2
Desert Tortoise Exclusion Fence Repairs 3
Hazardous Material Spills 3
Non-Compliance Notifications or Reports 3
Miscellaneous 3

Special-status Species Monitoring and Other Surveys 3
Desert Tortoise 3
Invasive Weeds 4
Kit Fox and Other Mammals 4
Nesting Birds 4
Raven Monitoring and Management 4
Wildlife Injuries and Mortalities 5
Other Species 5

List of Figures

Figure **Page**

1 Regional Map 6

2 Biological Resources, May 2013 7

List of Attachments

1 Agency Approval Status of Biological Staff
2 WEAP Summary and May Training Logs
3 Monthly Common Raven Monitoring Results
4 Observed Wildlife Species List

Introduction

Per the California Energy Commission's Abengoa Mojave Solar Project Commission Decision, CEC-800-2010-008-CMF, Docket Number 09-AFC-5, the following monthly report summarizes compliance with biological resources activities from May 1 through May 31 on construction of the Mojave Solar Project (MSP) in San Bernardino County, California (see Figure 1). The previous biological monitoring contractor was not able to provide information on monitoring activities from May 1 through 12; therefore, those results are not presented in this monthly compliance report (MCR). It is assumed environmental compliance was met. Unless otherwise noted, this report does not repeat information provided in previous MCRs.

The Commission Decision's biological resources conditions of certification (COCs) pertaining to this month's monitoring activities include, but are not limited to:

- BIO-2 Designated Biologist Duties
- BIO-3 Biological Monitor Selection, Qualifications and Duties
- BIO-4 Designated Biologist and Biological Monitor Authority
- BIO-5 Worker Environmental Awareness Program (WEAP)
- BIO-6 Biological Resources Mitigation Implementation and Monitoring Plan (BRMIMP) Development and Compliance
- BIO-7 Impact Avoidance and Minimization Measures
- BIO-11 Desert Tortoise (*Gopherus agassizii*) Exclusion Fencing, Clearance Surveys, and Translocation Plan
- BIO-14 American Badger (*Taxadea taxus*) and Desert Kit Fox (*Vulpes macrotis*) Impact Avoidance and Minimization Measures
- BIO-18 Common Raven (*Corvus corax*) Monitoring, Management, and Control

This MCR was also provided to California Department of Fish and Wildlife (CDFW) and United States Fish and Wildlife Service (USFWS).

Status of Biological Staff

CH2M HILL replaced AECOM as Mojave Solar LLC's environmental compliance staff on May 13, 2013. Attachment 1 provides a summary table of the biological staff submitted for approval on this project and the status of their agency approvals.

Ongoing Construction Monitoring

The following section summarizes biological monitoring activities conducted by CH2M HILL throughout May 2013.

Please refer to sections "Desert Tortoise," "Invasive Weed Species," "Kit Fox and Mammal Burrow Monitoring," "Nesting Birds," "Raven Monitoring and Management," "Wildlife Injury and Mortality," and "Other Species" for specific information about wildlife and plants found by biological monitors in May.

The MSP requires that all onsite staff receive the Worker Environmental Awareness Program (WEAP) training (via DVD) and a brochure prior to start of work. A total of 408 staff went through WEAP training in May. Attachment 2 provides an ongoing summary table of the Project's WEAP attendance and the hard copy sign-in training logs for May 2013.

On a typical weekday, one biological monitor or designated biologist:

- Monitored Harper Dry Lake Road every 3 hours and prior to increased morning and afternoon traffic;
- Monitored active construction areas, parking lots, laydown yards and any areas of potential threat to vegetation, soils, or wildlife;
- Inspected desert tortoise exclusion fences and crossing guards as required;
- Inspected entrapment areas, e.g., trenches;
- Monitored for formation of puddles;
- Conducted raven observations, point counts, breeding season raven nest searches;
- Reported hazardous waste spills to designated biologist;
- Inspected pipes greater than 3 inches in diameter that are less than 8 inches from ground; and
- Other special biological activities as required.

Construction Activities

In May, construction activities occurred in the Alpha West and East, and Beta West and East areas. A significant amount of activity concentrated in the Alpha East and Beta West power block areas with trenching and structural assembly work conducted to build those facilities. Construction activities there also included well development and installation of monitoring wells as well as removing trash and pouring concrete foundations in the Beta areas. Other activities included installation of wind fence and finishing perimeter fencing. Routine maintenance of desert tortoise fence, including removing sand piled up along the desert tortoise fences, occurred throughout the month on an as-needed basis. Excavation of trench lines and build out of evaporation ponds continued in both Alpha East and Beta West areas. In Alpha West, Alpha East, and Beta East helicals (solar mirror supports), trenching in foundations for heat transfer fluid (HTF) piping, trenching for electrical infrastructure, and installing mirror modules continued throughout the month.

Desert Tortoise Exclusion Fence Repairs

In May, biological staff inspected 100 percent of the perimeter desert tortoise exclusion fence, and the fence integrity is in compliance. Fence inspections occurred every week during the daily biological monitoring, which is more frequent than the monthly fence inspections required by BIO-11 and the Biological Opinion. The designated biologists felt this level of effort was appropriate because windy conditions often accumulate sand on fence lines. All required fence repairs were documented and performed in a timely manner.

There were no rain events during the month of May.

Hazardous Material Spills

No hazardous material spills were reported or observed on MSP in May.

Non-Compliance Notifications or Reports

No formal non-compliance notifications or reports were issued to MSP in May.

Trash

Although not worthy of a non-compliance report, loose trash was identified building up on the east side of Alpha East. Biological monitors identified that trash was not improperly disposed of but significant waste materials were being blown around the site due to excessively high winds. Construction staff cleaned up trash in a timely manner following cessation of high winds.

On one instance, biological monitors noticed several discarded lunch bags at the base of a piece of equipment. The foreman was notified and the operator was directed to comply with site protocols by the biological monitor and construction compliance manager.

On several occasions, it noticed that the trash bins near the trough assembly building were uncovered. Upon noticing, construction crews were requested to cover trash containers and complied.

Miscellaneous

Biological monitors were tasked with monitoring a crane moving offsite from Beta East along Lockhart Road. This required resetting the desert tortoise gate with construction staff. No special-status species were observed during this activity.

Special-status Species Monitoring and Other Surveys

Desert Tortoise

In May, no construction activities required desert tortoise clearance surveys.

No desert tortoises were observed on the project site or any access road to the project in May.

Invasive Weeds

Russian thistle (*Salsola tragus*) was observed onsite in May. This species has a California Invasive Plant Council (Cal-IPC) moderate dispersal rating. MSP is actively searching for a California certified herbicide applicator to control weed species onsite.

Kit Fox and Other Mammals

Biological monitors reported six kit fox (*Vulpes macrotis*) (fox) observations within the MSP boundaries between May 29 and 30 (see Figure 2). All of the observations were of an individual adult fox, two of which were using shelter sites.

The first shelter site observation was of a fox inside a trench between mirror rows 126 and 127 in Alpha East. The biological monitor determined the fox was using an inconspicuous, abandoned corrugated metal pipe that was exposed in the bottom of the trench. The designated biologist ordered a 250-foot buffer be set up around the pipe opening and stopped construction activities in rows 126 and 127. Diatomaceous earth was placed at the entrance of the pipe because a motion sensor camera was not available until the following week. The CEC's biological staff were notified on May 31, 2013 and consultation was scheduled for the following week, in June.

The second observation was a fox using an open irrigation pipe in the channel to the southwest of Alpha East. This pipe is exposed for several hundred feet on the surface of the channel. No fox was observed using the open irrigation pipe in the heat of the day, likely because temperatures would make the pipe inhospitable. Motion sensor cameras will be installed at this location and consultation with the CEC was scheduled for the following week, in June.

Nesting Birds

There were no active nests or nesting behavior by birds on MSP in May.

Results of the breeding season nesting raven surveys are presented in the "Ravens" section.

Raven Monitoring and Management

Common raven monitoring activities continued on the MSP site per BIO-18 and as outlined in the *Common Raven Monitoring, Management and Control Plan* (Plan). In May, 44 ravens were incidentally observed within the project boundaries. Individual ravens could have been counted multiple times, as it is not possible to distinguish individual sightings from multiple sightings of the same bird. AECOM was not able to provide the project with the daily logs for May 1 through 12; therefore, raven observations are only reported for

May 13 through 31. Raven nests, nesting behavior, or raven "problem areas" were not observed within the project boundaries.

Biological monitors conducted Plan-specified biweekly point count surveys on May 15 and 31 and maintained ongoing biweekly breeding season raven nest search surveys throughout the month. The results are reported in the May 2013 Monthly Common Raven Monitoring Results (Attachment 3).

An injured raven was observed onsite in May. This incident is described in "Wildlife Injury and Mortality" section.

Wildlife Injuries and Mortalities

Construction staff reported a raven with an injured wing in the Beta West solar field on May 31 (Figure 2). The designated biologist notified the agencies the same day via email. The CEC, CDFW, and USFWS all responded via email and recommended letting nature take its course and continued monitoring of the situation. If the status of the raven deteriorates and the designated biologists and Abengoa feel the situation is inhumane, the Agencies have given approval to bring the raven to a licensed veterinarian for treatment (email comm. CEC, CDFG, USFWS, May 31, 2013).

No other wildlife injuries or special-status wildlife mortalities were observed or reported on the MSP in May.

Other Species

Biologists observed other wildlife species onsite in May during daily monitoring activities. A list of observed wildlife species is included in Attachment 4. One additional sensitive species, loggerhead shrike (*Lanius ludovicianus*, California Department of Fish and Wildlife Species of Concern), was observed during May. Loggerhead shrikes were reported in previous compliance documents as known to occur within the project area. Four individuals during three different observations were recorded from the MSP: one individual flying in Alpha West, two individuals flying in Beta East, and one individual perched on a Beta West fence. No nesting behavior was observed.

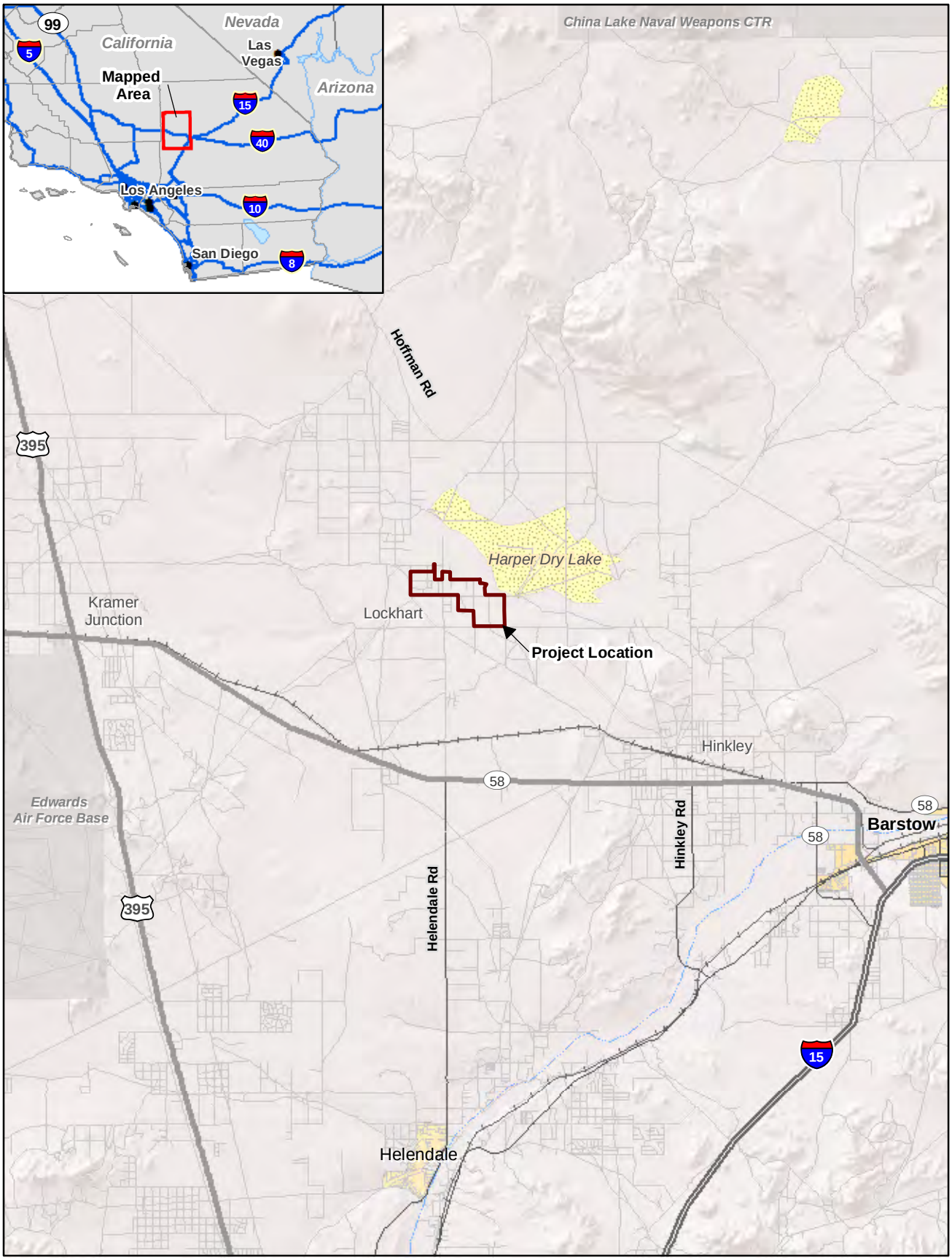

LEGEND

Project Boundary

N

0 2.5 5
Miles

FIGURE 1
Regional Map
Abengoa Mojave Solar Project
San Bernardino County, California

\\ZION\SACGIS\PROJ\SOLARPROJECTS\AGENGOA_MOJAVE_SOLAR\MAPFILES\AMSP_COMPLIANCEREPORT\FIGURE1_LOCATIONMAP.MXD SSCOPES 6/5/2013 9:58:34 AM

CH2MHILL

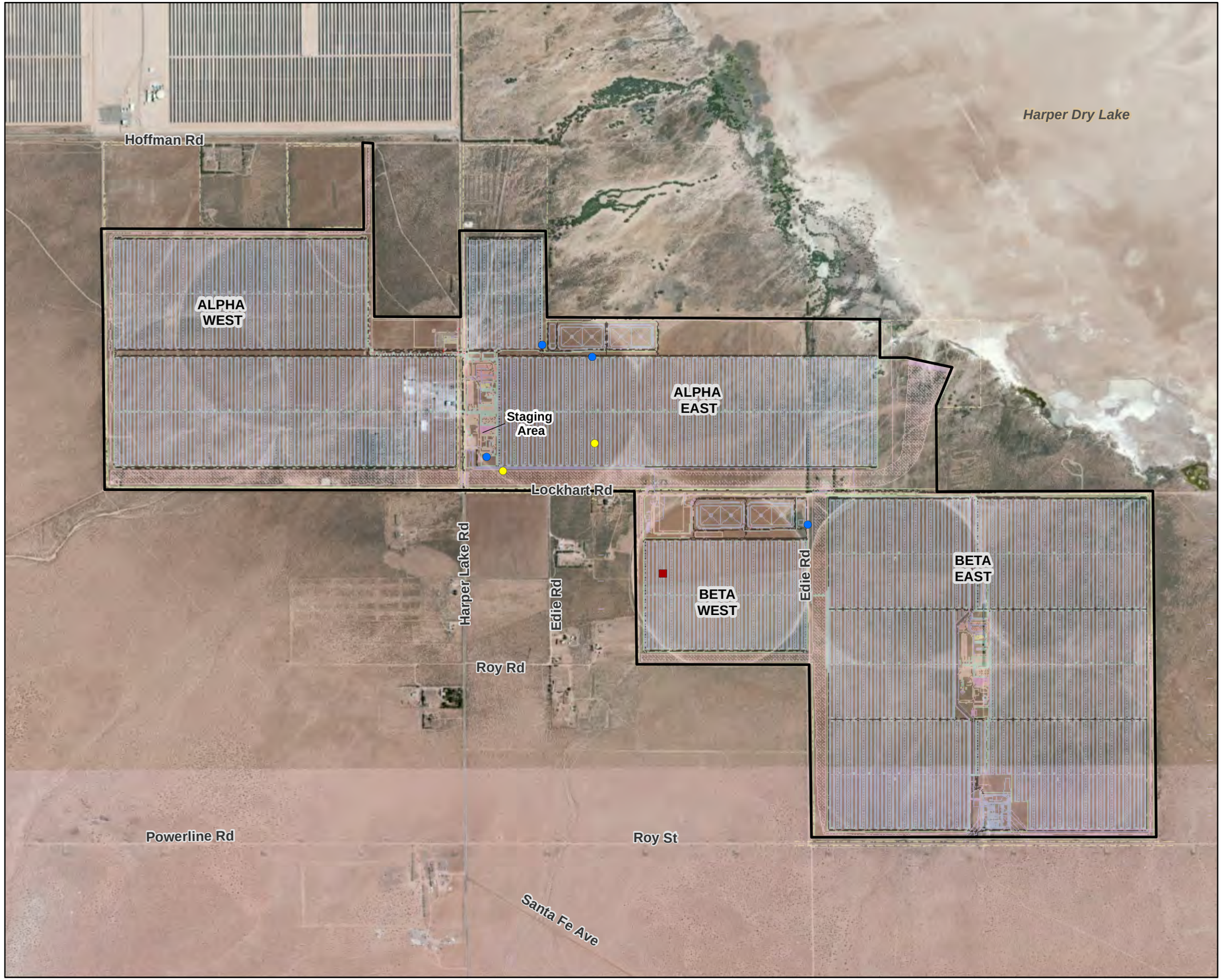

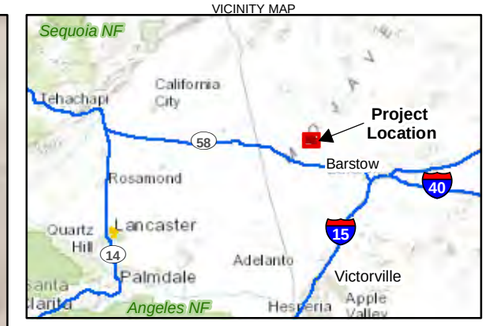

LEGEND

Kit Fox

- Burrow (with 250ft Buffer)
- Live Individual

Common Raven

- Injured Individual

Project Boundary

N

0 750 1,500
Feet

FIGURE 2
Biological Resources, May 2013
Abengoa Mojave Solar Project
San Bernardino County, California

CH2MHILL

\\ZION\SACGIS\PROJ\SOLARPROJECTS\AGENGOA_MOJAVE_SOLAR\MAPFILES\AMSP_COMPLIANCEREPORT\FIGURE2_BIOLOGICALRESOURCES.MXD SSCOPES 6/5/2013 11:22:53 AM

Attachment 1
Agency Approval Status of Biological Staff

Agency Approval Status of Biological Monitor and Designated Biologist

Abengoa Mojave Solar Project

Biologist	CEC				CDFW				USFWS	
	BM		DB		BM		DB		AB	
	Submitted	Approved	Submitted	Approved	Submitted	Approved	Submitted	Approved	Submitted	Approved
Brent Finley	5/6/2013	CM	—	—	5/6/2013	submitted	—	—	5/14/2013	no approval required
Tim Hamaker	5/9/2013	CM	—	—	5/9/2013	submitted	—	—	5/14/2013	no approval required
Josh Holloway	—	—	5/10/2013	Alt-DB	—	—	5/10/2013	submitted	5/14/2013	5/20/2013
Morgan King	—	—	5/2/2013	DB	—	—	5/9/2013	submitted	5/8/2013	submitted
Linda Sands	5/9/2013	CM	5/2/2013	Alt-DB not approved	—	—	—	—	5/14/2013	no approval required
Bruce Weise			5/10/2013	Alt-DB	—	—	5/10/2013	submitted	5/14/2013	5/20/2013

Legend:

CEC= California Energy Commission
CDFW=California Department Fish and Wildlife
USFWS= United States Fish & Wildlife Service

AB=Authorized Biologist
Alt-DB = Alternate Designated Biologist
DB=Designated Biologist
CM=Construction Monitor

Attachment 2
WEAP Summary and May Training Logs

WEAP Summary Table through May 31, 2013 Mojave Solar Project	
Month Training Conducted	**Monthly Total of WEAP Attendees***
March 2011	50
April 2011	9
May 2011	18
June 2011	2
July 2011	27
August 2011	63
September 2011	82
October 2011	75
November 2011	41
December 2011	68
January 2012	52
February 2012	112
March 2012	116
April 2012	158
May 2012	208
June 2012	167
July 2012	156
August 2012	271
September 2012	276
October 2012	268
November 2012	93
December 2012	137
January 2013	183
February 2013	195
March 2013	255
April 2013	295
May 2013	408
Total	3,785
*Attendance is based on training sign-in sheets	

Certification of Completion
Worker Environmental Awareness Program
Mojave Solar Project (09-AFC-5)

This is to acknowledge these individuals have completed a mandatory California Energy Commission-approved Worker Environmental Awareness Program (WEAP). The WEAP includes pertinent information on biological, cultural, and paleontological resources for all personnel (that is, construction supervisors, crews, and plant operators) working on site or at related facilities. By signing below, the participant indicates that he/she understands and shall abide by the guidelines set forth in the program materials. Include this completed form in the Monthly Compliance Report.

No.	Employee Name	Title/Company	Signature
1.	ALBERTO R. CORONA	MILCO	[illegible]
2.	JEFF Williams	West Coast	[illegible]
3.	Robert Heredia	Amber steel	[illegible]
4.	Feliciano Rodriguez	LARGO	[illegible]
5.	Steven Sandridge	Welder / University	[illegible]
6.	Gerald Upright	Welder / University	[illegible]
7.	CHAN HIERS	UMEC	Chan Hiers
8.	William Nimmo	UMEC	[illegible]
9.	Pablo A. Amaya	SUKUT	[illegible]
10.	TRAVIS BRADY	MILCO	[illegible]
11.	John Post	milco	[illegible]
12.	Blanca Valdez	MILCO	[illegible]
13.	Ray Littleman	Milco	[illegible]
14.	Dorian Durazo	milco	[illegible]
15.	Nathaniel Begay	Milco	[illegible]
16.	SAmuel Miller (Retrain)	Milco / #52	Samuel Miller
17.			
18.			
19.			
20.			
21.			
22.			
23.			
24.			
25.			
26.			
27.			
28.			
29.			
30.			

Biological Trainer: _____ Signature: _____ Date: 5/31/13

Cultural Trainer: _____ Signature: _____ Date: __/__/__

Paleo Trainer: _____ Signature: _____ Date: __/__/__

Certification of Completion
Worker Environmental Awareness Program
Mojave Solar Project (09-AFC-5)

This is to acknowledge these individuals have completed a mandatory California Energy Commission-approved Worker Environmental Awareness Program (WEAP). The WEAP includes pertinent information on biological, cultural, and paleontological resources for all personnel (that is, construction supervisors, crews, and plant operators) working on site or at related facilities. By signing below, the participant indicates that he/she understands and shall abide by the guidelines set forth in the program materials. Include this completed form in the Monthly Compliance Report.

No.	Employee Name	Title/Company	Signature
1.	James Russell	METRO	
2.	Brenda Marley	Milco	Brenda Marley
3.	Tim Rhodes	MILCO	Tim Rhodes
4.	Wayne Thompson	SWCA	
5.	Joaquin Carmona Robles	AG INGENIERIA	
6.	Luis Sánchez Cardozo	AG ENGINEERING	
7.	SARA AGURRUZA	AG ENGENIEERING	
8.	MANUEL J. PEREZ GARCIA	AG ENGINEERING	
9.	BRENT L. JORDAN	FHI	
10.	Frank Cambio	Milco	
11.	Edwin charter	milco	Edwin charter
12.	Fernando Sanchez Corral	Penhall Comp	
13.	Federico Garcia	Penhall Comp.	
14.	Don Presley	Operator	
15.	JOHN RAYSBY	FHI	
16.	WALT Middleton	PFW / Milco	Walt Middleton
17.	Patrick M. O'Neil Sr.	PFW / FHI	Patrick M. O'Neil Sr.
18.			
19.			
20.			
21.			
22.			
23.			
24.			
25.			
26.			
27.			
28.			
29.			
30.			

Biological Trainer: _____ Signature: _____ Date: 5/30/13

Cultural Trainer: _____ Signature: _____ Date: __/__/__

Paleo Trainer: _____ Signature: _____ Date: __/__/__

Certification of Completion
Worker Environmental Awareness Program
Mojave Solar Project (09-AFC-5)

This is to acknowledge these individuals have completed a mandatory California Energy Commission-approved Worker Environmental Awareness Program (WEAP). The WEAP includes pertinent information on biological, cultural, and paleontological resources for all personnel (that is, construction supervisors, crews, and plant operators) working on site or at related facilities. By signing below, the participant indicates that he/she understands and shall abide by the guidelines set forth in the program materials. Include this completed form in the Monthly Compliance Report.

No.	Employee Name	Title/Company	Signature
1.	ANDRES R PEREZ	ABEINSA EPC	
2.	AURORA MARTIN	ABEINSA EPC	
3.	Todd Reeves	Amerc inc	
4.	Lattie Jones	Abeinsa EPC	
5.	[illegible]	milco	
6.	WINSTON ROCKE	MILCO	
7.	GARY MADONNA	MILCO	
8.	Rick TIZZANO	milco	
9.	Ronald B Barton	Milco	
10.	Vanessa Ponerty	OTI / CH2MHILL	
11.	Chris Waller	CH2M HILL / AGMM-D	
12.	James R Burdge	Milco	
13.	JASON NUCKOLLS	milco / welder	
14.			
15.			
16.			
17.			
18.			
19.			
20.			
21.			
22.			
23.			
24.			
25.			
26.			
27.			
28.			
29.			
30.			

Biological Trainer: _____ Signature: _____ Date: 5/29/13

Cultural Trainer: _____ Signature: _____ Date: __/__/__

Paleo Trainer: _____ Signature: _____ Date: __/__/__

Certification of Completion
Worker Environmental Awareness Program
Mojave Solar Project (09-AFC-5)

This is to acknowledge these individuals have completed a mandatory California Energy Commission-approved Worker Environmental Awareness Program (WEAP). The WEAP includes pertinent information on biological, cultural, and paleontological resources for all personnel (that is, construction supervisors, crews, and plant operators) working on site or at related facilities. By signing below, the participant indicates that he/she understands and shall abide by the guidelines set forth in the program materials. Include this completed form in the Monthly Compliance Report.

No.	Employee Name	Title/Company	Signature
1.	Timothy P Garcia	P.F. Milco	Timothy P Garcia
2.	JAMES W MUNRO	PF. MILCO	James W Munro
3.	DANIEL E WILLIAMS	P.F. MILCO	[illegible]
4.	ANTHONY PAUL	P.F. MILCO	Anthony Paul
5.	John McCarty	operator / university	[illegible]
6.	Eduardo Alvarez	pf / U.mack	[illegible]
7.	Anthony Abreo	PF - University	[illegible]
8.	EDUARDO O. REYES	HET-CT-INSPECTOR	E.O. Reyes
9.	JONATHAN BOBADILLA	METRO GUARD	[illegible]
10.	Jonathan Cordova	Metro Guard	[illegible]
11.	Nathan Romo	P.F. Milco	[illegible]
12.	Edwin Mendoza	PF Milco	[illegible]
13.	DANIEL RICHARDS	P/W MILCO	[illegible]
14.	AUSTIN PECK	P/W MILCO	[illegible]
15.	GARY NEGALE	P/F Milco	[illegible]
16.	CHAD CORY	RSK	[illegible]
17.	RICHARD BRANTLEY	AITC	[illegible]
18.	Richard Hille	PF Milco	Richard Hille
19.	JAMES HATHAWAY	PF UNIVERSITY	[illegible]
20.	PAUL VALDEZ	PF MILCO	[illegible]
21.	DENNIS NARAINE	PF MILCO	[illegible]
22.	Michelle Self	PC/UMEC	[illegible]
23.	Dustin Rodriguez	P.F. UMEC	Dust
24.	Timothy Francis	PF Milco	[illegible]
25.	Laird Craig	Ironworker / Brutrico Ambro	[illegible]
26.	Chris Sellers	CM / Milco	[illegible]
27.	Mike Worrell	Milco	[illegible]
28.	Gustavo Huanolta	LARGO	Gustavo Huanolta
29.	Rafael Sanchez	LARGO	Rafael Sanchez
30.	Daniel Paul	Milco	[illegible]

Biological Trainer: _____ Signature: _____ Date: 5/28/13

Cultural Trainer: _____ Signature: _____ Date: __/__/__

Paleo Trainer: _____ Signature: _____ Date: __/__/__

5/28 con't

ADRIAN HUMANES SLEESA

Edgar Zavala SEL

Hector Salado SEL

Jon Tortoro University Mech

Jose CRUZ MILCO

Rogelio Mejia Pipelayer / Sukut Rogelio Mejia

Jorge Lopez Labor, SUKUT Jorge Lopez

ART GUZMAN P/F MILCO

ANTHONY PAUL

GERALD NASH JMEL

Certification of Completion
Worker Environmental Awareness Program
Mojave Solar Project (09-AFC-5)

This is to acknowledge these individuals have completed a mandatory California Energy Commission-approved Worker Environmental Awareness Program (WEAP). The WEAP includes pertinent information on biological, cultural, and paleontological resources for all personnel (that is, construction supervisors, crews, and plant operators) working on site or at related facilities. By signing below, the participant indicates that he/she understands and shall abide by the guidelines set forth in the program materials. Include this completed form in the Monthly Compliance Report.

No.	Employee Name	Title/Company	Signature
1.	Joe Aguirre	MILCO	
2.	Don Marshall	MILCO	
3.	HENRY VALENCIA	MILCO	
4.	GABRIEL CORTEZ	MILCO	
5.	Shacah [illegible]	milco	
6.	Clinton Pilkington Jr	milco	
7.	Steven Brierty	OIT	
8.	Larry Powell	Milco	
9.	John Clark	Milco	
10.	John K. Blevins	Milco	
11.	MARCOS CABREA	Metroguard	
12.	Daniel Martinez	Milco	
13.	Adrian Salas	MILCO	
14.	KEITH SHIRLEY	MILCO	
15.	CRAIG CORNEAL	MILCO	
16.	Lawrence Calderon	MILCO	
17.	GERRY JOHNSON	MILCO	
18.	RAIVO NEAGO	BUREAU VERITAS	
19.	JOSEPH LONTE	MONITOR / OIT	
20.	Leona Gilum	NAM / OIT	
21.	Steven Tacuco	Monitor / OIT	
22.			
23.			
24.			
25.			
26.			
27.			
28.			
29.			
30.			

Biological Trainer: _____ Signature: _____ Date: 5/24/13

Cultural Trainer: _____ Signature: _____ Date: __/__/__

Paleo Trainer: _____ Signature: _____ Date: __/__/__

Certification of Completion
Worker Environmental Awareness Program
Mojave Solar Project (09-AFC-5)

This is to acknowledge these individuals have completed a mandatory California Energy Commission-approved Worker Environmental Awareness Program (WEAP). The WEAP includes pertinent information on biological, cultural, and paleontological resources for all personnel (that is, construction supervisors, crews, and plant operators) working on site or at related facilities. By signing below, the participant indicates that he/she understands and shall abide by the guidelines set forth in the program materials. Include this completed form in the Monthly Compliance Report.

No.	Employee Name	Title/Company	Signature
1.	Eric Bush	crane operator / milco	
2.	Kenneth C. Bleck	Crane Operator Biggs Crane	Kenneth C. Bleck
3.	Josh Stone	Pipefitter / Murray	
4.	Michael Cozino	Labor / milco	
5.	David Watkins	Milco Construction	David Watkins
6.	Enrique Ortiz Sr	Milco Constructors	
7.	MIKE WAITE	ELECTRICIAN / HIGHLIGHT	
8.	Jesse V Romero	Elect / HighLight	Jesse V Romero
9.	Constantino O. Carbajal	UMEC / Pipefitter	
10.	Felix Pantoja	umec / welder	
11.	Royce Camp	U.mech / welder	
12.	Anthony Hankins	UMEC welder	Anthony Hankins
13.	Camilo Gaona	UMEC welder	Camilo Gaona
14.	Robert Hernandez	Murray Company	
15.	David Hayos	UMEC / PF	
16.	Trevor Embat	UMEC / PF	
17.			
18.			
19.			
20.			
21.			
22.			
23.			
24.			
25.			
26.			
27.			
28.			
29.			
30.			

Biological Trainer: _____ Signature: _____ Date: 5/23/13

Cultural Trainer: _____ Signature: _____ Date: ___/___/___

Paleo Trainer: _____ Signature: _____ Date: ___/___/___

Certification of Completion
Worker Environmental Awareness Program
Mojave Solar Project (09-AFC-5)

This is to acknowledge these individuals have completed a mandatory California Energy Commission-approved Worker Environmental Awareness Program (WEAP). The WEAP includes pertinent information on biological, cultural, and paleontological resources for all personnel (that is, construction supervisors, crews, and plant operators) working on site or at related facilities. By signing below, the participant indicates that he/she understands and shall abide by the guidelines set forth in the program materials. Include this completed form in the Monthly Compliance Report.

No.	Employee Name	Title/Company	Signature
1.	ERIC HUESCA	PF Milco	[illegible]
2.	BURT KING	OPP. MILCO	[illegible]
3.	Lee GAtson	PF milco	[illegible]
4.	DARRELL MARK	BM MILCO	[illegible]
5.	Seth Beasley	PF milco	[illegible]
6.	DAVID Sample	PF milco	[illegible]
7.	Stenson Begay	BM Milco	[illegible]
8.	Javier Gonzalez	BM milco	[illegible]
9.	Brian Hunter	PF MILCO	[illegible]
10.	Jason Ellis	PF Milco	[illegible]
11.	HOMERO DUEÑAS	BM Milco	[illegible]
12.	Kevin Walker SR	BM Milco	[illegible]
13.	Karlyn Smallcanyon	BM Milco	[illegible]
14.	JAMES WADE	P.M./UMODULAR	[illegible]
15.	MATT TUTTLE	JW/HotLine const.	[illegible]
16.	Gary Luker	PF milco	[illegible]
17.	MARCOS RENTERIA	PF/WELDER-MURRAY	[illegible]
18.	LUIS MIGUEL MORATO	AM/ABEINSA EPC	[illegible]
19.	BeLtran Lopez	METRO Guard	Beltran Lopez
20.	Ryan Hancock	PF/WELDER/Murray	Ryan Hancock
21.	Chris Mitchell	PF/welder/murray	Chris Mitchell
22.	ROBERT J DAVIS	PF ARB	Robert J Davis
23.			
24.			
25.			
26.			
27.			
28.			
29.			
30.			

Biological Trainer: _____ Signature: _____ Date: 5/22/13

Cultural Trainer: _____ Signature: _____ Date: __/__/__

Paleo Trainer: _____ Signature: _____ Date: __/__/__

Certification of Completion
Worker Environmental Awareness Program
Mojave Solar Project (09-AFC-5)

This is to acknowledge these individuals have completed a mandatory California Energy Commission-approved Worker Environmental Awareness Program (WEAP). The WEAP includes pertinent information on biological, cultural, and paleontological resources for all personnel (that is, construction supervisors, crews, and plant operators) working on site or at related facilities. By signing below, the participant indicates that he/she understands and shall abide by the guidelines set forth in the program materials. Include this completed form in the Monthly Compliance Report.

No.	Employee Name	Title/Company	Signature
1.	George Salloum	ABENGOA EPC	
2.	JARROD DIAMOND	UNIVERSITY MECHANICAL	
3.	MANUEL GONZALEZ	ABENGOA T&D	
4.	RAFAEL PACHECO RAMOS	AG INGENIERIA	
5.	FRANCISCO BLAIA GONZALEZ	AG INGENIERIA	
6.	FERNANDO A. GARCIA	High Light Electric	Fernando Garcia
7.	JESUS E. WALLACE	HIGH LIGHT ELECTRIC	
8.	ERIC J JONES	ARB	
9.	Randy Mende	SUKUT Const.	
10.	Jeremy Ogrodnik	Milco	Jeremy Ogrodnik
11.	Mike Aragona	MILCO	
12.	WILLIAM STUMP	TEAM	
13.	JEFF LOGERWALD	TEAM	Jeff Logerwald
14.			
15.			
16.			
17.			
18.			
19.			
20.			
21.			
22.			
23.			
24.			
25.			
26.			
27.			
28.			
29.			
30.			

Biological Trainer: _____ Signature: _____ Date: 5/21/13

Cultural Trainer: _____ Signature: _____ Date: __/__/__

Paleo Trainer: _____ Signature: _____ Date: __/__/__

Certification of Completion
Worker Environmental Awareness Program
Mojave Solar Project (09-AFC-5)

This is to acknowledge these individuals have completed a mandatory California Energy Commission-approved Worker Environmental Awareness Program (WEAP). The WEAP includes pertinent information on biological, cultural, and paleontological resources for all personnel (that is, construction supervisors, crews, and plant operators) working on site or at related facilities. By signing below, the participant indicates that he/she understands and shall abide by the guidelines set forth in the program materials. Include this completed form in the Monthly Compliance Report.

No.	Employee Name	Title/Company	Signature
1.	JOHNNY TORRES	MURRAY CO.	[illegible]
2.	JOEL VALCHU	SPX/FEMORAN	[illegible]
3.	TEAC KUNJACHAN	MURRAY CO	[illegible]
4.	Mike Massey	Carpenter/Largo	[illegible]
5.	Charles Scarff	United Rentals, Mech	[illegible]
6.	KACEY SYKES	Wekler/Murray	[illegible]
7.	Jonathan Clark	PF Murray	[illegible]
8.	Kim Scheidecker	McMinn/Sukut	[illegible]
9.	Joe Cochrane	Sukut	[illegible]
10.	Doug Clow	SUKUT	[illegible]
11.	Richard Hetherington	Sukut	[illegible]
12.	[illegible]	SPX/FEMORAN	[illegible]
13.	[illegible]	MURRAY	[illegible]
14.			
15.			
16.			
17.			
18.			
19.			
20.			
21.			
22.			
23.			
24.			
25.			
26.			
27.			
28.			
29.			
30.			

Biological Trainer: _____ Signature: _____ Date: 5/20/13

Cultural Trainer: _____ Signature: _____ Date: ___/___/___

Paleo Trainer: _____ Signature: _____ Date: ___/___/___

Certification of Completion
Worker Environmental Awareness Program
Mojave Solar Project (09-AFC-5)

This is to acknowledge these individuals have completed a mandatory California Energy Commission-approved Worker Environmental Awareness Program (WEAP). The WEAP includes pertinent information on biological, cultural, and paleontological resources for all personnel (that is, construction supervisors, crews, and plant operators) working on site or at related facilities. By signing below, the participant indicates that he/she understands and shall abide by the guidelines set forth in the program materials. Include this completed form in the Monthly Compliance Report.

No.	Employee Name	Title/Company	Signature
1.	Matthew Lusby	welder/University mech	[illegible]
2.	Justin Vincent	Welder	[illegible]
3.	Darrick Dash	Boilermaker	[illegible]
4.	Lincoln Tallman	Boilermaker	[illegible]
5.	Juan Estrada	LaBor	[illegible]
6.	Robert Butner	Ironworker	[illegible]
7.	Oscar Hernandez	LArgo	Oscar Hernandez
8.	James E. Clouse	welder/FHI	James E. Clouse
9.	Jorge L. Gonzalez	Iron Worker	[illegible]
10.	Robert McGinnis	Fitter/University	[illegible]
11.	Scott Gemberung	Fitter/University	[illegible]
12.	Jason Burton	Fitter/University	[illegible]
13.	James Adauto Jr	Fitter/University	[illegible]
14.	Javier Corova	Fitter/UNIMECH	[illegible]
15.	Charles Struckhoff	Mechanic Bigge Crane	[illegible]
16.	James Horlacher	Boilermaker/Millwr	[illegible]
17.	Felix Vigil	Boilermaker/Millwr	[illegible]
18.			
19.			
20.			
21.			
22.			
23.			
24.			
25.			
26.			
27.			
28.			
29.			
30.			

Biological Trainer: Tim Hamaker Signature: [illegible] Date: 05/17/13

Cultural Trainer: _____ Signature: _____ Date: __/__/__

Paleo Trainer: _____ Signature: _____ Date: __/__/__

Certification of Completion
Worker Environmental Awareness Program
Mojave Solar Project (09-AFC-5)

This is to acknowledge these individuals have completed a mandatory California Energy Commission-approved Worker Environmental Awareness Program (WEAP). The WEAP includes pertinent information on biological, cultural, and paleontological resources for all personnel (that is, construction supervisors, crews, and plant operators) working on site or at related facilities. By signing below, the participant indicates that he/she understands and shall abide by the guidelines set forth in the program materials. Include this completed form in the Monthly Compliance Report.

No.	Employee Name	Title/Company	Signature
1.	Eric Sumaya	Operator Amerc Inc	[signature]
2.	Adam Culver	Pipefitter/Murray Co.	[signature]
3.	Rian Murphy	Vice Pres / Amerc Inc	[signature]
4.	Joe Marshall	Pipefitter Murry	[signature]
5.	David Elser	Operator Amerc Inc	[signature]
6.	Junior Casan	P/F Murray	[signature]
7.	Andres Ramos	Large Concrete Company	[signature]
8.	Fred Barker	Journeyman Lineman	HL [signature]
9.	Antonio de la Cruz	BM / L-92	[signature]
10.	Elroy Addakai	BM L-004	[signature]
11.	Pat Fain	Journyman Lineman	[signature]
12.	James Measurall	Operator / Amerc	[signature]
13.	Steven Lund	Carpenter / ARB	[signature]
14.	Louis Silva	Carpenter / ARB	[signature]
15.	Arnold Diaz	Amerc Inc	[signature]
16.	Jason Whiterock	Boilermaker	[signature]
17.			
18.			
19.			
20.			
21.			
22.			
23.			
24.			
25.			
26.			
27.			
28.			
29.			
30.			

Biological Trainer: _____ Signature: _____ Date: 5/16/13

Cultural Trainer: _____ Signature: _____ Date: __/__/__

Paleo Trainer: _____ Signature: _____ Date: __/__/__

Certification of Completion
Worker Environmental Awareness Program
Mojave Solar Project (09-AFC-5)

This is to acknowledge these individuals have completed a mandatory California Energy Commission-approved Worker Environmental Awareness Program (WEAP). The WEAP includes pertinent information on biological, cultural, and paleontological resources for all personnel (that is, construction supervisors, crews, and plant operators) working on site or at related facilities. By signing below, the participant indicates that he/she understands and shall abide by the guidelines set forth in the program materials. Include this completed form in the Monthly Compliance Report.

No.	Employee Name	Title/Company	Signature
1.	Juan Negrete	Pipefitter milco	
2.	Carlos Estrada	Carpenter / Largo	
3.	Kevin Guy	Lineman / Hotline	
4.	Steve Diethelm	Lineman / Hotline	
5.	R.G. Montes	Laborer / Milco	
6.	Michael Smith	Groundman / Hotline	
7.			
8.			
9.			
10.			
11.			
12.			
13.			
14.			
15.			
16.			
17.			
18.			
19.			
20.			
21.			
22.			
23.			
24.			
25.			
26.			
27.			
28.			
29.			
30.			

Biological Trainer: _____ Signature: _____ Date: 5/15/13

Cultural Trainer: _____ Signature: _____ Date: __/__/__

Paleo Trainer: _____ Signature: _____ Date: __/__/__

Certification of Completion
Worker Environmental Awareness Program
Mojave Solar Project (09-AFC-5)

This is to acknowledge these individuals have completed a mandatory California Energy Commission-approved Worker Environmental Awareness Program (WEAP). The WEAP includes pertinent information on biological, cultural, and paleontological resources for all personnel (that is, construction supervisors, crews, and plant operators) working on site or at related facilities. By signing below, the participant indicates that he/she understands and shall abide by the guidelines set forth in the program materials. Include this completed form in the Monthly Compliance Report.

No.	Employee Name	Title/Company	Signature
1.	Tom Little	Milco Const Co	Tom Little
2.	Melissa A Collins-Little	Milco Construction	[illegible]
3.	Jorge Amaya	Straight line Cons	[illegible]
4.	JOHN REYES	STRAIGHTLINE CONS.	John Reyes
5.	Michael Iron Shell	Milco Const	Mike Iron Shell
6.	MICHAEL AAENSON	MILCO	[illegible]
7.	Daniel Mandojano	Milco	Daniel Mandojano
8.	ELEAZAR Aguilar (AL)	MILCO	[illegible]
9.	David D Reed	Straight light	[illegible]
10.	DENNIS NUCKOLLS	STRAIGHTLINE	Dennis Nuckolls
11.	Shawn Holk	Premier	[illegible]
12.	George Cohen	Straightline Con	[illegible]
13.	MICHAEL RORKE JR	AIBIENSA/Field Sup.	[illegible]
14.	GREG KOENIG	NEXT Century	[illegible]
15.	LES KOENIG	Next Century	[illegible]
16.	NICK RANSOM	Next Century	[illegible]
17.	Carlos V. Hernandez	Mechanical Quality	[illegible]
18.			
19.			
20.			
21.			
22.			
23.			
24.			
25.			
26.			
27.			
28.			
29.			
30.			

Biological Trainer: _____ Signature: _____ Date: 5/14/13

Cultural Trainer: _____ Signature: _____ Date: __/__/__

Paleo Trainer: _____ Signature: _____ Date: __/__/__

Certification of Completion
Worker Environmental Awareness Program
Mojave Solar Project (09-AFC-5)

This is to acknowledge these individuals have completed a mandatory California Energy Commission-approved Worker Environmental Awareness Program (WEAP). The WEAP includes pertinent information on biological, cultural, and paleontological resources for all personnel (that is, construction supervisors, crews, and plant operators) working on site or at related facilities. By signing below, the participant indicates that he/she understands and shall abide by the guidelines set forth in the program materials. Include this completed form in the Monthly Compliance Report.

No.	Employee Name	Title/Company	Signature
1.	TIMOTHY HAMAKER	Biol. Monitor/CH2MHill	Timothy Hamaker
2.	Jasper Yazzie	Milco	Jasper Yazzie
3.	Max Roth	ARB	Max Roth
4.	Laura Hanna	ARB	[illegible]
5.	Haskel Dickeson	Largo	[illegible]
6.	Fidencio Mayo	Largo	[illegible]
7.	DWAINE L. CRAIG	MILCO	[illegible]
8.	BEN ALCOSER	F.E. MORAN	[illegible]
9.			
10.			
11.			
12.			
13.			
14.			
15.			
16.			
17.			
18.			
19.			
20.			
21.			
22.			
23.			
24.			
25.			
26.			
27.			
28.			
29.			
30.			

Biological Trainer: _____ Signature: _____ Date: 5/13/13

Cultural Trainer: _____ Signature: _____ Date: __/__/__

Paleo Trainer: _____ Signature: _____ Date: __/__/__

Certification of Completion
Worker Environmental Awareness Program
Mojave Solar Project (09-AFC-5)

This is to acknowledge these individuals have completed a mandatory California Energy Commission-approved Worker Environmental Awareness Program (WEAP). The WEAP includes pertinent information on biological, cultural, and paleontological resources for all personnel (that is, construction supervisors, crews, and plant operators) working on site or at related facilities. By signing below, the participant indicates that he/she understands and shall abide by the guidelines set forth in the program materials. Include this completed form in the Monthly Compliance Report.

No.	Employee Name	Title/Company	Signature
1.	Noe Perez	MILCO	Noe Perez
2.	DINO MONTEZ	MILCO	[illegible]
3.	Robert Garcia	Milco	[illegible]
4.	Philbert Bigman	Milco	[illegible]
5.	Tracey Cristal	Milco	[illegible]
6.	Karmina Torres	SCESA.	Karmina Torres
7.	Greg Glennie	University	[illegible]
8.	Salvador Pedraza	FHI	[illegible]
9.	Michael Gomez	Loco	Michael G
10.	Barry Davidson	CMC	[illegible]
11.	Ruben Cantu	BM Milco	[illegible]
12.	Manuel Rivera	Sterny & Inc.	Manuel Rivera
13.	Tony Silva	Hot Line	[illegible]
14.	MORGAN A. KING	CH2M HILL	[illegible]
15.	Chris Placencia	University	[illegible]
16.	BRENT FINLEY	CH2M HILL	Brent Finley
17.	RICK GRAHAM	UNIVERSITY	Rick Graham
18.	TOM DOMENICO	MILCO	[illegible]
19.	Derrick Crank	MILCO	[illegible]
20.	Jeffrey BARNARD	Hot Line Const Inc	[illegible]
21.			
22.			
23.			
24.			
25.			
26.			
27.			
28.			
29.			
30.			

Biological Trainer: _____ Signature: _____ Date: 5/10/13

Cultural Trainer: _____ Signature: _____ Date: __/__/__

Paleo Trainer: _____ Signature: _____ Date: __/__/__

Paleontological Specialist

Cara Corsetti (Se

Certification of Completion
Worker Environmental Awareness Program
Mojave Solar Project (09-AFC-5)

This is to acknowledge these individuals have completed a mandatory California Energy Commission-approved Worker Environmental Awareness Program (WEAP). The WEAP includes pertinent information on biological, cultural, and paleontological resources for all personnel (that is, construction supervisors, crews, and plant operators) working on site or at related facilities. By signing below, the participant indicates that he/she understands and shall abide by the guidelines set forth in the program materials. Include this completed form in the Monthly Compliance Report.

No.	Employee Name	Title/Company	Signature
1.	Alice-Faye Peugh	Asst. Treasurer Abeinsa E/C	Alice-Faye Peugh
2.	Vanessa Pacheco	A/P Manager	[illegible]
3.	Francisco Cachu	Asst Controller/Abeinsa EPC	[illegible]
4.	Bernardo Santana Ramirez	Drafter	[illegible]
5.	MARIA ELENA LOPEZ	DC / ABEINSA	[illegible]
6.	Isabel Diez Atienza	DC / ABEINSA	[illegible]
7.	Tishana Jackson	DC / Abeinsa	[illegible]
8.	ROBIN E. YAMASAKI	DRAFTER/ABEINSA	[illegible]
9.	ANTONIO MANZI	PROCUREMENT	[illegible]
10.	LUIS MIGUEL LOPEZ JIMENEZ	PURCHASING DIRECTOR	[illegible]
11.	DIEGO M. RODRIGUEZ GLEZ	Engineering Director	[illegible]
12.	PILAR RODRIGUEZ GONZALEZ	Project ENGINEER	[illegible]
13.	Alberto Diaz Alderete	Elect. Lead Engineer	[illegible]
14.	ERNESTO MANRIQUEZ	CAD / AG ENGR G	[illegible]
15.	HOSSEIN KHORASANI	Mechanical ENG.	[illegible]
16.	MIKE HELLER	BUYER/ ABEINSA EPC	[illegible]
17.	Miguel Angel Perez	Expeditor / Abeinsa EPC	[illegible]
18.	Jose Manuel Rodriguez Pérez	Buyer / Abeinsa EPC	[illegible]
19.	VERNON D LEEMING	Permits/ AEPC	[illegible]
20.	Cassie Rodriguez	Admin / AEPC	[illegible]
21.	María Reyes de Castro	Finance / Abeinsa EPC	[illegible]
22.	Leticia Garza Martinez	Treasury / Abeinsa EPC	[illegible]
23.	Elisa Alejandra Peralpente	Accounting Controller	[illegible]
24.	María Elena Reyes Rivera	Abeinsa EPC	[illegible]
25.	Steven Jenkins	Abeinsa EPC	[illegible]
26.	Magdalena Tejeda	Purchasing	[illegible]
27.	Emilie Morreal	Purchasing / AEPC	[illegible]
28.	Daniel Cardenas	Purchasing	[illegible]
29.	Salvador Gonzalez Ayala	CIVIL AG	[illegible]
30.	JAQUIN PIULARCH MORENO	CIVIL AG	[illegible]
31	GERARDO PAZ RUIZ	CIVIL AG	[illegible]

Biological Trainer: _____ Signature: _____ Date: __/__/__

Cultural Trainer: MICHAEL CAREY AEPC Signature: [illegible] Date: 5/9/13

Paleo Trainer: _____ Signature: _____ Date: __/__/__

~~Bernardo Santana Ramirez~~

Certification of Completion
Worker Environmental Awareness Program
Mojave Solar Project (09-AFC-5)

This is to acknowledge these individuals have completed a mandatory California Energy Commission-approved Worker Environmental Awareness Program (WEAP). The WEAP includes pertinent information on biological, cultural, and paleontological resources for all personnel (that is, construction supervisors, crews, and plant operators) working on site or at related facilities. By signing below, the participant indicates that he/she understands and shall abide by the guidelines set forth in the program materials. Include this completed form in the Monthly Compliance Report.

No.	Employee Name	Title/Company	Signature
1.	ROBERT KAPHAN	LABORER/NMN CONSTR.	R. Kaphan
2.	Jeff Shafer	Operator/Brutoco	[illegible]
3.	Jeremy Young	Pipefitter/FHI	Jeremy Young
4.	Joel Ortiz	Laborer/Straight line	[illegible]
5.	Manuel Lopez	Teamster/Milco	[illegible]
6.	Jana Marcuse	Operator/Brutoco	[illegible]
7.	JEFFREY OLSZEWSKI	Carpenter/Cargo	[illegible]
8.	Robert Scott Hannah	FHI Pipefitter/welder	[illegible]
9.	Larry P. Gibby JR	FHI PF/W	[illegible]
10.	SEAN BOSSERT	HOTLINE	[illegible]
11.	ROBERTO CELEDON	CMC REBAR	[illegible]
12.			
13.			
14.			
15.			
16.			
17.			
18.			
19.			
20.			
21.			
22.			
23.			
24.			
25.			
26.			
27.			
28.			
29.			
30.			

Biological Trainer: _____ Signature: _____ Date: 05/09/13

Cultural Trainer: _____ Signature: _____ Date: __/__/__

Paleo Trainer: _____ Signature: _____ Date: __/__/__

Certification of Completion
Worker Environmental Awareness Program
Mojave Solar Project (09-AFC-5)

This is to acknowledge these individuals have completed a mandatory California Energy Commission-approved Worker Environmental Awareness Program (WEAP). The WEAP includes pertinent information on biological, cultural, and paleontological resources for all personnel (that is, construction supervisors, crews, and plant operators) working on site or at related facilities. By signing below, the participant indicates that he/she understands and shall abide by the guidelines set forth in the program materials. Include this completed form in the Monthly Compliance Report.

No.	Employee Name	Title/Company	Signature
1.	Charles Speiser	BM / milco	[signature]
2.	BRIAN ORTIZ	BMW / MILCO	[signature]
3.	Alex Catano	IW / CMC Rebar	[signature]
4.	Chris Jorgensen	BM / Milco	Chris Jorgensen
5.	Ken LAKEY	JL / Mountain Power	[signature]
6.	Antwoine Helmer Tr	FHI	[signature]
7.	PHILLIP WILLIAMS	EPS	[signature]
8.	[illegible]	NAM / CH2M Hill	[signature]
9.	Danny Sandoval	Murray Co.	[signature]
10.			
11.			
12.			
13.			
14.			
15.			
16.			
17.			
18.			
19.			
20.			
21.			
22.			
23.			
24.			
25.			
26.			
27.			
28.			
29.			
30.			

Biological Trainer: _____ Signature: _____ Date: 5 / 8 / 13 ?

Cultural Trainer: _____ Signature: _____ Date: ___/___/___

Paleo Trainer: _____ Signature: _____ Date: ___/___/___

Certification of Completion
Worker Environmental Awareness Program
Mojave Solar Project (09-AFC-5)

This is to acknowledge these individuals have completed a mandatory California Energy Commission-approved Worker Environmental Awareness Program (WEAP). The WEAP includes pertinent information on biological, cultural, and paleontological resources for all personnel (that is, construction supervisors, crews, and plant operators) working on site or at related facilities. By signing below, the participant indicates that he/she understands and shall abide by the guidelines set forth in the program materials. Include this completed form in the Monthly Compliance Report.

No.	Employee Name	Title/Company	Signature
1.	Brian Hansel	milco	[illegible]
2.	Heimball Villarreal	Milco	[illegible]
3.	JOSEPH FAGA	Milco	[illegible]
4.	Thomas Ortega	Milco	[illegible]
5.	Gonzalo Serrato	Service Master Clean	[illegible]
6.	Mike Spimechi	milco	[illegible]
7.	Sean Andersen	LALCO	[illegible]
8.	DAN LUNA	BIGGE	[illegible]
9.	Monte Gibbs	BIGGE	[illegible]
10.	Gary Wong	ARB	[illegible]
11.	Keylor L. Quinonez	ARB	[illegible]
12.	Max Roth	ARB	[illegible]
13.	Gilbert Ramirez	Milco	[illegible]
14.	Roland Gosevun	Milco	[illegible]
15.	ALFREDO AGUILERA	Milco	[illegible]
16.	Ralph Marquez	Milco	[illegible]
17.	David P Diaz	milco	[illegible]
18.	Trent Goodwin	ABEINSA	[illegible]
19.	Sergio Roa	Siemens contractor	[illegible]
20.	Ron Bauer	Electric Power Systems	[illegible]
21.	Manuel Kinney	Electric Power Sys	[illegible]
22.	Ruel Guanpo'n	Electric Power Systems	[illegible]
23.	BRIAN REDIN	ELECTRIC POWER SYS	[illegible]
24.	DONNEY Crawford	~~ELECTRIC POWER SYS~~	[illegible]
25.	NICHOLAS NIENKAMP	ELECTRIC POWER	[illegible]
26.	Isaac Cervantes	MILLCO	[illegible]
27.			
28.			
29.			
30.			

Biological Trainer: _____ Signature: _____ Date: 05/07/__

Cultural Trainer: _____ Signature: _____ Date: __/__/__

Paleo Trainer: _____ Signature: _____ Date: __/__/__

Certification of Completion
Worker Environmental Awareness Program
Mojave Solar Project (09-AFC-5)

This is to acknowledge these individuals have completed a mandatory California Energy Commission-approved Worker Environmental Awareness Program (WEAP). The WEAP includes pertinent information on biological, cultural, and paleontological resources for all personnel (that is, construction supervisors, crews, and plant operators) working on site or at related facilities. By signing below, the participant indicates that he/she understands and shall abide by the guidelines set forth in the program materials. Include this completed form in the Monthly Compliance Report.

No.	Employee Name	Title/Company	Signature
1.	Miguel Cervantes	MILCO	[illegible]
2.	Donald R. Martinez	Milco	[illegible]
3.	Albert Valles	MILCO	[illegible]
4.	Kevin McCallister	MILCO	[illegible]
5.	Travis Remington	Milco	[illegible]
6.	SHANE MEDLEY	MILCO	[illegible]
7.	Nick Waters	Milco	[illegible]
8.	Jesse Ellis	Metroguard	[illegible]
9.	CESAR TOLEDO	milco	[illegible]
10.	DAVID ELLIOTT	MILCO	[illegible]
11.	Shannon Butler	Milco	[illegible]
12.	SERGIO HERNANDEZ	LARGO	[illegible]
13.	Jared Tietjen	PTI	[illegible]
14.	Jacob Martinez	Straight line	[illegible]
15.	JEREMY EVES	STRAIGHT LINE	[illegible]
16.	STEVEN ESPINOZA	MILCO	[illegible]
17.	JESUS A. CINCO	Laborer/Largo Concrete	[illegible]
18.	Scott Wallace	ARB	[illegible]
19.			
20.			
21.			
22.			
23.			
24.			
25.			
26.			
27.			
28.			
29.			
30.			

Biological Trainer: _____ Signature: _____ Date: 05/06/__

Cultural Trainer: _____ Signature: _____ Date: __/__/__

Paleo Trainer: _____ Signature: _____ Date: __/__/__

Certification of Completion
Worker Environmental Awareness Program
Mojave Solar Project (09-AFC-5)

This is to acknowledge these individuals have completed a mandatory California Energy Commission-approved Worker Environmental Awareness Program (WEAP). The WEAP includes pertinent information on biological, cultural, and paleontological resources for all personnel (that is, construction supervisors, crews, and plant operators) working on site or at related facilities. By signing below, the participant indicates that he/she understands and shall abide by the guidelines set forth in the program materials. Include this completed form in the Monthly Compliance Report.

No.	Employee Name	Title/Company	Signature
1.	Gabriel Torres	Largo	
2.	Julio Ramos.	Largo.	
3.	Francisco Gonzalez	Largo	
4.	Richard "Tim" Sulzenbach	CMC Rebar	
5.	Lorenzo Marquez Sr.	CMC Rebar	
6.	Luis F. Restrepo	Milco	
7.	Steven Wilkerson	Hill Crane	
8.	Robert Robinson	Hill Crane	
9.	Danny Villasenor	MILCO INC	
10.	Daniel P Young	Milco Inc	
11.	Mike Rios	MILCO INC	
12.	Delray McHenry Smethers	Milco	
13.	Sonia Rios	Adm. Asst. INABENS A	
14.	Joshua Tate	Milco	
15.	Carlos Garcia	Milco	
16.	Gloriella Cardenas	CH2M HILL	
17.	Eric Hall	CH2M HILL	
18.	Jesse Shelmire	CH2M Hill	
19.	Mark Lambert	CH2M Hill	
20.	ANTHONY DAVIS	MILCO	
21.	Michael M. DeGiovine	CH2M Hill	
22.	Humphrey Calicher	CH2M Hill	
23.	Daniel Ewers	CH2M Hill	
24.	Sonia Situentes	CH2M Hill	
25.	Erica Maier	CH2M Hill	
26.	Phillip Reid	CH2M Hill	
27.			
28.			
29.			
30.			

Biological Trainer: _____ Signature: _____ Date: 05/04/__

Cultural Trainer: _____ Signature: _____ Date: __/__/__

Paleo Trainer: _____ Signature: _____ Date: __/__/__

Certification of Completion
Worker Environmental Awareness Program
Mojave Solar Project (09-AFC-5)

This is to acknowledge these individuals have completed a mandatory California Energy Commission-approved Worker Environmental Awareness Program (WEAP). The WEAP includes pertinent information on biological, cultural, and paleontological resources for all personnel (that is, construction supervisors, crews, and plant operators) working on site or at related facilities. By signing below, the participant indicates that he/she understands and shall abide by the guidelines set forth in the program materials. Include this completed form in the Monthly Compliance Report.

No.	Employee Name	Title/Company	Signature
1.	Todd Stiefel	Sunbelt	Todd Stiefel
2.	JOSE AGUSTIN MEDO GARCIA	INABENSA USA	
3.			
4.			
5.			
6.			
7.			
8.			
9.			
10.			
11.			
12.			
13.			
14.			
15.			
16.			
17.			
18.			
19.			
20.			
21.			
22.			
23.			
24.			
25.			
26.			
27.			
28.			
29.			
30.			

Biological Trainer: _____ Signature: _____ Date: 5/6/13

Cultural Trainer: _____ Signature: _____ Date: __/__/__

Paleo Trainer: _____ Signature: _____ Date: __/__/__

Certification of Completion
Worker Environmental Awareness Program
Mojave Solar Project (09-AFC-5)

This is to acknowledge these individuals have completed a mandatory California Energy Commission-approved Worker Environmental Awareness Program (WEAP). The WEAP includes pertinent information on biological, cultural, and paleontological resources for all personnel (that is, construction supervisors, crews, and plant operators) working on site or at related facilities. By signing below, the participant indicates that he/she understands and shall abide by the guidelines set forth in the program materials. Include this completed form in the Monthly Compliance Report.

No.	Employee Name	Title/Company	Signature
1.	JOE ROBERTSON	LABOR - MILCO	Joe A. Robertson
2.	ANDREW SCHAFER	ELECTRICIAN/HIGH LIGHT	[illegible]
3.	Michael Allen	Expeditor/milco	[illegible]
4.	John Karolczak	IRON WORKER milco	[illegible]
5.	Moises Del Rio	Inspector/MB Pro	[illegible]
6.	MARK RICE	Electrician/Ken Curran	Mark Rice
7.	Manuel Rodriguez	labor/milco	[illegible]
8.	Michael OSBORNE	Labor Milco	Michael Osborne
9.	HENRY Zavala	groundman/Hotline	[illegible]
10.	LUKE ENRIQUEZ	KEN CURRAN ELECTRIC	[illegible]
11.	J. Jesus Nuno	Teamster	[illegible]
12.	Alfredo Coronado	Labor	Alfredo Coronado
13.	Horacio Martinez	Labor	[illegible]
14.	JORGE AMAYAC	LABOR	[illegible]
15.	ROGER SHARP	PF	[illegible]
16.	Alex Sinkevitch	PF	[illegible]
17.	DAVID ROGERS	PF/MILCO	[illegible]
18.	Albert CAIN	labor milco	Albert Cain
19.	GARY MADONNA	PF/FHI	[illegible]
20.	Kris Bohm	FHI	[illegible]
21.	Jason Zeeb	B.M.	[illegible]
22.	Eduardo Aguilar	B.M	[illegible]
23.	TREVOR EMRAY	FITTER/FHI	[illegible]
24.	Frank Loera III	Substation tech/Hotline	[illegible]
25.	Lené Glover	Lab/milco	[illegible]
26.	Eliseo Gutierrez	Labor Milco	[illegible]
27.	Felipe V. Araujo	Labor Milco	Felipe V Araujo
28.	David Gam	Ironworker/CNC	[illegible]
29.	Cedric Swan	Labor Milco	Cedric Swan
30.	Rick Cooney	Boilermaker	Rick Cooney

Biological Trainer: _____ Signature: _____ Date: 5/1/13

Cultural Trainer: _____ Signature: _____ Date: __/__/__

Paleo Trainer: _____ Signature: _____ Date: __/__/__

Attachment 3
Monthly Common Raven Monitoring Results

Monthly Common Raven Results for Abengoa Mojave Solar Project San Bernardino County, California

Monthly Compliance Report
May 2013

Prepared for:
Mojave Solar LLC
13911 Park Avenue, Suite 206
Victorville, California 92392

Prepared by:

CH2MHILL®

2485 Natomas Park Drive
Sacramento, California 95833

June 2013

Table of Contents

Section **Page**

Introduction 2
Incidental Observations 2
Point Counts 3
Nest Monitoring 5

List of Tables

Tables **Page**

1 Incidential Common Raven Observations 2
2 Summary of Common Raven Point Count Observations 4

List of Figures

Figure **Page**

1 Common Raven Point Count Stations 4

Introduction

The Abengoa Mojave Solar Project is required to provide a monthly report on common ravens (*Corvus corax*) to the California Energy Commission (CEC), United States Fish and Wildlife Service (USFWS), and California Department of Fish and Wildlife (CDFW). The CEC Final Decision includes Condition of Certification (COC) BIO-18 stating that the project owner shall implement control measures to manage their construction site and related facilities in a manner to control raven populations and to mitigate cumulative and indirect impacts to desert tortoise associated with regional increase in raven numbers. In accordance with BIO-18, the CEC approved the *Common Raven Monitoring, Management, and Control Plan* (the Plan) on March 26, 2012. Refer to BIO-18 and the Plan for monitoring and survey protocol description.

Incidental Observations

Incidental observations of 44 ravens were documented within the project boundaries during May 2013 (Table 1). Because ravens are indistinguishable from one another, multiple sightings of individual birds likely occur. Therefore, the number of observations does not reflect the number of individual birds onsite. The total number of raven observations reported is for May 11 through 31 because AECOM was not able to provide the project with daily logs for May 1 through 10. Raven nests, nesting behavior, or raven "problem areas" were not observed within the project boundaries.

Table 1
Incidental Common Raven Observations

Date	Location	Number of Ravens Observed	Observed Behavior* (perching, walking, flying, foraging/drinking, nesting)
05/01/2013	N/A	N/A	N/A
05/02/2013	N/A	N/A	N/A
05/03/2013	N/A	N/A	N/A
05/06/2013	N/A	N/A	N/A
05/07/2013	N/A	N/A	N/A
05/08/2013	N/A	N/A	N/A
05/09/2013	N/A	N/A	N/A
05/10/2013	N/A	N/A	N/A
05/13/2013	Beta East and West	2	P
05/14/2013	Beta East, Alpha East and West	3	Fl, P
05/15/2013	Beta East, Alpha East	2	P, W

Table 1
Incidental Common Raven Observations

Date	Location	Number of Ravens Observed	Observed Behavior* (perching, walking, flying, foraging/drinking, nesting)
05/16/2013	Beta West	4	P, N (active nest in SCE towers south of site)
05/17/2013	Beta West	2	Fl
05/20/2013	Alpha	4	D, P, W (drinking at well)
05/21/2013	Alpha East	5	P, W
05/22/2013	Alpha East, Beta West	4	Fl, P
05/23/2013	Alpha East, Beta East	4	P, W
05/24/2013	Alpha	2	Fl, W
05/27/2013	Holiday, no construction	0	N/A
05/28/2013	Alpha	5	Fl, P, W
05/29/2013	Alpha	4	D, Fl, W (drinking at well)
05/30/2013	Beta West	2	Fl
05/31/2013	Beta West	1	P
TOTAL OBSERVED		44	

*Behavior acronym definitions: Drinking = D, Flying = Fl, Foraging = F, Nesting behavior = N, Perching = P, Walking = W. Nesting behavior gets additional comments e.g. active nest, nest construction, carrying nesting material.

Point Counts

A biological monitor conducted biweekly point counts according to Plan protocol at each of seven designated stations (Figure 1). Eight ravens were observed on May 15 and nine ravens observed on May 31 across all seven designated observation locations. Flying and perching activities noted for all observations, but no nesting behaviors were document.

Figure 1. Common Raven Point Count Stations

Table 2 provides a summary of the point count observations.

Table 2
Summary of Common Raven Point Count Observations

Date: Time	Station	Number of Ravens Observed	Location Description	Activity Observed
05/15/13: 0950	#2	2	Alpha East service power pole	Perched on pole
05/15/13:1035	#4	2	Alpha East	Flying from BLM ACEC over project site
05/15/13: 1103	#5	1	Beta East and West	Flying
05/15/13: 1107	#5	2	Beta West, Trough Assembly Building (TAB)	Perched on pole
05/15/13: 1301	#7	1	Beta East, Substation	Near transmission towers, flew south of project site
TOTAL OBSERVED		8		

Table 2
Summary of Common Raven Point Count Observations

Date: Time	Station	Number of Ravens Observed	Location Description	Activity Observed
05/31/13: 0730	#3	2	Alpha East Power Block	Flying toward Harper Dry Lake
05/31/13: 0742	#4	2	Alpha East	Flying toward Harper Dry Lake
05/31/13: 0806	#5	2	Beta West evaporation ponds	Perched on wind fence, then moved to parking lot
05/31/13: 0812	#5	1	Beta West evaporation ponds	Flying toward Alpha East
05/31/13: 0813	#5	1	Beta West evaporation ponds	Flying toward Alpha East
05/31/13: 0845	#6	1	Beta East Power Block	Near transmission tower south of project site
TOTAL OBSERVED		9		

Nest Monitoring

Biological monitors conducted ongoing bi-weekly breeding raven nest surveys between February and June as specified in the Plan. All potential onsite nesting structures were inspected throughout each 2-week period with ≥ 1 week between inspections. No raven nests were observed within the project boundary during May 2013.

Attachment 4
Observed Wildlife Species List

Observed Wildlife Species List May 2013 Mojave Solar Project		
Common Name	***Scientific Name***	**Status State/Federal**
Reptiles		
Western whiptail lizard	*Aspidoscelis tigris*	__/__
Birds		
Bullock's oriole	*Icterus bullockii*	__/__
Common raven	*Corvus corax*	__/__
Western king bird	*Tyrannus verticalis*	__/__
Loggerhead shrike	*Lanius ludovicianus*	CSC/__
White wing dove	*Zenaida asaitica*	__/__
European starling	*Sturnus vulgaris*	__/__
Turkey vulture	*Cathartes aura*	__/__
Road runner	*Geococcyx californeanus*	__/__
Mourning dove	*Zenaida macroura*	__/__
California horned lark	*Eremophila alpestris*	__/__
Unidentified flycatcher	Tyrannidae family	__/__
Unidentified sparrow	Passeridae family	__/__
Mammals		
Desert kit fox	*Vulpes macrotis*	CCR/__
White tailed antelope ground squirrel	*Ammospermophilus leucurus*	__/__
Long tailed pocket mouse	*Chaetodipus formosus*	__/__

Status Codes:

Federal:

FE = Federally listed endangered: species in danger of extinction throughout a significant portion of its range

FT = Federally listed, threatened: species likely to become endangered within the foreseeable future

State:

SE = State listed as endangered

ST = State listed as threatened

CSC = California Species of Special Concern Species of concern to CDFW because of declining population levels, limited ranges, and/or continuing threats have made them vulnerable to extinction.

CCR = protected by the California Code of Regulations

Appendix C
Cultural Resources

Mojave Solar Project
Monthly Compliance Report
San Bernardino County, California

May 2013 Reporting Period

CH2M HILL
2485 Natomas Park Drive
Suite 600
Sacramento, CA
95833-2937
Tel: 916.920.0300
Fax: 916.920.8463

June 7, 2013

Dale Rundquist
Compliance Project Manager
California Energy Commission
1516 Ninth Street
Sacramento, CA 95814

Subject: Abengoa Mojave Solar Project (09-AFC-5C) Monthly Compliance Report CUL-1 and CUL-6

Dear Mr. Rundquist:

CH2M HILL is assisting Abengoa Solar Inc. (Abengoa) in complying with California Energy of Commission (CEC) Conditions of Certification, specifically, CUL-1 and CUL-6, for cultural resource monitoring, as set forth in the Commission Decision for the Mojave Solar Project (MSP). CH2M HILL began the monitoring program for MSP on May 13, 2013. This report covers the cultural resources monitoring conducted from May 13, 2013 through May 31, 2013 by CH2M HILL. AECOM conducted the cultural resource monitoring from May 1 through May 10, 2013. Reports for this period have not been provided to Abengoa, therefore, a summary of the work conducted during these dates is not included in this document.

Personnel Active in Cultural Monitoring This Period

The Cultural Resources Monitors (CRMs) included: Kurt Lambert, Michael Degiovine, Sonia Sifuentes, and Daniel Ewers (who also serves as Cultural Resource Specialist, Alternate). The Native American Monitors (NAMs) included: Justin Linton, Howard Diaz, Steven Brierty, Vanessa Brierty, Rebecca Brierty, Joseph Lente, Leona Gilvin, and Steven Pacheco. Additionally onsite was Cultural Resource Specialist, Gloriella Cardenas.

Monitoring and Associated Activities This Period

Monitoring activities, subject to cultural resource monitoring, occurred in various locations of the MSP. In Alpha East, ground disturbance included electrical trenching for trailers, wind fence installation, solar field electrical trenching, evaporation pond grading, substation electrical trenching, administration and control building, and transmission line. In Beta East, ground disturbance included solar electrical trenching, electrical trenching for trailers, transmission line, excavation of vertical loop foundations, Ryken well excavation, foundation repairs, PSV foundations, and end loops. In Beta West, ground disturbance included solar electrical trenching, electrical trenching for trailer, end loops, Ryken well excavation, and bioremediation of evaporation ponds.

Cultural Resources Discoveries This Period

No new cultural resources discoveries were made in this reporting period.

Anticipated Changes in the Next Period

Monitoring will continue for evaporation pond excavations, administration and control building, solar electrical trenching, and PSV foundations. The CRMs and NAMs will remain on site to continue monitoring and to respond to discoveries if they occur.

Comments, Issues or Concerns

On May 20, 2013, an unscheduled grading activity in Alpha East with no monitoring team present was observed. Corrective actions were taken and the construction crew involved with the grading activity has been WEAP retrained.

On May 31, 2013, end loop excavations were framed and were in the process of being closed, prior to clearance of the spoils by a monitoring crew. The construction crew from Straight Line, who were conducting the end loop excavations, completed this phase of activity and left prior to a corrective action taking place. Corrective actions are pending. This crew is expected to return for another phase of end loop excavations and WEAP retraining is recommended prior resuming excavations.

Sincerely,

CH2M HILL

Gloriella Cardenas, M.A., RPA
Cultural Resources Specialist

Appendix D
Paleontological Resources

Mojave Solar Project
Monthly Compliance Report for
San Bernardino County, California

May 2013 Reporting Period

SWCA
ENVIRONMENTAL CONSULTANTS
Sound Science. Creative Solutions.

Pasadena Office
150 S. Arroyo Parkway, 2nd Floor
Pasadena, CA 91105
Tel 626.240.0587 Fax 626.240.0607
www.swca.com

Mr. Dale Rundquist, CPM
(09-AFC-5C)
California Energy Commission
1516 Ninth Street (MS-2000)
Sacramento, CA 95814

May 31, 2013

RE: PAL-5, Summary of paleontological monitoring and mitigation activities at the Mojave Solar Plant (MSP) for the period of May 2013

Dear Mr. Rundquist,

This letter is to update you on SWCA Environmental Consultants paleontological monitoring and mitigation activities at the MSP site during the period of May 1st through May 31st, 2013. SWCA's Paleontological Resource Monitor (PRM) was onsite part time monitoring drilling operations in Beta East, and excavation operations in Alpha East and Alpha West, Beta East and Beta West and along Harper Lake Road. All monitoring activities occurred in Quaternary alluvium.

During the course of monitoring, SWCA's paleontologists observed non-significant invertebrate fossils on one (1) day and recorded one (1) invertebrate fossil locality. The invertebrate locality yielded a small fragmentary bivalve shell from spoils piles left from excavations along Harper Lake Road. The invertebrate locality was recorded but not collected. No (0) significant fossils were collected and no significant fossil resources were destroyed by construction activity. No concerns regarding paleontological resources were identified during paleontological monitoring in May 2013.

It is a pleasure working with you on this project. If you have any questions please do not hesitate to contact me at 626 240 0587 ext 6605 or at ccorsetti@swca.com.

Respectfully,

Cara Corsetti, M.S.
Principal
Paleontological Resources Specialist, MSP

Locality Number	Date	Taxon	Element	Found by	ID By	Collected (Y/N)	Significance
FL-LEH-130507-01	5/7/13	Bivalvia	Shell	L. Hall	L. Hall	N	[1]**NFO**: fossil was fragmentary and poorly preserved

[1]NFO = Non-significant Fossil Locality

Appendix E
Worker Safety

Mojave Solar Project
Monthly Compliance Report
San Bernardino County, California

May 2013 Reporting Period

Monthly Safety Inspection Report
Jorge Daniel Collado Alvarez, Construction Interim Safety Manager
May 2013

• Record of all employees trained for the month

472 New employee orientations have been completed for the month of April.
1,645 Visitor Safety Orientations were completed to date
3,551 New employee Orientations completed to date.
Weekly Safety Meeting and daily Task Safety Awareness meetings included Pinch Points, Valley Fever, Back Protection and Heat awareness

• Summary report of safety management actions and safety-related incidents that occurred during the month;

There were 5 recordable incidents in the month of May

- Case #1: An employee was working on a trailer measuring panels when he stepped on a hanging piece 30" over the ground, losing his balance and falling. Lost work day Case.
- Case #2: An employee assigned to the Mirror assembly building complaint about pain in his shoulder and neck. X-Ray were needed.
- Case #3: While assisting a co-worker and handling material an employee got injured because a sharp piece. Stiches were needed and returned to full duty.
- Case #4: An employee working in Solar Field complaint about a Back pain.
- Case #5: Ruben was welding on power block piping. He was attempting to grind his tacks and the grinder caught and kicked back and struck his nose and forehead.
- April Case #2: The case #2 reported on last month has been reclassified into a First Aid Case instead of Recordable case. This case is subtracted from the list and Site rates.

Safety management actions included Safety meetings and Classes on Welding Fume Hazards, Respirators, Heat Stress Illness prevention. There were five subcontractor audits performed which included Milco, Alcorn Fence, Largo, Psomas, Inabensa, FHI and Sukut. Weekly inspections with Bureau Veritas revealed no major safety issues and other corrected right away.

• Report of any continuing or unresolved situations and incidents that may pose danger to life or health;

Currently we have an average of 1,140.53 employees on site daily.
Landing Zone prepared for emergency evacuation.
Summer Campaign: required to all subcontractors on site to provide a specific training to employees in regards to Heat Stress

• Report of accidents and injuries that occurred during the month.

There were 5 recordable incidents in the month of May.
We have worked 1,730,208 hours with 15 recordable cases.
Total Recordable Incident Rate, (TRIR), for Project in the month of April is 4.15%
Total Recordable Incident Rate, (TRIR), for year to date is 2.68%
Total Recordable Incident Rate, (TRIR), for Project to date is 1.73%
Total Lost Work day cases- 4, Lost Work days total - 403
There were 13 non recordable first aid cases.

ABENER TEYMA MOJAVE

Safety Conditions Check List

Internal by Work Site

Mojave Solar Project	
Activities performed:	
Safety Inspection Report **Record periodically (monthly)** **May, 2013**	

Date:	Time:	Project Name & Number
06/04/2013	5:30 pm	Mojave Solar Project -4A6007

Inspected by:	Title
Jorge Daniel Collado Alvarez	Interim Site Safety Manager
Accompanied by:	**Title**

A	Safety & Risk Management Program Administration & Record Keeping	Values				Comments
		1	2	3	N/A	
1	Is there a Safety Manual, 29CFR1926 and HazCom Manuals available on-site?			3		
2	Are there Weekly Safety meetings (Toolbox Talks) conducted and documented?			3		
3	Is the Weekly Job Safety Inspection conducted and documented?			3		
4	Are the Federal & State Labor Notices posted in a conspicuous location?			3		
5	Are the Emergency phone numbers & Doctors list posted conspicuously?			3		
6	Are the Company vehicle operators authorized per company policy?			3		
7	Are the New employee orientations documented for all new subcontractor employees?			3		
8	Are the PM Follow up letters to subcontractors re: Serious Violations on file?			3		
9	Is the approved safety plan including the emergency action plan on site?			3		
10	Is the Safety Plan updated to reflect any/all scope changes?		2			
B	**Ladders & Stairways - OSHA Subpart X**	**Values**				**Comments**
1	Are the ladders inspected for defects?			3		
2	Are straight ladders extending 3 ft. above landing?			3		
3	Are straight ladders pitched at 1 ft. out from vertical for every 4 ft. of height?			3		
4	Are straight ladders secured in place?			3		
5	Are the straight ladders equipped with safety feet?			3		

Safety Conditions Check List

Internal by Work Site

6	Are the step ladders used only in open position?			3		
7	Are the stepladders tall enough for job without using top step, second step from top step or platform?				N/A	
8	Is the use on non-conductive (non metal) ladders only in proximity of electricity?		2			
9	Are the stairways, ramps, and landing equipped with rails and handrails?			3		
10	Are the stairways and/or landings in use poured, filled, finished and free of debris, slip, trip or fall hazards?			3		
11	Are the stairways adequately lighted?				N/A	
12	Do the permanent ladders meet OSHA 1910 standards?			3		
C	**Fall Protection OSHA - Subpart M**	**Values**				**Comments**
1	Are the floor/roof deck openings protected with properly secured and marked covers or guardrails?			3		
2	Are the wall openings/open-sided floors protected with fall protection/prevention systems?			3		
3	Are the workers exposed to falls of 6' or more provided with and required to use personal fall arrest systems (PFAS) when not protected by guardrails?			3		
4	Are the exposed rebar in work areas properly protected - capped, etc.? Both vertical and horizontal?			3		
5	Are specialty trades, I.e., roofers, ironworkers, etc., working under fall protection plans prepared by them and approved by controlling contractor?			3		
6	Are the PFAS - Harnesses, Lanyards, Anchorage Points, Lifelines and Retractables inspected?			3		
7	Are the anchorage Points 5K per person?			3		
D	**Demolition – OSHA Subpart T**	**Values**				**Comments**
1	Is the Engineering Survey completed and documented?				N/A	
2	Is the work area "Identified & Protected", i.e., electricity, gas, water, sprinkler system?				N/A	
E	**Scaffolds and Aerial Lifts – OSHA Subpart L**	**Values**				**Comments**
1	Is there a competent Person, designated in writing, assigned to supervise operations and conduct documented daily inspections and on-site full time?		2			**Not full time**
2	Are the working surfaces 6' or higher equipped with guardrails?			3		
3	Are the working surfaces clear of debris, slip, trip and fall hazards?			3		
4	Are the plumbs, tied in as necessary, safe footing, base plates, mudsills assembled and erected properly -? Are they equipped with all pins and bracing? Is a complete platform?				N/A	

Safety Conditions Check List

Internal by Work Site

5	Is there a safe means of access to platform provided?			3		
6	Are the wheels locked on rolling units when platform occupied?			3		
7	Are the scaffolds at least 10 ft. from energized power lines?			3		
8	Are the workers tied off in articulating boom lift?			3		
9	Is the aerial lift on level surface?			3		
10	Has safety been notified in advance of erecting a suspended scaffold?				N/A	
11	Is there a competent Scaffold Person inspected and signed-off on scaffold prior to each shift daily?			3		
11	Is a Tagging system used?		2			**Issues detected on daily inspections**
F	**Excavations & Trenches – OSHA Subpart P**	**Values**				**Comments**
1	Is there a competent Person, designated in writing, assigned to supervise operations and conduct documented daily inspections and on site full time?		2			**Not Full Time**
2	Are all excavations and trenches 5 ft. or greater in depth equipped with Protective Systems (shoring/shielding or sloped/benched)?			3		**Harper Lake Road underground tunnel properly shored, and shoring plan submitted to main contractor**
3	Are the ladders or other means of quick exit within 25 ft. of lateral travel for workers?			3		
4	Is the Spoil pile at least 3 ft. from edge of excavation or trench?		2			**Have had issues with Subcontractors because 2ft. is the Cal/OSHA standard**
5	Are the Underground utilities located & marked before excavation starts? (Verify ticket/maps/plans)			3		
6	Are the barricades provided around all open excavations?			3		
7	Is the Equipment kept at proper distance from occupied excavations/trenches to minimize risk of cave-in or equipment falling in on workers?			3		
8	IF 20' OR DEEPER Has Safety been notified?				N/A	
9	IF 20' OR DEEPER, are the protective systems designed by a RPE?				N/A	
10	Are the Surface and subsurface encumbrances identified?			3		
11	Are the Water, atmospheric conditions, & surcharge loads considered?		2			
G	**Motor Vehicles, Mechanized Equipment – OSHA Subpart**	**Values**				**Comments**
1	Are the Tractors, backhoes, other vehicles equipped with operable backup alarms?			3		
2	Are the Operators required wearing seat belts when provided on equipment?			3		
3	Is the Forklift/Lull operator certification documented and available on project?			3		
4	Is a High visible vest worn around earth moving equipment?			3		
H	**Electrical – OSHA Subpart K**	**Values**				**Comments**

Safety Conditions Check List

Internal by Work Site

1	Are the Ground fault circuit interrupters (GFCI) used with all temporary wiring, e.g., extension cords and power from welding machines?			3		
2	Is the GFCI in good appearance and in working order?			3		
3	Are All tools and equipment inspected for defects in cords and plugs?			3		
4	Are the Extension cords and ground pins are in good condition?			3		
5	Are the Sources of electricity, such as energized panel boxes, overhead lines, etc., properly marked, barricaded and protected? Inspected by a Qualified Person?			3		
6	Is there an adequate lockout/tag out/try out procedures in place to protect employees?			3		
7	Is the Temporary Lighting installed properly? (i.e. parking, construction trailer, & site)			3		
I	**Personal Protective Equipment – OSHA Subpart E**	**Values**				**Comments**
1	Is an adequate eye protection available and worn when required?			3		**100% eye protection required on site**
2	Is a Hearing protection available and used when necessary?			3		**Hearing protection required 100% in TAB**
3	Are Hard hats available and worn at all times?			3		
4	Are Work boots with protective toes worn by all employees?			3		
5	Are All employees wearing shirts with sleeves?			3		
6	Is a Hand protection available and in use when required?			3		**100% hand protection required**
7	Is there a Written respirator program available?			3		
8	Are they Using N95 respirators for "voluntary use"?			3		
9	Are the PFAS inspected by employees prior to use?			3		
J	**Fire Prevention – OSHA Subpart F**	**Values**				**Comments**
1	Are the flammable/combustible liquids stored away from ignition sources and identified by warning signs?			3		
2	Are the approved metal safety cans utilized for storing all liquid flammables?			3		
3	Are the fuel tanks surrounded by containment and 20' from building?			3		
4	Is an Adequate number of charged fire extinguishers available? Within 75'?			3		
5	Are the Extinguishers properly located, protected, Inspected?			3		
6	Are the Flammable/combustible debris & storage kept away from welding & cutting?			3		
K	**Welding & Cutting - OSHA Subpart J**	**Values**				**Comments**
1	Are welding leads in good condition?			3		
2	Is a Portable fire extinguisher located within 20' of all welding operations?			3		

Safety Conditions Check List

Internal by Work Site

3	Are Fire blankets available and used to cover combustible material located around welding operations?			3		
4	Are Hot Work Permits used when required?		2			**Some issues detected. Working with subcontractor to make sure they follow the right protocols**
5	Is an Adequate use of fire curtains to enclose and shield welding operations?			3		
6	Are Hoses, torches, and gauges free from defects, dirt and hydrocarbons such as oil and grease?			3		
7	Are Regulators provided with flash arrestors?			3		
8	Are Welding / cutting helmets, eye protection, gloves, bibs, face shields available and properly used when necessary?			3		
9	Are the Stored oxygen and fuel cylinders separated by a minimum of 20 ft. with valve protection caps in place?			3		
10	Are All cylinders firmly secured in upright position?		2			**Daily inspections detect violations corrected right away**
11	Are Cylinders secured to welding cart, valve closed and caps on when not in use?			3		
12	Are Empty and full cylinders separated and marked?			3		
13	Are Flammable gas cylinders and oxygen gas cylinders are separated 20' apart?		2			
L	**Tools – Hand & Powered – OSHA Subpart I**	**Values**				**Comments**
1	Are Tools and equipment in good condition?			3		
2	Is the Defective equipment tagged as such and removed from work area?			3		
3	Are Tools and equipment guards and handles in place and in good condition?			3		
4	Are the Powder actuated tool operators properly trained and documented?				N/A	
M	**Confined Space Entry - OSHA 29CFR1910.146**	**Values**				**Comments**
1	Is a competent Person / Entry Supervisor designated in writing? On site full time?			3		
2	Is an Entry permit properly issued prior to work starting?			3		
3	Is the Air sampling equipment available and properly used? Calibrated?			3		
4	Are the Air samples show acceptable oxygen concentrations of (19.5% to 23.5%)?			3		
5	Are the Air samples show space is free of toxic/flammable/explosive gases?			3		
6	Is there a Trained attendant assigned to maintain constant contact with workers inside space?			3		
7	Is there Trained person assigned to recheck air quality frequently throughout the project?			3		
8	Is there an Emergency rescue plan and equipment in place?			3		
N	**Hazard Communication - OSHA 29CFR1910.1200**	**Values**				**Comments**
1	Is there an Abencs, Subcontractor MSDS's available?			3		

Safety Conditions Check List

Internal by Work Site

2	Is there an Abencs's List of Hazardous Chemicals current?			3		
3	Is there an Abencs, Subcontractor written programs on site?			3		
4	Are the Containers labelled? Are the Notices posted?			3		
O	**Health and Safety - OSHA Subparts C & D**	**Values**				**Comments**
1	Is illumination, task lighting adequate?			3		
2	Are sanitary facilities adequate and clean?		2			**Have issues with vandalizing rest rooms**
3	Is drinking water properly dispensed and community water containers cleaned and secured?			3		
4	Is First Aid kit stocked including latex gloves and Bloodborne cleanup kit?			3		
5	Are Eye wash stations available & accessible?			3		
P	**Housekeeping - OSHA Subparts C & D**	**Values**				**Comments**
1	Are Suitable containers available for disposal of trash, debris and recyclables?			3		
2	Are Walkways, aisles, hallways and passageways clear of trash, debris, materials?			3		
3	Are Tools not in use stored in job boxes?			3		
4	Is the Equipment not in use stored properly?			3		
5	Are Pipes and other materials stored kept neatly?			3		
6	Are Appropriate sub-contractors dumpsters available?		2			
Q	**Cranes and Hoists - OSHA Subpart N**	**Values**				**Comments**
1	Are Operator's "daily inspections" available for review?			3		
2	Is there an Annual Inspection and 3rd party crane inspection documented?			3		
3	Are the Swing radius barricaded?			3		
4	Are the Hydraulic crane outriggers padded and on stable ground?			3		
5	Are the Power lines at safe distance? De-energized or protected? (Check clearance heights)			3		
6	Are the Uniform signals properly used?			3		
7	Are Cable and slings regularly inspected and in good condition? Red is dead!			3		
8	Are Operable safety catches provided on load hooks?			3		
9	Is there a Proper rigging used for loads?			3		
10	Are the Operator qualifications on site?			3		
11	Is a competent training person involved with safe rigging practices?			3		
R	**Abatement & Remediation - OSHA Subparts D & Z**	**Values**				**Comments**
1	Is the Personnel trained & medically qualified including fit tests? Documentation on site?				N/A	

Safety Conditions Check List

Internal by Work Site

2	Are the three work zones delineated?				N/A	
3	Are workers wearing the correct level of protection?				N/A	
4	Is on-going air monitoring documented?				N/A	
5	Are vision panels installed where practical?				N/A	
S	**Public Safety & General Liability – ANSI A.10-30-2001**	**Values**				**Comments**
1	Is an adequate placement of flashers, barricades, signs around excavations and equipment or materials located in foot/vehicle traffic areas?		2			
2	Is Security in place? Is the Access control plan established?			3		
3	Is the fencing erected around laydown/material storage areas?			3		
4	Is the Site lighting meets 5-foot candles?				N/A	
5	Have All contractors submitted COI?				N/A	
6	Are the way (Traffic signs) signs clear?			3		
7	Are the Off-site work hazards identified?			3		
	Safety Deficiency Point Reduction **Inspection Score: 365 /387 = 94.31%**					

Comments

- Worked 1,703,208 hours with 15 recordable injuries.
- 3,551 New employee Orientations completed to date.
- 1,645 Visitor Safety Orientations completed to date.
- 472 New employee orientations have been completed in the month of March.
- Weekly Safety Meeting and daily Task Safety Awareness meetings included Pinch Points, Valley Fever, Back Protection and Heat awareness

.

Appendix F
Soil & Water
Waste
General Conditions
Civil
Structural
Mechanical
Electrical
Transmission System-Engineering

Mojave Solar Project
Monthly Compliance Report
San Bernardino County, California

May 2013 Reporting Period

ABENER TEYMA MOJAVE

13911 Park Avenue, Suite 208
Victorville, CA 92392
Phone: 480-287-1419

Subject:	Mojave Solar Project (09-AFC-5C)
Condition No.:	Compliance-5
Description:	Monthly Compliance Matrix
Submittal No.:	COMPLIANCE-5-00-00

June 10, 2013

Mr. Dale Rundquist, CPM
California Energy Commission
1516 Ninth Street (MS-2000)
Sacramento, CA 95814
drundqui@energy.state.ca.us

Dear Mr. Rundquist,

As required by the California Energy Commission and more specifically by Condition of Certification COMPLIANCE-5, attached please find an update to the following Compliances:

AQ-13 [A/T]

The HTF storage tank shall have in place a properly operating liquid HTF air cooler which shall maintain the tank at or below 165 degrees Fahrenheit. The project owner shall provide the District and CPM manufacturer design specifications showing compliance with this condition at least 30 days prior to the installation of the HTF storage tanks. The project owner shall have active temperature gauges that can be inspected to show ongoing compliance with this condition. Submittal of the compliance.

Plans for the HTF Overflow tanks and foundations were submitted to the CPM and MDAQMD for review and approval on August 31, 2012. MDAQMD approved on October 10, 2012. CPM approved on October 8, 2012 but notice not received until November 27, 2012.

ABENER TEYMA
MOJAVE

13911 Park Avenue, Suite 208
Victorville, CA 92392
Phone: 480-287-1419

AQ-15 [A/T]

Vent release and HTF storage tank temperatures shall be monitored in accordance with a District approved Inspection, Monitoring and Maintenance plan. The project owner shall provide the District for review and approval and the CPM for review the required Inspection, Monitoring and Maintenance plan at least 30 days prior to the installation of the HTF storage tanks and vent systems. Submittal of the compliance.

The Inspection, Monitoring and Maintenance Plan for the HTF Overflow system was submitted to the CPM and MDAQMD for review and approval on August 31, 2012. MDAQMD approved on October 10, 2012. CEC approved compliance on September 24, 2012.

AQ-16 [A/T]

The inspection and maintenance plan shall be submitted to the CPM for review and approval at least 30 days before taking delivery of the HTF. As part of the Annual Compliance Report, the project owner shall provide the quantity of used HTF fluid removed from the system and the amount of new HTF fluid added to the system each year. The project owner shall make the site available for inspection of HTF piping Inspection and Maintenance Program records and HTF system equipment by representatives of the district, ARB, and the Energy Commission.

The Inspection, Monitoring and Maintenance Plan for the HTF Overflow system was submitted to the CPM and MDAQMD for review and approval on April 24, 2013. CEC approved compliance on May 29, 2013.

AQ-40 [A/T]

The project owner shall submit the engine specifications at least 30 days prior to purchasing the engines for review and approval demonstrating that the engines meet NSPS and ARB ATCM emission limit requirements at the time of engine purchase. Submittal of the compliance.

The engine specifications were submitted to the CPM for review and approval on March 11, 2013. CEC approved compliance on April 15, 2013. MDAQMD approved on 5/14/2013. Please see attachment.

AQ-49 [A/T]

The project owner shall submit the engine specifications at least 30 days prior to purchasing the engines for review and approval demonstrating that the engines meet NSPS and ARB ATCM emission limit requirements at the time of engine purchase. Submittal of the compliance.

ABENER TEYMA MOJAVE

13911 Park Avenue, Suite 208
Victorville, CA 92392
Phone: 480-287-1419

The engine specifications were submitted to the CPM for review and approval on March 11, 2013. CEC approved compliance on April 12, 2013, please see attachment. MDAQMD approved on May 16, 2013, please see attachment.

HAZ-3 [ASI and A/T]

The project owner shall not use any hazardous materials not listed in Appendix A, below, or in greater quantities or strengths than those identified by chemical name in Appendix A, below, unless approved in advance by the Compliance Project Manager (CPM). The project owner shall provide to the CPM, in the Annual Compliance Report, a list of hazardous materials contained at the facility. **Please see attached for the hazardous materials deliveries.**

HAZ-4 [A/T]

The project owner shall place an adequate number of isolation valves in the Heat transfer Fluid (HTF) pipe loops so as to be able to isolate a solar collector loop in the event of a leak of fluid. These valves shall be actuated automatically, manually, remotely, or locally as determined during detailed engineering design. The detailed engineering design drawings showing the number, location, and type of isolation valves shall be provided to the CPM for review and approval prior to the commencement of the solar array construction. At least sixty (60) days prior to the commencement of solar array construction, the project owner shall provide the design drawings as described above to the CPM for review and approval.

The isolation valve pipe plans for the HTF system was submitted to the CPM for review and approval on July 3, 2012. CPM approved on 08.31.12.

HAZ-7 [A/T]

The project owner shall ensure that all pipes carrying heat transfer fluid (HTF), all command and control systems, and the fire water loop that are required to cross Harper Lake Road or Lockhart Road will be placed underground for the crossing. The pipes and lines shall be installed in a protective structure underneath the road and the HTF pipes shall have expansion loops aboveground on either side of the road. The engineering design plans shall be provided to the CPM for review and approval prior to the commencement of the solar array construction. At least sixty (60) days prior to the commencement of solar array piping construction, the project owner shall provide the design drawings as described above to the CPM for review and approval.

The HTF crossing plans were submitted to the CPM for review and approval on July 23, 2012. CPM approved on 10.01.2012.

ABENER TEYMA MOJAVE

13911 Park Avenue, Suite 208
Victorville, CA 92392
Phone: 480-287-1419

WASTE-2 [ASI and A/T]

Project owner shall keep a copy of the identification number on file at the project site and provide documentation of the hazardous waste generation notification and receipt of the number to the CPM after receipt of the number. Waste generator number issued by California EPA on September 28, 2012. CEC reviewed and approved submittal on November 27, 2012.

WASTE-8

Inform the CPM of the date when all ACM is removed from the site. All asbestos pipe has been removed out of the ground on the site as of 01-27-12. NCM's waste logs are attached. Waste logs were included as part of the January 2012 MCR. Additional asbestos pipe was found in North Alpha West. NCM was brought back on site to remove additional asbestos pipe located in Alpha West and completed asbestos pipe removal as of 07.01.12. Please see attached waste logs. Although there was evidence of asbestos pipe located in Beta East, it is located at a depth where site excavations will not occur (8 feet and deeper). As this is the case, it was determined that it would be better to leave the pipe in place. SBC determined that underground storage tank found in Alpha west was inert and could be recycled. NCM removed 51 lf of asbestos pipe during the month of April, 2013.

WORKER SAFETY-3

The CSS shall submit in the MCR a monthly safety inspection report
Jorge Collado has updated the report and will submit to you.

SOIL&WATER-1

Provide an analysis on the effectiveness of the drainage, erosion, and sediment control measures and the results of monitoring and maintenance activities.
The contractor reports as of May 30, 2013 that 0 lf (24,280 lf total for project) of straw rolls and 0 lf (16,219 lf total for project) of new swale have been installed for this month. The existing fiber rolls and swales have continued being monitored and maintained. These BMP's have been effective in preventing sediment run off from the site. There are six concrete washout stations (2 in Alpha and 4 in Beta). Additionally, there are steel rumble strips at the Alpha main entrance and on Lockhart Road adjacent to the TAB main entrance. They have been effective in preventing dirt and mud from being tracked from the site onto Harper Lake Road and Lockhart Road as well as being an effective deterrent against the spreading of noxious weeds. The steel beams are continuously maintained to prevent clogging. Street sweeping of Harper Lake Road and Lockhart Road is occurring on an as needed basis as a means of good housekeeping; it has improved and will continue to be the main activity to keep the streets free of dirt and mud, especially when high winds occur. Soil stabilizer wasn't used for this month on traffic areas as daily watering was an effective means for dust control. Project site areas for the month that have been stabilized are 0 acres for Alpha East (279.50 acres total), 0

13911 Park Avenue, Suite 208
Victorville, CA 92392
Phone: 480-287-1419

acres in Alpha West (369 acres total), 0 acres in Beta East (502 acres total), and 0 acres in Beta West (102.50 acres total). Trash collection is being taken care of on a daily basis but repeated high volumes of trash have called for additional trash containers, which are now on site. It has been stressed to the construction team to remind the contractors to clean up their own trash, especially to prevent trash from accumulating in the trenches. A recycling program has been added to lessen the trash loads. Wood pallets, glass and plastic are now being disposed of in separate bins/areas. Sand removal along tortoise fences is being taken care of on a daily basis. Please see attachments, which include the weekly Construction Site Stormwater Runoff Control Inspection forms signed by the project QSP and the Bureau Veritas site inspector.

SOIL&WATER-4

Well abandonment status for remaining abandonments submitted to CPM on 09.06.12, As of 09.06.12, the CEC has approved all well abandonments with the exception of wells 11 and 14 (stuck pump wells). They require a wildlife survey in the area of the two wells to ensure that their habitats won't be disrupted with the use of explosives for the stuck pump wells. As of 10.13.2012, the well contractor was able to remove the pump from Well #11 by conventional means. However, Well #2 has now been determined as having a stuck pump and needing explosives to remove. The abandonment package was revised and resubmitted to the CEC on 10.22.2012. CEC has approved the use of explosives on Wells #2 and #14 as of October 31, 2012. As of March 5, 2013, the remaining wells to be abandoned are: Ryken and Wetlands. Wells #2 and #14 (by explosives) and 8, 10, 19, were abandoned during January 2013 but their well completion reports were finalized this month, please see attachments. **Ryken and Wetlands wells were approved to be abandoned by SBC on May 7, 2013. Final abandonment was completed on May 17, 2013 and well completion reports were submitted to the CEC for approval. Please see attached for copies of the well abandonment reports.**

SOIL&WATER-5

Beginning six (6) months after the start of construction, the project owner shall prepare a semi-annual summary report of the amount of water used for construction purposes. The summary shall include the monthly range and monthly average of daily water usage in gallons per day.
The running total of water usage for construction purposes from August 30, 2011 to April 30, 2013 is 260,462,147 gallons. To date, there have been 410 working days which equates to 635,274 gal/day. This equates to 12,402,959 gal/month. Please see attached water log data.

SOIL&WATER-9

Prior to the start of construction of the sanitary waste system, the project owner shall submit to the County of San Bernardino for review and comment, and to the CPM for review and approval, plans for the construction and operation of the project's proposed sanitary waste septic system and leach field. These plans shall comply with the requirements set forth in County of San Bernardino Code Title 3, Division 3, Chapter 8

ABENER TEYMA MOJAVE

13911 Park Avenue, Suite 208
Victorville, CA 92392
Phone: 480-287-1419

Waste Management, Article 5, Liquid Waste Disposal and Title 6, Division 3, Chapter 3, and the Uniform Plumbing Code. Project construction shall not proceed until the CPM has approved the plans. The project owner shall remain in compliance with the San Bernardino County code requirements for the life of the project.

The septic plans were submitted to CEC on 04.03.12 for review and approval. CEC approved on 04.23.12.

GEN-2

Provide schedule updates in the monthly compliance report.
All engineering disciplines have submitted updated master drawing/spec lists. Please see attached copies.

GEN-3

Make the required payments to the CBO in accordance with the agreement. Send a copy of the CBO's receipt of payment to the CPM indicating that applicable fees have been paid. A copy of the contract between the project owner and the CBO shall be submitted.

GEN-4

Resume for Luis Leal, PE submitted for site Resident Engineer (RE). Resume submitted to CBO on 03.22.12. CBO approved on 03.28.12.
Resume for Moe S. Karrit, PE submitted for site Resident Engineer (RE) Delegate. Resume submitted to CBO on 12.11.12. CBO approved on 12.18.12 for site Electrical matters only.
Resume for Arpan Tailor, PE submitted for Resident Engineer (RE) Delegate. Resume submitted to CBO on 02.12.13, CBO approved on 02.15.13.
The resume for Mohamad (Mike) Alhalabi, P.E. was submitted to CBO on 01.30.12 and approved on 02.06.12 for the position of site Mechanical Engineer.

GEN-6

Also submit to the CPM a copy of the CBO's approval of the qualifications of all special inspectors. Special Inspectors: Resumes for Julio Guzman, Jose Franco-Casas, Emil Rudolph and Frank Moreland were submitted to the CBO on 02.13.12 and approved on 02.13.12.
Resumes for Tejinder Kalra and Richard Mendoza were submitted to CBO on 04.23.12 and CBO approved on 04.25.12.
GEN-6-7.01: Twining Special Inspection agreement submitted to CBO on 06.11.12, CBO approved on 06.26.12.
GEN-6-8.00: Gold Line Repairs Special Inspection agreement submitted to CBO on 07.30.12, CBO approved on 08.01.12.
GEN-6-9.00: RMA Group Special Inspection agreement submitted to CBO on 12.13.12, CBO approved on 12.13.12.
GEN-6-10.01: PTI Group Special Inspection agreement submitted to CBO on 02.22.13, CBO approved on 03.06.13.

ABENER TEYMA MOJAVE

13911 Park Avenue, Suite 208
Victorville, CA 92392
Phone: 480-287-1419

GEN-6-10.02: PTI Group Special Inspection agreement submitted to CBO on 04.09.13, CBO approved on 04.17.13, please see attachment.
GEN-6-11.00: Murrey Special Inspector agreement submitted to CBO on 02.27.13, CBO approved on 02.28.13.
GEN-6-12.00: University Mechanical resume for Joseph Rodriguez submitted to CBO on 04.08.13, CBO approved on 04.12.13.

GEN-7

Transmit a copy of the CBO's approval of any corrective action taken to resolve a discrepancy to the CPM.
None to date.

GEN-8

Submit to the CBO, with a copy to the CPM, in the next monthly compliance report, (a) a written notice that the completed work is ready for final inspection, and (b) a signed statement that the work conforms to the final approved plans.
None to date.

FAB-1

FAB-1-18.00: Ram Jack Manufacturing LLC application for approved fabricator submitted to CBO for approval on 04.27.12, CBO approved on 05.01.12. Please see attachment.
FAB-1-20.00: Hine Hydraulics application for approved fabricator submitted to CBO for approval on 05.29.12, CBO approved on 05.31.12.
FAB-1-21.00: Metapol SA application for approved fabricator submitted to CBO for approval on 12.06.12, CBO approved on 12.19.12.
FAB-1-22.00: Montajes Frontera SA Welding certificates submitted to CBO for approval on 12.19.12, CBO approved on 12.28.12.
FAB-1-23.00: Nello Corporation for approved fabricator submitted to CBO for approval on 01.25.13, CBO approved on 03.12.13.
FAB-1-24.00: Newjac Inc. submitted to CBO on 03.26.13, CBO approved on 04.01.13.
FAB-1-25.00: Schweitzer Engineering Laboratories SA de CV (SEL Mexico) submitted to CBO on 04.18.13, CBO approved on 05.20.13, please see attachment.

CIVIL-1

Submit a written statement certifying that the documents have been approved by the CBO.
Civil-1-2.00x7, Grading & Drainage plans submitted to CBO on 05.17.12, CBO approved on 05.18.12.
Civil-1-2.00x8, Grading & Drainage plans submitted to CBO on 06.12.12, CBO approved on 06.12.12.
Civil-1-2.00x9, Fencing plans submitted to CBO on 08.16.12, CBO approved on 08.24.12.
Civil-1-2.00x10, Fencing plans submitted to CBO on 04.26.13, CBO approved on 05.03.13, please see attachment.
Civil-1-2.01, Grading & Drainage Construction plans submitted to CBO on 06.13.12, CBO approved on 06.19.12.
Civil-1-3.00x2, Channel construction plans submitted to CBO on 05.17.12, CBO approved on 05.18.12.

ABENER TEYMA MOJAVE

13911 Park Avenue, Suite 208
Victorville, CA 92392
Phone: 480-287-1419

Civil-1-5.00x3, Roadway Construction plans submitted to CBO on 07.10.12, CBO approved on 07.12.12.
Civil-1-6.01, Fencing plans submitted to CBO on 07.12.12, CBO approved on 07.17.12.
Civil-1-6.02, Fencing plans submitted to CBO on 08.20.12, CBO approved on 08.21.12.
Civil-1-6.03, Fencing plans submitted to CBO on 10.04.12, CBO approved on 11.08.12.
Civil-1-6.00x2, Fencing plans submitted to CBO on 07.09.12, CBO approved on 07.12.12.
Civil-1-6.00x3, Fencing plans submitted to CBO on 08.13.12, CBO approved on 08.17.12.
Civil-1-6.00x4, Fencing plans submitted to CBO on 03.05.13, CBO approved on 03.07.13.
Civil-1-7.00x3: Temporary Construction plans submitted to CBO on 04.03.13, CBO approved on 05.16.13, please see attachment.
Civil-1-7.01: Temporary Engineering Trailers Grading and Drainage plans submitted to CBO on 04.03.13, CBO approved on 05.16.13, please see attachment.
Civil1-10.00, Bioremediation and Evaporation plans submitted to CBO on 06.20.12, CBO approved on 08.14.12.
Civil-1-11.00x1, TAB building plans submitted to CBO on 05.14.12, CBO approved on 05.17.12.
Civil-1-11.01, TAB building Fire Protection plans (Alt. #2) submitted to CBO on 06.28.12, CBO approved on 07.25.12.
Civil-1-11.02, TAB building Fire Protection plans (Alt. #3) submitted to CBO on 07.17.12, CBO approved on 07.24.12.
Civil-1-13.00x2, Geotechnical Report Addendum No. 4 submitted to CBO on 05.08.12, CBO approved on 05.14.12.
Civil-1-14.00, Soil Cement Batch plant submitted to CBO on 05.01.12, CBO approved for reference on 05.02.12. Permit for 2 cell box culvert across Lockhart Road submitted to SBC on 03.14.12, approved by SBC on 05.07.12.
Civil-1-16.00, Alpha and Beta Storage Area plans submitted to CBO on 07.05.12, CBO approved on 07.24.12.
Civil-1-17.00, Bioremediation Facility construction plans submitted to CBO on 12.04.12, CBO approved on 12.13.12.
Civil-1-17.00x1, Bioremediation Facility construction plans resubmitted to CBO on 03.25.13, CBO approved on 03.26.13.
Civil-1-18.00, Alpha Site Fire Protection construction plans submitted to CBO on 12.06.12, CBO approved on 01.16.13.
Civil-1-18.01, Beta Site Fire Protection construction plans submitted to CBO on 02.26.13, CBO approved on 03.26.13.
Civil-1-19.00, End Loop Foundation construction plans submitted to CBO on 01.21.13, CBO approved on 01.29.13.
Civil-1-19.00x1, End Loop Foundation construction plans resubmitted to CBO on 02.20.13, CBO approved on 02.26.13.
Civil-1-19.01: Vertical Loops Foundation plans submitted to CBO on 05.09.13, CBO approved on 05.14.13, please see attachment.
Civil-1-19.03: Vertical Loops Foundation plans (Beta forgotten sheets) submitted to CBO on 05.22.13, CBO approved with embedded comments on 05.30.13, please see attachment.
Civil-1-20.00: HTF Underground Crossing Tunnel plans submitted to CBO on 02.04/13, CBO approved on 03.26.13.
Civil-1-21.00: HTF Pipe Support Steel Truss Main Beta Channel Crossing Foundation plans submitted to CBO on 02.25.13, CBO approved on 03.21.13.
Civil-1-21.00x1: HTF Pipe Support Steel Truss Main Beta Channel Crossing Foundation plans submitted to CBO on 04.15.13, CBO approved with embedded comments on 05.02.13, please see attachment.

ABENER TEYMA MOJAVE

13911 Park Avenue, Suite 208
Victorville, CA 92392
Phone: 480-287-1419

Civil-1-21.01: HTF Pipe Support Steel Truss Main Beta Channel Crossing Connections submitted to CBO on 03.13.13, CBO approved on 05.31.13, please see attachment.

Civil-1-22.00: Alpha Effluent Water Line plans submitted to CBO on 03.28.13, CBO approved on 03.28.13.
Civil-1-22.01, Beta Effluent Water Line plans submitted to CBO on 03.26.13, CBO approved on 03.29.13.
Civil-1-23.00: Alpha and Beta Power Block Drainage System submitted to CBO on 03.28.13, CBO approved on 03.28.13.
Civil-1-23.02, Beta Power Block Drainage Purge and Oil System plans submitted to CBO on 03.26.13, CBO approved on 03.28.13.
Civil-1-24.00, Alpha and Beta Duct Bank plans submitted to CBO on 03.23.13, CBO approved on 03.28.13.
Civil-1-25.00: Alpha Raw Water Utility plans submitted to CBO on 03.26.13, CBO approved on 04.01.13.
Civil-1-25.00x1: Alpha Raw Water Utility plans submitted to CBO on 04.05.13, CBO approved on 04.10.13.
Civil-1-25.01: Alpha and Beta Potable Water Utility plans submitted to CBO on 04.05.13, C BO approved on 05.31.13, please see attachment.

CIVIL-3

A list of NCRs, for the reporting month, shall be included in MCR.
None to date.

CIVIL-4

Submit a copy of the CBO's approval to the CPM in the next monthly compliance report.
N/A.

STRUC-1

Submit to the CPM, in the next monthly compliance report, a copy of a statement from the CBO that the proposed structural plans, specifications, and calculations have been approved and comply with the requirements set forth in applicable engineering LORS.

Struc-1-2.00: Beta Field HTF Pipe support foundations submitted to CBO on 08.20.12, CBO approved on 08.28.12.
Struc-1-2.00x1: Beta Field HTF Pipe Support foundations resubmitted to CBO on 10.09.12, CBO approved on 10.16.12.
Struc-1-2.00x2: Beta Field HTF Pipe Support foundations resubmitted to CBO on 01.22.13, CBO approved on 01.28.13.
Struc-1-3.00: Alpha Field HTF Pipe support foundations submitted to CBO on 08.21.12, CBO approved on 08.30.12.
Struc-1-3.00x1: Alpha Field HTF Pipe Support foundations resubmitted to CBO on 10.09.12, CBO approved on 10.15.12.
Struc-1-3.00x2: Alpha Field HTF Pipe Support foundations resubmitted to CBO on 01.22.13, CBO approved on 01.28.13.
Struc-1-4.00: Stainless steel bar on HTF foundations submitted to CBO on 09.10.12, CBO approved on 09.12.12.

ABENER TEYMA MOJAVE

13911 Park Avenue, Suite 208
Victorville, CA 92392
Phone: 480-287-1419

Struc-1-4.00x1: Stainless steel bar on HTF foundations resubmitted to CBO on 11.01.12, CBO approved on 11.06.12.
Struc-1-4.01: CP Beta HTF Sleepers and PSV Foundation plans submitted to CBO on 03.27.13, CBO approved on 04.10.13.
Struc-1-4.02: CP Beta HTF Sleepers Foundation plans submitted to CBO on 03.28.13, CBO approved on 04.30.13.
Struc-1-4.03: CP Beta HTF Pipe Supports Foundation plans submitted to CBO on 03.23.13, CBO approved on 05.01.13, please see attachment.
Struc-1-4.04: CP Beta HTF PSV Foundation plans submitted to CBO on 03.26.13, CBO approved on 04.11.13.
Struc-1-5.00: Alpha and Beta Substation foundations submitted to CBO on 09.25.12, CBO approved on 09.26.12.
Struc-1-6.00: Alpha and Beta Rack 3 plans submitted to CBO on 10.09.12, CBO approved on 11.15.12.
Struc-1-6.01: Alpha and Beta Rack 3 foundation plans submitted to CBO on 10.26.12, CBO approved on 11.16.12.
Struc-1-7.00: Alpha and Beta Rack 1 plans submitted to CBO on 12.20.12, CBO approved on 02.22.13.
Struc-1-7.01: Alpha Rack 1 foundation plans submitted to CBO on 02.05.13, CBO approved on 02.28.13.
Struc-1-7.01x1: Alpha Rack 1 foundation plans submitted to CBO on 03.17.13, CBO approved on 03.19.13.
Struc-1-7.02: Beta Rack 1 Foundation plans submitted to CBO on 02.15.13, CBO approved on 03.20.13.
Struc-1-7.03: Beta Rack 1 Foundation Modification sent to CBO on 05.13.13, CBO approved on 05.20.13, please see attachment.
Struc-1-8.00: Alpha and Beta Substation plans submitted to CBO on 01.04.13, CBO conditionally approved on 05.14.13, please see attachment.
Struc-1-1.00X7: Collector Assembly Building Foundation, Plumbing and Electrical plans, CBO approved on 02-23-12.
Struc-1-1.00X8: Solar Collector Assembly Building (Architectural and Metal Building) plans, CBO approved on 02-24-12.
Struc-1-1.00x11: TAB building plans submitted to CBO on 07.06.12, CBO approved on 07.17.12.
Struc-1-1.00x12: TAB building plans submitted to CBO on 07.10.12, CBO approved on 07.12.12.
Struc-1-1.01, Beta East Southeast Solar Array Foundation plans submitted to CBO on 04.13.12, CBO approved on 04.19.12.
Struc-1-1.02, Beta East Northeast Solar Array Foundation plans submitted to CBO on 04.16.12, CBO approved on 04.19.12.
Struc-1-1.03, Beta West Solar Array Foundation plans submitted to CBO on 04.16.12, CBO approved on 04.20.12.
Struc-1-1.04, North Alpha West Solar Array Foundation plans submitted to CBO on 04.17.12, CBO approved on 04.23.12.
Struc-1-1.05, South Alpha East Solar Array Foundation plans submitted to CBO on 04.17.12, CBO approved on 04.24.12.
Struc-1-1.07: AMMC Pylon Structure plans submitted to CBO on 07.06.12, CBO approved on 07.24.12.
Struc-1-1.08: Solar Collector foundations submitted to CBO on 08.03.12, CBO approved on 08.24.12.

ABENER TEYMA MOJAVE

13911 Park Avenue, Suite 208
Victorville, CA 92392
Phone: 480-287-1419

Struc-1-1.09: Solar Collector foundations submitted to CBO on 08.07.12, CBO approved on 08.13.12.
Struc-1-8.01: Alpha and Beta Substation Firewall Opening plans submitted to CBO on 04.09.13, CBO approved on 05.22.13, please see attachment.
Struc-1-9.00x1: Generator Circuit Breaker submitted to CBO on 04.01.13, CBO approved on 04.04.13.
Struc-1-10.00: Alpha and Beta Rack 2 plans submitted to CBO on 01.30.13, CBO approved on 03.22.13.
Struc-1-10.01x1: Alpha and Beta Rack 2 Foundation plans submitted to CBO on 04.03.13, CBO approved on 04.19.13.
Struc-1-10.01: Alpha and Beta Rack 2 Foundation plans submitted to CBO on 02.20.13, CBO approved on 03.20.13.
Struc-1-10.02: Alpha and Beta Rack 2 Foundation Modification submitted to CBO on 05.13.13, CBO approved on 05.20.13, please see attachment.
Struc-1-1.11: End Loop Foundation plans submitted to CBO on 01.09.2013, CBO approved on 01.14.13.
Struc-1-12.01: Alpha Miscellaneous Foundations Rack 1 plans submitted to CBO on 03.24.13, CBO approved on 04.09.13.
Struc-1-12.01x1: Alpha Miscellaneous Foundations Rack 1 plans submitted to CBO on 04.16.13, CBO approved on 05.13.13, please see attachment.
Struc-1-12.02: Beta Miscellaneous Foundation Rack I plans submitted to CBO on 03.24.13, CBO approved on 04.09.13.
Struc-1-12.02x1: Beta Miscellaneous Foundation Rack I plans submitted to CBO on 04.16.13, CBO approved on 04.23.13.
Struc-1-12.03: Alpha and Beta Miscellaneous Foundation plans submitted to CBO on 03.24.13, CBO approved on 04.12.13.
Struc-1-13.00: Alpha and Beta Electrical Building #33 Foundation plans submitted to CBO on 03.23.13, CBO approved on 04.25.13.
Struc-1-13.01: Alpha and Beta Electrical Building #34 Foundation plans submitted to CBO on 03.29.13, CBO approved on 04.26.13.
Struc-1-13.02: Alpha and Beta Electrical Building #35 Foundation plans submitted to CBO on 03.29.13, CBO approved on 04.25.13.
Struc-1-13.03: Alpha and Beta Electrical Building #32 Foundation plans submitted to CBO on 04.03.13, CBO approved on 05.08.13, please see attachment.
Struc-1-14.00: Alpha and Beta Basin for HTF Recirculation Main Pump & Electrical Heater submitted to CBO on 03.27.13, CBO approved on 05.01.13, please see attachment.
Struc-1-14.00x1: Alpha and Beta Basin for HTF Recirculation Main Pump & Electrical Heater submitted to CBO on 05.16.13, CBO approved on 05.22.13, please see attachment.
Struc-1-15.00: Alpha and Beta Lube Oil Building Foundation plans submitted to CBO on 03.29.13, CBO approved on 04.15.13.
Struc-1-16.00: Alpha and Beta Compressed Air System Building Foundation plans submitted to CBO on 03.29.13, CBO approved on 04.16.13.
Struc-1-17.00: Alpha and Beta Water Treatment Building Foundation plans submitted to CBO on 03.29.13, CBO approved on 05.14.13, please see attachment.
Struc-1-18.00: Alpha and Beta Overflow-Ullage Steel Platform Structure plans submitted to CBO on 04.03.13, CBO approved on 05.08.13, please see attachment.
Struc-1-18.01: Alpha and Beta Ullage Connections Caruso submitted to CBO on 04.05.13, CBO approved on 04.26.13.

ABENER TEYMA MOJAVE

13911 Park Avenue, Suite 208
Victorville, CA 92392
Phone: 480-287-1419

Struc-1-18.02: Alpha and Beta Crossing Overflow & Ullage Structure plans submitted to CBO on 04.09.13, CBO conditionally approved on 05.09.13, please see attachment.
Struc-1-18.03: Alpha and Beta Overflow-Ullage Platform Foundation plans submitted to CBO on 04.09.13, CBO approved on 05.15.13, please see attachment.
Struc-1-18.04: Alpha and Beta Crossing-Overflow & Ullage Foundation plans submitted to CBO on 04.29.13, CBO approved on 05.03.13, please see attachment.
Struc-1-19.01: Alpha and Beta Electric Trays Support I Foundation South plans submitted to CBO on 04.29.13, CBO approved on 05.31.13, please see attachment.
Struc-1-20.00: Alpha and Beta Electrical Rack 4 (North) Foundation and Structure plans submitted to CBO on 04.24.13, CBO approved on 05.24.13, please see attachment.
Struc-1-21.00: Alpha and Beta Carbon Filter Foundation plans submitted to CBO on 04.29.13, CBO approved on 05.02.13, please see attachment.
Struc-1-22.00: Alpha and Beta Condensate Pumps Foundation plans submitted to CBO on 05.14.13, CBO approved on 05.28.13, please see attachment.
Struc-1-1.00x9, Temporary Assembly building Delta 2 and 3 plans submitted to CBO on 04.02.12, CBO approved on 04.23.12.
Struc-1-57.00: AGE General Notes and Details submitted to CBO on 09.28.12, CBO approved on 03.20.13.
Struc-1-100.00: SPX submittal for approved equivalent materials for the Cooling Towers submitted to CBO on 05.31.12.
Struc-1-101.00: SPX submittal for the Cooling Towers submitted to CBO on 08.27.12, CBO approved on 10.04.12.
Struc-1-101.00x2: SPX resubmittal for the Cooling Towers resubmitted to CBO on 12.03.12, CBO approved on 12.17.12.
Struc-1-102.00: Cooling Tower pump pit foundation plans submitted to CBO on 11.28.12, CBO approved on 12.07.12.
Struc-1-9.00: Generator Circuit Breaker Support Platform plans submitted to CBO on 11.29.12, CBO approved on 01.09.13.
Struc-1-10.00: Solar Collector foundation plans resubmitted to CBO on 10.08.12, CBO approved on 10.08.12.
Struc-1-1.00x13: Solar Collector foundations submitted to CBO on 08.01.12, CBO approved on 08.08.12.
Struc-1-1.00x14: Solar Collector Foundation plans submitted to CBO on 09.25.12, CBO approved on 09.25.12.
Struc-1-1.00x15: Solar Collector Foundation plans submitted to CBO on 10.19.12, CBO conditionally approved on 10.31.12.
Struc-1-1.00x16: Solar Collector foundations resubmitted to CBO on 11.29.12, CBO approved on 11.30.12.

STRUC-3

Notify the CPM, via monthly compliance report, when the CBO has approved the revised plans.
//
//
//
//

ABENER TEYMA MOJAVE

13911 Park Avenue, Suite 208
Victorville, CA 92392
Phone: 480-287-1419

STRUC-4

Send copies of the CBO approvals of plan checks to the CPM in the following monthly compliance report. Also transmit a copy of the CBO's inspection approvals to the CPM in the monthly compliance report following completion of any inspection.
None to date.

MECH-1

Send the CPM a copy of the transmittal letter.
Mech-1-0.00: Mechanical Specifications submitted to CBO on 04.18.13, CBO approved on 05.29.13, please see attachment.
Mech-1-0.01: Mechanical Specifications submitted to CBO on 05.08.13, CBO approved on 05.29.13, please see attachment.
Mech-1-1.00: IFP Steam Generation Area Reheaters foundation plans issued to CBO on 04.06.12, CBO approved on 05.03.12.
Mech-1-1.00x2: IFP(1/3) Steam Generation foundations submitted to CBO on 08.25.12, CBO approved on 08.30.12.
Mech-1-2.00x1: MT-402 Alpha plant foundation plans issued to CBO on 05.11.12, CBO approved on 05.14.12.
Mech-1-2.00x2: MT-402 Mojave Water Tank foundation plans issued to CBO on 06.22.12, CBO approved on 06.27.12.
Mech-1-2.00x3: MT-402 Mojave Water Tank foundations rev 3 submitted to CBO on 08.08.12, CBO approved on 08.24.12.
Mech-1-2.00x4: MT-402 Mojave Water Tank foundations rev 4 submitted to CBO on 09.10.12, CBO approved on 09.13.12.
Mech-1-3.00: MT-402 Raw Water Tank plans issued to CBO on 04.24.12, CBO approved on 05.17.12.
Mech-1-3.00x1: MT-402 Mojave Plant Tank plans submitted to CBO on 07.26.12, CBO approved on 08.06.12.
Mech-1-3.00x2: MT-402 Mojave Plant Tank plans resubmitted to CBO on 09.07.12, CBO approved on 09.13.12.
Mech-1-3.00x3: MT-402 Mojave Plant Tank plans resubmitted to CBO on 10.22.12, CBO approved on 10.25.12.
Mech-1-3.00x4: MT-402 Mojave Plant Tank plans resubmitted to CBO on 11.21.12, CBO approved on 12.11.12.
Mech-1-3.00x5: MT-402 Mojave Plant Tank plans resubmitted to CBO on 12.14.12, CBO approved on 12.28.12.
Mech-1-3.00x6: MT-402 Mojave Plant Tank plans resubmitted to CBO on 02.06.13, CBO approved on 02.07.13.
Mech-1-4.00: MT-204 Mojave HTF Overflow Tank foundation plans issued to CBO on 06.15.12, CBO approved on 06.22.12.
Mech-1-4.00x1: MT-204 Mojave HTF Overflow Tank foundation plans issued to CBO on 07.10.12, CBO approved on 07.17.12.
Mech-1-4.00x2: MT-204 Mojave HTF Overflow Tank foundation plans issued to CBO on 02.12.13, CBO approved on 03.05.13.
Mech-1-4.01: Alpha and Beta HTF Overflow Basin plans submitted to CBO on 03.29.13, CBO approved on 04.25.13.
Mech-1-5.00x1: IFC Cooling Tower foundations submitted to CBO on 07.31.12, CBO approved on 08.02.12.

ABENER TEYMA MOJAVE

13911 Park Avenue, Suite 208
Victorville, CA 92392
Phone: 480-287-1419

Mech-1-5.00x2: IFC Cooling Tower foundations submitted to CBO on 08.14.12, CBO approved on 08.17.12.
Mech-1-6.00: MT-204 Mojave HTF Overflow tank plans submitted to CBO on 07.20.12, CBO approved on 08.03.12.
Mech-1-6.00x1: MT-204 Mojave HTF Overflow tank plans resubmitted to CBO on 10.12.12, CBO approved on 02.04.13.
Mech-1-6.00x2: MT-204 Mojave HTF Overflow tank plans resubmitted to CBO on 03.28.13, CBO approved on 04.12.13.
Mech-1-7.00: MT-444 Process Make-up Water Tank foundation submitted to CBO on 07.30.12, CBO approved on 08.03.12.
Mech-1-7.01: MT-444 Process Make-up Water Tank plans submitted to CBO on 08.28.12, CBO approved on 09.10.12.
MECH-1-7.00x1: MT-444 Process Make-up Water Tank foundation submitted to CBO on 08.08.12, CBO approved on 08.24.12.
Mech-1-7.00x2: MT-444 Process Make-up Water Tank foundation resubmitted to CBO on 01.17.13, CBO approved on 02.04.13.
Mech-1-7.01x1: MT-444 Process Make-up Water Tank foundation resubmitted to CBO on 11.30.12, CBO approved on 12.19.12.
Mech-1-8.00: MT-424 Cooling Tower Blow Down Tank foundations submitted to CBO on 07.31.12, CBO approved on 08.14.12.
Mech-1-8.01: MT-424 Cooling Tower Blow Down Tank plans submitted to CBO on 09.10.12, CBO approved on 09.13.12.
Mech-1-8.00x2: Cooling Tower Blow Down Tank foundations resubmitted to CBO on 01.17.13, CBO approved on 01.21.13.
Mech-1-9.00: MT-451 Polisher Feed Tank foundations submitted to CBO on 07.31.12, CBO approved on 09.13.12.
Mech-1-9.00x1: MT-451 Polisher Feed Tank foundations resubmitted to CBO on 10.11.12, CBO approved on 10.15.12.
Mech-1-9.00x2: MT-451 Polisher Feed Tank foundations resubmitted to CBO on 05.09.13, CBO approved on 05.09.13, please see attachment.
Mech-1-9.01: MT-451 Polisher Feed Tank plans submitted to CBO on 09.10.12, CBO approved on 10.12.12.
Mech-1-10.00: MT-453 Polished Water Tank foundations submitted to CBO on 07.31.12, CBO approved on 09.11.12.
Mech-1-10.00x1: MT-453 Polished Water Tank foundations submitted to CBO on 10.11.12, CBO approved on 10.16.12.
Mech-1-10.00x2: MT-453 Polished Water Tank foundations submitted to CBO on 05.06.13, CBO approved on 05.24.13, please see attachment.
Mech-1-10.01: MT-453 Polished Water Tank plans submitted to CBO on 10.05.12, CBO approved on 10.29.12.
Mech-1-11.00: IFP(2/3) Steam Generation foundations submitted to CBO on 08.25.12, CBO approved on 10.12.12.
Mech-1-11.00x1: IFP(2/3) Steam Generation foundations resubmitted to CBO on 11.29.12, CBO approved on 12.07.12.
Mech-1-11.00x2: IFP(2/3) Steam Generation foundations resubmitted to CBO on 01.24.13, CBO approved on 02.01.13, please see attachment.
Mech-1-12.00: Steam Turbine Generator foundation plans submitted to CBO on 09.14.12, CBO approved on 12.13.12.
Mech-1-12.00x1: Steam Turbine Generator foundation plans resubmitted to CBO on 03.01.13, CBO approved on 03.11.13.

ABENER TEYMA MOJAVE

13911 Park Avenue, Suite 208
Victorville, CA 92392
Phone: 480-287-1419

Mech-1-13.00: Steam Turbine Generator Aux Equipment Structure Foundation plans submitted to CBO on 12.31.13, CBO approved with embedded comments on 03.29.13.
Mech-1-13.00x1: Steam Turbine Generator Aux Equipment Structure Foundation plans resubmitted to CBO on 04.11.13, CBO approved on 04.18.13.
Mech-1-13.01: STG Aux Equipment Structure Foundation plans submitted to CBO on 03.28.13, CBO approved on 03.28.13.
Mech-1-14.00: Steam Turbine Generator Aux Equipment Structure plans submitted to CBO on 12.22.13, CBO approved on 03.19.13.
Mech-1-14.00x1: Steam Turbine Generator Aux Equipment Structure plans resubmitted to CBO on 04.15.13, CBO approved on 04.19.13.
Mech-1-14.00x2: Steam Turbine Generator Aux Equipment Structure plans resubmitted to CBO on 05.08.13, CBO approved on 05.21.13, please see attachment.
Mech-1-15.00: Steam Turbine Generator Aux Equipment Structure plans submitted to CBO on 01.01.13, CBO approved on 03.20.13.
Mech-1-15.00x1: Steam Turbine Generator Aux Equipment Structure plans submitted to CBO on 04.22.13, CBO approved on 05.17.13, please see attachment.
Mech-1-16.00: MV 205 HTF Expansion Vessel foundations submitted to CBO on 02.12.13, CBO approved on 02.17.13.
Mech-1-16.00x2: MV 205 HTF Expansion Vessel foundations resubmitted to CBO on 03.08.13, CBO approved on 03.13.13.
Mech-1-16.00x3: MV 205 HTF Expansion Vessel foundations resubmitted to CBO on 03.18.13, CBO approved on 03.19.13.
Mech-1-16.01: HTF Expansion Vessel Basin submitted to CBO on 03.08.13, CBO approved on 03.27.13.
Mech-1-16.00x1: MV 205 HTF Expansion Vessel foundations resubmitted to CBO on 02.18.13, CBO approved on 02.18.13.
Mech-1-17.00: Steam Generator Mechanical and Structural Installation plans submitted to CBO on 02.09.13, CBO approved on 05.24.13, please see attachment.
Mech-1-18.00: Alpha and Beta MP 200 and MP 201 Pump Foundation plans submitted to CBO on 02.26.13, CBO approved on 04.30.13.
Mech-1-21.00: MP 453 Polished Water Pumps Foundation plans submitted to CBO on 05.17.13, CBO conditionally approved on 05.23.13, please see attachment.
Mech-1-22.00: MP 405 Cooling Tower Tempering Pumps Foundation plans submitted to CBO on 05.20.13, CBO conditionally approved on 05.24.13, please see attachment.

MECH-1

Transmit to the CPM following completion of any inspection, a copy of the transmittal letter conveying the CBO's inspection approvals.
None to date.

MECH-2

Transmit to the CPM, following completion of any inspection, a copy of the transmittal letter conveying the CBO's and/or Cal-OSHA inspection approvals.
Mech-2-2.00: Diesel Tank storage permit submitted to CBO on 06.07.12, CBO approved on 06.08.12.

ABENER TEYMA MOJAVE

13911 Park Avenue, Suite 208
Victorville, CA 92392
Phone: 480-287-1419

Mech-2-4.00: Diesel Tank storage permit submitted to CBO on 12.07.12, CBO approved for reference only on 12.11.12.

ELEC-1

Send the CPM a copy of the transmittal letter in the next monthly compliance report.
Construction temporary power plans submitted to CBO on 03.19.12, CBO approved on 05.09.12.
Elec-1-1.00x1: Construction Temporary Power plans submitted to CBO on 08.17.12, CBO approved on 08.24.12.
Elec-1-1.00x2: Construction Temporary Power plans resubmitted to CBO on 09.24.12, CBO approved on 10.01.12.
Elec-1-3.00: TAB Temporary Generator issued to CBO on 07.06.12, CBO approved on 07.11.12.
Elec-1-4.00: MT-402 Raw Water Tank Grounding plans submitted to CBO on 08.09.12, CBO approved on 08.10.12.
Elec-1-4.01: HTF Overflow Tank Grounding plans submitted to CBO on 10.18.12, CBO approved on 10.22.12.
Elec-1-4.02: SPX Cooling Tower Grounding plans submitted to CBO on 10.18.12, CBO approved on 10.22.12.
Elec-1-4.03: Polisher Feed Tank Grounding plans submitted to CBO on 10.18.12, CBO approved on 10.22.12.
Elec-1-4.04: Polished Water Tank Grounding plans submitted to CBO on 10.18.12, CBO approved on 10.22.12.
Elec-1-4.05: SPX Cooling Tower Blow Down Grounding plans submitted to CBO on 10.18.12, CBO approved on 10.22.12.
Elec-1-4.06: Process Make Up Water Tank Grounding plans submitted to CBO on 10.18.12, CBO approved on 10.22.12.
Elec-1-4.07: Turbine Generator Condenser Grounding plans submitted to CBO on 11.29.12, CBO approved on 12.06.12.
Elec-1-4.07x1: Turbine Generator Condenser Grounding plans resubmitted to CBO on 01.22.13, CBO approved on 02.18.13.
Elec-1-4.07x2: Turbine Generator Condenser Grounding plans resubmitted to CBO on 05.15.13, CBO approved on 05.23.13, please see attachment.
Elec-1-4.08: Pipe Rack 1 and 3 Grounding plans submitted to CBO on 01.22.13, CBO approved on 01.28.13.
Elec-1-5.00: LV, MV, FO Solar Field Trenching plans submitted to CBO on 08.13.12, CBO approved on 09.19.12.
Elec-1-5.01: Solar Field PTC's Trenching plans submitted to CBO on 10.23.12, CBO conditionally approved on 10.31.12.
Elec-1-5.02: AMMC Application FO Optral DSP submitted to CBO on 11.29.12, CBO approved on 12.06.12.
Elec-1-5.03: AMMC Application Direct Burial FO Cable Nexan SP495 submitted to CBO on 02/01/13, CBO approved on 03/26/13.
Elec-1-6.00: Solar Field Grounding plans submitted to CBO on 08.27.12, CBO approved on 09.18.12.
Elec-1-6.00x1: Solar Field Grounding plans resubmitted to CBO on 12.14.12, CBO approved on 12.21.12.
Elec-1-6.00x2: Solar Field Grounding plans resubmitted to CBO on 01.22.13, CBO approved on 05.21.13, please see attachment.

ABENER TEYMA MOJAVE

13911 Park Avenue, Suite 208
Victorville, CA 92392
Phone: 480-287-1419

Elec-1-6.00x3: Solar Field Grounding plans resubmitted to CBO on 05.15.13, CBO approved on 05.23.13, please see attachment.
Elec-1-6.01: Steam Generation Area Grounding plans submitted to CBO on 10.10.12, CBO conditionally approved on 10.29.12.
Elec-1-6.02: HTF Underground Crossing Tunnel Grounding plans submitted to CBO on 02.06.13, CBO approved on 02.20.13.
Elec-1-6.02x1: HTF Underground Crossing Tunnel Grounding plans submitted to CBO on 05.15.13, CBO approved on 05.23.13, please see attachment.
Elec-1-6.04: Fence Grounding plans submitted to CBO on 03.19.13, CBO approved on 05.10.13, please see attachment.
Elec-1-6.05: Racks 1,2 and 3 Grounding plans submitted to CBO on 03.28.13, CBO approved on 03.29.13.
Elec-1-7.00: Solar Field Routing Detail TT Loop submitted to CBO on 10.10.12, CBO approved on 10.29.12.
Elec-1-8.00: Alpha and Beta Transmission Line plans submitted to CBO 0N 02.20.13, CBO approved on 05.13.13, please see attachment.
Elec-1-9.00: Alpha and Beta Substation plans submitted to CBO on 02.20.13, CBO approved on 05.10.13, please see attachment.
Elec-1-10.00: Alpha and Beta Water Treatment Plant Grounding plans submitted to CBO on 03.29.13, CBO approved on 04.15.13.
Elec-1-11.00: Solar Field One Lines and Switch Boards submitted to CBO on 05.01.13, CBO approved on 05.01.13, please see attachment.
Elec-1-12.00: Alpha and Beta Transmission Line Lightning Protection plans submitted to CBO on 05.03.13, CBO approved on 05.13.13, please see attachment.
Elec-1-12.01: Alpha and Beta Cooling Tower Lightning Protection plans submitted to CBO on 05.20.13, CBO approved on 05.21.13, please see attachment.
Elec-1-13.00: Alpha and Beta Power Blocks Medium Voltage Power Cable Sizing plans submitted to CBO on 05.14.13, CBO approved on 05.21.13, please see attachment.
Elec-1-14.00: Overall One Line Diagram, Bldgs 22 and 26 submitted to CBO on 05.14.13, CBO approved on 05.21.13, please see attachment.
Elec-1-16.00: Solar Field Protective Coordination submitted to CBO on 05.15.13, CBO approved on 05.21.13, please see attachment.
Elec-1-17.00: Alpha Solar Field (One Lines UPS), (Panels UPS, Corner Loads, Feeders) submitted to CBO on 05.16.13, CBO approved on 05.21.13, please see attachment.
Elec-1-17.01: Beta Solar Field (One Lines UPS), (Panels UPS, Corner Loads, Feeders) submitted to CBO on 05.16.13, CBO approved on 05.21.13, please see attachment.

ECN-1

Project owner to submit copies of all RFI's.
ECN-1-1.00: RFI #045 Mojave Steam Generator foundation pad submitted to CBO on 06.23.12, CBO approved on 07.02.12.
ECN-1-2.00: RFI #RJ004 Temporary Use of 2.875 Pipe Pile Tip submitted to CBO on 07.06.12, CBO approved on 07.11.12.
ECN-1-3.00: RFI #001 CT submitted to CBO on 01.24.13, CBO approved on 01.30.13.
ECN-1-4.00: RFI #004 for 432 Slab Construction Joint submitted to CBO on 02.22.13, CBO approved on 03.06.13.

ABENER TEYMA MOJAVE

13911 Park Avenue, Suite 208
Victorville, CA 92392
Phone: 480-287-1419

ECN-1-6.00: RFI SGF Pier Epoxy Dowel submitted to CBO on 02.23.13, CBO approved with embedded comments on 03.04.13.
ECN-1-7.00: Steam Turbine Support Details submitted to CBO on 03.07.13, CBO approved on 03.13.13.
ECN-1-8.00: Alternate Epoxy Set Anchor Bolt End Loop Foundation plans submitted to CBO on 03.07.13, CBO approved on 03.13.13.
ECN-1-9.00: Cooling Tower Pump Pit Excavation plans submitted to CBO on 03.16.13, CBO approved on 03.22.13.
ECN-1-10.00: Steam Turbine Support Details submitted to CBO on 03.27.13, CBO approved on 03.27.13.
ECN-1-12.00: End Loop Foundation- Min. Reinforcement Length submitted to CBO on 03.26.13, CBO approved on 04.02.13.
ECN-1-13.00: End Loop Foundation Typical Epoxy Anchor Bolt submitted to CBO on 03.26.13, CBO approved on 04.02.13.
ECN-1-14.00: Gravel Size for LCR's Collection Zone submitted to CBO on 04.05.13, CBO approved on 04.11.13.
ECN-1-15.00: 4-Inch HDPE DR17 Neutron Probe Piping submitted to CBO on 04.05.13, CBO approved on 04.11.13.
ECN-1-16.00: Sand Gradation Table submitted to CBO on 04.05.13, CBO approved on 04.11.13.
ECN-1-17.00: Anchor Bolt Holes Hitting Reinforcement RFI submitted to CBO on 04.25.13, CBO approved on 05.15.13, please see attachment.
ECN-1-18.00: Structural Field Directives Largo 001 and 002 RFI submitted to CBO on 05.13.13, CBO approved on 05.21.13, please see attachment.
ECN-1-19.00: RFI #002 End Loop Foundations (Min. Reinforcement Length) submitted to CBO on 05.20.13, CBO approved on 05.24.13, please see attachment.

TRANS-4

During construction, the project owner will stagger the start time of employees for the day-time shift (morning start) in four roughly equal groups spaced by at least 30 minutes between groups. Also during construction, the project owner will be restricted from receiving any construction deliveries from the west starting 30
minutes before the day-time shift and continuing until all groups have arrived for the morning shift.
Caltrans plans for the eastbound left-hand turn lane for SR-58 to Harper Lake Road were submitted to Caltrans on 07.12.13, Caltrans approved on 03.25.13.

TRANS-5 [A/T]

The project owner shall not allow hazardous materials deliveries during non-daylight periods (during both construction and operation) to enhance safety at the rail crossing. A record of hazardous materials deliveries shall be provided to the CPM as required in HAZ-3. List will be updated as needed on a monthly basis.
//
//
//

ABENER TEYMA MOJAVE

13911 Park Avenue, Suite 208
Victorville, CA 92392
Phone: 480-287-1419

TSE-1

Provide schedule updates in the MCR.
Please see attached Electrical Master List.

TSE-2

Project owner shall assign an electrical engineer.
The resume for Mohamad (Mike) Alhalabi, P.E. was submitted to CBO on 01.30.12 and approved on 02.06.12 for the position of site Mechanical Engineer. Resume for Luis Leal, PE submitted for site Resident Engineer (RE)/ Structural Engineer. Resume submitted to CBO on 03.22.12. CBO approved on 03.28.12. Resume for Arpan Tailor, PE submitted for Resident Engineer (RE) Delegate. Resume submitted to CBO on 02.12.13, CBO approved on 02.15.13. **The resume for Moe S. Karrit, E.E., P.E. was submitted to CBO on 06.07.12 and approved on 06.08.12 for the position of site Electrical Engineer**.

TSE-4

At least 30 days (or a lesser number of days mutually agreed to by the project owner and the CBO) prior to the start of each increment of construction, the project owner shall submit to the CBO for review and approval the final design plans, specifications and calculations for equipment and systems of the power plant switchyard, outlet line and termination, including a copy of the signed and stamped statement from the responsible electrical engineer attesting to compliance with the applicable LORS, and send the CPM a copy of the transmittal letter in the next Monthly Compliance Report. The following activities shall be reported in the Monthly Compliance Report:

A. Receipt or delay of major electrical equipment;
   Please see attached list of receipt of major electrical equipment.
B. Testing or energization of major electrical equipment;
   Please see attachments for electrical tests to date.
C. The number of electrical drawings approved, submitted for approval, and still to be submitted.
   Please see attached Electrical Master List.

VIS-1

Revised Surface Treatment Package was submitted to CPM on 05.11.12. CPM approved plans on 05.14.12. Package resubmitted to CPM on 04.17.13, CBO approved on 05.03.13, please see attachment.

VIS-3

Temporary Lighting plans. Package was submitted to CPM on 02.27.12. CPM approved plans on 03.01.12.
//
//
//
//

ABENER TEYMA MOJAVE

13911 Park Avenue, Suite 208
Victorville, CA 92392
Phone: 480-287-1419

VIS-4

Visual Screening plans. Package was submitted to CPM on 03.22.12. CPM approved plans on 03.28.12.

Should you have any questions or need any additional information, please do not hesitate to contact me.

Sincerely,

Steven Pochmara
TEYMA USA INC.
13911 Park Avenue, Suite 208
Victorville, CA 92392
Cell: (480) 287-1419

"Rundquist, Dale@Energy"
05/28/2013 09:51 AM

Send To	"Steven.Pochmara@abeinsaepc.abengoa.com" <Steven.Pochmara@abeinsaepc.abengoa.com>
cc	"holmes.bassette@solar.abengoa.com" <holmes.bassette@solar.abengoa.com>, "Frederick.Redell@solar.abengoa.com" <Frederick.Redell@solar.abengoa.com>, "william.grisolia@solar.abengoa.com" <william.grisolia@solar.abengoa.com>,
bcc	
Subject	RE: AQ-16

Send to: "Steven.Pochmara@abeinsaepc.abengoa.com" <Steven.Pochmara@abeinsaepc.abengoa.com>

cc: "holmes.bassette@solar.abengoa.com" <holmes.bassette@solar.abengoa.com>,
"Frederick.Redell@solar.abengoa.com" <Frederick.Redell@solar.abengoa.com>,
"william.grisolia@solar.abengoa.com" <william.grisolia@solar.abengoa.com>,

Subject: RE: AQ-16

History: This memo has been replied

Hi Steven,
The Submittal for AQ-16 (Inspection, Monitoring and Maintenance Plan) has been reviewed and approved by staff.
Thank you,
Dale R.

From: Steven.Pochmara@abeinsaepc.abengoa.com [mailto:Steven.Pochmara@abeinsaepc.abengoa.com]

Sent: Wednesday, April 24, 2013 2:33 PM
To: Rundquist, Dale@Energy
Cc: holmes.bassette@solar.abengoa.com; Frederick.Redell@solar.abengoa.com; william.grisolia@solar.abengoa.com; amanda.steindorf@solar.abengoa.com; ngallo@abeinsaepc.abengoa.com; mercedes.macias@abeinsaepc.abengoa.com; angel.pimentel@abeinsaepc.abengoa.com; diego.rodriguez@abeinsaepc.abengoa.com; enrique.valades@abeinsaepc.abengoa.com; lbruno@abeinsaepc.abengoa.com
Subject: AQ-16

Dale,
Please find attached the Inspection, Monitoring and Maintenance plan (AQ-16) for your review and approval. If you have any questions, feel free to contact me.

Regards,

Steven Pochmara - Permit Manager

ABEINSA EPC
13911 Park Avenue, Suite 208
Victorville, CA 92392
Cell: +14802871419
Steven.Pochmara@teyma.abengoa.com
www.teyma.com
Eco-Tip: Printing e-mails is usually a waste.

**********Internet Email Confidentiality Footer**********

This email and any files transmitted with it are confidential and intended solely for the use of the organization or individual to whom they are addressed. It is expressly forbidden to retransmit or copy email and/or this attached files without our permission. If you are not the addressee indicated in this message (or responsible for delivery of the message to such person), you may not copy or deliver this message to anyone. In such case, you should destroy this message and kindly notify the sender by reply email. Please advise immediately if you or your employer does not consent to Internet email for messages of this kind. Opinions, conclusions and other information in this message that do not relate to the official business of my firm shall be understood as neither given nor endorsed by it.

****** Confidencialidad de Correo electr?nico de Internet ******

Este correo electr?nico y cualquier archivo transmitido con el, es confidencial y destinado exclusivamente para el empleo de la organizaci?n o el individuo a quien esta dirigido. Esta expresamente prohibido su reenvio o copia del correo electr?nico y/o de los archivos anexados sin permiso del remitente. El contenido esta protegido seg?n la regulaci?n sobre la Protecci?n de Datos e Informaci?n Personal. Si usted no es el destinatario indicado en este mensaje (o responsable de la entrega del mensaje a tal persona), no puede copiar, reenviar o entregar este mensaje. En tal caso, usted debe destruir este mensaje y notificar al remitente por el correo electr?nico de respuesta. Puede notificar igualmente si no desea recibir correos electr?nicos de esta clase. Las opiniones, conclusiones y otra informaci?n en este mensaje que no se relaciona con la actividad de la compa??a ni ser?n entendidas como autorizadas por ?sta.

Chris Anderson/05/14/2013 03:34:38 PM---Hi Mr. Pochmara, I did have a chance to review and the District does not object to the engines that

Chris Anderson
05/14/2013 03:34 PM

Send To	"Steven.Pochmara@abeinsaepc.abengoa.com" <Steven.Pochmara@abeinsaepc.abengoa.com>
cc	"vernon.leeming@abeinsaepc.abengoa.com" <vernon.leeming@abeinsaepc.abengoa.com>
bcc	
Subject	RE: Mojave Engine Specs

History: This memo has been replied and forwarded

Hi Mr. Pochmara,

I did have a chance to review and the District does not object to the engines that you proposed.

Regards

Chris Anderson
Air Quality Engineer

From: Steven.Pochmara@abeinsaepc.abengoa.com [mailto:Steven.Pochmara@abeinsaepc.abengoa.com]

Sent: Tuesday, May 14, 2013 12:48 PM
To: Chris Anderson
Cc: vernon.leeming@abeinsaepc.abengoa.com
Subject: Mojave Engine Specs

Good Afternoon Chris,
I apologize for not getting back to you last week in regards to the conference call. Our client felt it was not necessary at this time. Please let me know if you have had a chance to review the proposed engine specs I sent a couple of weeks ago.

Regards,

Steven Pochmara - Permit Manager

ABEINSA EPC
13911 Park Avenue, Suite 208
Victorville, CA 92392
Cell: +14802871419
Steven.Pochmara@teyma.abengoa.com
www.teyma.com
Eco-Tip: Printing e-mails is usually a waste.

**********Internet Email Confidentiality Footer**********

This email and any files transmitted with it are confidential and intended solely for the use of the organization or individual to whom they are addressed. It is expressly

Chris Anderson/05/14/2013 03:34:38 PM---Hi Mr. Pochmara, I did have a chance to review and the District does not object to the engines that

Chris Anderson
05/14/2013 03:34 PM

Send To	"Steven.Pochmara@abeinsaepc.abengoa.com" <Steven.Pochmara@abeinsaepc.abengoa.com>
cc	"vernon.leeming@abeinsaepc.abengoa.com" <vernon.leeming@abeinsaepc.abengoa.com>
bcc	
Subject	RE: Mojave Engine Specs

History: This memo has been replied and forwarded

Hi Mr. Pochmara,

I did have a chance to review and the District does not object to the engines that you proposed.

Regards

Chris Anderson
Air Quality Engineer

From: Steven.Pochmara@abeinsaepc.abengoa.com [mailto:Steven.Pochmara@abeinsaepc.abengoa.com]

Sent: Tuesday, May 14, 2013 12:48 PM
To: Chris Anderson
Cc: vernon.leeming@abeinsaepc.abengoa.com
Subject: Mojave Engine Specs

Good Afternoon Chris,
I apologize for not getting back to you last week in regards to the conference call. Our client felt it was not necessary at this time. Please let me know if you have had a chance to review the proposed engine specs I sent a couple of weeks ago.

Regards,

Steven Pochmara - Permit Manager

ABEINSA EPC
13911 Park Avenue, Suite 208
Victorville, CA 92392
Cell: +14802871419
Steven.Pochmara@teyma.abengoa.com
www.teyma.com
Eco-Tip: Printing e-mails is usually a waste.

**********Internet Email Confidentiality Footer**********

This email and any files transmitted with it are confidential and intended solely for the use of the organization or individual to whom they are addressed. It is expressly

HAZARDOUS MATERIAL SURVEY

In order to maintain compliance with Federal, State and Local hazardous material storage regulations, as well as to provide required information for emergency response, it is necessary to identify and quantify all hazardous materials currently at the Mojave site. This survey applies to all companies/contractors/subcontractors working at the Mojave Solar Project. Please review all hazardous materials greater than 1 gallon in quantity (including: fuels, chemicals, cleaning fluids, compressed gases, lubricants, etc.) associated with your operations and provide the name, quantity and the location where these materials are stored on site. ** Please return no later than 04/26/2013*

Name of Chemical/ Hazardous Material	Storage Type (Drum, Tank, Bin/Tote, etc)	Total Quantity (gal, lbs, etc)	Location where Hazardous Materials are Stored
*Example: Fuel (diesel)	2000 gal tank	1600 gal	Alpha East - North West Section
Fuel (red diesel)	2000 gal Tank	2000 gal	Murray Yard (Beta South)
Fuel (gas)	500 gal Tank	500 gal	Murray Yard (Beta South)
Fuel (clear & red diesel)	Fuel Truck 1000 gal Tank	1000 gal	Murray Yard (Beta South)(Mobile Unit)
Motor Oil	Fuel Truck 4qty 90 gal Tanks	360 gal	Murray Yard (Beta South)(Mobile Unit)
Oxygen (compressed)	Compressed Type T Tank	4 Tanks(1348 ci. ea.)	Murray Yard (Beta South)
Acetylene	Compressed Type T Tank	4 Tanks(520 ci. ea.)	Murray Yard (Beta South)
Argon	Compressed Type T Tank	8 Tanks(2688 ci. ea.)	Murray Yard (Beta South)
Argon	Comp. Type T Tank (6 pack)	8 units(16128 ci. ea.)	Murray Yard (Beta South)
Argon, Rfg. Liquid	Dewer	8 units(33808 ci. ea.)	Murray Yard (Beta South)

Company/Contractor Name: Murray Brutoco

Contact Person or Representative: Rob Fryan

Contact Phone or email: Rob.Fryan@Brutoco.net

Date of Survey: 04 / 09 / 13

Thank you for your cooperation!

Please return this form to your Activity Manager, or email to: kirk.anderson@abeinsaepc.abengoa.com (Duplicate as necessary.)

For questions please contact Kirk Anderson, Environmental Engineer at (661) 754-6180

HAZARDOUS MATERIAL SURVEY

In order to maintain compliance with Federal, State and Local hazardous material storage regulations, as well as to provide required information for emergency response, it is necessary to identify and quantify all hazardous materials currently at the Mojave site. This survey applies to all companies/contractors/subcontractors working at the Mojave Solar Project. Please review all hazardous materials greater than 1 gallon in quantity (including: fuels, chemicals, cleaning fluids, compressed gases, lubricants, etc.) associated with your operations and provide the name, quantity and the location where these materials are stored on site. **** Please return no later than 04/26/2013***

Name of Chemical/ Hazardous Material	Storage Type (Drum, Tank, Bin/Tote, etc)	Total Quantity (gal, lbs, etc)	Location where Hazardous Materials are Stored
*Example: Fuel (diesel)	2000 gal tank	1600 gal	Alpha East - North West Section
RED DYE DIESEL	1400 GAL TANK	1400	STRAIGHT LINE LUBE TRAILER
CLEAR DIESEL	250 GAL TANK	250	↓
UNLEADED FUEL	250 GAL TANK	250	↓
AF COOLANT	150 GAL TANK	150	↓
GEAR OIL	150 GAL TANK	150	↓
MOTOR OIL	250 GAL TANK	250	↓
HYDRAULIC OIL	250 GAL TANK	250	↓
WASTE OIL	500 GAL TANK	<500	↓
HYDRAULIC OIL	3 x 50 GAL DRUM	~~100~~ 150	↓
RED DYE DIESEL	250 GAL TANK	250	FUEL TRUCK
UNLEADED FUEL	75 & 25 GAL TANK	100	↓

Company/Contractor Name: STRAIGHT LINE CONST. **Contact Person or Representative:** WILL PRINDLE

Contact Phone or email: will@straightlinepier.com **Date of Survey:** 4 / 19 / 13

Thank you for your cooperation!

Please return this form to your Activity Manager, or email to: kirk.anderson@abeinsaepc.abengoa.com (Duplicate as necessary.)

For questions please contact Kirk Anderson, Environmental Engineer at (661) 754-6180

HAZARDOUS MATERIAL SURVEY

In order to maintain compliance with Federal, State and Local hazardous material storage regulations, as well as to provide required information for emergency response, it is necessary to identify and quantify all hazardous materials currently at the Mojave site. This survey applies to all companies/contractors/subcontractors working at the Mojave Solar Project. Please review all hazardous materials greater than 1 gallon in quantity (including: fuels, chemicals, cleaning fluids, compressed gases, lubricants, etc.) associated with your operations and provide the name, quantity and the location where these materials are stored on site. **** Please return no later than 04/26/2013***

Name of Chemical/ Hazardous Material	Storage Type (Drum, Tank, Bin/Tote, etc)	Total Quantity (gal, lbs, etc)	Location where Hazardous Materials are Stored
*Example: Fuel (diesel)	2000 gal tank	1600 gal	Alpha East - North West Section
Fuel (diesel)	500 Gal tank	450 gal	Alpha East next to Ponds

Company/Contractor Name:_Sukut Construction_____Contact Person or Representative:___Nathan Ritter_____

Contact Phone or email:_nritter@sukut.com_____ Date of Survey: __4___/__8____/__13___

Thank you for your cooperation!

Please return this form to your Activity Manager, or email to: kirk.anderson@abeinsaepc.abengoa.com (Duplicate as necessary.)

For questions please contact Kirk Anderson, Environmental Engineer at (661) 754-6180

HAZARDOUS MATERIAL SURVEY

In order to maintain compliance with Federal, State and Local hazardous material storage regulations, as well as to provide required information for emergency response, it is necessary to identify and quantify all hazardous materials currently at the Mojave site. This survey applies to all companies/contractors/subcontractors working at the Mojave Solar Project. Please review all hazardous materials greater than 1 gallon in quantity (including: fuels, chemicals, cleaning fluids, compressed gases, lubricants, etc.) associated with your operations and provide the name, quantity and the location where these materials are stored on site. **** Please return no later than 04/26/2013***

Name of Chemical/ Hazardous Material	Storage Type (Drum, Tank, Bin/Tote, etc)	Total Quantity (gal, lbs, etc)	Location where Hazardous Materials are Stored
Red Diesel	55 Gallon Drum	220 Gallon	Beta East Largo Laydown
Red Diesel	500 Gallon Tank	500 Gallon	Beta East Largo Laydown
Unleaded Gasoline	150 Gallon Tank	150 Gallon	Beta East Largo Laydown
Atlas Release	55 Gallon Drum	55 Gallon	Beta East Largo Laydown
Seatight Concrete Cure	55 Gallon Drum	110 Gallon	Beta East Largo Laydown
Red Diesel	5 Gallon Can	20 Gallon	Beta East Largo Laydown
WD-40	1 Gallon Can	1 Gallon	Beta East Largo Concrete Trailer
Commercial Grade Concrete Adhesive	1 Gallon Can	1 Gallon	Beta East Largo Concrete Trailer

Company/Contractor Name: Largo Concrete

Contact Person or Representative: Gildardo Monarrez

Contact Phone or email: 714-348-7280

Date of Survey: 4/8/2013

Thank you for your cooperation!

Please return this form to your Activity Manager, or email to: kirk.anderson@abeinsaepc.abengoa.com (Duplicate as necessary.)

For questions please contact Kirk Anderson, Environmental Engineer at (661) 754-6180

PLANS

Segmentation Selection

Project	Abengoa Mojave Solar Project
Submittal Title	ELEC-1-11.00-Solar Field One Lines and Switch Boards-PCF

Edit Add Copy

General Information

Submittal Title	ELEC-1-11.00-Solar Field One Lines and Switch Boards-PCF
Submittal Description	CBO Approved
Transmittal Number	
Client Submittal Date	05/01/2013
Due Date	
Due Date Comments	
Client Date	
Expedite	Yes
Expedite Instructions	
Letter of Transmittal	2013.04.23-ELEC-1-11.00-Solar Field One Lines and Switch Boards-PC1-TMT.pdf

Plan Checks - Pending

pcp Date	pcp Documents	pcp Comments

Plan Checks - Reviewed

pcr Date	pcr Documents	pcr Comments

CBO Approved

cboa Documents	cboa Date	cboa Comments
EE-10.00C-6007-CAL-AGE-00-40-0011-R03.pdf	05/01/2013	Approved in PC1

PLANS

Segmentation Selection

Project Abengoa Mojave Solar Project

Submittal Title STRUC-1-14.00-Alpha and Beta Basin for HTF Recirculation Main Pump & Electrical Heater-PCF

Edit Add Copy

General Information

Submittal Title	STRUC-1-14.00-Alpha and Beta Basin for HTF Recirculation Main Pump & Electrical Heater-PCF
Submittal Description	CBO Approved
Transmittal Number	
Client Submittal Date	03/27/2013
Due Date	
Due Date Comments	
Client Date	
Expedite	Yes
Expedite Instructions	
Letter of Transmittal	2013.03.27 STRUC-1-14.00-Alpha and Beta Basin for HTF Recirculation Main Pump & Electrical Heater-PC1-TMT.pdf 2013.04.09_STRUC-1-14.00-Alpha_and_Beta_Basin_for_HTF_Recirculation_Main_Pump_&_Electrical_Heater-PC2-TMT.pdf 2013.04.29-STRUC-1-14.00-Alpha_and_Beta_Basin_for_HTF_Recirculation_Main_Pump_&_Electrical_Heater-PC3-TMT.pdf

Plan Checks - Pending

pcp Date	pcp Documents	pcp Comments

Plan Checks - Reviewed

pcr Date	pcr Documents	pcr Comments

CBO Approved

cboa Documents	cboa Date	cboa Comments
	05/01/2013	CBO Approved PC3

PLANS

Segmentation Selection

Project Abengoa Mojave Solar Project

Submittal Title STRUC-1-4.03-CP Beta HTF pipe supports foundations-PCF

Edit Add Copy

General Information

Submittal Title	STRUC-1-4.03-CP Beta HTF pipe supports foundations-PCF
Submittal Description	CBO Approved
Transmittal Number	
Client Submittal Date	03/23/2013
Due Date	
Due Date Comments	
Client Date	
Expedite	Yes
Expedite Instructions	
Letter of Transmittal	2013.03.22-STRUC-1-4.03 CP Beta HTF pipe supports foundations-PC1-TMT.pdf 2013.04.09-STRUC-1-4.03_CP_Beta_HTF_pipe_supports_foundations-PC2-TMT.pdf 2013.04.17-STRUC-1-4.03_CP_Beta_HTF_pipe_supports_foundations-PC3-TMT.pdf 2013.04.24-STRUC-1-4.03_CP_Beta_HTF_pipe_supports_foundations-PC4-TMT.pdf

Plan Checks - Pending

pcp Date	pcp Documents	pcp Comments

Plan Checks - Reviewed

pcr Date	pcr Documents	pcr Comments

CBO Approved

cboa Documents	cboa Date	cboa Comments
	05/01/2013	CBO Approved PC4

PLANS

Segmentation Selection

Project	Abengoa Mojave Solar Project
Submittal Title	STRUC-1-21.00-A and B Carbon Filter foundation-PCF

Edit Add Copy

General Information

Submittal Title	STRUC-1-21.00-A and B Carbon Filter foundation-PCF
Submittal Description	CBO Approved
Transmittal Number	
Client Submittal Date	04/29/2013
Due Date	
Due Date Comments	5/2/13 - pending revised transmittal to match new calcs submitted. BT Received
Client Date	
Expedite	Yes
Expedite Instructions	
Letter of Transmittal	2013.04.29-STRUC-1-21.00-A_and_B_Carbon_Filter_foundation-PC1-TMT.pdf

Plan Checks - Pending

pcp Date	pcp Documents	pcp Comments

Plan Checks - Reviewed

pcr Date	pcr Documents	pcr Comments

CBO Approved

cboa Documents	cboa Date	cboa Comments
	05/02/2013	CBO Approved PC1

PLANS

Segmentation Selection

Project Abengoa Mojave Solar Project

Submittal Title CIVIL-1-21.00X1-HTF Pipe Support Steel Truss Main Beta Channel Crossing Foundation–PCF

Edit Add Copy

General Information

Submittal Title	CIVIL-1-21.00X1-HTF Pipe Support Steel Truss Main Beta Channel Crossing Foundation–PCF
Submittal Description	CBO Approved / Approved with Embedded Comments
Transmittal Number	
Client Submittal Date	04/15/2013
Due Date	
Due Date Comments	
Client Date	
Expedite	Yes
Expedite Instructions	
Letter of Transmittal	2013.04.15-CIVIL-1-21.00X1-HTF Pipe Support Steel Truss Channel Crossing Foundation–PC1-TMT.pdf 2013.04.26-CIVIL-1-21.00X1-HTF_Pipe_Support_Steel_Truss_Channel_Crossing_Foundation PC2-TMT2.pdf

Plan Checks - Pending

pcp Date	pcp Documents	pcp Comments

Plan Checks - Reviewed

pcr Date	pcr Documents	pcr Comments

CBO Approved

cboa Documents	cboa Date	cboa Comments
	05/02/2013	CBO Approved PC2

PLANS

Segmentation Selection

Project Abengoa Mojave Solar Project

Submittal Title STRUC-1-18.04-Alpha and Beta Crossing-Overflow & Ullage Foundation–PCF

Edit Add Copy

General Information

Submittal Title	STRUC-1-18.04-Alpha and Beta Crossing-Overflow & Ullage Foundation–PCF
Submittal Description	CBO Approved
Transmittal Number	
Client Submittal Date	04/29/2013
Due Date	
Due Date Comments	
Client Date	
Expedite	Yes
Expedite Instructions	
Letter of Transmittal	2013.04.29-STRUC-1-18.04-Alpha and Beta Crossing-Overflow & Ullage Foundation–PC1-TMT.pdf

Plan Checks - Pending

pcp Date	pcp Documents	pcp Comments

Plan Checks - Reviewed

pcr Date	pcr Documents	pcr Comments

CBO Approved

cboa Documents	cboa Date	cboa Comments
	05/03/2013	CBO Approved PC1

PLANS

Segmentation Selection

Project	Abengoa Mojave Solar Project
Submittal Title	CIVIL-1-2.00X10-Grading & Drainage Construction Plans-PCF

Edit Add Copy

General Information

Submittal Title	CIVIL-1-2.00X10-Grading & Drainage Construction Plans-PCF
Submittal Description	CBO Approved
Transmittal Number	
Client Submittal Date	04/26/2013
Due Date	
Due Date Comments	
Client Date	
Expedite	Yes
Expedite Instructions	
Letter of Transmittal	2013.04.26-CIVIL-1-2.00X10-Grading & Drainage Construction Plans-PC1.pdf

Plan Checks - Pending

pcp Date	pcp Documents	pcp Comments

Plan Checks - Reviewed

pcr Date	pcr Documents	pcr Comments

CBO Approved

cboa Documents	cboa Date	cboa Comments
	05/03/2013	CBO Approved PC1

PLANS

Segmentation Selection

Project Abengoa Mojave Solar Project

Submittal Title STRUC-1-18.00-Alpha and Beta Overflow-Ullage Steel Platform Structure--PCF

Edit Add Copy

General Information

Submittal Title	STRUC-1-18.00-Alpha and Beta Overflow-Ullage Steel Platform Structure--PCF
Submittal Description	CBO Approved
Transmittal Number	
Client Submittal Date	04/03/2013
Due Date	
Due Date Comments	4/8/13 - At reviewer request, due date to match STRUC 1-18.01 as they are reviewed simultaneously.
Client Date	
Expedite	Yes
Expedite Instructions	
Letter of Transmittal	2013.04.02 STRUC-1-18.00-Alpha and Beta Overflow-Ullage Steel platform Structure--PC1.pdf 2013.04.02_STRUC-1-18.00-Alpha_and_Beta_Ullage_StructurePC2.pdf 2013.05.02_STRUC-1-18.00-Alpha_and_Beta_Overflow_Ullage_Steel_Platform_Structure-PC3-TMT.pdf

Plan Checks - Pending

pcp Date	pcp Documents	pcp Comments

Plan Checks - Reviewed

pcr Date	pcr Documents	pcr Comments

CBO Approved

cboa Documents	cboa Date	cboa Comments
[illegible]	05/08/2013	CBO Approved PC3

PLANS

Segmentation Selection

Project Abengoa Mojave Solar Project

Submittal Title STRUC-1-13.03-Alpha and Beta Electrical Bldg #32 Foundation–PCF

Edit Add Copy

General Information

Submittal Title	STRUC-1-13.03-Alpha and Beta Electrical Bldg #32 Foundation–PCF
Submittal Description	CBO Approved
Transmittal Number	
Client Submittal Date	04/03/2013
Due Date	
Due Date Comments	
Client Date	
Expedite	No
Expedite Instructions	
Letter of Transmittal	2013.04.02 STRUC-1-13.03-Alpha and Beta Electrical Bldg #32 Foundation–PC1-TMT.pdf 2013.04.23_STRUC-1-13.03-Alpha_and_Beta_Electrical_Bldg__32_Foundationâ€PC2-TMT.pdf

Plan Checks - Pending

pcp Date	pcp Documents	pcp Comments

Plan Checks - Reviewed

pcr Date	pcr Documents	pcr Comments

CBO Approved

cboa Documents	cboa Date	cboa Comments
	05/08/2013	CBO Approved PC2

PLANS

Segmentation Selection

Project Abengoa Mojave Solar Project

Submittal Title MECH-1-9.00X2-MT-451 Polisher Feed Tank Foundations-PCF

Edit Add Copy

General Information

Submittal Title MECH-1-9.00X2-MT-451 Polisher Feed Tank Foundations-PCF
Submittal Description CBO Approved
Transmittal Number
Client Submittal Date 05/09/2013
Due Date
Due Date Comments
Client Date
Expedite
Expedite Instructions
Letter of Transmittal 2013.05.06-MECH-1-9.00X2-MT-451_Polisher_Feed_Tank_Foundations-PC1-TMT.pdf

Plan Checks - Pending

pcp Date	pcp Documents	pcp Comments

Plan Checks - Reviewed

pcr Date	pcr Documents	pcr Comments

CBO Approved

cboa Documents	cboa Date	cboa Comments
	05/08/2013	CBO Approved PC1

PLANS

Segmentation Selection

Project Abengoa Mojave Solar Project

Submittal Title STRUC-1-18.02-Alpha and Beta Crossing-Overflow & Ullage Structure--PCX

Edit Add Copy

General Information

Submittal Title STRUC-1-18.02-Alpha and Beta Crossing-Overflow & Ullage Structure--PCX
Submittal Description CBO Conditionally Approved
Transmittal Number
Client Submittal Date 04/09/2013
Due Date
Due Date Comments 4/9/13 - ON HOLD - Steel connection drawings for to be submitted under separate submittal. Reviewer needs this other submittal. BT per KL. Received as STRUC 1-18.03. Received. 4
Client Date
Expedite Yes
Expedite Instructions
Letter of Transmittal
2013.04.08 STRUC-1-18.02-Alpha and Beta Overflow-Ullage Steel platform Structure--PC1-TMT.pdf
2013.05.05-STRUC-1-18.02-Alpha_and_Beta_Crossing-Overflow_&_Ullage_Structure-PC2-TMT.pdf

Plan Checks - Pending

pcp Date	pcp Documents	

Plan Checks - Reviewed

pcr Date	pcr Documents	

CBO Approved

cboa Documents	cboa Date	

CBO Conditionally Approved

cboca Documents	cboca Date
	05/09/2013

PLANS

Segmentation Selection

Project Abengoa Mojave Solar Project

Submittal Title ELEC-1-6.04-Fence Grounding Plans-PCF

Edit Add Copy

General Information

Submittal Title ELEC-1-6.04-Fence Grounding Plans-PCF
Submittal Description CBO Approved
Transmittal Number
Client Submittal Date 03/19/2013
Due Date
Due Date Comments
Client Date
Expedite Yes
Expedite Instructions
Letter of Transmittal
2013.03.18 ELEC-1-6.04-Fence Grounding Plans-PC1-TMT.pdf
2013.03.28_ELEC-1-6.04-Fence_Grounding_Plans-PC2-TMT.pdf
2013.04.26-ELEC-1-6.04-Fence_Grounding_Plans-PC3-TMT.pdf

Plan Checks - Pending

pcp Date	pcp Documents	pcp Comments

Plan Checks - Reviewed

pcr Date	pcr Documents	pcr Comments

CBO Approved

cboa Documents	cboa Date	cboa Comments
	05/10/2013	CBO Approved PC3

PLANS

Segmentation Selection

Project Abengoa Mojave Solar Project

Submittal Title ELEC-1-9.00-Substation Package-PCF

Edit Add Copy

General Information

Submittal Title	ELEC-1-9.00-Substation Package-PCF
Submittal Description	CBO Approved
Transmittal Number	
Client Submittal Date	02/20/2013
Due Date	
Due Date Comments	Missing drawings stated on transmittal and electronic signatures. (JB 2/20/13)
Client Date	
Expedite	Yes
Expedite Instructions	
Letter of Transmittal	2013.02.20 ELEC-1-9.00-ELEC-1-9.00-Substation Package-PC1-TMT.pdf 2013.04.17-ELEC-1-9.00-Substation_Package-PC2-TMT.pdf 2013.05.05-ELEC-1-9.00-Substation_Package-PC3-TMT.pdf

Plan Checks - Pending

pcp Date	pcp Documents	pcp Comments

Plan Checks - Reviewed

pcr Date	pcr Documents	pcr Comments

CBO Approved

cboa Documents	cboa Date	cboa Comments
	05/10/2013	CBO Approved PC3

PLANS

Segmentation Selection

Project Abengoa Mojave Solar Project

Submittal Title ELEC-1-12.00-A&B Transmission Line Lightning Protection-PCF

Edit Add Copy

General Information

Submittal Title	ELEC-1-12.00-A&B Transmission Line Lightning Protection-PCF
Submittal Description	CBO Approved
Transmittal Number	
Client Submittal Date	05/03/2013
Due Date	
Due Date Comments	
Client Date	
Expedite	Yes
Expedite Instructions	
Letter of Transmittal	2013.05.03-ELEC-1-12.00-A&B_Transmission_Line_Lightning_Protection-PC1-TMT.pdf

Plan Checks - Pending

pcp Date	pcp Documents	pcp Comments

Plan Checks - Reviewed

pcr Date	pcr Documents	pcr Comments

CBO Approved

cboa Documents	cboa Date	cboa Comments
	05/13/2013	Alpha - CBO Approved PC1

PLANS

Segmentation Selection

Project Abengoa Mojave Solar Project

Submittal Title STRUC-1-12.01X1-Alpha Miscellaneous Foundations Rack 1-PCF

Edit Add Copy

General Information

Submittal Title	STRUC-1-12.01X1-Alpha Miscellaneous Foundations Rack 1-PCF
Submittal Description	CBO Approved
Transmittal Number	
Client Submittal Date	04/16/2013
Due Date	
Due Date Comments	
Client Date	
Expedite	Yes
Expedite Instructions	
Letter of Transmittal	2013.04.16 STRUC-1-12.01X1-Alpha Miscellaneous Foundations Rack 1-PC1-TMT.pdf 2013.05.07-STRUC-1-12.01X1-Alpha_Miscellaneous_Foundations_Rack_1-PC2-TMT.pdf

Plan Checks - Pending

pcp Date	pcp Documents	pcp Comments

Plan Checks - Reviewed

pcr Date	pcr Documents	pcr Comments

CBO Approved

cboa Documents	cboa Date	cboa Comments
	05/13/2013	CBO Approved PC2

PLANS

Segmentation Selection

Project Abengoa Mojave Solar Project

Submittal Title ELEC-1-8.00-Transmission Line Package-PCF

Edit Add Copy

General Information

Submittal Title	ELEC-1-8.00-Transmission Line Package-PCF
Submittal Description	CBO Approved
Transmittal Number	
Client Submittal Date	02/20/2013
Due Date	
Due Date Comments	2/22/13 Pending digital signatures. BT 2/25/13 Due date revised to reflect extra 5 day review time of large package by multiple reviewers per KL. BT
Client Date	
Expedite	Yes
Expedite Instructions	
Letter of Transmittal	2013.02.20 ELEC-1-8.00-Transmission Line Package-PC1-TMT.pdf K05-6007TL-BV_Transmittal-Mar25-2013..pdf 2013.03.18_ELEC-1-8.00-Transmission_Line_Package-PC2-TMT.pdf K05-6007TL-TMT-package_ELEC_1-800TLMay6 - PC5.pdf 2013.04.08_ELEC-1-8.00-Transmission_Line_Package-PC4-TMT.pdf

Plan Checks - Pending

pcp Date	pcp Documents	pcp Comments

Plan Checks - Reviewed

pcr Date	pcr Documents	pcr Comments

CBO Approved

cboa Documents	cboa Date	cboa Comments
	05/13/2013	CBO Approved PC5

PLANS

Segmentation Selection

Project Abengoa Mojave Solar Project

Submittal Title CIVIL-1-19.01-Vertical Loops Foundation Plans–PCF

Edit Add Copy

General Information

Submittal Title CIVIL-1-19.01-Vertical Loops Foundation Plans–PCF
Submittal Description CBO Approved
Transmittal Number
Client Submittal Date 05/15/2013
Due Date
Due Date Comments
Client Date
Expedite
Expedite Instructions
Letter of Transmittal

2013.05.09-CIVIL-1-19.01-Vertical_Loops_Foundation_Plans-PC3-TMT.pdf

2013.04.22_CIVIL-1-19.01-Vertical_Loops_Foundation_Plans_-PC2-TMT.pdf

2013.04.05_CIVIL-1-19.01-Vertical_Loops_Foundation_Plansâ€"PC1-TMT2.pdf

Plan Checks - Pending

pcp Date	pcp Documents	pcp Comments

Plan Checks - Reviewed

pcr Date	pcr Documents	pcr Comments

CBO Approved

cboa Documents	cboa Date	cboa Comments
	05/14/2013	CBO Approved PC3

PLANS

Segmentation Selection

Project Abengoa Mojave Solar Project

Submittal Title STRUC-1-17.00-Alpha and Beta Water Treatment Building Foundation-PCX

Edit Add Copy

General Information

Submittal Title	STRUC-1-17.00-Alpha and Beta Water Treatment Building Foundation-PCX
Submittal Description	CBO Conditionally Approved
Transmittal Number	
Client Submittal Date	03/29/2013
Due Date	
Due Date Comments	
Client Date	
Expedite	Yes
Expedite Instructions	
Letter of Transmittal	2013.03.29 STRUC-1-17.00-Alpha and Beta Water Treatment Building Foundation-PC1-TMT.pdf STRUC-1-17.00-Alpha_and_Beta_Water_Treatment_Building_Foundation-PC2.pdf 2013.04.18-STRUC-1-17.00-Alpha_and_Beta_Water_Treatment_Building_Foundation-PC3-TMT.pdf 2013.04.29-STRUC-1-17.00-Alpha_and_Beta_Water_Treatment_Building_Foundation-PC4-TMT.pdf

Plan Checks - Pending

pcp Date	pcp Documents	pcp Comments

Plan Checks - Reviewed

pcr Date	pcr Documents	pcr Comments

CBO Approved

cboa Documents	cboa Date	cboa Comments

CBO Conditionally Approved

cboca Documents	cboca Date	cboca Comments
	05/14/2013	CBO Conditionally Approved PC4

PLANS

Segmentation Selection

Project Abengoa Mojave Solar Project

Submittal Title STRUC-1-8.00-Alpha and Beta Substation Plans - PCX

Edit Add Copy

General Information

Submittal Title	STRUC-1-8.00-Alpha and Beta Substation Plans - PCX
Submittal Description	CBO Conditionally Approved
Transmittal Number	
Client Submittal Date	01/04/2013
Due Date	
Due Date Comments	
Client Date	
Expedite	Yes
Expedite Instructions	
Letter of Transmittal	2013.01.04 STRUC-1-8.00-Alpha and Beta Substations Plans-PC1 TMT.pdf 2013.02.01_STRUC-1-8.00-Alpha_and_Beta_Substations_Plans-PC2_TMT.pdf 2013.02.22_STRUC-1-8.00-Alpha_and_Beta_Substations_Plans-PC3_TMT.pdf 2013.03.05_STRUC-1-8.00-Alpha_and_Beta_Substation_Plans_-_PC4-TMT.pdf 2013.04.15_STRUC-1-8.00-Alpha_and_Beta_Substation_Plans-PC5-TMT.pdf 2013.05.05-STRUC-1-8.00-Alpha_and_Beta_Substation_Plans-PC6-TMT.pdf

Plan Checks - Pending

pcp Date	pcp Documents	pcp Comments

Plan Checks - Reviewed

pcr Date	pcr Documents	pcr Comments

CBO Approved

cboa Documents	cboa Date	cboa Comments
6007-ESP-ATD-23-54-E001.Rev 0.pdf 6007-INF-ATD-23-50-C002.Rev 0.pdf 6007-CAL-ATD-23-52-C070.Rev D.pdf	03/12/2013	CBO Approved PC4
6007-CAL-ATD-23-33-E048.pdf	05/14/2013	CBO Approved PC6

PLANS

Segmentation Selection

Project Abengoa Mojave Solar Project

Submittal Title ECN-1-17.00-Anchor Bolt Holes hitting Reinforcement-PCF

Edit Add Copy

General Information

Submittal Title	ECN-1-17.00-Anchor Bolt Holes hitting Reinforcement-PCF
Submittal Description	CBO Approved
Transmittal Number	
Client Submittal Date	04/25/2013
Due Date	
Due Date Comments	Note from VL; requested the signature to be corrected, however please continue with the review. 4/25/13 - BT Requested signature info.
Client Date	
Expedite	Yes
Expedite Instructions	
Letter of Transmittal	2013.04.23-ECN-1-17.00- Anchor Bolt Holes hitting Reinforcement-PC1-TMT.pdf 2013.05.08-ECN-1-17.00-_Anchor_Bolt_Holes_hitting_Reinforcement-PC2-TMT.pdf

Plan Checks - Pending

pcp Date	pcp Documents	pcp Comments

Plan Checks - Reviewed

pcr Date	pcr Documents	pcr Comments

CBO Approved

cboa Documents	cboa Date	cboa Comments
	05/15/2013	CBO Approved PC2

PLANS

Segmentation Selection

Project Abengoa Mojave Solar Project

Submittal Title STRUC-1-18.03-Alpha and Beta Overflow-Ullage Platform Foundation-PCF

Edit Add Copy

General Information

Submittal Title STRUC-1-18.03-Alpha and Beta Overflow-Ullage Platform Foundation-PCF
Submittal Description CBO Approved
Transmittal Number
Client Submittal Date 04/09/2013
Due Date
Due Date Comments
Client Date
Expedite Yes
Expedite Instructions
Letter of Transmittal
2013.04.09-STRUC-1-18.03-Alpha and Beta Overflow-Ullage Platform Foundation-PC1-TMT.pdf
2013.04.23-STRUC-1-18.03-Alpha_and_Beta_Overflow-Ullage_Platform_Foundation-PC2-TMT.pdf
2013.05.08-STRUC-1-18.03-Alpha_and_Beta_Overflow-Ullage_Platform_Foundation-PC3-TMT.pdf

Plan Checks - Pending

pcp Date	pcp Documents	pcp Comments

Plan Checks - Reviewed

pcr Date	pcr Documents	pcr Comments

CBO Approved

cboa Documents	cboa Date	cboa Comments
	05/15/2013	CBO Approved PC3

PLANS

Segmentation Selection

Project Abengoa Mojave Solar Project

Submittal Title CIVIL-1-7.01-Temporary Engineering Trailers Grading and Drainage Plans-PCF

Edit Add Copy

General Information

Submittal Title CIVIL-1-7.01-Temporary Engineering Trailers Grading and Drainage Plans-PCF
Submittal Description CBO Approved
Transmittal Number
Client Submittal Date 04/03/2013
Due Date
Due Date Comments
Client Date
Expedite Yes
Expedite Instructions
Letter of Transmittal
2013.04.02 CIVIL-1-7.01-Temporary Engineering Trailers Grading and Drainage Plans-PC1-TMT.pdf
2013.05.09_CIVIL-1-7.01-Temporary_Engineering_Trailers_Grading_and_Drainage_Plans-PC2-TMT2.pdf

Plan Checks - Pending

pcp Date	pcp Documents	pcp Comments

Plan Checks - Reviewed

pcr Date	pcr Documents	pcr Comments

CBO Approved

cboa Documents	cboa Date	cboa Comments
	05/16/2013	CBO Approved PC2

PLANS

Segmentation Selection

Project Abengoa Mojave Solar Project

Submittal Title CIVIL-1-7.00X3-Temporary Construction Plans-PCF

Edit Add Copy

General Information

Submittal Title	CIVIL-1-7.00X3-Temporary Construction Plans-PCF
Submittal Description	CBO Approved
Transmittal Number	
Client Submittal Date	04/03/2013
Due Date	
Due Date Comments	
Client Date	
Expedite	Yes
Expedite Instructions	
Letter of Transmittal	2013.04.02 CIVIL-1-7.00X3-Temporary Construction Plans-PC1-TMT.pdf 2013.05.09_CIVIL-1-7.00X3-Temporary_Construction_Plans-PC2-TMT.pdf BV_Comment_Letter_CIVIL-1-7_00X3-Temporary_Construction_Plans-PC1_-_Comments__GF_RESPONSE.pdf

Plan Checks - Pending

pcp Date	pcp Documents	pcp Comments

Plan Checks - Reviewed

pcr Date	pcr Documents	pcr Comments

CBO Approved

cboa Documents	cboa Date	cboa Comments
[illegible]	05/16/2013	Approved in PC2

PLANS

Segmentation Selection

Project Abengoa Mojave Solar Project

Submittal Title MECH-1-15.00X1-Steam Turbine Generator Aux Equipment Structure Joints-PCF

Edit Add Copy

General Information

Submittal Title	MECH-1-15.00X1-Steam Turbine Generator Aux Equipment Structure Joints-PCF
Submittal Description	CBO Approved
Transmittal Number	
Client Submittal Date	04/22/2013
Due Date	
Due Date Comments	
Client Date	
Expedite	Yes
Expedite Instructions	
Letter of Transmittal	2013.03.15 MECH-1-15.00X1- Steam Turbine Generator Aux Equipment Structure Joints-PC1-TMT2.pdf 2013.05.08-MECH-1-15.00X1-_Steam_Turbine_Generator_Aux_Equipment_Structure_Joints-PC2-TMT.pdf 2013.05.13-MECH-1-15.00X1-_Steam_Turbine_Generator_Aux_Equipment_Structure_Joints-PC2-TMT.pdf

Plan Checks - Pending

pcp Date	pcp Documents	pcp Comments

Plan Checks - Reviewed

pcr Date	pcr Documents	pcr Comments

CBO Approved

cboa Documents	cboa Date	cboa Comments
[illegible]	05/17/2013	CBO Approved PC2

PLANS

Segmentation Selection

Project Abengoa Mojave Solar Project

Submittal Title STRUC-1-7.03-Beta Rack 1 Foundation Modification–PCF

Edit Add Copy

General Information

Submittal Title	STRUC-1-7.03-Beta Rack 1 Foundation Modification–PCF
Submittal Description	CBO Approved
Transmittal Number	
Client Submittal Date	05/13/2013
Due Date	
Due Date Comments	BV Note: Rec'd corrected Transmittal (5/14/13 sca)
Client Date	
Expedite	Yes
Expedite Instructions	
Letter of Transmittal	2013.05.13 STRUC-1-7.03-Beta Rack 1 Foundation ModificationPC1-TMT.pdf

Plan Checks - Pending

pcp Date	pcp Documents	pcp Comments

Plan Checks - Reviewed

pcr Date	pcr Documents	pcr Comments

CBO Approved

cboa Documents	cboa Date	cboa Comments
6007-SKT-AGE-58-52-7403.pdf	05/20/2013	CBO Approved PC1

PLANS

Segmentation Selection

Project: Abengoa Mojave Solar Project

Submittal Title: STRUC-1-10.02-Alpha and Beta Rack 2 Foundation Modification-PCF

Edit Add Copy

General Information

Submittal Title	STRUC-1-10.02-Alpha and Beta Rack 2 Foundation Modification-PCF
Submittal Description	CBO Approved
Transmittal Number	
Client Submittal Date	05/13/2013
Due Date	
Due Date Comments	
Client Date	
Expedite	Yes
Expedite Instructions	
Letter of Transmittal	2013.05.13 STRUC-1-10.02-Alpha and Beta Rack 2 Foundation Modification-PC1-TMT.pdf

Plan Checks - Pending

pcp Date	pcp Documents	pcp Comments

Plan Checks - Reviewed

pcr Date	pcr Documents	pcr Comments

CBO Approved

cboa Documents	cboa Date	cboa Comments
	05/20/2013	CBO Approved PC1

PLANS

Segmentation Selection

Project Abengoa Mojave Solar Project

Submittal Title FAB-1-25.00-Schweitzer Engineering Laboratories SA de CV (SEL Mexico)-PCF

Edit Add Copy

General Information

Submittal Title FAB-1-25.00-Schweitzer Engineering Laboratories SA de CV (SEL Mexico)-PCF
Submittal Description CBO Approved
Transmittal Number
Client Submittal Date 04/18/2013
Due Date
Due Date Comments
Client Date
Expedite Yes
Expedite Instructions
Letter of Transmittal
2013.04.18-FAB-1-25.00-Schweitzer Engineering Laboratories SA de CV (SEL Mexico)-PC1-TMT.pdf
2013.05.01-FAB-1-25.00-Schweitzer_Engineering_Laboratories_SA_de_CV_(SEL_Mexico)-PC2-TMT.pdf
2013.05.15-FAB-1-25.00-Schweitzer_Engineering_Laboratories_SA_de_CV_(SEL_Mexico)-PC3-TMT.pdf

Plan Checks - Pending

pcp Date	pcp Documents	pcp Comments

Plan Checks - Reviewed

pcr Date	pcr Documents	pcr Comments

CBO Approved

cboa Documents	cboa Date	cboa Comments
	05/20/2013	CBO Approved PC3

PLANS

Segmentation Selection

Project Abengoa Mojave Solar Project

Submittal Title ELEC-1-12.01-A&B Cooling Tower Lightning Protection-PCF

Edit Add Copy

General Information

Submittal Title	ELEC-1-12.01-A&B Cooling Tower Lightning Protection-PCF
Submittal Description	CBO Approved
Transmittal Number	
Client Submittal Date	05/20/2013
Due Date	
Due Date Comments	5/17/13 1:20 PM Requested to change to expedited via e-mail by VL. Due date restart, originaly 5/6/13 was client submtital date. BT
Client Date	
Expedite	Yes
Expedite Instructions	
Letter of Transmittal	2013.05.06-ELEC-1-12.01-A&B Cooling Tower Lightning Protection-PC1-TMT.pdf

Plan Checks - Pending

pcp Date	pcp Documents	pcp Comments

Plan Checks - Reviewed

pcr Date	pcr Documents	pcr Comments

CBO Approved

cboa Documents	cboa Date	cboa Comments
	05/21/2013	CBO Approved PC1

PLANS

Segmentation Selection

Project Abengoa Mojave Solar Project

Submittal Title ELEC-1-17.01-Beta Solar Field (Onelines UPS), (Panels UPS,Corner Loads,Feeders)-PCF

Edit Add Copy

General Information

Submittal Title	ELEC-1-17.01-Beta Solar Field (Onelines UPS), (Panels UPS,Corner Loads,Feeders)-PCF
Submittal Description	CBO Approved
Transmittal Number	
Client Submittal Date	05/16/2013
Due Date	
Due Date Comments	
Client Date	
Expedite	Yes
Expedite Instructions	
Letter of Transmittal	EE31.B3 RA Trans Beta SF (Onelines UPS), (Panels).pdf

Plan Checks - Pending

pcp Date	pcp Documents	pcp Comments

Plan Checks - Reviewed

pcr Date	pcr Documents	pcr Comments

CBO Approved

cboa Documents	cboa Date	cboa Comments
	05/21/2013	CBO Approved PC1

PLANS

Segmentation Selection

Project Abengoa Mojave Solar Project

Submittal Title ELEC-1-17.00-Alpha Solar Field (Onelines UPS), (Panels UPS,Corner Loads,Feeders)-PCF

Edit Add Copy

General Information

Submittal Title	ELEC-1-17.00-Alpha Solar Field (Onelines UPS), (Panels UPS,Corner Loads,Feeders)-PCF
Submittal Description	CBO Approved
Transmittal Number	
Client Submittal Date	05/16/2013
Due Date	
Due Date Comments	
Client Date	
Expedite	Yes
Expedite Instructions	
Letter of Transmittal	ELEC-1-17.00 TMT.pdf

Plan Checks - Pending

pcp Date	pcp Documents	pcp Comments

Plan Checks - Reviewed

pcr Date	pcr Documents	pcr Comments

CBO Approved

cboa Documents	cboa Date	cboa Comments
EE31.A3.6007-PLN-AGE-57-21-2201_R6_PE.pdf	05/21/2013	CBO Approved PC1

PLANS

Segmentation Selection

Project Abengoa Mojave Solar Project

Submittal Title ELEC-1-16.00-Solar Field Protective Coordination-PCF

Edit Add Copy

General Information

Submittal Title ELEC-1-16.00-Solar Field Protective Coordination-PCF
Submittal Description CBO Approved
Transmittal Number
Client Submittal Date 05/15/2013
Due Date
Due Date Comments
Client Date
Expedite Yes
Expedite Instructions
Letter of Transmittal 2013.05.15 ELEC-1-16.00-Solar Field Protective Coordination-PC1-TMT.pdf

Plan Checks - Pending

pcp Date	pcp Documents	pcp Comments

Plan Checks - Reviewed

pcr Date	pcr Documents	pcr Comments

CBO Approved

cboa Documents	cboa Date	cboa Comments
EE30.00C 6007-CAL-AGE-57-40-0500_R1_PE.pdf	05/21/2013	CBO Approved PC1

PLANS

Segmentation Selection

Project Abengoa Mojave Solar Project

Submittal Title ELEC-1-13.00-Alpha & Beta Power Blocks Medium Voltage Power Cable Sizing-PCF

Edit Add Copy

General Information

Submittal Title	ELEC-1-13.00-Alpha & Beta Power Blocks Medium Voltage Power Cable Sizing-PCF
Submittal Description	CBO Approved
Transmittal Number	
Client Submittal Date	05/14/2013
Due Date	
Due Date Comments	
Client Date	
Expedite	Yes
Expedite Instructions	
Letter of Transmittal	2013.05.14 ELEC-1-13.00-Alpha & Beta Power Blocks Medium Voltage Power Cable Sizing-PC1-TMT.pdf

Plan Checks - Pending

pcp Date	pcp Documents	pcp Comments

Plan Checks - Reviewed

pcr Date	pcr Documents	pcr Comments

CBO Approved

cboa Documents	cboa Date	cboa Comments
	05/21/2013	CBO Approved PC1

PLANS

Segmentation Selection

Project Abengoa Mojave Solar Project

Submittal Title ELEC-1-14.00-OverAll One-Line Diagram, Bldgs. 22 and 26-PCF

Edit Add Copy

General Information

Submittal Title	ELEC-1-14.00-OverAll One-Line Diagram, Bldgs. 22 and 26-PCF
Submittal Description	CBO Approved
Transmittal Number	
Client Submittal Date	05/14/2013
Due Date	
Due Date Comments	
Client Date	
Expedite	Yes
Expedite Instructions	
Letter of Transmittal	2013.05.14 ELEC-1-14.00-OverAll One-Line Diagram, Bldgs. 22 and 26-PC1-TMT.pdf

Plan Checks - Pending

pcp Date	pcp Documents	pcp Comments

Plan Checks - Reviewed

pcr Date	pcr Documents	pcr Comments

CBO Approved

cboa Documents	cboa Date	cboa Comments
[illegible]	05/21/2013	CBO Approved PC1

PLANS

Segmentation Selection

Project Abengoa Mojave Solar Project

Submittal Title ELEC-1-6.00X2-Solar Field Grounding Plans-PCF

Edit Add Copy

General Information

Submittal Title	ELEC-1-6.00X2-Solar Field Grounding Plans-PCF
Submittal Description	CBO Approved
Transmittal Number	
Client Submittal Date	01/22/2013
Due Date	
Due Date Comments	
Client Date	
Expedite	Yes
Expedite Instructions	
Letter of Transmittal	2013.01.22 ELEC-1-6.00X2-Solar Field Grounding Plans-PC1- TMT.pdf 2013.05.14_ELEC-1-6.00X2-Solar_Field_Grounding_Plans-PC3-TMT.pdf 2013.02.07_ELEC-1-6.00X2-Solar_Field_Grounding_Plans-PC2-__TMT.pdf

Plan Checks - Pending

pcp Date	pcp Documents	pcp Comments

Plan Checks - Reviewed

pcr Date	pcr Documents	pcr Comments

CBO Approved

cboa Documents	cboa Date	cboa Comments
	05/21/2013	CBO Approved PC3

PLANS

Segmentation Selection

Project Abengoa Mojave Solar Project

Submittal Title ECN-1-18.00-Structural Field Directives Largo 001 and 002-PCF

Edit Add Copy

General Information

Submittal Title ECN-1-18.00-Structural Field Directives Largo 001 and 002-PCF
Submittal Description CBO Reference Only
Transmittal Number
Client Submittal Date 05/13/2013
Due Date
Due Date Comments BV Document Control Note – Plan Review in progress, for final review and approval, digital certification or other verifiable signature will need to be applied per CBO instructions. (AT
Client Date
Expedite Yes
Expedite Instructions
Letter of Transmittal 2013.05.13 ECN-1-18.00-Structural Directives Largo 001 and 002-PC1-TMT - Shortcut.pdf

Plan Checks - Pending

pcp Date	pcp Documents	pcp Comments

Plan Checks - Reviewed

pcr Date	pcr Documents	pcr Comments

CBO Approved

cboa Documents	cboa Date	cboa Comments

CBO Conditionally Approved

cboca Documents	cboca Date	cboca Comments

CBO Review-Comments

cborc Documents	cborc Date	cborc Comments

CBO Reference Only

cboro Documents	cboro Date	cboro Comments
	05/21/2013	CBO Reference Only PC1

PLANS

Segmentation Selection

Project Abengoa Mojave Solar Project

Submittal Title STRUC-1-14.00X1-Alpha and Beta Basin for HTF Recirculation Main Pump & Electrical Heater-PCF

Edit Add Copy

General Information

Submittal Title	STRUC-1-14.00X1-Alpha and Beta Basin for HTF Recirculation Main Pump & Electrical Heater-PCF
Submittal Description	CBO Approved
Transmittal Number	
Client Submittal Date	05/16/2013
Due Date	
Due Date Comments	
Client Date	
Expedite	Yes
Expedite Instructions	
Letter of Transmittal	TMT.pdf

Plan Checks - Pending

pcp Date	pcp Documents	pcp Comments

Plan Checks - Reviewed

pcr Date	pcr Documents	pcr Comments

CBO Approved

cboa Documents	cboa Date	cboa Comments
[illegible]	05/22/2013	CBO Approved PC1

PLANS

Segmentation Selection

Project Abengoa Mojave Solar Project

Submittal Title STRUC-1-8.01-Alpha and Beta Substation Firewall Opening Plans-PCF

Edit Add Copy

General Information

Submittal Title STRUC-1-8.01-Alpha and Beta Substation Firewall Opening Plans-PCF
Submittal Description CBO Approved
Transmittal Number
Client Submittal Date 04/09/2013
Due Date
Due Date Comments
Client Date
Expedite Yes
Expedite Instructions
Letter of Transmittal

2013.04.08 STRUC-1-8.01-Alpha and Beta Substation Firewall Opening Plans-PC1-TMT.pdf

2013.04.15_STRUC-1-8.01-Alpha_and_Beta_Substation_Firewall_Opening_Plans-PC2-TMT.pdf

2013.05.13_STRUC-1-8.01-Alpha_and_Beta_Substation_Firewall_Opening_Plans-PC3-TMT.pdf

Plan Checks - Pending

pcp Date	pcp Documents	pcp Comments

Plan Checks - Reviewed

pcr Date	pcr Documents	pcr Comments

CBO Approved

cboa Documents	cboa Date	cboa Comments
	05/22/2013	CBO Approved PC3

PLANS

Segmentation Selection

Project: Abengoa Mojave Solar Project

Submittal Title: ELEC-1-6.00X3-Solar Field Grounding Plans-PCF

Edit Add Copy

General Information

Submittal Title	ELEC-1-6.00X3-Solar Field Grounding Plans-PCF
Submittal Description	CBO Approved
Transmittal Number	
Client Submittal Date	05/15/2013
Due Date	
Due Date Comments	
Client Date	
Expedite	Yes
Expedite Instructions	
Letter of Transmittal	

Plan Checks - Pending

pcp Date	pcp Documents	pcp Comments

Plan Checks - Reviewed

pcr Date	pcr Documents	pcr Comments

CBO Approved

cboa Documents	cboa Date	cboa Comments
EE40.00_6007-PLN-AGE-57-33-1000_R2_PE.pdf	05/23/2013	CBO Approved PC1

PLANS

Segmentation Selection

Project Abengoa Mojave Solar Project

Submittal Title ELEC-1-4.07X2-Turbine Generator Condenser Grounding-PCF

Edit Add Copy

General Information

Submittal Title	ELEC-1-4.07X2-Turbine Generator Condenser Grounding-PCF
Submittal Description	CBO Approved
Transmittal Number	
Client Submittal Date	05/15/2013
Due Date	
Due Date Comments	
Client Date	
Expedite	Yes
Expedite Instructions	
Letter of Transmittal	

Plan Checks - Pending

pcp Date	pcp Documents	pcp Comments

Plan Checks - Reviewed

pcr Date	pcr Documents	pcr Comments

CBO Approved

cboa Documents	cboa Date	cboa Comments
EE23.A0_6007-PLN-AGE-25-33-5301_R3_PE.pdf	05/23/2013	CBO Approved PC1
EE23.B0_6007-PLN-AGE-25-33-9701_R3_PE.pdf		

PLANS

Segmentation Selection

Project Abengoa Mojave Solar Project

Submittal Title ELEC-1-6.02X1-Grounding HTF Underground Crossing Tunnel-PCF

Edit Add Copy

General Information

Submittal Title	ELEC-1-6.02X1-Grounding HTF Underground Crossing Tunnel-PCF
Submittal Description	CBO Approved
Transmittal Number	
Client Submittal Date	05/15/2013
Due Date	
Due Date Comments	
Client Date	
Expedite	Yes
Expedite Instructions	
Letter of Transmittal	E1602X1PC1.pdf

Plan Checks - Pending

pcp Date	pcp Documents	pcp Comments

Plan Checks - Reviewed

pcr Date	pcr Documents	pcr Comments

CBO Approved

cboa Documents	cboa Date	cboa Comments
EE27.A0_6007-PLN-AGE-58-33-3001-1_R1_PE.pdf	05/23/2013	CBO Approved PC1
EE27.A0_6007-PLN-AGE-58-33-3001-2_R1_PE.pdf		
EE27.A0_6007-PLN-AGE-58-33-3002-1_R1_PE.pdf		
EE27.A0_6007-PLN-AGE-58-33-3002-2_R1_PE.pdf		

PLANS

Segmentation Selection

Project Abengoa Mojave Solar Project

Submittal Title MECH-1-21.00-MP-453 Polished Water Pumps Foundation-PCX

Edit Add Copy

General Information

Submittal Title	MECH-1-21.00-MP-453 Polished Water Pumps Foundation-PCX
Submittal Description	CBO Conditionally Approved
Transmittal Number	
Client Submittal Date	05/17/2013
Due Date	
Due Date Comments	5/17/13 - pending transmittal rework. BT Received
Client Date	05/23/2013
Expedite	Yes
Expedite Instructions	
Letter of Transmittal	MECH-1-21.00-MP-453 Polished Water Pumps Foundations-PC1.pdf

Plan Checks - Pending

pcp Date	pcp Documents	pcp Comments

Plan Checks - Reviewed

pcr Date	pcr Documents	pcr Comments

CBO Approved

cboa Documents	cboa Date	cboa Comments

CBO Conditionally Approved

cboca Documents	cboca Date	cboca Comments
	05/23/2013	CBO Conditionally Approved PC1

PLANS

Segmentation Selection

Project Abengoa Mojave Solar Project

Submittal Title ECN-1-19.00-RFI #002 - End Loop Foundations (Min. Reinf. Length) - revised-PCF

Edit Add Copy

General Information

Submittal Title	ECN-1-19.00-RFI #002 - End Loop Foundations (Min. Reinf. Length) - revised-PCF
Submittal Description	CBO Approved
Transmittal Number	
Client Submittal Date	05/20/2013
Due Date	
Due Date Comments	
Client Date	
Expedite	Yes
Expedite Instructions	
Letter of Transmittal	ECN-1-19.00-RFI #002 - End Loop Foundations (Min. Reinf. Length) - revised-PC1.pdf

Plan Checks - Pending

pcp Date	pcp Documents	pcp Comments

Plan Checks - Reviewed

pcr Date	pcr Documents	pcr Comments

CBO Approved

cboa Documents	cboa Date	cboa Comments
RFI #002 - End Loop Foundations (Min. Reinf. Length) - revised.pdf	05/24/2013	CBO Approved PC1

PLANS

Segmentation Selection

Project Abengoa Mojave Solar Project

Submittal Title MECH-1-10.00X2-MT-453 Polished Water Tank Foundations-PCF

Edit Add Copy

General Information

Submittal Title	MECH-1-10.00X2-MT-453 Polished Water Tank Foundations-PCF
Submittal Description	CBO Approved
Transmittal Number	
Client Submittal Date	05/06/2013
Due Date	
Due Date Comments	
Client Date	
Expedite	No
Expedite Instructions	
Letter of Transmittal	2013.05.06-MECH-1-10.00X2-MT-453 Polished Water Tank Foundations-PC1-TMT.pdf

Plan Checks - Pending

pcp Date	pcp Documents	pcp Comments

Plan Checks - Reviewed

pcr Date	pcr Documents	pcr Comments

CBO Approved

cboa Documents	cboa Date	cboa Comments
	05/24/2013	CBO Approved PC1

PLANS

Segmentation Selection

Project Abengoa Mojave Solar Project

Submittal Title STRUC-1-20.00-A and B Electrical rack 4 (north) Foundation and Structure-PCF

Edit Add Copy

General Information

Submittal Title	STRUC-1-20.00-A and B Electrical rack 4 (north) Foundation and Structure-PCF
Submittal Description	CBO Approved
Transmittal Number	
Client Submittal Date	04/24/2013
Due Date	
Due Date Comments	
Client Date	
Expedite	Yes
Expedite Instructions	Requested as Critical Path, ok per KL. BT 4/24
Letter of Transmittal	2013.04.24-STRUC-1-20.00-A and B Electrical rack 4 (north) Foundation-PC1-TMT.pdf 2013.05.05-STRUC-1-20.00-A_and_B_Electrical_rack_4_(north)_Foundation-PC2-TMT.pdf

Plan Checks - Pending

pcp Date	pcp Documents	pcp Comments

Plan Checks - Reviewed

pcr Date	pcr Documents	pcr Comments

CBO Approved

cboa Documents	cboa Date	cboa Comments
	05/24/2013	CBO Approved PC2

PLANS

Segmentation Selection

Project Abengoa Mojave Solar Project

Submittal Title MECH-1-17.00-Steam Generator Mechanical and Structural Installations Plans-PCF

Edit Add Copy

General Information

Submittal Title	MECH-1-17.00-Steam Generator Mechanical and Structural Installations Plans-PCF
Submittal Description	CBO Approved
Transmittal Number	
Client Submittal Date	02/09/2013
Due Date	
Due Date Comments	
Client Date	
Expedite	Yes
Expedite Instructions	
Letter of Transmittal	2013.02.08 MECH-1-17.00-Steam Generator Mechanical and Structural Installations Plans-PC1-TMT.pdf 2013.03.06_MECH-1-17.00-Steam_Generator_Mechanical_and_Structural_Installations_Plans-PC2-TMT.pdf 2013.04.16_MECH-1-17.00-Steam_Generator_Mechanical_and_Structural_Installations_Plans-PC3-TMT.pdf 2013.04.30-MECH-1-17.00-Steam_Generator_Mechanical_and_Structural_Installations_Plans-PC4-TMT.pdf MECH-1-17.00-Steam_Generator_Mechanical_and_Structural_Installations_Plans-PC5.pdf

Plan Checks - Pending

pcp Date	pcp Documents	pcp Comments

Plan Checks - Reviewed

pcr Date	pcr Documents	pcr Comments

CBO Approved

cboa Documents	cboa Date	cboa Comments
	05/24/2013	CBO Approved PC5

PLANS

Segmentation Selection

Project Abengoa Mojave Solar Project

Submittal Title MECH-1-22.00-MP-405 Cooling Tower Tempering Pumps Foundation-PCX

Edit Add Copy

General Information

Submittal Title	MECH-1-22.00-MP-405 Cooling Tower Tempering Pumps Foundation-PCX
Submittal Description	CBO Conditionally Approved
Transmittal Number	
Client Submittal Date	05/20/2013
Due Date	
Due Date Comments	
Client Date	
Expedite	Yes
Expedite Instructions	
Letter of Transmittal	MECH-1-22.00-MP-405 Cooling Tower Tempering Pumps Foundation-PC1.pdf

Plan Checks - Pending

pcp Date	pcp Documents	pcp Comments

Plan Checks - Reviewed

pcr Date	pcr Documents	pcr Comments

CBO Approved

cboa Documents	cboa Date	cboa Comments

CBO Conditionally Approved

cboca Documents	cboca Date	cboca Comments
BV Conditionally Approved Letter MECH-1-22.00-PC1 - Abengoa.pdf	05/24/2013	CBO Conditionally Approved PC1

PLANS

Segmentation Selection

Project Abengoa Mojave Solar Project

Submittal Title STRUC-1-22.00-A and B Condensate Pumps foundation-PCF

Edit Add Copy

General Information

Submittal Title	STRUC-1-22.00-A and B Condensate Pumps foundation-PCF
Submittal Description	CBO Approved
Transmittal Number	
Client Submittal Date	05/14/2013
Due Date	
Due Date Comments	
Client Date	
Expedite	Yes
Expedite Instructions	
Letter of Transmittal	2013.05.13 STRUC-1-22.00-A and B Condensate Pumps foundation-PC1-TMT.pdf 2013.05.21_STRUC-1-22.00-A_and_B_Condensate_Pumps_foundation-PC2-TMT.pdf

Plan Checks - Pending

pcp Date	pcp Documents	pcp Comments

Plan Checks - Reviewed

pcr Date	pcr Documents	pcr Comments

CBO Approved

cboa Documents	cboa Date	cboa Comments
6007 CAL AGE 35 52 4000 R04.pdf	05/28/2013	CBO Approved PC2

PLANS

Segmentation Selection

Project Abengoa Mojave Solar Project

Submittal Title MECH 1-0.01-Mechanical Specifications-PCF

Edit Add Copy

General Information

Submittal Title	MECH 1-0.01-Mechanical Specifications-PCF
Submittal Description	CBO Approved
Transmittal Number	
Client Submittal Date	05/08/2013
Due Date	
Due Date Comments	5/9/13 Locked and signature issues are resovled. BT
Client Date	
Expedite	No
Expedite Instructions	
Letter of Transmittal	2013.05.08-MECH 1-0.01-Mechanical Specifications-PC1-TMT.pdf

Plan Checks - Pending

pcp Date	pcp Documents	pcp Comments

Plan Checks - Reviewed

pcr Date	pcr Documents	pcr Comments

CBO Approved

cboa Documents	cboa Date	cboa Comments
6007-ESP-ATP-68-61-CS97 - Full Vacuum 300 Carbon Steel PE Stamped Rev 1.pdf	05/29/2013	CBO Approved PC1

PLANS

Segmentation Selection

Project Abengoa Mojave Solar Project

Submittal Title MECH 1-0.00-Mechanical Specifications-PCF

Edit Add Copy

General Information

Submittal Title	MECH 1-0.00-Mechanical Specifications-PCF
Submittal Description	CBO Approved
Transmittal Number	
Client Submittal Date	04/18/2013
Due Date	
Due Date Comments	4/19/13 - Name changed from GEN 2-1.02, pending transmittal update. BT Received.
Client Date	
Expedite	No
Expedite Instructions	
Letter of Transmittal	2013.04.18-MECH-1-0.00-Mechanical Specifications-PC1-TMT.pdf

Plan Checks - Pending

pcp Date	pcp Documents	pcp Comments

Plan Checks - Reviewed

pcr Date	pcr Documents	pcr Comments

CBO Approved

cboa Documents	cboa Date	cboa Comments

CBO Conditionally Approved

cboca Documents	cboca Date	cboca Comments

CBO Review-Comments

cborc Documents	cborc Date	cborc Comments

CBO Reference Only

cboro Documents	cboro Date	cboro Comments

Incomplete

incomplete Documents	incomplete Date	incomplete Comments

Saved Responses & Superseded Files

srsf Documents	srsf Date	srsf Comments
	05/29/2013	See MECH 1-0.01 for complete set of approved specs including this one. BT

PLANS

Segmentation Selection

Project Abengoa Mojave Solar Project

Submittal Title CIVIL-1-19.03-Vertical Loops Foundation Plans(Beta)-PCF

Edit Add Copy

General Information

Submittal Title	CIVIL-1-19.03-Vertical Loops Foundation Plans(Beta)-PCF
Submittal Description	CBO Approved and Approved with Embedded Comments
Transmittal Number	
Client Submittal Date	05/22/2013
Due Date	
Due Date Comments	
Client Date	
Expedite	Yes
Expedite Instructions	These items should have been submitted with C1-19.01, to expedite the review we request that you assign it to the engineer that reviewed C1-19.02.
Letter of Transmittal	CIVIL-1-19.03-Vertical Loops Foundation Plans(Beta)-PC1.pdf

Plan Checks - Pending

pcp Date	pcp Documents	pcp Comments

Plan Checks - Reviewed

pcr Date	pcr Documents	pcr Comments

CBO Approved

cboa Documents	cboa Date	cboa Comments
6007-CAL-AGE-57-52-6310_R03.pdf 6007-PLN-AGE-57-52-6310-R03.pdf 6007-PLN-AGE-57-52-6311-R03.pdf 6007-PLN-AGE-57-52-6312-R04.pdf	05/30/2013	CBO Approved PC1
	05/30/2013	CBO Approved PC1 - Approved with Embedded Comments

BV Approved with Embedded Comment Letter -CIVIL-1-19.03 PC1-Abengoa.pdf

PLANS

Segmentation Selection

Project Abengoa Mojave Solar Project

Submittal Title CIVIL-1-21.01-HTF Pipe Support Steel Truss Main Beta Channel Crossing Connections--PCF

Edit Add Copy

General Information

Submittal Title	CIVIL-1-21.01-HTF Pipe Support Steel Truss Main Beta Channel Crossing Connections--PCF
Submittal Description	CBO Approved
Transmittal Number	
Client Submittal Date	03/13/2013
Due Date	
Due Date Comments	3/19/13 - Applicant changed to expedited. Revised due date applied. BT
Client Date	
Expedite	Yes
Expedite Instructions	
Letter of Transmittal	2013.03.13 CIVIL-1-21.01-HTF Pipe Support Steel Truss Main Beta Channel Crossing Connections--PC1-TMT.pdf 2013.04.02_CIVIL-1-21.01-HTF_Pipe_Support_Steel_Truss_Main_Beta_Channel_Crossing_Connections PC2-TMT.pdf 2013.05.10 CIVIL-1-21.01-HTF Pipe Support Steel Truss Main Beta Channel Crossing ConnectionsPC3-TMT.pdf CIVIL-1-21.01-HTF_Pipe_Support_Steel_Truss_Main_Beta_Channel_Crossing_ConnectionsPC4.pdf

Plan Checks - Pending

pcp Date	pcp Documents	pcp Comments

Plan Checks - Reviewed

pcr Date	pcr Documents	pcr Comments

CBO Approved

cboa Documents	cboa Date	cboa Comments
	05/31/2013	CBO Approved PC4

PLANS

Segmentation Selection

Project Abengoa Mojave Solar Project

Submittal Title STRUC-1-19.01-Alpha and Beta Electric Trays Support I Foundation South-PCX

Edit Add Copy

General Information

Submittal Title STRUC-1-19.01-Alpha and Beta Electric Trays Support I Foundation South-PCX

Submittal Description CBO Conditionally Approved

Transmittal Number

Client Submittal Date 04/29/2013

Due Date

Due Date Comments

Client Date

Expedite

Expedite Instructions

Letter of Transmittal

2013.04.18-STRUC-1-19.01-Alpha_and_Beta_Electric_Trays_Support_I_Foundation_South-PC1-TMT.pdf

2013.05.05-STRUC-1-19.01-Alpha_and_Beta_Electric_Trays_Support_I_Foundation_South-PC2-TMT.pdf

STRUC-1-19.01-Alpha_and_Beta_Electric_Trays_Support_I_Foundation_South-PC3.pdf

Plan Checks - Pending

pcp Date	pcp Documents	pcp Comments

Plan Checks - Reviewed

pcr Date	pcr Documents	pcr Comments

CBO Approved

cboa Documents	cboa Date	cboa Comments

CBO Conditionally Approved

cboca Documents	cboca Date	cboca Comments
[illegible]	05/31/2013	CBO Conditionally Approved PC3

ABEINSA EPC

Kristine Yates
06/06/2013 04:10 PM

Send To	Steven Pochmara/AbeinsaEPC/Abengoa@Abengoa
cc	Vernon Leeming/AbeinsaEPC/Abengoa@Abengoa
bcc	
Subject	SWPPP May

SWPPP reports:

may swppp reports.pdf

4 concrete washouts in beta

2 concrete washouts in alpha

Regards

Kristine Yates, PE

ABEINSA EPC
Abener Teyma Mojave General Partnership
43134 Harper Lake Rd.
Hinkley, CA. 92347
Cell: 661-754-6756
kristine.yates@abeinsaepc.abengoa.com

Eco-Tip: Printing e-mails is usually a waste.

CONSTRUCTION SITE STORMWATER RUNOFF CONTROL INSPECTION FORM

CORRECTIONS REQUIRED PRIOR TO NEXT INSPECTION?	YES	NO	N/A

PROJECT INFORMATION		INSPECTION INFORMATION			
WDID # 6 B 3 6 C 3 6 1 7 2 1		DATE: 5/9/13		TIME: 9:35am	
NAME: Mojave Solar Project		PRE-STORM	POST-STORM	WEEKLY	EXTENDED STORM
ADDRESS: 42134 Harper Lake Rd, Hinkley, CA 92347		RAIN >1/2"	None	Light	Moderate / Heavy
CONTRACTOR: Abener Teyma Mojave		WIND >15mph:	None	Light	Moderate / Heavy
ON-SITE CONTACT: Alberto Salas		TEMPERATURE:	LOW 56	HIGH 98	

INSPECTION CHECKLIST

Stormwater Pollution Prevention Plan	Yes	No	Comments
1. Is the SWPPP binder and/or DESCP on site and accessible?	✓		Supplemental Form Attached? YES NO NOTE: THE "CONSTRUCTION SITE STORMWATER RUNOFF CONTROL INSPECTION FORM" IS THE ONLY FORM IN USE FOR INSPECTIONS DOCUMENTATION FOR THIS PROJECT. STORM ACTIVITY: DEFICIENCIES:
2. Does the site have a WDID No.?	✓		
3. Does the SWPPP address the minimum BMP requirements?	✓		
4. Are amendments to the SWPPP clearly documented and dated?	✓		
5. Is the current SWPPP complete?	✓		
6. Does the SWPPP include a current map accurately indicating BMPs installed at the site?	✓		
7. Is routine BMP inspection and maintenance documentation on file?	✓		

Soil Stabilization Practices	Yes	No	Comments	
8. Are BMPs implemented on inactive disturbed areas?	✓		Alpha West	
9. Are implemented BMPs effectively stabilizing soil?	✓		Alpha East	
10. Are BMP materials stockpiled and available for use?	✓		Beta West	
11. Was any erosion observed?		✓	Beta East	

Sediment Control Practices	Yes	No	Discharge Risk Potential	
12. Are sediment control BMPs in place and maintained?	✓		Alpha West	
13. Are sediment BMPs placed to protect the downstream perimeter of the site?	✓		Alpha East	
14. Are the BMPs adequately controlling sediment?	✓		Beta West	
15. Are the storm drain inlets protected?	N/A	N/A	Beta East	

Sediment Discharges

16. Is there evidence that sediment was discharged previously from the site?	None	Minor	Major
17. Is sediment currently being discharged from the site?	None	Minor	Major
18. Where is sediment currently being discharged? Check all that apply:	19. Other	20. Creek	21. Drain inlet
	22. Gutter	23. Drainage Outfall	24. Wetland
	25. Vernal Pool	26. Drainage swale	

Tracking Controls	Yes	No	Discharge Risk Potential		
1. Are adjacent roads and construction entrances free of sediment?		✓	None	Minor	Major
2. Are current BMPs effectively preventing tracking of sediment?		✓	None	Minor	Major

CONSTRUCTION SITE STORMWATER RUNOFF CONTROL INSPECTION FORM

CORRECTIONS REQUIRED PRIOR TO NEXT INSPECTION?	YES	NO	N/A

PROJECT INFORMATION	INSPECTION INFORMATION
WDID # 6 B 3 6 C 3 6 1 7 2 1	DATE: 5/16/13 TIME: 11:10a
NAME: Mojave Solar Project	PRE-STORM / POST-STORM / WEEKLY / EXTENDED STORM
ADDRESS: 42134 Harper Lake Rd, Hinkley, CA 92347	RAIN >1/2": None / Light / Moderate / Heavy
CONTRACTOR: Abener Teyma Mojave	WIND >15mph: None / Light / Moderate / Heavy
ON-SITE CONTACT: Alberto Salas	TEMPERATURE: LOW 69 HIGH 101

INSPECTION CHECKLIST

Stormwater Pollution Prevention Plan	Yes	No
1. Is the SWPPP binder and/or DESCP on site and accessible?	✓	
2. Does the site have a WDID No.?	✓	
3. Does the SWPPP address the minimum BMP requirements?	✓	
4. Are amendments to the SWPPP clearly documented and dated?	✓	
5. Is the current SWPPP complete?	✓	
6. Does the SWPPP include a current map accurately indicating BMPs installed at the site?	✓	
7. Is routine BMP inspection and maintenance documentation on file?	✓	

Comments

Supplemental Form Attached? YES NO
NOTE: THE "CONSTRUCTION SITE STORMWATER RUNOFF CONTROL INSPECTION FORM" IS THE ONLY FORM IN USE FOR INSPECTIONS DOCUMENTATION FOR THIS PROJECT.

STORM ACTIVITY:
DEFICIENCIES:

Soil Stabilization Practices	Yes	No	Comments	
8. Are BMPs implemented on inactive disturbed areas?	✓		Alpha West	
9. Are implemented BMPs effectively stabilizing soil?	✓		Alpha East	
10. Are BMP materials stockpiled and available for use?	✓		Beta West	
11. Was any erosion observed?		✓	Beta East	

Sediment Control Practices	Yes	No	Discharge Risk Potential	
12. Are sediment control BMPs in place and maintained?	✓		Alpha West	
13. Are sediment BMPs placed to protect the downstream perimeter of the site?	✓		Alpha East	
14. Are the BMPs adequately controlling sediment?	✓		Beta West	
15. Are the storm drain inlets protected?	N/A	N/A	Beta East	

Sediment Discharges

16. Is there evidence that sediment was discharged previously from the site?	None	Minor	Major
17. Is sediment currently being discharged from the site?	None	Minor	Major
18. Where is sediment currently being discharged? Check all that apply:	19. Other	20. Creek	21. Drain inlet
	22. Gutter	23. Drainage Outfall	24 Wetland
	25. Vernal Pool	26. Drainage swale	

Tracking Controls	Yes	No	Discharge Risk Potential		
19. Are adjacent roads and construction entrances free of sediment?	✓		None	Minor	Major
20. Are current BMPs effectively preventing tracking of sediment?	✓		None	Minor	Major

CONSTRUCTION SITE STORMWATER RUNOFF CONTROL INSPECTION FORM

CORRECTIONS REQUIRED PRIOR TO NEXT INSPECTION?	YES	NO	N/A

PROJECT INFORMATION		INSPECTION INFORMATION			
WDID # 6 B 3 6 C 3 6 1 7 2 1		DATE: 5/23/13		TIME:	
NAME: Mojave Solar Project		PRE-STORM	POST-STORM	WEEKLY	EXTENDED STORM
ADDRESS: 42134 Harper Lake Rd, Hinkley, CA 92347		RAIN >1/2"	None	Light	Moderate / Heavy
CONTRACTOR: Abener Teyma Mojave		WIND >15mph:	None	Light	Moderate / Heavy
ON-SITE CONTACT: Alberto Salas		TEMPERATURE:	LOW 64	HIGH 96	

INSPECTION CHECKLIST

Stormwater Pollution Prevention Plan	Yes	No	Comments
1. Is the SWPPP binder and/or DESCP on site and accessible?	✓		Supplemental Form Attached? YES NO NOTE: THE "CONSTRUCTION SITE STORMWATER RUNOFF CONTROL INSPECTION FORM" IS THE ONLY FORM IN USE FOR INSPECTIONS DOCUMENTATION FOR THIS PROJECT. STORM ACTIVITY: DEFICIENCIES:
2. Does the site have a WDID No.?	✓		
3. Does the SWPPP address the minimum BMP requirements?	✓		
4. Are amendments to the SWPPP clearly documented and dated?	✓		
5. Is the current SWPPP complete?	✓		
6. Does the SWPPP include a current map accurately indicating BMPs installed at the site?	✓		
7. Is routine BMP inspection and maintenance documentation on file?	✓		

Soil Stabilization Practices	Yes	No	Comments	
8. Are BMPs implemented on inactive disturbed areas?	✓		Alpha West	
9. Are implemented BMPs effectively stabilizing soil?	✓		Alpha East	
10. Are BMP materials stockpiled and available for use?	✓		Beta West	
11. Was any erosion observed?		✓	Beta East	

Sediment Control Practices	Yes	No	Discharge Risk Potential	
12. Are sediment control BMPs in place and maintained?	✓		Alpha West	
13. Are sediment BMPs placed to protect the downstream perimeter of the site?	✓		Alpha East	
14. Are the BMPs adequately controlling sediment?	✓		Beta West	
15. Are the storm drain inlets protected?	N/A		Beta East	

Sediment Discharges			
16. Is there evidence that sediment was discharged previously from the site?	None	Minor	Major
17. Is sediment currently being discharged from the site?	None	Minor	Major
18. Where is sediment currently being discharged? Check all that apply:	19. Other	20. Creek	21. Drain inlet
	22. Gutter	23. Drainage Outfall	24. Wetland
	25. Vernal Pool	26. Drainage swale	

Tracking Controls	Yes	No	Discharge Risk Potential		
19. Are adjacent roads and construction entrances free of sediment?	✓		None	Minor	Major
20. Are current BMPs effectively preventing tracking of sediment?	✓		None	Minor	Major

CONSTRUCTION SITE STORMWATER RUNOFF CONTROL INSPECTION FORM

CORRECTIONS REQUIRED PRIOR TO NEXT INSPECTION?	YES	NO	N/A

PROJECT INFORMATION		INSPECTION INFORMATION			
WDID # 6 B 3 6 C 3 6 1 7 2 1		DATE: 5/30/13		TIME: 1:40	
NAME: Mojave Solar Project		PRE-STORM	POST-STORM	WEEKLY	EXTENDED STORM
ADDRESS: 42134 Harper Lake Rd, Hinkley, CA 92347		RAIN >1/2"	None	Light	Moderate / Heavy
CONTRACTOR: Abener Teyma Mojave		WIND >15mph:	None	Light	Moderate / Heavy
ON-SITE CONTACT: Alberto Salas		TEMPERATURE:	LOW 72	HIGH 103	

INSPECTION CHECKLIST

Stormwater Pollution Prevention Plan	Yes	No	Comments
1. Is the SWPPP binder and/or DESCP on site and accessible?	✓		Supplemental Form Attached? YES NO NOTE: THE "CONSTRUCTION SITE STORMWATER RUNOFF CONTROL INSPECTION FORM" IS THE ONLY FORM IN USE FOR INSPECTIONS DOCUMENTATION FOR THIS PROJECT. STORM ACTIVITY: DEFICIENCIES:
2. Does the site have a WDID No.?	✓		
3. Does the SWPPP address the minimum BMP requirements?	✓		
4. Are amendments to the SWPPP clearly documented and dated?	✓		
5. Is the current SWPPP complete?	✓		
6. Does the SWPPP include a current map accurately indicating BMPs installed at the site?	✓		
7. Is routine BMP inspection and maintenance documentation on file?	✓		

Soil Stabilization Practices	Yes	No	Comments	
8. Are BMPs implemented on inactive disturbed areas?	✓		Alpha West	
9. Are implemented BMPs effectively stabilizing soil?	✓		Alpha East	
10. Are BMP materials stockpiled and available for use?	✓		Beta West	
11. Was any erosion observed?		✓	Beta East	

Sediment Control Practices	Yes	No	Discharge Risk Potential	
12. Are sediment control BMPs in place and maintained?	✓		Alpha West	
13. Are sediment BMPs placed to protect the downstream perimeter of the site?	✓		Alpha East	
14. Are the BMPs adequately controlling sediment?	✓		Beta West	
15. Are the storm drain inlets protected?	N/A		Beta East	

Sediment Discharges			
16. Is there evidence that sediment was discharged previously from the site?	None	Minor	Major
17. Is sediment currently being discharged from the site?	None	Minor	Major
18. Where is sediment currently being discharged? Check all that apply.	19. Other	20. Creek	21. Drain inlet
	22. Gutter	23 Drainage Outfall	24. Wetland
	25. Vernal Pool	26. Drainage swale	

Tracking Controls	Yes	No	Discharge Risk Potential		
27. Are adjacent roads and construction entrances free of sediment?	✓		None	Minor	Major
28. Are current BMPs effectively preventing tracking of sediment?	✓		None	Minor	Major

ABENER TEYMA MOJAVE

ompliance No.: GEN-2
Job : Mojave Solar Project
ate: 04/10/2012 Description: Civil Master Drawing List

Line No.	Sheet No.	Description	Type of Document	Revision Number	Applicable Condition of Certification	Vendor Supplied or EOR	Submittal Date
		Site Plan	Drawing		GEN-2	VENDOR	8/26/2011
1	6007-PLN-GFE-00-50-C001	Temporary Tortoise Exclusion Fencing Plan - Sheet Index and Key Map	Drawing		CIVIL - 1	VENDOR	3/2/2011
2	6007-PLN-GFE-00-50-C002	Temporary Tortoise Exclusion Fencing Plan - Enlarged Plan	Drawing		CIVIL - 1	VENDOR	3/2/2011
3	6007-PLN-GFE-00-50-C003	Temporary Tortoise Exclusion Fencing Plan - Enlarged Plan	Drawing		CIVIL - 1	VENDOR	3/2/2011
4	6007-PLN-GFE-00-50-C004	Temporary Tortoise Exclusion Fencing Plan - Enlarged Plan	Drawing		CIVIL - 1	VENDOR	3/2/2011
5	6007-PLN-GFE-00-50-C005	Temporary Tortoise Exclusion Fencing Plan - Fence Details	Drawing		CIVIL - 1	VENDOR	3/2/2011
6	6007-PLN-GFE-00-50-C000	Construction Plans Cover Sheet	Drawing		CIVIL - 1	VENDOR	8/10/2011
7	6007-PLN-GFE-00-50-C006	Sheet Index	Drawing		CIVIL - 1	VENDOR	8/10/2011
8	6007-PLN-GFE-00-50-C007	General Notes, Legend and Abbreviations	Drawing		CIVIL - 1	VENDOR	8/10/2011
9	6007-PLN-GFE-00-50-C010	Solar Field Grading and Drainage - Kay Map and Notes	Drawing		CIVIL - 1	VENDOR	8/10/2011
10	6007-PLN-GFE-00-50-C011	Alpha West - Solar Field Retention Basins Details	Drawing		CIVIL - 1	VENDOR	8/10/2011
11	6007-PLN-GFE-00-50-C016	Alpha West Solar Field Grading and Drainage - Plan A2	Drawing		CIVIL - 1	VENDOR	8/10/2011
12	6007-PLN-GFE-00-50-C020	Alpha West Solar Field Grading and Drainage - Plan B3W	Drawing		CIVIL - 1	VENDOR	8/10/2011
13	6007-PLN-GFE-00-50-C021	Alpha East Solar Field Grading and Drainage - Plan B3E	Drawing		CIVIL - 1	VENDOR	8/10/2011
14	6007-PLN-GFE-00-50-C022	Alpha East Solar Field Grading and Drainage - Plan B4	Drawing		CIVIL - 1	VENDOR	8/10/2011
15	6007-PLN-GFE-00-50-C023	Alpha East Solar Field Grading and Drainage - Plan B5	Drawing		CIVIL - 1	VENDOR	8/10/2011
16	6007-PLN-GFE-00-50-C027	Alpha West Solar Field Grading and Drainage - Plan C3W	Drawing		CIVIL - 1	VENDOR	8/10/2011
17	6007-PLN-GFE-00-50-C028	Alpha East Solar Field Grading and Drainage - Plan C3E	Drawing		CIVIL - 1	VENDOR	8/10/2011
18	6007-PLN-GFE-00-50-C029	Alpha East Solar Field Grading and Drainage - Plan C4	Drawing		CIVIL - 1	VENDOR	8/10/2011
19	6007-PLN-GFE-00-50-C030	Alpha East Solar Field Grading and Drainage - Plan C5	Drawing		CIVIL - 1	VENDOR	8/10/2011
20	6007-PLN-GFE-00-50-C042	Beta East Solar Field Grading and Drainage - Plan F7	Drawing		CIVIL - 1	VENDOR	8/10/2011
21	6007-PLN-GFE-00-50-C043	Alpha/Beta Power Island Paving, Grading and Drainage - Key Map and Notes	Drawing		CIVIL - 1	VENDOR	8/10/2011
22	6007-PLN-GFE-00-50-C044	Alpha Power Island Paving, Grading and Drainage Details	Drawing		CIVIL - 1	VENDOR	8/10/2011
23	6007-PLN-GFE-00-50-C045	South Alpha Power Island Paving, Grading and Drainage Plan	Drawing		CIVIL - 1	VENDOR	8/10/2011
24	6007-PLN-GFE-00-50-C046	North Alpha Power Island Paving, Grading and Drainage Plan	Drawing		CIVIL - 1	VENDOR	8/10/2011
25	6007-PLN-GFE-00-50-C047	South Beta Power Island Paving, Grading and Drainage Plan	Drawing		CIVIL - 1	VENDOR	8/10/2011
26	6007-PLN-GFE-00-50-C048	North Beta Power Island Paving, Grading and Drainage Plan	Drawing		CIVIL - 1	VENDOR	8/10/2011
27	6007-PLN-GFE-00-50-C049	Channels - Key Map and Notes	Drawing		CIVIL - 1	VENDOR	8/10/2011
28	6007-PLN-GFE-00-50-C050	Channels - Typical Sections I	Drawing		CIVIL - 1	VENDOR	8/10/2011
29	6007-PLN-GFE-00-50-C171	Channels - Typical Sections II	Drawing		CIVIL - 1	VENDOR	8/10/2011
30	6007-PLN-GFE-00-50-C172	Channels - Typical Sections III	Drawing		CIVIL - 1	VENDOR	8/10/2011
31	6007-PLN-GFE-00-50-C177	Lockhart Channel Plan-Profile - Sta 21+00 to 32+50	Drawing		CIVIL - 1	VENDOR	8/10/2011
32	6007-PLN-GFE-00-50-C178	Lockhart Channel Plan-Profile - Sta 32+50 to 44+00	Drawing		CIVIL - 1	VENDOR	8/10/2011
33	6007-PLN-GFE-00-50-C179	Lockhart Channel Plan-Profile - Sta 44+00 to 55+50	Drawing		CIVIL - 1	VENDOR	8/10/2011
34	6007-PLN-GFE-00-50-C180	Lockhart Channel Plan-Profile - Sta 55+50 to 67+00	Drawing		CIVIL - 1	VENDOR	8/10/2011
35	6007-PLN-GFE-00-50-C056	Lockhart Channel Plan-Profile - Sta 67+00 to 78+50	Drawing		CIVIL - 1	VENDOR	8/10/2011
36	6007-PLN-GFE-00-50-C057	Lockhart Channel Plan-Profile - Sta 78+50 to 90+00	Drawing		CIVIL - 1	VENDOR	8/10/2011
37	6007-PLN-GFE-00-50-C058	Lockhart Channel Plan-Profile - Sta 90+00 to 101+50	Drawing		CIVIL - 1	VENDOR	8/10/2011
38	6007-PLN-GFE-00-50-C059	Lockhart Channel Plan-Profile - Sta 101+50 to 113+00	Drawing		CIVIL - 1	VENDOR	8/10/2011
39	6007-PLN-GFE-00-50-C060	Lockhart Channel Plan-Profile - Sta 113+00 to 124+50	Drawing		CIVIL - 1	VENDOR	8/10/2011
40	6007-PLN-GFE-00-50-C061	Lockhart Channel Plan-Profile - Sta 124+50 to 135+00	Drawing		CIVIL - 1	VENDOR	8/10/2011
41	6007-PLN-GFE-00-50-C062	Lockhart Channel Plan-Profile - Sta 135+00 to 146+50	Drawing		CIVIL - 1	VENDOR	8/10/2011
42	6007-PLN-GFE-00-50-C063	Lockhart Channel Plan-Profile - Sta 146+50 to 148+00	Drawing		CIVIL - 1	VENDOR	8/10/2011
43	6007-PLN-GFE-00-50-C064	West Alpha Channel Plan-Profile - Sta 10+00 to 21+00	Drawing		CIVIL - 1	VENDOR	8/10/2011
44	6007-PLN-GFE-00-50-C065	West Alpha Channel Plan-Profile - Sta 21+00 to 32+50	Drawing		CIVIL - 1	VENDOR	8/10/2011
45	6007-PLN-GFE-00-50-C066	West Alpha Channel Plan-Profile - Sta 32+50 to 44+00	Drawing		CIVIL - 1	VENDOR	8/10/2011
46	6007-PLN-GFE-00-50-C067	West Alpha Channel Plan-Profile - Sta 44+00 to 55+00	Drawing		CIVIL - 1	VENDOR	8/10/2011
47	6007-PLN-GFE-00-50-C068	West Alpha Channel Plan-Profile - Sta 55+00 to 66+50	Drawing		CIVIL - 1	VENDOR	8/10/2011
48	6007-PLN-GFE-00-50-C069	West Alpha Channel Plan-Profile - Sta 66+50 to 78+00	Drawing		CIVIL - 1	VENDOR	8/10/2011
49	6007-PLN-GFE-00-50-C070	West Alpha Channel Plan-Profile - Sta 78+00 to 88+00	Drawing		CIVIL - 1	VENDOR	8/10/2011
50	6007-PLN-GFE-00-50-C071	West Alpha Channel Plan-Profile - Sta 88+00 to 98+00	Drawing		CIVIL - 1	VENDOR	8/10/2011
51	6007-PLN-GFE-00-50-C072	Main Beta Channel Plan-Profile - Sta 10+00 to 21+00	Drawing		CIVIL - 1	VENDOR	8/10/2011
52	6007-PLN-GFE-00-50-C073	Main Beta Channel Plan-Profile - Sta 21+00 to 32+50	Drawing		CIVIL - 1	VENDOR	8/10/2011
53	6007-PLN-GFE-00-50-C099	Main Beta Channel Plan-Profile - Sta 32+50 to 43+50	Drawing		CIVIL - 1	VENDOR	8/10/2011
54	6007-PLN-GFE-00-50-C100	Main Beta Channel Plan-Profile - Sta 43+50 to 55+00	Drawing		CIVIL - 1	VENDOR	8/10/2011
55	6007-PLN-GFE-00-50-C101	Main Beta Channel Plan-Profile - Sta 55+00 to 66+50	Drawing		CIVIL - 1	VENDOR	8/10/2011
56	6007-PLN-GFE-00-50-C102	Main Beta Channel Plan-Profile - Sta 66+50 to 78+00	Drawing		CIVIL - 1	VENDOR	8/10/2011
57	6007-PLN-GFE-00-50-C103	Main Beta Channel Plan-Profile - Sta 78+00 to 88+65.52	Drawing		CIVIL - 1	VENDOR	8/10/2011
58	6007-PLN-GFE-00-50-C104	East Beta Channel Plan-Profile - Sta 10+00 to 21+00	Drawing		CIVIL - 1	VENDOR	8/10/2011
59	6007-PLN-GFE-00-50-C105	East Beta Channel Plan-Profile - Sta 21+00 to 32+50	Drawing		CIVIL - 1	VENDOR	8/10/2011
60	6007-PLN-GFE-00-50-C106	East Beta Channel Plan-Profile - Sta 32+50 to 44+00	Drawing		CIVIL - 1	VENDOR	8/10/2011
61	6007-PLN-GFE-00-50-C107	East Beta Channel Plan-Profile - Sta 44+00 to 55+50	Drawing		CIVIL - 1	VENDOR	8/10/2011
62	6007-PLN-GFE-00-50-C108	East Beta Channel Plan-Profile - Sta 55+50 to 66+69.76	Drawing		CIVIL - 1	VENDOR	8/10/2011
63	6007-PLN-GFE-00-50-C109	South Beta Channel Plan-Profile - Sta 10+00 to 21+00	Drawing		CIVIL - 1	VENDOR	8/10/2011
64	6007-PLN-GFE-00-50-C110	South Beta Channel Plan-Profile - Sta 21+00 to 32+50	Drawing		CIVIL - 1	VENDOR	8/10/2011
65	6007-PLN-GFE-00-50-C111	South Beta Channel Plan-Profile - Sta 32+50 to 38+10.23	Drawing		CIVIL - 1	VENDOR	8/10/2011
66	6007-PLN-GFE-00-50-C112	West Beta Channel Plan-Profile - Sta 10+00 to 21+00	Drawing		CIVIL - 1	VENDOR	8/10/2011
67	6007-PLN-GFE-00-50-C113	West Beta Channel Plan-Profile - Sta 21+00 to 32+50	Drawing		CIVIL - 1	VENDOR	8/10/2011
68	6007-PLN-GFE-00-50-C114	West Beta Channel Plan-Profile - Sta 32+50 to 37+80.68	Drawing		CIVIL - 1	VENDOR	8/10/2011
69	6007-PLN-GFE-00-50-C115	Harper Lake Rd Culvert - Details I	Drawing		CIVIL - 1	VENDOR	8/10/2011
70	6007-PLN-GFE-00-50-C116	Harper Lake Rd Culvert - Details II	Drawing		CIVIL - 1	VENDOR	8/10/2011
71	6007-PLN-GFE-00-50-C117	Lockhart Rd West Culvert - Details I	Drawing		CIVIL - 1	VENDOR	8/10/2011
72	6007-PLN-GFE-00-50-C118	Lockhart Rd West Culvert - Details II	Drawing		CIVIL - 1	VENDOR	8/10/2011
73	6007-PLN-GFE-00-50-C119	Lockhart Rd East Culvert - Details I	Drawing		CIVIL - 1	VENDOR	8/10/2011
74	6007-PLN-GFE-00-50-C120	Lockhart Rd East Culvert - Details II	Drawing		CIVIL - 1	VENDOR	8/10/2011
75	6007-PLN-GFE-00-50-C121	Fencing Plan - Key Map and Notes	Drawing		CIVIL - 1	VENDOR	8/10/2011
76	6007-PLN-GFE-00-50-C122	Fencing Plan - Details I	Drawing		CIVIL - 1	VENDOR	8/10/2011
77	6007-PLN-GFE-00-50-C123	Fencing Plan - Details II	Drawing		CIVIL - 1	VENDOR	8/10/2011
78	6007-PLN-GFE-00-50-C124	Alpha West Fencing Plan	Drawing		CIVIL - 1	VENDOR	8/10/2011
79	6007-PLN-GFE-00-50-C350	Alpha East Fencing Plan	Drawing		CIVIL - 1	VENDOR	8/10/2011
80	6007-PLN-GFE-00-50-C354	Beta East/West Fencing Plan	Drawing		CIVIL - 1	VENDOR	8/10/2011
81		Electrical Grounding Details	Drawing		CIVIL - 1	VENDOR	8/10/2011
82		Electrical Grounding Details	Drawing		CIVIL - 1	VENDOR	8/10/2011

ABENER TEYMA MOJAVE

ompliance No.: GEN-2
Job : Mojave Solar Project
ate: 04/10/2012 Description: Civil Master Drawing List

Line No.	Sheet No.	Description	Type of Document	Revision Number	Applicable Condition of Certification	Vendor Supplied or EOR	Submittal Date
83		Fence Grounding Plan Alpha Site	Drawing		CIVIL - 1	VENDOR	8/10/2011
84		Fence Grounding Plan Alpha/Beta Site	Drawing		CIVIL - 1	VENDOR	8/10/2011
85		Fence Grounding Plan Beta Site	Drawing		CIVIL - 1	VENDOR	8/10/2011
86	6007-PLN-GFE-00-50-C370	Demolition - Key Map and Notes	Drawing		CIVIL - 1	VENDOR	8/10/2011
87	6007-PLN-GFE-00-50-C373	Demolition - Plan Sheet 1	Drawing		CIVIL - 1	VENDOR	8/10/2011
88	6007-PLN-GFE-00-50-C374	Demolition - Plan Sheet 2	Drawing		CIVIL - 1	VENDOR	8/10/2011
89	6007-PLN-GFE-00-50-C375	Demolition - Plan Sheet 3	Drawing		CIVIL - 1	VENDOR	8/10/2011
90	6007-PLN-GFE-00-50-C376	Demolition - Details A and B	Drawing		CIVIL - 1	VENDOR	8/10/2011
91	6007-PLN-GFE-00-50-C351	Demolition - Details C and D	Drawing		CIVIL - 1	VENDOR	8/10/2011
92	6007-PLN-GFE-00-50-C352	Demolition - Details E	Drawing		CIVIL - 1	VENDOR	8/10/2011
93	6007-PLN-GFE-00-50-C360	Demolition - Details F	Drawing		CIVIL - 1	VENDOR	8/10/2011
94	6007-PLN-GFE-00-50-C361	Demolition - Details G and H	Drawing		CIVIL - 1	VENDOR	8/10/2011
95	6007-PLN-GFE-00-50-C362	Demolition - Details I and J	Drawing		CIVIL - 1	VENDOR	8/10/2011
96	6007-PLN-GFE-00-50-C363	Demolition - Details K and L	Drawing		CIVIL - 1	VENDOR	8/10/2011
97	6007-PLN-GFE-00-50-C364	Temporary Construction - Key Map and Notes	Drawing		CIVIL - 1	VENDOR	8/10/2011
98	6007-PLN-GFE-00-50-C365	Temporary Construction - Details I	Drawing		CIVIL - 1	VENDOR	8/10/2011
99	6007-PLN-GFE-00-50-C366	Temporary Construction - Details II	Drawing		CIVIL - 1	VENDOR	8/10/2011
100	6007-PLN-GFE-00-50-C367	Temporary Construction - Alpha Island Temporary Facilities	Drawing		CIVIL - 1	VENDOR	8/10/2011
101	6007-PLN-GFE-00-50-C368	Temporary Construction - Alpha West Laydown Area	Drawing		CIVIL - 1	VENDOR	8/10/2011
102	6007-PLN-GFE-00-50-C369	Temporary Construction - Beta Island Temporary Facilities	Drawing		CIVIL - 1	VENDOR	8/10/2011
103	6007-PLN-GFE-00-50-C385	Temporary Construction - Beta South Laydown Area	Drawing		CIVIL - 1	VENDOR	8/10/2011
104	6007-PLN-GFE-00-50-C386	Water Pollution Control - Key Map and Notes	Drawing		CIVIL - 1	VENDOR	8/10/2011
105	6007-PLN-GFE-00-50-C387	Water Pollution Control - Typical Construction Staging Area	Drawing		CIVIL - 1	VENDOR	8/10/2011
106	6007-PLN-GFE-00-50-C306	Water Pollution Control Alpha West and Alpha East	Drawing		CIVIL - 1	VENDOR	8/10/2011
107	6007-PLN-GFE-00-50-C307	Water Pollution Control Alpha East and Beta West	Drawing		CIVIL - 1	VENDOR	8/10/2011
108	6007-PLN-GFE-00-50-C308	Water Pollution Control - Beta East and Beta West	Drawing		CIVIL - 1	VENDOR	8/10/2011
109	6007-PLN-GFE-00-50-C309	Water Pollution Control - Details I	Drawing		CIVIL - 1	VENDOR	8/10/2011
110	6007-PLN-GFE-00-50-C310	Water Pollution Control - Details II	Drawing		CIVIL - 1	VENDOR	8/10/2011
111	6007-PLN-GFE-00-50-C311	Water Pollution Control - Typical Mirror Field Erosion Control Layout	Drawing		CIVIL - 1	VENDOR	8/10/2011
112	6007-PLN-GFE-00-50-C447	C349 Cover Sheet	Drawing		CIVIL - 1	VENDOR	8/10/2011
113	6007-PLN-GFE-00-50-C448	C350 Key Map and Notes	Drawing		CIVIL - 1	VENDOR	8/10/2011
114	6007-PLN-GFE-00-50-C449	C351 Harper Lake Road Plan - Profile Sta10+00 to 21+00	Drawing		CIVIL - 1	VENDOR	8/10/2011
115	6007-PLN-GFE-00-50-C450	C352 Harper Lake Road Plan - Profile Sta 21+00 to 32+50	Drawing		CIVIL - 1	VENDOR	8/10/2011
116	6007-PLN-GFE-00-50-C451	C354 Harper Lake Road Roadway Typical Sections	Drawing		CIVIL - 1	VENDOR	8/10/2011
117	6007-PLN-GFE-00-50-C452	C360 Lockhart Road Plan - Profile Sta 10+00 to 19+50	Drawing		CIVIL - 1	VENDOR	8/10/2011
118	6007-PLN-GFE-00-50-C453	C361 Lockhart Road Plan - Profile Sta 19+50 to 31+00	Drawing		CIVIL - 1	VENDOR	8/10/2011
119	6007-PLN-GFE-00-50-C551	C362 Lockhart Road Plan - Profile Sta 31+00 to 42+50	Drawing		CIVIL - 1	VENDOR	8/10/2011
120	6007-PLN-GFE-00-50-C552	C363 Lockhart Road Plan - Profile Sta 42+50 to 54+00	Drawing		CIVIL - 1	VENDOR	8/10/2011
121	6007-PLN-GFE-00-50-C553	C364 Lockhart Road Plan - Profile Sta 54+00 to 65+50	Drawing		CIVIL - 1	VENDOR	8/10/2011
122	6007-PLN-GFE-00-50-C554	C365 Lockhart Road Plan - Profile Sta 65+50 to 77+00	Drawing		CIVIL - 1	VENDOR	8/10/2011
123	6007-PLN-GFE-00-50-C555	C366 Lockhart Road Plan - Profile Sta 77+00 to 88+50	Drawing		CIVIL - 1	VENDOR	8/10/2011
124	6007-PLN-GFE-00-50-C556	C367 Lockhart Road Plan - Profile Sta 88+50 to 100+00	Drawing		CIVIL - 1	VENDOR	8/10/2011
125	6007-PLN-GFE-00-50-C557	C370 Lockhart Road Roadway Typical Sections	Drawing		CIVIL - 1	VENDOR	8/10/2011
126	6007-PLN-GFE-00-50-C558	C371 Barrier Details SKT Terminal System	Drawing		CIVIL - 1	VENDOR	8/10/2011
127	6007-PLN-GFE-00-50-C601	C372 Barrier Details Type 12A Layout	Drawing		CIVIL - 1	VENDOR	8/10/2011
128	6007-PLN-GFE-00-50-C602	C380 Barrier Details Type WB Transition	Drawing		CIVIL - 1	VENDOR	8/10/2011
129	6007-PLN-GFE-00-50-C603	C381 Barrier Details Type 12AA Layout	Drawing		CIVIL - 1	VENDOR	8/10/2011
130	6007-PLN-GFE-00-50-C604	C382 San Bernardino County Street Marker Details	Drawing		CIVIL - 1	VENDOR	8/10/2011
131	6007-PLN-GFE-00-50-C605	C307 Beta Power Island Entrance Road Typical Section and Details	Drawing		CIVIL - 1	VENDOR	8/10/2011
132	6007-PLN-GFE-00-50-C606	C309 Beta Power Island Entrance Road Plan - Profile Sta 10+00 to21+00	Drawing		CIVIL - 1	VENDOR	8/10/2011
133	6007-PLN-GFE-00-50-C607	C310 Beta Power Island Entrance Road Plan - Profile Sta 21+00 to32+50	Drawing		CIVIL - 1	VENDOR	8/10/2011
134	6007-PLN-GFE-00-50-C651	C311 Beta Power Island Entrance Road Plan - Profile Sta 32+50 to43+27+	Drawing		CIVIL - 1	VENDOR	8/10/2011
135	6007-PLN-GFE-00-50-C709	Process Wastewater Evaporation Ponds and Bioremediation Facilities	Drawing		CIVIL - 1	VENDOR	8/10/2011
136	6007-PLN-GFG-00-50-C500	Mirror Assebly Building Paving, Grading and Drainage, and Fencing Cover Sheet	Drawing		CIVIL - 1	VENDOR	1/19/2012
137	6007-PLN-GFG-00-50-C501	Mirror Assebly Building General Notes, Legend and Abbreviations	Drawing		CIVIL - 1	VENDOR	1/19/2012
138	6007-PLN-GFG-00-50-C502	Mirror Assebly Building Paving, Grading and Drainage, and Fencing Site Plan	Drawing		CIVIL - 1	VENDOR	1/19/2012
139	6007-PLN-GFG-00-50-C503	Mirror Assebly Building Water Pollution Control Plan	Drawing		CIVIL - 1	VENDOR	1/19/2012
140	6007-PLN-GFG-00-50-C504	Mirror Assebly Building Paving, Grading and Drainage Details I	Drawing		CIVIL - 1	VENDOR	1/19/2012
141	6007-PLN-GFG-00-50-C510	Mirror Assebly Building Temporary Construction Plan I	Drawing		CIVIL - 1	VENDOR	1/19/2012
142	6007-PLN-GFG-00-50-C511	Mirror Assebly Building Temporary Construction Plan II	Drawing		CIVIL - 1	VENDOR	1/19/2012
143	6007-PLN-GFG-00-50-C512	Mirror Assebly Building Civil Works General Details I	Drawing		CIVIL - 1	VENDOR	1/19/2012
144	6007-PLN-GFG-00-50-C513	Mirror Assebly Building Temporary Construction Details II	Drawing		CIVIL - 1	VENDOR	1/19/2012
145	6007-HMD-GFG-00-50-0010	Mirror Assembly Building SWPPP Amendment Log	Drawing		CIVIL - 1	VENDOR	1/19/2012
146	6007-CAL-GFG-00-50-DM01	Mirror Assembly Building Drainage Memo	Calculation		CIVIL - 1	VENDOR	1/19/2012
147	6007-PLN-GFE-00-50-C012	Beta West - Solar Field Retention Basins Details	Drawing		CIVIL - 1	VENDOR	2/16/2012
148	6007-PLN-GFE-00-50-C013	Beta East - Solar Field Retention Basins Details	Drawing		CIVIL - 1	VENDOR	2/17/2012
149	6007-PLN-GFE-00-50-C031	Beta West Solar Field Grading and Drainage - Plan D4	Drawing		CIVIL - 1	VENDOR	2/18/2012
150	6007-PLN-GFE-00-50-C032	Beta West/East Solar Field Grading and Drainage - Plan D5	Drawing		CIVIL - 1	VENDOR	2/19/2012
151	6007-PLN-GFE-00-50-C033	Beta East Solar Field Grading and Drainage - Plan D6	Drawing		CIVIL - 1	VENDOR	2/20/2012
152	6007-PLN-GFE-00-50-C034	Beta East Solar Field Grading and Drainage - Plan D7	Drawing		CIVIL - 1	VENDOR	2/21/2012
153	6007-PLN-GFE-00-50-C035	Beta West Solar Field Grading and Drainage - Plan E4	Drawing		CIVIL - 1	VENDOR	2/22/2012
154	6007-PLN-GFE-00-50-C036	Beta West/East Solar Field Grading and Drainage - Plan E5	Drawing		CIVIL - 1	VENDOR	2/23/2012
155	6007-PLN-GFE-00-50-C037	Beta East Solar Field Grading and Drainage - Plan E6	Drawing		CIVIL - 1	VENDOR	2/24/2012
156	6007-PLN-GFE-00-50-C038	Beta East Solar Field Grading and Drainage - Plan E7	Drawing		CIVIL - 1	VENDOR	2/25/2012
157	6007-PLN-GFE-00-50-C039	Beta East Solar Field Grading and Drainage - Plan F5	Drawing		CIVIL - 1	VENDOR	2/26/2012
158	6007-PLN-GFE-00-50-C040	Beta East Solar Field Grading and Drainage - Plan F6	Drawing		CIVIL - 1	VENDOR	2/27/2012
159	6007-PLN-GFE-00-50-C041	Beta East Solar Field Grading and Drainage - Plan F7	Drawing		CIVIL - 1	VENDOR	2/28/2012
160	6007-PLN-GFG-00-50-C026	Alpha West Solar Field Grading and Drainage Plan C3W	Drawing	5	CIVIL - 1	VENDOR	3/1/2012
161	6007-PLN-GFG-00-50-C549	vaporation Ponds / Bioremediation Facilities Alpha and Beta Sites Cover She	Drawing	1	CIVIL - 1	VENDOR	3/1/2012
162	6007-PLN-GFG-00-50-C550	ration Ponds / Bioremediation Facilities General Notes, Legend and Abbrevi	Drawing	1	CIVIL - 1	VENDOR	3/1/2012
163	6007-PLN-GFG-00-50-C551	Evaporation Ponds / Bioremediation Facilities Alpha Site Plan	Drawing	1	CIVIL - 1	VENDOR	3/1/2012
164	6007-PLN-GFG-00-50-C552	poration Ponds / Bioremediation Facilities Alpha Site Grading and Drainage	Drawing	1	CIVIL - 1	VENDOR	3/1/2012

ABENER TEYMA MOJAVE

ompliance No.: GEN-2
Job : Mojave Solar Project
ate: 04/10/2012 Description: Civil Master Drawing List

Line No.	Sheet No.	Description	Type of Document	Revision Number	Applicable Condition of Certification	Vendor Supplied or EOR	Submittal Date
165	6007-PLN-GFG-00-50-C553	Evaporation Ponds / Bioremediation Facilities Alpha Site Pond Sections	Drawing	1	CIVIL - 1	VENDOR	3/1/2012
166	6007-PLN-GFG-00-50-C554	Evaporation Ponds / Bioremediation Facilities Alpha Site Details	Drawing	1	CIVIL - 1	VENDOR	3/1/2012
167	6007-PLN-GFG-00-50-C555	Evaporation Ponds / Bioremediation Facilities Alpha Site Details 2	Drawing	1	CIVIL - 1	VENDOR	3/1/2012
168	6007-PLN-GFG-00-50-C556	oration Ponds / Bioremediation Facilities Alpha Site Bioremediation Facilities	Drawing	1	CIVIL - 1	VENDOR	3/1/2012
169	6007-PLN-GFG-00-50-C557	Ponds / Bioremediation Facilities Alpha Site Bioremediation Facilities Section	Drawing	1	CIVIL - 1	VENDOR	3/1/2012
170	6007-PLN-GFG-00-50-C558	Evaporation Ponds / Bioremediation Facilities Beta Site Plan	Drawing	1	CIVIL - 1	VENDOR	3/1/2012
171	6007-PLN-GFG-00-50-C559	poration Ponds / Bioremediation Facilities Beta Site Grading and Drainage P	Drawing	1	CIVIL - 1	VENDOR	3/1/2012
172	6007-PLN-GFG-00-50-C560	Evaporation Ponds / Bioremediation Facilities Beta Site Pond Sections	Drawing	1	CIVIL - 1	VENDOR	3/1/2012
173	6007-PLN-GFG-00-50-C561	Evaporation Ponds / Bioremediation Facilities Beta Site Details	Drawing	1	CIVIL - 1	VENDOR	3/1/2012
174	6007-PLN-GFG-00-50-C562	Evaporation Ponds / Bioremediation Facilities Beta Site Details 2	Drawing	1	CIVIL - 1	VENDOR	3/1/2012
175	6007-PLN-GFG-00-50-C563	oration Ponds / Bioremediation Facilities Beta Site Bioremediation Facilities	Drawing	1	CIVIL - 1	VENDOR	3/1/2012
176	6007-PLN-GFG-00-50-C564	Ponds / Bioremediation Facilities Beta Site Bioremediation Facilities Sections	Drawing	1	CIVIL - 1	VENDOR	3/1/2012
177	6007-PLN-GFG-00-50-C600	/ Water Pipe and Evaporation Pond Force Main Construction Plans Cover Sl	Drawing	0	CIVIL - 1	VENDOR	3/1/2012
178	6007-PLN-GFG-00-50-C601	ter Pipe and Evaporation Pond Force Main General Notes, Legend and Abbr	Drawing	0	CIVIL - 1	VENDOR	3/1/2012
179	6007-PLN-GFG-00-50-C602	w Water Pipe and Evaporation Pond Force Main Alpha Power Island Site Pla	Drawing	0	CIVIL - 1	VENDOR	3/1/2012
180	6007-PLN-GFG-00-50-C603	w Water Pipe and Evaporation Pond Force Main Alpha Power Island Site Pla	Drawing	0	CIVIL - 1	VENDOR	3/1/2012
181	6007-PLN-GFG-00-50-C604	ter Pipe and Evaporation Pond Force Main Alpha Site Evaporation Pond For	Drawing	0	CIVIL - 1	VENDOR	3/1/2012
182	6007-PLN-GFG-00-50-C605	w Water Pipe and Evaporation Pond Force Main Beta Power Island Site Pla	Drawing	0	CIVIL - 1	VENDOR	3/1/2012
183	6007-PLN-GFG-00-50-C606	w Water Pipe and Evaporation Pond Force Main Beta Power Island Site Plar	Drawing	0	CIVIL - 1	VENDOR	3/1/2012
184	6007-PLN-GFG-00-50-C607	ater Pipe and Evaporation Pond Force Main Beta Site Evaporation Pond For	Drawing	0	CIVIL - 1	VENDOR	3/1/2012
185	6007-PLN-GFG-00-50-C649	Onsite Waste Water Disposal Systems Alpha and Beta Sites Cover Sheet	Drawing	1	CIVIL - 1	VENDOR	3/1/2012
186	6007-PLN-GFG-00-50-C650	nsite Waste Water Disposal Systems General Notes, Legend and Abbreviatio	Drawing	1	CIVIL - 1	VENDOR	3/1/2012
187	6007-PLN-GFG-00-50-C651	ater Disposal Systems Alpha/Beta Waste Water Disposal Systems Key Map,	Drawing	1	CIVIL - 1	VENDOR	3/1/2012
188	6007-PLN-GFG-00-50-C652	te Waste Water Disposal Systems Waste Water Disposal System Alpha Plot	Drawing	1	CIVIL - 1	VENDOR	3/1/2012
189	6007-PLN-GFG-00-50-C653	ite Waste Water Disposal Systems Waste Water Disposal System Beta Plot	Drawing	1	CIVIL - 1	VENDOR	3/1/2012
190	6007-ESP-ATP-00-50-3100	Concrete Forms and Accessories Specifications	Spec	1	CIVIL - 1	EOR	6/15/2011
191	6007-ESP-ATP-00-50-3200	Concrete Reinforcement Specifications	Spec	1	CIVIL - 1	EOR	6/15/2011
192	6007-ESP-ATP-00-50-5120	Structural Steel Specifications	Spec	1	CIVIL - 1	EOR	6/15/2011
193	6007-ESP-ATP-00-50-C021	Civil Site Prep Technical Specifications	Spec	1	CIVIL - 1	EOR	6/15/2011
194	6007-ESP-ATP-00-50-C022	Flexible Pavement Specifications	Spec	0	CIVIL - 1	EOR	6/15/2011
195	6007-ESP-ATP-00-50-C024	Site Clearing and Rough Grading Specifications	Spec	0	CIVIL - 1	EOR	5/27/2011
196	6007-ESP-ATP-00-50-C025	Earthwork Specifications	Spec	0	CIVIL - 1	EOR	6/15/2011
197	6007-ESP-ATP-00-50-C026	Erosion, Sediment Control Specifications	Spec	0	CIVIL - 1	EOR	5/27/2011
198	6007-ESP-ATP-00-50-C028	Aggregate Base Course Specifications	Spec	0	CIVIL - 1	EOR	5/27/2011
199	6007-ESP-ATP-00-50-C029	Cast-In-Place Concrete Specifications	Spec	0	CIVIL - 1	EOR	5/27/2011
200	6007-ESP-ATP-00-50-C030	Site Dust Control Specifications	Spec	0	CIVIL - 1	EOR	6/15/2011
201	6007-ESP-ATP-00-50-C014	Ready Mix Concrete Production & Delivery Specifications	Spec	0	CIVIL - 1	EOR	6/6/2011
202	6007-ESP-ATP-00-50-C015	Commercial Conditions for Ready Mix Concrete Production & Delivery Spe	Spec	0	CIVIL - 1	EOR	6/6/2011
203	6007-ESP-ATP-00-50-GW001.01	Groundwater Well Reconnaissance & Abandonment Specification Adendun	Spec	1	CIVIL - 1	EOR	9/13/2011
204	6007-ESP-ATP-00-50-WTW001	Groundwater Well Construction Specifications	Spec	0	CIVIL - 1	EOR	5/20/2011
205	6007-ESP-ATP-00-50-WTW0002	Well Construction Technical Specifications	Spec	X	CIVIL - 1	EOR	5/21/2011
206	6007-ESP-ATP-00-50-D001	Demolition Specifications	Spec	0	CIVIL - 1	EOR	6/20/2011
207	6007-ESP-ATP-00-50-C033	Site Fencing Specifications	Spec	0	CIVIL - 1	EOR	6/13/2011
208	6007-ESP-ATP-00-50-0001	Site Video Surveillance Specifications	Spec	0	CIVIL - 1	EOR	5/9/2011
209	6007-ESP-ATP-00-50-C027	Soil Stabilization Specifications	Spec	0	CIVIL - 1	EOR	6/11/2011
210	6007-PLN-GFG-00-50-C014	Alpha West Solar Field Grading and Drainage Plan A1	Drawing	5	CIVIL - 1	VENDOR	3/1/2012
211	6007-PLN-GFG-00-50-C015	Alpha West Solar Field Grading and Drainage Plan A2	Drawing	5	CIVIL - 1	VENDOR	3/1/2012
212	6007-PLN-GFG-00-50-C017	Alpha West Solar Field Grading and Drainage Plan B1	Drawing	5	CIVIL - 1	VENDOR	3/1/2012
213	6007-PLN-GFG-00-50-C018	Alpha West Solar Field Grading and Drainage Plan B2	Drawing	5	CIVIL - 1	VENDOR	3/1/2012
214	6007-PLN-GFG-00-50-C019	Alpha West Solar Field Grading and Drainage Plan B3W	Drawing	5	CIVIL - 1	VENDOR	3/1/2012
215	6007-PLN-GFG-00-50-C024	Alpha West Solar Field Grading and Drainage Plan C1	Drawing	5	CIVIL - 1	VENDOR	3/1/2012
216	6007-PLN-GFG-00-50-C025	Alpha West Solar Field Grading and Drainage Plan C2	Drawing	5	CIVIL - 1	VENDOR	3/1/2012
217	6007-PLN-GFG-00-50-C026	Alpha West Solar Field Grading and Drainage Plan C3W	Drawing	5	CIVIL - 1	VENDOR	3/1/2012
218	6007-PLN-GFG-00-50-C173	South Alpha Power Island Paving, Grading and Drainage Plan	Drawing	5	CIVIL - 1	VENDOR	3/1/2012
219	6007-PLN-GFG-00-50-C174	North Alpha Power Island Paving, Grading and Drainage Plan	Drawing	5	CIVIL - 1	VENDOR	3/1/2012
220	6007-PLN-GFG-00-50-C175	South Beta Power Island Paving, Grading and Drainage Plan	Drawing	5	CIVIL - 1	VENDOR	3/1/2012
221	6007-PLN-GFG-00-50-C176	North Beta Power Island Paving, Grading and Drainage Plan	Drawing	5	CIVIL - 1	VENDOR	3/1/2012
222	6007-PLN-GFG-00-50-C011	Alpha East - Solar Field Retention Basins Details	Drawing	3	CIVIL - 2	VENDOR	3/19/2012
223	6007-PLN-GFG-00-50-C016	Alpha East Solar Field Grading and Drainage Plan A3	Drawing	6	CIVIL - 3	VENDOR	3/19/2012
224	6007-PLN-GFG-00-50-C020	Alpha West/East Collector Field Grading and Drainage Plan B3E	Drawing	6	CIVIL - 4	VENDOR	3/19/2012
225	6007-PLN-GFG-00-50-C021	Alpha West/East Collector Field Grading and Drainage Plan B4	Drawing	5	CIVIL - 5	VENDOR	3/19/2012
226	6007-PLN-GFG-00-50-C022	Alpha West/East Collector Field Grading and Drainage Plan B5	Drawing	5	CIVIL - 6	VENDOR	3/19/2012
227	6007-PLN-GFG-00-50-C023	Alpha West/East Collector Field Grading and Drainage Plan B6	Drawing	5	CIVIL - 7	VENDOR	3/19/2012
228	6007-PLN-GFG-00-50-C027	Alpha West/East Collector Field Grading and Drainage Plan C3E	Drawing	5	CIVIL - 8	VENDOR	3/19/2012
229	6007-PLN-GFG-00-50-C028	Alpha West/East Collector Field Grading and Drainage Plan C4	Drawing	5	CIVIL - 9	VENDOR	3/19/2012
230	6007-PLN-GFG-00-50-C029	Alpha West/East Collector Field Grading and Drainage Plan C5	Drawing	5	CIVIL - 10	VENDOR	3/19/2012
231	6007-PLN-GFG-00-50-C030	Alpha West/East Collector Field Grading and Drainage Plan C6	Drawing	5	CIVIL - 11	VENDOR	3/19/2012
232	6007-PLN-GFG-00-50-C307	Beta Power Island Entrance Road Typical Section and Details	Drawing	3	CIVIL - 1	VENDOR	4/2/2012
233	6007-PLN-GFG-00-50-C309	Beta Power Island Entrance Road Plan-Profile Sta 10+00 to 21+00	Drawing	4	CIVIL - 1	VENDOR	4/2/2012
234	6007-PLN-GFG-00-50-C310	Beta Power Island Entrance Road Plan-Profile Sta 21+00 to 32+50	Drawing	4	CIVIL - 1	VENDOR	4/2/2012
235	6007-PLN-GFG-00-50-C311	Beta Power Island Entrance Road Plan-Profile Sta 32+50 to 44+00	Drawing	4	CIVIL - 1	VENDOR	4/2/2012
236	6007-PLN-GFG-00-50-C312	Beta Power Island Entrance Road Plan-Profile Sta 44+00 to 55+50	Drawing	0	CIVIL - 1	VENDOR	4/2/2012
237	6007-PLN-GFG-00-50-C313	Beta Power Island Entrance Road Plan-Profile Sta 55+50 to 64+35	Drawing	0	CIVIL - 1	VENDOR	4/2/2012
238	6007-PLN-GFG-00-50-C552	oration. Ponds/Bioremediation. Facilities Alpha Site Grading and Drainage	Drawing	1	CIVIL - 1	VENDOR	3/1/2012
239	6007-PLN-GFG-00-50-C559	oration. Ponds/Bioremediation. Facilities Alpha Site Grading and Drainage	Drawing	1	CIVIL - 1	VENDOR	3/1/2012
240	6007-PLN-GFG-00-50-C376	Lockhart Road West Culvert. Details II	Drawing	0	CIVIL - 1	VENDOR	5/20/2012
241	6007-PLN-GFG-00-50-C500	COVER SHEET	Drawing	0	CIVIL -1	VENDOR	1/9/2012
242	6007-PLN-GFG-00-50-C501	NOTES SHEET	Drawing	0	CIVIL - 1	VENDOR	1/9/2012
243	6007-PLN-GFG-00-50-C502	SITE PLAN	Drawing	0	CIVIL - 1	VENDOR	1/9/2012

ABENER TEYMA MOJAVE

ompliance No.: GEN-2
Job : Mojave Solar Project
ate: 04/10/2012 Description: Civil Master Drawing List

Line No.	Sheet No.	Description	Type of Document	Revision Number	Applicable Condition of Certification	Vendor Supplied or EOR	Submittal Date
244	6007-PLN-GFG-00-50-C503	SITE PLAN	Drawing	0	CIVIL - 1	VENDOR	1/9/2012
245	6007-PLN-GFG-00-50-C504	DETAILS	Drawing	0	CIVIL - 1	VENDOR	1/9/2012
246	6007-PLN-GFG-00-50-C505	DETAILS	Drawing		CIVIL - 1	VENDOR	
247	6007-PLN-GFG-00-50-C307	Typical Section and Details	Drawing	4	CIVIL - 1	VENDOR	6/11/2012
248	6007-PLN-GFG-00-50-C515	Alternate 2 - Temporary Fire Storage and Distribution System	Drawing	0	CIVIL - 1	VENDOR	7/12/2012
249	6007-PLN-GFG-00-50-C006	Sheet Index	Drawing	3	CIVIL - 1	VENDOR	6/11/2012
250	6007-PLN-GFG-00-50-C008	Beta East - Lowered NE Transition and Ramp Details	Drawing	0	CIVIL - 1	VENDOR	6/11/2012
251	6007-PLN-GFG-00-50-C009	Solar Field Grading and Drainage Key Map and Notes	Drawing	3	CIVIL - 1	VENDOR	6/11/2012
252	6007-PLN-GFG-00-50-C033	Beta East Solar Field Grading and Drainage. Plan D6	Drawing	6	CIVIL - 1	VENDOR	6/11/2012
253	6007-PLN-GFG-00-50-C034	Beta East Solar Field Grading and Drainage. Plan D7	Drawing	6	CIVIL - 1	VENDOR	6/10/2012
254	6007-PLN-GFG-00-50-C309	Beta Power Island Entrance Road. Plan-Profile Sta 10+00 to 21+00	Drawing	5	CIVIL - 1	VENDOR	6/11/2012
255	6007-PLN-GFG-00-50-C310	Beta Power Island Entrance Road. Plan-Profile Sta 21+00 to 32+50	Drawing	5	CIVIL - 1	VENDOR	6/11/2012
256	6007-PLN-GFG-00-50-C362	Lockhart Road. Plan-Profile Sta 31+00 to 42+50	Drawing	4	CIVIL - 1	VENDOR	3/30/2012
257	ONSE LETTER CIVIL-1-6.00X2-Fencing Plans-PC1				CIVIL - 1	VENDOR	
258	6007-PLN-GFG-00-50-C450		Drawing		CIVIL - 1	VENDOR	
259	Wind Fence_Not Installed_07-13-12 Sealed				CIVIL - 1	VENDOR	
260	ind Fence_Retrofit on Installed_07-13-12 Sealed				CIVIL - 1	VENDOR	
261	6007-PLN-GFG-00-50-C514		Drawing		CIVIL - 1	VENDOR	
262	6007-PLN-GFG-00-50-C549	Alpha and Beta Sites Cover Sheet	Drawing		CIVIL - 1	VENDOR	
263	6007-PLN-GFG-00-50-C550	General Notes, Legend and Abbreviations	Drawing		CIVIL - 1	VENDOR	
264	6007-PLN-GFG-00-50-C551	Alpha Site Plan	Drawing		CIVIL- 1	VENDOR	
265	6007-PLN-GFG-00-50-C552	Alpha Site Grading and Drainage Plan	Drawing		CIVIL - 1	VENDOR	
266	6007-PLN-GFG-00-50-C553	Alpha Site Pond Sections	Drawing		CIVIL - 1	VENDOR	
267	6007-PLN-GFG-00-50-C554	Alpha Site Details	Drawing		CIVIL - 1	VENDOR	
268	6007-PLN-GFG-00-50-C555	Alpha Site Details 2	Drawing		CIVIL - 1	VENDOR	
269	6007-PLN-GFG-00-50-C556	Alpha Site Bioremediation Facilities Plan	Drawing		CIVIL - 1	VENDOR	
270	6007-PLN-GFG-00-50-C557	Alpha Site Bioremediation Facilities Sections and Details	Drawing		CIVIL - 1	VENDOR	
271	6007-PLN-GFG-00-50-C558	Beta Site Plan	Drawing		CIVIL - 1	VENDOR	
272	6007-PLN-GFG-00-50-C559	Beta Site Grading and Drainage Plan	Drawing		CIVIL - 1	VENDOR	
273	6007-PLN-GFG-00-50-C560	Beta Site Pond Sections	Drawing		CIVIL - 1	VENDOR	
274	6007-PLN-GFG-00-50-C561	Beta Site Details	Drawing		CIVIL - 1	VENDOR	
275	6007-PLN-GFG-00-50-C562	Beta Site Details 2	Drawing		CIVIL - 1	VENDOR	
276	6007-PLN-GFG-00-50-C563	Beta Site Bioremediation Facilities Plan	Drawing		CIVIL - 1	VENDOR	
278	6007-PLN-GFG-00-50-C564	Beta Site Bioremediation Facilities Sections and Details	Drawing		CIVIL - 1	VENDOR	
279	ech Memo for Evap Ponds and Bio Fac 3-23-1	Design Technical Memorandum			CIVIL - 1	VENDOR	
280	onal Water Quality Control Board Documentation				CIVIL - 1	VENDOR	
281	6007-PLN-GFG-00-50-C448		Drawing		CIVIL - 1	VENDOR	
310	ns r1 (DS 04-20-12) 0187P-A1&2 - MT-402 Ra	STRUCTURAL CALCULATIONS	Calculation		CIVIL -1	VENDOR	
311	6007-PLN-GFG-00-50-C173	South Alpha Power Island Paving,Grading and Drainage Plan	Drawing	7	CIVIL -1	VENDOR	
312	6007-PLN-GFG-00-50-C174	North Alpha Power Island Paving, Grading and Drainage Plan	Drawing	7	CIVIL -1	VENDOR	
312	6007-PLN-GFG-00-50-C175	South Beta Power Island Paving, Grading and Drainage Plan	Drawing	7	CIVIL -1	VENDOR	
314	6007-PLN-GFG-00-50-C176	North Beta Power Island Paving, Grading and Drainage Plan	Drawing	7	CIVIL -1	VENDOR	
315	6007-CAL-GFG-00-50-002	Wind fence calculations	Calculation	0	CIVIL -1	VENDOR	
316	6007-PLN-GFG-00-50-C454	Wind fence drawings	Drawing	0	CIVIL -1	VENDOR	
317	6007-PLN-GFG-00-50-C455	Wind fence drawings	Drawing	0	CIVIL -1	VENDOR	
318	6007-PLN-GFG-00-50-C456	Wind fence drawings	Drawing	0	CIVIL -1	VENDOR	
319	6007-PLN-GFG-00-50-C448	Fence Detail	Drawing	5	CIVIL -1	VENDOR	
320	6007-CAL-GFG-00-50-001	Perimeter Fence Design	Calculation	1	CIVIL -1	VENDOR	
321	6007-PLN-GFG-00-50-C449	Fence Detail	Drawing	4	CIVIL -1	VENDOR	
322	Screen Fence Retrofit 08-01/12 Sealed	Screen Fence Retrofit	Drawing	0	CIVIL -1	VENDOR	
333	6007-PLN-GFG-00-50-C451	Alpha West Fencing Plan	Drawing	4	CIVIL -1	VENDOR	10/2/2012
334	6007-PLN-GFG-00-50-C452	Alpha East Fencing Plan	Drawing	3	CIVIL -1	VENDOR	10/2/2012
335	6007-PLN-GFG-00-50-C453	Beta East/West Fencing Plan	Drawing	3	CIVIL -1	VENDOR	10/2/2012
336	6007-CAL-AGE-25-52-4000	Steam Turbine Generator Foundation - Calculation Report Alpha Plant	Calculation	3	CIVIL -1	VENDOR	11/27/2012
337	6007-CAL-AGE-25-52-8000	Steam Turbine Generator Foundation - Calculation Report Beta Plant	Calculation	3	CIVIL -1	VENDOR	11/27/2012
338	6007-PLN-AGE-25-52-4000	Steam Turbine Generator Foundation - Cover Sheet - Alpha Plant	Drawing	3	CIVIL -1	VENDOR	11/27/2012
339	6007-PLN-AGE-25-52-4020	Steam Turbine Generator Foundation - General notes - Alpha Plant	Drawing	3	CIVIL -1	VENDOR	11/27/2012
340	6007-PLN-AGE-25-52-4040	Steam Turbine Generator Foundation - Foundation plan - Alpha Plant	Drawing	3	CIVIL -1	VENDOR	11/27/2012
341	6007-PLN-AGE-25-52-4041	Steam Turbine Generator Foundation - Foundation Elevations - Alpha	Drawing	3	CIVIL -1	VENDOR	11/27/2012
342	6007-PLN-AGE-25-52-4060	Steam Turbine Generator Foundation - Details - Alpha plant	Drawing	3	CIVIL -1	VENDOR	11/27/2012
343	6007-PLN-AGE-25-52-4061	Steam Turbine Generator Foundation - Details - Alpha plant	Drawing	3	CIVIL -1	VENDOR	11/27/2012
344	6007-PLN-AGE-25-52-4062	Steam Turbine Generator Foundation - Details - Alpha plant	Drawing	3	CIVIL -1	VENDOR	11/27/2012
345	6007-PLN-AGE-25-52-4063	Steam Turbine Generator Foundation - Details - Alpha plant	Drawing	3	CIVIL -1	VENDOR	11/27/2012
346	6007-PLN-AGE-25-52-4064	Steam Turbine Generator Foundation - Details - Alpha plant	Drawing	3	CIVIL -1	VENDOR	11/27/2012
347	6007-PLN-AGE-25-52-4065	Steam Turbine Generator Foundation - Details - Alpha plant	Drawing	3	CIVIL -1	VENDOR	11/27/2012
348	6007-PLN-AGE-25-52-4066	Steam Turbine Generator Foundation - Details - Alpha plant	Drawing	3	CIVIL -1	VENDOR	11/27/2012
349	6007-PLN-AGE-25-52-4067	Steam Turbine Generator Foundation - Details - Alpha plant	Drawing	3	CIVIL -1	VENDOR	11/27/2012
350	6007-PLN-AGE-25-52-4068	Steam Turbine Generator Foundation - Details - Alpha plant	Drawing	2	CIVIL -1	VENDOR	11/27/2012
351	6007-PLN-AGE-25-52-4069	Steam Turbine Generator Foundation - Details - Alpha plant	Drawing	2	CIVIL -1	VENDOR	11/27/2012
352	6007-PLN-AGE-25-52-4070	Steam Turbine Generator Foundation - Details - Alpha plant	Drawing	2	CIVIL -1	VENDOR	11/27/2012
353	6007-PLN-AGE-25-52-4071	Steam Turbine Generator Foundation - Details - Alpha plant	Drawing	2	CIVIL -1	VENDOR	11/27/2012
354	6007-PLN-AGE-25-52-4072	Steam Turbine Generator Foundation - Details - Alpha plant	Drawing	2	CIVIL -1	VENDOR	11/27/2012
355	6007-PLN-AGE-25-52-8000	Steam Turbine Generator Foundation - Cover Sheet - Beta Plant	Drawing	3	CIVIL -1	VENDOR	11/27/2012
356	6007-PLN-AGE-25-52-8020	Steam Turbine Generator Foundation - General notes - Beta Plant	Drawing	3	CIVIL -1	VENDOR	11/27/2012
357	6007-PLN-AGE-25-52-8040	Steam Turbine Generator Foundation - Foundation plan - Beta Plant	Drawing	3	CIVIL -1	VENDOR	11/27/2012
358	6007-PLN-AGE-25-52-8041	Steam Turbine Generator Foundation - Foundation Elevations - Beta	Drawing	3	CIVIL -1	VENDOR	11/27/2012
359	6007-PLN-AGE-25-52-8060	Steam Turbine Generator Foundation - Details - Beta plant	Drawing	3	CIVIL -1	VENDOR	11/27/2012
360	6007-PLN-AGE-25-52-8061	Steam Turbine Generator Foundation - Details - Beta plant	Drawing	3	CIVIL -1	VENDOR	11/27/2012
361	6007-PLN-AGE-25-52-8062	Steam Turbine Generator Foundation - Details - Beta plant	Drawing	3	CIVIL -1	VENDOR	11/27/2012

ABENER TEYMA MOJAVE

ompliance No.: GEN-2
Job : Mojave Solar Project
ate: 04/10/2012 Description: Civil Master Drawing List

Line No.	Sheet No.	Description	Type of Document	Revision Number	Applicable Condition of Certification	Vendor Supplied or EOR	Submittal Date
362	6007-PLN-AGE-25-52-8063	Steam Turbine Generator Foundation - Details - Beta plant	Drawing	3	CIVIL -1	VENDOR	11/27/2012
363	6007-PLN-AGE-25-52-8064	Steam Turbine Generator Foundation - Details - Beta plant	Drawing	3	CIVIL -1	VENDOR	11/27/2012
364	6007-PLN-AGE-25-52-8065	Steam Turbine Generator Foundation - Details - Beta plant	Drawing	3	CIVIL -1	VENDOR	11/27/2012
365	6007-PLN-AGE-25-52-8066	Steam Turbine Generator Foundation - Details - Beta plant	Drawing	3	CIVIL -1	VENDOR	11/27/2012
366	6007-PLN-AGE-25-52-8067	Steam Turbine Generator Foundation - Details - Beta plant	Drawing	3	CIVIL -1	VENDOR	11/27/2012
367	6007-PLN-AGE-25-52-8068	Steam Turbine Generator Foundation - Details - Beta plant	Drawing	2	CIVIL -1	VENDOR	11/27/2012
368	6007-PLN-AGE-25-52-8069	Steam Turbine Generator Foundation - Details - Beta plant	Drawing	2	CIVIL -1	VENDOR	11/27/2012
369	6007-PLN-AGE-25-52-8070	Steam Turbine Generator Foundation - Details - Beta plant	Drawing	2	CIVIL -1	VENDOR	11/27/2012
370	6007-PLN-AGE-25-52-8071	Steam Turbine Generator Foundation - Details - Beta plant	Drawing	2	CIVIL -1	VENDOR	11/27/2012
371	6007-PLN-AGE-25-52-8072	Steam Turbine Generator Foundation - Details - Beta plant	Drawing	2	CIVIL -1	VENDOR	11/27/2012
372	6007-PLN-GFG-00-50-C549	6007-PLN-GFG-00-50-C549	Drawing	2	CIVIL -1	VENDOR	12/3/2012
373	6007-PLN-GFG-00-50-C550	6007-PLN-GFG-00-50-C550	Drawing	2	CIVIL -1	VENDOR	12/3/2012
374	6007-PLN-GFG-00-50-C551	6007-PLN-GFG-00-50-C551	Drawing	2	CIVIL -1	VENDOR	12/3/2012
375	6007-PLN-GFG-00-50-C553	Evaporation Ponds/Bioremediation Facilities/Alpha Site/Pond Sections	Drawing	2	CIVIL -1	VENDOR	12/3/2012
376	6007-PLN-GFG-00-50-C554	Evaporation Ponds/Bioremediation Facilities/Alpha Site/Details	Drawing	2	CIVIL -1	VENDOR	12/3/2012
377	6007-PLN-GFG-00-50-C555	Evaporation Ponds/Bioremediation Facilities/Alpha Site/Details 2	Drawing	2	CIVIL -1	VENDOR	12/3/2012
378	6007-PLN-GFG-00-50-C556	oration Ponds/Bioremediation Facilities/Alpha Site/Bioremediation Facilities	Drawing	2	CIVIL -1	VENDOR	12/3/2012
379	6007-PLN-GFG-00-50-C557	Ponds/Bioremediation Facilities/Alpha Site/Bioremediation Facilities Sections	Drawing	2	CIVIL -1	VENDOR	12/3/2012
380	6007-PLN-GFG-00-50-C558	Evaporation Ponds/Bioremediation Facilities/Beta Site/Plan	Drawing	2	CIVIL -1	VENDOR	12/3/2012
381	6007-PLN-GFG-00-50-C560	Evaporation Ponds/Bioremediation Facilities/Beta Site/Pond Sections	Drawing	2	CIVIL -1	VENDOR	12/3/2012
382	6007-PLN-GFG-00-50-C561	Evaporation Ponds/Bioremediation Facilities/Beta Site/Details	Drawing	2	CIVIL -1	VENDOR	12/3/2012
383	6007-PLN-GFG-00-50-C562	Evaporation Ponds/Bioremediation Facilities/Beta Site/Details 2	Drawing	2	CIVIL -1	VENDOR	12/3/2012
384	6007-PLN-GFG-00-50-C563	poration Ponds/Bioremediation Facilities/Beta Site/Bioremediation Facilities	Drawing	2	CIVIL -1	VENDOR	12/3/2012
385	6007-PLN-GFG-00-50-C564	Ponds/Bioremediation Facilities/Beta Site/Bioremediation Facilities Sections	Drawing	2	CIVIL -1	VENDOR	12/3/2012
386	6007-ESP-GFG-00-50-C001	Supplemental Technical Specifications	Spec	0	CIVIL -1	VENDOR	12/3/2012
387	6007-CAL-AGE-57-52-6277	Calculation Report	Calculation	4	CIVIL -1	VENDOR	2/22/2013
388	6007-PLN-AGE-57-52-6900	cover sheet	Drawing	6	CIVIL -1	VENDOR	2/22/2013
389	6007-PLN-AGE-57-52-6901	general notes	Drawing	5	CIVIL -1	VENDOR	2/22/2013
390	6007-PLN-AGE-57-52-6902	Elevation, plan, & Sections for Column 1 to 5	Drawing	6	CIVIL -1	VENDOR	2/22/2013
391	6007-PLN-AGE-57-52-6903	Elevation, plan, & Sections for Column 2, 3, 4	Drawing	5	CIVIL -1	VENDOR	2/22/2013
392	6007-PLN-AGE-57-52-6904	Elevation, plan, & Sections for Column 1 & 5	Drawing	6	CIVIL -1	VENDOR	2/22/2013
393	6007-PLN-AGE-57-52-6905	Elevation, plan, & Sections for Column C11-C20	Drawing	6	CIVIL -1	VENDOR	2/22/2013
394	6007-PLN-AGE-25-52-4000	Alpha - Steam Turbine Gen. Foundation Cover Sheet	Drawing	4	CIVIL -1	VENDOR	2/28/2013
395	6007-PLN-AGE-25-52-4020	Alpha - Steam Turbine Gen. Foundation General Notes	Drawing	6	CIVIL -1	VENDOR	2/28/2013
396	6007-PLN-AGE-25-52-4040	Alpha - Steam Turbine Gen. Foundation. Foundation Plan	Drawing	5	CIVIL -1	VENDOR	2/28/2013
397	6007-PLN-AGE-25-52-4041	Alpha - Steam Turbine Gen. Foundation. Foundation Elev.	Drawing	5	CIVIL -1	VENDOR	2/28/2013
398	6007-PLN-AGE-25-52-4060	Alpha - Steam Turbine Gen. Foundation. Details	Drawing	5	CIVIL -1	VENDOR	2/28/2013
399	6007-PLN-AGE-25-52-4061	Alpha - Steam Turbine Gen. Foundation. Details	Drawing	5	CIVIL -1	VENDOR	2/28/2013
400	6007-PLN-AGE-25-52-4062	Alpha - Steam Turbine Gen. Foundation. Details	Drawing	5	CIVIL -1	VENDOR	2/28/2013
401	6007-PLN-AGE-25-52-4063	Alpha - Steam Turbine Gen. Foundation. Details	Drawing	5	CIVIL -1	VENDOR	2/28/2013
402	6007-PLN-AGE-25-52-4064	Alpha - Steam Turbine Gen. Foundation. Details	Drawing	5	CIVIL -1	VENDOR	2/28/2013
403	6007-PLN-AGE-25-52-4065	Alpha - Steam Turbine Gen. Foundation. Details	Drawing	5	CIVIL -1	VENDOR	2/28/2013
404	6007-PLN-AGE-25-52-4066	Alpha - Steam Turbine Gen. Foundation. Details	Drawing	5	CIVIL -1	VENDOR	2/28/2013
405	6007-PLN-AGE-25-52-4067	Alpha - Steam Turbine Gen. Foundation. Details	Drawing	5	CIVIL -1	VENDOR	2/28/2013
406	6007-PLN-AGE-25-52-4068	Alpha - Steam Turbine Gen. Foundation. Details	Drawing	4	CIVIL -1	VENDOR	2/28/2013
407	6007-PLN-AGE-25-52-4069	Alpha - Steam Turbine Gen. Foundation. Details	Drawing	4	CIVIL -1	VENDOR	2/28/2013
408	6007-PLN-AGE-25-52-4070	Alpha - Steam Turbine Gen. Foundation. Details	Drawing	4	CIVIL -1	VENDOR	2/28/2013
409	6007-PLN-AGE-25-52-4071	Alpha - Steam Turbine Gen. Foundation. Details	Drawing	4	CIVIL -1	VENDOR	2/28/2013
410	6007-PLN-AGE-25-52-4072	Alpha - Steam Turbine Gen. Foundation. Details	Drawing	4	CIVIL -1	VENDOR	2/28/2013
411	6007-PLN-AGE-25-52-4073	Alpha - Anchor Bolts Coordinates Foundation Plan	Drawing	1	CIVIL -1	VENDOR	2/28/2013
412	6007-PLN-AGE-25-52-8000	Beta - Steam Turbine Gen. Foundation Cover Sheet	Drawing	4	CIVIL -1	VENDOR	2/28/2013
413	6007-PLN-AGE-25-52-8020	Beta - Steam Turbine Gen. Foundation General Notes	Drawing	6	CIVIL -1	VENDOR	2/28/2013
414	6007-PLN-AGE-25-52-8040	Beta - Steam Turbine Gen. Foundation. Foundation Plan	Drawing	5	CIVIL -1	VENDOR	2/28/2013
415	6007-PLN-AGE-25-52-8041	Beta - Steam Turbine Gen. Foundation. Foundation Elev.	Drawing	5	CIVIL -1	VENDOR	2/28/2013
416	6007-PLN-AGE-25-52-8060	Beta - Steam Turbine Gen. Foundation. Details	Drawing	5	CIVIL -1	VENDOR	2/28/2013
417	6007-PLN-AGE-25-52-8061	Beta - Steam Turbine Gen. Foundation. Details	Drawing	5	CIVIL -1	VENDOR	2/28/2013
418	6007-PLN-AGE-25-52-8062	Beta - Steam Turbine Gen. Foundation. Details	Drawing	5	CIVIL -1	VENDOR	2/28/2013
419	6007-PLN-AGE-25-52-8063	Beta - Steam Turbine Gen. Foundation. Details	Drawing	5	CIVIL -1	VENDOR	2/28/2013
420	6007-PLN-AGE-25-52-8064	Beta - Steam Turbine Gen. Foundation. Details	Drawing	5	CIVIL -1	VENDOR	2/28/2013
	6007-PLN-AGE-25-52-8065	Beta - Steam Turbine Gen. Foundation. Details	Drawing	5	CIVIL -1	VENDOR	2/28/2013
	6007-PLN-AGE-25-52-8066	Beta - Steam Turbine Gen. Foundation. Details	Drawing	5	CIVIL -1	VENDOR	2/28/2013
	6007-PLN-AGE-25-52-8067	Beta - Steam Turbine Gen. Foundation. Details	Drawing	5	CIVIL -1	VENDOR	2/28/2013
	6007-PLN-AGE-25-52-8068	Beta - Steam Turbine Gen. Foundation. Details	Drawing	4	CIVIL -1	VENDOR	2/28/2013
	6007-PLN-AGE-25-52-8069	Beta - Steam Turbine Gen. Foundation. Details	Drawing	4	CIVIL -1	VENDOR	2/28/2013
	6007-PLN-AGE-25-52-8070	Beta - Steam Turbine Gen. Foundation. Details	Drawing	4	CIVIL -1	VENDOR	2/28/2013
	6007-PLN-AGE-25-52-8071	Beta - Steam Turbine Gen. Foundation. Details	Drawing	4	CIVIL -1	VENDOR	2/28/2013
	6007-PLN-AGE-25-52-8072	Beta - Steam Turbine Gen. Foundation. Details	Drawing	4	CIVIL -1	VENDOR	2/28/2013
	6007-PLN-AGE-25-52-8073	Beta - Anchor Bolts Coordinates Foundation Plan	Drawing	1	CIVIL -1	VENDOR	2/28/2013
	6007-CAL-AGE-25-52-4000	Calculation report for Steam Turbine-Generator Found. Alpha	Calculation	5	CIVIL -1	VENDOR	2/28/2013
	6007-CAL-AGE-25-52-8000	Calculation report for Steam Turbine-Generator Found. Beta	Calculation	5	CIVIL -1	VENDOR	2/28/2013
	6007-PLN-GFG-00-50-C451	Alpha West Fencing Plan	Drawing	5	CIVIL -1	VENDOR	3/4/2013
	6007-PLN-GFG-00-50-C452	Alpha East Fencing Plan	Drawing	4	CIVIL -1	VENDOR	3/4/2013
	6007-PLN-GFG-00-50-C453	Beta East/West Fencing Plan	Drawing	4	CIVIL -1	VENDOR	3/4/2013
	6007-PLN-AGE-25-52-4040	Alpha – Steam Turbine Gen. Foundation. Foundation Plan	Drawing	6	CIVIL -1	VENDOR	2/28/2013
	6007-PLN-AGE-25-52-4062	Alpha – Steam Turbine Gen. Foundation. Details	Drawing	6	CIVIL -1	VENDOR	2/28/2013
	6007-PLN-AGE-25-52-4063	Alpha – Steam Turbine Gen. Foundation. Details	Drawing	6	CIVIL -1	VENDOR	3/3/2013
	6007-PLN-AGE-25-52-4068	Alpha – Steam Turbine Gen. Foundation. Details	Drawing	5	CIVIL -1	VENDOR	3/3/2013
	6007-PLN-AGE-25-52-4069	Alpha – Steam Turbine Gen. Foundation. Details	Drawing	5	CIVIL -1	VENDOR	3/3/2013
	6007-PLN-AGE-25-52-4070	Alpha – Steam Turbine Gen. Foundation. Details	Drawing	5	CIVIL -1	VENDOR	3/3/2013

ABENER TEYMA MOJAVE

ompliance No.: GEN-2
Job : Mojave Solar Project
ate: 04/10/2012 Description: Civil Master Drawing List

Line No.	Sheet No.	Description	Type of Document	Revision Number	Applicable Condition of Certification	Vendor Supplied or EOR	Submittal Date
	6007-PLN-AGE-25-52-4071	Alpha – Steam Turbine Gen. Foundation. Details	Drawing	5	CIVIL -1	VENDOR	3/3/2013
	6007-PLN-AGE-25-52-4073	Alpha – Anchor Bolts Coordinates Foundation Plan	Drawing	2	CIVIL -1	VENDOR	3/3/2013
	6007-PLN-AGE-25-52-8040	Beta – Steam Turbine Gen. Foundation. Foundation Plan	Drawing	6	CIVIL -1	VENDOR	3/3/2013
	6007-PLN-AGE-25-52-8068	Beta – Steam Turbine Gen. Foundation. Details	Drawing	5	CIVIL -1	VENDOR	3/3/2013
	6007-PLN-AGE-25-52-8069	Beta – Steam Turbine Gen. Foundation. Details	Drawing	5	CIVIL -1	VENDOR	3/3/2013
	6007-PLN-AGE-25-52-8070	Beta – Steam Turbine Gen. Foundation. Details	Drawing	5	CIVIL -1	VENDOR	3/3/2013
	6007-PLN-AGE-25-52-8071	Beta – Steam Turbine Gen. Foundation. Details	Drawing	5	CIVIL -1	VENDOR	3/3/2013
	6007-PLN-AGE-25-52-8073	Beta – Anchor Bolts Coordinates Foundation Plan	Drawing	2	CIVIL -1	VENDOR	3/3/2013
	6007-CAL-AGE-57-54-6277	Calculations	Calculation	4	CIVIL -1	VENDOR	3/13/2013
	6007-PLN-AGE-57-54-6900	Cover Sheet	Drawing	5	CIVIL -1	VENDOR	3/13/2013
	6007-PLN-AGE-57-54-6901	General Notes	Drawing	5	CIVIL -1	VENDOR	3/13/2013
	6007-PLN-AGE-57-54-6902	Plan Views	Drawing	5	CIVIL -1	VENDOR	3/13/2013
	6007-PLN-AGE-57-54-6903	Plan Views & Details	Drawing	5	CIVIL -1	VENDOR	3/13/2013
	6007-PLN-AGE-57-54-6904	Elevation of Frame A & B	Drawing	5	CIVIL -1	VENDOR	3/13/2013
	6007-PLN-AGE-57-54-6905	Elevation of Fraame 1 to 5	Drawing	5	CIVIL -1	VENDOR	3/13/2013
	6007-PLN-AGE-57-54-6906	Connection Details for Frame A & B	Drawing	5	CIVIL -1	VENDOR	3/13/2013
	6007-PLN-AGE-57-54-6907	Connection Details for Frame 1 to 5	Drawing	5	CIVIL -1	VENDOR	3/13/2013
	6007-PLN-AGE-57-54-6908	Connection Details for Plan at EL 2064'-3" & 2070'-3"	Drawing	5	CIVIL -1	VENDOR	3/13/2013
	6007-PLN-AGE-57-54-6909	Staircase & Baseplate Details	Drawing	5	CIVIL -1	VENDOR	3/13/2013
	6007-CAL-AGE-57-54-6700	Calculation Report	Calculation	0	CIVIL -1	VENDOR	3/13/2013
	6007-PLN-AGE-57-54-6700	Cover Sheet	Drawing	0	CIVIL -1	VENDOR	3/13/2013
	6007-PLN-AGE-57-54-6701	General Notes	Drawing	0	CIVIL -1	VENDOR	3/13/2013
	6007-PLN-AGE-57-54-6702	Plan View	Drawing	0	CIVIL -1	VENDOR	3/13/2013
	6007-PLN-AGE-57-54-6703	Plan View & Details	Drawing	0	CIVIL -1	VENDOR	3/13/2013
	6007-PLN-AGE-57-54-6704	Elevation A & B	Drawing	0	CIVIL -1	VENDOR	3/13/2013
	6007-PLN-AGE-57-54-6705	Elevation of Frame 1 to 5	Drawing	0	CIVIL -1	VENDOR	3/13/2013
	6007-PLN-AGE-57-54-6706	Staircase & Base plate Details	Drawing	0	CIVIL -1	VENDOR	3/13/2013
	6007-PLN-AGE-57-54-6707	Connection Detail	Drawing	0	CIVIL -1	VENDOR	3/13/2013
	6007-PLN-AGE-57-54-6708	Connection Detail	Drawing	0	CIVIL -1	VENDOR	3/13/2013
	6007-PLN-AGE-57-54-6709	Connection Detail	Drawing	0	CIVIL -1	VENDOR	3/13/2013
	6007-TMT-AGE-ATE-0993	AG Transmittal	Drawing		CIVIL -1	VENDOR	3/13/2013
	6007-CAL-AGE-57-52-4950-R03	Main HTF pipe support foundations in PSV areas. Alpha Plant	Calculation	3	CIVIL -1	VENDOR	3/18/2013
	6007-LIS-AGE-58-52-2401-R03	ordiantes list for Main HTF pipe support foundations in PSV areas. Alpha pl	List	3	CIVIL -1	VENDOR	3/18/2013
	6007-PLN-AGE-57-52-2600-R03	Alpha Plant. HTF Pipes support foundations in PSV areas. Cover sheet	Drawing	3	CIVIL -1	VENDOR	3/18/2013
	6007-PLN-AGE-57-52-2601-R03	Alpha Plant. HTF Pipes support foundations in PSV areas. General Notes	Drawing	3	CIVIL -1	VENDOR	3/18/2013
	6007-PLN-AGE-57-52-2602-R03	Plant. HTF Pipes support foundations in PSV areas. Foundations plan & coor	Drawing	3	CIVIL -1	VENDOR	3/18/2013
	6007-PLN-AGE-57-52-2603-R03	lpha Plant. HTF Pipes support foundations in PSV areas. Sections and details	Drawing	3	CIVIL -1	VENDOR	3/18/2013
	6007-PLN-AGE-57-52-2604-R03	pha Plant. HTF Pipes support foundations in PSV areas. Sections and details	Drawing	3	CIVIL -1	VENDOR	3/18/2013
	6007-PLN-AGE-57-52-2605-R03	pha Plant. HTF Pipes support foundations in PSV areas. Sections and details	Drawing	3	CIVIL -1	VENDOR	3/18/2013
	6007-CAL-AGE-58-52-2400-R03	ulation report for Central plant. HTF main pipe support foundation. Alpha p	Calculation	3	CIVIL -1	VENDOR	3/18/2013
	6007-LIS-AGE-58-52-2400-R03	ordiantes list for Central plant. HTF main pipe support foundation. Alpha pl	List	3	CIVIL -1	VENDOR	3/18/2013
	6007-PLN-AGE-58-52-2400-R03	Central Plant, Main HTF Pipes Support Foundations. Cover sheet	Drawing	3	CIVIL -1	VENDOR	3/18/2013
	6007-PLN-AGE-58-52-2401-R02	Central Plant, Main HTF Pipes Support Foundations. General Notes	Drawing	2	CIVIL -1	VENDOR	3/18/2013
	6007-PLN-AGE-58-52-2402-R02	Central Plant, Main HTF Pipes Support Foundations. Foundations plan	Drawing	2	CIVIL -1	VENDOR	3/18/2013
	6007-PLN-AGE-58-52-2403-R03	Central Plant, Main HTF Pipes Support Foundations. Sections & details I	Drawing	3	CIVIL -1	VENDOR	3/18/2013
	6007-PLN-AGE-58-52-2404-R03	Central Plant, Main HTF Pipes Support Foundations. Sections & details II	Drawing	3	CIVIL -1	VENDOR	3/18/2013
	6007-CAL-AGE-58-52-2405 R02	culation report for Central plant. HTF main sleepres-pipes supp. II. Alpha pl	Calculation	2	CIVIL -1	VENDOR	3/18/2013
	6007-LIS-AGE-58-52-2405_R02	ordinates list for Central plant. HTF main sleepres-pipes supp. II. Alpha pla	List	2	CIVIL -1	VENDOR	3/18/2013
	6007-PLN-AGE-58-52-2405-R02	Central Plant, Main HTF Pipes Support Foundations II. Cover sheet	Drawing	2	CIVIL -1	VENDOR	3/18/2013
	6007-PLN-AGE-58-52-2405-R02	Central Plant, Main HTF Pipes Support Foundations II. General Notes	Drawing	2	CIVIL -1	VENDOR	3/18/2013
	6007-PLN-AGE-58-52-2407-R02	Central Plant, Main HTF Pipes Support Foundations II. Foundations plan	Drawing	2	CIVIL -1	VENDOR	3/18/2013
	6007-PLN-AGE-58-52-2408-R02	Central Plant, Main HTF Pipes Support Foundations II. Sections & details	Drawing	2	CIVIL -1	VENDOR	3/18/2013
	6007-CAL-AGE-58-52-2410-R02	culation report for Central Plant, HTF Mian Sleepers-Pipes Supp. III. Alpha P	Calculation	2	CIVIL -1	VENDOR	3/18/2013
	6007-LIS-AGE-58-52-2410-R02	ordinates list for Central Plant, HTF Main Sleepers-Pipes Supp. III. Alpha Pla	List	2	CIVIL -1	VENDOR	3/18/2013
	6007-PLN-AGE-58-52-2410-R02	Central Plant, Main HTF Pipes Support Foundations III. Cover sheet	Drawing	2	CIVIL -1	VENDOR	3/18/2013
	6007-PLN-AGE-58-52-2411-R02	Central Plant, Main HTF Pipes Support Foundations III. General Notes	Drawing	2	CIVIL -1	VENDOR	3/18/2013
	6007-PLN-AGE-58-52-2412-R02	Central Plant, Main HTF Pipes Support Foundations III. General Notes	Drawing	2	CIVIL -1	VENDOR	3/18/2013
	6007-PLN-AGE-58-52-2413-R02	Central Plant, Main HTF Pipes Support Foundations III. Sections & details	Drawing	2	CIVIL -1	VENDOR	3/18/2013
	6007-PLN-AGE-58-52-2414-R02	Central Plant, Main HTF Pipes Support Foundations III. Sections & details II	Drawing	2	CIVIL -1	VENDOR	3/18/2013
	6007-PLN-AGE-58-52-2415-R02	Central Plant, Main HTF Pipes Support Foundations III. Sections & details III	Drawing	2	CIVIL -1	VENDOR	3/18/2013
	6007-CAL-AGE-57-52-6277	Report for DrainageChannel Crossing Pipe Support Steel Truss Foundation	Calculation	4	CIVIL -1	VENDOR	3/19/2013
	6007-PLN-AGE-57-52-6900	nel Crossing Far West Field Beta, HTF Pipe Support Steel Truss Foundations	Drawing	7	CIVIL -1	VENDOR	3/19/2013
	6007-PLN-AGE-57-52-6901	el Crossing Far West Field Beta, HTF Pipe Support Steel Truss Foundations	Drawing	6	CIVIL -1	VENDOR	3/19/2013
	6007-PLN-AGE-57-52-6902	West Field Beta, HTF Pipe Support Steel Truss Foundations Elevation, Plan	Drawing	7	CIVIL -1	VENDOR	3/19/2013
	6007-PLN-AGE-57-52-6903	West Field Beta, HTF Pipe Support Steel Truss Foundations Plan, Section ar	Drawing	6	CIVIL -1	VENDOR	3/19/2013
	6007-PLN-AGE-57-52-6904	r West Field Beta, HTF Pipe Support Steel Truss Foundations Plan, Section a	Drawing	7	CIVIL -1	VENDOR	3/19/2013
	6007-PLN-AGE-57-52-6905	West Field Beta, HTF Pipe Support Steel Truss Foundations Elevation, Plan &	Drawing	7	CIVIL -1	VENDOR	3/19/2013
	Sketch STGF	Sketch STGF	Drawing	na	CIVIL -1	VENDOR	3/19/2013
	6007-PLN-AGE-25-52-4041	Field Alpha Steam Generator Foundation Elevations (View Only)	Drawing	3	CIVIL -1	VENDOR	3/19/2013
	RFI 0005	Steam Generator Turbine Foundations	Drawing	na	CIVIL -1	VENDOR	3/19/2013
	xxxx-xxx-xxx-xx-xx-xxxx	Steam Turbine Supports L2 & L3	Drawing	0	CIVIL -1	VENDOR	3/19/2013
	RFI 0006	Steam Generator Turbine Foundations	Drawing	na	CIVIL -1	VENDOR	3/19/2013
	S1	Abengoa Solar Elevator 3-15-13	Drawing	n.a.	CIVIL -1	VENDOR	3/21/2013
	6007-PLN-WSI-00-00-A001	Abengoa Solar Architectural 3-15-13	Drawing	n.a.	CIVIL -1	VENDOR	3/21/2013
	6007-PLN-WSI-42-73-M001	Abengoa Solar Mechanical 3-15-13	Drawing	n.a.	CIVIL -1	VENDOR	3/21/2013
	6007-PLN-WSI-29-82-P001	Abengoa Solar Plumbing 3-15-13	Drawing	n.a.	CIVIL -1	VENDOR	3/21/2013
	1.01	Abengoa Solar Structural Plans 3-15-13	Drawing	n.a.	CIVIL -1	VENDOR	3/21/2013
	6007-PLN-ATM-18-53-F1.0	Abengoa Solar Foundation Plans 3-15-13	Drawing	n.a.	CIVIL -1	VENDOR	3/21/2013
	2	Abengoa Solar Foundation Calcs 3-15-13	Drawing	n.a.	CIVIL -1	VENDOR	3/21/2013

ABENER TEYMA MOJAVE

ompliance No.: GEN-2
Job : Mojave Solar Project
ate: 04/10/2012 Description: Civil Master Drawing List

Line No.	Sheet No.	Description	Type of Document	Revision Number	Applicable Condition of Certification	Vendor Supplied or EOR	Submittal Date
	1.01	Abengoa Solar Structural Calcs 3-15-13	Drawing	n.a.	CIVIL -1	VENDOR	3/21/2013
	LTG-1C	Abengoa T24 Electrical 3-15-13	Drawing	n.a.	CIVIL -1	VENDOR	3/21/2013
	C13025	Abengoa T 24 Mech & Envl 3-15-13	Drawing	n.a.	CIVIL -1	VENDOR	3/21/2013
	C13025	HVAC_Heating_&_Cooling_Calcs	Drawing	n.a.	CIVIL -1	VENDOR	3/21/2013
	6007-PLN-WSI-27-31-E001	Abengoa Solar E-001 3-15-13	Drawing	n.a.	CIVIL -1	VENDOR	3/21/2013
	6007-PLN-WSI-27-31-E002	Abengoa Solar E-002 3-15-13	Drawing	n.a.	CIVIL -1	VENDOR	3/21/2013
	6007-PLN-WSI-27-31-E003	Abengoa Solar E-003 3-15-13	Drawing	n.a.	CIVIL -1	VENDOR	3/21/2013
	6007-PLN-WSI-27-31-E004	Abengoa Solar E-004 3-15-13	Drawing	n.a.	CIVIL -1	VENDOR	3/21/2013
	6007-PLN-WSI-27-31-E005	Abengoa Solar E-005 3-15-13	Drawing	n.a.	CIVIL -1	VENDOR	3/21/2013
	6007-PLN-AGE-11-50-0000-R04	Effluent water line. Alpha plant. Cover sheet	Drawing	4	CIVIL -1	VENDOR	3/21/2013
	6007-PLN-AGE-11-50-0001-R04	Effluent water line. Alpha plant. General Notes	Drawing	4	CIVIL -1	VENDOR	3/21/2013
	6007-PLN-AGE-11-50-0002-R04	Effluent water line. Alpha plant. Plan 1	Drawing	4	CIVIL -1	VENDOR	3/21/2013
	6007-PLN-AGE-11-50-0003-R04	Effluent water line. Alpha plant. Plan 2	Drawing	4	CIVIL -1	VENDOR	3/21/2013
	6007-PLN-AGE-11-50-0004-R04	Effluent water line. Alpha plant. Plan 3	Drawing	4	CIVIL -1	VENDOR	3/21/2013
	6007-PLN-AGE-11-50-0005-R04	Effluent water line. Alpha plant. Cross sections	Drawing	4	CIVIL -1	VENDOR	3/21/2013
	6007-PLN-AGE-11-50-0006-R04	Effluent water line. Alpha plant. Details	Drawing	4	CIVIL -1	VENDOR	3/21/2013
	6007-PLN-GFG-00-50-C551	Alpha Site plan Evaporation ponds/Bioremediation facilities.	Drawing	4	CIVIL -1	VENDOR	3/23/2013
	6007-PLN-GFG-00-50-C552	a Site, Grading and Drainage Plan, Evaporation ponds/Bioremediation fac	Drawing	4	CIVIL -1	VENDOR	3/23/2013
	6007-PLN-GFG-00-50-C554	Alpha Site Details, Evaporation ponds/ Bioremediation facilities	Drawing	5	CIVIL -1	VENDOR	3/23/2013
	6007-PLN-GFG-00-50-C555	Alpha site, Details 2, Evaporation ponds/ bioremediation facilities.	Drawing	4	CIVIL -1	VENDOR	3/23/2013
	6007-PLN-GFG-00-50-C556	pha site, Bioremediation facilities. Evaporation ponds/Bioremediation facilit	Drawing	3	CIVIL -1	VENDOR	3/23/2013
	6007-PLN-GFG-00-50-C604	site, Evaporation ponds, Force main.Evaporation ponds/Bioremediation fac	Drawing	3	CIVIL -1	VENDOR	3/23/2013
	6007-CAL-AGE-58-52-6400-R02	Calculation Report for HTF pipe supports foundations South Beta Plant	Calculation	2	CIVIL -1	VENDOR	3/22/2013
	6007-LIS-AGE-58-52-6400-R01	Coordiantes List for Central Plant South. HTF main pipe supports	List	1	CIVIL -1	VENDOR	3/22/2013
	6007-PLN-AGE-58-52-6400-R03	Beta Central Plant, HTF Pipe Support Foundations. Cover Sheet	Drawing	3	CIVIL -1	VENDOR	3/22/2013
	6007-PLN-AGE-58-52-6401-R03	Beta Central Plant, HTF Pipe Support Foundations. General Notes	Drawing	3	CIVIL -1	VENDOR	3/22/2013
	6007-PLN-AGE-58-52-6402-R03	Beta Central Plant, HTF Pipe Support Foundations. Foundation Plan	Drawing	3	CIVIL -1	VENDOR	3/22/2013
	6007-PLN-AGE-58-52-6404-R03	Beta Central Plant, HTF Pipe Support Foundations. Sections and Details I	Drawing	3	CIVIL -1	VENDOR	3/22/2013
	6007-CAL-AGE-23-52-4000	Beta Central Plant, HTF Pipe Support Foundations. Sections and Details II	Calculation	3	CIVIL -1	VENDOR	3/22/2013
	6007-CAL-AGE-23-52-4000	Calculation Report for Exitation Transformer Foundation. Alpha Plant	Calculation	1	CIVIL -1	VENDOR	3/22/2013
	6007-CAL-AGE-23-52-8000	Calculation Report for Exitation Transformer Foundation. Beta Plant	Calculation	1	CIVIL -1	VENDOR	3/22/2013
	6007-PLN-AGE-23-52-4000_Rev 01	Alpha. Exitation Transformer #33 Foundation. Cover Sheet	Drawing	1	CIVIL -1	VENDOR	3/22/2013
	6007-PLN-AGE-23-52-4020_Rev 01	Alpha. Exitation Transformer #33 Foundation. General Notes	Drawing	1	CIVIL -1	VENDOR	3/22/2013
	6007-PLN-AGE-23-52-4040_Rev 01	Alpha. Exitation Transformer #33 Foundation. Fouindation Plan & details	Drawing	1	CIVIL -1	VENDOR	3/22/2013
	6007-PLN-AGE-23-52-8000_Rev 01	Beta. Exitation Transformer #33 Foundation. Cover Sheet	Drawing	1	CIVIL -1	VENDOR	3/22/2013
	6007-PLN-AGE-23-52-8020_Rev 01	Beta. Exitation Transformer #33 Foundation. General Notes	Drawing	1	CIVIL -1	VENDOR	3/22/2013
	6007-PLN-AGE-23-52-8040_Rev 01	Beta. Exitation Transformer #33 Foundation. Fouindation Plan & details	Drawing	1	CIVIL -1	VENDOR	3/22/2013
	6007-LIS-AGE-57-52-6601-R02	Main HTF pipe support foundations in PSV areas. Beta Plant	List	2	CIVIL -1	VENDOR	3/25/2013
	6007-PLN-AGE-57-52-6600-R02	Main HTF pipe support foundations in PSV areas. Cover sheet	Drawing	2	CIVIL -1	VENDOR	3/25/2013
	6007-PLN-AGE-57-52-6601-R02	Main HTF pipe support foundations in PSV areas. General Notes	Drawing	2	CIVIL -1	VENDOR	3/25/2013
	6007-PLN-AGE-57-52-6602-R02	n HTF pipe support foundations in PSV areas.East & West area foundations	Drawing	2	CIVIL -1	VENDOR	3/25/2013
	6007-PLN-AGE-57-52-6603-R02	HTF pipe support foundations in PSV areas.North & South area foundation	Drawing	2	CIVIL -1	VENDOR	3/25/2013
	6007-PLN-AGE-57-52-6604-R02	Main HTF pipe support foundations in PSV areas.Sections & details I	Drawing	2	CIVIL -1	VENDOR	3/25/2013
	6007-PLN-AGE-57-52-6605-R02	Main HTF pipe support foundations in PSV areas.Sections & details II	Drawing	2	CIVIL -1	VENDOR	3/25/2013
	6007-PLN-AGE-57-52-6606-R02	Main HTF pipe support foundations in PSV areas.Sections & details III	Drawing	2	CIVIL -1	VENDOR	3/25/2013
	6007-PLN-AGE-57-52-6607-R02	Main HTF pipe support foundations in PSV areas.Sections & details IV	Drawing	2	CIVIL -1	VENDOR	3/25/2013
	6007-PLN-AGE-57-52-6608-R02	Main HTF pipe support foundations in PSV areas.Sections & details V	Drawing	2	CIVIL -1	VENDOR	3/25/2013
	6007-PLN-AGE-57-52-6609-R02	Main HTF pipe support foundations in PSV areas.Sections & details VI	Drawing	2	CIVIL -1	VENDOR	3/25/2013
	6007-PLN-AGE-57-52-6610-R02	Main HTF pipe support foundations in PSV areas.Sections & details VII	Drawing	2	CIVIL -1	VENDOR	3/25/2013
	6007-PLN-AGE-57-52-6611-R00	Main HTF pipe support foundations in PSV areas.Sections & details VIII	Drawing	0	CIVIL -1	VENDOR	3/25/2013
	6007-PLN-GFG-00-50-C551	Alpha Site plan	Drawing	4	CIVIL -1	VENDOR	3-24-2013
	6007-PLN-GFG-00-50-C552	Alpha Site, Grading and Drainage Plan	Drawing	4	CIVIL -1	VENDOR	3-24-2013
	6007-PLN-GFG-00-50-C554	Alpha Site Details 1	Drawing	5	CIVIL -1	VENDOR	3-24-2013
	6007-PLN-GFG-00-50-C555	Alpha site, Details 2	Drawing	4	CIVIL -1	VENDOR	3-24-2013
	6007-PLN-GFG-00-50-C556	Alpha site, Bioremediation facilities	Drawing	3	CIVIL -1	VENDOR	3-24-2013
	6007-PLN-GFG-00-50-C604	Alpha site, Evaporation ponds, Force main	Drawing	3	CIVIL -1	VENDOR	3-24-2013
	6007-PLN-AGE-29-55-4000	Cover Sheet	Drawing	6	CIVIL -1	VENDOR	3-24-2013
	6007-PLN-AGE-29-55-4020	General notes	Drawing	6	CIVIL -1	VENDOR	3-24-2013
	6007-PLN-AGE-29-55-4040	underground plan	Drawing	6	CIVIL -1	VENDOR	3-24-2013
	6007-PLN-AGE-29-55-4060	Details	Drawing	6	CIVIL -1	VENDOR	3-24-2013
	6007-PLN-AGE-29-55-4065	Details	Drawing	6	CIVIL -1	VENDOR	3-24-2013
	6007-PLN-AGE-00-50-S001	General civil and Structural notes	Drawing	3	CIVIL -1	VENDOR	3-24-2013
	6007-CAL-AGE-58-52-2400-R04	Central plant, HTF Main Sleepers-Pipes Support Foundations. Alpha plant	Calculation	4	CIVIL -1	VENDOR	3/29/2013
	6007-LIS-AGE-58-52-2400-R03	Central plant, HTF Main Sleepers-Pipes Support Foundations. Alpha plant	List	3	CIVIL -1	VENDOR	3/29/2013
	6007-PLN-AGE-58-52-2400-R03	r project. Alpha plant. Central plant, Main HTF Pipes support foundations.	Drawing	3	CIVIL -1	VENDOR	3/29/2013
	6007-PLN-AGE-58-52-2401-R03	project. Alpha plant. Central plant, Main HTF Pipes support foundations. G	Drawing	3	CIVIL -1	VENDOR	3/29/2013
	6007-PLN-AGE-58-52-2402-R02	roject. Alpha plant. Central plant, Main HTF Pipes support foundations. Fo	Drawing	2	CIVIL -1	VENDOR	3/29/2013
	6007-PLN-AGE-58-52-2403-R04	bject. Alpha plant. Central plant, Main HTF Pipes support foundations. Sect	Drawing	4	CIVIL -1	VENDOR	3/29/2013
	6007-PLN-AGE-58-52-2404-R04	bject. Alpha plant. Central plant, Main HTF Pipes support foundations. Secti	Drawing	4	CIVIL -1	VENDOR	3/29/2013
	6007-PLN-AGE-58-52-2415-R03	bject. Alpha plant. Central plant, Main HTF Pipes support foundations. Secti	Drawing	3	CIVIL -1	VENDOR	3/29/2013
	6007-CAL-AGE-58-52-2405-R03	Central plant, HTF Main Sleepers-Pipes Supp. II. Alpha plant	Calculation	3	CIVIL -1	VENDOR	3/29/2013
	6007-LIS-AGE-58-52-2405_R02	Central plant, HTF Main Sleepers-Pipes Supp. II. Alpha plant	List	2	CIVIL -1	VENDOR	3/29/2013
	6007-PLN-AGE-58-52-2405-R02	project. Alpha plant. Central plant, Main HTF Pipes support foundations II.	Drawing	2	CIVIL -1	VENDOR	3/29/2013
	6007-PLN-AGE-58-52-2406-R03	project. Alpha plant. Central plant, Main HTF Pipes support foundations II. (	Drawing	3	CIVIL -1	VENDOR	3/29/2013
	6007-PLN-AGE-58-52-2407-R02	roject. Alpha plant. Central plant, Main HTF Pipes support foundations II. Fo	Drawing	2	CIVIL -1	VENDOR	3/29/2013
	6007-PLN-AGE-58-52-2408-R03	bject. Alpha plant. Central plant, Main HTF Pipes support foundations II. Sec	Drawing	3	CIVIL -1	VENDOR	3/29/2013
	6007-CAL-AGE-58-52-2410-R03	Central plant, HTF Main Sleepers-Pipes Supp. III. Alpha plant	Calculation	3	CIVIL -1	VENDOR	3/29/2013
	6007-LIS-AGE-58-52-2410-R02	Central plant, HTF Main Sleepers-Pipes Supp. III. Alpha plant	List	2	CIVIL -1	VENDOR	3/29/2013
	6007-PLN-AGE-58-52-2410-R02	project. Alpha plant. Central plant, Main HTF Pipes support foundations III.	Drawing	2	CIVIL -1	VENDOR	3/29/2013

ABENER TEYMA MOJAVE

ompliance No.: GEN-2
Job : Mojave Solar Project
ate: 04/10/2012 Description: Civil Master Drawing List

Line No.	Sheet No.	Description	Type of Document	Revision Number	Applicable Condition of Certification	Vendor Supplied or EOR	Submittal Date
	6007-PLN-AGE-58-52-2411-R03	project. Alpha plant. Central plant, Main HTF Pipes support foundations III.	Drawing	3	CIVIL -1	VENDOR	3/29/2013
	6007-PLN-AGE-58-52-2412-R02	oject. Alpha plant. Central plant, Main HTF Pipes support foundations III. Fo	Drawing	2	CIVIL -1	VENDOR	3/29/2013
	6007-PLN-AGE-58-52-2413-R03	ect. Alpha plant. Central plant, Main HTF Pipes support foundations III. Sec	Drawing	3	CIVIL -1	VENDOR	3/29/2013
	6007-PLN-AGE-58-52-2414-R03	ect. Alpha plant. Central plant, Main HTF Pipes support foundations III. Sec	Drawing	3	CIVIL -1	VENDOR	3/29/2013
	6007-CAL-AGE-57-52-4950-R03	Main HTF Pipes Support Foundations in PSV areas. Alpha plant	Calculation	3	CIVIL -1	VENDOR	3/29/2013
	6007-LIS-AGE-58-52-2401-R03.pdf	Main HTF pipes support foundations in PSV areas. Alpha Plant	List	3	CIVIL -1	VENDOR	3/29/2013
	6007-PLN-AGE-57-52-2600-R03.pdf	solar project. Alpha plant. HTF Pipes support foundations in PSV Areas. Cov	Drawing	3	CIVIL -1	VENDOR	3/29/2013
	6007-PLN-AGE-57-52-2601-R04.pdf	olar project. Alpha plant. HTF Pipes support foundations in PSV Areas. Gene	Drawing	4	CIVIL -1	VENDOR	3/29/2013
	6007-PLN-AGE-57-52-2602-R03.pdf	ct. Alpha plant. HTF Pipes support foundations in PSV Areas. Foundations p	Drawing	3	CIVIL -1	VENDOR	3/29/2013
	6007-PLN-AGE-57-52-2603-R04.pdf	r project. Alpha plant. HTF Pipes support foundations in PSV Areas. Section	Drawing	4	CIVIL -1	VENDOR	3/29/2013
	6007-PLN-AGE-57-52-2604-R04.pdf	r project. Alpha plant. HTF Pipes support foundations in PSV Areas. Section	Drawing	4	CIVIL -1	VENDOR	3/29/2013
	6007-PLN-AGE-57-52-2605-R04.pdf	r project. Alpha plant. HTF Pipes support foundations in PSV Areas. Section	Drawing	4	CIVIL -1	VENDOR	3/29/2013
	6007-PLN-AGE-58-52-2485	Cover sheet	Drawing	2	CIVIL -1	VENDOR	3/29/2013
	6007-PLN-AGE-58-52-2486	General notes	Drawing	2	CIVIL -1	VENDOR	3/29/2013
	6007-PLN-AGE-58-52-2487	Basin layout	Drawing	2	CIVIL -1	VENDOR	3/29/2013
	6007-PLN-AGE-58-52-2488	Sections & staircase details	Drawing	2	CIVIL -1	VENDOR	3/29/2013
	6007-PLN-AGE-58-52-2489	Sump and trench details	Drawing	2	CIVIL -1	VENDOR	3/29/2013
	6007-PLN-AGE-58-52-2490	Pump A-MP-204A foundation plan, sections & details	Drawing	2	CIVIL -1	VENDOR	3/29/2013
	6007-PLN-AGE-58-52-2491	Tank A-MV-206A foundation plan, sections & details	Drawing	2	CIVIL -1	VENDOR	3/29/2013
	6007-PLN-AGE-58-52-2492	Pedestal details & coordinates	Drawing	2	CIVIL -1	VENDOR	3/29/2013
	6007-CAL-AGE-58-52-2485	Overflow basin calc report	Calculation	1	CIVIL -1	VENDOR	3/29/2013
	6007-CAL-AGE-58-52-2490	Pump report	Calculation	1	CIVIL -1	VENDOR	3/29/2013
	6007-PLN-AGE-58-52-6485	Cover sheet	Drawing	2	CIVIL -1	VENDOR	3/29/2013
	6007-PLN-AGE-58-52-6486	General notes	Drawing	2	CIVIL -1	VENDOR	3/29/2013
	6007-PLN-AGE-58-52-6487	Basin layout	Drawing	2	CIVIL -1	VENDOR	3/29/2013
	6007-PLN-AGE-58-52-6488	Sections & staircase details	Drawing	2	CIVIL -1	VENDOR	3/29/2013
	6007-PLN-AGE-58-52-6489	Sump and trench details	Drawing	2	CIVIL -1	VENDOR	3/29/2013
	6007-PLN-AGE-58-52-6490	Pump A-MP-204A foundation plan, sections & details	Drawing	2	CIVIL -1	VENDOR	3/29/2013
	6007-PLN-AGE-58-52-6491	Tank A-MV-206A foundation plan, sections & details	Drawing	2	CIVIL -1	VENDOR	3/29/2013
	6007-PLN-AGE-58-52-6492	Pedestal details & coordinates	Drawing	2	CIVIL -1	VENDOR	3/29/2013
	6007-CAL-AGE-58-52-6485	Overflow basin calc report	Calculation	1	CIVIL -1	VENDOR	3/29/2013
	6007-CAL-AGE-58-52-6490	Pump report	Calculation	1	CIVIL -1	VENDOR	3/29/2013
	6007-PLN-AGE-18-52-4200	Cover sheet	Drawing	1	CIVIL -1	VENDOR	3/29/2013
	6007-PLN-AGE-18-52-4220	General notes	Drawing	1	CIVIL -1	VENDOR	3/29/2013
	6007-PLN-AGE-18-52-4240	Foundation drawings	Drawing	2	CIVIL -1	VENDOR	3/29/2013
	6007-CAL-AGE-18-52-4200	Calc report	Calculation	2	CIVIL -1	VENDOR	3/29/2013
	6007-PLN-AGE-18-52-8200	Cover sheet	Drawing	1	CIVIL -1	VENDOR	3/29/2013
	6007-PLN-AGE-18-52-8220	General notes	Drawing	1	CIVIL -1	VENDOR	3/29/2013
	6007-PLN-AGE-18-52-8240	Foundation drawings	Drawing	2	CIVIL -1	VENDOR	3/29/2013
	6007-CAL-AGE-18-52-8200	Calc report	Calculation	2	CIVIL -1	VENDOR	3/29/2013
	6007-PLN-AGE-18-52-4100	Cover sheet	Drawing	2	CIVIL -1	VENDOR	4/2/2013
	6007-PLN-AGE-18-52-4120	General notes	Drawing	1	CIVIL -1	VENDOR	4/2/2013
	6007-PLN-AGE-18-52-4140	Foundation drawings	Drawing	2	CIVIL -1	VENDOR	4/2/2013
	6007-CAL-AGE-18-52-4100	Calc report	Calculation	2	CIVIL -1	VENDOR	4/2/2013
	6007-PLN-AGE-18-52-8100	Cover sheet	Drawing	2	CIVIL -1	VENDOR	4/2/2013
	6007-PLN-AGE-18-52-8120	General notes	Drawing	1	CIVIL -1	VENDOR	4/2/2013
	6007-PLN-AGE-18-52-8140	Foundation drawings	Drawing	2	CIVIL -1	VENDOR	4/2/2013
	6007-CAL-AGE-18-52-8100	Calc report	Calculation	2	CIVIL -1	VENDOR	4/2/2013
	6007-PLN-AGE-18-52-4200	Cover sheet	Drawing	2	CIVIL -1	VENDOR	4/2/2013
	6007-PLN-AGE-18-52-4220	General notes	Drawing	1	CIVIL -1	VENDOR	4/2/2013
	6007-PLN-AGE-18-52-4240	Foundation drawings	Drawing	2	CIVIL -1	VENDOR	4/2/2013
	6007-CAL-AGE-18-52-4200	Calc report	Calculation	2	CIVIL -1	VENDOR	4/2/2013
	6007-PLN-AGE-18-52-8200	Cover sheet	Drawing	2	CIVIL -1	VENDOR	4/2/2013
	6007-PLN-AGE-18-52-8220	General notes	Drawing	1	CIVIL -1	VENDOR	4/2/2013
	6007-PLN-AGE-18-52-8240	Foundation drawings	Drawing	2	CIVIL -1	VENDOR	4/2/2013
	6007-CAL-AGE-18-52-8200	Calc report	Calculation	2	CIVIL -1	VENDOR	4/2/2013
	6007-PLN-AGE-18-52-4300	Cover sheet	Drawing	1	CIVIL -1	VENDOR	4/1/2013
	6007-PLN-AGE-18-52-4320	General notes	Drawing	1	CIVIL -1	VENDOR	4/1/2013
	6007-PLN-AGE-18-52-4340	Foundation drawings	Drawing	2	CIVIL -1	VENDOR	4/1/2013
	6007-CAL-AGE-18-52-4300	Calc report	Calculation	2	CIVIL -1	VENDOR	4/1/2013
	6007-PLN-AGE-18-52-8300	Cover sheet	Drawing	1	CIVIL -1	VENDOR	4/1/2013
	6007-PLN-AGE-18-52-8320	General notes	Drawing	1	CIVIL -1	VENDOR	4/1/2013
	6007-PLN-AGE-18-52-8340	Foundation drawings	Drawing	2	CIVIL -1	VENDOR	4/1/2013
	6007-CAL-AGE-18-52-8300	Calc report	Calculation	2	CIVIL -1	VENDOR	4/1/2013
	6007-PLN-AGE-41-52-4000	Cover sheet	Drawing	2	CIVIL -1	VENDOR	4/1/2013
	6007-PLN-AGE-41-52-4020	General notes	Drawing	2	CIVIL -1	VENDOR	4/1/2013
	6007-PLN-AGE-41-52-4040	Foundation drawings	Drawing	2	CIVIL -1	VENDOR	4/1/2013
	6007-CAL-AGE-41-52-4000	Calc report	Calculation	2	CIVIL -1	VENDOR	4/1/2013
	6007-PLN-AGE-41-52-8000	Cover sheet	Drawing	2	CIVIL -1	VENDOR	4/1/2013
	6007-PLN-AGE-41-52-8020	General notes	Drawing	2	CIVIL -1	VENDOR	4/1/2013
	6007-PLN-AGE-41-52-8040	Foundation drawings	Drawing	2	CIVIL -1	VENDOR	4/1/2013
	6007-CAL-AGE-41-52-8000	Calc report	Calculation	2	CIVIL -1	VENDOR	4/1/2013
	6007-PLN-AGE-16-52-4000	Cover sheet	Drawing	1	CIVIL -1	VENDOR	4/1/2013
	6007-PLN-AGE-16-52-4020	General notes	Drawing	1	CIVIL -1	VENDOR	4/1/2013
	6007-PLN-AGE-16-52-4040	Foundation drawings	Drawing	1	CIVIL -1	VENDOR	4/1/2013
	6007-CAL-AGE-16-52-4010	Calc report	Calculation	0	CIVIL -1	VENDOR	4/1/2013
	6007-PLN-AGE-16-52-8000	Cover sheet	Drawing	1	CIVIL -1	VENDOR	4/1/2013
	6007-PLN-AGE-16-52-8020	General notes	Drawing	1	CIVIL -1	VENDOR	4/1/2013
	6007-PLN-AGE-16-52-8040	Foundation drawings	Drawing	1	CIVIL -1	VENDOR	4/1/2013

ABENER TEYMA MOJAVE

ompliance No.: GEN-2
Job : Mojave Solar Project
ate: 04/10/2012 Description: Civil Master Drawing List

Line No.	Sheet No.	Description	Type of Document	Revision Number	Applicable Condition of Certification	Vendor Supplied or EOR	Submittal Date
	6007-CAL-AGE-16-52-8010	Calc report	Calculation	0	CIVIL -1	VENDOR	4/1/2013
	6007-PLN-AGE-40-52-4100-R02	Cover sheet	Drawing	2	CIVIL -1	VENDOR	4/1/2013
	6007-PLN-AGE-40-52-4120-R02	General notes	Drawing	2	CIVIL -1	VENDOR	4/1/2013
	6007-PLN-AGE-40-52-4140-R02	Arrangment plan view	Drawing	2	CIVIL -1	VENDOR	4/1/2013
	6007-PLN-AGE-40-52-4141-R02	Mat bottom reinforcement	Drawing	2	CIVIL -1	VENDOR	4/1/2013
	6007-PLN-AGE-40-52-4142-R02	Mat top reinforcement	Drawing	2	CIVIL -1	VENDOR	4/1/2013
	6007-PLN-AGE-40-52-4143-R00	Extra top reinforcement	Drawing	0	CIVIL -1	VENDOR	4/1/2013
	6007-PLN-AGE-40-52-4144-R00	Extra bottom reinforcement	Drawing	0	CIVIL -1	VENDOR	4/1/2013
	6007-PLN-AGE-40-52-4145-R00	Mat reinforcement details	Drawing	0	CIVIL -1	VENDOR	4/1/2013
	6007-PLN-AGE-40-52-4150-R00	Drainage	Drawing	0	CIVIL -1	VENDOR	4/1/2013
	6007-PLN-AGE-40-52-4160-R00	Pier and rack support anchor layout	Drawing	0	CIVIL -1	VENDOR	4/1/2013
	6007-PLN-AGE-40-52-4161-R00	Pier and rack support anchor details	Drawing	0	CIVIL -1	VENDOR	4/1/2013
	6007-PLN-AGE-40-52-4162-R00	Anchor bolts. Assemblies and details	Drawing	0	CIVIL -1	VENDOR	4/1/2013
	6007-PLN-AGE-40-52-4163-R00	Skid and bench support layout	Drawing	0	CIVIL -1	VENDOR	4/1/2013
	6007-PLN-AGE-40-52-4164-R00	Skid support details	Drawing	0	CIVIL -1	VENDOR	4/1/2013
	6007-PLN-AGE-40-52-4173-R00	Skid support layout	Drawing	0	CIVIL -1	VENDOR	4/1/2013
	6007-CAL-AGE-40-52-4000-R00	WTP foundation calc report	Calculation	2	CIVIL -1	VENDOR	4/1/2013
	6007-PLN-AGE-40-52-8100-R02	Cover sheet	Drawing	2	CIVIL -1	VENDOR	4/1/2013
	6007-PLN-AGE-40-52-8120-R02	General notes	Drawing	2	CIVIL -1	VENDOR	4/1/2013
	6007-PLN-AGE-40-52-8140-R02	Arrangment plan view	Drawing	2	CIVIL -1	VENDOR	4/1/2013
	6007-PLN-AGE-40-52-8141-R02	Mat bottom reinforcement	Drawing	2	CIVIL -1	VENDOR	4/1/2013
	6007-PLN-AGE-40-52-8142-R02	Mat top reinforcement	Drawing	2	CIVIL -1	VENDOR	4/1/2013
	6007-PLN-AGE-40-52-8143-R00	Extra top reinforcement	Drawing	0	CIVIL -1	VENDOR	4/1/2013
	6007-PLN-AGE-40-52-8144-R00	Extra bottom reinforcement	Drawing	0	CIVIL -1	VENDOR	4/1/2013
	6007-PLN-AGE-40-52-8145-R00	Mat reinforcement details	Drawing	0	CIVIL -1	VENDOR	4/1/2013
	6007-PLN-AGE-40-52-8150-R00	Drainage	Drawing	0	CIVIL -1	VENDOR	4/1/2013
	6007-PLN-AGE-40-52-8160-R00	Pier and rack support anchor layout	Drawing	0	CIVIL -1	VENDOR	4/1/2013
	6007-PLN-AGE-40-52-8161-R00	Pier and rack support anchor details	Drawing	0	CIVIL -1	VENDOR	4/1/2013
	6007-PLN-AGE-40-52-8162-R00	Anchor bolts. Assemblies and details	Drawing	0	CIVIL -1	VENDOR	4/1/2013
	6007-PLN-AGE-40-52-8163-R00	Skid and bench support layout	Drawing	0	CIVIL -1	VENDOR	4/1/2013
	6007-PLN-AGE-40-52-8164-R00	Skid support details	Drawing	0	CIVIL -1	VENDOR	4/1/2013
	6007-PLN-AGE-40-52-8173-R00	Skid support layout	Drawing	0	CIVIL -1	VENDOR	4/1/2013
	6007-CAL-AGE-40-52-8000-R00	WTP foundation calc report	Calculation	2	CIVIL -1	VENDOR	4/1/2013
	6007-PLN-AGE-16-52-4000	Cover sheet	Drawing	1	CIVIL -1	VENDOR	4/2/2013
	6007-PLN-AGE-16-52-4040	Foundation drawings	Drawing	1	CIVIL -1	VENDOR	4/2/2013
	6007-PLN-AGE-16-52-8000	Cover sheet	Drawing	1	CIVIL -1	VENDOR	4/2/2013
	6007-PLN-AGE-16-52-8040	Foundation drawings	Drawing	1	CIVIL -1	VENDOR	4/2/2013
	6007-PLN-AGE-18-52-4300	Cover sheet	Drawing	2	CIVIL -1	VENDOR	4/2/2013
	6007-PLN-AGE-18-52-4340	Foundation drawings	Drawing	2	CIVIL -1	VENDOR	4/2/2013
	6007-PLN-AGE-18-52-8300	Cover sheet	Drawing	2	CIVIL -1	VENDOR	4/2/2013
	6007-PLN-AGE-18-52-8340	Foundation drawings	Drawing	2	CIVIL -1	VENDOR	
	6007-PLN-GFG-50-C400	Cover Sheet	Drawing	0	CIVIL -1	VENDOR	4/2/2013
	6007-PLN-GFG-50-C401	General Notes, Legend and Abbreviations	Drawing	0	CIVIL -1	VENDOR	4/2/2013
	6007-PLN-GFG-50-C402	Grading and Drainage Plan 1	Drawing	0	CIVIL -1	VENDOR	4/2/2013
	6007-PLN-GFG-50-C403	Grading and Drainage Plan 2	Drawing	0	CIVIL -1	VENDOR	4/2/2013
	6007-PLN-GFG-50-C404	Details	Drawing	0	CIVIL -1	VENDOR	4/2/2013
	6007-PLN-GFG-50-C405	Site Sections	Drawing	0	CIVIL -1	VENDOR	4/2/2013
	6007-PLN-GFG-50-C406	Water Pollution Control Plan 1	Drawing	0	CIVIL -1	VENDOR	4/2/2013
	6007-PLN-GFG-50-C407	Water Pollution Control Plan 2	Drawing	0	CIVIL -1	VENDOR	4/2/2013
	Eng Temp Trailers G&D Memo	Eng Temp Trailers G&D Memo	Drawing	0	CIVIL -1	VENDOR	4/2/2013
	6007-PLN-GFG-00-50-C735	Alpha West Laydown Area	Drawing	4	CIVIL -1	VENDOR	4/2/2013
	6007-PLN-GFG-00-50-C736	Beta Island Temporary Facilities	Drawing	8	CIVIL -1	VENDOR	4/2/2013
	6007-PLN-GFG-00-50-C738	Medical Trailer Location Plan	Drawing	0	CIVIL -1	VENDOR	4/2/2013
	6007-CAL-AGE-57-52-2310-R05	ulation report for vertical loops steel frame foundations North East, Alpha I	Calculation	5	CIVIL -1	VENDOR	4/5/2013
	6007-CAL-AGE-57-52-2320-R03	ulation report for vertical loops steel frame foundations North East, Alpha I	Calculation	3	CIVIL -1	VENDOR	4/5/2013
	6007-CAL-AGE-57-52-2330-R02	ulation report for vertical loops steel frame foundations North West, Alpha	Calculation	2	CIVIL -1	VENDOR	4/5/2013
	6007-CAL-AGE-57-52-2340-R02	alculation report for vertical loops steel frame foundations West, Alpha Pla	Calculation	2	CIVIL -1	VENDOR	4/5/2013
	6007-CAL-AGE-57-52-6320-R03	alculation report for vertical loops steel frame foundations West, Beta Plan	Calculation	3	CIVIL -1	VENDOR	4/5/2013
	6007-CAL-AGE-57-52-6330_R03	alculation report for vertical loops steel frame foundations North, Beta Plan	Calculation	3	CIVIL -1	VENDOR	4/5/2013
	6007-CAL-AGE-57-52-6340-R03	lculation report for vertical loops steel frame foundations Far West, Beta Pl	Calculation	3	CIVIL -1	VENDOR	4/5/2013
	6007-CAL-AGE-58-52-3600-R02	lation report for vertical loops steel frame foundations Central Plant, Alpha	Calculation	2	CIVIL -1	VENDOR	4/5/2013
	6007-CAL-AGE-58-52-6410-R02	ion report for vertical loops steel frame foundations Central Plant North, Be	Calculation	2	CIVIL -1	VENDOR	4/5/2013
	6007-PLN-AGE-57-52-2310-R04	over sheet for vertical loops steel frame foundations North East, Alpha Plan	Drawing	4	CIVIL -1	VENDOR	4/5/2013
	6007-PLN-AGE-57-52-2311-R04	eneral notes for vertical loops steel frame foundations North East, Alpha Pla	Drawing	4	CIVIL -1	VENDOR	4/5/2013
	6007-PLN-AGE-57-52-2312-R05	.Plan and details for vertical loops steel frame foundations North East, Alpl	Drawing	5	CIVIL -1	VENDOR	4/5/2013
	6007-PLN-AGE-57-52-2320-R02	over sheet for vertical loops steel frame foundations North East, Alpha Plan	Drawing	2	CIVIL -1	VENDOR	4/5/2013
	6007-PLN-AGE-57-52-2321-R03	eneral notes for vertical loops steel frame foundations North East, Alpha Pla	Drawing	3	CIVIL -1	VENDOR	4/5/2013
	6007-PLN-AGE-57-52-2322-R04	Plan and sections for vertical loops steel frame foundations North East, Alpl	Drawing	4	CIVIL -1	VENDOR	4/5/2013
	6007-PLN-AGE-57-52-2323-R04	Plan and sections for vertical loops steel frame foundations North East, Alpl	Drawing	4	CIVIL -1	VENDOR	4/5/2013
	6007-PLN-AGE-57-52-2330-R03	over sheet for vertical loops steel frame foundations North West, Alpha Pla	Drawing	3	CIVIL -1	VENDOR	4/5/2013
	6007-PLN-AGE-57-52-2331-R03	neral notes for vertical loops steel frame foundations North West, Alpha Pl	Drawing	3	CIVIL -1	VENDOR	4/5/2013
	6007-PLN-AGE-57-52-2332-R03	Plan and sections for vertical loops steel frame foundations North West, Al	Drawing	3	CIVIL -1	VENDOR	4/5/2013
	6007-PLN-AGE-57-52-2333-R03	Plan and sections for vertical loops steel frame foundations North West, Al	Drawing	3	CIVIL -1	VENDOR	4/5/2013
	6007-PLN-AGE-57-52-2334-R03	W02.Details for vertical loops steel frame foundations North West, Alpha P	Drawing	3	CIVIL -1	VENDOR	4/5/2013
	6007-PLN-AGE-57-52-2335-R03	.Plan and details for vertical loops steel frame foundations North West, Alp	Drawing	3	CIVIL -1	VENDOR	4/5/2013
	6007-PLN-AGE-57-52-2340-R02	Covert sheet for vertical loops steel frame foundations West, Alpha Plant	Drawing	2	CIVIL -1	VENDOR	4/5/2013
	6007-PLN-AGE-57-52-2341-R02	General notes for vertical loops steel frame foundations West, Alpha Plant	Drawing	2	CIVIL -1	VENDOR	4/5/2013
	6007-PLN-AGE-57-52-2342-R02	01. Plan and details for vertical loops steel frame foundations West, Alpha	Drawing	2	CIVIL -1	VENDOR	4/5/2013
	6007-PLN-AGE-57-52-2343-R02	02. Plan and details for vertical loops steel frame foundations West, Alpha	Drawing	2	CIVIL -1	VENDOR	4/5/2013

ABENER TEYMA MOJAVE

ompliance No.: GEN-2
Job : Mojave Solar Project
ate: 04/10/2012 Description: Civil Master Drawing List

Line No.	Sheet No.	Description	Type of Document	Revision Number	Applicable Condition of Certification	Vendor Supplied or EOR	Submittal Date
	6007-PLN-AGE-57-52-6350-R03	Cover sheet for vertical loops steel frame foundations West, Beta Plant	Drawing	3	CIVIL -1	VENDOR	4/5/2013
	6007-PLN-AGE-57-52-6351-R03	General notes for vertical loops steel frame foundations West, Beta Plant	Drawing	3	CIVIL -1	VENDOR	4/5/2013
	6007-PLN-AGE-57-52-6352-R04	F01. Plan and details for vertical loops steel frame foundations West, Beta P	Drawing	4	CIVIL -1	VENDOR	4/5/2013
	6007-PLN-AGE-57-52-6370-R03	Cover sheet for vertical loops steel frame foundations North, Beta Plant	Drawing	3	CIVIL -1	VENDOR	4/5/2013
	6007-PLN-AGE-57-52-6371-R03	General notes for vertical loops steel frame foundations North, Beta Plant	Drawing	3	CIVIL -1	VENDOR	4/5/2013
	6007-PLN-AGE-57-52-6372-R03	01. Plan and details for vertical loops steel frame foundations North, Beta P	Drawing	3	CIVIL -1	VENDOR	4/5/2013
	6007-PLN-AGE-57-52-6373-R03	02. Plan and details for vertical loops steel frame foundations North, Beta P	Drawing	3	CIVIL -1	VENDOR	4/5/2013
	6007-PLN-AGE-57-52-6390-R02	Cover sheet for vertical loops steel frame foundations Far West, Beta Plant	Drawing	2	CIVIL -1	VENDOR	4/5/2013
	6007-PLN-AGE-57-52-6391-R03	General notes for vertical loops steel frame foundations Far West, Beta Plan	Drawing	3	CIVIL -1	VENDOR	4/5/2013
	6007-PLN-AGE-57-52-6392-R03	01. Plan and details for vertical loops steel frame foundations Far West, Bet	Drawing	3	CIVIL -1	VENDOR	4/5/2013
	6007-PLN-AGE-57-52-6393-R03	02. Plan and details for vertical loops steel frame foundations Far West, Bet	Drawing	3	CIVIL -1	VENDOR	4/5/2013
	6007-PLN-AGE-58-52-3600-R02	over sheet for vertical loops steel frame foundations Central Plant, Alpha Pla	Drawing	2	CIVIL -1	VENDOR	4/5/2013
	6007-PLN-AGE-58-52-3601-R02	neral notes for vertical loops steel frame foundations Central Plant, Alpha P	Drawing	2	CIVIL -1	VENDOR	4/5/2013
	6007-PLN-AGE-58-52-3602-R02	undations for vertical loops steel frame foundations Central Plant, Alpha Pla	Drawing	2	CIVIL -1	VENDOR	4/5/2013
	6007-PLN-AGE-58-52-6410-R02	r sheet for vertical loops steel frame foundations Central Plant North, Beta	Drawing	2	CIVIL -1	VENDOR	4/5/2013
	6007-PLN-AGE-58-52-6411-R02	al notes for vertical loops steel frame foundations Central Plant North, Beta	Drawing	2	CIVIL -1	VENDOR	4/5/2013
	6007-PLN-AGE-58-52-6412-R02	Plan and details for vertical loops steel frame foundations Central Plant No	Drawing	2	CIVIL -1	VENDOR	4/5/2013
	6007-PLN-AGE-58-52-6413-R01	Plan and details for vertical loops steel frame foundations Central Plant No	Drawing	1	CIVIL -1	VENDOR	4/5/2013
	6007-CAL-AGE-50-00-2001_R00	Calcuation Report	Calculation	4	CIVIL -1	VENDOR	4/5/2013
	Plan Check Reply CIVIL-1-23.01		Drawing	4	CIVIL -1	VENDOR	4/5/2013
	6007-PLN-AGE-29-55-2000	Cover Sheet	Drawing	4	CIVIL -1	VENDOR	4/5/2013
	6007-PLN-AGE-29-55-2001	General Notes	Drawing	4	CIVIL -1	VENDOR	4/5/2013
	6007-PLN-AGE-29-55-2002	Plain View	Drawing	4	CIVIL -1	VENDOR	4/5/2013
	6007-PLN-AGE-29-55-2003	Sections	Drawing	4	CIVIL -1	VENDOR	4/5/2013
	6007-PLN-AGE-29-55-2004	Details I	Drawing	4	CIVIL -1	VENDOR	4/5/2013
	6007-PLN-AGE-29-55-2005	Details II	Drawing	2	CIVIL -1	VENDOR	4/5/2013
	6007-PLN-AGE-29-55-2006	Details III	Drawing	2	CIVIL -1	VENDOR	4/5/2013
	6007-PLN-AGE-29-55-2007	Details IV	Drawing	2	CIVIL -1	VENDOR	4/5/2013
	6007-PLN-AGE-29-55-2008	Details V	Drawing	2	CIVIL -1	VENDOR	4/5/2013
	6007-PLN-AGE-29-55-2009	Details VI	Drawing	2	CIVIL -1	VENDOR	4/5/2013
	6007-PLN-AGE-29-55-2010	Details VII	Drawing	2	CIVIL -1	VENDOR	4/5/2013
	6007-PLN-AGE-29-55-2011	Details VIII	Drawing	4	CIVIL -1	VENDOR	4/5/2013
	6007-PLN-AGE-29-55-2012	Details IX	Drawing	2	CIVIL -1	VENDOR	4/5/2013
	6007-PLN-AGE-29-55-2013	Details X	Drawing	2	CIVIL -1	VENDOR	4/5/2013
	6007-PLN-AGE-29-55-2014	Details XI	Drawing	2	CIVIL -1	VENDOR	4/5/2013
	6007-PLN-AGE-29-55-2015	Details XII	Drawing	2	CIVIL -1	VENDOR	4/5/2013
	6007-PLN-AGE-29-55-2016	Details XIII	Drawing	2	CIVIL -1	VENDOR	4/5/2013
	6007-PLN-AGE-00-50-S001	General civil and structural notes	Drawing	2	CIVIL -1	VENDOR	4/5/2013
	CIVIL-1-25.00X1 Revision List	Revision list	List	n/a	CIVIL -1	VENDOR	4/5/2013
	6007-PLN-AGE-29-55-4000-R08	Cover sheet	Drawing	8	CIVIL -1	VENDOR	4/5/2013
	6007-PLN-AGE-29-55-4020_R06	General notes	Drawing	6	CIVIL -1	VENDOR	4/5/2013
	6007-PLN-AGE-29-55-4040-R08	Underground Plan	Drawing	8	CIVIL -1	VENDOR	4/5/2013
	6007-PLN-AGE-29-55-4060-R08	Details	Drawing	8	CIVIL -1	VENDOR	4/5/2013
	6007-PLN-AGE-29-55-4065-R02	Details	Drawing	2	CIVIL -1	VENDOR	4/5/2013
	6007-PLN-AGE-00-50-S001-R03	GENERAL CIVIL STRUCTURAL NOTES	Drawing	3	CIVIL -1	VENDOR	4/5/2013
	6007-PLN-AGE-29-55-3999_R00	Cover sheet	Drawing	0	CIVIL -1	VENDOR	4/5/2013
	6007-PLN-AGE-29-55-4001_R00	General notes	Drawing	0	CIVIL -1	VENDOR	4/5/2013
	6007-PLN-AGE-29-55-4002_R00	Underground plan	Drawing	0	CIVIL -1	VENDOR	4/5/2013
	6007-PLN-AGE-29-55-4003_R00	Detail	Drawing	0	CIVIL -1	VENDOR	4/5/2013
	6007-PLN-AGE-29-55-7999_R00	Cover sheet	Drawing	0	CIVIL -1	VENDOR	4/5/2013
	6007-PLN-AGE-29-55-8001_R00	General notes	Drawing	0	CIVIL -1	VENDOR	4/5/2013
	6007-PLN-AGE-29-55-8002_R00	Underground plan	Drawing	0	CIVIL -1	VENDOR	4/5/2013
	6007-PLN-AGE-29-55-8003_R00	Detail	Drawing	0	CIVIL -1	VENDOR	4/5/2013
	6007-PLN-GFG-00-50-C554_-_SIGNED	BIOREMEDIATION ALPHA DETAILS	Drawing	5	CIVIL -1	VENDOR	4/5/2013
	6007-PLN-GFG-00-50-C561_-_SIGNED	BIOREMEDIATION BETA DETAILS	Drawing	2	CIVIL -1	VENDOR	4/5/2013
	RFI#6 4 inch HDPE DR17	RFI RESPONSE	Drawing	n/a	CIVIL -1	VENDOR	4/5/2013
	6007-TMT-SUP-83-50-006	Neutron Probe Plan	Drawing	n/a	CIVIL -1	VENDOR	4/5/2013
	6007-TMT-SUP-83-50-007	4" HDPE DR 17 Recommendation for Neutron Probe Pipe	Drawing	n/a	CIVIL -1	VENDOR	4/5/2013
	RFI#7 Sand gradation table.	RFI RESPONSE	Drawing	n/a	CIVIL -1	VENDOR	4/5/2013
	6007-PLN-AGE-57-52-6900-R08	Cover sheet	Drawing	8	CIVIL -1	VENDOR	4/15/2013
	6007-PLN-AGE-57-52-6901-R07	General notes	Drawing	7	CIVIL -1	VENDOR	4/15/2013
	6007-PLN-AGE-57-52-6902-R08	Elevation, Plan, and Sections for Columns 1 to 5	Drawing	8	CIVIL -1	VENDOR	4/15/2013
	6007-PLN-AGE-57-52-6903-R07	Plan, Sections, and Details for Columns 2, 3, and 4	Drawing	7	CIVIL -1	VENDOR	4/15/2013
	6007-PLN-AGE-57-52-6904-R07	Plan, Sections, and Details for Columns 1 and 5	Drawing	7	CIVIL -1	VENDOR	4/15/2013
	6007-PLN-AGE-57-52-6905-R08	Plan, Sections, and Details for Columns C11-C20	Drawing	8	CIVIL -1	VENDOR	4/15/2013
	6007-CAL-AGE-57-52-6277-R06	CALCULATIONS	Calculation	6	CIVIL -1	VENDOR	4/15/2013
	6007-PLN-AGE-29-55-2000-R05	Cover sheet	Drawing	5	CIVIL -1	VENDOR	4/18/2013
	6007-PLN-AGE-29-55-2001sheet1-2-R05	General Notes Sheet - Concrete	Drawing	5	CIVIL -1	VENDOR	4/18/2013
	6007-PLN-AGE-29-55-2001sheet1-2-R05	General Notes Sheet - Steel	Drawing	5	CIVIL -1	VENDOR	4/18/2013
	6007-PLN-AGE-29-55-2002-R04	Plan View	Drawing	4	CIVIL -1	VENDOR	4/18/2013
	6007-PLN-AGE-29-55-2003-R04	Sections	Drawing	4	CIVIL -1	VENDOR	4/18/2013
	6007-PLN-AGE-29-55-2004-R04	Details I	Drawing	4	CIVIL -1	VENDOR	4/18/2013
	6007-PLN-AGE-29-55-2005-R04	Details II	Drawing	4	CIVIL -1	VENDOR	4/18/2013
	6007-PLN-AGE-29-55-2006-R04	Details III	Drawing	4	CIVIL -1	VENDOR	4/18/2013
	6007-PLN-AGE-29-55-2007-R02	Details IV	Drawing	2	CIVIL -1	VENDOR	4/18/2013
	6007-PLN-AGE-29-55-2008-R02	Details V	Drawing	2	CIVIL -1	VENDOR	4/18/2013
	6007-PLN-AGE-29-55-2009-R02	Details VI	Drawing	2	CIVIL -1	VENDOR	4/18/2013
	6007-PLN-AGE-29-55-2010-R02	Details VII	Drawing	2	CIVIL -1	VENDOR	4/18/2013
	6007-PLN-AGE-29-55-2011-R02	Details VIII	Drawing	2	CIVIL -1	VENDOR	4/18/2013

ABENER TEYMA MOJAVE

ompliance No.: GEN-2
Job : Mojave Solar Project
ate: 04/10/2012 Description: Civil Master Drawing List

Line No.	Sheet No.	Description	Type of Document	Revision Number	Applicable Condition of Certification	Vendor Supplied or EOR	Submittal Date
	6007-PLN-AGE-29-55-2012-R04	Details IX	Drawing	4	CIVIL -1	VENDOR	4/18/2013
	6007-PLN-AGE-29-55-2013-R02	Details X	Drawing	2	CIVIL -1	VENDOR	4/18/2013
	6007-PLN-AGE-29-55-2014-R03	Details XI	Drawing	3	CIVIL -1	VENDOR	4/18/2013
	6007-PLN-AGE-29-55-2015-R03	Details XII	Drawing	3	CIVIL -1	VENDOR	4/18/2013
	6007-PLN-AGE-29-55-2016-R03	Details XIII	Drawing	3	CIVIL -1	VENDOR	4/18/2013
	6007-CAL-AGE50-00-2001-R01	Calculation Report	Calculation	1	CIVIL -1	VENDOR	4/18/2013
	6007-CAL-AGE-57-52-2310-R05	ulation report for vertical loops steel frame foundations North East, Alpha I	Calculation	5	CIVIL -1	VENDOR	4/22/2013
	6007-CAL-AGE-57-52-2320-R03	ulation report for vertical loops steel frame foundations North East, Alpha I	Calculation	3	CIVIL -1	VENDOR	4/22/2013
	6007-CAL-AGE-57-52-2330-R02	ulation report for vertical loops steel frame foundations North West, Alpha	Calculation	2	CIVIL -1	VENDOR	4/22/2013
	6007-CAL-AGE-57-52-2340-R02	alculation report for vertical loops steel frame foundations West, Alpha Pla	Calculation	2	CIVIL -1	VENDOR	4/22/2013
	6007-CAL-AGE-57-52-6320-R03	Calculation report for vertical loops steel frame foundations West, Beta Plan	Calculation	3	CIVIL -1	VENDOR	4/22/2013
	6007-CAL-AGE-57-52-6330_R03	alculation report for vertical loops steel frame foundations North, Beta Plan	Calculation	3	CIVIL -1	VENDOR	4/22/2013
	6007-CAL-AGE-57-52-6340-R03	lculation report for vertical loops steel frame foundations Far West, Beta Pla	Calculation	3	CIVIL -1	VENDOR	4/22/2013
	6007-CAL-AGE-58-52-3600-R02	lation report for vertical loops steel frame foundations Central Plant, Alpha	Calculation	2	CIVIL -1	VENDOR	4/22/2013
	6007-CAL-AGE-58-52-6410-R02	ion report for vertical loops steel frame foundations Central Plant North, Be	Calculation	2	CIVIL -1	VENDOR	4/22/2013
	6007-PLN-AGE-57-52-2310-R04	Cover sheet for vertical loops steel frame foundations North East, Alpha Plan	Drawing	4	CIVIL -1	VENDOR	4/22/2013
	6007-PLN-AGE-57-52-2311-R04	eneral notes for vertical loops steel frame foundations North East, Alpha Pla	Drawing	4	CIVIL -1	VENDOR	4/22/2013
	6007-PLN-AGE-57-52-2312-R05	.Plan and details for vertical loops steel frame foundations North East, Alpl	Drawing	5	CIVIL -1	VENDOR	4/22/2013
	6007-PLN-AGE-57-52-2320-R02	Cover sheet for vertical loops steel frame foundations North East, Alpha Plan	Drawing	2	CIVIL -1	VENDOR	4/22/2013
	6007-PLN-AGE-57-52-2321-R03	eneral notes for vertical loops steel frame foundations North East, Alpha Pla	Drawing	3	CIVIL -1	VENDOR	4/22/2013
	6007-PLN-AGE-57-52-2322-R04	Plan and sections for vertical loops steel frame foundations North East, Alpl	Drawing	4	CIVIL -1	VENDOR	4/22/2013
	6007-PLN-AGE-57-52-2323-R04	Plan and sections for vertical loops steel frame foundations North East, Alpl	Drawing	4	CIVIL -1	VENDOR	4/22/2013
	6007-PLN-AGE-57-52-2330-R03	over sheet for vertical loops steel frame foundations North West, Alpha Pla	Drawing	3	CIVIL -1	VENDOR	4/22/2013
	6007-PLN-AGE-57-52-2331-R03	neral notes for vertical loops steel frame foundations North West, Alpha Pl	Drawing	3	CIVIL -1	VENDOR	4/22/2013
	6007-PLN-AGE-57-52-2332-R03	Plan and sections for vertical loops steel frame foundations North West, Alp	Drawing	3	CIVIL -1	VENDOR	4/22/2013
	6007-PLN-AGE-57-52-2333-R03	Plan and sections for vertical loops steel frame foundations North West, Alp	Drawing	3	CIVIL -1	VENDOR	4/22/2013
	6007-PLN-AGE-57-52-2334-R03	W02.Details for vertical loops steel frame foundations North West, Alpha P	Drawing	3	CIVIL -1	VENDOR	4/22/2013
	6007-PLN-AGE-57-52-2335-R03	.Plan and details for vertical loops steel frame foundations North West, Alp	Drawing	3	CIVIL -1	VENDOR	4/22/2013
	6007-PLN-AGE-57-52-2340-R02	Covert sheet for vertical loops steel frame foundations West, Alpha Plant	Drawing	2	CIVIL -1	VENDOR	4/22/2013
	6007-PLN-AGE-57-52-2341-R02	General notes for vertical loops steel frame foundations West, Alpha Plant	Drawing	2	CIVIL -1	VENDOR	4/22/2013
	6007-PLN-AGE-57-52-2342-R02	01. Plan and details for vertical loops steel frame foundations West, Alpha	Drawing	2	CIVIL -1	VENDOR	4/22/2013
	6007-PLN-AGE-57-52-2343-R02	02. Plan and details for vertical loops steel frame foundations West, Alpha	Drawing	2	CIVIL -1	VENDOR	4/22/2013
	6007-PLN-AGE-57-52-6350-R03	Cover sheet for vertical loops steel frame foundations West, Beta Plant	Drawing	3	CIVIL -1	VENDOR	4/22/2013
	6007-PLN-AGE-57-52-6351-R03	General notes for vertical loops steel frame foundations West, Beta Plant	Drawing	3	CIVIL -1	VENDOR	4/22/2013
	6007-PLN-AGE-57-52-6352-R04	F01. Plan and details for vertical loops steel frame foundations West, Beta P	Drawing	4	CIVIL -1	VENDOR	4/22/2013
	6007-PLN-AGE-57-52-6370-R03	Cover sheet for vertical loops steel frame foundations North, Beta Plant	Drawing	3	CIVIL -1	VENDOR	4/22/2013
	6007-PLN-AGE-57-52-6371-R03	General notes for vertical loops steel frame foundations North, Beta Plant	Drawing	3	CIVIL -1	VENDOR	4/22/2013
	6007-PLN-AGE-57-52-6372-R03	01. Plan and details for vertical loops steel frame foundations North, Beta P	Drawing	3	CIVIL -1	VENDOR	4/22/2013
	6007-PLN-AGE-57-52-6373-R03	02. Plan and details for vertical loops steel frame foundations North, Beta P	Drawing	3	CIVIL -1	VENDOR	4/22/2013
	6007-PLN-AGE-57-52-6390-R02	Cover sheet for vertical loops steel frame foundations Far West, Beta Plant	Drawing	2	CIVIL -1	VENDOR	4/22/2013
	6007-PLN-AGE-57-52-6391-R03	r sheet for vertical loops steel frame foundations Central Plant North, Beta	Drawing	3	CIVIL -1	VENDOR	4/22/2013
	6007-PLN-AGE-57-52-6392-R03	al notes for vertical loops steel frame foundations Central Plant North, Beta	Drawing	3	CIVIL -1	VENDOR	4/22/2013
	6007-PLN-AGE-57-52-6393-R03	Plan and details for vertical loops steel frame foundations Central Plant No	Drawing	3	CIVIL -1	VENDOR	4/22/2013
	6007-PLN-AGE-58-52-3600-R02	Plan and details for vertical loops steel frame foundations Central Plant No	Drawing	2	CIVIL -1	VENDOR	4/22/2013
	6007-PLN-AGE-58-52-3601-R02	General notes for vertical loops steel frame foundations Far West, Beta Plan	Drawing	2	CIVIL -1	VENDOR	4/22/2013
	6007-PLN-AGE-58-52-3602-R02	01. Plan and details for vertical loops steel frame foundations Far West, Bet	Drawing	2	CIVIL -1	VENDOR	4/22/2013
	6007-PLN-AGE-58-52-6410-R02	02. Plan and details for vertical loops steel frame foundations Far West, Bet	Drawing	2	CIVIL -1	VENDOR	4/22/2013
	6007-PLN-AGE-58-52-6411-R02	over sheet for vertical loops steel frame foundations Central Plant, Alpha Pla	Drawing	2	CIVIL -1	VENDOR	4/22/2013
	6007-PLN-AGE-58-52-6412-R02	neral notes for vertical loops steel frame foundations Central Plant, Alpha P	Drawing	2	CIVIL -1	VENDOR	4/22/2013
	6007-PLN-AGE-58-52-6413-R01	undations for vertical loops steel frame foundations Central Plant, Alpha Pla	Drawing	1	CIVIL -1	VENDOR	4/22/2013
	6007-PLN-AGE-74-54-2020	Cover sheet	Drawing	1	CIVIL -1	VENDOR	5/3/2013
	6007-PLN-AGE-74-54-2021	General notes	Drawing	2	CIVIL -1	VENDOR	5/3/2013
	6007-PLN-AGE-74-54-2022	Plan, section & details	Drawing	2	CIVIL -1	VENDOR	5/3/2013
	6007-PLN-AGE-74-54-2023	Plan, section & details	Drawing	2	CIVIL -1	VENDOR	5/3/2013
	6007-CAL-AGE-74-54-2020	Calculation report	Calculation	1	CIVIL -1	VENDOR	5/3/2013
	6007-PLN-AGE-74-54-6020	Cover sheet	Drawing	1	CIVIL -1	VENDOR	5/3/2013
	6007-PLN-AGE-74-54-6021	General notes	Drawing	1	CIVIL -1	VENDOR	5/3/2013
	6007-PLN-AGE-74-54-6022	Plan, section & details	Drawing	1	CIVIL -1	VENDOR	5/3/2013
	6007-PLN-AGE-74-54-6023	Plan, section & details	Drawing	1	CIVIL -1	VENDOR	5/3/2013
	6007-CAL-AGE-74-54-6020	Calculation report	Calculation	1	CIVIL -1	VENDOR	5/3/2013
	6007-PLN-AGE-58-54-3500-R01	Cover sheet	Drawing	1	CIVIL -1	VENDOR	5/3/2013
	6007-PLN-AGE-58-54-3501-R02	General notes	Drawing	1	CIVIL -1	VENDOR	5/3/2013
	6007-PLN-AGE-58-54-3502-R02	Plan view	Drawing	1	CIVIL -1	VENDOR	5/3/2013
	6007-PLN-AGE-58-54-3503-R02	Sections & Details	Drawing	1	CIVIL -1	VENDOR	5/3/2013
	6007-CAL-AGE-58-54-3500-R02	Calculation report	Calculation	1	CIVIL -1	VENDOR	5/3/2013
	6007-PLN-AGE-58-54-7500-R01	Cover sheet	Drawing	1	CIVIL -1	VENDOR	5/3/2013
	6007-PLN-AGE-58-54-7501-R02	General notes	Drawing	1	CIVIL -1	VENDOR	5/3/2013
	6007-PLN-AGE-58-54-7502-R02	Plan view	Drawing	1	CIVIL -1	VENDOR	5/3/2013
	6007-PLN-AGE-58-54-7503-R02	Sections & Details	Drawing	1	CIVIL -1	VENDOR	5/3/2013
	6007-CAL-AGE-58-54-7500-R02	Calculation report	Calculation	1	CIVIL -1	VENDOR	5/3/2013
	6007-PLN-AGE-58-52-3500-R01	Cover sheet	Drawing	1	CIVIL -1	VENDOR	5/3/2013
	6007-PLN-AGE-58-52-3501-R02	General notes	Drawing	1	CIVIL -1	VENDOR	5/3/2013
	6007-PLN-AGE-58-52-3502-R02	Plan view & Details	Drawing	1	CIVIL -1	VENDOR	5/3/2013
	6007-CAL-AGE-58-52-3500-R02	Calculation report	Calculation	1	CIVIL -1	VENDOR	5/3/2013
	6007-PLN-AGE-58-52-7500-R01	Cover sheet	Drawing	1	CIVIL -1	VENDOR	5/3/2013
	6007-PLN-AGE-58-52-7501-R02	General notes	Drawing	1	CIVIL -1	VENDOR	5/3/2013
	6007-PLN-AGE-58-52-7502-R02	Plan view & Details	Drawing	1	CIVIL -1	VENDOR	5/3/2013
	6007-CAL-AGE-58-52-7500-R02	Calculation report	Calculation	1	CIVIL -1	VENDOR	5/3/2013
	6007-PLN-AGE-58-54-3550-R02	Cover sheet	Drawing	2	CIVIL -1	VENDOR	4/30/2013

ABENER TEYMA MOJAVE

ompliance No.: GEN-2
Job : Mojave Solar Project
ate: 04/10/2012 Description: Civil Master Drawing List

Line No.	Sheet No.	Description	Type of Document	Revision Number	Applicable Condition of Certification	Vendor Supplied or EOR	Submittal Date
	6007-PLN-AGE-58-54-3551-R03	General notes	Drawing	3	CIVIL -1	VENDOR	4/30/2013
	6007-PLN-AGE-58-54-3552-R03	Plan view & Details	Drawing	3	CIVIL -1	VENDOR	4/30/2013
	6007-CAL-AGE-58-54-3550-R02	Calculation report	Calculation	2	CIVIL -1	VENDOR	4/30/2013
	6007-PLN-AGE-58-54-7550-R02	Cover sheet	Drawing	2	CIVIL -1	VENDOR	4/30/2013
	6007-PLN-AGE-58-54-7551-R03	General notes	Drawing	3	CIVIL -1	VENDOR	4/30/2013
	6007-PLN-AGE-58-54-7552-R03	Plan view & Details	Drawing	3	CIVIL -1	VENDOR	4/30/2013
	6007-CAL-AGE-58-54-7550-R02	Calculation report	Calculation	2	CIVIL -1	VENDOR	4/30/2013
	6007-PLN-AGE-74-52-2500-R01	Cover sheet	Drawing	1	CIVIL -1	VENDOR	4/29/2013
	6007-PLN-AGE-74-52-2501-R01	General notes	Drawing	1	CIVIL -1	VENDOR	4/29/2013
	6007-PLN-AGE-74-52-2502-R01	Plan, section & details	Drawing	1	CIVIL -1	VENDOR	4/29/2013
	6007-CAL-AGE-74-52-2500-R01	Calculation report	Calculation	1	CIVIL -1	VENDOR	4/29/2013
	6007-PLN-AGE-74-52-6500-R01	Cover sheet	Drawing	1	CIVIL -1	VENDOR	4/29/2013
	6007-PLN-AGE-74-52-6501-R01	General notes	Drawing	1	CIVIL -1	VENDOR	4/29/2013
	6007-PLN-AGE-74-52-6502-R01	Plan, section & details	Drawing	1	CIVIL -1	VENDOR	4/29/2013
	6007-CAL-AGE-74-52-6500-R01	Calculation report	Calculation	1	CIVIL -1	VENDOR	4/29/2013
	6007-PLN-AGE-74-52-2020	Cover sheet	Drawing	0	CIVIL -1	VENDOR	4/29/2013
	6007-PLN-AGE-74-52-2021	General notes	Drawing	0	CIVIL -1	VENDOR	4/29/2013
	6007-PLN-AGE-74-52-2022	Plan, section & details	Drawing	1	CIVIL -1	VENDOR	4/29/2013
	6007-CAL-AGE-74-52-2020	Calculation report	Calculation	1	CIVIL -1	VENDOR	4/29/2013
	6007-PLN-AGE-74-52-6020	Cover sheet	Drawing	0	CIVIL -1	VENDOR	4/29/2013
	6007-PLN-AGE-74-52-6021	General notes	Drawing	0	CIVIL -1	VENDOR	4/29/2013
	6007-PLN-AGE-74-52-6022	Plan, section & details	Drawing	1	CIVIL -1	VENDOR	4/29/2013
	6007-CAL-AGE-74-52-6020	Calculation report	Calculation	1	CIVIL -1	VENDOR	4/29/2013
	6007-PLN-AGE-40-52-4100-R04	Cover sheet	Drawing	4	CIVIL -1	VENDOR	4/29/2013
	6007-PLN-AGE-40-52-4120-R03	General notes	Drawing	3	CIVIL -1	VENDOR	4/29/2013
	6007-PLN-AGE-40-52-4140-R04	Arrangement plan view	Drawing	4	CIVIL -1	VENDOR	4/29/2013
	6007-PLN-AGE-40-52-4141-R04	Mat bottom reinforcement	Drawing	4	CIVIL -1	VENDOR	4/29/2013
	6007-PLN-AGE-40-52-4142-R04	Mat top reinforcement	Drawing	4	CIVIL -1	VENDOR	4/29/2013
	6007-PLN-AGE-40-52-4143-R02	Extra top reinforcement	Drawing	2	CIVIL -1	VENDOR	4/29/2013
	6007-PLN-AGE-40-52-4144-R02	Extra bottom reinforcement	Drawing	2	CIVIL -1	VENDOR	4/29/2013
	6007-PLN-AGE-40-52-4145-R02	Mat reinforcement details	Drawing	2	CIVIL -1	VENDOR	4/29/2013
	6007-PLN-AGE-40-52-4150-R02	Drainage	Drawing	2	CIVIL -1	VENDOR	4/29/2013
	6007-PLN-AGE-40-52-4160-R02	Pier and rack support anchor layout	Drawing	2	CIVIL -1	VENDOR	4/29/2013
	6007-PLN-AGE-40-52-4161-R02	Pier and rack support anchor details	Drawing	2	CIVIL -1	VENDOR	4/29/2013
	6007-PLN-AGE-40-52-4162-R02	Anchor bolts. Assemblies and details	Drawing	2	CIVIL -1	VENDOR	4/29/2013
	6007-PLN-AGE-40-52-4163-R02	Skid and bench support layout	Drawing	2	CIVIL -1	VENDOR	4/29/2013
	6007-PLN-AGE-40-52-4164-R02	Skid support details	Drawing	2	CIVIL -1	VENDOR	4/29/2013
	6007-PLN-AGE-40-52-4173-R02	Skid support layout	Drawing	2	CIVIL -1	VENDOR	4/29/2013
	6007-CAL-AGE-40-52-4000-R03	WTP foundation calc report	Calculation	3	CIVIL -1	VENDOR	4/29/2013
	6007-PLN-AGE-40-52-8100-R04	Cover sheet	Drawing	4	CIVIL -1	VENDOR	4/29/2013
	6007-PLN-AGE-40-52-8120-R03	General notes	Drawing	3	CIVIL -1	VENDOR	4/29/2013
	6007-PLN-AGE-40-52-8140-R04	Arrangement plan view	Drawing	4	CIVIL -1	VENDOR	4/29/2013
	6007-PLN-AGE-40-52-8141-R04	Mat bottom reinforcement	Drawing	4	CIVIL -1	VENDOR	4/29/2013
	6007-PLN-AGE-40-52-8142-R04	Mat top reinforcement	Drawing	4	CIVIL -1	VENDOR	4/29/2013
	6007-PLN-AGE-40-52-8143-R02	Extra top reinforcement	Drawing	2	CIVIL -1	VENDOR	4/29/2013
	6007-PLN-AGE-40-52-8144-R02	Extra bottom reinforcement	Drawing	2	CIVIL -1	VENDOR	4/29/2013
	6007-PLN-AGE-40-52-8145-R02	Mat reinforcement details	Drawing	2	CIVIL -1	VENDOR	4/29/2013
	6007-PLN-AGE-40-52-8150-R02	Drainage	Drawing	2	CIVIL -1	VENDOR	4/29/2013
	6007-PLN-AGE-40-52-8160-R02	Pier and rack support anchor layout	Drawing	2	CIVIL -1	VENDOR	4/29/2013
	6007-PLN-AGE-40-52-8161-R02	Pier and rack support anchor details	Drawing	2	CIVIL -1	VENDOR	4/29/2013
	6007-PLN-AGE-40-52-8162-R02	Anchor bolts. Assemblies and details	Drawing	2	CIVIL -1	VENDOR	4/29/2013
	6007-PLN-AGE-40-52-8163-R02	Skid and bench support layout	Drawing	2	CIVIL -1	VENDOR	4/29/2013
	6007-PLN-AGE-40-52-8164-R02	Skid support details	Drawing	2	CIVIL -1	VENDOR	4/29/2013
	6007-PLN-AGE-40-52-8173-R02	Skid support layout	Drawing	2	CIVIL -1	VENDOR	4/29/2013
	6007-CAL-AGE-40-52-8000-R03	WTP foundation calc report	Calculation	3	CIVIL -1	VENDOR	4/29/2013
	ANCHORBOLT(318-08)_Rack	Anchor bolt Calculation Spreadsheet for WTP Rack	Drawing	0	CIVIL -1	VENDOR	4/29/2013
	ANCHORBOLT(318-08)_Type_1.1	Anchor bolt Calculation Spreadsheet for Type 1.1 Pedestal	Drawing	0	CIVIL -1	VENDOR	4/29/2013
	ANCHORBOLT(318-08)_Type_1.2	Anchor bolt Calculation Spreadsheet for Type 1.2 Pedestal	Drawing	0	CIVIL -1	VENDOR	4/29/2013
	ANCHORBOLT(318-08)_Type_2.0	Anchor bolt Calculation Spreadsheet for Type 2.0 Pedestal	Drawing	0	CIVIL -1	VENDOR	4/29/2013
	FORCES	Reactions & Moment Spreadsheet	Drawing	0	CIVIL -1	VENDOR	4/29/2013
	6007-CAL-LEF-12-54-0003-R5	Skids Structural Calculations	Calculation	5	CIVIL -1	VENDOR	4/29/2013
	6007-CAL-LEF-12-54-0004-R4	Rack StructuralCalculations	Calculation	4	CIVIL -1	VENDOR	4/29/2013
	6007-PLN-AGE-67-33-5403	Water Treatment Grounding System - Alpha	Drawing	0	CIVIL -1	VENDOR	4/29/2013
	6007-PLN-AGE-67-33-9803	Water Treatment Grounding System - Beta	Drawing	0	CIVIL -1	VENDOR	4/29/2013
	6007-PLN-LEF-12-03-0011	WTP Plant Layout (Preliminary)	Drawing	5	CIVIL -1	VENDOR	4/29/2013
	ANCHORBOLT ADDENDUM	Anchorbolt Calculations	Drawing	0	CIVIL -1	VENDOR	4/29/2013
	Content Guide	Skid Structure Calculation Content Guide	Drawing	5	CIVIL -1	VENDOR	4/29/2013
	6007-PLN-AGE-16-51-4000-R03	Cover sheet	Drawing	3	CIVIL -1	VENDOR	4/29/2013
	6007-PLN-AGE-16-50-4000-R02	General notes	Drawing	2	CIVIL -1	VENDOR	4/29/2013
	6007-PLN-AGE-16-54-4000-R04	Foundation drawings	Drawing	4	CIVIL -1	VENDOR	4/29/2013
	6007-CAL-AGE-16-54-4000-R01	Calc report	Calculation	1	CIVIL -1	VENDOR	4/29/2013
	6007-PLN-AGE-16-51-8000-R03	Cover sheet	Drawing	3	CIVIL -1	VENDOR	4/29/2013
	6007-PLN-AGE-16-50-8000-R02	General notes	Drawing	2	CIVIL -1	VENDOR	4/29/2013
	6007-PLN-AGE-16-54-8000-R04	Foundation drawings	Drawing	4	CIVIL -1	VENDOR	4/29/2013
	6007-CAL-AGE-16-54-8000-R01	Calc report	Calculation	1	CIVIL -1	VENDOR	4/29/2013
	6007-PLN-AGE-41-54-4000-R02	Cover sheet	Drawing	2	CIVIL -1	VENDOR	4/29/2013
	6007-PLN-AGE-41-54-4020-R02	General notes	Drawing	2	CIVIL -1	VENDOR	4/29/2013
	6007-PLN-AGE-41-54-4040-R04	Foundation drawings	Drawing	4	CIVIL -1	VENDOR	4/29/2013
	6007-CAL-AGE-41-54-4000-R02	Calc report	Calculation	2	CIVIL -1	VENDOR	4/29/2013

ABENER TEYMA MOJAVE

ompliance No.: GEN-2
Job : Mojave Solar Project
ate: 04/10/2012 Description: Civil Master Drawing List

Line No.	Sheet No.	Description	Type of Document	Revision Number	Applicable Condition of Certification	Vendor Supplied or EOR	Submittal Date
	6007-PLN-AGE-41-54-8000-R02	Cover sheet	Drawing	2	CIVIL -1	VENDOR	4/29/2013
	6007-PLN-AGE-41-54-8020-R02	General notes	Drawing	2	CIVIL -1	VENDOR	4/29/2013
	6007-PLN-AGE-41-54-8040-R04	Foundation drawings	Drawing	4	CIVIL -1	VENDOR	4/29/2013
	6007-CAL-AGE-41-54-8000-R02	Calc report	Calculation	2	CIVIL -1	VENDOR	4/29/2013
	6007-PLN-AGE-29-55-2014	Alpha Plant, Drainage purge & Oil Systems Details XI	Alpha Plant, Drain	3	CIVIL -1	VENDOR	5/1/2013
	6007-PLN-AGE-29-55-2015	Alpha Plant, Drainage purge & Oil Systems Details XII	Drawing	3	CIVIL -1	VENDOR	5/1/2013
	6007-PLN-AGE-29-55-6014	Beta Plant, Drainage purge & Oil Systems Details XI	Drawing	2	CIVIL -1	VENDOR	5/1/2013
	6007-PLN-AGE-29-55-6015	Beta Plant, Drainage purge & Oil Systems Details XII	Drawing	2	CIVIL -1	VENDOR	5/1/2013
	6007-PLN-AGE-35-52-4000	Cover sheet	Drawing	3	CIVIL -1	VENDOR	5/10/2013
	6007-PLN-AGE-35-52-4020	General notes	Drawing	4	CIVIL -1	VENDOR	5/10/2013
	6007-PLN-AGE-35-52-4040	Foundation Plans, Elevation, & Details	Drawing	5	CIVIL -1	VENDOR	5/10/2013
	6007-CAL-AGE-35-52-4000	Calculation Report	Calculation	4	CIVIL -1	VENDOR	5/10/2013
	6007-PLN-AGE-35-52-8000	Cover sheet	Drawing	3	CIVIL -1	VENDOR	5/10/2013
	6007-PLN-AGE-35-52-8020	General notes	Drawing	4	CIVIL -1	VENDOR	5/10/2013
	6007-PLN-AGE-35-52-8040	Foundation Plans, Elevation, & Details	Drawing	5	CIVIL -1	VENDOR	5/10/2013
	6007-CAL-AGE-35-52-8000	Calculation Report	Calculation	4	CIVIL -1	VENDOR	5/10/2013
	6007-PLN-AGE-58-52-2470	Cover sheet	Drawing	6	CIVIL -1	VENDOR	5/15/2013
	6007-PLN-AGE-58-52-2471	General notes	Drawing	4	CIVIL -1	VENDOR	5/15/2013
	6007-PLN-AGE-58-52-2472	Plan Layout	Drawing	6	CIVIL -1	VENDOR	5/15/2013
	6007-PLN-AGE-58-52-2474	Detail 2	Drawing	6	CIVIL -1	VENDOR	5/15/2013
	6007-PLN-AGE-58-52-2475	Electrical heater A-MX-208 foundation	Drawing	4	CIVIL -1	VENDOR	5/15/2013
	6007-PLN-AGE-58-52-2476	Coordinates	Drawing	3	CIVIL -1	VENDOR	5/15/2013
	6007-CAL-AGE-58-52-2470	Calculation report	Calculation	4	CIVIL -1	VENDOR	5/15/2013
	6007-PLN-AGE-58-52-6470	Cover sheet	Drawing	6	CIVIL -1	VENDOR	5/15/2013
	6007-PLN-AGE-58-52-6471	General notes	Drawing	4	CIVIL -1	VENDOR	5/15/2013
	6007-PLN-AGE-58-52-6472	Plan Layout	Drawing	6	CIVIL -1	VENDOR	5/15/2013
	6007-PLN-AGE-58-52-6474	Detail 2	Drawing	6	CIVIL -1	VENDOR	5/15/2013
	6007-PLN-AGE-58-52-6475	Electrical heater B-MX-208 foundation	Drawing	4	CIVIL -1	VENDOR	5/15/2013
	6007-PLN-AGE-58-52-6476	Coordinates	Drawing	3	CIVIL -1	VENDOR	5/15/2013
	6007-CAL-AGE-58-52-6470	Calculation report	Calculation	4	CIVIL -1	VENDOR	5/15/2013
	6007-PLN-AGE-25-52-4000	Cover sheet	Drawing	0	CIVIL -1	VENDOR	5-16-2013
	6007-PLN-AGE-40-52-4020	General notes	Drawing	0	CIVIL -1	VENDOR	5-16-2013
	6007-PLN-AGE-67-52-4440	Foundation Plans, Elevation, & Details	Drawing	2	CIVIL -1	VENDOR	5-16-2013
	6007-CAL-AGE-25-52-4010	Calculation Report	Calculation	2	CIVIL -1	VENDOR	5-16-2013
	6007-PLN-AGE-25-52-8000	Cover sheet	Drawing	0	CIVIL -1	VENDOR	5-16-2013
	6007-PLN-AGE-40-52-8020	General notes	Drawing	0	CIVIL -1	VENDOR	5-16-2013
	6007-PLN-AGE-67-52-8440	Foundation Plans, Elevation, & Details	Drawing	2	CIVIL -1	VENDOR	5-16-2013
	6007-CAL-AGE-25-52-8010	Calculation Report	Calculation	2	CIVIL -1	VENDOR	5-16-2013
	6007-PLN-AGE-40-52-4500	Cover sheet	Drawing	2	CIVIL -1	VENDOR	5-16-2013
	6007-PLN-AGE-40-52-4520	General notes	Drawing	3	CIVIL -1	VENDOR	5-16-2013
	6007-PLN-AGE-40-52-4540	Foundation Plans, Elevation, & Details	Drawing	3	CIVIL -1	VENDOR	5-16-2013
	6007-CAL-AGE-40-52-4500	Calculation Report	Calculation	1	CIVIL -1	VENDOR	5-16-2013
	6007-PLN-AGE-40-52-8500	Cover sheet	Drawing	2	CIVIL -1	VENDOR	5-16-2013
	6007-PLN-AGE-40-52-8520	General notes	Drawing	3	CIVIL -1	VENDOR	5-16-2013
	6007-PLN-AGE-40-52-8540	Foundation Plans, Elevation, & Details	Drawing	3	CIVIL -1	VENDOR	5-16-2013
	6007-CAL-AGE-40-52-8500	Calculation Report	Calculation	1	CIVIL -1	VENDOR	5-16-2013
	6007-PLN-AGE-67-52-4500	Cover sheet	Drawing	1	CIVIL -1	VENDOR	5/17/2013
	6007-PLN-AGE-67-52-4520	General notes	Drawing	1	CIVIL -1	VENDOR	5/17/2013
	6007-PLN-AGE-67-52-4540	Foundation Plans, Elevation, & Details	Drawing	3	CIVIL -1	VENDOR	5/17/2013
	6007-CAL-AGE-67-52-4500	Calculation Report	Calculation	2	CIVIL -1	VENDOR	5/17/2013
	6007-PLN-AGE-67-52-8500	Cover sheet	Drawing	1	CIVIL -1	VENDOR	5/17/2013
	6007-PLN-AGE-67-52-8520	General notes	Drawing	1	CIVIL -1	VENDOR	5/17/2013
	6007-PLN-AGE-67-52-8540	Foundation Plans, Elevation, & Details	Drawing	3	CIVIL -1	VENDOR	5/17/2013
	6007-CAL-AGE-67-52-8500	Calculation Report	Calculation	2	CIVIL -1	VENDOR	5/17/2013
	6007-PLN-AGE-57-52-6310	Cover sheet	Drawing	3	CIVIL -1	VENDOR	5/22/2013
	6007-PLN-AGE-57-52-6311	General notes	Drawing	3	CIVIL -1	VENDOR	5/22/2013
	6007-PLN-AGE-57-52-6312	BSF01. Plan and details	Drawing	4	CIVIL -1	VENDOR	5/22/2013
	6007-PLN-AGE-57-52-6313	BSF02. Plan and details	Drawing	3	CIVIL -1	VENDOR	5/22/2013
	6007-PLN-AGE-57-52-6314	BSF03. Plan and details	Drawing	3	CIVIL -1	VENDOR	5/22/2013
	6007-CAL-AGE-57-52-6310	Calculation report	Calculation	3	CIVIL -1	VENDOR	5/22/2013
	6007-PLN-AGE-12-51-4001	Cover sheet	Drawing	4	CIVIL -1	VENDOR	5/22/2013
	6007-PLN-AGE-12-50-4001	General notes	Drawing	4	CIVIL -1	VENDOR	5/22/2013
	6007-PLN-AGE-12-57-4001	Architectural definitions - Floor plan	Drawing	4	CIVIL -1	VENDOR	5/22/2013
	6007-PLN-AGE-12-57-4002	Architectural definitions - Roof and utility support plans	Drawing	4	CIVIL -1	VENDOR	5/22/2013
	6007-PLN-AGE-12-57-4003	Architectural definitions - Exterior elevations-sheet 1	Drawing	4	CIVIL -1	VENDOR	5/22/2013
	6007-PLN-AGE-12-57-4004	Architectural definitions - Exterior elevations-sheet 2	Drawing	4	CIVIL -1	VENDOR	5/22/2013
	6007-PLN-AGE-12-57-4005	Architectural definitions - Building sections	Drawing	4	CIVIL -1	VENDOR	5/22/2013
	6007-PLN-AGE-12-57-4006	Architectural definitions - Schedules&details	Drawing	4	CIVIL -1	VENDOR	5/22/2013
	6007-PLN-AGE-12-57-4007	Architectural definitions - Details	Drawing	3	CIVIL -1	VENDOR	5/22/2013
	6007-PLN-AGE-12-57-4008	Architectural definitions - Dimensions plan view.	Drawing	0	CIVIL -1	VENDOR	5/22/2013
	6007-PLN-AGE-12-57-4009	Architectural definitions - Equipment definition and location.	Drawing	0	CIVIL -1	VENDOR	5/22/2013
	6007-PLN-AGE-12-51-8001	Cover sheet	Drawing	4	CIVIL -1	VENDOR	5/22/2013
	6007-PLN-AGE-12-50-8001	General notes	Drawing	4	CIVIL -1	VENDOR	5/22/2013
	6007-PLN-AGE-12-57-8001	Architectural definitions - Floor plan	Drawing	4	CIVIL -1	VENDOR	5/22/2013
	6007-PLN-AGE-12-57-8002	Architectural definitions - Roof and utility support plans	Drawing	4	CIVIL -1	VENDOR	5/22/2013
	6007-PLN-AGE-12-57-8003	Architectural definitions - Exterior elevations-sheet 1	Drawing	4	CIVIL -1	VENDOR	5/22/2013
	6007-PLN-AGE-12-57-8004	Architectural definitions - Exterior elevations-sheet 2	Drawing	4	CIVIL -1	VENDOR	5/22/2013
	6007-PLN-AGE-12-57-8005	Architectural definitions - Building sections	Drawing	4	CIVIL -1	VENDOR	5/22/2013
	6007-PLN-AGE-12-57-8006	Architectural definitions - Schedules&details	Drawing	4	CIVIL -1	VENDOR	5/22/2013

ABENER TEYMA MOJAVE

ompliance No.: GEN-2
Job : Mojave Solar Project
ate: 04/10/2012 Description: Civil Master Drawing List

Line No.	Sheet No.	Description	Type of Document	Revision Number	Applicable Condition of Certification	Vendor Supplied or EOR	Submittal Date
	6007-PLN-AGE-12-57-8007	Architectural definitions - Details	Drawing	3	CIVIL -1	VENDOR	5/22/2013
	6007-PLN-AGE-12-57-8008	Architectural definitions - Dimensions plan view.	Drawing	0	CIVIL -1	VENDOR	5/22/2013
	6007-PLN-AGE-12-57-8009	Architectural definitions - Equipment definition and location.	Drawing	0	CIVIL -1	VENDOR	5/22/2013
	6007-PLN-AGE-58-52-3550	Cover sheet	Drawing	3	CIVIL -1	VENDOR	5/23/2013
	6007-PLN-AGE-58-52-3552	Plan view & Details	Drawing	5	CIVIL -1	VENDOR	5/23/2013
	6007-CAL-AGE-58-52-3550	Calculation report	Calculation	4	CIVIL -1	VENDOR	5/23/2013
	6007-PLN-AGE-58-52-7550	Cover sheet	Drawing	3	CIVIL -1	VENDOR	5/23/2013
	6007-PLN-AGE-58-52-7552	Plan view & Details	Drawing	5	CIVIL -1	VENDOR	5/23/2013
	6007-CAL-AGE-58-52-7550	Calculation report	Calculation	4	CIVIL -1	VENDOR	5/23/2013
	6007-PLN-AGE-58-54-3552	Plan view & Details	Drawing	4	CIVIL -1	VENDOR	5/23/2013
	6007-CAL-AGE-58-54-3550	Calculation report	Calculation	3	CIVIL -1	VENDOR	5/23/2013
	6007-PLN-AGE-58-54-7552	Plan view & Details	Drawing	4	CIVIL -1	VENDOR	5/23/2013
	6007-CAL-AGE-58-54-7550	Calculation report	Calculation	3	CIVIL -1	VENDOR	5/23/2013
	6007-PLN-AGE-12-52-4500	Cover sheet	Drawing	2	CIVIL -1	VENDOR	5/24/2013
	6007-PLN-AGE-12-52-4520	General notes	Drawing	2	CIVIL -1	VENDOR	5/24/2013
	6007-PLN-AGE-12-52-4540	Plan	Drawing	3	CIVIL -1	VENDOR	5/24/2013
	6007-PLN-AGE-12-52-4560	MP-409 Pump foundation Details	Drawing	3	CIVIL -1	VENDOR	5/24/2013
	6007-PLN-AGE-12-52-4561	MP-444 Pump foundation Details	Drawing	3	CIVIL -1	VENDOR	5/24/2013
	6007-PLN-AGE-12-52-4562	MP-409 Pump foundation Details	Drawing	3	CIVIL -1	VENDOR	5/24/2013
	6007-CAL-AGE-12-52-4500	Calculation Report	Calculation	2	CIVIL -1	VENDOR	5/24/2013
	6007-PLN-AGE-12-52-8500	Cover sheet	Drawing	2	CIVIL -1	VENDOR	5/24/2013
	6007-PLN-AGE-12-52-8520	General notes	Drawing	2	CIVIL -1	VENDOR	5/24/2013
	6007-PLN-AGE-12-52-8540	Plan	Drawing	3	CIVIL -1	VENDOR	5/24/2013
	6007-PLN-AGE-12-52-8560	MP-409 Pump foundation Details	Drawing	3	CIVIL -1	VENDOR	5/24/2013
	6007-PLN-AGE-12-52-8561	MP-444 Pump foundation Details	Drawing	3	CIVIL -1	VENDOR	5/24/2013
	6007-PLN-AGE-12-52-8562	MP-409 Pump foundation Details	Drawing	3	CIVIL -1	VENDOR	5/24/2013
	6007-CAL-AGE-12-52-8500	Calculation Report	Calculation	2	CIVIL -1	VENDOR	5/24/2013
	6007-PLN-AGE-50-00-S003	Handrails, stairways and grating details	Drawing	2	CIVIL -1	VENDOR	5/24/2013
	6007-CAL-AGE-50-00-S003	Calculation report	Calculation	0	CIVIL -1	VENDOR	5/24/2013
	6007-PLN-AGE-25-52-4000	Cover sheet	Drawing	1	CIVIL -1	VENDOR	5/28/2013
	6007-PLN-AGE-40-52-4020	General note s	Drawing	1	CIVIL -1	VENDOR	5/28/2013
	6007-PLN-AGE-67-52-4440	Foundation Plan s, Elevation, & Detail s	Drawing	3	CIVIL -1	VENDOR	5/28/2013
	6007-CAL-AGE-25-52-4010	Calculation Report	Calculation	3	CIVIL -1	VENDOR	5/28/2013
	6007-PLN-AGE-25-52-8000	Cover sheet	Drawing	1	CIVIL -1	VENDOR	5/28/2013
	6007-PLN-AGE-40-52-8020	General note s	Drawing	1	CIVIL -1	VENDOR	5/28/2013
	6007-PLN-AGE-67-52-8440	Foundation Plan s, Elevation, & Detail s	Drawing	3	CIVIL -1	VENDOR	5/28/2013
	6007-CAL-AGE-25-52-8010	Calculation Report	Calculation	3	CIVIL -1	VENDOR	5/28/2013
	6007-PLN-AGE-58-52-2476	Coordinates	Drawing	4	CIVIL -1	VENDOR	5/29/2013
	6007-PLN-AGE-58-52-6476	Coordinates	Drawing	4	CIVIL -1	VENDOR	5/29/2013
	6007-PLN-AGE-29-55-2002	Plan View	Drawing	5	CIVIL -1	VENDOR	6/4/2013
	6007-PLN-AGE-29-55-2013	Detail X	Drawing	3	CIVIL -1	VENDOR	6/4/2013
	6007-PLN-AGE-29-55-2014	Detail XI	Drawing	4	CIVIL -1	VENDOR	6/4/2013
	6007-PLN-AGE-29-55-2015	Detail XII	Drawing	4	CIVIL -1	VENDOR	6/4/2013
	6007-PLN-AGE-29-55-6002	Plan View	Drawing	5	CIVIL -1	VENDOR	6/4/2013
	6007-PLN-AGE-29-55-6014	Detail XI	Drawing	4	CIVIL -1	VENDOR	6/4/2013
	6007-PLN-AGE-29-55-6015	Detail XII	Drawing	4	CIVIL -1	VENDOR	6/4/2013
	6007-PLN-AGE-67-52-4540 Rev4	ha MP-405 Cooling tower tempering pumps foundation. Plans, elevations	Drawing	4	CIVIL -1	VENDOR	6/4/2013
	6007-PLN-AGE-67-52-8540 Rev4	ta MP-405 Cooling tower tempering pumps foundation. Plans, elevations &	Drawing	4	CIVIL -1	VENDOR	6/4/2013
	6007-PLN-AGE-58-54-2325	Cover sheet	Drawing	2	CIVIL -1	VENDOR	6/5/2013
	6007-PLN-AGE-58-54-2326	General notes	Drawing	2	CIVIL -1	VENDOR	6/5/2013
	6007-PLN-AGE-58-54-2327	Platform 1. Structure steel, frames	Drawing	2	CIVIL -1	VENDOR	6/5/2013
	6007-PLN-AGE-58-54-2328	Platform 1. Structure steel, frames	Drawing	2	CIVIL -1	VENDOR	6/5/2013
	6007-PLN-AGE-58-54-2329	Platform 2. Structure steel, frames	Drawing	2	CIVIL -1	VENDOR	6/5/2013
	6007-PLN-AGE-58-54-2330	Platform 2. Structure steel, frames	Drawing	2	CIVIL -1	VENDOR	6/5/2013
	6007-PLN-AGE-58-54-2331	Platform 3. Structure steel, frames	Drawing	2	CIVIL -1	VENDOR	6/5/2013
	6007-PLN-AGE-58-54-2332	Platform 3. Structure steel, frames	Drawing	2	CIVIL -1	VENDOR	6/5/2013
	6007-PLN-AGE-58-54-2333	Platform 4. Structure steel, frames	Drawing	2	CIVIL -1	VENDOR	6/5/2013
	6007-PLN-AGE-58-54-2334	Platform 4. Structure steel, frames	Drawing	2	CIVIL -1	VENDOR	6/5/2013
	6007-PLN-AGE-58-54-2335	Platform 5. Structure steel, frames	Drawing	2	CIVIL -1	VENDOR	6/5/2013
	6007-PLN-AGE-58-54-2336	Platform 5. Structure steel, frames	Drawing	2	CIVIL -1	VENDOR	6/5/2013
	6007-CAL-AGE-58-54-2325	Calculation Report	Calculation	1	CIVIL -1	VENDOR	6/5/2013
	6007-PLN-AGE-58-54-6325	Cover sheet	Drawing	2	CIVIL -1	VENDOR	6/5/2013
	6007-PLN-AGE-58-54-6326	General notes	Drawing	2	CIVIL -1	VENDOR	6/5/2013
	6007-PLN-AGE-58-54-6327	Platform 1. Structure steel, frames	Drawing	2	CIVIL -1	VENDOR	6/5/2013
	6007-PLN-AGE-58-54-6328	Platform 1. Structure steel, frames	Drawing	2	CIVIL -1	VENDOR	6/5/2013
	6007-PLN-AGE-58-54-6329	Platform 2. Structure steel, frames	Drawing	2	CIVIL -1	VENDOR	6/5/2013
	6007-PLN-AGE-58-54-6330	Platform 2. Structure steel, frames	Drawing	2	CIVIL -1	VENDOR	6/5/2013
	6007-PLN-AGE-58-54-6331	Platform 3. Structure steel, frames	Drawing	2	CIVIL -1	VENDOR	6/5/2013
	6007-PLN-AGE-58-54-6332	Platform 3. Structure steel, frames	Drawing	2	CIVIL -1	VENDOR	6/5/2013
	6007-PLN-AGE-58-54-6333	Platform 4. Structure steel, frames	Drawing	2	CIVIL -1	VENDOR	6/5/2013
	6007-PLN-AGE-58-54-6334	Platform 4. Structure steel, frames	Drawing	2	CIVIL -1	VENDOR	6/5/2013
	6007-PLN-AGE-58-54-6335	Platform 5. Structure steel, frames	Drawing	2	CIVIL -1	VENDOR	6/5/2013
	6007-PLN-AGE-58-54-6336	Platform 5. Structure steel, frames	Drawing	2	CIVIL -1	VENDOR	6/5/2013
	6007-CAL-AGE-58-54-6325	Calculation Report	Calculation	1	CIVIL -1	VENDOR	6/5/2013
	6007-PLN-AGE-40-52-4100	Cover Sheet	Drawing	5	CIVIL -1	VENDOR	6/6/2013
	6007-PLN-AGE-40-52-4140	Foundation Plan	Drawing	5	CIVIL -1	VENDOR	6/6/2013
	6007-PLN-AGE-40-52-4141	Mat Bottom	Drawing	5	CIVIL -1	VENDOR	6/6/2013
	6007-PLN-AGE-40-52-4142	Mat Top	Drawing	5	CIVIL -1	VENDOR	6/6/2013
	6007-PLN-AGE-40-52-4143	Extra Top	Drawing	3	CIVIL -1	VENDOR	6/6/2013

ABENER TEYMA MOJAVE

ompliance No.: GEN-2
Job : Mojave Solar Project
ate: 04/10/2012 Description: Civil Master Drawing List

Line No.	Sheet No.	Description	Type of Document	Revision Number	Applicable Condition of Certification	Vendor Supplied or EOR	Submittal Date
	6007-PLN-AGE-40-52-4144	Extra Bottom	Drawing	3	CIVIL -1	VENDOR	6/6/2013
	6007-PLN-AGE-40-52-4145	Mat Reinforcement details	Drawing	3	CIVIL -1	VENDOR	6/6/2013
	6007-PLN-AGE-40-52-4150	Drainage	Drawing	3	CIVIL -1	VENDOR	6/6/2013
	6007-PLN-AGE-40-52-4160	Pier and Rack anchor layout	Drawing	3	CIVIL -1	VENDOR	6/6/2013
	6007-PLN-AGE-40-52-4161	Pier and Rack support details	Drawing	3	CIVIL -1	VENDOR	6/6/2013
	6007-PLN-AGE-40-52-4162	Anchor rods. Assemblies and details.	Drawing	3	CIVIL -1	VENDOR	6/6/2013
	6007-PLN-AGE-40-52-4163	Skid and bench supports layout	Drawing	3	CIVIL -1	VENDOR	6/6/2013
	6007-PLN-AGE-40-52-4164	Skid support details	Drawing	3	CIVIL -1	VENDOR	6/6/2013
	6007-PLN-AGE-40-52-4173	Skid support lay out	Drawing	3	CIVIL -1	VENDOR	6/6/2013
	6007-PLN-AGE-40-52-8100	Cover Sheet	Drawing	5	CIVIL -1	VENDOR	6/6/2013
	6007-PLN-AGE-40-52-8140	Foundation Plan	Drawing	5	CIVIL -1	VENDOR	6/6/2013
	6007-PLN-AGE-40-52-8141	Mat Bottom	Drawing	5	CIVIL -1	VENDOR	6/6/2013
	6007-PLN-AGE-40-52-8142	Mat Top	Drawing	5	CIVIL -1	VENDOR	6/6/2013
	6007-PLN-AGE-40-52-8143	Extra Top	Drawing	3	CIVIL -1	VENDOR	6/6/2013
	6007-PLN-AGE-40-52-8144	Extra Bottom	Drawing	3	CIVIL -1	VENDOR	6/6/2013
	6007-PLN-AGE-40-52-8145	Mat Reinforcement details	Drawing	3	CIVIL -1	VENDOR	6/6/2013
	6007-PLN-AGE-40-52-8150	Drainage	Drawing	3	CIVIL -1	VENDOR	6/6/2013
	6007-PLN-AGE-40-52-8160	Pier and Rack anchor layout	Drawing	3	CIVIL -1	VENDOR	6/6/2013
	6007-PLN-AGE-40-52-8161	Pier and Rack support details	Drawing	3	CIVIL -1	VENDOR	6/6/2013
	6007-PLN-AGE-40-52-8162	Anchor rods. Assemblies and details.	Drawing	3	CIVIL -1	VENDOR	6/6/2013
	6007-PLN-AGE-40-52-8163	Skid and bench supports layout	Drawing	3	CIVIL -1	VENDOR	6/6/2013
	6007-PLN-AGE-40-52-8164	Skid support details	Drawing	3	CIVIL -1	VENDOR	6/6/2013
	6007-PLN-AGE-40-52-8173	Skid support lay out	Drawing	3	CIVIL -1	VENDOR	6/6/2013
	6007-PLN-MBS-18-52-0001	FOUNDATION PLAN	Drawing	2	CIVIL -1	VENDOR	5/29/2013
	6007-PLN-MBS-18-52-0002	FOUNDATION DETAILS & NOTES	Drawing	2	CIVIL -1	VENDOR	5/29/2013
	6007-PLN-MBS-18-52-0003	FOUNDATION DETAILS	Drawing	2	CIVIL -1	VENDOR	5/29/2013
	6007-CAL-MBS-18-52-0001	FOUNDATION CALCULATIONS	Calculation	2	CIVIL -1	VENDOR	5/29/2013
	6007-PLN-MBS-18-57-0001	MODULAR ELEVATOR COVER SHEET	Drawing	1	CIVIL -1	VENDOR	5/29/2013
	6007-PLN-MBS-18-57-0002	GENERAL NOTES & ABBREVIATIONS	Drawing	1	CIVIL -1	VENDOR	5/29/2013
	6007-PLN-MBS-18-57-0003	FOUNDATION PLAN	Drawing	1	CIVIL -1	VENDOR	5/29/2013
	6007-PLN-MBS-18-57-0004	FOUNDATION DETAILS	Drawing	1	CIVIL -1	VENDOR	5/29/2013
	6007-PLN-MBS-18-57-0005	HOISTWAY ROOF PLAN	Drawing	1	CIVIL -1	VENDOR	5/29/2013
	6007-PLN-MBS-18-57-0006	HOISTWAY & ROOF DETAILS	Drawing	1	CIVIL -1	VENDOR	5/29/2013
	6007-PLN-MBS-18-57-0007	HOISTWAY CROSS SECTIONS	Drawing	1	CIVIL -1	VENDOR	5/29/2013
	6007-PLN-MBS-18-57-0008	HOISTWAY DETAILS	Drawing	1	CIVIL -1	VENDOR	5/29/2013
	6007-PLN-MBS-18-57-0009	MISCELLANEOUS DETAILS	Drawing	1	CIVIL -1	VENDOR	5/29/2013
	6007-PLN-MBS-18-57-0010	HOISTWAY WALL PANELS	Drawing	1	CIVIL -1	VENDOR	5/29/2013
	6007-PLN-MBS-18-57-0011	MODULAR EQUIPMENT ROOM	Drawing	1	CIVIL -1	VENDOR	5/29/2013
	6007-PLN-MBS-18-57-0012	RAIL & POWER UNIT DETAILS	Drawing	1	CIVIL -1	VENDOR	5/29/2013
	6007-PLN-MBS-18-57-0013	ELEVATOR DATA	Drawing	1	CIVIL -1	VENDOR	5/29/2013
	6007-PLN-MBS-18-57-0014	ELEVATOR LATOUT	Drawing	1	CIVIL -1	VENDOR	5/29/2013
	6007-PLN-MBS-18-57-0015	ELEVATOR CAB	Drawing	1	CIVIL -1	VENDOR	5/29/2013
	6007-PLN-MBS-18-57-0016	ACCESS COMPLIANCE	Drawing	1	CIVIL -1	VENDOR	5/29/2013
	6007-CAL-MBS-18-57-0001	ELEVATOR CALCULATIONS	Calculation	1	CIVIL -1	VENDOR	5/29/2013
	6007-PLN-MBS-18-57-0001	COVER SHEET & BUILDING DATA	Drawing	1	CIVIL -1	VENDOR	5/29/2013
	6007-PLN-MBS-18-57-0002	FLOOR PLAN (1st STORY)	Drawing	1	CIVIL -1	VENDOR	5/29/2013
	6007-PLN-MBS-18-57-0003	FLOOR PLAN (2nd STORY)	Drawing	1	CIVIL -1	VENDOR	5/29/2013
	6007-PLN-MBS-18-57-0004	GENERAL NOTES & DETAILS	Drawing	1	CIVIL -1	VENDOR	5/29/2013
	6007-PLN-MBS-18-57-0005	REFLECTED CEILING PLAN (1st STORY)	Drawing	1	CIVIL -1	VENDOR	5/29/2013
	6007-PLN-MBS-18-57-0006	REFLECTED CEILING PLAN (2nd STORY)	Drawing	1	CIVIL -1	VENDOR	5/29/2013
	6007-PLN-MBS-18-57-0007	REFLECTED CEILING NOTES & DETAILS	Drawing	1	CIVIL -1	VENDOR	5/29/2013
	6007-PLN-MBS-18-57-0008	EXTERIOR ELEVATIONS	Drawing	1	CIVIL -1	VENDOR	5/29/2013
	6007-PLN-MBS-18-57-0009	EXTERIOR ELEVATIONS	Drawing	1	CIVIL -1	VENDOR	5/29/2013
	6007-PLN-MBS-18-57-0010	ROOF PLAN	Drawing	1	CIVIL -1	VENDOR	5/29/2013
	6007-PLN-MBS-18-57-0011	MISC. DETAILS	Drawing	1	CIVIL -1	VENDOR	5/29/2013
	6007-PLN-MBS-18-57-0012	MISC. DETAILS	Drawing	1	CIVIL -1	VENDOR	5/29/2013
	6007-PLN-MBS-18-57-0013	MISC. DETAILS	Drawing	1	CIVIL -1	VENDOR	5/29/2013
	6007-PLN-MBS-18-57-0014	1ST. STORY ROOF FRAMING PLAN	Drawing	1	CIVIL -1	VENDOR	5/29/2013
	6007-PLN-MBS-18-57-0015	2ND. STORY ROOF FRAMING PLAN	Drawing	1	CIVIL -1	VENDOR	5/29/2013
	6007-PLN-MBS-18-57-0016	LADDER DETAILS	Drawing	1	CIVIL -1	VENDOR	5/29/2013
	6007-PLN-MBS-18-60-0001	MECHANICAL LEGEND, NOTES & SCHEDULES	Drawing	1	CIVIL -1	VENDOR	5/29/2013
	6007-PLN-MBS-18-60-0002	MECHANICAL PLAN (1st STORY)	Drawing	1	CIVIL -1	VENDOR	5/29/2013
	6007-PLN-MBS-18-60-0003	MECHANICAL PLAN (2nd STORY)	Drawing	1	CIVIL -1	VENDOR	5/29/2013
	6007-PLN-MBS-18-60-0004	MECHANICAL DETAILS	Drawing	1	CIVIL -1	VENDOR	5/29/2013
	6007-PLN-MBS-18-82-0001	PLUMBING SUPPLY RISER DIAGRAMS	Drawing	1	CIVIL -1	VENDOR	5/29/2013
	6007-PLN-MBS-18-82-0002	PLUMBING WASTE RISER DIAGRAMS	Drawing	1	CIVIL -1	VENDOR	5/29/2013
	6007-PLN-MBS-18-82-0003	PLUMBING NOTES & DETAILS	Drawing	1	CIVIL -1	VENDOR	5/29/2013
	6007-PLN-MBS-18-82-0004	2nd STORY PLUMBING	Drawing	1	CIVIL -1	VENDOR	5/29/2013
	6007-PLN-MBS-18-54-0001	COVER SHEET & BUILDING DATA	Drawing	2	CIVIL -1	VENDOR	5/29/2013
	6007-PLN-MBS-18-54-0002	OVERALL STRUCTURAL KEY PLAN (LOWER STORY)	Drawing	2	CIVIL -1	VENDOR	5/29/2013
	6007-PLN-MBS-18-54-0003	STRUCTURAL KEY PLANS (LOWER STORY)	Drawing	0	CIVIL -1	VENDOR	5/29/2013
	6007-PLN-MBS-18-54-0004	STRUCTURAL KEY PLANS (LOWER STORY)	Drawing	0	CIVIL -1	VENDOR	5/29/2013
	6007-PLN-MBS-18-54-0005	STRUCTURAL KEY PLANS (LOWER STORY)	Drawing	1	CIVIL -1	VENDOR	5/29/2013
	6007-PLN-MBS-18-54-0006	OVERALL STRUCTURAL KEY PLAN (UPPER STORY)	Drawing	0	CIVIL -1	VENDOR	5/29/2013
	6007-PLN-MBS-18-54-0007	STRUCTURAL KEY PLAN (UPPER STORY)	Drawing	0	CIVIL -1	VENDOR	5/29/2013
	6007-PLN-MBS-18-54-0008	TYPICAL TRANSVERSE CROSS SECTION	Drawing	0	CIVIL -1	VENDOR	5/29/2013
	6007-PLN-MBS-18-54-0009	TYPICAL LONGITUDINAL CROSS SECTION	Drawing	0	CIVIL -1	VENDOR	5/29/2013
	6007-PLN-MBS-18-54-0010	TYPICAL FLOOR FRAMING DESIGN	Drawing	2	CIVIL -1	VENDOR	5/29/2013
	6007-PLN-MBS-18-54-0011	TYPICAL FLOOR FRAMING DESIGN	Drawing	2	CIVIL -1	VENDOR	5/29/2013

ABENER TEYMA MOJAVE

ompliance No.: GEN-2
Job : Mojave Solar Project
ate: 04/10/2012 Description: Civil Master Drawing List

Line No.	Sheet No.	Description	Type of Document	Revision Number	Applicable Condition of Certification	Vendor Supplied or EOR	Submittal Date
	6007-PLN-MBS-18-54-0012	AXLE & HITCH DESIGN	Drawing	0	CIVIL -1	VENDOR	5/29/2013
	6007-PLN-MBS-18-54-0013	WALL FRAMING	Drawing	2	CIVIL -1	VENDOR	5/29/2013
	6007-PLN-MBS-18-54-0014	ROOF FRAMING PLAN & DETAILS	Drawing	1	CIVIL -1	VENDOR	5/29/2013
	6007-PLN-MBS-18-54-0015	ROOF FRAMING PLAN & DETAILS	Drawing	0	CIVIL -1	VENDOR	5/29/2013
	6007-PLN-MBS-18-54-0016	ROOF FRAMING PLAN & DETAILS	Drawing	2	CIVIL -1	VENDOR	5/29/2013
	6007-PLN-MBS-18-54-0017	UPPER TO LOWER STORY CONNECTION	Drawing	0	CIVIL -1	VENDOR	5/29/2013
	6007-PLN-MBS-18-54-0018	INTERIOR STAIR CONSTRUCTION	Drawing	0	CIVIL -1	VENDOR	5/29/2013
	6007-PLN-MBS-18-54-0019	EXTERIOR STAIR CONSTRUCTION	Drawing	2	CIVIL -1	VENDOR	5/29/2013
	6007-PLN-MBS-18-40-0001	ELECTRICAL POWER PLAN (1sT STORY)	Drawing	1	CIVIL -1	VENDOR	5/29/2013
	6007-PLN-MBS-18-40-0002	ELECTRICAL POWER PLAN (2nd STORY)	Drawing	1	CIVIL -1	VENDOR	5/29/2013
	6007-PLN-MBS-18-40-0003	ELECTRICAL LIGHTING PLAN (1st STORY)	Drawing	1	CIVIL -1	VENDOR	5/29/2013
	6007-PLN-MBS-18-40-0004	ELECTRICAL LIGHTING PLAN (2nd STORY)	Drawing	1	CIVIL -1	VENDOR	5/29/2013
	6007-PLN-MBS-18-40-0005	ELECTRICAL NOTES, DETAILS, SINGLE LINE DIAGRAM & PANEL SCHEDULES	Drawing	1	CIVIL -1	VENDOR	5/29/2013
	6007-CAL-MBS-18-60-001	TITLE-24 MECHANICAL & ENVELOPE CALCS	Calculation	0	CIVIL -1	VENDOR	5/29/2013
	6007-CAL-MBS-18-54-001	STRUCTURAL CALCULATIONS	Calculation	2	CIVIL -1	VENDOR	5/29/2013
	6007-CAL-MBS-18-40-001	TITLE 24 ELECTRICAL CALCS	Calculation	0	CIVIL -1	VENDOR	5/29/2013

Compliance No.: GEN-2
Job: Mojave Solar Project
Date: 31 Jan 2012
Description: Electrical Site Drawings List - Alpha

Drawing Number	Drawing Title	Applicable Condition of Certification	Vendor Supplied or EOR	Submittal Date	Reason For Submittal		Type of Document
6007-PLN-ATP-00-21-O001	Electrical One-Line Diagram Symbol List	ELEC-1 (TYP)	Vendor	29-Nov-11	Approval		Drawing
6007-PLN-ATP-00-21-O010	Overall One-Line Diagram-Alpha Site	ELEC-1 (TYP)	Vendor	23-Sep-11	Approval		Drawing
6007-PLN-ATP-18-52-R101	Electrical Layout Building #22 Main Electric Station-Alpha Site	ELEC-1 (TYP)	Vendor	9-Sep-11	Approval		Drawing
6007-PLN-ATP-18-52-R102	Electrical Layout Building #27 HTF Station-Alpha Site	ELEC-1 (TYP)	Vendor	9-Sep-11	Approval		Drawing
6007-PLN-ATP-18-52-R103	Electrical Layout Building #26 Cooling Water Station-Alpha Site	ELEC-1 (TYP)	Vendor	9-Sep-11	Approval		Drawing
6007-PLN-ATP-18-52-R104	Electrical Layout Building #13 STG1 Station-Alpha Site	ELEC-1 (TYP)	Vendor	18-Nov-11	Approval		Drawing
6007-PLN-ATP-18-52-R106	Building Layout 101 SUB 001 Solar Field Station-Alpha Site	ELEC-1 (TYP)	Vendor	9-Sep-11	Approval		Drawing
6007-PLN-ATP-18-52-R107	Building Layout 102 SUB 001 Solar Field Station-Alpha Site	ELEC-1 (TYP)	Vendor	9-Sep-11	Approval		Drawing
6007-PLN-ATP-18-52-R108	Building Layout 103 SUB 001 Solar Field Station-Alpha Site	ELEC-1 (TYP)	Vendor	9-Sep-11	Approval		Drawing
6007-PLN-ATP-18-52-R109	Building Layout 104 SUB 001 Solar Field Station-Alpha Site	ELEC-1 (TYP)	Vendor	9-Sep-11	Approval		Drawing
6007-PLN-ATP-23-21-O105	General One-Line Diagram 230KV Substation-Alpha Site	ELEC-1 (TYP)	Vendor	23-Sep-11	Approval		Drawing
6007-PLN-ATP-23-21-O107	General One-Line Diagram 230KV Substation Utility Interconnection-Alpha/Beta Site	ELEC-1 (TYP)	Vendor		Approval		Drawing
6007-PLN-ATP-23-21-O108	Metering And Relaying One-Line Key Plan-Alpha Site	ELEC-1 (TYP)	Vendor	6-Jul-11	Approval		Drawing
6007-PLN-ATP-23-21-O109	Metering And Relaying One-Line Diagram STG1-Alpha Site	ELEC-1 (TYP)	Vendor	6-Jul-11	Approval		Drawing
6007-PLN-ATP-23-21-O110	Metering And Relaying One-Line Diagram APT1-Alpha Site	ELEC-1 (TYP)	Vendor	6-Jul-11	Approval		Drawing
6007-PLN-ATP-23-21-O113	Metering And Relaying One-Line 230 KV Transmission Line-Alpha Site	ELEC-1 (TYP)	Vendor	6-Jul-11	Approval		Drawing
6007-PLN-ATP-23-21-O114	Metering And Relaying Substation Trip/Close Control Logic One Line-Alpha Site	ELEC-1 (TYP)	Vendor	6-Jul-11	Approval		Drawing
6007-PLN-ATP-23-22-B106	DC Schematic STG1 Protection-Alpha Site	ELEC-1 (TYP)	Vendor	1-Dec-11	Approval		Drawing
6007-PLN-ATP-23-22-B108	DC Schematic STG1 Unit Protection-Alpha Site	ELEC-1 (TYP)	Vendor	1-Dec-11	Approval		Drawing
6007-PLN-ATP-23-22-B109	DC Schematic Excitation Protection STG1-Alpha Site	ELEC-1 (TYP)	Vendor	1-Dec-11	Approval		Drawing
6007-PLN-ATP-23-22-B110	DC Schematic Aux Power Transformer & Transmission Line Protection-Alpha Site	ELEC-1 (TYP)	Vendor	1-Dec-11	Approval		Drawing
6007-PLN-ATP-23-22-B116	AC Schematic Syncronization Bus STG1-Alpha Site	ELEC-1 (TYP)	Vendor	1-Dec-11	Approval		Drawing
6007-PLN-ATP-23-22-B117	DC Schematic Syncronization Bus STG1-Alpha Site	ELEC-1 (TYP)	Vendor	1-Dec-11	Approval		Drawing
6007-PLN-ATP-23-38-R100	230kV Substation Layout Plan View-Alpha Site	ELEC-1 (TYP)	Vendor	18-Nov-11	Approval		Drawing
6007-PLN-ATP-26-01-R100	230 KV Transmission Line Layout Plan-Alpha Site	ELEC-1 (TYP)	Vendor	23-Mar-11	Approval		Drawing
6007-PLN-ATP-26-38-R105	230 KV Substation Layout-Alpha/Beta Site	ELEC-1 (TYP)	Vendor	1-Dec-11	Approval		Drawing
6007-PLN-ATP-27-21-O160	480V Single Line LVSWGR-51 Building #13-Alpha Site	ELEC-1 (TYP)	Vendor	23-Sep-11	Approval		Drawing
6007-PLN-ATP-27-21-O165	480V Single Line LVSWGR-53 Building #10-Alpha Site	ELEC-1 (TYP)	Vendor	23-Sep-11	Approval		Drawing
6007-PLN-ATP-27-21-O170	480V Single-Line LVSWGR-54 Building #26-Alpha Site	ELEC-1 (TYP)	Vendor	23-Sep-11	Approval		Drawing
6007-PLN-ATP-27-21-O175	480V Single-Line LVSWGR-36 Building #27-Alpha Site	ELEC-1 (TYP)	Vendor	18-Nov-11	Approval		Drawing
6007-PLN-ATP-27-21-O305	480V Single-Line MCC-511 Building #13-Alpha Site	ELEC-1 (TYP)	Vendor	23-Sep-11	Approval		Drawing
6007-PLN-ATP-27-21-O325	480V Single-Line MCC-541 Building #26-Alpha Site	ELEC-1 (TYP)	Vendor	23-Sep-11	Approval		Drawing
6007-PLN-ATP-27-21-O335	480V Single-Line MCC-361 Electrical Building #27	ELEC-1 (TYP)	Vendor	23-Sep-11	Approval		Drawing
6007-PLN-ATP-27-23-P505	Electrical Panel PP-512 Building #22-Alpha Site	ELEC-1 (TYP)	Vendor	3-Oct-11	Approval		Drawing
6007-PLN-ATP-27-23-P506	Electrical Panel PP-51206 Building #22-Alpha Site	ELEC-1 (TYP)	Vendor	3-Oct-11	Approval		Drawing
6007-PLN-ATP-27-23-P510	Electrical Panel PP-513 Building #13-Alpha Site	ELEC-1 (TYP)	Vendor	3-Oct-11	Approval		Drawing
6007-PLN-ATP-27-23-P511	Electrical Panel PP-51306 Building #13-Alpha Site	ELEC-1 (TYP)	Vendor	3-Oct-11	Approval		Drawing
6007-PLN-ATP-27-23-P515	Electrical Panel PP-531 Building #10-Alpha Site	ELEC-1 (TYP)	Vendor	7-Dec-11	Approval		Drawing
6007-PLN-ATP-27-23-P520	Electrical Panel PP-532 Building #10-Alpha Site	ELEC-1 (TYP)	Vendor	3-Oct-11	Approval		Drawing
6007-PLN-ATP-27-23-P525	Electrical Panel PP-543 Building #26-Alpha Site	ELEC-1 (TYP)	Vendor	3-Oct-11	Approval		Drawing
6007-PLN-ATP-27-23-P526	Electrical Panel PP-54306 Building #26-Alpha Site	ELEC-1 (TYP)	Vendor	7-Dec-11	Approval		Drawing
6007-PLN-ATP-27-23-P535	Electrical Panel PP-363 Building #27	ELEC-1 (TYP)	Vendor	7-Dec-11	Approval		Drawing
6007-PLN-ATP-27-23-P536	Electrical Panel PP-36307 Building #27	ELEC-1 (TYP)	Vendor	7-Dec-11	Approval		Drawing
6007-PLN-ATP-28-21-O100	One-Line Diagram 15kV Distribution System-Alpha Site	ELEC-1 (TYP)	Vendor	23-Sep-11	Approval		Drawing
6007-PLN-ATP-28-21-O101	One-Line Diagram 15kV to 5kV VSD System-Alpha Site	ELEC-1 (TYP)	Vendor	23-Sep-11	Approval		Drawing
6007-PLN-ATP-28-21-O102	One-Line Diagram 5kV Distribution System-Alpha Site	ELEC-1 (TYP)	Vendor	9-Nov-11	Approval		Drawing
6007-PLN-ATP-28-21-O103	One-Line Diagram 5kV Distribution System-Alpha Site	ELEC-1 (TYP)	Vendor	23-Sep-11	Approval		Drawing
6007-PLN-ATP-28-21-O108	230 KV Metering & Relaying Protection Zone One-Line-Alpha Site	ELEC-1 (TYP)	Vendor	1-Dec-11	Approval		Drawing
6007-PLN-ATP-28-21-O110	230 KV Metering & Relaying One-Line - STG1 (STG2)-Alpha (Beta) Site	ELEC-1 (TYP)	Vendor	5-Dec-11	Approval		Drawing
6007-PLN-ATP-28-21-O111	230 KV Metering & Relaying One-Line - APT1(APT2)-Alpha (Beta) Site	ELEC-1 (TYP)	Vendor	1-Dec-11	Approval		Drawing
6007-PLN-ATP-28-21-O112	230 KV Metering & Relaying One-Line - TL1 (TL2) Alpha (Beta) Site	ELEC-1 (TYP)	Vendor	1-Dec-11	Approval		Drawing
6007-PLN-ATP-28-21-O141	Solar Field Substation 101 SUB 001-Alpha Site	ELEC-1 (TYP)	Vendor	23-Sep-11	Approval		Drawing
6007-PLN-ATP-28-21-O142	Solar Field Substation 102 SUB 001-Alpha Site	ELEC-1 (TYP)	Vendor	23-Sep-11	Approval		Drawing
6007-PLN-ATP-28-21-O143	Solar Field Substation 103 SUB 001-Alpha Site	ELEC-1 (TYP)	Vendor	23-Sep-11	Approval		Drawing
6007-PLN-ATP-28-21-O144	Solar Field Substation 104 SUB 001-Alpha Site	ELEC-1 (TYP)	Vendor	23-Sep-11	Approval		Drawing
6007-PLN-ATP-28-21-O150	General One-Line Diagram 15 kV to 480V BOP Distribution System-Alpha Site	ELEC-1 (TYP)	Vendor	9-Nov-11	Approval		Drawing
6007-PLN-ATP-28-22-B120	AC Schematic MVSWGR-1 Main Breaker 52-0-Alpha Site	ELEC-1 (TYP)	Vendor	23-Sep-11	Approval		Drawing
6007-PLN-ATP-28-22-B121	DC Schematic Sheet 1 MVSWGR-1 Main Breaker 52-0-Alpha Site	ELEC-1 (TYP)	Vendor	23-Sep-11	Approval		Drawing
6007-PLN-ATP-28-22-B122	DC Schematic Sheet 2 MVSWGR-1 Main Breaker 52-0-Alpha Site	ELEC-1 (TYP)	Vendor	23-Sep-11	Approval		Drawing
6007-PLN-ATP-28-22-B125	AC Schematic DG1 Synchronizing Breaker 52-1-Alpha Site	ELEC-1 (TYP)	Vendor	23-Sep-11	Approval		Drawing
6007-PLN-ATP-28-22-B126	DC Schematic Sheet 1 DG1 Synchronizing Breaker 52-1-Alpha Site	ELEC-1 (TYP)	Vendor	23-Sep-11	Approval		Drawing
6007-PLN-ATP-28-22-B127	DC Schematic Sheet 2 DG1 Synchronizing Breaker 52-1-Alpha Site	ELEC-1 (TYP)	Vendor	23-Sep-11	Approval		Drawing
6007-PLN-ATP-28-22-B128	AC & DC Schematic Diesel Generator DG1-Alpha Site	ELEC-1 (TYP)	Vendor	23-Sep-11	Approval		Drawing
6007-PLN-ATP-28-22-B129	AC Schematic Synchronizing Bus-Alpha Site	ELEC-1 (TYP)	Vendor	23-Sep-11	Approval		Drawing
6007-PLN-ATP-28-22-B130	DC Schematic DG1 Synchronizing Bus Sheet 1-Alpha Site	ELEC-1 (TYP)	Vendor	23-Sep-11	Approval		Drawing
6007-PLN-ATP-28-22-B131	DC Schematic DG1 Synchronizing Bus Sheet 2-Alpha Site	ELEC-1 (TYP)	Vendor	23-Sep-11	Approval		Drawing
6007-PLN-ATP-28-22-B132	AC Schematic MVSWGR 1 Feeder Breakers 52-2 thru 52-5-Alpha Site	ELEC-1 (TYP)	Vendor	23-Sep-11	Approval		Drawing
6007-PLN-ATP-28-22-B133	DC Schematic Sheet 1 MVSWGR 1 Feeder Breakers 52-2 thru 52-5-Alpha Site	ELEC-1 (TYP)	Vendor	23-Sep-11	Approval		Drawing
6007-PLN-ATP-28-22-B134	DC Schematic Sheet 2 MVSWGR 1 Feeder Breakers 52-2 thru 52-5-Alpha Site	ELEC-1 (TYP)	Vendor	23-Sep-11	Approval		Drawing
6007-PLN-ATP-28-22-B135	MVSWGR-1 Communication Schematic-Alpha Site	ELEC-1 (TYP)	Vendor	23-Sep-11	Approval		Drawing
6007-PLN-ATP-28-22-B136	MVSWGR-1 Digital Clocking Schematic-Alpha Site	ELEC-1 (TYP)	Vendor	23-Sep-11	Approval		Drawing
6007-PLN-ATP-28-22-B140	AC & DC Schematic Variable Speed Drive VSD-31 Thru VSD-34-Alpha Site	ELEC-1 (TYP)	Vendor	23-Sep-11	Approval		Drawing
6007-PLN-ATP-28-22-B141	Communication Schematic Variable Speed Drive VSD-31 Thru VSD-34-Alpha Site	ELEC-1 (TYP)	Vendor	23-Sep-11	Approval		Drawing
6007-PLN-ATP-28-22-B145	AC & DC Schematic Variable Speed Drive VSD-44-Alpha Site	ELEC-1 (TYP)	Vendor	23-Sep-11	Approval		Drawing
6007-PLN-ATP-28-22-B146	Communication Schematic Variable Speed Drive VSD-44-Alpha Site	ELEC-1 (TYP)	Vendor	23-Sep-11	Approval		Drawing
6007-PLN-ATP-28-22-B150	AC & DC Schematic Medium Voltage Switch MVS-30-Alpha Site	ELEC-1 (TYP)	Vendor	23-Sep-11	Approval		Drawing
6007-PLN-ATP-28-22-B153	Communication Schematic MVS-30-Alpha Site	ELEC-1 (TYP)	Vendor	23-Sep-11	Approval		Drawing
6007-PLN-ATP-28-22-B155	AC & DC Schematic Medium Voltage Switch MVS-51 - MVS-57-Alpha Site	ELEC-1 (TYP)	Vendor	23-Sep-11	Approval		Drawing
6007-PLN-ATP-28-22-B160	AC Schematic MVSWGR-4 Feeder Breaker 152-40 thru 43-Alpha Site	ELEC-1 (TYP)	Vendor	23-Sep-11	Approval		Drawing
6007-PLN-ATP-28-22-B161	DC Schematic MVSWGR-4 Feeder Breaker 152-40 Thru 43-Alpha Site	ELEC-1 (TYP)	Vendor	23-Sep-11	Approval		Drawing
6007-PLN-ATP-28-22-B162	DC Schematic Sheet 2 MVSWGR 4 Feeder Breakers 152-40 thru 152-43-Alpha Site	ELEC-1 (TYP)	Vendor	23-Sep-11	Approval		Drawing
6007-PLN-ATP-28-22-B163	Communication Schematic MVSWGR-4-Alpha Site	ELEC-1 (TYP)	Vendor	23-Sep-11	Approval		Drawing
6007-PLN-ATP-28-21-O001	Construction Temporary Power One Line Diagram	ELEC-1 (TYP)	Vendor	16-Aug-12	Approval		Drawing
6007-PLN-ATP-28-21-O002	Construction Temporary Power Distribution- One Line Diagram	ELEC-1 (TYP)	Vendor	16-Aug-12	Approval		Drawing
6007-PLN-ATP-28-21-O003	Construction Temporary Power Distribution- One Line Diagram	ELEC-1 (TYP)	Vendor	16-Aug-12	Approval		Drawing
6007-PLN-ATP-28-21-O004	Construction Temporary Power Distribution- One Line Diagram	ELEC-1 (TYP)	Vendor	16-Aug-12	Approval		Drawing
6007-PLN-ATP-28-21-P002	Construction Temporary Power Distribution Panel Schedules	ELEC-1 (TYP)	Vendor	16-Aug-12	Approval		Drawing
6007-PLN-ATP-28-21-P003	Construction Temporary Power Distribution Panel Schedules	ELEC-1 (TYP)	Vendor	16-Aug-12	Approval		Drawing
6007-PLN-ATP-28-21-P004	Construction Temporary Power Distribution Panel Schedules	ELEC-1 (TYP)	Vendor	16-Aug-12	Approval		Drawing
6007-PLN-ATP-28-21-P005	Construction Temporary Power Distribution Panel Schedules	ELEC-1 (TYP)	Vendor	16-Aug-12	Approval		Drawing
6007-PLN-ATP-28-21-P007	Construction Temporary Power Distribution Panel Schedules	ELEC-1 (TYP)	Vendor	16-Aug-12	Approval		Drawing
6007-PLN-ATP-28-21-R001	Construction Temporary Power Electrical Site Plan	ELEC-1 (TYP)	Vendor	16-Aug-12	Approval		Drawing
6007-PLN-ATP-28-21-R002	Construction Temporary Power for Alpha Plant	ELEC-1 (TYP)	Vendor	16-Aug-12	Approval		Drawing
6007-PLN-ATP-28-21-R003	Construction Temporaty Power for Beta Plant	ELEC-1 (TYP)	Vendor	16-Aug-12	Approval		Drawing
6007-PLN-AGE-57-33-1000	Solar Field Grounding System General Details	ELEC-1 (TYP)	Vendor	27-Aug-12	Approval		Drawing
6007-PLN-AGE-57-33-1002	Solar Field Grounding System General Typical Solar Collector Type 1 Details	ELEC-1 (TYP)	Vendor	27-Aug-12	Approval		Drawing
6007-PLN-AGE-57-33-1003	Solar Field Grounding System General Typical Solar Collector Type 2 Details	ELEC-1 (TYP)	Vendor	27-Aug-12	Approval		Drawing
6007-PLN-AGE-57-33-1004	Solar Field Barrier Fence Grounding Details	ELEC-1 (TYP)	Vendor	27-Aug-12	Approval		Drawing
6007-PLN-AGE-57-33-1005	Solar Field Perimeter and Wind Fence Grounding Details	ELEC-1 (TYP)	Vendor	27-Aug-12	Approval		Drawing
6007-PLN-AGE-57-33-1006	Solar Field Screening Fence Grounding Details	ELEC-1 (TYP)	Vendor	27-Aug-12	Approval		Drawing
6007-PLN-AGE-57-33-1007	Solar Field Grounding System General Details	ELEC-1 (TYP)	Vendor	27-Aug-12	Approval		Drawing
6007-PLN-AGE-57-33-2000	Alpha Plant Solar Field General Grounding	ELEC-1 (TYP)	Vendor	27-Aug-12	Approval		Drawing
6007-PLN-AGE-57-33-2001	Mojave. Solar Field Grounding System Cover Sheet. Alpha	ELEC-1 (TYP)	Vendor	27-Aug-12	Approval		Drawing
6007-PLN-AGE-57-33-2002	Mojave. Solar Field Grounding System General Notes. Alpha	ELEC-1 (TYP)	Vendor	27-Aug-12	Approval		Drawing
6007-PLN-AGE-57-33-2006	Alpha Plant. Solar Field 103 Shed for HTF Valves Panelboard Grounding Plan (East Valve Area)	ELEC-1 (TYP)	Vendor	27-Aug-12	Approval		Drawing
6007-PLN-AGE-57-33-2101	Alpha Plant Solar Field 101 Grounding Plan	ELEC-1 (TYP)	Vendor	27-Aug-12	Approval		Drawing
6007-PLN-AGE-57-33-2102	Alpha Plant Solar Field 102 Grounding Plan	ELEC-1 (TYP)	Vendor	27-Aug-12	Approval		Drawing
6007-PLN-AGE-57-33-2103	Alpha Plant Solar Field 103 Grounding Plan	ELEC-1 (TYP)	Vendor	27-Aug-12	Approval		Drawing
6007-PLN-AGE-57-33-2104	Alpha Plant Solar Field 104 Grounding Plan	ELEC-1 (TYP)	Vendor	27-Aug-12	Approval		Drawing
6007-PLN-AGE-57-33-6000	Beta Plant Solar Field General Grounding	ELEC-1 (TYP)	Vendor	27-Aug-12	Approval		Drawing
6007-PLN-AGE-57-33-6001	Mojave. Solar Field Grounding System Cover Sheet. Beta	ELEC-1 (TYP)	Vendor	27-Aug-12	Approval		Drawing
6007-PLN-AGE-57-33-6002	Mojave. Solar Field Grounding System General Notes. Beta	ELEC-1 (TYP)	Vendor	27-Aug-12	Approval		Drawing
6007-PLN-AGE-57-33-6006	Beta Plant. Solar Field 109 Shed for HTF Valve Panelboard Grounding Plan (East Valve Area)	ELEC-1 (TYP)	Vendor	27-Aug-12	Approval		Drawing
6007-PLN-AGE-57-33-6007	Beta Plant. Solar Field 107 Shed for HTF Valves Panelboard Grounding Plan (North Valve Area)	ELEC-1 (TYP)	Vendor	27-Aug-12	Approval		Drawing
6007-PLN-AGE-57-33-6008	Beta Plant. Solar Field 109 Shed for HTF Valve Panelboard Grounding Plan (South Valve Area)	ELEC-1 (TYP)	Vendor	27-Aug-12	Approval		Drawing
6007-PLN-AGE-57-33-6105	Beta Plant Solar Field 105 Grounding Plan	ELEC-1 (TYP)	Vendor	27-Aug-12	Approval		Drawing
6007-PLN-AGE-57-33-6106	Beta Plant Solar Field 106 Grounding Plan	ELEC-1 (TYP)	Vendor	27-Aug-12	Approval		Drawing
6007-PLN-AGE-57-33-6107	Beta Plant Solar Field 107 Grounding Plan	ELEC-1 (TYP)	Vendor	27-Aug-12	Approval		Drawing
6007-PLN-AGE-57-33-6108	Beta Plant Solar Field 108 Grounding Plan	ELEC-1 (TYP)	Vendor	27-Aug-12	Approval		Drawing
6007-PLN-AGE-57-33-6109	Beta Plan Solar Field 109 Grounding Plan	ELEC-1 (TYP)	Vendor	27-Aug-12	Approval		Drawing
	BV Comment Letter ELEC 1-6.00 PC1 Abengoa Response	ELEC-1 (TYP)	Vendor	7-Sep-12	Approval		Drawing
6007-PLN-GFG00-50-C449	Fence Detail	ELEC-1 (TYP)	Vendor	27-Aug-12	Approval		Drawing
6007-PLN-AGE57-33-2000	GENERAL GROUNDING ALPHA	ELEC-1 (TYP)	Vendor	27-Aug-12	Approval		Drawing
6007-PLN-AGE57-33-2001	COVER SHEET ALPHA	ELEC-1 (TYP)	Vendor	27-Aug-12	Approval		Drawing
6007-PLN-AGE57-33-2002	GENERAL NOTES ALPHA	ELEC-1 (TYP)	Vendor	27-Aug-12	Approval		Drawing
6007-PLN-AGE57-33-2003	EAST VALVE AREA GROUNDING PLAN ALPHA	ELEC-1 (TYP)	Vendor	27-Aug-12	Approval		Drawing
6007-PLN-AGE57-33-2101	101 GROUNDING PLAN ALPHA	ELEC-1 (TYP)	Vendor	27-Aug-12	Approval		Drawing
6007-PLN-AGE57-33-2102	102 GROUNDING PLAN ALPHA	ELEC-1 (TYP)	Vendor	27-Aug-12	Approval		Drawing
6007-PLN-AGE57-33-2103	103 GROUNDING PLAN ALPHA	ELEC-1 (TYP)	Vendor	27-Aug-12	Approval		Drawing
6007-PLN-AGE57-33-2104	104 GROUNDING PLAN ALPHA	ELEC-1 (TYP)	Vendor	27-Aug-12	Approval		Drawing
6007-PLN-AGE57-33-6000	GENERAL GROUNDING BETA	ELEC-1 (TYP)	Vendor	27-Aug-12	Approval		Drawing
6007-PLN-AGE57-33-6001	COVER SHEET BETA	ELEC-1 (TYP)	Vendor	27-Aug-12	Approval		Drawing
6007-PLN-AGE57-33-6002	GENERAL NOTES BETA	ELEC-1 (TYP)	Vendor	27-Aug-12	Approval		Drawing
6007-PLN-AGE57-33-6006	EAST VALVE AREA GROUNDING PLAN BETA	ELEC-1 (TYP)	Vendor	27-Aug-12	Approval		Drawing

Compliance No.: GEN-2
Job: Mojave Solar Project
Date: 31 Jan 2012
Description: Electrical Site Drawings List - Alpha

Drawing Number	Drawing Title	Applicable Condition of Certification	Vendor Supplied or EOR	Submittal Date	Reason For Submittal		Type of Document
6007-PLN-AGE57-33-6007	NORTH VALVE AREA GROUNDING PLAN BETA	ELEC-1 (TYP)	Vendor	27-Aug-12	Approval		Drawing
6007-PLN-AGE57-33-6008	SOUTH VALVE AREA GROUNDING PLAN BETA	ELEC-1 (TYP)	Vendor	27-Aug-12	Approval		Drawing
6007-PLN-AGE57-33-6105	105 GROUNDING PLAN BETA	ELEC-1 (TYP)	Vendor	27-Aug-12	Approval		Drawing
6007-PLN-AGE57-33-6106	106 GROUNDING PLAN BETA	ELEC-1 (TYP)	Vendor	27-Aug-12	Approval		Drawing

Compliance No.: GEN-2
Job: Mojave Solar Project
Date: 31 Jan 2012
Description: Electrical Site Drawings List - Alpha

Drawing Number	Drawing Title	Applicable Condition of Certification	Vendor Supplied or EOR	Submittal Date	Reason For Submittal		Type of Document
6007-PLN-AGE57-33-6107	107 GROUNDING PLAN BETA	ELEC-1 (TYP)	Vendor	27-Aug-12	Approval		Drawing
6007-PLN-AGE57-33-6108	108 GROUNDING PLAN BETA	ELEC-1 (TYP)	Vendor	27-Aug-12	Approval		Drawing
6007-PLN-AGE57-33-6109	109 GROUNDING PLAN BETA	ELEC-1 (TYP)	Vendor	27-Aug-12	Approval		Drawing
6007-PLN-AGE57-33-1000	GROUNDING SYSTEM GENERAL Details	ELEC-1 (TYP)	Vendor	27-Aug-12	Approval		Drawing
6007-PLN-AGE57-33-1002	TYPE 1 DETAILS	ELEC-1 (TYP)	Vendor	27-Aug-12	Approval		Drawing
6007-PLN-AGE57-33-1003	TYPE 2 DETAILS	ELEC-1 (TYP)	Vendor	27-Aug-12	Approval		Drawing
6007-PLN-AGE57-33-1004	BARRIER FENCE GROUNDING DETAILS	ELEC-1 (TYP)	Vendor	27-Aug-12	Approval		Drawing
6007-PLN-AGE57-33-1005	PERIMETER AND WIND FENCE GROUNDING DETAILS	ELEC-1 (TYP)	Vendor	27-Aug-12	Approval		Drawing
6007-PLN-AGE57-33-1006	SCREENING FENCE GROUNDING DETAILS	ELEC-1 (TYP)	Vendor	27-Aug-12	Approval		Drawing
6007-PLN-AGE57-33-1007	GROUNDING SYSTEM GENERAL DETAILS	ELEC-1 (TYP)	Vendor	27-Aug-12	Approval		Drawing
6007-PLN-ATP61-33-G003	Sketch 3 Alpha DB-7 Print	ELEC-1 (TYP)	Vendor	21-Sep-12	Approval		Drawing
	Sketch Alpha DB7 Layout 2 Print	ELEC-1 (TYP)	Vendor	21-Sep-12	Approval		Drawing
	Sketch Alpha DB7 Print	ELEC-1 (TYP)	Vendor	21-Sep-12	Approval		Drawing
	Sketch Alpha Trailers UDS 19,20,21 Layout 2 Print	ELEC-1 (TYP)	Vendor	21-Sep-12	Approval		Drawing
	Sketch Alpha Trailers UDS 19,20,21 Print	ELEC-1 (TYP)	Vendor	21-Sep-12	Approval		Drawing
6007-PLN-AGE-21-33-1101	Steam Generation Area Grounding Package Cover sheet Alpha Plant	ELEC-1 (TYP)	Vendor	27-Aug-12	Approval		Drawing
6007-PLN-AGE-21-33-1111	Steam Generation Area Grounding Package General notes Alpha Plant	ELEC-1 (TYP)	Vendor	27-Aug-12	Approval		Drawing
6007-PLN-AGE-21-33-1501	Steam Generation Area Grounding Package Cover sheet Beta Plant	ELEC-1 (TYP)	Vendor	27-Aug-12	Approval		Drawing
6007-PLN-AGE-21-33-1502	Steam Generation Area Grounding Package General notes Beta Plant	ELEC-1 (TYP)	Vendor	27-Aug-12	Approval		Drawing
6007-PLN-AGE-21-33-5101	SG Grounding System Alpha Plant	ELEC-1 (TYP)	Vendor	27-Aug-12	Approval		Drawing
6007-PLN-AGE-21-33-5111	SG Grounding System Details Alpha Plant	ELEC-1 (TYP)	Vendor	27-Aug-12	Approval		Drawing
6007-PLN-AGE-21-33-5112	SG Grounding System Reheater Details Alpha Plant	ELEC-1 (TYP)	Vendor	27-Aug-12	Approval		Drawing
6007-PLN-AGE-21-33-9501	SG Grounding System Beta Plant	ELEC-1 (TYP)	Vendor	27-Aug-12	Approval		Drawing
6007-PLN-AGE-21-33-9511	SG Grounding System Details Beta Plant	ELEC-1 (TYP)	Vendor	27-Aug-12	Approval		Drawing
6007-PLN-AGE57-35-0015	Solar Field %th Ruting System Detail Ruting TT Loop	ELEC-1 (TYP)	Vendor	27-Aug-12	Approval		Drawing
6007-PLN-AGE57-35-0012	Solar Field Cable Trenching Details for Cable Routing Between CCps	ELEC-1 (TYP)	Vendor	27-Aug-12	Approval		Drawing
6007-PLN-AGE57-35-0013	Solar Field Cable Trenching Details for Cable Routing with Basins Between CCps	ELEC-1 (TYP)	Vendor	15-Oct-12	Approval		Drawing
6007-PLN-AGE57-35-0014	Solar Field Cable Trenching Detail MC Cable Routing Close CCPs	ELEC-1 (TYP)	Vendor	15-Oct-12	Approval		Drawing
6007-PLN-AGE58-33-5201	Alpha Plan. HTF Overflow Tank (A-MT-204A) Grounding Plan	ELEC-1 (TYP)	Vendor	15-Oct-12	Approval		Drawing
6007-PLN-AGE58-33-5202	Alpha Plan. HTF Overflow Tank (A-MT-204B) Grounding Plan	ELEC-1 (TYP)	Vendor	11-Sep-12	Approval		Drawing
6007-PLN-AGE59-33-7201	Beta Plan. HTF Overflow Tank (B-MT-204A) Grounding Plan	ELEC-1 (TYP)	Vendor	11-Sep-12	Approval		Drawing
6007-PLN-AGE59-33-7201	Beta Plan. HTF Overflow Tank (B-MT-204B) Grounding Plan	ELEC-1 (TYP)	Vendor	11-Sep-12	Approval		Drawing
6007-PLN-AGE67-33-1421	Cooling Towers Grounding Package. Cover Sheet-Alpha Plant	ELEC-1 (TYP)	Vendor	11-Sep-12	Approval		Drawing
6007-PLN-AGE67-33-1431	Cooling Towers Grounding Package. General Notes-Alpha Plant	ELEC-1 (TYP)	Vendor	14-Aug-12	Approval		Drawing
6007-PLN-AGE67-33-1821	Cooling Towers Grounding Package. Cover Sheet. Beta	ELEC-1 (TYP)	Vendor	5-Jul-12	Approval		Drawing
6007-PLN-AGE67-33-1831	Cooling Towers Grounding Package. General Notes. Beta	ELEC-1 (TYP)	Vendor	14-Aug-12	Approval		Drawing
6007-PLN-AGE67-33-5421	Cooling Towers Grounding Plan-Alpha plant	ELEC-1 (TYP)	Vendor	5-Jul-12	Approval		Drawing
6007-PLN-AGE67-33-5422	Cooling Towers Grounding Details-Alpha plant	ELEC-1 (TYP)	Vendor	14-Aug-12	Approval		Drawing
6007-PLN-AGE67-33-9821	Cooling Tower grounding Plan-Beta Plant	ELEC-1 (TYP)	Vendor	31-Jul-12	Approval		Drawing
6007-PLN-AGE67-33-9822	Cooling Towers Grounding Details-Beta plant	ELEC-1 (TYP)	Vendor	14-Aug-12	Approval		Drawing
6007-PLN-AGE67-33-0001	Polisher Feed Tank Details	ELEC-1 (TYP)	Vendor	31-Jul-12	Approval		Drawing
6007-PLN-AGE67-33-1001	Polisher feed tank Grounding Package General Notes	ELEC-1 (TYP)	Vendor	17-Sep-12	Approval		Drawing
6007-PLN-AGE67-33-1441	Polisher feed tank Grounding Package Cover Sheet-Alpha Plant	ELEC-1 (TYP)	Vendor	17-Sep-12	Approval		Drawing
6007-PLN-AGE67-33-1851	Polisher Feed tank Grounding Package Cover Sheet-Beta Plant	ELEC-1 (TYP)	Vendor	17-Sep-12	Approval		Drawing
6007-PLN-AGE67-33-5431	Polisher Feed Tank Grounding Plan-Alpha Plant	ELEC-1 (TYP)	Vendor	17-Sep-12	Approval		Drawing
6007-PLN-AGE67-33-9831	Polisher Feed Tank Grounding Plan-Beta Plant	ELEC-1 (TYP)	Vendor	17-Sep-12	Approval		Drawing
6007-PLN-AGE25-33-0001	Polished Water Tank Details	ELEC-1 (TYP)	Vendor	17-Sep-12	Approval		Drawing
6007-PLN-AGE25-33-1001	Polished Water tank Grounding Package General Notes	ELEC-1 (TYP)	Vendor	17-Sep-12	Approval		Drawing
6007-PLN-AGE25-33-1322	Polished Water tank Grounding Package Cover Sheet-Alpha Plant	ELEC-1 (TYP)	Vendor	17-Sep-12	Approval		Drawing
6007-PLN-AGE25-33-1705	Polished Water tank Grounding Package Cover Sheet-Beta Plant	ELEC-1 (TYP)	Vendor	17-Sep-12	Approval		Drawing
6007-PLN-AGE25-33-5322	Polished Water Tank Grounding Plan-Alpha Plant	ELEC-1 (TYP)	Vendor	17-Sep-12	Approval		Drawing
6007-PLN-AGE25-33-9722	Polished Water Tank Grounding Plan-Beta Plant	ELEC-1 (TYP)	Vendor	17-Sep-12	Approval		Drawing
6007-PLN-AGE67-33-1463	Cooling Tower Blow Down Tank Grounding Package Cover Sheet_Alpha Plant	ELEC-1 (TYP)	Vendor	13-Sep-12	Approval		Drawing
6007-PLN-AGE67-33-1473	Cooling Tower Blow down Tank Grounding Package General Notes_Alpha Plant	ELEC-1 (TYP)	Vendor	12-Sep-12	Approval		Drawing
6007-PLN-AGE67-33-1863	Cooling Tower Blow Down Tank Grounding Package Cover Sheet_Beta Plant	ELEC-1 (TYP)	Vendor	12-Sep-12	Approval		Drawing
6007-PLN-AGE67-33-1873	Cooling Tower Blow Down tank Grounding Package General Notes_beta Plant	ELEC-1 (TYP)	Vendor	12-Sep-12	Approval		Drawing
6007-PLN-AGE67-33-5414	Cooling Tower Blow Down Tank Grounding Details_Alpha Plant	ELEC-1 (TYP)	Vendor	12-Sep-12	Approval		Drawing
6007-PLN-AGE67-33-5443	Cooling Tower Blow down Tank Grounding Plan_Alpha Plant	ELEC-1 (TYP)	Vendor	11-Sep-12	Approval		Drawing
6007-PLN-AGE67-33-9814	Cooling Tower Blow Down Tank Grounding Details_Beta Plant	ELEC-1 (TYP)	Vendor	11-Sep-12	Approval		Drawing
6007-PLN-AGE67-33-9843	Cooling Tower Blow Down Tank Grounding Plan_Beta Plant	ELEC-1 (TYP)	Vendor	11-Sep-12	Approval		Drawing
6007-PLN-AGE67-33-1462	Process Make up water tank Grounding Package Cover Sheet_Alpha Plant	ELEC-1 (TYP)	Vendor	11-Sep-12	Approval		Drawing
6007-PLN-AGE67-33-1472	Process Make-up water tank Grounding Package General Notes_Alpha Plant	ELEC-1 (TYP)	Vendor	12-Sep-12	Approval		Drawing
6007-PLN-AGE67-33-1862	Process Make up water tank Grounding Package Cover Sheet_Beta Plant	ELEC-1 (TYP)	Vendor	12-Sep-12	Approval		Drawing
6007-PLN-AGE67-33-1872	Process Make-up water tank Grounding Package General Notes_Beta Plant	ELEC-1 (TYP)	Vendor	12-Sep-12	Approval		Drawing
6007-PLN-AGE67-33-5413	Process Make up Water tank Grounding Details_Alpha Plant	ELEC-1 (TYP)	Vendor	12-Sep-12	Approval		Drawing
6007-PLN-AGE67-33-5442	Process Make up Water Tank Grounding Plan_Alpha Plant	ELEC-1 (TYP)	Vendor	11-Sep-12	Approval		Drawing
6007-PLN-AGE67-33-9813	Process Make up Water tank Grounding Details_Beta Plant	ELEC-1 (TYP)	Vendor	11-Sep-12	Approval		Drawing
6007-PLN-AGE67-33-9842	Process Make up Water Tank Grounding Plan_Beta Plant	ELEC-1 (TYP)	Vendor	11-Sep-12	Approval		Drawing
	AMMC Application FO Optral DSP-1 Binder	ELEC-1 (TYP)	Vendor	28-Nov-12	Approval		
6007-PLN-AGE25-33-9721	Turbine/Condenser/Generator Grounding Pan Beta Plant	ELEC-1 (TYP)	Vendor	29-Nov-12	Approval		Drawing
6007-PLN-AGE25-33-5321	Turbine/Condenser/Generator Grounding Pan Alpha Plant	ELEC-1 (TYP)	Vendor	29-Nov-12	Approval		Drawing
6007-PLN-AGE25-33-1704	Turbine/Condenser/Generator Grounding Package General Notes. Beta Plant	ELEC-1 (TYP)	Vendor	29-Nov-12	Approval		Drawing
6007-PLN-AGE25-33-1703	Turbine/Condenser/Generator Grounding Package Cover Sheet. Beta Plant	ELEC-1 (TYP)	Vendor	29-Nov-12	Approval		Drawing
6007-PLN-AGE25-33-1331	Turbine/Condenser/Generator Grounding Package General Notes. Alpha Plant	ELEC-1 (TYP)	Vendor	29-Nov-12	Approval		Drawing
6007-PLN-AGE25-33-1321	Turbine/Condenser/Generator Grounding Package Cover Sheet. Alpha Plant	ELEC-1 (TYP)	Vendor	29-Nov-12	Approval		Drawing
6007-PLN-AGE25-33-0002	Power Block Grounding Details	ELEC-1 (TYP)	Vendor	29-Nov-12	Approval		Drawing
6007-PLN-AGE-57-31-0022	Solar Field Cable Trenching Details MC Cable Routing Close CCP's with Grounding Cable	ELEC-1 (TYP)	Vendor	14-Dec-12	Approval		Drawing
6007-PLN-AGE-57-33-1003	Solar Field Grounding System Typical Solar Collectors Type 2 Details	ELEC-1 (TYP)	Vendor	14-Dec-12	Approval		Drawing
6007-PLN-AGE-57-33-1007	Solar Field Grounding System General details	ELEC-1 (TYP)	Vendor	14-Dec-12	Approval		Drawing
6007-PLN-AGE-57-33-6106	Beta Plant Solar Field 106 Grounding Plan	ELEC-1 (TYP)	Vendor	14-Dec-12	Approval		Drawing
6007-PLN-AGE-57-31-0021	olar Field Cable Trenching Details For Cable Routing With Basins Between CCP's with Grounding Cabl	ELEC-1 (TYP)	Vendor	14-Dec-12	Approval		Drawing
6007-PLN-AGE-57-33-1009	Solar Field Grounding System Typical Solar Collectors Type 4 Details	ELEC-1 (TYP)	Vendor	14-Dec-12	Approval		Drawing
6007-PLN-AGE-57-33-2101	Alpha Plant Solar Field 101 Grounding Plan	ELEC-1 (TYP)	Vendor	14-Dec-12	Approval		Drawing
6007-PLN-AGE-57-33-2103	Alpha Plant Solar Field 103 Grounding Plan	ELEC-1 (TYP)	Vendor	14-Dec-12	Approval		Drawing
6007-PLN-AGE-57-33-2102	Alpha Plant Solar Field 102 Grounding Plan	ELEC-1 (TYP)	Vendor	14-Dec-12	Approval		Drawing
6007-PLN-AGE-57-33-6107	Beta Plant Solar Field 107 Grounding Plan	ELEC-1 (TYP)	Vendor	14-Dec-12	Approval		Drawing
6007-PLN-AGE-57-33-6105	Beta Plant Solar Field 105 Grounding Plan	ELEC-1 (TYP)	Vendor	14-Dec-12	Approval		Drawing
6007-PLN-AGE-57-33-6108	Beta Plant Solar Field 108 Grounding Plan	ELEC-1 (TYP)	Vendor	14-Dec-12	Approval		Drawing
6007-PLN-AGE-57-33-2104	Alpha Plant Solar Field 104 Grounding Plan	ELEC-1 (TYP)	Vendor	14-Dec-12	Approval		Drawing
6007-PLN-AGE-57-33-1002	Solar Field Grounding System Typical Solar Collector Type 1 Details	ELEC-1 (TYP)	Vendor	14-Dec-12	Approval		Drawing
6007-PLN-AGE-57-33-1008	Solar Field Grounding System Typical Solar Collector Type 3 Details	ELEC-1 (TYP)	Vendor	14-Dec-12	Approval		Drawing
6007-PLN-AGE-57-33-6109	Beta Plant Solar Field 109 Grounding Plan	ELEC-1 (TYP)	Vendor	14-Dec-12	Approval		Drawing
6007-PLN-AGE-57-33-2000	Sketch, Alpha Grounding Layout, for Information Only.	ELEC-1 (TYP)	Vendor	18-Dec-12	Approval		Drawing
6007-PLN-AGE-57-33-6000	Sketch, Beta Grounding Layout, for Information Only.	ELEC-1 (TYP)	Vendor	18-Dec-12	Approval		Drawing
6007-CAL-AGE-57-33-2800	Solar Field Alpha Plant Grounding and Lightning Study.	ELEC-1 (TYP)	Vendor	18-Dec-12	Approval		Calculation
6007-CAL-AGE-57-33-6800	Solar Field Beta Plant Grounding and Lightning Study.	ELEC-1 (TYP)	Vendor	18-Dec-12	Approval		Calculation
6007-PLN-AGE-00-33-1001_R0	Pipe Rack Grounding Rack 1	ELEC-1 (TYP)	Vendor	21-Jan-13	Approval	0	Drawing
6007-PLN-AGE-00-33-1002_R0	Pipe Rack Grounding General Details	ELEC-1 (TYP)	Vendor	21-Jan-13	Approval	0	Drawing
6007-PLN-AGE-00-33-1003_R0	Pipe Rack Grounding Rack 3 North-South	ELEC-1 (TYP)	Vendor	21-Jan-13	Approval	0	Drawing
6007-PLN-AGE-00-33-1004_R0	Pipe Rack Grounding Rack 3 West-East	ELEC-1 (TYP)	Vendor	21-Jan-13	Approval	0	Drawing
6007-PLN-AGE-25-33-1321_R2	Turb Generator Cond Grounding Cover Alpha	ELEC-1 (TYP)	Vendor	21-Jan-13	Approval	2	Drawing
6007-PLN-AGE-25-33-1331_R1	Turb Generator Cond Grounding Notes Alpha	ELEC-1 (TYP)	Vendor	21-Jan-13	Approval	1	Drawing
6007-PLN-AGE-25-33-5301_R1	Turb Generator Cond & Aux Area Grounding Plan Alpha	ELEC-1 (TYP)	Vendor	21-Jan-13	Approval	1	Drawing
6007-PLN-AGE-25-33-5321_R2	Turb Generator Cond Grounding Plan Alpha	ELEC-1 (TYP)	Vendor	21-Jan-13	Approval	2	Drawing
6007-PLN-AGE-25-33-1703_R2	Turb Generator Cond Grounding Cover Beta	ELEC-1 (TYP)	Vendor	21-Jan-13	Approval	2	Drawing
6007-PLN-AGE-25-33-1704_R1	Turb Generator Cond Grounding Notes Beta	ELEC-1 (TYP)	Vendor	21-Jan-13	Approval	1	Drawing
6007-PLN-AGE-25-33-9701_R1	Turb Generator Cond & Aux Area Grounding Plan Beta	ELEC-1 (TYP)	Vendor	21-Jan-13	Approval	1	Drawing
6007-PLN-AGE-25-33-9721_R2	Turb Generator Cond. Grounding Plan Beta	ELEC-1 (TYP)	Vendor	21-Jan-13	Approval	2	Drawing
6007-PLN-AGE-57-33-1000_R2	SF Grounding General Details	ELEC-1 (TYP)	Vendor	22-Jan-13	Approval	2	Drawing
6007-PLN-AGE-57-33-1002_R3	SF Grounding General Typical Solar Collector	ELEC-1 (TYP)	Vendor	22-Jan-13	Approval	3	Drawing
6007-PLN-AGE-57-33-1003_R3	SF Grounding General Typical Solar Collector	ELEC-1 (TYP)	Vendor	22-Jan-13	Approval	3	Drawing
6007-PLN-AGE-57-33-1004_R3	SF Barrier Fence Grounding Details	ELEC-1 (TYP)	Vendor	22-Jan-13	Approval	3	Drawing
6007-PLN-AGE-57-33-1005_R3	SF Perimeter and Wind Fence Grounding Details	ELEC-1 (TYP)	Vendor	22-Jan-13	Approval	3	Drawing
6007-PLN-AGE-57-33-1006_R3	SF Screening Fence Grounding Details	ELEC-1 (TYP)	Vendor	22-Jan-13	Approval	3	Drawing
6007-PLN-AGE-57-33-1007_R3	SF Grounding General Details	ELEC-1 (TYP)	Vendor	22-Jan-13	Approval	3	Drawing
6007-PLN-AGE-57-33-1008_R0	SF Grounding Type 3 Details	ELEC-1 (TYP)	Vendor	22-Jan-13	Approval	0	Drawing
6007-PLN-AGE-57-33-1009_R0	SF Grounding Type 4 Details	ELEC-1 (TYP)	Vendor	22-Jan-13	Approval	0	Drawing
6007-CAL-AGE-57-33-2800_R1	SF Alpha Grounding and Lightning Study	ELEC-1 (TYP)	Vendor	22-Jan-13	Approval	1	Calculation
6007-CAL-AGE-57-33-6800_R1	SF Beta Grounding and Lightning Study	ELEC-1 (TYP)	Vendor	22-Jan-13	Approval	1	Calculation
6007-PLN-AGE-57-33-2000_R3	Alpha SF General Grounding	ELEC-1 (TYP)	Vendor	22-Jan-13	Approval	3	Drawing
6007-PLN-AGE-57-33-2001_R1	Alpha SF General Grounding Cover	ELEC-1 (TYP)	Vendor	22-Jan-13	Approval	1	Drawing
6007-PLN-AGE-57-33-2002_R1	Alpha SF General Grounding Notes	ELEC-1 (TYP)	Vendor	22-Jan-13	Approval	1	Drawing
6007-PLN-AGE-57-33-2101_R5	Alpha SF 101 Grounding Plan	ELEC-1 (TYP)	Vendor	22-Jan-13	Approval	5	Drawing
6007-PLN-AGE-57-33-2102_R5	Alpha SF 102 Grounding Plan	ELEC-1 (TYP)	Vendor	22-Jan-13	Approval	5	Drawing
6007-PLN-AGE-57-33-2103_R5	Alpha SF 103 Grounding Plan	ELEC-1 (TYP)	Vendor	22-Jan-13	Approval	5	Drawing
6007-PLN-AGE-57-33-2104_R5	Alpha SF 104 Grounding Plan	ELEC-1 (TYP)	Vendor	22-Jan-13	Approval	5	Drawing
6007-PLN-AGE-57-33-6000_R3	Beta SF General Grounding	ELEC-1 (TYP)	Vendor	22-Jan-13	Approval	3	Drawing
6007-PLN-AGE-57-33-6001_R1	Beta SF General Grounding Cover	ELEC-1 (TYP)	Vendor	22-Jan-13	Approval	1	Drawing
6007-PLN-AGE-57-33-6002_R1	Beta SF General Grounding Notes	ELEC-1 (TYP)	Vendor	22-Jan-13	Approval	1	Drawing
6007-PLN-AGE-57-33-6105_R4	Beta SF 105 Grounding Plan	ELEC-1 (TYP)	Vendor	22-Jan-13	Approval	4	Drawing
6007-PLN-AGE-57-33-6106_R4	Beta SF 106 Grounding Plan	ELEC-1 (TYP)	Vendor	22-Jan-13	Approval	4	Drawing
6007-PLN-AGE-57-33-6107_R4	Beta SF 107 Grounding Plan	ELEC-1 (TYP)	Vendor	22-Jan-13	Approval	4	Drawing
6007-PLN-AGE-57-33-6108_R4	Beta SF 108 Grounding Plan	ELEC-1 (TYP)	Vendor	22-Jan-13	Approval	4	Drawing
6007-PLN-AGE-57-33-6109_R4	Beta SF 109 Grounding Plan	ELEC-1 (TYP)	Vendor	22-Jan-13	Approval	4	Drawing

Compliance No.: GEN-2
Job: Mojave Solar Project
Date: 31 Jan 2012
Description: Electrical Site Drawings List - Alpha

Drawing Number	Drawing Title	Applicable Condition of Certification	Vendor Supplied or EOR	Submittal Date	Reason For Submittal		Type of Document
ELEC-1-5.03 AMMC	Mojave Solar Construction Plan	ELEC-1 (TYP)	Vendor	31-Jan-13	Approval	0	plan
6007-PLN-AGE-58-33-3002-1	PB HTF Underground South Crossing Grounding	ELEC-1 (TYP)	Vendor	5-Feb-13	Approval	0	Drawing
6007-PLN-AGE-58-33-3002-2	PB HTF Underground North Crossing Grounding	ELEC-1 (TYP)	Vendor	5-Feb-13	Approval	0	Drawing
6007-PLN-AGE-58-33-3010	PB HTF Underground Crossing Grounding Details	ELEC-1 (TYP)	Vendor	5-Feb-13	Approval	0	Drawing
6007-PLN-AGE-58-33-3001-2	PB HTF Underground North Crossing Grounding	ELEC-1 (TYP)	Vendor	5-Feb-13	Approval	0	Drawing
6007-PLN-AGE-58-33-3001-1	PB HTF Underground North Crossing Grounding	ELEC-1 (TYP)	Vendor	5-Feb-13	Approval	0	Drawing
6007-PLN-AGE-58-33-5205_R0	Alpha PB HTF Expansion Vessel Grounding	ELEC-1 (TYP)	Vendor	7-Feb-13	Approval	0	Drawing
6007-PLN-AGE-58-33-7205_R0	Beta PB HTF Expansion Vessel Grounding	ELEC-1 (TYP)	Vendor	7-Feb-13	Approval	0	Drawing
Transmittal Letter	ELEC-1-4.07X1-Turbine Generator Condenser Grounding-PC1	ELEC-1 (TYP)	Vendor	7-Feb-13	Approval	0	letter
6007-CAL-AGE-57-33-2800	SF Alpha Grounding and Lightning Study	ELEC-1 (TYP)	Vendor	7-Feb-13	Approval	1	Calculation
6007-CAL-AGE-57-33-6800	SF Beta Grounding and Lightning Study	ELEC-1 (TYP)	Vendor	7-Feb-13	Approval	1	Calculation
6007-CAL-AGE-57-40-0301	Short Circuit Calculation in SF	ELEC-1 (TYP)	Vendor	7-Feb-13	Approval	0	Calculation
Application for AMMC	Fiber Optic Cables in Solar Field.	ELEC-1 (TYP)	Vendor	7-Feb-13	Approval	0	letter
6007-ESP-AGE-00-40-0300	Electrical Design Criteria	ELEC-1 (TYP)	Vendor	7-Feb-13	Approval	1	Spec
Transmittal Letter	ELEC-1-5.03-AMMC Application Direct Burial FO Cables Nexan SP495-PC1	ELEC-1 (TYP)	Vendor	7-Feb-13	Approval	0	letter
6007-GEN-ATD-23-00-G001	Quality Control Plan	ELEC-1 (TYP)	Vendor	12-Feb-13	Approval	A	plan
6007-GEN-ATD-23-00-G002	Health, Safety and Enviromental Plan	ELEC-1 (TYP)	Vendor	12-Feb-13	Approval	A	list
6007-ESP-ATD-23-54-E001	Technical Specification for Steel Structures	ELEC-1 (TYP)	Vendor	12-Feb-13	Approval	A	Spec
6007-PLN-ATD-23-54-C012	Substation Take Off Structure Loading Tree (Typical)	ELEC-1 (TYP)	Vendor	12-Feb-13	Approval	0	Drawing
6007-PLN-ATD-23-54-C013	Lightening Mast Loading Tree (Typical)	ELEC-1 (TYP)	Vendor	12-Feb-13	Approval	0	Drawing
6007-PLN-ATD-23-54-C014	CT & CVT Stand Loading Tree (Typical)	ELEC-1 (TYP)	Vendor	12-Feb-13	Approval	0	Drawing
6007-PLN-ATD-23-54-C015	Disconnecting Switch Stand - Loading Tree (Typical)	ELEC-1 (TYP)	Vendor	12-Feb-13	Approval	0	Drawing
6007-PLN-ATD-23-54-C017	Load Tree Typical Details	ELEC-1 (TYP)	Vendor	12-Feb-13	Approval	0	Drawing
6007-CAL-ATD-23-54-C038	Steel Load Tree Calculations	ELEC-1 (TYP)	Vendor	12-Feb-13	Approval	A	Calculation
6007-INF-ATD-23-50-C001	Geotechnical Report for Mojave Substation and Transmission Line	ELEC-1 (TYP)	Vendor	12-Feb-13	Approval	0	Report
6007-HDD-ATD-23-50-C061	Concrete Mix for the Foundations	ELEC-1 (TYP)	Vendor	12-Feb-13	Approval	0	Data
6007-PLN-ATD-23-50-C061	Rebar Shop Drawing	ELEC-1 (TYP)	Vendor	12-Feb-13	Approval	1	Drawing
6007-PLN-ATD-23-57-C071	Foundation Layout Drawing	ELEC-1 (TYP)	Vendor	12-Feb-13	Approval	5	Drawing
6007-PLN-ATD-23-48-E331	Circuit Breakers Drawings	ELEC-1 (TYP)	Vendor	12-Feb-13	Approval	A	Drawing
6007-PLN-ATD-23-48-E342	Capacitor Voltage Transformer Drawings	ELEC-1 (TYP)	Vendor	12-Feb-13	Approval	B	Drawing
6007-PLN-ATD-23-48-E343	Lightning Arrestors Drawings	ELEC-1 (TYP)	Vendor	12-Feb-13	Approval	A	Drawing
6007-PLN-ATD-23-48-E341	Disconnect Switches Drawings	ELEC-1 (TYP)	Vendor	12-Feb-13	Approval	B	Drawing
6007-PLN-ATD-23-48-E344	Current Transformer Drawings	ELEC-1 (TYP)	Vendor	12-Feb-13	Approval	B	Drawing
6007-INF-ATD-23-48-E0349	Current transformers excitation curves	ELEC-1 (TYP)	Vendor	12-Feb-13	Approval	A	Report
6007-PLN-ATD-23-21-E011	Switching Single Line Diagram	ELEC-1 (TYP)	Vendor	12-Feb-13	Approval	C	Drawing
6007-PLN-ATD-23-21-E012	One-Line Diagram	ELEC-1 (TYP)	Vendor	12-Feb-13	Approval	0	Drawing
6007-PLN-ATD-23-03-E022	230kV Section A-A	ELEC-1 (TYP)	Vendor	12-Feb-13	Approval	0	Drawing
6007-PLN-ATD-23-34-E071	AC and DC Station Single Line Diagram	ELEC-1 (TYP)	Vendor	12-Feb-13	Approval	B	Drawing
6007-PLN-ATD-23-34-E072	AC/DC Station Drawings	ELEC-1 (TYP)	Vendor	12-Feb-13	Approval	A	Drawing
6007-PLN-ATD-23-02-E101	General Insallaton Relay House	ELEC-1 (TYP)	Vendor	12-Feb-13	Approval	A	Drawing
6007-CAL-ATD-23-36-E038	Substation Lightning Protection Report	ELEC-1 (TYP)	Vendor	12-Feb-13	Approval	A	Calculation
6007-PLN-ATD-23-33-E041	Grounding Plan	ELEC-1 (TYP)	Vendor	12-Feb-13	Approval	0	Drawing
6007-PLN-ATD-23-33-E042	Grounding Details	ELEC-1 (TYP)	Vendor	12-Feb-13	Approval	A	Drawing
6007-PLN-ATD-23-33-E048	Mojave Substations Grounding Calculations	ELEC-1 (TYP)	Vendor	12-Feb-13	Approval	0	Drawing
6007-PLN-ATD-23-33-051	Duct Bank and Conduit Plan	ELEC-1 (TYP)	Vendor	12-Feb-13	Approval	0	Drawing
6007-PLN-ATD-23-41-E081	Tranmssion Line Protection Panel	ELEC-1 (TYP)	Vendor	12-Feb-13	Approval	A	Drawing
6007-PLN-ATD-23-41-E082	Transformer MPT1 Protection panel	ELEC-1 (TYP)	Vendor	12-Feb-13	Approval	A	Drawing
6007-PLN-ATD-23-41-E083	Transformer APT1 Protection panel	ELEC-1 (TYP)	Vendor	12-Feb-13	Approval	A	Drawing
6007-PLN-ATD-23-35-E091	Communication Drawing	ELEC-1 (TYP)	Vendor	12-Feb-13	Approval	C	Drawing
6007-PLN-ATD-23-35-E092	Comunication and control Panel	ELEC-1 (TYP)	Vendor	12-Feb-13	Approval	A	Drawing
6007-GEN-ATD-23-00-G004	Mojave Alpha & Beta Substation Project Schedule	ELEC-1 (TYP)	Vendor	12-Feb-13	Approval	7	plan
6007-INF-ATD-23-07-G008	Monthly Progress Project Report - August	ELEC-1 (TYP)	Vendor	12-Feb-13	Approval	A	Report
6007-INF-ATD-23-07-G009	Monthly Progress Project Report - September	ELEC-1 (TYP)	Vendor	12-Feb-13	Approval	A	Report
6007-INF-ATD-23-07-G010	Monthly Progress Project Report - October	ELEC-1 (TYP)	Vendor	12-Feb-13	Approval	A	Report
6007-INF-ATD-23-07-G011	Monthly Progress Project Report - November	ELEC-1 (TYP)	Vendor	12-Feb-13	Approval	A	Report
6007-INF-ATD-23-07-G012	Monthly Progress Project Report - December	ELEC-1 (TYP)	Vendor	12-Feb-13	Approval	A	Report
6007-INF-ATD-23-07-G013	Monthly Progress Project Report - January	ELEC-1 (TYP)	Vendor	12-Feb-13	Approval	A	Report
6007-GEN-ATD-26-00-G001	Quality Control Plan	ELEC-1 (TYP)	Vendor	12-Feb-13	Approval	A	plan
6007-GEN-ATD-26-00-G002	Health, Safety and Environmental Plan	ELEC-1 (TYP)	Vendor	12-Feb-13	Approval	A	plan
6007-ESP-ATD-26-48-C002	Staking Sheet	ELEC-1 (TYP)	Vendor	12-Feb-13	Approval	A	Spec
6007-PLN-ATD-26-52-C061	Direct Embed Foundation Details	ELEC-1 (TYP)	Vendor	12-Feb-13	Approval	0	Drawing
6007-PLN-ATD-26-52-C062	Pier Foundation Details	ELEC-1 (TYP)	Vendor	12-Feb-13	Approval	B	Drawing
6007-ESP-ATD-26-54-C018	Technical Specification for Welded Tubular Steel Transmission Structures	ELEC-1 (TYP)	Vendor	12-Feb-13	Approval	0	Spec
6007-CAL-ATD-26-54-E038	230kV Double Circuit Tangent Loading Tree	ELEC-1 (TYP)	Vendor	12-Feb-13	Approval	C	Calculation
6007-CAL-ATD-26-54-E039	230k V 45 Degree Angle Double Circuit Loading Tree	ELEC-1 (TYP)	Vendor	12-Feb-13	Approval	A	Calculation
6007-CAL-ATD-26-54-E040	90 Degree D.C. Tap Structure Loading Tree	ELEC-1 (TYP)	Vendor	12-Feb-13	Approval	B	Calculation
6007-CAL-ATD-26-54-E041	230kV Single Circuit DE Loading Tree	ELEC-1 (TYP)	Vendor	12-Feb-13	Approval	A	Calculation
6007-CAL-ATD-26-54-E042	230k Single Circuit Delta Tangent Loading Tree	ELEC-1 (TYP)	Vendor	12-Feb-13	Approval	C	Calculation
6007-CAL-ATD-26-54-E043	230KV 90 Degree Angle Loading Tree	ELEC-1 (TYP)	Vendor	12-Feb-13	Approval	A	Calculation
6007-CAL-ATD-26-54-E044	230kV Degree Angle Single Circuit Loading Tree	ELEC-1 (TYP)	Vendor	12-Feb-13	Approval	A	Calculation
6007-CAL-ATD-26-54-E045	230k Beta Tap Structure Double Circuit Loading Tree	ELEC-1 (TYP)	Vendor	12-Feb-13	Approval	A	Calculation
6007-CAL-ATD-26-54-E047	230k V Typical Details	ELEC-1 (TYP)	Vendor	12-Feb-13	Approval	A	Calculation
6007-CAL-ATD-26-54-E048	230kV Delta Tangent - Extra Shield WiresLoading Tree (Typical)	ELEC-1 (TYP)	Vendor	12-Feb-13	Approval	B	Calculation
6007-PLN-ATD-26-52-C072	230kV Double Circuit Tangent, Structure Framing Details	ELEC-1 (TYP)	Vendor	12-Feb-13	Approval	A	Drawing
6007-PLN-ATD-26-52-C073	230kV 45 Degree Angle, Structure Framing Details	ELEC-1 (TYP)	Vendor	12-Feb-13	Approval	A	Drawing
6007-PLN-ATD-26-52-C074	230kV 45 Degree Angles, Structure Framing Details	ELEC-1 (TYP)	Vendor	12-Feb-13	Approval	A	Drawing
6007-PLN-ATD-26-52-C075	230kV Single Circuit Delta Tangent, Structure Framing Details	ELEC-1 (TYP)	Vendor	12-Feb-13	Approval	A	Drawing
6007-PLN-ATD-26-52-C076	230kV 90 Degree Angle, Structure Framing Details	ELEC-1 (TYP)	Vendor	12-Feb-13	Approval	A	Drawing
6007-PLN-ATD-26-52-C077	230kV SC Delta Tangent-Extra Shield Wires, Structure Framing Details	ELEC-1 (TYP)	Vendor	12-Feb-13	Approval	A	Drawing
6007-PLN-ATD-26-52-C078	230kV Beta Tap Structure, Structure Framing Details	ELEC-1 (TYP)	Vendor	12-Feb-13	Approval	A	Drawing
6007-PLN-ATD-26-52-C079	90 Degree D.C. Tap Structure, Structure Framing Details	ELEC-1 (TYP)	Vendor	12-Feb-13	Approval	A	Drawing
6007-PLN-ATD-26-52-C081	230kV Single Circuit DE, Structure Framing Details	ELEC-1 (TYP)	Vendor	12-Feb-13	Approval	A	Drawing
6007-PLN-ATD-26-52-C082	230kV Single Circuit DE, Structure Framing Details	ELEC-1 (TYP)	Vendor	12-Feb-13	Approval	A	Drawing
6007-PLN-ATD-26-52-C083	230kV 90 Degree Angle, Structure Framing Details	ELEC-1 (TYP)	Vendor	12-Feb-13	Approval	A	Drawing
6007-PLN-ATD-26-52-C084	230kV Alpha Substation DE, Structure Framing Details	ELEC-1 (TYP)	Vendor	12-Feb-13	Approval	A	Drawing
6007-PLN-ATD-26-52-C085	230kV Beta Substation DE, Structure Framing Details	ELEC-1 (TYP)	Vendor	12-Feb-13	Approval	A	Drawing
6007-PLN-ATD-26-52-C086	230kV Beta Substation Static Mast, Structure Framing Details	ELEC-1 (TYP)	Vendor	12-Feb-13	Approval	A	Drawing
6007-CAL-ATD-26-42-P000-1A	Steel Tubular Poles - Top Section Assembly	ELEC-1 (TYP)	Vendor	12-Feb-13	Approval	0	Calculation
6007-CAL-ATD-26-42-P000-LC1	Steel Tubular Poles -Personal Access Device Clip Details	ELEC-1 (TYP)	Vendor	12-Feb-13	Approval	0	Calculation
6007-CAL-ATD-26-42-P000-SW1	Steel Tubular Poles - TAN SW ARM	ELEC-1 (TYP)	Vendor	12-Feb-13	Approval	0	Calculation
6007-CAL-ATD-26-42-P001-E1	Steel Tubular Poles - Erection Sheet	ELEC-1 (TYP)	Vendor	12-Feb-13	Approval	0	Calculation
6007-CAL-ATD-26-42-P001-1C	Steel Tubular Poles - BTM Sections	ELEC-1 (TYP)	Vendor	12-Feb-13	Approval	0	Calculation
6007-CAL-ATD-26-42-P002-E2	Steel Tubular Poles - Erection Sheet	ELEC-1 (TYP)	Vendor	12-Feb-13	Approval	0	Calculation
6007-CAL-ATD-26-42-P002-2C	Steel Tubular Poles - BTM Sections	ELEC-1 (TYP)	Vendor	12-Feb-13	Approval	0	Calculation
6007-CAL-ATD-26-42-P003-E3	Steel Tubular Poles - Erection Sheet	ELEC-1 (TYP)	Vendor	12-Feb-13	Approval	0	Calculation
6007-CAL-ATD-26-42-P003-3C	Steel Tubular Poles - BTM Sections	ELEC-1 (TYP)	Vendor	12-Feb-13	Approval	0	Calculation
6007-CAL-ATD-26-42-P004-E4	Steel Tubular Poles - Erection Sheet	ELEC-1 (TYP)	Vendor	12-Feb-13	Approval	0	Calculation
6007-CAL-ATD-26-42-P004-4C	Steel Tubular Poles - BTM Sections	ELEC-1 (TYP)	Vendor	12-Feb-13	Approval	0	Calculation
6007-PLN-ATD-26-51-E011	Transmission Line Route	ELEC-1 (TYP)	Vendor	12-Feb-13	Approval	A	Drawing
6007-PLN-ATD-26-51-C012	Plan and Profile Drawings	ELEC-1 (TYP)	Vendor	12-Feb-13	Approval	0	Drawing
6007-PLN-ATD-26-51-C013	Plan and Profile Drawings	ELEC-1 (TYP)	Vendor	12-Feb-13	Approval	0	Drawing
6007-PLN-ATD-26-51-C014	Plan and Profile Drawings	ELEC-1 (TYP)	Vendor	12-Feb-13	Approval	0	Drawing
6007-ESP-ATD-26-35-E001	Technical Specifications OPGW	ELEC-1 (TYP)	Vendor	12-Feb-13	Approval	A	Spec
6007-LIS-ATD-26-38-E020	Bill of Materials. Phase Conductor Assemblies.	ELEC-1 (TYP)	Vendor	12-Feb-13	Approval	C	list
6007-MAN-ATD-26-38-E001	Conductor 795 ACSR Data sheet and certificates	ELEC-1 (TYP)	Vendor	12-Feb-13	Approval	0	
6007-PLN-ATD-26-38-E002	Insulators Drawings	ELEC-1 (TYP)	Vendor	12-Feb-13	Approval	0	Drawing
6007-PLN-ATD-26-33-E041	Phasing Diagram	ELEC-1 (TYP)	Vendor	12-Feb-13	Approval	A	Drawing
6007-PLN-ATD-26-54-E032	Stringing Chart	ELEC-1 (TYP)	Vendor	12-Feb-13	Approval	A	Drawing
6007-LIS-ATD-26-54-E031	Assembly Drawings	ELEC-1 (TYP)	Vendor	12-Feb-13	Approval	C	list
6007-LIS-ATD-26-33-E040	Bill of Materials (OPGW, OHGH and Grounding)	ELEC-1 (TYP)	Vendor	12-Feb-13	Approval	C	list
6007-GEN-ATD-26-00-G004	Mojave Transmission Line Execution Plan	ELEC-1 (TYP)	Vendor	12-Feb-13	Approval	7	plan
6007-INF-ATD-26-06-G008	Monthly progress project Report August	ELEC-1 (TYP)	Vendor	12-Feb-13	Approval	A	Report
6007-INF-ATD-26-06-G009	Monthly Progress Project Report - September	ELEC-1 (TYP)	Vendor	12-Feb-13	Approval	A	Report
6007-INF-ATD-26-06-G010	Monthly Progress Project Report - October	ELEC-1 (TYP)	Vendor	12-Feb-13	Approval	A	Report
6007-INF-ATD-26-06-G011	Monthly Progress Project Report - November	ELEC-1 (TYP)	Vendor	12-Feb-13	Approval	A	Report
6007-INF-ATD-26-06-G012	Monthly Progress Project Report - December	ELEC-1 (TYP)	Vendor	12-Feb-13	Approval	A	Report
6007-INF-ATD-26-06-G013	Monthly Progress Project Report - January	ELEC-1 (TYP)	Vendor	12-Feb-13	Approval	A	Report
6007-PLN-AGE-57-33-1004_R4	SF Barrier Fence Grounding Details	ELEC-1 (TYP)	Vendor	18-Mar-13	Approval	A	Drawing
6007-PLN-AGE-57-33-1005_R4	SF Perimeter and Wind Fence Grounding Details	ELEC-1 (TYP)	Vendor	18-Mar-13	Approval	A	Drawing

Compliance No.: GEN-2
Job: Mojave Solar Project
Date: 31 Jan 2012
Description: Electrical Site Drawings List - Alpha

Drawing Number	Drawing Title	Applicable Condition of Certification	Vendor Supplied or EOR	Submittal Date	Reason For Submittal		Type of Document
6007-PLN-AGE-57-33-1006_R4	SF Screening Fence Grounding Details	ELEC-1 (TYP)	Vendor	18-Mar-13	Approval	A	Drawing
6007-PLN-AGE-57-33-2501-01_R0	Fences Grounding Plan Alpha	ELEC-1 (TYP)	Vendor	18-Mar-13	Approval	A	Drawing
6007-PLN-AGE-57-33-2501-02_R0	Fences Grounding Plan Alpha	ELEC-1 (TYP)	Vendor	18-Mar-13	Approval	A	Drawing
6007-PLN-AGE-57-33-6501_R0	Fences Grounding Plan Beta	ELEC-1 (TYP)	Vendor	18-Mar-13	Approval	A	Drawing
6007-PLN-AGE-00-33-1001_R2	Pipe Rack Grounding Rack 1	ELEC-1 (TYP)	Vendor	21-Mar-13	Approval	A	Drawing
6007-PLN-AGE-00-33-1002_R1	Pipe Rack Grounding General Details	ELEC-1 (TYP)	Vendor	21-Mar-13	Approval	A	Drawing
6007-PLN-AGE-00-33-1003_R2	Pipe Rack Grounding Rack 3 North-South	ELEC-1 (TYP)	Vendor	21-Mar-13	Approval	A	Drawing
6007-PLN-AGE-00-33-1004_R2	Pipe Rack Grounding Rack 3 West-East	ELEC-1 (TYP)	Vendor	21-Mar-13	Approval	A	Drawing
6007-PLN-AGE-00-33-1005_R1	Pipe Rack Grounding Rack 2	ELEC-1 (TYP)	Vendor	21-Mar-13	Approval	A	Drawing
6007-PLN-AGE-68-55-4000	Cover Sheet	ELEC-1 (TYP)	Vendor	21-Mar-13	Approval	A	Drawing
6007-PLN-AGE-29-55-2000	Cover Sheet	ELEC-1 (TYP)	Vendor	21-Mar-13	Approval	A	Drawing
6007-PLN-AGE-29-55-2001	General Notes	ELEC-1 (TYP)	Vendor	21-Mar-13	Approval	A	Drawing
6007-PLN-AGE-29-55-2002	Plan View	ELEC-1 (TYP)	Vendor	21-Mar-13	Approval	A	Drawing
6007-PLN-AGE-29-55-2003	sections	ELEC-1 (TYP)	Vendor	21-Mar-13	Approval	A	Drawing
6007-PLN-AGE-29-55-2004	Details I	ELEC-1 (TYP)	Vendor	21-Mar-13	Approval	A	Drawing
6007-PLN-AGE-29-55-2005	Details II	ELEC-1 (TYP)	Vendor	21-Mar-13	Approval	A	Drawing
6007-PLN-AGE-29-55-2006	Details III	ELEC-1 (TYP)	Vendor	21-Mar-13	Approval	A	Drawing
6007-PLN-AGE-29-55-2007	Details IV	ELEC-1 (TYP)	Vendor	21-Mar-13	Approval	A	Drawing
6007-PLN-AGE-29-55-2008	Details V	ELEC-1 (TYP)	Vendor	21-Mar-13	Approval	A	Drawing
6007-PLN_AGE-29-55-2009	Details VI	ELEC-1 (TYP)	Vendor	21-Mar-13	Approval	A	Drawing
6007-PLN_AGE-29-55-2010	Details VII	ELEC-1 (TYP)	Vendor	21-Mar-13	Approval	A	Drawing
6007-PLN_AGE-29-55-2011	Details VIII	ELEC-1 (TYP)	Vendor	21-Mar-13	Approval	A	Drawing
6007-PLN_AGE-29-55-2012	Details IX	ELEC-1 (TYP)	Vendor	21-Mar-13	Approval	A	Drawing
6007-PLN_AGE-29-55-2013	Details X	ELEC-1 (TYP)	Vendor	21-Mar-13	Approval	A	Drawing
6007-PLN_AGE-29-55-2014	Details XI	ELEC-1 (TYP)	Vendor	21-Mar-13	Approval	A	Drawing
6007-PLN_AGE-29-55-2015	Details XII	ELEC-1 (TYP)	Vendor	21-Mar-13	Approval	A	Drawing
6007-PLN_AGE-29-55-2016	Details XIII	ELEC-1 (TYP)	Vendor	21-Mar-13	Approval	A	Drawing
6007-PLN-AGE-00-50-S001	General Civil	ELEC-1 (TYP)	Vendor	21-Mar-13	Approval	A	Drawing
6007-PLN-AGE-57-33-1004_R5	SF Barrier Fence Grounding Details	ELEC-1 (TYP)	Vendor	3-24-2013	Approval	A	Drawing
6007-PLN-AGE-57-33-1005_R5	SF Perimeter and Wind Fence Grounding Details	ELEC-1 (TYP)	Vendor	3-24-2013	Approval	A	Drawing
6007-PLN-AGE-57-33-1006_R5	SF Screening Fence Grounding Details	ELEC-1 (TYP)	Vendor	3-24-2013	Approval	A	Drawing
6007-PLN-AGE-57-33-2501-01_R1	Fences Grounding Plan Alpha	ELEC-1 (TYP)	Vendor	3-24-2013	Approval	A	Drawing
6007-PLN-AGE-57-33-2501-02_R1	Fences Grounding Plan Alpha	ELEC-1 (TYP)	Vendor	3-24-2013	Approval	A	Drawing
6007-PLN-AGE-57-33-6501_R1	Fences Grounding Plan Beta	ELEC-1 (TYP)	Vendor	3-24-2013	Approval	A	Drawing
6007-PLN-AGE-67-33-5403_R0	Water Treatment Grounding Alpha	ELEC-1 (TYP)	Vendor	1-Apr-13	Approval	A	Drawing
6007-PLN-AGE-67-33-9803_R0	Water Treatment Grounding Beta	ELEC-1 (TYP)	Vendor	1-Apr-13	Approval	A	Drawing
6007-PLN-AGE-67-33-0002_R0	Alpha Beta Grounding Details Utilities	ELEC-1 (TYP)	Vendor	1-Apr-13	Approval	A	Drawing
6007-PLN-AGE-67-33-5403_R0	Water Treatment Grounding Alpha	ELEC-1 (TYP)	Vendor	29-Mar-13	Approval	A	Drawing
6007-PLN-AGE-67-33-9803_R0	Water Treatment Grounding Beta	ELEC-1 (TYP)	Vendor	29-Mar-13	Approval	A	Drawing
6007-PLN-AGE-67-33-0002_R0	Alpha Beta Grounding Details Utilities	ELEC-1 (TYP)	Vendor	29-Mar-13	Approval	A	Drawing
6007-CAL-ATD-26-54-E038.Rev 0	230kV Double Circuit Tangent – Loading Tree (Typical)	ELEC-1 (TYP)	Vendor	9-Apr-13	Approval	A	Calculation
6007-CAL-ATD-26-54-E039.Rev 0	230kV 45 Degree Angle – Double Circuit Loading Tree	ELEC-1 (TYP)	Vendor	9-Apr-13	Approval	A	Calculation
6007-CAL-ATD-26-54-E040.Rev 0	90 Degree D.C. Tap Structure – Loading Tree	ELEC-1 (TYP)	Vendor	9-Apr-13	Approval	A	Calculation
6007-CAL-ATD-26-54-E041.Rev 0	230 kV Single Circuit DE – Loading Tree (Typical)	ELEC-1 (TYP)	Vendor	9-Apr-13	Approval	A	Calculation
6007-CAL-ATD-26-54-E042.Rev 0	230kV Single Circuit Delta Tangent – Loading Tree (Typical)	ELEC-1 (TYP)	Vendor	9-Apr-13	Approval	A	Calculation
6007-CAL-ATD-26-54-E043.Rev 0	230kV 90 Degree Angle –Loading Tree	ELEC-1 (TYP)	Vendor	9-Apr-13	Approval	A	Calculation
6007-CAL-ATD-26-54-E044.Rev 0	230kV 45 Degree Angle – Single Circuit Loading Tree	ELEC-1 (TYP)	Vendor	9-Apr-13	Approval	A	Calculation
6007-CAL-ATD-26-54-E045.Rev 0	230kV Beta Tap Structure – Double Circuit Loading Tree	ELEC-1 (TYP)	Vendor	9-Apr-13	Approval	A	Calculation
6007-CAL-ATD-26-54-E047.Rev 0	230kV Typical Details	ELEC-1 (TYP)	Vendor	9-Apr-13	Approval	A	Calculation
6007-CAL-ATD-26-54-E048.Rev 0	230kV SC Delta Tangent – Extra Shield Wires – Loading Tree (Typical)	ELEC-1 (TYP)	Vendor	9-Apr-13	Approval	A	Calculation
6007-ESP-ATD-26-48-C002.Rev 0	Staking Sheet	ELEC-1 (TYP)	Vendor	9-Apr-13	Approval	A	Spec
6007-ESP-ATD-26-54-C018.Rev 1	Technical Specification for Welded Tubular Steel Transmission Structures	ELEC-1 (TYP)	Vendor	9-Apr-13	Approval	A	Spec
6007-PLN-ATD-26-51-C012.Rev 0	Plan and Profile	ELEC-1 (TYP)	Vendor	9-Apr-13	Approval	A	Drawing
6007-PLN-ATD-26-51-C013.Rev 0	Plan and Profile	ELEC-1 (TYP)	Vendor	9-Apr-13	Approval	A	Drawing
6007-PLN-ATD-26-51-C014.Rev 0	Plan and Profile	ELEC-1 (TYP)	Vendor	9-Apr-13	Approval	A	Drawing
6007-PLN-ATD-26-52-C072.Rev 0	230kV Double Circuit Tangent – Structure Framing Details	ELEC-1 (TYP)	Vendor	9-Apr-13	Approval	A	Drawing
6007-PLN-ATD-26-52-C073.Rev 0	230kV 45 Degree Angle – Structure Framing Details	ELEC-1 (TYP)	Vendor	9-Apr-13	Approval	A	Drawing
6007-PLN-ATD-26-52-C074.Rev 0	230kV 45 Degree Angles – Structure Framing Details	ELEC-1 (TYP)	Vendor	9-Apr-13	Approval	A	Drawing
6007-PLN-ATD-26-52-C075.Rev 0	230kV Single Circuit Delta Tangent – Structure Framing Details	ELEC-1 (TYP)	Vendor	9-Apr-13	Approval	A	Drawing
6007-PLN-ATD-26-52-C076.Rev 0	230kV 90 Degree Angle – Structure Framing Details	ELEC-1 (TYP)	Vendor	9-Apr-13	Approval	A	Drawing
6007-PLN-ATD-26-52-C077.Rev 0	230kV SC Delta Tangent – Extra Shield Wires – Structure Fram-ing Details	ELEC-1 (TYP)	Vendor	9-Apr-13	Approval	A	Drawing
6007-PLN-ATD-26-52-C078.Rev 0	230kV Beta Tap Structure – Structure Framing Details	ELEC-1 (TYP)	Vendor	9-Apr-13	Approval	A	Drawing
6007-PLN-ATD-26-52-C079.Rev 0	90 Degree D.C. Tap Structure – Structure Framing Details	ELEC-1 (TYP)	Vendor	9-Apr-13	Approval	A	Drawing
6007-PLN-ATD-26-52-C080.Rev 0	230kV 45 Degree Angles – Structure Framing Details	ELEC-1 (TYP)	Vendor	9-Apr-13	Approval	A	Drawing
6007-PLN-ATD-26-52-C081.Rev 0	230kV Single Circuit DE – Structure Framing Details	ELEC-1 (TYP)	Vendor	9-Apr-13	Approval	A	Drawing
6007-PLN-ATD-26-52-C082.Rev 0	230kV Single Circuit DE – Structure Framing Details	ELEC-1 (TYP)	Vendor	9-Apr-13	Approval	A	Drawing
6007-PLN-ATD-26-52-C083.Rev 0	230kV 90 Degree Angle – Structure Framing Details	ELEC-1 (TYP)	Vendor	9-Apr-13	Approval	A	Drawing
6007-PLN-ATD-26-52-C084.Rev 0	230kV Alpha Substation DE – Structure Framing Details	ELEC-1 (TYP)	Vendor	9-Apr-13	Approval	A	Drawing
6007-PLN-ATD-26-52-C085.Rev 0	230kV Beta Substation DE – Structure Framing Details	ELEC-1 (TYP)	Vendor	9-Apr-13	Approval	A	Drawing
6007-PLN-ATD-26-52-C086.Rev 0	230kV Beta Substation Static Mast – Structure Framing Details	ELEC-1 (TYP)	Vendor	9-Apr-13	Approval	A	Drawing
6007-PLN-ATD-26-54-E031.Rev 0	Assembly drawings. Pages 1 to 19.	ELEC-1 (TYP)	Vendor	9-Apr-13	Approval	A	Drawing
6007-PLN-ATD-26-54-E032.Rev 0	Stringing Chart	ELEC-1 (TYP)	Vendor	9-Apr-13	Approval	A	Drawing
6007-PLN-ATD-26-54-E038-P005	Steel Tubular Poles – Erection Sheet	ELEC-1 (TYP)	Vendor	9-Apr-13	Approval	A	Drawing
6007-PLN-ATD-26-54-E038-P006	Steel Tubular Poles – Erection Sheet	ELEC-1 (TYP)	Vendor	9-Apr-13	Approval	A	Drawing
6007-PLN-ATD-26-54-E038-P007	Steel Tubular Poles – Erection Sheet	ELEC-1 (TYP)	Vendor	9-Apr-13	Approval	A	Drawing
6007-PLN-ATD-26-54-E038-P008	Steel Tubular Poles – Erection Sheet	ELEC-1 (TYP)	Vendor	9-Apr-13	Approval	A	Drawing
6007-PLN-ATD-26-54-E039-P010	Steel Tubular Poles – Erection Sheet	ELEC-1 (TYP)	Vendor	9-Apr-13	Approval	A	Drawing
6007-PLN-ATD-26-54-E041-P017	Steel Tubular Poles – Erection Sheet	ELEC-1 (TYP)	Vendor	9-Apr-13	Approval	A	Drawing
6007-PLN-ATD-26-54-E043-P011	Steel Tubular Poles – Erection Sheet	ELEC-1 (TYP)	Vendor	9-Apr-13	Approval	A	Drawing
6007-PLN-ATD-26-54-E044-P014	Steel Tubular Poles – Erection Sheet	ELEC-1 (TYP)	Vendor	9-Apr-13	Approval	A	Drawing
6007-PLN-ATD-26-54-E045-P015	Steel Tubular Poles – Erection Sheet	ELEC-1 (TYP)	Vendor	9-Apr-13	Approval	A	Drawing
6007-PLN-ATD-26-54-E048-P009	Steel Tubular Poles – Erection Sheet	ELEC-1 (TYP)	Vendor	9-Apr-13	Approval	A	Drawing
6007-PLN-AGE-57-21-2101_R6	Alpha SF Bldg 101 One Line	ELEC-1 (TYP)	Vendor	22-Apr-13	41386	W	Drawing
6007-PLN-AGE-57-21-2102_R6	Alpha SF Bldg 102 One Line	ELEC-1 (TYP)	Vendor	22-Apr-13	Approval	A	Drawing
6007-PLN-AGE-57-21-2103_R6	Alpha SF Bldg 103 One Line	ELEC-1 (TYP)	Vendor	22-Apr-13	Approval	A	Drawing
6007-PLN-AGE-57-21-2104_R6	Alpha SF Bldg 104 One Line	ELEC-1 (TYP)	Vendor	22-Apr-13	Approval	A	Drawing
6007-PLN-AGE-57-21-2401_R2	Alpha SF Bldg 101 Panel Schedule LVSWBD	ELEC-1 (TYP)	Vendor	22-Apr-13	Approval	A	Drawing
6007-PLN-AGE-57-21-2402_R2	Alpha SF Bldg 102 Panel Schedule LVSWBD	ELEC-1 (TYP)	Vendor	22-Apr-13	Approval	A	Drawing
6007-PLN-AGE-57-21-2403_R2	Alpha SF Bldg 103 Panel Schedule LVSWBD	ELEC-1 (TYP)	Vendor	22-Apr-13	Approval	A	Drawing
6007-PLN-AGE-57-21-2404_R2	Alpha SF Bldg 104 Panel Schedule LVSWBD	ELEC-1 (TYP)	Vendor	22-Apr-13	Approval	A	Drawing
6007-PLN-AGE-57-21-6105_R6	Beta SF Bldg 105 One Line	ELEC-1 (TYP)	Vendor	22-Apr-13	Approval	A	Drawing
6007-PLN-AGE-57-21-6106_R6	Beta SF Bldg 106 One Line	ELEC-1 (TYP)	Vendor	22-Apr-13	Approval	A	Drawing
6007-PLN-AGE-57-21-6107_R6	Beta SF Bldg 107 One Line	ELEC-1 (TYP)	Vendor	22-Apr-13	Approval	A	Drawing
6007-PLN-AGE-57-21-6108_R6	Beta SF Bldg 108 One Line	ELEC-1 (TYP)	Vendor	22-Apr-13	Approval	A	Drawing
6007-PLN-AGE-57-21-6109_R6	Beta SF Bldg 109 One Line	ELEC-1 (TYP)	Vendor	22-Apr-13	Approval	A	Drawing
6007-PLN-AGE-57-21-6405_R2	Beta SF Bldg 105 Panel Schedule LVSWBD	ELEC-1 (TYP)	Vendor	22-Apr-13	Approval	A	Drawing
6007-PLN-AGE-57-21-6406_R2	Beta SF Bldg 106 Panel Schedule LVSWBD	ELEC-1 (TYP)	Vendor	22-Apr-13	Approval	A	Drawing
6007-PLN-AGE-57-21-6407_R2	Beta SF Bldg 107 Panel Schedule LVSWBD	ELEC-1 (TYP)	Vendor	22-Apr-13	Approval	A	Drawing
6007-PLN-AGE-57-21-6408_R2	Beta SF Bldg 108 Panel Schedule LVSWBD	ELEC-1 (TYP)	Vendor	22-Apr-13	Approval	A	Drawing
6007-PLN-AGE-57-21-6409_R2	Beta SF Bldg 109 Panel Schedule LVSWBD	ELEC-1 (TYP)	Vendor	22-Apr-13	Approval	A	Drawing
6007-CAL-AGE-00-40-0011_R3	Short Circuit Study in PB	ELEC-1 (TYP)	Vendor	22-Apr-13	Approval	A	Calculation
6007-CAL-AGE-57-40-0500_R0	SF Fault Protections Justification Report	ELEC-1 (TYP)	Vendor	22-Apr-13	Approval	A	Calculation
6007-PLN-ATD-23-36-E038	Lightning protection calculation	ELEC-1 (TYP)	Vendor	17-Apr-13	Approval	A	Drawing
6007-PLN-ATD-23-03-E021	General Arrangement Plan	ELEC-1 (TYP)	Vendor	17-Apr-13	Approval	A	Drawing
6007-PLN-ATD-23-03-E022	230kV Section A-A	ELEC-1 (TYP)	Vendor	17-Apr-13	Approval	A	Drawing
6007-PLN-ATD-23-03-E023	230kV BUS Work Details	ELEC-1 (TYP)	Vendor	17-Apr-13	Approval	A	Drawing
6007-PLN-ATD-23-21-E012	One-Line Diagram	ELEC-1 (TYP)	Vendor	17-Apr-13	Approval	A	Drawing
6007-PLN-ATD-23-32-E052	Duct Bank and Conduit Details	ELEC-1 (TYP)	Vendor	17-Apr-13	Approval	A	Drawing
6007-PLN-ATD-23-33-E042	Grounding Details	ELEC-1 (TYP)	Vendor	17-Apr-13	Approval	A	Drawing
6007-PLN-ATD-23-34-E072	AC/DC Station Drawings	ELEC-1 (TYP)	Vendor	17-Apr-13	Approval	A	Drawing
6007-PLN-ATD-23-02-E101	General installation relay house	ELEC-1 (TYP)	Vendor	17-Apr-13	Approval	A	Drawing
6007-PLN-AGE-57-33-1004_R6	SF Barrier Fence Grounding Details	ELEC-1 (TYP)	Vendor	26-Apr-13	Approval	A	Drawing
6007-PLN-AGE-57-33-1005_R5	SF Perimeter and Wind Fence Grounding Details	ELEC-1 (TYP)	Vendor	26-Apr-13	Approval	A	Drawing
6007-PLN-AGE-57-33-1006_R5	SF Screening Fence Grounding Details	ELEC-1 (TYP)	Vendor	26-Apr-13	Approval	A	Drawing
6007-PLN-AGE-57-33-2501-01_R2	Fences Grounding Plan Alpha	ELEC-1 (TYP)	Vendor	26-Apr-13	Approval	A	Drawing
6007-PLN-AGE-57-33-2501-02_R2	Fences Grounding Plan Alpha	ELEC-1 (TYP)	Vendor	26-Apr-13	Approval	A	Drawing
6007-PLN-AGE-57-33-6501_R2	Fences Grounding Plan Beta	ELEC-1 (TYP)	Vendor	26-Apr-13	Approval	A	Drawing
6007-PLN-AGE-25-36-5341_R1	PB Lightning Protection Plan Turb Generator Cond & Aux Alpha - Sh.1	ELEC-1 (TYP)	Vendor	1-May-13	Approval	A	Drawing
6007-PLN-AGE-25-36-5342_R1	PB Lightning Protection Plan Turb Generator Cond & Aux Alpha - Sh.2	ELEC-1 (TYP)	Vendor	1-May-13	Approval	A	Drawing
6007-PLN-AGE-25-36-5343_R1	PB Lightning Protection Plan Turb Generator Cond & Aux Alpha - Sh.3	ELEC-1 (TYP)	Vendor	1-May-13	Approval	A	Drawing
6007-PLN-AGE-25-36-5344_R1	PB Lightning Protection Plan Turb Generator Cond & Aux Alpha - Sh.4	ELEC-1 (TYP)	Vendor	1-May-13	Approval	A	Drawing
6007-PLN-AGE-25-36-5345_R1	PB Lightning Protection Plan Turb Generator Cond & Aux Alpha - Sh.5	ELEC-1 (TYP)	Vendor	1-May-13	Approval	A	Drawing
6007-PLN-AGE-21-36-5121_R1	SG Area Lightning Protection Alpha	ELEC-1 (TYP)	Vendor	1-May-13	Approval	A	Drawing
6007-PLN-AGE-21-36-5122_R1	SG Area Lightning Protection Alpha	ELEC-1 (TYP)	Vendor	1-May-13	Approval	A	Drawing
6007-PLN-AGE-21-36-5123_R1	SG Area Lightning Protection Alpha	ELEC-1 (TYP)	Vendor	1-May-13	Approval	A	Drawing
6007-PLN-AGE-21-36-5124_R1	SG Area Lightning Protection Alpha	ELEC-1 (TYP)	Vendor	1-May-13	Approval	A	Drawing
6007-PLN-AGE-67-36-5444_R0	PB Lightning Protection Cooling Towers, Tanks Alpha	ELEC-1 (TYP)	Vendor	1-May-13	Approval	A	Drawing
6007-PLN-AGE-67-36-5445_R0	Water Treatment Lightning Protection. Alpha.	ELEC-1 (TYP)	Vendor	1-May-13	Approval	A	Drawing
6007-PLN-AGE-67-36-5446_R0	Water Treatment Lightning Protection. Alpha.	ELEC-1 (TYP)	Vendor	1-May-13	Approval	A	Drawing
6007-PLN-AGE-67-36-5441_R1	PB Lightning Protection Elec Rooms Alpha	ELEC-1 (TYP)	Vendor	1-May-13	Approval	A	Drawing
6007-PLN-AGE-67-36-5442_R1	PB Lightning Protection Elec Rooms Alpha	ELEC-1 (TYP)	Vendor	1-May-13	Approval	A	Drawing
6007-PLN-AGE-67-36-5447_R0	PB Lightning Protection Elec Rooms Alpha	ELEC-1 (TYP)	Vendor	1-May-13	Approval	A	Drawing
6007-PLN-AGE-58-36-5221_R0	Alpha HTF Lightning Protection Plan	ELEC-1 (TYP)	Vendor	1-May-13	Approval	A	Drawing
6007-PLN-AGE-58-36-5231_R0	Alpha HTF Lightning Protection Details	ELEC-1 (TYP)	Vendor	1-May-13	Approval	A	Drawing

Compliance No.: GEN-2
Job: Mojave Solar Project
Date: 31 Jan 2012
Description: Electrical Site Drawings List - Alpha

Drawing Number	Drawing Title	Applicable Condition of Certification	Vendor Supplied or EOR	Submittal Date	Reason For Submittal		Type of Document
6007-PLN-AGE-25-36-9731_R4	PB Lightning Protection Plan Turb Generator Cond & Aux Beta - Sh.1	ELEC-1 (TYP)	Vendor	1-May-13	Approval	A	Drawing
6007-PLN-AGE-25-36-9732_R3	PB Lightning Protection Plan Turb Generator Cond & Aux Beta - Sh.2	ELEC-1 (TYP)	Vendor	1-May-13	Approval	A	Drawing
6007-PLN-AGE-25-36-9733_R3	PB Lightning Protection Plan Turb Generator Cond & Aux Beta - Sh.3	ELEC-1 (TYP)	Vendor	1-May-13	Approval	A	Drawing
6007-PLN-AGE-25-36-9734_R3	PB Lightning Protection Plan Turb Generator Cond & Aux Beta - Sh.4	ELEC-1 (TYP)	Vendor	1-May-13	Approval	A	Drawing
6007-PLN-AGE-25-36-9735_R4	PB Lightning Protection Plan Turb Generator Cond & Aux Beta - Sh.5	ELEC-1 (TYP)	Vendor	1-May-13	Approval	A	Drawing
6007-PLN-AGE-21-36-9521_R4	SG Area Lightning Protection Beta	ELEC-1 (TYP)	Vendor	1-May-13	Approval	A	Drawing
6007-PLN-AGE-21-36-9522_R3	SG Area Lightning Protection Beta	ELEC-1 (TYP)	Vendor	1-May-13	Approval	A	Drawing
6007-PLN-AGE-21-36-9523_R3	SG Area Lightning Protection Beta	ELEC-1 (TYP)	Vendor	1-May-13	Approval	A	Drawing
6007-PLN-AGE-21-36-9524_R3	SG Area Lightning Protection Beta	ELEC-1 (TYP)	Vendor	1-May-13	Approval	A	Drawing
6007-PLN-AGE-67-36-9844_R1	PB Lightning Protection Cooling Towers, Tanks Beta	ELEC-1 (TYP)	Vendor	1-May-13	Approval	A	Drawing
6007-PLN-AGE-67-36-9845_R2	Water Treatment Lightning Protection. Beta.	ELEC-1 (TYP)	Vendor	1-May-13	Approval	A	Drawing
6007-PLN-AGE-67-36-9846_R2	Water Treatment Lightning Protection. Beta.	ELEC-1 (TYP)	Vendor	1-May-13	Approval	A	Drawing
6007-PLN-AGE-67-36-9841_R2	PB Lightning Protection Elec Bldg Beta	ELEC-1 (TYP)	Vendor	1-May-13	Approval	A	Drawing
6007-PLN-AGE-67-36-9842_R2	PB Lightning Protection Elec Bldg Beta	ELEC-1 (TYP)	Vendor	1-May-13	Approval	A	Drawing
6007-PLN-AGE-67-36-9847_R0	PB Lightning Protection Elec Bldg Beta	ELEC-1 (TYP)	Vendor	1-May-13	Approval	A	Drawing
6007-PLN-AGE-58-36-5231_R2	HTF Lightning Protection Details	ELEC-1 (TYP)	Vendor	1-May-13	Approval	A	Drawing
6007-PLN-AGE-58-36-9621_R3	Beta HTF Lightning Protection Plan	ELEC-1 (TYP)	Vendor	1-May-13	Approval	A	Drawing
6007-PLN-AGE-57-21-2201_R6	Alpha SF Bldg 101 One Line UPS	ELEC-1 (TYP)	Vendor	3-May-13	Approval	A	Drawing
6007-PLN-AGE-57-21-2202_R6	Alpha SF Bldg 102 One Line UPS	ELEC-1 (TYP)	Vendor	3-May-13	Approval	A	Drawing
6007-PLN-AGE-57-21-2203_R6	Alpha SF Bldg 103 One Line UPS	ELEC-1 (TYP)	Vendor	3-May-13	Approval	A	Drawing
6007-PLN-AGE-57-21-2204_R6	Alpha SF Bldg 104 One Line UPS	ELEC-1 (TYP)	Vendor	3-May-13	Approval	A	Drawing
6007-PLN-AGE-57-21-2214_R5	Corner Loads Power Panel Schedules Alpha	ELEC-1 (TYP)	Vendor	3-May-13	Approval	A	Drawing
6007-PLN-AGE-57-21-2215_R5	Corner Loads Power Panel Schedules Alpha	ELEC-1 (TYP)	Vendor	3-May-13	Approval	A	Drawing
6007-PLN-AGE-57-21-2216_R5	Panel Schedule For Outdoor Power Panels For Feeders Alpha	ELEC-1 (TYP)	Vendor	3-May-13	Approval	A	Drawing
6007-PLN-AGE-57-21-2301_R3	Alpha SF Bldg 101 Panel Schedule UPS	ELEC-1 (TYP)	Vendor	3-May-13	Approval	A	Drawing
6007-PLN-AGE-57-21-2302_R3	Alpha SF Bldg 102 Panel Schedule UPS	ELEC-1 (TYP)	Vendor	3-May-13	Approval	A	Drawing
6007-PLN-AGE-57-21-2303_R3	Alpha SF Bldg 103 Panel Schedule UPS	ELEC-1 (TYP)	Vendor	3-May-13	Approval	A	Drawing
6007-PLN-AGE-57-21-2304_R3	Alpha SF Bldg 104 Panel Schedule UPS	ELEC-1 (TYP)	Vendor	3-May-13	Approval	A	Drawing
6007-PLN-AGE-57-21-2314_R6	Alpha One-Line Corner Loads	ELEC-1 (TYP)	Vendor	3-May-13	Approval	A	Drawing
6007-PLN-AGE-57-21-2315_R5	Alpha One-Line Corner Loads	ELEC-1 (TYP)	Vendor	3-May-13	Approval	A	Drawing
6007-PLN-AGE-57-21-2316_R4	Alpha One-Line Outdoor Power Panels For Feeders	ELEC-1 (TYP)	Vendor	3-May-13	Approval	A	Drawing
6007-CAL-AGE-00-40-0011_R3	Short Circuit Study in PB	ELEC-1 (TYP)	Vendor	3-May-13	Approval	A	Calculation
6007-PLN-AGE-57-21-6205_R6	Beta SF Bldg 105 One Line UPS	ELEC-1 (TYP)	Vendor	3-May-13	Approval	A	Drawing
6007-PLN-AGE-57-21-6206_R6	Beta SF Bldg 106 One Line UPS	ELEC-1 (TYP)	Vendor	3-May-13	Approval	A	Drawing
6007-PLN-AGE-57-21-6207_R7	Beta SF Bldg 107 One Line UPS	ELEC-1 (TYP)	Vendor	3-May-13	Approval	A	Drawing
6007-PLN-AGE-57-21-6208_R6	Beta SF Bldg 108 One Line UPS	ELEC-1 (TYP)	Vendor	3-May-13	Approval	A	Drawing
6007-PLN-AGE-57-21-6209_R7	Beta SF Bldg 109 One Line UPS	ELEC-1 (TYP)	Vendor	3-May-13	Approval	A	Drawing
6007-PLN-AGE-57-21-6214_R5	Corner Loads Power Panel Schedules Beta	ELEC-1 (TYP)	Vendor	3-May-13	Approval	A	Drawing
6007-PLN-AGE-57-21-6215_R5	Corner Loads Power Panel Schedules Beta	ELEC-1 (TYP)	Vendor	3-May-13	Approval	A	Drawing
6007-PLN-AGE-57-21-6216_R5	Panel Schedule For Outdoor Power Panels For Feeders Beta	ELEC-1 (TYP)	Vendor	3-May-13	Approval	A	Drawing
6007-PLN-AGE-57-21-6305_R3	Beta SF Bldg 105 Panel Schedule UPS	ELEC-1 (TYP)	Vendor	3-May-13	Approval	A	Drawing
6007-PLN-AGE-57-21-6306_R3	Beta SF Bldg 106 Panel Schedule UPS	ELEC-1 (TYP)	Vendor	3-May-13	Approval	A	Drawing
6007-PLN-AGE-57-21-6307_R4	Beta SF Bldg 107 Panel Schedule UPS	ELEC-1 (TYP)	Vendor	3-May-13	Approval	A	Drawing
6007-PLN-AGE-57-21-6308_R3	Beta SF Bldg 108 Panel Schedule UPS	ELEC-1 (TYP)	Vendor	3-May-13	Approval	A	Drawing
6007-PLN-AGE-57-21-6309_R4	Beta SF Bldg 109 Panel Schedule UPS	ELEC-1 (TYP)	Vendor	3-May-13	Approval	A	Drawing
6007-PLN-AGE-57-21-6314_R5	One-Line - Beta - Corner Loads	ELEC-1 (TYP)	Vendor	3-May-13	Approval	A	Drawing
6007-PLN-AGE-57-21-6315_R5	One-Line - Beta - Corner Loads	ELEC-1 (TYP)	Vendor	3-May-13	Approval	A	Drawing
6007-PLN-AGE-57-21-6316_R4	One-Line For Outdoor Power Panels For Feeders Beta	ELEC-1 (TYP)	Vendor	3-May-13	Approval	A	Drawing
6007-PLN-AGE-57-21-6507_R3	One-Lines For Power and UPS Panels For 107 North HTF Beta	ELEC-1 (TYP)	Vendor	3-May-13	Approval	A	Drawing
6007-PLN-AGE-57-21-6509_R3	One-Lines For Power and UPS Panels For 109 South HTF Beta	ELEC-1 (TYP)	Vendor	3-May-13	Approval	A	Drawing
6007-CAL-AGE-00-40-0011_R3	Short Circuit Study in PB	ELEC-1 (TYP)	Vendor	3-May-13	Approval	A	Calculation
6007-CAL-AGE-00-34-2051_R3	Medium Voltage Power Cable Sizing Alpha	ELEC-1 (TYP)	Vendor	8-May-13	Approval	A	Calculation
6007-CAL-AGE-00-34-5051_R3	Medium Voltage Power Cable Sizing Beta	ELEC-1 (TYP)	Vendor	8-May-13	Approval	A	Calculation
6007-PLN-ATP-00-21-O001_R3	Electrical One Line symbols list	ELEC-1 (TYP)	Vendor	7-May-13	Approval	3	Drawing
6007-PLN-ATP-28-21-O100-1_R9	Alpha One Line 5KV Bldg #22	ELEC-1 (TYP)	Vendor	7-May-13	Approval	9	Drawing
6007-PLN-ATP-28-21-O100-2_R9	Alpha One Line 5KV Bldg #22	ELEC-1 (TYP)	Vendor	7-May-13	Approval	9	Drawing
6007-PLN-ATP-28-21-O200-1_R9	Beta One Line 5KV Bldg #22	ELEC-1 (TYP)	Vendor	7-May-13	Approval	9	Drawing
6007-PLN-ATP-28-21-O200-2_R9	Beta One Line 5KV Bldg #22	ELEC-1 (TYP)	Vendor	7-May-13	Approval	9	Drawing
6007-PLN-ATP-28-21-O101_R9	Alpha One Line 5KV VSD System Bldg #27	ELEC-1 (TYP)	Vendor	7-May-13	Approval	9	Drawing
6007-PLN-ATP-28-21-O201_R9	Beta One Line 5KV VSD System Bldg #27	ELEC-1 (TYP)	Vendor	7-May-13	Approval	9	Drawing
6007-PLN-ATP-28-21-O102_R11	Alpha One Line 5KV Bldg #26	ELEC-1 (TYP)	Vendor	7-May-13	Approval	11	Drawing
6007-PLN-ATP-28-21-O202_R11	Beta One Line 5KV Bldg #26	ELEC-1 (TYP)	Vendor	7-May-13	Approval	11	Drawing
6007-PLN-ATP-00-21-O010_R12	Alpha overall One-Line	ELEC-1 (TYP)	Vendor	7-May-13	Approval	12	Drawing
6007-PLN-ATP-00-21-O020_R12	Beta overall One-Line	ELEC-1 (TYP)	Vendor	7-May-13	Approval	12	Drawing
6007-ESP-ATP-00-32-C110_R3	Specification For Electrical Construction - Duct Banks	ELEC-1 (TYP)	Vendor	19-Mar-13	Approval	3	
6007-ESP-ATP-00-33-C105_R3	Grounding General Design Criteria	ELEC-1 (TYP)	Vendor	19-Mar-13	Approval	3	
6007-ESP-ATP-00-34-C100_R3	Electrical Contractor General Scope and Criteria	ELEC-1 (TYP)	Vendor	19-Mar-13	Approval	3	
6007-PLN-AGE-00-33-5001_R3	Grounding Plan - PB Alpha Over-All	ELEC-1 (TYP)	Vendor	30-Apr-13	Approval	3	Drawing
6007-PLN-AGE-58-33-3202_R2	Alpha HTF grounding System plan	ELEC-1 (TYP)	Vendor	30-Apr-13	Approval	2	Drawing
6007-PLN-AGE-00-33-9001_R3	Grounding Plan - PB Beta Over-All	ELEC-1 (TYP)	Vendor	30-Apr-13	Approval	3	Drawing
6007-PLN-AGE-58-33-5602_R2	Beta HTF grounding System plan	ELEC-1 (TYP)	Vendor	30-Apr-13	Approval	2	Drawing
6007-PLN-AGE-25-33-5301_R3	Turb Generator Cond & Aux Area Grounding Plan Alpha	ELEC-1 (TYP)	Vendor	12-Mar-13	Approval	3	Drawing
6007-PLN-AGE-25-33-9701_R3	Turb Generator Cond & Aux Area Grounding Plan Beta	ELEC-1 (TYP)	Vendor	12-Mar-13	Approval	3	Drawing
6007-PLN-AGE-21-33-5101_R2	SG Area Grounding Plan Alpha	ELEC-1 (TYP)	Vendor	15-Oct-13	Approval	2	Drawing
6007-PLN-AGE-21-33-9501_R3	SG Area Grounding Plan Beta	ELEC-1 (TYP)	Vendor	20-Mar-13	Approval	3	Drawing
6007-PLN-AGE-58-33-2001_R2	Alpha Ullage and Overflow Platform Aerial Grounding system	ELEC-1 (TYP)	Vendor	30-Apr-13	Approval	2	Drawing
6007-PLN-AGE-67-33-5403_R0	Water Treatment Grounding Alpha	ELEC-1 (TYP)	Vendor	18-Mar-13	Approval	0	Drawing
6007-PLN-AGE-58-33-5201_R2	Alpha HTF Overflow Tank (A-MT-204B) Grounding Plan	ELEC-1 (TYP)	Vendor	11-Jan-13	Approval	2	Drawing
6007-PLN-AGE-58-33-5202_R2	Alpha HTF Overflow Tank (A-MT-204A) Grounding Plan	ELEC-1 (TYP)	Vendor	11-Jan-13	Approval	2	Drawing
6007-PLN-AGE-58-33-6001_R2	Beta Ullage and Overflow Platform Aerial Grounding system	ELEC-1 (TYP)	Vendor	30-Apr-13	Approval	2	Drawing
6007-PLN-AGE-67-33-9803_R0	Water Treatment Grounding Beta	ELEC-1 (TYP)	Vendor	18-Mar-13	Approval	0	Drawing
6007-PLN-AGE-58-33-7201_R2	Beta HTF Overflow Tank (B-MT-204B) Grounding Plan	ELEC-1 (TYP)	Vendor	11-Jan-13	Approval	2	Drawing
6007-PLN-AGE-58-33-7202_R2	Beta HTF Overflow Tank (B-MT-204A) Grounding Plan	ELEC-1 (TYP)	Vendor	11-Jan-13	Approval	2	Drawing
6007-PLN-AGE-00-33-1001_R2	Pipe Rack Grounding Rack 1	ELEC-1 (TYP)	Vendor	13-Feb-13	Approval	2	Drawing
6007-PLN-AGE-00-33-1002_R1	Pipe Rack Grounding General Details	ELEC-1 (TYP)	Vendor	1-Feb-13	Approval	1	Drawing
6007-PLN-AGE-00-33-1003_R2	Pipe Rack Grounding Rack 3 North-South	ELEC-1 (TYP)	Vendor	13-Mar-13	Approval	2	Drawing
6007-PLN-AGE-00-33-1004_R2	Pipe Rack Grounding Rack 3 West-East	ELEC-1 (TYP)	Vendor	13-Mar-13	Approval	2	Drawing
6007-PLN-AGE-00-33-1005_R1	Pipe Rack Grounding Rack 2	ELEC-1 (TYP)	Vendor	13-Mar-13	Approval	1	Drawing
6007-PLN-AGE-00-33-1006_R0	Pipe Rack Grounding Rack 4	ELEC-1 (TYP)	Vendor	4-25-013	Approval	0	Drawing
6007-PLN-AGE-00-33-1007_R0	Pipe Rack Grounding Rack 5	ELEC-1 (TYP)	Vendor	25-Apr-13	Approval	0	Drawing
6007-PLN-AGE-58-33-3001_R1	PB HTF Underground North Crossing Grounding	ELEC-1 (TYP)	Vendor	19-Mar-13	Approval	1	Drawing
6007-PLN-AGE-58-33-3002_R1	PB HTF Underground South Crossing Grounding	ELEC-1 (TYP)	Vendor	19-Mar-13	Approval	1	Drawing
6007-PLN-AGE-67-33-5401_R0	Alpha Grounding Utilities	ELEC-1 (TYP)	Vendor	7-Dec-13	Approval	0	Drawing
6007-PLN-AGE-67-33-5402_R0	Alpha Grounding Utilities	ELEC-1 (TYP)	Vendor	7-Dec-13	Approval	0	Drawing
6007-PLN-AGE-67-33-9801_R0	Beta Grounding Utilities	ELEC-1 (TYP)	Vendor	7-Dec-13	Approval	0	Drawing
6007-PLN-AGE-67-33-9802_R0	Beta Grounding Utilities	ELEC-1 (TYP)	Vendor	7-Dec-13	Approval	0	Drawing
6007-PLN-AGE-57-33-1000_R2	SF Grounding General Details	ELEC-1 (TYP)	Vendor	19-Oct-13	Approval	2	Drawing
6007-PLN-AGE-57-33-1007_R3	SF Grounding General Details	ELEC-1 (TYP)	Vendor	11-Dec-13	Approval	3	Drawing
6007-PLN-AGE-57-33-1008_R0	SF Grounding Type 3 Details	ELEC-1 (TYP)	Vendor	11-Dec-13	Approval	0	Drawing
6007-PLN-AGE-57-33-2102_R5	Alpha SF 102 Grounding Plan	ELEC-1 (TYP)	Vendor	9-Dec-13	Approval	5	Drawing
6007-PLN-AGE-57-33-2103_R6	Alpha SF 103 Grounding Plan	ELEC-1 (TYP)	Vendor	7-May-13	Approval	6	Drawing
6007-PLN-AGE-57-33-6106_R4	Beta SF 106 Grounding Plan	ELEC-1 (TYP)	Vendor	19-Dec-13	Approval	4	Drawing
6007-PLN-AGE-57-33-6107_R4	Beta SF 107 Grounding Plan	ELEC-1 (TYP)	Vendor	19-Dec-13	Approval	4	Drawing
6007-PLN-AGE-57-33-6108_R4	Beta SF 108 Grounding Plan	ELEC-1 (TYP)	Vendor	19-Dec-13	Approval	4	Drawing
6007-PLN-AGE-57-33-6109_R5	Beta SF 109 Grounding Plan	ELEC-1 (TYP)	Vendor	7-May-13	Approval	5	Drawing
6007-PLN-AGE-57-33-1000_R2	SF Grounding General Details	ELEC-1 (TYP)	Vendor	19-Oct-12	Approval	2	Drawing
6007-PLN-AGE-57-33-1002_R3	SF Grounding General Typical Solar Collector	ELEC-1 (TYP)	Vendor	11-Dec-12	Approval	3	Drawing
6007-PLN-AGE-57-33-1003_R3	SF Grounding General Typical Solar Collector	ELEC-1 (TYP)	Vendor	11-Dec-12	Approval	3	Drawing
6007-PLN-AGE-57-33-1004_R6	SF Barrier Fence Grounding Details	ELEC-1 (TYP)	Vendor	24-Apr-13	Approval	6	Drawing
6007-PLN-AGE-57-33-1005_R5	SF Perimeter and Wind Fence Grounding Details	ELEC-1 (TYP)	Vendor	26-Mar-13	Approval	5	Drawing
6007-PLN-AGE-57-33-1006_R5	SF Screening Fence Grounding Details	ELEC-1 (TYP)	Vendor	26-Mar-13	Approval	5	Drawing
6007-PLN-AGE-57-33-1007_R3	SF Grounding General Details	ELEC-1 (TYP)	Vendor	11-Dec-12	Approval	3	Drawing
6007-PLN-AGE-57-33-1008_R0	SF Grounding Type 3 Details	ELEC-1 (TYP)	Vendor	11-Dec-12	Approval	0	Drawing
6007-PLN-AGE-57-33-1009_R0	SF Grounding Type 4 Details	ELEC-1 (TYP)	Vendor	11-Dec-13	Approval	0	Drawing
6007-CAL-AGE-57-33-2800_R3	SF Alpha Grounding and Lightning Study	ELEC-1 (TYP)	Vendor	3-May-13	Approval	3	Calculation
6007-CAL-AGE-57-33-6800_R3	SF Beta Grounding and Lightning Study	ELEC-1 (TYP)	Vendor	7-May-13	Approval	3	Calculation
6007-PLN-AGE-57-33-2000_R4	Alpha SF General Grounding	ELEC-1 (TYP)	Vendor	7-May-13	Approval	4	Drawing
6007-PLN-AGE-57-33-2001_R1	Alpha SF General Grounding Cover	ELEC-1 (TYP)	Vendor	13-Aug-12	Approval	1	Drawing
6007-PLN-AGE-57-33-2002_R1	Alpha SF General Grounding Notes	ELEC-1 (TYP)	Vendor	13-Aug-12	Approval	1	Drawing
6007-PLN-AGE-57-33-2101_R5	Alpha SF 101 Grounding Plan	ELEC-1 (TYP)	Vendor	19-Dec-13	Approval	5	Drawing
6007-PLN-AGE-57-33-2102_R5	Alpha SF 102 Grounding Plan	ELEC-1 (TYP)	Vendor	19-Dec-13	Approval	5	Drawing
6007-PLN-AGE-57-33-2103_R6	Alpha SF 103 Grounding Plan	ELEC-1 (TYP)	Vendor	7-May-13	Approval	6	Drawing
6007-PLN-AGE-57-33-2104_R5	Alpha SF 104 Grounding Plan	ELEC-1 (TYP)	Vendor	19-Dec-13	Approval	5	Drawing
6007-PLN-AGE-57-33-6000_R4	Beta SF General Grounding	ELEC-1 (TYP)	Vendor	4-May-13	Approval	4	Drawing
6007-PLN-AGE-57-33-6001_R1	Beta SF General Grounding Cover	ELEC-1 (TYP)	Vendor	13-Aug-13	Approval	1	Drawing
6007-PLN-AGE-57-33-6002_R1	Beta SF General Grounding Notes	ELEC-1 (TYP)	Vendor	13-Aug-12	Approval	1	Drawing
6007-PLN-AGE-57-33-6105_R5	Beta SF 105 Grounding Plan	ELEC-1 (TYP)	Vendor	7-May-13	Approval	5	Drawing
6007-PLN-AGE-57-33-6106_R4	Beta SF 106 Grounding Plan	ELEC-1 (TYP)	Vendor	19-Dec-12	Approval	4	Drawing
6007-PLN-AGE-57-33-6107_R4	Beta SF 107 Grounding Plan	ELEC-1 (TYP)	Vendor	19-Dec-12	Approval	4	Drawing
6007-PLN-AGE-57-33-6108_R4	Beta SF 108 Grounding Plan	ELEC-1 (TYP)	Vendor	19-Dec-12	Approval	4	Drawing
6007-PLN-AGE-57-33-6109_R5	Beta SF 109 Grounding Plan	ELEC-1 (TYP)	Vendor	7-May-13	Approval	5	Drawing
6007-CAL-AGE-57-40-0301_VOID	Short Circuit Calculation in SF	ELEC-1 (TYP)	Vendor	na	Approval	0	Calculation
6007-CAL-AGE-00-40-0011_R3	Short Circuit Calculation in PB and SF	ELEC-1 (TYP)	Vendor	22-Mar-13	Approval	3	Calculation
007-CAL-AGE-57-40-0500	Calculation report	ELEC-1 (TYP)	Vendor	6-May-13	Approval	1	Calculation

Compliance No.: GEN-2
Job: Mojave Solar Project
Date: 31 Jan 2012
Description: Electrical Site Drawings List - Alpha

Drawing Number	Drawing Title	Applicable Condition of Certification	Vendor Supplied or EOR	Submittal Date	Reason For Submittal		Type of Document
6007-PLN-AGE-57-33-1010_R1	Beta Pipe Rack Grounding Crossing with Drainage Channel	ELEC-1 (TYP)	Vendor	11-Apr-13	Approval	1	Drawing
6007-PLN-AGE-57-33-1011_R1	Beta Pipe Rack Grounding Details Crossing with Drainage Channel	ELEC-1 (TYP)	Vendor	7-Dec-12	Approval	0	Drawing
6007-CAL-AGE-43-20-0004_R4	HTF and Parking Lighting Calc For PB Alpha	ELEC-1 (TYP)	Vendor	24-Apr-13	Approval	4	Calculation
6007-CAL-AGE-43-20-0012_R4	HTF and Parking Lighting Calc For PB Beta	ELEC-1 (TYP)	Vendor	24-Apr-13	Approval	4	Calculation
6007-CAL-AGE-57-40-8001_R2	SF Lighting Calc for Drainage Channel Crossing HTF Pipes Beta	ELEC-1 (TYP)	Vendor	25-Apr-13	Approval	2	Calculation
6007-CAL-AGE-00-36-0011_R2	PB Lightning Calc Report Beta	ELEC-1 (TYP)	Vendor	13-Feb-13	Approval	2	Calculation
6007-CAL-AGE-00-36-0001_R2	PB Lightning Calc Report Alpha	ELEC-1 (TYP)	Vendor	13-Feb-13	Approval	2	Calculation
6007-PLN-ATP-27-21-O160_R9	Alpha 480V One Line LVSWGR 5 Bldg #22	ELEC-1 (TYP)	Vendor	17-May-13	Approval	9	Drawing
6007-PLN-ATP-00-21-O012_R1	Alpha 480V One Line LVSWGR 5 Bldg #22 Overview	ELEC-1 (TYP)	Vendor	17-May-13	Approval	1	Drawing
6007-PLN-ATP-00-21-O013_R1	Alpha 480V One Line LVSWGR 6 Bldg #22 Overview	ELEC-1 (TYP)	Vendor	13-May-13	Approval	1	Drawing
6007-PLN-ATP-27-21-O181_R6	Alpha 480V One Line LVSWGR 6 Bldg #22	ELEC-1 (TYP)	Vendor	17-May-13	Approval	6	Drawing
6007-PLN-ATP-27-21-O305_R9	Alpha 480V One Line MCC 51 Bldg #22	ELEC-1 (TYP)	Vendor	17-May-13	Approval	9	Drawing
6007-PLN-ATP-27-21-O335_R8	Alpha 480V One Line MCC 62 Bldg #22	ELEC-1 (TYP)	Vendor	17-May-13	Approval	8	Drawing
6007-PLN-ATP-27-23-P505_R8	Alpha Electrical panel PP 52 Bldg #22	ELEC-1 (TYP)	Vendor	13-May-13	Approval	8	Drawing
6007-PLN-ATP-27-23-P510_R8	Alpha Electrical panel PP 53 Bldg #22	ELEC-1 (TYP)	Vendor	13-May-13	Approval	8	Drawing
6007-PLN-ATP-27-23-P511_R8	Alpha Electrical panel PP 5307 Bldg #22	ELEC-1 (TYP)	Vendor	17-May-13	Approval	8	Drawing
6007-PLN-ATP-27-23-P512-1_R5	Alpha Electrical Lighting Panel LP 5305 Bldg #22	ELEC-1 (TYP)	Vendor	17-May-13	Approval	5	Drawing
6007-PLN-ATP-27-23-P512-2_R4	Alpha Electrical Lighting Panel LP 5305 Bldg #22	ELEC-1 (TYP)	Vendor	17-May-13	Approval	4	Drawing
6007-PLN-ATP-27-23-P570_R3	Alpha One Line DCP 362030110 Bldg #22	ELEC-1 (TYP)	Vendor	17-May-13	Approval	3	Drawing
6007-PLN-ATP-00-21-O023_R1	Beta 480V One Line LVSWGR 16 Bldg #22 Overview	ELEC-1 (TYP)	Vendor	13-May-13	Approval	1	Drawing
6007-PLN-ATP-27-21-O281_R6	Beta 480V One Line LVSWGR 16 Bldg #22	ELEC-1 (TYP)	Vendor	17-May-13	Approval	6	Drawing
6007-PLN-ATP-27-21-O435_R8	Beta 480V One Line MCC 162 Electrical Bldg #22	ELEC-1 (TYP)	Vendor	17-May-13	Approval	8	Drawing
6007-PLN-ATP-27-21-O175_R11	Alpha 480V One Line LVSWGR 36, Bldg #27	ELEC-1 (TYP)	Vendor	14-May-13	Approval	11	Drawing
6007-PLN-AGE-00-21-0015_R0	Alpha 480V One Line LVSWGR 36, Bldg #27 Overview	ELEC-1 (TYP)	Vendor	17-May-13	Approval	0	Drawing
6007-PLN-AGE-27-21-P555_R2	Alpha Electrical panel DCP-362301 Bldg #27	ELEC-1 (TYP)	Vendor	13-May-13	Approval	5	Drawing
6007-PLN-AGE-27-21-P556_R1	Alpha Electrical panel RP 36206 Bldg #27	ELEC-1 (TYP)	Vendor	14-May-13	Approval	1	Drawing
6007-PLN-AGE-43-20-0009-1_R6	Outdoor Lighting Panel One-Line Alpha LP-36212	ELEC-1 (TYP)	Vendor	13-May-13	Approval	6	Drawing
6007-PLN-AGE-43-20-0009-1_R6	Page 2	ELEC-1 (TYP)	Vendor	13-May-13	Approval	6	Drawing
6007-PLN-ATP-27-21-P528_R2	Alpha Panel PP 36212 Bldg #27	ELEC-1 (TYP)	Vendor	14-May-13	Approval	2	Drawing
6007-PLN-ATP-27-23-P535_R9	Alpha Electrical Panel PP 362, Bldg #27	ELEC-1 (TYP)	Vendor	13-May-13	Approval	9	Drawing
6007-PLN-ATP-27-23-P536_R10	Alpha Panel PP 36208, Bldg #27	ELEC-1 (TYP)	Vendor	13-May-13	Approval	10	Drawing
6007-PLN-AGE-43-20-0017_R6	Outdoor Lighting Panel One-Line Beta LP-136212	ELEC-1 (TYP)	Vendor	13-May-13	Approval	6	Drawing
6007-PLN-ATP-27-21-O170_R10	Alpha 480V One Line LVSWGR 403 Bldg #26	ELEC-1 (TYP)	Vendor	13-May-13	Approval	10	Drawing
6007-PLN-ATP-00-21-O011_R0	Alpha 480V One Line LVSWGR 401 Bldg #26 Overview	ELEC-1 (TYP)	Vendor	12-Apr-13	Approval	0	Drawing
6007-PLN-ATP-27-21-O325_R10	Alpha 480V One Line MCC 4031 Bldg #26	ELEC-1 (TYP)	Vendor	17-May-13	Approval	10	Drawing
6007-PLN-ATP-27-21-O340_R9	Alpha 480V One Line MCC 4032, MCC 4034, MCC 4035 & MCC 4036. Bldg #26	ELEC-1 (TYP)	Vendor	17-May-13	Approval	9	Drawing
6007-PLN-ATP-27-23-O525-1_R10	Alpha Electrical panel PP-4013 Bldg #26	ELEC-1 (TYP)	Vendor	21-May-13	Approval	10	Drawing
6007-PLN-ATP-27-23-O525-2_R10	Page 2	ELEC-1 (TYP)	Vendor	17-May-13	Approval	3	Drawing
6007-PLN-ATP-27-23-O525-3_R10	Page 3	ELEC-1 (TYP)	Vendor	13-May-13	Approval	4	Drawing
6007-PLN-ATP-27-23-P527_R4	Alpha Electrical Lighting Panel LP 401301 Bldg #26	ELEC-1 (TYP)	Vendor	17-May-13	Approval	4	Drawing
6007-PLN-ATP-27-21-O270_R10	Beta 480V One Line LVSWGR 1403 Bldg #26	ELEC-1 (TYP)	Vendor	13-May-13	Approval	10	Drawing
6007-PLN-ATP-00-21-O021_R0	Beta 480V One Line LVSWGR 1401 Bldg #26 Overview	ELEC-1 (TYP)	Vendor	12-Apr-13	Approval	0	Drawing
6007-PLN-ATP-27-21-O425_R10	Beta 480V One Line MCC 14031 Bldg #26	ELEC-1 (TYP)	Vendor	17-May-13	Approval	10	Drawing
6007-PLN-ATP-27-21-O440_R9	Beta 480V One Line MCC 14032, MCC 14034, MCC 14035 & MCC 14036. Bldg #26	ELEC-1 (TYP)	Vendor	17-May-13	Approval	9	Drawing
6007-PLN-ATP-27-23-P625-1_R9	Beta Electrical Panel PP 14013 & PP 1401316 Bldg #26	ELEC-1 (TYP)	Vendor	17-May-13	Approval	9	Drawing
6007-PLN-ATP-27-23-P625-2_R3	Beta Electrical Panel PP 14013 & PP 1401316 Bldg #26	ELEC-1 (TYP)	Vendor	17-May-13	Approval	3	Drawing
6007-PLN-ATP-27-23-P625-3_R4	Beta Electrical Panel PP 14013 & PP 1401316 Bldg #26	ELEC-1 (TYP)	Vendor	13-May-13	Approval	4	Drawing
6007-PLN-ATP-27-23-P627_R4	Beta Electrical Lighting Panel LP 401301 Bldg #26	ELEC-1 (TYP)	Vendor	17-May-13	Approval	4	Drawing
6007-PLN-ATP-27-23-P506-1_R3	Alpha Water Treatment Panel PP-5201	ELEC-1 (TYP)	Vendor	17-May-13	Approval	3	Drawing
6007-PLN-ATP-27-23-P506-2_R3	Page 2	ELEC-1 (TYP)	Vendor	17-May-13	Approval	3	Drawing
6007-PLN-ATP-27-23-P507_R2	Alpha Water Treatment Panel PP-5202	ELEC-1 (TYP)	Vendor	17-May-13	Approval	2	Drawing
6007-PLN-ATP-27-23-P576	Fire Protection System Alpha Plant	ELEC-1 (TYP)	Vendor	31-May-13	Approval	2	Drawing
6007-PLN-ATP-27-23-P676	Fire Protection System Beta Plant	ELEC-1 (TYP)	Vendor	31-May-13	Approval	2	Drawing
6007-PLN-ATP-28-21-0100-2	MVSWGR-1 signed Alpha Plant	ELEC-1 (TYP)	Vendor	31-May-13	Approval	12	Drawing
6007-PLN-ATP-28-21-0200-2	MVSWGR-2 signed Beta Plant	ELEC-1 (TYP)	Vendor	31-May-13	Approval	12	Drawing
6007-PLN-ATP-00-21-O012_R1	Alpha Site Overview of LVSWGR-5 Building #22	ELEC-1 (TYP)	Vendor	17-May-13	Approval	1	Drawing
6007-PLN-ATP-00-21-O013_R1	Alpha Site Overview of LVSWGR-6 Building #22	ELEC-1 (TYP)	Vendor	14-May-13	Approval	1	Drawing
6007-PLN-ATP-27-21-O160_R9	Alpha 480V Single-Line LVSWGR-5 Building #22	ELEC-1 (TYP)	Vendor	13-May-14	Approval	9	Drawing
6007-PLN-ATP-27-21-O181_R6	Alpha 480V Single-Line LVSWGR-6 Building #22	ELEC-1 (TYP)	Vendor	21-May-13	Approval	6	Drawing
6007-PLN-ATP-27-21-O305_R9	Alpha 480V Single-Line MCC-51 Building #22	ELEC-1 (TYP)	Vendor	17-May-13	Approval	9	Drawing
6007-PLN-ATP-27-21-O335_R8	Alpha 480V Single-Line MCC-62 Building #22	ELEC-1 (TYP)	Vendor	14-May-13	Approval	8	Drawing
6007-PLN-ATP-27-23-P505_R8	Alpha Electrical Panel PP-52 & PP-5211 Building #22	ELEC-1 (TYP)	Vendor	13-May-14	Approval	8	Drawing
6007-PLN-ATP-27-23-P510_R8	Alpha Electrical Panel PP-53 Building #22	ELEC-1 (TYP)	Vendor	21-May-13	Approval	8	Drawing
6007-PLN-ATP-27-23-P511_R8	Alpha Electrical Panel PP-5304 Building #22	ELEC-1 (TYP)	Vendor	17-May-13	Approval	8	Drawing
6007-PLN-ATP-27-23-P512-1_R5	Alpha Electrical Lighting Panel LP-5305 Building #22	ELEC-1 (TYP)	Vendor	14-May-13	Approval	5	Drawing
6007-PLN-ATP-27-23-P512-2_R4	Alpha Electrical Lighting Panel LP-5305 Building #22	ELEC-1 (TYP)	Vendor	13-May-14	Approval	4	Drawing
6007-PLN-ATP-27-23-P570_R3	Alpha One-Line Diagram DCP-362030110 Building #22	ELEC-1 (TYP)	Vendor	21-May-13	Approval	3	Drawing
6007-PLN-ATP-00-21-O023_R1	Beta Site Overview Of LVSWGR-16 Building #22	ELEC-1 (TYP)	Vendor	17-May-13	Approval	1	Drawing
6007-PLN-ATP-27-21-O281_R6	Beta 480V Single-Line LVSWGR-16 Building #22	ELEC-1 (TYP)	Vendor	14-May-13	Approval	6	Drawing
6007-PLN-ATP-27-21-O435_R8	Beta 480V Single-Line MCC-162 Building #22	ELEC-1 (TYP)	Vendor	13-May-14	Approval	8	Drawing
6007-PLN-AGE-00-21-0015_R0	Alpha Site Overview Of LVSWGR-36 Building #27	ELEC-1 (TYP)	Vendor	21-May-13	Approval	0	Drawing
6007-PLN-ATP-27-21-O175_R11	Alpha 480V Single-Line LVSWGR-36 Building #27	ELEC-1 (TYP)	Vendor	17-May-13	Approval	11	Drawing
6007-PLN-AGE-27-21-P555_R2	Alpha One-Line Diagram DCP-3620301 Building #27	ELEC-1 (TYP)	Vendor	14-May-13	Approval	2	Drawing
6007-PLN-AGE-27-21-P556_R1	Alpha Receptacle Panel RP-36206 Electrical Room 27	ELEC-1 (TYP)	Vendor	13-May-14	Approval	1	Drawing
6007-PLN-AGE-43-20-0009-1_R6	Outdoor Lighting Panel Single Line Diagram, Alpha Plant, LP-36209	ELEC-1 (TYP)	Vendor	21-May-13	Approval	6	Drawing
6007-PLN-AGE-43-20-0009-1_R6	Outdoor Lighting Panel Single Line Diagram, Alpha Plant, LP-36209	ELEC-1 (TYP)	Vendor	21-May-13	Approval	6	Drawing
6007-PLN-ATP-27-21-P528_R2	Alpha Electrical Panel PP-36212 Building #27	ELEC-1 (TYP)	Vendor	17-May-13	Approval	2	Drawing
6007-PLN-ATP-27-23-P535_R9	Alpha Electrical Panel PP-362 Building #27	ELEC-1 (TYP)	Vendor	14-May-13	Approval	9	Drawing
6007-PLN-ATP-27-23-P536_R10	Alpha Electrical Panel PP-36205 Building #27	ELEC-1 (TYP)	Vendor	13-May-14	Approval	10	Drawing
6007-PLN-AGE-43-20-0017-1_R6	Outdoor Lighting Panel Single Line Diagram, Beta Plant, LP-136209	ELEC-1 (TYP)	Vendor	21-May-13	Approval	6	Drawing
6007-PLN-AGE-43-20-0017-2_R6	Outdoor Lighting Panel Single Line Diagram, Beta Plant, LP-136209	ELEC-1 (TYP)	Vendor	17-May-13	Approval	6	Drawing
6007-PLN-ATP-00-21-O011_R0	Alpha Site Overview Of LVSWGR-401 Building #26	ELEC-1 (TYP)	Vendor	14-May-13	Approval	0	Drawing
6007-PLN-ATP-27-21-O170_R10	Alpha Site 480V Single-Line LVSWGR-401 Building #26	ELEC-1 (TYP)	Vendor	17-May-13	Approval	10	Drawing
6007-PLN-ATP-27-21-O325_R10	Alpha Site 480V Single-Line MCC-4011 Building #26	ELEC-1 (TYP)	Vendor	14-May-13	Approval	10	Drawing
6007-PLN-ATP-27-21-O340_R9	Alpha Site 480V Single-Line MCC-4012 Building #26	ELEC-1 (TYP)	Vendor	13-May-14	Approval	9	Drawing
6007-PLN-ATP-27-23-P525-1_R10	Alpha Electrical Panel PP-4013 & PP-40136 Building #26	ELEC-1 (TYP)	Vendor	21-May-13	Approval	10	Drawing
6007-PLN-ATP-27-23-P525-2_R3	Alpha Electrical Panel PP-4013 & PP-40136 Building #26	ELEC-1 (TYP)	Vendor	17-May-13	Approval	3	Drawing
6007-PLN-ATP-27-23-P525-3_R4	Alpha Electrical Panel PP-4013 & PP-40136 Building #26	ELEC-1 (TYP)	Vendor	14-May-13	Approval	4	Drawing
6007-PLN-ATP-27-23-P527_R4	Alpha Electrical Lighting Panel LP-401301 Building #26	ELEC-1 (TYP)	Vendor	13-May-14	Approval	4	Drawing
6007-PLN-ATP-00-21-O021_R0	Beta Site Overview Of LVSWGR-1401 Building #26	ELEC-1 (TYP)	Vendor	21-May-13	Approval	0	Drawing
6007-PLN-ATP-27-21-O270_R10	Beta 480V Single-Line LVSWGR-1401 Building #26	ELEC-1 (TYP)	Vendor	17-May-13	Approval	10	Drawing
6007-PLN-ATP-27-21-O425_R10	Beta 480V Single-Line MCC-14011 Building #26	ELEC-1 (TYP)	Vendor	14-May-13	Approval	10	Drawing
6007-PLN-ATP-27-21-O440_R9	Beta 480V Single-Line MCC-14012 Building #26	ELEC-1 (TYP)	Vendor	17-May-13	Approval	9	Drawing
6007-PLN-ATP-27-23-P625-1_R9	Beta Electrical Panel PP-14013 & PP-140136 Building #26	ELEC-1 (TYP)	Vendor	14-May-13	Approval	9	Drawing
6007-PLN-ATP-27-23-P625-2_R3	Beta Electrical Panel PP-14013 & PP-1401316 Building #26	ELEC-1 (TYP)	Vendor	13-May-14	Approval	3	Drawing
6007-PLN-ATP-27-23-P625-3_R4	Beta Electrical Panel PP-14013 & PP-1401316 Building #26	ELEC-1 (TYP)	Vendor	21-May-13	Approval	4	Drawing
6007-PLN-ATP-27-23-P627_R4	Beta Electrical Lighting Panel LP-1401301 Building #26	ELEC-1 (TYP)	Vendor	17-May-13	Approval	4	Drawing
6007-PLN-ATP-27-23-P506-1_R3	Alpha Electrical Panel PP-5201 Water Treatment Area	ELEC-1 (TYP)	Vendor	14-May-13	Approval	3	Drawing
6007-PLN-ATP-27-23-P506-2_R3	Alpha Electrical Panel PP-5201 water Treatment Area	ELEC-1 (TYP)	Vendor	13-May-14	Approval	3	Drawing
6007-PLN-ATP-27-23-P507_R2	Alpha Electrical Panel PP-5202 Water Treatment Area	ELEC-1 (TYP)	Vendor	21-May-13	Approval	2	Drawing

ABENER TEYMA MOJAVE - Beta Site Drawing List

6007-ESP-ATP-XX-XX-Z-XXXX

Compliance No.: GEN-2
Job: Mojave Solar Project
Date: 31 Jan 2012
Description: Electrical Site Drawings List - Beta

Drawing Number	Drawing Title	Applicable Condition of Certification	Vendor Supplied or EOR	Submittal Date	Reason For Submittal
6007-PLN-ATP- 00-21-O001	Electrical One-Line Diagram Symbol List	ELEC-1 (TYP)	Vendor	29-Nov-11	Approval
6007-PLN-ATP- 00-21-O020	Overall One-Line Diagram-Beta Site	ELEC-1 (TYP)	Vendor	23-Sep-11	Approval
6007-PLN-ATP- 18-52-R201	Electrical Layout Building #22 Main Electrical Station-Beta Site	ELEC-1 (TYP)	Vendor	9-Sep-11	Approval
6007-PLN-ATP- 18-52-R202	Electrical Layout Building #27 HTF Station-Beta Site	ELEC-1 (TYP)	Vendor	9-Sep-11	Approval
6007-PLN-ATP- 18-52-R203	Electrical Layout Building #26 Cooling Water Station-Beta Site	ELEC-1 (TYP)	Vendor	9-Sep-11	Approval
6007-PLN-ATP- 18-52-R204	Electrical Layout Building #13 STG2 Station-Beta Site	ELEC-1 (TYP)	Vendor	18-Nov-11	Approval
6007-PLN-ATP- 18-52-R206	Building Layout 105 SUB 001 Solar Field Station-Beta Site	ELEC-1 (TYP)	Vendor	9-Sep-11	Approval
6007-PLN-ATP- 18-52-R207	Building Layout 106 SUB 001 Solar Field Station-Beta Site	ELEC-1 (TYP)	Vendor	9-Sep-11	Approval
6007-PLN-ATP- 18-52-R208	Building Layout 107 SUB 001 Solar Field Station-Beta Site	ELEC-1 (TYP)	Vendor	9-Sep-11	Approval
6007-PLN-ATP- 18-52-R209	Building Layout 108 SUB 001 Solar Field Station-Beta Site	ELEC-1 (TYP)	Vendor	9-Sep-11	Approval
6007-PLN-ATP- 18-52-R210	Building Layout 109 SUB 001 Solar Field Station 1-Beta Site	ELEC-1 (TYP)	Vendor	9-Sep-11	Approval
6007-PLN-ATP- 23-21-O106	General One-Line Diagram 230kV Substation-Beta Site	ELEC-1 (TYP)	Vendor	1-Dec-11	Approval
6007-PLN-ATP- 23-21-O107	General one-Line Diagram 230kV Substation Utility Interconnection-Alpha/Beta Site	ELEC-1 (TYP)	Vendor		Approval
6007-PLN-ATP- 23-21-O205	General One-Line Diagram 230kV Substation-Beta Site	ELEC-1 (TYP)	Vendor	23-Sep-11	Approval
6007-PLN-ATP- 23-21-O208	Metering And Relaying One-Line Key Plan-Beta Site	ELEC-1 (TYP)	Vendor	6-Jul-11	Approval
6007-PLN-ATP- 23-21-O209	Metering And Relaying One-Line Diagram STG2-Beta Site	ELEC-1 (TYP)	Vendor	6-Jul-11	Approval
6007-PLN-ATP- 23-21-O210	Metering And Relaying One-Line Diagram APT2-Beta Site	ELEC-1 (TYP)	Vendor	6-Jul-11	Approval
6007-PLN-ATP- 23-21-O213	Metering And Relaying One-Line 230 KV Transmission Line-Beta Site	ELEC-1 (TYP)	Vendor	6-Jul-11	Approval
6007-PLN-ATP- 23-21-O214	Metering And Relaying Substation Trip/Close Control Logic One-Line-Beta Site	ELEC-1 (TYP)	Vendor	6-Jul-11	Approval
6007-PLN-ATP- 23-22-B206	DC Schematic STG2 Protection-Beta Site	ELEC-1 (TYP)	Vendor	6-Jul-11	Approval
6007-PLN-ATP- 23-22-B208	DC Schematic STG2 Unit Protection-Beta Site	ELEC-1 (TYP)	Vendor	6-Jul-11	Approval
6007-PLN-ATP- 23-22-B209	DC Schematic Excitation Protection STG2-Beta Site	ELEC-1 (TYP)	Vendor	6-Jul-11	Approval
6007-PLN-ATP- 23-22-B210	DC Schematic Aux Power Transformer & Transmission Line Protection-Beta Site	ELEC-1 (TYP)	Vendor	6-Jul-11	Approval
6007-PLN-ATP- 23-22-B216	AC Schematic Syncronization Bus STG2-Beta Site	ELEC-1 (TYP)	Vendor	6-Jul-11	Approval
6007-PLN-ATP- 23-22-B217	DC Schematic Syncronization Bus STG2-Beta Site	ELEC-1 (TYP)	Vendor	6-Jul-11	Approval
6007-PLN-ATP- 23-38-R200	230 KV Substation Layout Plan View-Beta Site	ELEC-1 (TYP)	Vendor	18-Nov-11	Approval
6007-PLN-ATP- 26-01-R101	230KV Transmission Line Layout-Beta Site	ELEC-1 (TYP)	Vendor	24-Mar-11	Approval
6007-PLN-ATP- 26-38-R105	230 KV Substation Layout Alpha/Beta Site	ELEC-1 (TYP)	Vendor	1-Dec-11	Approval
6007-PLN-ATP- 27-21-O260	480V Single Line LVSWGR-151 Building #13-Beta Site	ELEC-1 (TYP)	Vendor	23-Sep-11	Approval
6007-PLN-ATP- 27-21-O265	480V Single Line LVSWGR-153 Building #10-Beta Site	ELEC-1 (TYP)	Vendor	23-Sep-11	Approval
6007-PLN-ATP- 27-21-O270	480V Single-Line LVSWGR-154 Building #26-Beta Site	ELEC-1 (TYP)	Vendor	7-Dec-11	Approval
6007-PLN-ATP- 27-21-O275	480V Single-Line LVSWGR-136 Building #27-Beta Site	ELEC-1 (TYP)	Vendor	18-Nov-11	Approval
6007-PLN-ATP- 27-21-O405	480V Single-Line MCC-1511 Building #13-Beta Site	ELEC-1 (TYP)	Vendor	23-Sep-11	Approval
6007-PLN-ATP- 27-21-O425	480V Single-Line MCC-1541 Building #26- Beta Site	ELEC-1 (TYP)	Vendor	23-Sep-11	Approval
6007-PLN-ATP- 27-21-O435	480V Single-Line MCC-1361 WWT Electrical Building #27-Beta Site	ELEC-1 (TYP)	Vendor	23-Sep-11	Approval
6007-PLN-ATP- 27-23-P605	Electrical Panel PP-1512 Building #22-Beta Site	ELEC-1 (TYP)	Vendor	3-Oct-11	Approval
6007-PLN-ATP- 27-23-P606	Electrical Panel PP-151206 Building #22-Beta Site	ELEC-1 (TYP)	Vendor	3-Oct-11	Approval
6007-PLN-ATP- 27-23-P610	Electrical Panel PP-1513 Building #13-Beta Site	ELEC-1 (TYP)	Vendor	3-Oct-11	Approval
6007-PLN-ATP- 27-23-P611	Electrical Panel PP-151306 Building #13-Beta Site	ELEC-1 (TYP)	Vendor	3-Oct-11	Approval
6007-PLN-ATP- 27-23-P615	Electrical Panel PP-1531 Building #10-Beta Site	ELEC-1 (TYP)	Vendor	7-Dec-11	Approval
6007-PLN-ATP- 27-23-P620	Electrical Panel PP-1532 Building #10-Beta Site	ELEC-1 (TYP)	Vendor	3-Oct-11	Approval
6007-PLN-ATP- 27-23-P625	Electrical Panel PP-1543 Building #26-Beta Site	ELEC-1 (TYP)	Vendor	7-Dec-11	Approval
6007-PLN-ATP- 27-23-P626	Electrical Panel PP-154306 Building #26-Beta Site	ELEC-1 (TYP)	Vendor	3-Oct-11	Approval
6007-PLN-ATP- 27-23-P635	Electrical Panel PP-1363 Building #27-Beta Site	ELEC-1 (TYP)	Vendor	7-Dec-11	Approval
6007-PLN-ATP- 27-23-P636	Electrical Panel PP-136307 Building #27-Beta Site	ELEC-1 (TYP)	Vendor	7-Dec-11	Approval
6007-PLN-ATP- 28-21-O109	230 KV Metering & Relaying Protection Zone One-Line-Beta Site	ELEC-1 (TYP)	Vendor	1-Dec-11	Approval
6007-PLN-ATP- 28-21-O110	230 KV Metering & Relaying One-Line - STG1 (STG2)-Alpha (Beta) Site	ELEC-1 (TYP)	Vendor	5-Dec-11	Approval
6007-PLN-ATP- 28-21-O111	230 KV Metering & Relaying One-Line - APT1 (APT2)-Alpha (Beta) Site	ELEC-1 (TYP)	Vendor	1-Dec-11	Approval
6007-PLN-ATP- 28-21-O112	230 KV Metering & Relaying One-Line - TL1 (TL2)-Alpha (Beta) Site	ELEC-1 (TYP)	Vendor	1-Dec-11	Approval
6007-PLN-ATP- 28-21-O200	One-Line Diagram 15kV Distribution System-Beta Site	ELEC-1 (TYP)	Vendor	23-Sep-11	Approval
6007-PLN-ATP- 28-21-O201	One-Line Diagram 15kV To 5kV VSD System-Beta Site	ELEC-1 (TYP)	Vendor	23-Sep-11	Approval
6007-PLN-ATP- 28-21-O202	One-Line Diagram 5kV Distribution System-Beta Site	ELEC-1 (TYP)	Vendor	9-Nov-11	Approval
6007-PLN-ATP- 28-21-O203	One-Line Diagram 5kV Distribution System-Beta Site	ELEC-1 (TYP)	Vendor	23-Sep-11	Approval
6007-PLN-ATP- 28-21-O241	Solar Field Substation 105 SUB 001-Beta Site	ELEC-1 (TYP)	Vendor	23-Sep-11	Approval
6007-PLN-ATP- 28-21-O242	Solar Field Substation 106 SUB 001-Beta Site	ELEC-1 (TYP)	Vendor	23-Sep-11	Approval
6007-PLN-ATP- 28-21-O243	Solar Field Substation 107 SUB 001-Beta Site	ELEC-1 (TYP)	Vendor	23-Sep-11	Approval
6007-PLN-ATP- 28-21-O244	Solar Field Substation 108 SUB 001-Beta Site	ELEC-1 (TYP)	Vendor	23-Sep-11	Approval
6007-PLN-ATP- 28-21-O245	Solar Field Substation 109 SUB 001-Beta Site	ELEC-1 (TYP)	Vendor	23-Sep-11	Approval
6007-PLN-ATP- 28-21-O250	General One-Line Diagram 15 kV to 480V BOP Distribution System-Beta Site	ELEC-1 (TYP)	Vendor	23-Sep-11	Approval
6007-PLN-ATP- 28-22-B220	AC Schematic MVSWGR-2 Main Breaker 52-10-Beta Site	ELEC-1 (TYP)	Vendor	23-Sep-11	Approval
6007-PLN-ATP- 28-22-B221	DC Schematic Sheet 1 MVSWGR-2 Main Breaker 52-10-Beta Site	ELEC-1 (TYP)	Vendor	23-Sep-11	Approval

ABENER TEYMA MOJAVE - Beta Site Drawing List

6007-ESP-ATP-XX-XX-Z-XXXX

Compliance No.: GEN-2
Job: Mojave Solar Project
Date: 31 Jan 2012
Description: Electrical Site Drawings List - Beta

Drawing Number	Drawing Title	Applicable Condition of Certification	Vendor Supplied or EOR	Submittal Date	Reason For Submittal
6007-PLN-ATP- 28-22-B222	DC Schematic Sheet 2 MVSWGR-2 Main Breaker 52-10-Beta Site	ELEC-1 (TYP)	Vendor	23-Sep-11	Approval
6007-PLN-ATP- 28-22-B225	AC Schematic DG2 Synchronizing Breaker 52-11-Beta Site	ELEC-1 (TYP)	Vendor	23-Sep-11	Approval
6007-PLN-ATP- 28-22-B226	DC Schematic Sheet 2 DG2 Synchronizing Breaker 52-11-Beta Site	ELEC-1 (TYP)	Vendor	23-Sep-11	Approval
6007-PLN-ATP- 28-22-B227	DC Schematic Sheet 1 DG2 Synchronizing Breaker 52-11-Beta Site	ELEC-1 (TYP)	Vendor	23-Sep-11	Approval
6007-PLN-ATP- 28-22-B228	AC & DC Schematic Diesel Generator DG2-Beta Site	ELEC-1 (TYP)	Vendor	23-Sep-11	Approval
6007-PLN-ATP- 28-22-B229	AC Schematic Synchronizing Bus-Beta Site	ELEC-1 (TYP)	Vendor	23-Sep-11	Approval
6007-PLN-ATP- 28-22-B230	DC Schematic DG2 Synchronizing Bus Sheet 1-Beta Site	ELEC-1 (TYP)	Vendor	23-Sep-11	Approval
6007-PLN-ATP- 28-22-B231	DC Schematic DG2 Synchronizing Bus Sheet 2-Beta Site	ELEC-1 (TYP)	Vendor	23-Sep-11	Approval
6007-PLN-ATP- 28-22-B232	AC Schematic MVSWGR 2 Feeder Breaker 52-12 Thru 52-15-Beta Site	ELEC-1 (TYP)	Vendor	23-Sep-11	Approval
6007-PLN-ATP- 28-22-B233	DC Schematic Sheet 1 MVSWGR 2 Feeder Breakers 52-12 Thru 52-15-Beta Site	ELEC-1 (TYP)	Vendor	23-Sep-11	Approval
6007-PLN-ATP- 28-22-B234	DC Schematic Sheet 2 MVSWGR 2 Feeder Breakers 52-12 Thru 52-15-Beta Site	ELEC-1 (TYP)	Vendor	23-Sep-11	Approval
6007-PLN-ATP- 28-22-B235	MVSWGR-2 Communication Schematic-Beta Site	ELEC-1 (TYP)	Vendor	23-Sep-11	Approval
6007-PLN-ATP- 28-22-B236	MVSWGR-2 Digital Clocking Schematic-Beta Site	ELEC-1 (TYP)	Vendor	23-Sep-11	Approval
6007-PLN-ATP- 28-22-B240	AC & DC Schematic Variable Speed Drive VSD-131 Thru VSD-134-Beta Site	ELEC-1 (TYP)	Vendor	23-Sep-11	Approval
6007-PLN-ATP- 28-22-B241	Communication Schematic Variable Speed Drive VSD-131 Thru VSD-134-Beta Site	ELEC-1 (TYP)	Vendor	23-Sep-11	Approval
6007-PLN-ATP- 28-22-B245	AC & DC Schematic Variable Speed Dirve VSD-144	ELEC-1 (TYP)	Vendor	23-Sep-11	Approval
6007-PLN-ATP- 28-22-B246	Communication Schematic Variable Speed Drive VSD-144-Beta Site	ELEC-1 (TYP)	Vendor	23-Sep-11	Approval
6007-PLN-ATP- 28-22-B250	AC & DC Schematic Medium Voltage Switch MVS-130-Beta Site	ELEC-1 (TYP)	Vendor	23-Sep-11	Approval
6007-PLN-ATP- 28-22-B253	Communication Schematic MVS-130-Beta Site	ELEC-1 (TYP)	Vendor	23-Sep-11	Approval
6007-PLN-ATP- 28-22-B255	AC & DC Schematic Medium Voltage Switch MVS-151 - MVS-157-Beta Site	ELEC-1 (TYP)	Vendor	23-Sep-11	Approval
6007-PLN-ATP- 28-22-B260	AC Schematic MVSWGR-14 Feeder Breaker 152-140 Thru 143-Beta Site	ELEC-1 (TYP)	Vendor	23-Sep-11	Approval
6007-PLN-ATP- 28-22-B261	DC Schematic MVSWGR-14 Feeder Breaker 152-140 Thru 143-Beta Site	ELEC-1 (TYP)	Vendor	23-Sep-11	Approval
6007-PLN-ATP- 28-22-B262	DC Schematic Sheet 2 MVSWGR 14 Feeder Breakers 152-140 Thru 152-143-Beta Site	ELEC-1 (TYP)	Vendor	23-Sep-11	Approval
6007-PLN-ATP- 28-22-B263	Communication Schematic MVSWGR-14-Beta Site	ELEC-1 (TYP)	Vendor	23-Sep-11	Approval

ABENER TEYMA MOJAVE - Specifications List

Compliance No.: GEN-2
Job: Mojave Solar Project
Date: 31 Jan 2012
Description: Specifications List

Specification Number	Specification Title	Applicable Condition of Certification	Vendor Supplied or EOR	Submittal Date	Reason For Submittal
6007-ESP-ATP- 00-30-M100	Electrical and Instrument Systems on Packaged Mechanical Equipment	ELEC-1 (TYP)	Vendor	7-Jun-11	Approval
6007-ESP-ATP- 00-31-C150	Electrical Construction Insulation Resistance Testing	ELEC-1 (TYP)	Vendor	3-Jun-11	Approval
6007-ESP-ATP- 00-32-C110	Electrical Construction	ELEC-1 (TYP)	Vendor	3-Jun-11	Approval
6007-ESP-ATP- 00-32-C120	Electrical Construction Rigid Conduit Installation	ELEC-1 (TYP)	Vendor	3-Jun-11	Approval
6007-ESP-ATP- 00-32-C122	Conduit Installation For Warehouse Only	ELEC-1 (TYP)	Vendor	29-Nov-11	Approval
6007-ESP-ATP- 00-32-C125	Electrical Construction Cable Tray Installation	ELEC-1 (TYP)	Vendor	3-Jun-11	Approval
6007-ESP-ATP- 00-32-C130	Electrical Construction Cable and Wiring Installation	ELEC-1 (TYP)	Vendor	3-Jun-11	Approval
6007-ESP-ATP- 00-33-C105	Electrical Construction Grounding Installation	ELEC-1 (TYP)	Vendor	3-Jun-11	Approval
6007-ESP-ATP- 00-34-C100	General Requirements for Electrical Construction	ELEC-1 (TYP)	Vendor	3-Jun-11	Approval
6007-ESP-ATP- 00-34-C135	Electrical Construction Wiring Device Installation	ELEC-1 (TYP)	Vendor	3-Jun-11	Approval
6007-ESP-ATP- 00-34-S061	Scope of Work-Collector Assembly Building	ELEC-1 (TYP)	Vendor	29-Nov-11	Approval
6007-ESP-ATP- 00-34-S061V	Electrical Vendor Data Requirement	ELEC-1 (TYP)	Vendor		
6007-ESP-ATP- 00-34-S062	Electrical Construction Scope of Work-Warehouse Building	ELEC-1 (TYP)	Vendor	30-Nov-11	Approval
6007-ESP-ATP- 00-38-C115	Electrical Equipment Installation	ELEC-1 (TYP)	Vendor	3-Jun-11	Approval
6007-ESP-ATP- 00-46-E410	Liquid Filled Transformers 230 kV, 100MVA or Less	ELEC-1 (TYP)	Vendor	11-Nov-11	Approval
6007-ESP-ATP- 00-46-E410V	Vendor Data Requirements	ELEC-1 (TYP)	Vendor	22-Sep-11	Approval
6007-ESP-ATP- 00-46-E411	Liquid Filled Transformers 230kv, 100MVA or Less Data Sheet	ELEC-1 (TYP)	Vendor	14-Sep-11	Approval
6007-ESP-ATP- 00-46-E412	Liquid Filled Transformers 10MVA, Data Sheet	ELEC-1 (TYP)	Vendor	22-Sep-11	Approval
6007-ESP-ATP- 00-46-E415	Liquid Filled Transformers Above 100MVA	ELEC-1 (TYP)	Vendor	14-Sep-11	Approval
6007-ESP-ATP- 00-46-E416	Liquid Filled Transformers Above 100MVA Data Sheet	ELEC-1 (TYP)	Vendor	14-Sep-11	Approval
6007-ESP-ATP- 00-46-E420	Pad Mounted Transformer	ELEC-1 (TYP)	Vendor	22-Sep-11	Approval
6007-ESP-ATP- 00-46-E420V	Vendor Data Requirements	ELEC-1 (TYP)	Vendor	22-Sep-11	Approval
6007-ESP-ATP- 00-46-E421	Pad Mounted Transformer Data Sheet	ELEC-1 (TYP)	Vendor	11-Nov-11	Approval
6007-ESP-ATP- 00-46-E422	Pad Mounted Transformer Data Sheet	ELEC-1 (TYP)	Vendor	22-Sep-11	Approval
6007-ESP-ATP- 00-46-S050	Construction Temporary Power Subcontract	ELEC-1 (TYP)	Vendor	20-Oct-11	Approval
6007-ESP-ATP- 00-47-M120	Synchronous Generator	ELEC-1 (TYP)	Vendor	26-May-11	Approval
6007-ESP-ATP- 00-47-M125	Generator Synchronization Control	ELEC-1 (TYP)	Vendor	26-May-11	Approval
6007-ESP-ATP- 23-38-S030	Substation Construction Scope of Work	ELEC-1 (TYP)	Vendor	1-Dec-11	Approval
6007-ESP-ATP- 23-38-S030V	Vendor Data Requirements	ELEC-1 (TYP)	Vendor	1-Dec-11	Approval
6007-ESP-ATP- 23-38-S050V	Vendor Data Requirements	ELEC-1 (TYP)	Vendor	10-Jun-11	Approval
6007-ESP-ATP- 23-48-E330	Substation Circuit Breakers	ELEC-1 (TYP)	Vendor	1-Dec-11	Approval
6007-ESP-ATP- 23-48-E330V	Vendor Data Requirements	ELEC-1 (TYP)	Vendor	1-Dec-11	Approval
6007-ESP-ATP- 23-48-E331	Substation Circuit Breakers Data Sheet	ELEC-1 (TYP)	Vendor	1-Dec-11	Approval
6007-ESP-ATP- 23-48-E340	Disconnect Switches, Instrumentation Transformers, Lightning Arrestors, and Structures	ELEC-1 (TYP)	Vendor	1-Dec-11	Approval
6007-ESP-ATP- 23-48-E341	Substation Disconnect Switch Data Sheet	ELEC-1 (TYP)	Vendor	1-Dec-11	Approval
6007-ESP-ATP- 23-48-E342	Substation Instrumentation Transformer Data Sheet	ELEC-1 (TYP)	Vendor	1-Dec-11	Approval
6007-ESP-ATP- 23-48-E343	Substation Lightning Arrestor Data Sheet	ELEC-1 (TYP)	Vendor	1-Dec-11	Approval
6007-ESP-ATP- 23-48-S032	242 kV Transmission Line Scope of Work	ELEC-1 (TYP)	Vendor	24-May-11	Approval
6007-ESP-ATP- 26-48-S032	230 kV Transmission Line Scope of Work	ELEC-1 (TYP)	Vendor	24-May-11	Approval
6007-ESP-ATP- 26-48-S032V	Vendor Data Requirements	ELEC-1 (TYP)	Vendor	24-Mar-11	Approval
6007-ESP-ATP- 27-21-E150	Low Voltage Variable Speed Drive Mounted Outside the MCC	ELEC-1 (TYP)	Vendor	22-Sep-11	Approval
6007-ESP-ATP- 27-21-E150V	Vendor Data Requirements	ELEC-1 (TYP)	Vendor	22-Sep-11	Approval
6007-ESP-ATP- 27-21-E151	Wall Mounted Low Voltage Variable Speed Drive Data Sheet	ELEC-1 (TYP)	Vendor	22-Sep-11	Approval
6007-ESP-ATP- 27-21-E215	Low Voltage Smart Motor Control Centers	ELEC-1 (TYP)	Vendor	22-Sep-11	Approval
6007-ESP-ATP- 27-21-E215V	Vendor Data Requirements	ELEC-1 (TYP)	Vendor	22-Sep-11	Approval
6007-ESP-ATP- 27-21-E260	Unitized Distribution Substation	ELEC-1 (TYP)	Vendor	22-Nov-11	Approval
6007-ESP-ATP- 27-21-E260V	Vendor Data Requirements For Construction Panelboards	ELEC-1 (TYP)	Vendor	22-Nov-11	Approval
6007-ESP-ATP- 27-21-E310	Low Voltage Switchgear	ELEC-1 (TYP)	Vendor	22-Sep-11	Approval
6007-ESP-ATP- 27-21-E310V	Vendor Data Requirements	ELEC-1 (TYP)	Vendor	22-Sep-11	Approval
6007-ESP-ATP- 27-21-E311	Low Voltage Switchgear Data Sheet	ELEC-1 (TYP)	Vendor	22-Sep-11	Approval
6007-ESP-ATP- 27-21-E370	Low Voltage Bus Duct	ELEC-1 (TYP)	Vendor	22-Sep-11	Approval
6007-ESP-ATP- 27-21-E370V	Vendor Data Requirements	ELEC-1 (TYP)	Vendor	22-Sep-11	Approval
6007-ESP-ATP- 27-21-E371	Low Voltage Bus Duct Data Sheet	ELEC-1 (TYP)	Vendor	22-Sep-11	Approval
6007-ESP-ATP- 27-21-E390	Low Voltage Panel Boards	ELEC-1 (TYP)	Vendor	22-Nov-11	Approval
6007-ESP-ATP- 27-21-E540	Low Voltage Grounding Resistor	ELEC-1 (TYP)	Vendor	22-Sep-11	Approval
6007-ESP-ATP- 27-21-E540V	Vendor Data Requirements	ELEC-1 (TYP)	Vendor	22-Sep-11	Approval
6007-ESP-ATP- 27-21-E541	Low Voltage Grounding Resistor Data Sheet	ELEC-1 (TYP)	Vendor	22-Sep-11	Approval
6007-ESP-ATP- 28-38-E350	Medium Voltage Bus Duct	ELEC-1 (TYP)	Vendor	22-Sep-11	Approval
6007-ESP-ATP- 28-38-E350V	Vendor Data Requirements	ELEC-1 (TYP)	Vendor	22-Sep-11	Approval
6007-ESP-ATP- 28-38-E351	Medium Voltage Iso Phase Bus Duct Data Sheet	ELEC-1 (TYP)	Vendor	22-Sep-11	Approval
6007-ESP-ATP- 28-38-E352	Medium Voltage Bus Duct Data Sheet	ELEC-1 (TYP)	Vendor	22-Sep-11	Approval
6007-ESP-ATP- 28-43-E160	Medium Voltage Variable Speed Drives	ELEC-1 (TYP)	Vendor	22-Sep-11	Approval
6007-ESP-ATP- 28-43-E160V	Vendor Data Requirements	ELEC-1 (TYP)	Vendor	22-Sep-11	Approval

ABENER TEYMA MOJAVE - Specifications List

6007-ESP-ATP- 23-46-E161	Medium Voltage Variable Speed Drives Data Sheet	ELEC-1 (TYP)	Vendor	22-Sep-11	Approval
6007-ESP-ATP- 28-43-E220	5kV Motor Controllers	ELEC-1 (TYP)	Vendor	22-Sep-11	Approval
6007-ESP-ATP- 28-43-E220V	Vendor Data Requirements	ELEC-1 (TYP)	Vendor	22-Sep-11	Approval
6007-ESP-ATP- 28-43-E221	15kV Contactors	ELEC-1 (TYP)	Vendor	22-Sep-11	Approval
6007-ESP-ATP- 28-43-E221V	Vendor Data Requirements	ELEC-1 (TYP)	Vendor	22-Sep-11	Approval
6007-ESP-ATP- 28-43-E320	Medium Voltage Switchgear	ELEC-1 (TYP)	Vendor	22-Sep-11	Approval
6007-ESP-ATP- 28-43-E320V	Vendor Data Requirements	ELEC-1 (TYP)	Vendor	22-Sep-11	Approval
6007-ESP-ATP- 28-43-E321	Medium Voltage Switchgear Data Sheet	ELEC-1 (TYP)	Vendor	22-Sep-11	Approval
6007-ESP-ATP- 28-43-E325	Medium Voltage Interrupter Switch	ELEC-1 (TYP)	Vendor	22-Sep-11	Approval
6007-ESP-ATP- 28-43-E325V	Vendor Data Requirements	ELEC-1 (TYP)	Vendor	22-Sep-11	Approval
6007-ESP-ATP- 28-43-E326	Medium Voltage Interrupter Switch Data Sheet	ELEC-1 (TYP)	Vendor	22-Sep-11	Approval
6007-ESP-ATP- 28-46-E530	Medium Voltage Grounding Resistor	ELEC-1 (TYP)	Vendor	22-Sep-11	Approval
6007-ESP-ATP- 28-46-E530V	Vendor Data Requirements	ELEC-1 (TYP)	Vendor	22-Sep-11	Approval
6007-ESP-ATP- 28-46-E531	Medium Voltage Grounding Resistor Data Sheet	ELEC-1 (TYP)	Vendor	27-Jun-11	Approval
6007-ESP-ATP- 28-46-E532	Medium Voltage Grounding Resistor Data Sheet	ELEC-1 (TYP)	Vendor	22-Sep-11	Approval
6007-ESP-ATP- 28-47-E130	Diesel Generator	ELEC-1 (TYP)	Vendor		Approval
6007-ESP-ATP- 28-47-E130V	Vendor Data Requirements	ELEC-1 (TYP)	Vendor		Approval
6007-ESP-ATP- 28-47-M135	Generator Synchronization Control	ELEC-1 (TYP)	Vendor		Approval
6007-ESP-ATP- 35-30-M110	Induction Motors	ELEC-1 (TYP)	Vendor	28-Jul-11	Approval
6007-ESP-ATP- 35-30-M111	Motor Data Sheet 250hp and below; 250 hp to 400 hp VSD Driven	ELEC-1 (TYP)	Vendor	28-Jul-11	Approval
6007-ESP-ATP- 35-30-M112	Motor Data Sheet 250hp and Above	ELEC-1 (TYP)	Vendor	28-Jul-11	Approval

Compliance No.: GEN-2
Job: Mojave Solar Project
Date: 22 Jan 2012
Description: Electrical Site Drawings List - Temporary Power

Drawing Number	Drawing Title	Applicable Condition of Certification	Vendor Supplied or EOR	Submittal Date	Reason For Submittal
Alpha Phase 1					
6007-PLN-ATP- 28-21-O001	Construction Temporary Power One-Line Diagram		Vendor	2-Feb-12	
6007-PLN-ATP- 28-21-P002	Construction Temporary Power Distribution Panel Schedules		Vendor	16-Feb-12	
6007-PLN-ATP- 28-21-P007	Construction Temporary Power Distribution Panel Schedules		Vendor	16-Feb-12	
6007-PLN-ATP- 28-34-R001	Construction Tempoary Power Electrical Site Plan		Vendor	2-Feb-12	
6007-PLN-ATP- 28-34-R002	Construction Temporary Power For Alpha Plant		Vendor	2-Feb-12	
Alpha Phase 2 & Beta					
6007-PLN-ATP- 28-21-O001	Construction Temporary Power One-Line Diagram		Vendor	2-Feb-12	
6007-PLN-ATP- 28-21-P002	Construction Temporary Power Distribution Panel Schedules		Vendor	16-Feb-12	
6007-PLN-ATP- 28-21-P003	Construction Temporary Power Distribution Panel Schedules		Vendor	16-Feb-12	
6007-PLN-ATP- 28-21-P004	Construction Temporary Power Distribution Panel Schedules		Vendor	16-Feb-12	
6007-PLN-ATP- 28-21-P005	Construction Temporary Power Distribution Panel Schedules		Vendor	16-Feb-12	
6007-PLN-ATP- 28-34-R001	Construction Tempoary Power Electrical Site Plan		Vendor	2-Feb-12	
6007-PLN-ATP- 28-34-R002	Construction Temporary Power For Alpha Plant		Vendor	2-Feb-12	
6007-PLN-ATP- 28-34-R003	Construction Temporary Power For Alpha Plant		Vendor	2-Feb-12	
VIS-3					
6007-PLN-ATP- 28-34-R004	Construction Temporary Lighting Electrical Site Plan		Vendor	7-Feb-12	

6007-LIS-ATP-00-60-G127
GEN-2
Job: Mojave Solar Project
Date: 30 March 2012
Description: Mechanical Master Document List
Rev 1
By: JWP
App'd: MZA

Doc Number	Description	Type of Document	Rev. No	Vendor Supplied or EOR	Applicable Condition of Certification	Submittal Date	Reason For Submittal	Type of Document
6007-ESP-ATP-00-00-GW001	Groundwater Well Reconnaissance & Abandonment	Spec	0	SP	GEN-2	Field	Approval	Spec
6007-ESP-ATP-00-60-G100	Project Design Criteria	Spec	3	HED	GEN-2	8/30/2012	Approval	Spec
6007-ESP-ATP-00-60-G103	Quantitative Risk Analysis	Spec	0	KH	GEN-2	8/12/2011	Approval	Spec
6007-ESP-ATP-00-60-G120	Equipment Modeling Vendor Requirements	Spec	1	CK	GEN-2	6/6/2011	Approval	Spec
6007-ESP-ATP-00-60-G121	Shipping Preparation	Spec	2	CK	GEN-2	8/25/2011	Approval	Spec
6007-ESP-ATP-00-60-G130	Required Allowable Nozzle Loads	Spec	1	CK	GEN-2	1/27/2011	Approval	Spec
6007-ESP-ATP-00-60-I100	Mineral Fiber Insulation	Spec	1	CK	GEN-2	6/6/2011	Approval	Spec
6007-ESP-ATP-00-60-I150	Aluminum Jacket Cover for Insulaton	Spec	1	CK	GEN-2	6/6/2011	Approval	Spec
6007-ESP-ATP-00-60-I152	Removable - Reusable Jacketing for Insulation	Spec	1	CK	GEN-2	6/6/2011	Approval	Spec
6007-ESP-ATP-00-60-I153	Installation of Insulation and Jacketing on Piping	Spec	1	CK	GEN-2	6/6/2011	Approval	Spec
6007-ESP-ATP-00-60-I180	Miscellaneous Insulation Materials	Spec	1	CK	GEN-2	6/6/2011	Approval	Spec
6007-ESP-ATP-00-60-N101	Two Coat System for Low Temperature Non-Primed Carbon Steel	Spec	1	CK	GEN-2	6/6/2011	Approval	Spec
6007-ESP-ATP-00-60-N102	Two Coat System for High Temperature Non-Primed Carbon Steel	Spec	1	CK	GEN-2	6/6/2011	Approval	Spec
6007-ESP-ATP-00-60-N103	Safety and Hazards Paint	Spec	1	UR	GEN-2	6/30/2011	Approval	Spec
6007-ESP-ATP-00-60-N105	Hot Dip Galvanizing	Spec	1	UR	GEN-2	6/30/2011	Approval	Spec
6007-ESP-ATP-00-60-N106	Touch-up for Galvanized Steel	Spec	1	UR	GEN-2	6/30/2011	Approval	Spec
6007-ESP-ATP-00-60-N180	Shop Applied Paint	Spec	2	CK	GEN-2	1/31/2012	Approval	Spec
6007-ESP-ATP-00-60-N185	Field Applied Paint	Spec	0	CK	GEN-2	6/6/2011	Approval	Spec
6007-ESP-ATP-00-60-N190	Tank Lining	Spec	0	UR	GEN-2	2/17/2011	Approval	Spec
6007-ESP-ATP-00-60-Q101	Hydrostatic Pressure Test of Metallic Equipment	Spec	0	CK	GEN-2	6/6/2011	Approval	Spec
6007-ESP-ATP-00-61-G113	Pipe Index	Spec	2	JWP	GEN-2	1/17/2012	Approval	Spec
6007-ESP-ATP-00-62-M900	Safety Showers	Spec	0	SMR	GEN-2	1/17/2011	Approval	Spec
6007-ESP-ATP-00-62-U500	Steam Turbine Generator	Spec	0	GENERAL ELECTRIC	GEN-2	5/31/2011	Approval	Spec
6007-ESP-ATP-00-62-U501	Steam Turbine Generator	Spec	1	GENERAL ELECTRIC	GEN-2	2/10/2012	Approval	Spec
6007-ESP-ATP-00-62-U502	Steam Turbine	Spec	0	GENERAL ELECTRIC	GEN-2	5/31/2011	Approval	Spec
6007-ESP-ATP-00-62-U503	Turbine Generator Auxiliaries	Spec	0	GENERAL ELECTRIC	GEN-2	6/6/2011	Approval	Spec
6007-ESP-ATP-00-62-U504	Steam Turbine Generator Instrumentation and Controls	Spec	0	GENERAL ELECTRIC	GEN-2	6/7/2011	Approval	Spec
6007-ESP-ATP-00-62-U505	Steam Turbine Generator Engineering Coordination and Services	Spec	0	GENERAL ELECTRIC	GEN-2	6/6/2011	Approval	Spec
6007-ESP-ATP-12-62-W200	Water Treatment System	Spec	2	RS	GEN-2	11/30/2011	Approval	Spec
6007-ESP-ATP-14-60-G176	Cooling Water Analysis	Spec	0	RS	GEN-2	8/24/2011	Approval	Spec
6007-ESP-ATP-14-62-P205	Cooling Tower Pumps	Spec	0	WMP	GEN-2	8/16/2011	Approval	Spec
6007-ESP-ATP-14-62-P401	CWT Pumps	Spec			GEN-2	5/1/2012	Approval	Spec
6007-ESP-ATP-14-62-P415	Cooling Tower Auxiliary Pumps	Spec	0	WMP	GEN-2	8/24/2011	Approval	Spec
6007-ESP-ATP-14-62-U300	Cooling Towers	Spec	1	COOLING TECHNOL	GEN-2	3/16/2012	Approval	Spec
6007-ESP-ATP-14-62-X401	Cooling Water Tower	Spec			GEN-2	6/1/2012	Approval	Spec
6007-ESP-ATP-15-81-S103	Fire Protection Subcontract	Spec	0	KH	GEN-2	2/28/2012	Approval	Spec
6007-ESP-ATP-16-62-0002	Air Compressor Package	Spec	2	ZRW	GEN-2	10/17/2011	Approval	Spec
6007-ESP-ATP-16-62-Z480	Compressed Air System	Spec			GEN-2	8/1/2012	Approval	Spec
6007-ESP-ATP-17-62-U601	Steam Moisture Separator (Post High Pressure Turbine)	Spec	1	CK	GEN-2	3/5/2012	Approval	Spec
6007-ESP-ATP-21-62-B315	Moisture Separator	Spec			GEN-2	5/1/2012	Approval	Spec

6007-ESP-ATP-21-62-P208	Boiler Feedwater Pumps	Spec	1	FLOWSERVE	GEN-2	3/8/2012	Approval	Spec
6007-ESP-ATP-21-62-P302	BFW Pumps	Spec			GEN-2	6/15/2012	Approval	Spec
6007-ESP-ATP-21-62-P306	TG Condensate Pumps	Spec			GEN-2	6/15/2012	Approval	Spec
6007-ESP-ATP-21-62-P315	Pwr Gen Condensate Receiver Pumps	Spec			GEN-2	6/15/2012	Approval	Spec
6007-ESP-ATP-21-62-SG01	Steam Generator Package Scope of Supply	Spec	0	FOSTER WHEELER	GEN-2	4/29/2011	Approval	Spec
6007-ESP-ATP-21-62-U200	Auxiliary Boiler	Spec	1	KH	GEN-2	10/19/2011	Approval	Spec
6007-ESP-ATP-21-62-U201	Deaerators	Spec	3	STERLING	GEN-2	3/15/2012	Approval	Spec
6007-ESP-ATP-21-62-V315	Power Gen Condensate Receiver	Spec			GEN-2	6/15/2012	Approval	Spec
6007-ESP-ATP-21-62-X355	Boiler Blowdown Cooler	Spec	0	JWP	GEN-2	2/27/2012	Approval	Spec
6007-ESP-ATP-21-62-X400	Boiler Feedwater Heaters	Spec	4	FOSTER WHEELER	GEN-2	12/12/2011	Approval	Spec
6007-ESP-ATP-21-62-Z309	Boiler Chemical Feed System	Spec			GEN-2	7/15/2012	Approval	Spec
6007-ESP-ATP-25-62-P301	Condensate Pump	Spec	1	CK	GEN-2	11/18/2011	Approval	Spec
6007-ESP-ATP-25-62-P302	Reciever Pump Station	Spec	1	FLOWSERVE	GEN-2	11/18/2011	Approval	Spec
6007-ESP-ATP-25-62-U555	Steam Condenser Vacuum System Specification	Spec	1	CK	GEN-2	8/12/2011	Approval	Spec
6007-ESP-ATP-25-62-U600	Steam Surface Condenser Specification	Spec	1	CK	GEN-2	8/12/2011	Approval	Spec
6007-ESP-ATP-25-62-X313	Steam Condenser	Spec			GEN-2	7/1/2012	Approval	Spec
6007-ESP-ATP-29-60-G175	Well Water Analysis	Spec	1	UR	GEN-2	8/30/2011	Approval	Spec
6007-ESP-ATP-29-60-W601	Water Well Development	Spec	0	CHRISTENSEN CO	GEN-2	10/17/2011	Approval	Spec
6007-ESP-ATP-29-62-S112	Production Wells	Spec	2	CHRISTENSEN CO	GEN-2	1/18/2012	Approval	Spec
6007-ESP-ATP-29-62-T201	Field Fabricated Tank	Spec	1	SO ROBLES TANK	GEN-2	1/20/2012	Approval	Spec
6007-ESP-ATP-29-62-T402D	Raw-Fire Water Tank	Spec	0	SO ROBLES TANK	GEN-2	8/26/2011	Approval	Spec
6007-ESP-ATP-29-62-T424D	Cooling Tower Blow Down Tank	Spec	0	SO ROBLES TANK	GEN-2	8/26/2011	Approval	Spec
6007-ESP-ATP-29-62-T444D	Process Water Tank	Spec	0	SO ROBLES TANK	GEN-2	8/26/2011	Approval	Spec
6007-ESP-ATP-29-62-T451D	Polisher Feed Tank	Spec	0	SO ROBLES TANK	GEN-2	8/26/2011	Approval	Spec
6007-ESP-ATP-29-62-T453D	Polished Water Tank	Spec	0	SO ROBLES TANK	GEN-2	8/26/2011	Approval	Spec
6007-ESP-ATP-37-62-0001	Overhead Bridge Cranes	Spec	3	COLTON	GEN-2	10/19/2011	Approval	Spec
6007-ESP-ATP-44-62-F206	Carbon Filters	Spec	0	WMP	GEN-2	3/29/2012	Approval	Spec
6007-ESP-ATP-44-62-V208	HTF Scrubbers	Spec	0	WMP	GEN-2	10/21/2011	Approval	Spec
6007-ESP-ATP-53-00-G190	Site Chemicals Storage	Spec	0	UR	GEN-2	1/17/2011	Approval	Spec
6007-ESP-ATP-57-68-M450	Flexible Hoses for HTF Piping to/from Solar Collectors	Spec	0	ZRW	GEN-2	2/22/2012	Approval	Spec
6007-ESP-ATP-58-62-F201	HTF Strainers	Spec	0	JWP	GEN-2	2/27/2012	Approval	Spec
6007-ESP-ATP-58-62-P200	Main HTF Pumps	Spec	1	FLOWSERVE	GEN-2	1/27/2012	Approval	Spec
6007-ESP-ATP-58-62-P201	HTF Standby Pump	Spec	0	RGTD	GEN-2	9/9/2011	Approval	Spec
6007-ESP-ATP-58-62-P204	HTF Fill_Discharge Pump	Spec	1	RGTD	GEN-2	1/16/2012	Approval	Spec
6007-ESP-ATP-58-62-P221	HTF Degradations Recycle Pumps	Spec	1	RGTD	GEN-2	1/16/2012	Approval	Spec
6007-ESP-ATP-58-62-T204	HTF Overflow Tanks	Spec	1	SO ROBLES TANK	GEN-2	1/30/2012	Approval	Spec
6007-ESP-ATP-58-62-T204	HTF Overflow Tanks	Spec	1	RGTD/KH	GEN-2	1/30/2012	Approval	Spec
6007-ESP-ATP-58-62-V200	HTF Expansion Vessels	Spec	2	RGTD	GEN-2	3/6/2012	Approval	Spec
6007-ESP-ATP-58-62-V206	HTF/Steam Flash Vesssel	Spec			GEN-2		Approval	Spec
6007-ESP-ATP-58-62-V207	Low Boiler Condensate Receiver Vessels	Spec	0	WMP	GEN-2	1/19/2012	Approval	Spec
6007-ESP-ATP-58-62-X205	HTF Tank Coolers	Spec	0	WMP	GEN-2	1/4/2012	Approval	Spec
6007-ESP-ATP-58-62-X206	Nitrogen Ullage Coolers	Spec	0	WMP	GEN-2	1/10/2012	Approval	Spec
6007-ESP-ATP-58-62-X208	HTF Antifreeze Heater	Spec	0	RGTD	GEN-2		Approval	Spec
6007-ESP-ATP-64-62-X207	Nitrogen Electric Heater	Spec	0	SMR	GEN-2	2/10/2012	Approval	Spec
6007-ESP-ATP-64-62-Z208	Nitrogen System	Spec			GEN-2	5/1/2012	Approval	Spec
6007-HDD-ATP-58-62-C103	Therminol VP-1	Spec	0	HED	GEN-2	2/3/2012	Approval	Data Sheet
6007-LIS-ATP-00-60-G110	Equipment Motor List	List	1	WMP	GEN-2	1/24/2012	Approval	List
6007-LIS-ATP-00-60-G113	Equipment Parameter List	List	0	EOR/WMP	GEN-2	2/17/2012	Approval	List
6007-LIS-ATP-00-60-G114	Line List	List	0	EOR/WMP	GEN-2	2/21/2012	Approval	List
6007-LIS-ATP-00-60-G127	Mechanical Master Document List	List	0	JWP	GEN-2	3/15/2012	Approval	List
6007-LIS-ATP-00-60-G181	Vacuum Breaker List	List	0	HED	GEN-2	5/9/2011	Approval	List

6007-LIS-ATP-00-60-G182	Check Valve list	List	0	HED	GEN-2	5/9/2011	Approval	List
6007-LIS-ATP-00-60-G183	Relief and Safety Valve List	List	0	WMP	GEN-2	5/12/2011	Approval	List
6007-LIS-ATP-00-60-G184	Filter List	LIst	0	WMP	GEN-2	5/12/2011	Approval	List
6007-PLN-ATP-00-02-L001	Layout For Alpha Plant	Drawing	4	MJS/ERD	GEN-2	2/10/2012	Approval	Drawing
6007-PLN-ATP-00-02-L002	Layout For Beta Plant	Drawing	4	MJS/ERD	GEN-2	2/10/2012	Approval	Drawing
6007-PLN-ATP-00-02-L003	Central Plant Layout - Alpha Plant	Drawing	4	MJS/ERD	GEN-2	2/10/2012	Approval	Drawing
6007-PLN-ATP-00-02-L004	Central Plant Layout - Beta Plant	Drawing	4	MJS/ERD	GEN-2	2/10/2012	Approval	Drawing
6007-PLN-ATP-00-02-L010	Site Plan	Drawing	2	MJS/ERD	GEN-2	2/10/2012	Approval	Drawing
6007-PLN-ATP-00-70-I001C	Drawing Index P&ID	Drawing	2	WMP/JTP	GEN-2	1/17/2012	Approval	Drawing
6007-PLN-ATP-00-70-N001C	Nomenclature Sheet 1 P&ID	Drawing	2	ERD	GEN-2	3/6/2012	Approval	Drawing
6007-PLN-ATP-00-70-N002C	Nomenclature Sheet 2 P&ID	Drawing	1	ERD	GEN-2	3/6/2012	Approval	Drawing
6007-PLN-ATP-00-70-N003C	Nomenclature Sheet 3 P&ID	Drawing	2	ERD	GEN-2	3/6/2012	Approval	Drawing
6007-PLN-ATP-00-71-CL02A	Expansion System - Alpha plant Pressure & Level Control Complex Logic Diagram	Drawing	0	WMP/MJS	GEN-2	5/9/2011	Approval	Drawing
6007-PLN-ATP-00-71-CL03A	HTF Flow Control - Alpha Plant Branch Flow Balance Trim Control Complex Logic Dia	Drawing	0	WMP/MJS	GEN-2	5/9/2011	Approval	Drawing
6007-PLN-ATP-00-71-CL08C	Overflow System Pressure, Temp, and Minimum Flow Control	Drawing	0	WMP/MJS	GEN-2	5/9/2011	Approval	Drawing
6007-PLN-ATP-21-51-0001	Steam Generation Area Layout	Drawing	0	CK	GEN-2	6/9/2011	Approval	Drawing
6007-PLN-ATP-21-71-P301C	Steam Generation - Preheater P&ID	Drawing	2	WMP/JTP	GEN-2	1/17/2012	Approval	Drawing
6007-PLN-ATP-21-71-P302C	Steam Generation - Evaporator P&ID	Drawing	1	WMP/JTP	GEN-2	9/23/2012	Approval	Drawing
6007-PLN-ATP-21-71-P303C	Steam Generation - Superheater P&ID	Drawing	1	WMP/JTP	GEN-2	9/23/2012	Approval	Drawing
6007-PLN-ATP-21-71-P304C	Steam Generation - Reheaters System P&ID	Drawing	2	WMP/JTP	GEN-2	1/17/2012	Approval	Drawing
6007-PLN-ATP-21-71-P305C	Steam Generation - Blowdown System P&ID	Drawing	1	WMP/JTP	GEN-2	9/23/2011	Approval	Drawing
6007-PLN-ATP-21-71-P306C	Steam Generation - Sampling System P&ID	Drawing	0	WMP/MJS	GEN-2	5/9/2011	Approval	Drawing
6007-PLN-ATP-25-71-P309C	Auxiliary I.P. Steam System P&ID	Drawing	3	ERD	GEN-2	3/6/2012	Approval	Drawing
6007-PLN-ATP-25-71-P310C	HP Steam Turbine P&ID	Drawing	3	ERD	GEN-2	3/6/2012	Approval	Drawing
6007-PLN-ATP-25-71-P311C	LP Steam Turbine P&ID	Drawing	3	ERD	GEN-2	3/6/2012	Approval	Drawing
6007-PLN-ATP-25-71-P312C	Condensate System P&ID	Drawing	3	ERD	GEN-2	3/6/2012	Approval	Drawing
6007-PLN-ATP-25-71-P313C	Turbine Drain Flash Tank System P&ID	Drawing	3	ERD	GEN-2	3/6/2012	Approval	Drawing
6007-PLN-ATP-25-71-P315C	Condenser Air Removal System P&ID	Drawing	3	ERD	GEN-2	3/6/2012	Approval	Drawing
6007-PLN-ATP-25-71-P316C	Turbine Seal And Drain System P&ID	Drawing	3	ERD	GEN-2	3/6/2012	Approval	Drawing
6007-PLN-ATP-25-71-P317C	Boiler Feedwater Heater #5 P&ID	Drawing	3	ERD	GEN-2	3/6/2012	Approval	Drawing
6007-PLN-ATP-25-71-P321C	LP Feedwater Heater System P&ID	Drawing	3	ERD	GEN-2	3/6/2012	Approval	Drawing
6007-PLN-ATP-25-71-P322C	Dearator System P&ID	Drawing	3	ERD	GEN-2	3/6/2012	Approval	Drawing
6007-PLN-ATP-25-71-P323C	Feedwater Pumps P&ID	Drawing	3	ERD	GEN-2	3/6/2012	Approval	Drawing
6007-PLN-ATP-25-71-P324C	HP Feedwater Heater System P&ID	Drawing	3	ERD	GEN-2	3/6/2012	Approval	Drawing
6007-PLN-ATP-25-71-P325C	Boiler Feedwater Chemical Feed System P&ID	Drawing	1	WMP/JTP	GEN-2	1/24/2012	Approval	Drawing
6007-PLN-ATP-25-71-P330C	TG Machine Monitoring System P&ID	Drawing	0	WMP/MJS	GEN-2	5/9/2011	Approval	Drawing
6007-PLN-ATP-25-71-P335C	TG Lube Oil Skid P&ID	Drawing	0	WMP/MJS	GEN-2	5/9/2011	Approval	Drawing
6007-PLN-ATP-25-71-P336C	TG Lube Oil System P&ID	Drawing	0	WMP/MJS	GEN-2	5/9/2011	Approval	Drawing
6007-PLN-ATP-25-71-P340C	Cooling Water - TG Area P&ID	Drawing	2	ERD	GEN-2	3/6/2012	Approval	Drawing
6007-PLN-ATP-25-71-P350C	Auxiliary Boiler P&ID	Drawing	0	WMP/MJS	GEN-2	5/9/2011	Approval	Drawing
6007-PLN-ATP-57-71-P100A	Solar Field - Alpha Plant P&ID	Drawing	1	WMP/JTP	GEN-2	1/17/2012	Approval	Drawing
6007-PLN-ATP-57-71-P100B	Solar Field - Beta Plant P&ID	Drawing	1	WMP/JTP	GEN-2	1/17/2012	Approval	Drawing
6007-PLN-ATP-57-71-P102A	Solar Field Piping Loops - Alpha Plant P&ID	Drawing	2	ERD/JTP	GEN-2	3/9/2012	Approval	Drawing
6007-PLN-ATP-57-71-P102B	Solar Field Piping Loops - Beta Plant P&ID	Drawing	2	ERD/JTP	GEN-2	3/9/2012	Approval	Drawing
6007-PLN-ATP-57-71-P104C	Solar Field Collector Detail - 2 Loops P&ID	Drawing	2	WMP/JTP	GEN-2	1/24/2012	Approval	Drawing
6007-PLN-ATP-67-71-P401C	Cooling Tower P&ID	Drawing	3	ERD	GEN-2	3/6/2012	Approval	Drawing
6007-PLN-ATP-67-71-P402C	Cooling Tower Chemical Feed System P&ID	Drawing	1	ERD	GEN-2	3/6/2012	Approval	Drawing
6007-PLN-ATP-67-71-P405C	Auxiliary Cooling Water System P&ID	Drawing	3	ERD	GEN-2	3/6/2012	Approval	Drawing
6007-PLN-ATP-67-71-P410C	Raw/Fire Water Storage Tank P&ID	Drawing	2	ERD	GEN-2	3/6/2012	Approval	Drawing
6007-PLN-ATP-67-71-P411C	Central Plant Potable Water System P&ID	Drawing	1	WMP/JTP	GEN-2	1/24/2012	Approval	Drawing
6007-PLN-ATP-67-71-P413C	Magnesium Carbonate Storage, Mix and Delivery System P&ID	Drawing	1	WMP/JTP	GEN-2	1/24/2012	Approval	Drawing

6007-PLN-ATP-67-71-P414C	Sodium Carbonate Storage, Mix and Delivery System P&ID	Drawing	0	WMP/MJS	GEN-2	5/9/2011	Approval	Drawing
6007-PLN-ATP-67-71-P415C	Lime Storage, Mix and Delivery System P&ID	Drawing	0	WMP/MJS	GEN-2	5/9/2011	Approval	Drawing
6007-PLN-ATP-67-71-P416C	Ferric Chloride Feed System P&ID	Drawing	0	WMP/MJS	GEN-2	5/9/2011	Approval	Drawing
6007-PLN-ATP-67-71-P424C	Cooling Tower Blowdown Tank P&ID	Drawing	1	WMP/JTP	GEN-2	1/24/2012	Approval	Drawing
6007-PLN-ATP-67-71-P426C	CLS Parallel Reaction Tanks P&ID	Drawing	1	WMP/JTP	GEN-2	1/24/2012	Approval	Drawing
6007-PLN-ATP-67-71-P427C	Clarifier System P&ID	Drawing	1	WMP/JTP	GEN-2	1/24/2012	Approval	Drawing
6007-PLN-ATP-67-71-P428C	Filter Press P&ID	Drawing	0	WMP/MJS	GEN-2	5/9/2011	Approval	Drawing
6007-PLN-ATP-67-71-P430C	Filtrate Recycle P&ID	Drawing	0	WMP/MJS	GEN-2	5/9/2011	Approval	Drawing
6007-PLN-ATP-67-71-P431C	Sulfuric Acid P&ID	Drawing	1	WMP/JTP	GEN-2	1/24/2012	Approval	Drawing
6007-PLN-ATP-67-71-P432C	Clearwell P&ID	Drawing	1	WMP/JTP	GEN-2	1/24/2012	Approval	Drawing
6007-PLN-ATP-67-71-P433C	Multimedia Filters P&ID	Drawing	0	WMP/MJS	GEN-2	5/9/2011	Approval	Drawing
6007-PLN-ATP-67-71-P437C	Primary Ro Pumps P&ID	Drawing	0	WMP/MJS	GEN-2	5/9/2011	Approval	Drawing
6007-PLN-ATP-67-71-P438C	Primary RO System - Unit A P&ID	Drawing	0	WMP/MJS	GEN-2	1/24/2012	Approval	Drawing
6007-PLN-ATP-67-71-P439C	Primary RO System - Unit B P&ID	Drawing	0	WMP/MJS	GEN-2	5/9/2011	Approval	Drawing
6007-PLN-ATP-67-71-P441C	Primary RO System - Unit C P&ID	Drawing	0	WMP/MJS	GEN-2	5/9/2011	Approval	Drawing
6007-PLN-ATP-67-71-P442C	Primary RO System - Unit D P&ID	Drawing	0	WMP/MJS	GEN-2	5/9/2011	Approval	Drawing
6007-PLN-ATP-67-71-P444C	Process Makeup Water Storage Tank P&ID	Drawing	0	WMP/MJS	GEN-2	5/9/2011	Approval	Drawing
6007-PLN-ATP-67-71-P446C	Polishing Mirror RO P&ID	Drawing	0	WMP/MJS	GEN-2	5/9/2011	Approval	Drawing
6007-PLN-ATP-67-71-P448C	Concentrated RO System - Unit A P&ID	Drawing	0	WMP/MJS	GEN-2	5/9/2011	Approval	Drawing
6007-PLN-ATP-67-71-P449C	Concentrated RO System - Unit B P&ID	Drawing	0	WMP/MJS	GEN-2	5/9/2011	Approval	Drawing
6007-PLN-ATP-67-71-P450C	Concentrated RO System - Unit C P&ID	Drawing	0	WMP/MJS	GEN-2	5/9/2011	Approval	Drawing
6007-PLN-ATP-67-71-P451C	RO Water Storage Tank P&ID	Drawing	0	WMP/MJS	GEN-2	5/9/2011	Approval	Drawing
6007-PLN-ATP-67-71-P452C	Polishing Exchangers P&ID	Drawing	0	WMP/MJS	GEN-2	5/9/2011	Approval	Drawing
6007-PLN-ATP-67-71-P453C	Polished Water Storage Tank P&ID	Drawing	0	WMP/MJS	GEN-2	5/9/2011	Approval	Drawing
6007-PLN-ATP-67-71-P454C	RO Clean-in-Place P&ID	Drawing	0	WMP/MJS	GEN-2	5/9/2011	Approval	Drawing
6007-PLN-ATP-67-71-P455C	Water: Oil Separator P&ID	Drawing	0	WMP/MJS	GEN-2	5/9/2011	Approval	Drawing
6007-PLN-ATP-67-71-P456C	Waste Water Tank P&ID	Drawing	0	WMP/MJS	GEN-2	5/9/2011	Approval	Drawing
6007-PLN-ATP-67-71-P470C	Fire Protection Loop P&ID	Drawing	2	ERD	GEN-2	3/6/2012	Approval	Drawing
6007-PLN-ATP-67-71-P471C	Underground Fire Protection Loop P&ID	Drawing	1	WMP/JTP	GEN-2	9/23/2011	Approval	Drawing
6007-PLN-ATP-67-71-P480C	Compressed Air Instrument and Service P&ID	Drawing	1	ERD	GEN-2	3/6/2012	Approval	Drawing
6007-PLN-ATP-67-71-P481C	Instrument Air Distribution P&ID	Drawing	1	ERD	GEN-2	3/6/2012	Approval	Drawing
6007-PLN-ATP-67-71-P482C	Steam Gneration - Instrument Air System P&ID	Drawing	1	ERD	GEN-2	3/6/2012	Approval	Drawing
6007-PLN-ATP-67-71-P483C	Natural Gas Distribution P&ID	Drawing	2	ERD	GEN-2	3/6/2012	Approval	Drawing
6007-PLN-ATP-68-71-P200A	Central Plant HTF Distribution - Alpha Plant P&ID	Drawing	3	ERD/JTP	GEN-2	3/9/2012	Approval	Drawing
6007-PLN-ATP-68-71-P200B	Central Plant HTF Distribution - Beta Plant P&ID	Drawing	3	ERD/JTP	GEN-2	3/9/2012	Approval	Drawing
6007-PLN-ATP-68-71-P202A	HTF Circulation Pumps - Alpha Plant P&ID	Drawing	2	ERD/JTP	GEN-2	3/9/2012	Approval	Drawing
6007-PLN-ATP-68-71-P202B	HTF Circulation Pumps - Beta Plant P&ID	Drawing	3	ERD/JTP	GEN-2	3/9/2012	Approval	Drawing
6007-PLN-ATP-68-71-P204C	HTF Expansion System P&ID	Drawing	3	ERD/JTP	GEN-2	3/9/2012	Approval	Drawing
6007-PLN-ATP-68-71-P206C	HTF Overflow System P&ID	Drawing	3	ERD/JTP	GEN-2	3/9/2012	Approval	Drawing
6007-PLN-ATP-68-71-P208C	HTF Ullage Vent System P&ID	Drawing	3	ERD/JTP	GEN-2	3/9/2012	Approval	Drawing
6007-PLN-ATP-68-71-P210C	Nitrogen Generation And Distribution P&ID	Drawing	1	ERD/JTP	GEN-2	3/9/2012	Approval	Drawing
6007-PLN-ATP-68-11-F000C	Solar Field	Drawing	2	WMP/JTP	GEN-2	1/17/2012	Approval	Drawing
6007-PLN-ATP-68-11-F001A	HTF-Alpha Plant	Drawing	2	WMP/JTP	GEN-2	1/17/2012	Approval	Drawing
6007-PLN-ATP-68-11-F001B	HTF-Beta Plant	Drawing	2	WMP/JTP	GEN-2	1/17/2012	Approval	Drawing
6007-PLN-ATP-68-11-F002C	HTF Expansion Vent And Overflow Material Balance Tables	Drawing	2	WMP/JTP	GEN-2	1/17/2012	Approval	Drawing
6007-PLN-ATP-68-11-F003C	HTF Vents and Overflow Material Balance Tables	Drawing	2	WMP/JTP	GEN-2	1/17/2012	Approval	Drawing
6007-PLN-ATP-68-11-F004C	Steam Generation	Drawing	2	WMP/JTP	GEN-2	1/17/2012	Approval	Drawing
6007-PLN-ATP-68-11-F005C	Steam Turbine Generator	Drawing	2	WMP/JTP	GEN-2	1/17/2012	Approval	Drawing
6007-PLN-ATP-68-11-F007C	Water Treatment	Drawing	2	WMP/JTP	GEN-2	1/17/2012	Approval	Drawing
6007-PLN-ATP-68-11-F008C	Water Treatment Material Balance Table	Drawing	1	WMP/JTP	GEN-2	10/19/2011	Approval	Drawing
6007-PLN-ATP-68-11-F009C	Cooling Water System	Drawing	1	WMP/JTP	GEN-2	10/19/2011	Approval	Drawing

0187P-F1-4	Revision Memorandum		1		GEN-2	7/9/2012	Review	
0187P-F1-4 MT-204- HTF Over	Structural Calculations		50		GEN-2	7/9/2012	Review	
6007-PLN-PRI-58-52-6101	Alpha Plant MT-204A Cover Sheet	Drawing	1	SO ROBLES TANK I	GEN-2	7/9/2012	Review	Drawing
6007-PLN-PRI-58-52-6102	Alpha Plant MT-204A Contact UTS/Standard Abbreviations	Drawing	1	SO ROBLES TANK I	GEN-2	7/9/2012	Review	Drawing
6007-PLN-PRI-58-52-6103	Alpha Plant MT-204A General Welding Information	Drawing	1	SO ROBLES TANK I	GEN-2	7/9/2012	Review	Drawing
6007-PLN-PRI-58-52-6104	Alpha Plant MT-204A Special Inspections	Drawing	1	SO ROBLES TANK I	GEN-2	7/9/2012	Review	Drawing
6007-PLN-PRI-58-52-6105	Alpha Plant MT-204A Inspections	Drawing	1	SO ROBLES TANK I	GEN-2	7/9/2012	Review	Drawing
6007-PLN-PRI-58-52-6106	Alpha Plant MT-204A Anchor Chair Detail	Drawing	1	SO ROBLES TANK I	GEN-2	7/9/2012	Review	Drawing
6007-PLN-PRI-58-52-6201	Alpha Plant MT-204B Cover Sheet	Drawing	1	SO ROBLES TANK I	GEN-2	7/9/2012	Review	Drawing
6007-PLN-PRI-58-52-6202	Alpha Plant MT-204B Contact UST/ Standard Abbreviations	Drawing		PASO ROBLES TANK I	GEN-2	7/9/2012	Review	Drawing
6007-PLN-PRI-58-52-6203	Alpha Plant MT-204B General Welding Information	Drawing		PASO ROBLES TANK I	GEN-2	7/9/2012	Review	Drawing
6007-PLN-PRI-58-52-6204	Alpha Plant MT-204B Special Inspections	Drawing		PASO ROBLES TANK I	GEN-2	7/9/2012	Review	Drawing
6007-PLN-PRI-58-52-6205	Alpha Plant MT-204B Foundation	Drawing		PASO ROBLES TANK I	GEN-2	7/9/2012	Review	Drawing
6007-PLN-PRI-58-52-6206	Alpha Plant MT-204B Anchor Chair Details	Drawing		PASO ROBLES TANK I	GEN-2	7/9/2012	Review	Drawing
6007-PLN-PRI-58-52-6301	Beta Plant MT-204A Cover Sheet	Drawing		PASO ROBLES TANK I	GEN-2	7/9/2012	Review	Drawing
6007-PLN-PRI-58-52-6302	Beta Plant MT-204A Contact UST/ Standard Abbreviations	Drawing		PASO ROBLES TANK I	GEN-2	7/9/2012	Review	Drawing
6007-PLN-PRI-58-52-6303	Beta Plant MT-204A General Welding Information	Drawing		PASO ROBLES TANK I	GEN-2	7/9/2012	Review	Drawing
6007-PLN-PRI-58-52-6304	Beta Plant MT-204A Special Inspections	Drawing		PASO ROBLES TANK I	GEN-2	7/9/2012	Review	Drawing
6007-PLN-PRI-58-52-6305	Beta Plant MT-204A Foundation	Drawing		PASO ROBLES TANK I	GEN-2	7/9/2012	Review	Drawing
6007-PLN-PRI-58-52-6306	Beta Plant MT-204A Anchor Chair Details	Drawing		PASO ROBLES TANK I	GEN-2	7/9/2012	Review	Drawing
6007-PLN-PRI-58-52-6401	Beta Plant MT-204B Cover Sheet	Drawing		PASO ROBLES TANK I	GEN-2	7/9/2012	Review	Drawing
6007-PLN-PRI-58-52-6402	Beta Plant MT-204B Contact UST/ Standard Abbreviations	Drawing		PASO ROBLES TANK I	GEN-2	7/9/2012	Review	Drawing
6007-PLN-PRI-58-52-6403	Beta Plant MT-204B General Welding Information	Drawing		PASO ROBLES TANK I	GEN-2	7/9/2012	Review	Drawing
6007-PLN-PRI-58-52-6404	Beta Plant MT-204B Special Inspections	Drawing		PASO ROBLES TANK I	GEN-2	7/9/2012	Review	Drawing
6007-PLN-PRI-58-52-6405	Beta Plant MT-204B Foundation	Drawing		PASO ROBLES TANK I	GEN-2	7/9/2012	Review	Drawing
6007-PLN-PRI-58-52-6406	Beta Plant MT-204B Anchor Chair Details	Drawing		PASO ROBLES TANK I	GEN-2	7/9/2012	Review	Drawing
6007-CAL-PRI-39-52-3100	Alpha Plant Structural Calculations	Calculation	3	SO ROBLES TANK I	GEN-2	7/23/2012	Review	calculation
6007-CAL-PRI-39-52-3200	Beta Plant Structural Calculations	Calculation	3	SO ROBLES TANK I	GEN-2	7/23/2012	Review	calculation
6007-PLN-PRI-39-52-3101	Alpha Plant MT-444 Foundation Cover Sheet	Drawing	1	SO ROBLES TANK I	GEN-2	7/20/2012	Review	Drawing
6007-PLN-PRI-39-52-3102	Alpha Plant MT-444 Foundation Contact List/ Standard Abbreviations	Drawing	0	SO ROBLES TANK I	GEN-2	7/20/2012	Review	Drawing
6007-PLN-PRI-39-52-3103	Alpha Plant MT-444 Foundation General Welding Information	Drawing	0	SO ROBLES TANK I	GEN-2	7/20/2012	Review	Drawing
6007-PLN-PRI-39-52-3104	Alpha Plant MT-444 Foundation Special Inspections	Drawing	0	SO ROBLES TANK I	GEN-2	7/20/2012	Review	Drawing
6007-PLN-PRI-39-52-3105	Alpha Plant MT-444 Foundation	Drawing	1	SO ROBLES TANK I	GEN-2	7/20/2012	Review	Drawing
6007-PLN-PRI-39-52-3106	Alpha Plant MT-444 Foundation Anchor Chair Detail	Drawing	0	SO ROBLES TANK I	GEN-2	7/20/2012	Review	Drawing
6007-PLN-PRI-39-52-3201	Beta Plant MT-444 Foundation Cover Sheet	Drawing	1	SO ROBLES TANK I	GEN-2	7/20/2012	Review	Drawing
6007-PLN-PRI-39-52-3202	Beta Plant MT-444 Foundation Contact List/ Standard Abbreviations	Drawing	0	SO ROBLES TANK I	GEN-2	7/20/2012	Review	Drawing
6007-PLN-PRI-39-52-3203	Beta Plant MT-444 Foundation General Welding Information	Drawing	0	SO ROBLES TANK I	GEN-2	7/20/2012	Review	Drawing
6007-PLN-PRI-39-52-3204	Beta Plant MT-444 Foundation Special Inspections	Drawing	0	SO ROBLES TANK I	GEN-2	7/20/2012	Review	Drawing
6007-PLN-PRI-39-52-3205	Beta Plant MT-444 Foundation	Drawing	1	SO ROBLES TANK I	GEN-2	7/20/2012	Review	Drawing
6007-PLN-PRI-39-52-3206	Beta Plant MT-444 Foundation Anchor Chair Details	Drawing	0	SO ROBLES TANK I	GEN-2	7/20/2012	Review	Drawing
6007-PLN-AGE-67-52-4000	Alpha Plant Cooling Towerfoundation Phase 1 Cover sheet	Drawing		Vendor	GEN-2		Approval	Drawing
6007-PLN-AGE-67-52-4020	Alpha Plant Cooling Towerfoundation Phase 1 General Notes	Drawing		Vendor	GEN-2		Approval	Drawing
6007-PLN-AGE-67-52-4040	Alpha Plant Cooling Towerfoundation Phase 1 Foundation plan	Drawing		Vendor	GEN-2		Approval	Drawing
6007-PLN-AGE-67-52-4060	Alpha Plant Cooling Towerfoundation Phase 1 Details	Drawing		Vendor	GEN-2		Approval	Drawing
6007-PLN-AGE-67-52-4061	Alpha Plant Cooling Towerfoundation Phase 1 Details	Drawing		Vendor	GEN-2		Approval	Drawing
6007-PLN-AGE-67-52-8000	Beta Plant Cooling Towerfoundation Phase 1 Cover sheet	Drawing		Vendor	GEN-2		Approval	Drawing
6007-PLN-AGE-67-52-8020	Beta Plant Cooling Towerfoundation Phase 1 General Notes	Drawing		Vendor	GEN-2		Approval	Drawing
6007-PLN-AGE-67-52-8040	Beta Plant Cooling Towerfoundation Phase 1 Foundation plan	Drawing		Vendor	GEN-2		Approval	Drawing
6007-PLN-AGE-67-52-8060	Beta Plant Cooling Towerfoundation Phase 1 Details	Drawing		Vendor	GEN-2		Approval	Drawing
6007-PLN-AGE-67-52-8061	Beta Plant Cooling Towerfoundation Phase 1 Details	Drawing		Vendor	GEN-2		Approval	Drawing
6007-CAL-AGE-67-52-4000	Alpha Plant Calculation Report forCooling Tower foundation Phase 1	Calculation		Vendor	GEN-2		Approval	calculation
6007-CAL-AGE-67-52-8000	Beta Plant Calculation Report forCooling Tower foundation Phase 1	Calculation		Vendor	GEN-2		Approval	calculation
6007-PLN-AGE-21-52-2000	Field Alpha Steam GenerationReheaters Foundations.Cover sheet	Drawing		Vendor	GEN-2		Approval	Drawing

6007-PLN-AGE-21-52-2002	Field Alpha Steam GenerationReheaters Foundations. Foundation	Drawing		Vendor	GEN-2		Approval	Drawing
6007-PLN-AGE-21-52-2005	Field Alpha Steam GenerationReheaters Foundations. PiersReinforcement	Drawing		Vendor	GEN-2		Approval	Drawing
6007-PLN-AGE-21-52-2006	ha Steam GenerationReheaters Foundations. PipeSupports and ColumnsReinforcemer	Drawing		Vendor	GEN-2		Approval	Drawing
6007-PLN-AGE-21-52-2007	Field Alpha Steam GenerationReheaters Foundations. ProcessWater Drainage	Drawing		Vendor	GEN-2		Approval	Drawing
6007-PLN-AGE-21-52-2008	Field Alpha Steam GenerationReheaters Foundations. PiersDetails	Drawing		Vendor	GEN-2		Approval	Drawing
6007-PLN-AGE-21-52-2009	Alpha Steam GenerationReheaters Foundations. PipeSupportsand Columns Details	Drawing		Vendor	GEN-2		Approval	Drawing
6007-PLN-AGE-21-52-6000	Field Beta Steam GenerationReheaters Foundations.Cover sheet	Drawing		Vendor	GEN-2		Approval	Drawing
6007-PLN-AGE-21-52-6002	Field Beta Steam GenerationReheaters Foundations. Foundation	Drawing		Vendor	GEN-2		Approval	Drawing
6007-PLN-AGE-21-52-6005	Field Beta Steam GenerationReheaters Foundations. PiersReinforcement	Drawing		Vendor	GEN-2		Approval	Drawing
6007-PLN-AGE-21-52-6006	ta Steam GenerationReheaters Foundations. PipeSupports and ColumnsReinforcemen	Drawing		Vendor	GEN-2		Approval	Drawing
6007-PLN-AGE-21-52-6007	Field Beta Steam GenerationReheaters Foundations. ProcessWater Drainage	Drawing		Vendor	GEN-2		Approval	Drawing
6007-PLN-AGE-21-52-6008	Field Alpha Steam GenerationReheaters Foundations. Details	Drawing		Vendor	GEN-2		Approval	Drawing
6007-PLN-AGE-21-52-6009	Alpha Steam GenerationReheaters Foundations. PipeSupportsand Columns Details	Drawing		Vendor	GEN-2		Approval	Drawing
6007-PLN-ATP-00-50-S001	Steam Generation AreaReheaters Foundations –General Civil and Structural Notes	Drawing		Vendor	GEN-2		Approval	Drawing
6007-PLN-PRI-39-52-1101	COVER SHEET	Drawing		Vendor	GEN-2		Approval	Drawing
6007-PLN-PRI-39-52-1102	CONTACT LIST/STANDARDABBREVIATIONS	Drawing		Vendor	GEN-2		Approval	Drawing
6007-PLN-PRI-39-52-1103	GENERAL WELDING INFORMATION	Drawing		Vendor	GEN-2		Approval	Drawing
6007-PLN-PRI-39-52-1104	SPECIAL INSPECTION	Drawing		Vendor	GEN-2		Approval	Drawing
6007-PLN-PRI-39-52-1105	FOUNDATION	Drawing		Vendor	GEN-2		Approval	Drawing
6007-PLN-PRI-39-52-1106	ANCHOR CHAIR DETAILS	Drawing		Vendor	GEN-2		Approval	Drawing
6007-PLN-PRI-39-52-1201	COVER SHEET	Drawing		Vendor	GEN-2		Approval	Drawing
6007-PLN-PRI-39-52-1202	CONTACT LIST/STANDARDABBREVIATIONS	Drawing		Vendor	GEN-2		Approval	Drawing
6007-PLN-PRI-39-52-1203	GENERAL WELDING INFORMATION	Drawing		Vendor	GEN-2		Approval	Drawing
6007-PLN-PRI-39-52-1204	SPECIAL INSPECTION	Drawing		Vendor	GEN-2		Approval	Drawing
6007-PLN-PRI-39-52-1205	FOUNDATION	Drawing		Vendor	GEN-2		Approval	Drawing
6007-PLN-PRI-39-52-1206	ANCHOR CHAIR DETAILS	Drawing		Vendor	GEN-2		Approval	Drawing
6007-PLN-PRI-58-52-6101	ALPHA PLANT MT-204A COVER SHEET	Drawing		Vendor	GEN-2		Approval	Drawing
6007-PLN-PRI-58-52-6102	ALPHA PLANT MT-204A CONTACT UST STANDARD ABBREVIATIONS	Drawing		Vendor	GEN-2		Approval	Drawing
6007-PLN-PRI-58-52-6103	ALPHA PLANT MT-204A GENERALWELDING INFORMATION	Drawing		Vendor	GEN-2		Approval	Drawing
6007-PLN-PRI-58-52-6104	ALPHA PLANT MT-204A SPECIALINSPECTIONS	Drawing		Vendor	GEN-2		Approval	Drawing
6007-PLN-PRI-58-52-6105	ALPHA PLANT MT-204A FOUNDATION	Drawing		Vendor	GEN-2		Approval	Drawing
6007-PLN-PRI-58-52-6106	ALPHA PLANT MT-204A ANCHOR CHAIRDETAILS	Drawing		Vendor	GEN-2		Approval	Drawing
6007-PLN-PRI-58-52-6201	ALPHA PLANT MT-204B COVER SHEET	Drawing		Vendor	GEN-2		Approval	Drawing
6007-PLN-PRI-58-52-6202	ALPHA PLANT MT-204B CONTACT UST /STANDARD ABBREVIATIONS	Drawing		Vendor	GEN-2		Approval	Drawing
6007-PLN-PRI-58-52-6203	ALPHA PLANT MT-204B GENERALWELDING INFORMATION	Drawing		Vendor	GEN-2		Approval	Drawing
6007-PLN-PRI-58-52-6204	ALPHA PLANT MT-204B SPECIALINSPECTIONS	Drawing		Vendor	GEN-2		Approval	Drawing
6007-PLN-PRI-58-52-6205	ALPHA PLANT MT-204B FOUNDATION	Drawing		Vendor	GEN-2		Approval	Drawing
6007-PLN-PRI-58-52-6206	ALPHA PLANT MT-204B ANCHOR CHAIRDETAILS	Drawing		Vendor	GEN-2		Approval	Drawing
6007-PLN-PRI-58-52-6301	BETA PLANT MT-204A COVER SHEET	Drawing		Vendor	GEN-2		Approval	Drawing
6007-PLN-PRI-58-52-6302	BETA PLANT MT-204A CONTACT UST /STANDARD ABBREVIATIONS	Drawing		Vendor	GEN-2		Approval	Drawing
6007-PLN-PRI-58-52-6303	BETA PLANT MT-204A GENERALWELDING INFORMATION	Drawing		Vendor	GEN-2		Approval	Drawing
6007-PLN-PRI-58-52-6304	BETA PLANT MT-204A SPECIALINSPECTIONS	Drawing		Vendor	GEN-2		Approval	Drawing
6007-PLN-PRI-58-52-6305	BETA PLANT MT-204A FOUNDATION	Drawing		Vendor	GEN-2		Approval	Drawing
6007-PLN-PRI-58-52-6306	BETA PLANT MT-204A ANCHOR CHAIRDETAILS	Drawing		Vendor	GEN-2		Approval	Drawing
6007-PLN-PRI-58-52-6401	BETA PLANT MT-204B COVER SHEET	Drawing		Vendor	GEN-2		Approval	Drawing
6007-PLN-PRI-58-52-6402	BETA PLANT MT-204B CONTACT UST STANDARD ABBREVIATIONS	Drawing		Vendor	GEN-2		Approval	Drawing
6007-PLN-PRI-58-52-6403	BETA PLANT MT-204B GENERALWELDING INFORMATION	Drawing		Vendor	GEN-2		Approval	Drawing
6007-PLN-PRI-58-52-6404	BETA PLANT MT-204B SPECIALINSPECTIONS	Drawing		Vendor	GEN-2		Approval	Drawing
6007-PLN-PRI-58-52-6405	BETA PLANT MT-204B FOUNDATION	Drawing		Vendor	GEN-2		Approval	Drawing
6007-PLN-PRI-58-52-6406	BETA PLANT MT-204B ANCHOR CHAIRDETAILS	Drawing		Vendor	GEN-2		Approval	Drawing
6007-PLN-PRI-39-52-1101	COVER SHEET	Drawing		Vendor	GEN-2		Approval	Drawing
6007-PLN-PRI-39-52-1102	CONTACT LIST/STANDARDABBREVIATIONS	Drawing		Vendor	GEN-2		Approval	Drawing
6007-PLN-PRI-39-52-1103	GENERAL WELDING INFORMATION	Drawing		Vendor	GEN-2		Approval	Drawing
6007-PLN-PRI-39-52-1104	SPECIAL INSPECTION	Drawing		Vendor	GEN-2		Approval	Drawing
6007-PLN-PRI-39-52-1105	FOUNDATION	Drawing		Vendor	GEN-2		Approval	Drawing
6007-PLN-PRI-39-52-1106	ANCHOR CHAIR DETAILS	Drawing		Vendor	GEN-2		Approval	Drawing
6007-PLN-PRI-39-52-1201	COVER SHEET	Drawing		Vendor	GEN-2		Approval	Drawing

6007-PLN-PRI-39-52-1202	CONTACT LIST/STANDARDABBREVIATIONS	Drawing		Vendor	GEN-2		Approval	Drawing
6007-PLN-PRI-39-52-1203	GENERAL WELDING INFORMATION	Drawing		Vendor	GEN-2		Approval	Drawing
6007-PLN-PRI-39-52-1204	SPECIAL INSPECTION	Drawing		Vendor	GEN-2		Approval	Drawing
6007-PLN-PRI-39-52-1205	FOUNDATION	Drawing		Vendor	GEN-2		Approval	Drawing
6007-PLN-PRI-39-52-1206	ANCHOR CHAIR DETAILS	Drawing		Vendor	GEN-2		Approval	Drawing
6007-CAL-PRI-39-52-2100	MT -424 Cooling Tower Blow down alpha plant structural Calculations	Calculation	3	Vendor	GEN-2		Approval	calculation
6007-CAL-PRI-39-52-2200	MT -424 Cooling Tower Blow down Beta plant structural Calculations	Calculation	3	Vendor	GEN-2		Approval	calculation
6007-PLN-PRI-39-52-2101	Alpha Plant - Foundation Cooling Tower Blow Down A-MT-424 Cover Sheet	Drawing	1	Vendor	GEN-2		Approval	Drawing
6007-PLN-PRI-39-52-2102	Alpha Plant - Foundation Cooling Tower Blow Down A-MT-424 Contact list	Drawing	0	Vendor	GEN-2		Approval	Drawing
6007-PLN-PRI-39-52-2103	ıa Plant - Foundation Cooling Tower Blow Down A-MT-424 General Welding Informa	Drawing	0	Vendor	GEN-2		Approval	Drawing
6007-PLN-PRI-39-52-2104	Alpha Plant - Foundation Cooling Tower Blow Down A-MT-424 Special Inspection	Drawing	1	Vendor	GEN-2		Approval	Drawing
6007-PLN-PRI-39-52-2105	Alpha Plant - Foundation Cooling Tower Blow Down A-MT-424 Foundation	Drawing	1	Vendor	GEN-2		Approval	Drawing
6007-PLN-PRI-39-52-2106	Alpha Plant - Foundation Cooling Tower Blow Down A-MT-424 Anchor Chair Detail	Drawing	0	Vendor	GEN-2		Approval	Drawing
6007-PLN-PRI-39-52-2201	Beta Plant- Foundation Cooling Tower Blow Down B-MT-242 Cover Sheet	Drawing	1	Vendor	GEN-2		Approval	Drawing
6007-PLN-PRI-39-52-2202	lant- Foundation Cooling Tower Blow Down B-MT-242 Contact List/Standard Abbrevi	Drawing	0	Vendor	GEN-2		Approval	Drawing
6007-PLN-PRI-39-52-2203	ta Plant- Foundation Cooling Tower Blow Down B-MT-242 General Welding Informati	Drawing	0	Vendor	GEN-2		Approval	Drawing
6007-PLN-PRI-39-52-2204	Beta Plant- Foundation Cooling Tower Blow Down B-MT-242 Special Inspection	Drawing	1	Vendor	GEN-2		Approval	Drawing
6007-PLN-PRI-39-52-2205	Beta Plant- Foundation Cooling Tower Blow Down B-MT-242 Foundation	Drawing	1	Vendor	GEN-2		Approval	Drawing
6007-PLN-PRI-39-52-2206	Beta Plant- Foundation Cooling Tower Blow Down B-MT-242 Anchor Chair Detail	Drawing	0	Vendor	GEN-2		Approval	Drawing
6007-INF-PRI-39-52-1001	0187P-A1&2-MT-402 Foundation Grout Memo (DS 08-22-12)		0	Vendor	GEN-2	8/22/2012	Approval	Report
6007-INF-PRI-39-52-3001	0187P-A1&2-MT-444 Foundation Grout Memo (DS 08-22-12)		0	Vendor	GEN-2	8/22/2012	Approval	Report
6007-PLN-PRI-39-52-2201	Beta Plant- Foundation- Cooling Tower Blow Down B-MT-424 Cover Sheet	Drawing	2	Vendor	GEN-2	8/24/2012	Approval	Drawing
6007-PLN-PRI-39-52-2205	Beta Plant- Foundation- Cooling Tower Blow Down B-MT-424 Foundation	Drawing	2	Vendor	GEN-2	8/24/2012	Approval	Drawing
6007-PRI-PLN-39-62-3101	MT-444 Alpha Cover Sheet	Drawing	2	Vendor	GEN-2	8/28/2012	Approval	Drawing
6007-PRI-PLN-39-62-3102	Contact List/Standard Abbreviations	Drawing	0	Vendor	GEN-2	8/28/2012	Approval	Drawing
6007-PRI-PLN-39-62-3103	General Welding Information	Drawing	0	Vendor	GEN-2	8/28/2012	Approval	Drawing
6007-PRI-PLN-39-62-3104	Special Inspections	Drawing	0	Vendor	GEN-2	8/28/2012	Approval	Drawing
6007-PRI-PLN-39-62-3105	Orientation	Drawing	2	Vendor	GEN-2	8/28/2012	Approval	Drawing
6007-PRI-PLN-39-62-3106	Annular Layout	Drawing	0	Vendor	GEN-2	8/28/2012	Approval	Drawing
6007-PRI-PLN-39-62-3107	Floor Layout	Drawing	0	Vendor	GEN-2	8/28/2012	Approval	Drawing
6007-PRI-PLN-39-62-3108	Shell Details	Drawing	0	Vendor	GEN-2	8/28/2012	Approval	Drawing
6007-PRI-PLN-39-62-3109	Shell Layout	Drawing	2	Vendor	GEN-2	8/28/2012	Approval	Drawing
6007-PRI-PLN-39-62-3110	Welder Identification	Drawing	0	Vendor	GEN-2	8/28/2012	Approval	Drawing
6007-PRI-PLN-39-62-3111	Center Support Column	Drawing	0	Vendor	GEN-2	8/28/2012	Approval	Drawing
6007-PRI-PLN-39-62-3112	Roof Layout	Drawing	1	Vendor	GEN-2	8/28/2012	Approval	Drawing
6007-PRI-PLN-39-62-3113	Internal Rafter Layout	Drawing	1	Vendor	GEN-2	8/28/2012	Approval	Drawing
6007-PRI-PLN-39-62-3114	Shell Nozzle Schedule	Drawing	2	Vendor	GEN-2	8/28/2012	Approval	Drawing
6007-PRI-PLN-39-62-3115	Roof Nozzle Schedule	Drawing	2	Vendor	GEN-2	8/28/2012	Approval	Drawing
6007-PRI-PLN-39-62-3116	20" Overflow	Drawing	1	Vendor	GEN-2	8/28/2012	Approval	Drawing
6007-PRI-PLN-39-62-3117	8" Pump Recycle	Drawing	1	Vendor	GEN-2	8/28/2012	Approval	Drawing
6007-PRI-PLN-39-62-3118	36" Multi-Bolt Shell Manway	Drawing	0	Vendor	GEN-2	8/28/2012	Approval	Drawing
6007-PRI-PLN-39-62-3119	Nameplate Detail	Drawing	0	Vendor	GEN-2	8/28/2012	Approval	Drawing
6007-PRI-PLN-39-62-3120	30" Roof Manway	Drawing	0	Vendor	GEN-2	8/28/2012	Approval	Drawing
6007-PRI-PLN-39-62-3121	20" Gooseneck Vent	Drawing	0	Vendor	GEN-2	8/28/2012	Approval	Drawing
6007-PRI-PLN-39-62-3122	Exterior Ladder	Drawing	0	Vendor	GEN-2	8/28/2012	Approval	Drawing
6007-PRI-PLN-39-62-3123	Roof Handrail	Drawing	0	Vendor	GEN-2	8/28/2012	Approval	Drawing
6007-PRI-PLN-39-62-3124	Grounding Lug	Drawing	0	Vendor	GEN-2	8/28/2012	Approval	Drawing
6007-PRI-PLN-39-62-3125	Pipe Supports	Drawing	2	Vendor	GEN-2	8/28/2012	Approval	Drawing
6007-PRI-PLN-39-62-3201	MT-444 Beta Cover Sheet	Drawing	2	Vendor	GEN-2	8/28/2012	Approval	Drawing
6007-PRI-PLN-39-62-3202	Contact List/Standard Abbreviations	Drawing	0	Vendor	GEN-2	8/28/2012	Approval	Drawing
6007-PRI-PLN-39-62-3203	General Welding Information	Drawing	0	Vendor	GEN-2	8/28/2012	Approval	Drawing
6007-PRI-PLN-39-62-3204	Special Inspections	Drawing	0	Vendor	GEN-2	8/28/2012	Approval	Drawing

6007-PRI-PLN-39-62-3205	Orientation	Drawing	2	Vendor	GEN-2	8/28/2012	Approval	Drawing
6007-PRI-PLN-39-62-3206	Annular Layout	Drawing	0	Vendor	GEN-2	8/28/2012	Approval	Drawing
6007-PRI-PLN-39-62-3207	Floor Layout	Drawing	0	Vendor	GEN-2	8/28/2012	Approval	Drawing
6007-PRI-PLN-39-62-3208	Shell Details	Drawing	0	Vendor	GEN-2	8/28/2012	Approval	Drawing
6007-PRI-PLN-39-62-3209	Shell Layout	Drawing	2	Vendor	GEN-2	8/28/2012	Approval	Drawing
6007-PRI-PLN-39-62-3210	Welder Identification	Drawing	0	Vendor	GEN-2	8/28/2012	Approval	Drawing
6007-PRI-PLN-39-62-3211	Center Support Column	Drawing	0	Vendor	GEN-2	8/28/2012	Approval	Drawing
6007-PRI-PLN-39-62-3212	Roof Layout	Drawing	1	Vendor	GEN-2	8/28/2012	Approval	Drawing
6007-PRI-PLN-39-62-3213	Internal Rafter Layout	Drawing	1	Vendor	GEN-2	8/28/2012	Approval	Drawing
6007-PRI-PLN-39-62-3214	Shell Nozzle Schedule	Drawing	2	Vendor	GEN-2	8/28/2012	Approval	Drawing
6007-PRI-PLN-39-62-3215	Roof Nozzle Schedule	Drawing	2	Vendor	GEN-2	8/28/2012	Approval	Drawing
6007-PRI-PLN-39-62-3216	20" Overflow	Drawing	1	Vendor	GEN-2	8/28/2012	Approval	Drawing
6007-PRI-PLN-39-62-3217	8" Pump Recycle	Drawing	1	Vendor	GEN-2	8/28/2012	Approval	Drawing
6007-PRI-PLN-39-62-3218	36" Multi-Bolt Shell Manway	Drawing	0	Vendor	GEN-2	8/28/2012	Approval	Drawing
6007-PRI-PLN-39-62-3219	Nameplate Detail	Drawing	0	Vendor	GEN-2	8/28/2012	Approval	Drawing
6007-PRI-PLN-39-62-3220	30" Roof Manway	Drawing	0	Vendor	GEN-2	8/28/2012	Approval	Drawing
6007-PRI-PLN-39-62-3221	20" Gooseneck Vent	Drawing	0	Vendor	GEN-2	8/28/2012	Approval	Drawing
6007-PRI-PLN-39-62-3222	Exterior Ladder	Drawing	0	Vendor	GEN-2	8/28/2012	Approval	Drawing
6007-PRI-PLN-39-62-3223	Roof Handrail	Drawing	0	Vendor	GEN-2	8/28/2012	Approval	Drawing
6007-PRI-PLN-39-62-3224	Grounding Lug	Drawing	0	Vendor	GEN-2	8/28/2012	Approval	Drawing
6007-PRI-PLN-39-62-3225	Pipe Supports	Drawing	2	Vendor	GEN-2	8/28/2012	Approval	Drawing
6007-PLN-PRI-39-52-4101	A-MT-451 Foundation Cover Sheet	Drawing	1	Vendor	GEN-2	9/5/2012	Approval	Drawing
6007-PLN-PRI-39-52-4102	Contact List / Standard Abbreviations	Drawing	0	Vendor	GEN-2	9/5/2012	Approval	Drawing
6007-PLN-PRI-39-52-4103	General Welding Information	Drawing	0	Vendor	GEN-2	9/5/2012	Approval	Drawing
6007-PLN-PRI-39-52-4104	Special Inspections	Drawing	1	Vendor	GEN-2	9/5/2012	Approval	Drawing
6007-PLN-PRI-39-52-4105	Foundation	Drawing	1	Vendor	GEN-2	9/5/2012	Approval	Drawing
6007-PLN-PRI-39-52-4106	Anchor Chair Detail	Drawing	0	Vendor	GEN-2	9/5/2012	Approval	Drawing
6007-VAR-PRI-ATP-4100	Response to BV comments on MT-451 Foundations		0	Vendor	GEN-2	9/5/2012	Approval	
6007-PLN-PRI-39-52-4201	B-MT-451 Foundation Cover Sheet	Drawing	1	Vendor	GEN-2	9/5/2012	Approval	Drawing
6007-PLN-PRI-39-52-4202	Contact List / Standard Abbreviations	Drawing	0	Vendor	GEN-2	9/5/2012	Approval	Drawing
6007-PLN-PRI-39-52-4203	General Welding Information	Drawing	0	Vendor	GEN-2	9/5/2012	Approval	Drawing
6007-PLN-PRI-39-52-4204	Special Inspections	Drawing	1	Vendor	GEN-2	9/5/2012	Approval	Drawing
6007-PLN-PRI-39-52-4205	Foundation	Drawing	1	Vendor	GEN-2	9/5/2012	Approval	Drawing
6007-PLN-PRI-39-52-4206	Anchor Chair Detail	Drawing	0	Vendor	GEN-2	9/5/2012	Approval	Drawing
6007-PLN-PRI-39-52-5101	A-MT-453 Foundation Cover Sheet	Drawing	1	Vendor	GEN-2	9/5/2012	Approval	Drawing
6007-PLN-PRI-39-52-5102	Contact List / Standard Abbreviations	Drawing	0	Vendor	GEN-2	9/5/2012	Approval	Drawing
6007-PLN-PRI-39-52-5103	General Welding Information	Drawing	0	Vendor	GEN-2	9/5/2012	Approval	Drawing
6007-PLN-PRI-39-52-5104	Special Inspections	Drawing	1	Vendor	GEN-2	9/5/2012	Approval	Drawing
6007-PLN-PRI-39-52-5105	Foundation	Drawing	1	Vendor	GEN-2	9/5/2012	Approval	Drawing
6007-PLN-PRI-39-52-5106	Anchor Chair Detail	Drawing	0	Vendor	GEN-2	9/5/2012	Approval	Drawing
6007-VAR-PRI-ATP-5100	Responses to BV comments for MT-453 Foundations		0	Vendor	GEN-2	9/5/2012	Approval	
6007-PLN-PRI-39-52-5201	B-MT-453 Foundation Cover Sheet	Drawing	1	Vendor	GEN-2	9/5/2012	Approval	Drawing
6007-PLN-PRI-39-52-5202	Contact List / Standard Abbreviations	Drawing	0	Vendor	GEN-2	9/5/2012	Approval	Drawing
6007-PLN-PRI-39-52-5203	General Welding Information	Drawing	0	Vendor	GEN-2	9/5/2012	Approval	Drawing
6007-PLN-PRI-39-52-5204	Special Inspections	Drawing	1	Vendor	GEN-2	9/5/2012	Approval	Drawing
6007-PLN-PRI-39-52-5205	Foundation	Drawing	1	Vendor	GEN-2	9/5/2012	Approval	Drawing
6007-PLN-PRI-39-52-5206	Anchor Chair Detail	Drawing	0	Vendor	GEN-2	9/5/2012	Approval	Drawing
6007-CAL-PRI-39-52-5100	A-MT-453 Structural Calculations	Calculation	4	Vendor	GEN-2	9/5/2012	Approval	calculation
6007-CAL-PRI-39-52-5200	B-MT-453 Structural Calculations	Calculation	4	Vendor	GEN-2	9/5/2012	Approval	calculation
6007-PRI-PLN-39-62-3101	MT-444 Alpha Cover Sheet	Drawing	2	Vendor	GEN-2	08.24.12	Approval	Drawing
6007-PRI-PLN-39-62-3102	Contact List/Standard Abbreviations	Drawing	0	Vendor	GEN-2	08.03.12	Approval	Drawing

6007-PRI-PLN-39-62-3103	General Welding Information	Drawing	0	Vendor	GEN-2	08.03.12	Approval	Drawing
6007-PRI-PLN-39-62-3104	Special Inspections	Drawing	0	Vendor	GEN-2	08.03.12	Approval	Drawing
6007-PRI-PLN-39-62-3105	Orientation	Drawing	2	Vendor	GEN-2	08.24.12	Approval	Drawing
6007-PRI-PLN-39-62-3106	Annular Layout	Drawing	0	Vendor	GEN-2	08.03.12	Approval	Drawing
6007-PRI-PLN-39-62-3107	Floor Layout	Drawing	0	Vendor	GEN-2	08.03.12	Approval	Drawing
6007-PRI-PLN-39-62-3108	Shell Details	Drawing	0	Vendor	GEN-2	08.03.12	Approval	Drawing
6007-PRI-PLN-39-62-3109	Shell Layout	Drawing	2	Vendor	GEN-2	08.24.12	Approval	Drawing
6007-PRI-PLN-39-62-3110	Welder Identification	Drawing	0	Vendor	GEN-2	08.03.12	Approval	Drawing
6007-PRI-PLN-39-62-3111	Center Support Column	Drawing	0	Vendor	GEN-2	08.03.12	Approval	Drawing
6007-PRI-PLN-39-62-3112	Roof Layout	Drawing	1	Vendor	GEN-2	08.03.12	Approval	Drawing
6007-PRI-PLN-39-62-3113	Internal Rafter Layout	Drawing	1	Vendor	GEN-2	08.03.12	Approval	Drawing
6007-PRI-PLN-39-62-3114	Shell Nozzle Schedule	Drawing	2	Vendor	GEN-2	08.24.12	Approval	Drawing
6007-PRI-PLN-39-62-3115	Roof Nozzle Schedule	Drawing	2	Vendor	GEN-2	08.24.12	Approval	Drawing
6007-PRI-PLN-39-62-3116	20" Overflow	Drawing	1	Vendor	GEN-2	08.03.12	Approval	Drawing
6007-PRI-PLN-39-62-3117	8" Pump Recycle	Drawing	1	Vendor	GEN-2	08.03.12	Approval	Drawing
6007-PRI-PLN-39-62-3118	36" Multi-Bolt Shell Manway	Drawing	0	Vendor	GEN-2	08.03.12	Approval	Drawing
6007-PRI-PLN-39-62-3119	Nameplate Detail	Drawing	0	Vendor	GEN-2	08.03.12	Approval	Drawing
6007-PRI-PLN-39-62-3120	30" Roof Manway	Drawing	0	Vendor	GEN-2	08.03.12	Approval	Drawing
6007-PRI-PLN-39-62-3121	20" Gooseneck Vent	Drawing	0	Vendor	GEN-2	08.03.12	Approval	Drawing
6007-PRI-PLN-39-62-3122	Exterior Ladder	Drawing	0	Vendor	GEN-2	08.03.12	Approval	Drawing
6007-PRI-PLN-39-62-3123	Roof Handrail	Drawing	0	Vendor	GEN-2	08.03.12	Approval	Drawing
6007-PRI-PLN-39-62-3124	Grounding Lug	Drawing	0	Vendor	GEN-2	08.03.12	Approval	Drawing
6007-PRI-PLN-39-62-3125	Pipe Supports	Drawing	2	Vendor	GEN-2	08.24.12	Approval	Drawing
6007-PRI-PLN-39-62-3201	MT-444 Beta Cover Sheet	Drawing	2	Vendor	GEN-2	08.24.12	Approval	Drawing
6007-PRI-PLN-39-62-3202	Contact List/Standard Abbreviations	Drawing	0	Vendor	GEN-2	08.03.12	Approval	Drawing
6007-PRI-PLN-39-62-3203	General Welding Information	Drawing	0	Vendor	GEN-2	08.03.12	Approval	Drawing
6007-PRI-PLN-39-62-3204	Special Inspections	Drawing	0	Vendor	GEN-2	08.03.12	Approval	Drawing
6007-PRI-PLN-39-62-3205	Orientation	Drawing	2	Vendor	GEN-2	08.24.12	Approval	Drawing
6007-PRI-PLN-39-62-3206	Annular Layout	Drawing	0	Vendor	GEN-2	08.03.12	Approval	Drawing
6007-PRI-PLN-39-62-3207	Floor Layout	Drawing	0	Vendor	GEN-2	08.03.12	Approval	Drawing
6007-PRI-PLN-39-62-3208	Shell Details	Drawing	0	Vendor	GEN-2	08.03.12	Approval	Drawing
6007-PRI-PLN-39-62-3209	Shell Layout	Drawing	2	Vendor	GEN-2	08.24.12	Approval	Drawing
6007-PRI-PLN-39-62-3210	Welder Identification	Drawing	0	Vendor	GEN-2	08.03.12	Approval	Drawing
6007-PRI-PLN-39-62-3211	Center Support Column	Drawing	0	Vendor	GEN-2	08.03.12	Approval	Drawing
6007-PRI-PLN-39-62-3212	Roof Layout	Drawing	1	Vendor	GEN-2	08.03.12	Approval	Drawing
6007-PRI-PLN-39-62-3213	Internal Rafter Layout	Drawing	1	Vendor	GEN-2	08.03.12	Approval	Drawing
6007-PRI-PLN-39-62-3214	Shell Nozzle Schedule	Drawing	2	Vendor	GEN-2	08.24.12	Approval	Drawing
6007-PRI-PLN-39-62-3215	Roof Nozzle Schedule	Drawing	2	Vendor	GEN-2	08.24.12	Approval	Drawing
6007-PRI-PLN-39-62-3216	20" Overflow	Drawing	1	Vendor	GEN-2	08.03.12	Approval	Drawing
6007-PRI-PLN-39-62-3217	8" Pump Recycle	Drawing	1	Vendor	GEN-2	08.03.12	Approval	Drawing
6007-PRI-PLN-39-62-3218	36" Multi-Bolt Shell Manway	Drawing	0	Vendor	GEN-2	08.03.12	Approval	Drawing
6007-PRI-PLN-39-62-3219	Nameplate Detail	Drawing	0	Vendor	GEN-2	08.03.12	Approval	Drawing
6007-PRI-PLN-39-62-3220	30" Roof Manway	Drawing	0	Vendor	GEN-2	08.03.12	Approval	Drawing
6007-PRI-PLN-39-62-3221	20" Gooseneck Vent	Drawing	0	Vendor	GEN-2	08.03.12	Approval	Drawing
6007-PRI-PLN-39-62-3222	Exterior Ladder	Drawing	0	Vendor	GEN-2	08.03.12	Approval	Drawing
6007-PRI-PLN-39-62-3223	Roof Handrail	Drawing	0	Vendor	GEN-2	08.03.12	Approval	Drawing
6007-PRI-PLN-39-62-3224	Grounding Lug	Drawing	0	Vendor	GEN-2	08.03.12	Approval	Drawing
6007-PRI-PLN-39-62-3225	Pipe Supports	Drawing	2	Vendor	GEN-2	08.24.12	Approval	Drawing
0187P-C1&2 - MT-444 Respor	Response Memo			Vendor	GEN-2	9/5/2012	Approval	
6007-PLN-PRI-39-62-1120	Ø 10" PUMP RECYCLE	Drawing	6	Vendor	GEN-2	9/7/2012	Approval	Drawing
6007-PLN-PRI-39-62-1220	Ø 10" PUMP RECYCLE	Drawing	6	Vendor	GEN-2	9/7/2012	Approval	Drawing

0187P-A1&2 - MT-402 Tank D	Cover Letter	Drawing	0	Vendor	GEN-2	9/7/2012	Approval	
6007-PRI-PLN-39-62-2101	MT-424 Alpha Cover Sheet	Drawing	2	Vendor	GEN-2	9/5/2012	Approval	Drawing
6007-PRI-PLN-39-62-2102	Contact List/Standard Abbreviations	Drawing	0	Vendor	GEN-2	9/5/2012	Approval	Drawing
6007-PRI-PLN-39-62-2103	General Welding Information	Drawing	0	Vendor	GEN-2	9/5/2012	Approval	Drawing
6007-PRI-PLN-39-62-2104	Special Inspections	Drawing	0	Vendor	GEN-2	9/5/2012	Approval	Drawing
6007-PRI-PLN-39-62-2105	Orientation	Drawing	2	Vendor	GEN-2	9/5/2012	Approval	Drawing
6007-PRI-PLN-39-62-2106	Floor Layout	Drawing	0	Vendor	GEN-2	9/5/2012	Approval	Drawing
6007-PRI-PLN-39-62-2107	Shell Details	Drawing	0	Vendor	GEN-2	9/5/2012	Approval	Drawing
6007-PRI-PLN-39-62-2108	Shell Layout	Drawing	2	Vendor	GEN-2	9/5/2012	Approval	Drawing
6007-PRI-PLN-39-62-2109	Welder Identification	Drawing	0	Vendor	GEN-2	9/5/2012	Approval	Drawing
6007-PRI-PLN-39-62-2110	Center Support Column	Drawing	0	Vendor	GEN-2	9/5/2012	Approval	Drawing
6007-PRI-PLN-39-62-2111	Roof Layout	Drawing	1	Vendor	GEN-2	9/5/2012	Approval	Drawing
6007-PRI-PLN-39-62-2112	Internal Rafter Layout	Drawing	1	Vendor	GEN-2	9/5/2012	Approval	Drawing
6007-PRI-PLN-39-62-2113	Shell Nozzle Schedule	Drawing	2	Vendor	GEN-2	9/5/2012	Approval	Drawing
6007-PRI-PLN-39-62-2114	Roof Nozzle Schedule	Drawing	1	Vendor	GEN-2	9/5/2012	Approval	Drawing
6007-PRI-PLN-39-62-2115	ø 8" Overflow	Drawing	0	Vendor	GEN-2	9/5/2012	Approval	Drawing
6007-PRI-PLN-39-62-2116	ø 36" Multi-Bolt Shell Manway	Drawing	0	Vendor	GEN-2	9/5/2012	Approval	Drawing
6007-PRI-PLN-39-62-2117	Nameplate Detail	Drawing	0	Vendor	GEN-2	9/5/2012	Approval	Drawing
6007-PRI-PLN-39-62-2118	ø 30" Roof Manway	Drawing	0	Vendor	GEN-2	9/5/2012	Approval	Drawing
6007-PRI-PLN-39-62-2119	ø 10" Gooseneck Vent	Drawing	0	Vendor	GEN-2	9/5/2012	Approval	Drawing
6007-PRI-PLN-39-62-2120	Exterior Ladder	Drawing	0	Vendor	GEN-2	9/5/2012	Approval	Drawing
6007-PRI-PLN-39-62-2121	Roof Handrail	Drawing	0	Vendor	GEN-2	9/5/2012	Approval	Drawing
6007-PRI-PLN-39-62-2122	Grounding Lug & Shell Repad	Drawing	2	Vendor	GEN-2	9/5/2012	Approval	Drawing
6007-PRI-PLN-39-62-2201	MT-424 Beta Cover Sheet	Drawing	2	Vendor	GEN-2	9/5/2012	Approval	Drawing
6007-PRI-PLN-39-62-2202	Contact List/Standard Abbreviations	Drawing	0	Vendor	GEN-2	9/5/2012	Approval	Drawing
6007-PRI-PLN-39-62-2203	General Welding Information	Drawing	0	Vendor	GEN-2	9/5/2012	Approval	Drawing
6007-PRI-PLN-39-62-2204	Special Inspections	Drawing	0	Vendor	GEN-2	9/5/2012	Approval	Drawing
6007-PRI-PLN-39-62-2205	Orientation	Drawing	2	Vendor	GEN-2	9/5/2012	Approval	Drawing
6007-PRI-PLN-39-62-2206	Floor Layout	Drawing	0	Vendor	GEN-2	9/5/2012	Approval	Drawing
6007-PRI-PLN-39-62-2207	Shell Details	Drawing	0	Vendor	GEN-2	9/5/2012	Approval	Drawing
6007-PRI-PLN-39-62-2208	Shell Layout	Drawing	2	Vendor	GEN-2	9/5/2012	Approval	Drawing
6007-PRI-PLN-39-62-2209	Welder Identification	Drawing	0	Vendor	GEN-2	9/5/2012	Approval	Drawing
6007-PRI-PLN-39-62-2210	Center Support Column	Drawing	0	Vendor	GEN-2	9/5/2012	Approval	Drawing
6007-PRI-PLN-39-62-2211	Roof Layout	Drawing	1	Vendor	GEN-2	9/5/2012	Approval	Drawing
6007-PRI-PLN-39-62-2212	Internal Rafter Layout	Drawing	1	Vendor	GEN-2	9/5/2012	Approval	Drawing
6007-PRI-PLN-39-62-2213	Shell Nozzle Schedule	Drawing	2	Vendor	GEN-2	9/5/2012	Approval	Drawing
6007-PRI-PLN-39-62-2214	Roof Nozzle Schedule	Drawing	1	Vendor	GEN-2	9/5/2012	Approval	Drawing
6007-PRI-PLN-39-62-2215	ø 8" Overflow	Drawing	0	Vendor	GEN-2	9/5/2012	Approval	Drawing
6007-PRI-PLN-39-62-2216	ø 36" Multi-Bolt Shell Manway	Drawing	0	Vendor	GEN-2	9/5/2012	Approval	Drawing
6007-PRI-PLN-39-62-2217	Nameplate Detail	Drawing	0	Vendor	GEN-2	9/5/2012	Approval	Drawing
6007-PRI-PLN-39-62-2218	ø 30" Roof Manway	Drawing	0	Vendor	GEN-2	9/5/2012	Approval	Drawing
6007-PRI-PLN-39-62-2219	ø 10" Gooseneck Vent	Drawing	0	Vendor	GEN-2	9/5/2012	Approval	Drawing
6007-PRI-PLN-39-62-2220	Exterior Ladder	Drawing	0	Vendor	GEN-2	9/5/2012	Approval	Drawing
6007-PRI-PLN-39-62-2221	Roof Handrail	Drawing	0	Vendor	GEN-2	9/5/2012	Approval	Drawing
6007-PRI-PLN-39-62-2222	Grounding Lug & Shell Repad	Drawing	2	Vendor	GEN-2	9/5/2012	Approval	Drawing
6007-PRI-PLN-39-62-4101	MT-451 Alpha Cover Sheet	Drawing	1	Vendor	GEN-2	9/6/2012	Approval	Drawing
6007-PRI-PLN-39-62-4102	Contact List/Standard Abbreviations	Drawing	0	Vendor	GEN-2	9/6/2012	Approval	Drawing
6007-PRI-PLN-39-62-4103	General Welding Information	Drawing	0	Vendor	GEN-2	9/6/2012	Approval	Drawing
6007-PRI-PLN-39-62-4104	Special Inspections	Drawing	0	Vendor	GEN-2	9/6/2012	Approval	Drawing
6007-PRI-PLN-39-62-4105	Orientation	Drawing	1	Vendor	GEN-2	9/6/2012	Approval	Drawing
6007-PRI-PLN-39-62-4106	Floor Layout	Drawing	0	Vendor	GEN-2	9/6/2012	Approval	Drawing

6007-PRI-PLN-39-62-4107	Shell Details	Drawing	0	Vendor	GEN-2	9/6/2012	Approval	Drawing
6007-PRI-PLN-39-62-4108	Shell Layout	Drawing	1	Vendor	GEN-2	9/6/2012	Approval	Drawing
6007-PRI-PLN-39-62-4109	Welder Identification	Drawing	0	Vendor	GEN-2	9/6/2012	Approval	Drawing
6007-PRI-PLN-39-62-4110	Center Support Column	Drawing	0	Vendor	GEN-2	9/6/2012	Approval	Drawing
6007-PRI-PLN-39-62-4111	Roof Layout	Drawing	1	Vendor	GEN-2	9/6/2012	Approval	Drawing
6007-PRI-PLN-39-62-4112	Internal Rafter Layout	Drawing	1	Vendor	GEN-2	9/6/2012	Approval	Drawing
6007-PRI-PLN-39-62-4113	Shell Nozzle Schedule	Drawing	1	Vendor	GEN-2	9/6/2012	Approval	Drawing
6007-PRI-PLN-39-62-4114	Roof Nozzle Schedule	Drawing	0	Vendor	GEN-2	9/6/2012	Approval	Drawing
6007-PRI-PLN-39-62-4115	⌀ 8" Overflow	Drawing	0	Vendor	GEN-2	9/6/2012	Approval	Drawing
6007-PRI-PLN-39-62-4116	⌀ 2" Pump Recycle	Drawing	1	Vendor	GEN-2	9/6/2012	Approval	Drawing
6007-PRI-PLN-39-62-4117	⌀ 36" Multi-Bolt Shell Manway	Drawing	0	Vendor	GEN-2	9/6/2012	Approval	Drawing
6007-PRI-PLN-39-62-4118	Nameplate Detail	Drawing	1	Vendor	GEN-2	9/6/2012	Approval	Drawing
6007-PRI-PLN-39-62-4119	⌀ 30" Roof Manway	Drawing	0	Vendor	GEN-2	9/6/2012	Approval	Drawing
6007-PRI-PLN-39-62-4120	⌀ 8" Gooseneck Vent	Drawing	0	Vendor	GEN-2	9/6/2012	Approval	Drawing
6007-PRI-PLN-39-62-4121	Exterior Ladder	Drawing	0	Vendor	GEN-2	9/6/2012	Approval	Drawing
6007-PRI-PLN-39-62-4122	Roof Handrail	Drawing	0	Vendor	GEN-2	9/6/2012	Approval	Drawing
6007-PRI-PLN-39-62-4123	Grounding Lug & Shell Repad	Drawing	1	Vendor	GEN-2	9/6/2012	Approval	Drawing
6007-PRI-PLN-39-62-4201	MT-451 Beta Cover Sheet	Drawing	1	Vendor	GEN-2	9/6/2012	Approval	Drawing
6007-PRI-PLN-39-62-4202	Contact List/Standard Abbreviations	Drawing	0	Vendor	GEN-2	9/6/2012	Approval	Drawing
6007-PRI-PLN-39-62-4203	General Welding Information	Drawing	0	Vendor	GEN-2	9/6/2012	Approval	Drawing
6007-PRI-PLN-39-62-4204	Special Inspections	Drawing	0	Vendor	GEN-2	9/6/2012	Approval	Drawing
6007-PRI-PLN-39-62-4205	Orientation	Drawing	1	Vendor	GEN-2	9/6/2012	Approval	Drawing
6007-PRI-PLN-39-62-4206	Floor Layout	Drawing	0	Vendor	GEN-2	9/6/2012	Approval	Drawing
6007-PRI-PLN-39-62-4207	Shell Details	Drawing	0	Vendor	GEN-2	9/6/2012	Approval	Drawing
6007-PRI-PLN-39-62-4208	Shell Layout	Drawing	1	Vendor	GEN-2	9/6/2012	Approval	Drawing
6007-PRI-PLN-39-62-4209	Welder Identification	Drawing	0	Vendor	GEN-2	9/6/2012	Approval	Drawing
6007-PRI-PLN-39-62-4210	Center Support Column	Drawing	0	Vendor	GEN-2	9/6/2012	Approval	Drawing
6007-PRI-PLN-39-62-4211	Roof Layout	Drawing	1	Vendor	GEN-2	9/6/2012	Approval	Drawing
6007-PRI-PLN-39-62-4212	Internal Rafter Layout	Drawing	1	Vendor	GEN-2	9/6/2012	Approval	Drawing
6007-PRI-PLN-39-62-4213	Shell Nozzle Schedule	Drawing	1	Vendor	GEN-2	9/6/2012	Approval	Drawing
6007-PRI-PLN-39-62-4214	Roof Nozzle Schedule	Drawing	0	Vendor	GEN-2	9/6/2012	Approval	Drawing
6007-PRI-PLN-39-62-4215	⌀ 8" Overflow	Drawing	0	Vendor	GEN-2	9/6/2012	Approval	Drawing
6007-PRI-PLN-39-62-4216	⌀ 2" Pump Recycle	Drawing	1	Vendor	GEN-2	9/6/2012	Approval	Drawing
6007-PRI-PLN-39-62-4217	⌀ 36" Multi-Bolt Shell Manway	Drawing	0	Vendor	GEN-2	9/6/2012	Approval	Drawing
6007-PRI-PLN-39-62-4218	Nameplate Detail	Drawing	1	Vendor	GEN-2	9/6/2012	Approval	Drawing
6007-PRI-PLN-39-62-4219	⌀ 30" Roof Manway	Drawing	0	Vendor	GEN-2	9/6/2012	Approval	Drawing
6007-PRI-PLN-39-62-4220	⌀ 8" Gooseneck Vent	Drawing	0	Vendor	GEN-2	9/6/2012	Approval	Drawing
6007-PRI-PLN-39-62-4221	Exterior Ladder	Drawing	0	Vendor	GEN-2	9/6/2012	Approval	Drawing
6007-PRI-PLN-39-62-4222	Roof Handrail	Drawing	0	Vendor	GEN-2	9/6/2012	Approval	Drawing
6007-PRI-PLN-39-62-4223	Grounding Lug & Shell Repad	Drawing	1	Vendor	GEN-2	9/6/2012	Approval	Drawing
6007-VAR-PRI-ATP-1101	REVISION MEMO	Drawing	0	Vendor	GEN-2	9/6/2012	Approval	
6007-CAL-PRI-39-52-1100	ALPHA PLANT STRUCTURAL CALCULATIONS	Drawing	3	Vendor	GEN-2	9/6/2012	Approval	calculation
6007-PLN-PRI-39-52-1106	ANCHOR CHAIR DETAILS	Drawing	5	Vendor	GEN-2	9/6/2012	Approval	Drawing
6007-CAL-AGE-25-52-4000	ALPHA CALCULATIONS	Drawing	0	Vendor	GEN-2	10/8/2012	Approval	calculation
6007-CAL-AGE-25-52-8000	BETA CALCULATIONS	Drawing	0	Vendor	GEN-2	10/8/2012	Approval	calculation
6007-PLN-AGE-25-52-4000	ALPHA COVER	Drawing	0	Vendor	GEN-2	10/8/2012	Approval	Drawing
6007-PLN-AGE-25-52-4020	ALPHA GEN. NOTES	Drawing	0	Vendor	GEN-2	10/8/2012	Approval	Drawing
6007-PLN-AGE-25-52-4040	ALPHA FOUNDATION PLAN	Drawing	0	Vendor	GEN-2	10/8/2012	Approval	Drawing
6007-PLN-AGE-25-52-4041	ALPHA FOUNDATION ELE	Drawing	0	Vendor	GEN-2	10/8/2012	Approval	Drawing
6007-PLN-AGE-25-52-4060	ALPHA DETAILS	Drawing	0	Vendor	GEN-2	10/8/2012	Approval	Drawing
6007-PLN-AGE-25-52-4061	ALPHA DETAILS	Drawing	0	Vendor	GEN-2	10/8/2012	Approval	Drawing

6007-PLN-AGE-25-52-4062	ALPHA DETAILS	Drawing	0	Vendor	GEN-2	10/8/2012	Approval	Drawing
6007-PLN-AGE-25-52-4063	ALPHA DETAILS	Drawing	0	Vendor	GEN-2	10/8/2012	Approval	Drawing
6007-PLN-AGE-25-52-4064	ALPHA DETAILS	Drawing	0	Vendor	GEN-2	10/8/2012	Approval	Drawing
6007-PLN-AGE-25-52-4065	ALPHA DETAILS	Drawing	0	Vendor	GEN-2	10/8/2012	Approval	Drawing
6007-PLN-AGE-25-52-4066	ALPHA DETAILS	Drawing	0	Vendor	GEN-2	10/8/2012	Approval	Drawing
6007-PLN-AGE-25-52-4067	ALPHA DETAILS	Drawing	0	Vendor	GEN-2	10/8/2012	Approval	Drawing
6007-PLN-AGE-25-52-8000	BETA COVER	Drawing	0	Vendor	GEN-2	10/8/2012	Approval	Drawing
6007-PLN-AGE-25-52-8020	BETA GEN. NOTES	Drawing	0	Vendor	GEN-2	10/8/2012	Approval	Drawing
6007-PLN-AGE-25-52-8040	BETA FOUNDATION PLAN	Drawing	0	Vendor	GEN-2	10/8/2012	Approval	Drawing
6007-PLN-AGE-25-52-8041	BETA FOUNDATION ELE.	Drawing	0	Vendor	GEN-2	10/8/2012	Approval	Drawing
6007-PLN-AGE-25-52-8060	BETA DETAILS	Drawing	0	Vendor	GEN-2	10/8/2012	Approval	Drawing
6007-PLN-AGE-25-52-8061	BETA DETAILS	Drawing	0	Vendor	GEN-2	10/8/2012	Approval	Drawing
6007-PLN-AGE-25-52-8062	BETA DETAILS	Drawing	0	Vendor	GEN-2	10/8/2012	Approval	Drawing
6007-PLN-AGE-25-52-8063	BETA DETAILS	Drawing	0	Vendor	GEN-2	10/8/2012	Approval	Drawing
6007-PLN-AGE-25-52-8064	BETA DETAILS	Drawing	0	Vendor	GEN-2	10/8/2012	Approval	Drawing
6007-PLN-AGE-25-52-8065	BETA DETAILS	Drawing	0	Vendor	GEN-2	10/8/2012	Approval	Drawing
6007-PLN-AGE-25-52-8066	BETA DETAILS	Drawing	0	Vendor	GEN-2	10/8/2012	Approval	Drawing
6007-PLN-AGE-25-52-8067	BETA DETAILS	Drawing	0	Vendor	GEN-2	10/8/2012	Approval	Drawing
6007-PLN-PRI-39-62-4101	A-MT-451 Tank Cover Sheet	Drawing	2	Vendor	GEN-2	10/8/2012	Approval	Drawing
6007-PLN-PRI-39-62-4102	A-MT-451 Contact List/Standard Abbreviations	Drawing	0	Vendor	GEN-2	10/8/2012	Approval	Drawing
6007-PLN-PRI-39-62-4103	A-MT-451 General Welding Information	Drawing	2	Vendor	GEN-2	10/8/2012	Approval	Drawing
6007-PLN-PRI-39-62-4104	A-MT-451 Special Inspections	Drawing	2	Vendor	GEN-2	10/8/2012	Approval	Drawing
6007-PLN-PRI-39-62-4105	A-MT-451 Nozzle Orientations	Drawing	2	Vendor	GEN-2	10/8/2012	Approval	Drawing
6007-PLN-PRI-39-62-4106	A-MT-451 Floor Layout	Drawing	0	Vendor	GEN-2	10/8/2012	Approval	Drawing
6007-PLN-PRI-39-62-4107	A-MT-451 Shell Details	Drawing	2	Vendor	GEN-2	10/8/2012	Approval	Drawing
6007-PLN-PRI-39-62-4108	A-MT-451 Shell Layout	Drawing	2	Vendor	GEN-2	10/8/2012	Approval	Drawing
6007-PLN-PRI-39-62-4109	A-MT-451 Welder Identification	Drawing	0	Vendor	GEN-2	10/8/2012	Approval	Drawing
6007-PLN-PRI-39-62-4110	A-MT-451 Center Support Column	Drawing	2	Vendor	GEN-2	10/8/2012	Approval	Drawing
6007-PLN-PRI-39-62-4111	A-MT-451 Roof Layout	Drawing	1	Vendor	GEN-2	10/8/2012	Approval	Drawing
6007-PLN-PRI-39-62-4112	A-MT-451 Internal Rafter Layout	Drawing	2	Vendor	GEN-2	10/8/2012	Approval	Drawing
6007-PLN-PRI-39-62-4113	A-MT-451 Shell Nozzle Schedule	Drawing	2	Vendor	GEN-2	10/8/2012	Approval	Drawing
6007-PLN-PRI-39-62-4114	A-MT-451 Roof Nozzle Schedule	Drawing	1	Vendor	GEN-2	10/8/2012	Approval	Drawing
6007-PLN-PRI-39-62-4115	A-MT-451 8" Overflow	Drawing	0	Vendor	GEN-2	10/8/2012	Approval	Drawing
6007-PLN-PRI-39-62-4116	A-MT-451 2" Pump Recycle	Drawing	2	Vendor	GEN-2	10/8/2012	Approval	Drawing
6007-PLN-PRI-39-62-4117	A-MT-451 36" Multi-Bolt Shell Manway	Drawing	2	Vendor	GEN-2	10/8/2012	Approval	Drawing
6007-PLN-PRI-39-62-4118	A-MT-451 Nameplate Detail	Drawing	1	Vendor	GEN-2	10/8/2012	Approval	Drawing
6007-PLN-PRI-39-62-4119	A-MT-451 30" Roof Manway	Drawing	0	Vendor	GEN-2	10/8/2012	Approval	Drawing
6007-PLN-PRI-39-62-4120	A-MT-451 8" Gooseneck Vent	Drawing	0	Vendor	GEN-2	10/8/2012	Approval	Drawing
6007-PLN-PRI-39-62-4121	A-MT-451 Exterior Ladder	Drawing	2	Vendor	GEN-2	10/8/2012	Approval	Drawing
6007-PLN-PRI-39-62-4122	A-MT-451 Roof Handrail	Drawing	2	Vendor	GEN-2	10/8/2012	Approval	Drawing
6007-PLN-PRI-39-62-4123	A-MT-451 Grounding Lug & Shell Repad	Drawing	1	Vendor	GEN-2	10/8/2012	Approval	Drawing
6007-PLN-PRI-39-62-4201	B-MT-451 Tank Cover Sheet	Drawing	2	Vendor	GEN-2	10/8/2012	Approval	Drawing
6007-PLN-PRI-39-62-4202	B-MT-451 Contact List/Standard Abbreviations	Drawing	0	Vendor	GEN-2	10/8/2012	Approval	Drawing
6007-PLN-PRI-39-62-4203	B-MT-451 General Welding Information	Drawing	2	Vendor	GEN-2	10/8/2012	Approval	Drawing
6007-PLN-PRI-39-62-4204	B-MT-451 Special Inspections	Drawing	2	Vendor	GEN-2	10/8/2012	Approval	Drawing
6007-PLN-PRI-39-62-4205	B-MT-451 Nozzle Orientations	Drawing	2	Vendor	GEN-2	10/8/2012	Approval	Drawing
6007-PLN-PRI-39-62-4206	B-MT-451 Floor Layout	Drawing	0	Vendor	GEN-2	10/8/2012	Approval	Drawing
6007-PLN-PRI-39-62-4207	B-MT-451 Shell Details	Drawing	2	Vendor	GEN-2	10/8/2012	Approval	Drawing
6007-PLN-PRI-39-62-4208	B-MT-451 Shell Layout	Drawing	2	Vendor	GEN-2	10/8/2012	Approval	Drawing
6007-PLN-PRI-39-62-4209	B-MT-451 Welder Identification	Drawing	0	Vendor	GEN-2	10/8/2012	Approval	Drawing
6007-PLN-PRI-39-62-4210	B-MT-451 Center Support Column	Drawing	2	Vendor	GEN-2	10/8/2012	Approval	Drawing

6007-PLN-PRI-39-62-4211	B-MT-451 Roof Layout	Drawing	1	Vendor	GEN-2	10/8/2012	Approval	Drawing
6007-PLN-PRI-39-62-4212	B-MT-451 Internal Rafter Layout	Drawing	2	Vendor	GEN-2	10/8/2012	Approval	Drawing
6007-PLN-PRI-39-62-4213	B-MT-451 Shell Nozzle Schedule	Drawing	2	Vendor	GEN-2	10/8/2012	Approval	Drawing
6007-PLN-PRI-39-62-4214	B-MT-451 Roof Nozzle Schedule	Drawing	1	Vendor	GEN-2	10/8/2012	Approval	Drawing
6007-PLN-PRI-39-62-4215	B-MT-451 8" Overflow	Drawing	0	Vendor	GEN-2	10/8/2012	Approval	Drawing
6007-PLN-PRI-39-62-4216	B-MT-451 2" Pump Recycle	Drawing	2	Vendor	GEN-2	10/8/2012	Approval	Drawing
6007-PLN-PRI-39-62-4217	B-MT-451 36" Multi-Bolt Shell Manway	Drawing	2	Vendor	GEN-2	10/8/2012	Approval	Drawing
6007-PLN-PRI-39-62-4218	B-MT-451 Nameplate Detail	Drawing	1	Vendor	GEN-2	10/8/2012	Approval	Drawing
6007-PLN-PRI-39-62-4219	B-MT-451 30" Roof Manway	Drawing	0	Vendor	GEN-2	10/8/2012	Approval	Drawing
6007-PLN-PRI-39-62-4220	B-MT-451 8" Gooseneck Vent	Drawing	0	Vendor	GEN-2	10/8/2012	Approval	Drawing
6007-PLN-PRI-39-62-4221	B-MT-451 Exterior Ladder	Drawing	2	Vendor	GEN-2	10/8/2012	Approval	Drawing
6007-PLN-PRI-39-62-4222	B-MT-451 Roof Handrail	Drawing	2	Vendor	GEN-2	10/8/2012	Approval	Drawing
6007-PLN-PRI-39-62-4223	B-MT-451 Grounding Lug & Shell Repad	Drawing	1	Vendor	GEN-2	10/8/2012	Approval	Drawing
6007-CAL-PRI-39-62-4100	A-MT-451 Structural Calculations	Drawing	4	Vendor	GEN-2	10/8/2012	Approval	calculation
6007-CAL-PRI-39-62-4200	B-MT-451 Structural Calculations	Drawing	4	Vendor	GEN-2	10/8/2012	Approval	calculation
6007-PLN-PRI-39-62-5101	A-MT-453 Tank Cover Sheet	Drawing	1	Vendor	GEN-2	10/8/2012	Approval	Drawing
6007-PLN-PRI-39-62-5102	A-MT-453 Contact List/Standard Abbreviations	Drawing	0	Vendor	GEN-2	10/8/2012	Approval	Drawing
6007-PLN-PRI-39-62-5103	A-MT-453 General Welding Information	Drawing	1	Vendor	GEN-2	10/8/2012	Approval	Drawing
6007-PLN-PRI-39-62-5104	A-MT-453 Special Inspections	Drawing	1	Vendor	GEN-2	10/8/2012	Approval	Drawing
6007-PLN-PRI-39-62-5105	A-MT-453 Nozzle Orientations	Drawing	1	Vendor	GEN-2	10/8/2012	Approval	Drawing
6007-PLN-PRI-39-62-5106	A-MT-453 Floor Layout	Drawing	0	Vendor	GEN-2	10/8/2012	Approval	Drawing
6007-PLN-PRI-39-62-5107	A-MT-453 Shell Details	Drawing	1	Vendor	GEN-2	10/8/2012	Approval	Drawing
6007-PLN-PRI-39-62-5108	A-MT-453 Shell Layout	Drawing	1	Vendor	GEN-2	10/8/2012	Approval	Drawing
6007-PLN-PRI-39-62-5109	A-MT-453 Welder Identification	Drawing	0	Vendor	GEN-2	10/8/2012	Approval	Drawing
6007-PLN-PRI-39-62-5110	A-MT-453 Center Support Column	Drawing	1	Vendor	GEN-2	10/8/2012	Approval	Drawing
6007-PLN-PRI-39-62-5111	A-MT-453 Roof Layout	Drawing	1	Vendor	GEN-2	10/8/2012	Approval	Drawing
6007-PLN-PRI-39-62-5112	A-MT-453 Internal Rafter Layout	Drawing	1	Vendor	GEN-2	10/8/2012	Approval	Drawing
6007-PLN-PRI-39-62-5113	A-MT-453 Shell Nozzle Schedule	Drawing	1	Vendor	GEN-2	10/8/2012	Approval	Drawing
6007-PLN-PRI-39-62-5114	A-MT-453 Roof Nozzle Schedule	Drawing	1	Vendor	GEN-2	10/8/2012	Approval	Drawing
6007-PLN-PRI-39-62-5115	A-MT-453 8" Overflow	Drawing	0	Vendor	GEN-2	10/8/2012	Approval	Drawing
6007-PLN-PRI-39-62-5116	A-MT-453 4" Condenser Inlet	Drawing	1	Vendor	GEN-2	10/8/2012	Approval	Drawing
6007-PLN-PRI-39-62-5117	A-MT-453 3" Pump Recycle	Drawing	1	Vendor	GEN-2	10/8/2012	Approval	Drawing
6007-PLN-PRI-39-62-5118	A-MT-453 36" Multi-Bolt Shell Manway	Drawing	1	Vendor	GEN-2	10/8/2012	Approval	Drawing
6007-PLN-PRI-39-62-5119	A-MT-453 Nameplate Detail	Drawing	1	Vendor	GEN-2	10/8/2012	Approval	Drawing
6007-PLN-PRI-39-62-5120	A-MT-453 30" Roof Manway	Drawing	0	Vendor	GEN-2	10/8/2012	Approval	Drawing
6007-PLN-PRI-39-62-5121	A-MT-453 8" Gooseneck Vent	Drawing	0	Vendor	GEN-2	10/8/2012	Approval	Drawing
6007-PLN-PRI-39-62-5122	A-MT-453 Exterior Ladder	Drawing	1	Vendor	GEN-2	10/8/2012	Approval	Drawing
6007-PLN-PRI-39-62-5123	A-MT-453 Roof Handrail	Drawing	1	Vendor	GEN-2	10/8/2012	Approval	Drawing
6007-PLN-PRI-39-62-5124	A-MT-453 Grounding Lug	Drawing	0	Vendor	GEN-2	10/8/2012	Approval	Drawing
6007-PLN-PRI-39-62-5201	B-MT-453 Tank Cover Sheet	Drawing	1	Vendor	GEN-2	10/8/2012	Approval	Drawing
6007-PLN-PRI-39-62-5202	B-MT-453 Contact List/Standard Abbreviations	Drawing	0	Vendor	GEN-2	10/8/2012	Approval	Drawing
6007-PLN-PRI-39-62-5203	B-MT-453 General Welding Information	Drawing	1	Vendor	GEN-2	10/8/2012	Approval	Drawing
6007-PLN-PRI-39-62-5204	B-MT-453 Special Inspections	Drawing	1	Vendor	GEN-2	10/8/2012	Approval	Drawing
6007-PLN-PRI-39-62-5205	B-MT-453 Nozzle Orientations	Drawing	1	Vendor	GEN-2	10/8/2012	Approval	Drawing
6007-PLN-PRI-39-62-5206	B-MT-453 Floor Layout	Drawing	0	Vendor	GEN-2	10/8/2012	Approval	Drawing
6007-PLN-PRI-39-62-5207	B-MT-453 Shell Details	Drawing	1	Vendor	GEN-2	10/8/2012	Approval	Drawing
6007-PLN-PRI-39-62-5208	B-MT-453 Shell Layout	Drawing	1	Vendor	GEN-2	10/8/2012	Approval	Drawing
6007-PLN-PRI-39-62-5209	B-MT-453 Welder Identification	Drawing	0	Vendor	GEN-2	10/8/2012	Approval	Drawing
6007-PLN-PRI-39-62-5210	B-MT-453 Center Support Column	Drawing	1	Vendor	GEN-2	10/8/2012	Approval	Drawing
6007-PLN-PRI-39-62-5211	B-MT-453 Roof Layout	Drawing	1	Vendor	GEN-2	10/8/2012	Approval	Drawing
6007-PLN-PRI-39-62-5212	B-MT-453 Internal Rafter Layout	Drawing	1	Vendor	GEN-2	10/8/2012	Approval	Drawing

6007-PLN-PRI-39-62-5213	B-MT-453 Shell Nozzle Schedule	Drawing	1	Vendor	GEN-2	10/8/2012	Approval	Drawing
6007-PLN-PRI-39-62-5214	B-MT-453 Roof Nozzle Schedule	Drawing	1	Vendor	GEN-2	10/8/2012	Approval	Drawing
6007-PLN-PRI-39-62-5215	B-MT-453 8" Overflow	Drawing	0	Vendor	GEN-2	10/8/2012	Approval	Drawing
6007-PLN-PRI-39-62-5216	B-MT-453 4" Condenser Inlet	Drawing	1	Vendor	GEN-2	10/8/2012	Approval	Drawing
6007-PLN-PRI-39-62-5217	B-MT-453 3" Pump Recycle	Drawing	1	Vendor	GEN-2	10/8/2012	Approval	Drawing
6007-PLN-PRI-39-62-5218	B-MT-453 36" Multi-Bolt Shell Manway	Drawing	1	Vendor	GEN-2	10/8/2012	Approval	Drawing
6007-PLN-PRI-39-62-5219	B-MT-453 Nameplate Detail	Drawing	1	Vendor	GEN-2	10/8/2012	Approval	Drawing
6007-PLN-PRI-39-62-5220	B-MT-453 30" Roof Manway	Drawing	0	Vendor	GEN-2	10/8/2012	Approval	Drawing
6007-PLN-PRI-39-62-5221	B-MT-453 8" Gooseneck Vent	Drawing	0	Vendor	GEN-2	10/8/2012	Approval	Drawing
6007-PLN-PRI-39-62-5222	B-MT-453 Exterior Ladder	Drawing	1	Vendor	GEN-2	10/8/2012	Approval	Drawing
6007-PLN-PRI-39-62-5223	B-MT-453 Roof Handrail	Drawing	1	Vendor	GEN-2	10/8/2012	Approval	Drawing
6007-PLN-PRI-39-62-5224	B-MT-453 Grounding Lug	Drawing	0	Vendor	GEN-2	10/8/2012	Approval	Drawing
6007-CAL-PRI-39-52-5100	A-MT-453 Structural Calculations	Drawing	5	Vendor	GEN-2	10/8/2012	Approval	calculation
6007-CAL-PRI-39-52-5200	B-MT-453 Structural Calculations	Drawing	5	Vendor	GEN-2	10/8/2012	Approval	calculation
6007-PLN-PRI-39-52-4101	A-MT-451 Foundation Cover Sheet	Drawing	2	Vendor	GEN-2	10/8/2012	Approval	Drawing
6007-PLN-PRI-39-52-4105	A-MT-451 Foundation	Drawing	2	Vendor	GEN-2	10/8/2012	Approval	Drawing
6007-PLN-PRI-39-52-4106	A-MT-451 Anchor Chair Detail	Drawing	2	Vendor	GEN-2	10/8/2012	Approval	Drawing
6007-PLN-PRI-39-52-4201	A-MT-451 Foundation Cover Sheet	Drawing	2	Vendor	GEN-2	10/8/2012	Approval	Drawing
6007-PLN-PRI-39-52-4205	A-MT-451 Foundation	Drawing	2	Vendor	GEN-2	10/8/2012	Approval	Drawing
6007-PLN-PRI-39-52-4206	A-MT-451 Anchor Chair Detail	Drawing	2	Vendor	GEN-2	10/8/2012	Approval	Drawing
6007-VAR-PRI-ATP-4101	0187P-D1&2 - MT-451 Foundation Drawing Changes Memo	Drawing	0	Vendor	GEN-2	10/8/2012	Approval	
6007-CAL-PRI-39-52-4100	A-MT-451 Structural Calculations	Drawing	4	Vendor	GEN-2	10/8/2012	Approval	calculation
6007-CAL-PRI-39-52-4200	B-MT-451 Structural Calculations	Drawing	4	Vendor	GEN-2	10/8/2012	Approval	calculation
6007-PLN-PRI-39-52-5101	A-MT-453 Foundation Cover Sheet	Drawing	2	Vendor	GEN-2	10/8/2012	Approval	Drawing
6007-PLN-PRI-39-52-5106	A-MT-453 Anchor Chair Detail	Drawing	2	Vendor	GEN-2	10/8/2012	Approval	Drawing
6007-PLN-PRI-39-52-5201	B-MT-453 Foundation Cover Sheet	Drawing	2	Vendor	GEN-2	10/8/2012	Approval	Drawing
6007-PLN-PRI-39-52-5206	B-MT-453 Anchor Chair Detail	Drawing	2	Vendor	GEN-2	10/8/2012	Approval	Drawing
6007-VAR-PRI-ATP-5101	0187P-E1&2 - MT-453 Foundation Drawing Changes Memo	Drawing	0	Vendor	GEN-2	10/8/2012	Approval	
6007-CAL-PRI-39-52-5100	A-MT-453 Structural Calculations	Drawing	5	Vendor	GEN-2	10/8/2012	Approval	calculation
6007-CAL-PRI-39-52-5200	B-MT-453 Structural Calculations	Drawing	5	Vendor	GEN-2	10/8/2012	Approval	calculation
Fire Protection System	Fire Protection System Proposal	Drawing	6	Vendor	GEN-2	10/8/2012	Approval	
Fire Protection System	Fire Protection System Proposal	Drawing		Vendor	GEN-2	10/8/2012	Approval	
6007-PLN-PRI-39-62-1101	A-MT-402 Tank Cover Sheet	Drawing	7	Vendor	GEN-2	10/8/2012	Approval	Drawing
6007-PLN-PRI-39-62-1124	A-MT-402 30" Roof Manway	Drawing	7	Vendor	GEN-2	10/8/2012	Approval	Drawing
6007-PLN-PRI-39-62-1126	A-MT-402 Exterior Ladder	Drawing	7	Vendor	GEN-2	10/8/2012	Approval	Drawing
6007-PLN-PRI-39-62-1127	A-MT-402 Roof Handrail	Drawing	7	Vendor	GEN-2	10/8/2012	Approval	Drawing
6007-PLN-PRI-39-62-1201	B-MT-402 Tank Cover Sheet	Drawing	7	Vendor	GEN-2	10/8/2012	Approval	Drawing
6007-PLN-PRI-39-62-1224	B-MT-402 30" Roof Manway	Drawing	7	Vendor	GEN-2	10/8/2012	Approval	Drawing
6007-PLN-PRI-39-62-1226	B-MT-402 Exterior Ladder	Drawing	7	Vendor	GEN-2	10/8/2012	Approval	Drawing
6007-PLN-PRI-39-62-1227	B-MT-402 Roof Handrail	Drawing	7	Vendor	GEN-2	10/8/2012	Approval	Drawing
6007-VAR-PRI-ATP-1007	0187P-A1&2-MT-402 Tank Drawing Changes Memo	Drawing	0	Vendor	GEN-2	10/8/2012	Approval	
07-10078	Industrial Fiberglass Joint Detail No. 78	Drawing	A	Vendor	GEN-2	10/8/2012	Approval	
6007-PLN-PRI-58-62-6120	6007-PLN-PRI-58-62-6120	Drawing	4	Vendor	GEN-2	10/11/2012	Approval	Drawing
6007-PLN-PRI-58-62-6220	6007-PLN-PRI-58-62-6220	Drawing	4	Vendor	GEN-2	10/11/2012	Approval	Drawing
6007-PLN-PRI-58-62-6320	6007-PLN-PRI-58-62-6320	Drawing	4	Vendor	GEN-2	10/11/2012	Approval	Drawing
6007-PLN-PRI-58-62-6420	6007-PLN-PRI-58-62-6420	Drawing	4	Vendor	GEN-2	10/11/2012	Approval	Drawing
6007-ESP-ATP-15-81-S103	6007-ESP-ATP-15-81-S103	Drawing	1	Vendor	GEN-2	9/14/2012	Approval	Spec
6007-MEM-ATP-15-81-S103	6007-MEM-ATP-15-81-S103	Drawing	0	Vendor	GEN-2	9/19/2012	Approval	
6007-PLN-PRI-58-62-6201	Alpha Plant HTF Overflow Tank A-MT-204B Cover Sheet	Drawing	4	Vendor	GEN-2	10/4/2012	Approval	Drawing
6007-PLN-PRI-58-62-6301	Beta Plant HTF Overflow Tank A-MT-204A Cover Sheet	Drawing	4	Vendor	GEN-2	10/4/2012	Approval	Drawing
6007-PLN-PRI-58-62-6401	Beta Plant HTF Overflow Tank A-MT-204 Cover Sheet	Drawing	4	Vendor	GEN-2	10/4/2012	Approval	Drawing

6007-PLN-PRI-58-62-6101	Alpha Plant HTF Overflow Tank A-MT-204A Cover Sheet	Drawing	4	Vendor	GEN-2	10/4/2012	Approval	Drawing
6007-PLN-PRI-39-62-1101	A-MT-402 Tank Cover Sheet	Drawing	7	Vendor	GEN-2	10/22/2012	Approval	Drawing
6007-PLN-PRI-39-62-1124	A-MT-402 30" Roof Manway	Drawing	7	Vendor	GEN-2	10/22/2012	Approval	Drawing
6007-PLN-PRI-39-62-1126	A-MT-402 Exterior Ladder	Drawing	7	Vendor	GEN-2	10/22/2012	Approval	Drawing
6007-PLN-PRI-39-62-1127	A-MT-402 Roof Handrail	Drawing	7	Vendor	GEN-2	10/22/2012	Approval	Drawing
6007-PLN-PRI-39-62-1201	B-MT-402 Tank Cover Sheet	Drawing	7	Vendor	GEN-2	10/22/2012	Approval	Drawing
6007-PLN-PRI-39-62-1224	B-MT-402 30" Roof Manway	Drawing	7	Vendor	GEN-2	10/22/2012	Approval	Drawing
6007-PLN-PRI-39-62-1226	B-MT-402 Exterior Ladder	Drawing	7	Vendor	GEN-2	10/22/2012	Approval	Drawing
6007-PLN-PRI-39-62-1227	B-MT-402 Roof Handrail	Drawing	7	Vendor	GEN-2	10/22/2012	Approval	Drawing
6007-VAR-PRI-ATP-1007	0187P-A1&2-MT-402 Tank Drawing Changes Memo	Drawing	0	Vendor	GEN-2	10/22/2012	Approval	
07-10078	Industrial Fiberglass Joint Detail No. 78	Drawing	A	Vendor	GEN-2	11/5/2012	Approval	
ESN001	Engineering Substitution Notice: Diagonal Anchor Strap Assemblies	Drawing	0	Vendor	GEN-2	11/29/2012	Approval	
06-1399	Miscellaneous Plate Fabrication	Drawing	0	Vendor	GEN-2	11/29/2012	Approval	
06-25753	3/8" Anchor Plate Fabrication Counterflow Cooling Towers	Drawing	0	Vendor	GEN-2	11/29/2012	Approval	
06-25754	3/8" Anchor Plate Fabrication Counterflow Cooling Towers	Drawing	0	Vendor	GEN-2	11/29/2012	Approval	
06-25755	Anchor Plate Assembly Counterflow Cooling Towers	Drawing	0	Vendor	GEN-2	11/29/2012	Approval	
ESN002	Engineering Substitution Notice: Column Anchor Clip	Drawing	0	Vendor	GEN-2	11/29/2012	Approval	
2012-28716	10 Ga. Anchor Clip Fabrication Fiberglass Counterflow Cooling Tower	Drawing	0	Vendor	GEN-2	11/29/2012	Approval	
0187 C1&C2 - MT-444	MT-444 Tank Drawing Change Memo	Drawing	0	Vendor	GEN-2	11/30/2012	Approval	
6007-PLN-PRI-39-62-3101	A-MT-444 Tank Cover Sheet	Drawing	4	Vendor	GEN-2	11/30/2012	Approval	Drawing
6007-PLN-PRI-39-62-3106	A-MT-444 Annular Layout	Drawing	4	Vendor	GEN-2	11/30/2012	Approval	Drawing
6007-PLN-PRI-39-62-3108	A-MT-444 Shell Details	Drawing	4	Vendor	GEN-2	11/30/2012	Approval	Drawing
6007-PLN-PRI-39-62-3109	A-MT-444 Shell Layout	Drawing	4	Vendor	GEN-2	11/30/2012	Approval	Drawing
6007-PLN-PRI-39-62-3110	A-MT-444 Welder Identification	Drawing	4	Vendor	GEN-2	11/30/2012	Approval	Drawing
6007-PLN-PRI-39-62-3111	A-MT-444 Center Support Column	Drawing	4	Vendor	GEN-2	11/30/2012	Approval	Drawing
6007-PLN-PRI-39-62-3116	A-MT-444 24" Overflow	Drawing	4	Vendor	GEN-2	11/30/2012	Approval	Drawing
6007-PLN-PRI-39-62-3117	A-MT-444 8" Pump Recycle	Drawing	4	Vendor	GEN-2	11/30/2012	Approval	Drawing
6007-PLN-PRI-39-62-3118	A-MT-444 36" Multi-Bolt Shell Manway	Drawing	4	Vendor	GEN-2	11/30/2012	Approval	Drawing
6007-PLN-PRI-39-62-3119	A-MT-444 Nameplate Detail	Drawing	4	Vendor	GEN-2	11/30/2012	Approval	Drawing
6007-PLN-PRI-39-62-3120	A-MT-444 30" Roof Manway	Drawing	4	Vendor	GEN-2	11/30/2012	Approval	Drawing
6007-PLN-PRI-39-62-3121	A-MT-444 20" Gooseneck Vent	Drawing	4	Vendor	GEN-2	11/30/2012	Approval	Drawing
6007-PLN-PRI-39-62-3122	A-MT-444 Exterior Ladder	Drawing	4	Vendor	GEN-2	11/30/2012	Approval	Drawing
6007-PLN-PRI-39-62-3123	A-MT-444 Roof Handrail	Drawing	4	Vendor	GEN-2	11/30/2012	Approval	Drawing
6007-PLN-PRI-39-62-3201	B-MT-444 Tank Cover Sheet	Drawing	4	Vendor	GEN-2	11/30/2012	Approval	Drawing
6007-PLN-PRI-39-62-3206	B-MT-444 Annular Layout	Drawing	4	Vendor	GEN-2	11/30/2012	Approval	Drawing
6007-PLN-PRI-39-62-3208	B-MT-444 Shell Details	Drawing	4	Vendor	GEN-2	11/30/2012	Approval	Drawing
6007-PLN-PRI-39-62-3209	B-MT-444 Shell Layout	Drawing	4	Vendor	GEN-2	11/30/2012	Approval	Drawing
6007-PLN-PRI-39-62-3210	B-MT-444 Welder Identification	Drawing	4	Vendor	GEN-2	11/30/2012	Approval	Drawing
6007-PLN-PRI-39-62-3211	B-MT-444 Center Support Column	Drawing	4	Vendor	GEN-2	11/30/2012	Approval	Drawing
6007-PLN-PRI-39-62-3216	B-MT-444 24" Overflow	Drawing	4	Vendor	GEN-2	11/30/2012	Approval	Drawing
6007-PLN-PRI-39-62-3217	B-MT-444 8" Pump Recycle	Drawing	4	Vendor	GEN-2	11/30/2012	Approval	Drawing
6007-PLN-PRI-39-62-3218	B-MT-444 36" Multi-Bolt Shell Manway	Drawing	4	Vendor	GEN-2	11/30/2012	Approval	Drawing
6007-PLN-PRI-39-62-3219	B-MT-444 Nameplate Detail	Drawing	4	Vendor	GEN-2	11/30/2012	Approval	Drawing
6007-PLN-PRI-39-62-3220	B-MT-444 30" Roof Manway	Drawing	4	Vendor	GEN-2	11/30/2012	Approval	Drawing
6007-PLN-PRI-39-62-3221	B-MT-444 20" Gooseneck Vent	Drawing	4	Vendor	GEN-2	11/30/2012	Approval	Drawing
6007-PLN-PRI-39-62-3222	B-MT-444 Exterior Ladder	Drawing	4	Vendor	GEN-2	11/30/2012	Approval	Drawing
6007-PLN-PRI-39-62-3223	B-MT-444 Roof Handrail	Drawing	4	Vendor	GEN-2	11/30/2012	Approval	Drawing
6007-PLN-SFP-15-84-D100	Fire Protection Underground Details	Drawing	3	Vendor	GEN-2	12/5/2012	Approval	Drawing
6007-PLN-SFP-15-84-D100	Alpha Site Fire Protection Underground Plan	Drawing	3	Vendor	GEN-2	12/5/2012	Approval	Drawing
6007-PLN-PRI-39-62-1109	A-MT-402 Shell Layout	Drawing	6	Vendor	GEN-2	9/7/2012	Approval	Drawing
6007-PLN-PRI-39-62-1209	B-MT-402 Shell Layout	Drawing	6	Vendor	GEN-2	9/7/2012	Approval	Drawing

6007-PLN-PRI-39-62-1101	A-MT-402 Tank Cover Sheet	Drawing	8	Vendor	GEN-2	11/8/2012	Approval	Drawing
6007-PLN-PRI-39-62-1201	B-MT-402 Tank Cover Sheet	Drawing	8	Vendor	GEN-2	11/8/2012	Approval	Drawing
6007-PLN-PRI-39-62-1108	A-MT-402 Shell Details	Drawing	8	Vendor	GEN-2	11/8/2012	Approval	Drawing
6007-PLN-PRI-39-62-1208	B-MT-402 Shell Details	Drawing	8	Vendor	GEN-2	11/8/2012	Approval	Drawing
0187P-A1&A2	Tank Drawing Changes Memo	Drawing	0	Vendor	GEN-2	11/8/2012	Approval	
6007-PLN-PRI-39-62-1108A	A-MT-402 Insert Plate Details	Drawing	9	Vendor	GEN-2	12/17/2012	Approval	Drawing
6007-PLN-PRI-39-62-1208A	B-MT-402 Insert Plate Details	Drawing	9	Vendor	GEN-2	12/17/2012	Approval	Drawing
6007-PLN-PRI-39-62-1101	A-MT-402 Cover Sheet	Drawing	9	Vendor	GEN-2	12/17/2012	Approval	Drawing
6007-PLN-PRI-39-62-1201	B-MT-402 Cover Sheet	Drawing	9	Vendor	GEN-2	12/17/2012	Approval	Drawing
6007-VAR-PRI-ATM-1009	MT-402 Rev 9 Tank Change Memo	Drawing	0	Vendor	GEN-2	12/17/2012	Approval	
6007-PLN-SFP-15-84-D100	Fire Protection Underground Details	Drawing	4	Vendor	GEN-2	1/4/2013	Approval	Drawing
6007-PLN-SFP-15-84-U01A	Alpha Site Fire Protection Underground Plan	Drawing	4	Vendor	GEN-2	1/4/2013	Approval	Drawing
N/A	Response Letter to BV	Drawing	N/A	Vendor	GEN-2	1/7/2013	Approval	
0187-B1&B2	MT-424 Foundation Drawing Changes Memo	Drawing	0	Vendor	GEN-2	12/17/2012	Approval	
6007-CAL-PRI-39-52-2100	A-MT-424 Structural Calculations	Drawing	4	Vendor	GEN-2	12/17/2012	Approval	calculation
6007-CAL-PRI-39-52-2200	B-MT-424 Structural Calculations	Drawing	4	Vendor	GEN-2	12/17/2012	Approval	calculation
6007-PLN-PRI-39-52-2101	A-MT-424 Foundation Cover Sheet	Drawing	2	Vendor	GEN-2	12/17/2012	Approval	Drawing
6007-PLN-PRI-39-52-2106	A-MT-424 Anchor Chair Detail	Drawing	2	Vendor	GEN-2	12/17/2012	Approval	Drawing
6007-PLN-PRI-39-52-2201	B-MT-424 Foundation Cover Sheet	Drawing	3	Vendor	GEN-2	12/17/2012	Approval	Drawing
6007-PLN-PRI-39-52-2206	B-MT-424 Anchor Chair Detail	Drawing	3	Vendor	GEN-2	12/17/2012	Approval	Drawing
0187P-C1&C2	MT-444 Foundation Drawing Changes Memo	Drawing	0	Vendor	GEN-2	12/17/2012	Approval	
6007-CAL-PRI-39-52-3100	A-MT-444 Structural Calculations	Drawing	4	Vendor	GEN-2	12/17/2012	Approval	calculation
6007-CAL-PRI-39-52-3200	B-MT-444 Structural Calculation	Drawing	4	Vendor	GEN-2	12/17/2012	Approval	calculation
6007-PLN-PRI-39-52-3101	A-MT-444 Foundation Cover Sheet	Drawing	3	Vendor	GEN-2	12/17/2012	Approval	Drawing
6007-PLN-PRI-39-52-3106	A-MT-444 Anchor Chair Detail	Drawing	3	Vendor	GEN-2	12/17/2012	Approval	Drawing
6007-PLN-PRI-39-52-3201	B-MT-444 Foundation Cover Sheet	Drawing	3	Vendor	GEN-2	12/17/2012	Approval	Drawing
6007-PLN-PRI-39-52-3206	B-MT-444 Anchor Chair Detail	Drawing	3	Vendor	GEN-2	12/17/2012	Approval	Drawing
0187P-F1-4	HTF Overflow Tanks	Drawing		Vendor	GEN-2	1/18/2013	Approval	
6007-PLN-PRI-58-62-6101	Alpha Plant Htf Overflow Tank B-MT-204A Cover Sheet	Drawing	7	Vendor	GEN-2	12/18/2013	Approval	Drawing
6007-PLN-PRI-58-62-6107	Alpha Plant Htf Overflow Tank B-MT-204A Shell Details	Drawing	5	Vendor	GEN-2	12/23/2012	Approval	Drawing
6007-PLN-PRI-58-62-6117	Alpha Plant HTF Overflow Tank B-MT-204B Insulation Support Exterior Ladder	Drawing	5	Vendor	GEN-2	12/23/2012	Approval	Drawing
6007-PLN-PRI-58-62-6118	Alpha Plant Htf Overflow Tank B-MT-204A Roof Handrail	Drawing	6	Vendor	GEN-2	11/8/2012	Approval	Drawing
6007-PLN-PRI-58-62-6120	Alpha Plant Htf Overflow Tank B-MT-204A Insulation Support	Drawing	7	Vendor	GEN-2	12/18/2012	Approval	Drawing
6007-PLN-PRI-58-62-6201	Alpha Plant HTF Overflow Tank B-MT-204B Insulation Support Cover Sheet	Drawing	7	Vendor	GEN-2	12/18/2012	Approval	Drawing
6007-PLN-PRI-58-62-6207	Alpha Plant HTF Overflow Tank B-MT-204B Insulation Support Shell Details	Drawing	5	Vendor	GEN-2	12/23/2012	Approval	Drawing
6007-PLN-PRI-58-62-6217	Alpha Plant HTF Overflow Tank B-MT-204B Insulation Support Exterior Ladder	Drawing	5	Vendor	GEN-2	12/23/2012	Approval	Drawing
6007-PLN-PRI-58-62-6218	Alpha Plant HTF Overflow Tank B-MT-204B Insulation Support Roof Handrail	Drawing	6	Vendor	GEN-2	11/8/2012	Approval	Drawing
6007-PLN-PRI-58-62-6220	Beta Plant Htf Overflow Tank B-MT-204A Insulation Support	Drawing	7	Vendor	GEN-2	12/18/2013	Approval	Drawing
6007-PLN-PRI-58-62-6301	Beta Plant Htf Overflow Tank B-MT-204A Cover Sheet	Drawing	7	Vendor	GEN-2	12/18/2013	Approval	Drawing
6007-PLN-PRI-58-62-6307	Beta Plant Htf Overflow Tank B-MT-204A Shell Details	Drawing	5	Vendor	GEN-2	12/23/2012	Approval	Drawing
6007-PLN-PRI-58-62-6317	Beta Plant Htf Overflow Tank B-MT-204A Exterior Ladder	Drawing	5	Vendor	GEN-2	12/23/2012	Approval	Drawing
6007-PLN-PRI-58-62-6318	Beta Plant Htf Overflow Tank B-MT-204A Roof Handrail	Drawing	6	Vendor	GEN-2	11/8/2012	Approval	Drawing
6007-PLN-PRI-58-62-6320	Beta Plant Htf Overflow Tank B-MT-204A Insulation Support	Drawing	7	Vendor	GEN-2	12/18/2013	Approval	Drawing
6007-PLN-PRI-58-62-6401	Beta Plant HTF Overflow Tank B-MT-204B Insulation Support Cover Sheet	Drawing	7	Vendor	GEN-2	12/18/2013	Approval	Drawing
6007-PLN-PRI-58-62-6407	Beta Plant HTF Overflow Tank B-MT-204B Insulation Support Shell Details	Drawing	5	Vendor	GEN-2	12/23/2012	Approval	Drawing
6007-PLN-PRI-58-62-6417	Beta Plant HTF Overflow Tank B-MT-204B Insulation Support Exterior Ladder	Drawing	5	Vendor	GEN-2	12/23/2012	Approval	Drawing
6007-PLN-PRI-58-62-6418	Beta Plant HTF Overflow Tank B-MT-204B Insulation Support Roof Handrail	Drawing	6	Vendor	GEN-2	11/8/2012	Approval	Drawing
6007-PLN-PRI-58-62-6420	Beta Plant HTF Overflow Tank B-MT-204B Insulation Support	Drawing	7	Vendor	GEN-2	12/18/2013	Approval	Drawing
0187P-F1-4	HTF Overflow Tanks	Drawing	7	Vendor	GEN-2	1/18/2013	Approval	

6007-PLN-PRI-58-62-6101	Alpha Plant Htf Overflow Tank B-MT-204A Cover Sheet	Drawing	5	Vendor	GEN-2	1/18/2013	Approval	Drawing
6007-PLN-PRI-58-62-6107	Alpha Plant Htf Overflow Tank B-MT-204A Shell Details	Drawing	5	Vendor	GEN-2	1/18/2013	Approval	Drawing
6007-PLN-PRI-58-62-6117	Alpha Plant HTF Overflow Tank B-MT-204B Insulation Support Exterior Ladder	Drawing	6	Vendor	GEN-2	1/18/2013	Approval	Drawing
6007-PLN-PRI-58-62-6118	Alpha Plant Htf Overflow Tank B-MT-204A Roof Handrail	Drawing	7	Vendor	GEN-2	1/18/2013	Approval	Drawing
6007-PLN-PRI-58-62-6120	Alpha Plant Htf Overflow Tank B-MT-204A Insulation Support	Drawing	7	Vendor	GEN-2	1/18/2013	Approval	Drawing
6007-PLN-PRI-58-62-6201	Alpha Plant HTF Overflow Tank B-MT-204B Insulation Support Cover Sheet	Drawing	5	Vendor	GEN-2	1/18/2013	Approval	Drawing
6007-PLN-PRI-58-62-6207	Alpha Plant HTF Overflow Tank B-MT-204B Insulation Support Shell Details	Drawing	5	Vendor	GEN-2	1/18/2013	Approval	Drawing
6007-PLN-PRI-58-62-6217	Alpha Plant HTF Overflow Tank B-MT-204B Insulation Support Exterior Ladder	Drawing	6	Vendor	GEN-2	1/18/2013	Approval	Drawing
6007-PLN-PRI-58-62-6218	Alpha Plant HTF Overflow Tank B-MT-204B Insulation Support Roof Handrail	Drawing	7	Vendor	GEN-2	1/18/2013	Approval	Drawing
6007-PLN-PRI-58-62-6220	Beta Plant Htf Overflow Tank B-MT-204A Insulation Support	Drawing	7	Vendor	GEN-2	1/18/2013	Approval	Drawing
6007-PLN-PRI-58-62-6301	Beta Plant Htf Overflow Tank B-MT-204A Cover Sheet	Drawing	5	Vendor	GEN-2	1/18/2013	Approval	Drawing
6007-PLN-PRI-58-62-6307	Beta Plant Htf Overflow Tank B-MT-204A Shell Details	Drawing	5	Vendor	GEN-2	1/18/2013	Approval	Drawing
6007-PLN-PRI-58-62-6317	Beta Plant Htf Overflow Tank B-MT-204A Exterior Ladder	Drawing	6	Vendor	GEN-2	1/18/2013	Approval	Drawing
6007-PLN-PRI-58-62-6318	Beta Plant Htf Overflow Tank B-MT-204A Roof Handrail	Drawing	7	Vendor	GEN-2	1/18/2013	Approval	Drawing
6007-PLN-PRI-58-62-6320	Beta Plant Htf Overflow Tank B-MT-204A Insulation Support	Drawing	7	Vendor	GEN-2	1/18/2013	Approval	Drawing
6007-PLN-PRI-58-62-6401	Beta Plant HTF Overflow Tank B-MT-204B Insulation Support Cover Sheet	Drawing	5	Vendor	GEN-2	1/18/2013	Approval	Drawing
6007-PLN-PRI-58-62-6407	Beta Plant HTF Overflow Tank B-MT-204B Insulation Support Shell Details	Drawing	5	Vendor	GEN-2	1/18/2013	Approval	Drawing
6007-PLN-PRI-58-62-6417	Beta Plant HTF Overflow Tank B-MT-204B Insulation Support Exterior Ladder	Drawing	6	Vendor	GEN-2	1/18/2013	Approval	Drawing
6007-PLN-PRI-58-62-6418	Beta Plant HTF Overflow Tank B-MT-204B Insulation Support Roof Handrail	Drawing	7	Vendor	GEN-2	1/18/2013	Approval	Drawing
6007-PLN-PRI-58-62-6420	Beta Plant HTF Overflow Tank B-MT-204B Insulation Support	Drawing	7	Vendor	GEN-2	1/18/2013	Approval	Drawing
6007-PLN-FWE-21-54-0401	TYPICAL PIPE HANDRAIL, STAIRWAY AND GRATING DETAILS	Drawing	0	Vendor	GEN-2	2/8/2013	Approval	Drawing
6007-PLN-FWE-21-54-0402	TYPICAL PIPE HANDRAIL, STAIRWAY AND GRATING DETAILS	Drawing	0	Vendor	GEN-2	2/8/2013	Approval	Drawing
6007-PLN-FWE-21-54-0403	TYPICAL DETAILS	Drawing	0	Vendor	GEN-2	2/8/2013	Approval	Drawing
6007-PLN-FWE-21-52-0001	EQUIPMENTS - BASE LOADS	Drawing	H	Vendor	GEN-2	2/8/2013	Approval	Drawing
6007-PLN-FWE-21-52-0002	Structural Base Loads	Drawing	2	Vendor	GEN-2	2/8/2013	Approval	Drawing
6007-PLN-FWE-21-52-0003	Base Loads Table. Main & Auxiliary Platforms	Drawing	1	Vendor	GEN-2	2/8/2013	Approval	Drawing
6007-PLN-FWE-21-52-0004	Base Loads Table. Piping Supports	Drawing	1	Vendor	GEN-2	2/8/2013	Approval	Drawing
6007-PLN-FWE-21-52-0101	PIPE SUPPORTS BASE LOADS	Drawing	E	Vendor	GEN-2	2/8/2013	Approval	Drawing
6007-PLN-FWE-21-52-0102	PIPE SUPPORTS DETAILS BASE. PLATES AND ANCHOR RODS	Drawing	2	Vendor	GEN-2	2/8/2013	Approval	Drawing
6007-PLN-FWE-21-52-0201	Equipments Base Loads Details	Drawing	3	Vendor	GEN-2	2/8/2013	Approval	Drawing
6007-PLN-FWE-21-52-0202	Structural Base Loads Details	Drawing	3	Vendor	GEN-2	2/8/2013	Approval	Drawing
6007-PLN-FWE-21-52-0211	Equipment Base Plate Details	Drawing	1	Vendor	GEN-2	2/8/2013	Approval	Drawing
6007-PLN-FWE-21-54-0301	Main Structure	Drawing	2	Vendor	GEN-2	2/8/2013	Approval	Drawing
6007-PLN-FWE-21-54-0302	Main Structure. Bents 1 to 7	Drawing	1	Vendor	GEN-2	2/8/2013	Approval	Drawing
6007-PLN-FWE-21-54-0303	Main Structure. Bents A/M &B/N	Drawing	1	Vendor	GEN-2	2/8/2013	Approval	Drawing
6007-PLN-FWE-21-54-0304	Main Structure. Plan View	Drawing	1	Vendor	GEN-2	2/8/2013	Approval	Drawing
6007-PLN-FWE-21-54-0305	Auxiliary Structure. Platforms	Drawing	2	Vendor	GEN-2	2/8/2013	Approval	Drawing
6007-PLN-FWE-21-54-0306	MAIN STRUCTURE - P. V. - LEVELS +17' 11 3/4" +39' 6 3/4" & +50' 7 3/4"	Drawing	2	Vendor	GEN-2	2/8/2013	Approval	Drawing
6007-PLN-FWE-21-54-0307	MAIN STRUCTURE - PLANT VIEW - GRATING LEVELS	Drawing	2	Vendor	GEN-2	2/8/2013	Approval	Drawing
6007-PLN-FWE-21-54-0311	Auxiliary Structure. Piping Supports -I-	Drawing	1	Vendor	GEN-2	2/8/2013	Approval	Drawing
6007-PLN-FWE-21-54-0312	AUXILIARY STRUCTURE PIPPING SUPPORTS-2-	Drawing	1	Vendor	GEN-2	2/8/2013	Approval	Drawing
6007-PLN-FWE-21-54-0321	DRUM SADDLE FOR ERECTION - GENERAL ARRANGEMENT & SECTIONS	Drawing	1	Vendor	GEN-2	2/8/2013	Approval	Drawing
6007-PLN-FWE-21-54-0351	MAIN STRUCTURE - DETAILS SERIAL A & B	Drawing	1	Vendor	GEN-2	2/8/2013	Approval	Drawing
6007-PLN-FWE-21-54-0352	MAIN STRUCTURE - DETAILS SERIAL C - D & E	Drawing	1	Vendor	GEN-2	2/8/2013	Approval	Drawing
6007-CAL-FWE-21-61-0005	Feedwater and Steam Pipng Stress Analysis Report	Drawing	C	Vendor	GEN-2	2/8/2013	Approval	calculation
6007-CAL-FWE-21-61-0006	HTF Oil Pipng Stress Analysis Report	Drawing	C	Vendor	GEN-2	2/8/2013	Approval	calculation
6007-PLN-FWE-21-65-6001	PIPING GENERAL ARRANGEMENT AND TERMINAL POINTS	Drawing	G	Vendor	GEN-2	2/8/2013	Approval	Drawing
0187P-F1-4	Foundation Drawing	Drawing		Vendor	GEN-2	2/12/2013	Approval	
6007-PLN-PRI-58-52-6101	A-MT-204A Overflow Tanks Cover Sheet Alpha	Drawing	4	Vendor	GEN-2	2/12/2013	Approval	Drawing
6007-PLN-PRI-58-52-6105A	A-MT-204A Overflow Tanks Foundation Modifications Alpha	Drawing	4	Vendor	GEN-2	2/12/2013	Approval	Drawing

6007-PLN-PRI-58-52-6201	A-MT-204B Overflow Tanks Cover Sheet Alpha	Drawing	4	Vendor	GEN-2	2/12/2013	Approval	Drawing
6007-PLN-PRI-58-52-6205A	A-MT-204B Overflow Tanks Foundation Modifications Alpha	Drawing	4	Vendor	GEN-2	2/12/2013	Approval	Drawing
6007-PLN-PRI-58-52-6301	B-MT-204A Overflow Tanks Cover Sheet Beta	Drawing	4	Vendor	GEN-2	2/12/2013	Approval	Drawing
6007-PLN-PRI-58-52-6305A	B-MT-204B Overflow Tanks Foundation Modifications Beta	Drawing	4	Vendor	GEN-2	2/12/2013	Approval	Drawing
6007-PLN-PRI-58-52-6401	B-MT-204B Overflow Tanks Cover Sheet Beta	Drawing	4	Vendor	GEN-2	2/12/2013	Approval	Drawing
6007-PLN-PRI-58-52-6405A	B-MT-204B Overflow Tanks Foundation Modifications Beta	Drawing	4	Vendor	GEN-2	2/12/2013	Approval	Drawing
6007-PLN-SFP-15-84-U01B	Beta Site Fire Protection Underground Plan	Drawing	4	Vendor	GEN-2	2/25/2013	Approval	Drawing
6007-PLN-SFP-15-84-D001	Alpha & Beta Site Fire Protection Underground Details	Drawing	5	Vendor	GEN-2	2/25/2013	Approval	Drawing
6007-PLN-FWE-21-54-0401	TYPICAL PIPE HANDRAIL, STAIRWAY AND GRATING DETAILS	Drawing	0	Vendor	GEN-2	3/6/2013	Approval	Drawing
6007-PLN-FWE-21-54-0402	TYPICAL PIPE HANDRAIL, STAIRWAY AND GRATING DETAILS	Drawing	0	Vendor	GEN-2	3/6/2013	Approval	Drawing
6007-PLN-FWE-21-54-0403	TYPICAL DETAILS	Drawing	0	Vendor	GEN-2	3/6/2013	Approval	Drawing
6007-PLN-FWE-21-52-0002	Structural Base Loads	Drawing	2	Vendor	GEN-2	3/6/2013	Approval	Drawing
6007-PLN-FWE-21-52-0003	Base Loads Table. Main & Auxiliary Platforms	Drawing	1	Vendor	GEN-2	3/6/2013	Approval	Drawing
6007-PLN-FWE-21-52-0004	Base Loads Table. Piping Supports	Drawing	1	Vendor	GEN-2	3/6/2013	Approval	Drawing
6007-PLN-FWE-21-52-0102	PIPE SUPPORTS DETAILS BASE. PLATES AND ANCHOR RODS	Drawing	2	Vendor	GEN-2	3/6/2013	Approval	Drawing
6007-PLN-FWE-21-52-0201	Equipments Base Loads Details	Drawing	3	Vendor	GEN-2	3/6/2013	Approval	Drawing
6007-PLN-FWE-21-52-0202	Structural Base Loads Details	Drawing	3	Vendor	GEN-2	3/6/2013	Approval	Drawing
6007-PLN-FWE-21-52-0211	Equipment Base Plate Details	Drawing	1	Vendor	GEN-2	3/6/2013	Approval	Drawing
6007-PLN-FWE-21-54-0301	Main Structure	Drawing	2	Vendor	GEN-2	3/6/2013	Approval	Drawing
6007-PLN-FWE-21-54-0302	Main Structure. Bents 1 to 7	Drawing	1	Vendor	GEN-2	3/6/2013	Approval	Drawing
6007-PLN-FWE-21-54-0303	Main Structure. Bents A/M &B/N	Drawing	1	Vendor	GEN-2	3/6/2013	Approval	Drawing
6007-PLN-FWE-21-54-0304	Main Structure. Plan View	Drawing	1	Vendor	GEN-2	3/6/2013	Approval	Drawing
6007-PLN-FWE-21-54-0305	Auxiliary Structure. Platforms	Drawing	2	Vendor	GEN-2	3/6/2013	Approval	Drawing
6007-PLN-FWE-21-54-0306	MAIN STRUCTURE - P. V. - LEVELS +17' 11 3/4" +39' 6 3/4" & +50' 7 3/4"	Drawing	2	Vendor	GEN-2	3/6/2013	Approval	Drawing
6007-PLN-FWE-21-54-0307	MAIN STRUCTURE - PLANT VIEW - GRATING LEVELS	Drawing	2	Vendor	GEN-2	3/6/2013	Approval	Drawing
6007-PLN-FWE-21-54-0311	Auxiliary Structure. Piping Supports -I-	Drawing	1	Vendor	GEN-2	3/6/2013	Approval	Drawing
6007-PLN-FWE-21-54-0312	AUXILIARY STRUCTURE PIPPING SUPPORTS-2-	Drawing	1	Vendor	GEN-2	3/6/2013	Approval	Drawing
6007-PLN-FWE-21-54-0321	DRUM SADDLE FOR ERECTION - GENERAL ARRANGEMENT & SECTIONS	Drawing	1	Vendor	GEN-2	3/6/2013	Approval	Drawing
6007-PLN-FWE-21-54-0351	MAIN STRUCTURE - DETAILS SERIAL A & B	Drawing	1	Vendor	GEN-2	3/6/2013	Approval	Drawing
6007-PLN-FWE-21-54-0352	MAIN STRUCTURE - DETAILS SERIAL C - D & E	Drawing	1	Vendor	GEN-2	3/6/2013	Approval	Drawing
2804-CAL-12-2-15-02	FWE Evaporator Rods Technical Note	Drawing	0	Vendor	GEN-2	3/6/2013	Approval	calculation
6007-CAL-FWE-21-52-0001	Equipmement base plates, guides & anchor bolts Aci calculation	Drawing	C	Vendor	GEN-2	3/6/2013	Approval	calculation
6007-PLN-SFP-15-84-D001	Alpha and Beta Site Fire Proctection Underground Details	Drawing	5	Vendor	GEN-2	3/12/2013	Approval	Drawing
6007-PLN-SFP-15-84-U01B	Beta Site Fire Protection Underground Plan	Drawing	4	Vendor	GEN-2	3/12/2013	Approval	Drawing
6007-PLN-PRI-39-62-3102	A-MT-444 Annular Layout	Drawing	0	Vendor	GEN-2	3/12/2013	Approval	Drawing
6007-PLN-SCT-14-62-0117	FPS Drawing for Alpha Tower (1914FP-100)	Drawing	0	Vendor	GEN-2	3/21/2013	Approval	Drawing
6007-PLN-SCT-14-62-0211	FPS Drawing for Beta Tower (1914FP-101)	Drawing	0	Vendor	GEN-2	3/21/2013	Approval	Drawing
6007-CAL-SCT-14-62-0007	FPS Calculations for Alpha Tower (1914FP-100A)	Drawing	0	Vendor	GEN-2	3/21/2013	Approval	calculation
6007-CAL-SCT-14-62-0008	FPS Calculations for Beta Tower (1914FP-100B)	Drawing	0	Vendor	GEN-2	3/21/2013	Approval	calculation
6007-HDD-SCT-14-62-0007	FPS Equipment Data Alpha and Beta Towers (ME-1914)	Drawing	0	Vendor	GEN-2	3/21/2013	Approval	Data Sheet
6007-PLN-LEF-12-54-0021	Geometric Def of Rac plan detail drawings	Drawing	4	Vendor	GEN-2	3/22/2013	Approval	Drawing
6007-PLN-LEF-12-54-0022	Geometric Def of ourdoor Rac plan detail drawings	Drawing	2	Vendor	GEN-2	3/22/2013	Approval	Drawing
6007-PLN-LEF-12-54-0031	Geometric Def of Rac elevations	Drawing	4	Vendor	GEN-2	3/22/2013	Approval	Drawing
6007-PLN-LEF-12-54-0032	Geometric Def of Rac elevations	Drawing	4	Vendor	GEN-2	3/22/2013	Approval	Drawing
6007-PLN-LEF-12-54-0033	Geometric Def of Rac elevations	Drawing	4	Vendor	GEN-2	3/22/2013	Approval	Drawing
6007-PLN-LEF-12-54-0034	Geometric Def of Rac elevations	Drawing	4	Vendor	GEN-2	3/22/2013	Approval	Drawing
6007-PLN-LEF-12-54-0035	Geometric Def of Rac elevations	Drawing	4	Vendor	GEN-2	3/22/2013	Approval	Drawing
6007-PLN-LEF-12-54-0036	Geometric Def of ourdoor Rac elevations	Drawing	2	Vendor	GEN-2	3/22/2013	Approval	Drawing
6007-PLN-LEF-12-54-0037	Geometric Def of ourdoor Rac elevations	Drawing	2	Vendor	GEN-2	3/22/2013	Approval	Drawing
6007-PLN-LEF-12-54-0038	Geometric Def of ourdoor Rac elevations	Drawing	2	Vendor	GEN-2	3/22/2013	Approval	Drawing

6007-PLN-LEF-12-54-0039	Geometric Def of ourdoor Rac elevations	Drawing	3	Vendor	GEN-2	3/22/2013	Approval	Drawing
6007-PLN-LEF-12-54-0041	Geometric Def of Rac sections	Drawing	5	Vendor	GEN-2	3/22/2013	Approval	Drawing
6007-PLN-LEF-12-54-0042	Geometric Def of Rac sections	Drawing	5	Vendor	GEN-2	3/22/2013	Approval	Drawing
6007-PLN-LEF-12-54-0043	Geometric Def of ourdoor Rac sections	Drawing	3	Vendor	GEN-2	3/22/2013	Approval	Drawing
6007-PLN-LEF-12-54-0051	Geometric Def of Rac details of construction	Drawing	3	Vendor	GEN-2	3/22/2013	Approval	Drawing
6007-PLN-LEF-12-54-0052	Geometric Def of Rac details of construction	Drawing	2	Vendor	GEN-2	3/22/2013	Approval	Drawing
6007-PLN-LEF-12-54-0053	Geometric Def of Rac details of construction	Drawing	0	Vendor	GEN-2	3/22/2013	Approval	Drawing
6007-CAL-AGE-58-52-6500-R	Calculation report for Central plant. HTF main pipe support foundation. beta plant	Drawing	3	Vendor	GEN-2	3/21/2013	Approval	calculation
6007-LIS-AGE-58-52-6500-R0	Coordiantes list for Central plant. HTF main pipe support foundation. beta plant	LIst	3	Vendor	GEN-2	3/21/2013	Approval	List
6007-PLN-AGE-58-52-6500-R0	Central Plant, Main HTF Pipes Support Foundations. Cover sheet	Drawing	3	Vendor	GEN-2	3/21/2013	Approval	Drawing
6007-PLN-AGE-58-52-6501-R0	Central Plant, Main HTF Pipes Support Foundations. General Notes	Drawing	2	Vendor	GEN-2	3/21/2013	Approval	Drawing
6007-PLN-AGE-58-52-6502-R0	Central Plant, Main HTF Pipes Support Foundations. Foundations plan	Drawing	2	Vendor	GEN-2	3/21/2013	Approval	Drawing
6007-PLN-AGE-58-52-6503-R0	Central Plant, Main HTF Pipes Support Foundations. Sections & details I	Drawing	3	Vendor	GEN-2	3/21/2013	Approval	Drawing
6007-PLN-AGE-58-52-6504-R0	Central Plant, Main HTF Pipes Support Foundations. Sections & details II	Drawing	3	Vendor	GEN-2	3/21/2013	Approval	Drawing
6007-CAL-AGE-58-52-6505-R	Calculation report for Central plant. HTF main sleepers-pipes supp. II. beta plant	Drawing	2	Vendor	GEN-2	3/21/2013	Approval	calculation
6007-LIS-AGE-58-52-6505-R0	Coordinates list for Central plant. HTF main sleepers-pipes supp. II. beta plant	LIst	2	Vendor	GEN-2	3/21/2013	Approval	List
6007-PLN-AGE-58-52-6505-R0	Central Plant, Main HTF Pipes Support Foundations II. Cover sheet	Drawing	2	Vendor	GEN-2	3/21/2013	Approval	Drawing
6007-PLN-AGE-58-52-6506-R0	Central Plant, Main HTF Pipes Support Foundations II. General Notes	Drawing	2	Vendor	GEN-2	3/21/2013	Approval	Drawing
6007-PLN-AGE-58-52-6507-R0	Central Plant, Main HTF Pipes Support Foundations II. Foundations plan	Drawing	2	Vendor	GEN-2	3/21/2013	Approval	Drawing
6007-PLN-AGE-58-52-6508-R0	Central Plant, Main HTF Pipes Support Foundations II. Sections & details	Drawing	2	Vendor	GEN-2	3/21/2013	Approval	Drawing
6007-PLN-PRI-58-62-6101	A-MT-204A Tank Cover Sheet	Drawing	9	Vendor	GEN-2	3/27/2013	Approval	Drawing
6007-PLN-PRI-58-62-6108	A-MT-204A Shell Layout	Drawing	9	Vendor	GEN-2	3/27/2013	Approval	Drawing
6007-PLN-PRI-58-62-6108A	A-MT-204A Fire Protection Clip Shell Layout	Drawing	9	Vendor	GEN-2	3/27/2013	Approval	Drawing
6007-PLN-PRI-58-62-6121	A-MT-204A Fire Protection Clip	Drawing	9	Vendor	GEN-2	3/27/2013	Approval	Drawing
6007-PLN-PRI-58-62-6201	A-MT-204B Tank Cover Sheet	Drawing	9	Vendor	GEN-2	3/27/2013	Approval	Drawing
6007-PLN-PRI-58-62-6208	A-MT-204B Shell Layout	Drawing	9	Vendor	GEN-2	3/27/2013	Approval	Drawing
6007-PLN-PRI-58-62-6208A	A-MT-204B Fire Protection Clip Shell Layout	Drawing	9	Vendor	GEN-2	3/27/2013	Approval	Drawing
6007-PLN-PRI-58-62-6221	A-MT-204B Fire Protection Clip	Drawing	9	Vendor	GEN-2	3/27/2013	Approval	Drawing
6007-PLN-PRI-58-62-6301	B-MT-204A Tank Cover Sheet	Drawing	9	Vendor	GEN-2	3/27/2013	Approval	Drawing
6007-PLN-PRI-58-62-6308	B-MT-204A Shell Layout	Drawing	9	Vendor	GEN-2	3/27/2013	Approval	Drawing
6007-PLN-PRI-58-62-6308A	B-MT-204A Fire Protection Clip Shell Layout	Drawing	9	Vendor	GEN-2	3/27/2013	Approval	Drawing
6007-PLN-PRI-58-62-6321	B-MT-204A Fire Protection Clip	Drawing	9	Vendor	GEN-2	3/27/2013	Approval	Drawing
6007-PLN-PRI-58-62-6401	B-MT-204B Tank Cover Sheet	Drawing	9	Vendor	GEN-2	3/27/2013	Approval	Drawing
6007-PLN-PRI-58-62-6408	B-MT-204B Shell Layout	Drawing	9	Vendor	GEN-2	3/27/2013	Approval	Drawing
6007-PLN-PRI-58-62-6408A	B-MT-204B Fire Protection Clip Shell Layout	Drawing	9	Vendor	GEN-2	3/27/2013	Approval	Drawing
6007-PLN-PRI-58-62-6421	B-MT-204B Fire Protection Clip	Drawing	9	Vendor	GEN-2	3/27/2013	Approval	Drawing
N/A	Fire Clip Analysis Calculation	Drawing	0	Vendor	GEN-2	3/27/2013	Approval	
N/A	Overflow Tank Changes Memo	Drawing	0	Vendor	GEN-2	3/27/2013	Approval	
S2.1	General Circuit Breaker Platform Foundation and Framing Plans	Drawing	2	Vendor	GEN-2	3/27/2013	Approval	
6007-PLN-PRI-58-62-6101	A-MT-204A Tank Cover Sheet	Drawing	10	Vendor	GEN-2	4/8/2013	Approval	Drawing
6007-PLN-PRI-58-62-6108	A-MT-204A Shell Layout	Drawing	9	Vendor	GEN-2	4/8/2013	Approval	Drawing
6007-PLN-PRI-58-62-6108A	A-MT-204A Fire Protection Clip Shell Layout	Drawing	10	Vendor	GEN-2	4/8/2013	Approval	Drawing
6007-PLN-PRI-58-62-6121	A-MT-204A Fire Protection Clip	Drawing	10	Vendor	GEN-2	4/8/2013	Approval	Drawing
6007-PLN-PRI-58-62-6201	A-MT-204B Tank Cover Sheet	Drawing	10	Vendor	GEN-2	4/8/2013	Approval	Drawing
6007-PLN-PRI-58-62-6208	A-MT-204B Shell Layout	Drawing	9	Vendor	GEN-2	4/8/2013	Approval	Drawing
6007-PLN-PRI-58-62-6208A	A-MT-204B Fire Protection Clip Shell Layout	Drawing	10	Vendor	GEN-2	4/8/2013	Approval	Drawing
6007-PLN-PRI-58-62-6221	A-MT-204B Fire Protection Clip	Drawing	10	Vendor	GEN-2	4/8/2013	Approval	Drawing
6007-PLN-PRI-58-62-6301	B-MT-204A Tank Cover Sheet	Drawing	10	Vendor	GEN-2	4/8/2013	Approval	Drawing
6007-PLN-PRI-58-62-6308	B-MT-204A Shell Layout	Drawing	9	Vendor	GEN-2	4/8/2013	Approval	Drawing
6007-PLN-PRI-58-62-6308A	B-MT-204A Fire Protection Clip Shell Layout	Drawing	10	Vendor	GEN-2	4/8/2013	Approval	Drawing
6007-PLN-PRI-58-62-6321	B-MT-204A Fire Protection Clip	Drawing	10	Vendor	GEN-2	4/8/2013	Approval	Drawing

6007-PLN-PRI-58-62-6401	B-MT-204B Tank Cover Sheet	Drawing	10	Vendor	GEN-2	4/8/2013	Approval	Drawing
6007-PLN-PRI-58-62-6408	B-MT-204B Shell Layout	Drawing	9	Vendor	GEN-2	4/8/2013	Approval	Drawing
6007-PLN-PRI-58-62-6408A	B-MT-204B Fire Protection Clip Shell Layout	Drawing	10	Vendor	GEN-2	4/8/2013	Approval	Drawing
6007-PLN-PRI-58-62-6421	B-MT-204B Fire Protection Clip	Drawing	10	Vendor	GEN-2	4/8/2013	Approval	Drawing
0187P-F1-4 MT-204 HTF	Fire Clip Analysis Calculation	Drawing	0	Vendor	GEN-2	4/8/2013	Approval	
0187P-F1-4-MT-204 HTF	Fire Protection Clip Weld Design	Drawing	0	Vendor	GEN-2	4/8/2013	Approval	
6007-CAL-FWE-21-61-0006	HTF Oil Pipng Stress Analysis Report	Drawing	0	Vendor	GEN-2	4/15/2013	Approval	calculation
6007-PLN-FWE-21-65-6001	PIPING GENERAL ARRANGEMENT AND TERMINAL POINTS	Drawing	0	Vendor	GEN-2	4/15/2013	Approval	Drawing
6007-PLN-FWE-21-52-0102	PIPE SUPPORTS DETAILS BASE. PLATES AND ANCHOR RODS	Drawing	3	Vendor	GEN-2	4/15/2013	Approval	Drawing
6007-PLN-FWE-21-54-0401	TYPICAL PIPE HANDRAIL, STAIRWAY AND GRATING DETAILS	Drawing	1	Vendor	GEN-2	4/15/2013	Approval	Drawing
6007-PLN-FWE-21-54-0402	TYPICAL PIPE HANDRAIL, STAIRWAY AND GRATING DETAILS	Drawing	1	Vendor	GEN-2	4/15/2013	Approval	Drawing
6007-PLN-FWE-21-54-0403	TYPICAL DETAILS	Drawing	1	Vendor	GEN-2	4/15/2013	Approval	Drawing
6007-PLN-FWE-21-52-0002	Structural Base Loads	Drawing	3	Vendor	GEN-2	4/15/2013	Approval	Drawing
6007-PLN-FWE-21-52-0003	Base Loads Table. Main & Auxiliary Platforms	Drawing	2	Vendor	GEN-2	4/15/2013	Approval	Drawing
6007-PLN-FWE-21-52-0004	Base Loads Table. Piping Supports	Drawing	2	Vendor	GEN-2	4/15/2013	Approval	Drawing
6007-PLN-FWE-21-52-0201	Equipments Base Loads Details	Drawing	4	Vendor	GEN-2	4/15/2013	Approval	Drawing
6007-PLN-FWE-21-52-0202	Structural Base Loads Details	Drawing	4	Vendor	GEN-2	4/15/2013	Approval	Drawing
6007-PLN-FWE-21-52-0211	Equipment Base Plate Details	Drawing	2	Vendor	GEN-2	4/15/2013	Approval	Drawing
6007-PLN-FWE-21-54-0301	Main Structure	Drawing	4	Vendor	GEN-2	4/15/2013	Approval	Drawing
6007-PLN-FWE-21-54-0302	Main Structure. Bents 1 to 7	Drawing	2	Vendor	GEN-2	4/15/2013	Approval	Drawing
6007-PLN-FWE-21-54-0303	Main Structure. Bents A/M &B/N	Drawing	2	Vendor	GEN-2	4/15/2013	Approval	Drawing
6007-PLN-FWE-21-54-0304	Main Structure. Plan View	Drawing	2	Vendor	GEN-2	4/15/2013	Approval	Drawing
6007-PLN-FWE-21-54-0305	Auxiliary Structure. Platforms	Drawing	4	Vendor	GEN-2	4/15/2013	Approval	Drawing
6007-PLN-FWE-21-54-0306	MAIN STRUCTURE - P. V. - LEVELS +17' 11 3/4" +39' 6 3/4" & +50' 7 3/4"	Drawing	4	Vendor	GEN-2	4/15/2013	Approval	Drawing
6007-PLN-FWE-21-54-0307	MAIN STRUCTURE - PLANT VIEW - GRATING LEVELS	Drawing	3	Vendor	GEN-2	4/15/2013	Approval	Drawing
6007-PLN-FWE-21-54-0311	Auxiliary Structure. Piping Supports -I-	Drawing	2	Vendor	GEN-2	4/15/2013	Approval	Drawing
6007-PLN-FWE-21-54-0312	AUXILIARY STRUCTURE PIPPING SUPPORTS-2-	Drawing	2	Vendor	GEN-2	4/15/2013	Approval	Drawing
6007-PLN-FWE-21-54-0321	DRUM SADDLE FOR ERECTION - GENERAL ARRANGEMENT & SECTIONS	Drawing	2	Vendor	GEN-2	4/15/2013	Approval	Drawing
6007-PLN-FWE-21-54-0351	MAIN STRUCTURE - DETAILS SERIAL A & B	Drawing	2	Vendor	GEN-2	4/15/2013	Approval	Drawing
6007-PLN-FWE-21-54-0352	MAIN STRUCTURE - DETAILS SERIAL C - D & E	Drawing	2	Vendor	GEN-2	4/15/2013	Approval	Drawing
2804-CAL-12-2-15-01	Structural Engineering Design Report_13_04_05	Drawing	1	Vendor	GEN-2	4/15/2013	Approval	calculation
2804-CAL-12-2-15-02	n/a	Drawing	0	Vendor	GEN-2	4/15/2013	Approval	calculation
6007 -PLN -AGE -58 -52 -2485	Cover sheet	Drawing	2	Vendor	GEN-2	4/10/2013	Approval	Drawing
6007 -PLN -AGE -58 -52 -2486	General notes	Drawing	2	Vendor	GEN-2	4/10/2013	Approval	Drawing
6007 -PLN -AGE -58 -52 -2487	Basin layout	Drawing	2	Vendor	GEN-2	4/10/2013	Approval	Drawing
6007 -PLN -AGE -58 -52 -2488	Sections & staircase details	Drawing	3	Vendor	GEN-2	4/10/2013	Approval	Drawing
6007 -PLN -AGE -58 -52 -2489	Sump and trench details	Drawing	2	Vendor	GEN-2	4/10/2013	Approval	Drawing
6007 -PLN -AGE -58 -52 -2490	Pump A -MP -204A foundation plan, sections & details	Drawing	2	Vendor	GEN-2	4/10/2013	Approval	Drawing
6007 -PLN -AGE -58 -52 -2491	Tank A -MV-206A foundation plan, sections & details	Drawing	3	Vendor	GEN-2	4/10/2013	Approval	Drawing
6007 -PLN -AGE -58 -52 -2492	Pedestal details & coordinates	Drawing	2	Vendor	GEN-2	4/10/2013	Approval	Drawing
6007 -CAL -AGE -58 -52 -2481	Overflow basin calc report	Drawing	0	Vendor	GEN-2	4/10/2013	Approval	calculation
6007 -PLN -AGE -58 -52 -6485	Cover sheet	Drawing	2	Vendor	GEN-2	4/10/2013	Approval	Drawing
6007 -PLN -AGE -58 -52 -6486	General notes	Drawing	2	Vendor	GEN-2	4/10/2013	Approval	Drawing
6007 -PLN -AGE -58 -52 -6487	Basin layout	Drawing	2	Vendor	GEN-2	4/10/2013	Approval	Drawing
6007 -PLN -AGE -58 -52 -6488	Sections & staircase details	Drawing	3	Vendor	GEN-2	4/10/2013	Approval	Drawing
6007 -PLN -AGE -58 -52 -6489	Sump and trench details	Drawing	2	Vendor	GEN-2	4/10/2013	Approval	Drawing
6007 -PLN -AGE -58 -52 -6490	Pump A -MP -204A foundation plan, sections & details	Drawing	2	Vendor	GEN-2	4/10/2013	Approval	Drawing
6007 -PLN -AGE -58 -52 -6491	Tank A -MV-206A foundation plan, sections & details	Drawing	3	Vendor	GEN-2	4/10/2013	Approval	Drawing
6007 -PLN -AGE -58 -52 -6492	Pedestal details & coordinates	Drawing	2	Vendor	GEN-2	4/10/2013	Approval	Drawing
6007 -CAL -AGE -58 -52 -6481	Overflow basin calc report	Drawing	0	Vendor	GEN-2	4/10/2013	Approval	calculation
6007 -CAL -AGE -58 -52 -2491	Pump foundation calc. Report	Drawing	2	Vendor	GEN-2	4/10/2013	Approval	calculation

RESPONSES TO BV	na	Drawing		Vendor	GEN-2	4/10/2013	Approval	
6007-PLN-AGE-41-52-4000-R0	Cover sheet	Drawing	2	Vendor	GEN-2	4/10/2013	Approval	Drawing
6007-PLN-AGE-41-52-4020-R0	General notes	Drawing	2	Vendor	GEN-2	4/10/2013	Approval	Drawing
6007-PLN-AGE-41-52-4040-R0	Foundation Plan	Drawing	3	Vendor	GEN-2	4/10/2013	Approval	Drawing
6007-CAL-AGE-41-52-4000-R	Calculation report	Drawing	4	Vendor	GEN-2	4/10/2013	Approval	calculation
6007-PLN-AGE-41-52-8000-R0	Cover sheet	Drawing	2	Vendor	GEN-2	4/10/2013	Approval	Drawing
6007-PLN-AGE-41-52-8020-R0	General notes	Drawing	2	Vendor	GEN-2	4/10/2013	Approval	Drawing
6007-PLN-AGE-41-52-8040-R0	Foundation Plan	Drawing	3	Vendor	GEN-2	4/10/2013	Approval	Drawing
6007-CAL-AGE-41-52-8000-R	Calculation report	Drawing	4	Vendor	GEN-2	4/10/2013	Approval	calculation
6007-CAL-AGE-41-54-4000	Calculation report	Drawing	2	Vendor	GEN-2	4/10/2013	Approval	calculation
6007-CAL-AGE-41-54-8000	Calculation report	Drawing	2	Vendor	GEN-2	4/10/2013	Approval	calculation
6007-PLN-AGE-41-54-4000-R0	Cover sheet	Drawing	2	Vendor	GEN-2	4/10/2013	Approval	Drawing
6007-PLN-AGE-41-54-4020-R0	General notes	Drawing	2	Vendor	GEN-2	4/10/2013	Approval	Drawing
6007-PLN-AGE-41-54-4040-R0	Structure Plan	Drawing	2	Vendor	GEN-2	4/10/2013	Approval	Drawing
6007-PLN-AGE-41-54-8000-R0	Cover sheet	Drawing	2	Vendor	GEN-2	4/10/2013	Approval	Drawing
6007-PLN-AGE-41-54-8020-R0	General notes	Drawing	2	Vendor	GEN-2	4/10/2013	Approval	Drawing
6007-PLN-AGE-41-54-8040-R0	Structure Plan	Drawing	2	Vendor	GEN-2	4/10/2013	Approval	Drawing
6007-PLN-AGE-41-57-4000-R0	Architectural details	Drawing	0	Vendor	GEN-2	4/10/2013	Approval	Drawing
6007-PLN-AGE-41-57-8000-R0	Architectural details	Drawing	0	Vendor	GEN-2	4/10/2013	Approval	Drawing
6007-PLN-AGE-25-54-4000	Cover sheet	Drawing	8	Vendor	GEN-2	4/15/2013	Approval	Drawing
6007-PLN-AGE-25-54-4020	General notes	Drawing	6	Vendor	GEN-2	4/15/2013	Approval	Drawing
6007-PLN-AGE-25-54-4040	At Elevation 2073 and 2078	Drawing	8	Vendor	GEN-2	4/15/2013	Approval	Drawing
6007-PLN-AGE-25-54-4041	At Elevation 2086 and 2091	Drawing	7	Vendor	GEN-2	4/15/2013	Approval	Drawing
6007-PLN-AGE-25-54-4042	At Elevation 2098	Drawing	7	Vendor	GEN-2	4/15/2013	Approval	Drawing
6007-PLN-AGE-25-54-4043	At Elevation 2114	Drawing	7	Vendor	GEN-2	4/15/2013	Approval	Drawing
6007-PLN-AGE-25-54-4044	At Elevation 2123;2139 and 2150	Drawing	7	Vendor	GEN-2	4/15/2013	Approval	Drawing
6007-PLN-AGE-25-54-4045	Elevations, sheet 1	Drawing	8	Vendor	GEN-2	4/15/2013	Approval	Drawing
6007-PLN-AGE-25-54-4046	Elevations, sheet 2	Drawing	7	Vendor	GEN-2	4/15/2013	Approval	Drawing
6007-PLN-AGE-25-54-4047	Elevations, sheet 3	Drawing	8	Vendor	GEN-2	4/15/2013	Approval	Drawing
6007-PLN-AGE-25-54-4048	Misc. Details	Drawing	7	Vendor	GEN-2	4/15/2013	Approval	Drawing
6007-PLN-AGE-25-54-4049	Anchor plates	Drawing	4	Vendor	GEN-2	4/15/2013	Approval	Drawing
6007-PLN-AGE-25-54-4050	Stairs	Drawing	4	Vendor	GEN-2	4/15/2013	Approval	Drawing
6007-PLN-AGE-25-54-4051	Columns schedule	Drawing	1	Vendor	GEN-2	4/15/2013	Approval	Drawing
6007-CAL-AGE-25-54-4000	Calculation report	Drawing	5	Vendor	GEN-2	4/15/2013	Approval	calculation
6007-PLN-AGE-25-54-8000	Cover sheet	Drawing	6	Vendor	GEN-2	4/15/2013	Approval	Drawing
6007-PLN-AGE-25-54-8020	General notes	Drawing	5	Vendor	GEN-2	4/15/2013	Approval	Drawing
6007-PLN-AGE-25-54-8040	At Elevation 2081 and 2086	Drawing	6	Vendor	GEN-2	4/15/2013	Approval	Drawing
6007-PLN-AGE-25-54-8041	At Elevation 2094 and 2099	Drawing	5	Vendor	GEN-2	4/15/2013	Approval	Drawing
6007-PLN-AGE-25-54-8042	At Elevation 2116	Drawing	5	Vendor	GEN-2	4/15/2013	Approval	Drawing
6007-PLN-AGE-25-54-8043	At Elevation 2122	Drawing	5	Vendor	GEN-2	4/15/2013	Approval	Drawing
6007-PLN-AGE-25-54-8044	At Elevation 2131;2146 and 2158	Drawing	5	Vendor	GEN-2	4/15/2013	Approval	Drawing
6007-PLN-AGE-25-54-8045	Elevations, sheet 1	Drawing	6	Vendor	GEN-2	4/15/2013	Approval	Drawing
6007-PLN-AGE-25-54-8046	Elevations, sheet 2	Drawing	6	Vendor	GEN-2	4/15/2013	Approval	Drawing
6007-PLN-AGE-25-54-8047	Elevations, sheet 3	Drawing	6	Vendor	GEN-2	4/15/2013	Approval	Drawing
6007-PLN-AGE-25-54-8048	Misc. Details	Drawing	7	Vendor	GEN-2	4/15/2013	Approval	Drawing
6007-PLN-AGE-25-54-8049	Anchor plates	Drawing	4	Vendor	GEN-2	4/15/2013	Approval	Drawing
6007-PLN-AGE-25-54-8050	Stairs	Drawing	4	Vendor	GEN-2	4/15/2013	Approval	Drawing
6007-PLN-AGE-25-54-8051	Columns schedule	Drawing	1	Vendor	GEN-2	4/15/2013	Approval	Drawing
6007-CAL-AGE-25-54-8000	Calculation report	Drawing	5	Vendor	GEN-2	4/15/2013	Approval	calculation
STG structure foundations BV	STG structure foundations BV	Drawing	n/a	Vendor	GEN-2	4/15/2013	Approval	
6007-CAL-ATD-23-33-E048	Mojave Substations Grounding Calculations	Drawing	0	Vendor	GEN-2	4/15/2013	Approval	calculation

6007-PLN-ATD-23-33-E041	Grounding Plan	Drawing	1	Vendor	GEN-2	4/15/2013	Approval	Drawing
6007-PLN-ATD-23-33-E042	Grounding Details	Drawing	1	Vendor	GEN-2	4/15/2013	Approval	Drawing
6007-PLN-ATD-23-33-E051	Duct Bank and Conduit Plan	Drawing	1	Vendor	GEN-2	4/15/2013	Approval	Drawing
6007-PLN-ATD-23-32-E052	Duct Bank and Conduit Details	Drawing	0	Vendor	GEN-2	4/15/2013	Approval	Drawing
6007-PLN-ATD-23-57-C091	Site preparation	Drawing	0	Vendor	GEN-2	4/15/2013	Approval	Drawing
BV Comments-ATD struct 1-8.	BV Comments-ATD struct 1-8.00 PC4 april12 grounding	Drawing	na	Vendor	GEN-2	4/15/2013	Approval	
6007-PLN-ATD-23-02-E101	general installation relay house	Drawing	na	Vendor	GEN-2	4/15/2013	Approval	Drawing
6007-INF-ATD-23-50-E002	MPT firewall detail	Drawing	A	Vendor	GEN-2	4/15/2013	Approval	Report
6007-CAL-ATD-23-52-C070.R	Other Foundation Calculations	Drawing	E	Vendor	GEN-2	4/15/2013	Approval	calculation
6007-PLN-ATD-23-57-C074.Re	Foundation Det. Fire wall MPT1	Drawing	2	Vendor	GEN-2	4/15/2013	Approval	Drawing
BV comments Mojave SEfirewa	Abengoa T&D responses	Drawing	na	Vendor	GEN-2	4/15/2013	Approval	
Abengoa Mojave Solar memo	Explanation Memo #2	Drawing	na	Vendor	GEN-2	4/15/2013	Approval	
Abengoa T&D memo MPT Fire	Explanation Memo #1	Drawing	na	Vendor	GEN-2	4/15/2013	Approval	
6007-CAL-FWE-21-61-0005	Feed water and Steam Piping Stress Analysis Report	Drawing	0	Vendor	GEN-2	4/16/2013	Approval	calculation
6007-CAL-FWE-21-61-0006	HTF Oil Piping Stress Analysis Report	Drawing	0	Vendor	GEN-2	4/16/2013	Approval	calculation
6007-PLN-FWE-21-65-6001	PIPING GENERAL ARRANGEMENT AND TERMINAL POINTS	Drawing	0	Vendor	GEN-2	4/16/2013	Approval	Drawing
6007-PLN-FWE-21-52-0102	PIPE SUPPORTS DETAILS BASE. PLATES AND ANCHOR RODS	Drawing	3	Vendor	GEN-2	4/16/2013	Approval	Drawing
6007-PLN-FWE-21-54-0401	TYPICAL PIPE HANDRAIL, STAIRWAY AND GRATING DETAILS	Drawing	1	Vendor	GEN-2	4/16/2013	Approval	Drawing
6007-PLN-FWE-21-54-0402	TYPICAL PIPE HANDRAIL, STAIRWAY AND GRATING DETAILS	Drawing	1	Vendor	GEN-2	4/16/2013	Approval	Drawing
6007-PLN-FWE-21-54-0403	TYPICAL DETAILS	Drawing	1	Vendor	GEN-2	4/16/2013	Approval	Drawing
6007-PLN-FWE-21-52-0002	Structural Base Loads	Drawing	3	Vendor	GEN-2	4/16/2013	Approval	Drawing
6007-PLN-FWE-21-52-0003	Base Loads Table. Main & Auxiliary Platforms	Drawing	2	Vendor	GEN-2	4/16/2013	Approval	Drawing
6007-PLN-FWE-21-52-0004	Base Loads Table. Piping Supports	Drawing	2	Vendor	GEN-2	4/16/2013	Approval	Drawing
6007-PLN-FWE-21-52-0201	Equipment Base Loads Details	Drawing	4	Vendor	GEN-2	4/16/2013	Approval	Drawing
6007-PLN-FWE-21-52-0202	Structural Base Loads Details	Drawing	4	Vendor	GEN-2	4/16/2013	Approval	Drawing
6007-PLN-FWE-21-52-0211	Equipment Base Plate Details	Drawing	2	Vendor	GEN-2	4/16/2013	Approval	Drawing
6007-PLN-FWE-21-54-0301	Main Structure	Drawing	4	Vendor	GEN-2	4/16/2013	Approval	Drawing
6007-PLN-FWE-21-54-0302	Main Structure. Bents 1 to 7	Drawing	2	Vendor	GEN-2	4/16/2013	Approval	Drawing
6007-PLN-FWE-21-54-0303	Main Structure. Bents A/M &B/N	Drawing	2	Vendor	GEN-2	4/16/2013	Approval	Drawing
6007-PLN-FWE-21-54-0304	Main Structure. Plan View	Drawing	2	Vendor	GEN-2	4/16/2013	Approval	Drawing
6007-PLN-FWE-21-54-0305	Auxiliary Structure. Platforms	Drawing	4	Vendor	GEN-2	4/16/2013	Approval	Drawing
6007-PLN-FWE-21-54-0306	MAIN STRUCTURE - P. V. - LEVELS +17' 11 3/4" +39' 6 3/4" & +50' 7 3/4"	Drawing	4	Vendor	GEN-2	4/16/2013	Approval	Drawing
6007-PLN-FWE-21-54-0307	MAIN STRUCTURE - PLANT VIEW - GRATING LEVELS	Drawing	3	Vendor	GEN-2	4/16/2013	Approval	Drawing
6007-PLN-FWE-21-54-0311	Auxiliary Structure. Piping Supports -I-	Drawing	2	Vendor	GEN-2	4/16/2013	Approval	Drawing
6007-PLN-FWE-21-54-0312	AUXILIARY STRUCTURE PIPING SUPPORTS-2-	Drawing	2	Vendor	GEN-2	4/16/2013	Approval	Drawing
6007-PLN-FWE-21-54-0321	DRUM SADDLE FOR ERECTION - GENERAL ARRANGEMENT & SECTIONS	Drawing	2	Vendor	GEN-2	4/16/2013	Approval	Drawing
6007-PLN-FWE-21-54-0351	MAIN STRUCTURE - DETAILS SERIAL A & B	Drawing	2	Vendor	GEN-2	4/16/2013	Approval	Drawing
6007-PLN-FWE-21-54-0352	MAIN STRUCTURE - DETAILS SERIAL C - D & E	Drawing	2	Vendor	GEN-2	4/16/2013	Approval	Drawing
2804-CAL-12-2-15-01	Structural Engineering Design Report_13_04_05	Drawing	1	Vendor	GEN-2	4/16/2013	Approval	calculation
2804-CAL-12-2-15-02	na	Drawing	0	Vendor	GEN-2	4/16/2013	Approval	calculation
6007-PLN-AGE-58-52-3410-R0	Cover sheet	Drawing	2	Vendor	GEN-2	4/16/2013	Approval	Drawing
6007-PLN-AGE-58-52-3411-R0	General notes	Drawing	2	Vendor	GEN-2	4/16/2013	Approval	Drawing
6007-PLN-AGE-58-52-3412-R0	Support foundation plan	Drawing	2	Vendor	GEN-2	4/16/2013	Approval	Drawing
6007-PLN-AGE-58-52-3413-R0	Data table	Drawing	2	Vendor	GEN-2	4/16/2013	Approval	Drawing
6007-PLN-AGE-58-52-3414-R0	Section and detail I	Drawing	2	Vendor	GEN-2	4/16/2013	Approval	Drawing
6007-PLN-AGE-58-52-3415-R0	Section and detail II	Drawing	2	Vendor	GEN-2	4/16/2013	Approval	Drawing
6007-CAL-AGE-58-52-3410-R	Calc report	Drawing	2	Vendor	GEN-2	4/16/2013	Approval	calculation
6007-PLN-AGE-58-52-7410-R0	Cover sheet	Drawing	2	Vendor	GEN-2	4/16/2013	Approval	Drawing
6007-PLN-AGE-58-52-7411-R0	General notes	Drawing	2	Vendor	GEN-2	4/16/2013	Approval	Drawing
6007-PLN-AGE-58-52-7412-R0	Support foundation plan	Drawing	2	Vendor	GEN-2	4/16/2013	Approval	Drawing
6007-PLN-AGE-58-52-7413-R0	Data table	Drawing	2	Vendor	GEN-2	4/16/2013	Approval	Drawing

6007-PLN-AGE-58-52-7414-R0	Section and detail I	Drawing	2	Vendor	GEN-2	4/16/2013	Approval	Drawing
6007-PLN-AGE-58-52-7415-R0	Section and detail II	Drawing	2	Vendor	GEN-2	4/16/2013	Approval	Drawing
6007-CAL-AGE-58-52-7461-R	Calc report	Drawing	2	Vendor	GEN-2	4/16/2013	Approval	calculation
6007-PLN-AGE-58-52-6400-R0	Cover sheet	Drawing	3	Vendor	GEN-2	4/17/2013	Approval	Drawing
6007-PLN-AGE-58-52-6401-R0	General Notes	Drawing	3	Vendor	GEN-2	4/17/2013	Approval	Drawing
6007-PLN-AGE-58-52-6402-R0	Foundation Plan	Drawing	3	Vendor	GEN-2	4/17/2013	Approval	Drawing
6007-PLN-AGE-58-52-6404-R0	Section and Details I	Drawing	4	Vendor	GEN-2	4/17/2013	Approval	Drawing
6007-PLN-AGE-58-52-6405-R0	Section and Details II	Drawing	4	Vendor	GEN-2	4/17/2013	Approval	Drawing
6007-CAL-AGE-58-52-6400-R	Calculation Report	Drawing	4	Vendor	GEN-2	4/17/2013	Approval	calculation
6007-LIS-AGE-58-52-6400-R0	Coordinates List	LIst	1	Vendor	GEN-2	4/17/2013	Approval	List
6007-PLN-AGE-58-52-3461-R0	Cover sheet	Drawing	2	Vendor	GEN-2	4/17/2013	Approval	Drawing
6007-PLN-AGE-58-52-3462-R0	General notes	Drawing	2	Vendor	GEN-2	4/17/2013	Approval	Drawing
6007-PLN-AGE-58-52-3463-R0	Support foundation plan	Drawing	2	Vendor	GEN-2	4/17/2013	Approval	Drawing
6007-PLN-AGE-58-52-3464-R0	Data table	Drawing	0	Vendor	GEN-2	4/17/2013	Approval	Drawing
6007-PLN-AGE-58-52-3465-R0	Section and detail I	Drawing	0	Vendor	GEN-2	4/17/2013	Approval	Drawing
6007-PLN-AGE-58-52-3466-R0	Section and detail II	Drawing	0	Vendor	GEN-2	4/17/2013	Approval	Drawing
6007-CAL-AGE-58-52-3461-R	Calc report	Drawing	2	Vendor	GEN-2	4/17/2013	Approval	calculation
6007-PLN-AGE-58-52-7461-R0	Cover sheet	Drawing	2	Vendor	GEN-2	4/17/2013	Approval	Drawing
6007-PLN-AGE-58-52-7462-R0	General notes	Drawing	2	Vendor	GEN-2	4/17/2013	Approval	Drawing
6007-PLN-AGE-58-52-7463-R0	Support foundation plan	Drawing	2	Vendor	GEN-2	4/17/2013	Approval	Drawing
6007-PLN-AGE-58-52-7464-R0	Data table	Drawing	0	Vendor	GEN-2	4/17/2013	Approval	Drawing
6007-PLN-AGE-58-52-7465-R0	Section and detail I	Drawing	0	Vendor	GEN-2	4/17/2013	Approval	Drawing
6007-PLN-AGE-58-52-7466-R0	Section and detail II	Drawing	0	Vendor	GEN-2	4/17/2013	Approval	Drawing
6007-CAL-AGE-58-52-7462-R	Calc report	Drawing	2	Vendor	GEN-2	4/17/2013	Approval	calculation
6007-PLN-AGE-58-54-3550-R0	Cover sheet	Drawing	2	Vendor	GEN-2	4/17/2013	Approval	Drawing
6007-PLN-AGE-58-54-3551-R0	General notes	Drawing	2	Vendor	GEN-2	4/17/2013	Approval	Drawing
6007-PLN-AGE-58-54-3552-R0	Plan view and details	Drawing	2	Vendor	GEN-2	4/17/2013	Approval	Drawing
6007-CAL-AGE-58-54-3550-R	Calc report	Drawing	2	Vendor	GEN-2	4/17/2013	Approval	calculation
6007-PLN-AGE-58-54-7550-R0	Cover sheet	Drawing	2	Vendor	GEN-2	4/17/2013	Approval	Drawing
6007-PLN-AGE-58-54-7551-R0	General notes	Drawing	2	Vendor	GEN-2	4/17/2013	Approval	Drawing
6007-PLN-AGE-58-54-7552-R0	Plan view and details	Drawing	2	Vendor	GEN-2	4/17/2013	Approval	Drawing
6007-CAL-AGE-58-54-7550-R	Calc report	Drawing	2	Vendor	GEN-2	4/17/2013	Approval	calculation
6007-ESP-ATP-68-61-PL24	gineering Standards and practices Material and Installation standards Underground HD	Drawing	2	Vendor	GEN-2	4/18/2013	Approval	Spec
6007-CAL-AGE-58-52-2485	Calculation Report for Overflow Basin & MV-206 Alpha Plant	Drawing	0	Vendor	GEN-2	4/18/2013	Approval	calculation
6007-CAL-AGE-58-52-6485	Calculation Report for Overflow Basin & MV-206 Beta Plant	Drawing	0	Vendor	GEN-2	4/18/2013	Approval	calculation
6007-CAL-AGE-58-52-2490	Calculation Report for HTF Filling Discharge Pumps Foundations	Drawing	3	Vendor	GEN-2	4/18/2013	Approval	calculation
6007-PLN-AGE-58-52-2485	Cover sheet	Drawing	2	Vendor	GEN-2	4/18/2013	Approval	Drawing
6007-PLN-AGE-58-52-2486	General notes	Drawing	2	Vendor	GEN-2	4/18/2013	Approval	Drawing
6007-PLN-AGE-58-52-2487	Basin Layout	Drawing	2	Vendor	GEN-2	4/18/2013	Approval	Drawing
6007-PLN-AGE-58-52-2488	Sections and stair details	Drawing	3	Vendor	GEN-2	4/18/2013	Approval	Drawing
6007-PLN-AGE-58-52-2489	Sump and trench details	Drawing	2	Vendor	GEN-2	4/18/2013	Approval	Drawing
6007-PLN-AGE-58-52-2490	Pump MP-204 foundation plan sections and details	Drawing	3	Vendor	GEN-2	4/18/2013	Approval	Drawing
6007-PLN-AGE-58-52-2491	Tank MV-206 foundation plan, sections & details	Drawing	3	Vendor	GEN-2	4/18/2013	Approval	Drawing
6007-PLN-AGE-58-52-2492	Pedestal details and coordinates	Drawing	2	Vendor	GEN-2	4/18/2013	Approval	Drawing
6007-PLN-AGE-58-52-6485	Cover sheet	Drawing	2	Vendor	GEN-2	4/18/2013	Approval	Drawing
6007-PLN-AGE-58-52-6486	General notes	Drawing	2	Vendor	GEN-2	4/18/2013	Approval	Drawing
6007-PLN-AGE-58-52-6487	Basin Layout	Drawing	2	Vendor	GEN-2	4/18/2013	Approval	Drawing
6007-PLN-AGE-58-52-6488	Sections and stair details	Drawing	3	Vendor	GEN-2	4/18/2013	Approval	Drawing
6007-PLN-AGE-58-52-6489	Sump and trench details	Drawing	2	Vendor	GEN-2	4/18/2013	Approval	Drawing
6007-PLN-AGE-58-52-6490	Pump MP-204 foundation plan sections and details	Drawing	3	Vendor	GEN-2	4/18/2013	Approval	Drawing
6007-PLN-AGE-58-52-6491	Tank MV-206 foundation plan, sections & details	Drawing	3	Vendor	GEN-2	4/18/2013	Approval	Drawing

6007-PLN-AGE-58-52-6492	Pedestal details and coordinates	Drawing	2	Vendor	GEN-2	4/18/2013	Approval	Drawing
6007-PLN-AGE-00-50-S003-R0	TYPICAL PIPE HANDRAIL, STAIRWAY, AND GRATING DETAILS	Drawing	1	Vendor	GEN-2	4/18/2013	Approval	Drawing
6007-PLN-AGE-23-52-4000-R0	Cover sheet	Drawing	1	Vendor	GEN-2	4/18/2013	Approval	Drawing
6007-PLN-AGE-23-52-4020-R0	General notes	Drawing	2	Vendor	GEN-2	4/18/2013	Approval	Drawing
6007-PLN-AGE-23-52-4040-R0	Foundation Plan & details	Drawing	2	Vendor	GEN-2	4/18/2013	Approval	Drawing
6007-CAL-AGE-23-52-4000-R	Calculation report	Drawing	2	Vendor	GEN-2	4/18/2013	Approval	calculation
6007-PLN-AGE-23-52-8000-R0	Cover sheet	Drawing	1	Vendor	GEN-2	4/18/2013	Approval	Drawing
6007-PLN-AGE-23-52-8020-R0	General notes	Drawing	2	Vendor	GEN-2	4/18/2013	Approval	Drawing
6007-PLN-AGE-23-52-8040-R0	Foundation Plan & details	Drawing	2	Vendor	GEN-2	4/18/2013	Approval	Drawing
6007-CAL-AGE-23-52-8000-R	Calculation report	Drawing	2	Vendor	GEN-2	4/18/2013	Approval	calculation
6007-PLN-AGE-18-52-4200	Cover sheet	Drawing	2	Vendor	GEN-2	4/18/2013	Approval	Drawing
6007-PLN-AGE-18-52-4220	General notes	Drawing	2	Vendor	GEN-2	4/18/2013	Approval	Drawing
6007-PLN-AGE-18-52-4240	Foundation drawings	Drawing	4	Vendor	GEN-2	4/18/2013	Approval	Drawing
6007-CAL-AGE-18-52-4200	Calc report	Drawing	3	Vendor	GEN-2	4/18/2013	Approval	calculation
6007-PLN-AGE-18-52-8200	Cover sheet	Drawing	2	Vendor	GEN-2	4/18/2013	Approval	Drawing
6007-PLN-AGE-18-52-8220	General notes	Drawing	2	Vendor	GEN-2	4/18/2013	Approval	Drawing
6007-PLN-AGE-18-52-8240	Foundation drawings	Drawing	4	Vendor	GEN-2	4/18/2013	Approval	Drawing
6007-CAL-AGE-18-52-8200	Calc report	Drawing	3	Vendor	GEN-2	4/18/2013	Approval	calculation
6007-PLN-AGE-18-52-4300	Cover sheet	Drawing	2	Vendor	GEN-2	4/18/2013	Approval	Drawing
6007-PLN-AGE-18-52-4320	General notes	Drawing	2	Vendor	GEN-2	4/18/2013	Approval	Drawing
6007-PLN-AGE-18-52-4340	Foundation drawings	Drawing	3	Vendor	GEN-2	4/18/2013	Approval	Drawing
6007-CAL-AGE-18-52-4300	Calc report	Drawing	3	Vendor	GEN-2	4/18/2013	Approval	calculation
6007-PLN-AGE-18-52-8300	Cover sheet	Drawing	2	Vendor	GEN-2	4/18/2013	Approval	Drawing
6007-PLN-AGE-18-52-8320	General notes	Drawing	2	Vendor	GEN-2	4/18/2013	Approval	Drawing
6007-PLN-AGE-18-52-8340	Foundation drawings	Drawing	3	Vendor	GEN-2	4/18/2013	Approval	Drawing
6007-CAL-AGE-18-52-8300	Calc report	Drawing	3	Vendor	GEN-2	4/18/2013	Approval	calculation
6007-PLN-AGE-40-52-4100-R0	Cover sheet	Drawing	2	Vendor	GEN-2	4/18/2013	Approval	Drawing
6007-PLN-AGE-40-52-4120-R0	General notes	Drawing	2	Vendor	GEN-2	4/18/2013	Approval	Drawing
6007-PLN-AGE-40-52-4140-R0	Arrangment plan view	Drawing	2	Vendor	GEN-2	4/18/2013	Approval	Drawing
6007-PLN-AGE-40-52-4141-R0	Mat bottom reinforcement	Drawing	2	Vendor	GEN-2	4/18/2013	Approval	Drawing
6007-PLN-AGE-40-52-4142-R0	Mat top reinforcement	Drawing	2	Vendor	GEN-2	4/18/2013	Approval	Drawing
6007-PLN-AGE-40-52-4143-R0	Extra top reinforcement	Drawing	0	Vendor	GEN-2	4/18/2013	Approval	Drawing
6007-PLN-AGE-40-52-4144-R0	Extra bottom reinforcement	Drawing	0	Vendor	GEN-2	4/18/2013	Approval	Drawing
6007-PLN-AGE-40-52-4145-R0	Mat reinforcement details	Drawing	0	Vendor	GEN-2	4/18/2013	Approval	Drawing
6007-PLN-AGE-40-52-4150-R0	Drainage	Drawing	0	Vendor	GEN-2	4/18/2013	Approval	Drawing
6007-PLN-AGE-40-52-4160-R0	Pier and rack support anchor layout	Drawing	0	Vendor	GEN-2	4/18/2013	Approval	Drawing
6007-PLN-AGE-40-52-4161-R0	Pier and rack support anchor details	Drawing	0	Vendor	GEN-2	4/18/2013	Approval	Drawing
6007-PLN-AGE-40-52-4162-R0	Anchor bolts. Assemblies and details	Drawing	0	Vendor	GEN-2	4/18/2013	Approval	Drawing
6007-PLN-AGE-40-52-4163-R0	Skid and bench support layout	Drawing	0	Vendor	GEN-2	4/18/2013	Approval	Drawing
6007-PLN-AGE-40-52-4164-R0	Skid support details	Drawing	0	Vendor	GEN-2	4/18/2013	Approval	Drawing
6007-PLN-AGE-40-52-4173-R0	Skid support layout	Drawing	0	Vendor	GEN-2	4/18/2013	Approval	Drawing
6007-CAL-AGE-40-52-4000-R	WTP foundation calc report	Drawing	2	Vendor	GEN-2	4/18/2013	Approval	calculation
6007-PLN-AGE-40-52-8100-R0	Cover sheet	Drawing	2	Vendor	GEN-2	4/18/2013	Approval	Drawing
6007-PLN-AGE-40-52-8120-R0	General notes	Drawing	2	Vendor	GEN-2	4/18/2013	Approval	Drawing
6007-PLN-AGE-40-52-8140-R0	Arrangment plan view	Drawing	2	Vendor	GEN-2	4/18/2013	Approval	Drawing
6007-PLN-AGE-40-52-8141-R0	Mat bottom reinforcement	Drawing	2	Vendor	GEN-2	4/18/2013	Approval	Drawing
6007-PLN-AGE-40-52-8142-R0	Mat top reinforcement	Drawing	2	Vendor	GEN-2	4/18/2013	Approval	Drawing
6007-PLN-AGE-40-52-8143-R0	Extra top reinforcement	Drawing	0	Vendor	GEN-2	4/18/2013	Approval	Drawing
6007-PLN-AGE-40-52-8144-R0	Extra bottom reinforcement	Drawing	0	Vendor	GEN-2	4/18/2013	Approval	Drawing
6007-PLN-AGE-40-52-8145-R0	Mat reinforcement details	Drawing	0	Vendor	GEN-2	4/18/2013	Approval	Drawing
6007-PLN-AGE-40-52-8150-R0	Drainage	Drawing	0	Vendor	GEN-2	4/18/2013	Approval	Drawing

6007-PLN-AGE-40-52-8160-R0	Pier and rack support anchor layout	Drawing	0	Vendor	GEN-2	4/18/2013	Approval	Drawing
6007-PLN-AGE-40-52-8161-R0	Pier and rack support anchor details	Drawing	0	Vendor	GEN-2	4/18/2013	Approval	Drawing
6007-PLN-AGE-40-52-8162-R0	Anchor bolts. Assemblies and details	Drawing	0	Vendor	GEN-2	4/18/2013	Approval	Drawing
6007-PLN-AGE-40-52-8163-R0	Skid and bench support layout	Drawing	0	Vendor	GEN-2	4/18/2013	Approval	Drawing
6007-PLN-AGE-40-52-8164-R0	Skid support details	Drawing	0	Vendor	GEN-2	4/18/2013	Approval	Drawing
6007-PLN-AGE-40-52-8173-R0	Skid support layout	Drawing	0	Vendor	GEN-2	4/18/2013	Approval	Drawing
6007-CAL-AGE-40-52-8000-R	WTP foundation calc report	Drawing	2	Vendor	GEN-2	4/18/2013	Approval	calculation
6007-PLN-AGE-67-33-9803	Grounding in beta central plant	Drawing	na	Vendor	GEN-2	4/18/2013	Approval	Drawing
6007-CAL-AGE-57-52-3550-R	Calculation Report	Drawing	1	Vendor	GEN-2	4/18/2013	Approval	calculation
6007-PLN-AGE-57-52-3550-R0	Cover sheet	Drawing	2	Vendor	GEN-2	4/18/2013	Approval	Drawing
6007-PLN-AGE-57-52-3551-R0	General notes	Drawing	2	Vendor	GEN-2	4/18/2013	Approval	Drawing
6007-PLN-AGE-57-52-3552-R0	Plan View and Detils	Drawing	2	Vendor	GEN-2	4/18/2013	Approval	Drawing
6007-CAL-AGE-57-52-7550-R	Calculation Report	Drawing	1	Vendor	GEN-2	4/18/2013	Approval	calculation
6007-PLN-AGE-57-52-7550-R0	Cover sheet	Drawing	2	Vendor	GEN-2	4/18/2013	Approval	Drawing
6007-PLN-AGE-57-52-7551-R0	General notes	Drawing	2	Vendor	GEN-2	4/18/2013	Approval	Drawing
6007-PLN-AGE-57-52-7552-R0	Plan View and Detils	Drawing	2	Vendor	GEN-2	4/18/2013	Approval	Drawing
6007-PLN-AGE-25-54-4500-R0	Cover sheet	Drawing	4	Vendor	GEN-2	4/22/2013	Approval	Drawing
6007-PLN-AGE-25-54-4501-R0	General notes	Drawing	4	Vendor	GEN-2	4/22/2013	Approval	Drawing
6007-PLN-AGE-25-54-4502-R0	Elevation I	Drawing	5	Vendor	GEN-2	4/22/2013	Approval	Drawing
6007-PLN-AGE-25-54-4503-R0	Elevation III	Drawing	5	Vendor	GEN-2	4/22/2013	Approval	Drawing
6007-PLN-AGE-25-54-4504-R0	Elevation III	Drawing	5	Vendor	GEN-2	4/22/2013	Approval	Drawing
6007-PLN-AGE-25-54-4505-R0	BCP and BT connections	Drawing	5	Vendor	GEN-2	4/22/2013	Approval	Drawing
6007-PLN-AGE-25-54-4506-R0	CH and CR connections	Drawing	5	Vendor	GEN-2	4/22/2013	Approval	Drawing
6007-PLN-AGE-25-54-4507-R0	JT and JB connections	Drawing	5	Vendor	GEN-2	4/22/2013	Approval	Drawing
6007-PLN-AGE-25-54-4508-R0	Plan el 2073 and 2078	Drawing	4	Vendor	GEN-2	4/22/2013	Approval	Drawing
6007-PLN-AGE-25-54-4509-R0	Plan el 2086 and 2091	Drawing	4	Vendor	GEN-2	4/22/2013	Approval	Drawing
6007-PLN-AGE-25-54-4510-R0	Plan el 2098	Drawing	4	Vendor	GEN-2	4/22/2013	Approval	Drawing
6007-PLN-AGE-25-54-4511-R0	Plan el 2114	Drawing	4	Vendor	GEN-2	4/22/2013	Approval	Drawing
6007-PLN-AGE-25-54-4512-R0	Plan el 2123 and 2150	Drawing	4	Vendor	GEN-2	4/22/2013	Approval	Drawing
6007-PLN-AGE-25-54-4513-R0	GP connections	Drawing	4	Vendor	GEN-2	4/22/2013	Approval	Drawing
6007-PLN-AGE-25-54-4514-R0	JBP, GF and GE connections	Drawing	4	Vendor	GEN-2	4/22/2013	Approval	Drawing
6007-PLN-AGE-25-54-4515-R0	BCF connections	Drawing	4	Vendor	GEN-2	4/22/2013	Approval	Drawing
6007-PLN-AGE-25-54-4516-R0	Columns splices I	Drawing	4	Vendor	GEN-2	4/22/2013	Approval	Drawing
6007-PLN-AGE-25-54-4517-R0	Columns splices III	Drawing	4	Vendor	GEN-2	4/22/2013	Approval	Drawing
6007-PLN-AGE-25-54-4518-R0	Columns splices III	Drawing	4	Vendor	GEN-2	4/22/2013	Approval	Drawing
6007-CAL-AGE-25-51-4004-R	Calculation report	Drawing	5	Vendor	GEN-2	4/22/2013	Approval	calculation
6007-PLN-AGE-25-54-8500-R0	Cover sheet	Drawing	3	Vendor	GEN-2	4/22/2013	Approval	Drawing
6007-PLN-AGE-25-54-8501-R0	General notes	Drawing	3	Vendor	GEN-2	4/22/2013	Approval	Drawing
6007-PLN-AGE-25-54-8502-R0	Elevation I	Drawing	4	Vendor	GEN-2	4/22/2013	Approval	Drawing
6007-PLN-AGE-25-54-8503-R0	Elevation III	Drawing	4	Vendor	GEN-2	4/22/2013	Approval	Drawing
6007-PLN-AGE-25-54-8504-R0	Elevation III	Drawing	4	Vendor	GEN-2	4/22/2013	Approval	Drawing
6007-PLN-AGE-25-54-8505-R0	BCP and BT connections	Drawing	4	Vendor	GEN-2	4/22/2013	Approval	Drawing
6007-PLN-AGE-25-54-8506-R0	CH and CR connections	Drawing	4	Vendor	GEN-2	4/22/2013	Approval	Drawing
6007-PLN-AGE-25-54-8507-R0	JT and JB connections	Drawing	4	Vendor	GEN-2	4/22/2013	Approval	Drawing
6007-PLN-AGE-25-54-8508-R0	Plan el 2081 and 2064	Drawing	3	Vendor	GEN-2	4/22/2013	Approval	Drawing
6007-PLN-AGE-25-54-8509-R0	Plan el 2094 and 2099	Drawing	3	Vendor	GEN-2	4/22/2013	Approval	Drawing
6007-PLN-AGE-25-54-8510-R0	Plan el 2106	Drawing	3	Vendor	GEN-2	4/22/2013	Approval	Drawing
6007-PLN-AGE-25-54-8511-R0	Plan el 2122	Drawing	3	Vendor	GEN-2	4/22/2013	Approval	Drawing
6007-PLN-AGE-25-54-8512-R0	Plan el 2131 and 2158	Drawing	3	Vendor	GEN-2	4/22/2013	Approval	Drawing
6007-PLN-AGE-25-54-8513-R0	GP connections	Drawing	3	Vendor	GEN-2	4/22/2013	Approval	Drawing
6007-PLN-AGE-25-54-8514-R0	JBP, GF and GE connections	Drawing	3	Vendor	GEN-2	4/22/2013	Approval	Drawing

6007-PLN-AGE-25-54-8515-R0	BCF connections	Drawing	3	Vendor	GEN-2	4/22/2013	Approval	Drawing
6007-PLN-AGE-25-54-8516-R0	Columns splices I	Drawing	3	Vendor	GEN-2	4/22/2013	Approval	Drawing
6007-PLN-AGE-25-54-8517-R0	Columns splices III	Drawing	3	Vendor	GEN-2	4/22/2013	Approval	Drawing
6007-PLN-AGE-25-54-8518-R0	Columns splices III	Drawing	3	Vendor	GEN-2	4/22/2013	Approval	Drawing
6007-CAL-AGE-25-51-8004-R	Calculation report	Drawing	5	Vendor	GEN-2	4/22/2013	Approval	calculation
6007-inf-AGE-68-60-2001	Stress Analysis Report-Solar Field-East Inlet Alpha	Drawing	3	Vendor	GEN-2	4/25/2013	Approval	Report
6007-inf-AGE-68-60-2002	Stress Analysis Report-Solar Field-East Return Alpha	Drawing	3	Vendor	GEN-2	4/25/2013	Approval	Report
6007-inf-AGE-68-60-6005	Stress Analysis Report Header HTF- Beta North Solar Field Inlet	Drawing	3	Vendor	GEN-2	4/25/2013	Approval	Report
6007-inf-AGE-68-60-6006	Stress Analysis Report Header HTF- Beta North Solar Field Return	Drawing	3	Vendor	GEN-2	4/25/2013	Approval	Report
6007-inf-AGE-68-60-6001	Stress Analysis Report Header HTF- Beta Plant – East SF Inlet	Drawing	4	Vendor	GEN-2	4/25/2013	Approval	Report
6007-inf-AGE-68-60-6002	Stress Analysis Report Header HTF- Beta Plant – East SF Return	Drawing	3	Vendor	GEN-2	4/25/2013	Approval	Report
6007-PLN-AGE-57-61-2002_S	Pipe Layout Drawing SF Alpha East	Drawing	2	Vendor	GEN-2	4/25/2013	Approval	Drawing
6007-PLN-AGE-57-61-2002_S	Pipe Layout Drawing SF Alpha East	Drawing	2	Vendor	GEN-2	4/25/2013	Approval	Drawing
6007-PLN-AGE-57-61-2002_S	Pipe Layout Drawing SF Alpha East	Drawing	2	Vendor	GEN-2	4/25/2013	Approval	Drawing
6007-PLN-AGE-57-61-2002_S	Pipe Layout Drawing SF Alpha East	Drawing	2	Vendor	GEN-2	4/25/2013	Approval	Drawing
6007-PLN-AGE-57-61-2002_S	Pipe Layout Drawing SF Alpha East	Drawing	2	Vendor	GEN-2	4/25/2013	Approval	Drawing
6007-PLN-AGE-57-61-2002_S	Pipe Layout Drawing SF Alpha East	Drawing	2	Vendor	GEN-2	4/25/2013	Approval	Drawing
6007-PLN-AGE-57-61-2002_S	Pipe Layout Drawing SF Alpha East	Drawing	2	Vendor	GEN-2	4/25/2013	Approval	Drawing
6007-PLN-AGE-57-61-2002_S	Pipe Layout Drawing SF Alpha East	Drawing	2	Vendor	GEN-2	4/25/2013	Approval	Drawing
6007-PLN-AGE-57-61-2002_S	Pipe Layout Drawing SF Alpha East	Drawing	2	Vendor	GEN-2	4/25/2013	Approval	Drawing
6007-PLN-AGE-57-61-2002_S	Pipe Layout Drawing SF Alpha East	Drawing	2	Vendor	GEN-2	4/25/2013	Approval	Drawing
6007-PLN-AGE-57-61-2002_S	Pipe Layout Drawing SF Alpha East	Drawing	2	Vendor	GEN-2	4/25/2013	Approval	Drawing
6007-PLN-AGE-57-61-2002_S	Pipe Layout Drawing SF Alpha East	Drawing	2	Vendor	GEN-2	4/25/2013	Approval	Drawing
6007-PLN-AGE-57-61-2002_S	Pipe Layout Drawing SF Alpha East	Drawing	2	Vendor	GEN-2	4/25/2013	Approval	Drawing
6007-PLN-AGE-57-61-2002_S	Pipe Layout Drawing SF Alpha East	Drawing	2	Vendor	GEN-2	4/25/2013	Approval	Drawing
6007-PLN-AGE-57-61-2002_S	Pipe Layout Drawing SF Alpha East	Drawing	2	Vendor	GEN-2	4/25/2013	Approval	Drawing
6007-PLN-AGE-57-61-2002_S	Pipe Layout Drawing SF Alpha East	Drawing	2	Vendor	GEN-2	4/25/2013	Approval	Drawing
6007-PLN-AGE-57-61-2002_S	Pipe Layout Drawing SF Alpha East	Drawing	2	Vendor	GEN-2	4/25/2013	Approval	Drawing
6007-PLN-AGE-57-61-2002_S	Pipe Layout Drawing SF Alpha East	Drawing	2	Vendor	GEN-2	4/25/2013	Approval	Drawing
6007-PLN-AGE-57-61-2002_S	Pipe Layout Drawing SF Alpha East	Drawing	2	Vendor	GEN-2	4/25/2013	Approval	Drawing
6007-PLN-AGE-57-61-2002_S	Pipe Layout Drawing SF Alpha East	Drawing	2	Vendor	GEN-2	4/25/2013	Approval	Drawing
6007-PLN-AGE-57-61-2002_S	Pipe Layout Drawing SF Alpha East	Drawing	2	Vendor	GEN-2	4/25/2013	Approval	Drawing
6007-PLN-AGE-57-61-2002_S	Pipe Layout Drawing SF Alpha East	Drawing	2	Vendor	GEN-2	4/25/2013	Approval	Drawing
6007-PLN-AGE-57-61-2002_S	Pipe Layout Drawing SF Alpha East	Drawing	2	Vendor	GEN-2	4/25/2013	Approval	Drawing
6007-PLN-AGE-57-61-2002_S	Pipe Layout Drawing SF Alpha East	Drawing	2	Vendor	GEN-2	4/25/2013	Approval	Drawing
6007-PLN-AGE-57-61-2002_S	Pipe Layout Drawing SF Alpha East	Drawing	2	Vendor	GEN-2	4/25/2013	Approval	Drawing
6007-PLN-AGE-57-61-2002_S	Pipe Layout Drawing SF Alpha East	Drawing	2	Vendor	GEN-2	4/25/2013	Approval	Drawing
6007-PLN-AGE-57-61-2002_S	Pipe Layout Drawing SF Alpha East	Drawing	2	Vendor	GEN-2	4/25/2013	Approval	Drawing
6007-PLN-AGE-57-61-2002_S	Pipe Layout Drawing SF Alpha East	Drawing	2	Vendor	GEN-2	4/25/2013	Approval	Drawing
6007-PLN-AGE-57-61-2002_S	Pipe Layout Drawing SF Alpha East	Drawing	2	Vendor	GEN-2	4/25/2013	Approval	Drawing
6007-PLN-AGE-57-61-2002_S	Pipe Layout Drawing SF Alpha East	Drawing	2	Vendor	GEN-2	4/25/2013	Approval	Drawing
6007-PLN-AGE-57-61-2002_S	Pipe Layout Drawing SF Alpha East	Drawing	2	Vendor	GEN-2	4/25/2013	Approval	Drawing

6007-PLN-AGE-57-61-2002_S	Pipe Layout Drawing SF Alpha East	Drawing	2	Vendor	GEN-2	4/25/2013	Approval	Drawing
6007-PLN-AGE-57-61-2002_S	Pipe Layout Drawing SF Alpha East	Drawing	2	Vendor	GEN-2	4/25/2013	Approval	Drawing
6007-PLN-AGE-57-61-2002_S	Pipe Layout Drawing SF Alpha East	Drawing	2	Vendor	GEN-2	4/25/2013	Approval	Drawing
6007-PLN-AGE-57-61-2002_S	Pipe Layout Drawing SF Alpha East	Drawing	2	Vendor	GEN-2	4/25/2013	Approval	Drawing
6007-PLN-AGE-57-61-2002_S	Pipe Layout Drawing SF Alpha East	Drawing	2	Vendor	GEN-2	4/25/2013	Approval	Drawing
6007-PLN-AGE-57-61-2002_S	Pipe Layout Drawing SF Alpha East	Drawing	2	Vendor	GEN-2	4/25/2013	Approval	Drawing
6007-PLN-AGE-57-61-2002_S	Pipe Layout Drawing SF Alpha East	Drawing	2	Vendor	GEN-2	4/25/2013	Approval	Drawing
6007-PLN-AGE-57-61-2002_S	Pipe Layout Drawing SF Alpha East	Drawing	2	Vendor	GEN-2	4/25/2013	Approval	Drawing
6007-PLN-AGE-57-61-2002_S	Pipe Layout Drawing SF Alpha East	Drawing	2	Vendor	GEN-2	4/25/2013	Approval	Drawing
6007-PLN-AGE-57-61-2002_S	Pipe Layout Drawing SF Alpha East	Drawing	2	Vendor	GEN-2	4/25/2013	Approval	Drawing
6007-PLN-AGE-57-61-2002_S	Pipe Layout Drawing SF Alpha East	Drawing	2	Vendor	GEN-2	4/25/2013	Approval	Drawing
6007-PLN-AGE-57-61-2002_S	Pipe Layout Drawing SF Alpha East	Drawing	2	Vendor	GEN-2	4/25/2013	Approval	Drawing
6007-PLN-AGE-57-61-2002_S	Pipe Layout Drawing SF Alpha East	Drawing	2	Vendor	GEN-2	4/25/2013	Approval	Drawing
6007-PLN-AGE-57-61-2002_S	Pipe Layout Drawing SF Alpha East	Drawing	2	Vendor	GEN-2	4/25/2013	Approval	Drawing
6007-PLN-AGE-57-61-2002_S	Pipe Layout Drawing SF Alpha East	Drawing	2	Vendor	GEN-2	4/25/2013	Approval	Drawing
6007-PLN-AGE-57-61-2002_S	Pipe Layout Drawing SF Alpha East	Drawing	2	Vendor	GEN-2	4/25/2013	Approval	Drawing
6007-PLN-AGE-57-61-2002_S	Pipe Layout Drawing SF Alpha East	Drawing	2	Vendor	GEN-2	4/25/2013	Approval	Drawing
6007-PLN-AGE-57-61-2002_S	Pipe Layout Drawing SF Alpha East	Drawing	2	Vendor	GEN-2	4/25/2013	Approval	Drawing
6007-PLN-AGE-57-61-2002_S	Pipe Layout Drawing SF Alpha East	Drawing	2	Vendor	GEN-2	4/25/2013	Approval	Drawing
6007-PLN-AGE-57-61-2002_S	Pipe Layout Drawing SF Alpha East	Drawing	2	Vendor	GEN-2	4/25/2013	Approval	Drawing
6007-PLN-AGE-57-61-2002_S	Pipe Layout Drawing SF Alpha East	Drawing	2	Vendor	GEN-2	4/25/2013	Approval	Drawing
6007-PLN-AGE-57-61-2002_S	Pipe Layout Drawing SF Alpha East	Drawing	2	Vendor	GEN-2	4/25/2013	Approval	Drawing
6007-PLN-AGE-57-61-2002_S	Pipe Layout Drawing SF Alpha East	Drawing	2	Vendor	GEN-2	4/25/2013	Approval	Drawing
6007-PLN-AGE-57-61-2002_S	Pipe Layout Drawing SF Alpha East	Drawing	2	Vendor	GEN-2	4/25/2013	Approval	Drawing
6007_PLN_AGE_57_61_6001_	Pipe Layout Drawing SF Beta North	Drawing	1	Vendor	GEN-2	4/25/2013	Approval	Drawing
6007_PLN_AGE_57_61_6001_	Piping Plan North Area Index	Drawing	1	Vendor	GEN-2	4/25/2013	Approval	Drawing
6007_PLN_AGE_57_61_6001_	Pipe Layout Drawing SF Beta North	Drawing	1	Vendor	GEN-2	4/25/2013	Approval	Drawing
6007_PLN_AGE_57_61_6001_	Pipe Layout Drawing SF Beta North	Drawing	1	Vendor	GEN-2	4/25/2013	Approval	Drawing
6007_PLN_AGE_57_61_6001_	Pipe Layout Drawing SF Beta North	Drawing	1	Vendor	GEN-2	4/25/2013	Approval	Drawing
6007_PLN_AGE_57_61_6001_	Pipe Layout Drawing SF Beta North	Drawing	1	Vendor	GEN-2	4/25/2013	Approval	Drawing
6007_PLN_AGE_57_61_6001_	Pipe Layout Drawing SF Beta North	Drawing	1	Vendor	GEN-2	4/25/2013	Approval	Drawing
6007_PLN_AGE_57_61_6001_	Pipe Layout Drawing SF Beta North	Drawing	1	Vendor	GEN-2	4/25/2013	Approval	Drawing
6007_PLN_AGE_57_61_6001_	Pipe Layout Drawing SF Beta North	Drawing	1	Vendor	GEN-2	4/25/2013	Approval	Drawing
6007_PLN_AGE_57_61_6001_	Pipe Layout Drawing SF Beta North	Drawing	1	Vendor	GEN-2	4/25/2013	Approval	Drawing
6007_PLN_AGE_57_61_6001_	Pipe Layout Drawing SF Beta North	Drawing	1	Vendor	GEN-2	4/25/2013	Approval	Drawing
6007_PLN_AGE_57_61_6001_	Pipe Layout Drawing SF Beta North	Drawing	1	Vendor	GEN-2	4/25/2013	Approval	Drawing
6007_PLN_AGE_57_61_6001_	Pipe Layout Drawing SF Beta North	Drawing	1	Vendor	GEN-2	4/25/2013	Approval	Drawing
6007_PLN_AGE_57_61_6001_	Pipe Layout Drawing SF Beta North	Drawing	1	Vendor	GEN-2	4/25/2013	Approval	Drawing
6007_PLN_AGE_57_61_6001_	Pipe Layout Drawing SF Beta North	Drawing	1	Vendor	GEN-2	4/25/2013	Approval	Drawing
6007_PLN_AGE_57_61_6001_	Pipe Layout Drawing SF Beta North	Drawing	1	Vendor	GEN-2	4/25/2013	Approval	Drawing
6007_PLN_AGE_57_61_6001_	Pipe Layout Drawing SF Beta North	Drawing	1	Vendor	GEN-2	4/25/2013	Approval	Drawing
6007_PLN_AGE_57_61_6001_	Pipe Layout Drawing SF Beta North	Drawing	1	Vendor	GEN-2	4/25/2013	Approval	Drawing

6007_PLN_AGE_57_61_6001	Pipe Layout Drawing SF Beta North	Drawing	1	Vendor	GEN-2	4/25/2013	Approval	Drawing
6007_PLN_AGE_57_61_6001	Pipe Layout Drawing SF Beta North	Drawing	1	Vendor	GEN-2	4/25/2013	Approval	Drawing
6007_PLN_AGE_57_61_6001	Pipe Layout Drawing SF Beta North	Drawing	1	Vendor	GEN-2	4/25/2013	Approval	Drawing
6007_PLN_AGE_57_61_6001	Pipe Layout Drawing SF Beta North	Drawing	1	Vendor	GEN-2	4/25/2013	Approval	Drawing
6007_PLN_AGE_57_61_6001	Pipe Layout Drawing SF Beta North	Drawing	1	Vendor	GEN-2	4/25/2013	Approval	Drawing
6007_PLN_AGE_57_61_6001	Pipe Layout Drawing SF Beta North	Drawing	1	Vendor	GEN-2	4/25/2013	Approval	Drawing
6007_PLN_AGE_57_61_6001	Pipe Layout Drawing SF Beta North	Drawing	1	Vendor	GEN-2	4/25/2013	Approval	Drawing
6007_PLN_AGE_57_61_6001	Pipe Layout Drawing SF Beta North	Drawing	1	Vendor	GEN-2	4/25/2013	Approval	Drawing
6007_PLN_AGE_57_61_6001	Pipe Layout Drawing SF Beta North	Drawing	1	Vendor	GEN-2	4/25/2013	Approval	Drawing
6007_PLN_AGE_57_61_6001	Pipe Layout Drawing SF Beta North	Drawing	1	Vendor	GEN-2	4/25/2013	Approval	Drawing
6007_PLN_AGE_57_61_6001	Pipe Layout Drawing SF Beta North	Drawing	1	Vendor	GEN-2	4/25/2013	Approval	Drawing
6007_PLN_AGE_57_61_6001	Pipe Layout Drawing SF Beta North	Drawing	1	Vendor	GEN-2	4/25/2013	Approval	Drawing
6007_PLN_AGE_57_61_6001	Pipe Layout Drawing SF Beta North	Drawing	1	Vendor	GEN-2	4/25/2013	Approval	Drawing
6007_PLN_AGE_57_61_6001	Pipe Layout Drawing SF Beta North	Drawing	1	Vendor	GEN-2	4/25/2013	Approval	Drawing
6007_PLN_AGE_57_61_6001	Pipe Layout Drawing SF Beta North	Drawing	1	Vendor	GEN-2	4/25/2013	Approval	Drawing
6007_PLN_AGE_57_61_6001	Pipe Layout Drawing SF Beta North	Drawing	1	Vendor	GEN-2	4/25/2013	Approval	Drawing
6007_PLN_AGE_57_61_6001	Pipe Layout Drawing SF Beta North	Drawing	1	Vendor	GEN-2	4/25/2013	Approval	Drawing
6007_PLN_AGE_57_61_6001	Pipe Layout Drawing SF Beta North	Drawing	1	Vendor	GEN-2	4/25/2013	Approval	Drawing
6007_PLN_AGE_57_61_6001	Pipe Layout Drawing SF Beta North	Drawing	1	Vendor	GEN-2	4/25/2013	Approval	Drawing
6007_PLN_AGE_57_61_6001	Pipe Layout Drawing SF Beta North	Drawing	1	Vendor	GEN-2	4/25/2013	Approval	Drawing
6007_PLN_AGE_57_61_6001	Pipe Layout Drawing SF Beta North	Drawing	1	Vendor	GEN-2	4/25/2013	Approval	Drawing
6007_PLN_AGE_57_61_6001	Pipe Layout Drawing SF Beta North	Drawing	1	Vendor	GEN-2	4/25/2013	Approval	Drawing
6007_PLN_AGE_57_61_6001	Pipe Layout Drawing SF Beta North	Drawing	1	Vendor	GEN-2	4/25/2013	Approval	Drawing
6007_PLN_AGE_57_61_6001	Pipe Layout Drawing SF Beta North	Drawing	1	Vendor	GEN-2	4/25/2013	Approval	Drawing
6007_PLN_AGE_57_61_6001	Pipe Layout Drawing SF Beta North	Drawing	1	Vendor	GEN-2	4/25/2013	Approval	Drawing
6007_PLN_AGE_57_61_6001	Pipe Layout Drawing SF Beta North	Drawing	1	Vendor	GEN-2	4/25/2013	Approval	Drawing
6007_PLN_AGE_57_61_6001	Pipe Layout Drawing SF Beta North	Drawing	1	Vendor	GEN-2	4/25/2013	Approval	Drawing
6007_PLN_AGE_57_61_6001	Pipe Layout Drawing SF Beta North	Drawing	1	Vendor	GEN-2	4/25/2013	Approval	Drawing
6007_PLN_AGE_57_61_6001	Pipe Layout Drawing SF Beta North	Drawing	1	Vendor	GEN-2	4/25/2013	Approval	Drawing
6007_PLN_AGE_57_61_6001	Pipe Layout Drawing SF Beta North	Drawing	1	Vendor	GEN-2	4/25/2013	Approval	Drawing
6007_PLN_AGE_57_61_6001	Pipe Layout Drawing SF Beta North	Drawing	1	Vendor	GEN-2	4/25/2013	Approval	Drawing
6007_PLN_AGE_57_61_6001	Pipe Layout Drawing SF Beta North	Drawing	1	Vendor	GEN-2	4/25/2013	Approval	Drawing
6007_PLN_AGE_57_61_6001	Pipe Layout Drawing SF Beta North	Drawing	1	Vendor	GEN-2	4/25/2013	Approval	Drawing
6007_PLN_AGE_57_61_6001	Pipe Layout Drawing SF Beta North	Drawing	1	Vendor	GEN-2	4/25/2013	Approval	Drawing
6007_PLN_AGE_57_61_6001	Pipe Layout Drawing SF Beta North	Drawing	1	Vendor	GEN-2	4/25/2013	Approval	Drawing
6007_PLN_AGE_57_61_6001	Pipe Layout Drawing SF Beta North	Drawing	1	Vendor	GEN-2	4/25/2013	Approval	Drawing
6007_PLN_AGE_57_61_6001	Pipe Layout Drawing SF Beta North	Drawing	1	Vendor	GEN-2	4/25/2013	Approval	Drawing
6007-PLN-FWE-21-52-0102	PIPE SUPPORTS DETAILS BASE. PLATES AND ANCHOR RODS	Drawing	3	Vendor	GEN-2	4/26/2013	Approval	Drawing
6007-PLN-FWE-21-54-0401	TYPICAL PIPE HANDRAIL, STAIRWAY AND GRATING DETAILS	Drawing	1	Vendor	GEN-2	4/26/2013	Approval	Drawing
6007-PLN-FWE-21-54-0402	TYPICAL PIPE HANDRAIL, STAIRWAY AND GRATING DETAILS	Drawing	1	Vendor	GEN-2	4/26/2013	Approval	Drawing
6007-PLN-FWE-21-54-0403	TYPICAL DETAILS	Drawing	1	Vendor	GEN-2	4/26/2013	Approval	Drawing
6007-PLN-FWE-21-52-0002	Structural Base Loads	Drawing	3	Vendor	GEN-2	4/26/2013	Approval	Drawing

6007-PLN-FWE-21-52-0003	Base Loads Table. Main & Auxiliary Platforms	Drawing	2	Vendor	GEN-2	4/26/2013	Approval	Drawing
6007-PLN-FWE-21-52-0004	Base Loads Table. Piping Supports	Drawing	2	Vendor	GEN-2	4/26/2013	Approval	Drawing
6007-PLN-FWE-21-52-0201	Equipments Base Loads Details	Drawing	4	Vendor	GEN-2	4/26/2013	Approval	Drawing
6007-PLN-FWE-21-52-0202	Structural Base Loads Details	Drawing	4	Vendor	GEN-2	4/26/2013	Approval	Drawing
6007-PLN-FWE-21-52-0211	Equipment Base Plate Details	Drawing	2	Vendor	GEN-2	4/26/2013	Approval	Drawing
6007-PLN-FWE-21-54-0301	Main Structure	Drawing	4	Vendor	GEN-2	4/26/2013	Approval	Drawing
6007-PLN-FWE-21-54-0302	Main Structure. Bents 1 to 7	Drawing	2	Vendor	GEN-2	4/26/2013	Approval	Drawing
6007-PLN-FWE-21-54-0303	Main Structure. Bents A/M &B/N	Drawing	2	Vendor	GEN-2	4/26/2013	Approval	Drawing
6007-PLN-FWE-21-54-0304	Main Structure. Plan View	Drawing	2	Vendor	GEN-2	4/26/2013	Approval	Drawing
6007-PLN-FWE-21-54-0305	Auxiliary Structure. Platforms	Drawing	4	Vendor	GEN-2	4/26/2013	Approval	Drawing
6007-PLN-FWE-21-54-0306	MAIN STRUCTURE - P. V. - LEVELS +17' 11 3/4" +39' 6 3/4" & +50' 7 3/4"	Drawing	4	Vendor	GEN-2	4/26/2013	Approval	Drawing
6007-PLN-FWE-21-54-0307	MAIN STRUCTURE - PLANT VIEW - GRATING LEVELS	Drawing	3	Vendor	GEN-2	4/26/2013	Approval	Drawing
6007-PLN-FWE-21-54-0311	Auxiliary Structure. Piping Supports -I-	Drawing	2	Vendor	GEN-2	4/26/2013	Approval	Drawing
6007-PLN-FWE-21-54-0312	AUXILIARY STRUCTURE PIPPING SUPPORTS-2-	Drawing	2	Vendor	GEN-2	4/26/2013	Approval	Drawing
6007-PLN-FWE-21-54-0321	DRUM SADDLE FOR ERECTION - GENERAL ARRANGEMENT & SECTIONS	Drawing	2	Vendor	GEN-2	4/26/2013	Approval	Drawing
6007-PLN-FWE-21-54-0351	MAIN STRUCTURE - DETAILS SERIAL A & B	Drawing	2	Vendor	GEN-2	4/26/2013	Approval	Drawing
6007-PLN-FWE-21-54-0352	MAIN STRUCTURE - DETAILS SERIAL C - D & E	Drawing	2	Vendor	GEN-2	4/26/2013	Approval	Drawing
6007-CAL-FWE-21-52-0020	Structural Engineering Design Report_13_04_05	Drawing	1	Vendor	GEN-2	4/26/2013	Approval	calculation
6007-CAL-FWE-21-61-0005	Feedwater and Steam Pipng Stress Analysis Report	Drawing	0	Vendor	GEN-2	4/26/2013	Approval	calculation
6007-CAL-FWE-21-61-0006	HTF Oil Pipng Stress Analysis Report	Drawing	0	Vendor	GEN-2	4/26/2013	Approval	calculation
6007-PLN-FWE-21-65-6001	PIPING GENERAL ARRANGEMENT AND TERMINAL POINTS	Drawing	0	Vendor	GEN-2	4/26/2013	Approval	Drawing
6007_PLN_AGE_57_61_6004	Pipe Layout Drawing SF Beta W	Drawing	1	Vendor	GEN-2	5/2/2013	Approval	Drawing
6007_PLN_AGE_57_61_6004	Pipe Layout Drawing SF Beta W	Drawing	1	Vendor	GEN-2	5/2/2013	Approval	Drawing
6007_PLN_AGE_57_61_6004	Pipe Layout Drawing SF Beta W	Drawing	1	Vendor	GEN-2	5/2/2013	Approval	Drawing
6007_PLN_AGE_57_61_6004	Pipe Layout Drawing SF Beta W	Drawing	1	Vendor	GEN-2	5/2/2013	Approval	Drawing
6007_PLN_AGE_57_61_6004	Pipe Layout Drawing SF Beta W	Drawing	1	Vendor	GEN-2	5/2/2013	Approval	Drawing
6007_PLN_AGE_57_61_6004	Pipe Layout Drawing SF Beta W	Drawing	1	Vendor	GEN-2	5/2/2013	Approval	Drawing
6007_PLN_AGE_57_61_6004	Pipe Layout Drawing SF Beta W	Drawing	1	Vendor	GEN-2	5/2/2013	Approval	Drawing
6007_PLN_AGE_57_61_6004	Pipe Layout Drawing SF Beta W	Drawing	1	Vendor	GEN-2	5/2/2013	Approval	Drawing
6007_PLN_AGE_57_61_6004	Pipe Layout Drawing SF Beta W	Drawing	1	Vendor	GEN-2	5/2/2013	Approval	Drawing
6007_PLN_AGE_57_61_6004	Pipe Layout Drawing SF Beta W	Drawing	1	Vendor	GEN-2	5/2/2013	Approval	Drawing
6007_PLN_AGE_57_61_6004	Pipe Layout Drawing SF Beta W	Drawing	1	Vendor	GEN-2	5/2/2013	Approval	Drawing
6007_PLN_AGE_57_61_6004	Pipe Layout Drawing SF Beta W	Drawing	1	Vendor	GEN-2	5/2/2013	Approval	Drawing
6007_PLN_AGE_57_61_6004	Pipe Layout Drawing SF Beta W	Drawing	1	Vendor	GEN-2	5/2/2013	Approval	Drawing
6007_PLN_AGE_57_61_6004	Pipe Layout Drawing SF Beta W	Drawing	1	Vendor	GEN-2	5/2/2013	Approval	Drawing
6007_PLN_AGE_57_61_6004	Pipe Layout Drawing SF Beta W	Drawing	1	Vendor	GEN-2	5/2/2013	Approval	Drawing
6007_PLN_AGE_57_61_6004	Pipe Layout Drawing SF Beta W	Drawing	1	Vendor	GEN-2	5/2/2013	Approval	Drawing
6007_PLN_AGE_57_61_6004	Pipe Layout Drawing SF Beta W	Drawing	1	Vendor	GEN-2	5/2/2013	Approval	Drawing
6007_PLN_AGE_57_61_6004	Pipe Layout Drawing SF Beta W	Drawing	1	Vendor	GEN-2	5/2/2013	Approval	Drawing
6007_PLN_AGE_57_61_6004	Pipe Layout Drawing SF Beta W	Drawing	1	Vendor	GEN-2	5/2/2013	Approval	Drawing
6007_PLN_AGE_57_61_6004	Pipe Layout Drawing SF Beta W	Drawing	1	Vendor	GEN-2	5/2/2013	Approval	Drawing
6007_PLN_AGE_57_61_6004	Pipe Layout Drawing SF Beta W	Drawing	1	Vendor	GEN-2	5/2/2013	Approval	Drawing
6007_PLN_AGE_57_61_6004	Pipe Layout Drawing SF Beta W	Drawing	1	Vendor	GEN-2	5/2/2013	Approval	Drawing
6007_PLN_AGE_57_61_6004	Pipe Layout Drawing SF Beta W	Drawing	1	Vendor	GEN-2	5/2/2013	Approval	Drawing

6007_PLN_AGE_57_61_6004_	Pipe Layout Drawing SF Beta W	Drawing	1	Vendor	GEN-2	5/2/2013	Approval	Drawing
6007_PLN_AGE_57_61_6004_	Pipe Layout Drawing SF Beta W	Drawing	1	Vendor	GEN-2	5/2/2013	Approval	Drawing
6007_PLN_AGE_57_61_6004_	Pipe Layout Drawing SF Beta W	Drawing	1	Vendor	GEN-2	5/2/2013	Approval	Drawing
6007_PLN_AGE_57_61_6004_	Pipe Layout Drawing SF Beta W	Drawing	1	Vendor	GEN-2	5/2/2013	Approval	Drawing
6007_PLN_AGE_57_61_6004_	Pipe Layout Drawing SF Beta W	Drawing	1	Vendor	GEN-2	5/2/2013	Approval	Drawing
6007_PLN_AGE_57_61_6004_	Pipe Layout Drawing SF Beta W	Drawing	1	Vendor	GEN-2	5/2/2013	Approval	Drawing
6007_PLN_AGE_57_61_6004_	Pipe Layout Drawing SF Beta W	Drawing	1	Vendor	GEN-2	5/2/2013	Approval	Drawing
6007_PLN_AGE_57_61_6004_	Pipe Layout Drawing SF Beta W	Drawing	1	Vendor	GEN-2	5/2/2013	Approval	Drawing
6007_PLN_AGE_57_61_6004_	Pipe Layout Drawing SF Beta W	Drawing	1	Vendor	GEN-2	5/2/2013	Approval	Drawing
6007_PLN_AGE_57_61_6004_	Pipe Layout Drawing SF Beta W	Drawing	1	Vendor	GEN-2	5/2/2013	Approval	Drawing
6007_PLN_AGE_57_61_6004_	Pipe Layout Drawing SF Beta W	Drawing	1	Vendor	GEN-2	5/2/2013	Approval	Drawing
6007_PLN_AGE_57_61_6004_	Pipe Layout Drawing SF Beta W	Drawing	1	Vendor	GEN-2	5/2/2013	Approval	Drawing
6007_PLN_AGE_57_61_6004_	Pipe Layout Drawing SF Beta W	Drawing	1	Vendor	GEN-2	5/2/2013	Approval	Drawing
6007_PLN_AGE_57_61_6004_	Pipe Layout Drawing SF Beta W	Drawing	1	Vendor	GEN-2	5/2/2013	Approval	Drawing
6007_PLN_AGE_57_61_6004_	Pipe Layout Drawing SF Beta W	Drawing	1	Vendor	GEN-2	5/2/2013	Approval	Drawing
6007_PLN_AGE_57_61_6004_	Pipe Layout Drawing SF Beta W	Drawing	1	Vendor	GEN-2	5/2/2013	Approval	Drawing
6007_PLN_AGE_57_61_6004_	Pipe Layout Drawing SF Beta W	Drawing	1	Vendor	GEN-2	5/2/2013	Approval	Drawing
6007_PLN_AGE_57_61_6004_	Pipe Layout Drawing SF Beta W	Drawing	1	Vendor	GEN-2	5/2/2013	Approval	Drawing
6007_PLN_AGE_57_61_6004_	Pipe Layout Drawing SF Beta W	Drawing	1	Vendor	GEN-2	5/2/2013	Approval	Drawing
6007_PLN_AGE_57_61_6004_	Pipe Layout Drawing SF Beta W	Drawing	1	Vendor	GEN-2	5/2/2013	Approval	Drawing
6007_PLN_AGE_57_61_6004_	Pipe Layout Drawing SF Beta W	Drawing	1	Vendor	GEN-2	5/2/2013	Approval	Drawing
6007_PLN_AGE_57_61_6004_	Pipe Layout Drawing SF Beta W	Drawing	1	Vendor	GEN-2	5/2/2013	Approval	Drawing
6007_PLN_AGE_57_61_6004_	Pipe Layout Drawing SF Beta W	Drawing	1	Vendor	GEN-2	5/2/2013	Approval	Drawing
6007_PLN_AGE_57_61_6004_	Pipe Layout Drawing SF Beta W	Drawing	1	Vendor	GEN-2	5/2/2013	Approval	Drawing
6007_PLN_AGE_57_61_6004_	Pipe Layout Drawing SF Beta W	Drawing	1	Vendor	GEN-2	5/2/2013	Approval	Drawing
6007_PLN_AGE_57_61_6004_	Pipe Layout Drawing SF Beta W	Drawing	1	Vendor	GEN-2	5/2/2013	Approval	Drawing
6007_PLN_AGE_57_61_6004_	Pipe Layout Drawing SF Beta W	Drawing	1	Vendor	GEN-2	5/2/2013	Approval	Drawing
6007_PLN_AGE_57_61_6004_	Pipe Layout Drawing SF Beta W	Drawing	1	Vendor	GEN-2	5/2/2013	Approval	Drawing
6007_PLN_AGE_57_61_6004_	Pipe Layout Drawing SF Beta W	Drawing	1	Vendor	GEN-2	5/2/2013	Approval	Drawing
6007_PLN_AGE_57_61_6004_	Pipe Layout Drawing SF Beta W	Drawing	1	Vendor	GEN-2	5/2/2013	Approval	Drawing
6007_PLN_AGE_57_61_6004_	Pipe Layout Drawing SF Beta W	Drawing	1	Vendor	GEN-2	5/2/2013	Approval	Drawing
6007-inf-AGE-68-60-6003	Stress Analysis Report Header HTF- Beta Plant – W SF Inlet	Drawing	4	Vendor	GEN-2	5/2/2013	Approval	Report
6007-inf-AGE-68-60-6004	Stress Analysis Report Header HTF- Beta Plant – W SF Return	Drawing	2	Vendor	GEN-2	5/2/2013	Approval	Report
6007_PLN_AGE_57_61_2001_	Pipe layout Drawing SF Alpha NE	Drawing	1	Vendor	GEN-2	5/2/2013	Approval	Drawing
6007_PLN_AGE_57_61_2001_	Pipe layout Drawing SF Alpha NE	Drawing	1	Vendor	GEN-2	5/2/2013	Approval	Drawing
6007-PLN-AGE-57-61-2001_S	Pipe layout Drawing SF Alpha NE	Drawing	1	Vendor	GEN-2	5/2/2013	Approval	Drawing
6007-PLN-AGE-57-61-2001_S	Pipe layout Drawing SF Alpha NE	Drawing	1	Vendor	GEN-2	5/2/2013	Approval	Drawing
6007-PLN-AGE-57-61-2001_S	Pipe layout Drawing SF Alpha NE	Drawing	1	Vendor	GEN-2	5/2/2013	Approval	Drawing
6007-PLN-AGE-57-61-2001_S	Pipe layout Drawing SF Alpha NE	Drawing	1	Vendor	GEN-2	5/2/2013	Approval	Drawing
6007-PLN-AGE-57-61-2001_S	Pipe layout Drawing SF Alpha NE	Drawing	1	Vendor	GEN-2	5/2/2013	Approval	Drawing
6007-PLN-AGE-57-61-2001_S	Pipe layout Drawing SF Alpha NE	Drawing	1	Vendor	GEN-2	5/2/2013	Approval	Drawing
6007-PLN-AGE-57-61-2001_S	Pipe layout Drawing SF Alpha NE	Drawing	1	Vendor	GEN-2	5/2/2013	Approval	Drawing
6007-PLN-AGE-57-61-2001_S	Pipe layout Drawing SF Alpha NE	Drawing	1	Vendor	GEN-2	5/2/2013	Approval	Drawing

6007-PLN-AGE-57-61-2001_S	Pipe layout Drawing SF Alpha NE	Drawing	1	Vendor	GEN-2	5/2/2013	Approval	Drawing
6007-PLN-AGE-57-61-2001_S	Pipe layout Drawing SF Alpha NE	Drawing	1	Vendor	GEN-2	5/2/2013	Approval	Drawing
6007-PLN-AGE-57-61-2001-SH	Pipe layout Drawing SF Alpha NE	Drawing	1	Vendor	GEN-2	5/2/2013	Approval	Drawing
6007-PLN-AGE-57-61-2001_S	Pipe layout Drawing SF Alpha NE	Drawing	1	Vendor	GEN-2	5/2/2013	Approval	Drawing
6007-PLN-AGE-57-61-2001_S	Pipe layout Drawing SF Alpha NE	Drawing	1	Vendor	GEN-2	5/2/2013	Approval	Drawing
6007-PLN-AGE-57-61-2001_S	Pipe layout Drawing SF Alpha NE	Drawing	1	Vendor	GEN-2	5/2/2013	Approval	Drawing
6007-PLN-AGE-57-61-2001_S	Pipe layout Drawing SF Alpha NE	Drawing	1	Vendor	GEN-2	5/2/2013	Approval	Drawing
6007-PLN-AGE-57-61-2001_S	Pipe layout Drawing SF Alpha NE	Drawing	1	Vendor	GEN-2	5/2/2013	Approval	Drawing
6007-PLN-AGE-57-61-2001_S	Pipe layout Drawing SF Alpha NE	Drawing	1	Vendor	GEN-2	5/2/2013	Approval	Drawing
6007-PLN-AGE-57-61-2001_S	Pipe layout Drawing SF Alpha NE	Drawing	1	Vendor	GEN-2	5/2/2013	Approval	Drawing
6007-PLN-AGE-57-61-2001_S	Pipe layout Drawing SF Alpha NE	Drawing	1	Vendor	GEN-2	5/2/2013	Approval	Drawing
6007-PLN-AGE-57-61-2001-D	Pipe layout Drawing SF Alpha NE	Drawing	1	Vendor	GEN-2	5/2/2013	Approval	Drawing
6007-PLN-AGE-57-61-2001-D	Pipe layout Drawing SF Alpha NE	Drawing	1	Vendor	GEN-2	5/2/2013	Approval	Drawing
6007-PLN-AGE-57-61-2001-D	Pipe layout Drawing SF Alpha NE	Drawing	1	Vendor	GEN-2	5/2/2013	Approval	Drawing
6007-PLN-AGE-57-61-2001-D	Pipe layout Drawing SF Alpha NE	Drawing	1	Vendor	GEN-2	5/2/2013	Approval	Drawing
6007-PLN-AGE-57-61-2001-D	Pipe layout Drawing SF Alpha NE	Drawing	1	Vendor	GEN-2	5/2/2013	Approval	Drawing
6007-PLN-AGE-57-61-2001-D	Pipe layout Drawing SF Alpha NE	Drawing	1	Vendor	GEN-2	5/2/2013	Approval	Drawing
6007-PLN-AGE-57-61-2001-D	Pipe layout Drawing SF Alpha NE	Drawing	1	Vendor	GEN-2	5/2/2013	Approval	Drawing
6007-PLN-AGE-57-61-2001-D	Pipe layout Drawing SF Alpha NE	Drawing	1	Vendor	GEN-2	5/2/2013	Approval	Drawing
6007-inf-AGE-68-60-2005	Pipe layout Drawing SF Alpha NE	Drawing	1	Vendor	GEN-2	5/2/2013	Approval	Report
6007-inf-AGE-68-60-2006	Pipe layout Drawing SF Alpha NE	Drawing	1	Vendor	GEN-2	5/2/2013	Approval	Report
6007_PLN_AGE_57_61_6002_	Pipe Layout Drawing SF Beta East	Drawing	1	Vendor	GEN-2	5/2/2013	Approval	Drawing
6007_PLN_AGE_57_61_6002_	Pipe Layout Drawing SF Beta East	Drawing	1	Vendor	GEN-2	5/2/2013	Approval	Drawing
6007_PLN_AGE_57_61_6002_	Pipe Layout Drawing SF Beta East	Drawing	1	Vendor	GEN-2	5/2/2013	Approval	Drawing
6007_PLN_AGE_57_61_6002_	Pipe Layout Drawing SF Beta East	Drawing	1	Vendor	GEN-2	5/2/2013	Approval	Drawing
6007_PLN_AGE_57_61_6002_	Pipe Layout Drawing SF Beta East	Drawing	1	Vendor	GEN-2	5/2/2013	Approval	Drawing
6007_PLN_AGE_57_61_6002_	Pipe Layout Drawing SF Beta East	Drawing	1	Vendor	GEN-2	5/2/2013	Approval	Drawing
6007_PLN_AGE_57_61_6002_	Pipe Layout Drawing SF Beta East	Drawing	1	Vendor	GEN-2	5/2/2013	Approval	Drawing
6007_PLN_AGE_57_61_6002_	Pipe Layout Drawing SF Beta East	Drawing	1	Vendor	GEN-2	5/2/2013	Approval	Drawing
6007_PLN_AGE_57_61_6002_	Pipe Layout Drawing SF Beta East	Drawing	1	Vendor	GEN-2	5/2/2013	Approval	Drawing
6007_PLN_AGE_57_61_6002_	Pipe Layout Drawing SF Beta East	Drawing	1	Vendor	GEN-2	5/2/2013	Approval	Drawing
6007_PLN_AGE_57_61_6002_	Pipe Layout Drawing SF Beta East	Drawing	1	Vendor	GEN-2	5/2/2013	Approval	Drawing
6007_PLN_AGE_57_61_6002_	Pipe Layout Drawing SF Beta East	Drawing	1	Vendor	GEN-2	5/2/2013	Approval	Drawing
6007_PLN_AGE_57_61_6002_	Pipe Layout Drawing SF Beta East	Drawing	1	Vendor	GEN-2	5/2/2013	Approval	Drawing
6007_PLN_AGE_57_61_6002_	Pipe Layout Drawing SF Beta East	Drawing	1	Vendor	GEN-2	5/2/2013	Approval	Drawing
6007_PLN_AGE_57_61_6002_	Pipe Layout Drawing SF Beta East	Drawing	1	Vendor	GEN-2	5/2/2013	Approval	Drawing
6007_PLN_AGE_57_61_6002_	Pipe Layout Drawing SF Beta East	Drawing	1	Vendor	GEN-2	5/2/2013	Approval	Drawing
6007_PLN_AGE_57_61_6002_	Pipe Layout Drawing SF Beta East	Drawing	1	Vendor	GEN-2	5/2/2013	Approval	Drawing
6007_PLN_AGE_57_61_6002_	Pipe Layout Drawing SF Beta East	Drawing	1	Vendor	GEN-2	5/2/2013	Approval	Drawing
6007_PLN_AGE_57_61_6002_	Pipe Layout Drawing SF Beta East	Drawing	1	Vendor	GEN-2	5/2/2013	Approval	Drawing
6007_PLN_AGE_57_61_6002_	Pipe Layout Drawing SF Beta East	Drawing	1	Vendor	GEN-2	5/2/2013	Approval	Drawing
6007_PLN_AGE_57_61_6002_	Pipe Layout Drawing SF Beta East	Drawing	1	Vendor	GEN-2	5/2/2013	Approval	Drawing
6007_PLN_AGE_57_61_6002_	Pipe Layout Drawing SF Beta East	Drawing	1	Vendor	GEN-2	5/2/2013	Approval	Drawing

6007_PLN_AGE_57_61_6002_	Pipe Layout Drawing SF Beta East	Drawing	1	Vendor	GEN-2	5/2/2013	Approval	Drawing
6007_PLN_AGE_57_61_6002_	Pipe Layout Drawing SF Beta East	Drawing	1	Vendor	GEN-2	5/2/2013	Approval	Drawing
6007_PLN_AGE_57_61_6002_	Pipe Layout Drawing SF Beta East	Drawing	1	Vendor	GEN-2	5/2/2013	Approval	Drawing
6007_PLN_AGE_57_61_6002_	Pipe Layout Drawing SF Beta East	Drawing	1	Vendor	GEN-2	5/2/2013	Approval	Drawing
6007_PLN_AGE_57_61_6002_	Pipe Layout Drawing SF Beta East	Drawing	1	Vendor	GEN-2	5/2/2013	Approval	Drawing
6007_PLN_AGE_57_61_6002_	Pipe Layout Drawing SF Beta East	Drawing	1	Vendor	GEN-2	5/2/2013	Approval	Drawing
6007-inf-AGE-68-60-6001	Stress Analysis Report Header HTF- Beta Plant – East SF Inlet	Drawing	1	Vendor	GEN-2	5/2/2013	Approval	Report
6007-inf-AGE-68-60-6002	Stress Analysis Report Header HTF- Beta Plant – East SF Return	Drawing	1	Vendor	GEN-2	5/2/2013	Approval	Report
LP 1.0	Lightning Protection System (Roof Plan and Installation Details)	Drawing	1	Vendor	GEN-2	5/3/2013	Approval	
6007-PLN-AGE-57-61-2004_S	Pipe Layout Drawing Alpha NW	Drawing	1	Vendor	GEN-2	5/6/2013	Approval	Drawing
6007-PLN-AGE-57-61-2004_S	Pipe Layout Drawing Alpha NW	Drawing	1	Vendor	GEN-2	5/6/2013	Approval	Drawing
6007-PLN-AGE-57-61-2004_S	Pipe Layout Drawing Alpha NW	Drawing	1	Vendor	GEN-2	5/6/2013	Approval	Drawing
6007-PLN-AGE-57-61-2004_S	Pipe Layout Drawing Alpha NW	Drawing	1	Vendor	GEN-2	5/6/2013	Approval	Drawing
6007-PLN-AGE-57-61-2004_S	Pipe Layout Drawing Alpha NW	Drawing	1	Vendor	GEN-2	5/6/2013	Approval	Drawing
6007-PLN-AGE-57-61-2004_S	Pipe Layout Drawing Alpha NW	Drawing	1	Vendor	GEN-2	5/6/2013	Approval	Drawing
6007-PLN-AGE-57-61-2004_S	Pipe Layout Drawing Alpha NW	Drawing	1	Vendor	GEN-2	5/6/2013	Approval	Drawing
6007-PLN-AGE-57-61-2004_S	Pipe Layout Drawing Alpha NW	Drawing	1	Vendor	GEN-2	5/6/2013	Approval	Drawing
6007-PLN-AGE-57-61-2004_S	Pipe Layout Drawing Alpha NW	Drawing	1	Vendor	GEN-2	5/6/2013	Approval	Drawing
6007-PLN-AGE-57-61-2004_S	Pipe Layout Drawing Alpha NW	Drawing	1	Vendor	GEN-2	5/6/2013	Approval	Drawing
6007-PLN-AGE-57-61-2004_S	Pipe Layout Drawing Alpha NW	Drawing	1	Vendor	GEN-2	5/6/2013	Approval	Drawing
6007-PLN-AGE-57-61-2004_S	Pipe Layout Drawing Alpha NW	Drawing	1	Vendor	GEN-2	5/6/2013	Approval	Drawing
6007-PLN-AGE-57-61-2004_S	Pipe Layout Drawing Alpha NW	Drawing	1	Vendor	GEN-2	5/6/2013	Approval	Drawing
6007-PLN-AGE-57-61-2004_S	Pipe Layout Drawing Alpha NW	Drawing	1	Vendor	GEN-2	5/6/2013	Approval	Drawing
6007-PLN-AGE-57-61-2004_S	Pipe Layout Drawing Alpha NW	Drawing	1	Vendor	GEN-2	5/6/2013	Approval	Drawing
6007-PLN-AGE-57-61-2004_S	Pipe Layout Drawing Alpha NW	Drawing	1	Vendor	GEN-2	5/6/2013	Approval	Drawing
6007-PLN-AGE-57-61-2004_S	Pipe Layout Drawing Alpha NW	Drawing	1	Vendor	GEN-2	5/6/2013	Approval	Drawing
6007-PLN-AGE-57-61-2004_S	Pipe Layout Drawing Alpha NW	Drawing	1	Vendor	GEN-2	5/6/2013	Approval	Drawing
6007-PLN-AGE-57-61-2004_S	Pipe Layout Drawing Alpha NW	Drawing	1	Vendor	GEN-2	5/6/2013	Approval	Drawing
6007-PLN-AGE-57-61-2004_S	Pipe Layout Drawing Alpha NW	Drawing	1	Vendor	GEN-2	5/6/2013	Approval	Drawing
6007-PLN-AGE-57-61-2004_S	Pipe Layout Drawing Alpha NW	Drawing	1	Vendor	GEN-2	5/6/2013	Approval	Drawing
6007-PLN-AGE-57-61-2004_S	Pipe Layout Drawing Alpha NW	Drawing	1	Vendor	GEN-2	5/6/2013	Approval	Drawing
6007-PLN-AGE-57-61-2004_S	Pipe Layout Drawing Alpha NW	Drawing	1	Vendor	GEN-2	5/6/2013	Approval	Drawing
6007-PLN-AGE-57-61-2004_S	Pipe Layout Drawing Alpha NW	Drawing	1	Vendor	GEN-2	5/6/2013	Approval	Drawing
6007-PLN-AGE-57-61-2004_S	Pipe Layout Drawing Alpha NW	Drawing	1	Vendor	GEN-2	5/6/2013	Approval	Drawing
6007-PLN-AGE-57-61-2004_S	Pipe Layout Drawing Alpha NW	Drawing	1	Vendor	GEN-2	5/6/2013	Approval	Drawing
6007-PLN-AGE-57-61-2004_S	Pipe Layout Drawing Alpha NW	Drawing	1	Vendor	GEN-2	5/6/2013	Approval	Drawing
6007-PLN-AGE-57-61-2004_S	Pipe Layout Drawing Alpha NW	Drawing	1	Vendor	GEN-2	5/6/2013	Approval	Drawing
6007-PLN-AGE-57-61-2004_S	Pipe Layout Drawing Alpha NW	Drawing	1	Vendor	GEN-2	5/6/2013	Approval	Drawing
6007-PLN-AGE-57-61-2004_S	Pipe Layout Drawing Alpha NW	Drawing	1	Vendor	GEN-2	5/6/2013	Approval	Drawing
6007-PLN-AGE-57-61-2004_S	Pipe Layout Drawing Alpha NW	Drawing	1	Vendor	GEN-2	5/6/2013	Approval	Drawing
6007-PLN-AGE-57-61-2004_S	Pipe Layout Drawing Alpha NW	Drawing	1	Vendor	GEN-2	5/6/2013	Approval	Drawing
6007-PLN-AGE-57-61-2004_S	Pipe Layout Drawing Alpha NW	Drawing	1	Vendor	GEN-2	5/6/2013	Approval	Drawing
6007-PLN-AGE-57-61-2004_S	Pipe Layout Drawing Alpha NW	Drawing	1	Vendor	GEN-2	5/6/2013	Approval	Drawing
6007-PLN-AGE-57-61-2004_S	Pipe Layout Drawing Alpha NW	Drawing	1	Vendor	GEN-2	5/6/2013	Approval	Drawing

6007-PLN-AGE-57-61-2004_S	Pipe Layout Drawing Alpha NW	Drawing	1	Vendor	GEN-2	5/6/2013	Approval	Drawing
6007-PLN-AGE-57-61-2004_S	Pipe Layout Drawing Alpha NW	Drawing	1	Vendor	GEN-2	5/6/2013	Approval	Drawing
6007-PLN-AGE-57-61-2004_S	Pipe Layout Drawing Alpha NW	Drawing	1	Vendor	GEN-2	5/6/2013	Approval	Drawing
6007-PLN-AGE-57-61-2004_S	Pipe Layout Drawing Alpha NW	Drawing	1	Vendor	GEN-2	5/6/2013	Approval	Drawing
6007-PLN-AGE-57-61-2004_S	Pipe Layout Drawing Alpha NW	Drawing	1	Vendor	GEN-2	5/6/2013	Approval	Drawing
6007-PLN-AGE-57-61-2004_S	Pipe Layout Drawing Alpha NW	Drawing	1	Vendor	GEN-2	5/6/2013	Approval	Drawing
6007-inf-AGE-68-60-2007	Stress Analysis Report-Solar Field-North West Inlet Alpha	Drawing	4	Vendor	GEN-2	5/6/2013	Approval	Report
6007-inf-AGE-68-60-2008	Stress Analysis Report-Solar Field-North West return Alpha	Drawing	3	Vendor	GEN-2	5/6/2013	Approval	Report
6007-PLN-AGE-57-61-2003-SH	Pipe Layout Drawing Alpha West	Drawing	3	Vendor	GEN-2	5/6/2013	Approval	Drawing
6007-PLN-AGE-57-61-2003-SH	Pipe Layout Drawing Alpha West	Drawing	3	Vendor	GEN-2	5/6/2013	Approval	Drawing
6007-PLN-AGE-57-61-2003-SH	Pipe Layout Drawing Alpha West	Drawing	3	Vendor	GEN-2	5/6/2013	Approval	Drawing
6007-PLN-AGE-57-61-2003-SH	Pipe Layout Drawing Alpha West	Drawing	3	Vendor	GEN-2	5/6/2013	Approval	Drawing
6007-PLN-AGE-57-61-2003-SH	Pipe Layout Drawing Alpha West	Drawing	3	Vendor	GEN-2	5/6/2013	Approval	Drawing
6007-PLN-AGE-57-61-2003-SH	Pipe Layout Drawing Alpha West	Drawing	3	Vendor	GEN-2	5/6/2013	Approval	Drawing
6007-PLN-AGE-57-61-2003-SH	Pipe Layout Drawing Alpha West	Drawing	3	Vendor	GEN-2	5/6/2013	Approval	Drawing
6007-PLN-AGE-57-61-2003-SH	Pipe Layout Drawing Alpha West	Drawing	3	Vendor	GEN-2	5/6/2013	Approval	Drawing
6007-PLN-AGE-57-61-2003-SH	Pipe Layout Drawing Alpha West	Drawing	3	Vendor	GEN-2	5/6/2013	Approval	Drawing
6007-PLN-AGE-57-61-2003-SH	Pipe Layout Drawing Alpha West	Drawing	3	Vendor	GEN-2	5/6/2013	Approval	Drawing
6007-PLN-AGE-57-61-2003-SH	Pipe Layout Drawing Alpha West	Drawing	3	Vendor	GEN-2	5/6/2013	Approval	Drawing
6007-PLN-AGE-57-61-2003-SH	Pipe Layout Drawing Alpha West	Drawing	3	Vendor	GEN-2	5/6/2013	Approval	Drawing
6007-PLN-AGE-57-61-2003-SH	Pipe Layout Drawing Alpha West	Drawing	3	Vendor	GEN-2	5/6/2013	Approval	Drawing
6007-PLN-AGE-57-61-2003-SH	Pipe Layout Drawing Alpha West	Drawing	3	Vendor	GEN-2	5/6/2013	Approval	Drawing
6007-PLN-AGE-57-61-2003-SH	Pipe Layout Drawing Alpha West	Drawing	3	Vendor	GEN-2	5/6/2013	Approval	Drawing
6007-PLN-AGE-57-61-2003-SH	Pipe Layout Drawing Alpha West	Drawing	3	Vendor	GEN-2	5/6/2013	Approval	Drawing
6007-PLN-AGE-57-61-2003-SH	Pipe Layout Drawing Alpha West	Drawing	3	Vendor	GEN-2	5/6/2013	Approval	Drawing
6007-PLN-AGE-57-61-2003-SH	Pipe Layout Drawing Alpha West	Drawing	3	Vendor	GEN-2	5/6/2013	Approval	Drawing
6007-PLN-AGE-57-61-2003-SH	Pipe Layout Drawing Alpha West	Drawing	3	Vendor	GEN-2	5/6/2013	Approval	Drawing
6007-PLN-AGE-57-61-2003-SH	Pipe Layout Drawing Alpha West	Drawing	3	Vendor	GEN-2	5/6/2013	Approval	Drawing
6007-PLN-AGE-57-61-2003-SH	Pipe Layout Drawing Alpha West	Drawing	3	Vendor	GEN-2	5/6/2013	Approval	Drawing
6007-PLN-AGE-57-61-2003-SH	Pipe Layout Drawing Alpha West	Drawing	3	Vendor	GEN-2	5/6/2013	Approval	Drawing
6007-PLN-AGE-57-61-2003-SH	Pipe Layout Drawing Alpha West	Drawing	3	Vendor	GEN-2	5/6/2013	Approval	Drawing
6007-PLN-AGE-57-61-2003-SH	Pipe Layout Drawing Alpha West	Drawing	3	Vendor	GEN-2	5/6/2013	Approval	Drawing
6007-PLN-AGE-57-61-2003-SH	Pipe Layout Drawing Alpha West	Drawing	3	Vendor	GEN-2	5/6/2013	Approval	Drawing
6007-PLN-AGE-57-61-2003-SH	Pipe Layout Drawing Alpha West	Drawing	3	Vendor	GEN-2	5/6/2013	Approval	Drawing
6007-PLN-AGE-57-61-2003-SH	Pipe Layout Drawing Alpha West	Drawing	3	Vendor	GEN-2	5/6/2013	Approval	Drawing
6007-PLN-AGE-57-61-2003-SH	Pipe Layout Drawing Alpha West	Drawing	3	Vendor	GEN-2	5/6/2013	Approval	Drawing
6007-PLN-AGE-57-61-2003-SH	Pipe Layout Drawing Alpha West	Drawing	3	Vendor	GEN-2	5/6/2013	Approval	Drawing
6007-PLN-AGE-57-61-2003-SH	Pipe Layout Drawing Alpha West	Drawing	3	Vendor	GEN-2	5/6/2013	Approval	Drawing
6007-PLN-AGE-57-61-2003-SH	Pipe Layout Drawing Alpha West	Drawing	3	Vendor	GEN-2	5/6/2013	Approval	Drawing
6007-PLN-AGE-57-61-2003-SH	Pipe Layout Drawing Alpha West	Drawing	3	Vendor	GEN-2	5/6/2013	Approval	Drawing
6007-PLN-AGE-57-61-2003-SH	Pipe Layout Drawing Alpha West	Drawing	3	Vendor	GEN-2	5/6/2013	Approval	Drawing
6007-PLN-AGE-57-61-2003-SH	Pipe Layout Drawing Alpha West	Drawing	3	Vendor	GEN-2	5/6/2013	Approval	Drawing
6007-PLN-AGE-57-61-2003-SH	Pipe Layout Drawing Alpha West	Drawing	3	Vendor	GEN-2	5/6/2013	Approval	Drawing
6007-PLN-AGE-57-61-2003-SH	Pipe Layout Drawing Alpha West	Drawing	3	Vendor	GEN-2	5/6/2013	Approval	Drawing
6007-PLN-AGE-57-61-2003-SH	Pipe Layout Drawing Alpha West	Drawing	3	Vendor	GEN-2	5/6/2013	Approval	Drawing
6007-PLN-AGE-57-61-2003-SH	Pipe Layout Drawing Alpha West	Drawing	3	Vendor	GEN-2	5/6/2013	Approval	Drawing
6007-PLN-AGE-57-61-2003-SH	Pipe Layout Drawing Alpha West	Drawing	3	Vendor	GEN-2	5/6/2013	Approval	Drawing
6007-PLN-AGE-57-61-2003-SH	Pipe Layout Drawing Alpha West	Drawing	3	Vendor	GEN-2	5/6/2013	Approval	Drawing

6007-PLN-AGE-57-61-2003-SH	Pipe Layout Drawing Alpha West	Drawing	3	Vendor	GEN-2	5/6/2013	Approval	Drawing
6007-PLN-AGE-57-61-2003-SH	Pipe Layout Drawing Alpha West	Drawing	3	Vendor	GEN-2	5/6/2013	Approval	Drawing
6007-PLN-AGE-57-61-2003-SH	Pipe Layout Drawing Alpha West	Drawing	3	Vendor	GEN-2	5/6/2013	Approval	Drawing
6007-PLN-AGE-57-61-2003-SH	Pipe Layout Drawing Alpha West	Drawing	3	Vendor	GEN-2	5/6/2013	Approval	Drawing
6007-PLN-AGE-57-61-2003-SH	Pipe Layout Drawing Alpha West	Drawing	3	Vendor	GEN-2	5/6/2013	Approval	Drawing
6007-PLN-AGE-57-61-2003-SH	Pipe Layout Drawing Alpha West	Drawing	3	Vendor	GEN-2	5/6/2013	Approval	Drawing
6007-PLN-AGE-57-61-2003-SH	Pipe Layout Drawing Alpha West	Drawing	3	Vendor	GEN-2	5/6/2013	Approval	Drawing
6007-PLN-AGE-57-61-2003-SH	Pipe Layout Drawing Alpha West	Drawing	3	Vendor	GEN-2	5/6/2013	Approval	Drawing
6007-PLN-AGE-57-61-2003-SH	Pipe Layout Drawing Alpha West	Drawing	3	Vendor	GEN-2	5/6/2013	Approval	Drawing
6007-PLN-AGE-57-61-2003-SH	Pipe Layout Drawing Alpha West	Drawing	3	Vendor	GEN-2	5/6/2013	Approval	Drawing
6007-PLN-AGE-57-61-2003-SH	Pipe Layout Drawing Alpha West	Drawing	3	Vendor	GEN-2	5/6/2013	Approval	Drawing
6007-PLN-AGE-57-61-2003-SH	Pipe Layout Drawing Alpha West	Drawing	3	Vendor	GEN-2	5/6/2013	Approval	Drawing
6007-PLN-AGE-57-61-2003-SH	Pipe Layout Drawing Alpha West	Drawing	3	Vendor	GEN-2	5/6/2013	Approval	Drawing
6007-PLN-AGE-57-61-2003-SH	Pipe Layout Drawing Alpha West	Drawing	3	Vendor	GEN-2	5/6/2013	Approval	Drawing
6007-PLN-AGE-57-61-2003-SH	Pipe Layout Drawing Alpha West	Drawing	3	Vendor	GEN-2	5/6/2013	Approval	Drawing
6007-PLN-AGE-57-61-2003-SH	Pipe Layout Drawing Alpha West	Drawing	3	Vendor	GEN-2	5/6/2013	Approval	Drawing
6007-PLN-AGE-57-61-2003-SH	Pipe Layout Drawing Alpha West	Drawing	3	Vendor	GEN-2	5/6/2013	Approval	Drawing
6007-inf-AGE-68-60-2003	Stress Analysis Report-Solar Field-West Inlet Alpha	Drawing	2	Vendor	GEN-2	5/6/2013	Approval	Report
6007-inf-AGE-68-60-2004	Stress Analysis Report-Solar Field-West return Alpha	Drawing	2	Vendor	GEN-2	5/6/2013	Approval	Report
6007-PLN-SCT-14-62-0002	Lightning Protection System (Roof Plan and Installation Details)	Drawing	1	Vendor	GEN-2	5/3/2013	Approval	Drawing
6007-PLN-PRI-39-52-4101	A-MT-451 Foundation Cover Sheet	Drawing	3	Vendor	GEN-2	5/3/2013	Approval	Drawing
6007-PLN-PRI-39-52-4106	A-MT-451 Anchor Chair Detail	Drawing	3	Vendor	GEN-2	5/3/2013	Approval	Drawing
6007-PLN-PRI-39-52-4201	B-MT-451 Foundation Cover Sheet	Drawing	3	Vendor	GEN-2	5/3/2013	Approval	Drawing
6007-PLN-PRI-39-52-4206	B-MT-451 Anchor Chair Detail	Drawing	3	Vendor	GEN-2	5/3/2013	Approval	Drawing
MT-451 Foundation Drawing C	MT-451 Foundation Drawing Change Memo	Drawing	0	Vendor	GEN-2	5/3/2013	Approval	
6007-PLN-LEF-12-54-0021	Geometric definition of RAC plant detail drawings	Drawing	5	Vendor	GEN-2	5/3/2013	Approval	Drawing
6007-PLN-LEF-12-54-0022	Geometric definition of RAC plant detail drawings	Drawing	3	Vendor	GEN-2	5/3/2013	Approval	Drawing
6007-PLN-LEF-12-54-0031	Geometric definition of RAC elevations	Drawing	5	Vendor	GEN-2	5/3/2013	Approval	Drawing
6007-PLN-LEF-12-54-0032	Geometric definition of RAC elevations	Drawing	5	Vendor	GEN-2	5/3/2013	Approval	Drawing
6007-PLN-LEF-12-54-0033	Geometric definition of RAC elevations	Drawing	5	Vendor	GEN-2	5/3/2013	Approval	Drawing
6007-PLN-LEF-12-54-0034	Geometric definition of RAC elevations	Drawing	5	Vendor	GEN-2	5/3/2013	Approval	Drawing
6007-PLN-LEF-12-54-0035	Geometric definition of RAC elevations	Drawing	5	Vendor	GEN-2	5/3/2013	Approval	Drawing
6007-PLN-LEF-12-54-0036	Geometric definition of RAC elevations	Drawing	3	Vendor	GEN-2	5/3/2013	Approval	Drawing
6007-PLN-LEF-12-54-0037	Geometric definition of RAC elevations	Drawing	3	Vendor	GEN-2	5/3/2013	Approval	Drawing
6007-PLN-LEF-12-54-0038	Geometric definition of RAC elevations	Drawing	3	Vendor	GEN-2	5/3/2013	Approval	Drawing
6007-PLN-LEF-12-54-0039	Geometric definition of RAC elevations	Drawing	4	Vendor	GEN-2	5/3/2013	Approval	Drawing
6007-PLN-LEF-12-54-0041	Geometric definition of RAC sections	Drawing	6	Vendor	GEN-2	5/3/2013	Approval	Drawing
6007-PLN-LEF-12-54-0042	Geometric definition of RAC sections	Drawing	6	Vendor	GEN-2	5/3/2013	Approval	Drawing
6007-PLN-LEF-12-54-0043	Geometric definition of RAC sections	Drawing	4	Vendor	GEN-2	5/3/2013	Approval	Drawing
6007-PLN-LEF-12-54-0051	Geometric definition of RAC details of construction	Drawing	4	Vendor	GEN-2	5/3/2013	Approval	Drawing
6007-PLN-LEF-12-54-0052	Geometric definition of RAC details of construction	Drawing	3	Vendor	GEN-2	5/3/2013	Approval	Drawing
6007-PLN-LEF-12-54-0053	Geometric definition of RAC details of construction	Drawing	1	Vendor	GEN-2	5/3/2013	Approval	Drawing
6007-PLN-AGE-25-52-4161	Foundation Details	Drawing	7	Vendor	GEN-2	5/1/2013	Approval	Drawing
6007-PLN-AGE-25-52-4163	Anchor Bolt Details	Drawing	4	Vendor	GEN-2	5/1/2013	Approval	Drawing
6007-PLN-AGE-25-52-8160	Foundation Details	Drawing	5	Vendor	GEN-2	5/1/2013	Approval	Drawing
6007-PLN-AGE-25-52-8161	Foundation Details	Drawing	7	Vendor	GEN-2	5/1/2013	Approval	Drawing
6007-PLN-AGE-25-52-8163	Anchor Bolt Details	Drawing	4	Vendor	GEN-2	5/1/2013	Approval	Drawing
6007-PLN-AGE-57-61-6003-SH	Pipe Layout Drawing Beta South	Drawing	2	Vendor	GEN-2	5/7/2013	Approval	Drawing

6007-PLN-AGE-57-61-6003-SH	Pipe Layout Drawing Beta South	Drawing	2	Vendor	GEN-2	5/7/2013	Approval	Drawing
6007-PLN-AGE-57-61-6003-SH	Pipe Layout Drawing Beta South	Drawing	2	Vendor	GEN-2	5/7/2013	Approval	Drawing
6007-PLN-AGE-57-61-6003-SH	Pipe Layout Drawing Beta South	Drawing	2	Vendor	GEN-2	5/7/2013	Approval	Drawing
6007-PLN-AGE-57-61-6003-SH	Pipe Layout Drawing Beta South	Drawing	2	Vendor	GEN-2	5/7/2013	Approval	Drawing
6007-PLN-AGE-57-61-6003-SH	Pipe Layout Drawing Beta South	Drawing	2	Vendor	GEN-2	5/7/2013	Approval	Drawing
6007-PLN-AGE-57-61-6003-SH	Pipe Layout Drawing Beta South	Drawing	2	Vendor	GEN-2	5/7/2013	Approval	Drawing
6007-PLN-AGE-57-61-6003-SH	Pipe Layout Drawing Beta South	Drawing	2	Vendor	GEN-2	5/7/2013	Approval	Drawing
6007-PLN-AGE-57-61-6003-SH	Pipe Layout Drawing Beta South	Drawing	2	Vendor	GEN-2	5/7/2013	Approval	Drawing
6007-PLN-AGE-57-61-6003-SH	Pipe Layout Drawing Beta South	Drawing	2	Vendor	GEN-2	5/7/2013	Approval	Drawing
6007-PLN-AGE-57-61-6003-SH	Pipe Layout Drawing Beta South	Drawing	2	Vendor	GEN-2	5/7/2013	Approval	Drawing
6007-PLN-AGE-57-61-6003-SH	Pipe Layout Drawing Beta South	Drawing	2	Vendor	GEN-2	5/7/2013	Approval	Drawing
6007-PLN-AGE-57-61-6003-SH	Pipe Layout Drawing Beta South	Drawing	2	Vendor	GEN-2	5/7/2013	Approval	Drawing
6007-PLN-AGE-57-61-6003-SH	Pipe Layout Drawing Beta South	Drawing	2	Vendor	GEN-2	5/7/2013	Approval	Drawing
6007-PLN-AGE-57-61-6003-SH	Pipe Layout Drawing Beta South	Drawing	2	Vendor	GEN-2	5/7/2013	Approval	Drawing
6007-PLN-AGE-57-61-6003-SH	Pipe Layout Drawing Beta South	Drawing	2	Vendor	GEN-2	5/7/2013	Approval	Drawing
6007-PLN-AGE-57-61-6003-SH	Pipe Layout Drawing Beta South	Drawing	2	Vendor	GEN-2	5/7/2013	Approval	Drawing
6007-PLN-AGE-57-61-6003-SH	Pipe Layout Drawing Beta South	Drawing	2	Vendor	GEN-2	5/7/2013	Approval	Drawing
6007-PLN-AGE-57-61-6003-SH	Pipe Layout Drawing Beta South	Drawing	2	Vendor	GEN-2	5/7/2013	Approval	Drawing
6007-PLN-AGE-57-61-6003-SH	Pipe Layout Drawing Beta South	Drawing	2	Vendor	GEN-2	5/7/2013	Approval	Drawing
6007-PLN-AGE-57-61-6003-SH	Pipe Layout Drawing Beta South	Drawing	2	Vendor	GEN-2	5/7/2013	Approval	Drawing
6007-PLN-AGE-57-61-6003-SH	Pipe Layout Drawing Beta South	Drawing	2	Vendor	GEN-2	5/7/2013	Approval	Drawing
6007-PLN-AGE-57-61-6003-SH	Pipe Layout Drawing Beta South	Drawing	2	Vendor	GEN-2	5/7/2013	Approval	Drawing
6007-PLN-AGE-57-61-6003-SH	Pipe Layout Drawing Beta South	Drawing	2	Vendor	GEN-2	5/7/2013	Approval	Drawing
6007-PLN-AGE-57-61-6003-SH	Pipe Layout Drawing Beta South	Drawing	2	Vendor	GEN-2	5/7/2013	Approval	Drawing
6007-PLN-AGE-57-61-6003-SH	Pipe Layout Drawing Beta South	Drawing	2	Vendor	GEN-2	5/7/2013	Approval	Drawing
6007-PLN-AGE-57-61-6003-SH	Pipe Layout Drawing Beta South	Drawing	2	Vendor	GEN-2	5/7/2013	Approval	Drawing
6007-PLN-AGE-57-61-6003-SH	Pipe Layout Drawing Beta South	Drawing	2	Vendor	GEN-2	5/7/2013	Approval	Drawing
6007-PLN-AGE-57-61-6003-SH	Pipe Layout Drawing Beta South	Drawing	2	Vendor	GEN-2	5/7/2013	Approval	Drawing
6007-PLN-AGE-57-61-6003-SH	Pipe Layout Drawing Beta South	Drawing	2	Vendor	GEN-2	5/7/2013	Approval	Drawing
6007-PLN-AGE-57-61-6003-SH	Pipe Layout Drawing Beta South	Drawing	2	Vendor	GEN-2	5/7/2013	Approval	Drawing
6007-PLN-AGE-57-61-6003-SH	Pipe Layout Drawing Beta South	Drawing	2	Vendor	GEN-2	5/7/2013	Approval	Drawing
6007-PLN-AGE-57-61-6003-SH	Pipe Layout Drawing Beta South	Drawing	2	Vendor	GEN-2	5/7/2013	Approval	Drawing
6007-PLN-AGE-57-61-6003-SH	Pipe Layout Drawing Beta South	Drawing	2	Vendor	GEN-2	5/7/2013	Approval	Drawing
6007-PLN-AGE-57-61-6003-SH	Pipe Layout Drawing Beta South	Drawing	2	Vendor	GEN-2	5/7/2013	Approval	Drawing
6007-PLN-AGE-57-61-6003-SH	Pipe Layout Drawing Beta South	Drawing	2	Vendor	GEN-2	5/7/2013	Approval	Drawing
6007-PLN-AGE-57-61-6003-SH	Pipe Layout Drawing Beta South	Drawing	2	Vendor	GEN-2	5/7/2013	Approval	Drawing
6007-PLN-AGE-57-61-6003-SH	Pipe Layout Drawing Beta South	Drawing	2	Vendor	GEN-2	5/7/2013	Approval	Drawing
6007-PLN-AGE-57-61-6003-SH	Pipe Layout Drawing Beta South	Drawing	2	Vendor	GEN-2	5/7/2013	Approval	Drawing
6007-PLN-AGE-57-61-6003-SH	Pipe Layout Drawing Beta South	Drawing	2	Vendor	GEN-2	5/7/2013	Approval	Drawing
6007-PLN-AGE-57-61-6003-SH	Pipe Layout Drawing Beta South	Drawing	2	Vendor	GEN-2	5/7/2013	Approval	Drawing
6007-PLN-AGE-57-61-6003-SH	Pipe Layout Drawing Beta South	Drawing	2	Vendor	GEN-2	5/7/2013	Approval	Drawing
6007-PLN-AGE-57-61-6003-SH	Pipe Layout Drawing Beta South	Drawing	2	Vendor	GEN-2	5/7/2013	Approval	Drawing
6007-PLN-AGE-57-61-6003-SH	Pipe Layout Drawing Beta South	Drawing	2	Vendor	GEN-2	5/7/2013	Approval	Drawing
6007-PLN-AGE-57-61-6003-SH	Pipe Layout Drawing Beta South	Drawing	2	Vendor	GEN-2	5/7/2013	Approval	Drawing
6007-PLN-AGE-57-61-6003-SH	Pipe Layout Drawing Beta South	Drawing	2	Vendor	GEN-2	5/7/2013	Approval	Drawing
6007-PLN-AGE-57-61-6003-SH	Pipe Layout Drawing Beta South	Drawing	2	Vendor	GEN-2	5/7/2013	Approval	Drawing
6007-PLN-AGE-57-61-6003-SH	Pipe Layout Drawing Beta South	Drawing	2	Vendor	GEN-2	5/7/2013	Approval	Drawing
6007-PLN-AGE-57-61-6003-SH	Pipe Layout Drawing Beta South	Drawing	2	Vendor	GEN-2	5/7/2013	Approval	Drawing

6007-PLN-AGE-57-61-6003-SH	Pipe Layout Drawing Beta South	Drawing	2	Vendor	GEN-2	5/7/2013	Approval	Drawing
6007-PLN-AGE-57-61-6003-SH	Pipe Layout Drawing Beta South	Drawing	2	Vendor	GEN-2	5/7/2013	Approval	Drawing
6007-PLN-AGE-57-61-6003-SH	Pipe Layout Drawing Beta South	Drawing	2	Vendor	GEN-2	5/7/2013	Approval	Drawing
6007-PLN-AGE-57-61-6003-SH	Pipe Layout Drawing Beta South	Drawing	2	Vendor	GEN-2	5/7/2013	Approval	Drawing
6007_PLN_AGE_57_61_6003_	Pipe Layout Drawing Beta South	Drawing	2	Vendor	GEN-2	5/7/2013	Approval	Drawing
6007_PLN_AGE_57_61_6003_	Pipe Layout Drawing Beta South	Drawing	2	Vendor	GEN-2	5/7/2013	Approval	Drawing
6007_PLN_AGE_57_61_6003_	Pipe Layout Drawing Beta South	Drawing	2	Vendor	GEN-2	5/7/2013	Approval	Drawing
6007_PLN_AGE_57_61_6003_	Pipe Layout Drawing Beta South	Drawing	2	Vendor	GEN-2	5/7/2013	Approval	Drawing
6007_PLN_AGE_57_61_6003_	Pipe Layout Drawing Beta South	Drawing	2	Vendor	GEN-2	5/7/2013	Approval	Drawing
6007_PLN_AGE_57_61_6003_	Pipe Layout Drawing Beta South	Drawing	2	Vendor	GEN-2	5/7/2013	Approval	Drawing
6007_PLN_AGE_57_61_6003_	Pipe Layout Drawing Beta South	Drawing	2	Vendor	GEN-2	5/7/2013	Approval	Drawing
6007_PLN_AGE_57_61_6003_	Pipe Layout Drawing Beta South	Drawing	2	Vendor	GEN-2	5/7/2013	Approval	Drawing
6007_PLN_AGE_57_61_6003_	Pipe Layout Drawing Beta South	Drawing	2	Vendor	GEN-2	5/7/2013	Approval	Drawing
6007-inf-AGE-68-60-6007	Stress Analysis Report Header HTF- Beta Plant -South SF Inlet	Drawing	4	Vendor	GEN-2	5/7/2013	Approval	Report
6007-inf-AGE-68-60-6008	Stress Analysis Report Header HTF- Beta Plant -South SF Return	Drawing	4	Vendor	GEN-2	5/7/2013	Approval	Report
Compressed Air anchor bolt	Compressed Air anchor bolt	Drawing	na	Vendor	GEN-2	5/7/2013	Approval	Report
6007-CAL-SCT-14-62-0007	Alpha Cooling Tower Fire Protection System Hydraulic Calculations	Calculation	1	Vendor	GEN-2	5/21/2013	Approval	Calculation
6007-CAL-SCT-14-62-0008	Beta Cooling Tower Fire Protection System Hydraulic Calculations	Calculation	1	Vendor	GEN-2	5/21/2013	Approval	Calculation
6007-HDD-SCT-14-62-0007	Cooling Tower Fire Protection System Technical Data	Data Sheeet	0	Vendor	GEN-2	5/21/2013	Approval	Data Sheeet
6007-PLN-SCT-14-62-0117	Alpha Cooling Tower Fire Protection System Drawing	Drawing	3	Vendor	GEN-2	5/21/2013	Approval	Drawing
6007-PLN-SCT-14-62-0211	Beta Cooling Tower Fire Protection System Drawing	Drawing	3	Vendor	GEN-2	5/21/2013	Approval	Drawing
6007-PLN-SCT-14-62-0002	Cooling Tower Lightening Protection System	Drawing	2	Vendor	GEN-2	6/6/2013	Approval	Drawing
6007-PLN-AGE-25-54-4502-R0	STG Auxiliar equipment structure connections. Elevations I	Drawing	rev7	Vendor	GEN-2	5/9/2013	Approval	Drawing
6007-PLN-AGE-25-54-4503-R0	STG Auxiliar equipment structure connections. Elevations II	Drawing	rev7	Vendor	GEN-2	5/8/2013	Approval	Drawing
6007-PLN-AGE-25-54-4504-R0	STG Auxiliar equipment structure connections. Elevations III	Drawing	rev7	Vendor	GEN-2	5/8/2013	Approval	Drawing
6007-PLN-AGE-25-54-4505-R0	STG Auxiliar equipment structure connections. BCP & BT connections	Drawing	rev7	Vendor	GEN-2	5/9/2013	Approval	Drawing
6007-PLN-AGE-25-54-4506-R0	STG Auxiliar equipment structure connections. CH & CR connections	Drawing	rev6	Vendor	GEN-2	5/6/2013	Approval	Drawing
6007-PLN-AGE-25-54-8502-R0	STG Auxiliar equipment structure connections. Elevations I	Drawing	rev6	Vendor	GEN-2	5/8/2013	Approval	Drawing
6007-PLN-AGE-25-54-8503-R0	STG Auxiliar equipment structure connections. Elevations II	Drawing	rev6	Vendor	GEN-2	5/8/2013	Approval	Drawing
6007-PLN-AGE-25-54-8504-R0	STG Auxiliar equipment structure connections. Elevations III	Drawing	rev6	Vendor	GEN-2	5/8/2013	Approval	Drawing
6007-PLN-AGE-25-54-8505-R0	STG Auxiliar equipment structure connections. BCP & BT connections	Drawing	rev5	Vendor	GEN-2	5/9/2013	Approval	Drawing
6007-PLN-AGE-25-54-8506-R0	STG Auxiliar equipment structure connections. CH & CR connections	Drawing	rev5	Vendor	GEN-2	5/6/2013	Approval	Drawing
CH_Beams_Calculations_0509	Calculation report	Calculation		Vendor	GEN-2		Approval	Calculation
6007-PLN-AGE-25-54-4000-R0	Cover sheet	Drawing	8	Vendor	GEN-2	3/18/2013	Approval	Drawing
6007-PLN-AGE-25-54-4020-R0	General notes	Drawing	6	Vendor	GEN-2	3/11/2013	Approval	Drawing
6007-PLN-AGE-25-54-4040-R0	STG Auxiliary equipment structure - Plan @EL 2073.09' & @EL 2078.50'	Drawing	8	Vendor	GEN-2	4/9/2013	Approval	Drawing
6007-PLN-AGE-25-54-4041-R0	STG Auxiliary equipment structure - Plan @EL 2086.50' & @EL 2091'	Drawing	7	Vendor	GEN-2	3/11/2013	Approval	Drawing
6007-PLN-AGE-25-54-4042-R0	STG Auxiliary equipment structure - Plan @EL 2098.25'	Drawing	7	Vendor	GEN-2	3/11/2013	Approval	Drawing
6007-PLN-AGE-25-54-4043-R0	STG Auxiliary equipment structure - Plan @EL 2114'	Drawing	7	Vendor	GEN-2	3/11/2013	Approval	Drawing
6007-PLN-AGE-25-54-4044-R0	STG Auxiliary equipment structure - Plan @EL 2123.84' & 2150.17'	Drawing	7	Vendor	GEN-2	3/11/2013	Approval	Drawing
6007-PLN-AGE-25-54-4045-R1	STG Auxiliary equipment structure - Elevations - Sht 1	Drawing	10	Vendor	GEN-2	5/9/2013	Approval	Drawing
6007-PLN-AGE-25-54-4046-R0	STG Auxiliary equipment structure - Elevations - Sht 2	Drawing	9	Vendor	GEN-2	5/9/2013	Approval	Drawing
6007-PLN-AGE-25-54-4047-R1	STG Auxiliary equipment structure - Elevations - Sht 3	Drawing	10	Vendor	GEN-2	5/9/2013	Approval	Drawing
6007-PLN-AGE-25-54-4048-R0	STG Auxiliary equipment structure - Misc Details	Drawing	7	Vendor	GEN-2	4/9/2013	Approval	Drawing
6007-PLN-AGE-25-54-4049-R0	STG Auxiliary equipment structure - Anchor plates datails	Drawing	4	Vendor	GEN-2	3/11/2013	Approval	Drawing
6007-PLN-AGE-25-54-4050-R0	STG Auxiliary equipment structure - Stair schematics	Drawing	4	Vendor	GEN-2	3/11/2013	Approval	Drawing
6007-PLN-AGE-25-54-4051-R0	STG Auxiliary equipment structure - Column Schedule	Drawing	1	Vendor	GEN-2	3/11/2013	Approval	Drawing
6007-CAL-AGE-25-54-4000-R	Calculation report	Calculation	7	Vendor	GEN-2	5/9/2013	Approval	Calculation
6007-PLN-AGE-25-54-8000-R0	Cover sheet	Drawing	6	Vendor	GEN-2	3/18/2013	Approval	Drawing

6007-PLN-AGE-25-54-8020-R0	General notes	Drawing	5	Vendor	GEN-2	3/11/2013	Approval	Drawing
6007-PLN-AGE-25-54-8040-R0	STG Auxiliary equipment structure - Plan @EL 2081.09' & @EL 2086.50'	Drawing	6	Vendor	GEN-2	4/9/2013	Approval	Drawing
6007-PLN-AGE-25-54-8041-R0	STG Auxiliary equipment structure - Plan @EL 2094.50' & @EL 2099'	Drawing	5	Vendor	GEN-2	3/11/2013	Approval	Drawing
6007-PLN-AGE-25-54-8042-R0	STG Auxiliary equipment structure - Plan @EL 2106.25'	Drawing	5	Vendor	GEN-2	3/11/2013	Approval	Drawing
6007-PLN-AGE-25-54-8043-R0	STG Auxiliary equipment structure - Plan @EL 2122'	Drawing	5	Vendor	GEN-2	3/11/2013	Approval	Drawing
6007-PLN-AGE-25-54-8044-R0	STG Auxiliary equipment structure - Plan @EL 2131.84' & 2158.17'	Drawing	5	Vendor	GEN-2	3/11/2013	Approval	Drawing
6007-PLN-AGE-25-54-8045-R0	STG Auxiliary equipment structure - Elevations - Sht 1	Drawing	8	Vendor	GEN-2	5/9/2013	Approval	Drawing
6007-PLN-AGE-25-54-8046-R0	STG Auxiliary equipment structure - Elevations - Sht 2	Drawing	8	Vendor	GEN-2	5/9/2013	Approval	Drawing
6007-PLN-AGE-25-54-8047-R0	STG Auxiliary equipment structure - Elevations - Sht 3	Drawing	8	Vendor	GEN-2	5/9/2013	Approval	Drawing
6007-PLN-AGE-25-54-8048-R0	STG Auxiliary equipment structure - Misc Details	Drawing	8	Vendor	GEN-2	5/9/2013	Approval	Drawing
6007-PLN-AGE-25-54-8049-R0	STG Auxiliary equipment structure - Anchor plates datails	Drawing	4	Vendor	GEN-2	3/11/2013	Approval	Drawing
6007-PLN-AGE-25-54-8050-R0	STG Auxiliary equipment structure - Stair schematics	Drawing	4	Vendor	GEN-2	3/11/2013	Approval	Drawing
6007-PLN-AGE-25-54-8051-R0	STG Auxiliary equipment structure - Column Schedule	Drawing	1	Vendor	GEN-2	3/11/2013	Approval	Drawing
6007-CAL-AGE-25-54-8000-R	Calculation report	Calculation	7	Vendor	GEN-2	5/9/2013	Approval	Calculation
6007-PLN-AGE-58-54-3575	Cover sheet	Drawing	0	Vendor	GEN-2	5/14/2013	Approval	Drawing
6007-PLN-AGE-58-54-3576	General notes	Drawing	0	Vendor	GEN-2	5/14/2013	Approval	Drawing
6007-PLN-AGE-58-54-3577	Plan view	Drawing	0	Vendor	GEN-2	5/14/2013	Approval	Drawing
6007-PLN-AGE-58-54-3578	Sections	Drawing	0	Vendor	GEN-2	5/14/2013	Approval	Drawing
6007-CAL-AGE-58-54-3575	Calculation report	Calculation	0	Vendor	GEN-2	5/14/2013	Approval	Calculation
6007-PLN-AGE-58-54-7575	Cover sheet	Drawing	0	Vendor	GEN-2	5/14/2013	Approval	Drawing
6007-PLN-AGE-58-54-7576	General notes	Drawing	0	Vendor	GEN-2	5/14/2013	Approval	Drawing
6007-PLN-AGE-58-54-7577	Plan view	Drawing	0	Vendor	GEN-2	5/14/2013	Approval	Drawing
6007-PLN-AGE-58-54-7578	Sections	Drawing	0	Vendor	GEN-2	5/14/2013	Approval	Drawing
6007-CAL-AGE-58-54-7575	Calculation report	Calculation	0	Vendor	GEN-2	5/14/2013	Approval	Calculation
6007-PLN-AGE-11-50-6200	Cover sheet	Drawing	4	Vendor	GEN-2	5/22/2013	Approval	Drawing
6007-PLN-AGE-11-50-6202	Plan 1	Drawing	5	Vendor	GEN-2	5/22/2013	Approval	Drawing
6007-PLN-AGE-11-50-6203	Plan 2	Drawing	5	Vendor	GEN-2	5/22/2013	Approval	Drawing
6007-PLN-AGE-11-50-6204	Plan 3	Drawing	5	Vendor	GEN-2	5/22/2013	Approval	Drawing
6007-PLN-AGE-11-50-6205	Plan 4	Drawing	5	Vendor	GEN-2	5/22/2013	Approval	Drawing
6007-PLN-AGE-11-50-6206	Plan 5	Drawing	5	Vendor	GEN-2	5/22/2013	Approval	Drawing
6007-PLN-AGE-11-50-6207	Plan 6	Drawing	5	Vendor	GEN-2	5/22/2013	Approval	Drawing
6007-PLN-AGE-11-50-6208	Plan 7	Drawing	5	Vendor	GEN-2	5/22/2013	Approval	Drawing
6007-PLN-AGE-58-54-1100	Cover sheet	Drawing	3	Vendor	GEN-2	5/24/2013	Approval	Drawing
6007-PLN-AGE-58-54-1101	General notes	Drawing	3	Vendor	GEN-2	5/24/2013	Approval	Drawing
6007-PLN-AGE-58-54-1102	Plan and Elevation	Drawing	3	Vendor	GEN-2	5/24/2013	Approval	Drawing
6007-PLN-AGE-58-54-1103	Plan, Elevation, and Details	Drawing	3	Vendor	GEN-2	5/24/2013	Approval	Drawing
6007-CAL-AGE-58-52-2470	Calculation Report	Calculation	3	Vendor	GEN-2	5/23/2013	Approval	Calculation
6007-PLN-AGE-58-54-5100-R2	Cover sheet	Drawing	3	Vendor	GEN-2	5/24/2013	Approval	Drawing
6007-PLN-AGE-58-54-5101-R2	General notes	Drawing	3	Vendor	GEN-2	5/24/2013	Approval	Drawing
6007-PLN-AGE-58-54-5102-R2	Plan and Elevation	Drawing	3	Vendor	GEN-2	5/24/2013	Approval	Drawing
6007-PLN-AGE-58-54-5103-R2	Plan, Elevation, and Details	Drawing	3	Vendor	GEN-2	5/24/2013	Approval	Drawing
6007-CAL-AGE-58-54-5100-R	Calculation Report	Calculation	1	Vendor	GEN-2	5/24/2013	Approval	Calculation
6007-PLN-AGE-57-54-2280	Calculation report	Drawing	1	Vendor	GEN-2	5/17/2013	Approval	Drawing
6007-PLN-AGE-57-54-2280	Cover sheet. Connections west field	Drawing	0	Vendor	GEN-2	5/12/2013	Approval	Drawing
6007-PLN-AGE-57-54-2281	General notes. Connections west field	Drawing	1	Vendor	GEN-2	5/12/2013	Approval	Drawing
6007-PLN-AGE-57-54-2282	AWT01. Frames	Drawing	1	Vendor	GEN-2	5/12/2013	Approval	Drawing
6007-PLN-AGE-57-54-2283	AWT02. Frames	Drawing	1	Vendor	GEN-2	5/12/2013	Approval	Drawing
6007-PLN-AGE-57-54-2284	Connection details west field	Drawing	0	Vendor	GEN-2	5/12/2013	Approval	Drawing
6007-PLN-AGE-57-54-2285	Connection details west field	Drawing	1	Vendor	GEN-2	5/12/2013	Approval	Drawing
6007-PLN-AGE-57-54-4970	Calculation report	Drawing	1	Vendor	GEN-2	5/12/2013	Approval	Drawing
6007-PLN-AGE-57-54-4970	Cover sheet. Connection PSV areas	Drawing	0	Vendor	GEN-2	5/12/2013	Approval	Drawing

6007-PLN-AGE-57-54-4971	General notes. Connection PSV areas	Drawing	1	Vendor	GEN-2	5/12/2013	Approval	Drawing
6007-PLN-AGE-57-54-4972	PSV areas frames	Drawing	1	Vendor	GEN-2	5/12/2013	Approval	Drawing
6007-PLN-AGE-57-54-4973	Connection details PSV areas	Drawing	0	Vendor	GEN-2	5/12/2013	Approval	Drawing
6007-PLN-AGE-57-54-4974	Connection details PSV areas	Drawing	1	Vendor	GEN-2	5/12/2013	Approval	Drawing
6007-PLN-AGE-58-54-3620	Calculation report	Drawing	1	Vendor	GEN-2	5/12/2013	Approval	Drawing
6007-PLN-AGE-58-54-3620	Connection details central plant	Drawing	0	Vendor	GEN-2	5/12/2013	Approval	Drawing
6007-PLN-AGE-58-54-3621	Connection details central plant	Drawing	1	Vendor	GEN-2	5/12/2013	Approval	Drawing
6007-PLN-AGE-58-54-3622	Central plant. Frames	Drawing	1	Vendor	GEN-2	5/12/2013	Approval	Drawing
6007-PLN-AGE-58-54-3623	Central plant. Connection details	Drawing	0	Vendor	GEN-2	5/12/2013	Approval	Drawing
6007-PLN-AGE-58-54-3624	Central plant. Connection details	Drawing	1	Vendor	GEN-2	5/12/2013	Approval	Drawing
6007-PLN-AGE-57-54-2250	Calculation report	Drawing		Vendor	GEN-2	5/12/2013	Approval	Drawing
6007-PLN-AGE-57-54-2250	Cover sheet. Connection north east field	Drawing	0	Vendor	GEN-2	5/12/2013	Approval	Drawing
6007-PLN-AGE-57-54-2251	General notes. Connection north east field	Drawing	1	Vendor	GEN-2	5/12/2013	Approval	Drawing
6007-PLN-AGE-57-54-2252	Frames north east field	Drawing	1	Vendor	GEN-2	5/12/2013	Approval	Drawing
6007-PLN-AGE-57-54-2253	Connections details north east field	Drawing	0	Vendor	GEN-2	5/12/2013	Approval	Drawing
6007-PLN-AGE-57-54-2254	Connections details north east field	Drawing	1	Vendor	GEN-2	5/12/2013	Approval	Drawing
6007-PLN-AGE-57-54-2260	Calculation report	Drawing	1	Vendor	GEN-2	5/12/2013	Approval	Drawing
6007-PLN-AGE-57-54-2260	Cover sheet. Connections east field	Drawing	0	Vendor	GEN-2	5/12/2013	Approval	Drawing
6007-PLN-AGE-57-54-2261	General notes. Connections east field	Drawing	1	Vendor	GEN-2	5/12/2013	Approval	Drawing
6007-PLN-AGE-57-54-2262	AET01. Frames	Drawing	1	Vendor	GEN-2	5/12/2013	Approval	Drawing
6007-PLN-AGE-57-54-2263	AET02. Frames	Drawing	1	Vendor	GEN-2	5/12/2013	Approval	Drawing
6007-PLN-AGE-57-54-2264	Connection details east field	Drawing	0	Vendor	GEN-2	5/12/2013	Approval	Drawing
6007-PLN-AGE-57-54-2265	Connection details east field	Drawing	1	Vendor	GEN-2	5/12/2013	Approval	Drawing
6007-PLN-AGE-57-54-2270	Calculation report	Drawing	1	Vendor	GEN-2	5/12/2013	Approval	Drawing
6007-PLN-AGE-57-54-2270	Cover sheet. Connections north-west field	Drawing	0	Vendor	GEN-2	5/12/2013	Approval	Drawing
6007-PLN-AGE-57-54-2271	General notes. Connections north-west field	Drawing	1	Vendor	GEN-2	5/12/2013	Approval	Drawing
6007-PLN-AGE-57-54-2272	ANWT01. Frames	Drawing	1	Vendor	GEN-2	5/12/2013	Approval	Drawing
6007-PLN-AGE-57-54-2273	ANWT02. Frames	Drawing	1	Vendor	GEN-2	5/12/2013	Approval	Drawing
6007-PLN-AGE-57-54-2274	ANWT03. Frames	Drawing	1	Vendor	GEN-2	5/12/2013	Approval	Drawing
6007-PLN-AGE-57-54-2275	Connection details north west field	Drawing	0	Vendor	GEN-2	5/12/2013	Approval	Drawing
6007-PLN-AGE-57-54-2276	Connection details north west field	Drawing	1	Vendor	GEN-2	5/12/2013	Approval	Drawing
6007-CAL-AGE-57-54-6300	Calculation report	Calculation	0	Vendor	GEN-2	5/12/2013	Approval	Calculation
6007-PLN-AGE-57-54-6300	Cover sheet. Connection far west field	Drawing	1	Vendor	GEN-2	5/12/2013	Approval	Drawing
6007-PLN-AGE-57-54-6301	General notes. Connection far west field	Drawing	1	Vendor	GEN-2	5/12/2013	Approval	Drawing
6007-PLN-AGE-57-54-6302	BFWT01. Frames	Drawing	1	Vendor	GEN-2	5/12/2013	Approval	Drawing
6007-PLN-AGE-57-54-6303	BFWT02. Frames	Drawing	1	Vendor	GEN-2	5/12/2013	Approval	Drawing
6007-PLN-AGE-57-54-6304	Connection details far west field	Drawing	0	Vendor	GEN-2	5/12/2013	Approval	Drawing
6007-PLN-AGE-57-54-6305	Connection details far west field	Drawing	1	Vendor	GEN-2	5/12/2013	Approval	Drawing
6007-CAL-AGE-57-54-7970	Calculation report	Calculation	1	Vendor	GEN-2	5/12/2013	Approval	Calculation
6007-PLN-AGE-57-54-7970	Cover sheet. Connection PSV areas east	Drawing	0	Vendor	GEN-2	5/12/2013	Approval	Drawing
6007-PLN-AGE-57-54-7971	General notes. Connection PSV areas east	Drawing	1	Vendor	GEN-2	5/12/2013	Approval	Drawing
6007-PLN-AGE-57-54-7972	PSV areas east frames	Drawing	1	Vendor	GEN-2	5/12/2013	Approval	Drawing
6007-PLN-AGE-57-54-7973	Connection details PSV areas east	Drawing	2	Vendor	GEN-2	5/12/2013	Approval	Drawing
6007-CAL-AGE-57-54-7980	Calculation report	Calculation	1	Vendor	GEN-2	5/12/2013	Approval	Calculation
6007-PLN-AGE-57-54-7980	Cover sheet. Connection PSV areas west	Drawing	0	Vendor	GEN-2	5/12/2013	Approval	Drawing
6007-PLN-AGE-57-54-7981	General notes. Connection PSV areas west	Drawing	1	Vendor	GEN-2	5/12/2013	Approval	Drawing
6007-PLN-AGE-57-54-7982	PSV areas west frames	Drawing	1	Vendor	GEN-2	5/12/2013	Approval	Drawing
6007-PLN-AGE-57-54-7983	Connection details PSV areas west	Drawing	0	Vendor	GEN-2	5/12/2013	Approval	Drawing
6007-PLN-AGE-57-54-7984	Connection details PSV areas west	Drawing	1	Vendor	GEN-2	5/12/2013	Approval	Drawing
6007-CAL-AGE-57-54-9900	Calculation report	Calculation	1	Vendor	GEN-2	5/12/2013	Approval	Calculation
6007-PLN-AGE-57-54-9900	General notes. Connection north field	Drawing	0	Vendor	GEN-2	5/12/2013	Approval	Drawing

6007-PLN-AGE-57-54-9901	Cover sheet. Connection north field	Drawing	1	Vendor	GEN-2	5/12/2013	Approval	Drawing
6007-PLN-AGE-57-54-9902	BNT01 Frames	Drawing	1	Vendor	GEN-2	5/12/2013	Approval	Drawing
6007-PLN-AGE-57-54-9903	BNT02 Frames	Drawing	1	Vendor	GEN-2	5/12/2013	Approval	Drawing
6007-PLN-AGE-57-54-9904	Connection details	Drawing	0	Vendor	GEN-2	5/12/2013	Approval	Drawing
6007-PLN-AGE-57-54-9905	Connection details	Drawing	1	Vendor	GEN-2	5/12/2013	Approval	Drawing
6007-CAL-AGE-57-54-9926	Calculation report	Calculation	0	Vendor	GEN-2	5/12/2013	Approval	Calculation
6007-PLN-AGE-57-54-9926	Cover sheet. Connection south field	Drawing	0	Vendor	GEN-2	5/12/2013	Approval	Drawing
6007-PLN-AGE-57-54-9927	General notes. Connection south field	Drawing	1	Vendor	GEN-2	5/12/2013	Approval	Drawing
6007-PLN-AGE-57-54-9928	BST01. Frames	Drawing	1	Vendor	GEN-2	5/12/2013	Approval	Drawing
6007-PLN-AGE-57-54-9929	BST02. Frames	Drawing	1	Vendor	GEN-2	5/12/2013	Approval	Drawing
6007-PLN-AGE-57-54-9930	BST03. Frames	Drawing	1	Vendor	GEN-2	5/12/2013	Approval	Drawing
6007-PLN-AGE-57-54-9931	Connection details south field	Drawing	0	Vendor	GEN-2	5/12/2013	Approval	Drawing
6007-PLN-AGE-57-54-9932	Connection details south field	Drawing	1	Vendor	GEN-2	5/12/2013	Approval	Drawing
6007-CAL-AGE-58-54-6420	Calculation report	Calculation		Vendor	GEN-2	5/12/2013	Approval	Calculation
6007-PLN-AGE-58-54-6420	Cover sheet. Connection south side HTF	Drawing	0	Vendor	GEN-2	5/12/2013	Approval	Drawing
6007-PLN-AGE-58-54-6421	General notes. Connection south side HTF	Drawing	1	Vendor	GEN-2	5/12/2013	Approval	Drawing
6007-PLN-AGE-58-54-6422	South side HTF frames	Drawing	1	Vendor	GEN-2	5/12/2013	Approval	Drawing
6007-PLN-AGE-58-54-6423	South side HTF connection details	Drawing	1	Vendor	GEN-2	5/12/2013	Approval	Drawing
6007-PLN-CAL-58-54-6430	Calculation report	Calculation	0	Vendor	GEN-2	5/12/2013	Approval	Calculation
6007-PLN-AGE-58-54-6430	Cover sheet. Connection north side	Drawing	0	Vendor	GEN-2	5/12/2013	Approval	Drawing
6007-PLN-AGE-58-54-6431	General notes. Connection north side	Drawing	1	Vendor	GEN-2	5/12/2013	Approval	Drawing
6007-PLN-AGE-58-54-6432	Frames north side	Drawing	1	Vendor	GEN-2	5/12/2013	Approval	Drawing
6007-PLN-AGE-58-54-6433	BCPS01 Frames north side	Drawing	1	Vendor	GEN-2	5/12/2013	Approval	Drawing
6007-PLN-AGE-58-54-6434	Connection details north side	Drawing	0	Vendor	GEN-2	5/12/2013	Approval	Drawing
6007-PLN-AGE-58-54-6435	Connection details north side	Drawing	1	Vendor	GEN-2	5/12/2013	Approval	Drawing
6007-CAL-AGE-57-54-6260	Calculation report	Calculation	1	Vendor	GEN-2	5/12/2013	Approval	Calculation
6007-PLN-AGE-57-54-6260	General notes. Connection west field	Drawing	0	Vendor	GEN-2	5/12/2013	Approval	Drawing
6007-PLN-AGE-57-54-6261	Cover sheet. Connection west field	Drawing	1	Vendor	GEN-2	5/12/2013	Approval	Drawing
6007-PLN-AGE-57-54-6262	BWT01 Frames	Drawing	1	Vendor	GEN-2	5/12/2013	Approval	Drawing
6007-PLN-AGE-57-54-6263	BWT01 Connection details	Drawing	0	Vendor	GEN-2	5/12/2013	Approval	Drawing
6007-PLN-AGE-57-54-6264	BWT01 Connection details	Drawing	1	Vendor	GEN-2	5/12/2013	Approval	Drawing
6007-CAL-AGE-57-54-2200	Calc report. Structural Steel Frames. North-East field	Calculation	5	Vendor	GEN-2	4/7/2013	Approval	Calculation
6007-PLN-AGE-57-54-2200	Cover sheet. Structural Steel Frames. North-East field	Drawing	3	Vendor	GEN-2	4-29-201	Approval	Drawing
6007-PLN-AGE-57-54-2201	General notes. Structural Steel Frames. North-East field	Drawing	4	Vendor	GEN-2	5/4/2013	Approval	Drawing
6007-PLN-AGE-57-54-2202	Frames and details I. Structural Steel Frames. North-East field	Drawing	5	Vendor	GEN-2	4/7/2013	Approval	Drawing
6007-CAL-AGE-57-54-2210	Calc report. Structural Steel Frames. East field	Calculation	5	Vendor	GEN-2	4-29-201	Approval	Calculation
6007-PLN-AGE-57-54-2210	Cover sheet. Structural Steel Frames. East field	Drawing	3	Vendor	GEN-2	5/4/2013	Approval	Drawing
6007-PLN-AGE-57-54-2211	General notes. Structural Steel Frames. East field	Drawing	6	Vendor	GEN-2	4/7/2013	Approval	Drawing
6007-PLN-AGE-57-54-2212	Frames and details I. Structural Steel Frames. East field	Drawing	6	Vendor	GEN-2	4-29-201	Approval	Drawing
6007-PLN-AGE-57-54-2213	Frames and details II. Structural Steel Frames. East field	Drawing	6	Vendor	GEN-2	5/4/2013	Approval	Drawing
6007-CAL-AGE-57-54-2220	Calc report. Structural Steel Frames. North-West field	Calculation	5	Vendor	GEN-2	4/7/2013	Approval	Calculation
6007-PLN-AGE-57-54-2220	Cover sheet. Structural Steel Frames. North-West field	Drawing	5	Vendor	GEN-2	4-29-201	Approval	Drawing
6007-PLN-AGE-57-54-2221	General notes. Structural Steel Frames. North-West field	Drawing	6	Vendor	GEN-2	5/4/2013	Approval	Drawing
6007-PLN-AGE-57-54-2222	Frames and details I. Structural Steel Frames. North-West field	Drawing	6	Vendor	GEN-2	4/7/2013	Approval	Drawing
6007-PLN-AGE-57-54-2223	Frames and details II. Structural Steel Frames. North-West field	Drawing	6	Vendor	GEN-2	4-29-201	Approval	Drawing
6007-PLN-AGE-57-54-2224	Frames and details III. Structural Steel Frames. North-West field	Drawing	6	Vendor	GEN-2	5/4/2013	Approval	Drawing
6007-CAL-AGE-57-54-2230	Calc report. Structural Steel Frames. West field	Calculation	5	Vendor	GEN-2	5/4/2013	Approval	Calculation
6007-PLN-AGE-57-54-2230	Cover sheet. Structural Steel Frames. West field	Drawing	2	Vendor	GEN-2	3/27/2013	Approval	Drawing
6007-PLN-AGE-57-54-2231	General notes. Structural Steel Frames. West field	Drawing	5	Vendor	GEN-2	3/27/2013	Approval	Drawing
6007-PLN-AGE-57-54-2232	Frames and details I. Structural Steel Frames. West field	Drawing	5	Vendor	GEN-2	3/27/2013	Approval	Drawing
6007-PLN-AGE-57-54-2233	Frames and details II. Structural Steel Frames. West field	Drawing	5	Vendor	GEN-2	3/27/2013	Approval	Drawing

6007-CAL-AGE-57-54-4950	Calc report. Structural Steel Frames. PSV East field	Calculation	3	Vendor	GEN-2	3/27/2013	Approval	Calculation
6007-PLN-AGE-57-54-4950	Cover sheet. Structural Steel Frames. PSV East field	Drawing	2	Vendor	GEN-2	3/27/2013	Approval	Drawing
6007-PLN-AGE-57-54-4951	General notes. Structural Steel Frames. PSV East field	Drawing	3	Vendor	GEN-2	3/27/2013	Approval	Drawing
6007-PLN-AGE-57-54-4952	Frames and details I. Structural Steel Frames. PSV East field	Drawing	3	Vendor	GEN-2	3/27/2013	Approval	Drawing
6007-CAL-AGE-58-54-3600	Calc report. Structural Steel Frames. North Central Plant	Calculation	3	Vendor	GEN-2	3/27/2013	Approval	Calculation
6007-PLN-AGE-58-54-3600	Cover sheet. Structural Steel Frames. North Central Plant	Drawing	3	Vendor	GEN-2	3/27/2013	Approval	Drawing
6007-PLN-AGE-58-54-3601	General notes. Structural Steel Frames. North Central Plant	Drawing	3	Vendor	GEN-2	3/27/2013	Approval	Drawing
6007-PLN-AGE-58-54-3602	Frames and details I. Structural Steel Frames. North Central Plant	Drawing	3	Vendor	GEN-2	3/27/2013	Approval	Drawing
6007-CAL-AGE-57-54-6220	Calc report. Structural Steel Frames. North field	Calculation	3	Vendor	GEN-2	3/27/2013	Approval	Calculation
6007-PLN-AGE-57-54-6260	Cover sheet. Structural Steel Frames. North field	Drawing	1	Vendor	GEN-2	3/27/2013	Approval	Drawing
6007-PLN-AGE-57-54-6261	General notes. Structural Steel Frames. North field	Drawing	3	Vendor	GEN-2	3/27/2013	Approval	Drawing
6007-PLN-AGE-57-54-6262	Frames and details I. Structural Steel Frames. North field	Drawing	2	Vendor	GEN-2	3/27/2013	Approval	Drawing
6007-PLN-AGE-57-54-6263	Frames and details II. Structural Steel Frames. North field	Drawing	1	Vendor	GEN-2	3/27/2013	Approval	Drawing
6007-PLN-AGE-57-54-6264	Frames and details III. Structural Steel Frames. North field	Drawing	2	Vendor	GEN-2	3/27/2013	Approval	Drawing
6007-CAL-AGE-57-54-6200	Calc report. Structural Steel Frames. South field	Calculation	3	Vendor	GEN-2	3/27/2013	Approval	Calculation
6007-PLN-AGE-57-54-6200	Cover sheet. Structural Steel Frames. South field	Drawing	1	Vendor	GEN-2	3/27/2013	Approval	Drawing
6007-PLN-AGE-57-54-6201	General notes. Structural Steel Frames. South field	Drawing	3	Vendor	GEN-2	3/27/2013	Approval	Drawing
6007-PLN-AGE-57-54-6202	Frames and details I. Structural Steel Frames. South field	Drawing	2	Vendor	GEN-2	3/27/2013	Approval	Drawing
6007-PLN-AGE-57-54-6203	Frames and details II. Structural Steel Frames. South field	Drawing	1	Vendor	GEN-2	3/27/2013	Approval	Drawing
6007-PLN-AGE-57-54-6204	Frames and details III. Structural Steel Frames. South field	Drawing	2	Vendor	GEN-2	3/27/2013	Approval	Drawing
6007-PLN-AGE-57-54-6205	Frames and details IV. Structural Steel Frames. South field	Drawing	2	Vendor	GEN-2	3/27/2013	Approval	Drawing
6007-CAL-AGE-57-54-6210	Calc report. Structural Steel Frames. West field	Calculation	4	Vendor	GEN-2	3/27/2013	Approval	Calculation
6007-PLN-AGE-57-54-6240	Cover sheet. Structural Steel Frames. West field	Drawing	2	Vendor	GEN-2	3/27/2013	Approval	Drawing
6007-PLN-AGE-57-54-6241	General notes. Structural Steel Frames. West field	Drawing	3	Vendor	GEN-2	3/27/2013	Approval	Drawing
6007-PLN-AGE-57-54-6242	Frames and details I. Structural Steel Frames. West field	Drawing	4	Vendor	GEN-2	3/27/2013	Approval	Drawing
6007-CAL-AGE-57-54-6230	Calc report. Structural Steel Frames. Far West field	Calculation	4	Vendor	GEN-2	3/27/2013	Approval	Calculation
6007-PLN-AGE-57-54-6280	Cover sheet. Structural Steel Frames. Far West field	Drawing	1	Vendor	GEN-2	3/27/2013	Approval	Drawing
6007-PLN-AGE-57-54-6281	General notes. Structural Steel Frames. Far West field	Drawing	3	Vendor	GEN-2	3/27/2013	Approval	Drawing
6007-PLN-AGE-57-54-6282	Frames and details I. Structural Steel Frames. Far West field	Drawing	4	Vendor	GEN-2	3/27/2013	Approval	Drawing
6007-PLN-AGE-57-54-6283	Frames and details II. Structural Steel Frames. Far West field	Drawing	4	Vendor	GEN-2	3/27/2013	Approval	Drawing
6007-CAL-AGE-57-54-7950	Calc report. Structural Steel Frames. PSV East field	Calculation	3	Vendor	GEN-2	3/27/2013	Approval	Calculation
6007-PLN-AGE-57-54-7950	Cover sheet. Structural Steel Frames. PSV East field	Drawing	1	Vendor	GEN-2	3/27/2013	Approval	Drawing
6007-PLN-AGE-57-54-7951	General notes. Structural Steel Frames. PSV East field	Drawing	2	Vendor	GEN-2	3/27/2013	Approval	Drawing
6007-PLN-AGE-57-54-7952	Frames and details I. Structural Steel Frames. PSV East field	Drawing	2	Vendor	GEN-2	3/27/2013	Approval	Drawing
6007-CAL-AGE-57-54-7960	Calc report. Structural Steel Frames. PSV West field	Calculation	4	Vendor	GEN-2	3/27/2013	Approval	Calculation
6007-PLN-AGE-57-54-7960	Cover sheet. Structural Steel Frames. PSV West field	Drawing	2	Vendor	GEN-2	3/27/2013	Approval	Drawing
6007-PLN-AGE-57-54-7961	General notes. Structural Steel Frames. PSV West field	Drawing	3	Vendor	GEN-2	3/27/2013	Approval	Drawing
6007-PLN-AGE-57-54-7962	Frames and details I. Structural Steel Frames. PSV West field	Drawing	3	Vendor	GEN-2	3/27/2013	Approval	Drawing
6007-CAL-AGE-58-54-6405	Calc report. Structural Steel Frames. South Central Plant	Calculation	2	Vendor	GEN-2	3/27/2013	Approval	Calculation
6007-PLN-AGE-58-54-6400	Cover sheet. Structural Steel Frames. South Central Plant	Drawing	2	Vendor	GEN-2	3/27/2013	Approval	Drawing
6007-PLN-AGE-58-54-6401	General notes. Structural Steel Frames. South Central Plant	Drawing	3	Vendor	GEN-2	3/27/2013	Approval	Drawing
6007-PLN-AGE-58-54-6402	Frames and details I. Structural Steel Frames. South Central Plant	Drawing	3	Vendor	GEN-2	3/27/2013	Approval	Drawing
6007-CAL-AGE-58-54-6410	Calc report. Structural Steel Frames. North Central Plant	Calculation	2	Vendor	GEN-2	3/27/2013	Approval	Calculation
6007-PLN-AGE-58-54-6410	Cover sheet. Structural Steel Frames. North Central Plant	Drawing	4	Vendor	GEN-2	3/27/2013	Approval	Drawing
6007-PLN-AGE-58-54-6411	General notes. Structural Steel Frames. North Central Plant	Drawing	3	Vendor	GEN-2	3/27/2013	Approval	Drawing
6007-PLN-AGE-58-54-6412	Frames and details I. Structural Steel Frames. North Central Plant	Drawing	5	Vendor	GEN-2	3/27/2013	Approval	Drawing
6007-PLN-AGE-58-54-6413	Frames and details II. Structural Steel Frames. North Central Plant	Drawing	5	Vendor	GEN-2	3/27/2013	Approval	Drawing
6007-CAL-AGE-74-54-2000	Calculation Report for Alpha Plant Overflow-Ullage Steel Platform	Calculation	4	Vendor	GEN-2	5/13/2013	Approval	Calculation
6007-CAL-AGE-74-54-6000	Calculation Report for Beta Plant Overflow-Ullage Steel Platform	Calculation	3	Vendor	GEN-2	5/13/2013	Approval	Calculation
6007-PLN-AGE-74-54-2000	Overflow-Ullage Steel Platform Cover Sheet Alpha Plant	Drawing	3	Vendor	GEN-2	4/17/2013	Approval	Drawing
6007-PLN-AGE-74-54-2001	Overflow-Ullage Steel Platform General Notes Alpha Plant	Drawing	4	Vendor	GEN-2	4/26/2013	Approval	Drawing

6007-PLN-AGE-74-54-2002	Overflow-Ullage Steel Platform G.A. & Base Plates Alpha Plant	Drawing	6	Vendor	GEN-2	5/13/2013	Approval	Drawing
6007-PLN-AGE-74-54-2003	Overflow-Ullage Steel Platform G.A. Plan Alpha Plant	Drawing	5	Vendor	GEN-2	4/30/2013	Approval	Drawing
6007-PLN-AGE-74-54-2004	Overflow-Ullage Steel Platform G.A. Plan Alpha Plant	Drawing	6	Vendor	GEN-2	4/30/2013	Approval	Drawing
6007-PLN-AGE-74-54-2005	Overflow-Ullage Steel Platform G.A. Plan Alpha Plant	Drawing	6	Vendor	GEN-2	5/13/2013	Approval	Drawing
6007-PLN-AGE-74-54-2006	Overflow-Ullage Steel Platform G.A. Elevation at Grid A Alpha Plant	Drawing	5	Vendor	GEN-2	5/13/2013	Approval	Drawing
6007-PLN-AGE-74-54-2007	Overflow-Ullage Steel Platform G.A. Elevation at Grid B Alpha Plant	Drawing	5	Vendor	GEN-2	5/13/2013	Approval	Drawing
6007-PLN-AGE-74-54-2008	Overflow-Ullage Steel Platform G.A. Elevation at Grid C Alpha Plant	Drawing	5	Vendor	GEN-2	5/13/2013	Approval	Drawing
6007-PLN-AGE-74-54-2009	Overflow-Ullage Steel Platform G.A. Elevation at Grid 1 & 2 Alpha Plant	Drawing	5	Vendor	GEN-2	5/13/2013	Approval	Drawing
6007-PLN-AGE-74-54-2010	Overflow-Ullage Steel Platform G.A. Elevation at Grid 3 & 4 Alpha Plant	Drawing	5	Vendor	GEN-2	5/13/2013	Approval	Drawing
6007-PLN-AGE-74-54-2011	Overflow-Ullage Steel Platform G.A. Elevation at Grid 5 & 6 Alpha Plant	Drawing	5	Vendor	GEN-2	5/13/2013	Approval	Drawing
6007-PLN-AGE-74-54-2012	Overflow-Ullage Steel Platform Stair Details Alpha Plant	Drawing	5	Vendor	GEN-2	4/30/2013	Approval	Drawing
6007-PLN-AGE-74-54-2013	Overflow-Ullage Steel Platform Section & Details Alpha Plant	Drawing	5	Vendor	GEN-2	4/30/2013	Approval	Drawing
6007-PLN-AGE-74-54-6000	Overflow-Ullage Steel Platform Cover Sheet Beta Plant	Drawing	3	Vendor	GEN-2	4/30/2013	Approval	Drawing
6007-PLN-AGE-74-54-6001	Overflow-Ullage Steel Platform General Notes Beta Plant	Drawing	3	Vendor	GEN-2	4/26/2013	Approval	Drawing
6007-PLN-AGE-74-54-6002	Overflow-Ullage Steel Platform G.A. & Base Plates Beta Plant	Drawing	5	Vendor	GEN-2	5/13/2013	Approval	Drawing
6007-PLN-AGE-74-54-6003	Overflow-Ullage Steel Platform G.A. Plan Beta Plant	Drawing	4	Vendor	GEN-2	4/30/2013	Approval	Drawing
6007-PLN-AGE-74-54-6004	Overflow-Ullage Steel Platform G.A. Plan Beta Plant	Drawing	5	Vendor	GEN-2	5/13/2013	Approval	Drawing
6007-PLN-AGE-74-54-6005	Overflow-Ullage Steel Platform G.A. Plan Beta Plant	Drawing	5	Vendor	GEN-2	5/13/2013	Approval	Drawing
6007-PLN-AGE-74-54-6006	Overflow-Ullage Steel Platform G.A. Elevation at Grid A Beta Plant	Drawing	4	Vendor	GEN-2	5/13/2013	Approval	Drawing
6007-PLN-AGE-74-54-6007	Overflow-Ullage Steel Platform G.A. Elevation at Grid B Beta Plant	Drawing	4	Vendor	GEN-2	5/13/2013	Approval	Drawing
6007-PLN-AGE-74-54-6008	Overflow-Ullage Steel Platform G.A. Elevation at Grid C Beta Plant	Drawing	4	Vendor	GEN-2	5/13/2013	Approval	Drawing
6007-PLN-AGE-74-54-6009	Overflow-Ullage Steel Platform G.A. Elevation at Grid 1 & 2 Beta Plant	Drawing	4	Vendor	GEN-2	5/13/2013	Approval	Drawing
6007-PLN-AGE-74-54-6010	Overflow-Ullage Steel Platform G.A. Elevation at Grid 3 & 4 Beta Plant	Drawing	4	Vendor	GEN-2	5/13/2013	Approval	Drawing
6007-PLN-AGE-74-54-6011	Overflow-Ullage Steel Platform G.A. Elevation at Grid 5 & 6 Beta Plant	Drawing	4	Vendor	GEN-2	5/13/2013	Approval	Drawing
6007-PLN-AGE-74-54-6012	Overflow-Ullage Steel Platform Stair Details Beta Plant	Drawing	4	Vendor	GEN-2	4/30/2013	Approval	Drawing
6007-PLN-AGE-74-54-6013	Overflow-Ullage Steel Platform Section & Details Beta Plant	Drawing	4	Vendor	GEN-2	4/30/2013	Approval	Drawing
6007-PLN-AGE-58-54-1110	Cover sheet	Drawing	0	Vendor	GEN-2	5/29/2013	Approval	Drawing
6007-PLN-AGE-58-54-1111	General notes	Drawing	0	Vendor	GEN-2	5/29/2013	Approval	Drawing
6007-PLN-AGE-58-54-1112	Plan, elevation, and details	Drawing	0	Vendor	GEN-2	5/29/2013	Approval	Drawing
6007-PLN-AGE-58-54-1113	Connections 1	Drawing	0	Vendor	GEN-2	5/29/2013	Approval	Drawing
6007-PLN-AGE-58-54-1114	Connections 2	Drawing	0	Vendor	GEN-2	5/29/2013	Approval	Drawing
6007-PLN-AGE-58-54-1115	Connections 3	Drawing	0	Vendor	GEN-2	5/29/2013	Approval	Drawing
6007-PLN-AGE-58-54-1116	Connections 4	Drawing	0	Vendor	GEN-2	5/29/2013	Approval	Drawing
6007-CAL-AGE-58-54-1110	Calculation Report	Calculation	0	Vendor	GEN-2	5/29/2013	Approval	Calculation
6007-PLN-FWE-21-52-0102	3	Drawing	3	Vendor	GEN-2	3/4/2013	Approval	Drawing
6007-PLN-FWE-21-54-0401	1	Drawing	1	Vendor	GEN-2	3/4/2013	Approval	Drawing
6007-PLN-FWE-21-54-0402	1	Drawing	1	Vendor	GEN-2	3/4/2013	Approval	Drawing
6007-PLN-FWE-21-54-0403	1	Drawing	1	Vendor	GEN-2	3/4/2013	Approval	Drawing
6007-PLN-FWE-21-52-0002	3	Drawing	3	Vendor	GEN-2	3/4/2013	Approval	Drawing
6007-PLN-FWE-21-52-0003	2	Drawing	2	Vendor	GEN-2	3/4/2013	Approval	Drawing
6007-PLN-FWE-21-52-0004	2	Drawing	2	Vendor	GEN-2	3/4/2013	Approval	Drawing
6007-PLN-FWE-21-52-0201	4	Drawing	4	Vendor	GEN-2	3/4/2013	Approval	Drawing
6007-PLN-FWE-21-52-0202	4	Drawing	4	Vendor	GEN-2	3/4/2013	Approval	Drawing
6007-PLN-FWE-21-54-0301	2	Drawing	2	Vendor	GEN-2	3/4/2013	Approval	Drawing
6007-PLN-FWE-21-54-0301	4	Drawing	4	Vendor	GEN-2	3/4/2013	Approval	Drawing
6007-PLN-FWE-21-54-0302	2	Drawing	2	Vendor	GEN-2	3/4/2013	Approval	Drawing
6007-PLN-FWE-21-54-0303	2	Drawing	2	Vendor	GEN-2	3/4/2013	Approval	Drawing
6007-PLN-FWE-21-54-0304	2	Drawing	2	Vendor	GEN-2	3/4/2013	Approval	Drawing
6007-PLN-FWE-21-54-0305	4	Drawing	4	Vendor	GEN-2	3/4/2013	Approval	Drawing
6007-PLN-FWE-21-54-0306	4	Drawing	4	Vendor	GEN-2	3/4/2013	Approval	Drawing
6007-PLN-FWE-21-54-0307	3	Drawing	3	Vendor	GEN-2	3/4/2013	Approval	Drawing

6007-PLN-FWE-21-54-0311	2	Drawing	2	Vendor	GEN-2	3/4/2013	Approval	Drawing
6007-PLN-FWE-21-54-0312	2	Drawing	2	Vendor	GEN-2	3/4/2013	Approval	Drawing
6007-PLN-FWE-21-54-0321	2	Drawing	2	Vendor	GEN-2	3/4/2013	Approval	Drawing
6007-PLN-FWE-21-54-0351	2	Drawing	2	Vendor	GEN-2	3/4/2013	Approval	Drawing
6007-PLN-FWE-21-54-0352	2	Drawing	2	Vendor	GEN-2	3/4/2013	Approval	Drawing
6007-CAL-FWE-21-52-0020	1	Calculation	1	Vendor	GEN-2	na	Approval	Calculation
6007-CAL-FWE-21-52-0021	0	Calculation	0	Vendor	GEN-2	na	Approval	Calculation

ABENER TEYMA MOJAVE

Compliance No.:	GEN-2				
Job :	Mojave Solar Project				
Date: 2/17/11	Description: Structural Master Drawing List				
Sheet No.	Description	Applicable Condition of Certification	Vendor Supplied or EOR	Submittal Date	Reason for Submittal
	Document Name	GEN-2		4/10/2012	
60007-ESP-ATP-00-50-C104	Ready Mix Concrete Production and Delivery	STRUCTURAL - 1	EOR	11/17/2011	Purchase
60007-ESP-ATP-00-50-C105	Particular Comm Condition for Ready Mix Concrete Production and Delivery	STRUCTURAL - 1	EOR	11/17/2011	Purchase
6007-CAL-CCI-18-54-0001	Mirror Building Metal Building Calcs	STRUCTURAL - 1	Vendor	12/17/2011	Review
6007-CAL-CCI-18-54-VSCA	Mirror Building Structural Calcs	STRUCTURAL - 1	Vendor	1/6/2012	Review
6007-ESP-ATP-00-50-2001	Engineering standards and practices specifications for subsurface exploration and geotechnical evaluation	STRUCTURAL - 1	EOR	5/20/2011	Purchase
6007-ESP-ATP-00-50-2001V	Specification for Vendor data requirement Structural, Geotechnical study	STRUCTURAL - 1	EOR	5/26/2011	Approval
6007-ESP-ATP-00-50-2061	Preliminary Geo-Tech Report	STRUCTURAL - 1	EOR	5/6/2011	Approval
6007-ESP-ATP-00-50-2062	Final Geotech Report	STRUCTURAL - 1	EOR	9/26/2011	Bid/Quote
6007-ESP-ATP-00-50-2063	Geotech Report Addendum 1	STRUCTURAL - 1	EOR	10/14/2011	Bid/Quote
6007-ESP-ATP-00-50-3100	Concrete Forms and Accessories	STRUCTURAL - 1	EOR	6/1/2011	Purchase
6007-ESP-ATP-00-50-3200	Concrete Reinforcement	STRUCTURAL - 1	EOR	6/1/2011	Purchase
6007-ESP-ATP-00-50-3300	Cast-In-Place Concrete	STRUCTURAL - 1	EOR	12/7/2011	Bid/Quote
6007-ESP-ATP-00-50-5120	Structural Steel	STRUCTURAL - 1	EOR	6/1/2011	Bid/Quote
6007-ESP-ATP-00-50-C014V	Concrete Batch Plant Vendor Spec	STRUCTURAL - 1	EOR	12/5/2011	Bid/Quote
6007-ESP-ATP-18-52-1332	Concrete Slabs and Foundations For Mirror Building Subcontract Package	STRUCTURAL - 1	EOR	9/26/2011	Bid/Quote
6007-ESP-ATP-18-52-1332V	Vendor Data Concrete Slabs and Foundations For Mirror Building Subcontract Package	STRUCTURAL - 1	EOR	9/26/2011	Bid/Quote
6007-ESP-ATP-18-54-1330	Mirror Building Subcontract Package	STRUCTURAL - 1	EOR	11/4/2011	Purchase
6007-ESP-ATP-18-54-1330V	Vendor Data for Mirror Building Subcontract Package	STRUCTURAL - 1	EOR	11/4/2011	Purchase
6007-ESP-ATP-18-54-1331	Warehouse Building Subcontract Package	STRUCTURAL - 1	EOR	12/5/2011	Bid/Quote
6007-ESP-ATP-18-54-1331V	Vendor Data Requirement Warehouse Building	STRUCTURAL - 1	EOR	12/5/2011	Bid/Quote
6007-ESP-ATP-18-54-3121	Pre-Engineered Metal Building	STRUCTURAL - 1	EOR	11/4/2011	Purchase
6007-ESP-ATP-18-54-3122	Pre-Engineered Metal Buildings	STRUCTURAL - 1	EOR	10/12/2011	Bid/Quote
6007-ESP-ATP-57-52-1351	Parabolic Solar Collector Steel Foundation Design-Build Subcontract	STRUCTURAL - 1	EOR	5/8/2011	Construction
6007-ESP-ATP-57-52-1351V	Vendor Data Requirements Parabolic Triugh Solar Collector Foundation Design-Build Subcontract	STRUCTURAL - 1	EOR	5/8/2011	Construction
6007-ESP-RJK-33-50-0001	Solar Collector Foundation Design	STRUCTURAL - 1	Vendor	8/31/2011	Approval
6007-ESP-UTE-16-62-0002	Air Compressor Package	STRUCTURAL - 1	EOR	4/27/2011	Approval
6007-INF-ATP-00-50-0001	Geo-Tech Report	STRUCTURAL - 1	EOR	7/18/2011	Construction
6007-INF-ATP-33-50-0001	Wind Tunnel Clarification	STRUCTURAL - 1	EOR	9/6/2011	Approval
6007-INF-RJK-33-50-0001	Responce to CEC for collector Foundation	STRUCTURAL - 1	Vendor	9/2/2011	Approval
6007-INS-ATP-00-50-0002	Preliminary Foundation Recommendation	STRUCTURAL - 1	EOR	5/8/2011	Construction
6007-INS-ATP-32-50-0001	Exterior Solar Collector Foundation Loads	STRUCTURAL - 1	EOR	4/8/2011	Approval
6007-INS-ATP-32-50-0002	Interior Solar Collector Foundation Loads	STRUCTURAL - 1	EOR	4/8/2011	Approval
6007-INS-ATP-32-50-0004	Solar Collector Foundation Loads	STRUCTURAL - 1	EOR	5/8/2011	Construction
6007-INS-ATP-32-52-0003	Collector Support Dimensions	STRUCTURAL - 1	EOR	7/18/2011	Approval
6007-PLN-ATP-00-50-S001	General Civil and Structural Notes	STRUCTURAL - 1	EOR	1/6/2011	Bid/Quote
6007-PLN-ATP-00-50-S002	Typical Ladder and Safety Cage Details	STRUCTURAL - 1	EOR	1/6/2011	Bid/Quote
6007-PLN-ATP-00-50-S003	Typical Pipe Handrail, Stairway and Grating Details	STRUCTURAL - 1	EOR	1/6/2011	Bid/Quote
6007-PLN-ATP-00-50-S004	Standard Base Plate Details and Standard Shear Key Details	STRUCTURAL - 1	EOR	1/6/2011	Bid/Quote
6007-PLN-ATP-00-55-0001	Soil boring location plan for alpha plant solar field	STRUCTURAL - 1	EOR	5/26/2011	Purchase
6007-PLN-ATP-00-55-0002	Soil boring location plan for beta plant solar field	STRUCTURAL - 1	EOR	5/26/2011	Purchase
6007-PLN-ATP-00-55-0003	Soil boring location plan for alpha power island	STRUCTURAL - 1	EOR	5/26/2011	Purchase
6007-PLN-ATP-00-55-0004	Soil boring location plan for beta power island	STRUCTURAL - 1	EOR	5/26/2011	Purchase
6007-PLN-ATP-00-55-LX01	Alpha Warehouse Building Proposed Location	STRUCTURAL - 1	EOR	10/26/2011	Bid/Quote
6007-PLN-ATP-00-55-LX02	Beta Warehouse Building Proposed Location	STRUCTURAL - 1	EOR	10/26/2011	Bid/Quote
6007-PLN-ATP-16-62-0001	Mirror Building Air Supply & Electrical Outlet Locations	STRUCTURAL - 1	EOR	8/9/2011	Purchase
6007-PLN-ATP-18-52-0016	Anchor Bolts Reference Plan	STRUCTURAL - 1	EOR	9/26/2011	Bid/Quote
6007-PLN-ATP-18-52-0017	Slab and Foundation Reference Plan	STRUCTURAL - 1	EOR	9/26/2011	Bid/Quote
6007-PLN-ATP-18-52-0018	Slab and Foundation Reference Details	STRUCTURAL - 1	EOR	9/26/2011	Bid/Quote
6007-PLN-ATP-18-54-0016	General Location of Mirror Building	STRUCTURAL - 1	EOR	4/11/2011	Purchase
6007-PLN-ATP-18-57-0011	Mirror Building Floor Plan	STRUCTURAL - 1	EOR	9/23/2011	Bid/Quote
6007-PLN-ATP-18-57-0012	Mirror Building Roof Plan	STRUCTURAL - 1	EOR	8/9/2011	Purchase
6007-PLN-ATP-18-57-0013	Mirror Building Crane Layout Plan	STRUCTURAL - 1	EOR	8/9/2011	Purchase
6007-PLN-ATP-18-57-0014	Mirror Building Elevations and Sections	STRUCTURAL - 1	EOR	8/9/2011	Purchase
6007-PLN-ATP-18-57-0015	Mirror Building Sections	STRUCTURAL - 1	EOR	9/23/2011	Bid/Quote
6007-PLN-ATP-18-57-0021	Warehouse Building Floor Plan	STRUCTURAL - 1	EOR	12/5/2011	Bid/Quote
6007-PLN-ATP-18-57-0022	Warehouse Building Roof Plan	STRUCTURAL - 1	EOR	12/5/2011	Bid/Quote
6007-PLN-ATP-18-57-0023	Warehouse Building Elevation and Section	STRUCTURAL - 1	EOR	12/5/2011	Bid/Quote
6007-PLN-ATP-18-57-0024	Warehouse Building Elevations	STRUCTURAL - 1	EOR	12/5/2011	Bid/Quote
6007-PLN-ATP-18-57-0025	Warehouse Building Sections	STRUCTURAL - 1	EOR	12/5/2011	Bid/Quote
6007-PLN-CCI-18-54-ALLD	Mirror Building Metal Building All Drawings	STRUCTURAL - 1	Vendor	1/24/2012	Review
6007-CAL-CCI-18-54-VASP	Mirror Building Material Specs	ARCHITECTURAL - 1	Vendor	1/18/2012	Review
6007-PLN-CCI-18-54-VA10	Mirror Building Code Plan	ARCHITECTURAL - 1	Vendor	1/18/2012	Review
6007-PLN-CCI-18-54-VA11	Mirror Building Floor Plan	ARCHITECTURAL - 1	Vendor	1/18/2012	Review

ABENER TEYMA MOJAVE

Compliance No.:	GEN-2				
Job :	Mojave Solar Project				
Date: 2/17/11	Description: Structural Master Drawing List				
Sheet No.	Description	Applicable Condition of Certification	Vendor Supplied or EOR	Submittal Date	Reason for Submittal
6007-PLN-CCI-18-54-VA12	Mirror Building Trench & Utility Plan	ARCHITECTURAL - 1	Vendor	1/18/2012	Review
6007-PLN-CCI-18-54-VA13	Mirror Building Equipment Layout (for reference only)	ARCHITECTURAL - 1	Vendor	1/18/2012	Review
6007-PLN-CCI-18-54-VA14	Mirror Building Crane Layout Plan	ARCHITECTURAL - 1	Vendor	1/18/2012	Review
6007-PLN-CCI-18-54-VA15	Mirror Building Roof Plan	ARCHITECTURAL - 1	Vendor	1/18/2012	Review
6007-PLN-CCI-18-54-VA21	Mirror Building Exterior Elevations	ARCHITECTURAL - 1	Vendor	1/18/2012	Review
6007-PLN-CCI-18-54-VA41	Mirror Building Building Sections	ARCHITECTURAL - 1	Vendor	1/18/2012	Review
6007-PLN-CCI-18-54-VA51	Mirror Building Details	ARCHITECTURAL - 1	Vendor	1/18/2012	Review
6007-PLN-CCI-18-54-VA61	Mirror Building Door Schedule	ARCHITECTURAL - 1	Vendor	1/18/2012	Review
6007-PLN-CCI-18-54-VACS	Mirror Building Cover Sheet	ARCHITECTURAL - 1	Vendor	1/18/2012	Review
6007-PLN-CCI-18-54-VAS1	Mirror Building Site Plan	ARCHITECTURAL - 1	Vendor	1/18/2012	Review
6007-PLN-CCI-18-54-VS11	Mirror Building General Structural Notes	STRUCTURAL - 1	Vendor	1/18/2012	Review
6007-PLN-CCI-18-54-VS12	Mirror Building Details	STRUCTURAL - 1	Vendor	1/18/2012	Review
6007-PLN-CCI-18-54-VS21	Mirror Building Foundation Plan	STRUCTURAL - 1	Vendor	1/18/2012	Review
6007-PLN-CCI-18-54-VS31	Mirror Building Framing Details	STRUCTURAL - 1	Vendor	1/18/2012	Review
6007-PLN-RJK-33-50-0001	Mirrorfield Foundation	STRUCTURAL - 1	Vendor	8/31/2011	Approval
6007-PLN-RJK-33-50-0002	Mirrorfield Foundation	STRUCTURAL - 1	Vendor	8/31/2011	Approval
6007-PLN-GFG-00-50-C800	North Alpha East Solar Array Foundation Plans Cover Sheet	STRUCTURAL - 1	Vendor	2/7/2012	Construction
6007-PLN-GFG-00-50-C801	Civil Works . General Notes Sheet	STRUCTURAL - 1	Vendor	2/7/2012	Construction
6007-PLN-GFG-00-50-P002	North Alpha East Solar Array Foundation Plan Foundation Working Points Layout I	STRUCTURAL - 1	Vendor	2/7/2012	Construction
6007-PLN-GFG-00-50-P003	North Alpha East Solar Array Foundation Plan Foundation Working Points Layout II	STRUCTURAL - 1	Vendor	2/7/2012	Construction
6007-PLN-GFG-00-50-C804	North Alpha East Solar Array Foundation Plan Foundation Piles Location Data I	STRUCTURAL - 1	Vendor	2/7/2012	Construction
6007-PLN-GFG-00-50-C805	North Alpha East Solar Array Foundation Plan Foundation Piles Location Data II	STRUCTURAL - 1	Vendor	2/7/2012	Construction
6007-PLN-GFG-00-50-C806	North Alpha East Solar Array Foundation Plan Foundation Piles Location Data III	STRUCTURAL - 1	Vendor	2/7/2012	Construction
6007-PLN-GFG-00-50-C807	North Alpha East Solar Array Foundation Plan Foundation Piles Location Data IV	STRUCTURAL - 1	Vendor	2/7/2012	Construction
6007-PLN-GFG-00-50-P008	North Alpha East Solar Array Foundation Plan Foundation Piles Location Data V	STRUCTURAL - 1	Vendor	2/7/2012	Construction
6007-PLN-GFG-00-50-P009	North Alpha East Solar Array Foundation Plan Foundation Piles Location Data VI	STRUCTURAL - 1	Vendor	2/7/2012	Construction
6007-PLN-GFG-00-50-P010	North Alpha East Solar Array Foundation Plan Foundation Piles Location Data VII	STRUCTURAL - 1	Vendor	2/7/2012	Construction
6007-PLN-GFG-00-50-P011	North Alpha East Solar Array Foundation Plan Foundation Piles Location Data VIII	STRUCTURAL - 1	Vendor	2/7/2012	Construction
6007-PLN-GFG-00-50-P012	North Alpha East Solar Array Foundation Plan Foundation Piles Location Data IX	STRUCTURAL - 1	Vendor	2/7/2012	Construction
6007-PLN-GFG-00-50-P013	North Alpha East Solar Array Foundation Plan Foundation Piles Location Data X	STRUCTURAL - 1	Vendor	2/7/2012	Construction
6007-PLN-GFG-00-50-P014	North Alpha East Solar Array Foundation Plan Foundation Piles Location Data XI	STRUCTURAL - 1	Vendor	2/7/2012	Construction
6007-PLN-GFG-00-50-P015	North Alpha East Solar Array Foundation Plan Foundation Piles Location Data XII	STRUCTURAL - 1	Vendor	2/7/2012	Construction
6007-PLN-GFG-00-50-P016	North Alpha East Solar Array Foundation Plan Foundation Piles Location Data XIII	STRUCTURAL - 1	Vendor	2/7/2012	Construction
6007-PLN-GFG-00-50-P017	North Alpha East Solar Array Foundation Plan Foundation Piles Location Data XIV	STRUCTURAL - 1	Vendor	2/7/2012	Construction
6007-PLN-GFG-00-50-P018	North Alpha East Solar Array Foundation Plan Foundation Piles Location Data XV	STRUCTURAL - 1	Vendor	2/7/2012	Construction
6007-PLN-GFG-00-50-P019	North Alpha East Solar Array Foundation Plan Foundation Piles Location Data XVI	STRUCTURAL - 1	Vendor	2/7/2012	Construction
6007-PLN-GFG-00-50-P020	North Alpha East Solar Array Foundation Plan Foundation Piles Location Data XVII	STRUCTURAL - 1	Vendor	2/7/2012	Construction
6007-PLN-GFG-00-50-P021	North Alpha East Solar Array Foundation Plan Foundation Piles Location Data XVIII	STRUCTURAL - 1	Vendor	2/7/2012	Construction
6007-PLN-GFG-00-50-P022	North Alpha East Solar Array Foundation Plan Foundation Piles Location Data XIX	STRUCTURAL - 1	Vendor	2/7/2012	Construction
6007-PLN-GFG-00-50-P023	North Alpha East Solar Array Foundation Plan Foundation Piles Location Data XX	STRUCTURAL - 1	Vendor	2/7/2012	Construction
6007-PLN-GFG-00-50-P024	North Alpha East Solar Array Foundation Plan Foundation Piles Location Data XXI	STRUCTURAL - 1	Vendor	2/7/2012	Construction
6007-PLN-GFG-00-50-P025	Middle Alpha East Solar Array Foundation Plans Cover Sheet	STRUCTURAL - 1	Vendor	2/6/2012	Construction
6007-PLN-GFG-00-50-P026	Notes Sheet	STRUCTURAL - 1	Vendor	2/6/2012	Construction
6007-PLN-GFG-00-50-P027	Middle Alpha East Solar Array Foundation Plan Foundation Working Points Layout I	STRUCTURAL - 1	Vendor	2/6/2012	Construction
6007-PLN-GFG-00-50-P028	6007-PLN-GFG-00-50-P028Middle Alpha East Solar Array Foundation Plan Foundation Working Points Layout II	STRUCTURAL - 1	Vendor	2/6/2012	Construction
6007-PLN-GFG-00-50-P029	Middle Alpha East Solar Array Foundation Plan Foundation Working Points Layout III	STRUCTURAL - 1	Vendor	2/6/2012	Construction
6007-PLN-GFG-00-50-P030	Middle Alpha East Solar Array Foundation Plan Foundation Working Points Layout IV	STRUCTURAL - 1	Vendor	2/6/2012	Construction
6007-PLN-GFG-00-50-P031	Middle Alpha East Solar Array Foundation Plan Foundation Working Points Layout V	STRUCTURAL - 1	Vendor	2/6/2012	Construction
6007-PLN-GFG-00-50-P032	Middle Alpha East Solar Array Foundation Plan Foundation Piles Location Data 1	STRUCTURAL - 1	Vendor	2/6/2012	Construction
6007-PLN-GFG-00-50-P033	Middle Alpha East Solar Array Foundation Plan Foundation Piles Location Data 2	STRUCTURAL - 1	Vendor	2/6/2012	Construction
6007-PLN-GFG-00-50-P034	Middle Alpha East Solar Array Foundation Plan Foundation Piles Location Data 3	STRUCTURAL - 1	Vendor	2/6/2012	Construction
6007-PLN-GFG-00-50-P035	Middle Alpha East Solar Array Foundation Plan Foundation Piles Location Data 4	STRUCTURAL - 1	Vendor	2/6/2012	Construction
6007-PLN-GFG-00-50-P036	Middle Alpha East Solar Array Foundation Plan Foundation Piles Location Data 5	STRUCTURAL - 1	Vendor	2/6/2012	Construction
6007-PLN-GFG-00-50-P037	Middle Alpha East Solar Array Foundation Plan Foundation Piles Location Data 6	STRUCTURAL - 1	Vendor	2/6/2012	Construction
6007-PLN-GFG-00-50-P038	Middle Alpha East Solar Array Foundation Plan Foundation Piles Location Data 7	STRUCTURAL - 1	Vendor	2/6/2012	Construction
6007-PLN-GFG-00-50-P039	Middle Alpha East Solar Array Foundation Plan Foundation Piles Location Data 8	STRUCTURAL - 1	Vendor	2/6/2012	Construction
6007-PLN-GFG-00-50-P040	Middle Alpha East Solar Array Foundation Plan Foundation Piles Location Data 9	STRUCTURAL - 1	Vendor	2/6/2012	Construction
6007-PLN-GFG-00-50-P041	Middle Alpha East Solar Array Foundation Plan Foundation Piles Location Data 10	STRUCTURAL - 1	Vendor	2/6/2012	Construction
6007-PLN-GFG-00-50-P042	Middle Alpha East Solar Array Foundation Plan Foundation Piles Location Data 11	STRUCTURAL - 1	Vendor	2/6/2012	Construction
6007-PLN-GFG-00-50-P043	Middle Alpha East Solar Array Foundation Plan Foundation Piles Location Data 12	STRUCTURAL - 1	Vendor	2/6/2012	Construction
6007-PLN-GFG-00-50-P044	Middle Alpha East Solar Array Foundation Plan Foundation Piles Location Data 13	STRUCTURAL - 1	Vendor	2/6/2012	Construction
6007-PLN-GFG-00-50-P045	Middle Alpha East Solar Array Foundation Plan Foundation Piles Location Data 14	STRUCTURAL - 1	Vendor	2/6/2012	Construction
6007-PLN-GFG-00-50-P046	Middle Alpha East Solar Array Foundation Plan Foundation Piles Location Data 15	STRUCTURAL - 1	Vendor	2/6/2012	Construction
6007-PLN-GFG-00-50-P047	Middle Alpha East Solar Array Foundation Plan Foundation Piles Location Data 16	STRUCTURAL - 1	Vendor	2/6/2012	Construction
6007-PLN-GFG-00-50-P048	Middle Alpha East Solar Array Foundation Plan Foundation Piles Location Data 17	STRUCTURAL - 1	Vendor	2/6/2012	Construction
6007-PLN-GFG-00-50-P049	Middle Alpha East Solar Array Foundation Plan Foundation Piles Location Data 18	STRUCTURAL - 1	Vendor	2/6/2012	Construction
6007-PLN-GFG-00-50-P050	Middle Alpha East Solar Array Foundation Plan Foundation Piles Location Data 19	STRUCTURAL - 1	Vendor	2/6/2012	Construction
6007-PLN-GFG-00-50-P051	Middle Alpha East Solar Array Foundation Plan Foundation Piles Location Data 20	STRUCTURAL - 1	Vendor	2/6/2012	Construction
6007-PLN-GFG-00-50-P052	Middle Alpha East Solar Array Foundation Plan Foundation Piles Location Data 21	STRUCTURAL - 1	Vendor	2/6/2012	Construction
6007-PLN-GFG-00-50-P053	Middle Alpha East Solar Array Foundation Plan Foundation Piles Location Data 22	STRUCTURAL - 1	Vendor	2/6/2012	Construction
6007-PLN-GFG-00-50-P054	Middle Alpha East Solar Array Foundation Plan Foundation Piles Location Data 23	STRUCTURAL - 1	Vendor	2/6/2012	Construction
6007-PLN-GFG-00-50-P055	Middle Alpha East Solar Array Foundation Plan Foundation Piles Location Data 24	STRUCTURAL - 1	Vendor	2/6/2012	Construction
6007-PLN-GFG-00-50-P056	Middle Alpha East Solar Array Foundation Plan Foundation Piles Location Data 25	STRUCTURAL - 1	Vendor	2/6/2012	Construction
6007-PLN-GFG-00-50-P057	Middle Alpha East Solar Array Foundation Plan Foundation Piles Location Data 26	STRUCTURAL - 1	Vendor	2/6/2012	Construction
6007-PLN-GFG-00-50-P058	Middle Alpha East Solar Array Foundation Plan Foundation Piles Location Data 27	STRUCTURAL - 1	Vendor	2/6/2012	Construction
6007-PLN-GFG-00-50-P059	Middle Alpha East Solar Array Foundation Plan Foundation Piles Location Data 28	STRUCTURAL - 1	Vendor	2/6/2012	Construction
6007-PLN-GFG-00-50-P060	Middle Alpha East Solar Array Foundation Plan Foundation Piles Location Data 29	STRUCTURAL - 1	Vendor	2/6/2012	Construction
6007-PLN-GFG-00-50-P061	Middle Alpha East Solar Array Foundation Plan Foundation Piles Location Data 30	STRUCTURAL - 1	Vendor	2/6/2012	Construction
6007-PLN-GFG-00-50-P062	Middle Alpha East Solar Array Foundation Plan Foundation Piles Location Data 31	STRUCTURAL - 1	Vendor	2/6/2012	Construction
6007-PLN-GFG-00-50-P063	Middle Alpha East Solar Array Foundation Plan Foundation Piles Location Data 32	STRUCTURAL - 1	Vendor	2/6/2012	Construction
6007-PLN-GFG-00-50-P064	Middle Alpha East Solar Array Foundation Plan Foundation Piles Location Data 33	STRUCTURAL - 1	Vendor	2/6/2012	Construction
6007-PLN-GFG-00-50-P065	Middle Alpha East Solar Array Foundation Plan Foundation Piles Location Data 34	STRUCTURAL - 1	Vendor	2/6/2012	Construction
6007-PLN-GFG-00-50-P066	Middle Alpha East Solar Array Foundation Plan Foundation Piles Location Data 35	STRUCTURAL - 1	Vendor	2/6/2012	Construction
6007-PLN-GFG-00-50-P067	Middle Alpha East Solar Array Foundation Plan Foundation Piles Location Data 36	STRUCTURAL - 1	Vendor	2/6/2012	Construction
6007-PLN-GFG-00-50-P068	Middle Alpha East Solar Array Foundation Plan Foundation Piles Location Data 37	STRUCTURAL - 1	Vendor	2/6/2012	Construction
6007-PLN-GFG-00-50-P069	Middle Alpha East Solar Array Foundation Plan Foundation Piles Location Data 38	STRUCTURAL - 1	Vendor	2/6/2012	Construction
6007-PLN-GFG-00-50-P070	Middle Alpha East Solar Array Foundation Plan Foundation Piles Location Data 39	STRUCTURAL - 1	Vendor	2/6/2012	Construction
6007-PLN-GFG-00-50-P071	Middle Alpha East Solar Array Foundation Plan Foundation Piles Location Data 40	STRUCTURAL - 1	Vendor	2/6/2012	Construction
6007-PLN-GFG-00-50-P072	Middle Alpha East Solar Array Foundation Plan Foundation Piles Location Data 41	STRUCTURAL - 1	Vendor	2/6/2012	Construction
6007-PLN-GFG-00-50-P073	Middle Alpha East Solar Array Foundation Plan Foundation Piles Location Data 42	STRUCTURAL - 1	Vendor	2/6/2012	Construction

ABENER TEYMA MOJAVE

Compliance No.:	GEN-2				
Job :	Mojave Solar Project				
Date: 2/17/11	Description: Structural Master Drawing List				
Sheet No.	Description	Applicable Condition of Certification	Vendor Supplied or EOR	Submittal Date	Reason for Submittal
6007-PLN-GFG-00-50-P074	Middle Alpha East Solar Array Foundation Plan Foundation Piles Location Data 43	STRUCTURAL - 1	Vendor	2/6/2012	Construction
6007-PLN-GFG-00-50-P075	Middle Alpha East Solar Array Foundation Plan Foundation Piles Location Data 44	STRUCTURAL - 1	Vendor	2/6/2012	Construction
6007-PLN-GFG-00-50-P076	Middle Alpha East Solar Array Foundation Plan Foundation Piles Location Data 45	STRUCTURAL - 1	Vendor	2/6/2012	Construction
6007-PLN-GFG-00-50-P077	Middle Alpha East Solar Array Foundation Plan Foundation Piles Location Data 46	STRUCTURAL - 1	Vendor	2/6/2012	Construction
6007-PLN-GFG-00-50-P078	Middle Alpha East Solar Array Foundation Plan Foundation Piles Location Data 47	STRUCTURAL - 1	Vendor	2/6/2012	Construction
6007-PLN-GFG-00-50-P079	Middle Alpha East Solar Array Foundation Plan Foundation Piles Location Data 48	STRUCTURAL - 1	Vendor	2/6/2012	Construction
6007-PLN-GFG-00-50-P080	Middle Alpha East Solar Array Foundation Plan Foundation Piles Location Data 49	STRUCTURAL - 1	Vendor	2/6/2012	Construction
6007-PLN-GFG-00-50-P081	Middle Alpha East Solar Array Foundation Plan Foundation Piles Location Data 50	STRUCTURAL - 1	Vendor	2/6/2012	Construction
6007-PLN-GFG-00-50-P082	Middle Alpha East Solar Array Foundation Plan Foundation Piles Location Data 51	STRUCTURAL - 1	Vendor	2/6/2012	Construction
6007-PLN-GFG-00-50-P083	Middle Alpha East Solar Array Foundation Plan Foundation Piles Location Data 52	STRUCTURAL - 1	Vendor	2/6/2012	Construction
6007-CAL-CCI-18-54-1300	Structural Calculations	STRUCTURAL - 1	Vendor	3/19/2012	Construction
6007-CAL-CCI-18-54-1710	Pre-Engineered Metal Building Calculations	STRUCTURAL - 1	Vendor	3/19/2012	Construction
6007-ESP-ATP-00-50-2068	Geotech Report Addendum 6	STRUCTURAL - 1	EOR	3/19/2012	Construction
6007-PLN-ATP-00-50-C001	Anchor Rod Assemblies and Details	STRUCTURAL - 1	EOR	3/20/2012	Construction
6007-PLN-ATP-00-50-S001	General Civil and Structural Notes	STRUCTURAL - 1	EOR	3/20/2012	Construction
6007-ESP-RJK-33-50-0004	Anchor Bolt Tolerance Calculations	STRUCTURAL - 1	Vendor	6/5/2012	Approval
6007-ESP-RJK-33-50-0005	Drive Pilecap out fo tolerance	STRUCTURAL - 1	vendor	6/26/2012	Approval
6007-ESP-RJK-33-50-0006	Type III pilecap out of tolerance fix	STRUCTURAL - 1	Vendor	6/26/2012	Approval
6007-PLN-CCI-18-54-1200	Cover Sheet	STRUCTURAL - 1	vendor	7/16/2012	Approval
6007-PLN-CCI-18-54-1210	Code Plan	STRUCTURAL - 1	vendor	7/16/2012	Approval
6007-PLN-CCI-18-54-1211	Floor Plan	STRUCTURAL - 1	vendor	7/16/2012	Approval
6007-PLN-PRI-39-52-1205	FOUNDATION PLAN	STRUCTURAL - 1	vendor		Approval
aled and Signed Package 07.20.12-S	Pylon Structures Design Calculations Package	STRUCTURAL - 1	vendor	7/20/2012	Approval
328000_0 Central Support- signed	Central Support Plan	STRUCTURAL - 1	vendor	7/6/2012	Approval
35000_0 IntermediateSupport-signe	Intermediate Support Plan	STRUCTURAL - 1	vendor	7/6/2012	Approval
App for Alt Mat - BV form	Application for Alternate Material	STRUCTURAL - 1	vendor	7/6/2012	Approval
6007-ESP-CCI-18-54-1400	MECHANICAL SPECIFICATIONS	STRUCTURAL - 1	vendor		Approval
6007-PLN-CCI-18-54-1200	COVER SHEET	STRUCTURAL - 1	vendor		Approval
6007-PLN-CCI-18-54-1211	FLOOR PLAN	STRUCTURAL - 1	vendor		Approval
6007-PLN-CCI-18-54-1213	TRENCH AND UTILITY PLAN	STRUCTURAL - 1	vendor		Approval
6007-PLN-CCI-18-54-1214	EQUIPMENT LAYOUT	STRUCTURAL - 1	vendor		Approval
6007-PLN-CCI-18-54-1221	EXTERIOR ELEVATIONS	STRUCTURAL - 1	vendor		Approval
6007-PLN-CCI-18-54-1241	BUILDING SECTIONS	STRUCTURAL - 1	vendor		Approval
6007-PLN-CCI-18-54-1321	FOUNDATION PLAN	STRUCTURAL - 1	vendor		Approval
6007-PLN-CC1-18-54-1510	MECHANICAL/AIRLINE PIPING FLOOR PLAN	STRUCTURAL - 1	vendor		Approval
6007-PLN-CC1-18-54-1520	MECHANICAL/AIRLINE PIPING SCHEDULES AND DIAGRAMS	STRUCTURAL - 1	vendor		Approval
6007-PLN-CC1-18-54- 1611	ELECTRICAL GROUNDING PLAN	STRUCTURAL - 1	vendor		Approval
6007-PLN-CC1-18-54- 1613	ELECTRICAL EQUIPMENT PLAN	STRUCTURAL - 1	vendor		Approval
6007-PLN-CC1-18-54- 1621	ELECTRICAL LIGHTING PLAN	STRUCTURAL - 1	vendor		Approval
6007-PLN-CC1-18-54- 1622	ELECTRICAL LIGHTING SCHEDULES	STRUCTURAL - 1	vendor		Approval
6007-PLN-CC1-18-54- 1623	PHOTOMETRIC LIGHTING PLAN	STRUCTURAL - 1	vendor		Approval
6007-PLN-CC1-18-54- 1624	EM PHOTOMETRIC LIGHTING PLAN	STRUCTURAL - 1	vendor		Approval
6007-PLN-CC1-18-54- 1641	ONELINE DIAGRAM	STRUCTURAL - 1	vendor		Approval
6007-PLN-CC1-18-54-1643	PANEL SCHEDULES	STRUCTURAL - 1	vendor		Approval
6007-PLN-GFG-00-50-P212	Beta East Northeast Solar Array Foundation Plans Cover	STRUCTURAL - 1	vendor		Approval
6007-PLN-GFG-00-50-P213	Beta East Northeast Solar Array Foundation Plans Notes Sheet	STRUCTURAL - 1	vendor		Approval
6007-PLN-GFG-00-50-P214	Beta East Northeast Solar Array Foundation Plans Foundation Working Points Layout I	STRUCTURAL - 1	vendor		Approval
6007-PLN-GFG-00-50-P215	Beta East Northeast Foundation Plans Solar Array Foundation Working Points Layout II	STRUCTURAL - 1	vendor		Approval
6007-PLN-GFG-00-50-P216	Beta East Northeast Foundation Plans Solar Array Foundation Working Points Layout III	STRUCTURAL - 1	vendor		Approval
6007-PLN-GFG-00-50-P217	Beta East Northeast Foundation Plans Solar Array Foundation Working Points Layout IV	STRUCTURAL - 1	vendor		Approval
6007-PLN-GFG-00-50-P218	Beta East Northeast Foundation Plans Solar Array Foundation Working Points Layout V	STRUCTURAL - 1	vendor		Approval
6007-PLN-GFG-00-50-P219	Beta East Northeast Foundation Plans Solar Array Foundation Working Points Layout VI	STRUCTURAL - 1	vendor		Approval
6007-PLN-GFG-00-50-P220	Beta East Northeast Foundation Plans Solar Array Foundation Working Points Layout VII	STRUCTURAL - 1	vendor		Approval
6007-PLN-GFG-00-50-P221	Beta East Northeast Foundation Plans Solar Array Foundation Working Points Layout VIII	STRUCTURAL - 1	vendor		Approval
6007-PLN-GFG-00-50-P222	Beta East Northeast Solar Array Foundation Plans Foundation Piles Location Data 1	STRUCTURAL - 1	vendor		Approval
6007-PLN-GFG-00-50-P223	Beta East Northeast Solar Array Foundation Plans Foundation Piles Location Data 2	STRUCTURAL - 1	vendor		Approval
6007-PLN-GFG-00-50-P224	Beta East Northeast Solar Array Foundation Plans Foundation Piles Location Data 3	STRUCTURAL - 1	vendor		Approval
6007-PLN-GFG-00-50-P225	Beta East Northeast Solar Array Foundation Plans Foundation Piles Location Data 4	STRUCTURAL - 1	vendor		Approval
6007-PLN-GFG-00-50-P226	Beta East Northeast Solar Array Foundation Plans Foundation Piles Location Data 5	STRUCTURAL - 1	vendor		Approval
6007-PLN-GFG-00-50-P227	Beta East Northeast Solar Array Foundation Plans Foundation Piles Location Data 6	STRUCTURAL - 1	vendor		Approval
6007-PLN-GFG-00-50-P228	Beta East Northeast Solar Array Foundation Plans Foundation Piles Location Data 7	STRUCTURAL - 1	vendor		Approval
6007-PLN-GFG-00-50-P229	Beta East Northeast Solar Array Foundation Plans Foundation Piles Location Data 8	STRUCTURAL - 1	vendor		Approval
6007-PLN-GFG-00-50-P230	Beta East Northeast Solar Array Foundation Plans Foundation Piles Location Data 9	STRUCTURAL - 1	vendor		Approval
6007-PLN-GFG-00-50-P231	Beta East Northeast Solar Array Foundation Plans Foundation Piles Location Data 10	STRUCTURAL - 1	vendor		Approval
6007-PLN-GFG-00-50-P232	Beta East Northeast Solar Array Foundation Plans Foundation Piles Location Data 11	STRUCTURAL - 1	vendor		Approval
6007-PLN-GFG-00-50-P233	Beta East Northeast Solar Array Foundation Plans Foundation Piles Location Data 12	STRUCTURAL - 1	vendor		Approval
6007-PLN-GFG-00-50-P234	Beta East Northeast Solar Array Foundation Plans Foundation Piles Location Data 13	STRUCTURAL - 1	vendor		Approval
6007-PLN-GFG-00-50-P235	Beta East Northeast Solar Array Foundation Plans Foundation Piles Location Data 14	STRUCTURAL - 1	vendor		Approval
6007-PLN-GFG-00-50-P236	Beta East Northeast Solar Array Foundation Plans Foundation Piles Location Data 15	STRUCTURAL - 1	vendor		Approval
6007-PLN-GFG-00-50-P237	Beta East Northeast Solar Array Foundation Plans Foundation Piles Location Data 16	STRUCTURAL - 1	vendor		Approval
6007-PLN-GFG-00-50-P238	Beta East Northeast Solar Array Foundation Plans Foundation Piles Location Data 17	STRUCTURAL - 1	vendor		Approval
6007-PLN-GFG-00-50-P239	Beta East Northeast Solar Array Foundation Plans Foundation Piles Location Data 18	STRUCTURAL - 1	vendor		Approval
6007-PLN-GFG-00-50-P240	Beta East Northeast Solar Array Foundation Plans Foundation Piles Location Data 19	STRUCTURAL - 1	vendor		Approval
6007-PLN-GFG-00-50-P241	Beta East Northeast Solar Array Foundation Plans Foundation Piles Location Data 20	STRUCTURAL - 1	vendor		Approval
6007-PLN-GFG-00-50-P242	Beta East Northeast Solar Array Foundation Plans Foundation Piles Location Data 21	STRUCTURAL - 1	vendor		Approval
6007-PLN-GFG-00-50-P243	Beta East Northeast Solar Array Foundation Plans Foundation Piles Location Data 22	STRUCTURAL - 1	vendor		Approval
6007-PLN-GFG-00-50-P244	Beta East Northeast Solar Array Foundation Plans Foundation Piles Location Data 23	STRUCTURAL - 1	vendor		Approval
6007-PLN-GFG-00-50-P245	Beta East Northeast Solar Array Foundation Plans Foundation Piles Location Data 24	STRUCTURAL - 1	vendor		Approval
6007-PLN-GFG-00-50-P246	Beta East Northeast Solar Array Foundation Plans Foundation Piles Location Data 25	STRUCTURAL - 1	vendor		Approval
6007-PLN-GFG-00-50-P247	Beta East Northeast Solar Array Foundation Plans Foundation Piles Location Data 26	STRUCTURAL - 1	vendor		Approval
6007-PLN-GFG-00-50-P248	Beta East Northeast Solar Array Foundation Plans Foundation Piles Location Data 27	STRUCTURAL - 1	vendor		Approval
6007-PLN-GFG-00-50-P249	Beta East Northeast Solar Array Foundation Plans Foundation Piles Location Data 28	STRUCTURAL - 1	vendor		Approval
6007-PLN-GFG-00-50-P250	Beta East Northeast Solar Array Foundation Plans Foundation Piles Location Data 29	STRUCTURAL - 1	vendor		Approval
6007-PLN-GFG-00-50-P251	Beta East Northeast Solar Array Foundation Plans Foundation Piles Location Data 30	STRUCTURAL - 1	vendor		Approval
6007-PLN-GFG-00-50-P252	Beta East Northeast Solar Array Foundation Plans Foundation Piles Location Data 31	STRUCTURAL - 1	vendor		Approval
6007-PLN-GFG-00-50-P253	Beta East Northeast Solar Array Foundation Plans Foundation Piles Location Data 32	STRUCTURAL - 1	vendor		Approval
6007-PLN-GFG-00-50-P254	Beta East Northeast Solar Array Foundation Plans Foundation Piles Location Data 33	STRUCTURAL - 1	vendor		Approval
6007-PLN-GFG-00-50-P255	Beta East Northeast Solar Array Foundation Plans Foundation Piles Location Data 34	STRUCTURAL - 1	vendor		Approval
6007-PLN-GFG-00-50-P256	Beta East Northeast Solar Array Foundation Plans Foundation Piles Location Data 35	STRUCTURAL - 1	vendor		Approval

ABENER TEYMA MOJAVE

Compliance No.:	GEN-2				
Job :	Mojave Solar Project				
Date: 2/17/11	Description: Structural Master Drawing List				
Sheet No.	Description	Applicable Condition of Certification	Vendor Supplied or EOR	Submittal Date	Reason for Submittal
6007-PLN-GFG-00-50-P257	Beta East Northeast Solar Array Foundation Plans Foundation Piles Location Data 36	STRUCTURAL - 1	vendor		Approval
6007-PLN-GFG-00-50-P258	Beta East Northeast Solar Array Foundation Plans Foundation Piles Location Data 37	STRUCTURAL - 1	vendor		Approval
6007-PLN-GFG-00-50-P259	Beta East Northeast Solar Array Foundation Plans Foundation Piles Location Data 38	STRUCTURAL - 1	vendor		Approval
6007-PLN-GFG-00-50-P260	Beta East Northeast Solar Array Foundation Plans Foundation Piles Location Data 39	STRUCTURAL - 1	vendor		Approval
6007-PLN-GFG-00-50-P261	Beta East Northeast Solar Array Foundation Plans Foundation Piles Location Data 40	STRUCTURAL - 1	vendor		Approval
6007-PLN-GFG-00-50-P262	Beta East Northeast Solar Array Foundation Plans Foundation Piles Location Data 41	STRUCTURAL - 1	vendor		Approval
6007-PLN-GFG-00-50-P263	Beta East Northeast Solar Array Foundation Plans Foundation Piles Location Data 42	STRUCTURAL - 1	vendor		Approval
6007-PLN-GFG-00-50-P264	Beta East Northeast Solar Array Foundation Plans Foundation Piles Location Data 43	STRUCTURAL - 1	vendor		Approval
6007-PLN-GFG-00-50-P265	Beta East Northeast Solar Array Foundation Plans Foundation Piles Location Data 44	STRUCTURAL - 1	vendor		Approval
6007-PLN-GFG-00-50-P266	Beta East Northeast Solar Array Foundation Plans Foundation Piles Location Data 45	STRUCTURAL - 1	vendor		Approval
6007-PLN-GFG-00-50-P267	Beta East Northeast Solar Array Foundation Plans Foundation Piles Location Data 46	STRUCTURAL - 1	vendor		Approval
6007-PLN-GFG-00-50-P268	Beta East Northeast Solar Array Foundation Plans Foundation Piles Location Data 47	STRUCTURAL - 1	vendor		Approval
6007-PLN-GFG-00-50-P269	Beta East Northeast Solar Array Foundation Plans Foundation Piles Location Data 48	STRUCTURAL - 1	vendor		Approval
6007-PLN-GFG-00-50-P270	Beta East Northeast Solar Array Foundation Plans Foundation Piles Location Data 49	STRUCTURAL - 1	vendor		Approval
6007-PLN-GFG-00-50-P271	Beta East Northeast Solar Array Foundation Plans Foundation Piles Location Data 50	STRUCTURAL - 1	vendor		Approval
6007-PLN-GFG-00-50-P272	Beta East Northeast Solar Array Foundation Plans Foundation Piles Location Data 51	STRUCTURAL - 1	vendor		Approval
6007-PLN-GFG-00-50-P273	Beta East Northeast Solar Array Foundation Plans Foundation Piles Location Data 52	STRUCTURAL - 1	vendor		Approval
6007-PLN-GFG-00-50-P274	Beta East Northeast Solar Array Foundation Plans Foundation Piles Location Data 53	STRUCTURAL - 1	vendor		Approval
6007-PLN-GFG-00-50-P275	Beta East Northeast Solar Array Foundation Plans Foundation Piles Location Data 54	STRUCTURAL - 1	vendor		Approval
6007-PLN-GFG-00-50-P276	Beta East Northeast Solar Array Foundation Plans Foundation Piles Location Data 55	STRUCTURAL - 1	vendor		Approval
6007-PLN-GFG-00-50-P277	Beta East Northeast Solar Array Foundation Plans Foundation Piles Location Data 56	STRUCTURAL - 1	vendor		Approval
6007-PLN-GFG-00-50-P278	Beta East Northeast Solar Array Foundation Plans Foundation Piles Location Data 57	STRUCTURAL - 1	vendor		Approval
6007-PLN-GFG-00-50-P279	Beta East Northeast Solar Array Foundation Plans Foundation Piles Location Data 58	STRUCTURAL - 1	vendor		Approval
6007-PLN-GFG-00-50-P280	Beta East Northeast Solar Array Foundation Plans Foundation Piles Location Data 59	STRUCTURAL - 1	vendor		Approval
6007-PLN-GFG-00-50-P281	Beta East Northeast Solar Array Foundation Plans Foundation Piles Location Data 60	STRUCTURAL - 1	vendor		Approval
6007-PLN-GFG-00-50-P282	Beta East Northeast Solar Array Foundation Plans Foundation Piles Location Data 61	STRUCTURAL - 1	vendor		Approval
6007-PLN-GFG-00-50-P283	Beta East Northeast Solar Array Foundation Plans Foundation Piles Location Data 62	STRUCTURAL - 1	vendor		Approval
6007-PLN-GFG-00-50-P284	Beta East Northeast Solar Array Foundation Plans Foundation Piles Location Data 63	STRUCTURAL - 1	vendor		Approval
6007-PLN-GFG-00-50-P285	Beta East Northeast Solar Array Foundation Plans Foundation Piles Location Data 64	STRUCTURAL - 1	vendor		Approval
6007-PLN-GFG-00-50-P286	Beta East Northeast Solar Array Foundation Plans Foundation Piles Location Data 65	STRUCTURAL - 1	vendor		Approval
6007-PLN-GFG-00-50-P287	Beta East Northeast Solar Array Foundation Plans Foundation Piles Location Data 66	STRUCTURAL - 1	vendor		Approval
6007-PLN-GFG-00-50-P143	Beta East Southeast Solar Array Foundation Plans Cover	STRUCTURAL - 1	vendor		Approval
6007-PLN-GFG-00-50-P144	Beta East Southeast Solar Array Foundation Plans Notes Sheet	STRUCTURAL - 1	vendor		Approval
6007-PLN-GFG-00-50-P145	Beta East Southeast Solar Array Foundation Plans Foundation Working Points Layout I	STRUCTURAL - 1	vendor		Approval
6007-PLN-GFG-00-50-P146	Beta East Southeast Solar Array Foundation Plans Foundation Working Points Layout II	STRUCTURAL - 1	vendor		Approval
6007-PLN-GFG-00-50-P147	Beta East Southeast Solar Array Foundation Plans Foundation Working Points Layout III	STRUCTURAL - 1	vendor		Approval
6007-PLN-GFG-00-50-P148	Beta East Southeast Solar Array Foundation Plans Foundation Working Points Layout IV	STRUCTURAL - 1	vendor		Approval
6007-PLN-GFG-00-50-P149	Beta East Southeast Solar Array Foundation Plans Foundation Working Points Layout V	STRUCTURAL - 1	vendor		Approval
6007-PLN-GFG-00-50-P150	Beta East Southeast Solar Array Foundation Plans Foundation Working Points Layout VI	STRUCTURAL - 1	vendor		Approval
6007-PLN-GFG-00-50-P151	Beta East Southeast Solar Array Foundation Plans Foundation Working Points Layout VII	STRUCTURAL - 1	vendor		Approval
6007-PLN-GFG-00-50-P152	Beta East Southeast Solar Array Foundation Plans Foundation Piles Location Data 1	STRUCTURAL - 1	vendor		Approval
6007-PLN-GFG-00-50-P153	Beta East Southeast Solar Array Foundation Plans Foundation Piles Location Data 2	STRUCTURAL - 1	vendor		Approval
6007-PLN-GFG-00-50-P154	Beta East Southeast Solar Array Foundation Plans Foundation Piles Location Data 3	STRUCTURAL - 1	vendor		Approval
6007-PLN-GFG-00-50-P155	Beta East Southeast Solar Array Foundation Plans Foundation Piles Location Data 4	STRUCTURAL - 1	vendor		Approval
6007-PLN-GFG-00-50-P156	Beta East Southeast Solar Array Foundation Plans Foundation Piles Location Data 5	STRUCTURAL - 1	vendor		Approval
6007-PLN-GFG-00-50-P157	Beta East Southeast Solar Array Foundation Plans Foundation Piles Location Data 6	STRUCTURAL - 1	vendor		Approval
6007-PLN-GFG-00-50-P158	Beta East Southeast Solar Array Foundation Plans Foundation Piles Location Data 7	STRUCTURAL - 1	vendor		Approval
6007-PLN-GFG-00-50-P159	Beta East Southeast Solar Array Foundation Plans Foundation Piles Location Data 8	STRUCTURAL - 1	vendor		Approval
6007-PLN-GFG-00-50-P160	Beta East Southeast Solar Array Foundation Plans Foundation Piles Location Data 9	STRUCTURAL - 1	vendor		Approval
6007-PLN-GFG-00-50-P161	Beta East Southeast Solar Array Foundation Plans Foundation Piles Location Data 10	STRUCTURAL - 1	vendor		Approval
6007-PLN-GFG-00-50-P162	Beta East Southeast Solar Array Foundation Plans Foundation Piles Location Data 11	STRUCTURAL - 1	vendor		Approval
6007-PLN-GFG-00-50-P163	Beta East Southeast Solar Array Foundation Plans Foundation Piles Location Data 12	STRUCTURAL - 1	vendor		Approval
6007-PLN-GFG-00-50-P164	Beta East Southeast Solar Array Foundation Plans Foundation Piles Location Data 13	STRUCTURAL - 1	vendor		Approval
6007-PLN-GFG-00-50-P165	Beta East Southeast Solar Array Foundation Plans Foundation Piles Location Data 14	STRUCTURAL - 1	vendor		Approval
6007-PLN-GFG-00-50-P166	Beta East Southeast Solar Array Foundation Plans Foundation Piles Location Data 15	STRUCTURAL - 1	vendor		Approval
6007-PLN-GFG-00-50-P167	Beta East Southeast Solar Array Foundation Plans Foundation Piles Location Data 16	STRUCTURAL - 1	vendor		Approval
6007-PLN-GFG-00-50-P168	Beta East Southeast Solar Array Foundation Plans Foundation Piles Location Data 17	STRUCTURAL - 1	vendor		Approval
6007-PLN-GFG-00-50-P169	Beta East Southeast Solar Array Foundation Plans Foundation Piles Location Data 18	STRUCTURAL - 1	vendor		Approval
6007-PLN-GFG-00-50-P170	Beta East Southeast Solar Array Foundation Plans Foundation Piles Location Data 19	STRUCTURAL - 1	vendor		Approval
6007-PLN-GFG-00-50-P171	Beta East Southeast Solar Array Foundation Plans Foundation Piles Location Data 20	STRUCTURAL - 1	vendor		Approval
6007-PLN-GFG-00-50-P172	Beta East Southeast Solar Array Foundation Plans Foundation Piles Location Data 21	STRUCTURAL - 1	vendor		Approval
6007-PLN-GFG-00-50-P173	Beta East Southeast Solar Array Foundation Plans Foundation Piles Location Data 22	STRUCTURAL - 1	vendor		Approval
6007-PLN-GFG-00-50-P174	Beta East Southeast Solar Array Foundation Plans Foundation Piles Location Data 23	STRUCTURAL - 1	vendor		Approval
6007-PLN-GFG-00-50-P175	Beta East Southeast Solar Array Foundation Plans Foundation Piles Location Data 24	STRUCTURAL - 1	vendor		Approval
6007-PLN-GFG-00-50-P176	Beta East Southeast Solar Array Foundation Plans Foundation Piles Location Data 25	STRUCTURAL - 1	vendor		Approval
6007-PLN-GFG-00-50-P177	Beta East Southeast Solar Array Foundation Plans Foundation Piles Location Data 26	STRUCTURAL - 1	vendor		Approval
6007-PLN-GFG-00-50-P178	Beta East Southeast Solar Array Foundation Plans Foundation Piles Location Data 27	STRUCTURAL - 1	vendor		Approval
6007-PLN-GFG-00-50-P179	Beta East Southeast Solar Array Foundation Plans Foundation Piles Location Data 28	STRUCTURAL - 1	vendor		Approval
6007-PLN-GFG-00-50-P180	Beta East Southeast Solar Array Foundation Plans Foundation Piles Location Data 29	STRUCTURAL - 1	vendor		Approval
6007-PLN-GFG-00-50-P181	Beta East Southeast Solar Array Foundation Plans Foundation Piles Location Data 30	STRUCTURAL - 1	vendor		Approval
6007-PLN-GFG-00-50-P182	Beta East Southeast Solar Array Foundation Plans Foundation Piles Location Data 31	STRUCTURAL - 1	vendor		Approval
6007-PLN-GFG-00-50-P183	Beta East Southeast Solar Array Foundation Plans Foundation Piles Location Data 32	STRUCTURAL - 1	vendor		Approval
6007-PLN-GFG-00-50-P184	Beta East Southeast Solar Array Foundation Plans Foundation Piles Location Data 33	STRUCTURAL - 1	vendor		Approval
6007-PLN-GFG-00-50-P185	Beta East Southeast Solar Array Foundation Plans Foundation Piles Location Data 34	STRUCTURAL - 1	vendor		Approval
6007-PLN-GFG-00-50-P186	Beta East Southeast Solar Array Foundation Plans Foundation Piles Location Data 35	STRUCTURAL - 1	vendor		Approval
6007-PLN-GFG-00-50-P187	Beta East Southeast Solar Array Foundation Plans Foundation Piles Location Data 36	STRUCTURAL - 1	vendor		Approval

ABENER TEYMA
MOJAVE

Compliance No.:	GEN-2				
Job :	Mojave Solar Project				
Date: 2/17/11	Description: Structural Master Drawing List				
Sheet No.	Description	Applicable Condition of Certification	Vendor Supplied or EOR	Submittal Date	Reason for Submittal
6007-PLN-GFG-00-50-P188	Beta East Southeast Solar Array Foundation Plans Foundation Piles Location Data 37	STRUCTURAL - 1	vendor		Approval
6007-PLN-GFG-00-50-P189	Beta East Southeast Solar Array Foundation Plans Foundation Piles Location Data 38	STRUCTURAL - 1	vendor		Approval
6007-PLN-GFG-00-50-P190	Beta East Southeast Solar Array Foundation Plans Foundation Piles Location Data 39	STRUCTURAL - 1	vendor		Approval
6007-PLN-GFG-00-50-P191	Beta East Southeast Solar Array Foundation Plans Foundation Piles Location Data 40	STRUCTURAL - 1	vendor		Approval
6007-PLN-GFG-00-50-P192	Beta East Southeast Solar Array Foundation Plans Foundation Piles Location Data 41	STRUCTURAL - 1	vendor		Approval
6007-PLN-GFG-00-50-P193	Beta East Southeast Solar Array Foundation Plans Foundation Piles Location Data 42	STRUCTURAL - 1	vendor		Approval
6007-PLN-GFG-00-50-P194	Beta East Southeast Solar Array Foundation Plans Foundation Piles Location Data 43	STRUCTURAL - 1	vendor		Approval
6007-PLN-GFG-00-50-P195	Beta East Southeast Solar Array Foundation Plans Foundation Piles Location Data 44	STRUCTURAL - 1	vendor		Approval
6007-PLN-GFG-00-50-P196	Beta East Southeast Solar Array Foundation Plans Foundation Piles Location Data 45	STRUCTURAL - 1	vendor		Approval
6007-PLN-GFG-00-50-P197	Beta East Southeast Solar Array Foundation Plans Foundation Piles Location Data 46	STRUCTURAL - 1	vendor		Approval
6007-PLN-GFG-00-50-P198	Beta East Southeast Solar Array Foundation Plans Foundation Piles Location Data 47	STRUCTURAL - 1	vendor		Approval
6007-PLN-GFG-00-50-P199	Beta East Southeast Solar Array Foundation Plans Foundation Piles Location Data 48	STRUCTURAL - 1	vendor		Approval
6007-PLN-GFG-00-50-P200	Beta East Southeast Solar Array Foundation Plans Foundation Piles Location Data 49	STRUCTURAL - 1	vendor		Approval
6007-PLN-GFG-00-50-P201	Beta East Southeast Solar Array Foundation Plans Foundation Piles Location Data 50	STRUCTURAL - 1	vendor		Approval
6007-PLN-GFG-00-50-P202	Beta East Southeast Solar Array Foundation Plans Foundation Piles Location Data 51	STRUCTURAL - 1	vendor		Approval
6007-PLN-GFG-00-50-P203	Beta East Southeast Solar Array Foundation Plans Foundation Piles Location Data 52	STRUCTURAL - 1	vendor		Approval
6007-PLN-GFG-00-50-P204	Beta East Southeast Solar Array Foundation Plans Foundation Piles Location Data 53	STRUCTURAL - 1	vendor		Approval
6007-PLN-GFG-00-50-P205	Beta East Southeast Solar Array Foundation Plans Foundation Piles Location Data 54	STRUCTURAL - 1	vendor		Approval
6007-PLN-GFG-00-50-P206	Beta East Southeast Solar Array Foundation Plans Foundation Piles Location Data 55	STRUCTURAL - 1	vendor		Approval
6007-PLN-GFG-00-50-P207	Beta East Southeast Solar Array Foundation Plans Foundation Piles Location Data 56	STRUCTURAL - 1	vendor		Approval
6007-PLN-GFG-00-50-P208	Beta East Southeast Solar Array Foundation Plans Foundation Piles Location Data 57	STRUCTURAL - 1	vendor		Approval
6007-PLN-GFG-00-50-P209	Beta East Southeast Solar Array Foundation Plans Foundation Piles Location Data 58	STRUCTURAL - 1	vendor		Approval
6007-PLN-GFG-00-50-P210	Beta East Southeast Solar Array Foundation Plans Foundation Piles Location Data 59	STRUCTURAL - 1	vendor		Approval
6007-PLN-GFG-00-50-P211	Beta East Southeast Solar Array Foundation Plans Foundation Piles Location Data 60	STRUCTURAL - 1	vendor		Approval
6007-PLN-GFG-00-50-P288	Beta East Southeast Solar Array Foundation Plans Foundation Piles Location Data 60	STRUCTURAL - 1	vendor		Approval
6007-PLN-GFG-00-50-P289	Beta East Southeast Solar Array Foundation Plans Foundation Piles Location Data 60	STRUCTURAL - 1	vendor		Approval
6007-PLN-GFG-00-50-P290	Beta East Southeast Solar Array Foundation Plans Foundation Piles Location Data 60	STRUCTURAL - 1	vendor		Approval
6007-PLN-GFG-00-50-P291	Beta East Southeast Solar Array Foundation Plans Foundation Piles Location Data 60	STRUCTURAL - 1	vendor		Approval
6007-PLN-GFG-00-50-P292	Beta East Southeast Solar Array Foundation Plans Foundation Piles Location Data 60	STRUCTURAL - 1	vendor		Approval
6007-PLN-GFG-00-50-P293	Beta East Southeast Solar Array Foundation Plans Foundation Piles Location Data 60	STRUCTURAL - 1	vendor		Approval
6007-PLN-GFG-00-50-P294	Beta East Southeast Solar Array Foundation Plans Foundation Piles Location Data 60	STRUCTURAL - 1	vendor		Approval
6007-PLN-GFG-00-50-P295	Beta East Southeast Solar Array Foundation Plans Foundation Piles Location Data 60	STRUCTURAL - 1	vendor		Approval
6007-PLN-GFG-00-50-P296	Beta East Southeast Solar Array Foundation Plans Foundation Piles Location Data 60	STRUCTURAL - 1	vendor		Approval
6007-PLN-GFG-00-50-P297	Beta East Southeast Solar Array Foundation Plans Foundation Piles Location Data 60	STRUCTURAL - 1	vendor		Approval
6007-PLN-GFG-00-50-P298	Beta East Southeast Solar Array Foundation Plans Foundation Piles Location Data 60	STRUCTURAL - 1	vendor		Approval
6007-PLN-GFG-00-50-P299	Beta East Southeast Solar Array Foundation Plans Foundation Piles Location Data 60	STRUCTURAL - 1	vendor		Approval
6007-PLN-GFG-00-50-P300	Beta East Southeast Solar Array Foundation Plans Foundation Piles Location Data 60	STRUCTURAL - 1	vendor		Approval
6007-PLN-GFG-00-50-P301	Beta East Southeast Solar Array Foundation Plans Foundation Piles Location Data 60	STRUCTURAL - 1	vendor		Approval
6007-PLN-GFG-00-50-P302	Beta East Southeast Solar Array Foundation Plans Foundation Piles Location Data 60	STRUCTURAL - 1	vendor		Approval
6007-PLN-GFG-00-50-P303	Beta East Southeast Solar Array Foundation Plans Foundation Piles Location Data 60	STRUCTURAL - 1	vendor		Approval
6007-PLN-GFG-00-50-P304	Beta East Southeast Solar Array Foundation Plans Foundation Piles Location Data 60	STRUCTURAL - 1	vendor		Approval
6007-PLN-GFG-00-50-P305	Beta East Southeast Solar Array Foundation Plans Foundation Piles Location Data 60	STRUCTURAL - 1	vendor		Approval
6007-PLN-GFG-00-50-P306	Beta East Southeast Solar Array Foundation Plans Foundation Piles Location Data 60	STRUCTURAL - 1	vendor		Approval
6007-PLN-GFG-00-50-P307	Beta East Southeast Solar Array Foundation Plans Foundation Piles Location Data 60	STRUCTURAL - 1	vendor		Approval
6007-PLN-GFG-00-50-P308	Beta East Southeast Solar Array Foundation Plans Foundation Piles Location Data 60	STRUCTURAL - 1	vendor		Approval
6007-PLN-GFG-00-50-P309	Beta East Southeast Solar Array Foundation Plans Foundation Piles Location Data 60	STRUCTURAL - 1	vendor		Approval
6007-PLN-GFG-00-50-P310	Beta East Southeast Solar Array Foundation Plans Foundation Piles Location Data 60	STRUCTURAL - 1	vendor		Approval
6007-PLN-GFG-00-50-P311	Beta East Southeast Solar Array Foundation Plans Foundation Piles Location Data 60	STRUCTURAL - 1	vendor		Approval
6007-PLN-GFG-00-50-P312	Beta East Southeast Solar Array Foundation Plans Foundation Piles Location Data 60	STRUCTURAL - 1	vendor		Approval
6007-PLN-GFG-00-50-P313	Beta East Southeast Solar Array Foundation Plans Foundation Piles Location Data 60	STRUCTURAL - 1	vendor		Approval
6007-PLN-GFG-00-50-P314	Beta East Southeast Solar Array Foundation Plans Foundation Piles Location Data 60	STRUCTURAL - 1	vendor		Approval
6007-PLN-GFG-00-50-P315	Beta East Southeast Solar Array Foundation Plans Foundation Piles Location Data 60	STRUCTURAL - 1	vendor		Approval
6007-PLN-GFG-00-50-P316	Beta East Southeast Solar Array Foundation Plans Foundation Piles Location Data 60	STRUCTURAL - 1	vendor		Approval
6007-PLN-GFG-00-50-P317	Beta East Southeast Solar Array Foundation Plans Foundation Piles Location Data 60	STRUCTURAL - 1	vendor		Approval
6007-PLN-GFG-00-50-P318	Beta East Southeast Solar Array Foundation Plans Foundation Piles Location Data 60	STRUCTURAL - 1	vendor		Approval
6007-PLN-GFG-00-50-P319	Beta East Southeast Solar Array Foundation Plans Foundation Piles Location Data 60	STRUCTURAL - 1	vendor		Approval
6007-PLN-GFG-00-50-P320	Beta East Southeast Solar Array Foundation Plans Foundation Piles Location Data 60	STRUCTURAL - 1	vendor		Approval
6007-PLN-GFG-00-50-P321	Beta East Southeast Solar Array Foundation Plans Foundation Piles Location Data 60	STRUCTURAL - 1	vendor		Approval
6007-PLN-GFG-00-50-P322	Beta East Southeast Solar Array Foundation Plans Foundation Piles Location Data 60	STRUCTURAL - 1	vendor		Approval
6007-PLN-GFG-00-50-P323	Beta East Southeast Solar Array Foundation Plans Foundation Piles Location Data 60	STRUCTURAL - 1	vendor		Approval
6007-PLN-GFG-00-50-P324	Beta East Southeast Solar Array Foundation Plans Foundation Piles Location Data 60	STRUCTURAL - 1	vendor		Approval
6007-PLN-GFG-00-50-P325	Beta East Southeast Solar Array Foundation Plans Foundation Piles Location Data 60	STRUCTURAL - 1	vendor		Approval
6007-PLN-GFG-00-50-P326	Beta East Southeast Solar Array Foundation Plans Foundation Piles Location Data 60	STRUCTURAL - 1	vendor		Approval
6007-PLN-GFG-00-50-P327	Beta East Southeast Solar Array Foundation Plans Foundation Piles Location Data 60	STRUCTURAL - 1	vendor		Approval
6007-PLN-GFG-00-50-P328	Beta East Southeast Solar Array Foundation Plans Foundation Piles Location Data 60	STRUCTURAL - 1	vendor		Approval
6007-PLN-GFG-00-50-P329	Beta East Southeast Solar Array Foundation Plans Foundation Piles Location Data 60	STRUCTURAL - 1	vendor		Approval
6007-PLN-GFG-00-50-P330	Beta East Southeast Solar Array Foundation Plans Foundation Piles Location Data 60	STRUCTURAL - 1	vendor		Approval
6007-PLN-GFG-00-50-P331	Beta East Southeast Solar Array Foundation Plans Foundation Piles Location Data 60	STRUCTURAL - 1	vendor		Approval
6007-PLN-GFG-00-50-P332	Beta East Southeast Solar Array Foundation Plans Foundation Piles Location Data 60	STRUCTURAL - 1	vendor		Approval
6007-PLN-GFG-00-50-P333	Beta East Southeast Solar Array Foundation Plans Foundation Piles Location Data 60	STRUCTURAL - 1	vendor		Approval
6007-PLN-GFG-00-50-P334	Beta East Southeast Solar Array Foundation Plans Foundation Piles Location Data 60	STRUCTURAL - 1	vendor		Approval
6007-PLN-GFG-00-50-P335	Beta East Southeast Solar Array Foundation Plans Foundation Piles Location Data 60	STRUCTURAL - 1	vendor		Approval
6007-PLN-GFG-00-50-P336	Beta East Southeast Solar Array Foundation Plans Foundation Piles Location Data 60	STRUCTURAL - 1	vendor		Approval
6007-PLN-GFG-00-50-P337	Beta East Southeast Solar Array Foundation Plans Foundation Piles Location Data 60	STRUCTURAL - 1	vendor		Approval
6007-PLN-GFG-00-50-P338	Beta East Southeast Solar Array Foundation Plans Foundation Piles Location Data 60	STRUCTURAL - 1	vendor		Approval
6007-PLN-GFG-00-50-P339	Beta East Southeast Solar Array Foundation Plans Foundation Piles Location Data 60	STRUCTURAL - 1	vendor		Approval

ABENER TEYMA MOJAVE

Compliance No.:	GEN-2				
Job :	Mojave Solar Project				
Date: 2/17/11	Description: Structural Master Drawing List				
Sheet No.	Description	Applicable Condition of Certification	Vendor Supplied or EOR	Submittal Date	Reason for Submittal
6007-PLN-GFG-00-50-P340	Beta East Southeast Solar Array Foundation Plans Foundation Piles Location Data 60	STRUCTURAL - 1	vendor		Approval
6007-PLN-GFG-00-50-P341	Beta East Southeast Solar Array Foundation Plans Foundation Piles Location Data 60	STRUCTURAL - 1	vendor		Approval
6007-PLN-GFG-00-50-P342	Beta East Southeast Solar Array Foundation Plans Foundation Piles Location Data 60	STRUCTURAL - 1	vendor		Approval
6007-PLN-GFG-00-50-P343	Beta East Southeast Solar Array Foundation Plans Foundation Piles Location Data 60	STRUCTURAL - 1	vendor		Approval
6007-PLN-GFG-00-50-P344	Beta East Southeast Solar Array Foundation Plans Foundation Piles Location Data 60	STRUCTURAL - 1	vendor		Approval
6007-PLN-GFG-00-50-P345	Beta East Southeast Solar Array Foundation Plans Foundation Piles Location Data 60	STRUCTURAL - 1	vendor		Approval
6007-PLN-GFG-00-50-P346	Beta East Southeast Solar Array Foundation Plans Foundation Piles Location Data 60	STRUCTURAL - 1	vendor		Approval
6007-PLN-GFG-00-50-P347	North Alpha West Foundation Plans Cover	STRUCTURAL - 1	vendor		Approval
6007-PLN-GFG-00-50-P348	North Alpha West Foundation Plans Notes Sheet	STRUCTURAL - 1	vendor		Approval
6007-PLN-GFG-00-50-P349	North Alpha West Foundation Plans Working Points Layout I	STRUCTURAL - 1	vendor		Approval
6007-PLN-GFG-00-50-P350	North Alpha West Foundation Plans Working Points Layout II	STRUCTURAL - 1	vendor		Approval
6007-PLN-GFG-00-50-P351	North Alpha West Foundation Plans Working Points Layout III	STRUCTURAL - 1	vendor		Approval
6007-PLN-GFG-00-50-P352	North Alpha West Foundation Plans Working Points IV	STRUCTURAL - 1	vendor		Approval
6007-PLN-GFG-00-50-P353	North Alpha West Foundation Plans Working Points Layout V	STRUCTURAL - 1	vendor		Approval
6007-PLN-GFG-00-50-P354	North Alpha West Foundation Plans Working Points Layout VI	STRUCTURAL - 1	vendor		Approval
6007-PLN-GFG-00-50-P355	North Alpha West Foundation Plans Working Points Layout VII	STRUCTURAL - 1	vendor		Approval
6007-PLN-GFG-00-50-P356	North Alpha West Foundation Plans Working Points Layout VIII	STRUCTURAL - 1	vendor		Approval
6007-PLN-GFG-00-50-P357	North Alpha West Foundation Plans Piles Location Data 1	STRUCTURAL - 1	vendor		Approval
6007-PLN-GFG-00-50-P358	North Alpha West Foundation Plans Piles Location Data 2	STRUCTURAL - 1	vendor		Approval
6007-PLN-GFG-00-50-P359	North Alpha West Foundation Plans Piles Location Data 3	STRUCTURAL - 1	vendor		Approval
6007-PLN-GFG-00-50-P360	North Alpha West Foundation Plans Piles Location Data 4	STRUCTURAL - 1	vendor		Approval
6007-PLN-GFG-00-50-P361	North Alpha West Foundation Plans Piles Location Data 5	STRUCTURAL - 1	vendor		Approval
6007-PLN-GFG-00-50-P362	North Alpha West Foundation Plans Piles Location Data 6	STRUCTURAL - 1	vendor		Approval
6007-PLN-GFG-00-50-P363	North Alpha West Foundation Plans Piles Location Data 7	STRUCTURAL - 1	vendor		Approval
6007-PLN-GFG-00-50-P364	North Alpha West Foundation Plans Piles Location Data 8	STRUCTURAL - 1	vendor		Approval
6007-PLN-GFG-00-50-P365	North Alpha West Foundation Plans Piles Location Data 9	STRUCTURAL - 1	vendor		Approval
6007-PLN-GFG-00-50-P366	North Alpha West Foundation Plans Piles Location Data 10	STRUCTURAL - 1	vendor		Approval
6007-PLN-GFG-00-50-P367	North Alpha West Foundation Plans Piles Location Data 11	STRUCTURAL - 1	vendor		Approval
6007-PLN-GFG-00-50-P368	North Alpha West Foundation Plans Piles Location Data 12	STRUCTURAL - 1	vendor		Approval
6007-PLN-GFG-00-50-P369	North Alpha West Foundation Plans Piles Location Data 13	STRUCTURAL - 1	vendor		Approval
6007-PLN-GFG-00-50-P370	North Alpha West Foundation Plans Piles Location Data 14	STRUCTURAL - 1	vendor		Approval
6007-PLN-GFG-00-50-P371	North Alpha West Foundation Plans Piles Location Data 15	STRUCTURAL - 1	vendor		Approval
6007-PLN-GFG-00-50-P372	North Alpha West Foundation Plans Piles Location Data 16	STRUCTURAL - 1	vendor		Approval
6007-PLN-GFG-00-50-P373	North Alpha West Foundation Plans Piles Location Data 17	STRUCTURAL - 1	vendor		Approval
6007-PLN-GFG-00-50-P374	North Alpha West Foundation Plans Piles Location Data 18	STRUCTURAL - 1	vendor		Approval
6007-PLN-GFG-00-50-P375	North Alpha West Foundation Plans Piles Location Data 19	STRUCTURAL - 1	vendor		Approval
6007-PLN-GFG-00-50-P376	North Alpha West Foundation Plans Piles Location Data 20	STRUCTURAL - 1	vendor		Approval
6007-PLN-GFG-00-50-P377	North Alpha West Foundation Plans Piles Location Data 21	STRUCTURAL - 1	vendor		Approval
6007-PLN-GFG-00-50-P378	North Alpha West Foundation Plans Piles Location Data 22	STRUCTURAL - 1	vendor		Approval
6007-PLN-GFG-00-50-P379	North Alpha West Foundation Plans Piles Location Data 23	STRUCTURAL - 1	vendor		Approval
6007-PLN-GFG-00-50-P380	North Alpha West Foundation Plans Piles Location Data 24	STRUCTURAL - 1	vendor		Approval
6007-PLN-GFG-00-50-P381	North Alpha West Foundation Plans Piles Location Data 25	STRUCTURAL - 1	vendor		Approval
6007-PLN-GFG-00-50-P382	North Alpha West Foundation Plans Piles Location Data 26	STRUCTURAL - 1	vendor		Approval
6007-PLN-GFG-00-50-P383	North Alpha West Foundation Plans Piles Location Data 27	STRUCTURAL - 1	vendor		Approval
6007-PLN-GFG-00-50-P384	North Alpha West Foundation Plans Piles Location Data 28	STRUCTURAL - 1	vendor		Approval
6007-PLN-GFG-00-50-P385	North Alpha West Foundation Plans Piles Location Data 29	STRUCTURAL - 1	vendor		Approval
6007-PLN-GFG-00-50-P386	North Alpha West Foundation Plans Piles Location Data 30	STRUCTURAL - 1	vendor		Approval
6007-PLN-GFG-00-50-P387	North Alpha West Foundation Plans Piles Location Data 31	STRUCTURAL - 1	vendor		Approval
6007-PLN-GFG-00-50-P388	North Alpha West Foundation Plans Piles Location Data 32	STRUCTURAL - 1	vendor		Approval
6007-PLN-GFG-00-50-P389	North Alpha West Foundation Plans Piles Location Data 33	STRUCTURAL - 1	vendor		Approval
6007-PLN-GFG-00-50-P390	North Alpha West Foundation Plans Piles Location Data 34	STRUCTURAL - 1	vendor		Approval
6007-PLN-GFG-00-50-P391	North Alpha West Foundation Plans Piles Location Data 35	STRUCTURAL - 1	vendor		Approval
6007-PLN-GFG-00-50-P392	North Alpha West Foundation Plans Piles Location Data 36	STRUCTURAL - 1	vendor		Approval
6007-PLN-GFG-00-50-P393	North Alpha West Foundation Plans Piles Location Data 37	STRUCTURAL - 1	vendor		Approval
6007-PLN-GFG-00-50-P394	North Alpha West Foundation Plans Piles Location Data 38	STRUCTURAL - 1	vendor		Approval
6007-PLN-GFG-00-50-P395	North Alpha West Foundation Plans Piles Location Data 39	STRUCTURAL - 1	vendor		Approval
6007-PLN-GFG-00-50-P396	North Alpha West Foundation Plans Piles Location Data 40	STRUCTURAL - 1	vendor		Approval
6007-PLN-GFG-00-50-P397	North Alpha West Foundation Plans Piles Location Data 41	STRUCTURAL - 1	vendor		Approval
6007-PLN-GFG-00-50-P398	North Alpha West Foundation Plans Piles Location Data 42	STRUCTURAL - 1	vendor		Approval
6007-PLN-GFG-00-50-P399	North Alpha West Foundation Plans Piles Location Data 43	STRUCTURAL - 1	vendor		Approval
6007-PLN-GFG-00-50-P400	North Alpha West Foundation Plans Piles Location Data 44	STRUCTURAL - 1	vendor		Approval
6007-PLN-GFG-00-50-P401	North Alpha West Foundation Plans Piles Location Data 45	STRUCTURAL - 1	vendor		Approval
6007-PLN-GFG-00-50-P402	North Alpha West Foundation Plans Piles Location Data 46	STRUCTURAL - 1	vendor		Approval
6007-PLN-GFG-00-50-P403	North Alpha West Foundation Plans Piles Location Data 47	STRUCTURAL - 1	vendor		Approval
6007-PLN-GFG-00-50-P404	North Alpha West Foundation Plans Piles Location Data 48	STRUCTURAL - 1	vendor		Approval
6007-PLN-GFG-00-50-P405	North Alpha West Foundation Plans Piles Location Data 49	STRUCTURAL - 1	vendor		Approval
6007-PLN-GFG-00-50-P406	North Alpha West Foundation Plans Piles Location Data 50	STRUCTURAL - 1	vendor		Approval
6007-PLN-GFG-00-50-P407	North Alpha West Foundation Plans Piles Location Data 51	STRUCTURAL - 1	vendor		Approval
6007-PLN-GFG-00-50-P408	North Alpha West Foundation Plans Piles Location Data 52	STRUCTURAL - 1	vendor		Approval
6007-PLN-GFG-00-50-P409	North Alpha West Foundation Plans Piles Location Data 53	STRUCTURAL - 1	vendor		Approval
6007-PLN-GFG-00-50-P410	North Alpha West Foundation Plans Piles Location Data 54	STRUCTURAL - 1	vendor		Approval
6007-PLN-GFG-00-50-P411	North Alpha West Foundation Plans Piles Location Data 55	STRUCTURAL - 1	vendor		Approval
6007-PLN-GFG-00-50-P412	North Alpha West Foundation Plans Piles Location Data 56	STRUCTURAL - 1	vendor		Approval
6007-PLN-GFG-00-50-P413	North Alpha West Foundation Plans Piles Location Data 57	STRUCTURAL - 1	vendor		Approval
6007-PLN-GFG-00-50-P414	North Alpha West Foundation Plans Piles Location Data 58	STRUCTURAL - 1	vendor		Approval
6007-PLN-GFG-00-50-P415	North Alpha West Foundation Plans Piles Location Data 59	STRUCTURAL - 1	vendor		Approval

ABENER TEYMA MOJAVE

Compliance No.:	GEN-2				
Job :	Mojave Solar Project				
Date: 2/17/11	Description: Structural Master Drawing List				
Sheet No.	Description	Applicable Condition of Certification	Vendor Supplied or EOR	Submittal Date	Reason for Submittal
6007-PLN-GFG-00-50-P416	North Alpha West Foundation Plans Piles Location Data 60	STRUCTURAL - 1	vendor		Approval
6007-PLN-GFG-00-50-P417	North Alpha West Foundation Plans Piles Location Data 61	STRUCTURAL - 1	vendor		Approval
6007-PLN-GFG-00-50-P418	North Alpha West Foundation Plans Piles Location Data 62	STRUCTURAL - 1	vendor		Approval
6007-PLN-GFG-00-50-P084	North Alpha West Foundation Plans Piles Location Data 63	STRUCTURAL - 1	vendor		Approval
6007-PLN-GFG-00-50-P085	North Alpha West Foundation Plans Piles Location Data 64	STRUCTURAL - 1	vendor		Approval
6007-PLN-GFG-00-50-P086	North Alpha West Foundation Plans Piles Location Data 65	STRUCTURAL - 1	vendor		Approval
6007-PLN-GFG-00-50-P087	North Alpha West Foundation Plans Piles Location Data 66	STRUCTURAL - 1	vendor		Approval
6007-PLN-GFG-00-50-P088	North Alpha West Foundation Plans Piles Location Data 67	STRUCTURAL - 1	vendor		Approval
6007-PLN-GFG-00-50-P089	North Alpha West Foundation Plans Piles Location Data 68	STRUCTURAL - 1	vendor		Approval
6007-PLN-GFG-00-50-P090	South Alpha East Foundation Plans Working Points Layout V	STRUCTURAL - 1	vendor		Approval
6007-PLN-GFG-00-50-P091	South Alpha East Foundation Plans Piles Location Data 1	STRUCTURAL - 1	vendor		Approval
6007-PLN-GFG-00-50-P092	South Alpha East Foundation Plans Piles Location Data 2	STRUCTURAL - 1	vendor		Approval
6007-PLN-GFG-00-50-P093	South Alpha East Foundation Plans Piles Location Data 3	STRUCTURAL - 1	vendor		Approval
6007-PLN-GFG-00-50-P094	South Alpha East Foundation Plans Piles Location Data 4	STRUCTURAL - 1	vendor		Approval
6007-PLN-GFG-00-50-P095	South Alpha East Foundation Plans Piles Location Data 5	STRUCTURAL - 1	vendor		Approval
6007-PLN-GFG-00-50-P096	South Alpha East Foundation Plans Piles Location Data 6	STRUCTURAL - 1	vendor		Approval
6007-PLN-GFG-00-50-P097	South Alpha East Foundation Plans Piles Location Data 7	STRUCTURAL - 1	vendor		Approval
6007-PLN-GFG-00-50-P098	South Alpha East Foundation Plans Piles Location Data 8	STRUCTURAL - 1	vendor		Approval
6007-PLN-GFG-00-50-P099	South Alpha East Foundation Plans Piles Location Data 9	STRUCTURAL - 1	vendor		Approval
6007-PLN-GFG-00-50-P100	South Alpha East Foundation Plans Piles Location Data 10	STRUCTURAL - 1	vendor		Approval
6007-PLN-GFG-00-50-P101	South Alpha East Foundation Plans Piles Location Data 11	STRUCTURAL - 1	vendor		Approval
6007-PLN-GFG-00-50-P102	South Alpha East Foundation Plans Piles Location Data 12	STRUCTURAL - 1	vendor		Approval
6007-PLN-GFG-00-50-P103	South Alpha East Foundation Plans Piles Location Data 13	STRUCTURAL - 1	vendor		Approval
6007-PLN-GFG-00-50-P104	South Alpha East Foundation Plans Piles Location Data 14	STRUCTURAL - 1	vendor		Approval
6007-PLN-GFG-00-50-P105	South Alpha East Foundation Plans Piles Location Data 15	STRUCTURAL - 1	vendor		Approval
6007-PLN-GFG-00-50-P106	South Alpha East Foundation Plans Piles Location Data 16	STRUCTURAL - 1	vendor		Approval
6007-PLN-GFG-00-50-P107	South Alpha East Foundation Plans Piles Location Data 17	STRUCTURAL - 1	vendor		Approval
6007-PLN-GFG-00-50-P108	South Alpha East Foundation Plans Piles Location Data 18	STRUCTURAL - 1	vendor		Approval
6007-PLN-GFG-00-50-P109	South Alpha East Foundation Plans Piles Location Data 19	STRUCTURAL - 1	vendor		Approval
6007-PLN-GFG-00-50-P110	South Alpha East Foundation Plans Piles Location Data 20	STRUCTURAL - 1	vendor		Approval
6007-PLN-GFG-00-50-P111	South Alpha East Foundation Plans Piles Location Data 21	STRUCTURAL - 1	vendor		Approval
6007-PLN-GFG-00-50-P112	South Alpha East Foundation Plans Piles Location Data 22	STRUCTURAL - 1	vendor		Approval
6007-PLN-GFG-00-50-P113	South Alpha East Foundation Plans Piles Location Data 23	STRUCTURAL - 1	vendor		Approval
6007-PLN-GFG-00-50-P114	South Alpha East Foundation Plans Piles Location Data 24	STRUCTURAL - 1	vendor		Approval
6007-PLN-GFG-00-50-P115	South Alpha East Foundation Plans Piles Location Data 25	STRUCTURAL - 1	vendor		Approval
6007-PLN-GFG-00-50-P116	South Alpha East Foundation Plans Piles Location Data 26	STRUCTURAL - 1	vendor		Approval
6007-PLN-GFG-00-50-P117	South Alpha East Foundation Plans Piles Location Data 27	STRUCTURAL - 1	vendor		Approval
6007-PLN-GFG-00-50-P118	South Alpha East Foundation Plans Piles Location Data 28	STRUCTURAL - 1	vendor		Approval
6007-PLN-GFG-00-50-P119	South Alpha East Foundation Plans Piles Location Data 29	STRUCTURAL - 1	vendor		Approval
6007-PLN-GFG-00-50-P120	South Alpha East Foundation Plans Piles Location Data 30	STRUCTURAL - 1	vendor		Approval
6007-PLN-GFG-00-50-P121	South Alpha East Foundation Plans Piles Location Data 31	STRUCTURAL - 1	vendor		Approval
6007-PLN-GFG-00-50-P122	South Alpha East Foundation Plans Piles Location Data 32	STRUCTURAL - 1	vendor		Approval
6007-PLN-GFG-00-50-P123	South Alpha East Foundation Plans Piles Location Data 33	STRUCTURAL - 1	vendor		Approval
6007-PLN-GFG-00-50-P124	South Alpha East Foundation Plans Piles Location Data 34	STRUCTURAL - 1	vendor		Approval
6007-PLN-GFG-00-50-P125	South Alpha East Foundation Plans Piles Location Data 35	STRUCTURAL - 1	vendor		Approval
6007-PLN-GFG-00-50-P126	South Alpha East Foundation Plans Piles Location Data 36	STRUCTURAL - 1	vendor		Approval
6007-PLN-GFG-00-50-P127	South Alpha East Foundation Plans Piles Location Data 37	STRUCTURAL - 1	vendor		Approval
6007-PLN-GFG-00-50-P128	South Alpha East Foundation Plans Piles Location Data 38	STRUCTURAL - 1	vendor		Approval
6007-PLN-GFG-00-50-P129	South Alpha East Foundation Plans Piles Location Data 39	STRUCTURAL - 1	vendor		Approval
6007-PLN-GFG-00-50-P130	South Alpha East Foundation Plans Piles Location Data 40	STRUCTURAL - 1	vendor		Approval
6007-PLN-GFG-00-50-P131	South Alpha East Foundation Plans Piles Location Data 41	STRUCTURAL - 1	vendor		Approval
6007-PLN-GFG-00-50-P132	South Alpha East Foundation Plans Piles Location Data 42	STRUCTURAL - 1	vendor		Approval
6007-PLN-GFG-00-50-P133	South Alpha East Foundation Plans Piles Location Data 43	STRUCTURAL - 1	vendor		Approval
6007-PLN-GFG-00-50-P134	South Alpha East Foundation Plans Piles Location Data 44	STRUCTURAL - 1	vendor		Approval
6007-PLN-GFG-00-50-P135	South Alpha East Foundation Plans Piles Location Data 45	STRUCTURAL - 1	vendor		Approval
6007-PLN-GFG-00-50-P136	South Alpha East Foundation Plans Piles Location Data 46	STRUCTURAL - 1	vendor		Approval
6007-PLN-GFG-00-50-P137	South Alpha East Foundation Plans Piles Location Data 47	STRUCTURAL - 1	vendor		Approval
6007-PLN-GFG-00-50-P138	South Alpha East Foundation Plans Piles Location Data 48	STRUCTURAL - 1	vendor		Approval
6007-PLN-GFG-00-50-P139	South Alpha East Foundation Plans Piles Location Data 49	STRUCTURAL - 1	vendor		Approval
6007-PLN-GFG-00-50-P140	South Alpha East Foundation Plans Piles Location Data 50	STRUCTURAL - 1	vendor		Approval
6007-PLN-GFG-00-50-P141	South Alpha East Foundation Plans Piles Location Data 51	STRUCTURAL - 1	vendor		Approval
6007-PLN-GFG-00-50-P142	South Alpha East Foundation Plans Piles Location Data 52	STRUCTURAL - 1	vendor		Approval
6007-ESP-RJK-33-50-0007	Foundation Calculations-Type II Anchor Bolt Tolerance (N-S) Fix	STRUCTURAL - 1	vendor		Approval
6007-PLN-AGE-67-52-4060	Alph a Plant Cooling Tower Foundation Phase 1 Details	STRUCTURAL - 1	vendor	8/24/2012	Approval
6007-PLN-AGE-67-52-8040	Beta Plant Cooling Tower Foundation Plan	STRUCTURAL - 1	vendor	8/24/2012	Approval
6007-PLN-AGE-67-52-8060	Beta Plant Cooling Tower Foundation Phase 1 Details	STRUCTURAL - 1	vendor	8/24/2012	Approval
6007-PLN-AGE-57-52-6200	Beta Plant, S, HTF pipe support foundations. Cover sheet	STRUCTURAL - 1	vendor	8/17/2012	Approval
6007-PLN-AGE-57-52-6201	Beta Plant, S, HTF pipe support foundations. General notes	STRUCTURAL - 1	vendor	8/17/2012	Approval
6007-PLN-AGE-57-52-6202	Beta Plant, S, HTF pipe support foundations. Foundations plan I	STRUCTURAL - 1	vendor	8/17/2012	Approval
6007-PLN-AGE-57-52-6203	Beta Plant, S, HTF pipe support foundations. Foundations plan II	STRUCTURAL - 1	vendor	8/17/2012	Approval
6007-PLN-AGE-57-52-6204	Beta Plant, S, HTF pipe support foundations. Coordinates I	STRUCTURAL - 1	vendor	8/17/2012	Approval
6007-PLN-AGE-57-52-6205	Beta Plant, S, HTF pipe support foundations. Coordinates II	STRUCTURAL - 1	vendor	8/17/2012	Approval
6007-PLN-AGE-57-52-6206	Beta Plant, S, HTF pipe support foundations. Coordinates IIII	STRUCTURAL - 1	vendor	8/17/2012	Approval
6007-PLN-AGE-57-52-6207	Beta Plant, S, HTF pipe support foundations. Coordinates IV	STRUCTURAL - 1	vendor	8/17/2012	Approval
6007-PLN-AGE-57-52-6208	Beta Plant, S, HTF pipe support foundations. Coordinates V	STRUCTURAL - 1	vendor	8/17/2012	Approval
6007-PLN-AGE-57-52-6209	Beta Plant, S, HTF pipe support foundations. Coordinates VI	STRUCTURAL - 1	vendor	8/17/2012	Approval

ABENER TEYMA MOJAVE

Compliance No.:	GEN-2				
Job :	Mojave Solar Project				
Date: 2/17/11	Description: Structural Master Drawing List				
Sheet No.	Description	Applicable Condition of Certification	Vendor Supplied or EOR	Submittal Date	Reason for Submittal
6007-PLN-AGE-57-52-6210	Beta Plant, S, HTF pipe support foundations. Coordinates VII	STRUCTURAL - 1	vendor	8/17/2012	Approval
6007-PLN-AGE-57-52-6211	Beta Plant, S, HTF pipe support foundations. Coordinates VIII	STRUCTURAL - 1	vendor	8/17/2012	Approval
6007-PLN-AGE-57-52-6212	Beta Plant, S, HTF pipe support foundations. Coordinates IX	STRUCTURAL - 1	vendor	8/17/2012	Approval
6007-PLN-AGE-57-52-6213	Beta Plant, S, HTF pipe support foundations. Sections and Details I	STRUCTURAL - 1	vendor	8/17/2012	Approval
6007-PLN-AGE-57-52-6214	Beta Plant, S, HTF pipe support foundations. Sections and Details II	STRUCTURAL - 1	vendor	8/17/2012	Approval
6007-PLN-AGE-57-52-6220	Beta Plant, E, HTF pipe support foundations. Cover sheet	STRUCTURAL - 1	vendor	8/17/2012	Approval
6007-PLN-AGE-57-52-6221	Beta Plant, E, HTF pipe support foundations. General notes	STRUCTURAL - 1	vendor	8/17/2012	Approval
6007-PLN-AGE-57-52-6222	Beta Plant, E, HTF pipe support foundations. Foundations plan	STRUCTURAL - 1	vendor	8/17/2012	Approval
6007-PLN-AGE-57-52-6223	Beta Plant, E, HTF pipe support foundations. Coordinates I	STRUCTURAL - 1	vendor	8/17/2012	Approval
6007-PLN-AGE-57-52-6224	Beta Plant, E, HTF pipe support foundations. Coordinates II	STRUCTURAL - 1	vendor	8/17/2012	Approval
6007-PLN-AGE-57-52-6225	Beta Plant, E, HTF pipe support foundations. Coordinates III	STRUCTURAL - 1	vendor	8/17/2012	Approval
6007-PLN-AGE-57-52-6226	Beta Plant, E, HTF pipe support foundations. Coordinates IV	STRUCTURAL - 1	vendor	8/17/2012	Approval
6007-PLN-AGE-57-52-6227	Beta Plant, E, HTF pipe support foundations. Sections and Details	STRUCTURAL - 1	vendor	8/17/2012	Approval
6007-PLN-AGE-57-52-6240	Beta Plant, W, HTF pipe support foundations. Cover sheet	STRUCTURAL - 1	vendor	8/17/2012	Approval
6007-PLN-AGE-57-52-6241	Beta Plant, W, HTF pipe support foundations. General notes	STRUCTURAL - 1	vendor	8/17/2012	Approval
6007-PLN-AGE-57-52-6242	Beta Plant, W, HTF pipe support foundations. Foundations plan	STRUCTURAL - 1	vendor	8/17/2012	Approval
6007-PLN-AGE-57-52-6243	Beta Plant, W, HTF pipe support foundations. Coordinates I	STRUCTURAL - 1	vendor	8/17/2012	Approval
6007-PLN-AGE-57-52-6244	Beta Plant, W, HTF pipe support foundations. Coordinates II	STRUCTURAL - 1	vendor	8/17/2012	Approval
6007-PLN-AGE-57-52-6245	Beta Plant, W, HTF pipe support foundations. Coordinates IIII	STRUCTURAL - 1	vendor	8/17/2012	Approval
6007-PLN-AGE-57-52-6246	Beta Plant, W, HTF pipe support foundations. Coordinates IV	STRUCTURAL - 1	vendor	8/17/2012	Approval
6007-PLN-AGE-57-52-6247	Beta Plant, W, HTF pipe support foundations. Coordinates V	STRUCTURAL - 1	vendor	8/17/2012	Approval
6007-PLN-AGE-57-52-6248	Beta Plant, W, HTF pipe support foundations. Sections and Details I	STRUCTURAL - 1	vendor	8/17/2012	Approval
6007-PLN-AGE-57-52-6249	Beta Plant, W, HTF pipe support foundations. Sections and Details II	STRUCTURAL - 1	vendor	8/17/2012	Approval
6007-PLN-AGE-57-52-6260	Beta Plant, N, HTF pipe support foundations. Cover sheet	STRUCTURAL - 1	vendor	8/17/2012	Approval
6007-PLN-AGE-57-52-6261	Beta Plant, N, HTF pipe support foundations. General notes	STRUCTURAL - 1	vendor	8/17/2012	Approval
6007-PLN-AGE-57-52-6262	Beta Plant, N, HTF pipe support foundations. Foundations plan I	STRUCTURAL - 1	vendor	8/17/2012	Approval
6007-PLN-AGE-57-52-6263	Beta Plant, N, HTF pipe support foundations. Foundations plan II	STRUCTURAL - 1	vendor	8/17/2012	Approval
6007-PLN-AGE-57-52-6264	Beta Plant, N, HTF pipe support foundations. Coordinates I	STRUCTURAL - 1	vendor	8/17/2012	Approval
6007-PLN-AGE-57-52-6265	Beta Plant, N, HTF pipe support foundations. Coordinates II	STRUCTURAL - 1	vendor	8/17/2012	Approval
6007-PLN-AGE-57-52-6266	Beta Plant, N, HTF pipe support foundations. Coordinates III	STRUCTURAL - 1	vendor	8/17/2012	Approval
6007-PLN-AGE-57-52-6267	Beta Plant, N, HTF pipe support foundations. Coordinates IV	STRUCTURAL - 1	vendor	8/17/2012	Approval
6007-PLN-AGE-57-52-6268	Beta Plant, N, HTF pipe support foundations. Coordinates V	STRUCTURAL - 1	vendor	8/17/2012	Approval
6007-PLN-AGE-57-52-6269	Beta Plant, N, HTF pipe support foundations. Coordinates VI	STRUCTURAL - 1	vendor	8/17/2012	Approval
6007-PLN-AGE-57-52-6270	Beta Plant, N, HTF pipe support foundations. Coordinates VII	STRUCTURAL - 1	vendor	8/17/2012	Approval
6007-PLN-AGE-57-52-6271	Beta Plant, N, HTF pipe support foundations. Coordinates VIII	STRUCTURAL - 1	vendor	8/17/2012	Approval
6007-PLN-AGE-57-52-6272	Beta Plant, N, HTF pipe support foundations. Coordinates IX	STRUCTURAL - 1	vendor	8/17/2012	Approval
6007-PLN-AGE-57-52-6273	Beta Plant, N, HTF pipe support foundations. Sections and Details I	STRUCTURAL - 1	vendor	8/17/2012	Approval
6007-PLN-AGE-57-52-6274	Beta Plant, N, HTF pipe support foundations. Sections and Details II	STRUCTURAL - 1	vendor	8/17/2012	Approval
6007-PLN-AGE-57-52-6280	Beta Plant, FW, HTF pipe support foundations. Cover sheet	STRUCTURAL - 1	vendor	8/17/2012	Approval
6007-PLN-AGE-57-52-6281	Beta Plant, FW, HTF pipe support foundations. General notes	STRUCTURAL - 1	vendor	8/17/2012	Approval
6007-PLN-AGE-57-52-6282	Beta Plant, FW, HTF pipe support foundations. Foundations plan	STRUCTURAL - 1	vendor	8/17/2012	Approval
6007-PLN-AGE-57-52-6283	Beta Plant, FW, HTF pipe support foundations. Coordinates I	STRUCTURAL - 1	vendor	8/17/2012	Approval
6007-PLN-AGE-57-52-6284	Beta Plant, FW, HTF pipe support foundations. Coordinates II	STRUCTURAL - 1	vendor	8/17/2012	Approval
6007-PLN-AGE-57-52-6285	Beta Plant, FW, HTF pipe support foundations. Coordinates III	STRUCTURAL - 1	vendor	8/17/2012	Approval
6007-PLN-AGE-57-52-6286	Beta Plant, FW, HTF pipe support foundations. Coordinates IV	STRUCTURAL - 1	vendor	8/17/2012	Approval
6007-PLN-AGE-57-52-6287	Beta Plant, FW, HTF pipe support foundations. Sections and Details	STRUCTURAL - 1	vendor	8/17/2012	Approval
6007-CAL-AGE-57-52-6201	Calculation report for HTF pipe support foundations, Beta Plant, S	STRUCTURAL - 1	vendor	8/17/2012	Approval
6007-CAL-AGE-57-52-6202	Calculation report for HTF pipe support foundations, Beta Plant, E	STRUCTURAL - 1	vendor	8/17/2012	Approval
6007-CAL-AGE-57-52-6204	Calculation report for HTF pipe support foundations, Beta Plant, W	STRUCTURAL - 1	vendor	8/17/2012	Approval
6007-CAL-AGE-57-52-6205	Calculation report for HTF pipe support foundations, Beta Plant, N	STRUCTURAL - 1	vendor	8/17/2012	Approval
6007-CAL-AGE-57-52-6207	Calculation report for HTF pipe support foundations, Beta Plant, FW	STRUCTURAL - 1	vendor	8/17/2012	Approval
6007-PLN-AGE-57-52-2200	Alpha Plant, NE, HTF pipe support foundations. Cover sheet	STRUCTURAL - 1	vendor	8/21/2012	Approval
6007-PLN-AGE-57-52-2201	Alpha Plant, NE, HTF pipe support foundations. General notes	STRUCTURAL - 1	vendor	8/21/2012	Approval
6007-PLN-AGE-57-52-2202	Alpha Plant, NE, HTF pipe support foundations. Foundations plan I	STRUCTURAL - 1	vendor	8/21/2012	Approval
6007-PLN-AGE-57-52-2203	Alpha Plant, NE, HTF pipe support foundations. Coordinates I	STRUCTURAL - 1	vendor	8/21/2012	Approval
6007-PLN-AGE-57-52-2204	Alpha Plant, NE, HTF pipe support foundations. Coordinates II	STRUCTURAL - 1	vendor	8/21/2012	Approval
6007-PLN-AGE-57-52-2205	Alpha Plant, NE, HTF pipe support foundations. Coordinates III	STRUCTURAL - 1	vendor	8/21/2012	Approval
6007-PLN-AGE-57-52-2206	Alpha Plant, NE, HTF pipe support foundations. Coordinates IV	STRUCTURAL - 1	vendor	8/21/2012	Approval
6007-PLN-AGE-57-52-2207	Alpha Plant, NE, HTF pipe support foundations. Sections and Details I	STRUCTURAL - 1	vendor	8/21/2012	Approval
6007-PLN-AGE-57-52-2208	Alpha Plant, NE, HTF pipe support foundations. Sections and Details II	STRUCTURAL - 1	vendor	8/21/2012	Approval
6007-PLN-AGE-57-52-2220	Alpha Plant, E, HTF pipe support foundations. Cover sheet	STRUCTURAL - 1	vendor	8/21/2012	Approval
6007-PLN-AGE-57-52-2221	Alpha Plant, E, HTF pipe support foundations. General notes	STRUCTURAL - 1	vendor	8/21/2012	Approval
6007-PLN-AGE-57-52-2222	Alpha Plant, E, HTF pipe support foundations. Foundations plan I	STRUCTURAL - 1	vendor	8/21/2012	Approval
6007-PLN-AGE-57-52-2223	Alpha Plant, E, HTF pipe support foundations. Foundations plan II	STRUCTURAL - 1	vendor	8/21/2012	Approval
6007-PLN-AGE-57-52-2224	Alpha Plant, E, HTF pipe support foundations. Coordinates I	STRUCTURAL - 1	vendor	8/21/2012	Approval
6007-PLN-AGE-57-52-2225	Alpha Plant, E, HTF pipe support foundations. Coordinates II	STRUCTURAL - 1	vendor	8/21/2012	Approval
6007-PLN-AGE-57-52-2226	Alpha Plant, E, HTF pipe support foundations. Coordinates III	STRUCTURAL - 1	vendor	8/21/2012	Approval
6007-PLN-AGE-57-52-2227	Alpha Plant, E, HTF pipe support foundations. Coordinates IV	STRUCTURAL - 1	vendor	8/21/2012	Approval
6007-PLN-AGE-57-52-2228	Alpha Plant, E, HTF pipe support foundations. Coordinates V	STRUCTURAL - 1	vendor	8/21/2012	Approval
6007-PLN-AGE-57-52-2229	Alpha Plant, E, HTF pipe support foundations. Coordinates VI	STRUCTURAL - 1	vendor	8/21/2012	Approval
6007-PLN-AGE-57-52-2230	Alpha Plant, E, HTF pipe support foundations. Coordinates VII	STRUCTURAL - 1	vendor	8/21/2012	Approval
6007-PLN-AGE-57-52-2231	Alpha Plant, E, HTF pipe support foundations. Coordinates VIII	STRUCTURAL - 1	vendor	8/21/2012	Approval
6007-PLN-AGE-57-52-2232	Alpha Plant, E, HTF pipe support foundations. Coordinates IX	STRUCTURAL - 1	vendor	8/21/2012	Approval
6007-PLN-AGE-57-52-2233	Alpha Plant, E, HTF pipe support foundations. Sections and Details	STRUCTURAL - 1	vendor	8/21/2012	Approval
6007-PLN-AGE-57-52-2240	Alpha Plant, NW, HTF pipe support foundations. Cover sheet	STRUCTURAL - 1	vendor	8/21/2012	Approval
6007-PLN-AGE-57-52-2241	Alpha Plant, NW, HTF pipe support foundations. General notes	STRUCTURAL - 1	vendor	8/21/2012	Approval

ABENER TEYMA MOJAVE

Compliance No.:	GEN-2				
Job :	Mojave Solar Project				
Date: 2/17/11	Description: Structural Master Drawing List				
Sheet No.	Description	Applicable Condition of Certification	Vendor Supplied or EOR	Submittal Date	Reason for Submittal
6007-PLN-AGE-57-52-2242	Alpha Plant, NW, HTF pipe support foundations. Foundations plan I	STRUCTURAL - 1	vendor	8/21/2012	Approval
6007-PLN-AGE-57-52-2243	Alpha Plant, NW, HTF pipe support foundations. Foundations plan II	STRUCTURAL - 1	vendor	8/21/2012	Approval
6007-PLN-AGE-57-52-2244	Alpha Plant, NW, HTF pipe support foundations. Foundations plan III	STRUCTURAL - 1	vendor	8/21/2012	Approval
6007-PLN-AGE-57-52-2245	Alpha Plant, NW, HTF pipe support foundations. Coordinates I	STRUCTURAL - 1	vendor	8/21/2012	Approval
6007-PLN-AGE-57-52-2246	Alpha Plant, NW, HTF pipe support foundations. Coordinates II	STRUCTURAL - 1	vendor	8/21/2012	Approval
6007-PLN-AGE-57-52-2247	Alpha Plant, NW, HTF pipe support foundations. Coordinates III	STRUCTURAL - 1	vendor	8/21/2012	Approval
6007-PLN-AGE-57-52-2248	Alpha Plant, NW, HTF pipe support foundations. Coordinates IV	STRUCTURAL - 1	vendor	8/21/2012	Approval
6007-PLN-AGE-57-52-2249	Alpha Plant, NW, HTF pipe support foundations. Coordinates V	STRUCTURAL - 1	vendor	8/21/2012	Approval
6007-PLN-AGE-57-52-2250	Alpha Plant, NW, HTF pipe support foundations. Coordinates VI	STRUCTURAL - 1	vendor	8/21/2012	Approval
6007-PLN-AGE-57-52-2251	Alpha Plant, NW, HTF pipe support foundations. Coordinates VII	STRUCTURAL - 1	vendor	8/21/2012	Approval
6007-PLN-AGE-57-52-2252	Alpha Plant, NW, HTF pipe support foundations. Coordinates VIII	STRUCTURAL - 1	vendor	8/21/2012	Approval
6007-PLN-AGE-57-52-2253	Alpha Plant, NW, HTF pipe support foundations. Coordinates IX	STRUCTURAL - 1	vendor	8/21/2012	Approval
6007-PLN-AGE-57-52-2254	Alpha Plant, NW, HTF pipe support foundations. Coordinates X	STRUCTURAL - 1	vendor	8/21/2012	Approval
6007-PLN-AGE-57-52-2255	Alpha Plant, NW, HTF pipe support foundations. Sections and Details I	STRUCTURAL - 1	vendor	8/21/2012	Approval
6007-PLN-AGE-57-52-2256	Alpha Plant, NW, HTF pipe support foundations. Sections and Details II	STRUCTURAL - 1	vendor	8/21/2012	Approval
6007-PLN-AGE-57-52-2260	Alpha Plant, W, HTF pipe support foundations. Cover sheet	STRUCTURAL - 1	vendor	8/21/2012	Approval
6007-PLN-AGE-57-52-2261	Alpha Plant, W, HTF pipe support foundations. General notes	STRUCTURAL - 1	vendor	8/21/2012	Approval
6007-PLN-AGE-57-52-2262	Alpha Plant, W, HTF pipe support foundations. Foundations plan I	STRUCTURAL - 1	vendor	8/21/2012	Approval
6007-PLN-AGE-57-52-2263	Alpha Plant, W, HTF pipe support foundations. Foundations plan II	STRUCTURAL - 1	vendor	8/21/2012	Approval
6007-PLN-AGE-57-52-2264	Alpha Plant, W, HTF pipe support foundations. Coordinates I	STRUCTURAL - 1	vendor	8/21/2012	Approval
6007-PLN-AGE-57-52-2265	Alpha Plant, W, HTF pipe support foundations. Coordinates II	STRUCTURAL - 1	vendor	8/21/2012	Approval
6007-PLN-AGE-57-52-2266	Alpha Plant, W, HTF pipe support foundations. Coordinates III	STRUCTURAL - 1	vendor	8/21/2012	Approval
6007-PLN-AGE-57-52-2267	Alpha Plant, W, HTF pipe support foundations. Coordinates IV	STRUCTURAL - 1	vendor	8/21/2012	Approval
6007-PLN-AGE-57-52-2268	Alpha Plant, W, HTF pipe support foundations. Coordinates V	STRUCTURAL - 1	vendor	8/21/2012	Approval
6007-PLN-AGE-57-52-2269	Alpha Plant, W, HTF pipe support foundations. Coordinates VI	STRUCTURAL - 1	vendor	8/21/2012	Approval
6007-PLN-AGE-57-52-2270	Alpha Plant, W, HTF pipe support foundations. Coordinates VII	STRUCTURAL - 1	vendor	8/21/2012	Approval
6007-PLN-AGE-57-52-2271	Alpha Plant, W, HTF pipe support foundations. Coordinates VIII	STRUCTURAL - 1	vendor	8/21/2012	Approval
6007-PLN-AGE-57-52-2272	Alpha Plant, W, HTF pipe support foundations. Sections and Details I	STRUCTURAL - 1	vendor	8/21/2012	Approval
6007-PLN-AGE-57-52-2273	Alpha Plant, W, HTF pipe support foundations. Sections and Details II	STRUCTURAL - 1	vendor	8/21/2012	Approval
6007-CAL-AGE-57-52-2201	Calculation report for HTF pipe support foundations, Alpha Plant, NE	STRUCTURAL - 1	vendor	8/21/2012	Approval
6007-CAL-AGE-57-52-2202	Calculation report for HTF pipe support foundations, Alpha Plant, E	STRUCTURAL - 1	vendor	8/21/2012	Approval
6007-CAL-AGE-57-52-2203	Calculation report for HTF pipe support foundations, Alpha Plant, W	STRUCTURAL - 1	vendor	8/21/2012	Approval
6007-CAL-AGE-57-52-2204	Calculation report for HTF pipe support foundations, Alpha Plant, NW	STRUCTURAL - 1	vendor	8/21/2012	Approval
Regional Water Quality Control		STRUCTURAL - 1	vendor		Approval
6007-PLN-GFG-00-50-C448		STRUCTURAL - 1	vendor		Approval
6007-PLN-PRI-39-62-1101	COVER	STRUCTURAL - 1	vendor		Approval
6007-PLN-PRI-39-62-1102	TANK PLANS	STRUCTURAL - 1	vendor		Approval
6007-PLN-PRI-39-62-1103	TANK PLANS	STRUCTURAL - 1	vendor		Approval
6007-PLN-PRI-39-62-1104	TANK PLANS	STRUCTURAL - 1	vendor		Approval
6007-PLN-PRI-39-62-1105	TANK PLANS	STRUCTURAL - 1	vendor		Approval
6007-PLN-PRI-39-62-1106	TANK PLANS	STRUCTURAL - 1	vendor		Approval
6007-PLN-PRI-39-62-1107	TANK PLANS	STRUCTURAL - 1	vendor		Approval
6007-PLN-PRI-39-62-1108	TANK PLANS	STRUCTURAL - 1	vendor		Approval
6007-PLN-PRI-39-62-1109	TANK PLANS	STRUCTURAL - 1	vendor		Approval
6007-PLN-PRI-39-62-1110	TANK PLANS	STRUCTURAL - 1	vendor		Approval
6007-PLN-PRI-39-62-1111	TANK PLANS	STRUCTURAL - 1	vendor		Approval
6007-PLN-PRI-39-62-1112	TANK PLANS	STRUCTURAL - 1	vendor		Approval
6007-PLN-PRI-39-62-1113	TANK PLANS	STRUCTURAL - 1	vendor		Approval
6007-PLN-PRI-39-62-1114	TANK PLANS	STRUCTURAL - 1	vendor		Approval
6007-PLN-PRI-39-62-1115	TANK PLANS	STRUCTURAL - 1	vendor		Approval
6007-PLN-PRI-39-62-1116	TANK PLANS	STRUCTURAL - 1	vendor		Approval
6007-PLN-PRI-39-62-1117	TANK PLANS	STRUCTURAL - 1	vendor		Approval
6007-PLN-PRI-39-62-1118	TANK PLANS	STRUCTURAL - 1	vendor		Approval
6007-PLN-PRI-39-62-1119	TANK PLANS	STRUCTURAL - 1	vendor		Approval
6007-PLN-PRI-39-62-1120	TANK PLANS	STRUCTURAL - 1	vendor		Approval
6007-PLN-PRI-39-62-1121	TANK PLANS	STRUCTURAL - 1	vendor		Approval
6007-PLN-PRI-39-62-1122	TANK PLANS	STRUCTURAL - 1	vendor		Approval
6007-PLN-PRI-39-62-1123	TANK PLANS	STRUCTURAL - 1	vendor		Approval
6007-PLN-PRI-39-62-1124	TANK PLANS	STRUCTURAL - 1	vendor		Approval
6007-PLN-PRI-39-62-1125	TANK PLANS	STRUCTURAL - 1	vendor		Approval
6007-PLN-PRI-39-62-1126	TANK PLANS	STRUCTURAL - 1	vendor		Approval
6007-PLN-PRI-39-62-1127	TANK PLANS	STRUCTURAL - 1	vendor		Approval
6007-PLN-PRI-39-62-1128	TANK PLANS	STRUCTURAL - 1	vendor		Approval
(DS 04-20-12) 0187P-A1&2 -	MT-402 Raw-Fire Water Tank -	STRUCTURAL - 1	vendor		Approval
SPX Response to CBO Comments	RESPONSE LETTER	STRUCTURAL - 1	vendor	8/29/2012	Approval
02-24482-Mojave	FREESTANDING FIBERGLASS STAIRWAY DETAIL	STRUCTURAL - 1	vendor	12/1/2011	Approval
2012-4334	GENERAL NOTES	STRUCTURAL - 1	vendor	7/13/2012	Approval
6007-LIS-AGE-57-52-0001	List of material for Stainless steel bar on HTF foundations-solar field	STRUCTURAL - 1	vendor	9/5/2012	Approval
6007-PLN-RJK-33-50-0001	Mirror Field Foundations	STRUCTURAL - 1	vendor	9/25/2012	Approval
6007-PLN-AGE-00-50-C001	ANCHOR ROD ASSEMBLIES AND DETAILS	STRUCTURAL - 1	vendor	9/26/2012	Approval
6007-PLN-AGE-00-50-S001	GENERAL CIVIL AND STRUCTURAL NOTES	STRUCTURAL - 1	vendor	9/26/2012	Approval
6007-PLN-AGE-00-50-S002	TYPICAL LADDER AND SAFETY CAGE AND SAFETY GATE DETAILS	STRUCTURAL - 1	vendor	9/26/2012	Approval
6007-PLN-AGE-00-50-S003	TYPICAL PIPE HANDRAIL, STAIRWAY, AND GRATING DETAILS.	STRUCTURAL - 1	vendor	9/26/2012	Approval
6007-PLN-AGE-00-50-S004	STANDARD BASE PLATE DETAILS AND STANDARD.	STRUCTURAL - 1	vendor	9/26/2012	Approval
6007-PLN-AGE-21-52-2002	Alpha Plant, Steam generators reheaters foundations - Foundation plan	STRUCTURAL - 1	vendor	9/28/2012	Approval
6007-PLN-AGE-21-52-2050	Alpha Plant, Steam generators evaporators foundations - Cover Sheet	STRUCTURAL - 1	vendor	9/20/2012	Approval

ABENER TEYMA MOJAVE

Compliance No.:	GEN-2				
Job :	Mojave Solar Project				
Date: 2/17/11	Description: Structural Master Drawing List				
Sheet No.	Description	Applicable Condition of Certification	Vendor Supplied or EOR	Submittal Date	Reason for Submittal
6007-PLN-AGE-21-52-2051	Alpha Plant, Steam generators evaporators foundations - General notes	STRUCTURAL - 1	vendor	9/20/2012	Approval
6007-PLN-AGE-21-52-2052	Alpha Plant, Steam generators evaporators foundations - Foundation plan	STRUCTURAL - 1	vendor	9/20/2012	Approval
6007-PLN-AGE-21-52-2053	Alpha Plant, Steam generators evaporators foundations - Drainage	STRUCTURAL - 1	vendor	10/3/2012	Approval
6007-PLN-AGE-21-52-2054	Alpha Plant, Steam generators evaporators foundations - Mat bottom reinforcement	STRUCTURAL - 1	vendor	9/20/2012	Approval
6007-PLN-AGE-21-52-2055	Alpha Plant, Steam generators evaporators foundations - Mat top reinforcement	STRUCTURAL - 1	vendor	9/20/2012	Approval
6007-PLN-AGE-21-52-2056	Alpha Plant, Steam generators evaporators foundations - Piers and pipe support reinforcement	STRUCTURAL - 1	vendor	9/20/2012	Approval
6007-PLN-AGE-21-52-2057	Alpha Plant, Steam generators evaporators foundations - Columns reinforcement	STRUCTURAL - 1	vendor	9/20/2012	Approval
6007-PLN-AGE-21-52-2058	Alpha Plant, Steam generators evaporators foundations - Piers and pipe support details	STRUCTURAL - 1	vendor	9/20/2012	Approval
6007-PLN-AGE-21-52-2059	Alpha Plant, Steam generators evaporators foundations - Columns details	STRUCTURAL - 1	vendor	9/20/2012	Approval
6007-PLN-AGE-21-52-6002	Beta Plant, Steam generators reheaters foundations - Foundation plan	STRUCTURAL - 1	vendor	9/28/2012	Approval
6007-PLN-AGE-21-52-6050	Beta Plant, Steam generators evaporators foundations - Cover Sheet	STRUCTURAL - 1	vendor	9/20/2012	Approval
6007-PLN-AGE-21-52-6051	Beta Plant, Steam generators evaporators foundations - General notes	STRUCTURAL - 1	vendor	9/20/2012	Approval
6007-PLN-AGE-21-52-6052	Beta Plant, Steam generators evaporators foundations - Foundation plan	STRUCTURAL - 1	vendor	9/20/2012	Approval
6007-PLN-AGE-21-52-6053	Beta Plant, Steam generators evaporators foundations - Drainage	STRUCTURAL - 1	vendor	10/3/2012	Approval
6007-PLN-AGE-21-52-6054	Beta Plant, Steam generators evaporators foundations - Mat bottom reinforcement	STRUCTURAL - 1	vendor	9/20/2012	Approval
6007-PLN-AGE-21-52-6055	Beta Plant, Steam generators evaporators foundations - Mat top reinforcement	STRUCTURAL - 1	vendor	9/20/2012	Approval
6007-PLN-AGE-21-52-6056	Beta Plant, Steam generators evaporators foundations - Piers and pipe support reinforcement	STRUCTURAL - 1	vendor	9/20/2012	Approval
6007-PLN-AGE-21-52-6057	Beta Plant, Steam generators evaporators foundations - Columns reinforcement	STRUCTURAL - 1	vendor	9/20/2012	Approval
6007-PLN-AGE-21-52-6058	Beta Plant, Steam generators evaporators foundations - Piers and pipe support details	STRUCTURAL - 1	vendor	9/20/2012	Approval
6007-PLN-AGE-21-52-6059	Beta Plant, Steam generators evaporators foundations - Columns details	STRUCTURAL - 1	vendor	9/20/2012	Approval
6007-PLN-AGE-57-52-2201	Alpha Plant NE solar field. HTF Pipe Support Foundations General notes	STRUCTURAL - 1	vendor	10/4/2012	Approval
6007-PLN-AGE-57-52-2221	Alpha Plant E solar field. HTF Pipe Support Foundations General notes	STRUCTURAL - 1	vendor	10/4/2012	Approval
6007-PLN-AGE-57-52-2241	Alpha Plant NW solar field. HTF Pipe Support Foundations General notes	STRUCTURAL - 1	vendor	10/4/2012	Approval
6007-PLN-AGE-57-52-2261	Alpha Plant W solar field. HTF Pipe Support Foundations General notes	STRUCTURAL - 1	vendor	10/4/2012	Approval
6007-PLN-AGE-57-52-6201	Beta Plant S solar field. HTF Pipe Support Foundations General notes	STRUCTURAL - 1	vendor	10/4/2012	Approval
6007-PLN-AGE-57-52-6221	Beta Plant E solar field. HTF Pipe Support Foundations General notes	STRUCTURAL - 1	vendor	10/4/2012	Approval
6007-PLN-AGE-57-52-6241	Beta Plant W solar field. HTF Pipe Support Foundations General notes	STRUCTURAL - 1	vendor	10/4/2012	Approval
6007-PLN-AGE-57-52-6261	Beta Plant N solar field. HTF Pipe Support Foundations General notes	STRUCTURAL - 1	vendor	10/4/2012	Approval
6007-PLN-AGE-57-52-6281	Beta Plant FW solar field. HTF Pipe Support Foundations General notes	STRUCTURAL - 1	vendor	10/4/2012	Approval
6007-CAL-AGE-67-54-7500	Calculation Report for Rack 3 Beta plant	STRUCTURAL - 1	vendor	9/6/2012	Approval
6007-PLN-AGE-67-52-3500	Alpha Plant Modular utilities piperack foundations - Cover sheet	STRUCTURAL - 1	vendor	9/20/2012	Approval
6007-PLN-AGE-67-52-3501	Alpha Plant Modular utilities piperack foundations - General notes	STRUCTURAL - 1	vendor	10/22/2012	Approval
6007-PLN-AGE-67-52-3502	Alpha Plant Modular utilities piperack foundations - Foundation plan and details	STRUCTURAL - 1	vendor	9/20/2012	Approval
6007-PLN-AGE-67-52-7500	Beta Plant Modular utilities piperack foundations - Cover sheet	STRUCTURAL - 1	vendor	10/25/2012	Approval
6007-PLN-AGE-67-52-7501	Beta Plant Modular utilities piperack foundations - General notes	STRUCTURAL - 1	vendor	10/22/2012	Approval
6007-PLN-AGE-67-52-7502	Beta Plant Modular utilities piperack foundations - Foundation plan and details	STRUCTURAL - 1	vendor	10/22/2012	Approval
6007-CAL-AGE-67-52-3500	Alpha Plant Calculation Report for Rack 3 Foundations	STRUCTURAL - 1	vendor	10/22/2012	Approval
6007-CAL-AGE-67-52-7000	Beta Plant Calculation Report for Rack 3 Foundations	STRUCTURAL - 1	vendor	10/22/2012	Approval
6007-LIS-AGE-57-52-0001	Stainless Steel Bar on HTF Foundation-Solar Field	STRUCTURAL - 1	vendor	10/30/2012	Approval
6007-CAL-AGE-67-54-3500	Calculation Report for Rack 3 Alpha plant	STRUCTURAL - 1	vendor	10/19/2012	Approval
6007-CAL-AGE-67-54-3501	Calculation Report for Rack 3 Steel Frame Connections Alpha plant	STRUCTURAL - 1	vendor	11/1/2012	Approval
6007-CAL-AGE-67-54-6501	Calculation Report for Rack 3 Steel Frame Connections Beta plant	STRUCTURAL - 1	vendor	11/1/2012	Approval
6007-CAL-AGE-67-54-7500	Calculation Report for Rack 3 Beta plant	STRUCTURAL - 1	vendor	10/25/2012	Approval
6007-PLN-AGE-58-54-3522	Alpha Plant Modular Utilities Pipe Rack steel structure - Plan view	STRUCTURAL - 1	vendor	11/1/2012	Approval
6007-PLN-AGE-58-54-3523	Alpha Plant Modular Utilities Pipe Rack steel structure - Elevations	STRUCTURAL - 1	vendor	11/1/2012	Approval
6007-PLN-AGE-58-54-3524	Alpha Plant Modular Utilities Pipe Rack steel structure - Connection details	STRUCTURAL - 1	vendor	11/1/2012	Approval
6007-PLN-AGE-58-54-3525	Alpha Plant Modular Utilities Pipe Rack steel structure - Connection details	STRUCTURAL - 1	vendor	11/1/2012	Approval
6007-PLN-AGE-58-54-6522	Beta Plant Modular Utilities Pipe Rack steel structure - Plan view	STRUCTURAL - 1	vendor	11/1/2012	Approval
6007-PLN-AGE-58-54-6523	Beta Plant Modular Utilities Pipe Rack steel structure - Elevations	STRUCTURAL - 1	vendor	11/1/2012	Approval
6007-PLN-AGE-58-54-6524	Beta Plant Modular Utilities Pipe Rack steel structure - Connection details	STRUCTURAL - 1	vendor	11/1/2012	Approval
6007-PLN-AGE-58-54-6525	Beta Plant Modular Utilities Pipe Rack steel structure - Connection details	STRUCTURAL - 1	vendor	11/1/2012	Approval
6007-PLN-AGE-67-54-3500	Alpha Plant Modular Utilities Pipe Rack steel structure - Cover sheet	STRUCTURAL - 1	vendor	10/9/2012	Approval
6007-PLN-AGE-67-54-3501	Alpha Plant Modular Utilities Pipe Rack steel structure - General notes	STRUCTURAL - 1	vendor	9/7/2012	Approval
6007-PLN-AGE-67-54-3502	Alpha Plant Modular Utilities Pipe Rack steel structure - Plan view	STRUCTURAL - 1	vendor	9/7/2012	Approval
6007-PLN-AGE-67-54-3503	Alpha Plant Modular Utilities Pipe Rack steel structure - Elevations	STRUCTURAL - 1	vendor	10/9/2012	Approval
6007-PLN-AGE-67-54-3504	Alpha Plant Modular Utilities Pipe Rack steel structure - Details and base plates	STRUCTURAL - 1	vendor	10/29/2012	Approval
6007-PLN-AGE-67-54-3505	Alpha Plant Modular Utilities Pipe Rack steel structure - Details (Cable Trays)	STRUCTURAL - 1	vendor	10/8/2012	Approval
6007-PLN-AGE-67-54-7500	Beta Plant Modular Utilities Pipe Rack steel structure - Cover sheet	STRUCTURAL - 1	vendor	10/23/2012	Approval
6007-PLN-AGE-67-54-7501	Beta Plant Modular Utilities Pipe Rack steel structure - General notes	STRUCTURAL - 1	vendor	9/7/2012	Approval
6007-PLN-AGE-67-54-7502	Beta Plant Modular Utilities Pipe Rack steel structure - Plan view	STRUCTURAL - 1	vendor	9/7/2012	Approval
6007-PLN-AGE-67-54-7503	Beta Plant Modular Utilities Pipe Rack steel structure - Elevations	STRUCTURAL - 1	vendor	10/23/2012	Approval
6007-PLN-AGE-67-54-7504	Beta Plant Modular Utilities Pipe Rack steel structure - Details and base plates	STRUCTURAL - 1	vendor	10/29/2012	Approval
6007-PLN-AGE-67-54-7505	Beta Plant Modular Utilities Pipe Rack steel structure - Details (Cable Trays)	STRUCTURAL - 1	vendor	10/23/2012	Approval
6007-PLN-AGE-67-52-3500	Alpha Plant Modular utilities piperack foundations - Cover sheet	STRUCTURAL - 1	vendor	11/8/2012	Approval
6007-PLN-AGE-67-52-3501	Alpha Plant Modular utilities piperack foundations - General notes	STRUCTURAL - 1	vendor	11/8/2012	Approval
6007-PLN-AGE-67-52-3502	Alpha Plant Modular utilities piperack foundations - Foundation plan and details	STRUCTURAL - 1	vendor	11/8/2012	Approval
6007-PLN-AGE-67-52-7500	Beta Plant Modular utilities piperack foundations - Cover sheet	STRUCTURAL - 1	vendor	11/8/2012	Approval
6007-PLN-AGE-67-52-7501	Beta Plant Modular utilities piperack foundations - General notes	STRUCTURAL - 1	vendor	11/8/2012	Approval
6007-PLN-AGE-67-52-7502	Beta Plant Modular utilities piperack foundations - Foundation plan and details	STRUCTURAL - 1	vendor	11/8/2012	Approval
6007-CAL-AGE-67-52-3500	Alpha Plant Calculation Report for Rack 3 Foundations	STRUCTURAL - 1	vendor	11/8/2012	Approval
6007-CAL-AGE-67-52-7500	Beta Plant Calculation Report for Rack 3 Foundations	STRUCTURAL - 1	vendor	11/8/2012	Approval
6007-PLN-AGE-57-52-2208	Alpha Plant NE Solar Field. HTF Pipe Support Foundations. Sections and Details	STRUCTURAL - 1	vendor	11/9/2012	Approval
6007-CAL-AGE-67-52-4005	Calculation Report for Cooling Tower Foundations Phase 2 Alpha Plant	STRUCTURAL - 1	vendor	11/28/2012	Approval
6007-CAL-AGE-67-52-8005	Calculation Report for Cooling Tower Foundations Phase 2 Beta Plant	STRUCTURAL - 1	vendor	11/28/2012	Approval
6007-PLN-AGE-67-52-4005	Field Alpha Cooling Tower Foundations Phase 2 Cover Sheet	STRUCTURAL - 1	vendor	11/28/2012	Approval
6007-PLN-AGE-67-52-4025	Field Alpha Cooling Tower Foundations Phase 2 General notes	STRUCTURAL - 1	vendor	11/28/2012	Approval

ABENER TEYMA MOJAVE

Compliance No.:	GEN-2				
Job :	Mojave Solar Project				
Date: 2/17/11	Description: Structural Master Drawing List				
Sheet No.	Description	Applicable Condition of Certification	Vendor Supplied or EOR	Submittal Date	Reason for Submittal
6007-PLN-AGE-67-52-4045	Field Alpha Cooling Tower Foundations Phase 2 Foundation plan and section	STRUCTURAL - 1	vendor	11/28/2012	Approval
6007-PLN-AGE-67-52-4065	Field Alpha Cooling Tower Foundations Phase 2 Details	STRUCTURAL - 1	vendor	11/28/2012	Approval
6007-PLN-AGE-67-52-4066	Field Alpha Cooling Tower Foundations Phase 2 Details	STRUCTURAL - 1	vendor	11/28/2012	Approval
6007-PLN-AGE-67-52-4067	Field Alpha Cooling Tower Foundations Phase 2 Details	STRUCTURAL - 1	vendor	11/28/2012	Approval
6007-PLN-AGE-67-52-8005	Field Beta Cooling Tower Foundations Phase 2 Cover Sheet	STRUCTURAL - 1	vendor	11/28/2012	Approval
6007-PLN-AGE-67-52-8025	Field Beta Cooling Tower Foundations Phase 2 General notes	STRUCTURAL - 1	vendor	11/28/2012	Approval
6007-PLN-AGE-67-52-8045	Field Beta Cooling Tower Foundations Phase 2 Foundation plan and section	STRUCTURAL - 1	vendor	11/28/2012	Approval
6007-PLN-AGE-67-52-8065	Field Beta Cooling Tower Foundations Phase 2 Details	STRUCTURAL - 1	vendor	11/28/2012	Approval
6007-PLN-AGE-67-52-8066	Field Beta Cooling Tower Foundations Phase 2 Details	STRUCTURAL - 1	vendor	11/28/2012	Approval
6007-PLN-AGE-67-52-8067	Field Beta Cooling Tower Foundations Phase 2 Details	STRUCTURAL - 1	vendor	11/28/2012	Approval
6007-PLN-RJK-33-50-0001	Mirror Field Foundations	STRUCTURAL - 1	vendor	11/28/2012	Approval
6007-PLN-AGE-21-52-2050	Alpha Plant, Steam generators evaporators foundations - Cover Sheet	STRUCTURAL - 1	vendor	11/29/2012	Approval
6007-PLN-AGE-21-52-2051	Alpha Plant, Steam generators evaporators foundations - General notes	STRUCTURAL - 1	vendor	11/29/2012	Approval
6007-PLN-AGE-21-52-2052	Alpha Plant, Steam generators evaporators foundations - Foundation plan	STRUCTURAL - 1	vendor	11/29/2012	Approval
6007-PLN-AGE-21-52-2053	Alpha Plant, Steam generators evaporators foundations - Drainage	STRUCTURAL - 1	vendor	11/29/2012	Approval
6007-PLN-AGE-21-52-2054	Alpha Plant, Steam generators evaporators foundations - Mat bottom reinforcement	STRUCTURAL - 1	vendor	11/29/2012	Approval
6007-PLN-AGE-21-52-2055	Alpha Plant, Steam generators evaporators foundations - Mat top reinforcement	STRUCTURAL - 1	vendor	11/29/2012	Approval
6007-PLN-AGE-21-52-2056	Alpha Plant, Steam generators evaporators foundations - Piers and pipe support reinforcement	STRUCTURAL - 1	vendor	11/29/2012	Approval
6007-PLN-AGE-21-52-2057	Alpha Plant, Steam generators evaporators foundations - Columns reinforcement	STRUCTURAL - 1	vendor	11/29/2012	Approval
6007-PLN-AGE-21-52-2058	Alpha Plant, Steam generators evaporators foundations - Piers and pipe support details	STRUCTURAL - 1	vendor	11/29/2012	Approval
6007-PLN-AGE-21-52-2059	Alpha Plant, Steam generators evaporators foundations - Columns details	STRUCTURAL - 1	vendor	11/29/2012	Approval
6007-PLN-AGE-21-52-6050	Beta Plant, Steam generators evaporators foundations - Cover Sheet	STRUCTURAL - 1	vendor	11/29/2012	Approval
6007-PLN-AGE-21-52-6051	Beta Plant, Steam generators evaporators foundations - General notes	STRUCTURAL - 1	vendor	11/29/2012	Approval
6007-PLN-AGE-21-52-6052	Beta Plant, Steam generators evaporators foundations - Foundation plan	STRUCTURAL - 1	vendor	11/29/2012	Approval
6007-PLN-AGE-21-52-6053	Beta Plant, Steam generators evaporators foundations - Drainage	STRUCTURAL - 1	vendor	11/29/2012	Approval
6007-PLN-AGE-21-52-6054	Beta Plant, Steam generators evaporators foundations - Mat bottom reinforcement	STRUCTURAL - 1	vendor	11/29/2012	Approval
6007-PLN-AGE-21-52-6055	Beta Plant, Steam generators evaporators foundations - Mat top reinforcement	STRUCTURAL - 1	vendor	11/29/2012	Approval
6007-PLN-AGE-21-52-6056	Beta Plant, Steam generators evaporators foundations - Piers and pipe support reinforcement	STRUCTURAL - 1	vendor	11/29/2012	Approval
6007-PLN-AGE-21-52-6057	Beta Plant, Steam generators evaporators foundations - Columns reinforcement	STRUCTURAL - 1	vendor	11/29/2012	Approval
6007-PLN-AGE-21-52-6058	Beta Plant, Steam generators evaporators foundations - Piers and pipe support details	STRUCTURAL - 1	vendor	11/29/2012	Approval
6007-PLN-AGE-21-52-6059	Beta Plant, Steam generators evaporators foundations - Columns details	STRUCTURAL - 1	vendor	11/29/2012	Approval
103T5676	Turbine Foundation Design - STEAM TURBINE FOUNDATION LOADING DATA	STRUCTURAL - 1	vendor	12/4/2012	Approval
103T6160	Turbine Foundation Design - STEAM TURBINE - GENERATOR FOUNDATION INTERFACE	STRUCTURAL - 1	vendor	12/4/2012	Approval
WUH/740.12-1283-FL	Turbine Foundation Design - CONDENSER FOOT ARRANGEMENT	STRUCTURAL - 1	vendor	12/4/2012	Approval
103T5675	Turbine Foundation Design - SUPPLEMENTARY DESIGN DATA	STRUCTURAL - 1	vendor	12/4/2012	Approval
6007-ESP-ATP-00-50-2064	Addendum 2 to Geotechnical Evaluation: Dynamic Soil Properties	STRUCTURAL - 1	vendor	12/4/2012	Approval
6007-ESP-ATP-00-50-2066	Addendum 4 to Geotechnical Evaluation: Remedial Grading at Power Blocks	STRUCTURAL - 1	vendor	12/4/2012	Approval
6007-ESP-ATP-00-50-3300	Engineering Standards and Practices Specification For Cast-In-Place Concrete	STRUCTURAL - 1	vendor	12/4/2012	Approval
6007-INF-ASI-00-50-C002	Turbine Foundation Design - Geotechnical Evaluation (AFC - Appendix B)	STRUCTURAL - 1	vendor	12/4/2012	Approval
6007-PLN-AGE-25-33-5301	Turbine Foundation Design - POWER BLOCK AREA GROUNDING PLAN ALPHA PLANT	STRUCTURAL - 1	vendor	12/4/2012	Approval
GEK 63383d	Turbine Foundation Design - Turbine Generator Foundations	STRUCTURAL - 1	vendor	12/4/2012	Approval
6007-ESP-ATP-00-50-2062	Engineering Standards and Practices Specification For Final Geotech Report	STRUCTURAL - 1	vendor	12/4/2012	Approval
6007-PLN-AGE-00-50-S001	Turbine Foundation Design - GENERAL CIVIL AND STRUCTURAL NOTES	STRUCTURAL - 1	vendor	12/4/2012	Approval
103T5675	Turbine Foundation Design - SUPPLEMENTARY DESIGN DATA	STRUCTURAL - 1	vendor	12/4/2012	Approval
6007-ESP-ATP-00-60-G100	Turbine Foundation Design - Specification For Project Design Criteria	STRUCTURAL - 1	vendor	12/4/2012	Approval
	Response letter 12.4.12	STRUCTURAL - 1	vendor	12/4/2012	Approval
6007-PLN-AGE-25-52-8020	Field Beta Steam turbine/ generator foundation general notes	STRUCTURAL - 1	vendor	12/7/2012	Approval
6007-PLN-AGE-25-52-8020	Field Alpha Steam turbine/ generator foundation general notes	STRUCTURAL - 1	vendor	12/7/2012	Approval
Comment 10- Calculation	Additional Calculation	STRUCTURAL - 1	vendor	12/7/2012	Approval
Comment 11- Index	Index with Page Numbers	STRUCTURAL - 1	vendor	12/7/2012	Approval
	Cover Letter	STRUCTURAL - 1	vendor	12/7/2012	Approval
6007-CAL-AGE-58-54-3400	Calculation Report for Rack 1 Alpha Plant	STRUCTURAL - 1	vendor	12/20/2012	Approval
6007-CAL-AGE-58-54-3401	Calculation Report for Rack 1 Steel Frame Connection Design Alpha Plant	STRUCTURAL - 1	vendor	12/20/2012	Approval
6007-CAL-AGE-58-54-6401	Calculation Report for Rack 1 Steel Frame Connection Design Beta Plant	STRUCTURAL - 1	vendor	12/20/2012	Approval
6007-CAL-AGE-58-54-7400	Calculation Report for Rack 1 Beta Plant	STRUCTURAL - 1	vendor	12/20/2012	Approval
6007-PLN-AGE-58-54-3400	HTF-1 Pipe Rack Steel Structure Alpha Plant - Cover Sheet	STRUCTURAL - 1	vendor	12/20/2012	Approval
6007-PLN-AGE-58-54-3401	HTF-1 Pipe Rack Steel Structure Alpha Plant - General Notes	STRUCTURAL - 1	vendor	12/20/2012	Approval
6007-PLN-AGE-58-54-3402	HTF-1 Pipe Rack Steel Structure Alpha Plant - Plan View I	STRUCTURAL - 1	vendor	12/20/2012	Approval
6007-PLN-AGE-58-54-3403	HTF-1 Pipe Rack Steel Structure Alpha Plant - Plan View II	STRUCTURAL - 1	vendor	12/20/2012	Approval
6007-PLN-AGE-58-54-3404	HTF-1 Pipe Rack Steel Structure Alpha Plant - Elevations I	STRUCTURAL - 1	vendor	12/20/2012	Approval
6007-PLN-AGE-58-54-3405	HTF-1 Pipe Rack Steel Structure Alpha Plant - Elevations II	STRUCTURAL - 1	vendor	12/20/2012	Approval
6007-PLN-AGE-58-54-3406	HTF-1 Pipe Rack Steel Structure Alpha Plant - Elevations III	STRUCTURAL - 1	vendor	12/20/2012	Approval
6007-PLN-AGE-58-54-3407	HTF-1 Pipe Rack Steel Structure Alpha Plant - Elevations IV	STRUCTURAL - 1	vendor	12/20/2012	Approval
6007-PLN-AGE-58-54-3408	HTF-1 Pipe Rack Steel Structure Alpha Plant - Details I	STRUCTURAL - 1	vendor	12/20/2012	Approval
6007-PLN-AGE-58-54-3409	HTF-1 Pipe Rack Steel Structure Alpha Plant - Details II	STRUCTURAL - 1	vendor	12/20/2012	Approval
6007-PLN-AGE-58-54-3410	HTF-1 Pipe Rack Steel Structure Alpha Plant - Details III	STRUCTURAL - 1	vendor	12/20/2012	Approval
6007-PLN-AGE-58-54-3411	HTF-1 Pipe Rack Steel Structure Alpha Plant - Details IV	STRUCTURAL - 1	vendor	12/20/2012	Approval
6007-PLN-AGE-58-54-3422	HTF-1 Pipe Rack Steel Structure Alpha Plant - Plan View I	STRUCTURAL - 1	vendor	12/20/2012	Approval
6007-PLN-AGE-58-54-3423	HTF-1 Pipe Rack Steel Structure Alpha Plant - Plan View II	STRUCTURAL - 1	vendor	12/20/2012	Approval
6007-PLN-AGE-58-54-3424	HTF-1 Pipe Rack Steel Structure Alpha Plant - Elevations I	STRUCTURAL - 1	vendor	12/20/2012	Approval
6007-PLN-AGE-58-54-3425	HTF-1 Pipe Rack Steel Structure Alpha Plant - Elevations II	STRUCTURAL - 1	vendor	12/20/2012	Approval
6007-PLN-AGE-58-54-3426	HTF-1 Pipe Rack Steel Structure Alpha Plant - Elevations III	STRUCTURAL - 1	vendor	12/20/2012	Approval
6007-PLN-AGE-58-54-3427	HTF-1 Pipe Rack Steel Structure Alpha Plant - Elevations IV	STRUCTURAL - 1	vendor	12/20/2012	Approval
6007-PLN-AGE-58-54-3428	HTF-1 Pipe Rack Steel Structure Alpha Plant - Connection details	STRUCTURAL - 1	vendor	12/20/2012	Approval
6007-PLN-AGE-58-54-3429	HTF-1 Pipe Rack Steel Structure Alpha Plant - Connection details	STRUCTURAL - 1	vendor	12/20/2012	Approval
6007-PLN-AGE-58-54-3430	HTF-1 Pipe Rack Steel Structure Alpha Plant - Connection details	STRUCTURAL - 1	vendor	12/20/2012	Approval

ABENER TEYMA MOJAVE

Compliance No.:	GEN-2				
Job :	Mojave Solar Project				
Date: 2/17/11	Description: Structural Master Drawing List				
Sheet No.	Description	Applicable Condition of Certification	Vendor Supplied or EOR	Submittal Date	Reason for Submittal
6007-PLN-AGE-58-54-3431	HTF-1 Pipe Rack Steel Structure Alpha Plant - Connection details	STRUCTURAL - 1	vendor	12/20/2012	Approval
6007-PLN-AGE-58-54-6422	HTF-1 Pipe Rack Steel Structure Beta Plant - Plan View I	STRUCTURAL - 1	vendor	12/20/2012	Approval
6007-PLN-AGE-58-54-6423	HTF-1 Pipe Rack Steel Structure Beta Plant - Plan View II	STRUCTURAL - 1	vendor	12/20/2012	Approval
6007-PLN-AGE-58-54-6424	HTF-1 Pipe Rack Steel Structure Beta Plant - Elevations I	STRUCTURAL - 1	vendor	12/20/2012	Approval
6007-PLN-AGE-58-54-6425	HTF-1 Pipe Rack Steel Structure Beta Plant - Elevations II	STRUCTURAL - 1	vendor	12/20/2012	Approval
6007-PLN-AGE-58-54-6426	HTF-1 Pipe Rack Steel Structure Beta Plant - Elevations III	STRUCTURAL - 1	vendor	12/20/2012	Approval
6007-PLN-AGE-58-54-6427	HTF-1 Pipe Rack Steel Structure Beta Plant - Elevations IV	STRUCTURAL - 1	vendor	12/20/2012	Approval
6007-PLN-AGE-58-54-6428	HTF-1 Pipe Rack Steel Structure Beta Plant - Connection details	STRUCTURAL - 1	vendor	12/20/2012	Approval
6007-PLN-AGE-58-54-6429	HTF-1 Pipe Rack Steel Structure Beta Plant - Connection details	STRUCTURAL - 1	vendor	12/20/2012	Approval
6007-PLN-AGE-58-54-6430	HTF-1 Pipe Rack Steel Structure Beta Plant - Connection details	STRUCTURAL - 1	vendor	12/20/2012	Approval
6007-PLN-AGE-58-54-6431	HTF-1 Pipe Rack Steel Structure Beta Plant - Connection details	STRUCTURAL - 1	vendor	12/20/2012	Approval
6007-PLN-AGE-58-54-7400	HTF-1 Pipe Rack Steel Structure Beta Plant - Cover Sheet	STRUCTURAL - 1	vendor	12/20/2012	Approval
6007-PLN-AGE-58-54-7401	HTF-1 Pipe Rack Steel Structure Beta Plant - General Notes	STRUCTURAL - 1	vendor	12/20/2012	Approval
6007-PLN-AGE-58-54-7402	HTF-1 Pipe Rack Steel Structure Beta Plant - Plan View I	STRUCTURAL - 1	vendor	12/20/2012	Approval
6007-PLN-AGE-58-54-7403	HTF-1 Pipe Rack Steel Structure Beta Plant - Plan View II	STRUCTURAL - 1	vendor	12/20/2012	Approval
6007-PLN-AGE-58-54-7404	HTF-1 Pipe Rack Steel Structure Beta Plant - Elevations I	STRUCTURAL - 1	vendor	12/20/2012	Approval
6007-PLN-AGE-58-54-7405	HTF-1 Pipe Rack Steel Structure Beta Plant - Elevations II	STRUCTURAL - 1	vendor	12/20/2012	Approval
6007-PLN-AGE-58-54-7406	HTF-1 Pipe Rack Steel Structure Beta Plant - Elevations III	STRUCTURAL - 1	vendor	12/20/2012	Approval
6007-PLN-AGE-58-54-7407	HTF-1 Pipe Rack Steel Structure Beta Plant - Elevations IV	STRUCTURAL - 1	vendor	12/20/2012	Approval
6007-PLN-AGE-58-54-7408	HTF-1 Pipe Rack Steel Structure Beta Plant - Details I	STRUCTURAL - 1	vendor	12/20/2012	Approval
6007-PLN-AGE-58-54-7409	HTF-1 Pipe Rack Steel Structure Beta Plant - Details II	STRUCTURAL - 1	vendor	12/20/2012	Approval
6007-PLN-AGE-58-54-7410	HTF-1 Pipe Rack Steel Structure Beta Plant - Details III	STRUCTURAL - 1	vendor	12/20/2012	Approval
6007-PLN-AGE-58-54-7411	HTF-1 Pipe Rack Steel Structure Beta Plant - Details IV	STRUCTURAL - 1	vendor	12/20/2012	Approval
121212	Generator Circuit Breaker	STRUCTURAL - 1	vendor	12/21/2012	Approval
S2.1	Generator Circuit Breaker Platform Foundation and Framing Plans	STRUCTURAL - 1	vendor	12/21/2012	Approval
S1.1	Generator Circuit Breaker Platform General Structural Notes	STRUCTURAL - 1	vendor	12/21/2012	Approval
S3.1	Generator Circuit Breaker Platform Foundation and Framing Details	STRUCTURAL - 1	vendor	12/21/2012	Approval
	Cert Excahange Brady Notbohm	STRUCTURAL - 1	vendor	12/21/2012	Approval
6007-CAL-AGE-25-51-4000	Calculation Report for STG Auxiliary equip. struc. Alpha	STRUCTURAL - 1	vendor	12/21/2012	Approval
6007-CAL-AGE-25-51-8000	Calculation Report for STG Auxiliary equip. struc. Beta	STRUCTURAL - 1	vendor	12/21/2012	Approval
6007-PLN-AGE-25-54-4000	STG Auxiliary equip. struc. Alpha Cover Sheet	STRUCTURAL - 1	vendor	12/21/2012	Approval
6007-PLN-AGE-25-54-4020	STG Auxiliary equip. struc. Alpha general note	STRUCTURAL - 1	vendor	12/21/2012	Approval
6007-PLN-AGE-25-54-4040	STG Auxiliary equip. struc. Alpha Plan@EL2072'-51/8'' &@EL2077`	STRUCTURAL - 1	vendor	12/21/2012	Approval
6007-PLN-AGE-25-54-4041	STG Auxiliary equip. struc. Alpha Plan@EL2086'-6&@EL2091'	STRUCTURAL - 1	vendor	12/21/2012	Approval
6007-PLN-AGE-25-54-4042	STG Auxiliary equip. struc. Alpha Plan @El 2098'-3''	STRUCTURAL - 1	vendor	12/21/2012	Approval
6007-PLN-AGE-25-54-4043	STG Auxiliary equip. struc. Alpha Plan @EL 2114'	STRUCTURAL - 1	vendor	12/21/2012	Approval
6007-PLN-AGE-25-54-4044	STG Auxiliary equip. struc. Alpha Plan@EL 2123'-10 3/32 & 2150'-2 3/32	STRUCTURAL - 1	vendor	12/21/2012	Approval
6007-PLN-AGE-25-54-4045	STG Auxiliary equip. struc. Alpha Elevations Sh 1	STRUCTURAL - 1	vendor	12/21/2012	Approval
6007-PLN-AGE-25-54-4046	STG Auxiliary equip. struc. Alpha Elevations Sh 2	STRUCTURAL - 1	vendor	12/21/2012	Approval
6007-PLN-AGE-25-54-4047	STG Auxiliary equip. struc. Alpha Elevations Sh 3	STRUCTURAL - 1	vendor	12/21/2012	Approval
6007-PLN-AGE-25-54-4048	STG Auxiliary equip. struc. Alpha Column Schedule & Misc Details	STRUCTURAL - 1	vendor	12/21/2012	Approval
6007-PLN-AGE-25-54-4049	STG Auxiliary equip. struc. Alpha Anchor Plates Detail	STRUCTURAL - 1	vendor	12/21/2012	Approval
6007-PLN-AGE-25-54-4050	STG Auxiliary equip. struc. Alpha Stair Schematics	STRUCTURAL - 1	vendor	12/21/2012	Approval
6007-PLN-AGE-25-54-8000	STG Auxiliary equip. struc. Beta Cover Sheet	STRUCTURAL - 1	vendor	12/21/2012	Approval
6007-PLN-AGE-25-54-8020	STG Auxiliary equip. struc. Beta general notes	STRUCTURAL - 1	vendor	12/21/2012	Approval
6007-PLN-AGE-25-54-8040	STG Auxiliary equip. struc. Beta Plan@EL2072'-51/8'' &@EL2077`	STRUCTURAL - 1	vendor	12/21/2012	Approval
6007-PLN-AGE-25-54-8041	STG Auxiliary equip. struc. Beta Plan@EL2086'-6&@EL2091'	STRUCTURAL - 1	vendor	12/21/2012	Approval
6007-PLN-AGE-25-54-8042	STG Auxiliary equip. struc. Beta Plan @El 2098'-3''	STRUCTURAL - 1	vendor	12/21/2012	Approval
6007-PLN-AGE-25-54-8043	STG Auxiliary equip. struc. Beta Plan @EL 2114'	STRUCTURAL - 1	vendor	12/21/2012	Approval
6007-PLN-AGE-25-54-8044	STG Auxiliary equip. struc. Beta Plan@EL 2123'-10 3/32 & 2150'- 2 3/32	STRUCTURAL - 1	vendor	12/21/2012	Approval
6007-PLN-AGE-25-54-8045	STG Auxiliary equip. struc. Beta Elevations Sh 1	STRUCTURAL - 1	vendor	12/21/2012	Approval
6007-PLN-AGE-25-54-8046	STG Auxiliary equip. struc. Beta Elevations Sh 2	STRUCTURAL - 1	vendor	12/21/2012	Approval
6007-PLN-AGE-25-54-8047	STG Auxiliary equip. struc. Beta Elevations Sh 3	STRUCTURAL - 1	vendor	12/21/2012	Approval
6007-PLN-AGE-25-54-8048	STG Auxiliary equip. struc. Beta Column Schedule & Misc Details	STRUCTURAL - 1	vendor	12/21/2012	Approval
6007-PLN-AGE-25-54-8049	STG Auxiliary equip. struc. Beta Anchor Plates Detail	STRUCTURAL - 1	vendor	12/21/2012	Approval
6007-PLN-AGE-25-54-8050	STG Auxiliary equip. struc. Beta Stair Schematics	STRUCTURAL - 1	vendor	12/21/2012	Approval
6007-CAL-AGE-25-52-4020	STG Structure Foundations calculations 1	STRUCTURAL - 1	vendor	12/21/2012	Approval
6007-CAL-AGE-25-52-8020	STG Structure Foundations calculations 2	STRUCTURAL - 1	vendor	12/21/2012	Approval
6007-PLN-AGE-25-52-4100	Field Alpha STG Aux equipment sturcture foundation cover sheet	STRUCTURAL - 1	vendor	12/21/2012	Approval
6007-PLN-AGE-25-52-4120	Field Alpha STG Aux equipment sturcture foundation general notes	STRUCTURAL - 1	vendor	12/21/2012	Approval
6007-PLN-AGE-25-52-4140	Field Alpha STG Aux equipment sturcture foundation plan columns position	STRUCTURAL - 1	vendor	12/21/2012	Approval
6007-PLN-AGE-25-52-4141	Field Alpha STG Aux equipment sturcture foundation plan bottom lonitudinal reinforcement	STRUCTURAL - 1	vendor	12/21/2012	Approval
6007-PLN-AGE-25-52-4142	Field Alpha STG Aux equipment sturcture foundation plan bottom transversal reinforcement	STRUCTURAL - 1	vendor	12/21/2012	Approval
6007-PLN-AGE-25-52-4160	Field Alpha STG Aux equipment sturcture foundation details	STRUCTURAL - 1	vendor	12/21/2012	Approval
6007-PLN-AGE-25-52-4161	Field Alpha STG Aux equipment sturcture foundation details	STRUCTURAL - 1	vendor	12/21/2012	Approval
6007-PLN-AGE-25-52-4162	Field Alpha STG Aux equipment sturcture foundation drainage	STRUCTURAL - 1	vendor	12/21/2012	Approval
6007-PLN-AGE-25-52-8100	Field beta STG Aux equipment sturcture foundation cover sheet	STRUCTURAL - 1	vendor	12/21/2012	Approval
6007-PLN-AGE-25-52-8120	Field beta STG Aux equipment sturcture foundation general notes	STRUCTURAL - 1	vendor	12/21/2012	Approval
6007-PLN-AGE-25-52-8140	Field beta STG Aux equipment sturcture foundation plan coumns position	STRUCTURAL - 1	vendor	12/21/2012	Approval
6007-PLN-AGE-25-52-8141	Field beta STG Aux equipment sturcture foundation plan bottom longitdinal reinforcement	STRUCTURAL - 1	vendor	12/21/2012	Approval
6007-PLN-AGE-25-52-8142	Field beta STG Aux equipment sturcture foundation plan bottom longitdinal reinforcement	STRUCTURAL - 1	vendor	12/21/2012	Approval
6007-PLN-AGE-25-52-8160	Field beta STG Aux equipment sturcture foundation details	STRUCTURAL - 1	vendor	12/21/2012	Approval
6007-PLN-AGE-25-52-8161	Field beta STG Aux equipment sturcture foundation details	STRUCTURAL - 1	vendor	12/21/2012	Approval
6007-PLN-AGE-25-52-8162	Field beta STG Aux equipment sturcture foundation drainage	STRUCTURAL - 1	vendor	12/21/2012	Approval
6007-CAL-AGE-25-51-4004	Alpha plant STG Auxiliary equipment structure joints Alpha Plant	STRUCTURAL - 1	vendor	12/21/2012	Approval
6007-PLN-AGE-25-54-4500	Alpha plant STG Auxiliar equipment structure connections Cover sheet	STRUCTURAL - 1	vendor	12/21/2012	Approval

ABENER TEYMA MOJAVE

Compliance No.:	GEN-2				
Job :	Mojave Solar Project				
Date: 2/17/11	Description: Structural Master Drawing List				
Sheet No.	Description	Applicable Condition of Certification	Vendor Supplied or EOR	Submittal Date	Reason for Submittal
6007-PLN-AGE-25-54-4501	Alpha plant STG Auxiliar equipment structure connections General notes	STRUCTURAL - 1	vendor	12/21/2012	Approval
6007-PLN-AGE-25-54-4502	Alpha plant STG Auxiliar equipment structure connections Knots location, Frame A	STRUCTURAL - 1	vendor	12/21/2012	Approval
6007-PLN-AGE-25-54-4503	Alpha plant STG Auxiliar equipment structure connections Knots location, Frame B	STRUCTURAL - 1	vendor	12/21/2012	Approval
6007-PLN-AGE-25-54-4504	Alpha plant STG Auxiliar equipment structure connections Knots location, Frame C	STRUCTURAL - 1	vendor	12/21/2012	Approval
6007-PLN-AGE-25-54-4505	Alpha plant STG Auxiliar equipment structure connections Knots location, Frame D & E	STRUCTURAL - 1	vendor	12/21/2012	Approval
6007-PLN-AGE-25-54-4506	Alpha plant STG Auxiliar equipment structure connections Knots location, Frame 1 & 2	STRUCTURAL - 1	vendor	12/21/2012	Approval
6007-PLN-AGE-25-54-4507	Alpha plant STG Auxiliar equipment structure connections Knots location, Frame 3 & 4	STRUCTURAL - 1	vendor	12/21/2012	Approval
6007-PLN-AGE-25-54-4508	Alpha plant STG Auxiliar equipment structure connections Knots location, Frame 3 & 4	STRUCTURAL - 1	vendor	12/21/2012	Approval
6007-PLN-AGE-25-54-4509	Alpha plant STG Auxiliar equipment structure connections Knots location, Frame 5	STRUCTURAL - 1	vendor	12/21/2012	Approval
6007-PLN-AGE-25-54-4510	Alpha plant STG Auxiliar equipment structure connections Sketch of knots	STRUCTURAL - 1	vendor	12/21/2012	Approval
6007-PLN-AGE-25-54-4511	Alpha plant STG Auxiliar equipment structure connections Knots definition table, Frame A	STRUCTURAL - 1	vendor	12/21/2012	Approval
6007-PLN-AGE-25-54-4512	Alpha plant STG Auxiliar equipment structure connections Knots definition table, Frame B	STRUCTURAL - 1	vendor	12/21/2012	Approval
6007-PLN-AGE-25-54-4513	Alpha plant STG Auxiliar equipment structure connections Knots definition table, Frame C	STRUCTURAL - 1	vendor	12/21/2012	Approval
6007-PLN-AGE-25-54-4514	Alpha plant STG Auxiliar equipment structure connections Knots definition table, Frame D & E	STRUCTURAL - 1	vendor	12/21/2012	Approval
6007-PLN-AGE-25-54-4515	Alpha plant STG Auxiliar equipment structure connections Knots definition table, Frame 1 & 2	STRUCTURAL - 1	vendor	12/21/2012	Approval
6007-PLN-AGE-25-54-4516	Alpha plant STG Auxiliar equipment structure connections Knots definition table, Frame 3	STRUCTURAL - 1	vendor	12/21/2012	Approval
6007-PLN-AGE-25-54-4517	Alpha plant STG Auxiliar equipment sturcture connections knots definition table. Frame 4	STRUCTURAL - 1	vendor	12/21/2012	Approval
6007-PLN-AGE-25-54-4518	Alpha plant STG Auxiliar equipment sturcture connections knots definition table. Frame 5	STRUCTURAL - 1	vendor	12/21/2012	Approval
6007-PLN-AGE-25-54-4519	Alpha plant STG Auxiliar equipment sturcture connections joints location, level 3& 4	STRUCTURAL - 1	vendor	12/21/2012	Approval
6007-PLN-AGE-25-54-4520	Alpha plant STG Auxiliar equipment sturcture connections joints location, level 2	STRUCTURAL - 1	vendor	12/21/2012	Approval
6007-PLN-AGE-25-54-4521	Alpha plant STG Auxiliar equipment sturcture connections joints location, level 5	STRUCTURAL - 1	vendor	12/21/2012	Approval
6007-PLN-AGE-25-54-4522	Alpha plant STG Auxiliar equipment sturcture connections joints location, level 6	STRUCTURAL - 1	vendor	12/21/2012	Approval
6007-PLN-AGE-25-54-4523	Alpha plant STG Auxiliar equipment sturcture connections joints location, level 1,7,8,&9	STRUCTURAL - 1	vendor	12/21/2012	Approval
6007-PLN-AGE-25-54-4524	Alpha plant STG Auxiliar equipment sturcture connections joints location, frame A	STRUCTURAL - 1	vendor	12/21/2012	Approval
6007-PLN-AGE-25-54-4525	Alpha plant STG Auxiliar equipment sturcture connections joints location, frame B	STRUCTURAL - 1	vendor	12/21/2012	Approval
6007-PLN-AGE-25-54-4526	Alpha plant STG Auxiliar equipment sturcture connections joints location, frame C	STRUCTURAL - 1	vendor	12/21/2012	Approval
6007-PLN-AGE-25-54-4527	Alpha plant STG Auxiliar equipment sturcture connections joints location, frame D & E	STRUCTURAL - 1	vendor	12/21/2012	Approval
6007-PLN-AGE-25-54-4528	Alpha plant STG Auxiliar equipment sturcture connections joints location, frame 1 & 2	STRUCTURAL - 1	vendor	12/21/2012	Approval
6007-PLN-AGE-25-54-4529	Alpha plant STG Auxiliar equipment sturcture connections joints location, frame 3	STRUCTURAL - 1	vendor	12/21/2012	Approval
6007-PLN-AGE-25-54-4530	Alpha plant STG Auxiliar equipment sturcture connections joints location, frame 4	STRUCTURAL - 1	vendor	12/21/2012	Approval
6007-PLN-AGE-25-54-4531	Alpha plant STG Auxiliar equipment sturcture connections joints location, frame 5	STRUCTURAL - 1	vendor	12/21/2012	Approval
6007-PLN-AGE-25-54-4532	Alpha plant STG Auxiliar equipment sturcture connections Sketch of Joints I	STRUCTURAL - 1	vendor	12/21/2012	Approval
6007-PLN-AGE-25-54-4533	Alpha plant STG Auxiliar equipment sturcture connections Sketch of Joints II	STRUCTURAL - 1	vendor	12/21/2012	Approval
6007-CAL-AGE-25-51-8004	Beta plant STG Auxiliary equipment structure joints Beta Plant	STRUCTURAL - 1	vendor	12/21/2012	Approval
6007-PLN-AGE-25-54-8500	Beta plant STG Auxiliar equipment structure connections Cover sheet	STRUCTURAL - 1	vendor	12/21/2012	Approval
6007-PLN-AGE-25-54-8501	Beta plant STG Auxiliar equipment structure connections General notes	STRUCTURAL - 1	vendor	12/21/2012	Approval
6007-PLN-AGE-25-54-8502	Beta plant STG Auxiliar equipment structure connections Knots location, Frame A	STRUCTURAL - 1	vendor	12/21/2012	Approval
6007-PLN-AGE-25-54-8503	Beta plant STG Auxiliar equipment structure connections Knots location, Frame B	STRUCTURAL - 1	vendor	12/21/2012	Approval
6007-PLN-AGE-25-54-8504	Beta plant STG Auxiliar equipment structure connections Knots location, Frame C	STRUCTURAL - 1	vendor	12/21/2012	Approval
6007-PLN-AGE-25-54-8505	Beta plant STG Auxiliar equipment structure connections Knots location, Frame D & E	STRUCTURAL - 1	vendor	12/21/2012	Approval
6007-PLN-AGE-25-54-8506	Beta plant STG Auxiliar equipment structure connections Knots location, Frame 1 & 2	STRUCTURAL - 1	vendor	12/21/2012	Approval
6007-PLN-AGE-25-54-8507	Beta plant STG Auxiliar equipment structure connections Knots location, Frame 3 & 4	STRUCTURAL - 1	vendor	12/21/2012	Approval
6007-PLN-AGE-25-54-8508	Beta plant STG Auxiliar equipment structure connections Knots location, Frame 3 & 4	STRUCTURAL - 1	vendor	12/21/2012	Approval
6007-PLN-AGE-25-54-8509	Beta plant STG Auxiliar equipment structure connections Knots location, Frame 5	STRUCTURAL - 1	vendor	12/21/2012	Approval
6007-PLN-AGE-25-54-8510	Beta plant STG Auxiliar equipment structure connections Sketch of knots	STRUCTURAL - 1	vendor	12/21/2012	Approval
6007-PLN-AGE-25-54-8511	Beta plant STG Auxiliar equipment structure connections Knots definition table, Frame A	STRUCTURAL - 1	vendor	12/21/2012	Approval
6007-PLN-AGE-25-54-8512	Beta plant STG Auxiliar equipment structure connections Knots definition table, Frame B	STRUCTURAL - 1	vendor	12/21/2012	Approval
6007-PLN-AGE-25-54-8513	Beta plant STG Auxiliar equipment structure connections Knots definition table, Frame C	STRUCTURAL - 1	vendor	12/21/2012	Approval
6007-PLN-AGE-25-54-8514	Beta plant STG Auxiliar equipment structure connections Knots definition table, Frame D & E	STRUCTURAL - 1	vendor	12/21/2012	Approval
6007-PLN-AGE-25-54-8515	Beta plant STG Auxiliar equipment structure connections Knots definition table, Frame 1 & 2	STRUCTURAL - 1	vendor	12/21/2012	Approval
6007-PLN-AGE-25-54-8516	Beta plant STG Auxiliar equipment structure connections Knots definition table, Frame 3	STRUCTURAL - 1	vendor	12/21/2012	Approval
6007-PLN-AGE-25-54-8517	Beta plant STG Auxiliar equipment sturcture connections knots definition table. Frame 4	STRUCTURAL - 1	vendor	12/21/2012	Approval
6007-PLN-AGE-25-54-8518	Beta plant STG Auxiliar equipment sturcture connections knots definition table. Frame 5	STRUCTURAL - 1	vendor	12/21/2012	Approval
6007-PLN-AGE-25-54-8519	Beta plant STG Auxiliar equipment sturcture connections joints location, level 3& 4	STRUCTURAL - 1	vendor	12/21/2012	Approval
6007-PLN-AGE-25-54-8520	Beta plant STG Auxiliar equipment sturcture connections joints location, level 2	STRUCTURAL - 1	vendor	12/21/2012	Approval
6007-PLN-AGE-25-54-8521	Beta plant STG Auxiliar equipment sturcture connections joints location, level 5	STRUCTURAL - 1	vendor	12/21/2012	Approval
6007-PLN-AGE-25-54-8522	Beta plant STG Auxiliar equipment sturcture connections joints location, level 6	STRUCTURAL - 1	vendor	12/21/2012	Approval
6007-PLN-AGE-25-54-8523	Beta plant STG Auxiliar equipment sturcture connections joints location, level 1,7,8,&9	STRUCTURAL - 1	vendor	12/21/2012	Approval
6007-PLN-AGE-25-54-8524	Beta plant STG Auxiliar equipment sturcture connections joints location, frame A	STRUCTURAL - 1	vendor	12/21/2012	Approval
6007-PLN-AGE-25-54-8525	Beta plant STG Auxiliar equipment sturcture connections joints location, frame B	STRUCTURAL - 1	vendor	12/21/2012	Approval
6007-PLN-AGE-25-54-8526	Beta plant STG Auxiliar equipment sturcture connections joints location, frame C	STRUCTURAL - 1	vendor	12/21/2012	Approval
6007-PLN-AGE-25-54-8527	Beta plant STG Auxiliar equipment sturcture connections joints location, frame D & E	STRUCTURAL - 1	vendor	12/21/2012	Approval
6007-PLN-AGE-25-54-8528	Beta plant STG Auxiliar equipment sturcture connections joints location, frame 1 & 2	STRUCTURAL - 1	vendor	12/21/2012	Approval
6007-PLN-AGE-25-54-8529	Beta plant STG Auxiliar equipment sturcture connections joints location, frame 3	STRUCTURAL - 1	vendor	12/21/2012	Approval
6007-PLN-AGE-25-54-8530	Beta plant STG Auxiliar equipment sturcture connections joints location, frame 4	STRUCTURAL - 1	vendor	12/21/2012	Approval
6007-PLN-AGE-25-54-8531	Beta plant STG Auxiliar equipment sturcture connections joints location, frame 5	STRUCTURAL - 1	vendor	12/21/2012	Approval
6007-PLN-AGE-25-54-8532	Beta plant STG Auxiliar equipment sturcture connections Sketch of Joints I	STRUCTURAL - 1	vendor	12/21/2012	Approval
6007-PLN-AGE-25-54-8533	Beta plant STG Auxiliar equipment sturcture connections Sketch of Joints II	STRUCTURAL - 1	vendor	12/21/2012	Approval
121212- Structural Calcs_Signed	Generator Circuit Breaker	STRUCTURAL - 1	vendor	1/4/2013	Approval
S2.1	Generator Circuit Breaker Platform Foundation and Framing Plans	STRUCTURAL - 1	vendor	1/4/2013	Approval
S1.1	Generator Circuit Breaker Platform General Structural Notes	STRUCTURAL - 1	vendor	1/4/2013	Approval
S3.1	Generator Circuit Breaker Platform Foundation and Framing Details	STRUCTURAL - 1	vendor	1/4/2013	Approval
	Cert Excahange Brady Notbohm	STRUCTURAL - 1	vendor	1/4/2013	Approval
6007-CAL-ATD-23-52-C070	Mojave Alpha & Beta Substations Other Foundations Calculations	STRUCTURAL - 1	vendor	1/4/2013	Approval
6007-PLN-ATD-23-55-C011	Mojave Alpha & Beta Substations Steel Details 230 kV Single Phase Low Bus Support	STRUCTURAL - 1	vendor	1/4/2013	Approval
6007-PLN-ATD-23-55-C014	Mojave Alpha & Beta Substations Steel Details 230 kV Single Phase S3 Stand - S3	STRUCTURAL - 1	vendor	1/4/2013	Approval

ABENER TEYMA MOJAVE

Compliance No.:	GEN-2				
Job :	Mojave Solar Project				
Date: 2/17/11	Description: Structural Master Drawing List				
Sheet No.	Description	Applicable Condition of Certification	Vendor Supplied or EOR	Submittal Date	Reason for Submittal
6007-PLN-ATD-23-55-C015	Mojave Alpha & Beta Substations Steel Details 230 kV Switch Stand S4 - Sheet 1	STRUCTURAL - 1	vendor	1/4/2013	Approval
6007-PLN-ATD-23-55-C016	Mojave Alpha & Beta Substations Steel Details 230 kV Switch Stand S4 - Sheet 2	STRUCTURAL - 1	vendor	1/4/2013	Approval
6007-PLN-ATD-23-55-C018	Mojave Alpha & Beta Substations Steel Details 230 kV Single Phase CT Stand - S6	STRUCTURAL - 1	vendor	1/4/2013	Approval
6007-PLN-ATD-23-55-C019	Mojave Alpha & Beta Substations Steel Details Control Building Stair Details & Footing - ST1	STRUCTURAL - 1	vendor	1/4/2013	Approval
6007-PLN-ATD-23-57-C063	Mojave Alpha & Beta Substations Foundation Detail - APT Transformer (F2)	STRUCTURAL - 1	vendor	1/4/2013	Approval
6007-PLN-ATD-23-57-C064	Mojave Alpha & Beta Substations Foundation Detail - Relay House & Minor Equipment (P2, P3, P4, P6 & P7)	STRUCTURAL - 1	vendor	1/4/2013	Approval
6007-PLN-ATD-23-57-C065	Mojave Alpha & Beta Substations Foundation Detail - Shield Spike & Terminal Structure (P1 & P5)	STRUCTURAL - 1	vendor	1/4/2013	Approval
6007-PLN-ATD-23-57-C071	Mojave Alpha & Beta Substations Foundation Layout Drawings	STRUCTURAL - 1	vendor	1/4/2013	Approval
6007-PLN-ATD-23-57-C072	Mojave Alpha & Beta Substations Foundation Detail - Circuit Breaker (F4)	STRUCTURAL - 1	vendor	1/4/2013	Approval
6007-PLN-ATD-23-57-C073	Mojave Alpha & Beta Substations Foundation Detail - Firewall APT1 (F6)	STRUCTURAL - 1	vendor	1/4/2013	Approval
6007-PLN-ATD-23-57-C074	Mojave Alpha & Beta Substations Foundation Detail - Firewall MPT1 (F3)	STRUCTURAL - 1	vendor	1/4/2013	Approval
6007-PLN-ATD-23-57-C091	Mojave Alpha & Beta Substations Site Preparation & Fencing Drawings	STRUCTURAL - 1	vendor	1/4/2013	Approval
6007-PLN-ATD-23-52-E101	Control Building	STRUCTURAL - 1	vendor	1/4/2013	Approval
6007-PLN-ATD-23-03-E021	Mojave Alpha & Beta Substations General Arrangement	STRUCTURAL - 1	vendor	1/4/2013	Approval
6007-PLN-ATD-23-54-C011	Mojave Alpha & Beta Substations Structure Layout Plan	STRUCTURAL - 1	vendor	1/4/2013	Approval
6007-PLN-ATD-23-55-C012	Mojave Alpha & Beta Substations Steel Details 230 kV Three Phase 230 kV Deadend - S7	STRUCTURAL - 1	vendor	1/4/2013	Approval
6007-PLN-ATD-23-55-C013	Mojave Alpha & Beta Substations Steel Details Static Mast (S1)	STRUCTURAL - 1	vendor	1/4/2013	Approval
6007-ESP-RJK-33-50-0010	Engineering Calculation Record Cover Sheet	STRUCTURAL - 1	vendor	1/8/2013	Approval
6007-PLN-AGE-57-52-3302	End supply return loops foundation - NE field Foundations plan I - Alpha	STRUCTURAL - 1	vendor	12/18/2012	Approval
6007-PLN-AGE-57-52-3303	End supply return loops foundation - NE field Foundations plan II - Alpha	STRUCTURAL - 1	vendor	12/18/2012	Approval
6007-PLN-AGE-57-52-3304	End supply return loops foundation - NE field Coordinates I - Alpha	STRUCTURAL - 1	vendor	12/18/2012	Approval
6007-PLN-AGE-57-52-3305	End supply return loops foundation - NE field Coordinates II - Alpha	STRUCTURAL - 1	vendor	12/18/2012	Approval
6007-PLN-AGE-57-52-3312	End supply return loops foundation - E field Foundations plan I - Alpha	STRUCTURAL - 1	vendor	12/13/2012	Approval
6007-PLN-AGE-57-52-3313	End supply return loops foundation - E field Foundations plan II - Alpha	STRUCTURAL - 1	vendor	12/13/2012	Approval
6007-PLN-AGE-57-52-3314	End supply return loops foundation - E field Foundations plan III - Alpha	STRUCTURAL - 1	vendor	12/13/2012	Approval
6007-PLN-AGE-57-52-3315	End supply return loops foundation - E field Foundations plan IV - Alpha	STRUCTURAL - 1	vendor	12/13/2012	Approval
6007-PLN-AGE-57-52-3316	End supply return loops foundation - E field Foundations plan V - Alpha	STRUCTURAL - 1	vendor	12/13/2012	Approval
6007-PLN-AGE-57-52-3317	End supply return loops foundation - E field Foundations plan VI - Alpha	STRUCTURAL - 1	vendor	12/13/2012	Approval
6007-PLN-AGE-57-52-3318	End supply return loops foundation - E field Foundations plan VII - Alpha	STRUCTURAL - 1	vendor	12/13/2012	Approval
6007-PLN-AGE-57-52-3319	End supply return loops foundation - E field Coordinates I - Alpha	STRUCTURAL - 1	vendor	12/13/2012	Approval
6007-PLN-AGE-57-52-3320	End supply return loops foundation - E field Coordinates II - Alpha	STRUCTURAL - 1	vendor	12/13/2012	Approval
6007-PLN-AGE-57-52-3321	End supply return loops foundation - E field Coordinates III - Alpha	STRUCTURAL - 1	vendor	12/13/2012	Approval
6007-PLN-AGE-57-52-3322	End supply return loops foundation - E field Coordinates IV - Alpha	STRUCTURAL - 1	vendor	12/13/2012	Approval
6007-PLN-AGE-57-52-3323	End supply return loops foundation - E field Coordinates V - Alpha	STRUCTURAL - 1	vendor	12/13/2012	Approval
6007-PLN-AGE-57-52-3324	End supply return loops foundation - E field Coordinates VI - Alpha	STRUCTURAL - 1	vendor	12/13/2012	Approval
6007-PLN-AGE-57-52-3325	End supply return loops foundation - E field Coordinates VII - Alpha	STRUCTURAL - 1	vendor	12/13/2012	Approval
6007-PLN-AGE-57-52-3352	End supply return loops foundation - NW field Foundations plan I - Alpha	STRUCTURAL - 1	vendor	12/14/2012	Approval
6007-PLN-AGE-57-52-3353	End supply return loops foundation - NW field Foundations plan II - Alpha	STRUCTURAL - 1	vendor	12/14/2012	Approval
6007-PLN-AGE-57-52-3354	End supply return loops foundation - NW field Foundations plan III - Alpha	STRUCTURAL - 1	vendor	12/14/2012	Approval
6007-PLN-AGE-57-52-3355	End supply return loops foundation - NW field Foundations plan IV - Alpha	STRUCTURAL - 1	vendor	12/14/2012	Approval
6007-PLN-AGE-57-52-3356	End supply return loops foundation - NW field Foundations plan V - Alpha	STRUCTURAL - 1	vendor	12/14/2012	Approval
6007-PLN-AGE-57-52-3357	End supply return loops foundation - NW field Coordinates I - Alpha	STRUCTURAL - 1	vendor	12/14/2012	Approval
6007-PLN-AGE-57-52-3358	End supply return loops foundation - NW field Coordinates II - Alpha	STRUCTURAL - 1	vendor	12/14/2012	Approval
6007-PLN-AGE-57-52-3359	End supply return loops foundation - NW field Coordinates III - Alpha	STRUCTURAL - 1	vendor	12/14/2012	Approval
6007-PLN-AGE-57-52-3360	End supply return loops foundation - NW field Coordinates IV - Alpha	STRUCTURAL - 1	vendor	12/14/2012	Approval
6007-PLN-AGE-57-52-3361	End supply return loops foundation - NW field Coordinates V - Alpha	STRUCTURAL - 1	vendor	12/14/2012	Approval
6007-PLN-AGE-57-52-3372	End supply return loops foundation - W field Foundations plan I - Alpha	STRUCTURAL - 1	vendor	12/17/2012	Approval
6007-PLN-AGE-57-52-3373	End supply return loops foundation - W field Foundations plan II - Alpha	STRUCTURAL - 1	vendor	12/17/2012	Approval
6007-PLN-AGE-57-52-3374	End supply return loops foundation - W field Foundations plan III - Alpha	STRUCTURAL - 1	vendor	12/17/2012	Approval
6007-PLN-AGE-57-52-3375	End supply return loops foundation - W field Foundations plan IV - Alpha	STRUCTURAL - 1	vendor	12/17/2012	Approval
6007-PLN-AGE-57-52-3376	End supply return loops foundation - W field Foundations plan V - Alpha	STRUCTURAL - 1	vendor	12/17/2012	Approval
6007-PLN-AGE-57-52-3377	End supply return loops foundation - W field Foundations plan VI - Alpha	STRUCTURAL - 1	vendor	12/17/2012	Approval
6007-PLN-AGE-57-52-3378	End supply return loops foundation - W field Coordinates I - Alpha	STRUCTURAL - 1	vendor	12/17/2012	Approval
6007-PLN-AGE-57-52-3379	End supply return loops foundation - W field Coordinates II - Alpha	STRUCTURAL - 1	vendor	12/17/2012	Approval
6007-PLN-AGE-57-52-3380	End supply return loops foundation - W field Coordinates III - Alpha	STRUCTURAL - 1	vendor	12/17/2012	Approval
6007-PLN-AGE-57-52-3381	End supply return loops foundation - W field Coordinates IV - Alpha	STRUCTURAL - 1	vendor	12/17/2012	Approval
6007-PLN-AGE-57-52-3382	End supply return loops foundation - W field Coordinates V - Alpha	STRUCTURAL - 1	vendor	12/17/2012	Approval
6007-PLN-AGE-57-52-3383	End supply return loops foundation - W field Coordinates VI - Alpha	STRUCTURAL - 1	vendor	12/17/2012	Approval
6007-PLN-AGE-57-52-5000	End supply return loops foundation - Alpha & Beta - Cover Sheet	STRUCTURAL - 1	vendor	1/14/2013	Approval
6007-PLN-AGE-57-52-5001	End supply return loops foundation - Alpha - North east	STRUCTURAL - 1	vendor	1/14/2013	Approval
6007-PLN-AGE-57-52-5002	End supply return loops foundation - Alpha - East	STRUCTURAL - 1	vendor	1/14/2013	Approval
6007-PLN-AGE-57-52-5003	End supply return loops foundation - Alpha - North west	STRUCTURAL - 1	vendor	1/14/2013	Approval
6007-PLN-AGE-57-52-5004	End supply return loops foundation - Alpha - West	STRUCTURAL - 1	vendor	1/14/2013	Approval
6007-PLN-AGE-57-52-5005	End supply return loops foundation - Beta - North	STRUCTURAL - 1	vendor	1/14/2013	Approval
6007-PLN-AGE-57-52-5006	End supply return loops foundation - Beta - East	STRUCTURAL - 1	vendor	1/14/2013	Approval
6007-PLN-AGE-57-52-5007	End supply return loops foundation - Beta - South	STRUCTURAL - 1	vendor	1/14/2013	Approval
6007-PLN-AGE-57-52-5008	End supply return loops foundation - Beta - West and Far west	STRUCTURAL - 1	vendor	1/14/2013	Approval
6007-PLN-AGE-57-52-7302	End supply return loops foundation - E field Foundations plan I - Beta	STRUCTURAL - 1	vendor	12/18/2012	Approval
6007-PLN-AGE-57-52-7303	End supply return loops foundation - E field Foundations plan II - Beta	STRUCTURAL - 1	vendor	12/18/2012	Approval
6007-PLN-AGE-57-52-7304	End supply return loops foundation - E field Foundations plan III - Beta	STRUCTURAL - 1	vendor	12/18/2012	Approval
6007-PLN-AGE-57-52-7305	End supply return loops foundation - E field Coordinates I - Beta	STRUCTURAL - 1	vendor	12/18/2012	Approval
6007-PLN-AGE-57-52-7306	End supply return loops foundation - E field Coordinates II - Beta	STRUCTURAL - 1	vendor	12/18/2012	Approval
6007-PLN-AGE-57-52-7307	End supply return loops foundation - E field Coordinates III - Beta	STRUCTURAL - 1	vendor	12/18/2012	Approval
6007-PLN-AGE-57-52-7312	End supply return loops foundation - S field Foundations plan I - Beta	STRUCTURAL - 1	vendor	12/18/2012	Approval
6007-PLN-AGE-57-52-7313	End supply return loops foundation - S field Foundations plan II - Beta	STRUCTURAL - 1	vendor	12/18/2012	Approval
6007-PLN-AGE-57-52-7314	End supply return loops foundation - S field Foundations plan III - Beta	STRUCTURAL - 1	vendor	12/18/2012	Approval

ABENER TEYMA MOJAVE

Compliance No.:	GEN-2				
Job :	Mojave Solar Project				
Date: 2/17/11	Description: Structural Master Drawing List				
Sheet No.	Description	Applicable Condition of Certification	Vendor Supplied or EOR	Submittal Date	Reason for Submittal
6007-PLN-AGE-57-52-7315	End supply return loops foundation - S field Foundations plan IV - Beta	STRUCTURAL - 1	vendor	12/18/2012	Approval
6007-PLN-AGE-57-52-7316	End supply return loops foundation - S field Foundations plan V - Beta	STRUCTURAL - 1	vendor	12/18/2012	Approval
6007-PLN-AGE-57-52-7317	End supply return loops foundation - S field Foundations plan VI - Beta	STRUCTURAL - 1	vendor	12/18/2012	Approval
6007-PLN-AGE-57-52-7318	End supply return loops foundation - S field Foundations plan I - Beta	STRUCTURAL - 1	vendor	12/18/2012	Approval
6007-PLN-AGE-57-52-7319	End supply return loops foundation - S field Foundations plan II - Beta	STRUCTURAL - 1	vendor	12/18/2012	Approval
6007-PLN-AGE-57-52-7320	End supply return loops foundation - S field Foundations plan III - Beta	STRUCTURAL - 1	vendor	12/18/2012	Approval
6007-PLN-AGE-57-52-7321	End supply return loops foundation - S field Foundations plan IV - Beta	STRUCTURAL - 1	vendor	12/18/2012	Approval
6007-PLN-AGE-57-52-7322	End supply return loops foundation - S field Foundations plan V - Beta	STRUCTURAL - 1	vendor	12/18/2012	Approval
6007-PLN-AGE-57-52-7323	End supply return loops foundation - S field Foundations plan VI - Beta	STRUCTURAL - 1	vendor	12/18/2012	Approval
6007-PLN-AGE-57-52-7352	End supply return loops foundation - N field Foundations plan I - Beta	STRUCTURAL - 1	vendor	12/13/2012	Approval
6007-PLN-AGE-57-52-7353	End supply return loops foundation - N field Foundations plan II - Beta	STRUCTURAL - 1	vendor	12/13/2012	Approval
6007-PLN-AGE-57-52-7354	End supply return loops foundation - N field Foundations plan III - Beta	STRUCTURAL - 1	vendor	12/13/2012	Approval
6007-PLN-AGE-57-52-7355	End supply return loops foundation - N field Foundations plan IV - Beta	STRUCTURAL - 1	vendor	12/13/2012	Approval
6007-PLN-AGE-57-52-7356	End supply return loops foundation - N field Foundations plan V - Beta	STRUCTURAL - 1	vendor	12/13/2012	Approval
6007-PLN-AGE-57-52-7357	End supply return loops foundation - N field Foundations plan VI - Beta	STRUCTURAL - 1	vendor	12/13/2012	Approval
6007-PLN-AGE-57-52-7358	End supply return loops foundation - N field Coordinates I - Beta	STRUCTURAL - 1	vendor	12/13/2012	Approval
6007-PLN-AGE-57-52-7359	End supply return loops foundation - N field Coordinates II - Beta	STRUCTURAL - 1	vendor	12/13/2012	Approval
6007-PLN-AGE-57-52-7360	End supply return loops foundation - N field Coordinates III - Beta	STRUCTURAL - 1	vendor	12/13/2012	Approval
6007-PLN-AGE-57-52-7361	End supply return loops foundation - N field Coordinates IV - Beta	STRUCTURAL - 1	vendor	12/13/2012	Approval
6007-PLN-AGE-57-52-7362	End supply return loops foundation - N field Coordinates V - Beta	STRUCTURAL - 1	vendor	12/13/2012	Approval
6007-PLN-AGE-57-52-7363	End supply return loops foundation - N field Coordinates VI - Beta	STRUCTURAL - 1	vendor	12/13/2012	Approval
6007-PLN-AGE-57-52-7372	End supply return loops foundation - W and FW field Foundations plan I - Beta	STRUCTURAL - 1	vendor	12/17/2012	Approval
6007-PLN-AGE-57-52-7373	End supply return loops foundation - W and FW field Foundations plan II - Beta	STRUCTURAL - 1	vendor	12/17/2012	Approval
6007-PLN-AGE-57-52-7374	End supply return loops foundation - W and FW field Foundations plan III - Beta	STRUCTURAL - 1	vendor	12/17/2012	Approval
6007-PLN-AGE-57-52-7375	End supply return loops foundation - W and FW field Foundations plan IV - Beta	STRUCTURAL - 1	vendor	12/17/2012	Approval
6007-PLN-AGE-57-52-7376	End supply return loops foundation - W and FW field Foundations plan V - Beta	STRUCTURAL - 1	vendor	12/17/2012	Approval
6007-PLN-AGE-57-52-7377	End supply return loops foundation - W and FW field Foundations plan VI - Beta	STRUCTURAL - 1	vendor	12/17/2012	Approval
6007-PLN-AGE-57-52-7378	End supply return loops foundation - W and FW field Coordinates I - Beta	STRUCTURAL - 1	vendor	12/17/2012	Approval
6007-PLN-AGE-57-52-7379	End supply return loops foundation - W and FW field Coordinates II - Beta	STRUCTURAL - 1	vendor	12/17/2012	Approval
6007-PLN-AGE-57-52-7380	End supply return loops foundation - W and FW field Coordinates III - Beta	STRUCTURAL - 1	vendor	12/17/2012	Approval
6007-PLN-AGE-57-52-7381	End supply return loops foundation - W and FW field Coordinates IV - Beta	STRUCTURAL - 1	vendor	12/17/2012	Approval
6007-PLN-AGE-57-52-7382	End supply return loops foundation - W and FW field Coordinates V - Beta	STRUCTURAL - 1	vendor	12/17/2012	Approval
6007-PLN-AGE-57-52-7383	End supply return loops foundation - W and FW field Coordinates VI - Beta	STRUCTURAL - 1	vendor	12/17/2012	Approval
6007-PLN-AGE-21-52-2052	Alpha plant - Steam generators evaporators foundations - Foundation plan	STRUCTURAL - 1	vendor	1/3/2013	Approval
6007-PLN-AGE-21-52-6052	Beta plant - Steam generators evaporators foundations - Foundation plan	STRUCTURAL - 1	vendor	1/3/2013	Approval
6007-CAL-AGE-58-54-3400	Calculation Report for Rack 1 Alpha Plant	STRUCTURAL - 1	vendor	1/16/2013	Approval
6007-CAL-AGE-58-54-3401	Calculation Report for Rack 1 Steel Frame Connection Design Alpha Plant	STRUCTURAL - 1	vendor	1/23/2013	Approval
6007-CAL-AGE-58-54-7401	Calculation Report for Rack 1 Steel Frame Connection Design Beta Plant	STRUCTURAL - 1	vendor	1/23/2013	Approval
6007-CAL-AGE-58-54-7400	Calculation Report for Rack 1 Beta Plant	STRUCTURAL - 1	vendor	1/16/2013	Approval
6007-PLN-AGE-58-54-3400	HTF-1 Pipe Rack Steel Structure Alpha Plant - Cover Sheet	STRUCTURAL - 1	vendor	1/16/2013	Approval
6007-PLN-AGE-58-54-3401	HTF-1 Pipe Rack Steel Structure Alpha Plant - General Notes	STRUCTURAL - 1	vendor	1/16/2013	Approval
6007-PLN-AGE-58-54-3402	HTF-1 Pipe Rack Steel Structure Alpha Plant - Plan View I	STRUCTURAL - 1	vendor	1/16/2013	Approval
6007-PLN-AGE-58-54-3403	HTF-1 Pipe Rack Steel Structure Alpha Plant - Plan View II	STRUCTURAL - 1	vendor	1/16/2013	Approval
6007-PLN-AGE-58-54-3404	HTF-1 Pipe Rack Steel Structure Alpha Plant - Elevations I	STRUCTURAL - 1	vendor	1/17/2013	Approval
6007-PLN-AGE-58-54-3405	HTF-1 Pipe Rack Steel Structure Alpha Plant - Elevations II	STRUCTURAL - 1	vendor	1/17/2013	Approval
6007-PLN-AGE-58-54-3406	HTF-1 Pipe Rack Steel Structure Alpha Plant - Elevations III	STRUCTURAL - 1	vendor	1/17/2013	Approval
6007-PLN-AGE-58-54-3407	HTF-1 Pipe Rack Steel Structure Alpha Plant - Elevations IV	STRUCTURAL - 1	vendor	1/17/2013	Approval
6007-PLN-AGE-58-54-3408	HTF-1 Pipe Rack Steel Structure Alpha Plant - Details I	STRUCTURAL - 1	vendor	1/16/2013	Approval
6007-PLN-AGE-58-54-3409	HTF-1 Pipe Rack Steel Structure Alpha Plant - Details II	STRUCTURAL - 1	vendor	1/16/2013	Approval
6007-PLN-AGE-58-54-3410	HTF-1 Pipe Rack Steel Structure Alpha Plant - Details III	STRUCTURAL - 1	vendor	1/16/2013	Approval
6007-PLN-AGE-58-54-3411	HTF-1 Pipe Rack Steel Structure Alpha Plant - Details IV	STRUCTURAL - 1	vendor	1/16/2013	Approval
6007-PLN-AGE-58-54-3422	HTF-1 Pipe Rack Steel Structure Alpha Plant - Plan View I	STRUCTURAL - 1	vendor	1/23/2013	Approval
6007-PLN-AGE-58-54-3423	HTF-1 Pipe Rack Steel Structure Alpha Plant - Plan View II	STRUCTURAL - 1	vendor	1/23/2013	Approval
6007-PLN-AGE-58-54-3424	HTF-1 Pipe Rack Steel Structure Alpha Plant - Elevations I	STRUCTURAL - 1	vendor	1/23/2013	Approval
6007-PLN-AGE-58-54-3425	HTF-1 Pipe Rack Steel Structure Alpha Plant - Elevations II	STRUCTURAL - 1	vendor	1/23/2013	Approval
6007-PLN-AGE-58-54-3426	HTF-1 Pipe Rack Steel Structure Alpha Plant - Elevations III	STRUCTURAL - 1	vendor	1/23/2013	Approval
6007-PLN-AGE-58-54-3427	HTF-1 Pipe Rack Steel Structure Alpha Plant - Elevations IV	STRUCTURAL - 1	vendor	1/23/2013	Approval
6007-PLN-AGE-58-54-3428	HTF-1 Pipe Rack Steel Structure Alpha Plant - Connection details	STRUCTURAL - 1	vendor	1/23/2013	Approval
6007-PLN-AGE-58-54-3429	HTF-1 Pipe Rack Steel Structure Alpha Plant - Connection details	STRUCTURAL - 1	vendor	1/23/2013	Approval
6007-PLN-AGE-58-54-3430	HTF-1 Pipe Rack Steel Structure Alpha Plant - Connection details	STRUCTURAL - 1	vendor	1/23/2013	Approval
6007-PLN-AGE-58-54-3431	HTF-1 Pipe Rack Steel Structure Alpha Plant - Connection details	STRUCTURAL - 1	vendor	1/23/2013	Approval
6007-PLN-AGE-58-54-7422	HTF-1 Pipe Rack Steel Structure Beta Plant - Plan View I	STRUCTURAL - 1	vendor	1/23/2013	Approval
6007-PLN-AGE-58-54-7423	HTF-1 Pipe Rack Steel Structure Beta Plant - Plan View II	STRUCTURAL - 1	vendor	1/23/2013	Approval
6007-PLN-AGE-58-54-7424	HTF-1 Pipe Rack Steel Structure Beta Plant - Elevations I	STRUCTURAL - 1	vendor	1/23/2013	Approval
6007-PLN-AGE-58-54-7425	HTF-1 Pipe Rack Steel Structure Beta Plant - Elevations II	STRUCTURAL - 1	vendor	1/23/2013	Approval
6007-PLN-AGE-58-54-7426	HTF-1 Pipe Rack Steel Structure Beta Plant - Elevations III	STRUCTURAL - 1	vendor	1/23/2013	Approval
6007-PLN-AGE-58-54-7427	HTF-1 Pipe Rack Steel Structure Beta Plant - Elevations IV	STRUCTURAL - 1	vendor	1/23/2013	Approval
6007-PLN-AGE-58-54-7428	HTF-1 Pipe Rack Steel Structure Beta Plant - Connection details	STRUCTURAL - 1	vendor	1/23/2013	Approval
6007-PLN-AGE-58-54-7429	HTF-1 Pipe Rack Steel Structure Beta Plant - Connection details	STRUCTURAL - 1	vendor	1/23/2013	Approval
6007-PLN-AGE-58-54-7430	HTF-1 Pipe Rack Steel Structure Beta Plant - Connection details	STRUCTURAL - 1	vendor	1/23/2013	Approval
6007-PLN-AGE-58-54-7431	HTF-1 Pipe Rack Steel Structure Beta Plant - Connection details	STRUCTURAL - 1	vendor	1/23/2013	Approval
6007-PLN-AGE-58-54-7400	HTF-1 Pipe Rack Steel Structure Beta Plant - Cover Sheet	STRUCTURAL - 1	vendor	1/16/2013	Approval
6007-PLN-AGE-58-54-7401	HTF-1 Pipe Rack Steel Structure Beta Plant - General Notes	STRUCTURAL - 1	vendor	1/16/2013	Approval
6007-PLN-AGE-58-54-7402	HTF-1 Pipe Rack Steel Structure Beta Plant - Plan View I	STRUCTURAL - 1	vendor	1/16/2013	Approval
6007-PLN-AGE-58-54-7403	HTF-1 Pipe Rack Steel Structure Beta Plant - Plan View II	STRUCTURAL - 1	vendor	1/16/2013	Approval
6007-PLN-AGE-58-54-7404	HTF-1 Pipe Rack Steel Structure Beta Plant - Elevations I	STRUCTURAL - 1	vendor	1/16/2013	Approval

ABENER TEYMA MOJAVE

Compliance No.:	GEN-2				
Job :	Mojave Solar Project				
Date: 2/17/11	Description: Structural Master Drawing List				
Sheet No.	Description	Applicable Condition of Certification	Vendor Supplied or EOR	Submittal Date	Reason for Submittal
6007-PLN-AGE-58-54-7405	HTF-1 Pipe Rack Steel Structure Beta Plant - Elevations II	STRUCTURAL - 1	vendor	1/16/2013	Approval
6007-PLN-AGE-58-54-7406	HTF-1 Pipe Rack Steel Structure Beta Plant - Elevations III	STRUCTURAL - 1	vendor	1/16/2013	Approval
6007-PLN-AGE-58-54-7407	HTF-1 Pipe Rack Steel Structure Beta Plant - Elevations IV	STRUCTURAL - 1	vendor	1/16/2013	Approval
6007-PLN-AGE-58-54-7408	HTF-1 Pipe Rack Steel Structure Beta Plant - Details I	STRUCTURAL - 1	vendor	1/16/2013	Approval
6007-PLN-AGE-58-54-7409	HTF-1 Pipe Rack Steel Structure Beta Plant - Details II	STRUCTURAL - 1	vendor	1/16/2013	Approval
6007-PLN-AGE-58-54-7410	HTF-1 Pipe Rack Steel Structure Beta Plant - Details III	STRUCTURAL - 1	vendor	1/16/2013	Approval
6007-PLN-AGE-58-54-7411	HTF-1 Pipe Rack Steel Structure Beta Plant - Details IV	STRUCTURAL - 1	vendor	1/16/2013	Approval
6007-CAL-AGE-58-54-3450	Calculation Report for Rack 2 Alpha Plant	STRUCTURAL - 1	vendor	1/25/2013	Approval
6007-CAL-AGE-58-54-7450	Calculation Report for Rack 2 Beta Plant	STRUCTURAL - 1	vendor	1/25/2013	Approval
6007-PLN-AGE-58-54-3450	HTF-2 Pipe Rack Steel Structure Alpha Plant - Cover Sheet	STRUCTURAL - 1	vendor	1/25/2013	Approval
6007-PLN-AGE-58-54-3451	HTF-2 Pipe Rack Steel Structure Alpha Plant - General notes	STRUCTURAL - 1	vendor	1/25/2013	Approval
6007-PLN-AGE-58-54-3452	HTF-2 Pipe Rack Steel Structure Alpha Plant - Plan View I	STRUCTURAL - 1	vendor	1/25/2013	Approval
6007-PLN-AGE-58-54-3453	HTF-2 Pipe Rack Steel Structure Alpha Plant - Plan View II	STRUCTURAL - 1	vendor	1/25/2013	Approval
6007-PLN-AGE-58-54-3454	HTF-2 Pipe Rack Steel Structure Alpha Plant - Plan View III	STRUCTURAL - 1	vendor	1/25/2013	Approval
6007-PLN-AGE-58-54-3455	HTF-2 Pipe Rack Steel Structure Alpha Plant - Plan View IV	STRUCTURAL - 1	vendor	1/25/2013	Approval
6007-PLN-AGE-58-54-3456	HTF-2 Pipe Rack Steel Structure Alpha Plant - Elevations I	STRUCTURAL - 1	vendor	1/25/2013	Approval
6007-PLN-AGE-58-54-3457	HTF-2 Pipe Rack Steel Structure Alpha Plant - Elevations II	STRUCTURAL - 1	vendor	1/25/2013	Approval
6007-PLN-AGE-58-54-3458	HTF-2 Pipe Rack Steel Structure Alpha Plant - Elevations III	STRUCTURAL - 1	vendor	1/25/2013	Approval
6007-PLN-AGE-58-54-3459	HTF-2 Pipe Rack Steel Structure Alpha Plant - Elevations IV	STRUCTURAL - 1	vendor	1/25/2013	Approval
6007-PLN-AGE-58-54-3460	HTF-2 Pipe Rack Steel Structure Alpha Plant - Details I	STRUCTURAL - 1	vendor	1/25/2013	Approval
6007-PLN-AGE-58-54-3461	HTF-2 Pipe Rack Steel Structure Alpha Plant - Details II	STRUCTURAL - 1	vendor	1/25/2013	Approval
6007-PLN-AGE-58-54-3462	HTF-2 Pipe Rack Steel Structure Alpha Plant - Details III	STRUCTURAL - 1	vendor	1/25/2013	Approval
6007-PLN-AGE-58-54-3463	HTF-2 Pipe Rack Steel Structure Alpha Plant - Details IV	STRUCTURAL - 1	vendor	1/25/2013	Approval
6007-PLN-AGE-58-54-3464	HTF-2 Pipe Rack Steel Structure Alpha Plant - Details V	STRUCTURAL - 1	vendor	1/25/2013	Approval
6007-PLN-AGE-58-54-7450	HTF-2 Pipe Rack Steel Structure Beta Plant - Cover Sheet	STRUCTURAL - 1	vendor	1/25/2013	Approval
6007-PLN-AGE-58-54-7451	HTF-2 Pipe Rack Steel Structure Beta Plant - General notes	STRUCTURAL - 1	vendor	1/25/2013	Approval
6007-PLN-AGE-58-54-7452	HTF-2 Pipe Rack Steel Structure Beta Plant - Plan View I	STRUCTURAL - 1	vendor	1/25/2013	Approval
6007-PLN-AGE-58-54-7453	HTF-2 Pipe Rack Steel Structure Beta Plant - Plan View II	STRUCTURAL - 1	vendor	1/25/2013	Approval
6007-PLN-AGE-58-54-7454	HTF-2 Pipe Rack Steel Structure Beta Plant - Plan View III	STRUCTURAL - 1	vendor	1/25/2013	Approval
6007-PLN-AGE-58-54-7455	HTF-2 Pipe Rack Steel Structure Beta Plant - Plan View IV	STRUCTURAL - 1	vendor	1/25/2013	Approval
6007-PLN-AGE-58-54-7456	HTF-2 Pipe Rack Steel Structure Beta Plant - Elevations I	STRUCTURAL - 1	vendor	1/25/2013	Approval
6007-PLN-AGE-58-54-7457	HTF-2 Pipe Rack Steel Structure Beta Plant - Elevations II	STRUCTURAL - 1	vendor	1/25/2013	Approval
6007-PLN-AGE-58-54-7458	HTF-2 Pipe Rack Steel Structure Beta Plant - Elevations III	STRUCTURAL - 1	vendor	1/25/2013	Approval
6007-PLN-AGE-58-54-7459	HTF-2 Pipe Rack Steel Structure Beta Plant - Elevations IV	STRUCTURAL - 1	vendor	1/25/2013	Approval
6007-PLN-AGE-58-54-7460	HTF-2 Pipe Rack Steel Structure Beta Plant - Details I	STRUCTURAL - 1	vendor	1/25/2013	Approval
6007-PLN-AGE-58-54-7461	HTF-2 Pipe Rack Steel Structure Beta Plant - Details II	STRUCTURAL - 1	vendor	1/25/2013	Approval
6007-PLN-AGE-58-54-7462	HTF-2 Pipe Rack Steel Structure Beta Plant - Details III	STRUCTURAL - 1	vendor	1/25/2013	Approval
6007-PLN-AGE-58-54-7463	HTF-2 Pipe Rack Steel Structure Beta Plant - Details IV	STRUCTURAL - 1	vendor	1/25/2013	Approval
6007-PLN-AGE-58-54-7464	HTF-2 Pipe Rack Steel Structure Beta Plant - Details VII	STRUCTURAL - 1	vendor	1/18/2013	Approval
6007-CAL-AGE-58-54-3451	Calculation Report for Rack 2 Alpha Plant	STRUCTURAL - 1	vendor	1/7/2013	Approval
6007-CAL-AGE-58-54-7451	Calculation Report for Rack 2 Beta Plant	STRUCTURAL - 1	vendor	1/7/2013	Approval
6007-PLN-AGE-58-54-3472	HTF-2 Pipe Rack Steel Structure Alpha Plant - Plan View I	STRUCTURAL - 1	vendor	1/9/2013	Approval
6007-PLN-AGE-58-54-3473	HTF-2 Pipe Rack Steel Structure Alpha Plant - Plan View II	STRUCTURAL - 1	vendor	1/9/2013	Approval
6007-PLN-AGE-58-54-3474	HTF-2 Pipe Rack Steel Structure Alpha Plant - Plan View III	STRUCTURAL - 1	vendor	1/9/2013	Approval
6007-PLN-AGE-58-54-3475	HTF-2 Pipe Rack Steel Structure Alpha Plant - Plan View IV	STRUCTURAL - 1	vendor	1/9/2013	Approval
6007-PLN-AGE-58-54-3476	HTF-2 Pipe Rack Steel Structure Alpha Plant - Elevations I	STRUCTURAL - 1	vendor	1/9/2013	Approval
6007-PLN-AGE-58-54-3477	HTF-2 Pipe Rack Steel Structure Alpha Plant - Elevations II	STRUCTURAL - 1	vendor	1/9/2013	Approval
6007-PLN-AGE-58-54-3478	HTF-2 Pipe Rack Steel Structure Alpha Plant - Elevations III	STRUCTURAL - 1	vendor	1/9/2013	Approval
6007-PLN-AGE-58-54-3479	HTF-2 Pipe Rack Steel Structure Alpha Plant - Elevations IV	STRUCTURAL - 1	vendor	1/9/2013	Approval
6007-PLN-AGE-58-54-3480	HTF-2 Pipe Rack Steel Structure Alpha Plant - Connections Details	STRUCTURAL - 1	vendor	1/9/2013	Approval
6007-PLN-AGE-58-54-3481	HTF-2 Pipe Rack Steel Structure Alpha Plant - Connections Details	STRUCTURAL - 1	vendor	1/9/2013	Approval
6007-PLN-AGE-58-54-3482	HTF-2 Pipe Rack Steel Structure Alpha Plant - Connections Details	STRUCTURAL - 1	vendor	1/9/2013	Approval
6007-PLN-AGE-58-54-3483	HTF-2 Pipe Rack Steel Structure Alpha Plant - Connections Details	STRUCTURAL - 1	vendor	1/9/2013	Approval
6007-PLN-AGE-58-54-7472	HTF-2 Pipe Rack Steel Structure Beta Plant - Plan View I	STRUCTURAL - 1	vendor	1/9/2013	Approval
6007-PLN-AGE-58-54-7473	HTF-2 Pipe Rack Steel Structure Beta Plant - Plan View II	STRUCTURAL - 1	vendor	1/9/2013	Approval
6007-PLN-AGE-58-54-7474	HTF-2 Pipe Rack Steel Structure Beta Plant - Plan View III	STRUCTURAL - 1	vendor	1/9/2013	Approval
6007-PLN-AGE-58-54-7475	HTF-2 Pipe Rack Steel Structure Beta Plant - Plan View IV	STRUCTURAL - 1	vendor	1/9/2013	Approval
6007-PLN-AGE-58-54-7476	HTF-2 Pipe Rack Steel Structure Beta Plant - Elevations I	STRUCTURAL - 1	vendor	1/9/2013	Approval
6007-PLN-AGE-58-54-7477	HTF-2 Pipe Rack Steel Structure Beta Plant - Elevations II	STRUCTURAL - 1	vendor	1/9/2013	Approval
6007-PLN-AGE-58-54-7478	HTF-2 Pipe Rack Steel Structure Beta Plant - Elevations III	STRUCTURAL - 1	vendor	1/9/2013	Approval
6007-PLN-AGE-58-54-7479	HTF-2 Pipe Rack Steel Structure Beta Plant - Elevations IV	STRUCTURAL - 1	vendor	1/9/2013	Approval
6007-PLN-AGE-58-54-7480	HTF-2 Pipe Rack Steel Structure Beta Plant - Connections Details	STRUCTURAL - 1	vendor	1/9/2013	Approval
6007-PLN-AGE-58-54-7481	HTF-2 Pipe Rack Steel Structure Beta Plant - Connections Details	STRUCTURAL - 1	vendor	1/9/2013	Approval
6007-PLN-AGE-58-54-7482	HTF-2 Pipe Rack Steel Structure Beta Plant - Connections Details	STRUCTURAL - 1	vendor	1/9/2013	Approval
6007-PLN-AGE-58-54-7483	HTF-2 Pipe Rack Steel Structure Beta Plant - Connections Details	STRUCTURAL - 1	vendor	1/9/2013	Approval
6007-PLN-AGE-57-52-3302	End supply return loops foundation - NE field Foundations plan I - Alpha	STRUCTURAL - 1	vendor	1/21/2013	Approval
6007-PLN-AGE-57-52-3303	End supply return loops foundation - NE field Foundations plan II - Alpha	STRUCTURAL - 1	vendor	1/21/2013	Approval
6007-PLN-AGE-57-52-3304	End supply return loops foundation - NE field Coordinates I - Alpha	STRUCTURAL - 1	vendor	1/21/2013	Approval
6007-PLN-AGE-57-52-3305	End supply return loops foundation - NE field Coordinates II - Alpha	STRUCTURAL - 1	vendor	1/21/2013	Approval
6007-PLN-AGE-57-52-3312	End supply return loops foundation - E field Foundations plan I - Alpha	STRUCTURAL - 1	vendor	1/21/2013	Approval
6007-PLN-AGE-57-52-3313	End supply return loops foundation - E field Foundations plan II - Alpha	STRUCTURAL - 1	vendor	1/21/2013	Approval
6007-PLN-AGE-57-52-3314	End supply return loops foundation - E field Foundations plan III - Alpha	STRUCTURAL - 1	vendor	1/21/2013	Approval
6007-PLN-AGE-57-52-3315	End supply return loops foundation - E field Foundations plan IV - Alpha	STRUCTURAL - 1	vendor	1/21/2013	Approval
6007-PLN-AGE-57-52-3316	End supply return loops foundation - E field Foundations plan V - Alpha	STRUCTURAL - 1	vendor	1/21/2013	Approval
6007-PLN-AGE-57-52-3317	End supply return loops foundation - E field Foundations plan VI - Alpha	STRUCTURAL - 1	vendor	1/21/2013	Approval
6007-PLN-AGE-57-52-3318	End supply return loops foundation - E field Foundations plan VII - Alpha	STRUCTURAL - 1	vendor	1/21/2013	Approval

ABENER TEYMA MOJAVE

Compliance No.:	GEN-2				
Job :	Mojave Solar Project				
Date: 2/17/11	Description: Structural Master Drawing List				
Sheet No.	Description	Applicable Condition of Certification	Vendor Supplied or EOR	Submittal Date	Reason for Submittal
6007-PLN-AGE-57-52-3319	End supply return loops foundation - E field Coordinates I - Alpha	STRUCTURAL - 1	vendor	1/21/2013	Approval
6007-PLN-AGE-57-52-3320	End supply return loops foundation - E field Coordinates II - Alpha	STRUCTURAL - 1	vendor	1/21/2013	Approval
6007-PLN-AGE-57-52-3321	End supply return loops foundation - E field Coordinates III - Alpha	STRUCTURAL - 1	vendor	1/21/2013	Approval
6007-PLN-AGE-57-52-3322	End supply return loops foundation - E field Coordinates IV - Alpha	STRUCTURAL - 1	vendor	1/21/2013	Approval
6007-PLN-AGE-57-52-3323	End supply return loops foundation - E field Coordinates V - Alpha	STRUCTURAL - 1	vendor	1/21/2013	Approval
6007-PLN-AGE-57-52-3324	End supply return loops foundation - E field Coordinates VI - Alpha	STRUCTURAL - 1	vendor	1/21/2013	Approval
6007-PLN-AGE-57-52-3325	End supply return loops foundation - E field Coordinates VII - Alpha	STRUCTURAL - 1	vendor	1/21/2013	Approval
6007-PLN-AGE-57-52-3352	End supply return loops foundation - NW field Foundations plan I - Alpha	STRUCTURAL - 1	vendor	1/21/2013	Approval
6007-PLN-AGE-57-52-3353	End supply return loops foundation - NW field Foundations plan II - Alpha	STRUCTURAL - 1	vendor	1/21/2013	Approval
6007-PLN-AGE-57-52-3354	End supply return loops foundation - NW field Foundations plan III - Alpha	STRUCTURAL - 1	vendor	1/21/2013	Approval
6007-PLN-AGE-57-52-3355	End supply return loops foundation - NW field Foundations plan IV - Alpha	STRUCTURAL - 1	vendor	1/21/2013	Approval
6007-PLN-AGE-57-52-3356	End supply return loops foundation - NW field Foundations plan V - Alpha	STRUCTURAL - 1	vendor	1/21/2013	Approval
6007-PLN-AGE-57-52-3357	End supply return loops foundation - NW field Coordinates I - Alpha	STRUCTURAL - 1	vendor	1/21/2013	Approval
6007-PLN-AGE-57-52-3358	End supply return loops foundation - NW field Coordinates II - Alpha	STRUCTURAL - 1	vendor	1/21/2013	Approval
6007-PLN-AGE-57-52-3359	End supply return loops foundation - NW field Coordinates III - Alpha	STRUCTURAL - 1	vendor	1/21/2013	Approval
6007-PLN-AGE-57-52-3360	End supply return loops foundation - NW field Coordinates IV - Alpha	STRUCTURAL - 1	vendor	1/21/2013	Approval
6007-PLN-AGE-57-52-3361	End supply return loops foundation - NW field Coordinates V - Alpha	STRUCTURAL - 1	vendor	1/21/2013	Approval
6007-PLN-AGE-57-52-3372	End supply return loops foundation - W field Foundations plan I - Alpha	STRUCTURAL - 1	vendor	1/21/2013	Approval
6007-PLN-AGE-57-52-3373	End supply return loops foundation - W field Foundations plan II - Alpha	STRUCTURAL - 1	vendor	1/21/2013	Approval
6007-PLN-AGE-57-52-3374	End supply return loops foundation - W field Foundations plan III - Alpha	STRUCTURAL - 1	vendor	1/21/2013	Approval
6007-PLN-AGE-57-52-3375	End supply return loops foundation - W field Foundations plan IV - Alpha	STRUCTURAL - 1	vendor	1/21/2013	Approval
6007-PLN-AGE-57-52-3376	End supply return loops foundation - W field Foundations plan V - Alpha	STRUCTURAL - 1	vendor	1/21/2013	Approval
6007-PLN-AGE-57-52-3377	End supply return loops foundation - W field Foundations plan VI - Alpha	STRUCTURAL - 1	vendor	1/21/2013	Approval
6007-PLN-AGE-57-52-3378	End supply return loops foundation - W field Coordinates I - Alpha	STRUCTURAL - 1	vendor	1/21/2013	Approval
6007-PLN-AGE-57-52-3379	End supply return loops foundation - W field Coordinates II - Alpha	STRUCTURAL - 1	vendor	1/21/2013	Approval
6007-PLN-AGE-57-52-3380	End supply return loops foundation - W field Coordinates III - Alpha	STRUCTURAL - 1	vendor	1/21/2013	Approval
6007-PLN-AGE-57-52-3381	End supply return loops foundation - W field Coordinates IV - Alpha	STRUCTURAL - 1	vendor	1/21/2013	Approval
6007-PLN-AGE-57-52-3382	End supply return loops foundation - W field Coordinates V - Alpha	STRUCTURAL - 1	vendor	1/21/2013	Approval
6007-PLN-AGE-57-52-3383	End supply return loops foundation - W field Coordinates VI - Alpha	STRUCTURAL - 1	vendor	1/21/2013	Approval
6007-PLN-AGE-57-52-5000	End supply return loops foundation - Alpha & Beta - Cover Sheet	STRUCTURAL - 1	vendor	1/21/2013	Approval
6007-PLN-AGE-57-52-5001	End supply return loops foundation - Alpha - North east	STRUCTURAL - 1	vendor	1/21/2013	Approval
6007-PLN-AGE-57-52-5002	End supply return loops foundation - Alpha - East	STRUCTURAL - 1	vendor	1/21/2013	Approval
6007-PLN-AGE-57-52-5003	End supply return loops foundation - Alpha - North west	STRUCTURAL - 1	vendor	1/21/2013	Approval
6007-PLN-AGE-57-52-5004	End supply return loops foundation - Alpha - West	STRUCTURAL - 1	vendor	1/21/2013	Approval
6007-PLN-AGE-57-52-5005	End supply return loops foundation - Beta - North	STRUCTURAL - 1	vendor	1/21/2013	Approval
6007-PLN-AGE-57-52-5006	End supply return loops foundation - Beta - East	STRUCTURAL - 1	vendor	1/21/2013	Approval
6007-PLN-AGE-57-52-5007	End supply return loops foundation - Beta - South	STRUCTURAL - 1	vendor	1/21/2013	Approval
6007-PLN-AGE-57-52-5008	End supply return loops foundation - Beta - West and Far west	STRUCTURAL - 1	vendor	1/21/2013	Approval
6007-PLN-AGE-57-52-7302	End supply return loops foundation - E field Foundations plan I - Beta	STRUCTURAL - 1	vendor	1/21/2013	Approval
6007-PLN-AGE-57-52-7303	End supply return loops foundation - E field Foundations plan II - Beta	STRUCTURAL - 1	vendor	1/21/2013	Approval
6007-PLN-AGE-57-52-7304	End supply return loops foundation - E field Foundations plan III - Beta	STRUCTURAL - 1	vendor	1/21/2013	Approval
6007-PLN-AGE-57-52-7305	End supply return loops foundation - E field Coordinates I - Beta	STRUCTURAL - 1	vendor	1/21/2013	Approval
6007-PLN-AGE-57-52-7306	End supply return loops foundation - E field Coordinates II - Beta	STRUCTURAL - 1	vendor	1/21/2013	Approval
6007-PLN-AGE-57-52-7307	End supply return loops foundation - E field Coordinates III - Beta	STRUCTURAL - 1	vendor	1/21/2013	Approval
6007-PLN-AGE-57-52-7312	End supply return loops foundation - S field Foundations plan I - Beta	STRUCTURAL - 1	vendor	1/21/2013	Approval
6007-PLN-AGE-57-52-7313	End supply return loops foundation - S field Foundations plan II - Beta	STRUCTURAL - 1	vendor	1/21/2013	Approval
6007-PLN-AGE-57-52-7314	End supply return loops foundation - S field Foundations plan III - Beta	STRUCTURAL - 1	vendor	1/21/2013	Approval
6007-PLN-AGE-57-52-7315	End supply return loops foundation - S field Foundations plan IV - Beta	STRUCTURAL - 1	vendor	1/21/2013	Approval
6007-PLN-AGE-57-52-7316	End supply return loops foundation - S field Foundations plan V - Beta	STRUCTURAL - 1	vendor	1/21/2013	Approval
6007-PLN-AGE-57-52-7317	End supply return loops foundation - S field Foundations plan VI - Beta	STRUCTURAL - 1	vendor	1/21/2013	Approval
6007-PLN-AGE-57-52-7318	End supply return loops foundation - S field Foundations plan I - Beta	STRUCTURAL - 1	vendor	1/21/2013	Approval
6007-PLN-AGE-57-52-7319	End supply return loops foundation - S field Foundations plan II - Beta	STRUCTURAL - 1	vendor	1/21/2013	Approval
6007-PLN-AGE-57-52-7320	End supply return loops foundation - S field Foundations plan III - Beta	STRUCTURAL - 1	vendor	1/21/2013	Approval
6007-PLN-AGE-57-52-7321	End supply return loops foundation - S field Foundations plan IV - Beta	STRUCTURAL - 1	vendor	1/21/2013	Approval
6007-PLN-AGE-57-52-7322	End supply return loops foundation - S field Foundations plan V - Beta	STRUCTURAL - 1	vendor	1/21/2013	Approval
6007-PLN-AGE-57-52-7323	End supply return loops foundation - S field Foundations plan VI - Beta	STRUCTURAL - 1	vendor	1/21/2013	Approval
6007-PLN-AGE-57-52-7352	End supply return loops foundation - N field Foundations plan I - Beta	STRUCTURAL - 1	vendor	1/21/2013	Approval
6007-PLN-AGE-57-52-7353	End supply return loops foundation - N field Foundations plan II - Beta	STRUCTURAL - 1	vendor	1/21/2013	Approval
6007-PLN-AGE-57-52-7354	End supply return loops foundation - N field Foundations plan III - Beta	STRUCTURAL - 1	vendor	1/21/2013	Approval
6007-PLN-AGE-57-52-7355	End supply return loops foundation - N field Foundations plan IV - Beta	STRUCTURAL - 1	vendor	1/21/2013	Approval
6007-PLN-AGE-57-52-7356	End supply return loops foundation - N field Foundations plan V - Beta	STRUCTURAL - 1	vendor	1/21/2013	Approval
6007-PLN-AGE-57-52-7357	End supply return loops foundation - N field Foundations plan VI - Beta	STRUCTURAL - 1	vendor	1/21/2013	Approval
6007-PLN-AGE-57-52-7358	End supply return loops foundation - N field Coordinates I - Beta	STRUCTURAL - 1	vendor	1/21/2013	Approval
6007-PLN-AGE-57-52-7359	End supply return loops foundation - N field Coordinates II - Beta	STRUCTURAL - 1	vendor	1/21/2013	Approval
6007-PLN-AGE-57-52-7360	End supply return loops foundation - N field Coordinates III - Beta	STRUCTURAL - 1	vendor	1/21/2013	Approval
6007-PLN-AGE-57-52-7361	End supply return loops foundation - N field Coordinates IV - Beta	STRUCTURAL - 1	vendor	1/21/2013	Approval
6007-PLN-AGE-57-52-7362	End supply return loops foundation - N field Coordinates V - Beta	STRUCTURAL - 1	vendor	1/21/2013	Approval
6007-PLN-AGE-57-52-7363	End supply return loops foundation - N field Coordinates VI - Beta	STRUCTURAL - 1	vendor	1/21/2013	Approval
6007-PLN-AGE-57-52-7372	End supply return loops foundation - W and FW field Foundations plan I - Beta	STRUCTURAL - 1	vendor	1/21/2013	Approval
6007-PLN-AGE-57-52-7373	End supply return loops foundation - W and FW field Foundations plan II - Beta	STRUCTURAL - 1	vendor	1/21/2013	Approval
6007-PLN-AGE-57-52-7374	End supply return loops foundation - W and FW field Foundations plan III - Beta	STRUCTURAL - 1	vendor	1/21/2013	Approval
6007-PLN-AGE-57-52-7375	End supply return loops foundation - W and FW field Foundations plan IV - Beta	STRUCTURAL - 1	vendor	1/21/2013	Approval
6007-PLN-AGE-57-52-7376	End supply return loops foundation - W and FW field Foundations plan V - Beta	STRUCTURAL - 1	vendor	1/21/2013	Approval
6007-PLN-AGE-57-52-7377	End supply return loops foundation - W and FW field Foundations plan VI - Beta	STRUCTURAL - 1	vendor	1/21/2013	Approval
6007-PLN-AGE-57-52-7378	End supply return loops foundation - W and FW field Coordinates I - Beta	STRUCTURAL - 1	vendor	1/21/2013	Approval
6007-PLN-AGE-57-52-7379	End supply return loops foundation - W and FW field Coordinates II - Beta	STRUCTURAL - 1	vendor	1/21/2013	Approval

ABENER TEYMA MOJAVE

Compliance No.:	GEN-2				
Job :	Mojave Solar Project				
Date: 2/17/11	Description: Structural Master Drawing List				
Sheet No.	Description	Applicable Condition of Certification	Vendor Supplied or EOR	Submittal Date	Reason for Submittal
6007-PLN-AGE-57-52-7380	End supply return loops foundation - W and FW field Coordinates III - Beta	STRUCTURAL - 1	vendor	1/21/2013	Approval
6007-PLN-AGE-57-52-7381	End supply return loops foundation - W and FW field Coordinates IV - Beta	STRUCTURAL - 1	vendor	1/21/2013	Approval
6007-PLN-AGE-57-52-7382	End supply return loops foundation - W and FW field Coordinates V - Beta	STRUCTURAL - 1	vendor	1/21/2013	Approval
6007-PLN-AGE-57-52-7383	End supply return loops foundation - W and FW field Coordinates VI - Beta	STRUCTURAL - 1	vendor	1/21/2013	Approval
6007-PLN-AGE-57-52-7383	End supply return loops foundation - W and FW field Coordinates VI - Beta	STRUCTURAL - 1	vendor	1/21/2013	Approval
6007-PLN-AGE-21-52-2052	Alpha plant - Steam generators evaporators foundations - Foundation plan	STRUCTURAL - 1	vendor	1/24/2013	Approval
6007-PLN-AGE-21-52-6052	Beta plant - Steam generators evaporators foundations - Foundation plan	STRUCTURAL - 1	vendor	1/24/2013	Approval
6007-CAL-AGE-58-54-3400	Calculation Report for Rack 1 Alpha Plant	STRUCTURAL - 1	vendor	1/25/2013	Approval
6007-CAL-AGE-58-54-3401	Calculation Report for Rack 1 Steel Frame Connection Design Alpha Plant	STRUCTURAL - 1	vendor	1/25/2013	Approval
6007-CAL-AGE-58-54-7401	Calculation Report for Rack 1 Steel Frame Connection Design Beta Plant	STRUCTURAL - 1	vendor	1/25/2013	Approval
6007-CAL-AGE-58-54-7400	Calculation Report for Rack 1 Beta Plant	STRUCTURAL - 1	vendor	1/25/2013	Approval
6007-PLN-AGE-58-54-3400	HTF-1 Pipe Rack Steel Structure Alpha Plant - Cover Sheet	STRUCTURAL - 1	vendor	1/25/2013	Approval
6007-PLN-AGE-58-54-3401	HTF-1 Pipe Rack Steel Structure Alpha Plant - General Notes	STRUCTURAL - 1	vendor	1/25/2013	Approval
6007-PLN-AGE-58-54-3402	HTF-1 Pipe Rack Steel Structure Alpha Plant - Plan View I	STRUCTURAL - 1	vendor	1/25/2013	Approval
6007-PLN-AGE-58-54-3403	HTF-1 Pipe Rack Steel Structure Alpha Plant - Plan View II	STRUCTURAL - 1	vendor	1/25/2013	Approval
6007-PLN-AGE-58-54-3404	HTF-1 Pipe Rack Steel Structure Alpha Plant - Elevations I	STRUCTURAL - 1	vendor	1/25/2013	Approval
6007-PLN-AGE-58-54-3405	HTF-1 Pipe Rack Steel Structure Alpha Plant - Elevations II	STRUCTURAL - 1	vendor	1/25/2013	Approval
6007-PLN-AGE-58-54-3406	HTF-1 Pipe Rack Steel Structure Alpha Plant - Elevations III	STRUCTURAL - 1	vendor	1/25/2013	Approval
6007-PLN-AGE-58-54-3407	HTF-1 Pipe Rack Steel Structure Alpha Plant - Elevations IV	STRUCTURAL - 1	vendor	1/25/2013	Approval
6007-PLN-AGE-58-54-3408	HTF-1 Pipe Rack Steel Structure Alpha Plant - Details I	STRUCTURAL - 1	vendor	1/25/2013	Approval
6007-PLN-AGE-58-54-3409	HTF-1 Pipe Rack Steel Structure Alpha Plant - Details II	STRUCTURAL - 1	vendor	1/25/2013	Approval
6007-PLN-AGE-58-54-3410	HTF-1 Pipe Rack Steel Structure Alpha Plant - Details III	STRUCTURAL - 1	vendor	1/25/2013	Approval
6007-PLN-AGE-58-54-3411	HTF-1 Pipe Rack Steel Structure Alpha Plant - Details IV	STRUCTURAL - 1	vendor	1/25/2013	Approval
6007-PLN-AGE-58-54-3422	HTF-1 Pipe Rack Steel Structure Alpha Plant - Plan View I	STRUCTURAL - 1	vendor	1/25/2013	Approval
6007-PLN-AGE-58-54-3423	HTF-1 Pipe Rack Steel Structure Alpha Plant - Plan View II	STRUCTURAL - 1	vendor	1/25/2013	Approval
6007-PLN-AGE-58-54-3424	HTF-1 Pipe Rack Steel Structure Alpha Plant - Elevations I	STRUCTURAL - 1	vendor	1/25/2013	Approval
6007-PLN-AGE-58-54-3425	HTF-1 Pipe Rack Steel Structure Alpha Plant - Elevations II	STRUCTURAL - 1	vendor	1/25/2013	Approval
6007-PLN-AGE-58-54-3426	HTF-1 Pipe Rack Steel Structure Alpha Plant - Elevations III	STRUCTURAL - 1	vendor	1/25/2013	Approval
6007-PLN-AGE-58-54-3427	HTF-1 Pipe Rack Steel Structure Alpha Plant - Elevations IV	STRUCTURAL - 1	vendor	1/25/2013	Approval
6007-PLN-AGE-58-54-3428	HTF-1 Pipe Rack Steel Structure Alpha Plant - Connection details	STRUCTURAL - 1	vendor	1/25/2013	Approval
6007-PLN-AGE-58-54-3429	HTF-1 Pipe Rack Steel Structure Alpha Plant - Connection details	STRUCTURAL - 1	vendor	1/25/2013	Approval
6007-PLN-AGE-58-54-3430	HTF-1 Pipe Rack Steel Structure Alpha Plant - Connection details	STRUCTURAL - 1	vendor	1/25/2013	Approval
6007-PLN-AGE-58-54-3431	HTF-1 Pipe Rack Steel Structure Alpha Plant - Connection details	STRUCTURAL - 1	vendor	1/25/2013	Approval
6007-PLN-AGE-58-54-7422	HTF-1 Pipe Rack Steel Structure Beta Plant - Plan View I	STRUCTURAL - 1	vendor	1/25/2013	Approval
6007-PLN-AGE-58-54-7423	HTF-1 Pipe Rack Steel Structure Beta Plant - Plan View II	STRUCTURAL - 1	vendor	1/25/2013	Approval
6007-PLN-AGE-58-54-7424	HTF-1 Pipe Rack Steel Structure Beta Plant - Elevations I	STRUCTURAL - 1	vendor	1/25/2013	Approval
6007-PLN-AGE-58-54-7425	HTF-1 Pipe Rack Steel Structure Beta Plant - Elevations II	STRUCTURAL - 1	vendor	1/25/2013	Approval
6007-PLN-AGE-58-54-7426	HTF-1 Pipe Rack Steel Structure Beta Plant - Elevations III	STRUCTURAL - 1	vendor	1/25/2013	Approval
6007-PLN-AGE-58-54-7427	HTF-1 Pipe Rack Steel Structure Beta Plant - Elevations IV	STRUCTURAL - 1	vendor	1/25/2013	Approval
6007-PLN-AGE-58-54-7428	HTF-1 Pipe Rack Steel Structure Beta Plant - Connection details	STRUCTURAL - 1	vendor	1/25/2013	Approval
6007-PLN-AGE-58-54-7429	HTF-1 Pipe Rack Steel Structure Beta Plant - Connection details	STRUCTURAL - 1	vendor	1/25/2013	Approval
6007-PLN-AGE-58-54-7430	HTF-1 Pipe Rack Steel Structure Beta Plant - Connection details	STRUCTURAL - 1	vendor	1/25/2013	Approval
6007-PLN-AGE-58-54-7431	HTF-1 Pipe Rack Steel Structure Beta Plant - Connection details	STRUCTURAL - 1	vendor	1/25/2013	Approval
6007-PLN-AGE-58-54-7400	HTF-1 Pipe Rack Steel Structure Beta Plant - Cover Sheet	STRUCTURAL - 1	vendor	1/25/2013	Approval
6007-PLN-AGE-58-54-7401	HTF-1 Pipe Rack Steel Structure Beta Plant - General Notes	STRUCTURAL - 1	vendor	1/25/2013	Approval
6007-PLN-AGE-58-54-7402	HTF-1 Pipe Rack Steel Structure Beta Plant - Plan View I	STRUCTURAL - 1	vendor	1/25/2013	Approval
6007-PLN-AGE-58-54-7403	HTF-1 Pipe Rack Steel Structure Beta Plant - Plan View II	STRUCTURAL - 1	vendor	1/25/2013	Approval
6007-PLN-AGE-58-54-7404	HTF-1 Pipe Rack Steel Structure Beta Plant - Elevations I	STRUCTURAL - 1	vendor	1/25/2013	Approval
6007-PLN-AGE-58-54-7405	HTF-1 Pipe Rack Steel Structure Beta Plant - Elevations II	STRUCTURAL - 1	vendor	1/25/2013	Approval
6007-PLN-AGE-58-54-7406	HTF-1 Pipe Rack Steel Structure Beta Plant - Elevations III	STRUCTURAL - 1	vendor	1/25/2013	Approval
6007-PLN-AGE-58-54-7407	HTF-1 Pipe Rack Steel Structure Beta Plant - Elevations IV	STRUCTURAL - 1	vendor	1/25/2013	Approval
6007-PLN-AGE-58-54-7408	HTF-1 Pipe Rack Steel Structure Beta Plant - Details I	STRUCTURAL - 1	vendor	1/25/2013	Approval
6007-PLN-AGE-58-54-7409	HTF-1 Pipe Rack Steel Structure Beta Plant - Details II	STRUCTURAL - 1	vendor	1/25/2013	Approval
6007-PLN-AGE-58-54-7410	HTF-1 Pipe Rack Steel Structure Beta Plant - Details III	STRUCTURAL - 1	vendor	1/25/2013	Approval
6007-PLN-AGE-58-54-7411	HTF-1 Pipe Rack Steel Structure Beta Plant - Details IV	STRUCTURAL - 1	vendor	1/25/2013	Approval
6007-CAL-AGE-58-54-3450	Calculation Report for Rack 2 Alpha Plant	STRUCTURAL - 1	vendor	1/29/2013	Approval
6007-CAL-AGE-58-54-7450	Calculation Report for Rack 2 Beta Plant	STRUCTURAL - 1	vendor	1/29/2013	Approval
6007-PLN-AGE-58-54-3450	HTF-2 Pipe Rack Steel Structure Alpha Plant - Cover Sheet	STRUCTURAL - 1	vendor	1/29/2013	Approval
6007-PLN-AGE-58-54-3451	HTF-2 Pipe Rack Steel Structure Alpha Plant - General notes	STRUCTURAL - 1	vendor	1/29/2013	Approval
6007-PLN-AGE-58-54-3452	HTF-2 Pipe Rack Steel Structure Alpha Plant - Plan View I	STRUCTURAL - 1	vendor	1/29/2013	Approval
6007-PLN-AGE-58-54-3453	HTF-2 Pipe Rack Steel Structure Alpha Plant - Plan View II	STRUCTURAL - 1	vendor	1/29/2013	Approval
6007-PLN-AGE-58-54-3454	HTF-2 Pipe Rack Steel Structure Alpha Plant - Plan View III	STRUCTURAL - 1	vendor	1/29/2013	Approval
6007-PLN-AGE-58-54-3455	HTF-2 Pipe Rack Steel Structure Alpha Plant - Plan View IV	STRUCTURAL - 1	vendor	1/29/2013	Approval
6007-PLN-AGE-58-54-3456	HTF-2 Pipe Rack Steel Structure Alpha Plant - Elevations I	STRUCTURAL - 1	vendor	1/29/2013	Approval
6007-PLN-AGE-58-54-3457	HTF-2 Pipe Rack Steel Structure Alpha Plant - Elevations II	STRUCTURAL - 1	vendor	1/29/2013	Approval
6007-PLN-AGE-58-54-3458	HTF-2 Pipe Rack Steel Structure Alpha Plant - Elevations III	STRUCTURAL - 1	vendor	1/29/2013	Approval
6007-PLN-AGE-58-54-3459	HTF-2 Pipe Rack Steel Structure Alpha Plant - Elevations IV	STRUCTURAL - 1	vendor	1/29/2013	Approval
6007-PLN-AGE-58-54-3460	HTF-2 Pipe Rack Steel Structure Alpha Plant - Details I	STRUCTURAL - 1	vendor	1/29/2013	Approval
6007-PLN-AGE-58-54-3461	HTF-2 Pipe Rack Steel Structure Alpha Plant - Details II	STRUCTURAL - 1	vendor	1/29/2013	Approval
6007-PLN-AGE-58-54-3462	HTF-2 Pipe Rack Steel Structure Alpha Plant - Details III	STRUCTURAL - 1	vendor	1/29/2013	Approval
6007-PLN-AGE-58-54-3463	HTF-2 Pipe Rack Steel Structure Alpha Plant - Details IV	STRUCTURAL - 1	vendor	1/29/2013	Approval
6007-PLN-AGE-58-54-3464	HTF-2 Pipe Rack Steel Structure Alpha Plant - Details V	STRUCTURAL - 1	vendor	1/29/2013	Approval
6007-PLN-AGE-58-54-7450	HTF-2 Pipe Rack Steel Structure Beta Plant - Cover Sheet	STRUCTURAL - 1	vendor	1/29/2013	Approval
6007-PLN-AGE-58-54-7451	HTF-2 Pipe Rack Steel Structure Beta Plant - General notes	STRUCTURAL - 1	vendor	1/29/2013	Approval
6007-PLN-AGE-58-54-7452	HTF-2 Pipe Rack Steel Structure Beta Plant - Plan View I	STRUCTURAL - 1	vendor	1/29/2013	Approval
6007-PLN-AGE-58-54-7453	HTF-2 Pipe Rack Steel Structure Beta Plant - Plan View II	STRUCTURAL - 1	vendor	1/29/2013	Approval

ABENER TEYMA MOJAVE

Compliance No.:	GEN-2				
Job :	Mojave Solar Project				
Date: 2/17/11	Description: Structural Master Drawing List				
Sheet No.	Description	Applicable Condition of Certification	Vendor Supplied or EOR	Submittal Date	Reason for Submittal
6007-PLN-AGE-58-54-7454	HTF-2 Pipe Rack Steel Structure Beta Plant - Plan View III	STRUCTURAL - 1	vendor	1/29/2013	Approval
6007-PLN-AGE-58-54-7455	HTF-2 Pipe Rack Steel Structure Beta Plant - Plan View IV	STRUCTURAL - 1	vendor	1/29/2013	Approval
6007-PLN-AGE-58-54-7456	HTF-2 Pipe Rack Steel Structure Beta Plant - Elevations I	STRUCTURAL - 1	vendor	1/29/2013	Approval
6007-PLN-AGE-58-54-7457	HTF-2 Pipe Rack Steel Structure Beta Plant - Elevations II	STRUCTURAL - 1	vendor	1/29/2013	Approval
6007-PLN-AGE-58-54-7458	HTF-2 Pipe Rack Steel Structure Beta Plant - Elevations III	STRUCTURAL - 1	vendor	1/29/2013	Approval
6007-PLN-AGE-58-54-7459	HTF-2 Pipe Rack Steel Structure Beta Plant - Elevations IV	STRUCTURAL - 1	vendor	1/29/2013	Approval
6007-PLN-AGE-58-54-7460	HTF-2 Pipe Rack Steel Structure Beta Plant - Details I	STRUCTURAL - 1	vendor	1/29/2013	Approval
6007-PLN-AGE-58-54-7461	HTF-2 Pipe Rack Steel Structure Beta Plant - Details II	STRUCTURAL - 1	vendor	1/29/2013	Approval
6007-PLN-AGE-58-54-7462	HTF-2 Pipe Rack Steel Structure Beta Plant - Details III	STRUCTURAL - 1	vendor	1/29/2013	Approval
6007-PLN-AGE-58-54-7463	HTF-2 Pipe Rack Steel Structure Beta Plant - Details IV	STRUCTURAL - 1	vendor	1/29/2013	Approval
6007-PLN-AGE-58-54-7464	HTF-2 Pipe Rack Steel Structure Beta Plant - Details VII	STRUCTURAL - 1	vendor	1/29/2013	Approval
6007-CAL-AGE-58-54-3451	Calculation Report for Rack 2 Alpha Plant	STRUCTURAL - 1	vendor	1/30/2013	Approval
6007-CAL-AGE-58-54-7451	Calculation Report for Rack 2 Beta Plant	STRUCTURAL - 1	vendor	1/30/2013	Approval
6007-PLN-AGE-58-54-3472	HTF-2 Pipe Rack Steel Structure Alpha Plant - Plan View I	STRUCTURAL - 1	vendor	1/30/2013	Approval
6007-PLN-AGE-58-54-3473	HTF-2 Pipe Rack Steel Structure Alpha Plant - Plan View II	STRUCTURAL - 1	vendor	1/30/2013	Approval
6007-PLN-AGE-58-54-3474	HTF-2 Pipe Rack Steel Structure Alpha Plant - Plan View III	STRUCTURAL - 1	vendor	1/30/2013	Approval
6007-PLN-AGE-58-54-3475	HTF-2 Pipe Rack Steel Structure Alpha Plant - Plan View IV	STRUCTURAL - 1	vendor	1/30/2013	Approval
6007-PLN-AGE-58-54-3476	HTF-2 Pipe Rack Steel Structure Alpha Plant - Elevations I	STRUCTURAL - 1	vendor	1/30/2013	Approval
6007-PLN-AGE-58-54-3477	HTF-2 Pipe Rack Steel Structure Alpha Plant - Elevations II	STRUCTURAL - 1	vendor	1/30/2013	Approval
6007-PLN-AGE-58-54-3478	HTF-2 Pipe Rack Steel Structure Alpha Plant - Elevations III	STRUCTURAL - 1	vendor	1/30/2013	Approval
6007-PLN-AGE-58-54-3479	HTF-2 Pipe Rack Steel Structure Alpha Plant - Elevations IV	STRUCTURAL - 1	vendor	1/30/2013	Approval
6007-PLN-AGE-58-54-3480	HTF-2 Pipe Rack Steel Structure Alpha Plant - Connections Details	STRUCTURAL - 1	vendor	1/30/2013	Approval
6007-PLN-AGE-58-54-3481	HTF-2 Pipe Rack Steel Structure Alpha Plant - Connections Details	STRUCTURAL - 1	vendor	1/30/2013	Approval
6007-PLN-AGE-58-54-3482	HTF-2 Pipe Rack Steel Structure Alpha Plant - Connections Details	STRUCTURAL - 1	vendor	1/30/2013	Approval
6007-PLN-AGE-58-54-3483	HTF-2 Pipe Rack Steel Structure Alpha Plant - Connections Details	STRUCTURAL - 1	vendor	1/30/2013	Approval
6007-PLN-AGE-58-54-7472	HTF-2 Pipe Rack Steel Structure Beta Plant - Plan View I	STRUCTURAL - 1	vendor	1/30/2013	Approval
6007-PLN-AGE-58-54-7473	HTF-2 Pipe Rack Steel Structure Beta Plant - Plan View II	STRUCTURAL - 1	vendor	1/30/2013	Approval
6007-PLN-AGE-58-54-7474	HTF-2 Pipe Rack Steel Structure Beta Plant - Plan View III	STRUCTURAL - 1	vendor	1/30/2013	Approval
6007-PLN-AGE-58-54-7475	HTF-2 Pipe Rack Steel Structure Beta Plant - Plan View IV	STRUCTURAL - 1	vendor	1/30/2013	Approval
6007-PLN-AGE-58-54-7476	HTF-2 Pipe Rack Steel Structure Beta Plant - Elevations I	STRUCTURAL - 1	vendor	1/30/2013	Approval
6007-PLN-AGE-58-54-7477	HTF-2 Pipe Rack Steel Structure Beta Plant - Elevations II	STRUCTURAL - 1	vendor	1/30/2013	Approval
6007-PLN-AGE-58-54-7478	HTF-2 Pipe Rack Steel Structure Beta Plant - Elevations III	STRUCTURAL - 1	vendor	1/30/2013	Approval
6007-PLN-AGE-58-54-7479	HTF-2 Pipe Rack Steel Structure Beta Plant - Elevations IV	STRUCTURAL - 1	vendor	1/30/2013	Approval
6007-PLN-AGE-58-54-7480	HTF-2 Pipe Rack Steel Structure Beta Plant - Connections Details	STRUCTURAL - 1	vendor	1/30/2013	Approval
6007-PLN-AGE-58-54-7481	HTF-2 Pipe Rack Steel Structure Beta Plant - Connections Details	STRUCTURAL - 1	vendor	1/30/2013	Approval
6007-PLN-AGE-58-54-7482	HTF-2 Pipe Rack Steel Structure Beta Plant - Connections Details	STRUCTURAL - 1	vendor	1/30/2013	Approval
6007-PLN-AGE-58-54-7483	HTF-2 Pipe Rack Steel Structure Beta Plant - Connections Details	STRUCTURAL - 1	vendor	1/30/2013	Approval
ELEC-1-5.03 AMMC	Mojave Solar Construction Plan	STRUCTURAL - 1	vendor	1/31/2013	Approval
6007-CAL-CTS-58-52-1000	HTF Flash and Expansion Vessel Foundation and Anchor Bolt Design	STRUCTURAL - 1	vendor	2/1/2013	Approval
6007-PLN-CTS-58-52-1000	HTF Flash and Expansion Vessel General Structural Notes / Structural Details	STRUCTURAL - 1	vendor	2/1/2013	Approval
6007-PLN-CTS-58-52-1001	Foundation Plan	STRUCTURAL - 1	vendor	2/1/2013	Approval
6007-CAL-ATD-23-52-C070	Mojave Alpha & Beta Substations Other Foundations Calculations	STRUCTURAL - 1	vendor	2/1/2013	Approval
6007-PLN-ATD-23-33-E045	Steel details 230 kV Ground Grate - GG1	STRUCTURAL - 1	vendor	2/1/2013	Approval
6007-PLN-ATD-23-55-C011	Mojave Alpha & Beta Substations Steel Details 230 kV Single Phase Low Bus Support	STRUCTURAL - 1	vendor	2/1/2013	Approval
6007-PLN-ATD-23-55-C012	Mojave Alpha & Beta Substations Steel Details 230 kV Three Phase 230 kV Deadend - S7	STRUCTURAL - 1	vendor	2/1/2013	Approval
6007-PLN-ATD-23-55-C013	Mojave Alpha & Beta Substations Steel Details Static Mast (S1)	STRUCTURAL - 1	vendor	2/1/2013	Approval
6007-PLN-ATD-23-55-C014	Mojave Alpha & Beta Substations Steel Details 230 kV Single Phase S3 Stand - S3	STRUCTURAL - 1	vendor	2/1/2013	Approval
6007-PLN-ATD-23-55-C015	Mojave Alpha & Beta Substations Steel Details 230 kV Switch Stand S4 - Sheet 1	STRUCTURAL - 1	vendor	2/1/2013	Approval
6007-PLN-ATD-23-55-C016	Mojave Alpha & Beta Substations Steel Details 230 kV Switch Stand S4 - Sheet 2	STRUCTURAL - 1	vendor	2/1/2013	Approval
6007-PLN-ATD-23-55-C018	Mojave Alpha & Beta Substations Steel Details 230 kV Single Phase CT Stand - S6	STRUCTURAL - 1	vendor	2/1/2013	Approval
6007-PLN-ATD-23-55-C019	Mojave Alpha & Beta Substations Steel Details Control Building Stair Details & Footing - ST1	STRUCTURAL - 1	vendor	2/1/2013	Approval
6007-PLN-ATD-23-57-C063	Mojave Alpha & Beta Substations Foundation Detail - APT Transformer (F2)	STRUCTURAL - 1	vendor	2/1/2013	Approval
6007-PLN-ATD-23-57-C064	Mojave Alpha & Beta Substations Foundation Detail - Relay House & Minor Equipment (P2, P3, P4, P6 & P7)	STRUCTURAL - 1	vendor	2/1/2013	Approval
6007-PLN-ATD-23-57-C065	Mojave Alpha & Beta Substations Foundation Detail - Shield Spike & Terminal Structure (P1 & P5)	STRUCTURAL - 1	vendor	2/1/2013	Approval
6007-PLN-ATD-23-57-C071	Mojave Alpha & Beta Substations Foundation Layout Drawings	STRUCTURAL - 1	vendor	2/1/2013	Approval
6007-PLN-ATD-23-57-C072	Mojave Alpha & Beta Substations Foundation Detail - Circuit Breaker (F4)	STRUCTURAL - 1	vendor	2/1/2013	Approval
6007-PLN-ATD-23-57-C073	Mojave Alpha & Beta Substations Foundation Detail - Firewall APT1 (F6)	STRUCTURAL - 1	vendor	2/1/2013	Approval
6007-PLN-ATD-23-57-C074	Mojave Alpha & Beta Substations Foundation Detail - Firewall MPT1 (F3)	STRUCTURAL - 1	vendor	2/1/2013	Approval
6007-CAL-AGE-58-53-2400	Calculation report for North Underground crossing	STRUCTURAL - 1	vendor	2/4/2013	Approval
6007-CAL-AGE-58-53-2450	Calculation report for South Underground crossing	STRUCTURAL - 1	vendor	2/4/2013	Approval
6007-PLN-AGE-58-53-2400	Alpha plant HTF North underground crossing - Cover sheet	STRUCTURAL - 1	vendor	2/4/2013	Approval
6007-PLN-AGE-58-53-2401	Alpha plant HTF North underground crossing - General notes	STRUCTURAL - 1	vendor	2/4/2013	Approval
6007-PLN-AGE-58-53-2402	Alpha plant HTF North underground crossing - Geometrical definition	STRUCTURAL - 1	vendor	2/4/2013	Approval
6007-PLN-AGE-58-53-2403	Alpha plant HTF North underground crossing - Reinforcement definition	STRUCTURAL - 1	vendor	2/4/2013	Approval
6007-PLN-AGE-58-53-2404	Alpha plant HTF North underground crossing - Walls reinforcement definition	STRUCTURAL - 1	vendor	2/4/2013	Approval
6007-PLN-AGE-58-53-2405	Alpha plant HTF North underground crossing - Mat foundation reinforcement	STRUCTURAL - 1	vendor	2/4/2013	Approval
6007-PLN-AGE-58-53-2406	Alpha plant HTF North underground crossing - Slabs definition I	STRUCTURAL - 1	vendor	2/4/2013	Approval
6007-PLN-AGE-58-53-2407	Alpha plant HTF North underground crossing - Slabs definition II	STRUCTURAL - 1	vendor	2/4/2013	Approval
6007-PLN-AGE-58-53-2408	Alpha plant HTF North underground crossing - Plan, sections and details of sleeper	STRUCTURAL - 1	vendor	2/4/2013	Approval
6007-PLN-AGE-58-53-2409	Alpha plant HTF North underground crossing - Gatehouse foundations	STRUCTURAL - 1	vendor	2/4/2013	Approval
6007-PLN-AGE-58-53-2410	Alpha plant HTF North underground crossing - Details	STRUCTURAL - 1	vendor	2/4/2013	Approval
6007-PLN-AGE-58-53-2450	Alpha plant HTF South underground crossing - Cover sheet	STRUCTURAL - 1	vendor	2/4/2013	Approval
6007-PLN-AGE-58-53-2451	Alpha plant HTF South underground crossing - General notes	STRUCTURAL - 1	vendor	2/4/2013	Approval
6007-PLN-AGE-58-53-2452	Alpha plant HTF South underground crossing - Geometrical definition	STRUCTURAL - 1	vendor	2/4/2013	Approval
6007-PLN-AGE-58-53-2453	Alpha plant HTF South underground crossing - Reinforcement definition	STRUCTURAL - 1	vendor	2/4/2013	Approval
6007-PLN-AGE-58-53-2454	Alpha plant HTF South underground crossing - Walls reinforcement definition	STRUCTURAL - 1	vendor	2/4/2013	Approval

ABENER TEYMA MOJAVE

Compliance No.:	GEN-2				
Job :	Mojave Solar Project				
Date: 2/17/11	Description: Structural Master Drawing List				
Sheet No.	Description	Applicable Condition of Certification	Vendor Supplied or EOR	Submittal Date	Reason for Submittal
6007-PLN-AGE-58-53-2455	Alpha plant HTF South underground crossing - Mat foundation reinforcement	STRUCTURAL - 1	vendor	2/4/2013	Approval
6007-PLN-AGE-58-53-2456	Alpha plant HTF South underground crossing - Slabs definition I	STRUCTURAL - 1	vendor	2/4/2013	Approval
6007-PLN-AGE-58-53-2457	Alpha plant HTF South underground crossing - Slabs definition II	STRUCTURAL - 1	vendor	2/4/2013	Approval
6007-PLN-AGE-58-53-2458	Alpha plant HTF South underground crossing - Plan, sections and details of sleeper	STRUCTURAL - 1	vendor	2/4/2013	Approval
6007-PLN-AGE-58-53-2459	Alpha plant HTF South underground crossing - Gatehouse foundations	STRUCTURAL - 1	vendor	2/4/2013	Approval
6007-PLN-AGE-58-53-2460	Alpha plant HTF South underground crossing - Details	STRUCTURAL - 1	vendor	2/4/2013	Approval
6007-CAL-58-52-3400	Alpha plant - Calculation report for Rack 1 foundation	STRUCTURAL - 1	vendor	2/4/2013	Approval
6007-PLN-58-52-3400	Alpha plant HTF-1 Pipe Rack foundation - Cover sheet	STRUCTURAL - 1	vendor	2/4/2013	Approval
6007-PLN-58-52-3401	Alpha plant HTF-1 Pipe Rack foundation - General notes	STRUCTURAL - 1	vendor	2/4/2013	Approval
6007-PLN-58-52-3402	Alpha plant HTF-1 Pipe Rack foundation - Support foundations plan	STRUCTURAL - 1	vendor	2/4/2013	Approval
6007-PLN-58-52-3403	Alpha plant HTF-1 Pipe Rack foundation - Data table	STRUCTURAL - 1	vendor	2/4/2013	Approval
6007-PLN-58-52-3404	Alpha plant HTF-1 Pipe Rack foundation - Sections and details I	STRUCTURAL - 1	vendor	2/4/2013	Approval
6007-PLN-58-52-3405	Alpha plant HTF-1 Pipe Rack foundation - Sections and details II	STRUCTURAL - 1	vendor	2/4/2013	Approval
6007-PLN-58-52-3406	Alpha plant HTF-1 Pipe Rack foundation - Sections and details III	STRUCTURAL - 1	vendor	2/4/2013	Approval
6007-PLN-58-52-3407	Alpha plant HTF-1 Pipe Rack foundation - Sections and details IV	STRUCTURAL - 1	vendor	2/4/2013	Approval
6007-CAL-AGE-58-54-3401	Alpha Plant Calculation Report for Rack 1 Connection Design	STRUCTURAL - 1	vendor	2/5/2013	Approval
6007-CAL-AGE-58-54-7401	Beta Plant Calculation Report for Rack 1 Connection Design	STRUCTURAL - 1	vendor	2/5/2013	Approval
6007-PLN-AGE-58-54-3401	Alpha Plant HTF-1 Pipe Rack Steel Structure - General notes	STRUCTURAL - 1	vendor	2/5/2013	Approval
6007-PLN-AGE-58-54-7401	Beta Plant HTF-1 Pipe Rack Steel Structure - General notes	STRUCTURAL - 1	vendor	2/5/2013	Approval
6007-PLN-AGE-57-52-2200	Alpha Plant NE solar field. HTF Pipe Support Foundations - General Notes	STRUCTURAL - 1	vendor	1/21/2013	Approval
6007-PLN-AGE-57-52-2201	Alpha Plant NE solar field. HTF Pipe Support Foundations - Cover Sheet	STRUCTURAL - 1	vendor	1/21/2013	Approval
6007-PLN-AGE-57-52-2202	Alpha Plant NE solar field. HTF Pipe Support Foundations - Foundations plan	STRUCTURAL - 1	vendor	1/21/2013	Approval
6007-PLN-AGE-57-52-2203	Alpha Plant NE solar field. HTF Pipe Support Foundations - Coordinates I	STRUCTURAL - 1	vendor	1/21/2013	Approval
6007-PLN-AGE-57-52-2204	Alpha Plant NE solar field. HTF Pipe Support Foundations - Coordinates II	STRUCTURAL - 1	vendor	1/21/2013	Approval
6007-PLN-AGE-57-52-2205	Alpha Plant NE solar field. HTF Pipe Support Foundations - Coordinates III	STRUCTURAL - 1	vendor	1/21/2013	Approval
6007-PLN-AGE-57-52-2206	Alpha Plant NE solar field. HTF Pipe Support Foundations - Coordinates IV	STRUCTURAL - 1	vendor	1/21/2013	Approval
6007-PLN-AGE-57-52-2207	Alpha Plant NE solar field. HTF Pipe Support Foundations - Section and details I	STRUCTURAL - 1	vendor	1/21/2013	Approval
6007-PLN-AGE-57-52-2208	Alpha Plant NE solar field. HTF Pipe Support Foundations - Section and details II	STRUCTURAL - 1	vendor	1/21/2013	Approval
6007-PLN-AGE-57-52-2240	Alpha Plant NW solar field. HTF Pipe Support Foundations - General Notes	STRUCTURAL - 1	vendor	1/21/2013	Approval
6007-PLN-AGE-57-52-2241	Alpha Plant NW solar field. HTF Pipe Support Foundations - Cover Sheet	STRUCTURAL - 1	vendor	1/21/2013	Approval
6007-PLN-AGE-57-52-2244	Alpha Plant NW solar field. HTF Pipe Support Foundations - Foundations plan III	STRUCTURAL - 1	vendor	1/21/2013	Approval
6007-PLN-AGE-57-52-2254	Alpha Plant NW solar field. HTF Pipe Support Foundations - Coordinates X	STRUCTURAL - 1	vendor	1/21/2013	Approval
6007-PLN-AGE-57-52-2255	Alpha Plant NW solar field. HTF Pipe Support Foundations - Section and details I	STRUCTURAL - 1	vendor	1/21/2013	Approval
6007-PLN-AGE-57-52-2256	Alpha Plant NW solar field. HTF Pipe Support Foundations - Section and details II	STRUCTURAL - 1	vendor	1/21/2013	Approval
6007-PLN-AGE-57-52-6201	Beta Plant S solar field. HTF Pipe Support Foundations - General Notes	STRUCTURAL - 1	vendor	1/21/2013	Approval
6007-PLN-AGE-57-52-6202	Beta Plant S solar field. HTF Pipe Support Foundations - Foundations Plan I	STRUCTURAL - 1	vendor	1/21/2013	Approval
6007-PLN-AGE-57-52-6207	Beta Plant S solar field. HTF Pipe Support Foundations - Coordinates IV	STRUCTURAL - 1	vendor	1/21/2013	Approval
6007-PLN-AGE-57-52-6261	Beta Plant N solar field. HTF Pipe Support Foundations - General Notes	STRUCTURAL - 1	vendor	1/21/2013	Approval
6007-PLN-AGE-57-52-6262	Beta Plant N solar field. HTF Pipe Support Foundations - Foundations Plan I	STRUCTURAL - 1	vendor	1/21/2013	Approval
6007-PLN-AGE-57-52-6267	Beta Plant N solar field. HTF Pipe Support Foundations - Coordinates IV	STRUCTURAL - 1	vendor	1/21/2013	Approval
6007-PLN-AGE-57-52-6273	Beta Plant N solar field. HTF Pipe Support Foundations - Section and details I	STRUCTURAL - 1	vendor	1/21/2013	Approval
6007-PLN-AGE-57-52-6274	Beta Plant N solar field. HTF Pipe Support Foundations - Section and details II	STRUCTURAL - 1	vendor	1/21/2013	Approval
6007-CAL-CTS-58-52-1000	HTF Flash and Expansion Vessel Foundation and Anchor Bolt Design	STRUCTURAL - 1	vendor	2/11/2013	Approval
6007-CAL-CTS-58-52-1001	HTF Vessel Foundation Design	STRUCTURAL - 1	vendor	2/11/2013	Approval
6007-PLN-CTS-58-52-1000	HTF Flash and Expansion Vessel General Structural Notes / Structural Details	STRUCTURAL - 1	vendor	2/11/2013	Approval
6007-PLN-CTS-58-52-1001	Foundation Plan	STRUCTURAL - 1	vendor	2/11/2013	Approval
6007-CAL-AGE-58-52-7400	Calculation report for Rack 1 foundations Beat Plant	STRUCTURAL - 1	vendor	2/14/2013	Approval
6007-PLN-AGE-58-52-7400	Mojave Generating Station. Beta plant HTF-1 piperack foundation Cover sheet	STRUCTURAL - 1	vendor	2/14/2013	Approval
6007-PLN-AGE-58-52-7401	Mojave Generating Station. Beta plant HTF-1 piperack foundation General notes	STRUCTURAL - 1	vendor	2/14/2013	Approval
6007-PLN-AGE-58-52-7402	Mojave Generating Station. Beta plant HTF-1 piperack foundation Support foundations plan	STRUCTURAL - 1	vendor	2/14/2013	Approval
6007-PLN-AGE-58-52-7403	Mojave Generating Station. Beta plant HTF-1 piperack foundation Data table	STRUCTURAL - 1	vendor	2/14/2013	Approval
6007-PLN-AGE-58-52-7404	Mojave Generating Station. Beta plant HTF-1 piperack foundation Sections and details I	STRUCTURAL - 1	vendor	2/14/2013	Approval
6007-PLN-AGE-58-52-7405	Mojave Generating Station. Beta plant HTF-1 piperack foundation Sections and details II	STRUCTURAL - 1	vendor	2/14/2013	Approval
6007-PLN-AGE-58-52-7406	Mojave Generating Station. Beta plant HTF-1 piperack foundation Sections and details III	STRUCTURAL - 1	vendor	2/14/2013	Approval
6007-PLN-AGE-25-54-8500	STG Auxiliar Equipment Structure Connections Cover Sheet	STRUCTURAL - 1	vendor	2/15/2013	Approval
6007-PLN-AGE-25-54-8501	STG Auxiliar Equipment Structure Connections General Notes	STRUCTURAL - 1	vendor	2/15/2013	Approval
6007-PLN-AGE-25-54-8502	STG Auxiliar Equipment Structure Connections Elevations I	STRUCTURAL - 1	vendor	2/15/2013	Approval
6007-PLN-AGE-25-54-8503	STG Auxiliar Equipment Structure Connections Elevations II	STRUCTURAL - 1	vendor	2/15/2013	Approval
6007-PLN-AGE-25-54-8504	STG Auxiliar Equipment Structure Connections Elevations III	STRUCTURAL - 1	vendor	2/15/2013	Approval
6007-PLN-AGE-25-54-8505	STG Auxiliar Equipment Structure Connections BCP&BT Connections	STRUCTURAL - 1	vendor	2/15/2013	Approval
6007-PLN-AGE-25-54-8506	STG Auxiliar Equipment Structure Connections CH&CR Connections	STRUCTURAL - 1	vendor	2/15/2013	Approval
6007-PLN-AGE-25-54-8507	STG Auxiliar Equipment Structure Connections BCP Connections	STRUCTURAL - 1	vendor	2/15/2013	Approval
6007-PLN-AGE-25-54-8508	STG Auxiliar Equipment Structure Connections Plan @EL 2081.93' & @EL 2086.50'	STRUCTURAL - 1	vendor	2/15/2013	Approval
6007-PLN-AGE-25-54-8509	STG Auxiliar Equipment Structure Connections Plan @EL 2094.50' & @EL2099'	STRUCTURAL - 1	vendor	2/15/2013	Approval
6007-PLN-AGE-25-54-8510	STG Auxiliar Equipment StructureConnections Plan @EL 2106.25'	STRUCTURAL - 1	vendor	2/15/2013	Approval
6007-PLN-AGE-25-54-8511	STG Auxiliar Equipment Structure Connections Plan @EL 2122'	STRUCTURAL - 1	vendor	2/15/2013	Approval
6007-PLN-AGE-25-54-8512	STG Auxiliar Equipment Structure Connections Plan @EL 2131.84' & 2158.17	STRUCTURAL - 1	vendor	2/15/2013	Approval
6007-PLN-AGE-25-54-8513	STG Auxiliar Equipment Structure Connections GP Connection	STRUCTURAL - 1	vendor	2/15/2013	Approval
6007-PLN-AGE-25-54-8514	STG Auxiliar Equipment Structure Connections GF& GE Connections	STRUCTURAL - 1	vendor	2/15/2013	Approval
6007-PLN-AGE-25-54-8515	STG Auxiliar Equipment Structure Connections BCF Connections	STRUCTURAL - 1	vendor	2/15/2013	Approval
6007-PLN-AGE-25-54-8516	STG Auxiliar Equipment Structure Connections Column Splices I	STRUCTURAL - 1	vendor	2/15/2013	Approval
6007-PLN-AGE-25-54-8517	STG Auxiliar Equipment Structure Connections Column Splices II	STRUCTURAL - 1	vendor	2/15/2013	Approval
6007-PLN-AGE-25-54-8518	STG Auxiliar Equipment Structure Connections Column Splices III	STRUCTURAL - 1	vendor	2/15/2013	Approval
6007-CAL-AGE-25-51-8004	Calculation report	STRUCTURAL - 1	vendor	2/15/2013	Approval
6007-PLN-AGE-00-50-C001	Anchor Rod Assemblies and Details	STRUCTURAL - 1	vendor	2/15/2013	Approval
6007-PLN-AGE-00-50-S001	General Civil and Structural Notes	STRUCTURAL - 1	vendor	2/15/2013	Approval

ABENER TEYMA MOJAVE

Compliance No.:	GEN-2				
Job :	Mojave Solar Project				
Date: 2/17/11	Description: Structural Master Drawing List				
Sheet No.	Description	Applicable Condition of Certification	Vendor Supplied or EOR	Submittal Date	Reason for Submittal
6007-PLN-AGE-00-50-S002	Typical Ladder, Safety Cage, and Safety Gate Details	STRUCTURAL - 1	vendor	2/15/2013	Approval
6007-PLN-AGE-00-50-S003	Typical Pipe Handrail, Stairway, and Grating Details	STRUCTURAL - 1	vendor	2/15/2013	Approval
6007-PLN-AGE-00-50-S004	Standard Base Plate Details and Standard Shear Key Details	STRUCTURAL - 1	vendor	2/15/2013	Approval
6007-CAL-A GE-25-51-4000	Calculation Report for ST G Auxiliary equip. struc. Alpha	STRUCTURAL - 1	vendor	2/15/2013	Approval
6007-CAL-A GE-25-51-8000	Calculation Report for ST G Auxiliary equip. struc. Beta	STRUCTURAL - 1	vendor	2/15/2013	Approval
6007-PLN-A GE-25-54-4000	STG Auxiluary Equipment Struc. Alpha Coveer Sheet	STRUCTURAL - 1	vendor	2/15/2013	Approval
6007-PLN-A GE-25-54-4020	STG Auxiluary Equipment Struc. Alpha General Notes	STRUCTURAL - 1	vendor	2/15/2013	Approval
6007-PLN-A GE-25-54-4040	ST G Auxiliary equip. struc. Alpha Plan@EL2072'- 51/8" &@EL2077'	STRUCTURAL - 1	vendor	2/15/2013	Approval
6007-PLN-A GE-25-54-4041	ST G Auxiliary equip. struc. Alpha Plan@EL2086'- 6&@EL2091'	STRUCTURAL - 1	vendor	2/15/2013	Approval
6007-PLN-A GE-25-54-4042	STG Auxiliary Equipment Struc. Alpha plan @EL2098'-3"	STRUCTURAL - 1	vendor	2/15/2013	Approval
6007-PLN-A GE-25-54-4043	ST G Auxiliary equip. struc. Alpha Plan @EL 2114'	STRUCTURAL - 1	vendor	2/15/2013	Approval
6007-PLN-A GE-25-54-4044	STG Auxiliary equip. struc. Alpha Plan@EL 2123'-10 3/32 & 2150'2 3/32	STRUCTURAL - 1	vendor	2/15/2013	Approval
6007-PLN-A GE-25-54-4045	ST G Auxiliary equip. struc. Alpha Plan Elevation SH. 1	STRUCTURAL - 1	vendor	2/15/2013	Approval
6007-PLN-A GE-25-54-4046	ST G Auxiliary equip. struc. Alpha Plan Elevation SH. 2	STRUCTURAL - 1	vendor	2/15/2013	Approval
6007-PLN-A GE-25-54-4047	ST G Auxiliary equip. struc. Alpha Plan Elevation SH. 3	STRUCTURAL - 1	vendor	2/15/2013	Approval
6007-PLN-A GE-25-54-4048	ST G Auxiliary equip. struc. Alpha Column Schedule & M isc Details	STRUCTURAL - 1	vendor	2/15/2013	Approval
6007-PLN-A GE-25-54-4049	ST G Auxiliary equip. struc. Alpha Plan Anchor Plan Details	STRUCTURAL - 1	vendor	2/15/2013	Approval
6007-PLN-A GE-25-54-4050	ST G Auxiliary equip. struc. Alpha Stair Schematics	STRUCTURAL - 1	vendor	2/15/2013	Approval
6007-PLN-A GE-25-54-4051	ST G Auxiliary equip. struc. Alpha Column Schedule	STRUCTURAL - 1	vendor	2/15/2013	Approval
6007-PLN-A GE-25-54-8000	ST G Auxiliary equip. struc. Beta	STRUCTURAL - 1	vendor	2/15/2013	Approval
6007-PLN-A GE-25-54-8020	ST G Auxiliary equip. struc. Beta General Notes	STRUCTURAL - 1	vendor	2/15/2013	Approval
6007-PLN-A GE-25-54-8040	ST G Auxiliary equip. struc. Beta Plan@EL2072'-51/8" &@EL2077'	STRUCTURAL - 1	vendor	2/15/2013	Approval
6007-PLN-A GE-25-54-8041	ST G Auxiliary equip. struc. Beta Plan@EL2086'- 6&@EL2091'	STRUCTURAL - 1	vendor	2/15/2013	Approval
6007-PLN-A GE-25-54-8042	ST G Auxiliary equip. struc. Beta Plan @El 2098'-3"	STRUCTURAL - 1	vendor	2/15/2013	Approval
6007-PLN-A GE-25-54-8043	ST G Auxiliary equip. struc. Beta Plan @EL 2114'	STRUCTURAL - 1	vendor	2/15/2013	Approval
6007-PLN-A GE-25-54-8044	ST G Auxiliary equip. struc. Beta Plan@EL 2123'-10 3/32 & 2150'2 3/3	STRUCTURAL - 1	vendor	2/15/2013	Approval
6007-PLN-A GE-25-54-8045	ST G Auxiliary equip. struc. Beta Elevations Sh 1	STRUCTURAL - 1	vendor	2/15/2013	Approval
6007-PLN-A GE-25-54-8046	ST G Auxiliary equip. struc. Beta Elevations Sh 2	STRUCTURAL - 1	vendor	2/15/2013	Approval
6007-PLN-A GE-25-54-8047	ST G Auxiliary equip. struc. Beta Elevations Sh 3	STRUCTURAL - 1	vendor	2/15/2013	Approval
6007-PLN-A GE-25-54-8048	ST G Auxiliary equip. struc. Beta Column Schedule & M isc Details	STRUCTURAL - 1	vendor	2/15/2013	Approval
6007-PLN-A GE-25-54-8049	ST G Auxiliary equip. struc. Beta Anchor Plates Detail	STRUCTURAL - 1	vendor	2/15/2013	Approval
6007-PLN-A GE-25-54-8050	ST G Auxiliary equip. struc. Beta Stair Schematics	STRUCTURAL - 1	vendor	2/15/2013	Approval
6007-PLN-A GE-25-54-8051	ST G Auxiliary equip. struc. Beta Column Schedule	STRUCTURAL - 1	vendor	2/15/2013	Approval
6007-PLN-A GE-25-54-4500	STG Auiliar Equip,emt cpmmectopms cpver sjeet	STRUCTURAL - 1	vendor	2/15/2013	Approval
6007-PLN-A GE-25-54-4501	SI G Auxiliar Equipment Structure Connections General Note	STRUCTURAL - 1	vendor	2/15/2013	Approval
6007-PLN-A GE-25-54-4502	SI G Auxiliar Equipment Structure Connections Elevations /	STRUCTURAL - 1	vendor	2/15/2013	Approval
6007-PLN-A GE-25-54-4503	SI G Auxiliar Equipment Structure Connections Elevations //	STRUCTURAL - 1	vendor	2/15/2013	Approval
6007-PLN-A GE-25-54-4504	STG Auxiliar Equipment Structure Connections Elevations ///	STRUCTURAL - 1	vendor	2/15/2013	Approval
6007-PLN-A GE-25-54-4505	STG Auiliar Equip,emt cpmmectopms cpver sjeet	STRUCTURAL - 1	vendor	2/15/2013	Approval
6007-PLN-A GE-25-54-4506	SI G Auxiliar Equipment Structure Connections General Note	STRUCTURAL - 1	vendor	2/15/2013	Approval
6007-PLN-A GE-25-54-4507	SI G Auxiliar EQUIPMENT Structure Connections BCP Connections	STRUCTURAL - 1	vendor	2/15/2013	Approval
6007-PLN-A GE-25-54-4508	SI G Auxiliar Equipment Structure Connections Plan@EL 2073.93'&@EL2078.50	STRUCTURAL - 1	vendor	2/15/2013	Approval
6007-PLN-A GE-25-54-4509	SI G Auxiliar Equipment Structure Connections Plan@EL 2086.50'&@EL2091	STRUCTURAL - 1	vendor	2/15/2013	Approval
6007-PLN-A GE-25-54-4510	SI G Auxiliar Equipment Structure Connections Plan@EL 2098.25	STRUCTURAL - 1	vendor	2/15/2013	Approval
6007-PLN-A GE-25-54-4511	SI G Auxiliar Equipment Structure Connections Plan@EL 2114'	STRUCTURAL - 1	vendor	2/15/2013	Approval
6007-PLN-A GE-25-54-4512	SI G Auxiliar Equipment Structure Connections Plan@EL 2123.84 & 2150,17'	STRUCTURAL - 1	vendor	2/15/2013	Approval
6007-PLN-A GE-25-54-4513	SI G Auxiliar Equipment Structure Connections GP Connections	STRUCTURAL - 1	vendor	2/15/2013	Approval
6007-PLN-A GE-25-54-4514	SI G Auxiliar Equipment Structure Connections GF& GE Connections	STRUCTURAL - 1	vendor	2/15/2013	Approval
6007-PLN-A GE-25-54-4515	SI G Auxiliar Equipment Structure Connections BCF Connections	STRUCTURAL - 1	vendor	2/15/2013	Approval
6007-PLN-A GE-25-54-4516	SI G Auxiliar Equipment Structure Connections Colum Splices I	STRUCTURAL - 1	vendor	2/15/2013	Approval
6007-PLN-A GE-25-54-4517	SI G Auxiliar Equipment Structure Connections Colum Splices II	STRUCTURAL - 1	vendor	2/15/2013	Approval
6007-PLN-A GE-25-54-4518	SI G Auxiliar Equipment Structure Connections Colum Splices III	STRUCTURAL - 1	vendor	2/15/2013	Approval
6007-CAL-A GE-25-51-4004	Calculation report	STRUCTURAL - 1	vendor	2/15/2013	Approval
6007-CAL-AGE-58-52-3450	Calculation report for Rack 2 Foundation	STRUCTURAL - 1	vendor	2/19/2013	Approval
6007-PLN-AGE-58-52-3450	HTF -2 Piperack Foundation cover sheet	STRUCTURAL - 1	vendor	2/19/2013	Approval
6007-PLN-AGE-58-52-3451	HTF -2 Piperack Foundation general notes	STRUCTURAL - 1	vendor	2/19/2013	Approval
6007-PLN-AGE-58-52-3452	HTF -2 Piperack Foundation Plan view	STRUCTURAL - 1	vendor	2/19/2013	Approval
6007-PLN-AGE-58-52-3453	HTF -2 Piperack Foundation sections and details	STRUCTURAL - 1	vendor	2/19/2013	Approval
6007-PLN-AGE-58-52-3454	HTF -2 Piperack Foundation table data and details	STRUCTURAL - 1	vendor	2/19/2013	Approval
6007-PLN-AGE-58-52-3455	HTF -2 Piperack Foundation Section & Details 1	STRUCTURAL - 1	vendor	2/19/2013	Approval
6007-PLN-AGE-58-52-3456	HTF -2 Piperack Foundation Section & Details 2	STRUCTURAL - 1	vendor	2/19/2013	Approval
6007-PLN-AGE-58-52-3457	HTF -2 Piperack Foundation Section & Details 3	STRUCTURAL - 1	vendor	2/19/2013	Approval
6007-PLN-AGE-58-52-3458	HTF -2 Piperack Foundation Section & Details 4	STRUCTURAL - 1	vendor	2/19/2013	Approval
6007-PLN-AGE-58-52-3459	HTF -2 Piperack Foundation Section & Details 5	STRUCTURAL - 1	vendor	2/19/2013	Approval
6007-PLN-AGE-58-52-3460	HTF -2 Piperack Foundation Section & Details 6	STRUCTURAL - 1	vendor	2/19/2013	Approval
6007-CAL-AGE-58-52-7450	Calculation report for Rack 2 foundation	STRUCTURAL - 1	vendor	2/19/2013	Approval
6007-PLN-AGE-58-52-7450	HTF -2 Piperack Foundation cover sheet	STRUCTURAL - 1	vendor	2/19/2013	Approval
6007-PLN-AGE-58-52-7451	HTF -2 Piperack Foundation general notes	STRUCTURAL - 1	vendor	2/19/2013	Approval
6007-PLN-AGE-58-52-7452	HTF -2 Piperack Foundation Plan view	STRUCTURAL - 1	vendor	2/19/2013	Approval
6007-PLN-AGE-58-52-7453	HTF -2 Piperack Foundation sections and details	STRUCTURAL - 1	vendor	2/19/2013	Approval
6007-PLN-AGE-58-52-7454	HTF -2 Piperack Foundation table data and details	STRUCTURAL - 1	vendor	2/19/2013	Approval
6007-PLN-AGE-58-52-7455	HTF -2 Piperack Foundation section and details 1	STRUCTURAL - 1	vendor	2/19/2013	Approval
6007-PLN-AGE-58-52-7456	HTF -2 Piperack Foundation section and details 2	STRUCTURAL - 1	vendor	2/19/2013	Approval
6007-PLN-AGE-58-52-7457	HTF -2 Piperack Foundation section and details 3	STRUCTURAL - 1	vendor	2/19/2013	Approval
6007-PLN-AGE-58-52-7458	HTF -2 Piperack Foundation sections and details 4	STRUCTURAL - 1	vendor	2/19/2013	Approval
6007-PLN-AGE-58-52-7459	HTF -2 Piperack Foundation section and details 5	STRUCTURAL - 1	vendor	2/19/2013	Approval

ABENER TEYMA MOJAVE

Compliance No.:	GEN-2				
Job :	Mojave Solar Project				
Date: 2/17/11	Description: Structural Master Drawing List				
Sheet No.	Description	Applicable Condition of Certification	Vendor Supplied or EOR	Submittal Date	Reason for Submittal
6007-PLN-AGE-58-52-7460	HTF -2 Piperack Foundation section and details 6	STRUCTURAL - 1	vendor	2/19/2013	Approval
6007-PLN-AGE-57-52-7321	Closed end & Supply double loops foundations. South field. Coordinates IV	STRUCTURAL - 1	vendor	2/19/2013	Approval
6007-CAL-AGE-58-53-2450	Calculation Report for South Underground crossing Alpha Plant	STRUCTURAL - 1	vendor	2/20/2013	Approval
6007-PLN-AGE-58-53-2450	HTF South Underground Crossing Cover Sheet	STRUCTURAL - 1	vendor	2/20/2013	Approval
6007-PLN-AGE-58-53-2451	HTF South Underground Crossing General Notes	STRUCTURAL - 1	vendor	2/20/2013	Approval
6007-PLN-AGE-58-53-2452	HTF South Underground Crossing Geometrical definitio	STRUCTURAL - 1	vendor	2/20/2013	Approval
6007-PLN-AGE-58-53-2453	HTF South Underground Crossing Reinforcement definitio	STRUCTURAL - 1	vendor	2/20/2013	Approval
6007-PLN-AGE-58-53-2454	HTF South Underground Crossing Walls Reinforcement definition	STRUCTURAL - 1	vendor	2/20/2013	Approval
6007-PLN-AGE-58-53-2455	HTF South Underground Crossing Mat Foundation Reinforcement	STRUCTURAL - 1	vendor	2/20/2013	Approval
6007-PLN-AGE-58-53-2456	HTF South Underground Crossing Slabs definition /	STRUCTURAL - 1	vendor	2/20/2013	Approval
6007-PLN-AGE-58-53-2457	HTF South Underground Crossing Slabs definition //	STRUCTURAL - 1	vendor	2/20/2013	Approval
6007-PLN-AGE-58-53-2458	HTF South Underground Crossing Plan sections & Details for Sleepers	STRUCTURAL - 1	vendor	2/20/2013	Approval
6007-PLN-AGE-58-53-2459	HTF South Underground Crossing Gatehause Foundation	STRUCTURAL - 1	vendor	2/20/2013	Approval
6007-PLN-AGE-58-53-2460	HTF South Underground Crossing details	STRUCTURAL - 1	vendor	2/20/2013	Approval
6007-PLN-A GE-58-53-2400	HTF North Underground Crossing Cover Sheet	STRUCTURAL - 1	vendor	2/20/2013	Approval
6007-PLN-A GE-58-53-2401	HTF North Underground Crossing General Notes	STRUCTURAL - 1	vendor	2/20/2013	Approval
6007-PLN-A GE-58-53-2402	HTF North Underground Crossing Geometrical definitio	STRUCTURAL - 1	vendor	2/20/2013	Approval
6007-PLN-A GE-58-53-2403	HTF North Underground Crossing Reinforcement definitio	STRUCTURAL - 1	vendor	2/20/2013	Approval
6007-PLN-A GE-58-53-2404	HTF North Underground Crossing Walls Reinforcement definition	STRUCTURAL - 1	vendor	2/20/2013	Approval
6007-PLN-A GE-58-53-2405	HTF North Underground Crossing Mat Foundation Reinforcement	STRUCTURAL - 1	vendor	2/20/2013	Approval
6007-PLN-A GE-58-53-2406	HTF North Underground Crossing Slabs definition /	STRUCTURAL - 1	vendor	2/20/2013	Approval
6007-PLN-A GE-58-53-2407	HTF North Underground Crossing Slabs definition //	STRUCTURAL - 1	vendor	2/20/2013	Approval
6007-PLN-A GE-58-53-2408	HTF North Underground Crossing Plan sections & Details for Sleepers	STRUCTURAL - 1	vendor	2/20/2013	Approval
6007-PLN-A GE-58-53-2409	HTF North Underground Crossing Gatehause Foundation	STRUCTURAL - 1	vendor	2/20/2013	Approval
6007-PLN-A GE-58-53-2410	HTF North Underground Crossing details	STRUCTURAL - 1	vendor	2/20/2013	Approval
6007-CAL-A GE-58-53-2400	Calculation Report for North Underground crossing Alpha Plant	STRUCTURAL - 1	vendor	2/20/2013	Approval
6007-PLN-58-52-3402	Alpha plant HTF-1 Pipe Rack foundation - Support foundations plan	STRUCTURAL - 1	vendor	2/21/2013	Approval
6007-PLN-58-52-3403	Alpha plant HTF-1 Pipe Rack foundation - Data table	STRUCTURAL - 1	vendor	2/21/2013	Approval
6007-PLN-58-52-3404	Alpha plant HTF-1 Pipe Rack foundation - Sections and details I	STRUCTURAL - 1	vendor	2/21/2013	Approval
6007-PLN-58-52-3405	Alpha plant HTF-1 Pipe Rack foundation - Sections and details II	STRUCTURAL - 1	vendor	2/21/2013	Approval
6007-PLN-58-52-3406	Alpha plant HTF-1 Pipe Rack foundation - Sections and details III	STRUCTURAL - 1	vendor	2/21/2013	Approval
6007-PLN-58-52-3407	Alpha plant HTF-1 Pipe Rack foundation - Sections and details IV	STRUCTURAL - 1	vendor	2/21/2013	Approval
6007-INF-ATD-23-50-C001	Geotechnical Report for Mojave Substation and Transmission Line by FMG Engineering	STRUCTURAL - 1	vendor	2/21/2013	Approval
6007-INF-ATD-23-50-C002	Special Inspections, Structural Testing, and Structural Observations	STRUCTURAL - 1	vendor	2/21/2013	Approval
6007-PLN-ATD-23-54-C011	Mojave Alpha & Beta Substations Structure Layout Plan	STRUCTURAL - 1	vendor	2/21/2013	Approval
6007-PLN-ATD-23-55-C019	Mojave 230 kV, Alpha & Beta Substations Steel Details Control Building Stair Details & Footing - ST1	STRUCTURAL - 1	vendor	2/21/2013	Approval
6007-PLN-ATD-23-57-C063	Mojave 230 kV, Alpha & Beta Substations Foundation Detail - APT Transformer (F2)	STRUCTURAL - 1	vendor	2/21/2013	Approval
6007-PLN-ATD-23-57-C071	Mojave Alpha and Beta Substations Foundation Layout Drawing	STRUCTURAL - 1	vendor	2/21/2013	Approval
6007-PLN-ATD-23-57-C091	Mojave Alpha & Beta Substations Site Preparation & Fencing Drawing	STRUCTURAL - 1	vendor	2/21/2013	Approval
6007-CAL-AGE-58-52-2460	Calculation Report for Alpha Plant - HTF/Main Pumps A-MP-200-A/B/C/D Foundation	STRUCTURAL - 1	vendor	2/26/2013	Approval
6007-CAL-AGE-58-52-2461	Calculation Report for Alpha Plant - HTF/Recirculation Pump A-MP-201 Foundation	STRUCTURAL - 1	vendor	2/26/2013	Approval
6007-PLN-AGE-58-52-2450	Alpha HTF/Recirculation Pump A-MP-201 Foundation Cover Sheet	STRUCTURAL - 1	vendor	2/26/2013	Approval
6007-PLN-AGE-58-52-2451	Alpha HTF/Recirculation Pump A-MP-201 Foundation General Notes	STRUCTURAL - 1	vendor	2/26/2013	Approval
6007-PLN-AGE-58-52-2452	Alpha HTF/Recirculation Pump A-MP-201 Foundation Plan, Section, and Details	STRUCTURAL - 1	vendor	2/26/2013	Approval
6007-PLN-AGE-58-52-2460	Alpha HTF/Main Pumps A-MP-200-A/B/C/D Foundation Cover Sheet	STRUCTURAL - 1	vendor	2/26/2013	Approval
6007-PLN-AGE-58-52-2461	Alpha HTF/Main Pumps A-MP-200-A/B/C/D Foundation General Notes	STRUCTURAL - 1	vendor	2/26/2013	Approval
6007-PLN-AGE-58-52-2462	Alpha HTF/Main Pumps A-MP-200-A/B/C/D Foundation Plan, Section, and Details	STRUCTURAL - 1	vendor	2/26/2013	Approval
6007-CAL-AGE-58-52-6460	Calculation Report for Beta Plant - HTF/Main Pumps B-MP-200-A/B/C/D Foundation	STRUCTURAL - 1	vendor	2/26/2013	Approval
6007-CAL-AGE-58-52-6461	Calculation Report for Beta Plant - HTF/Recirculation Pump B-MP-201 Foundation	STRUCTURAL - 1	vendor	2/26/2013	Approval
6007-PLN-AGE-58-52-6450	Beta HTF/Recirculation Pump B-MP-201 Foundation Cover Sheet	STRUCTURAL - 1	vendor	2/26/2013	Approval
6007-PLN-AGE-58-52-6451	Beta HTF/Recirculation Pump B-MP-201 Foundation General Notes	STRUCTURAL - 1	vendor	2/26/2013	Approval
6007-PLN-AGE-58-52-6452	Beta HTF/Recirculation Pump B-MP-201 Foundation Plan, Section, and Details	STRUCTURAL - 1	vendor	2/26/2013	Approval
6007-PLN-AGE-58-52-6460	Beta HTF/Main Pumps B-MP-200-A/B/C/D Foundation Cover Sheet	STRUCTURAL - 1	vendor	2/26/2013	Approval
6007-PLN-AGE-58-52-6461	Beta HTF/Main Pumps B-MP-200-A/B/C/D Foundation General Notes	STRUCTURAL - 1	vendor	2/26/2013	Approval
6007-PLN-AGE-58-52-6462	Beta HTF/Main Pumps B-MP-200-A/B/C/D Foundation Plan, Section, and Details	STRUCTURAL - 1	vendor	2/26/2013	Approval
6007-ESP-ATD-26-48-C002	Staking Sheet	STRUCTURAL - 1	vendor	3/4/2013	Approval
6007-PLN-ATD-26-33-E041	Phasing Diagram	STRUCTURAL - 1	vendor	3/4/2013	Approval
6007-PLN-ATD-26-51-C012	Plan and Profile	STRUCTURAL - 1	vendor	3/4/2013	Approval
6007-PLN-ATD-26-51-C013	Plan and Profile	STRUCTURAL - 1	vendor	3/4/2013	Approval
6007-PLN-ATD-26-51-C014	Plan and Profile	STRUCTURAL - 1	vendor	3/4/2013	Approval
6007-PLN-ATD-26-52-C0 61	Direct Embed Foundation Details	STRUCTURAL - 1	vendor	3/4/2013	Approval
6007-PLN-ATD-26-52-C0 62	Pier Foundation Details	STRUCTURAL - 1	vendor	3/4/2013	Approval
6007-PLN-ATD-26-54-E031	Assembly Drawings	STRUCTURAL - 1	vendor	3/4/2013	Approval
6007-PLN-ATD-26-54-E032	Stringing Chart	STRUCTURAL - 1	vendor	3/4/2013	Approval
6007-CAL-ATD-26-54-E038	230kV Double Circuit Tangent – Loading Tree (Typical)	STRUCTURAL - 1	vendor	3/4/2013	Approval
6007-CAL-ATD-26-54-E039	230kV 45 Degree Angle – Double Circuit Loading Tree	STRUCTURAL - 1	vendor	3/4/2013	Approval
6007-CAL-ATD-26-54-E040	90 Degree D.C. Tap Structure – Loading Tree	STRUCTURAL - 1	vendor	3/4/2013	Approval
6007-CAL-ATD-26-54-E041	230 kV Single Circuit DE – Loading Tree (Typical)	STRUCTURAL - 1	vendor	3/4/2013	Approval
6007-CAL-ATD-26-54-E042	230kV Single Circuit Delta Tangent – Loading Tree (Typical)	STRUCTURAL - 1	vendor	3/4/2013	Approval
6007-CAL-ATD-26-54-E043	230kV 90 Degree Angle –Loading Tree	STRUCTURAL - 1	vendor	3/4/2013	Approval
6007-CAL-ATD-26-54-E044	230kV 45 Degree Angle – Single Circuit Loading Tree	STRUCTURAL - 1	vendor	3/4/2013	Approval
6007-CAL-ATD-26-54-E045	230kV Beta Tap Structure – Double Circuit Loading Tree	STRUCTURAL - 1	vendor	3/4/2013	Approval
6007-CAL-ATD-26-54-E047	230kV Typical Details	STRUCTURAL - 1	vendor	3/4/2013	Approval
6007-CAL-ATD-26-54-E048	230kV SC Delta Tangent – Extra Shield Wires – Loading Tree (Typical)	STRUCTURAL - 1	vendor	3/4/2013	Approval
6007-ESP-ATD-26-54-C018	Technical Specification for Welded Tubular Steel Transmission Structures	STRUCTURAL - 1	vendor	3/4/2013	Approval
6007-PLN-ATD-26-52-C072	230kV Double Circuit Tangent – Structure Framing Details	STRUCTURAL - 1	vendor	3/4/2013	Approval

ABENER TEYMA MOJAVE

Compliance No.:	GEN-2				
Job :	Mojave Solar Project				
Date: 2/17/11	Description: Structural Master Drawing List				
Sheet No.	Description	Applicable Condition of Certification	Vendor Supplied or EOR	Submittal Date	Reason for Submittal
6007-PLN-ATD-26-52-C073	230kV 45 Degree Angle – Structure Framing Details	STRUCTURAL - 1	vendor	3/4/2013	Approval
6007-PLN-ATD-26-52-C074	230kV 45 Degree Angles – Structure Framing Details	STRUCTURAL - 1	vendor	3/4/2013	Approval
6007-PLN-ATD-26-52-C075	230kV Single Circuit Delta Tangent – Structure Framing Details	STRUCTURAL - 1	vendor	3/4/2013	Approval
6007-PLN-ATD-26-52-C076	230kV 90 Degree Angle – Structure Framing Details	STRUCTURAL - 1	vendor	3/4/2013	Approval
6007-PLN-ATD-26-52-C077	230kV SC Delta Tangent – Extra Shield Wires – Structure Fram- ing Details	STRUCTURAL - 1	vendor	3/4/2013	Approval
6007-PLN-ATD-26-52-C078	230kV Beta Tap Structure – Structure Framing Details	STRUCTURAL - 1	vendor	3/4/2013	Approval
6007-PLN-ATD-26-52-C079	90 Degree D.C. Tap Structure – Structure Framing Details	STRUCTURAL - 1	vendor	3/4/2013	Approval
6007-PLN-ATD-26-52-C080	230kV 45 Degree Angles – Structure Framing Details	STRUCTURAL - 1	vendor	3/4/2013	Approval
6007-PLN-ATD-26-52-C081	230kV Single Circuit DE – Structure Framing Details	STRUCTURAL - 1	vendor	3/4/2013	Approval
6007-PLN-ATD-26-52-C082	230kV Single Circuit DE – Structure Framing Details	STRUCTURAL - 1	vendor	3/4/2013	Approval
6007-PLN-ATD-26-52-C083	230kV 90 Degree Angle – Structure Framing Details	STRUCTURAL - 1	vendor	3/4/2013	Approval
6007-PLN-ATD-26-52-C084	230kV Alpha Substation DE – Structure Framing Details	STRUCTURAL - 1	vendor	3/4/2013	Approval
6007-PLN-ATD-26-52-C085	230kV Beta Substation DE – Structure Framing Details	STRUCTURAL - 1	vendor	3/4/2013	Approval
6007-PLN-ATD-26-52-C086	230kV Beta Substation Static Mast – Structure Framing Details	STRUCTURAL - 1	vendor	3/4/2013	Approval
6007-1NF-ATD-23-50-0002	Special 1nspections, Structural Testing, and 3-iructurai upservaiions	STRUCTURAL - 1	vendor	3/5/2013	Approval
6007-1NF-ATD-23-50-0001	Geotechnical Report for Mojave Substation and Transmission Line	STRUCTURAL - 1	vendor	1/0/1900	Approval
6007-0AL-ATD-23-52-0070	Other Foundation 0alculations	STRUCTURAL - 1	vendor	3/5/2013	Approval
6007-PLN-ATD-23-57-00 63	Foundation Detail APT1 (F2)	STRUCTURAL - 1	vendor	3/5/2013	Approval
6007-PLN-ATD-23-57-00 64	Foundation Relay House and Minor Equipment	STRUCTURAL - 1	vendor	3/5/2013	Approval
6007-PLN-ATD-23-57-0071	Foundation Layout Drawing	STRUCTURAL - 1	vendor	3/5/2013	Approval
6007-PLN-ATD-23-57-0072	Foundation Detail - 0ircuit Breaker (F4)	STRUCTURAL - 1	vendor	3/5/2013	Approval
6007-PLN-ATD-23-57-0073	Foundation Detail - Firewall APT1	STRUCTURAL - 1	vendor	3/5/2013	Approval
6007-PLN-ATD-23-57-0074	Foundation Detail - Firewall MPT1	STRUCTURAL - 1	vendor	3/5/2013	Approval
6007-PLN-ATD-23-57-0091	Site Preparation and Fencing Drawing	STRUCTURAL - 1	vendor	3/5/2013	Approval
6007-ESP-ATD-23-54-E001	Technical Specification for Steel Structures	STRUCTURAL - 1	vendor	3/5/2013	Approval
6007-PLN-ATD-23-54-0011	Structure Layout Plan	STRUCTURAL - 1	vendor	3/5/2013	Approval
6007-PLN-ATD-23-55-0011	Steel Details 230 kV Single Phase, Low Bus Support - S2	STRUCTURAL - 1	vendor	3/5/2013	Approval
6007-PLN-ATD-23-55-0012	Steel Details 230 kV Three Phase, 230 kV Deadend - S7	STRUCTURAL - 1	vendor	3/5/2013	Approval
6007-PLN-ATD-23-55-0013	Steel Details, Static Mast (S1)	STRUCTURAL - 1	vendor	3/5/2013	Approval
6007-PLN-ATD-23-55-0014	Steel Details 230 kV Single Phase, S3 Stand - S3	STRUCTURAL - 1	vendor	3/5/2013	Approval
6007-PLN-ATD-23-55-0015	Steel Details 230kV Switch Stand, S4 Sheet 1	STRUCTURAL - 1	vendor	3/5/2013	Approval
6007-PLN-ATD-23-55-001 6	Steel Details 230kV Switch Stand, S4 Sheet 2	STRUCTURAL - 1	vendor	3/5/2013	Approval
6007-PLN-ATD-23-55-0018	Steel Details 230kV Single Phase, 0T Stand - S 6	STRUCTURAL - 1	vendor	3/5/2013	Approval
6007-CON-BRU-00-25-0003	RFI Steam Generator Turbine Foundations	STRUCTURAL - 1	vendor	3/6/2013	Approval
N.A,	Steam Turbine Supports L2 & L3	STRUCTURAL - 1	vendor	3/6/2013	Approval
RFI #RJ008	Alternate Epoxy Set Anchor Bolts	STRUCTURAL - 1	vendor	3/7/2013	Approval
6007-CAL-AGE-58-52-2530	Calculation report for Basin Expansion Vesse foundation Alpha	STRUCTURAL - 1	vendor	3/7/2013	Approval
6007-PLN-AGE-58-52-2530	Alpha Plant Basin Expansion Vessel Foundation. Cover Sheet	STRUCTURAL - 1	vendor	3/7/2013	Approval
6007-PLN-AGE-58-52-2531	Alpha Plant Basin Expansion Vessel Foundation. General notes	STRUCTURAL - 1	vendor	3/7/2013	Approval
6007-PLN-AGE-58-52-2532	Alpha Plant Basin Expansion Vessel Foundation. Plan View	STRUCTURAL - 1	vendor	3/7/2013	Approval
6007-PLN-AGE-58-52-2533	Alpha Plant Basin Expansion Vessel Foundation. Section and details	STRUCTURAL - 1	vendor	3/7/2013	Approval
6007-PLN-AGE-58-52-2534	Alpha Plant Basin Expansion Vessel Foundation. Schedule and details II	STRUCTURAL - 1	vendor	3/7/2013	Approval
6007-PLN-AGE-58-52-2535	Alpha Plant Basin Expansion Vessel Foundation. Columns I	STRUCTURAL - 1	vendor	3/7/2013	Approval
6007-PLN-AGE-58-52-2536	Alpha Plant Basin Expansion Vessel Foundation. Columns II	STRUCTURAL - 1	vendor	3/7/2013	Approval
6007-CAL-AGE-58-52-6530	Calculation report for Basin Expansion Vesse foundation Beta	STRUCTURAL - 1	vendor	3/7/2013	Approval
6007-PLN-AGE-58-52-6530	Beta Plant Basin Expansion Vessel Foundation. Cover Sheet	STRUCTURAL - 1	vendor	3/7/2013	Approval
6007-PLN-AGE-58-52-6531	Beta Plant Basin Expansion Vessel Foundation. General notes	STRUCTURAL - 1	vendor	3/7/2013	Approval
6007-PLN-AGE-58-52-6532	Beta Plant Basin Expansion Vessel Foundation. Plan View	STRUCTURAL - 1	vendor	3/7/2013	Approval
6007-PLN-AGE-58-52-6533	Beta Plant Basin Expansion Vessel Foundation. Section and details	STRUCTURAL - 1	vendor	3/7/2013	Approval
6007-PLN-AGE-58-52-6534	Beta Plant Basin Expansion Vessel Foundation. Schedule and details II	STRUCTURAL - 1	vendor	3/7/2013	Approval
6007-PLN-AGE-58-52-6535	Beta Plant Basin Expansion Vessel Foundation. Columns I	STRUCTURAL - 1	vendor	3/7/2013	Approval
6007-PLN-AGE-58-52-6536	Beta Plant Basin Expansion Vessel Foundation. Columns II	STRUCTURAL - 1	vendor	3/7/2013	Approval
6007-PLN-AGE-58-52-7402	Beta plant HTF-1 Pipe Rack foundation - Support foundations plan	STRUCTURAL - 1	vendor	3/7/2013	Approval
6007-PLN-AGE-58-52-7403	Beta plant HTF-1 Pipe Rack foundation - Data table	STRUCTURAL - 1	vendor	3/7/2013	Approval
6007-PLN-AGE-58-52-7404	Beta plant HTF-1 Pipe Rack foundation - Sections and details I	STRUCTURAL - 1	vendor	3/7/2013	Approval
6007-PLN-AGE-58-52-7405	Beta plant HTF-1 Pipe Rack foundation - Sections and details II	STRUCTURAL - 1	vendor	3/7/2013	Approval
6007-PLN-AGE-58-52-7406	Beta plant HTF-1 Pipe Rack foundation - Sections and details III	STRUCTURAL - 1	vendor	3/7/2013	Approval
Annex 3 Column Load Data	Annex 3 of calculation report	STRUCTURAL - 1	vendor	3/7/2013	Approval
Columns.pdf	Additional calculations for columns/walls	STRUCTURAL - 1	vendor	3/7/2013	Approval
6007-PLN-AGE-00-50-S001	General Civil and Structural Notes	STRUCTURAL - 1	vendor	3/7/2013	Approval
6007-CAL-CTS-58-52-1000	HTF Flash and Expansion Vessel Foundation and Anchor Bolt Design	STRUCTURAL - 1	vendor	3/7/2013	Approval
6007-PLN-CTS-58-52-1000	HTF Flash and Expansion Vessel General Structural Notes / Structural Details	STRUCTURAL - 1	vendor	3/7/2013	Approval
6007-PLN-CTS-58-52-1001	Foundation Plan	STRUCTURAL - 1	vendor	3/7/2013	Approval
n.a.	Modification to top of pier at P-11 thru P-16	STRUCTURAL - 1	vendor	3/11/2013	Approval
6007-CAL-AGE-58-54-3451	Calculation report for Rack 2-Connection Design Alpha	STRUCTURAL - 1	vendor	3/15/2013	Approval
6007-PLN-AGE-58-54-3472	HTF -2 Piperack Steel Structure Plan View I	STRUCTURAL - 1	vendor	3/15/2013	Approval
6007-PLN-AGE-58-54-3473	HTF -2 Piperack Steel Structure Plan View II	STRUCTURAL - 1	vendor	3/15/2013	Approval
6007-PLN-AGE-58-54-3474	HTF -2 Piperack Steel Structure Plan View III	STRUCTURAL - 1	vendor	3/15/2013	Approval
6007-PLN-AGE-58-54-3475	HTF -2 Piperack Steel Structure Plan View IV	STRUCTURAL - 1	vendor	3/15/2013	Approval
6007-PLN-AGE-58-54-3476	HTF -2 Piperack Steel Structure Elevations I	STRUCTURAL - 1	vendor	3/15/2013	Approval
6007-PLN-AGE-58-54-3477	HTF -2 Piperack Steel Structure Elevations II	STRUCTURAL - 1	vendor	3/15/2013	Approval
6007-PLN-AGE-58-54-3478	HTF -2 Piperack Steel Structure Elevations III	STRUCTURAL - 1	vendor	3/15/2013	Approval
6007-PLN-AGE-58-54-3479	HTF -2 Piperack Steel Structure Elevations IV	STRUCTURAL - 1	vendor	3/15/2013	Approval
6007-PLN-AGE-58-54-3480	HTF -2 Piperack Foundation Connection Details	STRUCTURAL - 1	vendor	3/15/2013	Approval
6007-PLN-AGE-58-54-3481	HTF -2 Piperack Foundation Connection Details	STRUCTURAL - 1	vendor	3/15/2013	Approval
6007-PLN-AGE-58-54-3482	HTF -2 Piperack Foundation Connection Details	STRUCTURAL - 1	vendor	3/15/2013	Approval

ABENER TEYMA MOJAVE

Compliance No.:	GEN-2				
Job :	Mojave Solar Project				
Date: 2/17/11	Description: Structural Master Drawing List				
Sheet No.	Description	Applicable Condition of Certification	Vendor Supplied or EOR	Submittal Date	Reason for Submittal
6007-PLN-AGE-58-54-3483	HTF -2 Piperack Foundation Connection Details	STRUCTURAL - 1	vendor	3/15/2013	Approval
6007-CAL-AGE-58-54-7451	Calculation report for Rack 2-Connection Design Beta	STRUCTURAL - 1	vendor	3/15/2013	Approval
6007-PLN-AGE-58-54-7472	HTF -2 Piperack Steel Structure Plan View I	STRUCTURAL - 1	vendor	3/15/2013	Approval
6007-PLN-AGE-58-54-7473	HTF -2 Piperack Steel Structure Plan View II	STRUCTURAL - 1	vendor	3/15/2013	Approval
6007-PLN-AGE-58-54-7474	HTF -2 Piperack Steel Structure Plan View III	STRUCTURAL - 1	vendor	3/15/2013	Approval
6007-PLN-AGE-58-54-7475	HTF -2 Piperack Steel Structure Plan View IV	STRUCTURAL - 1	vendor	3/15/2013	Approval
6007-PLN-AGE-58-54-7476	HTF -2 Piperack Steel Structure Elevations I	STRUCTURAL - 1	vendor	3/15/2013	Approval
6007-PLN-AGE-58-54-7477	HTF -2 Piperack Steel Structure Elevations II	STRUCTURAL - 1	vendor	3/15/2013	Approval
6007-PLN-AGE-58-54-7478	HTF -2 Piperack Steel Structure Elevations III	STRUCTURAL - 1	vendor	3/15/2013	Approval
6007-PLN-AGE-58-54-7479	HTF -2 Piperack Steel Structure Elevations IV	STRUCTURAL - 1	vendor	3/15/2013	Approval
6007-PLN-AGE-58-54-7480	HTF -2 Piperack Foundation Connection Details	STRUCTURAL - 1	vendor	3/15/2013	Approval
6007-PLN-AGE-58-54-7481	HTF -2 Piperack Foundation Connection Details	STRUCTURAL - 1	vendor	3/15/2013	Approval
6007-PLN-AGE-58-54-7482	HTF -2 Piperack Foundation Connection Details	STRUCTURAL - 1	vendor	3/15/2013	Approval
6007-PLN-AGE-58-54-7483	HTF -2 Piperack Foundation Connection Details	STRUCTURAL - 1	vendor	3/15/2013	Approval
6007-PLN-A GE-58-54-3450	Alpha Plant HTF-2 Piperack Steel Structure Cover Sheet	STRUCTURAL - 1	vendor	3/15/2013	Approval
6007-PLN-AGE-58-54-3451	Alpha Plant HTF-2 Piperack Steel Structure General Notes	STRUCTURAL - 1	vendor	3/15/2013	Approval
6007-PLN-AGE-58-54-3452	Alpha Plant HTF-2 Piperack Steel	STRUCTURAL - 1	vendor	3/15/2013	Approval
6007-PLN-AGE-58-54-3453	Alpha Plant HTF-2 Piperack Steel	STRUCTURAL - 1	vendor	3/15/2013	Approval
6007-PLN-AGE-58-54-3454	Alpha Plant HTF-2 Piperack Steel	STRUCTURAL - 1	vendor	3/15/2013	Approval
6007-PLN-AGE-58-54-3455	Alpha Plant HTF-2 Piperack Steel	STRUCTURAL - 1	vendor	3/15/2013	Approval
6007-PLN-AGE-58-54-3456	Alpha Plant HTF-2 Piperack Steel Structure Elevations I	STRUCTURAL - 1	vendor	3/15/2013	Approval
6007-PLN-AGE-58-54-3457	Alpha Plant HTF-2 Piperack Steel Structure Eleveations II	STRUCTURAL - 1	vendor	3/15/2013	Approval
6007-PLN-AGE-58-54-3458	Alpha Plant HTF-2 Piperack Steel Structure Elevations III	STRUCTURAL - 1	vendor	3/15/2013	Approval
6007-PLN-AGE-58-54-3459	Alpha Plant HTF-2 Piperack Steel Structure Elevations IV	STRUCTURAL - 1	vendor	3/15/2013	Approval
6007-PLN-AGE-58-54-3460	Alpha Plant HTF-2 Piperack Steel Structure Details I	STRUCTURAL - 1	vendor	3/15/2013	Approval
6007-PLN-AGE-58-54-3461	Alpha Plant HTF-2 Piperack Steel Structure Details II	STRUCTURAL - 1	vendor	3/15/2013	Approval
6007-PLN-AGE-58-54-3462	Alpha Plant HTF-2 Piperack Steel Structure Details III	STRUCTURAL - 1	vendor	3/15/2013	Approval
6007-PLN-AGE-58-54-3463	Alpha Plant HTF-2 Piperack Steel Structure Details IV	STRUCTURAL - 1	vendor	3/15/2013	Approval
6007-PLN-AGE-58-54-3464	Alpha Plant HTF-2 Piperack Steel Structure Details V	STRUCTURAL - 1	vendor	3/15/2013	Approval
6007-PLN-AGE-58-54-7450	Beta Plant HTF-2 Piperack Steel Structure Cover Sheet	STRUCTURAL - 1	vendor	3/15/2013	Approval
6007-PLN-A GE-58-54-7451	Beta Plant HTF-2 Piperack Steel Structure General Notes	STRUCTURAL - 1	vendor	3/15/2013	Approval
6007-PLN-A GE-58-54-7453	Beta Plant HTF-2 Piperack Steel	STRUCTURAL - 1	vendor	3/15/2013	Approval
6007-PLN-A GE-58-54-7454	Beta Plant HTF-2 Piperack Steel (-4Structure Plan View III	STRUCTURAL - 1	vendor	3/15/2013	Approval
6007-PLN-A GE-58-54-7455	Beta Plant HTF-2 Piperack Steel Structure c[4]ucture Plan View IV	STRUCTURAL - 1	vendor	3/15/2013	Approval
6007-PLN-A GE-58-54-7456	Beta Plant HTF-2 Piperack Steel Structure Elevations I	STRUCTURAL - 1	vendor	3/15/2013	Approval
6007-PLN-AGE-58-54-7457	Beta Plant HTF-2 Piperack Steel Structure Elevations II	STRUCTURAL - 1	vendor	3/15/2013	Approval
6007-PLN-AGE-58-54-7458	Beta Plant HTF-2 Piperack Steel Structure Elevations III	STRUCTURAL - 1	vendor	3/15/2013	Approval
6007-PLN-AGE-58-54-7459	Beta Plant HTF-2 Piperack Steel Structure Elevations IV	STRUCTURAL - 1	vendor	3/15/2013	Approval
6007-PLN-AGE-58-54-7460	Beta Plant HTF-2 Piperack Steel Structure Details I	STRUCTURAL - 1	vendor	3/15/2013	Approval
6007-PLN-AGE-58-54-7461	Beta Plant HTF-2 Piperack Steel Structure Details II	STRUCTURAL - 1	vendor	3/15/2013	Approval
6007-PLN-AGE-58-54-7462	Beta Plant HTF-2 Piperack Steel Structure Details III	STRUCTURAL - 1	vendor	3/15/2013	Approval
6007-PLN-AGE-58-54-7463	Beta Plant HTF-2 Piperack Steel Structure Details IV	STRUCTURAL - 1	vendor	3/15/2013	Approval
6007-PLN-AGE-58-54-7464	Beta Plant HTF-2 Piperack Steel Structure Details VII	STRUCTURAL - 1	vendor	3/15/2013	Approval
Additional calculations	Additional calculations	STRUCTURAL - 1	vendor	3/15/2013	Approval
Annex G 6007-CAL-A GE-58-54	Annex G 6007-CAL-A GE-58-54- 3450	STRUCTURAL - 1	vendor	3/15/2013	Approval
Rack2_BV	Rack2_BV	STRUCTURAL - 1	vendor	3/15/2013	Approval
6007-CAL-AGE-58-52-7400	Calculation report for Rack 1 Foundation Beta Plant	STRUCTURAL - 1	vendor	3/15/2013	Approval
6007-PLN-AGE-58-52-7400	Beta Plant HTF-1 piperack Foundation Cover Sheet	STRUCTURAL - 1	vendor	3/15/2013	Approval
6007-PLN-AGE-58-52-7401	Beta Plant HTF-1 piperack Foundation General Notes	STRUCTURAL - 1	vendor	3/15/2013	Approval
6007-PLN-AGE-58-52-7402	Beta Plant HTF-1 piperack Foundation Support Foundation Plan	STRUCTURAL - 1	vendor	3/15/2013	Approval
6007-PLN-AGE-58-52-7403	Beta Plant HTF-1 piperack Foundation Data Table	STRUCTURAL - 1	vendor	3/15/2013	Approval
6007-PLN-AGE-58-52-7404	Beta Plant HTF-1 piperack Foundation Section & Details I	STRUCTURAL - 1	vendor	3/15/2013	Approval
6007-PLN-AGE-58-52-7405	Beta Plant HTF-1 piperack Foundation Section & Details II	STRUCTURAL - 1	vendor	3/15/2013	Approval
6007-PLN-AGE-58-52-7406	Beta Plant HTF-1 piperack Foundation Section & Details III	STRUCTURAL - 1	vendor	3/15/2013	Approval
6007-PLN-AGE-00-50-S001	general civil and structural notes	STRUCTURAL - 1	vendor	3/15/2013	Approval
6007-CAL-AGE-25-51-4000	Calculation Report for STG auxiliary equipment structure Alpha Plant	STRUCTURAL - 1	vendor	3/15/2013	Approval
6007-CAL-AGE-25-51-8000	Calculation Report for STG auxiliary equipment structure Beta Plant	STRUCTURAL - 1	vendor	3/15/2013	Approval
6007-PLN-AGE-25-54-4000	Field Alpha STG auxiliary equipment structure Alpha Cover Sheet	STRUCTURAL - 1	vendor	3/15/2013	Approval
6007-PLN-AGE-25-54-4020	Field Alpha STG auxiliary equipment structure Alpha General Notes	STRUCTURAL - 1	vendor	3/15/2013	Approval
6007-PLN-AGE-25-54-4040	Field Alpha STG auxiliary equipment structure Plan @El 2073.93' @El 2078.50'	STRUCTURAL - 1	vendor	3/15/2013	Approval
6007-PLN-AGE-25-54-4041	Field Alpha STG auxiliary equipment structure Plan @El 2086.50' @El 2091'	STRUCTURAL - 1	vendor	3/15/2013	Approval
6007-PLN-AGE-25-54-4042	Field Alpha STG auxiliary equipment structure Plan @El 2098.25'	STRUCTURAL - 1	vendor	3/15/2013	Approval
6007-PLN-AGE-25-54-4043	Field Alpha STG auxiliary equipment structure Plan @El 2114'	STRUCTURAL - 1	vendor	3/15/2013	Approval
6007-PLN-AGE-25-54-4044	Field Alpha STG auxiliary equipment structure Plan @El 2123.84'; 2138.98' 2150.17'	STRUCTURAL - 1	vendor	3/15/2013	Approval
6007-PLN-AGE-25-54-4045	Field Alpha STG auxiliary equipment structure Elevations Sheet 1	STRUCTURAL - 1	vendor	3/15/2013	Approval
6007-PLN-AGE-25-54-4046	Field Alpha STG auxiliary equipment structure Elevations Sheet 2	STRUCTURAL - 1	vendor	3/15/2013	Approval
6007-PLN-AGE-25-54-4047	Field Alpha STG auxiliary equipment structure Elevations Sheet 3	STRUCTURAL - 1	vendor	3/15/2013	Approval
6007-PLN-AGE-25-54-4048	Field Alpha STG auxiliary equipment structure Misc Details	STRUCTURAL - 1	vendor	3/15/2013	Approval
6007-PLN-AGE-25-54-4049	Field Alpha STG auxiliary equipment structure Anchor Plates Details	STRUCTURAL - 1	vendor	3/15/2013	Approval
6007-PLN-AGE-25-54-4050	Field Alpha STG auxiliary equipment structure Stair schematics	STRUCTURAL - 1	vendor	3/15/2013	Approval
6007-PLN-AGE-25-54-4051	Field Alpha STG auxiliary equipment structure Column schedule	STRUCTURAL - 1	vendor	3/15/2013	Approval
6007-PLN-AGE-25-54-8000	Field Beta STG auxiliary equipment structure Beta Cover Sheet	STRUCTURAL - 1	vendor	3/15/2013	Approval
6007-PLN-AGE-25-54-8020	Field Beta STG auxiliary equipment structure Beta General Notes	STRUCTURAL - 1	vendor	3/15/2013	Approval
6007-PLN-AGE-25-54-8040	Field Beta STG auxiliary equipment structure Plan @El 2081.93' @El 2086.50'	STRUCTURAL - 1	vendor	3/15/2013	Approval
6007-PLN-AGE-25-54-8041	Field Beta STG auxiliary equipment structure Plan @El 2094.50' @El 2099'	STRUCTURAL - 1	vendor	3/15/2013	Approval
6007-PLN-AGE-25-54-8042	Field Beta STG auxiliary equipment structure Plan @El 2116.25'	STRUCTURAL - 1	vendor	3/15/2013	Approval

ABENER TEYMA MOJAVE

Compliance No.:	GEN-2				
Job :	Mojave Solar Project				
Date: 2/17/11	Description: Structural Master Drawing List				
Sheet No.	Description	Applicable Condition of Certification	Vendor Supplied or EOR	Submittal Date	Reason for Submittal
6007-PLN-AGE-25-54-8043	Field Beta STG auxiliary equipment structure Plan @El 2122'	STRUCTURAL - 1	vendor	3/15/2013	Approval
6007-PLN-AGE-25-54-8044	Field Beta STG auxiliary equipment structure Plan @El 2131.84'; 2146.98' 2158.17'	STRUCTURAL - 1	vendor	3/15/2013	Approval
6007-PLN-AGE-25-54-8045	Field Beta STG auxiliary equipment structure Elevations Sheet 1	STRUCTURAL - 1	vendor	3/15/2013	Approval
6007-PLN-AGE-25-54-8046	Field Beta STG auxiliary equipment structure Elevations Sheet 2	STRUCTURAL - 1	vendor	3/15/2013	Approval
6007-PLN-AGE-25-54-8047	Field Beta STG auxiliary equipment structure Elevations Sheet 3	STRUCTURAL - 1	vendor	3/15/2013	Approval
6007-PLN-AGE-25-54-8048	Field Beta STG auxiliary equipment structure Misc Details	STRUCTURAL - 1	vendor	3/15/2013	Approval
6007-PLN-AGE-25-54-8049	Field Beta STG auxiliary equipment structure Anchor Plates Details	STRUCTURAL - 1	vendor	3/15/2013	Approval
6007-PLN-AGE-25-54-8050	Field Beta STG auxiliary equipment structure Stair schematics	STRUCTURAL - 1	vendor	3/15/2013	Approval
6007-PLN-AGE-25-54-8051	Field Beta STG auxiliary equipment structure Column schedule	STRUCTURAL - 1	vendor	3/15/2013	Approval
na	Additional calculaitons BV PC2	STRUCTURAL - 1	vendor	3/15/2013	Approval
na	ANCHOR BOLTS	STRUCTURAL - 1	vendor	3/15/2013	Approval
na	Responses to BV PC2	STRUCTURAL - 1	vendor	3/15/2013	Approval
6007-CAL-AGE-58-52-3450	Calculation report for Rack 2 foundations	STRUCTURAL - 1	vendor	3/15/2013	Approval
6007-PLN-AGE-58-52-3450	HTF -2 Piperack Foundation Cover Sheet	STRUCTURAL - 1	vendor	3/15/2013	Approval
6007-PLN-AGE-58-52-3451	HTF -2 Piperack Foundation General Notes	STRUCTURAL - 1	vendor	3/15/2013	Approval
6007-PLN-AGE-58-52-3452	HTF -2 Piperack Foundation Plan View	STRUCTURAL - 1	vendor	3/15/2013	Approval
6007-PLN-AGE-58-52-3453	HTF -2 Piperack Foundation Sections & Details	STRUCTURAL - 1	vendor	3/15/2013	Approval
6007-PLN-AGE-58-52-3454	HTF -2 Piperack Foundation Table data & Details	STRUCTURAL - 1	vendor	3/15/2013	Approval
6007-PLN-AGE-58-52-3455	HTF -2 Piperack Foundation Section & Details 1	STRUCTURAL - 1	vendor	3/15/2013	Approval
6007-PLN-AGE-58-52-3456	HTF -2 Piperack Foundation Section & Details 2	STRUCTURAL - 1	vendor	3/15/2013	Approval
6007-PLN-AGE-58-52-3457	HTF -2 Piperack Foundation Section & Details 3	STRUCTURAL - 1	vendor	3/15/2013	Approval
6007-PLN-AGE-58-52-3458	HTF -2 Piperack Foundation Section & Details 4	STRUCTURAL - 1	vendor	3/15/2013	Approval
6007-PLN-A GE-58-52-3459	HTF -2 Piperack Foundation Section & Details 5	STRUCTURAL - 1	vendor	3/15/2013	Approval
6007-PLN-A GE-58-52-3460	HTF -2 Piperack Foundation Section & Details 6	STRUCTURAL - 1	vendor	3/15/2013	Approval
Responses to BV Foundations 2	Responses to BV Foundations 2	STRUCTURAL - 1	vendor	3/15/2013	Approval
6007-CAL-AGE-58-52-7450	Calculation report for Rack 2 foundations	STRUCTURAL - 1	vendor	3/15/2013	Approval
6007-PLN-AGE-58-52-7450	HTF -2 Piperack Foundation Cover Sheet	STRUCTURAL - 1	vendor	3/15/2013	Approval
6007-PLN-AGE-58-52-7451	HTF -2 Piperack Foundation General Notes	STRUCTURAL - 1	vendor	3/15/2013	Approval
6007-PLN-AGE-58-52-7452	HTF -2 Piperack Foundation Plan View	STRUCTURAL - 1	vendor	3/15/2013	Approval
6007-PLN-AGE-58-52-7453	HTF -2 Piperack Foundation Sections & Details	STRUCTURAL - 1	vendor	3/15/2013	Approval
6007-PLN-AGE-58-52-7454	HTF -2 Piperack Foundation Table data & Details	STRUCTURAL - 1	vendor	3/15/2013	Approval
6007-PLN-AGE-58-52-7455	HTF -2 Piperack Foundation Section & Details 1	STRUCTURAL - 1	vendor	3/15/2013	Approval
6007-PLN-AGE-58-52-7456	HTF -2 Piperack Foundation Section & Details 2	STRUCTURAL - 1	vendor	3/15/2013	Approval
6007-PLN-AGE-58-52-7457	HTF -2 Piperack Foundation Section & Details 3	STRUCTURAL - 1	vendor	3/15/2013	Approval
6007-PLN-AGE-58-52-7458	HTF -2 Piperack Foundation Sections & Details 4	STRUCTURAL - 1	vendor	3/15/2013	Approval
6007-PLN-AGE-58-52-7459	HTF -2 Piperack Foundation Sections & Details 5	STRUCTURAL - 1	vendor	3/15/2013	Approval
6007-PLN-AGE-58-52-7460	HTF -2 Piperack Foundation Sections & Details 6	STRUCTURAL - 1	vendor	3/15/2013	Approval
6007-CAL-AGE-58-53-2400	Calculation Report for North Underground crossing Alpha Plant	STRUCTURAL - 1	vendor	3/15/2013	Approval
6007-CAL-AGE-58-53-2450	Calculation Report for South Underground crossing Alpha Plant	STRUCTURAL - 1	vendor	3/15/2013	Approval
6007-PLN-AGE-58-53-2400	HTF North Underground Crossing Cover Sheet	STRUCTURAL - 1	vendor	3/15/2013	Approval
6007-PLN-AGE-58-53-2401	HTF North Underground Crossing General Notes	STRUCTURAL - 1	vendor	3/15/2013	Approval
6007-PLN-AGE-58-53-2402	HTF North Underground Crossing Geometrical definition	STRUCTURAL - 1	vendor	3/15/2013	Approval
6007-PLN-AGE-58-53-2403	HTF North Underground Crossing Reinforcement definition	STRUCTURAL - 1	vendor	3/15/2013	Approval
6007-PLN-AGE-58-53-2404	HTF North Underground Crossing Walls Reinforcement definition	STRUCTURAL - 1	vendor	3/15/2013	Approval
6007-PLN-AGE-58-53-2405	HTF North Underground Crossing Mat Foundation Reinforcement	STRUCTURAL - 1	vendor	3/15/2013	Approval
6007-PLN-AGE-58-53-2406	HTF North Underground Crossing Slabs definition I	STRUCTURAL - 1	vendor	3/15/2013	Approval
6007-PLN-AGE-58-53-2407	HTF North Underground Crossing Slabs definition II	STRUCTURAL - 1	vendor	3/15/2013	Approval
6007-PLN-AGE-58-53-2408	HTF North Underground Crossing Plan sections & Details for Sleepers	STRUCTURAL - 1	vendor	3/15/2013	Approval
6007-PLN-AGE-58-53-2409	HTF North Underground Crossing Gatehause Foundations	STRUCTURAL - 1	vendor	3/15/2013	Approval
6007-PLN-AGE-58-53-2410	HTF North Underground Crossing details	STRUCTURAL - 1	vendor	3/15/2013	Approval
6007-PLN-AGE-58-53-2450	HTF South Underground Crossing Cover Sheet	STRUCTURAL - 1	vendor	3/15/2013	Approval
6007-PLN-AGE-58-53-2451	HTF South Underground Crossing General Notes	STRUCTURAL - 1	vendor	3/15/2013	Approval
6007-PLN-AGE-58-53-2452	HTF South Underground Crossing Geometrical definition	STRUCTURAL - 1	vendor	3/15/2013	Approval
6007-PLN-AGE-58-53-2453	HTF South Underground Crossing Reinforcement definition	STRUCTURAL - 1	vendor	3/15/2013	Approval
6007-PLN-AGE-58-53-2454	HTF South Underground Crossing Walls Reinforcement definition	STRUCTURAL - 1	vendor	3/15/2013	Approval
6007-PLN-AGE-58-53-2455	HTF South Underground Crossing Mat Foundation Reinforcement	STRUCTURAL - 1	vendor	3/15/2013	Approval
6007-PLN-AGE-58-53-2456	HTF South Underground Crossing Slabs definition I	STRUCTURAL - 1	vendor	3/15/2013	Approval
6007-PLN-AGE-58-53-2457	HTF South Underground Crossing Slabs definition II	STRUCTURAL - 1	vendor	3/15/2013	Approval
6007-PLN-AGE-58-53-2458	HTF South Underground Crossing Plan sections & Details for Sleepers	STRUCTURAL - 1	vendor	3/15/2013	Approval
6007-PLN-AGE-58-53-2459	HTF South Underground Crossing Gatehause Foundations	STRUCTURAL - 1	vendor	3/15/2013	Approval
6007-PLN-AGE-58-53-2460	HTF South Underground Crossing details	STRUCTURAL - 1	vendor	3/15/2013	Approval
6007-CAL-AGE-58-54-4500	Calculation Report for for HTF north underground gatehouses	STRUCTURAL - 1	vendor	3/15/2013	Approval
6007-CAL-AGE-58-54-4510	Calculation Report for for HTF south underground gatehouses	STRUCTURAL - 1	vendor	3/15/2013	Approval
6007-PLN-AGE-58-54-4500	HTF north underground gatehouses Cover Sheet	STRUCTURAL - 1	vendor	3/15/2013	Approval
6007-PLN-AGE-58-54-4501	HTF north underground gatehouses General notes	STRUCTURAL - 1	vendor	3/15/2013	Approval
6007-PLN-AGE-58-54-4502	HTF north underground gatehouses Gate house NW & NE frames & Details	STRUCTURAL - 1	vendor	3/15/2013	Approval
6007-PLN-AGE-58-54-4503	HTF north underground gatehouses Gate house NW & NE Architecture	STRUCTURAL - 1	vendor	3/15/2013	Approval
6007-PLN-AGE-58-54-4504	HTF north underground gatehouses Gate house NW & NE Details	STRUCTURAL - 1	vendor	3/15/2013	Approval
6007-PLN-AGE-58-54-4505	HTF north underground gatehouses Gate house NW & NE Details	STRUCTURAL - 1	vendor	3/15/2013	Approval
6007-PLN-AGE-58-54-4510	HTF south underground gatehouses Cover Sheet	STRUCTURAL - 1	vendor	3/15/2013	Approval
6007-PLN-AGE-58-54-4511	HTF south underground gatehouses General notes	STRUCTURAL - 1	vendor	3/15/2013	Approval
6007-PLN-AGE-58-54-4512	HTF south underground gatehouses Gate house SW & SE frames & Details	STRUCTURAL - 1	vendor	3/15/2013	Approval
6007-PLN-AGE-58-54-4513	HTF south underground gatehouses Gate house SW & SE Architecture	STRUCTURAL - 1	vendor	3/15/2013	Approval
6007-PLN-AGE-58-54-4514	HTF south underground gatehouses Gate house SW & SE Details	STRUCTURAL - 1	vendor	3/15/2013	Approval
6007-PLN-AGE-58-54-4515	HTF south underground gatehouses Gate house SW & SE Details	STRUCTURAL - 1	vendor	3/15/2013	Approval
na	Plan Check Reply 130219	STRUCTURAL - 1	vendor	3/15/2013	Approval

ABENER TEYMA MOJAVE

Compliance No.:	GEN-2				
Job :	Mojave Solar Project				
Date: 2/17/11	Description: Structural Master Drawing List				
Sheet No.	Description	Applicable Condition of Certification	Vendor Supplied or EOR	Submittal Date	Reason for Submittal
6007-CAL-AGE-25-52-4020	STG Auxiliary equipment platformfoundation. Calculation report. Alpha plant	STRUCTURAL - 1	vendor	3/15/2013	Approval
6007-PLN-AGE-25-52-4100	STG Auxiliary equipment platformfoundation. Cover sheet. Alpha plant	STRUCTURAL - 1	vendor	3/15/2013	Approval
6007-PLN-AGE-25-52-4120	STG Auxiliary equipment platformfoundation. General notes. Alpha plant	STRUCTURAL - 1	vendor	3/15/2013	Approval
6007-PLN-AGE-25-52-4140	STG Auxiliary equipment platformfoundation. Plan columns position. Alpha plant	STRUCTURAL - 1	vendor	3/15/2013	Approval
6007-PLN-AGE-25-52-4141	STG Auxiliary equipment platformfoundation. Plan bottom longitudinal reinforcement. Alpha plant	STRUCTURAL - 1	vendor	3/15/2013	Approval
6007-PLN-AGE-25-52-4142	STG Auxiliary equipment platformfoundation. Plan bottom transversal reinforcement. Alpha plant	STRUCTURAL - 1	vendor	3/15/2013	Approval
6007-PLN-AGE-25-52-4160	STG Auxiliary equipment platformfoundation. Details. Alpha plant	STRUCTURAL - 1	vendor	3/15/2013	Approval
6007-PLN-AGE-25-52-4161	STG Auxiliary equipment platformfoundation. Details. Alpha plant	STRUCTURAL - 1	vendor	3/15/2013	Approval
6007-PLN-AGE-25-52-4162	STG Auxiliary equipment platformfoundation. Drainage. Alpha plant	STRUCTURAL - 1	vendor	3/15/2013	Approval
6007-PLN-AGE-25-52-4163	STG Auxiliary equipment platformfoundation. Anchor bolts details. Alpha plant	STRUCTURAL - 1	vendor	3/15/2013	Approval
6007-CAL-AGE-25-52-8020	STG Auxiliary equipment platformfoundation. Calculation report. Beta plant	STRUCTURAL - 1	vendor	3/15/2013	Approval
6007-PLN-AGE-25-52-8100	STG Auxiliary equipment platformfoundation. Cover sheet. Beta plant	STRUCTURAL - 1	vendor	3/15/2013	Approval
6007-PLN-AGE-25-52-8120	STG Auxiliary equipment platformfoundation. General notes. Beta plant	STRUCTURAL - 1	vendor	3/15/2013	Approval
6007-PLN-AGE-25-52-8140	STG Auxiliary equipment platformfoundation. Plan columns position. Beta plant	STRUCTURAL - 1	vendor	3/15/2013	Approval
6007-PLN-AGE-25-52-8141	STG Auxiliary equipment platformfoundation. Plan bottom longitudinal reinforcement. Beta plant	STRUCTURAL - 1	vendor	3/15/2013	Approval
6007-PLN-AGE-25-52-8142	STG Auxiliary equipment platformfoundation. Plan bottom transversal reinforcement. Beta plant	STRUCTURAL - 1	vendor	3/15/2013	Approval
6007-PLN-AGE-25-52-8160	STG Auxiliary equipment platformfoundation. Details. Beta plant	STRUCTURAL - 1	vendor	3/15/2013	Approval
6007-PLN-AGE-25-52-8161	STG Auxiliary equipment platformfoundation. Details. Beta plant	STRUCTURAL - 1	vendor	3/15/2013	Approval
6007-PLN-AGE-25-52-8162	STG Auxiliary equipment platformfoundation. Drainage. Beta plant	STRUCTURAL - 1	vendor	3/15/2013	Approval
6007-PLN-AGE-25-52-8163	STG Auxiliary equipment platformfoundation. Anchor bolts details. Beta plant	STRUCTURAL - 1	vendor	3/15/2013	Approval
na	Anchor Design	STRUCTURAL - 1	vendor	3/15/2013	Approval
na	Responses	STRUCTURAL - 1	vendor	3/15/2013	Approval
6007-AGE-00-50-S001	General Civil and Structural Notes	STRUCTURAL - 1	vendor	3/15/2013	Approval
6007-AGE-00-50-S002	Typical Ladder, Safety Cage, and Safety Gate Details	STRUCTURAL - 1	vendor	3/15/2013	Approval
6007-AGE-00-50-S003	Typical Pipe, Handrail, Stairway, and Grating Details	STRUCTURAL - 1	vendor	3/15/2013	Approval
6007-AGE-00-50-S004	Standard Base Plate Details and Standard Shear Key Details	STRUCTURAL - 1	vendor	3/15/2013	Approval
6007-PLN-AGE-00-50-C001	Anchor Rod Assemblies and Details	STRUCTURAL - 1	vendor	3/15/2013	Approval
6007-PLN-AGE-58-52-3400	HTF-1 piperack foundation. Alpha. Cover Sheet	STRUCTURAL - 1	vendor	3/15/2013	Approval
6007-PLN-AGE-58-52-3402	HTF-1 piperack foundation.Alpha. Support found. plan	STRUCTURAL - 1	vendor	3/15/2013	Approval
6007-PLN-AGE-58-52-3403	HTF-1 piperack foundation. Alpha. Data table	STRUCTURAL - 1	vendor	3/15/2013	Approval
6007-PLN-AGE-58-52-3404	HTF-1 piperack foundation. Alpha plant. Sections & Details I	STRUCTURAL - 1	vendor	3/15/2013	Approval
6007-PLN-AGE-58-52-3405	HTF-1 piperack foundation. Alpha plant. Sections & details II	STRUCTURAL - 1	vendor	3/15/2013	Approval
6007-PLN-AGE-58-52-3406	HTF-1 piperack foundation. Alpha plant. Sections & details III	STRUCTURAL - 1	vendor	3/15/2013	Approval
6007-PLN-AGE-58-52-3408	HTF-1 piperack foundation. Alpha plant. Sections & details V	STRUCTURAL - 1	vendor	3/15/2013	Approval
Additional Columns	Additional Columns	STRUCTURAL - 1	vendor	3/15/2013	Approval
6007-PLN-AGE-25-54-4500	STG Auxiliary equipment structure Cover Sheet	STRUCTURAL - 1	vendor	3/15/2013	Approval
6007-PLN-AGE-25-54-4501	STG Auxiliary equipment structure General Notes	STRUCTURAL - 1	vendor	3/15/2013	Approval
6007-PLN-AGE-25-54-4502	STG Auxiliary equipment structure Elevations I	STRUCTURAL - 1	vendor	3/15/2013	Approval
6007-PLN-AGE-25-54-4503	STG Auxiliary equipment structure Elevations II	STRUCTURAL - 1	vendor	3/15/2013	Approval
6007-PLN-AGE-25-54-4504	STG Auxiliary equipment structure Elevations III	STRUCTURAL - 1	vendor	3/15/2013	Approval
6007-PLN-AGE-25-54-4505	STG Auxiliary equipment structure BCP & BT Connections	STRUCTURAL - 1	vendor	3/15/2013	Approval
6007-PLN-AGE-25-54-4506	STG Auxiliary equipment structure CH & CR Connections	STRUCTURAL - 1	vendor	3/15/2013	Approval
6007-PLN-AGE-25-54-4507	STG Auxiliary equipment structure JT & JB Connections	STRUCTURAL - 1	vendor	3/15/2013	Approval
6007-PLN-AGE-25-54-4508	STG Auxiliary equipment structure Plan @El	STRUCTURAL - 1	vendor	3/15/2013	Approval
6007-PLN-AGE-25-54-4509	STG Auxiliary equipment structure Plan @El	STRUCTURAL - 1	vendor	3/15/2013	Approval
6007-PLN-AGE-25-54-4510	STG Auxiliary equipment structure Plan @El	STRUCTURAL - 1	vendor	3/15/2013	Approval
6007-PLN-AGE-25-54-4511	STG Auxiliary equipment structure Plan @El	STRUCTURAL - 1	vendor	3/15/2013	Approval
6007-PLN-AGE-25-54-4512	STG Auxiliary equipment structure Plan @El	STRUCTURAL - 1	vendor	3/15/2013	Approval
6007-PLN-AGE-25-54-4513	STG Auxiliary equipment structure GP Connections	STRUCTURAL - 1	vendor	3/15/2013	Approval
6007-PLN-AGE-25-54-4514	STG Auxiliary equipment Structure JBP GF & GE Connections	STRUCTURAL - 1	vendor	3/15/2013	Approval
6007-PLN-AGE-25-54-4515	STG Auxiliary equipment structure BCF Connections	STRUCTURAL - 1	vendor	3/15/2013	Approval
6007-PLN-AGE-25-54-4516	STG Auxiliary equipment structure Column Splices I	STRUCTURAL - 1	vendor	3/15/2013	Approval
6007-PLN-AGE-25-54-4517	STG Auxiliary equipment structure Column Splices II	STRUCTURAL - 1	vendor	3/15/2013	Approval
6007-PLN-AGE-25-54-4518	STG Auxiliary equipment structure Column Splices III	STRUCTURAL - 1	vendor	3/15/2013	Approval
6007-CAL-AGE-25-51-4004	Calculation report for STG Auxiliary equipment structure	STRUCTURAL - 1	vendor	3/15/2013	Approval
6007-PLN-AGE-25-54-8500	STG Auxiliary equipment structure Cover Sheet	STRUCTURAL - 1	vendor	3/15/2013	Approval
6007-PLN-AGE-25-54-8501	STG Auxiliary equipment structure General Notes	STRUCTURAL - 1	vendor	3/15/2013	Approval
6007-PLN-AGE-25-54-8502	STG Auxiliary equipment structure Elevations I	STRUCTURAL - 1	vendor	3/15/2013	Approval
6007-PLN-AGE-25-54-8503	STG Auxiliary equipment structure Elevations II	STRUCTURAL - 1	vendor	3/15/2013	Approval
6007-PLN-AGE-25-54-8504	STG Auxiliary equipment structure Elevations III	STRUCTURAL - 1	vendor	3/15/2013	Approval
6007-PLN-AGE-25-54-8505	STG Auxiliary equipment structure BCP & BT Connections	STRUCTURAL - 1	vendor	3/15/2013	Approval
6007-PLN-AGE-25-54-8506	STG Auxiliary equipment structure CH & CR Connections	STRUCTURAL - 1	vendor	3/15/2013	Approval
6007-PLN-AGE-25-54-8507	STG Auxiliary equipment structure JT & JB Connections	STRUCTURAL - 1	vendor	3/15/2013	Approval
6007-PLN-AGE-25-54-8508	STG Auxiliary equipment structure Plan @El	STRUCTURAL - 1	vendor	3/15/2013	Approval
6007-PLN-AGE-25-54-8509	STG Auxiliary equipment structure Plan @El	STRUCTURAL - 1	vendor	3/15/2013	Approval
6007-PLN-AGE-25-54-8510	STG Auxiliary equipment structure Plan @El	STRUCTURAL - 1	vendor	3/15/2013	Approval
6007-PLN-AGE-25-54-8511	STG Auxiliary equipment structure Plan @El	STRUCTURAL - 1	vendor	3/15/2013	Approval
6007-PLN-AGE-25-54-8512	STG Auxiliary equipment structure Plan @El	STRUCTURAL - 1	vendor	3/15/2013	Approval
6007-PLN-AGE-25-54-8513	STG Auxiliary equipment structure GP Connections	STRUCTURAL - 1	vendor	3/15/2013	Approval
6007-PLN-AGE-25-54-8514	STG Auxiliary equipment Structure JBP GF & GE Connections	STRUCTURAL - 1	vendor	3/15/2013	Approval
6007-PLN-AGE-25-54-8515	STG Auxiliary equipment structure BCF Connections	STRUCTURAL - 1	vendor	3/15/2013	Approval
6007-PLN-AGE-25-54-8516	STG Auxiliary equipment structure Column Splices I	STRUCTURAL - 1	vendor	3/15/2013	Approval
6007-PLN-AGE-25-54-8517	STG Auxiliary equipment structure Column Splices II	STRUCTURAL - 1	vendor	3/15/2013	Approval
6007-PLN-AGE-25-54-8518	STG Auxiliary equipment structure Column Splices III	STRUCTURAL - 1	vendor	3/15/2013	Approval
6007-CAL-AGE-25-51-8004	Calculation report for STG Auxiliary equipment structure	STRUCTURAL - 1	vendor	3/15/2013	Approval
na	BV Responses PC2	STRUCTURAL - 1	vendor	3/15/2013	Approval

ABENER TEYMA MOJAVE

Compliance No.:	GEN-2				
Job :	Mojave Solar Project				
Date: 2/17/11	Description: Structural Master Drawing List				
Sheet No.	Description	Applicable Condition of Certification	Vendor Supplied or EOR	Submittal Date	Reason for Submittal
-rev0-FWE Evaporator Structural De	Structural Engineering Design Report	STRUCTURAL - 1	vendor	3/22/2013	Approval
-21-62-0003 Pump and Motor And	Seismic Calculations	STRUCTURAL - 1	vendor	3/22/2013	Approval
-CAL-ATE-17-62-0025 - 02-0739 -	COMPRESS Pressure Vessel Design Calculations	STRUCTURAL - 1	vendor	3/22/2013	Approval
6007-PLN-AGE-25-52-4100	STG Auxiliary equipment platformfoundation. Cover sheet. Alpha plant	STRUCTURAL - 1	vendor	3/22/2013	Approval
6007-PLN-AGE-25-52-4162	STG Auxiliary equipment platformfoundation. Drainage. Alpha plant	STRUCTURAL - 1	vendor	3/22/2013	Approval
6007-PLN-AGE-25-52-8100	STG Auxiliary equipment platformfoundation. Cover sheet. Beta plant	STRUCTURAL - 1	vendor	3/22/2013	Approval
6007-PLN-AGE-25-52-8162	STG Auxiliary equipment platformfoundation. Drainage. Beta plant	STRUCTURAL - 1	vendor	3/22/2013	Approval
LN-ATE-17-62-0024 - 02-0739 - Dr	MV-317 drawings	STRUCTURAL - 1	vendor	3/22/2013	Approval
	Anchor Design	STRUCTURAL - 1	vendor	3/22/2013	Approval
E002587_anchor_bolt_110712.pdf	ANCHOR BOLT ANALYSIS REPORT	STRUCTURAL - 1	vendor	3/22/2013	Approval
E002587_seismic_110712.pdf	SEISMIC ANALYSIS REPORT	STRUCTURAL - 1	vendor	3/22/2013	Approval
MX-309	MX-309	STRUCTURAL - 1	vendor	3/22/2013	Approval
	Responses 2013-03-21	STRUCTURAL - 1	vendor	3/22/2013	Approval
6007-CAL-AGE-58-52-6505	Calculation Report for Centeral Plant, HTF Main Sleepers-pipes Supp. II Beta Plant	STRUCTURAL - 1	vendor	3/22/2013	Approval
6007-PLN-AGE-58-52-6507	Centeral Plant, HTF Main Sleepers-pipes Supp. II Beta Plant foundation plan	STRUCTURAL - 1	vendor	3/22/2013	Approval
6007-PLN-AGE-58-52-6509	Centeral Plant, HTF Main Sleepers-pipes Supp. II Beta Plant section and details II	STRUCTURAL - 1	vendor	3/22/2013	Approval
6007-PLN-AGE-58-52-6508	Centeral Plant, HTF Main Sleepers-pipes Supp. II Beta Plant section and details I	STRUCTURAL - 1	vendor	3/22/2013	Approval
6007-PLN-AGE-58-52-6506	Centeral Plant, HTF Main Sleepers-pipes Supp. II Beta Plant general notes	STRUCTURAL - 1	vendor	3/22/2013	Approval
6007-PLN-AGE-58-52-6505	Centeral Plant, HTF Main Sleepers-pipes Supp. II cover sheet	STRUCTURAL - 1	vendor	3/22/2013	Approval
6007-LIS-AGE-58-52-6505	Coordinates list for Central Plant, HTF Main Sleepers-Pipes Supp. III. Alpha Plant	STRUCTURAL - 1	vendor	3/22/2013	Approval
6007-PLN-ATD-23-57-C074	Mojave 230 KV, Substations Alpha and Beta Firewall MPT1 (F3)	STRUCTURAL - 1	vendor	3/25/2013	Approval
6007-PLN-AGE-68-55-4020	General Notes	STRUCTURAL - 1	vendor	3/21/2013	Approval
6007-PLN-AGE-68-55-4040	underground plan	STRUCTURAL - 1	vendor	3/21/2013	Approval
6007-PLN-AGE-68-55-4060	details	STRUCTURAL - 1	vendor	3/21/2013	Approval
6007-PLN-AGE-68-55-8000	Cover Sheet	STRUCTURAL - 1	vendor	3/21/2013	Approval
6007-PLN-AGE-68-55-8020	General Notes	STRUCTURAL - 1	vendor	3/21/2013	Approval
6007-PLN-AGE-68-55-8040	underground plan	STRUCTURAL - 1	vendor	3/21/2013	Approval
6007-PLN-AGE-68-55-8060	details I	STRUCTURAL - 1	vendor	3/21/2013	Approval
6007-PLN-AGE-00-31-1001	TRENCH DETAIL	STRUCTURAL - 1	vendor	3/22/2013	Approval
6007-PLN-AGE-58-31-1001	CONDUIT DETAILS	STRUCTURAL - 1	vendor	3/22/2013	Approval
6007-PLN-AGE-58-31-1002	MANHOLE DETAILS	STRUCTURAL - 1	vendor	3/22/2013	Approval
6007-PLN-AGE-58-31-1003	PULL BOX DETAILS	STRUCTURAL - 1	vendor	3/22/2013	Approval
6007-PLN-AGE-58-31-4221	ALPHA DUCT BANK PLANS	STRUCTURAL - 1	vendor	3/22/2013	Approval
6007-PLN-AGE-58-31-4222	ALPHA DUCT BANK PLANS	STRUCTURAL - 1	vendor	3/22/2013	Approval
6007-PLN-AGE-58-31-4223	ALPHA DUCT BANK PLANS	STRUCTURAL - 1	vendor	3/22/2013	Approval
6007-PLN-AGE-58-31-4224	ALPHA DUCT BANK PLANS	STRUCTURAL - 1	vendor	3/22/2013	Approval
6007-PLN-AGE-58-31-4231	SECTION DETAILS	STRUCTURAL - 1	vendor	3/22/2013	Approval
6007-PLN-AGE-58-31-4241	PROFILES	STRUCTURAL - 1	vendor	3/22/2013	Approval
6007-PLN-AGE-58-31-4251	MANHOLE DETAILS	STRUCTURAL - 1	vendor	3/22/2013	Approval
6007-PLN-AGE-58-31-8261	BETA DUCT BANK PLANS	STRUCTURAL - 1	vendor	3/22/2013	Approval
6007-PLN-AGE-58-31-8622	BETA DUCT BANK PLANS	STRUCTURAL - 1	vendor	3/22/2013	Approval
6007-PLN-AGE-58-31-8623	BETA DUCT BANK PLANS	STRUCTURAL - 1	vendor	3/22/2013	Approval
6007-PLN-AGE-58-31-8624	BETA DUCT BANK PLANS	STRUCTURAL - 1	vendor	3/22/2013	Approval
6007-PLN-AGE-58-31-8631	SECTION DETAILS	STRUCTURAL - 1	vendor	3/22/2013	Approval
6007-PLN-AGE-58-31-8641	PROFILES	STRUCTURAL - 1	vendor	3/22/2013	Approval
6007-PLN-AGE-58-31-8651	MANHOLE DETAILS	STRUCTURAL - 1	vendor	3/22/2013	Approval
6007-CAL-AGE-58-52-3410	CALCULATION	STRUCTURAL - 1	vendor	3/22/2013	Approval
6007-PLN-AGE-58-52-3410	COVER	STRUCTURAL - 1	vendor	3/22/2013	Approval
6007-PLN-AGE-58-52-3411	GENERAL NOTES	STRUCTURAL - 1	vendor	3/22/2013	Approval
6007-PLN-AGE-58-52-3412	FOUNDATION PLAN	STRUCTURAL - 1	vendor	3/22/2013	Approval
6007-PLN-AGE-58-52-3413	DATA TABLE	STRUCTURAL - 1	vendor	3/22/2013	Approval
6007-PLN-AGE-58-52-3414	SECTION AND DETAILS I	STRUCTURAL - 1	vendor	3/22/2013	Approval
6007-PLN-AGE-58-52-3415	SECTION AND DETAILS II	STRUCTURAL - 1	vendor	3/22/2013	Approval
calculation Report for MV-317	Cal report for STG Auxiliary Equipment Structure Foundation Equipment MV-317, Mx-309 MZ-309Anchor Boldts	STRUCTURAL - 1	vendor	3/23/2013	Approval
calculation Report for MP-315A	Cal report for STG Auxiliary Equipment Structure Foundation Equipment MP-315A, MP-315B MV-301Anchor Boldts	STRUCTURAL - 1	vendor	3/23/2013	Approval
6007-CAL-AGE-58-52-7461	CALCULATION	STRUCTURAL - 1	vendor	3/23/2013	Approval
6007-PLN-AGE-58-52-7410	COVER	STRUCTURAL - 1	vendor	3/23/2013	Approval
6007-PLN-AGE-58-52-7411	GENERAL NOTES	STRUCTURAL - 1	vendor	3/23/2013	Approval
6007-PLN-AGE-58-52-7412	FOUNDATION PLAN	STRUCTURAL - 1	vendor	3/23/2013	Approval
6007-PLN-AGE-58-52-7413	DATA TABLE	STRUCTURAL - 1	vendor	3/23/2013	Approval
6007-PLN-AGE-58-52-7414	SECTION AND DETAILS I	STRUCTURAL - 1	vendor	3/23/2013	Approval
6007-PLN-AGE-58-52-7415	SECTION AND DETAILS II	STRUCTURAL - 1	vendor	3/23/2013	Approval
6007-CAL-AGE-58-52-3461	ALPHA CALCULATION BETA CALCULATION	STRUCTURAL - 1	vendor	3/23/2013	Approval
6007-CAL-AGE-58-52-7461	ALPHA COVER	STRUCTURAL - 1	vendor	3/23/2013	Approval
6007-PLN-AGE-58-52-3461	ALPHA GENERAL NOTES	STRUCTURAL - 1	vendor	3/23/2013	Approval
6007-PLN-AGE-58-52-3462	ALPHA PLAN AND DETAILS	STRUCTURAL - 1	vendor	3/23/2013	Approval
6007-PLN-AGE-58-52-3463	BETA COVER	STRUCTURAL - 1	vendor	3/23/2013	Approval
6007-PLN-AGE-58-52-7461	BETA GENERAL NOTES	STRUCTURAL - 1	vendor	3/23/2013	Approval
6007-PLN-AGE-58-52-7462	BETA PLAN AND DETAILS	STRUCTURAL - 1	vendor	3/23/2013	Approval
6007-PLN-AGE-58-52-7463	BETA PLAN AND DETAILS	STRUCTURAL - 1	vendor	3/23/2013	Approval
6007-PLN-AGE-58-52-7453	HTF-2 Piperack foundation beta plant table 1	STRUCTURAL - 1	vendor	4/2/2013	Approval
Structural -S21	Generator Circuit Breaker Platform Foundation and Framing Plans	STRUCTURAL - 1	vendor	4/1/2013	Approval
6007-PLN-AGE-58-52-3410-R01	Cover sheet	STRUCTURAL - 1	vendor	4/5/2013	Approval
6007-PLN-AGE-58-52-3411-R01	Notes	STRUCTURAL - 1	vendor	4/5/2013	Approval
6007-PLN-AGE-58-52-3412-R01	Support foundation plan	STRUCTURAL - 1	vendor	4/5/2013	Approval
6007-PLN-AGE-58-52-3413-R01	Data table	STRUCTURAL - 1	vendor	4/5/2013	Approval

ABENER TEYMA MOJAVE

Compliance No.:	GEN-2				
Job :	Mojave Solar Project				
Date: 2/17/11	Description: Structural Master Drawing List				
Sheet No.	Description	Applicable Condition of Certification	Vendor Supplied or EOR	Submittal Date	Reason for Submittal
6007-PLN-AGE-58-52-3414-R01	Section and details I	STRUCTURAL - 1	vendor	4/5/2013	Approval
6007-PLN-AGE-58-52-3415-R01	Section and details II	STRUCTURAL - 1	vendor	4/5/2013	Approval
6007-CAL-AGE-58-52-3410-R01	Calculation report	STRUCTURAL - 1	vendor	4/5/2013	Approval
Plan Check Reply_STRUCT-1-12-01	Plan Check Reply_STRUCT-1-12-01	STRUCTURAL - 1	vendor	4/5/2013	Approval
6007-PLN-AGE-58-52-7410.R01	Cover sheet	STRUCTURAL - 1	vendor	4/5/2013	Approval
6007-PLN-AGE-58-52-7411.R01	Notes	STRUCTURAL - 1	vendor	4/5/2013	Approval
6007-PLN-AGE-58-52-7412.R01	Support foundation plan	STRUCTURAL - 1	vendor	4/5/2013	Approval
6007-PLN-AGE-58-52-7413.R01	Data table	STRUCTURAL - 1	vendor	4/5/2013	Approval
6007-PLN-AGE-58-52-7414.R01	Section and details I	STRUCTURAL - 1	vendor	4/5/2013	Approval
6007-PLN-AGE-58-52-7415.R01	Section and details II	STRUCTURAL - 1	vendor	4/5/2013	Approval
6007-CAL-AGE-58-52-7465-REV1	Calculation report	STRUCTURAL - 1	vendor	4/5/2013	Approval
Plan Check Reply_STRUCT-1-12-02	Plan Check Reply_STRUCT-1-12-02	STRUCTURAL - 1	vendor	4/5/2013	Approval
6007-CAL-AGE-58-52-3461	ALPHA CALCULATION	STRUCTURAL - 1	vendor	4/5/2013	Approval
6007-CAL-AGE-58-52-7461	BETA CALCULATION	STRUCTURAL - 1	vendor	4/5/2013	Approval
6007-PLN-AGE-58-52-3461	ALPHA COVER	STRUCTURAL - 1	vendor	4/5/2013	Approval
6007-PLN-AGE-58-52-3462	ALPHA GENERAL NOTES	STRUCTURAL - 1	vendor	4/5/2013	Approval
6007-PLN-AGE-58-52-3463	ALPHA PLAN AND DETAILS	STRUCTURAL - 1	vendor	4/5/2013	Approval
6007-PLN-AGE-58-52-7461	BETA COVER	STRUCTURAL - 1	vendor	4/5/2013	Approval
6007-PLN-AGE-58-52-7462	BETA GENERAL NOTES	STRUCTURAL - 1	vendor	4/5/2013	Approval
6007-PLN-AGE-58-52-7463	BETA PLAN AND DETAILS	STRUCTURAL - 1	vendor	4/5/2013	Approval
Plan Check Reply	Plan Check Reply	STRUCTURAL - 1	vendor	4/5/2013	Approval
6007-CAL-CTS-58-52-3000	STRUCTURAL CALCULATIONS	STRUCTURAL - 1	vendor	4/5/2013	Approval
6007-PLN-CTS-58-52-3000	GENERAL STRUCTURAL NOTES	STRUCTURAL - 1	vendor	4/5/2013	Approval
6007-PLN-CTS-58-52-3001	COLUMN / BASE PLATE PLAN	STRUCTURAL - 1	vendor	4/5/2013	Approval
6007-PLN-CTS-58-52-3002	2ND LEVEL FRAMING PLAN	STRUCTURAL - 1	vendor	4/5/2013	Approval
6007-PLN-CTS-58-52-3003	3RD & 4TH LEVEL FRAMING PLANS	STRUCTURAL - 1	vendor	4/5/2013	Approval
6007-PLN-CTS-58-52-3004	BRACED FRAME ELEVATIONS	STRUCTURAL - 1	vendor	4/5/2013	Approval
6007-PLN-CTS-58-52-3005	BRACED FRAME ELEVATIONS	STRUCTURAL - 1	vendor	4/5/2013	Approval
6007-PLN-CTS-58-52-3006	FRAMING DETAILS	STRUCTURAL - 1	vendor	4/5/2013	Approval
6007-PLN-CTS-58-52-3007	FRAMING DETAILS	STRUCTURAL - 1	vendor	4/5/2013	Approval
6007-PLN-CTS-58-52-3008	FRAMING DETAILS	STRUCTURAL - 1	vendor	4/5/2013	Approval
6007-CAL-CTS-58-52-7000	STRUCTURAL CALCULATIONS	STRUCTURAL - 1	vendor	4/5/2013	Approval
6007-PLN-CTS-58-52-7000	GENERAL STRUCTURAL NOTES	STRUCTURAL - 1	vendor	4/5/2013	Approval
6007-PLN-CTS-58-52-7001	COLUMN / BASE PLATE PLAN	STRUCTURAL - 1	vendor	4/5/2013	Approval
6007-PLN-CTS-58-52-7002	2ND LEVEL FRAMING PLAN	STRUCTURAL - 1	vendor	4/5/2013	Approval
6007-PLN-CTS-58-52-7003	3RD & 4TH LEVEL FRAMING PLANS	STRUCTURAL - 1	vendor	4/5/2013	Approval
6007-PLN-CTS-58-52-7004	BRACED FRAME ELEVATIONS	STRUCTURAL - 1	vendor	4/5/2013	Approval
6007-PLN-CTS-58-52-7005	BRACED FRAME ELEVATIONS	STRUCTURAL - 1	vendor	4/5/2013	Approval
6007-PLN-CTS-58-52-7006	FRAMING DETAILS	STRUCTURAL - 1	vendor	4/5/2013	Approval
6007-PLN-CTS-58-52-7007	FRAMING DETAILS	STRUCTURAL - 1	vendor	4/5/2013	Approval
6007-PLN-CTS-58-52-7008	FRAMING DETAILS	STRUCTURAL - 1	vendor	4/5/2013	Approval
6007-PLN-AGE-74-54-2020-R01	Cover sheet	STRUCTURAL - 1	vendor	4/8/2013	Approval
6007-PLN-AGE-74-54-2021-R01	General notes	STRUCTURAL - 1	vendor	4/8/2013	Approval
6007-PLN-AGE-74-54-2022-R01	Plan and base plate details	STRUCTURAL - 1	vendor	4/8/2013	Approval
6007-PLN-AGE-74-54-2023-R01	Elevations	STRUCTURAL - 1	vendor	4/8/2013	Approval
6007-CAL-AGE-74-54-2020-R01	Calculation report	STRUCTURAL - 1	vendor	4/8/2013	Approval
6007-PLN-AGE-74-54-6020-R01	Cover sheet	STRUCTURAL - 1	vendor	4/8/2013	Approval
6007-PLN-AGE-74-54-6021-R01	General notes	STRUCTURAL - 1	vendor	4/8/2013	Approval
6007-PLN-AGE-74-54-6022-R01	Plan and base plate details	STRUCTURAL - 1	vendor	4/8/2013	Approval
6007-PLN-AGE-74-54-6023-R01	Elevations	STRUCTURAL - 1	vendor	4/8/2013	Approval
6007-CAL-AGE-74-54-6020-R01	Calculation report	STRUCTURAL - 1	vendor	4/8/2013	Approval
6007-CAL-ABC-21-62-0003	Pump and Motor Anchorage Desing 1	STRUCTURAL - 1	vendor	4/11/2013	Approval
6007-CAL-AGE-25-52-4020	STG Auxiliary equipment platform foundation. Calculation report. Alpha plant	STRUCTURAL - 1	vendor	4/11/2013	Approval
6007-CAL-AGE-25-52-8020	STG Auxiliary equipment platform foundation. Calculation report. Beta plant	STRUCTURAL - 1	vendor	4/11/2013	Approval
6007-PLN-AGE-25-52-4100	STG Auxiliary equipment platform foundation. Cover sheet. Alpha plant	STRUCTURAL - 1	vendor	4/11/2013	Approval
6007-PLN-AGE-25-52-4120	STG Auxiliary equipment platform foundation. General notes. Alpha plant	STRUCTURAL - 1	vendor	4/11/2013	Approval
6007-PLN-AGE-25-52-4140	STG Auxiliary equipment platform foundation. Plan columns position. Alpha plant	STRUCTURAL - 1	vendor	4/11/2013	Approval
6007-PLN-AGE-25-52-4141	STG Auxiliary equipment platform foundation. Plan bottom longitudinal reinforcement. Alpha plant	STRUCTURAL - 1	vendor	4/11/2013	Approval
6007-PLN-AGE-25-52-4142	STG Auxiliary equipment platform foundation. Plan bottom transversal reinforcement. Alpha plant	STRUCTURAL - 1	vendor	4/11/2013	Approval
6007-PLN-AGE-25-52-4160	STG Auxiliary equipment platform foundation. Details. Alpha plant	STRUCTURAL - 1	vendor	4/11/2013	Approval
6007-PLN-AGE-25-52-4161	STG Auxiliary equipment platform foundation. Details. Alpha plant	STRUCTURAL - 1	vendor	4/11/2013	Approval
6007-PLN-AGE-25-52-4162	STG Auxiliary equipment platform foundation. Drainage. Alpha plant	STRUCTURAL - 1	vendor	4/11/2013	Approval
6007-PLN-AGE-25-52-4163	STG Auxiliary equipment platform foundation. Anchor bolts details. Alpha plant	STRUCTURAL - 1	vendor	4/11/2013	Approval
6007-PLN-AGE-25-52-8100	STG Auxiliary equipment platform foundation. Cover sheet. Beta plant	STRUCTURAL - 1	vendor	4/11/2013	Approval
6007-PLN-AGE-25-52-8120	STG Auxiliary equipment platform foundation. General notes. Beta plant	STRUCTURAL - 1	vendor	4/11/2013	Approval
6007-PLN-AGE-25-52-8140	STG Auxiliary equipment platform foundation. Plan columns position. Beta plant	STRUCTURAL - 1	vendor	4/11/2013	Approval
6007-PLN-AGE-25-52-8141	STG Auxiliary equipment platform foundation. Plan bottom longitudinal reinforcement. Beta plant	STRUCTURAL - 1	vendor	4/11/2013	Approval
6007-PLN-AGE-25-52-8142	STG Auxiliary equipment platform foundation. Plan bottom transversal reinforcement. Beta plant	STRUCTURAL - 1	vendor	4/11/2013	Approval
6007-PLN-AGE-25-52-8160	STG Auxiliary equipment platform foundation. Details. Beta plant	STRUCTURAL - 1	vendor	4/11/2013	Approval
6007-PLN-AGE-25-52-8161	STG Auxiliary equipment platform foundation. Details. Beta plant	STRUCTURAL - 1	vendor	4/11/2013	Approval
6007-PLN-AGE-25-52-8162	STG Auxiliary equipment platform foundation. Drainage. Beta plant	STRUCTURAL - 1	vendor	4/11/2013	Approval
6007-PLN-AGE-25-52-8163	STG Auxiliary equipment platform foundation. Anchor bolts details. Beta plant	STRUCTURAL - 1	vendor	4/11/2013	Approval
Anchor Design	Anchor Design	STRUCTURAL - 1	vendor	4/11/2013	Approval
ation Report MP-315A, MP-315B, M	alculation report STG Auxiliary Equipment Structure Foundation Equipment MP-315A, MP-315B, MV-301 Anchor Bol	STRUCTURAL - 1	vendor	4/11/2013	Approval
lation Report MV-317, MX-309, MZ	Calculation report STG Auxiliary Equipment Structure Foundation Equipment MV-317, MX-309, MZ-309 Anchor Bolts	STRUCTURAL - 1	vendor	4/11/2013	Approval
MX-309 anchor design	Anchor Design	STRUCTURAL - 1	vendor	4/11/2013	Approval

ABENER TEYMA MOJAVE

Compliance No.:	GEN-2				
Job :	Mojave Solar Project				
Date: 2/17/11	Description: Structural Master Drawing List				
Sheet No.	Description	Applicable Condition of Certification	Vendor Supplied or EOR	Submittal Date	Reason for Submittal
6007-CAL-ATD-23-52-C070	Other Foundation Calculations	STRUCTURAL - 1	vendor	4/8/2013	Approval
6007-PLN-ATD-23-57-C074	Foundation Det. Fire wall MPT1	STRUCTURAL - 1	vendor	4/8/2013	Approval
6007-PLN-AGE-58-52-2470-R03	Cover sheet	STRUCTURAL - 1	vendor	4/9/2013	Approval
6007-PLN-AGE-58-52-2471-R03	General notes	STRUCTURAL - 1	vendor	4/9/2013	Approval
6007-PLN-AGE-58-52-2472-R03	Basin layout	STRUCTURAL - 1	vendor	4/9/2013	Approval
6007-PLN-AGE-58-52-2474-R03	Detail 2	STRUCTURAL - 1	vendor	4/9/2013	Approval
6007-PLN-AGE-58-52-2476-R00	Coordinates	STRUCTURAL - 1	vendor	4/9/2013	Approval
6007-PLN-AGE-58-52-6470-R03	Cover sheet	STRUCTURAL - 1	vendor	4/9/2013	Approval
6007-PLN-AGE-58-52-6471-R03	General notes	STRUCTURAL - 1	vendor	4/9/2013	Approval
6007-PLN-AGE-58-52-6472-R03	Basin layout	STRUCTURAL - 1	vendor	4/9/2013	Approval
6007-PLN-AGE-58-52-6474-R03	Detail 2	STRUCTURAL - 1	vendor	4/9/2013	Approval
6007-PLN-AGE-58-52-6476-R00	Coordinates	STRUCTURAL - 1	vendor	4/9/2013	Approval
6007-PLN-AGE-58-52-6500-R03	Cover sheet	STRUCTURAL - 1	vendor	4/9/2013	Approval
6007-PLN-AGE-58-52-6501-R02	General Notes	STRUCTURAL - 1	vendor	4/9/2013	Approval
6007-PLN-AGE-58-52-6502-R04	Foundation Plan	STRUCTURAL - 1	vendor	4/9/2013	Approval
6007-PLN-AGE-58-52-6503-R04	Section and Details I	STRUCTURAL - 1	vendor	4/9/2013	Approval
6007-PLN-AGE-58-52-6505-R02	Cover Sheet	STRUCTURAL - 1	vendor	4/9/2013	Approval
6007-PLN-AGE-58-52-6506-R02	General Notes	STRUCTURAL - 1	vendor	4/9/2013	Approval
6007-PLN-AGE-58-52-6507-R02	Foundation Plan	STRUCTURAL - 1	vendor	4/9/2013	Approval
6007-PLN-AGE-58-52-6508-R02	Section and Details I	STRUCTURAL - 1	vendor	4/9/2013	Approval
6007-PLN-AGE-58-52-6509-R03	Section and Details II	STRUCTURAL - 1	vendor	4/9/2013	Approval
6007-CAL-AGE-58-52-6500	Calculation Report	STRUCTURAL - 1	vendor	4/9/2013	Approval
6007-CAL-AGE-58-52-6505-R02	Calculation Report	STRUCTURAL - 1	vendor	4/9/2013	Approval
6007-LIS-AGE-58-52-6505-R02	Coordinates List	STRUCTURAL - 1	vendor	4/9/2013	Approval
6007-PLN-AGE-58-52-6400-RO3	Cover sheet	STRUCTURAL - 1	vendor	4/9/2013	Approval
6007-PLN-AGE-58-52-6401-R03	General Notes	STRUCTURAL - 1	vendor	4/9/2013	Approval
6007-PLN-AGE-58-52-6402-R03	Foundation Plan	STRUCTURAL - 1	vendor	4/9/2013	Approval
6007-PLN-AGE-58-52-6404-R04	Section and Details I	STRUCTURAL - 1	vendor	4/9/2013	Approval
6007-PLN-AGE-58-52-6405-R04	Section and Details II	STRUCTURAL - 1	vendor	4/9/2013	Approval
6007-CAL-AGE-58-52-6400-RO3	Calculation Report	STRUCTURAL - 1	vendor	4/9/2013	Approval
6007-LIS-AGE-58-52-6400-RO1	Coordinates List	STRUCTURAL - 1	vendor	4/9/2013	Approval
6007-CAL-AGE-57-52-6601-RO2	Coordinates List	STRUCTURAL - 1	vendor	4/9/2013	Approval
6007-PLN-AGE-57-52-6600-RO2	Cover Sheet	STRUCTURAL - 1	vendor	4/9/2013	Approval
6007-PLN-AGE-57-52-6601-RO2	General Notes	STRUCTURAL - 1	vendor	4/9/2013	Approval
6007-PLN-AGE-57-52-6602-RO2	East & West Area Foundations Plan	STRUCTURAL - 1	vendor	4/9/2013	Approval
6007-PLN-AGE-57-52-6603-RO2	North & South Area Foundations Plan	STRUCTURAL - 1	vendor	4/9/2013	Approval
6007-PLN-AGE-57-52-6604-RO2	Section & Details I	STRUCTURAL - 1	vendor	4/9/2013	Approval
6007-PLN-AGE-57-52-6605-RO2	Section & Details II	STRUCTURAL - 1	vendor	4/9/2013	Approval
6007-PLN-AGE-57-52-6606-RO2	Section & Details III	STRUCTURAL - 1	vendor	4/9/2013	Approval
6007-PLN-AGE-57-52-6607-RO2	Section & Details IV	STRUCTURAL - 1	vendor	4/9/2013	Approval
6007-PLN-AGE-57-52-6608-RO2	Section & Details V	STRUCTURAL - 1	vendor	4/9/2013	Approval
6007-PLN-AGE-57-52-6610-RO2	Section & Details VII	STRUCTURAL - 1	vendor	4/9/2013	Approval
6007-PLN-AGE-57-52-6611-RO0	Section & Details VIII	STRUCTURAL - 1	vendor	4/9/2013	Approval
6007-PLN-AGE-40-52-4100-R03	Cover sheet	STRUCTURAL - 1	vendor	4/9/2013	Approval
6007-PLN-AGE-40-52-4120-R03	General notes	STRUCTURAL - 1	vendor	4/9/2013	Approval
6007-PLN-AGE-40-52-4140-R03	Arrangment plan view	STRUCTURAL - 1	vendor	4/9/2013	Approval
6007-PLN-AGE-40-52-4141-R03	Mat bottom reinforcement	STRUCTURAL - 1	vendor	4/9/2013	Approval
6007-PLN-AGE-40-52-4142-R03	Mat top reinforcement	STRUCTURAL - 1	vendor	4/9/2013	Approval
6007-PLN-AGE-40-52-4143-R01	Extra top reinforcement	STRUCTURAL - 1	vendor	4/9/2013	Approval
6007-PLN-AGE-40-52-4144-R01	Extra bottom reinforcement	STRUCTURAL - 1	vendor	4/9/2013	Approval
6007-PLN-AGE-40-52-4145-R01	Mat reinforcement details	STRUCTURAL - 1	vendor	4/9/2013	Approval
6007-PLN-AGE-40-52-4150-R01	Drainage	STRUCTURAL - 1	vendor	4/9/2013	Approval
6007-PLN-AGE-40-52-4160-R01	Pier and rack support anchor layout	STRUCTURAL - 1	vendor	4/9/2013	Approval
6007-PLN-AGE-40-52-4161-R01	Pier and rack support anchor details	STRUCTURAL - 1	vendor	4/9/2013	Approval
6007-PLN-AGE-40-52-4162-R01	Anchor bolts. Assemblies and details	STRUCTURAL - 1	vendor	4/9/2013	Approval
6007-PLN-AGE-40-52-4163-R01	Skid and bench support layout	STRUCTURAL - 1	vendor	4/9/2013	Approval
6007-PLN-AGE-40-52-4164-R01	Skid support details	STRUCTURAL - 1	vendor	4/9/2013	Approval
6007-PLN-AGE-40-52-4173-R01	Skid support layout	STRUCTURAL - 1	vendor	4/9/2013	Approval
6007-CAL-AGE-40-52-4000	WTP foundation calc report	STRUCTURAL - 1	vendor	4/9/2013	Approval
6007-PLN-AGE-40-52-8100-R03	Cover sheet	STRUCTURAL - 1	vendor	4/9/2013	Approval
6007-PLN-AGE-40-52-8120-R03	General notes	STRUCTURAL - 1	vendor	4/9/2013	Approval
6007-PLN-AGE-40-52-8140-R03	Arrangment plan view	STRUCTURAL - 1	vendor	4/9/2013	Approval
6007-PLN-AGE-40-52-8141-R03	Mat bottom reinforcement	STRUCTURAL - 1	vendor	4/9/2013	Approval
6007-PLN-AGE-40-52-8142-R03	Mat top reinforcement	STRUCTURAL - 1	vendor	4/9/2013	Approval
6007-PLN-AGE-40-52-8143-R01	Extra top reinforcement	STRUCTURAL - 1	vendor	4/9/2013	Approval
6007-PLN-AGE-40-52-8144-R01	Extra bottom reinforcement	STRUCTURAL - 1	vendor	4/9/2013	Approval
6007-CAL-AGE-74-52-2000-R02	Calculation Report	STRUCTURAL - 1	vendor	4/9/2013	Approval
6007-PLN-AGE-74-52-2000-R01	Cover Sheet	STRUCTURAL - 1	vendor	4/9/2013	Approval
6007-PLN-AGE-74-52-2001-R01	General Notes	STRUCTURAL - 1	vendor	4/9/2013	Approval
6007-PLN-AGE-74-52-2002-R01	Plan Layout	STRUCTURAL - 1	vendor	4/9/2013	Approval
6007-PLN-AGE-74-52-2003-R01	Bottom Reinforcement Plan & Details	STRUCTURAL - 1	vendor	4/9/2013	Approval
6007-PLN-AGE-74-52-2004-R01	Top Reinforcement Plan & Details	STRUCTURAL - 1	vendor	4/9/2013	Approval
6007-PLN-AGE-74-52-2005-R01	Sections	STRUCTURAL - 1	vendor	4/9/2013	Approval
6007-PLN-AGE-74-52-2006-R01	Sections & Details	STRUCTURAL - 1	vendor	4/9/2013	Approval
6007-PLN-AGE-74-52-2007-R01	Pedestal Details	STRUCTURAL - 1	vendor	4/9/2013	Approval
6007-CAL-AGE-74-52-6000-R02	Calculation Report	STRUCTURAL - 1	vendor	4/9/2013	Approval

ABENER TEYMA MOJAVE

Compliance No.:	GEN-2				
Job :	Mojave Solar Project				
Date: 2/17/11	Description: Structural Master Drawing List				
Sheet No.	Description	Applicable Condition of Certification	Vendor Supplied or EOR	Submittal Date	Reason for Submittal
6007-PLN-AGE-74-52-6000-R01	Cover Sheet	STRUCTURAL - 1	vendor	4/9/2013	Approval
6007-PLN-AGE-74-52-6001-R01	General Notes	STRUCTURAL - 1	vendor	4/9/2013	Approval
6007-PLN-AGE-74-52-6002-R01	Plan Layout	STRUCTURAL - 1	vendor	4/9/2013	Approval
6007-PLN-AGE-74-52-6003-R01	Bottom Reinforcement Plan & Details	STRUCTURAL - 1	vendor	4/9/2013	Approval
6007-PLN-AGE-74-52-6004-R01	Top Reinforcement Plan & Details	STRUCTURAL - 1	vendor	4/9/2013	Approval
6007-PLN-AGE-74-52-6005-R01	Sections	STRUCTURAL - 1	vendor	4/9/2013	Approval
6007-PLN-AGE-74-52-6006-R01	Sections & Details	STRUCTURAL - 1	vendor	4/9/2013	Approval
6007-PLN-AGE-74-52-6007-R01	Pedestal Details	STRUCTURAL - 1	vendor	4/9/2013	Approval
6007-CAL-FWE-21-61-0005	Feedwater and Steam Pipng Stress Analysis Report	STRUCTURAL - 1	vendor	4/9/2013	Approval
6007-PLN-AGE-41-52-4000-R02	Cover sheet	STRUCTURAL - 1	vendor	4/10/2013	Approval
6007-PLN-AGE-41-52-4020-R02	General notes	STRUCTURAL - 1	vendor	4/10/2013	Approval
6007-PLN-AGE-41-52-4040-R03	Foundation Plan	STRUCTURAL - 1	vendor	4/10/2013	Approval
6007-CAL-AGE-41-52-4000-R04	Calculation report	STRUCTURAL - 1	vendor	4/10/2013	Approval
6007-PLN-AGE-41-52-8000-R02	Cover sheet	STRUCTURAL - 1	vendor	4/10/2013	Approval
6007-PLN-AGE-41-52-8020-R02	General notes	STRUCTURAL - 1	vendor	4/10/2013	Approval
6007-PLN-AGE-41-52-8040-R03	Foundation Plan	STRUCTURAL - 1	vendor	4/10/2013	Approval
6007-CAL-AGE-41-52-8000-R04	Calculation report	STRUCTURAL - 1	vendor	4/10/2013	Approval
6007-CAL-AGE-41-54-4000	Calculation report	STRUCTURAL - 1	vendor	4/10/2013	Approval
6007-CAL-AGE-41-54-8000	Calculation report	STRUCTURAL - 1	vendor	4/10/2013	Approval
6007-PLN-AGE-41-54-4000-R02	Cover sheet	STRUCTURAL - 1	vendor	4/10/2013	Approval
6007-PLN-AGE-41-54-4020-R02	General notes	STRUCTURAL - 1	vendor	4/10/2013	Approval
6007-PLN-AGE-41-54-4040-R02	Structure Plan	STRUCTURAL - 1	vendor	4/10/2013	Approval
6007-PLN-AGE-41-54-8000-R02	Cover sheet	STRUCTURAL - 1	vendor	4/10/2013	Approval
6007-PLN-AGE-41-54-8020-R02	General notes	STRUCTURAL - 1	vendor	4/10/2013	Approval
6007-PLN-AGE-41-54-8040-R02	Structure Plan	STRUCTURAL - 1	vendor	4/10/2013	Approval
6007-PLN-AGE-41-57-4000-R00	Architectural details	STRUCTURAL - 1	vendor	4/10/2013	Approval
6007-PLN-AGE-41-57-8000-R00	Architectural details	STRUCTURAL - 1	vendor	4/10/2013	Approval
6007-CAL-ATD-23-33-E048	Mojave Substations Grounding Calculations	STRUCTURAL - 1	vendor	4/15/2013	Approval
6007-PLN-ATD-23-33-E041	Grounding Plan	STRUCTURAL - 1	vendor	4/15/2013	Approval
6007-PLN-ATD-23-33-E042	Grounding Details	STRUCTURAL - 1	vendor	4/15/2013	Approval
6007-PLN-ATD-23-33-E051	Duct Bank and Conduit Plan	STRUCTURAL - 1	vendor	4/15/2013	Approval
6007-PLN-ATD-23-32-E052	Duct Bank and Conduit Details	STRUCTURAL - 1	vendor	4/15/2013	Approval
6007-PLN-ATD-23-57-C091	Site preparation	STRUCTURAL - 1	vendor	4/15/2013	Approval
BV Comments-ATD struct 1-8.00	BV Comments-ATD struct 1-8.00 PC4 april12 grounding	STRUCTURAL - 1	vendor	4/15/2013	Approval
6007-PLN-ATD-23-02-E101	general installation relay house	STRUCTURAL - 1	vendor	4/15/2013	Approval
6007-INF-ATD-23-50-E002	MPT firewall detail	STRUCTURAL - 1	vendor	4/15/2013	Approval
6007-CAL-ATD-23-52-C070.Rev E	Other Foundation Calculations	STRUCTURAL - 1	vendor	4/15/2013	Approval
6007-PLN-ATD-23-57-C074.Rev 2	Foundation Det. Fire wall MPT1	STRUCTURAL - 1	vendor	4/15/2013	Approval
V comments Mojave SEfirewallApr1	Abengoa T&D responses	STRUCTURAL - 1	vendor	4/15/2013	Approval
Abengoa Mojave Solar memo #2	Explanation Memo #2	STRUCTURAL - 1	vendor	4/15/2013	Approval
bengoa T&D memo MPT Firewall hc	Explanation Memo #1	STRUCTURAL - 1	vendor	4/15/2013	Approval
6007-PLN-FWE-21-52-0102	PIPE SUPPORTS DETAILS BASE. PLATES AND ANCHOR RODS	STRUCTURAL - 1	vendor	4/16/2013	Approval
6007-PLN-FWE-21-54-0401	TYPICAL PIPE HANDRAIL, STAIRWAY AND GRATING DETAILS	STRUCTURAL - 1	vendor	4/16/2013	Approval
6007-PLN-FWE-21-54-0402	TYPICAL PIPE HANDRAIL, STAIRWAY AND GRATING DETAILS	STRUCTURAL - 1	vendor	4/16/2013	Approval
6007-PLN-FWE-21-54-0403	TYPICAL DETAILS	STRUCTURAL - 1	vendor	4/16/2013	Approval
6007-PLN-FWE-21-52-0002	Structural Base Loads	STRUCTURAL - 1	vendor	4/16/2013	Approval
6007-PLN-FWE-21-52-0003	Base Loads Table. Main & Auxiliary Platforms	STRUCTURAL - 1	vendor	4/16/2013	Approval
6007-PLN-FWE-21-52-0004	Base Loads Table. Piping Supports	STRUCTURAL - 1	vendor	4/16/2013	Approval
6007-PLN-FWE-21-52-0201	Equipment Base Loads Details	STRUCTURAL - 1	vendor	4/16/2013	Approval
6007-PLN-FWE-21-52-0202	Structural Base Loads Details	STRUCTURAL - 1	vendor	4/16/2013	Approval
6007-PLN-FWE-21-52-0211	Equipment Base Plate Details	STRUCTURAL - 1	vendor	4/16/2013	Approval
6007-PLN-FWE-21-54-0301	Main Structure	STRUCTURAL - 1	vendor	4/16/2013	Approval
6007-PLN-FWE-21-54-0302	Main Structure. Bents 1 to 7	STRUCTURAL - 1	vendor	4/16/2013	Approval
6007-PLN-FWE-21-54-0303	Main Structure. Bents A/M &B/N	STRUCTURAL - 1	vendor	4/16/2013	Approval
6007-PLN-FWE-21-54-0304	Main Structure. Plan View	STRUCTURAL - 1	vendor	4/16/2013	Approval
6007-PLN-FWE-21-54-0305	Auxiliary Structure. Platforms	STRUCTURAL - 1	vendor	4/16/2013	Approval
6007-PLN-FWE-21-54-0306	MAIN STRUCTURE - P. V. - LEVELS +17' 11 3/4" +39' 6 3/4" & +50' 7 3/4"	STRUCTURAL - 1	vendor	4/16/2013	Approval
6007-PLN-FWE-21-54-0307	MAIN STRUCTURE - PLANT VIEW - GRATING LEVELS	STRUCTURAL - 1	vendor	4/16/2013	Approval
6007-PLN-FWE-21-54-0311	Auxiliary Structure. Piping Supports -I-	STRUCTURAL - 1	vendor	4/16/2013	Approval
6007-PLN-FWE-21-54-0312	AUXILIARY STRUCTURE PIPING SUPPORTS-2-	STRUCTURAL - 1	vendor	4/16/2013	Approval
6007-PLN-FWE-21-54-0321	DRUM SADDLE FOR ERECTION - GENERAL ARRANGEMENT & SECTIONS	STRUCTURAL - 1	vendor	4/16/2013	Approval
6007-PLN-FWE-21-54-0351	MAIN STRUCTURE - DETAILS SERIAL A & B	STRUCTURAL - 1	vendor	4/16/2013	Approval
6007-PLN-FWE-21-54-0352	MAIN STRUCTURE - DETAILS SERIAL C - D & E	STRUCTURAL - 1	vendor	4/16/2013	Approval
2804-CAL-12-2-15-01	Structural Engineering Design Report_13_04_05	STRUCTURAL - 1	vendor	4/16/2013	Approval
2804-CAL-12-2-15-02	na	STRUCTURAL - 1	vendor	4/16/2013	Approval
6007-PLN-AGE-58-52-3410-R02	Cover sheet	STRUCTURAL - 1	vendor	4/16/2013	Approval
6007-PLN-AGE-58-52-3411-R02	General notes	STRUCTURAL - 1	vendor	4/16/2013	Approval
6007-PLN-AGE-58-52-3412-R02	Support foundation plan	STRUCTURAL - 1	vendor	4/16/2013	Approval
6007-PLN-AGE-58-52-3413-R02	Data table	STRUCTURAL - 1	vendor	4/16/2013	Approval
6007-PLN-AGE-58-52-3414-R02	Section and detail I	STRUCTURAL - 1	vendor	4/16/2013	Approval
6007-PLN-AGE-58-52-3415-R02	Section and detail II	STRUCTURAL - 1	vendor	4/16/2013	Approval
6007-CAL-AGE-58-52-3410-R02	Calc report	STRUCTURAL - 1	vendor	4/16/2013	Approval
6007-PLN-AGE-58-52-7410-R02	Cover sheet	STRUCTURAL - 1	vendor	4/16/2013	Approval
6007-PLN-AGE-58-52-7411-R02	General notes	STRUCTURAL - 1	vendor	4/16/2013	Approval
6007-PLN-AGE-58-52-7412-R02	Support foundation plan	STRUCTURAL - 1	vendor	4/16/2013	Approval
6007-PLN-AGE-58-52-7413-R02	Data table	STRUCTURAL - 1	vendor	4/16/2013	Approval

ABENER TEYMA MOJAVE

Compliance No.:	GEN-2				
Job :	Mojave Solar Project				
Date: 2/17/11	Description: Structural Master Drawing List				
Sheet No.	Description	Applicable Condition of Certification	Vendor Supplied or EOR	Submittal Date	Reason for Submittal
6007-PLN-AGE-58-52-7414-R02	Section and detail I	STRUCTURAL - 1	vendor	4/16/2013	Approval
6007-PLN-AGE-58-52-7415-R02	Section and detail II	STRUCTURAL - 1	vendor	4/16/2013	Approval
6007-CAL-AGE-58-52-7461-R02	Calc report	STRUCTURAL - 1	vendor	4/16/2013	Approval
6007-PLN-AGE-58-52-6400-R03	Cover sheet	STRUCTURAL - 1	vendor	4/17/2013	Approval
6007-PLN-AGE-58-52-6401-R03	General Notes	STRUCTURAL - 1	vendor	4/17/2013	Approval
6007-PLN-AGE-58-52-6402-R03	Foundation Plan	STRUCTURAL - 1	vendor	4/17/2013	Approval
6007-PLN-AGE-58-52-6404-R04	Section and Details I	STRUCTURAL - 1	vendor	4/17/2013	Approval
6007-PLN-AGE-58-52-6405-R04	Section and Details II	STRUCTURAL - 1	vendor	4/17/2013	Approval
6007-CAL-AGE-58-52-6400-R04	Calculation Report	STRUCTURAL - 1	vendor	4/17/2013	Approval
6007-LIS-AGE-58-52-6400-R01	Coordinates List	STRUCTURAL - 1	vendor	4/17/2013	Approval
6007-PLN-AGE-58-52-3461-R02	Cover sheet	STRUCTURAL - 1	vendor	4/17/2013	Approval
6007-PLN-AGE-58-52-3462-R02	General notes	STRUCTURAL - 1	vendor	4/17/2013	Approval
6007-PLN-AGE-58-52-3463-R02	Support foundation plan	STRUCTURAL - 1	vendor	4/17/2013	Approval
6007-PLN-AGE-58-52-3464-R00	Data table	STRUCTURAL - 1	vendor	4/17/2013	Approval
6007-PLN-AGE-58-52-3465-R00	Section and detail I	STRUCTURAL - 1	vendor	4/17/2013	Approval
6007-PLN-AGE-58-52-3466-R00	Section and detail II	STRUCTURAL - 1	vendor	4/17/2013	Approval
6007-CAL-AGE-58-52-3461-R02	Calc report	STRUCTURAL - 1	vendor	4/17/2013	Approval
6007-PLN-AGE-58-52-7461-R02	Cover sheet	STRUCTURAL - 1	vendor	4/17/2013	Approval
6007-PLN-AGE-58-52-7462-R02	General notes	STRUCTURAL - 1	vendor	4/17/2013	Approval
6007-PLN-AGE-58-52-7463-R02	Support foundation plan	STRUCTURAL - 1	vendor	4/17/2013	Approval
6007-PLN-AGE-58-52-7464-R00	Data table	STRUCTURAL - 1	vendor	4/17/2013	Approval
6007-PLN-AGE-58-52-7465-R00	Section and detail I	STRUCTURAL - 1	vendor	4/17/2013	Approval
6007-PLN-AGE-58-52-7466-R00	Section and detail II	STRUCTURAL - 1	vendor	4/17/2013	Approval
6007-CAL-AGE-58-52-7462-R02	Calc report	STRUCTURAL - 1	vendor	4/17/2013	Approval
6007-PLN-AGE-58-54-3550-R02	Cover sheet	STRUCTURAL - 1	vendor	4/17/2013	Approval
6007-PLN-AGE-58-54-3551-R02	General notes	STRUCTURAL - 1	vendor	4/17/2013	Approval
6007-PLN-AGE-58-54-3552-R02	Plan view and details	STRUCTURAL - 1	vendor	4/17/2013	Approval
6007-CAL-AGE-58-54-3550-R02	Calc report	STRUCTURAL - 1	vendor	4/17/2013	Approval
6007-PLN-AGE-58-54-7550-R02	Cover sheet	STRUCTURAL - 1	vendor	4/17/2013	Approval
6007-PLN-AGE-58-54-7551-R02	General notes	STRUCTURAL - 1	vendor	4/17/2013	Approval
6007-PLN-AGE-58-54-7552-R02	Plan view and details	STRUCTURAL - 1	vendor	4/17/2013	Approval
6007-CAL-AGE-58-54-7550-R02	Calc report	STRUCTURAL - 1	vendor	4/17/2013	Approval
6007-PLN-AGE-23-52-4000-R01	Cover sheet	STRUCTURAL - 1	vendor	4/18/2013	Approval
6007-PLN-AGE-23-52-4020-R02	General notes	STRUCTURAL - 1	vendor	4/18/2013	Approval
6007-PLN-AGE-23-52-4040-R02	Foundation Plan & details	STRUCTURAL - 1	vendor	4/18/2013	Approval
6007-CAL-AGE-23-52-4000-R02	Calculation report	STRUCTURAL - 1	vendor	4/18/2013	Approval
6007-PLN-AGE-23-52-8000-R01	Cover sheet	STRUCTURAL - 1	vendor	4/18/2013	Approval
6007-PLN-AGE-23-52-8020-R02	General notes	STRUCTURAL - 1	vendor	4/18/2013	Approval
6007-PLN-AGE-23-52-8040-R02	Foundation Plan & details	STRUCTURAL - 1	vendor	4/18/2013	Approval
6007-CAL-AGE-23-52-8000-R02	Calculation report	STRUCTURAL - 1	vendor	4/18/2013	Approval
6007-PLN-AGE-18-52-4200	Cover sheet	STRUCTURAL - 1	vendor	4/18/2013	Approval
6007-PLN-AGE-18-52-4220	General notes	STRUCTURAL - 1	vendor	4/18/2013	Approval
6007-PLN-AGE-18-52-4240	Foundation drawings	STRUCTURAL - 1	vendor	4/18/2013	Approval
6007-CAL-AGE-18-52-4200	Calc report	STRUCTURAL - 1	vendor	4/18/2013	Approval
6007-PLN-AGE-18-52-8200	Cover sheet	STRUCTURAL - 1	vendor	4/18/2013	Approval
6007-PLN-AGE-18-52-8220	General notes	STRUCTURAL - 1	vendor	4/18/2013	Approval
6007-PLN-AGE-18-52-8240	Foundation drawings	STRUCTURAL - 1	vendor	4/18/2013	Approval
6007-CAL-AGE-18-52-8200	Calc report	STRUCTURAL - 1	vendor	4/18/2013	Approval
6007-PLN-AGE-18-52-4300	Cover sheet	STRUCTURAL - 1	vendor	4/18/2013	Approval
6007-PLN-AGE-18-52-4320	General notes	STRUCTURAL - 1	vendor	4/18/2013	Approval
6007-PLN-AGE-18-52-4340	Foundation drawings	STRUCTURAL - 1	vendor	4/18/2013	Approval
6007-CAL-AGE-18-52-4300	Calc report	STRUCTURAL - 1	vendor	4/18/2013	Approval
6007-PLN-AGE-18-52-8300	Cover sheet	STRUCTURAL - 1	vendor	4/18/2013	Approval
6007-PLN-AGE-18-52-8320	General notes	STRUCTURAL - 1	vendor	4/18/2013	Approval
6007-PLN-AGE-18-52-8340	Foundation drawings	STRUCTURAL - 1	vendor	4/18/2013	Approval
6007-CAL-AGE-18-52-8300	Calc report	STRUCTURAL - 1	vendor	4/18/2013	Approval
6007-PLN-AGE-40-52-4100-R03	Cover sheet	STRUCTURAL - 1	vendor	4/18/2013	Approval
6007-PLN-AGE-40-52-4120-R03	General notes	STRUCTURAL - 1	vendor	4/18/2013	Approval
6007-PLN-AGE-40-52-4140-R03	Arrangment plan view	STRUCTURAL - 1	vendor	4/18/2013	Approval
6007-PLN-AGE-40-52-4141-R03	Mat bottom reinforcement	STRUCTURAL - 1	vendor	4/18/2013	Approval
6007-PLN-AGE-40-52-4142-R03	Mat top reinforcement	STRUCTURAL - 1	vendor	4/18/2013	Approval
6007-PLN-AGE-40-52-4143-R01	Extra top reinforcement	STRUCTURAL - 1	vendor	4/18/2013	Approval
6007-PLN-AGE-40-52-4144-R01	Extra bottom reinforcement	STRUCTURAL - 1	vendor	4/18/2013	Approval
6007-PLN-AGE-40-52-4145-R01	Mat reinforcement details	STRUCTURAL - 1	vendor	4/18/2013	Approval
6007-PLN-AGE-40-52-4150-R01	Drainage	STRUCTURAL - 1	vendor	4/18/2013	Approval
6007-PLN-AGE-40-52-4160-R01	Pier and rack support anchor layout	STRUCTURAL - 1	vendor	4/18/2013	Approval
6007-PLN-AGE-40-52-4161-R01	Pier and rack support anchor details	STRUCTURAL - 1	vendor	4/18/2013	Approval
6007-PLN-AGE-40-52-4162-R01	Anchor bolts. Assemblies and details	STRUCTURAL - 1	vendor	4/18/2013	Approval
6007-PLN-AGE-40-52-4163-R01	Skid and bench support layout	STRUCTURAL - 1	vendor	4/18/2013	Approval
6007-PLN-AGE-40-52-4164-R01	Skid support details	STRUCTURAL - 1	vendor	4/18/2013	Approval
6007-PLN-AGE-40-52-4173-R01	Skid support layout	STRUCTURAL - 1	vendor	4/18/2013	Approval
6007-CAL-AGE-40-52-4000-R03	WTP foundation calc report	STRUCTURAL - 1	vendor	4/18/2013	Approval
6007-PLN-AGE-40-52-8100-R03	Cover sheet	STRUCTURAL - 1	vendor	4/18/2013	Approval
6007-PLN-AGE-40-52-8120-R03	General notes	STRUCTURAL - 1	vendor	4/18/2013	Approval
6007-PLN-AGE-40-52-8140-R03	Arrangment plan view	STRUCTURAL - 1	vendor	4/18/2013	Approval
6007-PLN-AGE-40-52-8141-R03	Mat bottom reinforcement	STRUCTURAL - 1	vendor	4/18/2013	Approval

ABENER TEYMA MOJAVE

Compliance No.:	GEN-2				
Job :	Mojave Solar Project				
Date: 2/17/11	Description: Structural Master Drawing List				
Sheet No.	Description	Applicable Condition of Certification	Vendor Supplied or EOR	Submittal Date	Reason for Submittal
6007-PLN-AGE-40-52-8142-R03	Mat top reinforcement	STRUCTURAL - 1	vendor	4/18/2013	Approval
6007-PLN-AGE-40-52-8143-R01	Extra top reinforcement	STRUCTURAL - 1	vendor	4/18/2013	Approval
6007-PLN-AGE-40-52-8144-R01	Extra bottom reinforcement	STRUCTURAL - 1	vendor	4/18/2013	Approval
6007-PLN-AGE-40-52-8145-R01	Mat reinforcement details	STRUCTURAL - 1	vendor	4/18/2013	Approval
6007-PLN-AGE-40-52-8150-R01	Drainage	STRUCTURAL - 1	vendor	4/18/2013	Approval
6007-PLN-AGE-40-52-8160-R01	Pier and rack support anchor layout	STRUCTURAL - 1	vendor	4/18/2013	Approval
6007-PLN-AGE-40-52-8161-R01	Pier and rack support anchor details	STRUCTURAL - 1	vendor	4/18/2013	Approval
6007-PLN-AGE-40-52-8162-R01	Anchor bolts. Assemblies and details	STRUCTURAL - 1	vendor	4/18/2013	Approval
6007-PLN-AGE-40-52-8163-R01	Skid and bench support layout	STRUCTURAL - 1	vendor	4/18/2013	Approval
6007-PLN-AGE-40-52-8164-R01	Skid support details	STRUCTURAL - 1	vendor	4/18/2013	Approval
6007-PLN-AGE-40-52-8173-R01	Skid support layout	STRUCTURAL - 1	vendor	4/18/2013	Approval
6007-CAL-AGE-40-52-8000-R03	WTP foundation calc report	STRUCTURAL - 1	vendor	4/18/2013	Approval
6007-PLN-AGE-67-33-9803	Grounding in beta central plant	STRUCTURAL - 1	vendor	4/18/2013	Approval
6007-CAL-AGE-57-52-3550-R01	Calculation Report	STRUCTURAL - 1	vendor	4/18/2013	Approval
6007-PLN-AGE-57-52-3550-R02	Cover sheet	STRUCTURAL - 1	vendor	4/18/2013	Approval
6007-PLN-AGE-57-52-3551-R02	General notes	STRUCTURAL - 1	vendor	4/18/2013	Approval
6007-PLN-AGE-57-52-3552-R02	Plan View and Detils	STRUCTURAL - 1	vendor	4/18/2013	Approval
6007-CAL-AGE-57-52-7550-R01	Calculation Report	STRUCTURAL - 1	vendor	4/18/2013	Approval
6007-PLN-AGE-57-52-7550-R02	Cover sheet	STRUCTURAL - 1	vendor	4/18/2013	Approval
6007-PLN-AGE-57-52-7551-R02	General notes	STRUCTURAL - 1	vendor	4/18/2013	Approval
6007-PLN-AGE-57-52-7552-R02	Plan View and Detils	STRUCTURAL - 1	vendor	4/18/2013	Approval
Addendum NO.4	Revised Update 3 to Addendum 4 to Geotechnical Evaluation: Power Blocks Water Treatment Plant	STRUCTURAL - 1	vendor	4/26/2013	Approval
6007-CAL-CTS-58-52-1200-R1	STRUCTURAL CALCULATIONS	STRUCTURAL - 1	vendor	5/3/2013	Approval
6007-PLN-CTS-58-52-1200-R1	GENERAL STRUCTURAL NOTES AND DETAILS	STRUCTURAL - 1	vendor	5/3/2013	Approval
6007-PLN-CTS-58-52-1201-R1	FOUNDATION PLANS	STRUCTURAL - 1	vendor	5/3/2013	Approval
6007-CAL-CTS-58-52-5200-R1	STRUCTURAL CALCULATIONS	STRUCTURAL - 1	vendor	5/3/2013	Approval
6007-PLN-CTS-58-52-5200-R1	GENERAL STRUCTURAL NOTES AND DETAILS	STRUCTURAL - 1	vendor	5/3/2013	Approval
6007-PLN-CTS-58-52-5201-R1	FOUNDATION PLANS	STRUCTURAL - 1	vendor	5/3/2013	Approval
Anchor Bolt holes hitting Reinf	Anchor Bolt holes hitting Reinf	STRUCTURAL - 1	vendor	5/3/2013	Approval
6007-PLN-AGE-58-52-2500-R01	Cover sheet	STRUCTURAL - 1	vendor	4/24/2013	Approval
6007-PLN-AGE-58-52-2501-R01	General notes	STRUCTURAL - 1	vendor	4/24/2013	Approval
6007-PLN-AGE-58-52-2502-R01	Plan View, Sections, and Details	STRUCTURAL - 1	vendor	4/24/2013	Approval
6007-CAL-AGE-58-52-2500-R01	Calculation report	STRUCTURAL - 1	vendor	4/24/2013	Approval
6007-PLN-AGE-58-52-6500-R01	Cover sheet	STRUCTURAL - 1	vendor	4/24/2013	Approval
6007-PLN-AGE-58-52-6501-R01	General notes	STRUCTURAL - 1	vendor	4/24/2013	Approval
6007-PLN-AGE-58-52-6502-R01	Plan View, Sections, and Details	STRUCTURAL - 1	vendor	4/24/2013	Approval
6007-CAL-AGE-58-52-6500-R01	Calculation report	STRUCTURAL - 1	vendor	4/24/2013	Approval
6007-PLN-AGE-58-52-3500-R01	Cover sheet	STRUCTURAL - 1	vendor	4/24/2013	Approval
6007-PLN-AGE-58-52-3501-R01	General notes	STRUCTURAL - 1	vendor	4/24/2013	Approval
6007-PLN-AGE-58-52-3502-R01	Plan View and Details	STRUCTURAL - 1	vendor	4/24/2013	Approval
6007-CAL-AGE-58-52-3500-R01	Calculation report	STRUCTURAL - 1	vendor	4/24/2013	Approval
6007-PLN-AGE-58-52-7500-R01	Cover sheet	STRUCTURAL - 1	vendor	4/24/2013	Approval
6007-PLN-AGE-58-52-7501-R01	General notes	STRUCTURAL - 1	vendor	4/24/2013	Approval
6007-PLN-AGE-58-52-7502-R01	Plan View and Details	STRUCTURAL - 1	vendor	4/24/2013	Approval
6007-CAL-AGE-58-52-7500-R01	Calculation report	STRUCTURAL - 1	vendor	4/24/2013	Approval
6007-PLN-FWE-21-52-0102	PIPE SUPPORTS DETAILS BASE. PLATES AND ANCHOR RODS	STRUCTURAL - 1	vendor	4/30/2013	Approval
6007-PLN-FWE-21-54-0401	TYPICAL PIPE HANDRAIL, STAIRWAY AND GRATING DETAILS	STRUCTURAL - 1	vendor	4/30/2013	Approval
6007-PLN-FWE-21-54-0402	TYPICAL PIPE HANDRAIL, STAIRWAY AND GRATING DETAILS	STRUCTURAL - 1	vendor	4/30/2013	Approval
6007-PLN-FWE-21-54-0403	TYPICAL DETAILS	STRUCTURAL - 1	vendor	4/30/2013	Approval
6007-PLN-FWE-21-52-0002	Structural Base Loads	STRUCTURAL - 1	vendor	4/30/2013	Approval
6007-PLN-FWE-21-52-0003	Base Loads Table. Main & Auxiliary Platforms	STRUCTURAL - 1	vendor	4/30/2013	Approval
6007-PLN-FWE-21-52-0004	Base Loads Table. Piping Supports	STRUCTURAL - 1	vendor	4/30/2013	Approval
6007-PLN-FWE-21-52-0201	Equipments Base Loads Details	STRUCTURAL - 1	vendor	4/30/2013	Approval
6007-PLN-FWE-21-52-0202	Structural Base Loads Details	STRUCTURAL - 1	vendor	4/30/2013	Approval
6007-PLN-FWE-21-52-0211	Equipment Base Plate Details	STRUCTURAL - 1	vendor	4/30/2013	Approval
6007-PLN-FWE-21-54-0301	Main Structure	STRUCTURAL - 1	vendor	4/30/2013	Approval
6007-PLN-FWE-21-54-0302	Main Structure. Bents 1 to 7	STRUCTURAL - 1	vendor	4/30/2013	Approval
6007-PLN-FWE-21-54-0303	Main Structure. Bents A/M &B/N	STRUCTURAL - 1	vendor	4/30/2013	Approval
6007-PLN-FWE-21-54-0304	Main Structure. Plan View	STRUCTURAL - 1	vendor	4/30/2013	Approval
6007-PLN-FWE-21-54-0305	Auxiliary Structure. Platforms	STRUCTURAL - 1	vendor	4/30/2013	Approval
6007-PLN-FWE-21-54-0306	MAIN STRUCTURE - P. V. - LEVELS +17' 11 3/4" +39' 6 3/4" & +50' 7 3/4"	STRUCTURAL - 1	vendor	4/30/2013	Approval
6007-PLN-FWE-21-54-0307	MAIN STRUCTURE - PLANT VIEW - GRATING LEVELS	STRUCTURAL - 1	vendor	4/30/2013	Approval
6007-PLN-FWE-21-54-0311	Auxiliary Structure. Piping Supports -I-	STRUCTURAL - 1	vendor	4/30/2013	Approval
6007-PLN-FWE-21-54-0312	AUXILIARY STRUCTURE PIPPING SUPPORTS-2-	STRUCTURAL - 1	vendor	4/30/2013	Approval
6007-PLN-FWE-21-54-0321	DRUM SADDLE FOR ERECTION - GENERAL ARRANGEMENT & SECTIONS	STRUCTURAL - 1	vendor	4/30/2013	Approval
6007-PLN-FWE-21-54-0351	MAIN STRUCTURE - DETAILS SERIAL A & B	STRUCTURAL - 1	vendor	4/30/2013	Approval
6007-PLN-FWE-21-54-0352	MAIN STRUCTURE - DETAILS SERIAL C - D & E	STRUCTURAL - 1	vendor	4/30/2013	Approval
6007-CAL-FWE-21-52-0020	Structural Engineering Design Report_13_04_05	STRUCTURAL - 1	vendor	4/30/2013	Approval
6007-CAL-FWE-21-61-0005	Feedwater and Steam Pipng Stress Analysis Report	STRUCTURAL - 1	vendor	4/30/2013	Approval
6007-CAL-FWE-21-61-0006	HTF Oil Pipng Stress Analysis Report	STRUCTURAL - 1	vendor	4/30/2013	Approval
6007-PLN-FWE-21-65-6001	PIPING GENERAL ARRANGEMENT AND TERMINAL POINTS	STRUCTURAL - 1	vendor	4/30/2013	Approval
RESPONSE		STRUCTURAL - 1	vendor	4/30/2013	Approval
6007-PLN-AGE-58-52-2470-R05	Cover sheet	STRUCTURAL - 1	vendor	4/29/2013	Approval
6007-PLN-AGE-58-52-2471-R03	General notes	STRUCTURAL - 1	vendor	4/29/2013	Approval
6007-PLN-AGE-58-52-2472-R05	Basin layout	STRUCTURAL - 1	vendor	4/29/2013	Approval
6007-PLN-AGE-58-52-2473-R04	Bsin Section & Details	STRUCTURAL - 1	vendor	4/29/2013	Approval

ABENER TEYMA MOJAVE

Compliance No.:	GEN-2				
Job :	Mojave Solar Project				
Date: 2/17/11	Description: Structural Master Drawing List				
Sheet No.	Description	Applicable Condition of Certification	Vendor Supplied or EOR	Submittal Date	Reason for Submittal
6007-PLN-AGE-58-52-2474-R05	Detail 2	STRUCTURAL - 1	vendor	4/29/2013	Approval
6007-PLN-AGE-58-52-2475-R03	Electrical Heater Foundation	STRUCTURAL - 1	vendor	4/29/2013	Approval
6007-PLN-AGE-58-52-2476-R02	Coordinates	STRUCTURAL - 1	vendor	4/29/2013	Approval
6007-CAL-AGE-58-52-2470-R03	Calculations	STRUCTURAL - 1	vendor	4/29/2013	Approval
6007-PLN-AGE-58-52-6470-R05	Cover sheet	STRUCTURAL - 1	vendor	4/29/2013	Approval
6007-PLN-AGE-58-52-6471-R03	General notes	STRUCTURAL - 1	vendor	4/29/2013	Approval
6007-PLN-AGE-58-52-6472-R05	Basin layout	STRUCTURAL - 1	vendor	4/29/2013	Approval
6007-PLN-AGE-58-52-6473-R04	Bsin Section & Details	STRUCTURAL - 1	vendor	4/29/2013	Approval
6007-PLN-AGE-58-52-6474-R05	Detail 2	STRUCTURAL - 1	vendor	4/29/2013	Approval
6007-PLN-AGE-58-52-6475-R03	Electrical Heater Foundation	STRUCTURAL - 1	vendor	4/29/2013	Approval
6007-PLN-AGE-58-52-6476-R02	Coordinates	STRUCTURAL - 1	vendor	4/29/2013	Approval
6007-CAL-AGE-58-52-6470-R03	Calculations	STRUCTURAL - 1	vendor	4/29/2013	Approval
6007-PLN-AGE-12-51-4001-R03	Cover sheet	STRUCTURAL - 1	vendor	5/1/2013	Approval
6007-PLN-AGE-12-50-4001-R04	General notes	STRUCTURAL - 1	vendor	5/1/2013	Approval
6007-PLN-AGE-12-57-4001-R04	Architectural Definitions - Floor Plan	STRUCTURAL - 1	vendor	5/1/2013	Approval
6007-PLN-AGE-12-57-4002-R04	Architectural Definitions - Roof and utility Support Plans	STRUCTURAL - 1	vendor	5/1/2013	Approval
6007-PLN-AGE-12-57-4003-R04	Architectural Definitions - Exterior Elevations-Sheet 1	STRUCTURAL - 1	vendor	5/1/2013	Approval
6007-PLN-AGE-12-57-4004-R04	Architectural Definitions - Exterior Elevations-Sheet 2	STRUCTURAL - 1	vendor	5/1/2013	Approval
6007-PLN-AGE-12-57-4005-R04	Architectural Definitions - Building Sections	STRUCTURAL - 1	vendor	5/1/2013	Approval
6007-PLN-AGE-12-57-4006-R04	Architectural Definitions - Schedules & Details	STRUCTURAL - 1	vendor	5/1/2013	Approval
6007-PLN-AGE-12-57-4007-R03	Architectural Definitions - Details	STRUCTURAL - 1	vendor	5/1/2013	Approval
6007-PLN-AGE-12-51-8001-R03	Cover sheet	STRUCTURAL - 1	vendor	5/1/2013	Approval
6007-PLN-AGE-12-50-8001-R04	General notes	STRUCTURAL - 1	vendor	5/1/2013	Approval
6007-PLN-AGE-12-57-8001-R04	Architectural Definitions - Floor Plan	STRUCTURAL - 1	vendor	5/1/2013	Approval
6007-PLN-AGE-12-57-8002-R04	Architectural Definitions - Roof and utility Support Plans	STRUCTURAL - 1	vendor	5/1/2013	Approval
6007-PLN-AGE-12-57-8003-R04	Architectural Definitions - Exterior Elevations-Sheet 1	STRUCTURAL - 1	vendor	5/1/2013	Approval
6007-PLN-AGE-12-57-8004-R04	Architectural Definitions - Exterior Elevations-Sheet 2	STRUCTURAL - 1	vendor	5/1/2013	Approval
6007-PLN-AGE-12-57-8005-R04	Architectural Definitions - Building Sections	STRUCTURAL - 1	vendor	5/1/2013	Approval
6007-PLN-AGE-12-57-8006-R04	Architectural Definitions - Schedules & Details	STRUCTURAL - 1	vendor	5/1/2013	Approval
6007-PLN-AGE-12-57-8007-R03	Architectural Definitions - Details	STRUCTURAL - 1	vendor	5/1/2013	Approval
heck Reply_STRUC-1-17.01-Alpha at	na	STRUCTURAL - 1	vendor	5/1/2013	Approval
6007-HDD-LEF-12-62-0013	MSDS Data Sheets	STRUCTURAL - 1	vendor	5/1/2013	Approval
6007-CAL-AGE-12-52-4000-R03	Calculation Report for Water Treatment Building. Alpha Plant	STRUCTURAL - 1	vendor	5/1/2013	Approval
6007-PLN-AGE-12-50-4000-R03	Alpha Plant. Water Treatment Building. General Notes	STRUCTURAL - 1	vendor	5/1/2013	Approval
6007-PLN-AGE-12-51-4000-R03	Alpha Plant. Water Treatment Building. Cover Sheet	STRUCTURAL - 1	vendor	5/1/2013	Approval
6007-PLN-AGE-12-54-4000-R03	Alpha Plant. Water Treatment Building. Structural Roof Framing Plan	STRUCTURAL - 1	vendor	5/1/2013	Approval
6007-PLN-AGE-12-54-4001-R03	Alpha Plant. Water Treatment Building. Elevation - Sheet 1	STRUCTURAL - 1	vendor	5/1/2013	Approval
6007-PLN-AGE-12-54-4002-R03	Alpha Plant. Water Treatment Building. Elevation - Sheet 2	STRUCTURAL - 1	vendor	5/1/2013	Approval
6007-PLN-AGE-12-54-4003-R03	Alpha Plant. Water Treatment Building. Elevation - Sheet 3	STRUCTURAL - 1	vendor	5/1/2013	Approval
6007-PLN-AGE-12-54-4004-R03	Alpha Plant. Water Treatment Building. Elevation - Sheet 4	STRUCTURAL - 1	vendor	5/1/2013	Approval
6007-PLN-AGE-12-54-4005-R03	Alpha Plant. Water Treatment Building. Elevation - Sheet 5	STRUCTURAL - 1	vendor	5/1/2013	Approval
6007-PLN-AGE-12-54-4006-R03	Alpha Plant. Water Treatment Building. Elevation - Sheet 6	STRUCTURAL - 1	vendor	5/1/2013	Approval
6007-PLN-AGE-12-54-4007-R03	Alpha Plant. Water Treatment Building. Column Schedule	STRUCTURAL - 1	vendor	5/1/2013	Approval
6007-PLN-AGE-12-54-4008-R03	Alpha Plant. Water Treatment Building. Achor Rods Assemblies, Structure and Details	STRUCTURAL - 1	vendor	5/1/2013	Approval
6007-PLN-AGE-12-54-4009-R03	Alpha Plant. Water Treatment Building. Structural Connection Details	STRUCTURAL - 1	vendor	5/1/2013	Approval
6007-PLN-AGE-12-54-4010-R03	Alpha Plant. Water Treatment Building. Structural Connection Details	STRUCTURAL - 1	vendor	5/1/2013	Approval
6007-CAL-AGE-12-52-8000-R03	Calculation Report for Water Treatment Building. Beta Plant	STRUCTURAL - 1	vendor	5/1/2013	Approval
6007-PLN-AGE-12-50-8000-R03	Beta Plant. Water Treatment Building. General Notes	STRUCTURAL - 1	vendor	5/1/2013	Approval
6007-PLN-AGE-12-51-8000-R03	Beta Plant. Water Treatment Building. Cover Sheet	STRUCTURAL - 1	vendor	5/1/2013	Approval
6007-PLN-AGE-12-54-8000-R03	Beta Plant. Water Treatment Building. Structural Roof Framing Plan	STRUCTURAL - 1	vendor	5/1/2013	Approval
6007-PLN-AGE-12-54-8001-R03	Beta Plant. Water Treatment Building. Elevation - Sheet 1	STRUCTURAL - 1	vendor	5/1/2013	Approval
6007-PLN-AGE-12-54-8002-R03	Beta Plant. Water Treatment Building. Elevation - Sheet 2	STRUCTURAL - 1	vendor	5/1/2013	Approval
6007-PLN-AGE-12-54-8003-R03	Beta Plant. Water Treatment Building. Elevation - Sheet 3	STRUCTURAL - 1	vendor	5/1/2013	Approval
6007-PLN-AGE-12-54-8004-R03	Beta Plant. Water Treatment Building. Elevation - Sheet 4	STRUCTURAL - 1	vendor	5/1/2013	Approval
6007-PLN-AGE-12-54-8005-R03	Beta Plant. Water Treatment Building. Elevation - Sheet 5	STRUCTURAL - 1	vendor	5/1/2013	Approval
6007-PLN-AGE-12-54-8006-R03	Beta Plant. Water Treatment Building. Elevation - Sheet 6	STRUCTURAL - 1	vendor	5/1/2013	Approval
6007-PLN-AGE-12-54-8007-R03	Beta Plant. Water Treatment Building. Column Schedule	STRUCTURAL - 1	vendor	5/1/2013	Approval
6007-PLN-AGE-12-54-8008-R03	Beta Plant. Water Treatment Building. Achor Rods Assemblies, Structure and Details	STRUCTURAL - 1	vendor	5/1/2013	Approval
6007-PLN-AGE-12-54-8009-R03	Beta Plant. Water Treatment Building. Structural Connection Details	STRUCTURAL - 1	vendor	5/1/2013	Approval
6007-PLN-AGE-12-54-8010-R03	Beta Plant. Water Treatment Building. Structural Connection Details	STRUCTURAL - 1	vendor	5/1/2013	Approval
6007-PLN-AGE-58-52-3465-R00	Rack 2 Plain View Details	STRUCTURAL - 1	vendor	5/1/2013	Approval
6007-PLN-AGE-74-54-2000	Cover sheet	STRUCTURAL - 1	vendor	5/2/2013	Approval
6007-PLN-AGE-74-54-2001	General notes	STRUCTURAL - 1	vendor	5/2/2013	Approval
6007-PLN-AGE-74-54-2002	G.A. Plan (+2058.00") & Base plates	STRUCTURAL - 1	vendor	5/2/2013	Approval
6007-PLN-AGE-74-54-2003	G.A. Plan (+2077.26")	STRUCTURAL - 1	vendor	5/2/2013	Approval
6007-PLN-AGE-74-54-2004	G.A. Plan (+2100.83")	STRUCTURAL - 1	vendor	5/2/2013	Approval
6007-PLN-AGE-74-54-2005	G.A. Plan (+2115.33")	STRUCTURAL - 1	vendor	5/2/2013	Approval
6007-PLN-AGE-74-54-2006	G.A. Elevation at grid A	STRUCTURAL - 1	vendor	5/2/2013	Approval
6007-PLN-AGE-74-54-2007	G.A. Elevation at grid B	STRUCTURAL - 1	vendor	5/2/2013	Approval
6007-PLN-AGE-74-54-2008	G.A. Elevation at grid C	STRUCTURAL - 1	vendor	5/2/2013	Approval
6007-PLN-AGE-74-54-2009	G.A. Elevation at grid 1 & 2	STRUCTURAL - 1	vendor	5/2/2013	Approval
6007-PLN-AGE-74-54-2010	G.A. Elevation at grid 3 & 4	STRUCTURAL - 1	vendor	5/2/2013	Approval
6007-PLN-AGE-74-54-2011	G.A. Elevation at grid 5 & 6	STRUCTURAL - 1	vendor	5/2/2013	Approval
6007-PLN-AGE-74-54-2012	Stairs details	STRUCTURAL - 1	vendor	5/2/2013	Approval
6007-PLN-AGE-74-54-2013	Sections & details	STRUCTURAL - 1	vendor	5/2/2013	Approval
6007-CAL-AGE-74-54-2000	Calculation report	STRUCTURAL - 1	vendor	5/2/2013	Approval

ABENER TEYMA MOJAVE

Compliance No.:	GEN-2				
Job :	Mojave Solar Project				
Date: 2/17/11	Description: Structural Master Drawing List				
Sheet No.	Description	Applicable Condition of Certification	Vendor Supplied or EOR	Submittal Date	Reason for Submittal
6007-PLN-AGE-74-54-6000	Cover sheet	STRUCTURAL - 1	vendor	5/2/2013	Approval
6007-PLN-AGE-74-54-6001	General notes	STRUCTURAL - 1	vendor	5/2/2013	Approval
6007-PLN-AGE-74-54-6002	G.A. Plan (+2066.00") & Base plates	STRUCTURAL - 1	vendor	5/2/2013	Approval
6007-PLN-AGE-74-54-6003	G.A. Plan (+2085.26")	STRUCTURAL - 1	vendor	5/2/2013	Approval
6007-PLN-AGE-74-54-6004	G.A. Plan (+2108.83")	STRUCTURAL - 1	vendor	5/2/2013	Approval
6007-PLN-AGE-74-54-6005	G.A. Plan (+2123.33")	STRUCTURAL - 1	vendor	5/2/2013	Approval
6007-PLN-AGE-74-54-6006	G.A. Elevation at grid A	STRUCTURAL - 1	vendor	5/2/2013	Approval
6007-PLN-AGE-74-54-6007	G.A. Elevation at grid B	STRUCTURAL - 1	vendor	5/2/2013	Approval
6007-PLN-AGE-74-54-6008	G.A. Elevation at grid C	STRUCTURAL - 1	vendor	5/2/2013	Approval
6007-PLN-AGE-74-54-6009	G.A. Elevation at grid 1 & 2	STRUCTURAL - 1	vendor	5/2/2013	Approval
6007-PLN-AGE-74-54-6010	G.A. Elevation at grid 3 & 4	STRUCTURAL - 1	vendor	5/2/2013	Approval
6007-PLN-AGE-74-54-6011	G.A. Elevation at grid 5 & 6	STRUCTURAL - 1	vendor	5/2/2013	Approval
6007-PLN-AGE-74-54-6012	Stairs details	STRUCTURAL - 1	vendor	5/2/2013	Approval
6007-PLN-AGE-74-54-6013	Sections & details	STRUCTURAL - 1	vendor	5/2/2013	Approval
6007-CAL-AGE-74-54-6000	Calculation report	STRUCTURAL - 1	vendor	5/2/2013	Approval
6007-SKT-AGE-58-52-7403	Rack 1 foundation - Column Type 1 detail	STRUCTURAL - 1	vendor	5/7/2013	Approval
6007-SKT-AGE-58-52-7404	Rack 1 foundation - Column Type 4 detail	STRUCTURAL - 1	vendor	5/7/2013	Approval
6007-SKT-AGE-58-52-7405	Rack 1 foundation - Column Type 6 detail	STRUCTURAL - 1	vendor	5/7/2013	Approval
6007-SKT-AGE-58-52-7406	Rack 1 foundation - Column Type 8 detail	STRUCTURAL - 1	vendor	5/7/2013	Approval
6007-SKT-AGE-58-52-7407	Rack 1 foundation - Column Type 9 detail	STRUCTURAL - 1	vendor	5/7/2013	Approval
RFI #002	NA	STRUCTURAL - 1	vendor	5/13/2013	Approval
6007-PLN-AGE-57-54-6700	HTF bridge connection. Cover sheet	STRUCTURAL - 1	vendor	5/13/2013	Approval
6007-PLN-AGE-57-54-6701	HTF bridge connection. General notes	STRUCTURAL - 1	vendor	5/23/2013	Approval
6007-PLN-AGE-57-54-6702	HTF bridge connection. Plan view	STRUCTURAL - 1	vendor	5/23/2013	Approval
6007-PLN-AGE-57-54-6703	HTF bridge connection. Connection plan views and details	STRUCTURAL - 1	vendor	5/23/2013	Approval
6007-PLN-AGE-57-54-6704	HTF bridge connection. Elevation A & B	STRUCTURAL - 1	vendor	5/23/2013	Approval
6007-PLN-AGE-57-54-6705	HTF bridge connection. Elevation frame 1 to 5	STRUCTURAL - 1	vendor	5/23/2013	Approval
6007-PLN-AGE-57-54-6706	HTF bridge connection. Staircase and baseplate detail	STRUCTURAL - 1	vendor	5/23/2013	Approval
6007-PLN-AGE-57-54-6707	HTF bridge connection. Connection details	STRUCTURAL - 1	vendor	5/23/2013	Approval
6007-PLN-AGE-57-54-6708	HTF bridge connection. Connection details	STRUCTURAL - 1	vendor	5/23/2013	Approval
6007-CAL-AGE-40-52-4500	Calculation Report	STRUCTURAL - 1	vendor	5/23/2013	Approval
6007-PLN-AGE-40-52-4500	Cover sheet	STRUCTURAL - 1	vendor	6/4/2013	Approval
6007-PLN-AGE-40-52-4520	General notes	STRUCTURAL - 1	vendor	6/4/2013	Approval
6007-PLN-AGE-40-52-4540	Foundation details	STRUCTURAL - 1	vendor	6/4/2013	Approval
6007-CAL-AGE-40-52-8500	Calculation Report	STRUCTURAL - 1	vendor	6/4/2013	Approval
6007-PLN-AGE-40-52-8500	Cover sheet	STRUCTURAL - 1	vendor	6/4/2013	Approval
6007-PLN-AGE-40-52-8520	General notes	STRUCTURAL - 1	vendor	6/4/2013	Approval
6007-PLN-AGE-40-52-8540	Foundation details	STRUCTURAL - 1	vendor	6/4/2013	Approval
6007-PLN-AGE-16-52-4000	Cover sheet	STRUCTURAL - 1	vendor	6/4/2013	Approval
6007-PLN-AGE-16-52-4020	General notes	STRUCTURAL - 1	vendor	6/6/2013	Approval
6007-PLN-AGE-16-52-4040	Foundation plan and details	STRUCTURAL - 1	vendor	6/6/2013	Approval
6007-PLN-AGE-16-52-8000	Cover sheet	STRUCTURAL - 1	vendor	6/6/2013	Approval
6007-PLN-AGE-16-52-8020	General notes	STRUCTURAL - 1	vendor	6/6/2013	Approval
6007-PLN-AGE-16-52-8040	Foundation plan and details	STRUCTURAL - 1	vendor	6/6/2013	Approval
6007-CAL-AGE-16-54-4000-R02.pd	Calculation report	STRUCTURAL - 1	vendor	6/6/2013	Approval
6007-PLN-AGE-16-54-4000-R05.pd	Structure details	STRUCTURAL - 1	vendor	6/6/2013	Approval
6007-CAL-AGE-16-54-8000-R02.pd	Calculation report	STRUCTURAL - 1	vendor	6/6/2013	Approval
6007-PLN-AGE-16-54-8000-R05.pd	Structure details	STRUCTURAL - 1	vendor	6/6/2013	Approval
6007-PLN-AGE-58-54-3502	Plan view	STRUCTURAL - 1	vendor	6/6/2013	Approval
6007-PLN-AGE-58-54-3503	Sections & Details	STRUCTURAL - 1	vendor	6/6/2013	Approval
6007-PLN-AGE-58-54-7502	Plan view	STRUCTURAL - 1	vendor	6/6/2013	Approval
6007-PLN-AGE-58-54-7503	Sections & Details	STRUCTURAL - 1	vendor	6/6/2013	Approval
6007-PLN-AGE-58-52-7502	Plan view & Details	STRUCTURAL - 1	vendor	6/6/2013	Approval
6007-PLN-AGE-58-54-3575	Cover sheet	STRUCTURAL - 1	vendor	6/6/2013	Approval
6007-PLN-AGE-58-54-3576	General notes	STRUCTURAL - 1	vendor	5/31/2013	Approval
6007-PLN-AGE-58-54-3577	Plan view	STRUCTURAL - 1	vendor	5/14/2013	Approval
6007-PLN-AGE-58-54-3578	Sections	STRUCTURAL - 1	vendor	5/31/2013	Approval
6007-CAL-AGE-58-54-3575	Calculation report	STRUCTURAL - 1	vendor	5/31/2013	Approval
6007-PLN-AGE-58-54-7575	Cover sheet	STRUCTURAL - 1	vendor	5/31/2013	Approval
6007-PLN-AGE-58-54-7576	General notes	STRUCTURAL - 1	vendor	5/31/2013	Approval
6007-PLN-AGE-58-54-7577	Plan view	STRUCTURAL - 1	vendor	5/31/2013	Approval
6007-PLN-AGE-58-54-7578	Sections	STRUCTURAL - 1	vendor	5/31/2013	Approval
6007-CAL-AGE-58-54-7575	Calculation report	STRUCTURAL - 1	vendor	5/31/2013	Approval
6007-PLN-AGE-74-54-2020.pdf	Cover sheet	STRUCTURAL - 1	vendor	5/31/2013	Approval
6007-PLN-AGE-74-54-2021.pdf	General notes	STRUCTURAL - 1	vendor	6/7/2013	Approval
6007-PLN-AGE-74-54-2022.pdf	Plan & base plate details	STRUCTURAL - 1	vendor	6/7/2013	Approval
6007-PLN-AGE-74-54-2023.pdf	Elevations	STRUCTURAL - 1	vendor	6/7/2013	Approval
6007-PLN-AGE-74-54-2024.pdf	Connection details	STRUCTURAL - 1	vendor	6/7/2013	Approval
6007-PLN-AGE-74-54-2025.pdf	Connection details	STRUCTURAL - 1	vendor	6/7/2013	Approval
6007-PLN-AGE-74-54-6020.pdf	Cover sheet	STRUCTURAL - 1	vendor	6/7/2013	Approval
6007-PLN-AGE-74-54-6021.pdf	General notes	STRUCTURAL - 1	vendor	6/7/2013	Approval
6007-PLN-AGE-74-54-6022.pdf	Plan & base plate details	STRUCTURAL - 1	vendor	6/7/2013	Approval
6007-PLN-AGE-74-54-6023.pdf	Elevations	STRUCTURAL - 1	vendor	6/7/2013	Approval
6007-PLN-AGE-74-54-6024.pdf	Connection details	STRUCTURAL - 1	vendor	6/7/2013	Approval
6007-PLN-AGE-74-54-6025.pdf	Connection details	STRUCTURAL - 1	vendor	6/7/2013	Approval

Compliance No.:	GEN-2				
Job :	Mojave Solar Project				
Date: 2/17/11	Description: Structural Master Drawing List				
Sheet No.	Description	Applicable Condition of Certification	Vendor Supplied or EOR	Submittal Date	Reason for Submittal

SIEMENS

Siemens Energy, Inc.
Power Transmission Division
444 Highway 49 South
RICHLAND MS 39218
Phone: 601 939 0550

Bill of Lading

eceived, subject to the classifications and lawfully filed tariffs in effect on the date of the issue of the Bill of Lading, the property described below in apparent good order, except as noted (contents and condition of contents of packages unknown), marked, consigned, and destined as indicated below, which said carrier (the word carrier being understood throughout this contract as meaning any person or corporation in possession of the property under the contract) agrees to carry to it.s usual place of delivery at said destination. If on its route, otherwise to deliver to another carrier on the route to said destination. It is mutually agreed, as to each carrier of all or any of said property over all or any portion of said route in destination, and as to each party at any time interested in all or any of said property, that every service to be performed hereunder shall be subject to all the terms and conditions of the Uniform Domestic Straight Bill of Lading set forth (1) in Uniform Freight Classification in effect on the date hereof, if this is a rail or a rail-water shipment, or (2) in the applicable motor carrier classification or tariff if this is a motor carrier shipment.
Shipper hereby certifies that he is familiar with all the terms and conditions of the said bill of lading, including these on the back thereof, set forth in the classification or tariff which governs the transportation of this shipment, and the said terms and conditions are hereby agreed to by the shipper and accepted for himself and his assigns.

Ship to:
Abengoa T&D, Inc
Site Manager
Mojave Solar Power Plant
42134 Harper Lake Road
HINKLEY CA 92347
USA

Information

Bill of Lading No.	**SIUSC0040124230**
Ship Date	Dec 10, 2012
Sales Order No.	30111795
Sales Order Date	Aug 16, 2012
Purchase Order No.	2012-K05-MJ-SE004
Account Code	NA
Ship Via	Bennett Motor Express
Ext. Tracking #:	LOW BOY
Total Weight	20,100.000 LB
Total # of Packages	4
Sold To:	ABENGOA T&D INC AND DISTRIBUTION INC

Item	Quantity	Material/Description
100	2 EA	SPS2-2454020
	SPS2-245-40-1200	

S/N:(30111795-1, 30111795-2)

SF6 Circuit Breaker, per P.O. #2012-K05-MJ-SE004, and Siemens Proposal #12129-S-1, with Installation Tools.

Price includes modification to make motor connection 120 VAC.

EACH BREAKER CONTAINS 28 LBS. SF6 GAS DURING SHIPMENT.

2 PLTS. - W/LEGS, ANGLES & GAS
4 CYL UN1080, SULFUR HEXAFLUORIDE, 2.2 @ 28C

★ ATTENTION RECEIVING ★
Please Inspect Shipment For Damage Prior To Signing Bill of Lading

Destination Control Statement:
"THESE COMMODITIES ARE SOLD FOR DOMESTIC CONSUMPTION. ANY EXPORT OF THESE COMMODITIES MUST BE MADE IN COMPLIANCE WITH APPLICABLE U.S. LAWS"

Storage Manager: Jesus Nieto 720-412-9107

Supervisor: Juan A. Perez 303-396-5821

JESUS NIETO
12/14/12

PLEASE CALL 48 HOURS PRIOR TO DELIVERY.

The plant site is located in San Bernardino County, CA, in the Mojave Desert, approximately 90 miles northeast of Los Angeles.
Located approximately 9 miles northwest of Hinkley, CA, and approximately 20 miles west of Barstow # approximately 6 miles north of CA-58 on Harper Lake Road.

Ship Freight Amount:
PREPAID

Class/Rate:
FAKA - ELECTRICAL PARTS

"This is to certify that the above named materials are properly classified, described, packaged, marked and labeled, and are in proper condition for transportation according to the applicable regulations by the Department of Transportation."
NOTE: Where the rate is dependent on value, shippers are required to state specifically in writing the agreed or declared value of the property. The agreed or declared value of the property is hereby specifically stated by the shipper to be not exceeding:

$_____

Per _____

Subject to Section 7 of conditions, if this shipment is to be delivered to the consignee without recourse on the consignor, the consignor shall sign the following statement:

**The carrier shall not make delivery of this shipment without payment of freight and all other lawful charges.

Per _____

Signature of Consignee

For Payment attach copy of the signed and ted B/L with POD to freight bill and mail to:
Siemens Energy, Inc./SPTD09
C/O Data2Logistics
PO BOX 61090
Ft. Myers, FL 33906
Phone (239)936-2800
Freight Bill without B/L copy will be returned.

Siemens Energy, Inc., Shipper,

Per Bill Moak_____
Permanent postoffice address of shipper,

Bennett Agent

Per Mike Comm Date 12-10-12

SIEMENS

Siemens Energy, Inc.
Power Transmission Division
444 Highway 49 South
RICHLAND MS 39218
Phone: 601 939 0550

Bill of Lading

Received, subject to the classifications and lawfully filed tariffs in effect on the date of the issue of the Bill of Lading, the property described below in apparent good order, except as noted (contents and condition of contents of packages unknown), marked, consigned, and destined as indicated below, which said carrier (the word carrier being understood throughout this contract as meaning any person or corporation in possession of the property under the contract) agrees to carry to its usual place of delivery at said destination. If on its route, otherwise to deliver to another carrier on the route to said destination. It is mutually agreed, as to each carrier of all or any of said property over all or any portion of said route in destination, and as to each party at any time interested in all or any of said property, that every service to be performed hereunder shall be subject to all the terms and conditions of the Uniform Domestic Straight Bill of Lading set forth (1) in Uniform Freight Classification in effect on the date hereof, if this is a rail or a rail-water shipment, or (2) in the applicable motor carrier classification or tariff if this is a motor carrier shipment.
Shipper hereby certifies that he is familiar with all the terms and conditions of the said bill of lading, including these on the back thereof, set forth in the classification or tariff which governs the transportation of this shipment, and the said terms and conditions are hereby agreed to by the shipper and accepted for himself and his assigns.

Ship to:
Abengoa T&D, Inc
Site Manager
Mojave Solar Power Plant
42134 Harper Lake Road
HINKLEY CA 92347
USA

02/21/2013

Information

Bill of Lading No.	SIUSC0040126982
Ship Date	Feb 08, 2013
Sales Order No.	30111719
Sales Order Date	Aug 15, 2012
Purchase Order No.	2012-K05-MJ-SE004
Account Code	NA
Ship Via	Con-way Freight
Ext. Tracking #:	246-312776
Total Weight	1,317.000 LB
Total # of Packages	7
Sold To:	ABENGOA T&D INC AND DISTRIBUTION INC

Item	Quantity	Material/Description
100	6 EA	3EL21922PJ324NH1
	SURGE ARRESTER,192 / 152kV MCOV	
	SURGE ARRESTER,192 / 152kV MCOV POLYMER (INSULATED BASE)	
200	6 EA	3EX5050
	DISCHARGE COUNTER W/METER	
	DISCHARGE COUNTER W/METER	
	6 CRATES - W/1 CARDBOARD BOX BANDED TO THE TOP OF ONE OF THE CRATES	

Ship Freight Amount:
PREPAID AND ALLOWED

Class/Rate:
FAKA - ELECTRICAL PARTS

Destination Control Statement:
"THESE COMMODITIES ARE SOLD FOR DOMESTIC CONSUMPTION. ANY EXPORT OF THESE COMMODITIES MUST BE MADE IN COMPLIANCE WITH APPLICABLE U.S. LAWS"

CONTACT: JESUS NIETO
PHONE: 480-236-6674

PLEASE CALL 2 WEEKS PRIOR TO MAKE SURE ALL DOCUMENTS HAVE BEEN PROVIDED

PLEASE CALL 48 HOURS PRIOR TO DELIVERY. HOURS M-F 7-4

The plant site is located in San Bernardino County, CA, in the Mojave Desert, approximately 90 miles northeast of Los Angeles.
Located approximately 9 miles northwest of Hinkley, CA, and approximately 20 miles west of Barstow # approximately 6 miles north of CA-58 on Harper Lake Road.

****DRESS CODE: STEEL TOE BOOTS, LONG PANTS, SAFETY VEST, SAFETY GLASSES, HARD HAT AND SAFETY GLOVES.***
Hazardous Materials Information:
Hazardous Material 24 hour Emergency Number
Chemtrec: 1-800-424-9300

"This is to certify that the above named materials are properly classified, described, packaged, marked and labeled, and are in proper condition for transportation according to the applicable regulations by the Department of Transportation."
NOTE: Where the rate is dependent on value, shippers are required to state specifically in writing the agreed or declared value of the property. The agreed or declared value of the property is hereby specifically stated by the shipper to be not exceeding:

$_____

Per _____

Subject to Section 7 of conditions, if this shipment is to be delivered to the consignee without recourse on the consignor, the consignor shall sign the following statement:

**The carrier shall not make delivery of this shipment without payment of freight and all other lawful charges.

Per _____
Signature of Consignee

For Payment attach copy of the signed and dated B/L with POD to freight bill and mail to:
Siemens Energy, Inc./SPTD09
C/O Data2Logistics
PO BOX 61090
Ft. Myers, FL 33906
Phone (239)936-2800
Freight Bill without B/L copy will be returned.

Siemens Energy, Inc., Shipper,

Per Bill Moak_____
Permanent postoffice address of shipper,

_____Agent

Per_____ Date_____

TRENCH LIMITED
71 Maybrook Drive, Scarborough, Ontario, Canada M1V 4B6
Telephone: 416-298-8108, Facsimile: 416-298-2209

TRENCH

PACKING LIST

T121718

DATE: March 04, 2013

SOLD TO: 6309
ABENGOA T&D INC
11500 W 13TH AVE
LAKEWOOD, CO
US 80215

INVOICE TO: 6309
ABENGOA T&D INC
11500 W 13TH AVE
LAKEWOOD, CO
US 80215

SHIP TO:
ABENGOA T&D
MOJAVE SOLAR POWER PLANT
42134 HARPER LAKE RD
HINKLEY, CA
US 92347
CONTACT 48 HRS PRIOR DELIVERY
JESUS NIETO, STORAGE MANAGER
TEL: 480-236-6674 (AVAILABLE 24/7, IF NEEDED)

CUSTOMER ORDER NO	:	2012-K05-MJ SE-001	BOOKING DETAILS	:	MAIER TRUCKING SEND EMAIL TO J NEITO ONE WEEK BEFORE DELIVERY DATE
DATE OF ORDER	:	August 24, 2012			
TRENCH REF NO	:	21211397-T121718			
TRENCH GST REG. #	:	86905 3447			
TRENCH PROV / STATE #	:				
PAYMENT TERMS	:	within 90 days Due net	DATE SHIPPED	:	March 08, 2013
FEDERAL TAX ID #	:	26-4768117	DELIVERY TERMS	:	DDP San Bernardino County, CA
PST REG. #-CUST	:		FREIGHT	:	Prepaid
AGENT CODE	:	PETERS YOULOS	TRANSPORT METHOD	:	Truck

CRATING INFORMATION : (DIMENSIONS AND WEIGHT ARE FOR EACH PACKAGE)

SO#	NO.	NET WEIGHT	GROSS WEIGHT	DIMENSIONS	COMMENT
T121718	4		70 LB	24 X 19 X 16 IN	

TOTAL : 4 CRT / 280 LB
SERIAL NO : T121718-01-02-03-05

CUST ITEM	SO#	QTY ORD	DESCRIPTION	QTY B/O	QTY SHIPPED	HS CODE
3	T121718	6	JUNCTION BOX 4 UNITS JUNCTION BOX FOR TEMF230; S/O T121717 2 UNITS JUNCTION BOX FOR IOSK 245; S/O T121716	2	4	

03/12/13

COMMENTS :

Country of origin: CA
ECCN: N
ECL: N
AWV code: 'NN'

Goods labelled with "ECL not equal to N" are subject to Canadian export authorization when being exported out of Canada. Goods labelled with "ECCN not equal to N" may be subject to U.S. re-export authorization. Even without a label, or with label "ECL: N" or "ECCN: N", authorization may be required due to the final whereabouts and the purpose for which the goods are to be used. Further, depending on the origin of the products and destination, additional Canadian export control regulations may apply.

TRENCH STANDARD CONDITIONS OF SALE VER. 7.03 SHALL APPLY
Payable 90 days from Invoice date with 1% discount of the total invoiced value
MARK: PO# 2012-K05-MJ SE-001;MOJAVE PROJECT

TRENCH LIMITED
71 Maybrook Drive, Scarborough, Ontario, Canada M1V 4B6
Telephone: 416-298-8108, Facsimile: 416-298-2209

TRENCH

PACKING LIST T121717

DATE: March 04, 2013

SOLD TO: 6309
ABENGOA T&D INC
11500 W 13TH AVE
LAKEWOOD, CO
US 80215

INVOICE TO: 6309
ABENGOA T&D INC
11500 W 13TH AVE
LAKEWOOD, CO
US 80215

SHIP TO:
ABENGOA T&D
MOJAVE SOLAR POWER PLANT
42134 HARPER LAKE RD
HINKLEY, CA
US 92347
CONTACT 48 HRS PRIOR DELIVERY
JESUS NIETO, STORAGE MANAGER
TEL: 480-236-6674 (AVAILABLE 24/7, IF NEEDED)

CUSTOMER ORDER NO	:	2012-K05-MJ SE-001	BOOKING DETAILS	:	MAIER TRUCKING SEND EMAIL TO J NEITO ONE WEEK BEFORE DELIVERY DATE
DATE OF ORDER	:	August 24, 2012			
TRENCH REF NO	:	21211397-T121717			
TRENCH GST REG. #	:	86905 3447			
TRENCH PROV / STATE #	:				
PAYMENT TERMS	:	within 90 days Due net	DATE SHIPPED	:	March 08, 2013
FEDERAL TAX ID #	:	26-4768117	DELIVERY TERMS	:	DDP San BernardinoCounty, California
PST REG. #-CUST	:		FREIGHT	:	Prepaid
AGENT CODE	:	PETERS YOULOS	TRANSPORT METHOD	:	Truck

CRATING INFORMATION : (DIMENSIONS AND WEIGHT ARE FOR EACH PACKAGE)

SO#	NO.	NET WEIGHT	GROSS WEIGHT	DIMENSIONS	COMMENT
T121717	6		936 LB	46 X 36 X 75 IN	

TOTAL : 6 CRT / 5616 LB
SERIAL NO : T121717-01,06,07,10,11,12

CUST ITEM	SO#	QTY ORD	DESCRIPTION	QTY B/O	QTY SHIPPED	HS CODE
2	T121717	12	CAPACITOR VOLTAGE TRANSFORMER TEMF230 Capacitor Voltage transformer 245 kV Without carrier accessories	6	6	8504.21.0020

03/12/13

COMMENTS :

Country of origin: CA
ECCN: 'N'
ECL: 'N'
AWV code: 'NN'

Goods labelled with "ECL not equal to N" are subject to Canadian export authorization when being exported out of Canada. Goods labelled with "ECCN not equal to N" may be subject to U.S. re-export authorization. Even without a label, or with label "ECL: N" or "ECCN: N", authorization may be required due to the final whereabouts and the purpose for which the goods are to be used. Further, depending on the origin of the products and destination, additional Canadian export control regulations may apply.

TRENCH STANDARD CONDITIONS OF SALE VER. 7.03 SHALL APPLY
Payable 90 days from Invoice date with 1% discount of the total invoiced value
MARK PO# 2012-K05-MJ SE-001; MOJAVE PROJECT

BILL OF LADING (NOT NEGOTIABLE UNLESS CONSIGNED "TO ORDER")

B/L No. 01/12/139778

Shipper

COELME COSTRUZIONI ELETTROMECCANIC-
HE SPA
VIA GALILEO GALICI 1/2(ZONA IND.)
30036 SANTA MARIA DI SALA(VE)
ITALY

MEDLINERS
INCORPORATING COMBIMAR AND AGEMAR SERVICES
COMBIMAR&AGEMAR SPA -20066 MELZO (MI) - Via 1 Maggio, 1

Consignee (if 'To Order' so indicate)

ABENGOA T&D, INC.
C/O ABENER TEYMA HUGOTON
1043, ROAD P HUGOTON KS 67951
OLGA NOGUERA

For delivery please apply to

SHIPCO TRANSPORT INC

1235 NORTH LOOP WEST STE 308
77008 HOUSTON TX US
TL 17138612100 FX 0017138610055

Notify Party (No claim shall attach for failure to notify)

SAME AS THE CONSIGNEE
(OLGA.NOGUERA$ABENGOA.COM)
PH:602-282-4127 MARIO GONZALEZ
(MARIO.GONZALEZ$ABENGOA.COM
PH:303-250-8476

RECEIVED by the Carrier the Goods as specified below in apparent good order and condition unless otherwis stated, to be transported to such place as agreed, authorised or permitted herein and subject to all the terms an conditions appearing on the front and reverse of this Bill of Lading to with the Merchant agress by accepting thi Bill of Lading, any local privileges and customs notwithstanding. The particulars given below as stated by the shipper. Weight contents and value of the Good are unknow to the Carrier. In WITNESS, thereof one (1) original Bill of Lading has been signed if not otherwis stated hereafter, the same beind accomplished the other(s), if any, to the void, if required by the Carrier one (1 original Bill of Lading must be surrendered duly endorsed in exchange for the Goods or delivery order.

Ocean Vessel	Place of Receipt
BOX TRADER	Melzo
Voy	**Port of Loading**
02W50	GENOVA

Port of discharge	Place of Delivery	Freight payable at	Numb. of origin B/L's
HOUSTON - TX		ORIGIN	3(THREE) ORIGINALS

Marks and Numbers	No of Pkgs. or Shipping Units	Description of goods (said to contain)	Gross weight	Measurement CBM
HLXU 639982/0	GOODS STOWED INTO CNTR 1X 40FT HIGH CUBE			
A004051				
ABENGOA T&D, INC	3 CASES	DISCONNECTING SWITCH "FREIGHT PREPAID"	2220.00	5.903

2 - MOJAVE
1 - Hugoton

04/08/13

Loaded into container(s)

HLXU 639982 0 SEAL A004051

Excess value declaration refer to clause 6 (4) (B) + (C) on reverse side

LCL/LCL **THC/STRIPPING COLLECT**

FREIGHT AND CHARGES:

DRAFT PER CONTROLLO

PARTENZA NAVE DA CONFERMARE

"Shipper is fully responsible for freight collect unpaid at destination"

"The contract evidenced by or contained in this Bill of Lading is governed by the law of Italy, and any claim or dispute arising hereunder or in connection herewith shall be determined by Courts of Italy and no other Courts."

Shipped on board above vessel

Date 14/12/2012

Signed by COMBIMAR & AGEMAR SPA
AS AGENT OF MEDLINERS AS CARRIER

Signed on behalfed of the Carrier
COMBIMAR & AGEMAR SPA
AS AGENT OF MEDLINERS AS CARRIER

Place and date of issue
MELZO 14/12/2012

(terms continued onback hereof)

TEAM 1

WESTERN FREIGHT CARRIER, INC.
321 E. GARDENA BLVD., GARDENA, CA 90248
TEL: (310) 767-1042 • FAX: (310) 767-1738
www.westernfreightcarrier.com

TO	ABENGOA T&D 42134 HARPER LAKE RD HINKLEY, CA 92347 480-236-6674 JESUS	INVOICE NO. 429136
BILL TO	CAVALIER INT'L	DATE 04/03/13
FROM	PIER 400 2500 NAVY WAY TERMINAL ISLAND, CA 90731 310-221-4100	Fontana Yard LFD

QUANTITY	DESCRIPTION	UNIT	RATE	COLLECT
8	TOTAL 1 CONTAINER CLHU4585683 B/L: HLCUGOA130240291 VSL: HAPAG LLOYD V06E08 REF:506-906008 JESUS NIETO. ABENGOA T&D STORAGE MANAGER - APPARENTY ARE NOT DAMAGE IN THE EQUIPMENT. FOR THE REASON THAT IS A MECHANICAL EQUIPMENT, TIL THAT BE INSTALLED WE WILL KNOW IF ARE OK	D418 8AM		

WAITING TIME _____ TO _____ X _____ 04/08/13
CUSTOMER SIGNATURE

TOTAL $

X | DATE: 20 | DRIVER

THE RECEIVER WILL BE HELD LIABLE FOR THE LOSS, STOLEN OR DAMAGE TO THE EQUIPMENT WHILE SUCH EQUIPMENT IS IN RECEIVER'S CARE, CUSTODY, AND CONTROL.
CLAIMS FOR SHORTAGE OR DAMAGE OR OVERCHARGE MUST BE FILLED WITH THIS RECEIPT WITHIN 10 DAYS.
SEE TERMS & CONDITIONS ON REVERSE SIDE.

Trench Ltd.
71 Maybrook Drive,Scarborough ON M1V 4B6,Canada
Telephone: 416-298-8108 Facsimile: 416-298-2209

Packing List

Delivery no. 5000104
Trench Sales Order T121717

Date: 2013-APR-11

SOLD TO
ABENGOA T&D INC
11500 W 13TH AVE
LAKEWOOD CO 80215
USA

SHIP TO
ABENGOA T&D
42134 HARPER LAKE RD
HINKLEY CA 92347
USA

CONTACT 48 HRS PRIOR DELIVERY
JESUS NIETO, STORAGE MANAGER
TEL: 480-236-6674 (AVAILABLE 24/7, IF NEEDED)

Customer order no.	: 2012-K05-MJ SE-001
Date of order	: 2013-MAR-28
Trench Sales Order	: T121717
Delivery no.	: 5000104
UCR number:	: SIU6A0005000104
Federal Tax ID No	: 26-4768117

Carrier	: MAIER TRUCKING
Booking Details	: RUSH
Date shipped:	: 2013-APR-11
Delivery terms	: DDP Hinkley, CA
Freight	: PREPAID
Transport method	: Truck

SO#	ITEM#	QTY	NET WEIGHT	GROSS WEIGHT	DIMENSIONS	COMMENT
T121717	20	6	875 LB	925 LB	46x36x90 IN	

TOTAL: 6 CRT / 5,550 LB
Serial No: T121717 – 02,03,04,05,08,09

CUST ITEM	SO#	QTY QRD	Description		QTY B/O	QTY Shipped
000020	T121717	6	Capacitor Voltage Transformer TEMF230 **Mark as:** MARK PO# 2012-K05-MJ SE-001; MOJAVE PROJECT HS Code: 8504210020 / Origin: CA ECCN:"N" / ECL:"N"	CVT's	0	6

Goods labeled with "ECL not equal to N" are subject to Canadian export authorization when being exported out of Canada. Goods labeled with "ECCN not equal to N" may be subject to U.S. re-export authorization. Even without label, or with label "ECL:N" or "ECCN:N", authorization maybe required due to the final whereabouts and the purpose for which the goods are to be used. Further, depending on the origin of the products and destination, additional Canadian export control regulations may apply.

Comments

Shipping Instructions

04/15/2013

Trench Ltd.
71 Maybrook Drive,Scarborough ON M1V 4B6,Canada
Telephone: 416-298-8108 Facsimile: 416-298-2209

Delivery no. 5000089
Trench Sales Order T121716

Date: 2013-APR-09

Packing List

SOLD TO
ABENGOA T&D INC
11500 W 13TH AVE
LAKEWOOD CO 80215
USA

SHIP TO
ABENGOA T&D
42134 HARPER LAKE RD
HINKLEY CA 92347
USA

CONTACT 48 HRS PRIOR DELIVERY
JESUS NIETO, STORAGE MANAGER
TEL: 480-236-6674 (AVAILABLE 24/7, IF NEEDED)

Customer order no.	: 2012-K05-MJ SE-001 R	Carrier	: MAIER TRUCKING
Date of order	: 2013-MAR-28	Booking Details	: RUSH ORDER
Trench Sales Order	: T121716		
Delivery no.	: 5000089	Date shipped:	: 2013-APR-10
UCR number:	: SIU6A0005000089	Delivery terms	: DDP Hinkley, CA
Federal Tax ID No	: 26-4768117	Freight	: PREPAID
		Transport method	: Truck

SO#	ITEM#	QTY	NET WEIGHT	GROSS WEIGHT	DIMENSIONS	COMMENT
T121716	10	6	1,065 LB	1,157 LB	152x34x45 IN	

TOTAL: 6 CRT / 6,942 LB
Serial No: T121716 – 01 TO 06

CUST ITEM	SO#	QTY QRD	Description	QTY B/O	QTY Shipped
000010	T121716	6	IOSK Instrument Transformer TC's IOSK 245 **Mark as:** MARK: PO# 2012-K05-MJ SE-001;MOJAVE PROJECT HS Code: 8504210020 / Origin: CA ECCN:"N" / ECL:"N"	0	6

Goods labeled with "ECL not equal to N" are subject to Canadian export authorization when being exported out of Canada. Goods labeled with "ECCN not equal to N" may be subject to U.S. re-export authorization. Even without label, or with label "ECL:N" or "ECCN:N", authorization maybe required due to the final whereabouts and the purpose for which the goods are to be used. Further, depending on the origin of the products and destination, additional Canadian export control regulations may apply.

Comments

Shipping Instructions

04/15/2013

Delivery no. 5000094
Trench Sales Order T121718

Trench Ltd.
71 Maybrook Drive,Scarborough ON M1V 4B6,Canada
Telephone: 416-298-8108 Facsimile: 416-298-2209

Date: 2013-APR-09

Packing List

SOLD TO
ABENGOA T&D INC
11500 W 13TH AVE
LAKEWOOD CO 80215
USA

SHIP TO
ABENGOA T&D
42134 HARPER LAKE RD
HINKLEY CA 92347
USA

CONTACT 48 HRS PRIOR DELIVERY
JESUS NIETO, STORAGE MANAGER
TEL: 480-236-6674 (AVAILABLE 24/7, IF NEEDED)

Customer order no. : 2012-K05-MJ SE-001
Date of order : 2013-MAR-28

Trench Sales Order : T121718
Delivery no. : 5000094
UCR number: : SIU6A0005000094
Federal Tax ID No : 26-4768117

Carrier : MAIER TRUCKING
Booking Details : SHIPPING WITH T121716
RUSH ORDER

Date shipped: : 2013-APR-10
Delivery terms : DDP Hinkley, CA
Freight : PREPAID
Transport method : Truck

SO#	ITEM#	QTY	NET WEIGHT	GROSS WEIGHT	DIMENSIONS	COMMENT
T121718	20	2	70 LB	70 LB	19x24x16 IN	

TOTAL: 2 CRT / 140 LB
Serial No: T121718 – 04,06

CUST ITEM	SO#	QTY QRD	Description	QTY B/O	QTY Shipped
000020	T121718	2	JUNCTION BOX **Mark as:** MARK: PO# 2012-K05-MJ SE-001;MOJAVE PROJECT HS Code: 853690 / Origin:CA	0	2

Goods labeled with "ECL not equal to N" are subject to Canadian export authorization when being exported out of Canada. Goods labeled with "ECCN not equal to N" may be subject to U.S. re-export authorization. Even without label, or with label "ECL:N" or "ECCN:N", authorization maybe required due to the final whereabouts and the purpose for which the goods are to be used. Further, depending on the origin of the products and destination, additional Canadian export control regulations may apply.

Comments

Shipping Instructions

04/15/2013

Quote #

Date: 04/20/2013

STANDARD TRUCKLOAD BILL OF LADING

Page _____

SHIP FROM

Name: Schweitzer Engineering Lab, S.A. de C.V.
Address: Ave. Central No. 205 Parq. Ind. Logistico
City/State/Zip: Delegacion La Pila, San Luis Potosi
SID#:
FOB: ☐

Bill of Lading Number:

236142

SHIP TO

Name: Abengoa T&D // Mojave Solar Power Plant
Location #: _____
Address: 42134 Harper Lake Road
Contact: Juan Perez 303-396-5821
City/State/Zip: Hinkley, CA 92347
Cid #
FOB: ☐

CARRIER NAME: Super Transport International Ltd.
Trailer number: 558108

SCAC:

Pro number:

BAR CODE SPACE

THIRD PARTY FREIGHT CHARGES BILL TO:

Name: Super Transport International
Address: 801 Pellegrino Ct
City/State/Zip: Laredo, TX 78045

SPECIAL INSTRUCTIONS:

Freight Charge Terms: *(freight charges are prepaid unless marked otherwise)*
Prepaid _____ **Collect** _____ **3rd Party** _____

☐ (check box) Master Bill of Lading: with attached underlying Bills of Lading

CUSTOMER ORDER INFORMATION

CUSTOMER ORDER NUMBER	# PKGS	WEIGHT	PALLET/SLIP (CIRCLE ONE)		ADDITIONAL SHIPPER INFO
			Y	N	
			Y	N	
			Y	N	
GRAND TOTAL					

CARRIER INFORMATION

HANDLING UNIT QTY	HANDLING UNIT TYPE	PACKAGE QTY	PACKAGE TYPE	WEIGHT	H.M. (X)	COMMODITY DESCRIPTION (Commodities requiring special or additional care or attention in handling or stowing must be so marked and packaged as to ensure safe transportation with ordinary care.)
1	Piece			36060		Control Building
						Dimensions
						L 32' X W 12' X H 12'2"
1				36060		TOTAL

Where the rate is dependent on value, shippers are required to state specifically in writing the agreed or declared value of the property as follows:

"The agreed or declared value of the property is specifically stated by the shipper to be not exceeding _____ per _____."

COD Amount: $ _____
Fee Terms: Collect: ☐ **Prepaid:** ☐
Customer check acceptable: ☐

DELIVERY INFORMATION

CONSIGNEE NAME JESUS NIETO
CONSIGNEE SIGNATURE/DATE 04/25/13
NOTES ALPHA

NOTE: Liability Limitation for loss or damage in this shipment may be applicable. See 49 U.S.C. ▯ 14706(c)(1)(A) and (B).

RECEIVED, subject to individually determined rates or contracts that have been agreed upon in writing between the carrier and shipper, if applicable, otherwise to the rates, classifications and rules that have been established by the carrier and are available to the shipper, on request, and to the terms and conditions set forth on the reverse side hereon as well as to all applicable state and federal regulations.

The carrier shall not make delivery of this shipment without payment of freight and all other lawful charges.

_____ **Shipper Signature**

SHIPPER SIGNATURE / DATE
This is to certify that the above named materials are properly classified, packaged, marked and labeled, and are in proper condition for transportation according to the applicable regulations of the DOT.

Trailer Loaded:
☐ By Shipper
☐ By Driver

Freight Counted:
☐ By Shipper
☐ By Driver/pallets said to contain
☐ By Driver/Pieces

CARRIER SIGNATURE / PICKUP DATE
Carrier acknowledges receipt of packages and required placards. Carrier certifies emergency response information was made available and/or carrier has the DOT emergency response guidebook or equivalent documentation in the vehicle.

Property described above is received in apparent good order, except as noted.

Quote #

Date: 04/20/2013

STANDARD TRUCKLOAD BILL OF LADING

Page _____

SHIP FROM

Name: Schweitzer Engineering Lab, S.A. de C.V.
Address: Ave. Central No. 205 Parq. Ind. Logistico
City/State/Zip: Delegacion La Pila, San Luis Potosi
SID#:
FOB: ☐

Bill of Lading Number:

236141

SHIP TO

Name: Abengoa T&D // Mojave Solar Power Plant
Location #: _____
Address: 42134 Harper Lake Road
Contact: Juan Perez 303-396-5821
City/State/Zip: Hinkley, CA 92347
Cid #
FOB: ☐

CARRIER NAME: Super Transport International Ltd.
Trailer number: 571983

SCAC:

Pro number:

BAR CODE SPACE

THIRD PARTY FREIGHT CHARGES BILL TO:

Name: Super Transport International
Address: 801 Pellegrino Ct
City/State/Zip: Laredo, TX 78045

SPECIAL INSTRUCTIONS:

Freight Charge Terms: *(freight charges are prepaid unless marked otherwise)*
Prepaid _____ **Collect** _____ **3rd Party** _____

☐ (check box) Master Bill of Lading: with attached underlying Bills of Lading

CUSTOMER ORDER INFORMATION

CUSTOMER ORDER NUMBER	# PKGS	WEIGHT	PALLET/SLIP (CIRCLE ONE)		ADDITIONAL SHIPPER INFO
			Y	N	
			Y	N	
			Y	N	
GRAND TOTAL					

CARRIER INFORMATION

HANDLING UNIT QTY	HANDLING UNIT TYPE	PACKAGE QTY	PACKAGE TYPE	WEIGHT	H.M. (X)	COMMODITY DESCRIPTION (Commodities requiring special or additional care or attention in handling or stowing must be so marked and packaged as to ensure safe transportation with ordinary care.)
1	Piece			36060		Control Building
						Dimensions
						L 32' X W 12' X H 12'2"
1				36060		TOTAL

Where the rate is dependent on value, shippers are required to state specifically in writing the agreed or declared value of the property as follows:

"The agreed or declared value of the property is specifically stated by the shipper to be not exceeding _____ per _____."

COD Amount: $ _____
Fee Terms: Collect: ☐ **Prepaid:** ☐
Customer check acceptable: ☐

DELIVERY INFORMATION

CONSIGNEE NAME JESUS NIETO
CONSIGNEE SIGNATURE/DATE 04/25/13
NOTES BETA

NOTE: Liability Limitation for loss or damage in this shipment may be applicable. See 49 U.S.C. ▯ 14706(c)(1)(A) and (B).

RECEIVED, subject to individually determined rates or contracts that have been agreed upon in writing between the carrier and shipper, if applicable, otherwise to the rates, classifications and rules that have been established by the carrier and are available to the shipper, on request, and to the terms and conditions set forth on the reverse side hereon as well as to all applicable state and federal regulations.

The carrier shall not make delivery of this shipment without payment of freight and all other lawful charges.

_____ **Shipper Signature**

SHIPPER SIGNATURE / DATE
This is to certify that the above named materials are properly classified, packaged, marked and labeled, and are in proper condition for transportation according to the applicable regulations of the DOT.

Trailer Loaded:
☐ By Shipper
☐ By Driver

Freight Counted:
☐ By Shipper
☐ By Driver/pallets said to contain
☐ By Driver/Pieces

CARRIER SIGNATURE / PICKUP DATE
Carrier acknowledges receipt of packages and required placards. Carrier certifies emergency response information was made available and/or carrier has the DOT emergency response guidebook or equivalent documentation in the vehicle.

Property described above is received in apparent good order, except as noted.

SBS
STORAGE BATTERY SYSTEMS, LLC.

538240

SBS Menomonee Falls
N56W16665 Ridgewood Dr.
Menomonee Falls WI 53051

Phone: (262) 703-5800
Fax: (262) 703-3073
Toll-Free: (800) 554-2243
www.sbsbattery.com

Delivery Receipt
109591.01

Date: 21-Jan-13
Requested Delivery: 25-Jan-13
Cust PO Number: 61672
Salesperson: McLaren
Ship Via: Common Carrier
F.O.B.: Shipping Point
Our Vendor ID:
Customer Number: SCHW08

Invoice to:

Schweitzer Engineering Lab (SEL)
Attn: Julieta Trujillo
SA CV AV. Central #205
Parque Industrial Logistico
San Luis Potosi. SLP. CP 78395

Ship to:

Schweitzer Engineering Lab
C/O Border Transfer Serv.
13512 North Unitec Drive
Unitec Industrial Park
Laredo TX 78045

Notes: PER CUSTOMER SHIP ON 1/22/13

Contact:
Phone: (000) 000-0000

	Part Number	Description	UOM	Qty Ord	Qty Ship	Qty B/Ord
1	L-STT12V150	Tubular Plate 12 Volt 165ah Block ea. w/(6)Caps & (1)Conn.	EA	20	20	
2	KIT12V50-150	2-Step OR 2-Tier Install Kit for STT12V Blocks	EA	2	2	
3	FRCL	Freight Collect SHIP VIA Fed Ex Freight - Economy Acct# 447253720		1		

natalies *1/22/13, 14:06:15* *Weight: 3,230*

Additional Info: Fed Ex Freight - Economy Acct# 447253720

Received By _____ Date 04/25/13 Freight _____

ELECTRIC POWER SYSTEMS
ELECTRICAL TESTING
& ENGINEERING

557 E Juanita Ave, Ste 4 • Mesa, AZ 85204 • Phone 480-633-1490 • Fax 480-633-7092

May 31, 2013

Rev.1 June 3, 2013

Mojave Solar Power Plant
Alpha/Beta Substation

EPS Job Number A13024: Acceptance Testing

At

Mojave Solar Power Plant
42134 Harper Lake Road
Hinkley, CA 92347

Attention: Mr. Santos Tobar

Hotline Construction, Inc.

9020 Brentwood Blvd., Suite D
Brentwood, CA 94513
Santos Tobar
Substation Superintendent
Office (925) 634-9333
Mobile (925) 813-1440
stobar@hotlineconstructioninc.com

Prepared by:

Louis Gilbert

ELECTRIC POWER SYSTEMS
ELECTRICAL TESTING & ENGINEERING

Branch Manager- AZ

ELECTRIC POWER SYSTEMS
ELECTRICAL TESTING
& ENGINEERING

557 E Juanita Ave, Ste 4 • Mesa, AZ 85204 • Phone 480-633-1490 • Fax 480-633-7092

TABLE OF CONTENTS

I. SCOPE OF WORK

II. EQUIPMENT TESTED

III. RESULTS AND RECOMMENDATIONS

IV. TEST DATA SHEETS
- i. -Alpha Substation
- ii. -Beta Substation

V. NETA Standards

VI. EPS Test Plan

ELECTRIC POWER SYSTEMS
ELECTRICAL TESTING & ENGINEERING

557 E Juanita Ave, Ste 4 • Mesa, AZ 85204 • Phone 480-633-1490 • Fax 480-633-7092

I. SCOPE OF WORK

Perform acceptance testing per NETA standards and provide engineering support as needed to meet project deadlines. Scope is per EPS **Proposal #PA13548 dated** February 27, 2013. EPS followed TEST PLAN, see VI.

II. EQUIPMENT TESTED

Alpha Substation
(2) Gang style motor operated disconnect switches
(1) SF6 230kV Circuit Breaker
(6) 230kV Capacitive Coupled Voltage Transformers
(3) 230kV Stand alone Current Transformers
(1) Grounding Grid-Fall of Potential

Beta Substation
(2) Gang style motor operated disconnect switches
(1) SF6 230kV Circuit Breaker
(6) 230kV Capacitive Coupled Voltage Transformers
(3) 230kV Stand alone Current Transformers
(1) Grounding Grid-Fall of Potential

ELECTRIC POWER SYSTEMS
ELECTRICAL TESTING & ENGINEERING

557 E Juanita Ave, Ste 4 • Mesa, AZ 85204 • Phone 480-633-1490 • Fax 480-633-7092

III. RESULTS AND RECOMMENDATIONS

All results during this test and inspection period are acceptable; PASSED; per NETA standards.

Secondary control wiring in all components not installed at the time of test. Secondary polarity of CT's and CCVT's verified at individual component terminals as opposed to junction box or relay inputs terminals.

Recommend retesting at regular intervals as defined by NETA Maintenance Testing Standards Appendix B (see attached), to maintain plant operational reliability.

No other recommendations noted at this time.

IV. TEST DATASHEETS

-Alpha Substation

Electric Power Systems ELECTRICAL TESTING & ENGINEERING

557 E Juanita Ave, Ste 4 • Mesa, AZ 85204 • Phone 480-633-1490 • Fax 480-633-7092

IV. TEST DATASHEETS

-Alpha Substation

30111795-1_BS

Report Source **SF6DeadTankBreaker**

Session Test Date 5/11/2013 12:08:07 PM

Nameplate - SF6 Dead Tank Breaker

Company	Hotline Construction	**Serial Number**	30111795-1
Location	Mojave Solar	**Special ID**	Alpha
Division		**Circuit Designation**	
Manufacturer	Siemens	**Type**	SPS2-245-40-
Year Manufactured	2012	**Class**	SF6_dead_tank_breaker
Mfr Location	Jackson, MS	**Mechanism Type**	
SF6 Volume	161 LB	**# of Tanks**	1
Total Weight	10800.000 LB	**Interrupting Rating**	
Phase Names	8,,	**BIL**	*
Control Volts	*	**Counters**	
kV	245	**Amps**	1200.000

Test Date	5/11/2013	**Test Time**	12:08 PM	**Weather**	Sunny
Air Temperature	34°C	**Tank Temperature**	32.2°C	**Rel. Humidity**	4 %
Tested By	RDB/MEK	**Work Order#**		**Last Test Date**	
Checked By		**Test Set Type**	M4000	**Retest Date**	
Checked Date		**Set Top S/N**	031120882	**Reason**	ACCEPTANCE
Last Sheet#		**Set Bottom S/N**		**Travel Time**	
P.O.#		**Ins. Book#**		**Duration**	
Copies		**Sheet#**		**Crew Size**	2

Nameplate Notes

Operations:
As Found: 8
As Left: 27

Session Notes

Insulation Resistance @ 10kV
Across Open:
A: 15.8T
B: 11.9T
C: 19.0T

Closed:
A-B: 6.16T
B-C: 4.42T
C-A: 8.72T

Overall Tests

#	Breaker	HV	Red Measure Lead	Phase	Bushing	Test kV	Corr. Factor	Bus Length	Corr Fctrlns. #
1	Open	1	Unused	A		10.000	1.00	0	0
2	Open	2	Unused	A		10.000	1.00	0	0
3	Open	3	Unused	B		10.000	1.00	0	0
4	Open	4	Unused	B		10.000	1.00	0	0
5	Open	5	Unused	C		10.000	1.00	0	0
6	Open	6	Unused	C		10.000	1.00	0	0
7	Open	1	2	A		10.000	1.00	0	0
8	Open	3	4	B		10.000	1.00	0	0
9	Open	5	6	C		10.000	1.00	0	0
10	Closed	1 or 2	Unused	A		10.000	1.00	0	0
11	Closed	3 or 4	Unused	B		10.000	1.00	0	0
12	Closed	5 or 6	Unused	C		10.000	1.00	0	0

#	Breaker	HV	Red Measure Lead	Phase	Bushing	mA	Watts	%PF Meas.	%PF Corr.	Pf Cap	FRANK	Manual
1	Open	1	Unused	A		0.514	0.003		0.060	136.220	Good	
2	Open	2	Unused	A		0.541	0.003		0.060	143.500	Good	
3	Open	3	Unused	B		0.510	0.002		0.040	135.320	Good	
4	Open	4	Unused	B		0.543	0.002		0.040	144.000	Good	
5	Open	5	Unused	C		0.511	0.002		0.040	135.510	Good	
6	Open	6	Unused	C		0.538	0.002		0.040	142.720	Good	
7	Open	1	2	A		0.021	0.000		0.000	5.300	Good	
8	Open	3	4	B		0.021	0.000		0.000	5.400	Good	
9	Open	5	6	C		0.021	0.000		0.000	5.400	Good	
10	Closed	1 or 2	Unused	A		1.004	0.005		0.050	266.190	Good	
11	Closed	3 or 4	Unused	B		0.999	0.005		0.050	265.090	Good	
12	Closed	5 or 6	Unused	C		0.995	0.005		0.050	263.990	Good	

LSR	mA: 0.514/0.514, 1/1	Watts: 0.003/0.003, 1/1	Cap (pF): 136.22/136.223, 1/1
LSR	mA: 0.541/0.541, 1/1	Watts: 0.003/0.003, 1/1	Cap (pF): 143.5/143.501, 1/1
LSR	mA: 0.51/0.51, 1/1	Watts: 0.002/0.002, 1/1	Cap (pF): 135.32/135.316, 1/1
LSR	mA: 0.543/0.543, 1/1	Watts: 0.002/0.002, 1/1	Cap (pF): 144/143.996, 1/1
LSR	mA: 0.511/0.511, 1/1	Watts: 0.002/0.002, 1/1	Cap (pF): 135.51/135.506, 1/1
LSR	mA: 0.538/0.538, 1/1	Watts: 0.002/0.002, 1/1	Cap (pF): 142.72/142.722, 1/1
LSR	mA: 0.021/0.021, 1/1	Watts: 0/0, 1/1	Cap (pF): 5.345/5.345, 1/1
LSR	mA: 0.021/0.021, 1/1	Watts: 0/0, 1/1	Cap (pF): 5.413/5.413, 1/1
LSR	mA: 0.021/0.021, 1/1	Watts: 0/0, 1/1	Cap (pF): 5.4/5.4, 1/1
LSR	mA: 1.004/1.004, 1/1	Watts: 0.005/0.005, 1/1	Cap (pF): 266.19/266.192, 1/1
LSR	mA: 0.999/0.999, 1/1	Watts: 0.005/0.005, 1/1	Cap (pF): 265.09/265.091, 1/1
LSR	mA: 0.995/0.995, 1/1	Watts: 0.005/0.005, 1/1	Cap (pF): 263.99/263.993, 1/1

Insulation Resistance

Manufacturer	Megger					
Serial Number	ATL					
Voltage	10000.00					
	Megohms	**T1**	**T2**	**PI**	**Volts**	**Manual**
Open Breaker Tests						
Bushing 1	*	*	*	*	*	
Bushing 2	*	*	*	*	*	
Bushing 3	*	*	*	*	*	
Bushing 4	*	*	*	*	*	
Bushing 5	*	*	*	*	*	
Bushing 6	*	*	*	*	*	
Closed Breaker Tests						
A	3740000.00	*	*	*	*	
B	3040000.00	*	*	*	*	
C	4230000.00	*	*	*	*	

SF6 Gas Tests

	Pressure (psi)	**Moisture (ppm)**	**Dew Point**
A	87	67.99	-45.4 C
B	*	*	*
C	*	*	*

Rev. 1: at 68 degrees F; pressure should be 87 psi; per manual, see pg. 251

Contact Resistance

Manufacturer	Vanguard		
Serial	PHX0045		
Amps	100		
		Contact Res. (uOhms)	**Manual**
Closed Breaker Tests			
	A	87.9	
	B	82.5	
	C	77.2	

90 micro-ohms maximum for new contacts.

BREAKER PERFORMANCE REPORT
TDR9000 Version: RE 4.01

Manufacturer : Siemens
Model Number : SPS-145-40
Serial Number: 30111795-1
Instr Book # :
Mechanism # :
Mech Instr # :
Special ID : ALPHA Station
:

Location: Sample Location 1
Circuit :
Operator: MEK
Operation Counter :
:

Test Type : CLOSE
Test Plan Name :

Test was performed on 5/11/2013 at 09:38:59.

Motion Channels 1-3 Transfer Function
1.000 in Travel at the contacts is 1.000 in Travel at the transducer.

Resistor range selected None

Command Parameters Close Pulse 133.3 ms

Command Currents Close Current 2.11 A pk

MECHANICAL MOTION CHANNELS 1-3
CLOSE OPERATION

Specifications	Test results	Compare
Total Travel		
Expected ******* inches	TRAVEL 1 4.288 inches	
Tolerance + *******	TRAVEL 2	
- *******	TRAVEL 3	
Overtravel		
Expected ******* inches	TRAVEL 1 0.449 inches	
Tolerance + *******	TRAVEL 2	
- *******	TRAVEL 3	
Rebound		
Expected ******* inches	TRAVEL 1 0.195 inches	
Tolerance + *******	TRAVEL 2	
- *******	TRAVEL 3	
Contact Wipe		

Expected	******* inches	TRAVEL 1	1.270 inches
Tolerance +	*******	TRAVEL 2	
-	*******	TRAVEL 3	

OCB CONTACT TIMING - MOTION CHANNELS 1-3
CLOSE OPERATION

Main Contact Closing Time Measured From Test Initiation

Specifications		Test results		Travel	Velocity	Compare
Maximum	66.0 ms	CONTACT1	56.0 ms	3.018 in	10.73 ft/s	Pass
Minimum	50.0	CONTACT2	56.2	3.043	10.52	Pass
		CONTACT3	56.2	3.043	10.52	Pass

Delta Main Contact Closing Time Within the Breaker

Specifications	Test results		Compare
Maximum******** ms	Breaker	0.2 ms	

User Notes

Page 1

Page 2

Page 3

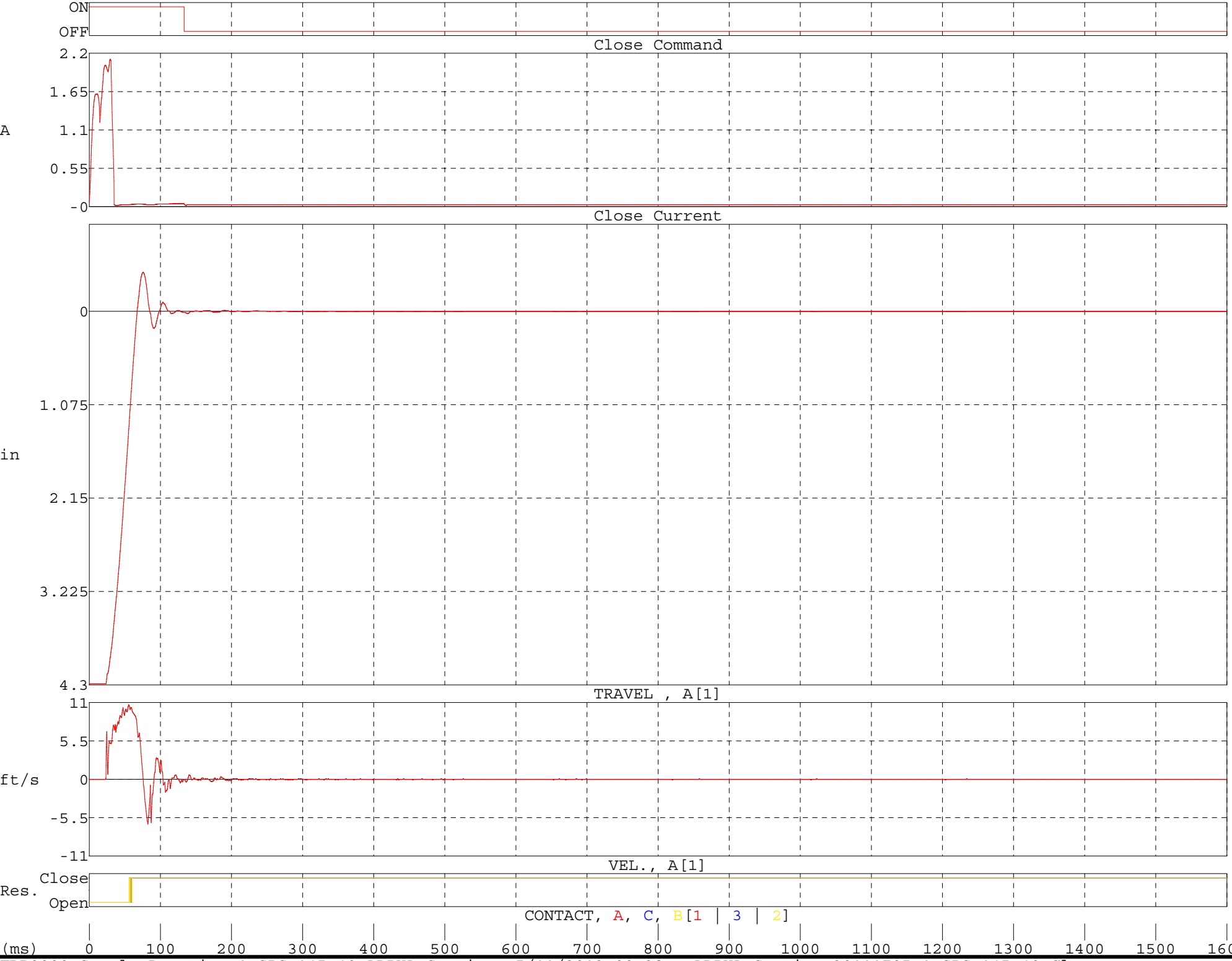
ON
OFF
Close Command
2.2
1.65
A
1.1
0.55
-0
Close Current
0
1.075
in
2.15
3.225
4.3
TRAVEL , A[1]
11
5.5
ft/s
0
-5.5
-11
VEL., A[1]
Close
Res.
Open
CONTACT, A, C, B[1 | 3 | 2]
(ms)
0
100
200
300
400
500
600
700
800
900
1000
1100
1200
1300
1400
1500
1600

BREAKER PERFORMANCE REPORT
TDR9000 Version: RE 4.01

Manufacturer : Siemens Location: Sample Location 1
Model Number : SPS-145-40 Circuit :
Serial Number: 30111795-1 Operator: MEK
Instr Book # :
Mechanism # :
Mech Instr # :
Special ID : ALPHA Station Operation Counter :
: :

Test Type : RECLOSE Test Plan Name :

Test was performed on 5/11/2013 at 09:55:29.

Motion Channels 1-3 Transfer Function
1.000 in Travel at the contacts is 1.000 in Travel at the transducer.

Command Parameters	Trip Pulse	66.6 ms	Close Pulse	1591.7 ms
	Delay 1	50.0 ms	(Delay)	
Command Currents	Trip Current	8.66 A pk	Close Current	2.10 A pk

OCB CONTACT TIMING
RECLOSE OPERATION

Reclose Dead Time Within a Phase

Specifications	Test results		Compare
Maximum******** ms	Phase A	80.9 ms	
Minimum********	Phase B	81.0	
	Phase C	81.1	

Reclose Dead Time Within the Breaker

Specifications	Test results		Compare
	Breaker	80.9 ms	

Main Contact Opening Time Measured From Test Initiation

Specifications		Test results		Travel	Velocity	Compare
Maximum	30.0 ms	CONTACT1	27.7 ms	******* in	****** ft/s	Pass
Minimum	24.0	CONTACT2	27.6	*******	******	Pass
		CONTACT3	27.6	*******	******	Pass

Delta Main Contact Opening Time Within the Breaker

Specifications	Test results		Compare
Maximum******** ms	Breaker	0.1 ms	

Main Contact Reclosing Time Measured From Test Initiation

Specifications	Test results	Travel	Velocity	Compare
Maximum 300.0 ms	CONTACT1 108.6 ms	******* in	****** ft/s	
Minimum********	CONTACT2 108.6	*******	******	
	CONTACT3 108.7	*******	******	

Delta Main Contact Reclosing Time Within the Breaker

Specifications	Test results	Compare
Maximum******** ms	Breaker 0.1 ms	

User Notes

Page 1

Page 2

Page 3

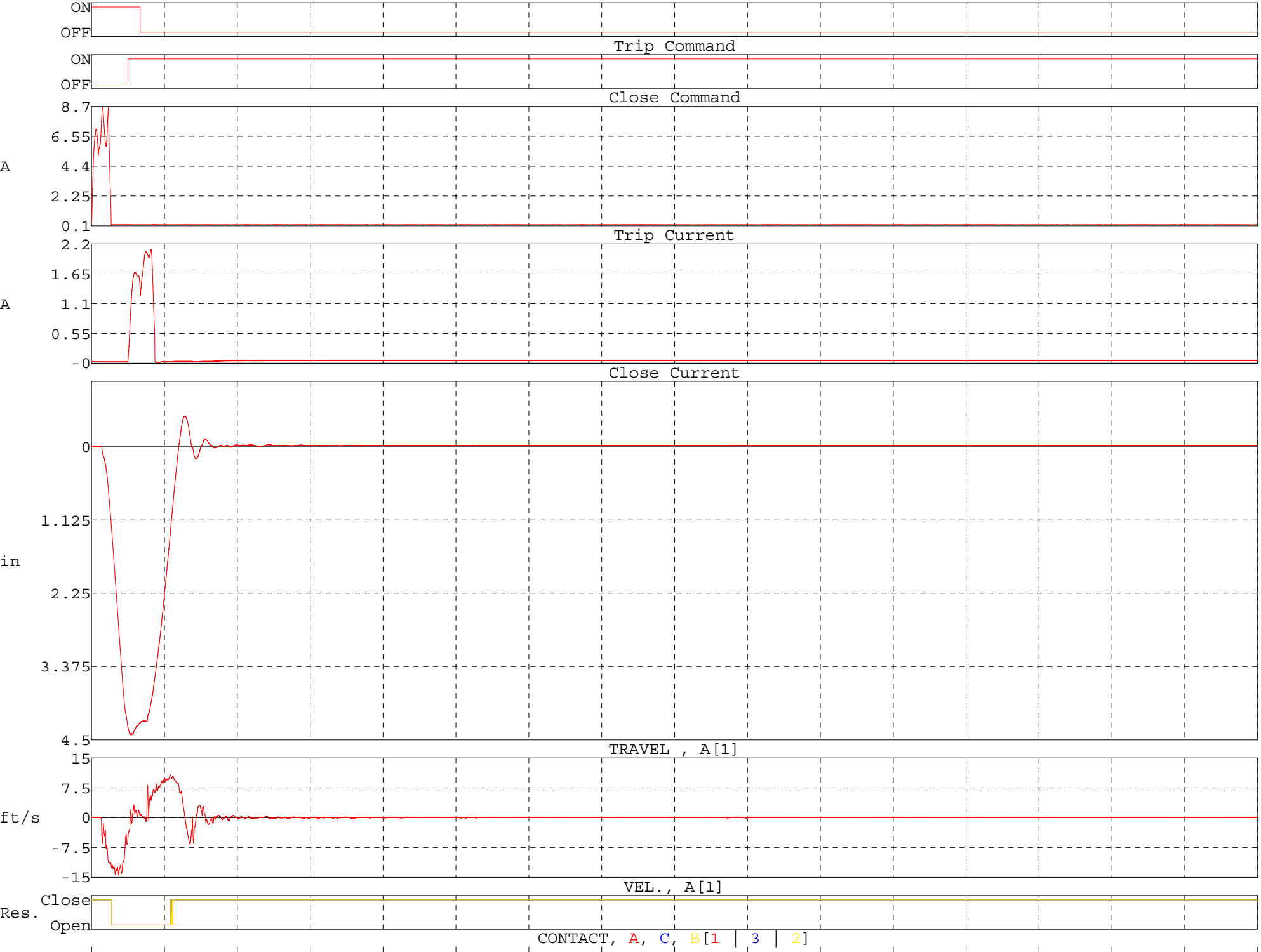
ON
OFF
Trip Command
ON
OFF
Close Command
8.7
6.55
A
4.4
2.25
0.1
Trip Current
2.2
1.65
A
1.1
0.55
-0
Close Current
0
1.125
in
2.25
3.375
4.5
TRAVEL , A[1]
15
7.5
ft/s
0
-7.5
-15
VEL., A[1]
Close
Res.
Open
CONTACT, A, C, B[1 | 3 | 2]
(ms) 0 100 200 300 400 500 600 700 800 900 1000 1100 1200 1300 1400 1500 1600

BREAKER PERFORMANCE REPORT
TDR9000 Version: RE 4.01

Manufacturer : Siemens Location: Sample Location 1
Model Number : SPS-145-40 Circuit :
Serial Number: 30111795-1 Operator: MEK
Instr Book # :
Mechanism # :
Mech Instr # :
Special ID : ALPHA Station Operation Counter :
: :

Test Type : RECLOSE Test Plan Name :

Test was performed on 5/11/2013 at 10:21:20.

Motion Channels 1-3 Transfer Function
1.000 in Travel at the contacts is 1.000 in Travel at the transducer.

Command Parameters	Trip Pulse	66.6 ms	Close Pulse	1591.7 ms
	Delay 1	50.0 ms	(Delay)	
Command Currents	Trip Current	8.69 A pk	Close Current	2.09 A pk

OCB CONTACT TIMING
RECLOSE OPERATION

Reclose Dead Time Within a Phase

Specifications	Test results		Compare
Maximum******** ms	Phase A	80.2 ms	
Minimum********	Phase B	80.5	
	Phase C	80.6	

Reclose Dead Time Within the Breaker

Specifications	Test results		Compare
	Breaker	80.2 ms	

Main Contact Opening Time Measured From Test Initiation

Specifications		Test results		Travel	Velocity	Compare
Maximum	30.0 ms	CONTACT1	27.9 ms	******* in	****** ft/s	Pass
Minimum	24.0	CONTACT2	27.7	*******	******	Pass
		CONTACT3	27.7	*******	******	Pass

Delta Main Contact Opening Time Within the Breaker

Specifications	Test results		Compare
Maximum******** ms	Breaker	0.2 ms	

Main Contact Reclosing Time Measured From Test Initiation

Specifications	Test results	Travel	Velocity	Compare
Maximum 300.0 ms	CONTACT1 108.1 ms	******* in	****** ft/s	
Minimum********	CONTACT2 108.2	*******	******	
	CONTACT3 108.3	*******	******	

Delta Main Contact Reclosing Time Within the Breaker

Specifications	Test results	Compare
Maximum******** ms	Breaker 0.2 ms	

User Notes

Page 1

Page 2

Page 3

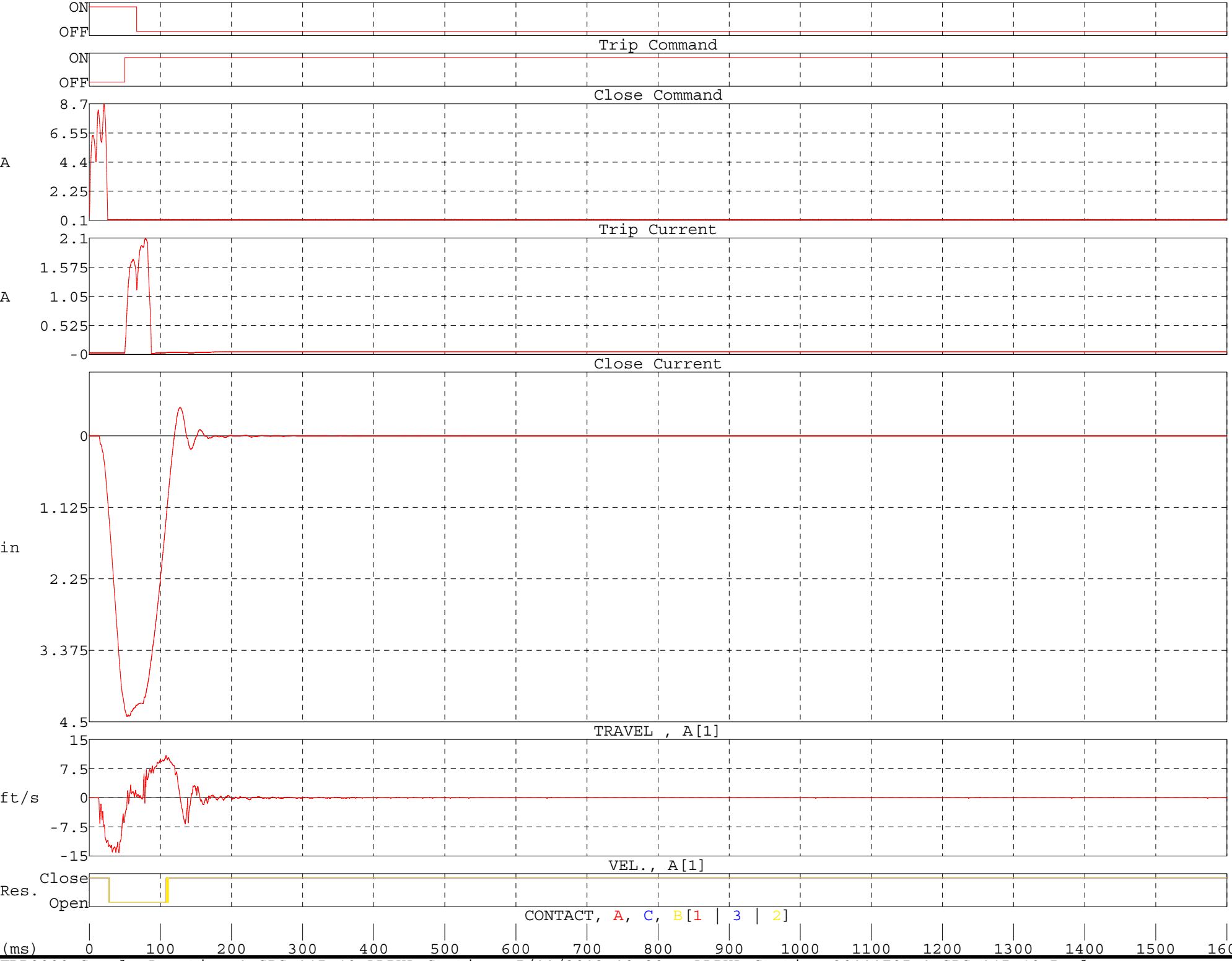
ON
OFF
Trip Command
ON
OFF
Close Command
8.7
6.55
A
4.4
2.25
0.1
Trip Current
2.1
1.575
A
1.05
0.525
-0
Close Current
0
1.125
in
2.25
3.375
4.5
TRAVEL , A[1]
15
7.5
ft/s
0
-7.5
-15
VEL., A[1]
Close
Res.
Open
CONTACT, A, C, B[1 | 3 | 2]
(ms) 0 100 200 300 400 500 600 700 800 900 1000 1100 1200 1300 1400 1500 1600

BREAKER PERFORMANCE REPORT
TDR9000 Version: RE 4.01

Manufacturer : Siemens
Model Number : SPS-145-40
Serial Number: 30111795-1
Instr Book # :
Mechanism # :
Mech Instr # :
Special ID : ALPHA Station
:

Location: Sample Location 1
Circuit :
Operator: MEK
Operation Counter :
:

Test Type : TRIP
Test Plan Name :

Test was performed on 5/11/2013 at 09:44:52.

Motion Channels 1-3 Transfer Function
1.000 in Travel at the contacts is 1.000 in Travel at the transducer.

Resistor range selected None

Command Parameters Trip Pulse 66.6 ms

Command Currents Trip Current 8.73 A pk

MECHANICAL MOTION CHANNELS 1-3
TRIP OPERATION

Specifications	Test results	Compare
Total Travel		
Expected ******* inches	TRAVEL 1 4.266 inches	
Tolerance + *******	TRAVEL 2	
- *******	TRAVEL 3	
Overtravel		
Expected ******* inches	TRAVEL 1 0.151 inches	
Tolerance + *******	TRAVEL 2	
- *******	TRAVEL 3	
Rebound		
Expected ******* inches	TRAVEL 1 0.071 inches	
Tolerance + *******	TRAVEL 2	
- *******	TRAVEL 3	

OCB CONTACT TIMING - MOTION CHANNELS 1-3
TRIP OPERATION

Main Contact Opening Time Measured From Test Initiation

Specifications		Test results		Travel	Velocity	Compare
Maximum	30.0 ms	CONTACT1	28.0 ms	1.333 in	12.08 ft/s	Pass
Minimum	24.0	CONTACT2	27.8	1.304	12.40	Pass
		CONTACT3	27.8	1.304	12.40	Pass

Delta Main Contact Opening Time Within the Breaker

Specifications	Test results		Compare
Maximum******** ms	Breaker	0.2 ms	

User Notes

Page 1

Page 2

Page 3

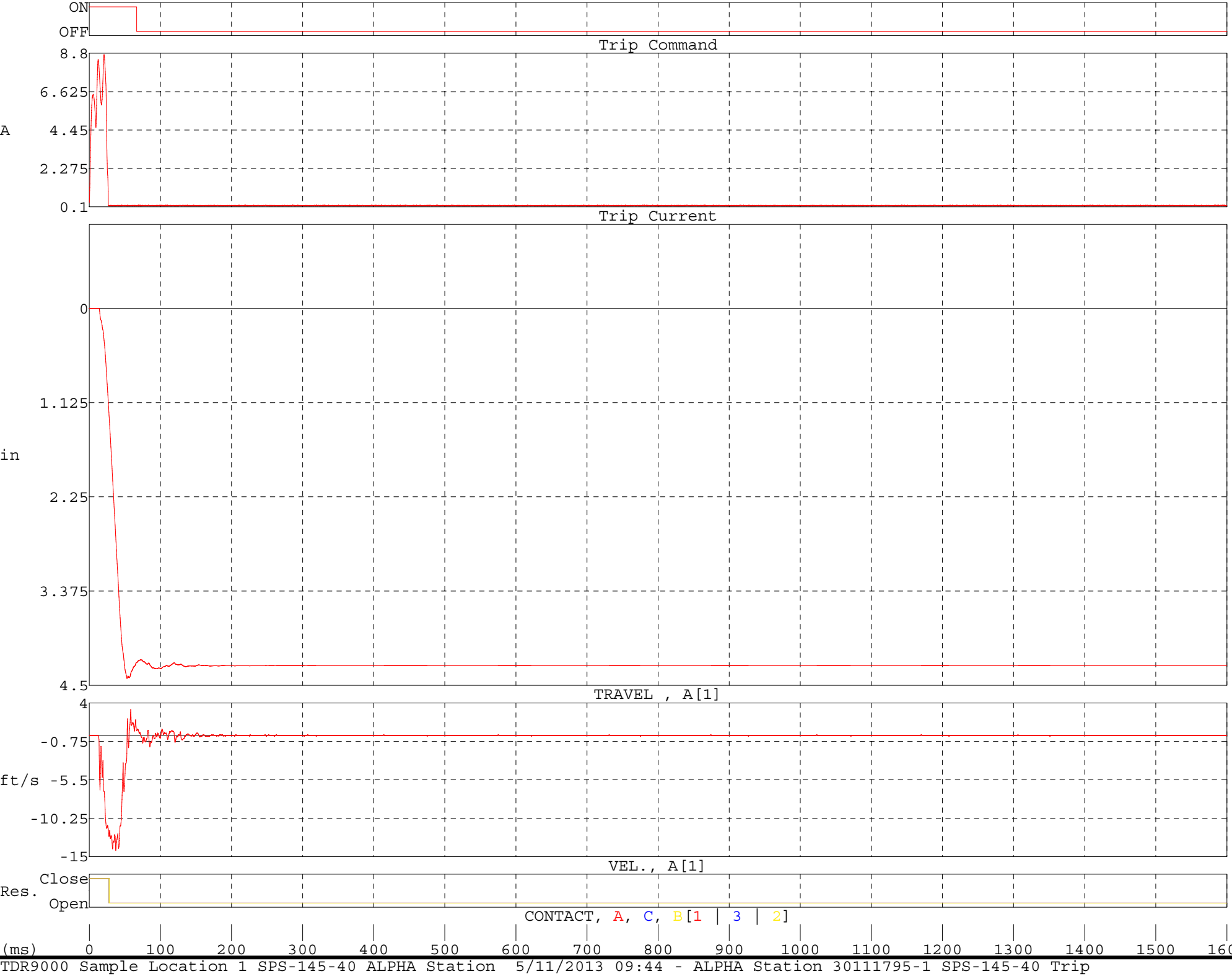
ON
OFF
Trip Command
8.8
6.625
A
4.45
2.275
0.1
Trip Current
0
1.125
in
2.25
3.375
4.5
TRAVEL , A[1]
4
-0.75
ft/s -5.5
-10.25
-15
VEL., A[1]
Close
Res.
Open
CONTACT, A, C, B[1 | 3 | 2]
(ms) 0 100 200 300 400 500 600 700 800 900 1000 1100 1200 1300 1400 1500 1600

BREAKER PERFORMANCE REPORT
TDR9000 Version: RE 4.01

Manufacturer : Siemens
Model Number : SPS-145-40
Serial Number: 30111795-1
Instr Book # :
Mechanism # :
Mech Instr # :
Special ID : ALPHA Station
:

Location: Sample Location 1
Circuit :
Operator: MEK
Operation Counter :
:

Test Type : TRIP
Test Plan Name :

Test was performed on 5/11/2013 at 10:10:02.

Motion Channels 1-3 Transfer Function
1.000 in Travel at the contacts is 1.000 in Travel at the transducer.

Command Parameters Trip Pulse 66.6 ms

Command Currents Trip Current 8.54 A pk

MECHANICAL MOTION CHANNELS 1-3
TRIP OPERATION

Specifications	Test results	Compare
Total Travel		
Expected ******* inches	TRAVEL 1 4.261 inches	
Tolerance + *******	TRAVEL 2	
- *******	TRAVEL 3	
Overtravel		
Expected ******* inches	TRAVEL 1 0.155 inches	
Tolerance + *******	TRAVEL 2	
- *******	TRAVEL 3	
Rebound		
Expected ******* inches	TRAVEL 1 0.064 inches	
Tolerance + *******	TRAVEL 2	
- *******	TRAVEL 3	

OCB CONTACT TIMING - MOTION CHANNELS 1-3
TRIP OPERATION

Main Contact Opening Time Measured From Test Initiation

Specifications		Test results		Travel	Velocity	Compare
Maximum	30.0 ms	CONTACT1	27.9 ms	******* in	****** ft/s	Pass
Minimum	24.0	CONTACT2	27.8	*******	******	Pass
		CONTACT3	27.8	*******	******	Pass

see curves

Delta Main Contact Opening Time Within the Breaker

Specifications	Test results		Compare
Maximum******** ms	Breaker	0.1 ms	

User Notes

Page 1

Page 2

Page 3

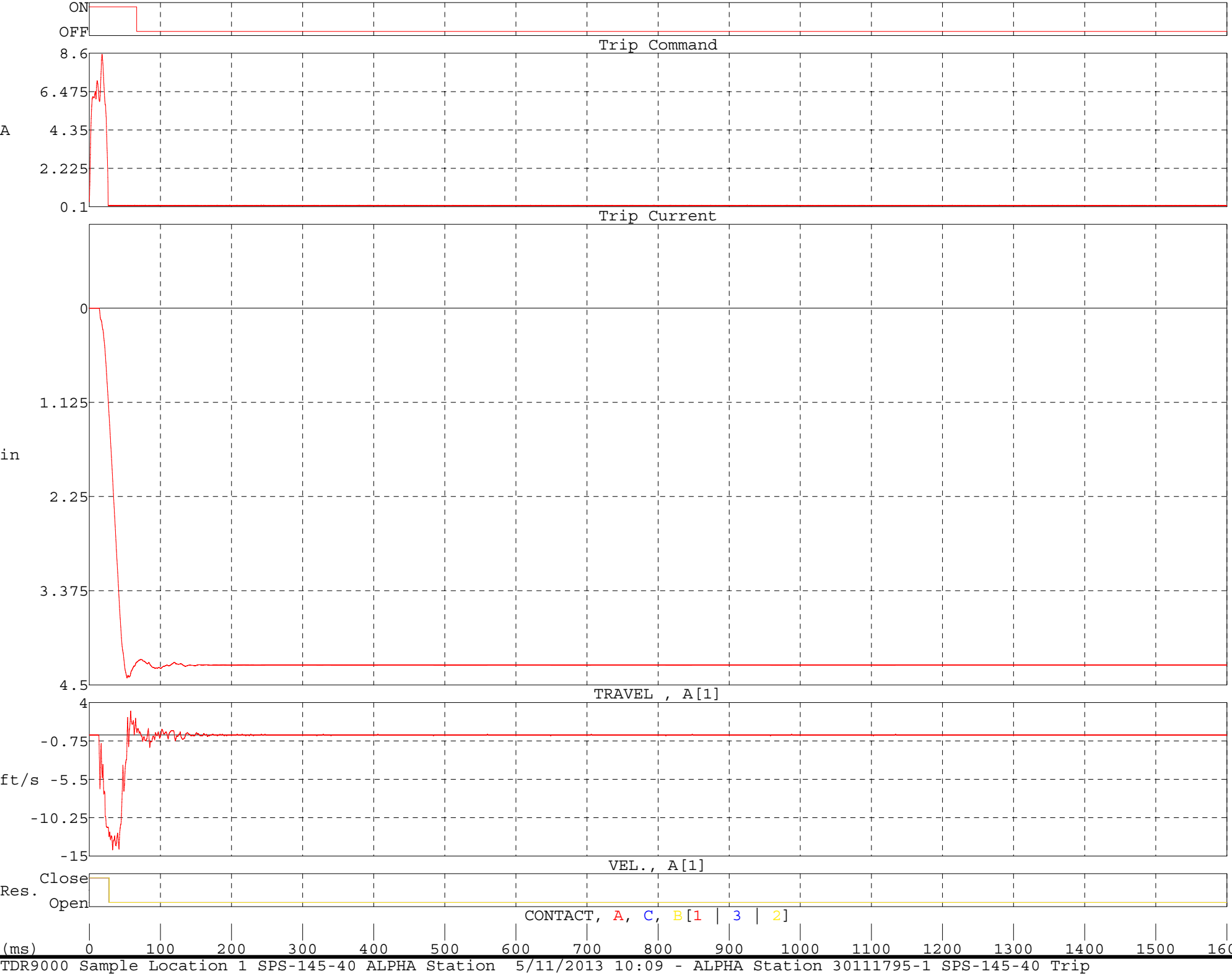
ON
OFF
Trip Command
8.6
6.475
A
4.35
2.225
0.1
Trip Current
0
1.125
in
2.25
3.375
4.5
TRAVEL , A[1]
4
-0.75
ft/s -5.5
-10.25
-15
VEL., A[1]
Close
Res.
Open
CONTACT, A, C, B[1 | 3 | 2]
(ms) 0 100 200 300 400 500 600 700 800 900 1000 1100 1200 1300 1400 1500 1600

BREAKER PERFORMANCE REPORT
TDR9000 Version: RE 4.01

Manufacturer : Siemens Location: Sample Location 1
Model Number : SPS-145-40 Circuit :
Serial Number: 30111795-1 Operator: MEK
Instr Book # :
Mechanism # :
Mech Instr # :
Special ID : ALPHA Station Operation Counter :
: :

Test Type : TRIP-FREE Test Plan Name :

Test was performed on 5/11/2013 at 09:46:41.

Motion Channels 1-3 Transfer Function
1.000 in Travel at the contacts is 1.000 in Travel at the transducer.

Resistor range selected None

Command Parameters	Trip Pulse	6500.0 ms	Close Pulse	133.3 ms
	Delay 1	8.3 ms	(Standing)	
Command Currents	Trip Current	7.61 A pk	Close Current	2.11 A pk

OCB CONTACT TIMING
TRIP-FREE OPERATION

Trip-Free Dwell Time Within a Phase

Specifications	Test results		Compare
Maximum******** ms	Phase A	40.2 ms	
Minimum********	Phase B	41.0	
	Phase C	41.5	

Trip-Free Dwell Time Within the Breaker

Specifications	Test results		Compare
	Breaker	41.6 ms	

Main Contact Closing Time Measured From Test Initiation

Specifications	Test results		Travel	Velocity	Compare
Maximum 300.0 ms	CONTACT1	56.4 ms	3.015 in	10.73 ft/s	
Minimum********	CONTACT2	56.6	3.041	10.62	
	CONTACT3	56.5	3.029	10.73	

Delta Main Contact Closing Time Within the Breaker

Specifications	Test results		Compare
Maximum******** ms	Breaker	0.2 ms	

Main Contact Opening Time Measured From Test Initiation

Specifications	Test results		Travel	Velocity	Compare
Maximum******** ms	CONTACT1	96.6 ms	3.211 in	12.71 ft/s	
Minimum********	CONTACT2	97.6	3.051	13.33	
	CONTACT3	98.0	2.990	13.02	

Delta Main Contact Opening Time Within the Breaker

Specifications	Test results		Compare
Maximum******** ms	Breaker	1.4 ms	

User Notes

Page 1

Page 2

Page 3

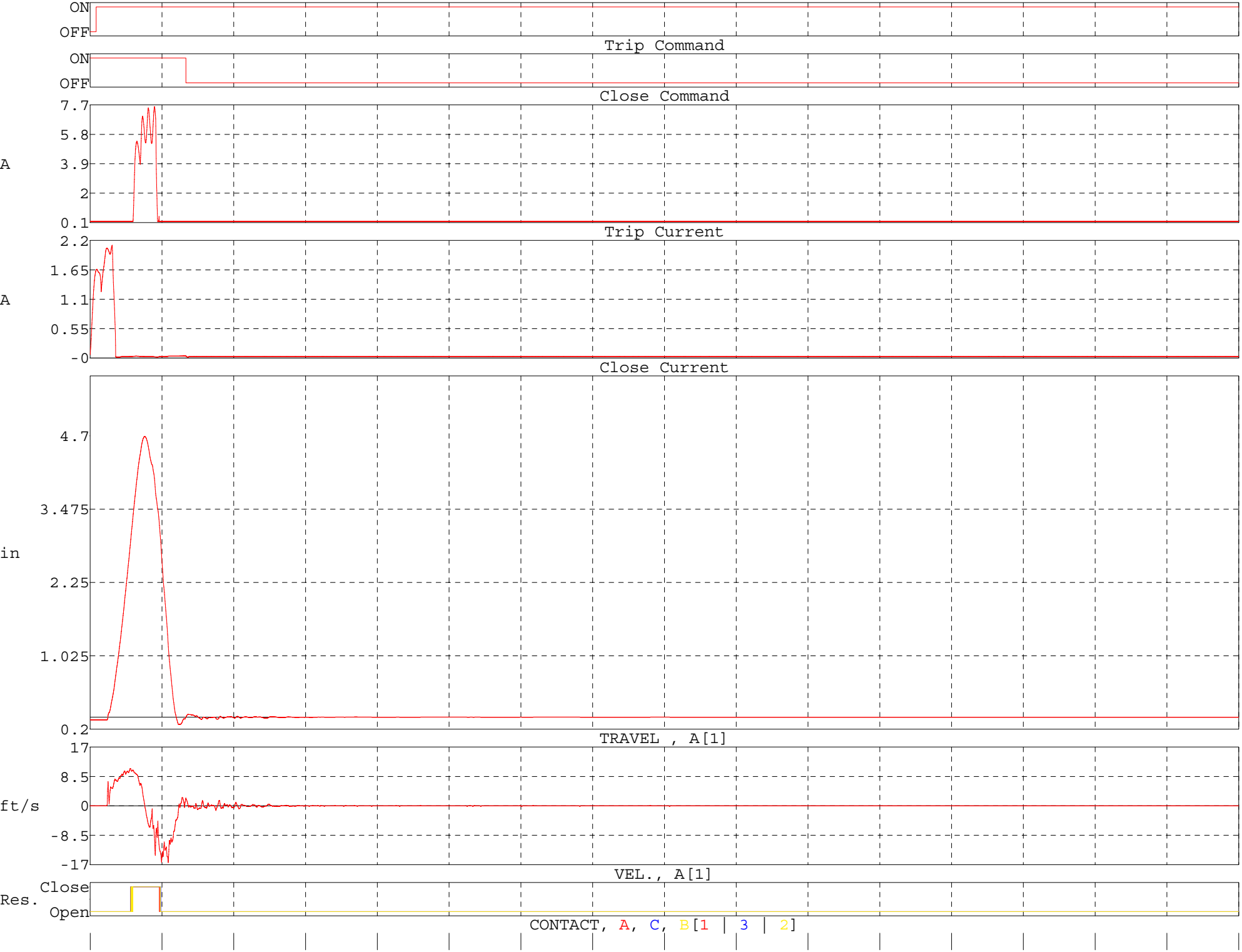
ON
OFF
Trip Command
ON
OFF
Close Command
7.7
5.8
A
3.9
2
0.1
Trip Current
2.2
1.65
A
1.1
0.55
-0
Close Current
4.7
3.475
in
2.25
1.025
0.2
TRAVEL , A[1]
17
8.5
ft/s
0
-8.5
-17
VEL., A[1]
Close
Res.
Open
CONTACT, A, C, B[1 | 3 | 2]
(ms) 0 100 200 300 400 500 600 700 800 900 1000 1100 1200 1300 1400 1500 1600

BREAKER PERFORMANCE REPORT
TDR9000 Version: RE 4.01

Manufacturer : Siemens Location: Sample Location 1
Model Number : SPS-145-40 Circuit :
Serial Number: 30111795-1 Operator: MEK
Instr Book # :
Mechanism # :
Mech Instr # :
Special ID : ALPHA Station Operation Counter :
: :

Test Type : TRIP-FREE Test Plan Name :

Test was performed on 5/11/2013 at 09:51:24.

Motion Channels 1-3 Transfer Function
1.000 in Travel at the contacts is 1.000 in Travel at the transducer.

Command Parameters	Trip Pulse	6500.0 ms	Close Pulse	133.3 ms
	Delay 1	50.0 ms	(Delay)	
Command Currents	Trip Current	7.64 A pk	Close Current	2.10 A pk

OCB CONTACT TIMING
TRIP-FREE OPERATION

Trip-Free Dwell Time Within a Phase

Specifications	Test results		Compare
Maximum******** ms	Phase A	40.1 ms	
Minimum********	Phase B	40.7	
	Phase C	41.3	

Trip-Free Dwell Time Within the Breaker

Specifications	Test results		Compare
	Breaker	41.4 ms	

Main Contact Closing Time Measured From Test Initiation

Specifications	Test results		Travel	Velocity	Compare
Maximum 300.0 ms	CONTACT1	56.2 ms	******* in	****** ft/s	
Minimum********	CONTACT2	56.5	*******	******	
	CONTACT3	56.3	*******	******	

Delta Main Contact Closing Time Within the Breaker

Specifications	Test results		Compare
Maximum******** ms	Breaker	0.3 ms	

Main Contact Opening Time Measured From Test Initiation

Specifications	Test results	Travel	Velocity	Compare
Maximum******** ms	CONTACT1 96.3 ms	******* in	****** ft/s	
Minimum********	CONTACT2 97.2	*******	******	
	CONTACT3 97.6	*******	******	

Delta Main Contact Opening Time Within the Breaker

Specifications	Test results	Compare
Maximum******** ms	Breaker 1.3 ms	

User Notes

Page 1

Page 2

Page 3

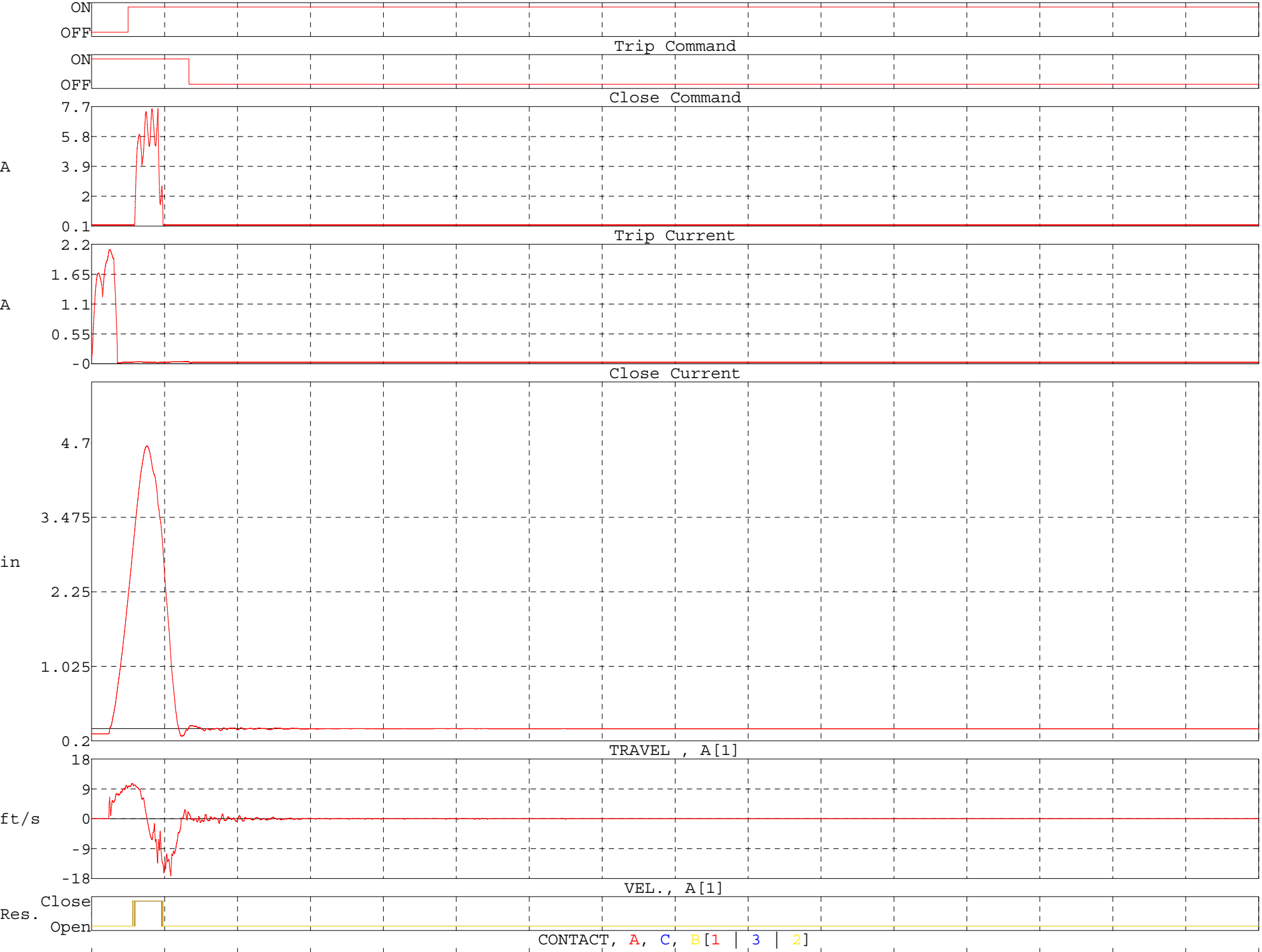
ON
OFF
Trip Command
ON
OFF
Close Command
7.7
5.8
A
3.9
2
0.1
Trip Current
2.2
1.65
A
1.1
0.55
-0
Close Current
4.7
3.475
in
2.25
1.025
0.2
TRAVEL , A[1]
18
9
ft/s
0
-9
-18
VEL., A[1]
Close
Res.
Open
CONTACT, A, C, B[1 | 3 | 2]
(ms) 0 100 200 300 400 500 600 700 800 900 1000 1100 1200 1300 1400 1500 1600

BREAKER PERFORMANCE REPORT
TDR9000 Version: RE 4.01

Manufacturer : Siemens Location: Sample Location 1
Model Number : SPS-145-40 Circuit :
Serial Number: 30111795-1 Operator: MEK
Instr Book # :
Mechanism # :
Mech Instr # :
Special ID : ALPHA Station Operation Counter :
: :

Test Type : TRIP-FREE Test Plan Name :

Test was performed on 5/11/2013 at 09:59:32.

Motion Channels 1-3 Transfer Function
1.000 in Travel at the contacts is 1.000 in Travel at the transducer.

Command Parameters	Trip Pulse	6500.0 ms	Close Pulse	133.3 ms
	Delay 1	500.0 ms	(Delay)	
Command Currents	Trip Current	8.34 A pk	Close Current	2.09 A pk

OCB CONTACT TIMING
TRIP-FREE OPERATION

Trip-Free Dwell Time Within a Phase

Specifications	Test results		Compare
Maximum******** ms	Phase A	472.4 ms	
Minimum********	Phase B	472.1	
	Phase C	472.0	

Trip-Free Dwell Time Within the Breaker

Specifications	Test results		Compare
	Breaker	472.4 ms	

Main Contact Closing Time Measured From Test Initiation

Specifications	Test results		Travel	Velocity	Compare
Maximum 300.0 ms	CONTACT1	55.8 ms	******* in	****** ft/s	
Minimum********	CONTACT2	55.9	*******	******	
	CONTACT3	56.1	*******	******	

Delta Main Contact Closing Time Within the Breaker

Specifications	Test results		Compare
Maximum******** ms	Breaker	0.3 ms	

Main Contact Opening Time Measured From Test Initiation

Specifications	Test results	Travel	Velocity	Compare
Maximum******** ms	CONTACT1 528.2 ms	******* in	****** ft/s	
Minimum********	CONTACT2 528.0	*******	******	
	CONTACT3 528.1	*******	******	

Delta Main Contact Opening Time Within the Breaker

Specifications	Test results	Compare
Maximum******** ms	Breaker 0.2 ms	

User Notes

Page 1

Page 2

Page 3

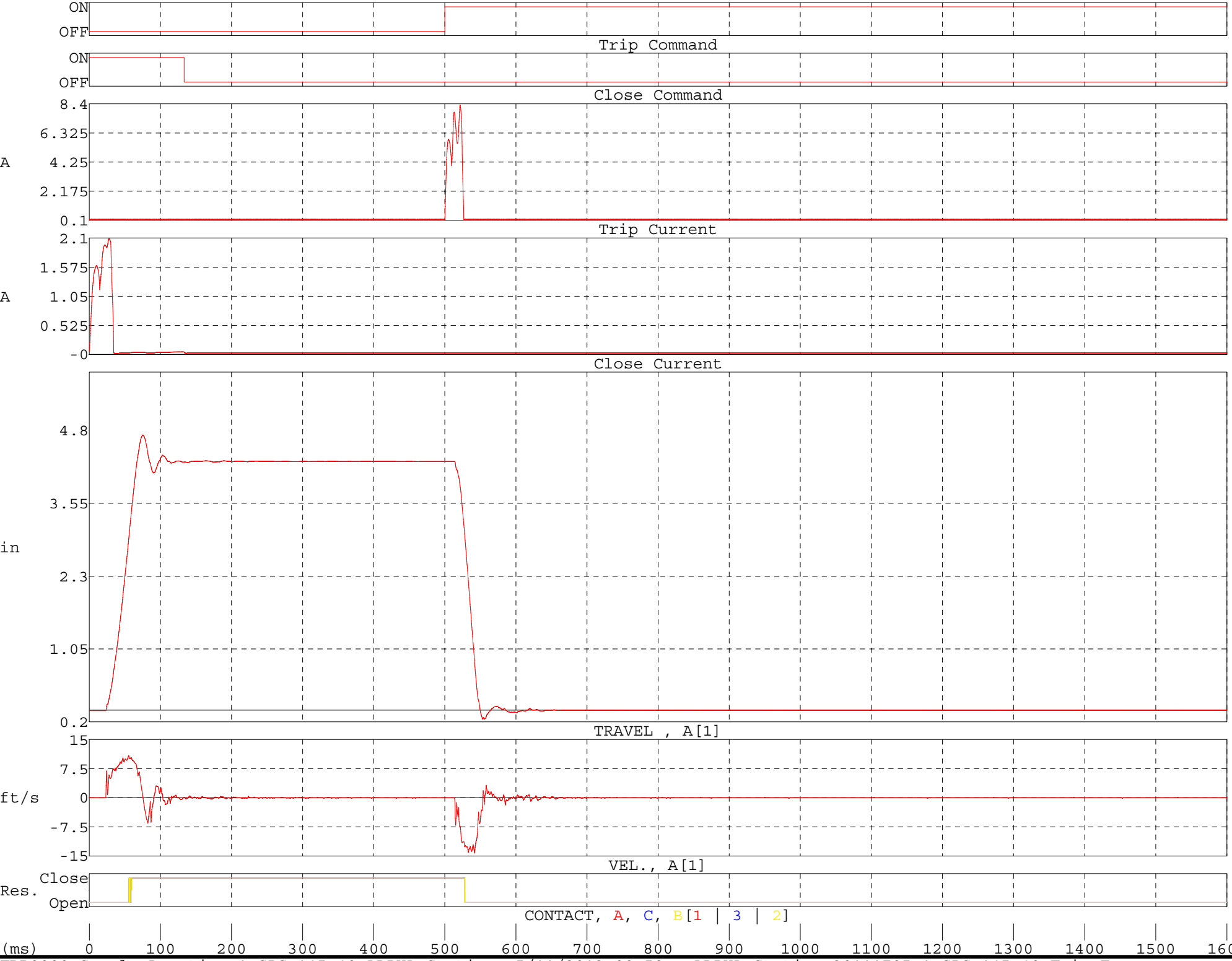
ON
OFF
Trip Command
ON
OFF
Close Command
8.4
6.325
A
4.25
2.175
0.1
Trip Current
2.1
1.575
A
1.05
0.525
-0
Close Current
4.8
3.55
in
2.3
1.05
0.2
TRAVEL , A[1]
15
7.5
ft/s
0
-7.5
-15
VEL., A[1]
Close
Res.
Open
CONTACT, A, C, B[1 | 3 | 2]
(ms) 0 100 200 300 400 500 600 700 800 900 1000 1100 1200 1300 1400 1500 1600

BREAKER PERFORMANCE REPORT
TDR9000 Version: RE 4.01

Manufacturer : Siemens Location: Sample Location 1
Model Number : SPS-145-40 Circuit :
Serial Number: 30111795-1 Operator: MEK
Instr Book # :
Mechanism # :
Mech Instr # :
Special ID : ALPHA Station Operation Counter :
: :

Test Type : TRIP-FREE Test Plan Name :

Test was performed on 5/11/2013 at 10:18:37.

Motion Channels 1-3 Transfer Function
1.000 in Travel at the contacts is 1.000 in Travel at the transducer.

Command Parameters	Trip Pulse	6500.0 ms	Close Pulse	133.3 ms
	Delay 1	8.3 ms	(Standing)	
Command Currents	Trip Current	7.46 A pk	Close Current	2.09 A pk

OCB CONTACT TIMING
TRIP-FREE OPERATION

Trip-Free Dwell Time Within a Phase

Specifications	Test results		Compare
Maximum******** ms	Phase A	39.8 ms	
Minimum********	Phase B	40.6	
	Phase C	40.8	

Trip-Free Dwell Time Within the Breaker

Specifications	Test results		Compare
	Breaker	41.0 ms	

Main Contact Closing Time Measured From Test Initiation

Specifications	Test results		Travel	Velocity	Compare
Maximum 300.0 ms	CONTACT1	56.4 ms	******* in	****** ft/s	
Minimum********	CONTACT2	56.4	*******	******	
	CONTACT3	56.6	*******	******	

Delta Main Contact Closing Time Within the Breaker

Specifications	Test results		Compare
Maximum******** ms	Breaker	0.2 ms	

Main Contact Opening Time Measured From Test Initiation

Specifications	Test results	Travel	Velocity	Compare
Maximum******** ms	CONTACT1 96.2 ms	******* in	****** ft/s	
Minimum********	CONTACT2 97.0	*******	******	
	CONTACT3 97.4	*******	******	

Delta Main Contact Opening Time Within the Breaker

Specifications	Test results	Compare
Maximum******** ms	Breaker 1.2 ms	

User Notes

Page 1

Page 2

Page 3

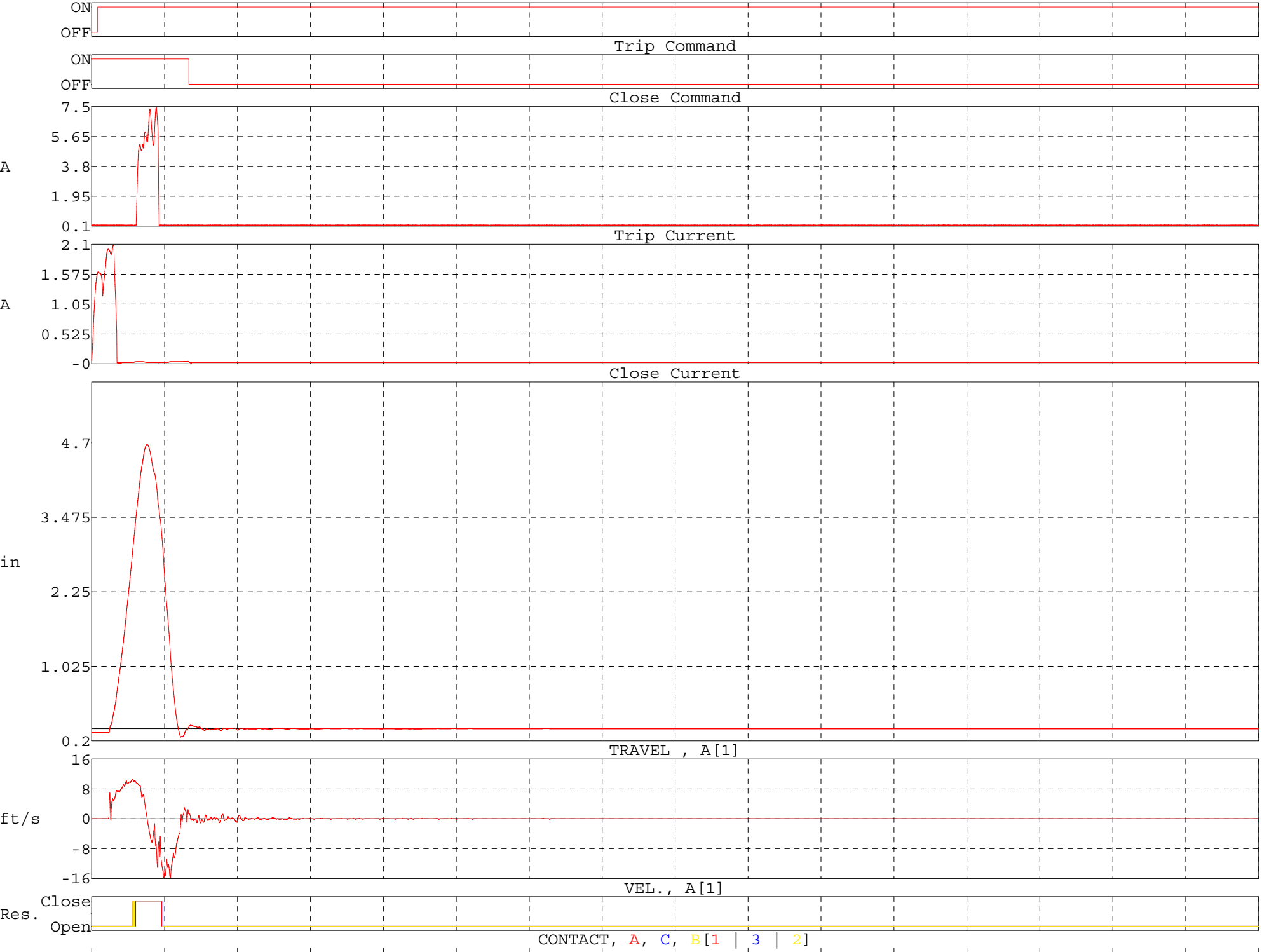
ON
OFF
Trip Command
ON
OFF
Close Command
7.5
5.65
A
3.8
1.95
0.1
Trip Current
2.1
1.575
A
1.05
0.525
-0
Close Current
4.7
3.475
in
2.25
1.025
0.2
TRAVEL , A[1]
16
8
ft/s
0
-8
-16
VEL., A[1]
Close
Res.
Open
CONTACT, A, C, B[1 | 3 | 2]
(ms) 0 100 200 300 400 500 600 700 800 900 1000 1100 1200 1300 1400 1500 1600

BREAKER PERFORMANCE REPORT
TDR9000 Version: RE 4.01

Manufacturer : Siemens Location: Sample Location 1
Model Number : SPS-145-40 Circuit :
Serial Number: 30111795-1 Operator: MEK
Instr Book # :
Mechanism # :
Mech Instr # :
Special ID : ALPHA Station Operation Counter :
: :

Test Type : TRIP-FREE Test Plan Name :

Test was performed on 5/11/2013 at 10:06:26.

Motion Channels 1-3 Transfer Function
1.000 in Travel at the contacts is 1.000 in Travel at the transducer.

Command Parameters	Trip Pulse	6500.0 ms	Close Pulse	133.3 ms
	Delay 1	500.0 ms	(Delay)	
Command Currents	Trip Current	8.30 A pk	Close Current	2.10 A pk

OCB CONTACT TIMING
TRIP-FREE OPERATION

Trip-Free Dwell Time Within a Phase

Specifications	Test results		Compare
Maximum******** ms	Phase A	472.6 ms	
Minimum********	Phase B	472.4	
	Phase C	472.3	

Trip-Free Dwell Time Within the Breaker

Specifications	Test results		Compare
	Breaker	472.6 ms	

Main Contact Closing Time Measured From Test Initiation

Specifications	Test results		Travel	Velocity	Compare
Maximum 300.0 ms	CONTACT1	55.8 ms	******* in	****** ft/s	
Minimum********	CONTACT2	55.9	*******	******	
	CONTACT3	56.0	*******	******	

Delta Main Contact Closing Time Within the Breaker

Specifications	Test results		Compare
Maximum******** ms	Breaker	0.2 ms	

Main Contact Opening Time Measured From Test Initiation

Specifications	Test results	Travel	Velocity	Compare
Maximum******** ms	CONTACT1 528.4 ms	******* in	****** ft/s	
Minimum********	CONTACT2 528.3	*******	******	
	CONTACT3 528.3	*******	******	

Delta Main Contact Opening Time Within the Breaker

Specifications	Test results	Compare
Maximum******** ms	Breaker 0.1 ms	

User Notes

Page 1

Page 2

Page 3

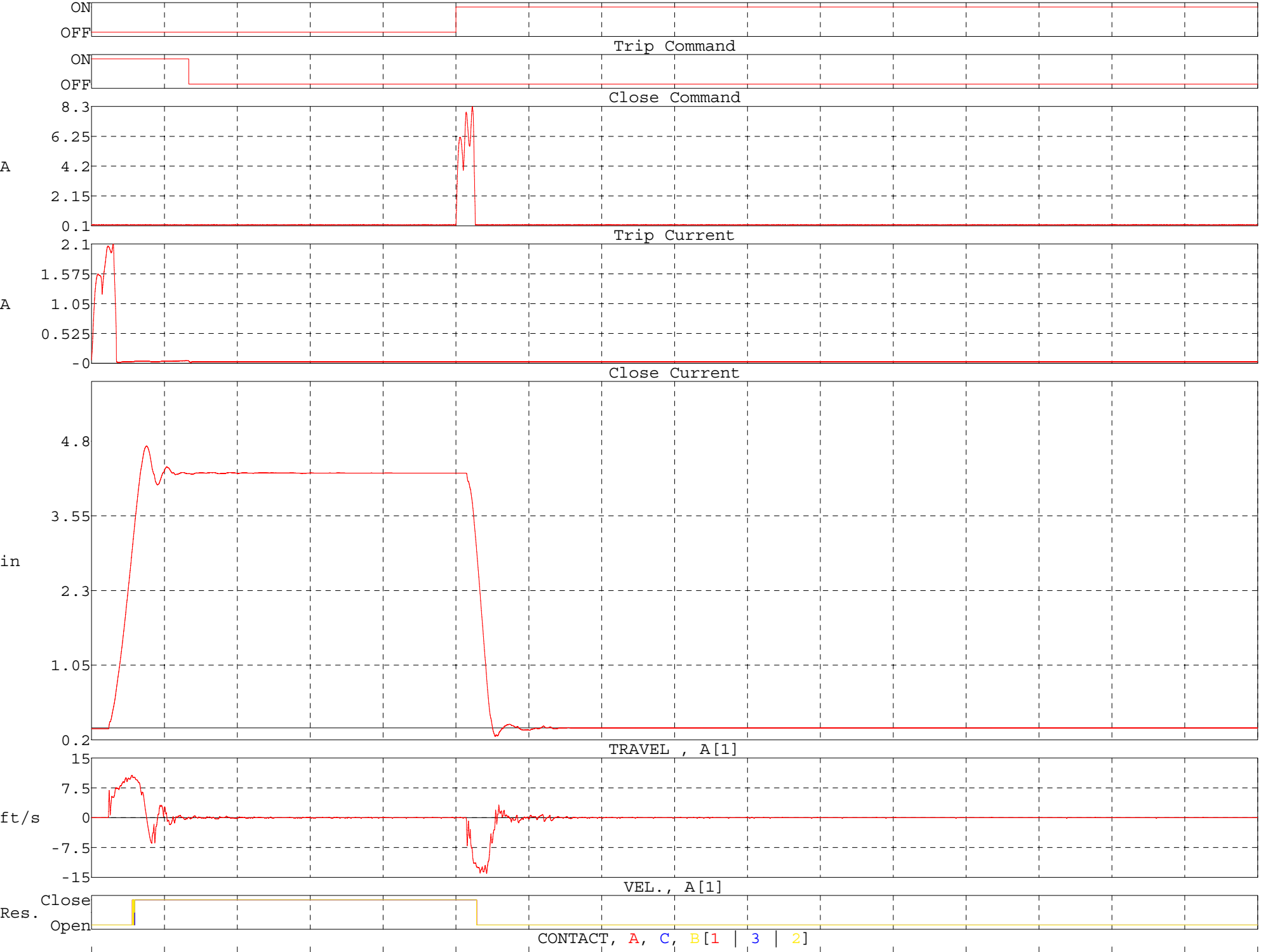
ON
OFF
Trip Command
ON
OFF
Close Command
8.3
6.25
A
4.2
2.15
0.1
Trip Current
2.1
1.575
A
1.05
0.525
-0
Close Current
4.8
3.55
in
2.3
1.05
0.2
TRAVEL , A[1]
15
7.5
ft/s
0
-7.5
-15
VEL., A[1]
Close
Res.
Open
CONTACT, A, C, B[1 | 3 | 2]
(ms) 0 100 200 300 400 500 600 700 800 900 1000 1100 1200 1300 1400 1500 1600

BREAKER PERFORMANCE REPORT
TDR9000 Version: RE 4.01

Manufacturer : Siemens Location: Sample Location 1
Model Number : SPS-145-40 Circuit :
Serial Number: 30111795-1 Operator: MEK
Instr Book # :
Mechanism # :
Mech Instr # :
Special ID : ALPHA Station Operation Counter :
: :

Test Type : TRIP-FREE Test Plan Name :

Test was performed on 5/11/2013 at 10:13:05.

Motion Channels 1-3 Transfer Function
1.000 in Travel at the contacts is 1.000 in Travel at the transducer.

Command Parameters	Trip Pulse	6500.0 ms	Close Pulse	133.3 ms
	Delay 1	50.0 ms	(Delay)	
Command Currents	Trip Current	7.59 A pk	Close Current	2.09 A pk

OCB CONTACT TIMING
TRIP-FREE OPERATION

Trip-Free Dwell Time Within a Phase

Specifications	Test results		Compare
Maximum******** ms	Phase A	40.0 ms	
Minimum********	Phase B	40.9	
	Phase C	41.1	

Trip-Free Dwell Time Within the Breaker

Specifications	Test results		Compare
	Breaker	41.4 ms	

Main Contact Closing Time Measured From Test Initiation

Specifications	Test results		Travel	Velocity	Compare
Maximum 300.0 ms	CONTACT1	56.1 ms	******* in	****** ft/s	
Minimum********	CONTACT2	56.2	*******	******	
	CONTACT3	56.4	*******	******	

Delta Main Contact Closing Time Within the Breaker

Specifications	Test results		Compare
Maximum******** ms	Breaker	0.3 ms	

Main Contact Opening Time Measured From Test Initiation

Specifications	Test results	Travel	Velocity	Compare
Maximum******** ms	CONTACT1 96.1 ms	******* in	****** ft/s	
Minimum********	CONTACT2 97.1	*******	******	
	CONTACT3 97.5	*******	******	

Delta Main Contact Opening Time Within the Breaker

Specifications	Test results	Compare
Maximum******** ms	Breaker 1.4 ms	

User Notes

Page 1

Page 2

Page 3

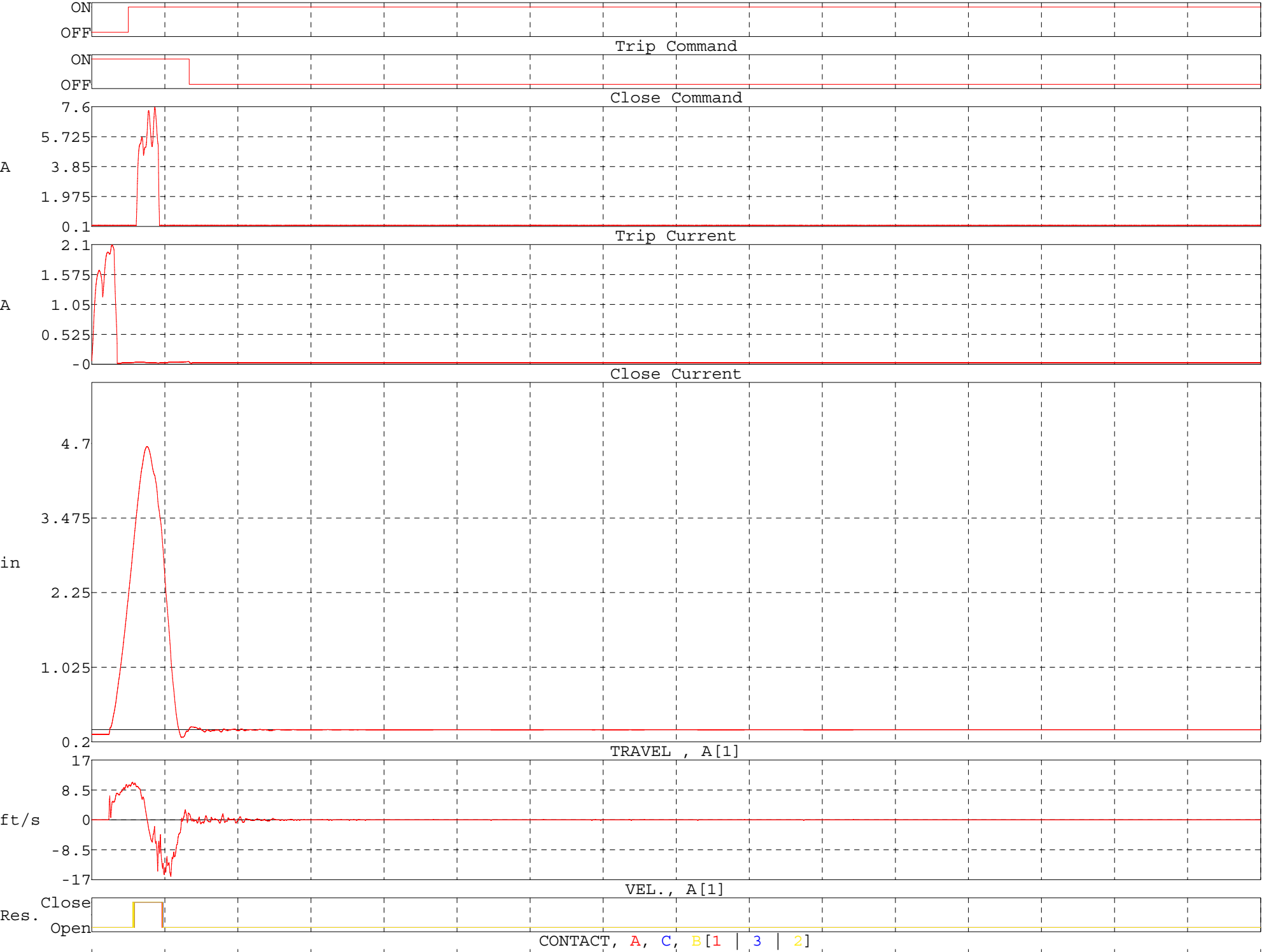
ON
OFF
Trip Command
ON
OFF
Close Command
7.6
5.725
A
3.85
1.975
0.1
Trip Current
2.1
1.575
A
1.05
0.525
-0
Close Current
4.7
3.475
in
2.25
1.025
0.2
TRAVEL , A[1]
17
8.5
ft/s
0
-8.5
-17
VEL., A[1]
Close
Res.
Open
CONTACT, A, C, B[1 | 3 | 2]
(ms) 0 100 200 300 400 500 600 700 800 900 1000 1100 1200 1300 1400 1500 1600

Vanguard Instruments Company, Inc.
1520 S. Hellman Avenue, Ontario, CA 91761, USA Phone: 909.923.9390 FAX: 909.923.9391
www.vanguard-instruments.com

FILENAME: CT 1X PHASE A ALPHA BKR.tes
DATE: 05/09/13 08:18:06
COMPANY: HOTLINE CONSTRUCTION
STATION: MOJAVE PP ALPHA SS
CIRCUIT: CT 1X PHASE A ALPHA

MFR: SEIMENS
MODEL:
SN:
OPERATOR: RG/BR
COMMENTS: BRK SN: 30111795-1

SUMMARY REPORT
KNEE TYPE: IEEE 30 Deg
FREQUENCY: 60 Hz

Test	Tap	IEEE30	IEEE45	IEC 10/50	NP-Ratio	M-Ratio	% Error	Phase Angle	Winding Res
1	X1-X2	0.00	0.00	0.00	200/5.0	40.125	0.3133 %	-0.16°	N/A
2	X1-X3	0.00	0.00	0.00	300/5.0	60.160	0.2673 %	-0.28°	N/A
3	X1-X4	0.00	0.00	0.00	800/5.0	160.018	0.0109 %	0.14°	N/A
4	X1-X5	338.00	284.20	359.44	1200/5.0	239.513	0.2028 %	1.44°	458.83 m-ohms
5	X2-X3	0.00	0.00	0.00	100/5.0	20.139	0.6960 %	-0.44°	N/A
6	X2-X4	0.00	0.00	0.00	600/5.0	120.115	0.0962 %	0.02°	N/A
7	X2-X5	0.00	0.00	0.00	1000/5.0	199.966	0.0168 %	-0.02°	N/A
8	X3-X4	0.00	0.00	0.00	500/5.0	100.030	0.0295 %	-0.96°	N/A
9	X3-X5	0.00	0.00	0.00	900/5.0	179.914	0.0477 %	0.02°	N/A
10	X4-X5	0.00	0.00	0.00	400/5.0	80.010	0.0120 %	-0.24°	N/A

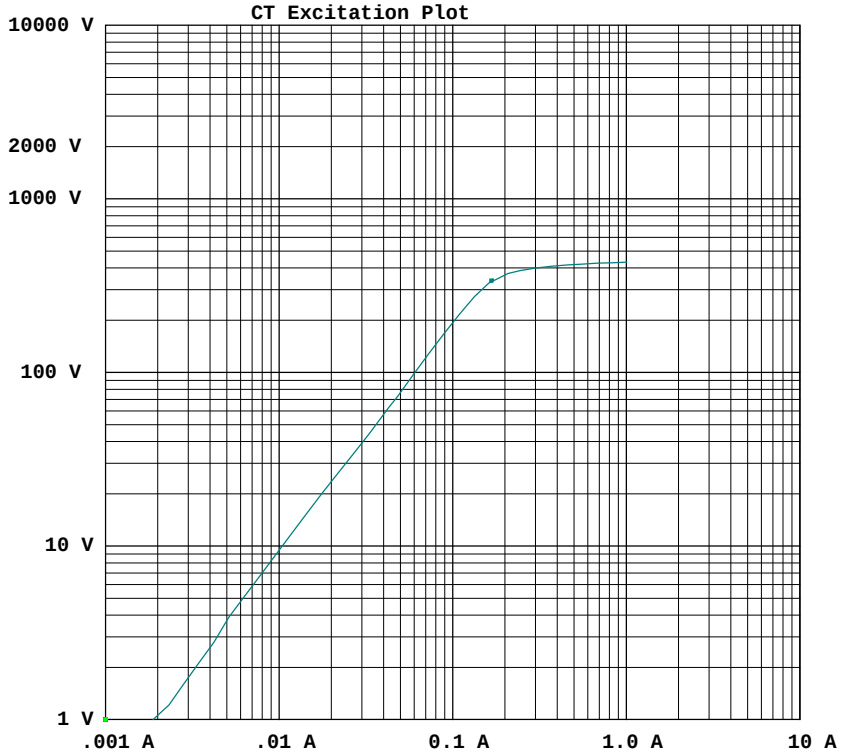

1000V INSULATION RES TEST RESULTS

VOLTAGE: 993.4 V
CURRENT: 0.00 MICRO-AMPS
RESISTANCE: >1,000 MEG-OHMS

BURDEN TEST RESULTS

5 AMP BURDEN TEST

MEASURED CURRENT: 0.043 A
MEASURED VOLTAGE: 57.371 V, 21.01 DEG
IMPEDANCE (Z): 23.496 OHMS
BURDEN: 0.000 VA
POWER FACTOR: 0.93

Test Notepad

EZCT-2000 Software Version: 1.35
www.vanguard-instruments.com

Vanguard Instruments Company, Inc.
1520 S. Hellman Avenue, Ontario, CA 91761, USA Phone: 909.923.9390 FAX: 909.923.9391
www.vanguard-instruments.com

FILENAME: CT 1Y PHASE A ALPHA BKR.tes
DATE: 05/09/13 08:28:43
COMPANY: HOTLINE CONSTRUCTION
STATION: MOJAVE PP ALPHA SS
CIRCUIT: CT 1Y PHASE A ALPHA

MFR: SEIMENS
MODEL:
SN:
OPERATOR: RG/BR
COMMENTS: BRK SN: 30111795-1

SUMMARY REPORT
KNEE TYPE: IEEE 30 Deg
FREQUENCY: 60 Hz

Test	Tap	IEEE30	IEEE45	IEC 10/50	NP-Ratio	M-Ratio	% Error	Phase Angle	Winding Res
1	X1-X2	0.00	0.00	0.00	200/5.0	40.089	0.2230 %	-0.24°	N/A
2	X1-X3	0.00	0.00	0.00	300/5.0	60.085	0.1413 %	-0.02°	N/A
3	X1-X4	0.00	0.00	0.00	800/5.0	160.048	0.0303 %	0.08°	N/A
4	X1-X5	341.80	281.20	355.52	1200/5.0	240.295	0.1230 %	3.28°	473.80 m-ohms
5	X2-X3	0.00	0.00	0.00	100/5.0	20.120	0.6005 %	-0.40°	N/A
6	X2-X4	0.00	0.00	0.00	600/5.0	119.971	0.0242 %	0.00°	N/A
7	X2-X5	0.00	0.00	0.00	1000/5.0	199.965	0.0173 %	0.10°	N/A
8	X3-X4	0.00	0.00	0.00	500/5.0	100.129	0.1295 %	-0.12°	N/A
9	X3-X5	0.00	0.00	0.00	900/5.0	180.108	0.0603 %	0.06°	N/A
10	X4-X5	0.00	0.00	0.00	400/5.0	80.034	0.0421 %	0.28°	N/A

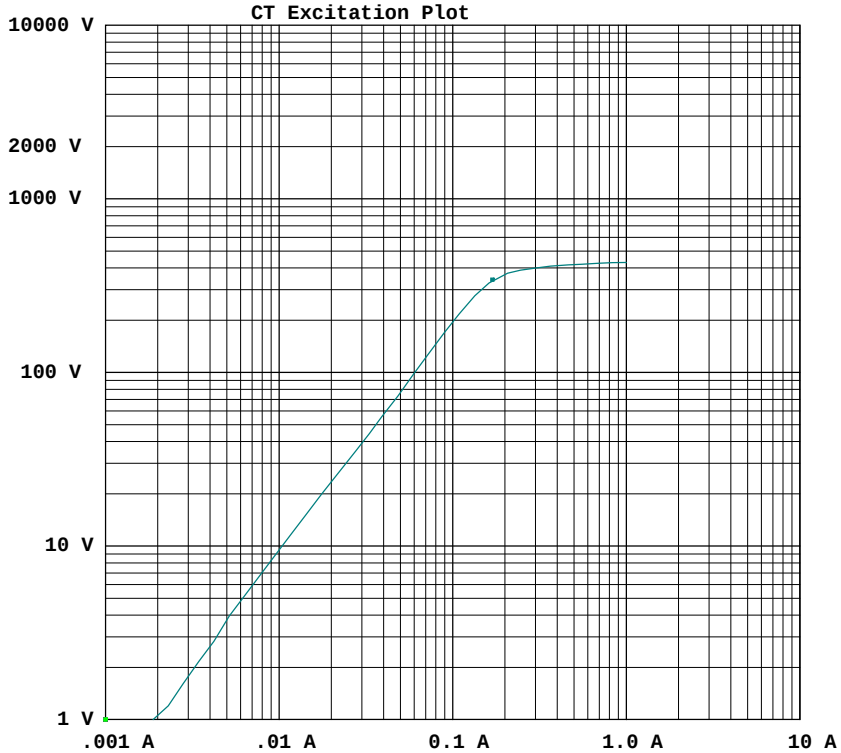

1000V INSULATION RES TEST RESULTS

VOLTAGE: 1001.4 V
CURRENT: 0.00 MICRO-AMPS
RESISTANCE: >1,000 MEG-OHMS

BURDEN TEST RESULTS

5 AMP BURDEN TEST

MEASURED CURRENT: 0.045 A
MEASURED VOLTAGE: 57.783 V, 21.56 DEG
IMPEDANCE (Z): 38.883 OHMS
BURDEN: 0.000 VA
POWER FACTOR: 0.93

Test Notepad

EZCT-2000 Software Version: 1.35
www.vanguard-instruments.com

Vanguard Instruments Company, Inc.
1520 S. Hellman Avenue, Ontario, CA 91761, USA Phone: 909.923.9390 FAX: 909.923.9391
www.vanguard-instruments.com

FILENAME: CT 1Z PHASE A ALPHA BKR.tes
DATE: 05/09/13 08:42:28
COMPANY: HOTLINE CONSTRUCTION
STATION: MOJAVE PP ALPHA SS
CIRCUIT: CT 1Z PHASE A ALPHA

MFR: SIEMENS
MODEL:
SN:
OPERATOR: RG/BR
COMMENTS: BKR SN: 30111795-1

SUMMARY REPORT
KNEE TYPE: IEEE 30 Deg
FREQUENCY: 60 Hz

Test	Tap	IEEE30	IEEE45	IEC 10/50	NP-Ratio	M-Ratio	% Error	Phase Angle	Winding Res
1 [redacted]	X1-X2	173.92	145.56	187.64	800/5.0	159.959	0.0254 %	0.32°	194.17 m-ohms

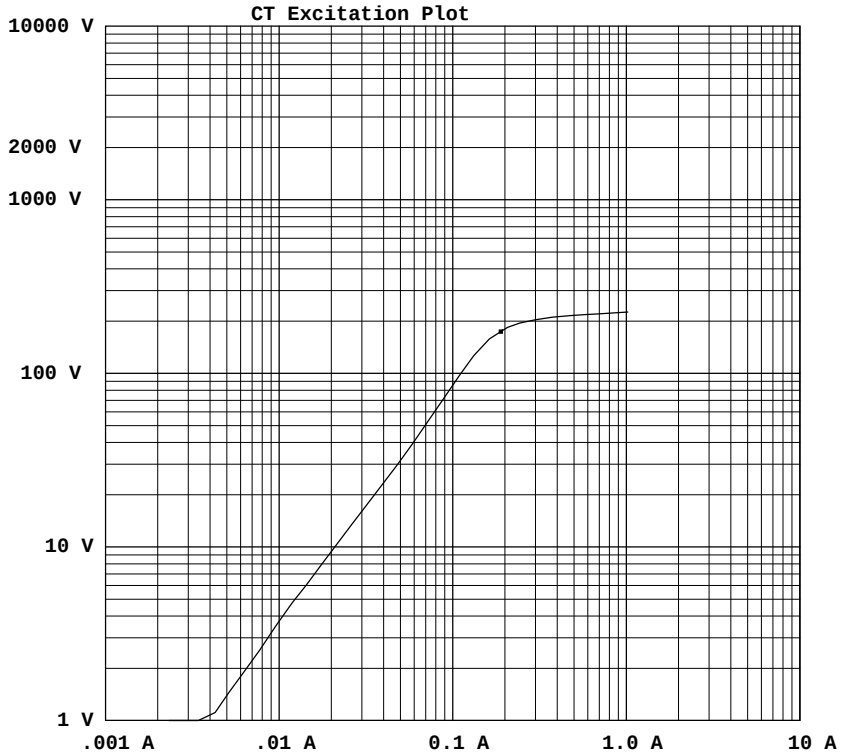

1000V INSULATION RES TEST RESULTS

VOLTAGE: 1002.6 V
CURRENT: 0.05 MICRO-AMPS
RESISTANCE: >1,000 MEG-OHMS

BURDEN TEST RESULTS

5 AMP BURDEN TEST

MEASURED CURRENT: 0.081 A
MEASURED VOLTAGE: 57.571 V, 34.51 DEG
IMPEDANCE (Z): 55.390 OHMS
BURDEN: 0.000 VA
POWER FACTOR: 0.82

Test Notepad

Vanguard Instruments Company, Inc.
1520 S. Hellman Avenue, Ontario, CA 91761, USA Phone: 909.923.9390 FAX: 909.923.9391
www.vanguard-instruments.com

FILENAME: CT 2X PHASE A ALPHA BKR.tes
DATE: 05/09/13 08:54:00
COMPANY: HOTLINE CONSTRUCTION
STATION: MOJAVE PP ALPHA SS
CIRCUIT: CT 2X PHASE A ALPHA

MFR: SEIMENS
MODEL:
SN:
OPERATOR: RG/BR
COMMENTS: BRK SN: 30111795-1

SUMMARY REPORT
KNEE TYPE: IEEE 30 Deg
FREQUENCY: 60 Hz

Test	Tap	IEEE30	IEEE45	IEC 10/50	NP-Ratio	M-Ratio	% Error	Phase Angle	Winding Res
1	X1-X2	0.00	0.00	0.00	200/5.0	40.124	0.3105 %	-0.04°	N/A
2	X1-X3	0.00	0.00	0.00	300/5.0	60.084	0.1397 %	0.22°	N/A
3	X1-X4	0.00	0.00	0.00	800/5.0	159.977	0.0144 %	-0.30°	N/A
4	X1-X5	351.80	278.76	357.60	1200/5.0	240.497	0.2070 %	5.12°	462.08 m-ohms
5	X2-X3	0.00	0.00	0.00	100/5.0	20.147	0.7350 %	-0.40°	N/A
6	X2-X4	0.00	0.00	0.00	600/5.0	120.039	0.0328 %	-0.58°	N/A
7	X2-X5	0.00	0.00	0.00	1000/5.0	200.187	0.0934 %	0.12°	N/A
8	X3-X4	0.00	0.00	0.00	500/5.0	100.057	0.0566 %	0.88°	N/A
9	X3-X5	0.00	0.00	0.00	900/5.0	180.003	0.0014 %	0.16°	N/A
10	X4-X5	0.00	0.00	0.00	400/5.0	80.088	0.1094 %	0.40°	N/A

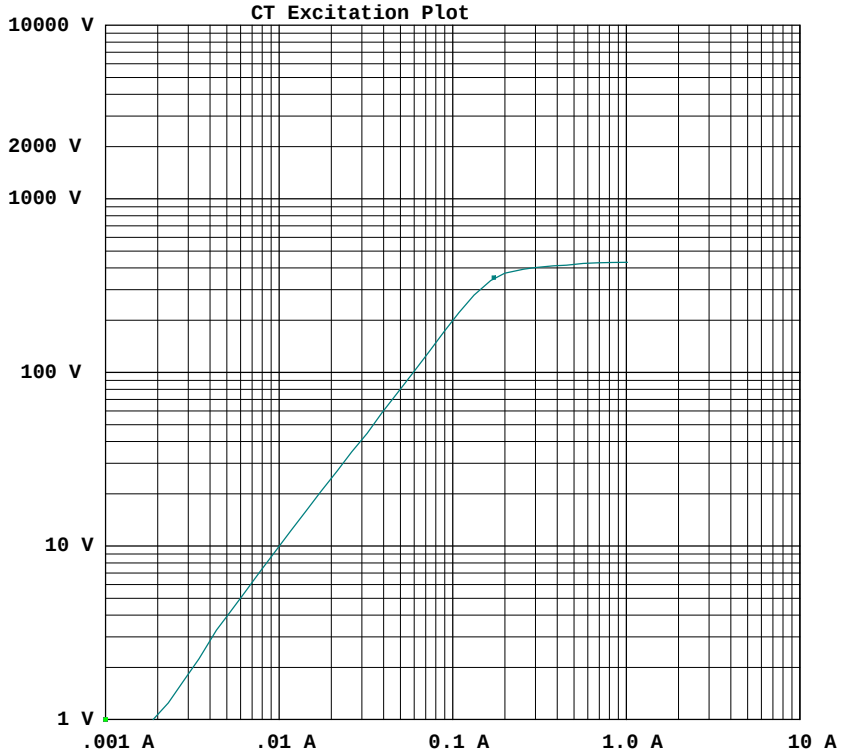

1000V INSULATION RES TEST RESULTS

VOLTAGE: 995.3 V
CURRENT: 0.23 MICRO-AMPS
RESISTANCE: >1,000 MEG-OHMS

BURDEN TEST RESULTS

5 AMP BURDEN TEST

MEASURED CURRENT: 0.043 A
MEASURED VOLTAGE: 57.588 V, 20.31 DEG
IMPEDANCE (Z): 28.543 OHMS
BURDEN: 0.000 VA
POWER FACTOR: 0.94

Test Notepad

EZCT-2000 Software Version: 1.35
www.vanguard-instruments.com

Vanguard Instruments Company, Inc.
1520 S. Hellman Avenue, Ontario, CA 91761, USA Phone: 909.923.9390 FAX: 909.923.9391
www.vanguard-instruments.com

FILENAME: CT 2Y PHASE A ALPHA BKR.tes
DATE: 05/09/13 09:03:40
COMPANY: HOTLINE CONSTRUCTION
STATION: MOJAVE PP ALPHA SS
CIRCUIT: CT 2Y PHASE A ALPHA

MFR: SEIMENS
MODEL:
SN:
OPERATOR: RG/BR
COMMENTS: BRK SN: 30111795-1

SUMMARY REPORT
KNEE TYPE: IEEE 30 Deg
FREQUENCY: 60 Hz

Test	Tap	IEEE30	IEEE45	IEC 10/50	NP-Ratio	M-Ratio	% Error	Phase Angle	Winding Res
1	X1-X2	0.00	0.00	0.00	200/5.0	40.111	0.2765 %	-0.50°	N/A
2	X1-X3	0.00	0.00	0.00	300/5.0	60.081	0.1343 %	-0.04°	N/A
3	X1-X4	0.00	0.00	0.00	800/5.0	160.025	0.0154 %	-0.02°	N/A
4	X1-X5	342.04	283.84	360.56	1200/5.0	240.353	0.1469 %	-0.40°	456.35 m-ohms
5	X2-X3	0.00	0.00	0.00	100/5.0	20.134	0.6675 %	-0.36°	N/A
6	X2-X4	0.00	0.00	0.00	600/5.0	119.982	0.0152 %	0.06°	N/A
7	X2-X5	0.00	0.00	0.00	1000/5.0	199.954	0.0229 %	-0.58°	N/A
8	X3-X4	0.00	0.00	0.00	500/5.0	100.097	0.0967 %	-0.06°	N/A
9	X3-X5	0.00	0.00	0.00	900/5.0	179.911	0.0495 %	0.00°	N/A
10	X4-X5	0.00	0.00	0.00	400/5.0	80.075	0.0933 %	-0.12°	N/A

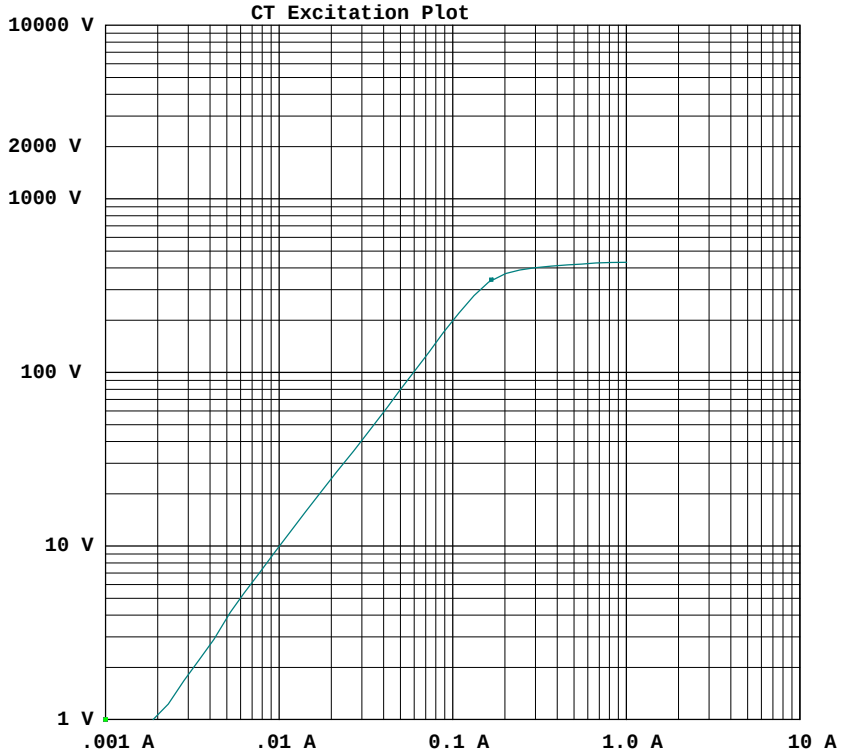

1000V INSULATION RES TEST RESULTS

VOLTAGE: 997.4 V
CURRENT: 0.09 MICRO-AMPS
RESISTANCE: >1,000 MEG-OHMS

BURDEN TEST RESULTS

5 AMP BURDEN TEST

MEASURED CURRENT: 0.043 A
MEASURED VOLTAGE: 57.555 V, 21.58 DEG
IMPEDANCE (Z): 27.764 OHMS
BURDEN: 0.000 VA
POWER FACTOR: 0.93

Test Notepad

EZCT-2000 Software Version: 1.35
www.vanguard-instruments.com

Vanguard Instruments Company, Inc.
1520 S. Hellman Avenue, Ontario, CA 91761, USA Phone: 909.923.9390 FAX: 909.923.9391
www.vanguard-instruments.com

FILENAME: CT 2Z PHASE A ALPHA BKR.tes
DATE: 05/09/13 09:11:32
COMPANY: HOTLINE CONSTRUCTION
STATION: MOJAVE PP ALPHA SS
CIRCUIT: CT 2Z PHASE A ALPHA

MFR: SIEMENS
MODEL:
SN:
OPERATOR: RG/BR
COMMENTS: BKR SN: 30111795-1

SUMMARY REPORT
KNEE TYPE: IEEE 30 Deg
FREQUENCY: 60 Hz

Test	Tap	IEEE30	IEEE45	IEC 10/50	NP-Ratio	M-Ratio	% Error	Phase Angle	Winding Res
1 [redacted]	X1-X2	176.68	147.24	186.96	800/5.0	159.939	0.0384 %	-0.02°	202.27 m-ohms

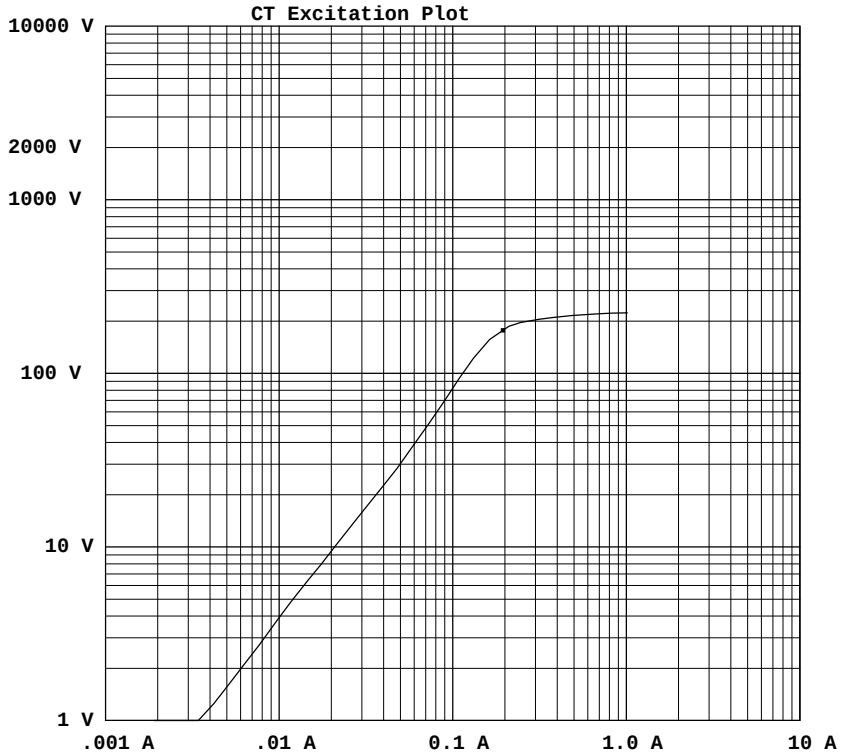

1000V INSULATION RES TEST RESULTS

VOLTAGE: 1003.0 V
CURRENT: 0.00 MICRO-AMPS
RESISTANCE: >1,000 MEG-OHMS

BURDEN TEST RESULTS

5 AMP BURDEN TEST

MEASURED CURRENT: 0.084 A
MEASURED VOLTAGE: 57.141 V, 35.72 DEG
IMPEDANCE (Z): 24.896 OHMS
BURDEN: 0.000 VA
POWER FACTOR: 0.81

Test Notepad

EZCT-2000 Software Version: 1.35
www.vanguard-instruments.com

Vanguard Instruments Company, Inc.
1520 S. Hellman Avenue, Ontario, CA 91761, USA Phone: 909.923.9390 FAX: 909.923.9391
www.vanguard-instruments.com

FILENAME: CT 3X PHASE B ALPHA BKR.tes
DATE: 05/09/13 09:22:20
COMPANY: HOTLINE CONSTRUCTION
STATION: MOJAVE PP ALPHA SS
CIRCUIT: CT 3X PHASE B ALPHA

MFR: SEIMENS
MODEL:
SN:
OPERATOR: RG/BR
COMMENTS: BRK SN: 30111795-1

SUMMARY REPORT
KNEE TYPE: IEEE 30 Deg
FREQUENCY: 60 Hz

Test	Tap	IEEE30	IEEE45	IEC 10/50	NP-Ratio	M-Ratio	% Error	Phase Angle	Winding Res
1	X1-X2	0.00	0.00	0.00	200/5.0	40.090	0.2262 %	-0.30°	N/A
2	X1-X3	0.00	0.00	0.00	300/5.0	60.081	0.1348 %	-0.02°	N/A
3	X1-X4	0.00	0.00	0.00	800/5.0	160.054	0.0341 %	0.08°	N/A
4	X1-X5	349.72	282.16	362.52	1200/5.0	240.113	0.0469 %	0.26°	462.36 m-ohms
5	X2-X3	0.00	0.00	0.00	100/5.0	20.138	0.6910 %	-0.20°	N/A
6	X2-X4	0.00	0.00	0.00	600/5.0	119.995	0.0046 %	0.08°	N/A
7	X2-X5	0.00	0.00	0.00	1000/5.0	200.018	0.0088 %	0.04°	N/A
8	X3-X4	0.00	0.00	0.00	500/5.0	99.981	0.0192 %	0.12°	N/A
9	X3-X5	0.00	0.00	0.00	900/5.0	180.037	0.0207 %	0.06°	N/A
10	X4-X5	0.00	0.00	0.00	400/5.0	80.058	0.0720 %	-0.14°	N/A

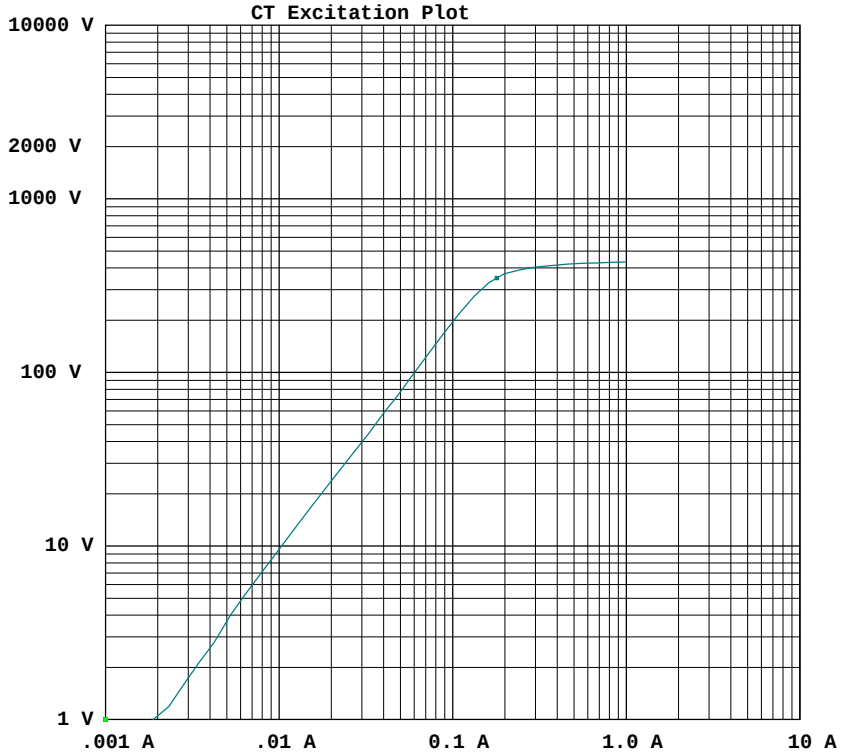

1000V INSULATION RES TEST RESULTS

VOLTAGE: 1090.8 V
CURRENT: 0.01 MICRO-AMPS
RESISTANCE: >1,000 MEG-OHMS

BURDEN TEST RESULTS

5 AMP BURDEN TEST

MEASURED CURRENT: 0.043 A
MEASURED VOLTAGE: 57.694 V, 20.88 DEG
IMPEDANCE (Z): 30.993 OHMS
BURDEN: 0.000 VA
POWER FACTOR: 0.93

Test Notepad

EZCT-2000 Software Version: 1.35
www.vanguard-instruments.com

Vanguard Instruments Company, Inc.
1520 S. Hellman Avenue, Ontario, CA 91761, USA Phone: 909.923.9390 FAX: 909.923.9391
www.vanguard-instruments.com

FILENAME: CT 3Y PHASE B ALPHA BKR.tes
DATE: 05/09/13 09:32:54
COMPANY: HOTLINE CONSTRUCTION
STATION: MOJAVE PP ALPHA SS
CIRCUIT: CT 3Y PHASE B ALPHA

MFR: SEIMENS
MODEL:
SN:
OPERATOR: RG/BR
COMMENTS: BRK SN: 30111795-1

SUMMARY REPORT
KNEE TYPE: IEEE 30 Deg
FREQUENCY: 60 Hz

Test	Tap	IEEE30	IEEE45	IEC 10/50	NP-Ratio	M-Ratio	% Error	Phase Angle	Winding Res
1	X1-X2	0.00	0.00	0.00	200/5.0	40.133	0.3330 %	-0.36°	N/A
2	X1-X3	0.00	0.00	0.00	300/5.0	60.063	0.1057 %	-0.12°	N/A
3	X1-X4	0.00	0.00	0.00	800/5.0	160.050	0.0311 %	0.02°	N/A
4	X1-X5	332.92	268.32	352.48	1200/5.0	239.751	0.1037 %	-1.24°	467.28 m-ohms
5	X2-X3	0.00	0.00	0.00	100/5.0	20.178	0.8890 %	-0.22°	N/A
6	X2-X4	0.00	0.00	0.00	600/5.0	120.054	0.0448 %	0.02°	N/A
7	X2-X5	0.00	0.00	0.00	1000/5.0	199.905	0.0474 %	0.06°	N/A
8	X3-X4	0.00	0.00	0.00	500/5.0	100.021	0.0210 %	0.02°	N/A
9	X3-X5	0.00	0.00	0.00	900/5.0	179.927	0.0406 %	0.10°	N/A
10	X4-X5	0.00	0.00	0.00	400/5.0	80.037	0.0461 %	-0.02°	N/A

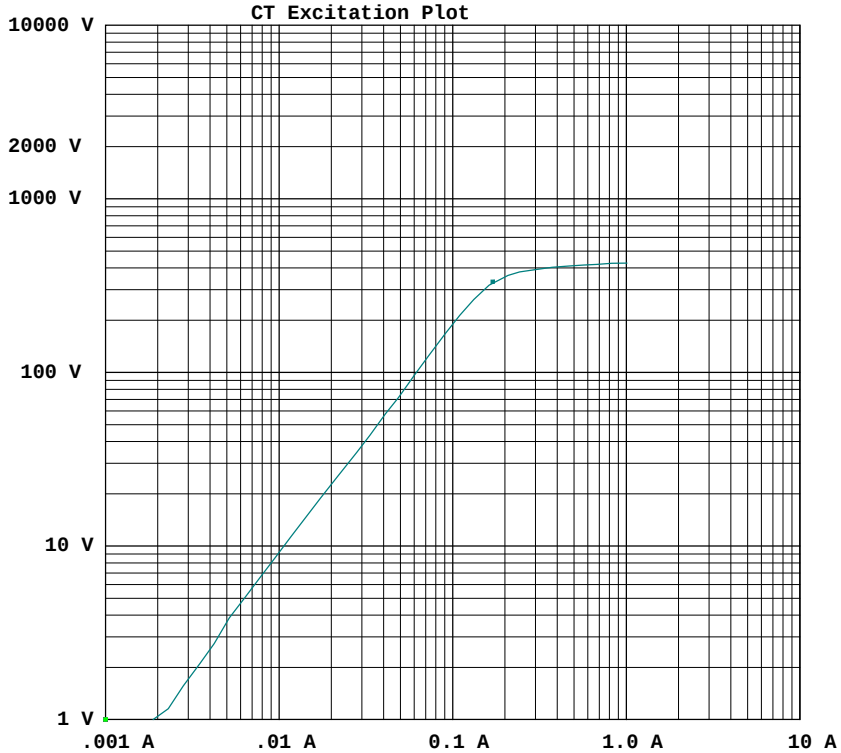

1000V INSULATION RES TEST RESULTS

VOLTAGE: 997.5 V
CURRENT: 0.00 MICRO-AMPS
RESISTANCE: >1,000 MEG-OHMS

BURDEN TEST RESULTS

5 AMP BURDEN TEST

MEASURED CURRENT: 0.045 A
MEASURED VOLTAGE: 57.852 V, 22.66 DEG
IMPEDANCE (Z): 40.408 OHMS
BURDEN: 0.000 VA
POWER FACTOR: 0.92

Test Notepad

EZCT-2000 Software Version: 1.35
www.vanguard-instruments.com

Vanguard Instruments Company, Inc.
1520 S. Hellman Avenue, Ontario, CA 91761, USA Phone: 909.923.9390 FAX: 909.923.9391
www.vanguard-instruments.com

FILENAME: CT 3Z PHASE B ALPHA BKR.tes
DATE: 05/09/13 09:38:58
COMPANY: HOTLINE CONSTRUCTION
STATION: MOJAVE PP ALPHA SS
CIRCUIT: CT 3Z PHASE B ALPHA

MFR: SIEMENS
MODEL:
SN:
OPERATOR: RG/BR
COMMENTS: BKR SN: 30111795-1

SUMMARY REPORT
KNEE TYPE: IEEE 30 Deg
FREQUENCY: 60 Hz

Test	Tap	IEEE30	IEEE45	IEC 10/50	NP-Ratio	M-Ratio	% Error	Phase Angle	Winding Res
1 [redacted]	X1-X2	175.88	146.20	188.40	800/5.0	159.902	0.0613 %	0.02°	206.40 m-ohms

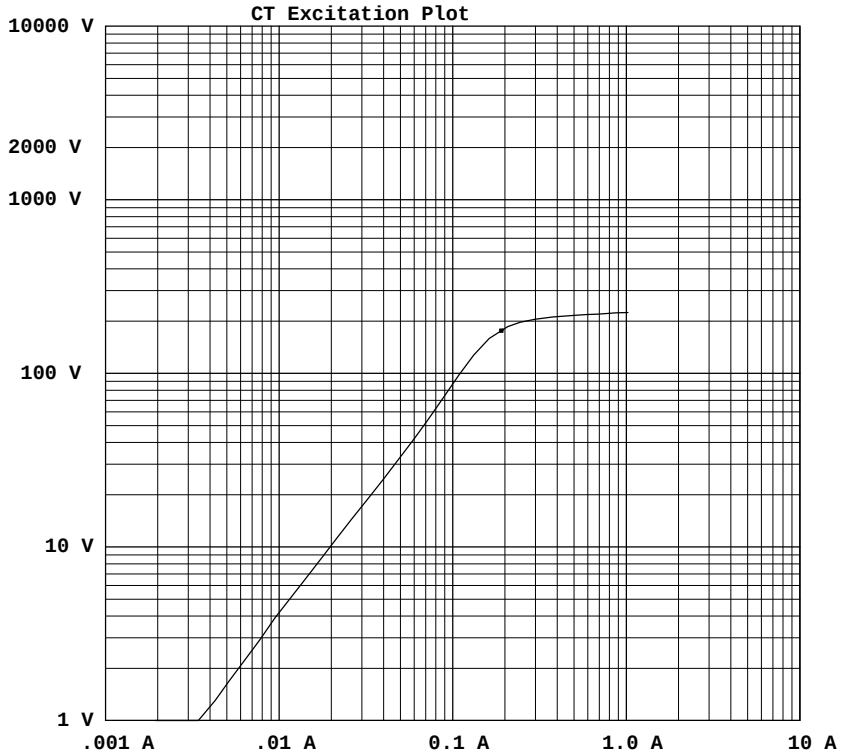

1000V INSULATION RES TEST RESULTS

VOLTAGE: 993.4 V
CURRENT: 0.10 MICRO-AMPS
RESISTANCE: >1,000 MEG-OHMS

BURDEN TEST RESULTS

5 AMP BURDEN TEST

MEASURED CURRENT: 0.079 A
MEASURED VOLTAGE: 56.754 V, 34.83 DEG
IMPEDANCE (Z): 63.041 OHMS
BURDEN: 0.000 VA
POWER FACTOR: 0.82

Test Notepad

Vanguard Instruments Company, Inc.
1520 S. Hellman Avenue, Ontario, CA 91761, USA Phone: 909.923.9390 FAX: 909.923.9391
www.vanguard-instruments.com

FILENAME: CT 4X PHASE B ALPHA BKR.tes
DATE: 05/09/13 09:51:01
COMPANY: HOTLINE CONSTRUCTION
STATION: MOJAVE PP ALPHA SS
CIRCUIT: CT 4X PHASE B ALPHA

MFR: SEIMENS
MODEL:
SN:
OPERATOR: RG/RB
COMMENTS: BRK SN: 30111795-1

SUMMARY REPORT
KNEE TYPE: IEEE 30 Deg
FREQUENCY: 60 Hz

Test	Tap	IEEE30	IEEE45	IEC 10/50	NP-Ratio	M-Ratio	% Error	Phase Angle	Winding Res
1	X1-X2	0.00	0.00	0.00	200/5.0	40.091	0.2285 %	-0.16°	N/A
2	X1-X3	0.00	0.00	0.00	300/5.0	60.050	0.0837 %	-0.04°	N/A
3	X1-X4	0.00	0.00	0.00	800/5.0	159.973	0.0169 %	0.02°	N/A
4	X1-X5	345.80	278.96	358.88	1200/5.0	239.874	0.0525 %	0.94°	464.64 m-ohms
5	X2-X3	0.00	0.00	0.00	100/5.0	20.145	0.7230 %	-0.54°	N/A
6	X2-X4	0.00	0.00	0.00	600/5.0	120.067	0.0561 %	0.06°	N/A
7	X2-X5	0.00	0.00	0.00	1000/5.0	200.071	0.0353 %	0.02°	N/A
8	X3-X4	0.00	0.00	0.00	500/5.0	100.072	0.0715 %	-0.02°	N/A
9	X3-X5	0.00	0.00	0.00	900/5.0	180.161	0.0897 %	0.00°	N/A
10	X4-X5	0.00	0.00	0.00	400/5.0	80.055	0.0690 %	0.12°	N/A

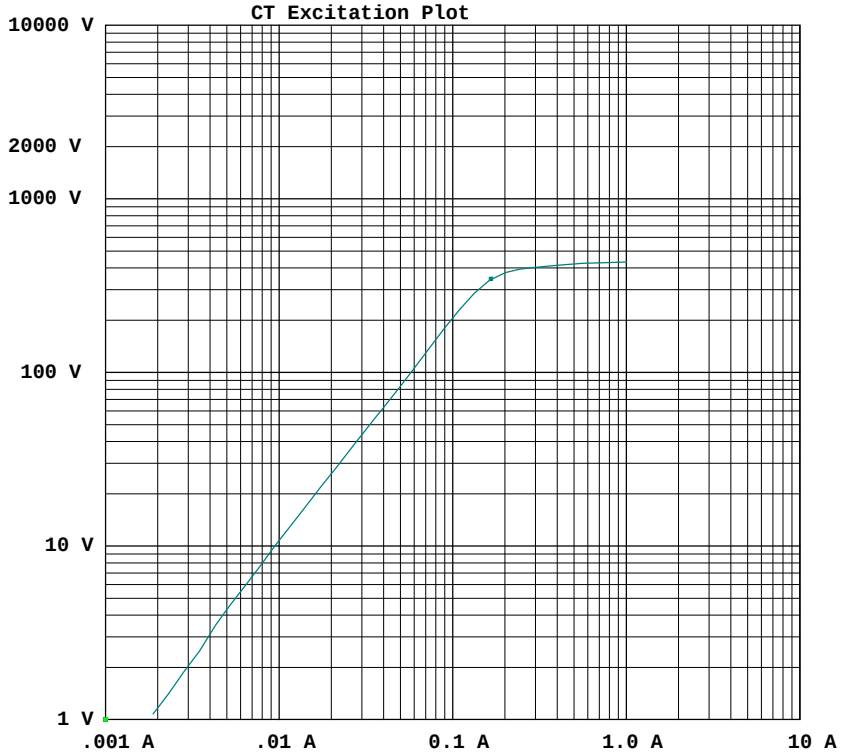

1000V INSULATION RES TEST RESULTS

VOLTAGE: 999.1 V
CURRENT: 0.00 MICRO-AMPS
RESISTANCE: >1,000 MEG-OHMS

BURDEN TEST RESULTS

5 AMP BURDEN TEST

MEASURED CURRENT: 0.042 A
MEASURED VOLTAGE: 58.030 V, 21.41 DEG
IMPEDANCE (Z): 5.419 OHMS
BURDEN: 0.000 VA
POWER FACTOR: 0.93

Test Notepad

EZCT-2000 Software Version: 1.35
www.vanguard-instruments.com

Vanguard Instruments Company, Inc.
1520 S. Hellman Avenue, Ontario, CA 91761, USA Phone: 909.923.9390 FAX: 909.923.9391
www.vanguard-instruments.com

FILENAME: CT 4Y PHASE B ALPHA BKR.tes
DATE: 05/09/13 10:01:36
COMPANY: HOTLINE CONSTRUCTION
STATION: MOJAVE PP ALPHA SS
CIRCUIT: CT 4Y PHASE B ALPHA

MFR: SEIMENS
MODEL:
SN:
OPERATOR: RG/RB
COMMENTS: BRK SN: 30111795-1

SUMMARY REPORT
KNEE TYPE: IEEE 30 Deg
FREQUENCY: 60 Hz

Test	Tap	IEEE30	IEEE45	IEC 10/50	NP-Ratio	M-Ratio	% Error	Phase Angle	Winding Res
1	X1-X2	0.00	0.00	0.00	200/5.0	40.127	0.3185 %	-0.32°	N/A
2	X1-X3	0.00	0.00	0.00	300/5.0	60.091	0.1510 %	-0.06°	N/A
3	X1-X4	0.00	0.00	0.00	800/5.0	160.036	0.0225 %	0.00°	N/A
4	X1-X5	352.28	280.52	358.40	1200/5.0	239.937	0.0264 %	0.48°	464.39 m-ohms
5	X2-X3	0.00	0.00	0.00	100/5.0	20.168	0.8395 %	-0.28°	N/A
6	X2-X4	0.00	0.00	0.00	600/5.0	120.087	0.0727 %	-0.08°	N/A
7	X2-X5	0.00	0.00	0.00	1000/5.0	200.016	0.0082 %	0.08°	N/A
8	X3-X4	0.00	0.00	0.00	500/5.0	100.072	0.0723 %	0.08°	N/A
9	X3-X5	0.00	0.00	0.00	900/5.0	180.062	0.0342 %	-0.04°	N/A
10	X4-X5	0.00	0.00	0.00	400/5.0	80.059	0.0734 %	0.12°	N/A

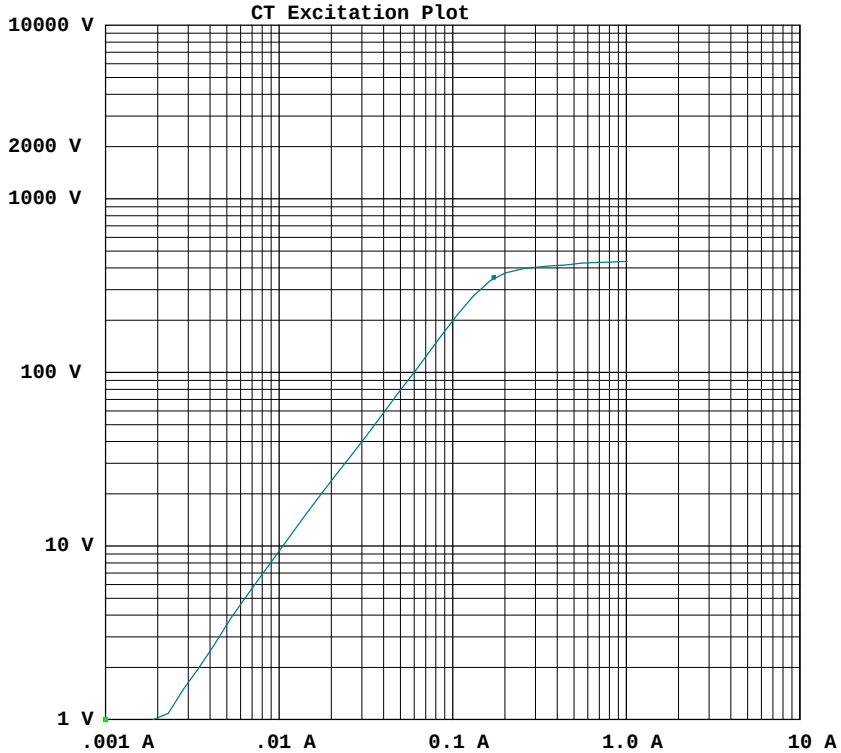

1000V INSULATION RES TEST RESULTS

VOLTAGE: 996.8 V
CURRENT: 0.00 MICRO-AMPS
RESISTANCE: >1,000 MEG-OHMS

BURDEN TEST RESULTS

5 AMP BURDEN TEST

MEASURED CURRENT: 0.043 A
MEASURED VOLTAGE: 57.044 V, 21.00 DEG
IMPEDANCE (Z): 15.888 OHMS
BURDEN: 0.000 VA
POWER FACTOR: 0.93

Test Notepad

EZCT-2000 Software Version: 1.35
www.vanguard-instruments.com

Vanguard Instruments Company, Inc.
1520 S. Hellman Avenue, Ontario, CA 91761, USA Phone: 909.923.9390 FAX: 909.923.9391
www.vanguard-instruments.com

FILENAME: CT 4Z PHASE B ALPHA BKR.tes
DATE: 05/09/13 11:55:52
COMPANY: HOTLINE CONSTRUCTION
STATION: MOJAVE PP ALPHA SS
CIRCUIT: CT 4Z PHASE B ALPHA

MFR: SIEMENS
MODEL:
SN:
OPERATOR: RG/MEK
COMMENTS: BKR SN: 30111795-1

SUMMARY REPORT
KNEE TYPE: IEEE 30 Deg
FREQUENCY: 60 Hz

Test	Tap	IEEE30	IEEE45	IEC 10/50	NP-Ratio	M-Ratio	% Error	Phase Angle	Winding Res
1 [redacted]	X1-X2	179.76	150.60	191.52	800/5.0	160.034	0.0215 %	0.12°	215.52 m-ohms

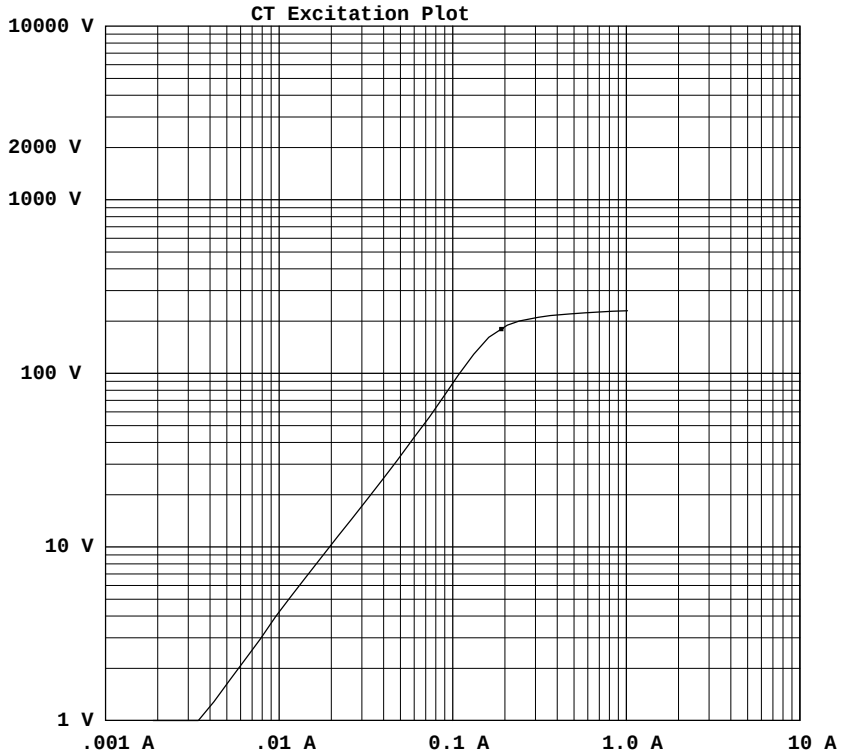

1000V INSULATION RES TEST RESULTS

VOLTAGE: 996.1 V
CURRENT: 0.00 MICRO-AMPS
RESISTANCE: >1,000 MEG-OHMS

BURDEN TEST RESULTS

5 AMP BURDEN TEST

MEASURED CURRENT: 0.081 A
MEASURED VOLTAGE: 58.997 V, 34.92 DEG
IMPEDANCE (Z): 7.467 OHMS
BURDEN: 0.000 VA
POWER FACTOR: 0.82

Test Notepad

Vanguard Instruments Company, Inc.
1520 S. Hellman Avenue, Ontario, CA 91761, USA Phone: 909.923.9390 FAX: 909.923.9391
www.vanguard-instruments.com

FILENAME: CT 5X PHASE C ALPHA BKR.tes
DATE: 05/09/13 12:13:24
COMPANY: HOTLINE CONSTRUCTION
STATION: MOJAVE PP ALPHA SS
CIRCUIT: CT 5X PHASE C ALPHA

MFR: SEIMENS
MODEL:
SN:
OPERATOR: RG/MEK
COMMENTS: BRK SN: 30111795-1

SUMMARY REPORT
KNEE TYPE: IEEE 30 Deg
FREQUENCY: 60 Hz

Test	Tap	IEEE30	IEEE45	IEC 10/50	NP-Ratio	M-Ratio	% Error	Phase Angle	Winding Res
1	X1-X2	0.00	0.00	0.00	200/5.0	40.107	0.2673 %	-0.28°	N/A
2	X1-X3	0.00	0.00	0.00	300/5.0	60.097	0.1617 %	0.00°	N/A
3	X1-X4	0.00	0.00	0.00	800/5.0	160.051	0.0321 %	0.00°	N/A
4	X1-X5	341.40	279.64	368.72	1200/5.0	239.782	0.0907 %	-2.36°	477.14 m-ohms
5	X2-X3	0.00	0.00	0.00	100/5.0	20.162	0.8120 %	-0.42°	N/A
6	X2-X4	0.00	0.00	0.00	600/5.0	120.028	0.0233 %	-0.02°	N/A
7	X2-X5	0.00	0.00	0.00	1000/5.0	199.982	0.0088 %	0.04°	N/A
8	X3-X4	0.00	0.00	0.00	500/5.0	100.016	0.0161 %	0.08°	N/A
9	X3-X5	0.00	0.00	0.00	900/5.0	180.056	0.0312 %	-0.02°	N/A
10	X4-X5	0.00	0.00	0.00	400/5.0	80.053	0.0666 %	0.12°	N/A

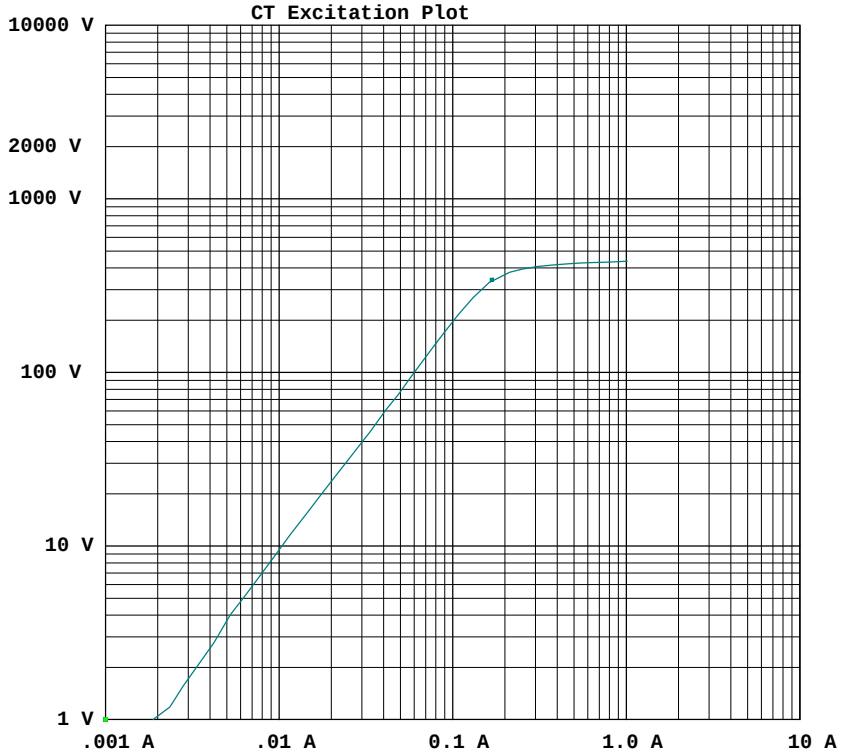

1000V INSULATION RES TEST RESULTS

VOLTAGE: 994.0 V
CURRENT: 0.00 MICRO-AMPS
RESISTANCE: >1,000 MEG-OHMS

BURDEN TEST RESULTS

5 AMP BURDEN TEST

MEASURED CURRENT: 0.045 A
MEASURED VOLTAGE: 59.358 V, 22.07 DEG
IMPEDANCE (Z): 8.348 OHMS
BURDEN: 0.000 VA
POWER FACTOR: 0.93

Test Notepad

EZCT-2000 Software Version: 1.35
www.vanguard-instruments.com

Vanguard Instruments Company, Inc.
1520 S. Hellman Avenue, Ontario, CA 91761, USA Phone: 909.923.9390 FAX: 909.923.9391
www.vanguard-instruments.com

FILENAME: CT 5Y PHASE C ALPHA BKR.tes
DATE: 05/09/13 12:27:38
COMPANY: HOTLINE CONSTRUCTION
STATION: MOJAVE PP ALPHA SS
CIRCUIT: CT 5Y PHASE C ALPHA

MFR: SEIMENS
MODEL:
SN:
OPERATOR: RG
COMMENTS: BRK SN: 30111795-1

SUMMARY REPORT
KNEE TYPE: IEEE 30 Deg
FREQUENCY: 60 Hz

Test	Tap	IEEE30	IEEE45	IEC 10/50	NP-Ratio	M-Ratio	% Error	Phase Angle	Winding Res
1	X1-X2	0.00	0.00	0.00	200/5.0	40.103	0.2582 %	-0.14°	N/A
2	X1-X3	0.00	0.00	0.00	300/5.0	60.085	0.1423 %	-0.08°	N/A
3	X1-X4	0.00	0.00	0.00	800/5.0	160.097	0.0604 %	0.02°	N/A
4	X1-X5	351.20	290.56	361.56	1200/5.0	240.364	0.1518 %	-0.02°	480.91 m-ohms
5	X2-X3	0.00	0.00	0.00	100/5.0	20.173	0.8640 %	-0.30°	N/A
6	X2-X4	0.00	0.00	0.00	600/5.0	120.039	0.0322 %	0.02°	N/A
7	X2-X5	0.00	0.00	0.00	1000/5.0	200.061	0.0303 %	0.00°	N/A
8	X3-X4	0.00	0.00	0.00	500/5.0	100.075	0.0752 %	-0.02°	N/A
9	X3-X5	0.00	0.00	0.00	900/5.0	179.989	0.0059 %	0.04°	N/A
10	X4-X5	0.00	0.00	0.00	400/5.0	80.041	0.0514 %	0.32°	N/A

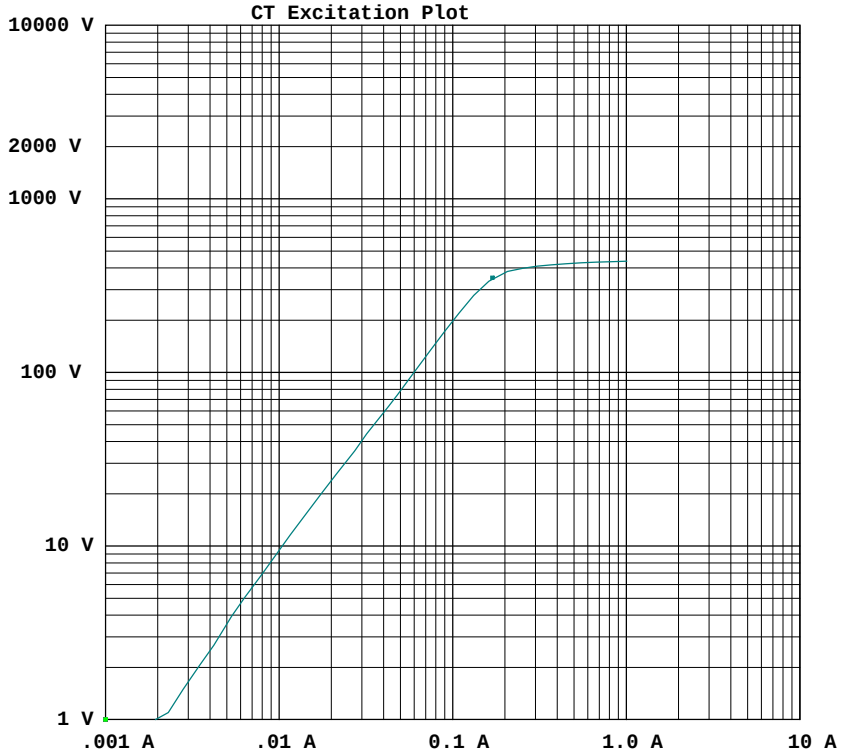

1000V INSULATION RES TEST RESULTS

VOLTAGE: 995.7 V
CURRENT: 0.00 MICRO-AMPS
RESISTANCE: >1,000 MEG-OHMS

BURDEN TEST RESULTS

5 AMP BURDEN TEST

MEASURED CURRENT: 0.044 A
MEASURED VOLTAGE: 58.985 V, 20.68 DEG
IMPEDANCE (Z): 29.840 OHMS
BURDEN: 0.000 VA
POWER FACTOR: 0.94

Test Notepad

Vanguard Instruments Company, Inc.
1520 S. Hellman Avenue, Ontario, CA 91761, USA Phone: 909.923.9390 FAX: 909.923.9391
www.vanguard-instruments.com

FILENAME: CT 5Z PHASE C ALPHA BKR.tes
DATE: 05/09/13 12:41:50
COMPANY: HOTLINE CONSTRUCTION
STATION: MOJAVE PP ALPHA SS
CIRCUIT: CT 5Z PHASE C ALPHA

MFR: SIEMENS
MODEL:
SN:
OPERATOR: RG
COMMENTS: BKR SN: 30111795-1

SUMMARY REPORT
KNEE TYPE: IEEE 30 Deg
FREQUENCY: 60 Hz

Test	Tap	IEEE30	IEEE45	IEC 10/50	NP-Ratio	M-Ratio	% Error	Phase Angle	Winding Res
1 [redacted]	X1-X2	182.64	150.96	191.60	800/5.0	160.115	0.0721 %	1.30°	215.00 m-ohms

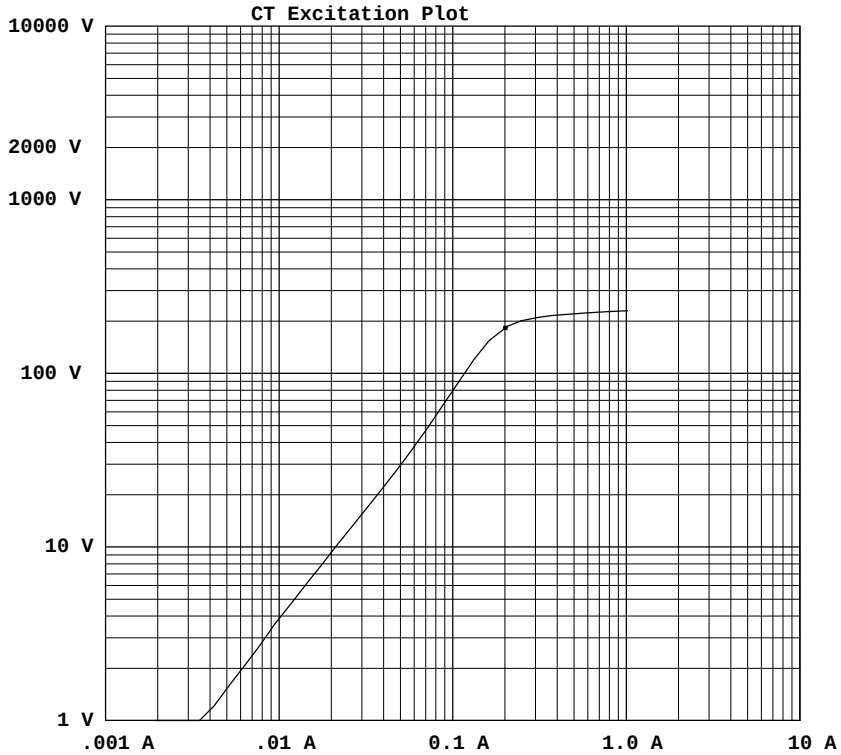

1000V INSULATION RES TEST RESULTS

VOLTAGE: 996.0 V
CURRENT: 0.00 MICRO-AMPS
RESISTANCE: >1,000 MEG-OHMS

BURDEN TEST RESULTS

5 AMP BURDEN TEST

MEASURED CURRENT: 0.088 A
MEASURED VOLTAGE: 59.084 V, 36.35 DEG
IMPEDANCE (Z): 16.045 OHMS
BURDEN: 0.000 VA
POWER FACTOR: 0.80

Test Notepad

Vanguard Instruments Company, Inc.
1520 S. Hellman Avenue, Ontario, CA 91761, USA Phone: 909.923.9390 FAX: 909.923.9391
www.vanguard-instruments.com

FILENAME: CT 6X PHASE C ALPHA BKR.tes
DATE: 05/09/13 13:03:04
COMPANY: HOTLINE CONSTRUCTION
STATION: MOJAVE PP ALPHA SS
CIRCUIT: CT 6X PHASE C ALPHA

MFR: SEIMENS
MODEL:
SN:
OPERATOR: RG
COMMENTS: BRK SN: 30111795-1

SUMMARY REPORT
KNEE TYPE: IEEE 30 Deg
FREQUENCY: 60 Hz

Test	Tap	IEEE30	IEEE45	IEC 10/50	NP-Ratio	M-Ratio	% Error	Phase Angle	Winding Res
1	X1-X2	0.00	0.00	0.00	200/5.0	40.169	0.4235 %	-0.14°	N/A
2	X1-X3	0.00	0.00	0.00	300/5.0	60.098	0.1632 %	0.04°	N/A
3	X1-X4	0.00	0.00	0.00	800/5.0	160.141	0.0882 %	0.00°	N/A
4	X1-X5	356.72	294.00	360.32	1200/5.0	239.952	0.0199 %	-0.30°	491.06 m-ohms
5	X2-X3	0.00	0.00	0.00	100/5.0	20.178	0.8910 %	-0.32°	N/A
6	X2-X4	0.00	0.00	0.00	600/5.0	120.080	0.0665 %	-0.04°	N/A
7	X2-X5	0.00	0.00	0.00	1000/5.0	200.095	0.0473 %	-0.04°	N/A
8	X3-X4	0.00	0.00	0.00	500/5.0	100.014	0.0144 %	0.06°	N/A
9	X3-X5	0.00	0.00	0.00	900/5.0	179.997	0.0019 %	0.12°	N/A
10	X4-X5	0.00	0.00	0.00	400/5.0	80.099	0.1238 %	-0.24°	N/A

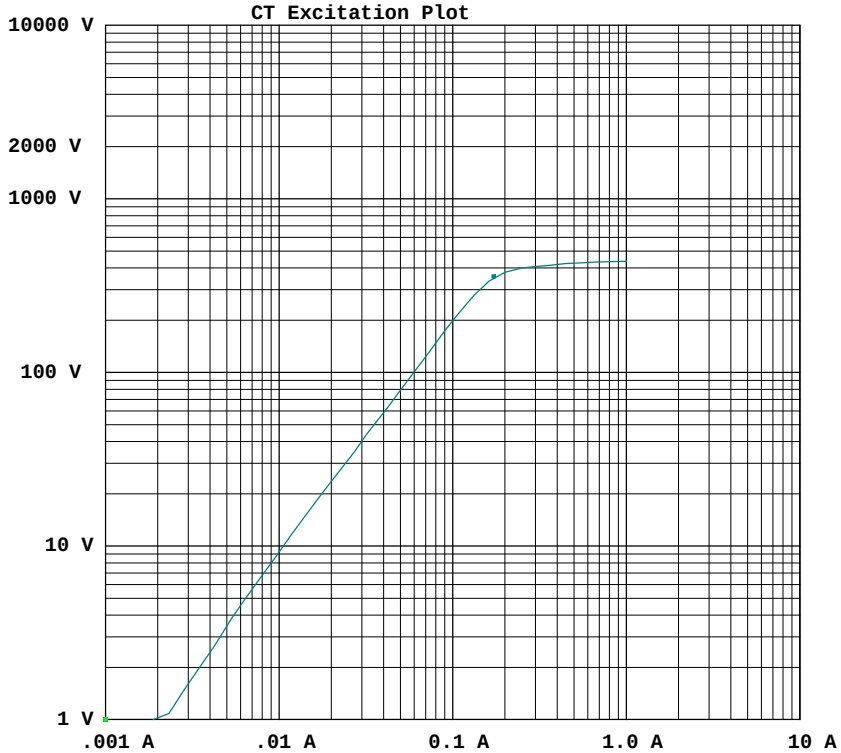

1000V INSULATION RES TEST RESULTS

VOLTAGE: 990.2 V
CURRENT: 0.00 MICRO-AMPS
RESISTANCE: >1,000 MEG-OHMS

BURDEN TEST RESULTS

5 AMP BURDEN TEST

MEASURED CURRENT: 0.043 A
MEASURED VOLTAGE: 58.431 V, 21.63 DEG
IMPEDANCE (Z): 48.138 OHMS
BURDEN: 0.000 VA
POWER FACTOR: 0.93

Test Notepad

EZCT-2000 Software Version: 1.35
www.vanguard-instruments.com

Vanguard Instruments Company, Inc.
1520 S. Hellman Avenue, Ontario, CA 91761, USA Phone: 909.923.9390 FAX: 909.923.9391
www.vanguard-instruments.com

FILENAME: CT 6Y PHASE C ALPHA BKR.tes
DATE: 05/09/13 13:26:08
COMPANY: HOTLINE CONSTRUCTION
STATION: MOJAVE PP ALPHA SS
CIRCUIT: CT 6Y PHASE C ALPHA

MFR: SEIMENS
MODEL:
SN:
OPERATOR: RG/MEK
COMMENTS: BRK SN: 30111795-1

SUMMARY REPORT
KNEE TYPE: IEEE 30 Deg
FREQUENCY: 60 Hz

Test	Tap	IEEE30	IEEE45	IEC 10/50	NP-Ratio	M-Ratio	% Error	Phase Angle	Winding Res
1	X1-X2	0.00	0.00	0.00	200/5.0	40.113	0.2835 %	-0.36°	N/A
2	X1-X3	0.00	0.00	0.00	300/5.0	60.118	0.1973 %	-0.16°	N/A
3	X1-X4	0.00	0.00	0.00	800/5.0	160.051	0.0321 %	0.02°	N/A
4	X1-X5	343.88	282.08	359.08	1200/5.0	239.732	0.1116 %	-0.40°	487.88 m-ohms
5	X2-X3	0.00	0.00	0.00	100/5.0	20.187	0.9330 %	-0.42°	N/A
6	X2-X4	0.00	0.00	0.00	600/5.0	120.021	0.0176 %	-0.02°	N/A
7	X2-X5	0.00	0.00	0.00	1000/5.0	200.178	0.0889 %	0.00°	N/A
8	X3-X4	0.00	0.00	0.00	500/5.0	100.028	0.0282 %	0.20°	N/A
9	X3-X5	0.00	0.00	0.00	900/5.0	180.106	0.0587 %	0.00°	N/A
10	X4-X5	0.00	0.00	0.00	400/5.0	80.054	0.0677 %	0.28°	N/A

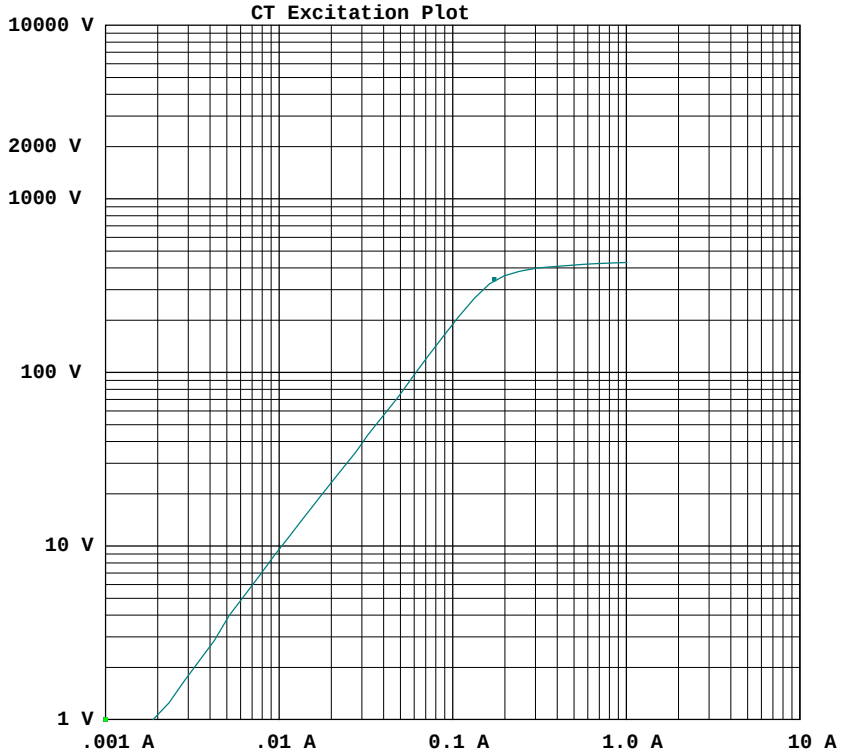

1000V INSULATION RES TEST RESULTS

VOLTAGE: 998.4 V
CURRENT: 0.00 MICRO-AMPS
RESISTANCE: >1,000 MEG-OHMS

BURDEN TEST RESULTS

5 AMP BURDEN TEST

MEASURED CURRENT: 0.045 A
MEASURED VOLTAGE: 58.271 V, 22.11 DEG
IMPEDANCE (Z): 49.734 OHMS
BURDEN: 0.000 VA
POWER FACTOR: 0.93

Test Notepad

EZCT-2000 Software Version: 1.35
www.vanguard-instruments.com

Vanguard Instruments Company, Inc.
1520 S. Hellman Avenue, Ontario, CA 91761, USA Phone: 909.923.9390 FAX: 909.923.9391
www.vanguard-instruments.com

FILENAME: CT 6Z PHASE C ALPHA BKR.tes
DATE: 05/09/13 13:32:15
COMPANY: HOTLINE CONSTRUCTION
STATION: MOJAVE PP ALPHA SS
CIRCUIT: CT 6Z PHASE C ALPHA

MFR: SIEMENS
MODEL:
SN:
OPERATOR: RG/MEK
COMMENTS: BKR SN: 30111795-1

SUMMARY REPORT
KNEE TYPE: IEEE 30 Deg
FREQUENCY: 60 Hz

Test	Tap	IEEE30	IEEE45	IEC 10/50	NP-Ratio	M-Ratio	% Error	Phase Angle	Winding Res
1 [redacted]	X1-X2	178.52	149.20	189.44	800/5.0	159.893	0.0671 %	0.02°	221.07 m-ohms

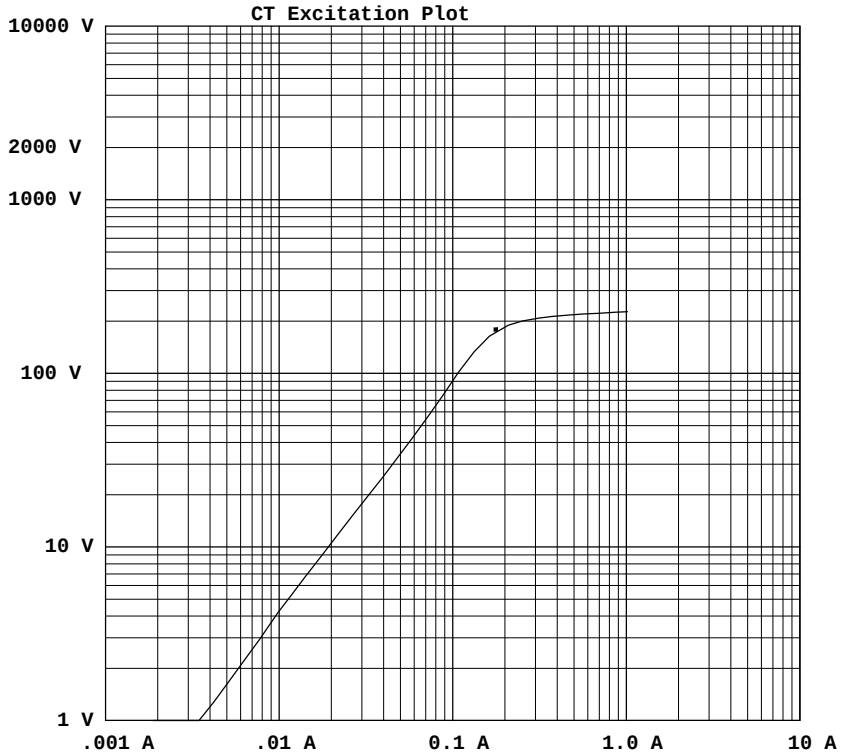

1000V INSULATION RES TEST RESULTS

VOLTAGE: 993.2 V
CURRENT: 0.00 MICRO-AMPS
RESISTANCE: >1,000 MEG-OHMS

BURDEN TEST RESULTS

5 AMP BURDEN TEST

MEASURED CURRENT: 0.078 A
MEASURED VOLTAGE: 58.062 V, 35.78 DEG
IMPEDANCE (Z): 23.492 OHMS
BURDEN: 0.000 VA
POWER FACTOR: 0.81

Test Notepad

Electric Power Systems Electrical Testing and Engineering

Phoenix, AZ Office

Phone (480) 633-1490 Fax (480) 633-7092

FULL MEMBER

SF6 CIRCUIT BREAKER TEST (Page 1 of 2)

CUSTOMER: Hot Line	LOCATION: Hinkley ,CA	JOB NO.: A13024
		DATE: 5/10/13
		TESTED BY: MK

EQUIPMENT: SF6 Spring Operated Breaker	TEST EQUIPMENT USED: Megger, Ductor, Timing, Purity&Moisture meter,
CIRCUIT DESIGNATION: ALPHA	

EQUIPMENT DATA

MANUFACTURER: Siemens	MODEL: SPS2-245-40-2	SERIAL NO:30111795-1	VOLTAGE RATING: 245KV
OPERATING VOLTAGE: 235kv	INTERRUPTING RATING: 40KA	AMP RATING: 1200	CLOSE COIL RATING: 90-140VDC
TRIP COIL RATING: 70-140VDC	MOTOR RATING: 120VAC		

MECHANICAL CHECKS

CHECK POINT	COND	NOTES	CHECK POINT	COND	NOTES
PHYSICAL CONDITION	G		INTERLOCKS	G	
HEATER CIRCUIT OPERATION	G		CONTROL WIRING	N/G	
BOLTED TO FOUNDATION	G		TIGHTNESS OF CONNECTIONS	G	
AUXILIARY CONTACTS	G		TRIP FREE & ANNTI-PUMP SCHEMES	G	
GROUNDING	G		BREAKER TRIP FROM RELAYS	G	
LUBRICATION OF CURRENT PARTS	G		COUNTER AS FOUND/AS LEFT 8 / 29	G	

PNEUMATIC MECHANISM

AIR COMPRESSOR OIL LEVEL: N/A	LEAK RATE N/A PSIG/HR N/A	GOVERNOR SWITCH OPENS AT PSIG; N/A CLOSES AT PSIG N/A
LOW PRESSURE ALARM OPENS AT PSIG N/A CLOSES AT PSIG		LOW PRESSURE LOCKOUT OPENS AT PSIG N/A CLOSES AT PSIG N/A

SF6 PRESSURE SWITCH (TEMP-COMPENSATED)

ALARM SWITCH CLOSES AT: 75 PSIG ALARM AT: 73 °F	LOCKOUT SWITCH OPENS AT: 71 PSIG CUTOUT AT: 73 °F
SF6 PRESSURE AS LEFT: 87 PSIG AMB TEMPRATURE : 68 °F	AUXILIARY SWITCH OPERATION:
CHECK FOR LOOSE HARDWARE:	MOISTURE CONTENT: 67.99PPM, PURITY LEVEL: 99.6%, DEW POINT-45.4

All PASS per pg. 251

SF6 CIRCUIT BREAKER TEST (Page 2 of 2)

Electric Power Systems Electrical Testing and Engineering

Phoenix, AZ Office
Phone (480) 633-1490 Fax (480) 633-7092

FULL MEMBER

ELECTRICAL TESTS			
TIMING TESTS			
TRIP COIL ENERGIZED: MILLISEC. SEE TIMING RESULTS		CLOSE COIL ENERGIZED MILLISEC. SEE TIMING RESULTS	
	PHASE A	PHASE B	PHASE C
CHECK POLE UNIT INDICATOR TO BE WITHIN TOLERANCE IN CLOSED POSITION	GOOD	GOOD	GOOD
CONTACT PENETRATION (REQ. ONLY) IF 3.A.3 IS OUT OF TOLERANCE	N/A	N/A	N/A
DUCTOR TEST: CONTACT RESISTANCE IN MICRO-OHMS (100 AMPS)	87.9 micro ohms	82.5 micro ohms	77.2 micro ohms
MEGGER TEST: @ 10KV: RESISTANCE IN OHMS	See below	See below	See below

NOTES

MEGGER TEST: @10KV: RESISTANCE IN OHMS

OPEN	CLOSED
A: 15.8T	A-G: 3.74T
B: 11.9T	B-G: 3.04T
C: 19.0T	C-G: 4.23T
	A-B: 6.16T
	B-C: 4.42T
	C-A: 8.72T

ELECTRIC POWER SYSTEMS

ELECTRICAL TESTING & ENGINEERING

HV CIRCUIT SWITCHES

CUSTOMER DATA					
Customer:	Hotline Construction	Location:	Mojave Solar	Job Number:	A13024
Equipment:	245 kV Gang Switch	Circuit Designation:	Alpha North	Date:	18MAY13
Test Equipment:	PHX0045 Ductor (7FEB13), PHX0044 DC HiPot (30AUG13)			Tested By:	RDB

DISCONNECT DATA			
Manufacturer: Coelme	Style: SLOB-E	Type: N/A	Serial Number: C61590 1/3
Voltage Rating: 245 kV		Phase: 3	Bil: 900kV
Current Rating: 1200A	Fuses: N/A		Mfg Date: 2011

OPERATOR DATA			
Manufacturer: Coelme	Style: N/A	Type: N/A	Serial #: N/A
Mfg Date: 2012			Voltage Rating: N/A
Control Voltage: 125 VDC	Fuses:N/A		Current Rating: N/A

ELECTRICAL TESTS					
CONTACT RESISTANCE in Micro-Ohms @ 100 AMPS AT Switch PADS					
AØ:	90.1	BØ:	90.5	CØ:	87.7
CONTACT RESISTANCE in Micro-Ohms @ 100 AMPS AT Cable before crimp					
AØ:	123.7	BØ:	100.3	CØ:	103.4

INSULATION RESISTANCE					
Acceptance Criterion:	100 Giga-Ohms per NETA				
Test Voltage: **40kv**					
AØ- GND:	400 GΩ	BØ-GND:	400 GΩ	CØ-GND:	400 GΩ

CONTROL CHECKS			
Indicating Lights	N/A	Control Switch Functions	N/A
Functional Test	N/A	Fuses Correct Size	N/A
Shunt Trip Checked	N/A	Drive Coupling Pin	N/A
Control Cams Set	N/A	Indicating Cams Set	N/A

REMARKS: Motor control wiring not yet installed. No designation for switches at this time.
Alpha switch cable resistance slightly elevated. Recommend checking torque on connections.
All pass per NETA ATS 2009. all within 50% of lowest value on ductor readings**.**

ELECTRIC POWER SYSTEMS

ELECTRICAL TESTING & ENGINEERING

HV CIRCUIT SWITCHES

CUSTOMER DATA					
Customer:	Hotline Construction	Location:	Mojave Solar	Job Number:	A13024
Equipment:	245 kV Gang Switch	Circuit Designation:	Alpha South	Date:	18MAY13
Test Equipment:	PHX0045 Ductor (7FEB13), PHX0044 DC HiPot (30AUG13)			Tested By:	RDB

DISCONNECT DATA			
Manufacturer: Coelme	Style: SLOB-E	Type: N/A	Serial Number: N/A
Voltage Rating: 245 kV		Phase: 3	Bil: 900kV
Current Rating: 1200A	Fuses: N/A		Mfg Date: 2011

OPERATOR DATA			
Manufacturer: Coelme	Style: N/A	Type: N/A	Serial #: N/A
Mfg Date: 2012			Voltage Rating: N/A
Control Voltage: 125 VDC	Fuses:N/A		Current Rating: N/A

ELECTRICAL TESTS					
CONTACT RESISTANCE in Micro-Ohms @ 100 AMPS AT Switch PADS					
AØ:	90.1	BØ:	90.5	CØ:	87.7
CONTACT RESISTANCE in Micro-Ohms @ 100 AMPS AT Cable before crimp					
AØ:	123.7	BØ:	100.3	CØ:	103.4

INSULATION RESISTANCE					
Acceptance Criterion:	100 Giga-Ohms per NETA				
Test Voltage: **40kv**					
AØ- GND:	400 GΩ	BØ-GND:	400 GΩ	CØ-GND:	400 GΩ

CONTROL CHECKS			
Indicating Lights	N/A	Control Switch Functions	N/A
Functional Test	N/A	Fuses Correct Size	N/A
Shunt Trip Checked	N/A	Drive Coupling Pin	N/A
Control Cams Set	N/A	Indicating Cams Set	N/A

REMARKS: Motor control wiring not yet installed. No designation for switches at this time.
Alpha switch cable resistance slightly elevated. Recommend checking torque on connections.
All pass per NETA ATS 2009. all within 50% of lowest value on ductor readings

T12171704_CC

Report Source **CouplingCapacitor**

Session Test Date 5/10/2013 11:36:11 AM

Nameplate - Coupling Capacitor Potential Device

Company	EPS	**Serial Number**	T12171704
Location	VE PP ALPHA SS	**Special ID**	PHASE A 1
Division	PHX	**Circuit Designation**	
Manufacturer	Trench Electric	**Weight**	875 LB
Year Manufactured	2013	**Type**	TEMF
Mfr Location		**BIL**	242 kV
Impedance	*	**Amps**	*
kV	239	**Max. Rated BIL**	900
Line to Ground	138 kV		
C2(CAR-POT)	39238.000	**%PF**	*
C1-1(B1-POT)	7544.760	**%PF**	*
C2 ser C1-1	6328.000	**%PF**	*
C1-2(B2-B1)	6226.000	**%PF**	*
Primary Magnetic Unit			
Volts	138000.000	**Amps**	*
Secondary Magnetic Unit			
Volts	120	**Amps**	*
Cap Arrangement	Oil-Filled Base, Two Porcelains		

Test Date	5/10/2013	**Test Time**	11:36 AM	**Weather**	Sunny
Air Temperature	90°C	**Tank Temperature**	90°C	**Rel. Humidity**	*
Tested By	RG	**Work Order#**		**Last Test Date**	
Checked By		**Test Set Type**	M4000	**Retest Date**	
Checked Date		**Set Top S/N**	031120882	**Reason**	ACCEPTANCE
Last Sheet#		**Set Bottom S/N**		**Travel Time**	
P.O.#		**Ins. Book#**		**Duration**	
Copies		**Sheet#**		**Crew Size**	3

Session Notes

As per doble C CVT power factor limits are 0.01-0.2

Overall Tests

Measure	Insulation	Porc	Test kV	mA	Watts	% PF meas	Cap(pF)	FRANK™	Manual
C2 (CAR-POT)	C2(CAR-POT)	Bottom	1.998	147.811	0.911	0.062	39207.150		Good
C1-1 (B1 -POT)	C1-1(B1-POT)	Bottom	10.000	28.501	0.162	0.057	7560.180		Good
C1-2 (B2-B1)	C1-2(B2-B1)	Second	9.999	23.416	0.126	0.054	6211.145		Good

LSR	mA: 147.811/147.811, 1/1	Watts: 0.911/0.911, 1/1	Cap (pF): 39207.150/39207.150, 1/1
LSR	mA: 28.501/28.501, 1/1	Watts: 0.162/0.162, 1/1	Cap (pF): 7560.180/7560.180, 1/1
LSR	mA: 23.416/23.416, 1/1	Watts: 0.126/0.126, 1/1	Cap (pF): 6211.145/6211.145, 1/1

Doble Ratio Tests

				True Cap			HV Winding			LV Winding	
				*							
Connections				**1150 -**			**1916.67 -**			**-**	
				1150 -			**1916.67 -**			**-**	
DETC	**NP Volt**	**LTC**	**NP Volt**	**Cal**	**Ratio 1**	**Ratio 2**	**Ratio 3**	**Min. Lim**	**Max. Lim**	**FRANK™**	**Manual**
	138000.000		120	1150.000	*	*	*	1144.25	1155.75		

LSR	mA: */*, 1/1	Watts: */*, 1/1	Cap (pF): */*, 1/1
LSR	mA: */*, 1/1	Watts: */*, 1/1	Cap (pF): */*, 1/1
LSR	mA: */*, 1/1	Watts: */*, 1/1	Cap (pF): */*, 1/1

Turns Ratio Tests

				Serial Number			HV Winding			LV Winding	
			T12171704								
Connections				**-**			**-**			**-**	
				-			**-**			**-**	
Tap	**NP Volt**	**Tap**	**NP Volt**	**Cal**	**Ratio 1**	**Ratio 2**	**Ratio 3**	**Min. Lim**	**Max. Lim**	**FRANK™**	**Manual**
	138000.000		120	1150.000	1139.6	1138.95	*	1146.55	1153.45	Investigate	Investigate
	138000.000		72	1916.667	1897.5	1899.33	*	1910.917	1922.417	Investigate	Investigate

T12171705_CC

Report Source **CouplingCapacitor**

Session Test Date 5/10/2013 3:10:57 PM

Nameplate - Coupling Capacitor Potential Device

Company	EPS	**Serial Number**	T12171705
Location	VE PP ALPHA SS	**Special ID**	PHASE B 1
Division	PHX	**Circuit Designation**	
Manufacturer	Trench Electric	**Weight**	875 LB
Year Manufactured	2013	**Type**	TEMF
Mfr Location		**BIL**	242 kV
Impedance	*	**Amps**	*
kV	239	**Max. Rated BIL**	900
Line to Ground	138 kV		
C2(CAR-POT)	38898.000	**%PF**	*
C1-1(B1-POT)	7557.462	**%PF**	*
C2 ser C1-1	6328.000	**%PF**	*
C1-2(B2-B1)	6371.000	**%PF**	*
Primary Magnetic Unit			
Volts	138000.000	**Amps**	*
Secondary Magnetic Unit			
Volts	120	**Amps**	*
Cap Arrangement	Oil-Filled Base, Two Porcelains		

Test Date	5/10/2013	**Test Time**	3:10 PM	**Weather**	Sunny
Air Temperature	90°C	**Tank Temperature**	90°C	**Rel. Humidity**	*
Tested By	RG	**Work Order#**		**Last Test Date**	
Checked By		**Test Set Type**	M4000	**Retest Date**	
Checked Date		**Set Top S/N**	031120882	**Reason**	ACCEPTANCE
Last Sheet#		**Set Bottom S/N**		**Travel Time**	
P.O.#		**Ins. Book#**		**Duration**	
Copies		**Sheet#**		**Crew Size**	3

Session Notes

As per doble C CVT power factor limits are 0.01-0.2

Overall Tests

Measure	Insulation	Porc	Test kV	mA	Watts	% PF meas	Cap(pF)	FRANK™	Manual
C2 (CAR-POT)	C2(CAR-POT)	Bottom	1.994	146.372	0.853	0.058	38826.451		Good
C1-1 (B1 -POT)	C1-1(B1-POT)	Bottom	10.000	28.738	0.156	0.054	7622.980		Good
C1-2 (B2-B1)	C1-2(B2-B1)	Second	9.998	23.772	0.124	0.052	6305.630		Good

LSR	mA: 146.372/146.372, 1/1	Watts: 0.853/0.853, 1/1	Cap (pF): 38826.451/38826.451, 1/1
LSR	mA: 28.738/28.738, 1/1	Watts: 0.156/0.156, 1/1	Cap (pF): 7622.980/7622.980, 1/1
LSR	mA: 23.772/23.772, 1/1	Watts: 0.124/0.124, 1/1	Cap (pF): 6305.630/6305.630, 1/1

Turns Ratio Tests

			Serial Number				HV Winding			LV Winding	
			T12171705								
Connections				-			-			-	
				-			-			-	
Tap	**NP Volt**	**Tap**	**NP Volt**	**Cal**	**Ratio 1**	**Ratio 2**	**Ratio 3**	**Min. Lim**	**Max. Lim**	**FRANK™**	**Manual**
	138000.000		120	1150.000	1144.16	1145.47	*	1146.55	1153.45	Investigate	Investigate
	138000.000		72	1916.667	1906.58	1906.58	*	1910.917	1922.417	Investigate	Investigate

T12171706_CC

Report Source **CouplingCapacitor**

Session Test Date 5/13/2013 8:14:01 AM

Nameplate - Coupling Capacitor Potential Device

Company	EPS	**Serial Number**	T12171706
Location	MOJAVE PP ALPHA SS	**Special ID**	PHASE C 1
Division	PHX	**Circuit Designation**	
Manufacturer	Trench Electric	**Weight**	875 LB
Year Manufactured	2013	**Type**	TEMF
Mfr Location		**BIL**	242 kV
Impedance	*	**Amps**	*
kV	239	**Max. Rated BIL**	900
Line to Ground	138 kV		
C2(CAR-POT)	39435.000	**%PF**	*
C1-1(B1-POT)	7573.017	**%PF**	*
C2 ser C1-1	6353.000	**%PF**	*
C1-2(B2-B1)	6234.000	**%PF**	*
Primary Magnetic Unit			
Volts	138000.000	**Amps**	*
Secondary Magnetic Unit			
Volts	120	**Amps**	*
Cap Arrangement	Oil-Filled Base, Two Porcelains		

Test Date	5/13/2013	**Test Time**	8:14 AM	**Weather**	Sunny
Air Temperature	85°C	**Tank Temperature**	85°C	**Rel. Humidity**	*
Tested By	RG	**Work Order#**		**Last Test Date**	
Checked By		**Test Set Type**	M4000	**Retest Date**	
Checked Date		**Set Top S/N**	031120882	**Reason**	ACCEPTANCE
Last Sheet#		**Set Bottom S/N**		**Travel Time**	
P.O.#		**Ins. Book#**		**Duration**	
Copies		**Sheet#**		**Crew Size**	3

Session Notes

As per doble C CVT power factor limits are 0.01-0.2

Overall Tests

Measure	Insulation	Porc	Test kV	mA	Watts	% PF meas	Cap(pF)	FRANK™	Manual
C2 (CAR-POT)	C2(CAR-POT)	Bottom	1.994	148.811	0.860	0.058	39473.649		Good
C1-1 (B1 -POT)	C1-1(B1-POT)	Bottom	10.000	28.588	0.166	0.058	7583.160		Good
C1-2 (B2-B1)	C1-2(B2-B1)	Second	9.998	23.436	0.128	0.055	6216.285		Good

LSR	mA: 148.811/148.811, 1/1	Watts: 0.860/0.860, 1/1	Cap (pF): 39473.649/39473.649, 1/1
LSR	mA: 28.588/28.588, 1/1	Watts: 0.166/0.166, 1/1	Cap (pF): 7583.160/7583.160, 1/1
LSR	mA: 23.436/23.436, 1/1	Watts: 0.128/0.128, 1/1	Cap (pF): 6216.285/6216.285, 1/1

Doble Ratio Tests

			True Cap			HV Winding			LV Winding		
			*								
Connections			-			-			-		
			-			-			-		
DETC	NP Volt	LTC	NP Volt	Cal	Ratio 1	Ratio 2	Ratio 3	Min. Lim	Max. Lim	FRANK™	Manual
	*		*	*	*	*	*	*	*		
LSR			mA: */*, 1/1			Watts: */*, 1/1			Cap (pF): */*, 1/1		
LSR			mA: */*, 1/1			Watts: */*, 1/1			Cap (pF): */*, 1/1		
LSR			mA: */*, 1/1			Watts: */*, 1/1			Cap (pF): */*, 1/1		

Turns Ratio Tests

			Serial Number			HV Winding			LV Winding		
Connections			-			-			-		
			-			-			-		
Tap	NP Volt	Tap	NP Volt	Cal	Ratio 1	Ratio 2	Ratio 3	Min. Lim	Max. Lim	FRANK™	Manual
	138000.000		120	1150.000	1137.65	1137.65	*	*	*	Investigate	Investigate
	138000.000		72	1916.667	1928.64	1926.78	*	*	*	Investigate	Investigate

T12171701_CC

Report Source **CouplingCapacitor**

Session Test Date 5/15/2013 9:50:52 AM

Nameplate - Coupling Capacitor Potential Device

Company	EPS	**Serial Number**	T12171701
Location	MOJAVE PP ALPHA SS	**Special ID**	PHASE A 2
Division	PHX	**Circuit Designation**	
Manufacturer	Trench Electric	**Weight**	875 LB
Year Manufactured	2013	**Type**	TEMF
Mfr Location		**BIL**	242 kV
Impedance	*	**Amps**	*
kV	239	**Max. Rated BIL**	900
Line to Ground	138 kV		
C2(CAR-POT)	38361.000	**%PF**	*
C1-1(B1-POT)	7520.780	**%PF**	*
C2 ser C1-1	6288.000	**%PF**	*
C1-2(B2-B1)	6412.000	**%PF**	*
Primary Magnetic Unit			
Volts	138000.000	**Amps**	*
Secondary Magnetic Unit			
Volts	120	**Amps**	*
Cap Arrangement	Oil-Filled Base, Two Porcelains		

Test Date	5/15/2013	**Test Time**	9:50 AM	**Weather**	Sunny
Air Temperature	85°C	**Tank Temperature**	85°C	**Rel. Humidity**	*
Tested By	RG	**Work Order#**		**Last Test Date**	
Checked By		**Test Set Type**	M4000	**Retest Date**	
Checked Date		**Set Top S/N**	031120882	**Reason**	ACCEPTANCE
Last Sheet#		**Set Bottom S/N**		**Travel Time**	
P.O.#		**Ins. Book#**		**Duration**	
Copies		**Sheet#**		**Crew Size**	3

Session Notes

As per doble C CVT power factor limits are 0.01-0.2

Overall Tests

Measure	Insulation	Porc	Test kV	mA	Watts	% PF meas	Cap(pF)	FRANK™	Manual
C2 (CAR-POT)	C2(CAR-POT)	Bottom	1.993	144.533	0.901	0.062	38337.602		Good
C1-1 (B1 -POT)	C1-1(B1-POT)	Bottom	9.999	28.407	0.156	0.055	7535.370		Good
C1-2 (B2-B1)	C1-2(B2-B1)	Second	9.998	24.103	0.129	0.054	6393.345		Good

LSR	mA: 144.533/144.533, 1/1	Watts: 0.901/0.901, 1/1	Cap (pF): 38337.602/38337.602, 1/1
LSR	mA: 28.407/28.407, 1/1	Watts: 0.156/0.156, 1/1	Cap (pF): 7535.370/7535.370, 1/1
LSR	mA: 24.103/24.103, 1/1	Watts: 0.129/0.129, 1/1	Cap (pF): 6393.345/6393.345, 1/1

Doble Ratio Tests

			True Cap			HV Winding			LV Winding		
			*								
Connections			-				-			-	
			-				-			-	
DETC	NP Volt	LTC	NP Volt	Cal	Ratio 1	Ratio 2	Ratio 3	Min. Lim	Max. Lim	FRANK™	Manual
	*		*	*	*	*	*	*	*		
LSR			mA: */*, 1/1			Watts: */*, 1/1			Cap (pF): */*, 1/1		
LSR			mA: */*, 1/1			Watts: */*, 1/1			Cap (pF): */*, 1/1		
LSR			mA: */*, 1/1			Watts: */*, 1/1			Cap (pF): */*, 1/1		

Turns Ratio Tests

			Serial Number			HV Winding			LV Winding		
Connections			-				-			-	
			-				-			-	
Tap	NP Volt	Tap	NP Volt	Cal	Ratio 1	Ratio 2	Ratio 3	Min. Lim	Max. Lim	FRANK™	Manual
	138000.000		120	1150.000	1158.07	1158.08	*	*	*	Investigate	Investigate
	138000.000		72	1916.667	1928.64	1926.78	*	*	*	Investigate	Investigate

T12171702_CC

Report Source **CouplingCapacitor**

Session Test Date 5/15/2013 9:14:46 AM

Nameplate - Coupling Capacitor Potential Device

Company	EPS	**Serial Number**	T12171702
Location	MOJAVE PP ALPHA SS	**Special ID**	PHASE B 2
Division	PHX	**Circuit Designation**	
Manufacturer	Trench Electric	**Weight**	875 LB
Year Manufactured	2013	**Type**	TEMF
Mfr Location		**BIL**	242 kV
Impedance	*	**Amps**	*
kV	239	**Max. Rated BIL**	900
Line to Ground	138 kV		
C2(CAR-POT)	38467.000	**%PF**	*
C1-1(B1-POT)	7621.273	**%PF**	*
C2 ser C1-1	6361.000	**%PF**	*
C1-2(B2-B1)	6270.000	**%PF**	*
Primary Magnetic Unit			
Volts	138000.000	**Amps**	*
Secondary Magnetic Unit			
Volts	120	**Amps**	*
Cap Arrangement	Oil-Filled Base, Two Porcelains		

Test Date	5/15/2013	**Test Time**	9:14 AM	**Weather**	
Air Temperature	*	**Tank Temperature**	*	**Rel. Humidity**	*
Tested By	RG	**Work Order#**		**Last Test Date**	
Checked By		**Test Set Type**	M4000	**Retest Date**	
Checked Date		**Set Top S/N**	031120882	**Reason**	
Last Sheet#		**Set Bottom S/N**		**Travel Time**	
P.O.#		**Ins. Book#**		**Duration**	
Copies		**Sheet#**		**Crew Size**	3

Session Notes

As per doble C CVT power factor limits are 0.01-0.2

Overall Tests

Measure	Insulation	Porc	Test kV	mA	Watts	% PF meas	Cap(pF)	FRANK™	Manual
C2 (CAR-POT)	C2(CAR-POT)	Bottom	1.994	145.433	0.888	0.061	38577.150		Good
C1-1 (B1 -POT)	C1-1(B1-POT)	Bottom	10.000	28.320	0.160	0.056	7512.105		Good
C1-2 (B2-B1)	C1-2(B2-B1)	Second	9.998	23.958	0.129	0.054	6354.900		Good

LSR	mA: 145.433/145.433, 1/1	Watts: 0.888/0.888, 1/1	Cap (pF): 38577.150/38577.150, 1/1
LSR	mA: 28.320/28.320, 1/1	Watts: 0.160/0.160, 1/1	Cap (pF): 7512.105/7512.105, 1/1
LSR	mA: 23.958/23.958, 1/1	Watts: 0.129/0.129, 1/1	Cap (pF): 6354.900/6354.900, 1/1

Doble Ratio Tests

			True Cap			HV Winding			LV Winding		
			*								
Connections			-			-			-		
			-			-			-		
DETC	NP Volt	LTC	NP Volt	Cal	Ratio 1	Ratio 2	Ratio 3	Min. Lim	Max. Lim	FRANK™	Manual
	*		*	*	*	*	*	*	*		
LSR			mA: */*, 1/1			Watts: */*, 1/1			Cap (pF): */*, 1/1		
LSR			mA: */*, 1/1			Watts: */*, 1/1			Cap (pF): */*, 1/1		
LSR			mA: */*, 1/1			Watts: */*, 1/1			Cap (pF): */*, 1/1		

Turns Ratio Tests

			Serial Number			HV Winding			LV Winding		
Connections			-			-			-		
			-			-			-		
Tap	NP Volt	Tap	NP Volt	Cal	Ratio 1	Ratio 2	Ratio 3	Min. Lim	Max. Lim	FRANK™	Manual
	138000.000		120	1150.000	1157.41	1158.000	*	*	*	Investigate	Investigate
	138000.000		72	1916.667	1930.5	1926.8	*	*	*	Investigate	Investigate

T12171703_CC

Report Source **CouplingCapacitor**

Session Test Date 5/15/2013 8:14:04 AM

Nameplate - Coupling Capacitor Potential Device

Company	EPS	**Serial Number**	T12171703
Location	MOJAVE PP ALPHA SS	**Special ID**	PHASE C 2
Division	PHX	**Circuit Designation**	
Manufacturer	Trench Electric	**Weight**	875 LB
Year Manufactured	2013	**Type**	TEMF
Mfr Location		**BIL**	242 kV
Impedance	*	**Amps**	*
kV	239	**Max. Rated BIL**	900
Line to Ground	138 kV		
C2(CAR-POT)	39028.000	**%PF**	*
C1-1(B1-POT)	7598.203	**%PF**	*
C2 ser C1-1	6360.000	**%PF**	*
C1-2(B2-B1)	6334.000	**%PF**	*
Primary Magnetic Unit			
Volts	138000.000	**Amps**	*
Secondary Magnetic Unit			
Volts	120	**Amps**	*
Cap Arrangement	Oil-Filled Base, Two Porcelains		

Test Date	5/15/2013	**Test Time**	8:14 AM	**Weather**	Sunny
Air Temperature	81°C	**Tank Temperature**	81°C	**Rel. Humidity**	*
Tested By	RG	**Work Order#**		**Last Test Date**	
Checked By		**Test Set Type**	M4000	**Retest Date**	
Checked Date		**Set Top S/N**	031120882	**Reason**	ACCEPTANCE
Last Sheet#		**Set Bottom S/N**		**Travel Time**	
P.O.#		**Ins. Book#**		**Duration**	
Copies		**Sheet#**		**Crew Size**	3

Session Notes

As per doble C CVT power factor limits are 0.01-0.2

Overall Tests

Measure	Insulation	Porc	Test kV	mA	Watts	% PF meas	Cap(pF)	FRANK™	Manual
C2 (CAR-POT)	C2(CAR-POT)	Bottom	1.995	147.260	0.978	0.066	39061.900		Good
C1-1 (B1 -POT)	C1-1(B1-POT)	Bottom	10.000	28.620	0.161	0.056	7591.815		Good
C1-2 (B2-B1)	C1-2(B2-B1)	Second	9.998	23.957	0.131	0.055	6354.640		Good

LSR	mA: 147.260/147.260, 1/1	Watts: 0.978/0.978, 1/1	Cap (pF): 39061.900/39061.900, 1/1
LSR	mA: 28.620/28.620, 1/1	Watts: 0.161/0.161, 1/1	Cap (pF): 7591.815/7591.815, 1/1
LSR	mA: 23.957/23.957, 1/1	Watts: 0.131/0.131, 1/1	Cap (pF): 6354.640/6354.640, 1/1

Doble Ratio Tests

			True Cap			HV Winding			LV Winding		
			*								
Connections			-			-			-		
			-			-			-		
DETC	NP Volt	LTC	NP Volt	Cal	Ratio 1	Ratio 2	Ratio 3	Min. Lim	Max. Lim	FRANK™	Manual
	*		*	*	*	*	*	*	*		
LSR			mA: */*, 1/1			Watts: */*, 1/1			Cap (pF): */*, 1/1		
LSR			mA: */*, 1/1			Watts: */*, 1/1			Cap (pF): */*, 1/1		
LSR			mA: */*, 1/1			Watts: */*, 1/1			Cap (pF): */*, 1/1		

Turns Ratio Tests

			Serial Number			HV Winding			LV Winding		
Connections			-			-			-		
			-			-			-		
Tap	NP Volt	Tap	NP Volt	Cal	Ratio 1	Ratio 2	Ratio 3	Min. Lim	Max. Lim	FRANK™	Manual
	138000.000		120	1150.000	1151.41	1151.41	*	*	*	Good	Good
	138000.000		72	1916.667	1913.88	1919.38	*	*	*	Good	Good

Vanguard Instruments Company, Inc.
1520 S. Hellman Avenue, Ontario, CA 91761, USA Phone: 909.923.9390 FAX: 909.923.9391
www.vanguard-instruments.com

FILENAME: CT X T-121716-01 A PHASE AL
DATE: 05/11/13 09:59:44
COMPANY: HOTLINE CONSTRUCTION
STATION: MOJAVE PP ALPHA SS
CIRCUIT: T-121716-01 A PHASE

MFR: TRENCH LIMITED
MODEL: 10SK 245
SN: T12171601
OPERATOR: RG/BR
COMMENTS:

SUMMARY REPORT
KNEE TYPE: IEEE 30 Deg
FREQUENCY: 60 Hz

Test	Tap	IEEE30	IEEE45	IEC 10/50	NP-Ratio	M-Ratio	% Error	Phase Angle	Winding Res
1 [redacted]	X1-X2	26.08	19.52	33.24	800/5.0	160.112	0.0703 %	0.04°	216.73 m-ohms

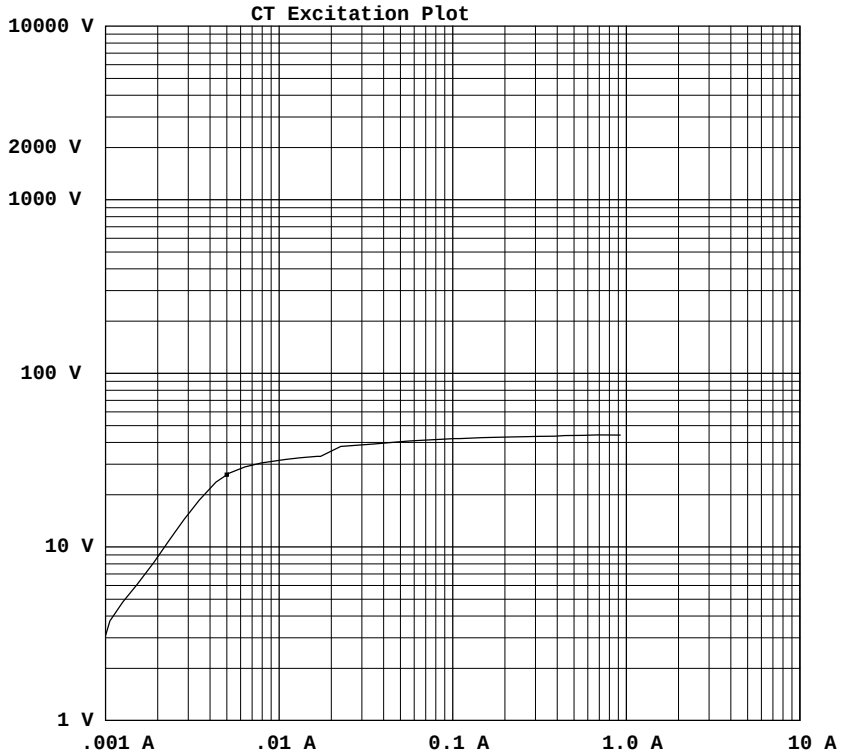

1000V INSULATION RES TEST RESULTS

VOLTAGE: 987.7 V
CURRENT: 0.14 MICRO-AMPS
RESISTANCE: >1,000 MEG-OHMS

BURDEN TEST RESULTS

5 AMP BURDEN TEST

MEASURED CURRENT: 4.894 A
MEASURED VOLTAGE: 44.373 V, 37.91 DEG
IMPEDANCE (Z): 9.067 OHMS
BURDEN: 226.837 VA
POWER FACTOR: 0.79

Test Notepad

Vanguard Instruments Company, Inc.
1520 S. Hellman Avenue, Ontario, CA 91761, USA Phone: 909.923.9390 FAX: 909.923.9391
www.vanguard-instruments.com

FILENAME: CT Y T-121716-01 A PHASE AL
DATE: 05/11/13 10:14:20
COMPANY: HOTLINE CONSTRUCTION
STATION: MOJAVE PP ALPHA SS
CIRCUIT: T-121716-01 APHASE Y

MFR: TRENCH LIMITED
MODEL: 10SK 245
SN: T-121716-02
OPERATOR: RG/BR
COMMENTS:

SUMMARY REPORT
KNEE TYPE: IEEE 30 Deg
FREQUENCY: 60 Hz

Test	Tap	IEEE30	IEEE45	IEC 10/50	NP-Ratio	M-Ratio	% Error	Phase Angle	Winding Res
1 [redacted]	X1-X2	28.08	22.28	30.76	800/5.0	160.087	0.0546 %	0.10°	226.62 m-ohms

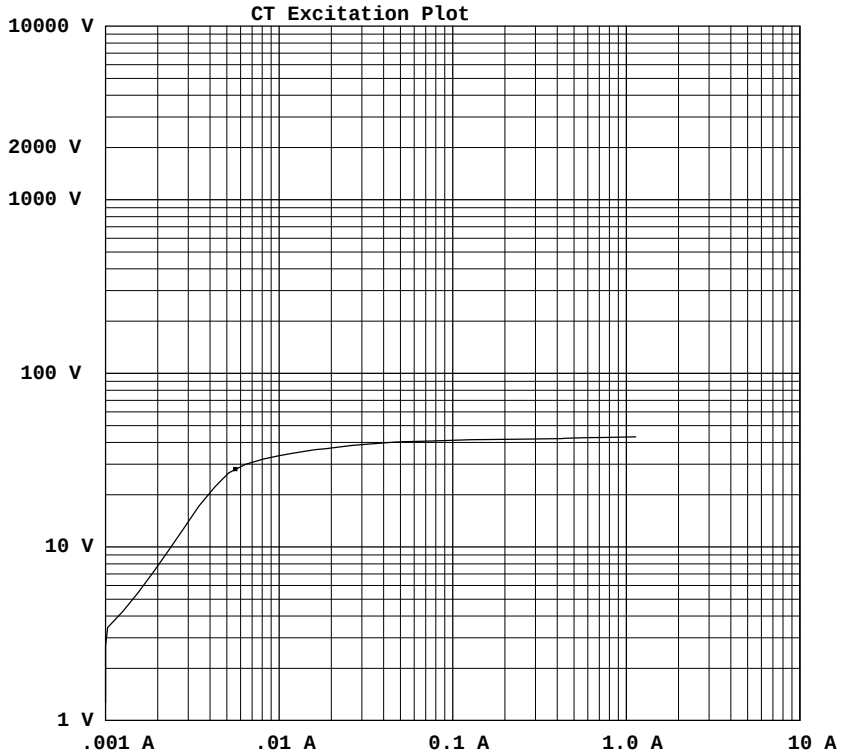

1000V INSULATION RES TEST RESULTS

VOLTAGE: 993.8 V
CURRENT: 0.10 MICRO-AMPS
RESISTANCE: >1,000 MEG-OHMS

BURDEN TEST RESULTS

5 AMP BURDEN TEST

MEASURED CURRENT: 4.972 A
MEASURED VOLTAGE: 44.560 V, 38.14 DEG
IMPEDANCE (Z): 8.962 OHMS
BURDEN: 224.226 VA
POWER FACTOR: 0.79

Test Notepad

Vanguard Instruments Company, Inc.
1520 S. Hellman Avenue, Ontario, CA 91761, USA Phone: 909.923.9390 FAX: 909.923.9391
www.vanguard-instruments.com

FILENAME:	CT X T-121716-02 B PHASE AL	MFR:	TRENCH LIMITED
DATE:	05/11/13 11:11:01	MODEL:	10SK 245
COMPANY:	HOTLINE CONSTRUCTION	SN:	T-121716-02
STATION:	MOJAVE PP ALPHA SS	OPERATOR:	RG/BR
CIRCUIT:	T-121716-02 BPHASE X	COMMENTS:	

SUMMARY REPORT
KNEE TYPE: IEEE 30 Deg
FREQUENCY: 60 Hz

Test	Tap	IEEE30	IEEE45	IEC 10/50	NP-Ratio	M-Ratio	% Error	Phase Angle	Winding Res
1 [redacted]	X1-X2	27.12	23.40	33.08	800/5.0	159.984	0.0102 %	0.02°	231.79 m-ohms

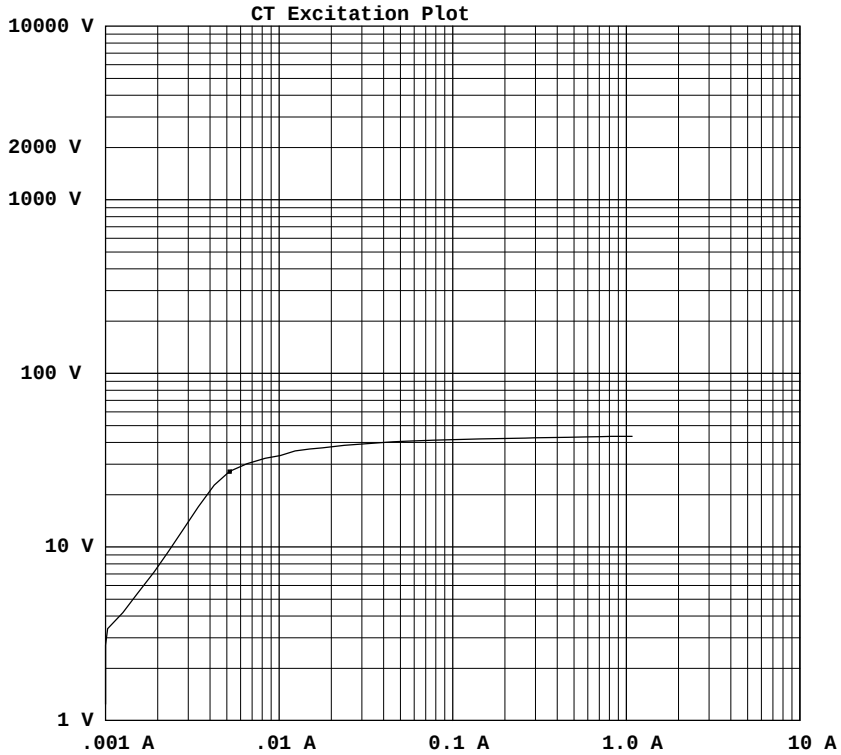

1000V INSULATION RES TEST RESULTS

VOLTAGE: 1001.6 V
CURRENT: 0.21 MICRO-AMPS
RESISTANCE: >1,000 MEG-OHMS

BURDEN TEST RESULTS

5 AMP BURDEN TEST

MEASURED CURRENT: 4.989 A
MEASURED VOLTAGE: 45.011 V, 38.89 DEG
IMPEDANCE (Z): 9.022 OHMS
BURDEN: 225.459 VA
POWER FACTOR: 0.78

Test Notepad

Vanguard Instruments Company, Inc.
1520 S. Hellman Avenue, Ontario, CA 91761, USA Phone: 909.923.9390 FAX: 909.923.9391
www.vanguard-instruments.com

FILENAME: CT Y T-121716-02 B PHASE AL
DATE: 05/11/13 11:23:11
COMPANY: HOTLINE CONSTRUCTION
STATION: MOJAVE PP ALPHA SS
CIRCUIT: T-121716-02 BPHASE Y

MFR: TRENCH LIMITED
MODEL: 10SK 245
SN: T-121716-02
OPERATOR: RG/BR
COMMENTS:

SUMMARY REPORT
KNEE TYPE: IEEE 30 Deg
FREQUENCY: 60 Hz

Test	Tap	IEEE30	IEEE45	IEC 10/50	NP-Ratio	M-Ratio	% Error	Phase Angle	Winding Res
1 [redacted]	X1-X2	36.44	19.40	33.60	800/5.0	159.987	0.0080 %	0.08°	220.83 m-ohms

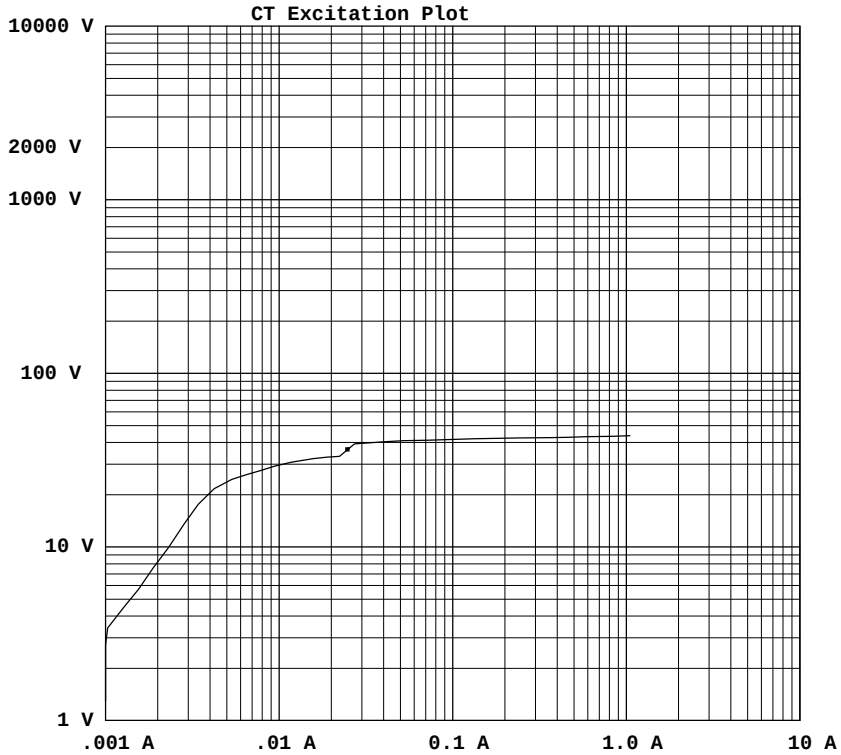

1000V INSULATION RES TEST RESULTS

VOLTAGE: 997.5 V
CURRENT: 0.12 MICRO-AMPS
RESISTANCE: >1,000 MEG-OHMS

BURDEN TEST RESULTS

5 AMP BURDEN TEST

MEASURED CURRENT: 5.451 A
MEASURED VOLTAGE: 45.483 V, 40.42 DEG
IMPEDANCE (Z): 8.344 OHMS
BURDEN: 208.495 VA
POWER FACTOR: 0.76

Test Notepad

Vanguard Instruments Company, Inc.
1520 S. Hellman Avenue, Ontario, CA 91761, USA Phone: 909.923.9390 FAX: 909.923.9391
www.vanguard-instruments.com

FILENAME:	CT X T-121716-03 C PHASE AL	MFR:	TRENCH LIMITED
DATE:	05/11/13 11:46:20	MODEL:	10SK 245
COMPANY:	HOTLINE CONSTRUCTION	SN:	T-121716-03
STATION:	MOJAVE PP ALPHA SS	OPERATOR:	RG/BR
CIRCUIT:	T-121716-03 CPHASE X	COMMENTS:	

SUMMARY REPORT
KNEE TYPE: IEEE 30 Deg
FREQUENCY: 60 Hz

Test	Tap	IEEE30	IEEE45	IEC 10/50	NP-Ratio	M-Ratio	% Error	Phase Angle	Winding Res
1 [redacted]	X1-X2	27.24	21.20	30.44	800/5.0	160.036	0.0227 %	0.08°	229.94 m-ohms

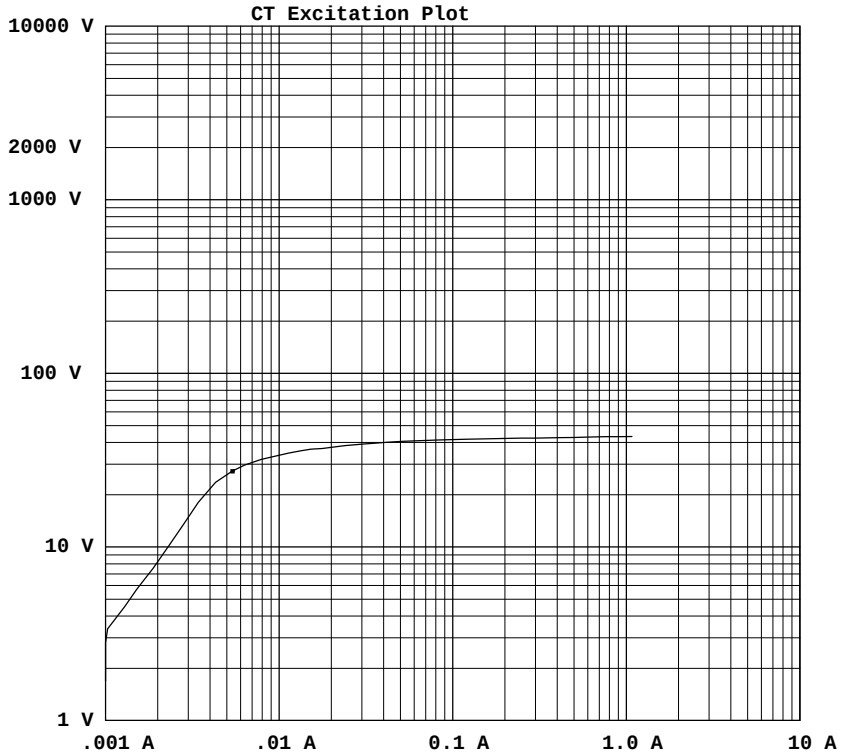

1000V INSULATION RES TEST RESULTS

VOLTAGE: 995.2 V
CURRENT: 0.17 MICRO-AMPS
RESISTANCE: >1,000 MEG-OHMS

BURDEN TEST RESULTS

5 AMP BURDEN TEST

MEASURED CURRENT: 4.955 A
MEASURED VOLTAGE: 45.246 V, 38.96 DEG
IMPEDANCE (Z): 9.131 OHMS
BURDEN: 228.267 VA
POWER FACTOR: 0.78

Test Notepad

Vanguard Instruments Company, Inc.
1520 S. Hellman Avenue, Ontario, CA 91761, USA Phone: 909.923.9390 FAX: 909.923.9391
www.vanguard-instruments.com

FILENAME: CT Y T-121716-03 C PHASE AL
DATE: 05/11/13 11:53:02
COMPANY: HOTLINE CONSTRUCTION
STATION: MOJAVE PP ALPHA SS
CIRCUIT: T-121716-03 CPHASE Y

MFR: TRENCH LIMITED
MODEL: 10SK 245
SN: T-121716-03
OPERATOR: RG/BR
COMMENTS:

SUMMARY REPORT
KNEE TYPE: IEEE 30 Deg
FREQUENCY: 60 Hz

Test	Tap	IEEE30	IEEE45	IEC 10/50	NP-Ratio	M-Ratio	% Error	Phase Angle	Winding Res
1 [redacted]	X1-X2	28.80	21.64	31.76	800/5.0	160.034	0.0213 %	0.04°	215.16 m-ohms

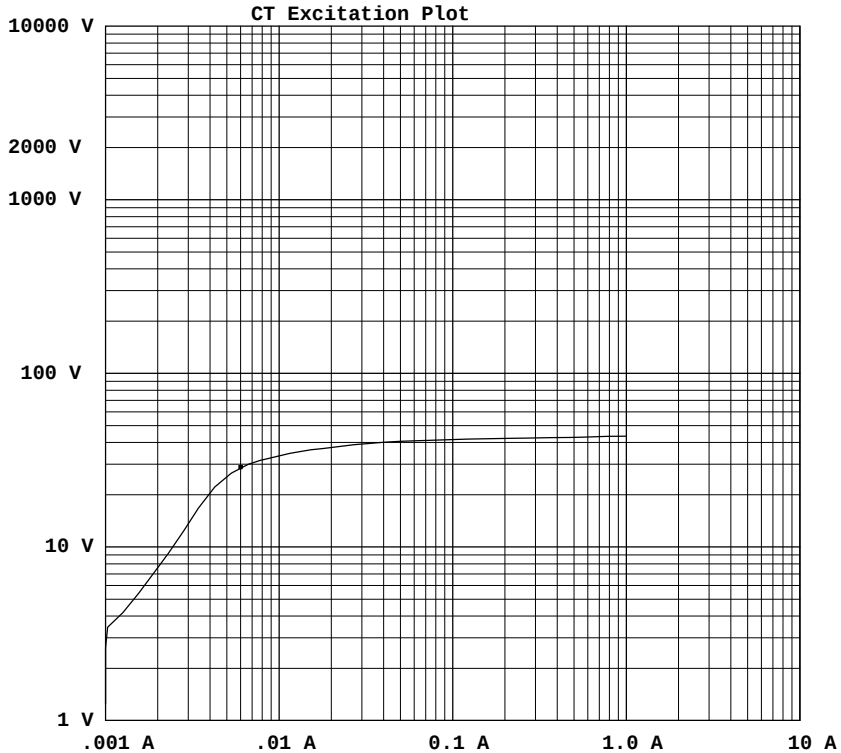

1000V INSULATION RES TEST RESULTS

VOLTAGE: 996.9 V
CURRENT: 0.10 MICRO-AMPS
RESISTANCE: >1,000 MEG-OHMS

BURDEN TEST RESULTS

5 AMP BURDEN TEST

MEASURED CURRENT: 4.918 A
MEASURED VOLTAGE: 45.156 V, 38.55 DEG
IMPEDANCE (Z): 9.182 OHMS
BURDEN: 229.709 VA
POWER FACTOR: 0.78

Test Notepad

ELECTRIC POWER SYSTEMS

557 E. Juanita Ave. Ste. 4, Mesa, AZ 85204 *Phone (480) 633-1490 Fax (480) 633-7092*

CLIENT:	HOTLINE ELECTRIC	LOCATION:	ALPHA SS MOJAVE PP	JOB #:	A13024
EQUIPMENT:	SS GROUNDING			DATE:	5/17/2013
TEST EQUIPMENT:	DET5-4R			TESTED BY:	RG
C2 - DISTANCE TO CURRENT ELECTRODE:	350 FEET	EARTH RESISTANCE: 0.29Ω		**SEE NOTE**	OHMS

FULL MEMBER

P2 - DISTANCE TO POTENTIAL ELECTRODE	Resistance in ohms
60 FEET	0.20
90 FEET	0.22
120 FEET	0.24
150 FEET	0.29
180 FEET	0.30
210 FEET	0.31
240 FEET	0.35
270 FEET	0.540

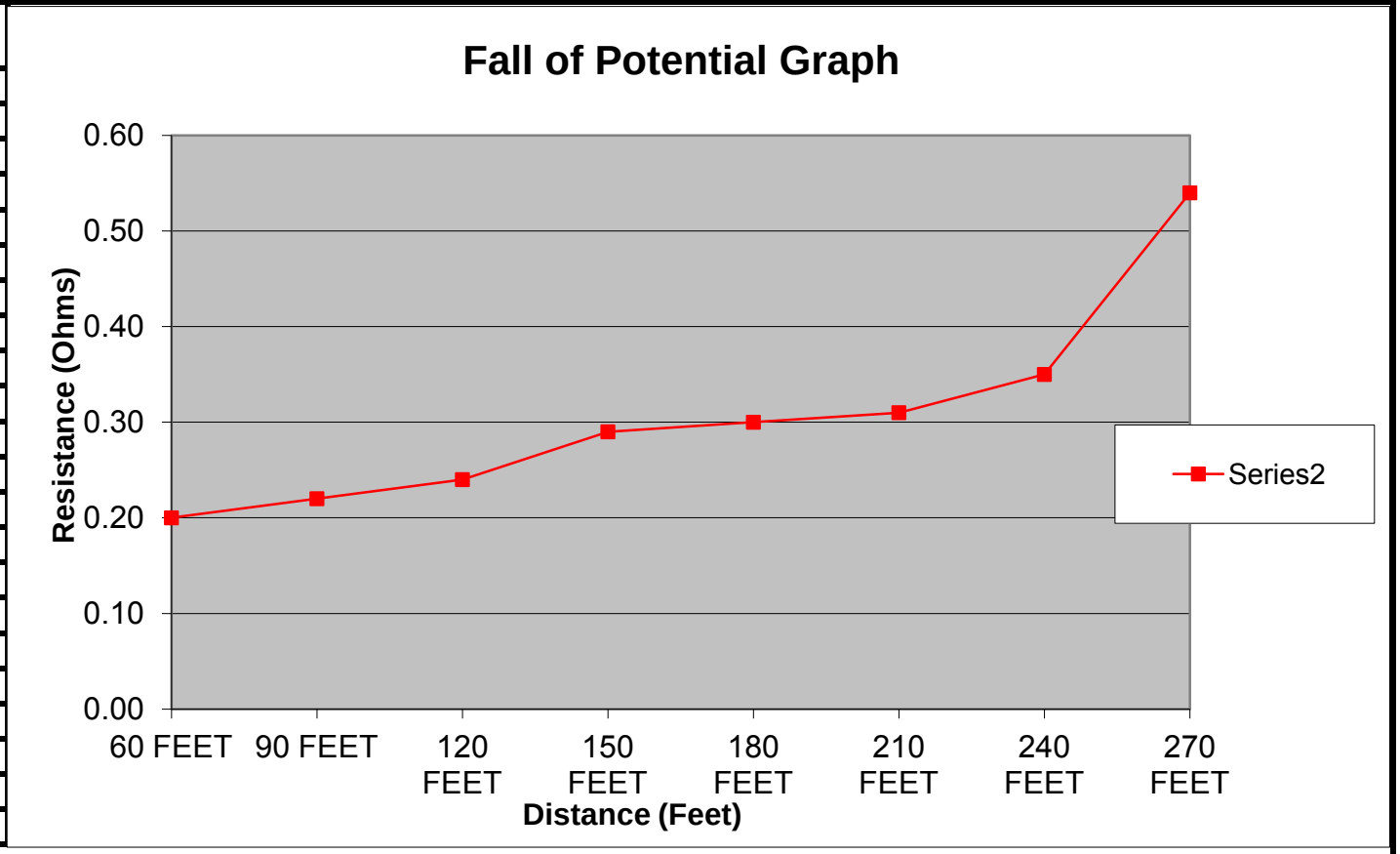

Notes: All pass. The resistance between the main grounding electrode and ground shall be no greater than 1.0 ohm or less for generating or transmission station grounds unless otherwise specified by the owner. (Reference ANSI/IEEE Standard 142)

Electric Power Systems ELECTRICAL TESTING & ENGINEERING

557 E Juanita Ave, Ste 4 • Mesa, AZ 85204 • Phone 480-633-1490 • Fax 480-633-7092

TEST DATASHEETS

-Beta Substation

30111795-2_BS

Report Source **SF6DeadTankBreaker**

Session Test Date 5/13/2013 1:44:16 PM

Nameplate - SF6 Dead Tank Breaker

Company	Hotline Construction	**Serial Number**	30111795-2
Location	Mojave Solar	**Special ID**	Beta
Division		**Circuit Designation**	
Manufacturer	Siemens	**Type**	SPS2-245-40-
Year Manufactured	2012	**Class**	SF6_dead_tank_breaker
Mfr Location	Jackson, MS	**Mechanism Type**	
SF6 Volume	161 LB	**# of Tanks**	1
Total Weight	10800.000 LB	**Interrupting Rating**	
Phase Names	8,,	**BIL**	*
Control Volts	*	**Counters**	
kV	245	**Amps**	1200.000

Test Date	5/13/2013	**Test Time**	1:44 PM	**Weather**	Sunny
Air Temperature	39°C	**Tank Temperature**	35.6°C	**Rel. Humidity**	1 %
Tested By	RDB/ MEK	**Work Order#**		**Last Test Date**	
Checked By		**Test Set Type**	M4000	**Retest Date**	
Checked Date		**Set Top S/N**	031120882	**Reason**	ACCEPTANCE
Last Sheet#		**Set Bottom S/N**		**Travel Time**	
P.O.#		**Ins. Book#**		**Duration**	
Copies		**Sheet#**		**Crew Size**	2

Session Notes

Insulation Resistance
Across Open:
A: 13.6T
B: 10.3T
C: 11.0T

Closed
A-B: 5.67T
B-C: 607G
C-A: 3.43T

Overall Tests

#	Breaker	HV	Red Measure Lead	Phase	Bushing	Test kV	Corr. Factor	Bus Length	Corr Fctrlns. #
1	Open	1	Unused	A		10.000	1.00	0	0
2	Open	2	Unused	A		10.000	1.00	0	0
3	Open	3	Unused	B		10.000	1.00	0	0
4	Open	4	Unused	B		10.000	1.00	0	0
5	Open	5	Unused	C		10.000	1.00	0	0
6	Open	6	Unused	C		10.000	1.00	0	0
7	Open	1	2	A		10.000	1.00	0	0
8	Open	3	4	B		10.000	1.00	0	0
9	Open	5	6	C		10.000	1.00	0	0
10	Closed	1 or 2	Unused	A		10.000	1.00	0	0
11	Closed	3 or 4	Unused	B		10.000	1.00	0	0
12	Closed	5 or 6	Unused	C		10.000	1.00	0	0

#	Breaker	HV	Red Measure Lead	Phase	Bushing	mA	Watts	%PF Meas.	%PF Corr.	Pf Cap	FRANK	Manual
1	Open	1	Unused	A		0.512	0.003		0.060	135.860	Good	
2	Open	2	Unused	A		0.540	0.003		0.060	143.250	Good	
3	Open	3	Unused	B		0.514	0.003		0.060	136.240	Good	
4	Open	4	Unused	B		0.543	0.003		0.060	144.120	Good	
5	Open	5	Unused	C		0.510	0.003		0.060	135.330	Good	
6	Open	6	Unused	C		0.540	0.003		0.060	143.220	Good	
7	Open	1	2	A		0.020	0.000		0.000	5.223	Good	
8	Open	3	4	B		0.021	0.000		0.000	5.525	Good	
9	Open	5	6	C		0.021	0.000		0.000	5.592	Good	
10	Closed	1 or 2	Unused	A		0.997	0.005		0.050	264.430	Good	
11	Closed	3 or 4	Unused	B		1.004	0.005		0.050	266.350	Good	
12	Closed	5 or 6	Unused	C		0.995	0.005		0.050	264.040	Good	

LSR	mA: 0.512/0.512, 1/1	Watts: 0.003/0.003, 1/1	Cap (pF): 135.86/135.86, 1/1
LSR	mA: 0.54/0.54, 1/1	Watts: 0.003/0.003, 1/1	Cap (pF): 143.25/143.249, 1/1
LSR	mA: 0.514/0.514, 1/1	Watts: 0.003/0.003, 1/1	Cap (pF): 136.24/136.239, 1/1
LSR	mA: 0.543/0.543, 1/1	Watts: 0.003/0.003, 1/1	Cap (pF): 144.12/144.117, 1/1
LSR	mA: 0.51/0.51, 1/1	Watts: 0.003/0.003, 1/1	Cap (pF): 135.33/135.327, 1/1
LSR	mA: 0.54/0.54, 1/1	Watts: 0.003/0.003, 1/1	Cap (pF): 143.22/143.218, 1/1
LSR	mA: 0.02/0.02, 1/1	Watts: 0/0, 1/1	Cap (pF): 5.223/5.223, 1/1
LSR	mA: 0.021/0.021, 1/1	Watts: 0/0, 1/1	Cap (pF): 5.525/5.525, 1/1
LSR	mA: 0.021/0.021, 1/1	Watts: 0/0, 1/1	Cap (pF): 5.592/5.592, 1/1
LSR	mA: 0.997/0.997, 1/1	Watts: 0.005/0.005, 1/1	Cap (pF): 264.43/264.433, 1/1
LSR	mA: 1.004/1.004, 1/1	Watts: 0.005/0.005, 1/1	Cap (pF): 266.35/266.345, 1/1
LSR	mA: 0.995/0.995, 1/1	Watts: 0.005/0.005, 1/1	Cap (pF): 264.04/264.044, 1/1

Insulation Resistance

Manufacturer	Megger					
Serial Number	ATL					
Voltage	10000.00					
	Megohms	**T1**	**T2**	**PI**	**Volts**	**Manual**
Open Breaker Tests						
Bushing 1	*	*	*	*	*	
Bushing 2	*	*	*	*	*	
Bushing 3	*	*	*	*	*	
Bushing 4	*	*	*	*	*	
Bushing 5	*	*	*	*	*	
Bushing 6	*	*	*	*	*	
Closed Breaker Tests						
A	2670.00	*	*	*	*	
B	1240.00	*	*	*	*	
C	1970.00	*	*	*	*	

SF6 Gas Tests

	Pressure (psi)	**Moisture (ppm)**	**Dew Point**
A	*	*	*
B	*	*	*
C	*	*	*

Contact Resistance

Manufacturer	Vanguard		
Serial	PHX0045		
Amps	100		
		Contact Res. (uOhms)	**Manual**
Closed Breaker Tests			
	A	79.7	
	B	78.6	
	C	78.9	

BREAKER PERFORMANCE REPORT
TDR9000 Version: RE 4.01

Manufacturer : Siemens
Model Number : SPS-145-40
Serial Number: 30111795-2
Instr Book # :
Mechanism # :
Mech Instr # :
Special ID : BETA Station
:

Location: Sample Location 1
Circuit :
Operator: MEK / RDB
Operation Counter :
:

Test Type : CLOSE
Test Plan Name :

Test was performed on 5/14/2013 at 10:21:22.

Motion Channels 1-3 Transfer Function
1.000 in Travel at the contacts is 1.000 in Travel at the transducer.

Command Parameters Close Pulse 133.3 ms

Command Currents Close Current 2.13 A pk

MECHANICAL MOTION CHANNELS 1-3
CLOSE OPERATION

Specifications	Test results	Compare
Total Travel		
Expected ******* inches	TRAVEL 1 4.255 inches	
Tolerance + *******	TRAVEL 2	
- *******	TRAVEL 3	
Overtravel		
Expected ******* inches	TRAVEL 1 0.409 inches	
Tolerance + *******	TRAVEL 2	
- *******	TRAVEL 3	
Rebound		
Expected ******* inches	TRAVEL 1 0.185 inches	
Tolerance + *******	TRAVEL 2	
- *******	TRAVEL 3	
Contact Wipe		
Expected ******* inches	TRAVEL 1 1.260 inches	
Tolerance + *******	TRAVEL 2	

- *******	TRAVEL 3	

OCB CONTACT TIMING - MOTION CHANNELS 1-3
CLOSE OPERATION

Main Contact Closing Time Measured From Test Initiation

Specifications		Test results		Travel	Velocity	Compare
Maximum	66.0 ms	CONTACT1	55.4 ms	******* in	****** ft/s	Pass
Minimum	50.0	CONTACT2	55.4	*******	******	Pass
		CONTACT3	55.4	*******	******	Pass

Delta Main Contact Closing Time Within the Breaker

Specifications	Test results		Compare
Maximum******** ms	Breaker	0.0 ms	

User Notes

Page 1

Page 2

Page 3

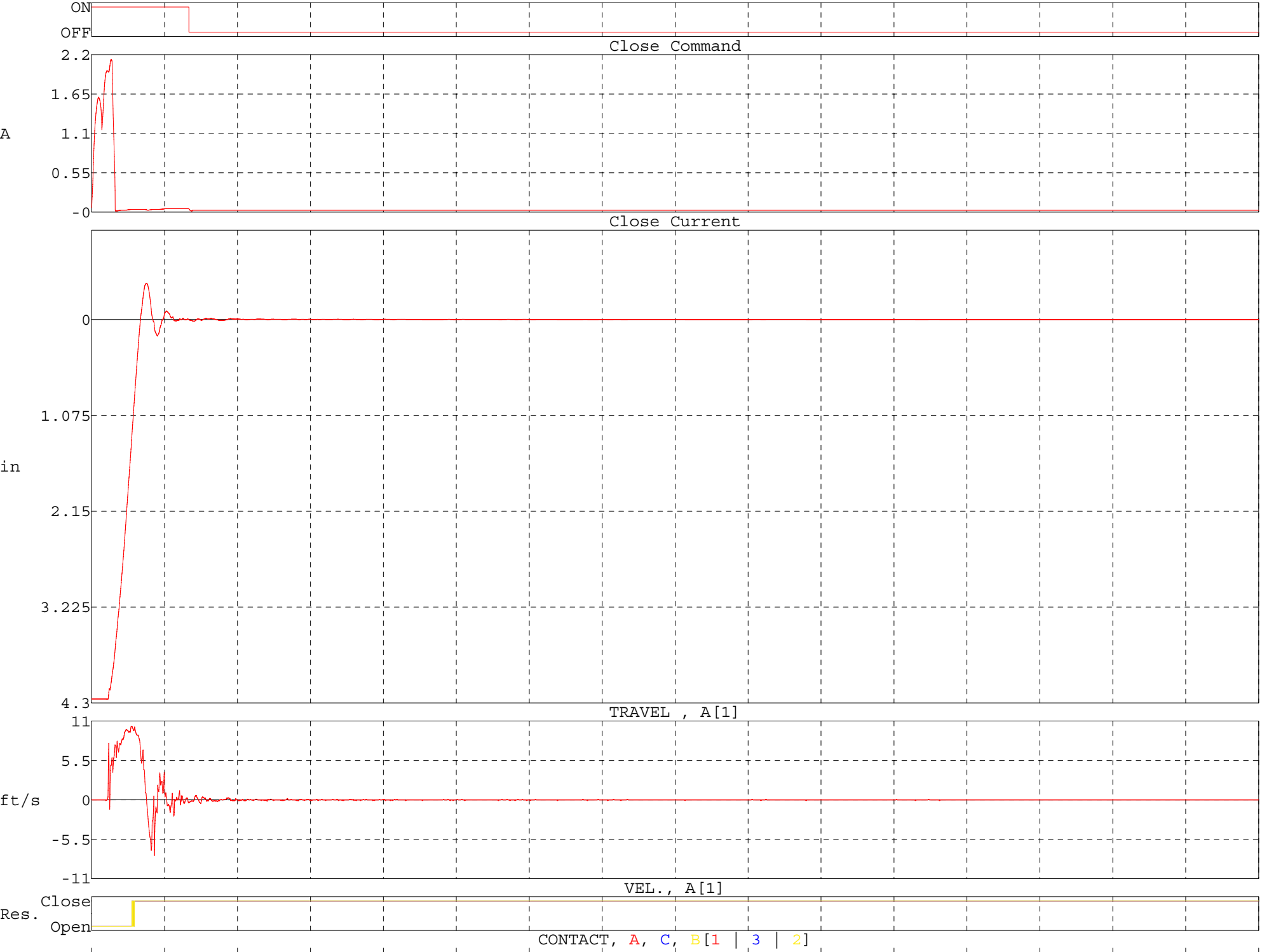
ON
OFF
Close Command
2.2
1.65
A
1.1
0.55
-0
Close Current
0
1.075
in
2.15
3.225
4.3
TRAVEL , A[1]
11
5.5
ft/s
0
-5.5
-11
VEL., A[1]
Close
Res.
Open
CONTACT, A, C, B[1 | 3 | 2]
(ms) 0 100 200 300 400 500 600 700 800 900 1000 1100 1200 1300 1400 1500 1600

BREAKER PERFORMANCE REPORT
TDR9000 Version: RE 4.01

Manufacturer : Siemens Location: Sample Location 1
Model Number : SPS-145-40 Circuit :
Serial Number: 30111795-2 Operator: MEK / RDB
Instr Book # :
Mechanism # :
Mech Instr # :
Special ID : BETA Station Operation Counter :
: :

Test Type : RECLOSE Test Plan Name :

Test was performed on 5/14/2013 at 10:33:47.

Motion Channels 1-3 Transfer Function
1.000 in Travel at the contacts is 1.000 in Travel at the transducer.

Command Parameters	Trip Pulse	66.6 ms	Close Pulse	1591.7 ms
	Delay 1	50.0 ms	(Delay)	
Command Currents	Trip Current	8.96 A pk	Close Current	2.12 A pk

OCB CONTACT TIMING
RECLOSE OPERATION

Reclose Dead Time Within a Phase

Specifications	Test results		Compare
Maximum******** ms	Phase A	81.8 ms	
Minimum********	Phase B	81.9	
	Phase C	82.1	

Reclose Dead Time Within the Breaker

Specifications	Test results		Compare
	Breaker	81.8 ms	

Main Contact Opening Time Measured From Test Initiation

Specifications		Test results		Travel	Velocity	Compare
Maximum	30.0 ms	CONTACT1	28.0 ms	******* in	****** ft/s	Pass
Minimum	24.0	CONTACT2	28.0	*******	******	Pass
		CONTACT3	27.9	*******	******	Pass

Delta Main Contact Opening Time Within the Breaker

Specifications	Test results		Compare
Maximum******** ms	Breaker	0.1 ms	

Main Contact Reclosing Time Measured From Test Initiation

Specifications	Test results	Travel	Velocity	Compare
Maximum 300.0 ms	CONTACT1 109.8 ms	******* in	****** ft/s	
Minimum********	CONTACT2 109.9	*******	******	
	CONTACT3 110.0	*******	******	

Delta Main Contact Reclosing Time Within the Breaker

Specifications	Test results	Compare
Maximum******** ms	Breaker 0.2 ms	

User Notes

Page 1

Page 2

Page 3

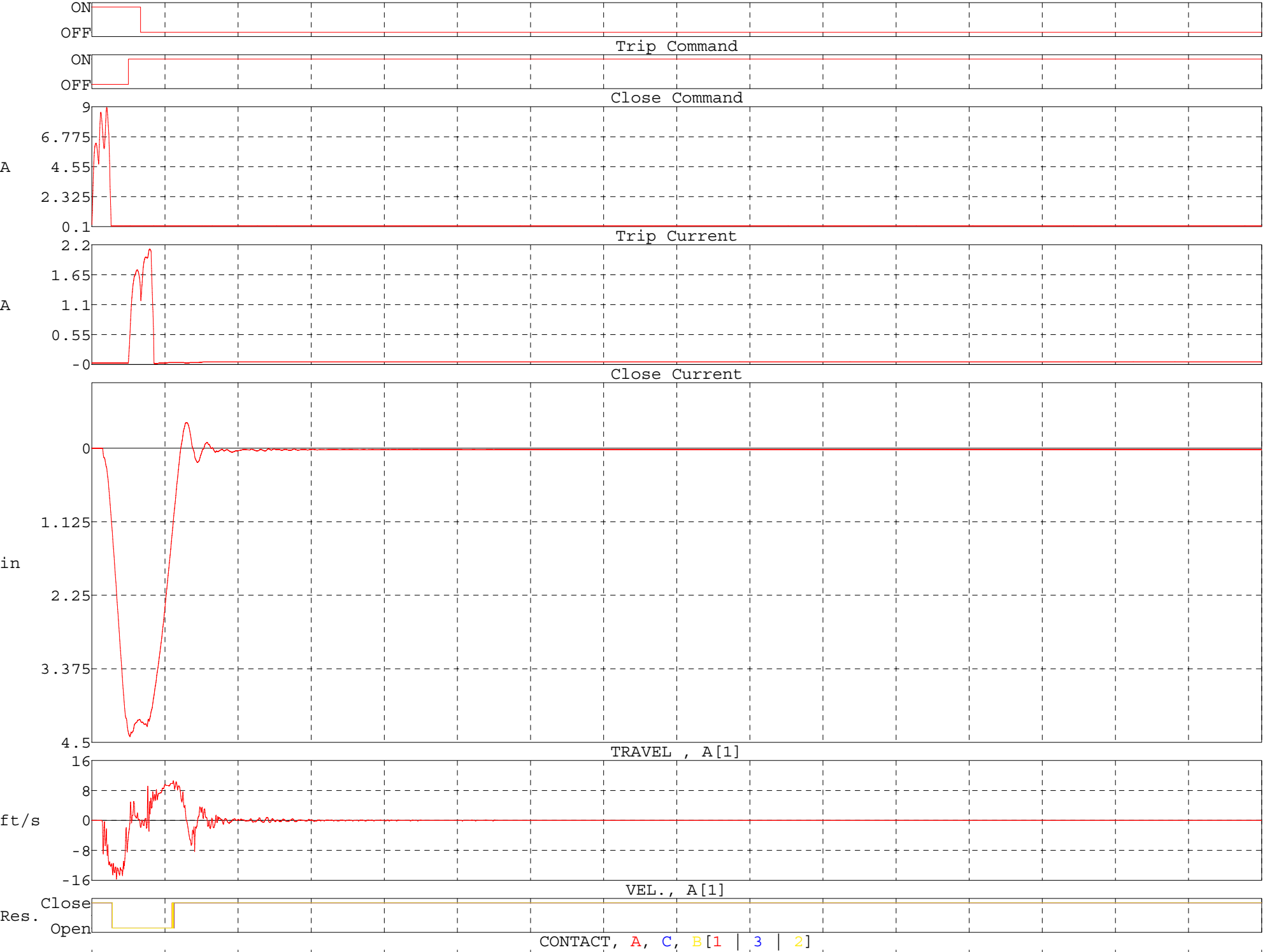
ON
OFF
Trip Command
ON
OFF
Close Command
9
6.775
A
4.55
2.325
0.1
Trip Current
2.2
1.65
A
1.1
0.55
-0
Close Current
0
1.125
in
2.25
3.375
4.5
TRAVEL , A[1]
16
8
ft/s
0
-8
-16
VEL., A[1]
Close
Res.
Open
CONTACT, A, C, B[1 | 3 | 2]
(ms) 0 100 200 300 400 500 600 700 800 900 1000 1100 1200 1300 1400 1500 1600

BREAKER PERFORMANCE REPORT
TDR9000 Version: RE 4.01

Manufacturer : Siemens Location: Sample Location 1
Model Number : SPS-145-40 Circuit :
Serial Number: 30111795-2 Operator: MEK / RDB
Instr Book # :
Mechanism # :
Mech Instr # :
Special ID : BETA Station Operation Counter :
: :

Test Type : RECLOSE Test Plan Name :

Test was performed on 5/14/2013 at 11:57:45.

Motion Channels 1-3 Transfer Function
1.000 in Travel at the contacts is 1.000 in Travel at the transducer.

Command Parameters	Trip Pulse	66.6 ms	Close Pulse	1591.7 ms
	Delay 1	50.0 ms	(Delay)	
Command Currents	Trip Current	8.64 A pk	Close Current	2.06 A pk

OCB CONTACT TIMING
RECLOSE OPERATION

Reclose Dead Time Within a Phase

Specifications	Test results		Compare
Maximum******** ms	Phase A	81.4 ms	
Minimum********	Phase B	81.3	
	Phase C	81.5	

Reclose Dead Time Within the Breaker

Specifications	Test results		Compare
	Breaker	81.3 ms	

Main Contact Opening Time Measured From Test Initiation

Specifications		Test results		Travel	Velocity	Compare
Maximum	30.0 ms	CONTACT1	27.8 ms	******* in	****** ft/s	Pass
Minimum	24.0	CONTACT2	27.8	*******	******	Pass
		CONTACT3	27.6	*******	******	Pass

Delta Main Contact Opening Time Within the Breaker

Specifications	Test results		Compare
Maximum******** ms	Breaker	0.2 ms	

Main Contact Reclosing Time Measured From Test Initiation

Specifications	Test results	Travel	Velocity	Compare
Maximum 300.0 ms	CONTACT1 109.2 ms	******* in	****** ft/s	
Minimum********	CONTACT2 109.1	*******	******	
	CONTACT3 109.1	*******	******	

Delta Main Contact Reclosing Time Within the Breaker

Specifications	Test results	Compare
Maximum******** ms	Breaker 0.1 ms	

User Notes

Page 1

Page 2

Page 3

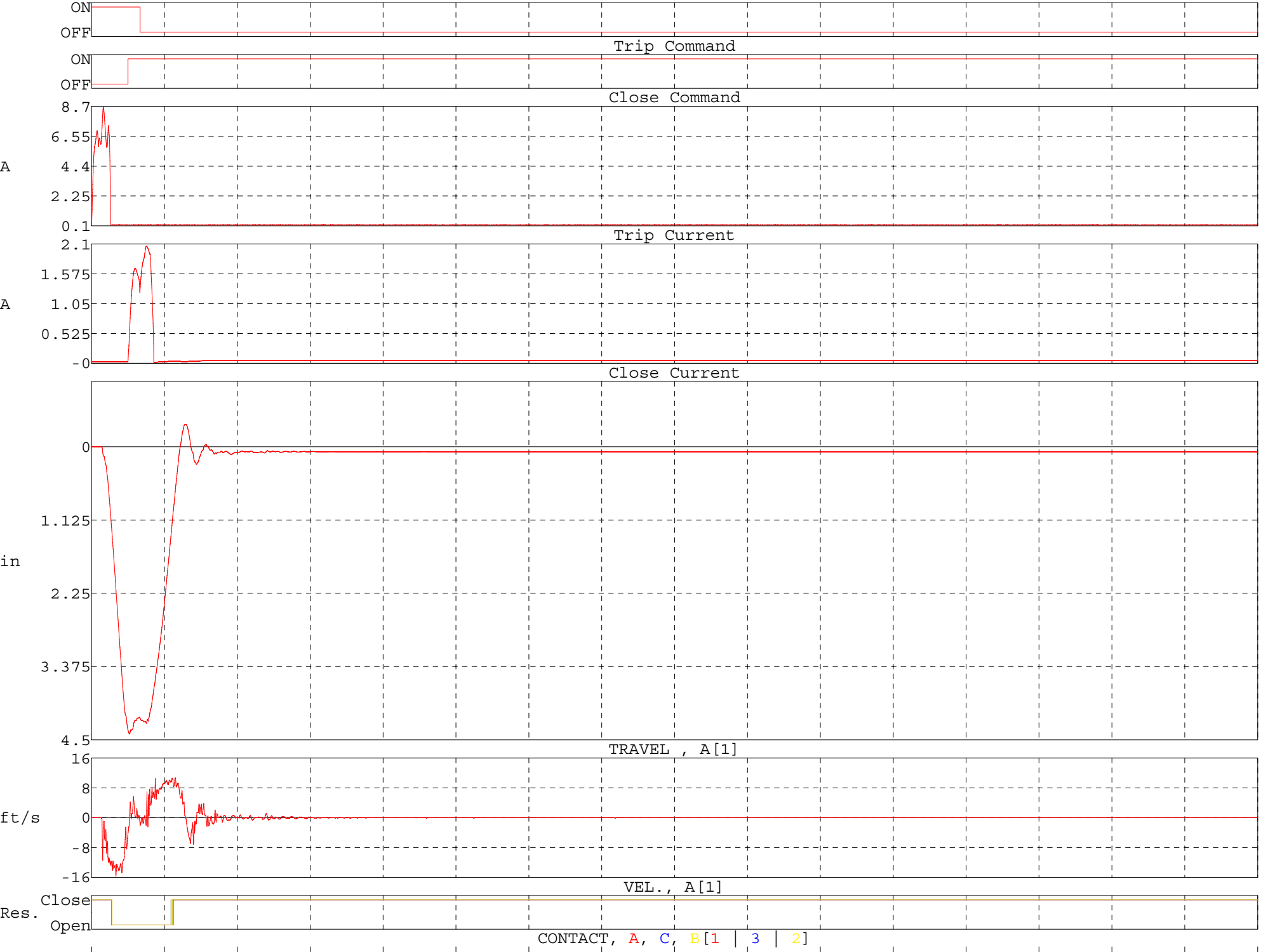
ON
OFF
Trip Command
ON
OFF
Close Command
8.7
6.55
A
4.4
2.25
0.1
Trip Current
2.1
1.575
A
1.05
0.525
-0
Close Current
0
1.125
in
2.25
3.375
4.5
TRAVEL , A[1]
16
8
ft/s
0
-8
-16
VEL., A[1]
Close
Res.
Open
CONTACT, A, C, B[1 | 3 | 2]
(ms) 0 100 200 300 400 500 600 700 800 900 1000 1100 1200 1300 1400 1500 1600

BREAKER PERFORMANCE REPORT
TDR9000 Version: RE 4.01

Manufacturer : Siemens
Model Number : SPS-145-40
Serial Number: 30111795-2
Instr Book # :
Mechanism # :
Mech Instr # :
Special ID : BETA Station
:

Location: Sample Location 1
Circuit :
Operator: MEK / RDB
Operation Counter :
:

Test Type : TRIP
Test Plan Name :

Test was performed on 5/14/2013 at 10:25:43.

Motion Channels 1-3 Transfer Function
1.000 in Travel at the contacts is 1.000 in Travel at the transducer.

Command Parameters Trip Pulse 66.6 ms

Command Currents Trip Current 8.89 A pk

MECHANICAL MOTION CHANNELS 1-3
TRIP OPERATION

Specifications	Test results	Compare
Total Travel		
Expected ******* inches	TRAVEL 1 4.260 inches	
Tolerance + *******	TRAVEL 2	
- *******	TRAVEL 3	
Overtravel		
Expected ******* inches	TRAVEL 1 0.154 inches	
Tolerance + *******	TRAVEL 2	
- *******	TRAVEL 3	
Rebound		
Expected ******* inches	TRAVEL 1 0.116 inches	
Tolerance + *******	TRAVEL 2	
- *******	TRAVEL 3	

OCB CONTACT TIMING - MOTION CHANNELS 1-3
TRIP OPERATION

Main Contact Opening Time Measured From Test Initiation

Specifications		Test results		Travel	Velocity	Compare
Maximum	30.0 ms	CONTACT1	27.7 ms	******* in	****** ft/s	Pass
Minimum	24.0	CONTACT2	27.7	*******	******	Pass
		CONTACT3	27.5	*******	******	Pass

Delta Main Contact Opening Time Within the Breaker

Specifications	Test results		Compare
Maximum******** ms	Breaker	0.2 ms	

User Notes

Page 1

Page 2

Page 3

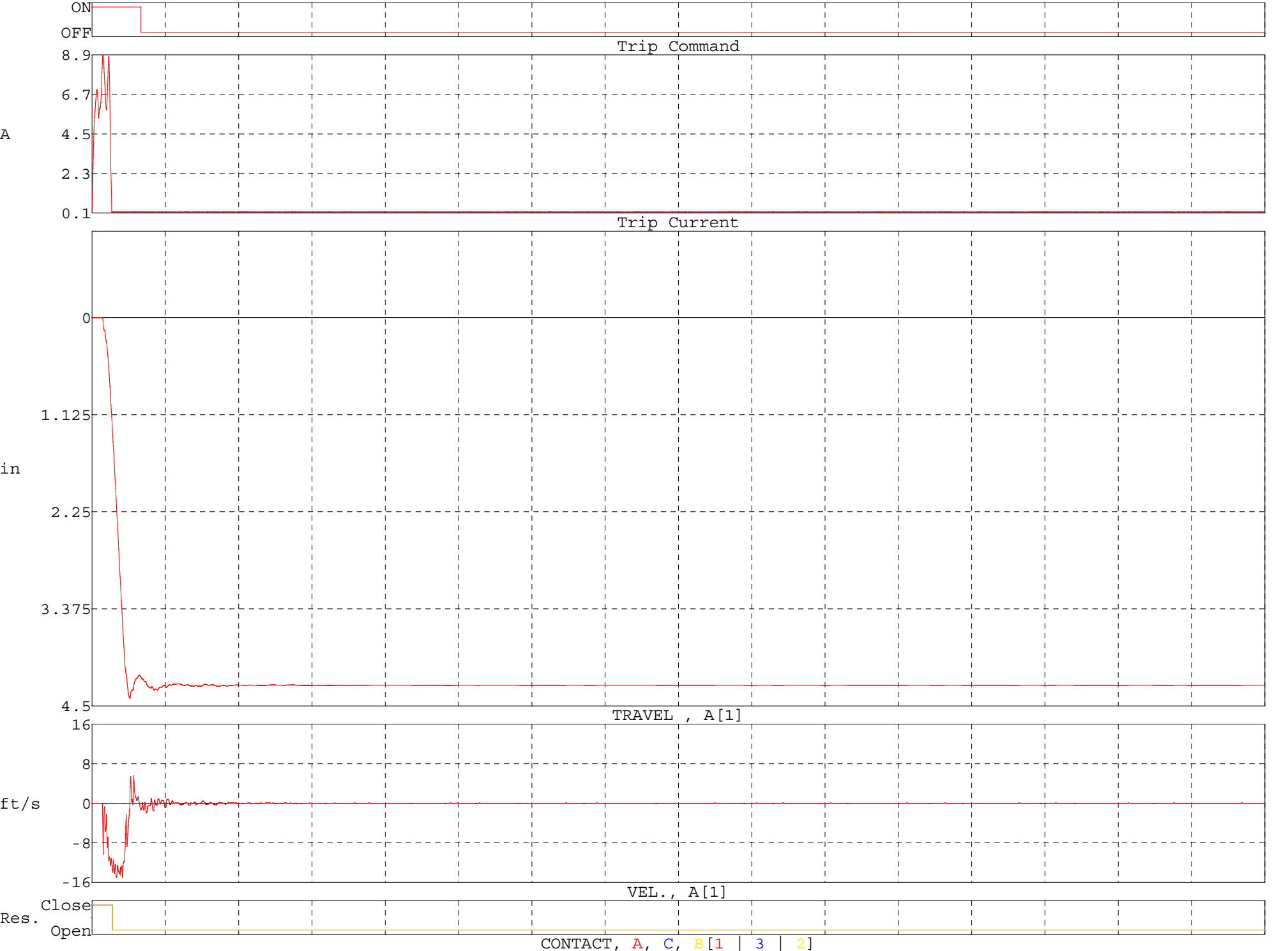
ON
OFF
Trip Command
8.9
6.7
A
4.5
2.3
0.1
Trip Current
0
1.125
in
2.25
3.375
4.5
TRAVEL , A[1]
16
8
ft/s
0
-8
-16
VEL., A[1]
Close
Res.
Open
CONTACT, A, C, B[1 | 3 | 2]
(ms) 0 100 200 300 400 500 600 700 800 900 1000 1100 1200 1300 1400 1500 1600

BREAKER PERFORMANCE REPORT
TDR9000 Version: RE 4.01

Manufacturer :	Siemens	Location:	Sample Location 1
Model Number :	SPS-145-40	Circuit :	
Serial Number:	30111795-2	Operator:	MEK / RDB
Instr Book # :			
Mechanism # :			
Mech Instr # :			
Special ID :	BETA Station	Operation Counter :	
:		:	
Test Type :	TRIP	Test Plan Name :	

Test was performed on 5/14/2013 at 11:52:24.

Motion Channels 1-3 Transfer Function
1.000 in Travel at the contacts is 1.000 in Travel at the transducer.

Command Parameters Trip Pulse 66.6 ms

Command Currents Trip Current 8.69 A pk

MECHANICAL MOTION CHANNELS 1-3
TRIP OPERATION

Specifications	Test results		Compare
Total Travel			
Expected ******* inches	TRAVEL 1	4.275 inches	
Tolerance + *******	TRAVEL 2		
- *******	TRAVEL 3		
Overtravel			
Expected ******* inches	TRAVEL 1	0.139 inches	
Tolerance + *******	TRAVEL 2		
- *******	TRAVEL 3		
Rebound			
Expected ******* inches	TRAVEL 1	0.109 inches	
Tolerance + *******	TRAVEL 2		
- *******	TRAVEL 3		

OCB CONTACT TIMING - MOTION CHANNELS 1-3
TRIP OPERATION

Main Contact Opening Time Measured From Test Initiation

Specifications		Test results		Travel	Velocity	Compare
Maximum	30.0 ms	CONTACT1	27.8 ms	******* in	****** ft/s	Pass
Minimum	24.0	CONTACT2	27.9	*******	******	Pass
		CONTACT3	27.6	*******	******	Pass

Delta Main Contact Opening Time Within the Breaker

Specifications	Test results		Compare
Maximum******** ms	Breaker	0.3 ms	

User Notes

Page 1

Page 2

Page 3

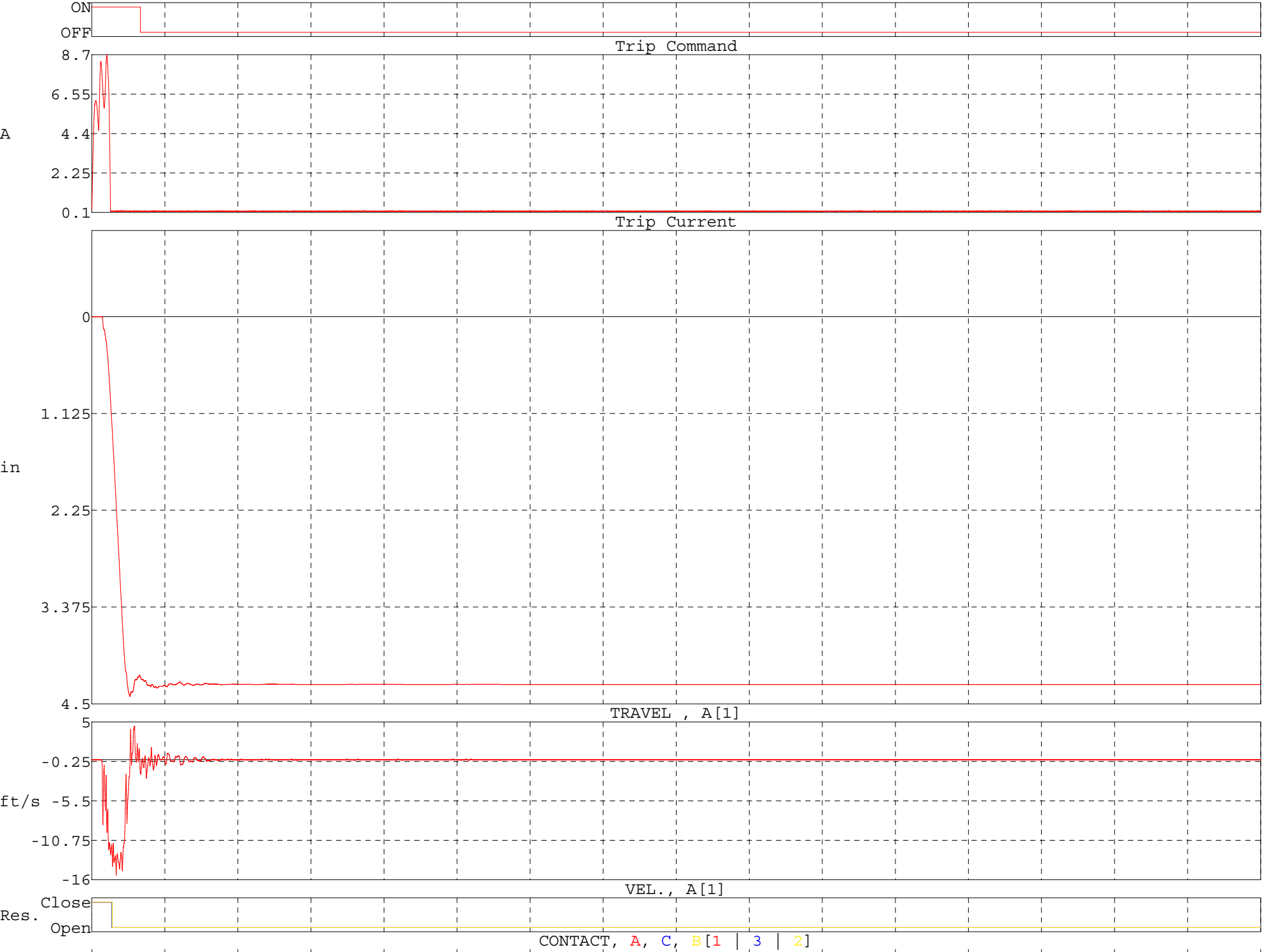
ON
OFF
Trip Command
8.7
6.55
A
4.4
2.25
0.1
Trip Current
0
1.125
in
2.25
3.375
4.5
TRAVEL , A[1]
5
-0.25
ft/s -5.5
-10.75
-16
VEL., A[1]
Close
Res.
Open
CONTACT, A, C, B[1 | 3 | 2]
(ms) 0 100 200 300 400 500 600 700 800 900 1000 1100 1200 1300 1400 1500 1600

BREAKER PERFORMANCE REPORT
TDR9000 Version: RE 4.01

Manufacturer : Siemens Location: Sample Location 1
Model Number : SPS-145-40 Circuit :
Serial Number: 30111795-2 Operator: MEK / RDB
Instr Book # :
Mechanism # :
Mech Instr # :
Special ID : BETA Station Operation Counter :
: :

Test Type : TRIP-FREE Test Plan Name :

Test was performed on 5/14/2013 at 10:27:43.

Motion Channels 1-3 Transfer Function
1.000 in Travel at the contacts is 1.000 in Travel at the transducer.

Command Parameters	Trip Pulse	6500.0 ms	Close Pulse	133.3 ms
	Delay 1	8.3 ms	(Standing)	
Command Currents	Trip Current	8.21 A pk	Close Current	2.10 A pk

OCB CONTACT TIMING
TRIP-FREE OPERATION

Trip-Free Dwell Time Within a Phase

Specifications	Test results		Compare
Maximum******** ms	Phase A	39.7 ms	
Minimum********	Phase B	41.2	
	Phase C	41.2	

Trip-Free Dwell Time Within the Breaker

Specifications	Test results		Compare
	Breaker	41.3 ms	

Main Contact Closing Time Measured From Test Initiation

Specifications	Test results		Travel	Velocity	Compare
Maximum 300.0 ms	CONTACT1	55.6 ms	******* in	****** ft/s	
Minimum********	CONTACT2	55.5	*******	******	
	CONTACT3	55.6	*******	******	

Delta Main Contact Closing Time Within the Breaker

Specifications	Test results		Compare
Maximum******** ms	Breaker	0.1 ms	

Main Contact Opening Time Measured From Test Initiation

Specifications	Test results	Travel	Velocity	Compare
Maximum******** ms	CONTACT1 95.3 ms	******* in	****** ft/s	
Minimum********	CONTACT2 96.7	*******	******	
	CONTACT3 96.8	*******	******	

Delta Main Contact Opening Time Within the Breaker

Specifications	Test results	Compare
Maximum******** ms	Breaker 1.5 ms	

User Notes

Page 1

Page 2

Page 3

ON
OFF
Trip Command
ON
OFF
Close Command
8.3
6.225
A
4.15
2.075
0
Trip Current
2.2
1.65
A
1.1
0.55
-0
Close Current
4.8
3.55
in
2.3
1.05
0.2
TRAVEL , A[1]
21
10.5
ft/s
0
-10.5
-21
VEL., A[1]
Close
Res.
Open
CONTACT, A, C, B[1 | 3 | 2]
(ms) 0 100 200 300 400 500 600 700 800 900 1000 1100 1200 1300 1400 1500 1600

BREAKER PERFORMANCE REPORT
TDR9000 Version: RE 4.01

Manufacturer : Siemens Location: Sample Location 1
Model Number : SPS-145-40 Circuit :
Serial Number: 30111795-2 Operator: MEK / RDB
Instr Book # :
Mechanism # :
Mech Instr # :
Special ID : BETA Station Operation Counter :
: :

Test Type : TRIP-FREE Test Plan Name :

Test was performed on 5/14/2013 at 10:42:35.

Motion Channels 1-3 Transfer Function
1.000 in Travel at the contacts is 1.000 in Travel at the transducer.

Command Parameters	Trip Pulse	6500.0 ms	Close Pulse	133.3 ms
	Delay 1	50.0 ms	(Delay)	
Command Currents	Trip Current	8.89 A pk	Close Current	2.10 A pk

OCB CONTACT TIMING
TRIP-FREE OPERATION

Trip-Free Dwell Time Within a Phase

Specifications	Test results		Compare
Maximum******** ms	Phase A	110.1 ms	
Minimum********	Phase B	111.3	
	Phase C	111.3	

Trip-Free Dwell Time Within the Breaker

Specifications	Test results		Compare
	Breaker	111.3 ms	

Main Contact Closing Time Measured From Test Initiation

Specifications	Test results		Travel	Velocity	Compare
Maximum 300.0 ms	CONTACT1	77.7 ms	******* in	****** ft/s	
Minimum********	CONTACT2	77.7	*******	******	
	CONTACT3	77.7	*******	******	

Delta Main Contact Closing Time Within the Breaker

Specifications	Test results		Compare
Maximum******** ms	Breaker	0.0 ms	

Main Contact Opening Time Measured From Test Initiation

Specifications	Test results	Travel	Velocity	Compare
Maximum******** ms	CONTACT1 187.8 ms	******* in	****** ft/s	
Minimum********	CONTACT2 189.0	*******	******	
	CONTACT3 189.0	*******	******	

Delta Main Contact Opening Time Within the Breaker

Specifications	Test results	Compare
Maximum******** ms	Breaker 1.2 ms	

User Notes

Page 1

Page 2

Page 3

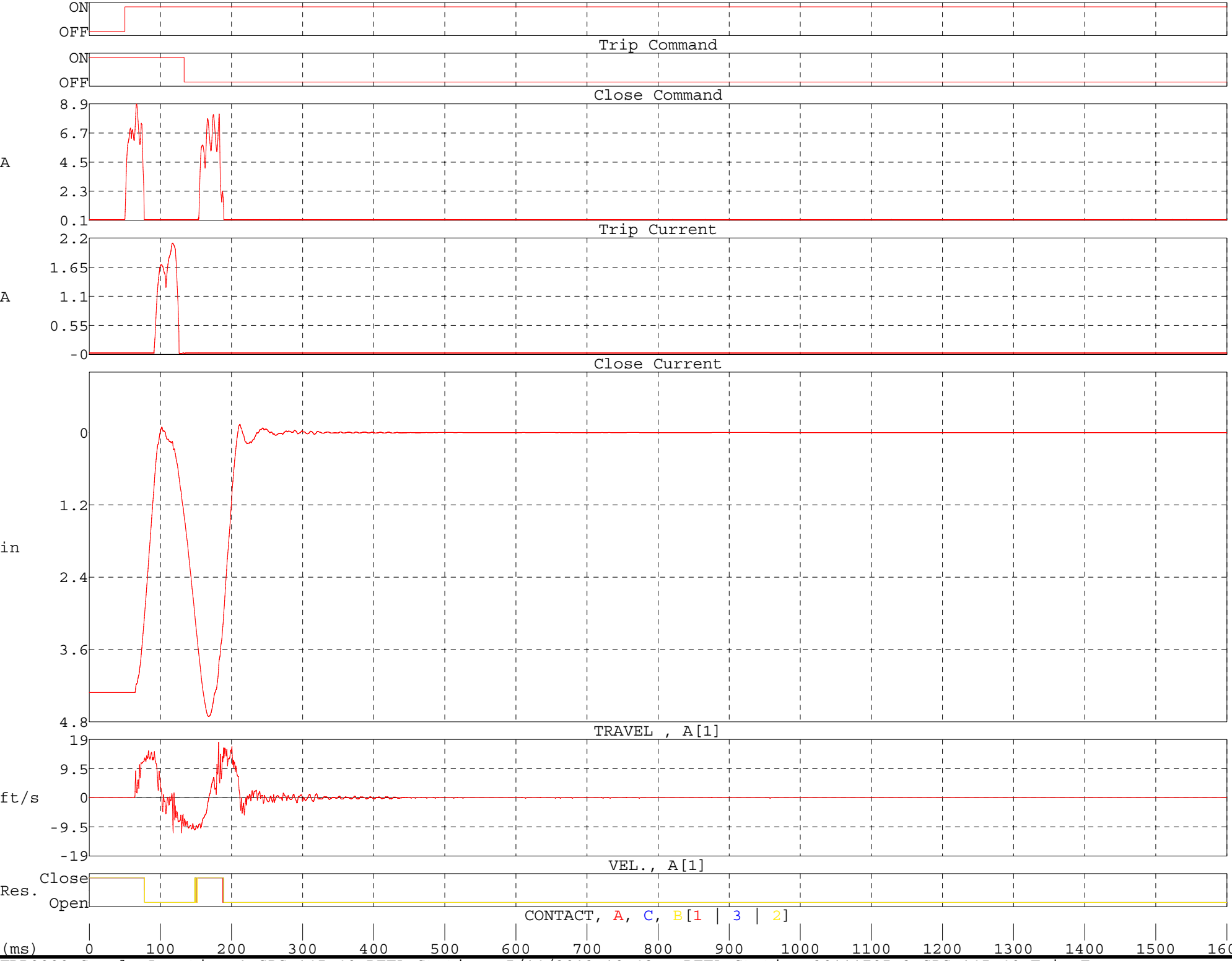
ON
OFF
Trip Command
ON
OFF
Close Command
8.9
6.7
A
4.5
2.3
0.1
Trip Current
2.2
1.65
A
1.1
0.55
-0
Close Current
0
1.2
in
2.4
3.6
4.8
TRAVEL , A[1]
19
9.5
ft/s
0
-9.5
-19
VEL., A[1]
Close
Res.
Open
CONTACT, A, C, B[1 | 3 | 2]
(ms) 0 100 200 300 400 500 600 700 800 900 1000 1100 1200 1300 1400 1500 1600

BREAKER PERFORMANCE REPORT
TDR9000 Version: RE 4.01

Manufacturer : Siemens Location: Sample Location 1
Model Number : SPS-145-40 Circuit :
Serial Number: 30111795-2 Operator: MEK / RDB
Instr Book # :
Mechanism # :
Mech Instr # :
Special ID : BETA Station Operation Counter :
: :

Test Type : TRIP-FREE Test Plan Name :

Test was performed on 5/14/2013 at 10:45:07.

Motion Channels 1-3 Transfer Function
1.000 in Travel at the contacts is 1.000 in Travel at the transducer.

Command Parameters	Trip Pulse	6500.0 ms	Close Pulse	133.3 ms
	Delay 1	500.0 ms	(Delay)	
Command Currents	Trip Current	8.89 A pk	Close Current	2.08 A pk

OCB CONTACT TIMING
TRIP-FREE OPERATION

Trip-Free Dwell Time Within a Phase

Specifications	Test results		Compare
Maximum******** ms	Phase A	472.0 ms	
Minimum********	Phase B	471.8	
	Phase C	471.9	

Trip-Free Dwell Time Within the Breaker

Specifications	Test results		Compare
	Breaker	472.1 ms	

Main Contact Closing Time Measured From Test Initiation

Specifications	Test results		Travel	Velocity	Compare
Maximum 300.0 ms	CONTACT1	55.9 ms	******* in	****** ft/s	
Minimum********	CONTACT2	56.1	*******	******	
	CONTACT3	55.8	*******	******	

Delta Main Contact Closing Time Within the Breaker

Specifications	Test results		Compare
Maximum******** ms	Breaker	0.3 ms	

Main Contact Opening Time Measured From Test Initiation

Specifications	Test results	Travel	Velocity	Compare
Maximum******** ms	CONTACT1 527.9 ms	******* in	****** ft/s	
Minimum********	CONTACT2 527.9	*******	******	
	CONTACT3 527.7	*******	******	

Delta Main Contact Opening Time Within the Breaker

Specifications	Test results	Compare
Maximum******** ms	Breaker 0.2 ms	

User Notes

Page 1

Page 2

Page 3

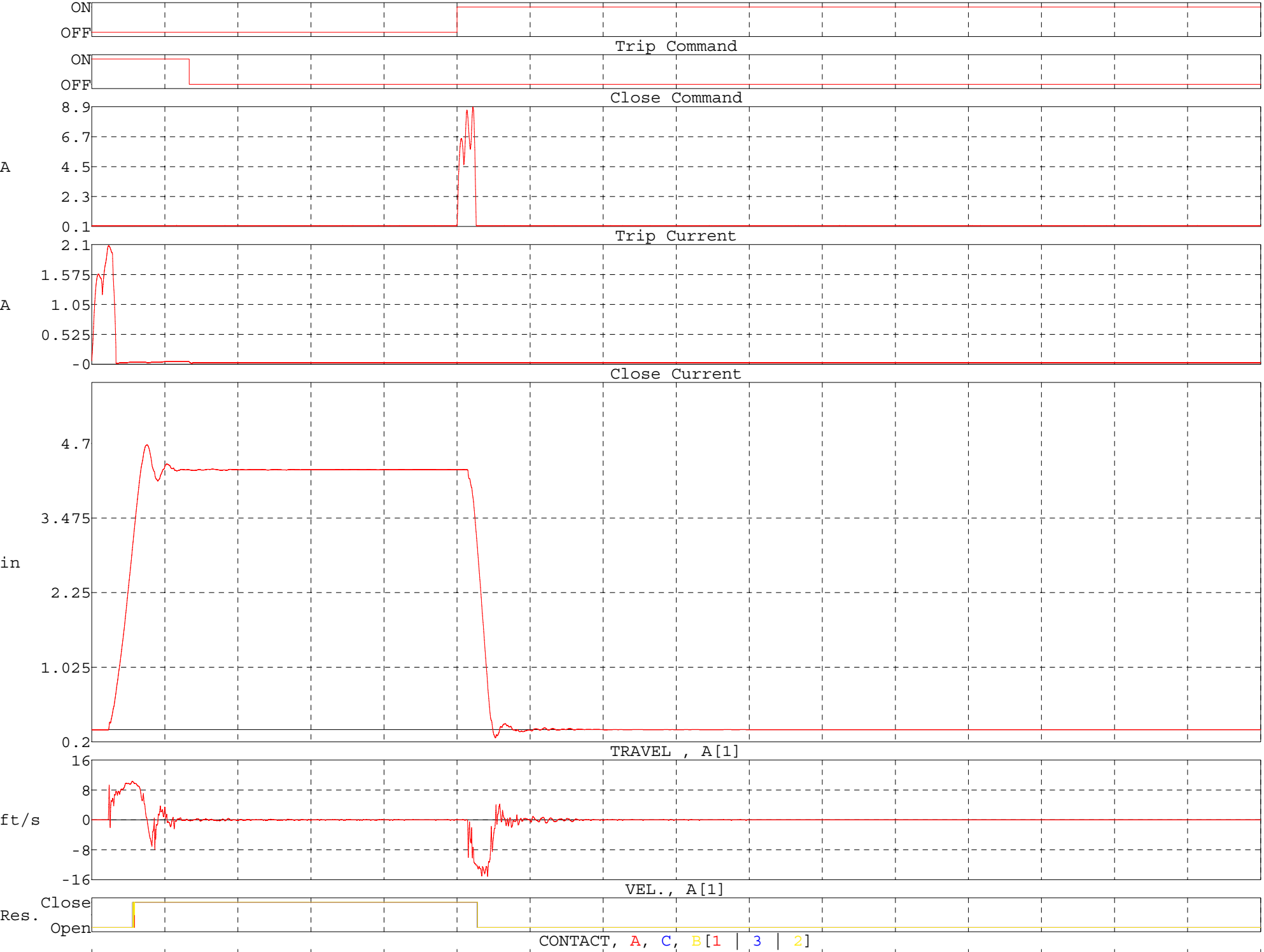
ON
OFF
Trip Command
ON
OFF
Close Command
8.9
6.7
A
4.5
2.3
0.1
Trip Current
2.1
1.575
A
1.05
0.525
-0
Close Current
4.7
3.475
in
2.25
1.025
0.2
TRAVEL , A[1]
16
8
ft/s
0
-8
-16
VEL., A[1]
Close
Res.
Open
CONTACT, A, C, B[1 | 3 | 2]
(ms) 0 100 200 300 400 500 600 700 800 900 1000 1100 1200 1300 1400 1500 1600

BREAKER PERFORMANCE REPORT
TDR9000 Version: RE 4.01

Manufacturer : Siemens
Model Number : SPS-145-40
Serial Number: 30111795-2
Instr Book # :
Mechanism # :
Mech Instr # :
Special ID : BETA Station
:

Location: Sample Location 1
Circuit :
Operator: MEK / RDB
Operation Counter :
:

Test Type : TRIP-FREE
Test Plan Name :

Test was performed on 5/14/2013 at 11:49:19.

Motion Channels 1-3 Transfer Function
1.000 in Travel at the contacts is 1.000 in Travel at the transducer.

Command Parameters	Trip Pulse	6500.0 ms	Close Pulse	133.3 ms
	Delay 1	8.3 ms	(Standing)	
Command Currents	Trip Current	8.05 A pk	Close Current	2.05 A pk

OCB CONTACT TIMING
TRIP-FREE OPERATION

Trip-Free Dwell Time Within a Phase

Specifications	Test results		Compare
Maximum******** ms	Phase A	39.2 ms	
Minimum********	Phase B	40.6	
	Phase C	40.6	

Trip-Free Dwell Time Within the Breaker

Specifications	Test results		Compare
	Breaker	40.7 ms	

Main Contact Closing Time Measured From Test Initiation

Specifications	Test results		Travel	Velocity	Compare
Maximum 300.0 ms	CONTACT1	56.1 ms	******* in	****** ft/s	
Minimum********	CONTACT2	55.9	*******	******	
	CONTACT3	56.0	*******	******	

Delta Main Contact Closing Time Within the Breaker

Specifications	Test results		Compare
Maximum******** ms	Breaker	0.2 ms	

Main Contact Opening Time Measured From Test Initiation

Specifications	Test results	Travel	Velocity	Compare
Maximum******** ms	CONTACT1 95.3 ms	******* in	****** ft/s	
Minimum********	CONTACT2 96.5	*******	******	
	CONTACT3 96.6	*******	******	

Delta Main Contact Opening Time Within the Breaker

Specifications	Test results	Compare
Maximum******** ms	Breaker 1.3 ms	

User Notes

Page 1

Page 2

Page 3

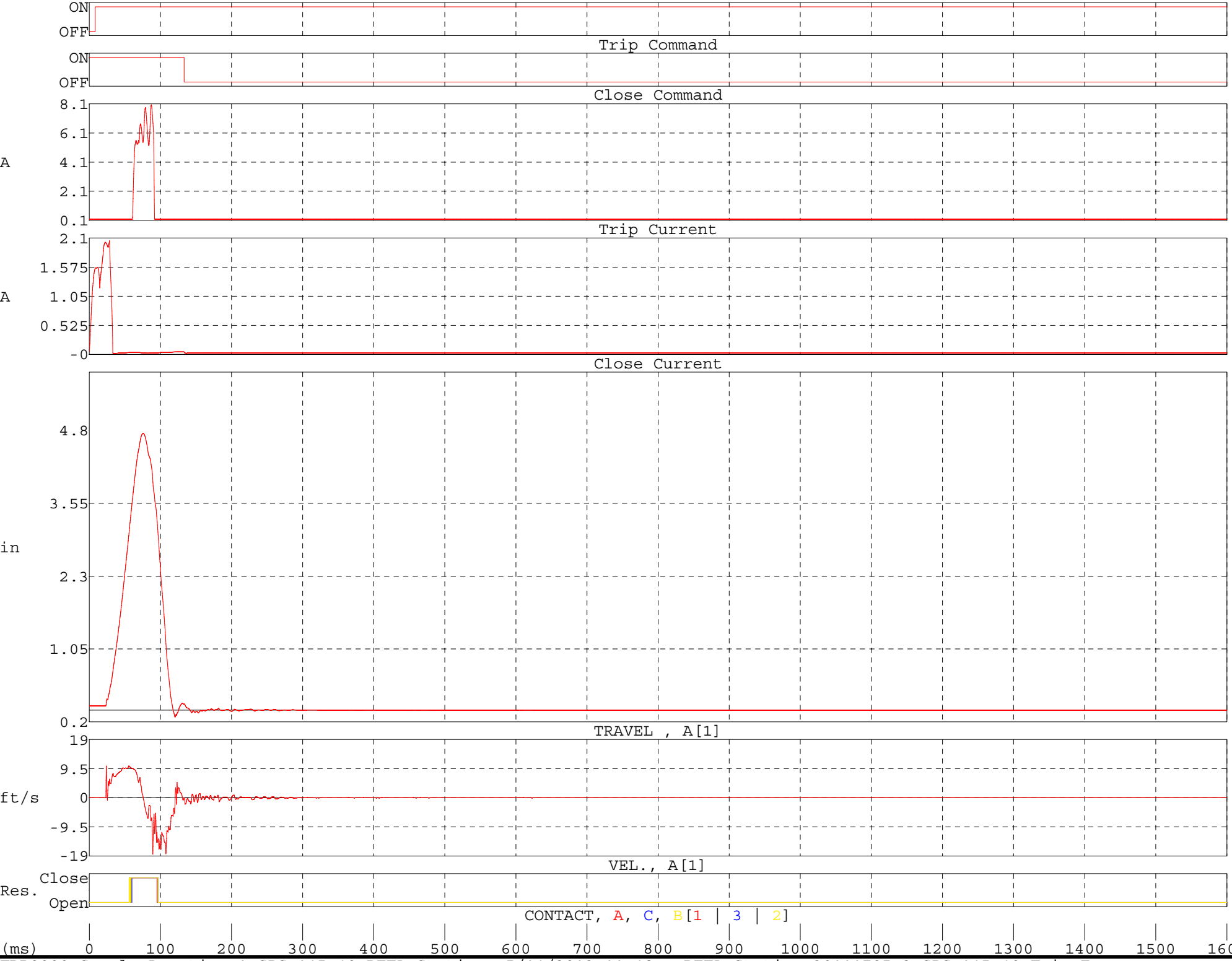
ON
OFF
Trip Command
ON
OFF
Close Command
8.1
6.1
A
4.1
2.1
0.1
Trip Current
2.1
1.575
A
1.05
0.525
-0
Close Current
4.8
3.55
in
2.3
1.05
0.2
TRAVEL , A[1]
19
9.5
ft/s
0
-9.5
-19
VEL., A[1]
Close
Res.
Open
CONTACT, A, C, B[1 | 3 | 2]
(ms) 0 100 200 300 400 500 600 700 800 900 1000 1100 1200 1300 1400 1500 1600

BREAKER PERFORMANCE REPORT
TDR9000 Version: RE 4.01

Manufacturer : Siemens Location: Sample Location 1
Model Number : SPS-145-40 Circuit :
Serial Number: 30111795-2 Operator: MEK / RDB
Instr Book # :
Mechanism # :
Mech Instr # :
Special ID : BETA Station Operation Counter :
: :

Test Type : TRIP-FREE Test Plan Name :

Test was performed on 5/14/2013 at 10:49:36.

Motion Channels 1-3 Transfer Function
1.000 in Travel at the contacts is 1.000 in Travel at the transducer.

Command Parameters	Trip Pulse	6500.0 ms	Close Pulse	133.3 ms
	Delay 1	50.0 ms	(Delay)	
Command Currents	Trip Current	7.96 A pk	Close Current	2.11 A pk

OCB CONTACT TIMING
TRIP-FREE OPERATION

Trip-Free Dwell Time Within a Phase

Specifications	Test results		Compare
Maximum******** ms	Phase A	39.4 ms	
Minimum********	Phase B	40.8	
	Phase C	40.8	

Trip-Free Dwell Time Within the Breaker

Specifications	Test results		Compare
	Breaker	40.9 ms	

Main Contact Closing Time Measured From Test Initiation

Specifications	Test results		Travel	Velocity	Compare
Maximum 300.0 ms	CONTACT1	56.8 ms	******* in	****** ft/s	
Minimum********	CONTACT2	56.6	*******	******	
	CONTACT3	56.7	*******	******	

Delta Main Contact Closing Time Within the Breaker

Specifications	Test results		Compare
Maximum******** ms	Breaker	0.2 ms	

Main Contact Opening Time Measured From Test Initiation

Specifications	Test results	Travel	Velocity	Compare
Maximum******** ms	CONTACT1 96.2 ms	******* in	****** ft/s	
Minimum********	CONTACT2 97.4	*******	******	
	CONTACT3 97.5	*******	******	

Delta Main Contact Opening Time Within the Breaker

Specifications	Test results	Compare
Maximum******** ms	Breaker 1.3 ms	

User Notes

Page 1

Page 2

Page 3

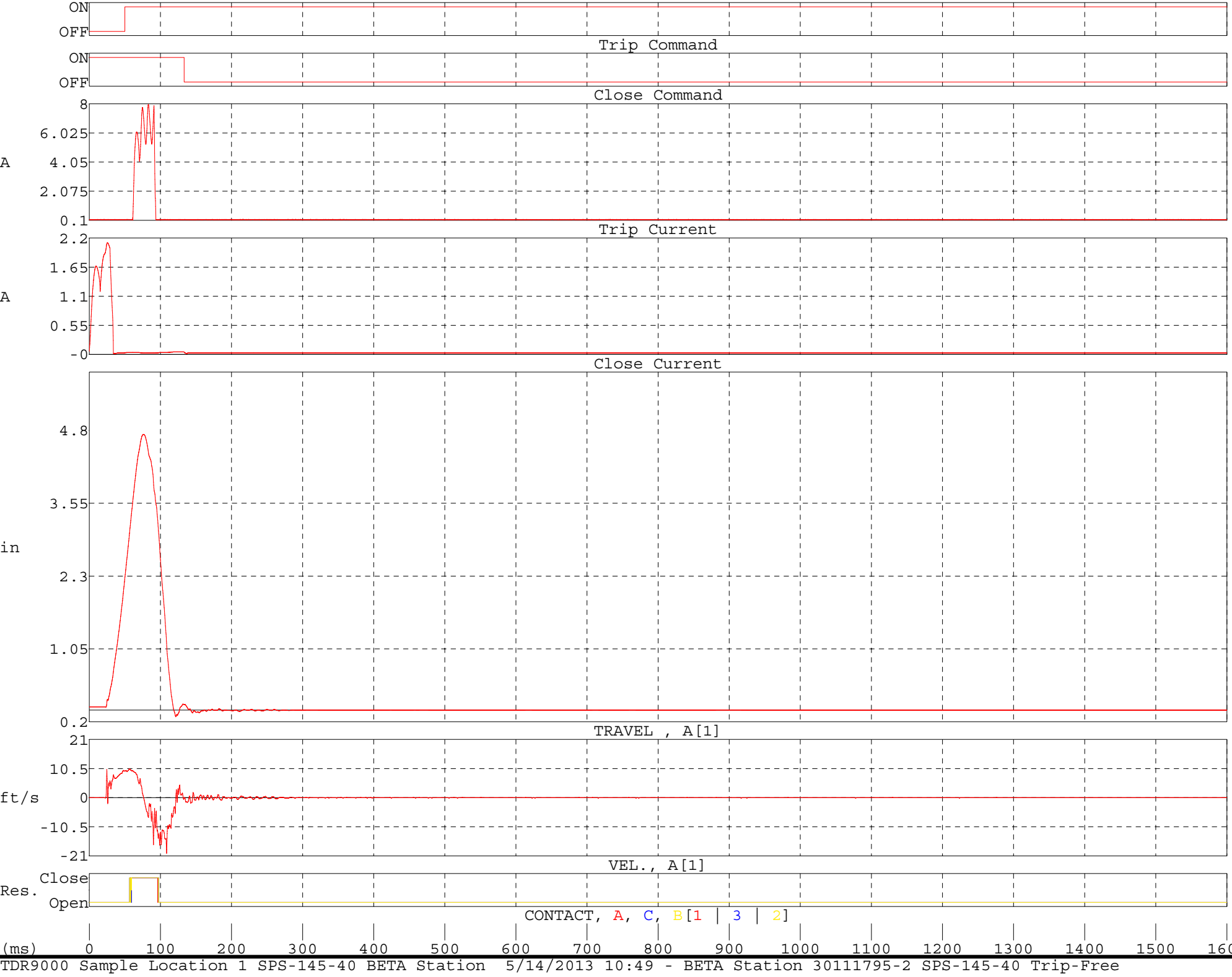
ON
OFF
Trip Command
ON
OFF
Close Command
8
6.025
A
4.05
2.075
0.1
Trip Current
2.2
1.65
A
1.1
0.55
-0
Close Current
4.8
3.55
in
2.3
1.05
0.2
TRAVEL , A[1]
21
10.5
ft/s
0
-10.5
-21
VEL., A[1]
Close
Res.
Open
CONTACT, A, C, B[1 | 3 | 2]
(ms) 0 100 200 300 400 500 600 700 800 900 1000 1100 1200 1300 1400 1500 1600

BREAKER PERFORMANCE REPORT
TDR9000 Version: RE 4.01

Manufacturer : Siemens Location: Sample Location 1
Model Number : SPS-145-40 Circuit :
Serial Number: 30111795-2 Operator: MEK / RDB
Instr Book # :
Mechanism # :
Mech Instr # :
Special ID : BETA Station Operation Counter :
: :

Test Type : TRIP-FREE Test Plan Name :

Test was performed on 5/14/2013 at 10:47:21.

Motion Channels 1-3 Transfer Function
1.000 in Travel at the contacts is 1.000 in Travel at the transducer.

Command Parameters	Trip Pulse	6500.0 ms	Close Pulse	133.3 ms
	Delay 1	500.0 ms	(Delay)	
Command Currents	Trip Current	8.74 A pk	Close Current	2.12 A pk

OCB CONTACT TIMING
TRIP-FREE OPERATION

Trip-Free Dwell Time Within a Phase

Specifications	Test results		Compare
Maximum******** ms	Phase A	471.9 ms	
Minimum********	Phase B	472.0	
	Phase C	471.7	

Trip-Free Dwell Time Within the Breaker

Specifications	Test results		Compare
	Breaker	472.0 ms	

Main Contact Closing Time Measured From Test Initiation

Specifications	Test results		Travel	Velocity	Compare
Maximum 300.0 ms	CONTACT1	56.1 ms	******* in	****** ft/s	
Minimum********	CONTACT2	56.0	*******	******	
	CONTACT3	56.1	*******	******	

Delta Main Contact Closing Time Within the Breaker

Specifications	Test results		Compare
Maximum******** ms	Breaker	0.1 ms	

Main Contact Opening Time Measured From Test Initiation

Specifications	Test results	Travel	Velocity	Compare
Maximum******** ms	CONTACT1 528.0 ms	******* in	****** ft/s	
Minimum********	CONTACT2 528.0	*******	******	
	CONTACT3 527.8	*******	******	

Delta Main Contact Opening Time Within the Breaker

Specifications	Test results	Compare
Maximum******** ms	Breaker 0.2 ms	

User Notes

Page 1

Page 2

Page 3

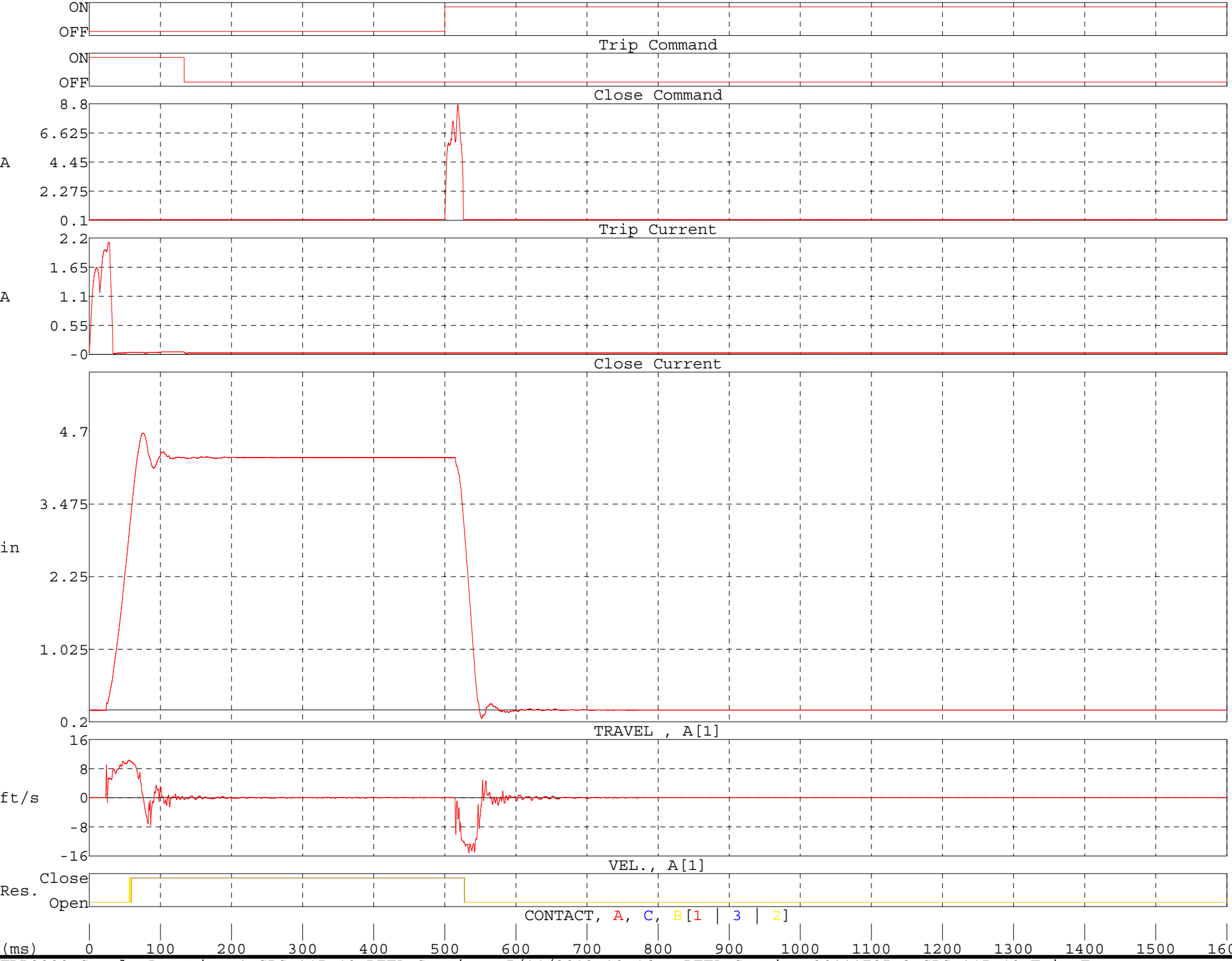
ON
OFF
Trip Command
ON
OFF
Close Command
8.8
6.625
A
4.45
2.275
0.1
Trip Current
2.2
1.65
A
1.1
0.55
-0
Close Current
4.7
3.475
in
2.25
1.025
0.2
TRAVEL , A[1]
16
8
ft/s
0
-8
-16
VEL., A[1]
Close
Res.
Open
CONTACT, A, C, B[1 | 3 | 2]
(ms) 0 100 200 300 400 500 600 700 800 900 1000 1100 1200 1300 1400 1500 1600

Vanguard Instruments Company, Inc.
1520 S. Hellman Avenue, Ontario, CA 91761, USA Phone: 909.923.9390 FAX: 909.923.9391
www.vanguard-instruments.com

FILENAME: CT 1X PHASE A BETA BKR.test
DATE: 05/08/13 08:00:49
COMPANY: HOTLINE CONSTRUCTION
STATION: MOJAVE PP BETA SS
CIRCUIT: CT 1X PHASE A BETA B

MFR: SEIMENS
MODEL:
SN:
OPERATOR: RG/RB
COMMENTS: BRK SN: 30111795-2

SUMMARY REPORT
KNEE TYPE: IEEE 30 Deg
FREQUENCY: 60 Hz

Test	Tap	IEEE30	IEEE45	IEC 10/50	NP-Ratio	M-Ratio	% Error	Phase Angle	Winding Res
1	X1-X2	0.00	0.00	0.00	200/5.0	40.084	0.2105 %	-0.06°	N/A
2	X1-X3	0.00	0.00	0.00	300/5.0	60.075	0.1245 %	-0.06°	N/A
3	X1-X4	0.00	0.00	0.00	800/5.0	159.987	0.0083 %	0.20°	N/A
4	X1-X5	386.80	312.48	406.96	1200/5.0	240.026	0.0108 %	1.56°	451.86 m-ohms
5	X2-X3	0.00	0.00	0.00	100/5.0	20.130	0.6510 %	-0.58°	N/A
6	X2-X4	0.00	0.00	0.00	600/5.0	119.991	0.0072 %	0.02°	N/A
7	X2-X5	0.00	0.00	0.00	1000/5.0	199.973	0.0134 %	0.04°	N/A
8	X3-X4	0.00	0.00	0.00	500/5.0	100.054	0.0537 %	-0.02°	N/A
9	X3-X5	0.00	0.00	0.00	900/5.0	180.022	0.0124 %	0.02°	N/A
10	X4-X5	0.00	0.00	0.00	400/5.0	80.018	0.0229 %	0.00°	N/A

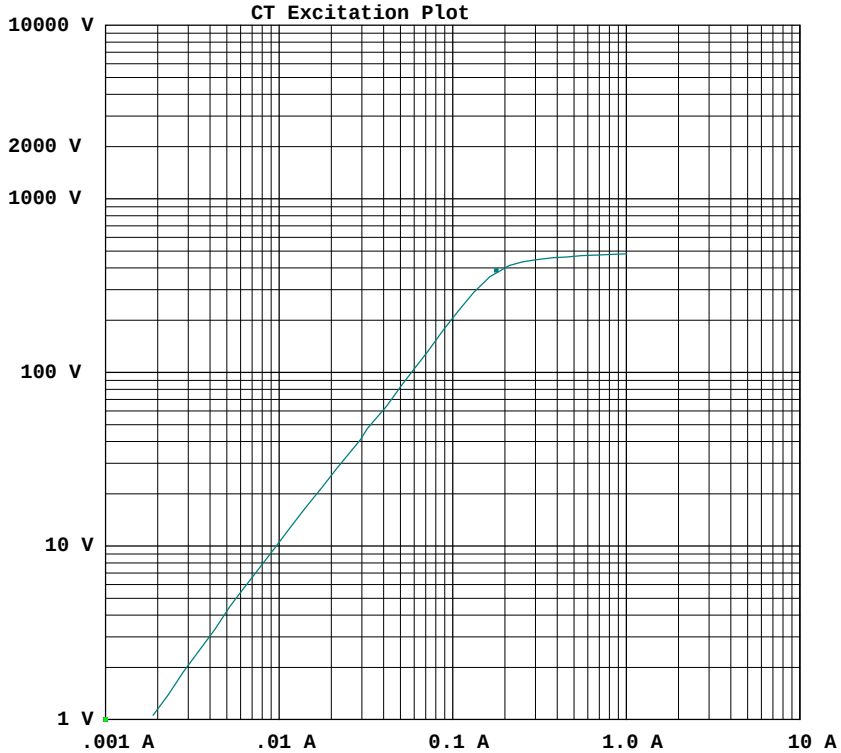

1000V INSULATION RES TEST RESULTS

VOLTAGE: 993.4 V
CURRENT: 0.01 MICRO-AMPS
RESISTANCE: >1,000 MEG-OHMS

BURDEN TEST RESULTS

5 AMP BURDEN TEST

MEASURED CURRENT: 0.046 A
MEASURED VOLTAGE: 67.077 V, 21.12 DEG
IMPEDANCE (Z): 16.405 OHMS
BURDEN: 0.000 VA
POWER FACTOR: 0.93

Test Notepad

EZCT-2000 Software Version: 1.35
www.vanguard-instruments.com

Vanguard Instruments Company, Inc.
1520 S. Hellman Avenue, Ontario, CA 91761, USA Phone: 909.923.9390 FAX: 909.923.9391
www.vanguard-instruments.com

FILENAME: CT 1Y PHASE A BETA BKR.test
DATE: 05/08/13 08:19:35
COMPANY: HOTLINE CONSTRUCTION
STATION: MOJAVE PP BETA SS
CIRCUIT: CT 1Y PHASE A BETA B

MFR: SEIMENS
MODEL:
SN:
OPERATOR: RG/RB
COMMENTS: BRK SN: 30111795-2

SUMMARY REPORT
KNEE TYPE: IEEE 30 Deg
FREQUENCY: 60 Hz

Test	Tap	IEEE30	IEEE45	IEC 10/50	NP-Ratio	M-Ratio	% Error	Phase Angle	Winding Res
1	X1-X2	0.00	0.00	0.00	200/5.0	40.086	0.2143 %	-0.10°	N/A
2	X1-X3	0.00	0.00	0.00	300/5.0	60.094	0.1560 %	0.06°	N/A
3	X1-X4	0.00	0.00	0.00	800/5.0	160.068	0.0427 %	-0.02°	N/A
4	X1-X5	393.20	327.76	411.36	1200/5.0	240.204	0.0850 %	0.12°	453.96 m-ohms
5	X2-X3	0.00	0.00	0.00	100/5.0	20.128	0.6405 %	-0.62°	N/A
6	X2-X4	0.00	0.00	0.00	600/5.0	120.010	0.0086 %	0.06°	N/A
7	X2-X5	0.00	0.00	0.00	1000/5.0	199.880	0.0602 %	0.06°	N/A
8	X3-X4	0.00	0.00	0.00	500/5.0	100.130	0.1302 %	0.00°	N/A
9	X3-X5	0.00	0.00	0.00	900/5.0	180.035	0.0196 %	0.02°	N/A
10	X4-X5	0.00	0.00	0.00	400/5.0	80.169	0.2117 %	-0.06°	N/A

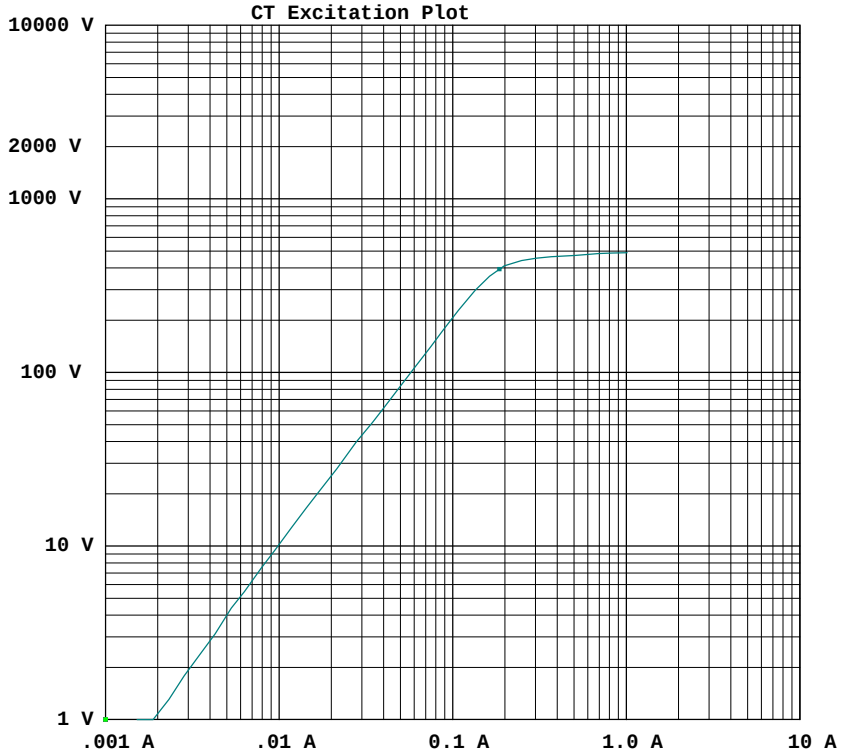

1000V INSULATION RES TEST RESULTS

VOLTAGE: 991.8 V
CURRENT: 0.00 MICRO-AMPS
RESISTANCE: >1,000 MEG-OHMS

BURDEN TEST RESULTS

5 AMP BURDEN TEST

MEASURED CURRENT: 0.045 A
MEASURED VOLTAGE: 66.353 V, 20.36 DEG
IMPEDANCE (Z): 32.709 OHMS
BURDEN: 0.000 VA
POWER FACTOR: 0.94

Test Notepad

EZCT-2000 Software Version: 1.35
www.vanguard-instruments.com

Vanguard Instruments Company, Inc.
1520 S. Hellman Avenue, Ontario, CA 91761, USA Phone: 909.923.9390 FAX: 909.923.9391
www.vanguard-instruments.com

FILENAME: CT 1Z PHASE A BETA BKR.test
DATE: 05/08/13 08:34:20
COMPANY: HOTLINE CONSTRUCTION
STATION: MOJAVE PP BETA SS
CIRCUIT: CT 1Z PHASE A BETA B

MFR: SIEMENS
MODEL:
SN:
OPERATOR: RG/RB
COMMENTS: BKR SN: 30111795-2

SUMMARY REPORT
KNEE TYPE: IEEE 30 Deg
FREQUENCY: 60 Hz

Test	Tap	IEEE30	IEEE45	IEC 10/50	NP-Ratio	M-Ratio	% Error	Phase Angle	Winding Res
1 [redacted]	X1-X2	199.44	171.40	208.12	800/5.0	160.479	0.2992 %	0.16°	194.80 m-ohms

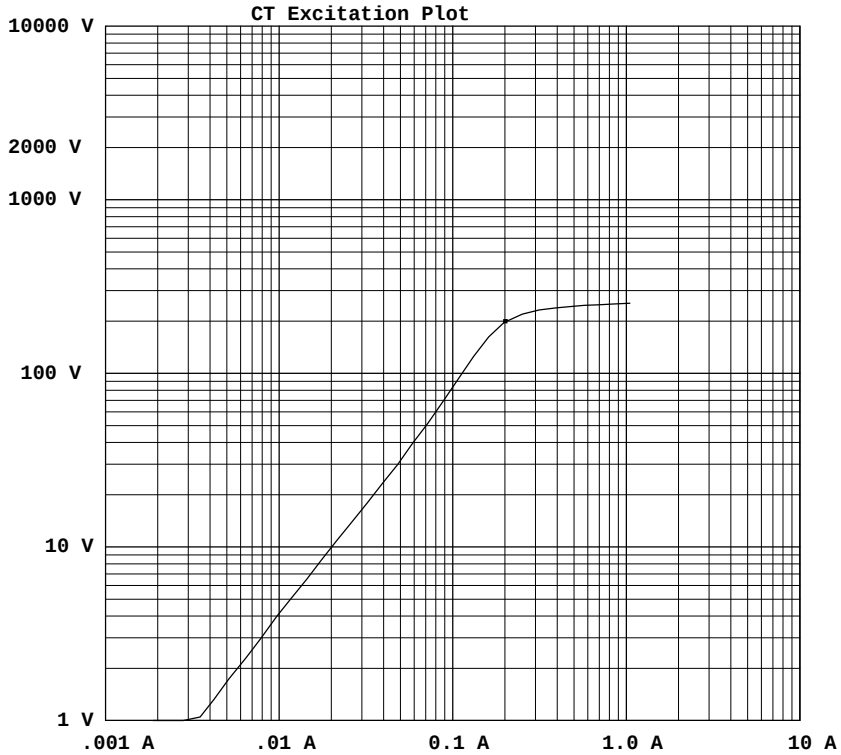

1000V INSULATION RES TEST RESULTS

VOLTAGE: 1014.3 V
CURRENT: 0.09 MICRO-AMPS
RESISTANCE: >1,000 MEG-OHMS

BURDEN TEST RESULTS

5 AMP BURDEN TEST

MEASURED CURRENT: 0.091 A
MEASURED VOLTAGE: 67.077 V, 35.25 DEG
IMPEDANCE (Z): 16.215 OHMS
BURDEN: 0.000 VA
POWER FACTOR: 0.82

Test Notepad

Vanguard Instruments Company, Inc.
1520 S. Hellman Avenue, Ontario, CA 91761, USA Phone: 909.923.9390 FAX: 909.923.9391
www.vanguard-instruments.com

FILENAME: CT 2X PHASE A BETA BKR.test
DATE: 05/08/13 08:59:52
COMPANY: HOTLINE CONSTRUCTION
STATION: MOJAVE PP BETA SS
CIRCUIT: CT 2X PHASE A BETA

MFR: SEIMENS
MODEL:
SN:
OPERATOR: RG/RB
COMMENTS: BRK SN: 30111795-2

SUMMARY REPORT
KNEE TYPE: IEEE 30 Deg
FREQUENCY: 60 Hz

Test	Tap	IEEE30	IEEE45	IEC 10/50	NP-Ratio	M-Ratio	% Error	Phase Angle	Winding Res
1	X1-X2	0.00	0.00	0.00	200/5.0	40.095	0.2380 %	-0.06°	N/A
2	X1-X3	0.00	0.00	0.00	300/5.0	60.108	0.1807 %	0.34°	N/A
3	X1-X4	0.00	0.00	0.00	800/5.0	160.027	0.0171 %	-0.08°	N/A
4	X1-X5	389.00	315.64	409.28	1200/5.0	239.103	0.3737 %	-0.70°	451.56 m-ohms
5	X2-X3	0.00	0.00	0.00	100/5.0	20.139	0.6930 %	-1.08°	N/A
6	X2-X4	0.00	0.00	0.00	600/5.0	119.997	0.0024 %	0.02°	N/A
7	X2-X5	0.00	0.00	0.00	1000/5.0	200.106	0.0529 %	-0.06°	N/A
8	X3-X4	0.00	0.00	0.00	500/5.0	100.039	0.0393 %	0.00°	N/A
9	X3-X5	0.00	0.00	0.00	900/5.0	179.965	0.0192 %	0.02°	N/A
10	X4-X5	0.00	0.00	0.00	400/5.0	80.047	0.0585 %	0.04°	N/A

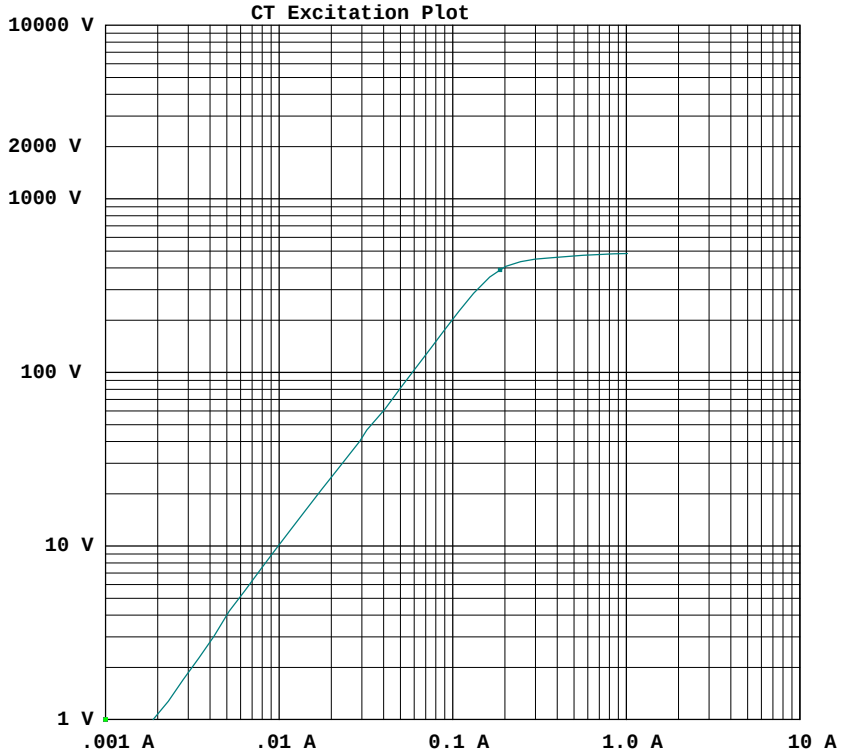

1000V INSULATION RES TEST RESULTS

VOLTAGE: 992.3 V
CURRENT: 0.00 MICRO-AMPS
RESISTANCE: >1,000 MEG-OHMS

BURDEN TEST RESULTS

5 AMP BURDEN TEST

MEASURED CURRENT: 0.046 A
MEASURED VOLTAGE: 66.144 V, 20.54 DEG
IMPEDANCE (Z): 61.646 OHMS
BURDEN: 0.000 VA
POWER FACTOR: 0.94

Test Notepad

EZCT-2000 Software Version: 1.35
www.vanguard-instruments.com

Vanguard Instruments Company, Inc.
1520 S. Hellman Avenue, Ontario, CA 91761, USA Phone: 909.923.9390 FAX: 909.923.9391
www.vanguard-instruments.com

FILENAME: CT 2Y PHASE A BETA BKR.test
DATE: 05/08/13 09:14:07
COMPANY: HOTLINE CONSTRUCTION
STATION: MOJAVE PP BETA SS
CIRCUIT: CT 2Y PHASE A BETA

MFR: SEIMENS
MODEL:
SN:
OPERATOR: RG/RB
COMMENTS: BRK SN: 30111795-2

SUMMARY REPORT
KNEE TYPE: IEEE 30 Deg
FREQUENCY: 60 Hz

Test	Tap	IEEE30	IEEE45	IEC 10/50	NP-Ratio	M-Ratio	% Error	Phase Angle	Winding Res
1	X1-X2	0.00	0.00	0.00	200/5.0	40.074	0.1858 %	-0.10°	N/A
2	X1-X3	0.00	0.00	0.00	300/5.0	60.072	0.1202 %	0.00°	N/A
3	X1-X4	0.00	0.00	0.00	800/5.0	160.084	0.0527 %	0.02°	N/A
4	X1-X5	385.36	325.28	408.32	1200/5.0	239.986	0.0057 %	0.22°	451.73 m-ohms
5	X2-X3	0.00	0.00	0.00	100/5.0	20.123	0.6155 %	-0.62°	N/A
6	X2-X4	0.00	0.00	0.00	600/5.0	120.037	0.0311 %	0.06°	N/A
7	X2-X5	0.00	0.00	0.00	1000/5.0	199.926	0.0371 %	0.02°	N/A
8	X3-X4	0.00	0.00	0.00	500/5.0	100.028	0.0282 %	-0.08°	N/A
9	X3-X5	0.00	0.00	0.00	900/5.0	179.880	0.0666 %	0.06°	N/A
10	X4-X5	0.00	0.00	0.00	400/5.0	80.055	0.0688 %	0.00°	N/A

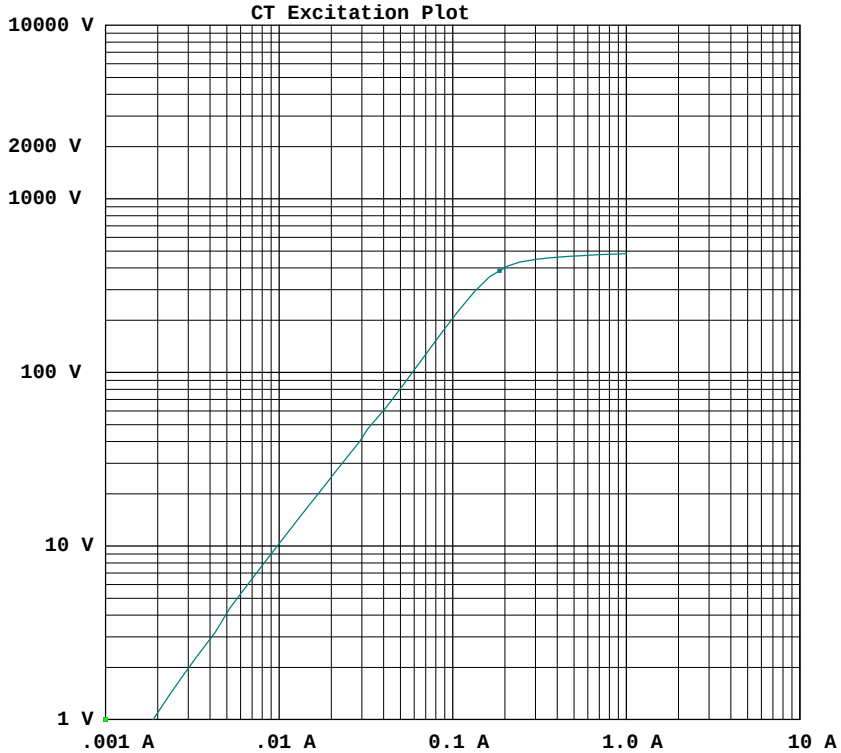

1000V INSULATION RES TEST RESULTS

VOLTAGE: 991.6 V
CURRENT: 0.00 MICRO-AMPS
RESISTANCE: >1,000 MEG-OHMS

BURDEN TEST RESULTS

5 AMP BURDEN TEST

MEASURED CURRENT: 0.046 A
MEASURED VOLTAGE: 66.614 V, 21.54 DEG
IMPEDANCE (Z): 6.344 OHMS
BURDEN: 0.000 VA
POWER FACTOR: 0.93

Test Notepad

EZCT-2000 Software Version: 1.35
www.vanguard-instruments.com

Vanguard Instruments Company, Inc.
1520 S. Hellman Avenue, Ontario, CA 91761, USA Phone: 909.923.9390 FAX: 909.923.9391
www.vanguard-instruments.com

FILENAME: CT 2Z PHASE A BETA BKR.test
DATE: 05/08/13 09:21:43
COMPANY: HOTLINE CONSTRUCTION
STATION: MOJAVE PP BETA SS
CIRCUIT: CT 2Z PHASE A BETA

MFR: SIEMENS
MODEL:
SN:
OPERATOR: RG/RB
COMMENTS: BKR SN: 30111795-2

SUMMARY REPORT
KNEE TYPE: IEEE 30 Deg
FREQUENCY: 60 Hz

Test	Tap	IEEE30	IEEE45	IEC 10/50	NP-Ratio	M-Ratio	% Error	Phase Angle	Winding Res
1 [redacted]	X1-X2	198.04	167.96	207.84	800/5.0	160.019	0.0119 %	0.00°	192.85 m-ohms

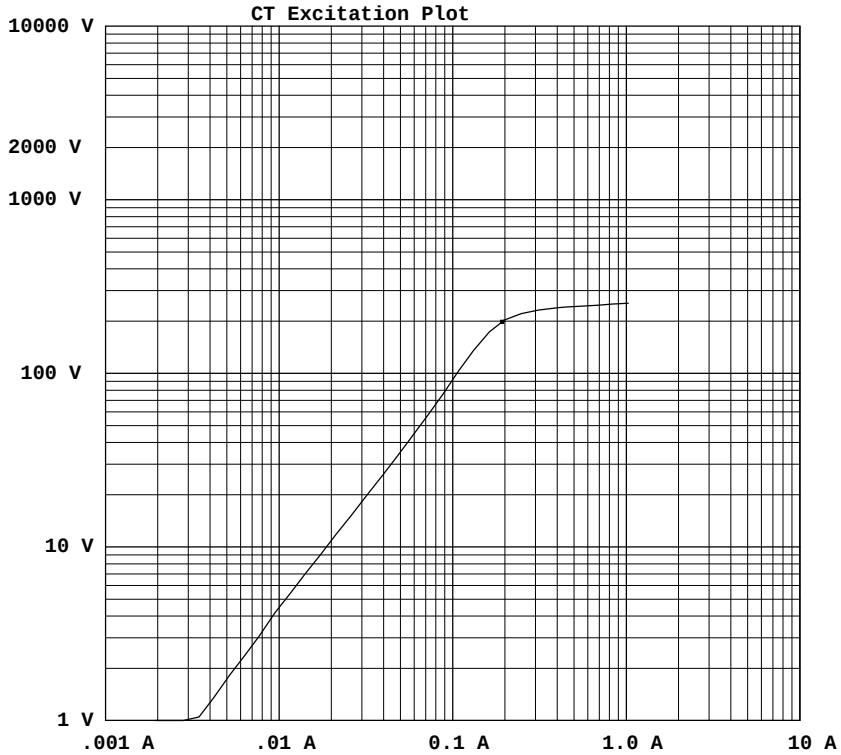

1000V INSULATION RES TEST RESULTS

VOLTAGE: 1002.2 V
CURRENT: 0.05 MICRO-AMPS
RESISTANCE: >1,000 MEG-OHMS

BURDEN TEST RESULTS

5 AMP BURDEN TEST

MEASURED CURRENT: 0.084 A
MEASURED VOLTAGE: 66.278 V, 34.27 DEG
IMPEDANCE (Z): 2.586 OHMS
BURDEN: 0.000 VA
POWER FACTOR: 0.83

Test Notepad

Vanguard Instruments Company, Inc.
1520 S. Hellman Avenue, Ontario, CA 91761, USA Phone: 909.923.9390 FAX: 909.923.9391
www.vanguard-instruments.com

FILENAME: CT 3X PHASE B BETA BKR.test
DATE: 05/08/13 09:37:57
COMPANY: HOTLINE CONSTRUCTION
STATION: MOJAVE PP BETA SS
CIRCUIT: CT 3X PHASE B BETA

MFR: SEIMENS
MODEL:
SN:
OPERATOR: RG/RB
COMMENTS: BRK SN: 30111795-2

SUMMARY REPORT
KNEE TYPE: IEEE 30 Deg
FREQUENCY: 60 Hz

Test	Tap	IEEE30	IEEE45	IEC 10/50	NP-Ratio	M-Ratio	% Error	Phase Angle	Winding Res
1	X1-X2	0.00	0.00	0.00	200/5.0	40.111	0.2775 %	-0.10°	N/A
2	X1-X3	0.00	0.00	0.00	300/5.0	60.072	0.1205 %	0.10°	N/A
3	X1-X4	0.00	0.00	0.00	800/5.0	160.054	0.0336 %	0.00°	N/A
4	X1-X5	383.16	324.40	404.52	1200/5.0	239.860	0.0585 %	0.92°	460.76 m-ohms
5	X2-X3	0.00	0.00	0.00	100/5.0	20.139	0.6950 %	-0.70°	N/A
6	X2-X4	0.00	0.00	0.00	600/5.0	120.049	0.0409 %	0.04°	N/A
7	X2-X5	0.00	0.00	0.00	1000/5.0	199.968	0.0159 %	0.02°	N/A
8	X3-X4	0.00	0.00	0.00	500/5.0	100.069	0.0694 %	0.02°	N/A
9	X3-X5	0.00	0.00	0.00	900/5.0	180.067	0.0371 %	0.04°	N/A
10	X4-X5	0.00	0.00	0.00	400/5.0	80.061	0.0761 %	0.00°	N/A

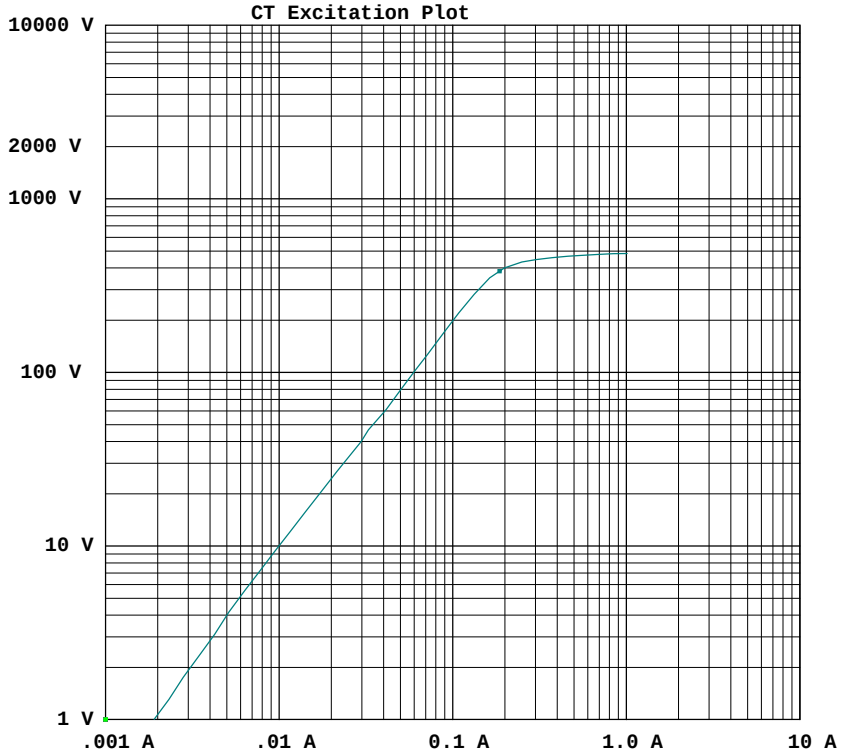

1000V INSULATION RES TEST RESULTS

VOLTAGE: 999.0 V
CURRENT: 0.00 MICRO-AMPS
RESISTANCE: >1,000 MEG-OHMS

BURDEN TEST RESULTS

5 AMP BURDEN TEST

MEASURED CURRENT: 0.047 A
MEASURED VOLTAGE: 66.174 V, 21.42 DEG
IMPEDANCE (Z): 31.698 OHMS
BURDEN: 0.000 VA
POWER FACTOR: 0.93

Test Notepad

EZCT-2000 Software Version: 1.35
www.vanguard-instruments.com

Vanguard Instruments Company, Inc.
1520 S. Hellman Avenue, Ontario, CA 91761, USA Phone: 909.923.9390 FAX: 909.923.9391
www.vanguard-instruments.com

FILENAME: CT 3Y PHASE B BETA BKR.test
DATE: 05/08/13 09:50:24
COMPANY: HOTLINE CONSTRUCTION
STATION: MOJAVE PP BETA SS
CIRCUIT: CT 3Y PHASE B BETA

MFR: SEIMENS
MODEL:
SN:
OPERATOR: RG/RB
COMMENTS: BRK SN: 30111795-2

SUMMARY REPORT
KNEE TYPE: IEEE 30 Deg
FREQUENCY: 60 Hz

Test	Tap	IEEE30	IEEE45	IEC 10/50	NP-Ratio	M-Ratio	% Error	Phase Angle	Winding Res
1	X1-X2	0.00	0.00	0.00	200/5.0	40.111	0.2778 %	-0.08°	N/A
2	X1-X3	0.00	0.00	0.00	300/5.0	60.086	0.1438 %	0.04°	N/A
3	X1-X4	0.00	0.00	0.00	800/5.0	160.016	0.0101 %	0.02°	N/A
4	X1-X5	390.52	328.48	412.28	1200/5.0	239.543	0.1903 %	-0.58°	465.18 m-ohms
5	X2-X3	0.00	0.00	0.00	100/5.0	20.143	0.7160 %	-0.88°	N/A
6	X2-X4	0.00	0.00	0.00	600/5.0	120.027	0.0222 %	0.04°	N/A
7	X2-X5	0.00	0.00	0.00	1000/5.0	199.975	0.0127 %	0.08°	N/A
8	X3-X4	0.00	0.00	0.00	500/5.0	100.078	0.0776 %	0.02°	N/A
9	X3-X5	0.00	0.00	0.00	900/5.0	180.000	0.0001 %	0.08°	N/A
10	X4-X5	0.00	0.00	0.00	400/5.0	80.045	0.0563 %	0.04°	N/A

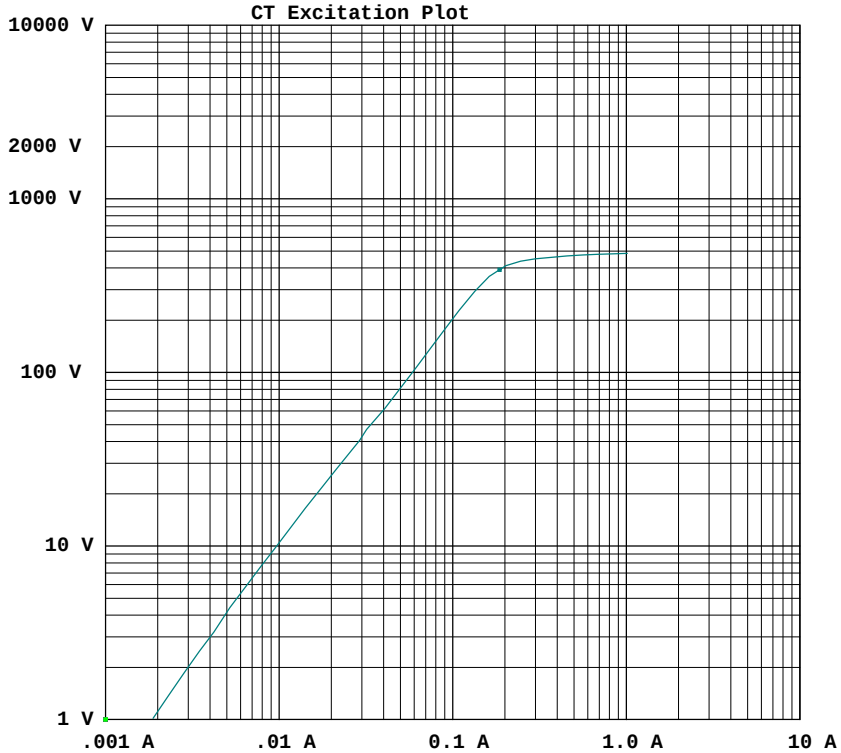

1000V INSULATION RES TEST RESULTS

VOLTAGE: 997.6 V
CURRENT: 0.00 MICRO-AMPS
RESISTANCE: >1,000 MEG-OHMS

BURDEN TEST RESULTS

5 AMP BURDEN TEST

MEASURED CURRENT: 0.046 A
MEASURED VOLTAGE: 66.606 V, 20.49 DEG
IMPEDANCE (Z): 6.171 OHMS
BURDEN: 0.000 VA
POWER FACTOR: 0.94

Test Notepad

Vanguard Instruments Company, Inc.
1520 S. Hellman Avenue, Ontario, CA 91761, USA Phone: 909.923.9390 FAX: 909.923.9391
www.vanguard-instruments.com

FILENAME: CT 3Z PHASE B BETA BKR.test
DATE: 05/08/13 09:56:19
COMPANY: HOTLINE CONSTRUCTION
STATION: MOJAVE PP BETA SS
CIRCUIT: CT 3Z PHASE B BETA

MFR: SIEMENS
MODEL:
SN:
OPERATOR: RG/RB
COMMENTS: BKR SN: 30111795-2

SUMMARY REPORT
KNEE TYPE: IEEE 30 Deg
FREQUENCY: 60 Hz

Test	Tap	IEEE30	IEEE45	IEC 10/50	NP-Ratio	M-Ratio	% Error	Phase Angle	Winding Res
1 [redacted]	X1-X2	198.52	163.80	211.36	800/5.0	159.948	0.0323 %	0.58°	198.78 m-ohms

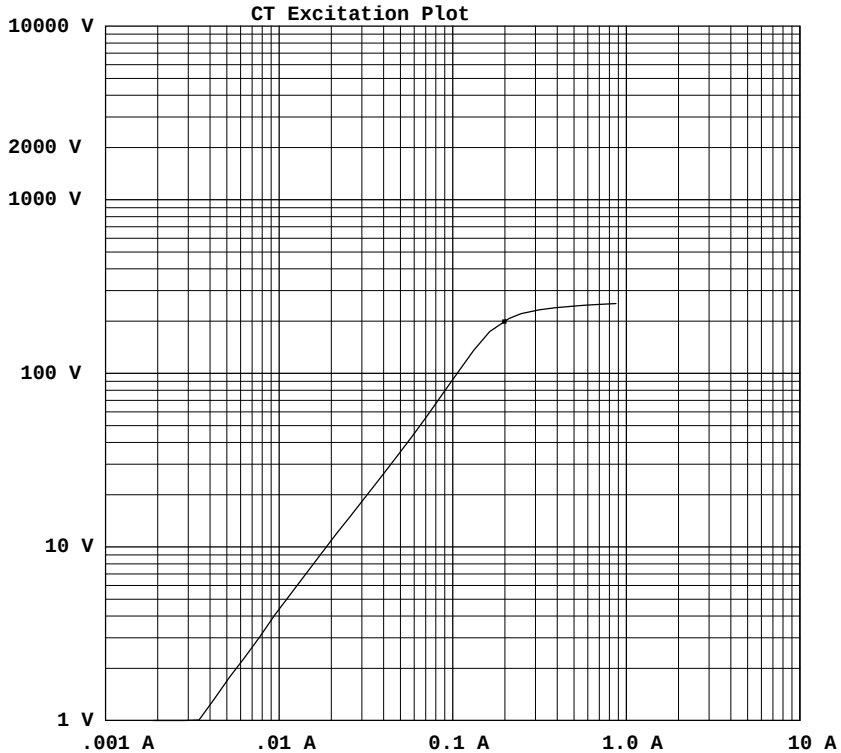

1000V INSULATION RES TEST RESULTS

VOLTAGE: 1000.3 V
CURRENT: 0.04 MICRO-AMPS
RESISTANCE: >1,000 MEG-OHMS

BURDEN TEST RESULTS

5 AMP BURDEN TEST

MEASURED CURRENT: 0.084 A
MEASURED VOLTAGE: 66.477 V, 34.08 DEG
IMPEDANCE (Z): 4.961 OHMS
BURDEN: 0.000 VA
POWER FACTOR: 0.83

Test Notepad

Vanguard Instruments Company, Inc.
1520 S. Hellman Avenue, Ontario, CA 91761, USA Phone: 909.923.9390 FAX: 909.923.9391
www.vanguard-instruments.com

FILENAME: CT 4X PHASE B BETA BKR.test
DATE: 05/08/13 11:34:43
COMPANY: HOTLINE CONSTRUCTION
STATION: MOJAVE PP BETA SS
CIRCUIT: CT 4X PHASE B BETA

MFR: SEIMENS
MODEL:
SN:
OPERATOR: RG/RB
COMMENTS: BRK SN: 30111795-2

SUMMARY REPORT
KNEE TYPE: IEEE 30 Deg
FREQUENCY: 60 Hz

Test	Tap	IEEE30	IEEE45	IEC 10/50	NP-Ratio	M-Ratio	% Error	Phase Angle	Winding Res
1	X1-X2	0.00	0.00	0.00	200/5.0	40.088	0.2190 %	-0.04°	N/A
2	X1-X3	0.00	0.00	0.00	300/5.0	60.055	0.0918 %	-0.06°	N/A
3	X1-X4	0.00	0.00	0.00	800/5.0	160.068	0.0424 %	0.02°	N/A
4	X1-X5	392.08	320.32	406.32	1200/5.0	239.694	0.1275 %	-0.70°	462.47 m-ohms
5	X2-X3	0.00	0.00	0.00	100/5.0	20.126	0.6295 %	-0.68°	N/A
6	X2-X4	0.00	0.00	0.00	600/5.0	120.036	0.0298 %	0.04°	N/A
7	X2-X5	0.00	0.00	0.00	1000/5.0	200.051	0.0254 %	0.02°	N/A
8	X3-X4	0.00	0.00	0.00	500/5.0	100.044	0.0441 %	0.00°	N/A
9	X3-X5	0.00	0.00	0.00	900/5.0	179.938	0.0345 %	0.02°	N/A
10	X4-X5	0.00	0.00	0.00	400/5.0	80.022	0.0277 %	0.00°	N/A

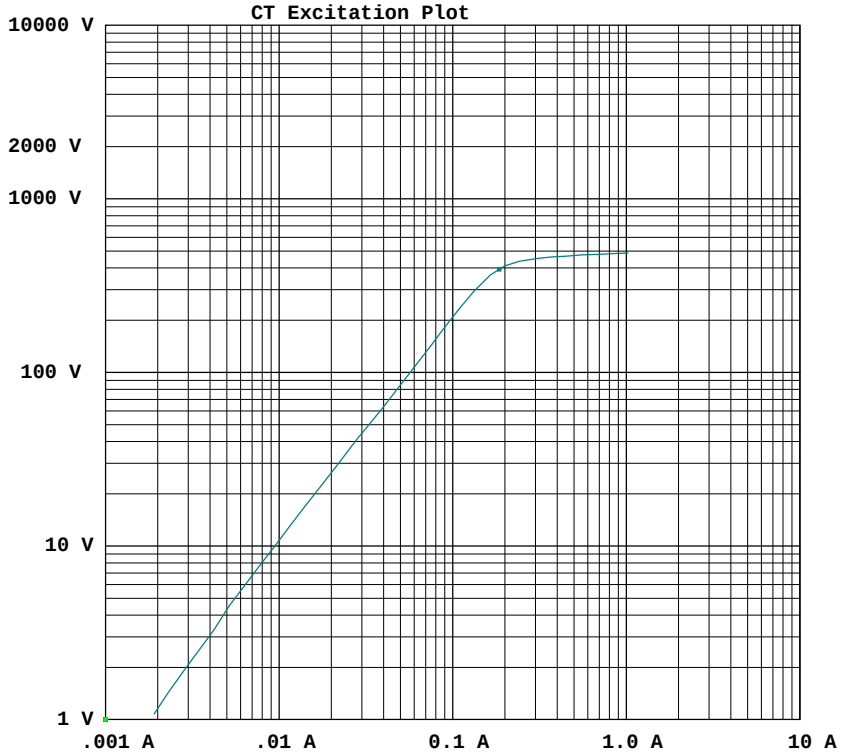

1000V INSULATION RES TEST RESULTS

VOLTAGE: 999.8 V
CURRENT: 0.02 MICRO-AMPS
RESISTANCE: >1,000 MEG-OHMS

BURDEN TEST RESULTS

5 AMP BURDEN TEST

MEASURED CURRENT: 0.045 A
MEASURED VOLTAGE: 67.773 V, 19.89 DEG
IMPEDANCE (Z): 64.271 OHMS
BURDEN: 0.000 VA
POWER FACTOR: 0.94

Test Notepad

EZCT-2000 Software Version: 1.35
www.vanguard-instruments.com

Vanguard Instruments Company, Inc.
1520 S. Hellman Avenue, Ontario, CA 91761, USA Phone: 909.923.9390 FAX: 909.923.9391
www.vanguard-instruments.com

FILENAME: CT 4Y PHASE B BETA BKR.test
DATE: 05/08/13 11:47:12
COMPANY: HOTLINE CONSTRUCTION
STATION: MOJAVE PP BETA SS
CIRCUIT: CT 4Y PHASE B BETA

MFR: SEIMENS
MODEL:
SN:
OPERATOR: RG/RB
COMMENTS: BRK SN: 30111795-2

SUMMARY REPORT
KNEE TYPE: IEEE 30 Deg
FREQUENCY: 60 Hz

Test	Tap	IEEE30	IEEE45	IEC 10/50	NP-Ratio	M-Ratio	% Error	Phase Angle	Winding Res
1	X1-X2	0.00	0.00	0.00	200/5.0	40.102	0.2548 %	-0.10°	N/A
2	X1-X3	0.00	0.00	0.00	300/5.0	60.084	0.1405 %	0.02°	N/A
3	X1-X4	0.00	0.00	0.00	800/5.0	160.029	0.0182 %	0.02°	N/A
4	X1-X5	390.20	329.64	409.76	1200/5.0	240.008	0.0035 %	-0.26°	463.34 m-ohms
5	X2-X3	0.00	0.00	0.00	100/5.0	20.140	0.7000 %	-0.50°	N/A
6	X2-X4	0.00	0.00	0.00	600/5.0	119.999	0.0012 %	0.08°	N/A
7	X2-X5	0.00	0.00	0.00	1000/5.0	200.043	0.0216 %	0.04°	N/A
8	X3-X4	0.00	0.00	0.00	500/5.0	100.069	0.0693 %	0.02°	N/A
9	X3-X5	0.00	0.00	0.00	900/5.0	179.998	0.0012 %	0.06°	N/A
10	X4-X5	0.00	0.00	0.00	400/5.0	80.064	0.0806 %	0.04°	N/A

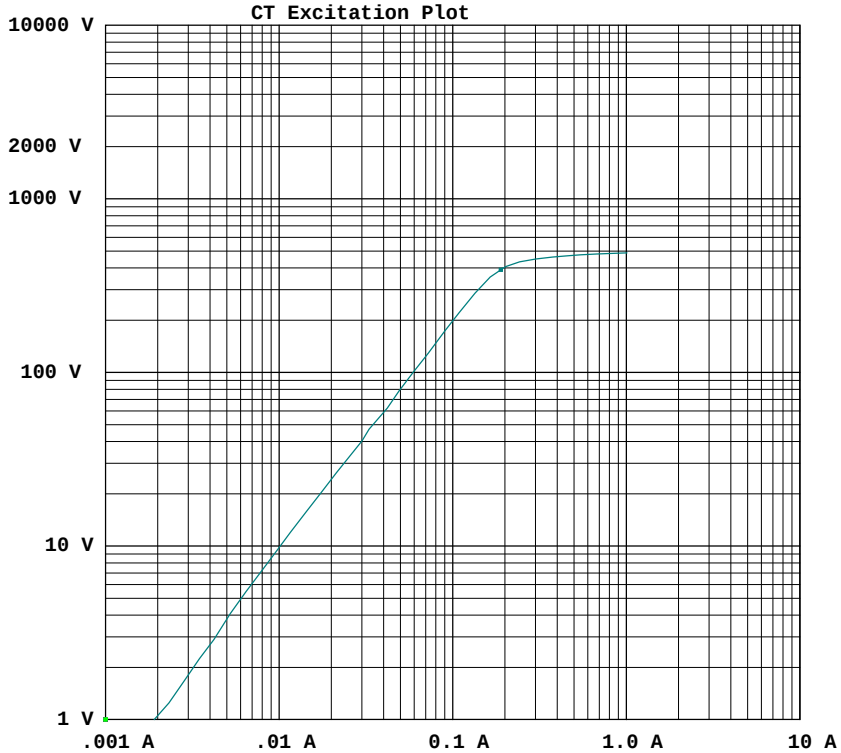

1000V INSULATION RES TEST RESULTS

VOLTAGE: 990.0 V
CURRENT: 0.06 MICRO-AMPS
RESISTANCE: >1,000 MEG-OHMS

BURDEN TEST RESULTS

5 AMP BURDEN TEST

MEASURED CURRENT: 0.048 A
MEASURED VOLTAGE: 67.072 V, 20.52 DEG
IMPEDANCE (Z): 21.083 OHMS
BURDEN: 0.000 VA
POWER FACTOR: 0.94

Test Notepad

EZCT-2000 Software Version: 1.35
www.vanguard-instruments.com

Vanguard Instruments Company, Inc.
1520 S. Hellman Avenue, Ontario, CA 91761, USA Phone: 909.923.9390 FAX: 909.923.9391
www.vanguard-instruments.com

FILENAME: CT 4Z PHASE B BETA BKR.test
DATE: 05/08/13 11:54:30
COMPANY: HOTLINE CONSTRUCTION
STATION: MOJAVE PP BETA SS
CIRCUIT: CT 4Z PHASE B BETA

MFR: SIEMENS
MODEL:
SN:
OPERATOR: RG/RB
COMMENTS: BKR SN: 30111795-2

SUMMARY REPORT
KNEE TYPE: IEEE 30 Deg
FREQUENCY: 60 Hz

Test	Tap	IEEE30	IEEE45	IEC 10/50	NP-Ratio	M-Ratio	% Error	Phase Angle	Winding Res
1 [redacted]	X1-X2	202.56	166.64	212.80	800/5.0	159.539	0.2880 %	-1.50°	206.72 m-ohms

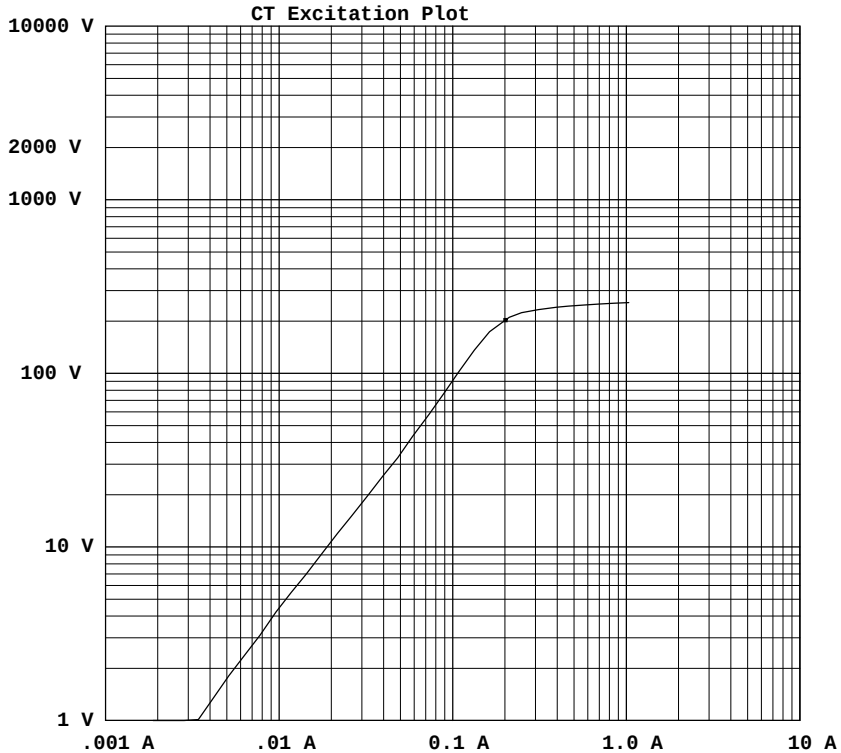

1000V INSULATION RES TEST RESULTS

VOLTAGE: 989.8 V
CURRENT: 0.00 MICRO-AMPS
RESISTANCE: >1,000 MEG-OHMS

BURDEN TEST RESULTS

5 AMP BURDEN TEST

MEASURED CURRENT: 0.085 A
MEASURED VOLTAGE: 67.289 V, 35.15 DEG
IMPEDANCE (Z): 5.207 OHMS
BURDEN: 0.000 VA
POWER FACTOR: 0.82

Test Notepad

Vanguard Instruments Company, Inc.
1520 S. Hellman Avenue, Ontario, CA 91761, USA Phone: 909.923.9390 FAX: 909.923.9391
www.vanguard-instruments.com

FILENAME: CT 5X PHASE C BETA BKR.test
DATE: 05/08/13 12:07:38
COMPANY: HOTLINE CONSTRUCTION
STATION: MOJAVE PP BETA SS
CIRCUIT: CT 5X PHASE C BETA

MFR: SEIMENS
MODEL:
SN:
OPERATOR: RG/RB
COMMENTS: BRK SN: 30111795-2

SUMMARY REPORT
KNEE TYPE: IEEE 30 Deg
FREQUENCY: 60 Hz

Test	Tap	IEEE30	IEEE45	IEC 10/50	NP-Ratio	M-Ratio	% Error	Phase Angle	Winding Res
1	X1-X2	0.00	0.00	0.00	200/5.0	40.113	0.2835 %	-0.12°	N/A
2	X1-X3	0.00	0.00	0.00	300/5.0	60.093	0.1542 %	0.02°	N/A
3	X1-X4	0.00	0.00	0.00	800/5.0	160.059	0.0367 %	0.04°	N/A
4	X1-X5	385.92	321.76	403.76	1200/5.0	240.156	0.0650 %	1.06°	475.68 m-ohms
5	X2-X3	0.00	0.00	0.00	100/5.0	20.157	0.7865 %	-0.68°	N/A
6	X2-X4	0.00	0.00	0.00	600/5.0	120.016	0.0135 %	0.10°	N/A
7	X2-X5	0.00	0.00	0.00	1000/5.0	200.085	0.0425 %	0.04°	N/A
8	X3-X4	0.00	0.00	0.00	500/5.0	100.090	0.0901 %	0.06°	N/A
9	X3-X5	0.00	0.00	0.00	900/5.0	179.919	0.0452 %	0.02°	N/A
10	X4-X5	0.00	0.00	0.00	400/5.0	80.046	0.0572 %	0.06°	N/A

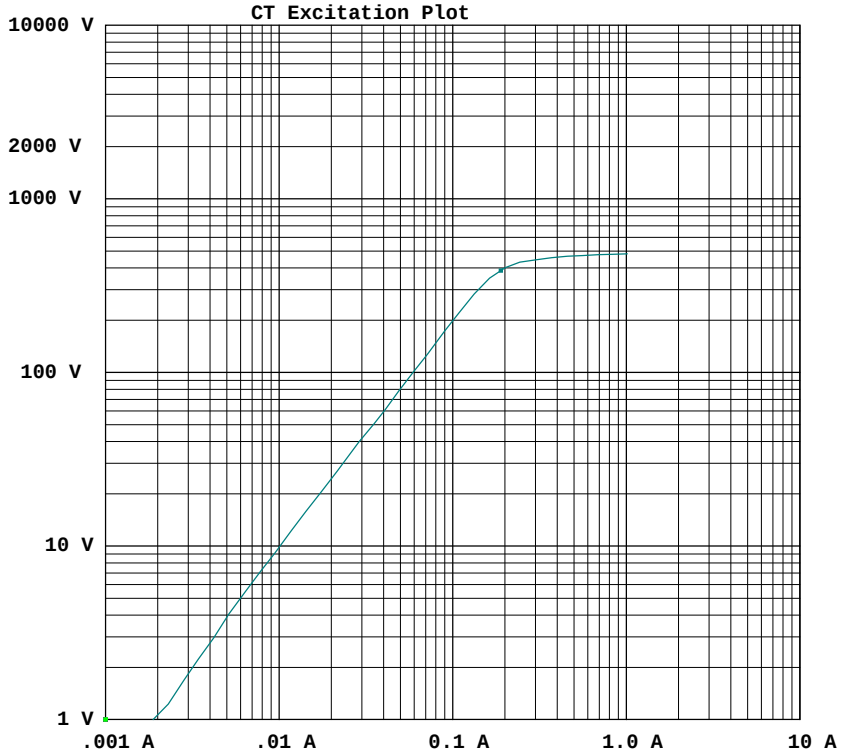

1000V INSULATION RES TEST RESULTS

VOLTAGE: 991.8 V
CURRENT: 0.00 MICRO-AMPS
RESISTANCE: >1,000 MEG-OHMS

BURDEN TEST RESULTS

5 AMP BURDEN TEST

MEASURED CURRENT: 0.047 A
MEASURED VOLTAGE: 66.844 V, 21.27 DEG
IMPEDANCE (Z): 45.958 OHMS
BURDEN: 0.000 VA
POWER FACTOR: 0.93

Test Notepad

EZCT-2000 Software Version: 1.35
www.vanguard-instruments.com

Vanguard Instruments Company, Inc.
1520 S. Hellman Avenue, Ontario, CA 91761, USA Phone: 909.923.9390 FAX: 909.923.9391
www.vanguard-instruments.com

FILENAME: CT 5Y PHASE C BETA BKR.test
DATE: 05/08/13 12:20:31
COMPANY: HOTLINE CONSTRUCTION
STATION: MOJAVE PP BETA SS
CIRCUIT: CT 5Y PHASE C BETA

MFR: SEIMENS
MODEL:
SN:
OPERATOR: RG/RB
COMMENTS: BRK SN: 30111795-2

SUMMARY REPORT
KNEE TYPE: IEEE 30 Deg
FREQUENCY: 60 Hz

Test	Tap	IEEE30	IEEE45	IEC 10/50	NP-Ratio	M-Ratio	% Error	Phase Angle	Winding Res
1	X1-X2	0.00	0.00	0.00	200/5.0	40.092	0.2293 %	-0.10°	N/A
2	X1-X3	0.00	0.00	0.00	300/5.0	60.064	0.1073 %	0.10°	N/A
3	X1-X4	0.00	0.00	0.00	800/5.0	160.056	0.0352 %	0.00°	N/A
4	X1-X5	389.00	324.52	407.28	1200/5.0	239.562	0.1826 %	-0.10°	474.84 m-ohms
5	X2-X3	0.00	0.00	0.00	100/5.0	20.141	0.7045 %	-0.66°	N/A
6	X2-X4	0.00	0.00	0.00	600/5.0	120.018	0.0150 %	0.06°	N/A
7	X2-X5	0.00	0.00	0.00	1000/5.0	199.966	0.0169 %	0.04°	N/A
8	X3-X4	0.00	0.00	0.00	500/5.0	100.037	0.0368 %	0.06°	N/A
9	X3-X5	0.00	0.00	0.00	900/5.0	179.986	0.0081 %	0.02°	N/A
10	X4-X5	0.00	0.00	0.00	400/5.0	80.058	0.0719 %	0.02°	N/A

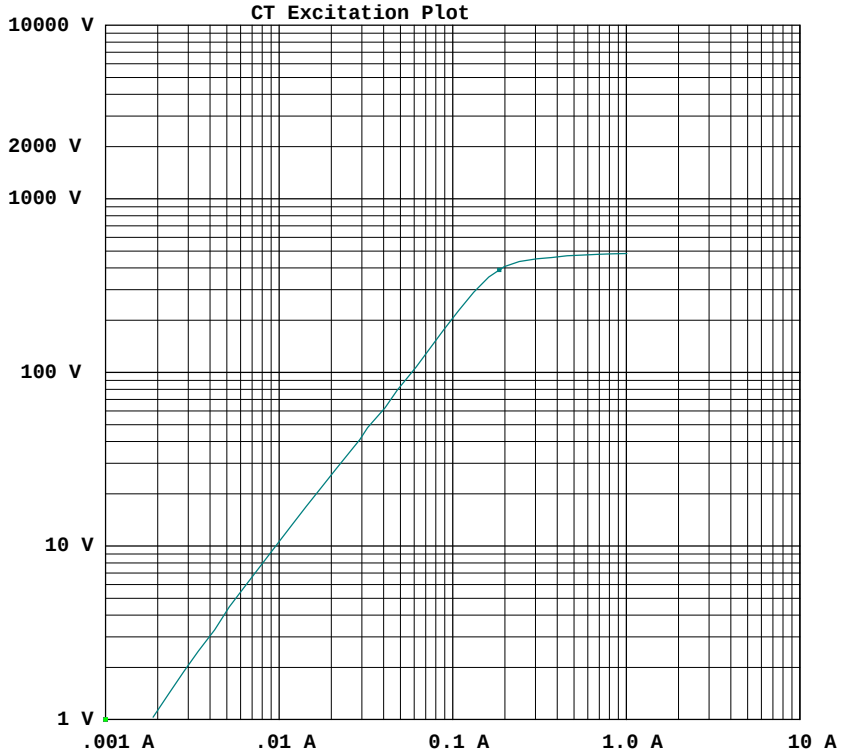

1000V INSULATION RES TEST RESULTS

VOLTAGE: 999.7 V
CURRENT: 0.00 MICRO-AMPS
RESISTANCE: >1,000 MEG-OHMS

BURDEN TEST RESULTS

5 AMP BURDEN TEST

MEASURED CURRENT: 0.046 A
MEASURED VOLTAGE: 67.155 V, 21.53 DEG
IMPEDANCE (Z): 18.105 OHMS
BURDEN: 0.000 VA
POWER FACTOR: 0.93

Test Notepad

EZCT-2000 Software Version: 1.35
www.vanguard-instruments.com

Vanguard Instruments Company, Inc.
1520 S. Hellman Avenue, Ontario, CA 91761, USA Phone: 909.923.9390 FAX: 909.923.9391
www.vanguard-instruments.com

FILENAME: CT 5Z PHASE C BETA BKR.test
DATE: 05/08/13 12:26:02
COMPANY: HOTLINE CONSTRUCTION
STATION: MOJAVE PP BETA SS
CIRCUIT: CT 5Z PHASE C BETA

MFR: SIEMENS
MODEL:
SN:
OPERATOR: RG/RB
COMMENTS: BKR SN: 30111795-2

SUMMARY REPORT
KNEE TYPE: IEEE 30 Deg
FREQUENCY: 60 Hz

Test	Tap	IEEE30	IEEE45	IEC 10/50	NP-Ratio	M-Ratio	% Error	Phase Angle	Winding Res
1 [redacted]	X1-X2	199.64	165.80	211.96	800/5.0	160.025	0.0156 %	0.06°	212.55 m-ohms

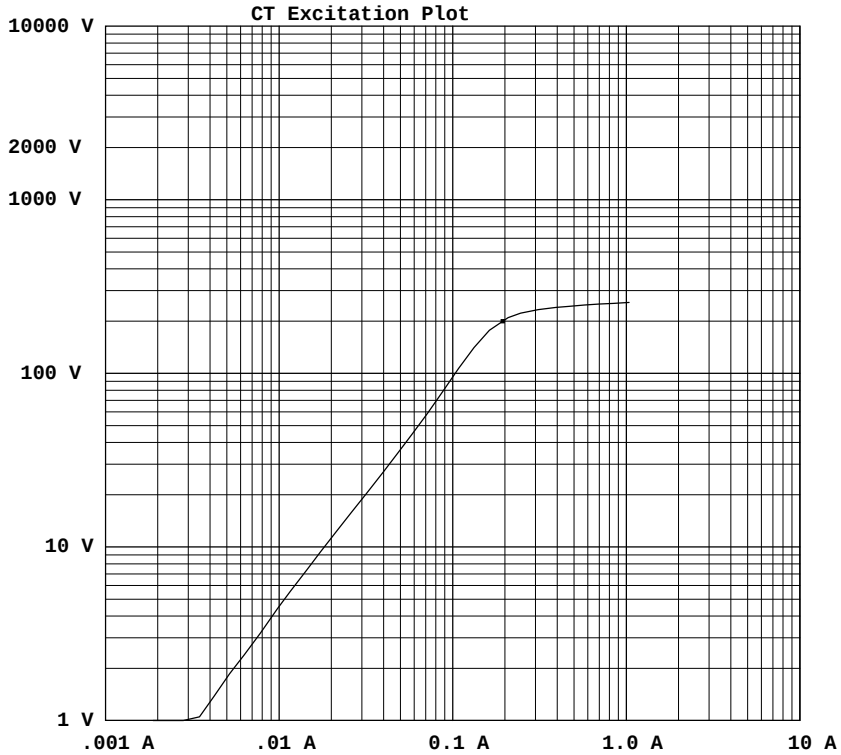

1000V INSULATION RES TEST RESULTS

VOLTAGE: 1002.0 V
CURRENT: 0.00 MICRO-AMPS
RESISTANCE: >1,000 MEG-OHMS

BURDEN TEST RESULTS

5 AMP BURDEN TEST

MEASURED CURRENT: 0.082 A
MEASURED VOLTAGE: 66.632 V, 34.56 DEG
IMPEDANCE (Z): 26.151 OHMS
BURDEN: 0.000 VA
POWER FACTOR: 0.82

Test Notepad

Vanguard Instruments Company, Inc.
1520 S. Hellman Avenue, Ontario, CA 91761, USA Phone: 909.923.9390 FAX: 909.923.9391
www.vanguard-instruments.com

FILENAME: CT 6X PHASE C BETA BKR.test
DATE: 05/08/13 12:50:21
COMPANY: HOTLINE CONSTRUCTION
STATION: MOJAVE PP BETA SS
CIRCUIT: CT 6X PHASE C BETA

MFR: SEIMENS
MODEL:
SN:
OPERATOR: RG/RB
COMMENTS: BRK SN: 30111795-2

SUMMARY REPORT
KNEE TYPE: IEEE 30 Deg
FREQUENCY: 60 Hz

Test	Tap	IEEE30	IEEE45	IEC 10/50	NP-Ratio	M-Ratio	% Error	Phase Angle	Winding Res
1	X1-X2	0.00	0.00	0.00	200/5.0	40.116	0.2900 %	-0.02°	N/A
2	X1-X3	0.00	0.00	0.00	300/5.0	60.119	0.1980 %	-0.10°	N/A
3	X1-X4	0.00	0.00	0.00	800/5.0	160.043	0.0266 %	-0.10°	N/A
4	X1-X5	383.64	323.68	407.44	1200/5.0	239.753	0.1028 %	-0.44°	478.59 m-ohms
5	X2-X3	0.00	0.00	0.00	100/5.0	20.161	0.8060 %	-0.80°	N/A
6	X2-X4	0.00	0.00	0.00	600/5.0	120.006	0.0049 %	0.10°	N/A
7	X2-X5	0.00	0.00	0.00	1000/5.0	200.005	0.0023 %	0.02°	N/A
8	X3-X4	0.00	0.00	0.00	500/5.0	100.059	0.0587 %	0.04°	N/A
9	X3-X5	0.00	0.00	0.00	900/5.0	180.062	0.0343 %	0.02°	N/A
10	X4-X5	0.00	0.00	0.00	400/5.0	80.053	0.0660 %	-0.02°	N/A

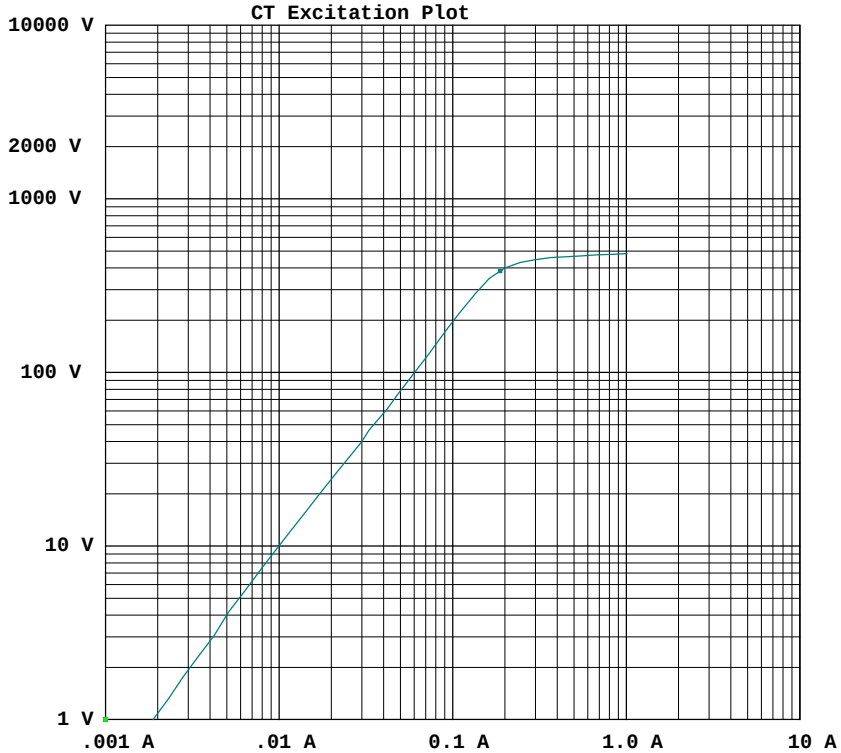

1000V INSULATION RES TEST RESULTS

VOLTAGE: 1001.4 V
CURRENT: 0.00 MICRO-AMPS
RESISTANCE: >1,000 MEG-OHMS

BURDEN TEST RESULTS

5 AMP BURDEN TEST

MEASURED CURRENT: 0.048 A
MEASURED VOLTAGE: 66.370 V, 20.57 DEG
IMPEDANCE (Z): 6.455 OHMS
BURDEN: 0.000 VA
POWER FACTOR: 0.94

Test Notepad

EZCT-2000 Software Version: 1.35
www.vanguard-instruments.com

Vanguard Instruments Company, Inc.
1520 S. Hellman Avenue, Ontario, CA 91761, USA Phone: 909.923.9390 FAX: 909.923.9391
www.vanguard-instruments.com

FILENAME: CT 6Y PHASE C BETA BKR.test
DATE: 05/08/13 13:02:49
COMPANY: HOTLINE CONSTRUCTION
STATION: MOJAVE PP BETA SS
CIRCUIT: CT 6Y PHASE C BETA

MFR: SEIMENS
MODEL:
SN:
OPERATOR: RG/RB
COMMENTS: BRK SN: 30111795-2

SUMMARY REPORT
KNEE TYPE: IEEE 30 Deg
FREQUENCY: 60 Hz

Test	Tap	IEEE30	IEEE45	IEC 10/50	NP-Ratio	M-Ratio	% Error	Phase Angle	Winding Res
1	X1-X2	0.00	0.00	0.00	200/5.0	40.096	0.2407 %	-0.02°	N/A
2	X1-X3	0.00	0.00	0.00	300/5.0	60.063	0.1048 %	-0.52°	N/A
3	X1-X4	0.00	0.00	0.00	800/5.0	159.945	0.0345 %	0.06°	N/A
4	X1-X5	393.24	321.32	411.80	1200/5.0	240.070	0.0293 %	-1.44°	481.97 m-ohms
5	X2-X3	0.00	0.00	0.00	100/5.0	20.149	0.7470 %	-0.78°	N/A
6	X2-X4	0.00	0.00	0.00	600/5.0	120.037	0.0304 %	0.06°	N/A
7	X2-X5	0.00	0.00	0.00	1000/5.0	200.128	0.0640 %	0.02°	N/A
8	X3-X4	0.00	0.00	0.00	500/5.0	100.034	0.0341 %	0.04°	N/A
9	X3-X5	0.00	0.00	0.00	900/5.0	180.030	0.0164 %	0.02°	N/A
10	X4-X5	0.00	0.00	0.00	400/5.0	80.089	0.1114 %	0.02°	N/A

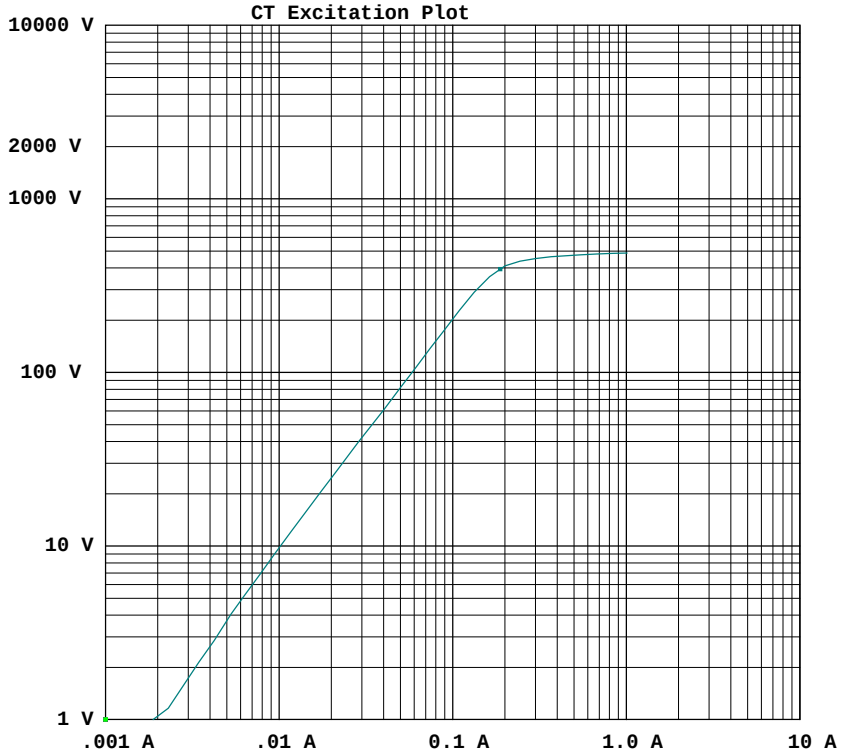

1000V INSULATION RES TEST RESULTS

VOLTAGE: 1003.6 V
CURRENT: 0.00 MICRO-AMPS
RESISTANCE: >1,000 MEG-OHMS

BURDEN TEST RESULTS

5 AMP BURDEN TEST

MEASURED CURRENT: 0.046 A
MEASURED VOLTAGE: 66.905 V, 20.22 DEG
IMPEDANCE (Z): 12.658 OHMS
BURDEN: 0.000 VA
POWER FACTOR: 0.94

Test Notepad

EZCT-2000 Software Version: 1.35
www.vanguard-instruments.com

Vanguard Instruments Company, Inc.
1520 S. Hellman Avenue, Ontario, CA 91761, USA Phone: 909.923.9390 FAX: 909.923.9391
www.vanguard-instruments.com

FILENAME: CT 6Z PHASE C BETA BKR.test
DATE: 05/08/13 13:11:47
COMPANY: HOTLINE CONSTRUCTION
STATION: MOJAVE PP BETA SS
CIRCUIT: CT 6Z PHASE C BETA

MFR: SIEMENS
MODEL:
SN:
OPERATOR: RG/RB
COMMENTS: BKR SN: 30111795-2

SUMMARY REPORT
KNEE TYPE: IEEE 30 Deg
FREQUENCY: 60 Hz

Test	Tap	IEEE30	IEEE45	IEC 10/50	NP-Ratio	M-Ratio	% Error	Phase Angle	Winding Res
1 [redacted]	X1-X2	195.76	160.32	209.84	800/5.0	159.941	0.0369 %	0.04°	218.99 m-ohms

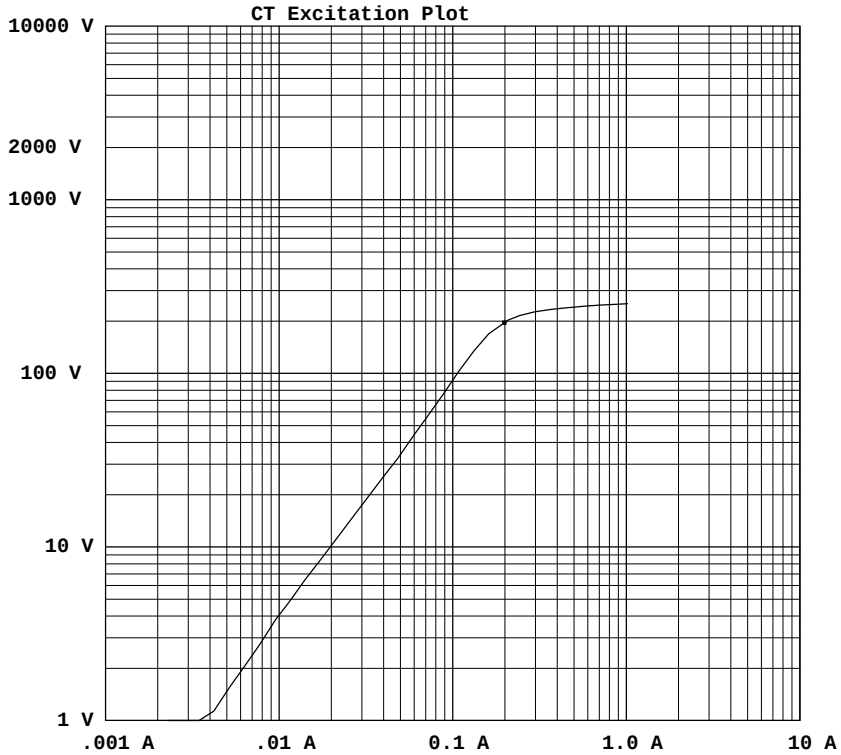

1000V INSULATION RES TEST RESULTS

VOLTAGE: 999.2 V
CURRENT: 0.06 MICRO-AMPS
RESISTANCE: >1,000 MEG-OHMS

BURDEN TEST RESULTS

5 AMP BURDEN TEST

MEASURED CURRENT: 0.085 A
MEASURED VOLTAGE: 66.672 V, 33.37 DEG
IMPEDANCE (Z): 63.477 OHMS
BURDEN: 0.000 VA
POWER FACTOR: 0.83

Test Notepad

Electric Power Systems Electrical Testing and Engineering

Phoenix, AZ Office

Phone (480) 633-1490 Fax (480) 633-7092

FULL MEMBER

SF6 CIRCUIT BREAKER TEST (Page 1 of 2)

CUSTOMER: Hot Line	LOCATION: Hinkley ,CA	JOB NO.: A13024
		DATE: 5/10/13
		TESTED BY: MK

EQUIPMENT: SF6 Spring Operated Breaker	TEST EQUIPMENT USED: Megger, Ductor, Timing, Purity&Moisture meter,
CIRCUIT DESIGNATION: BETA	

EQUIPMENT DATA

MANUFACTURER: Siemens	MODEL: SPS2-245-40-2	SERIAL NO:30111795-2	VOLTAGE RATING: 245KV
OPERATING VOLTAGE: 235kv	INTERRUPTING RATING: 40KA	AMP RATING: 1200	CLOSE COIL RATING: 90-140VDC
TRIP COIL RATING: 70-140VDC	MOTOR RATING: 120VAC		

MECHANICAL CHECKS

CHECK POINT	COND	NOTES	CHECK POINT	COND	NOTES
PHYSICAL CONDITION	G		INTERLOCKS	G	
HEATER CIRCUIT OPERATION	G		CONTROL WIRING	N/G	
BOLTED TO FOUNDATION	G		TIGHTNESS OF CONNECTIONS	G	
AUXILIARY CONTACTS	G		TRIP FREE & ANNTI-PUMP SCHEMES	G	
GROUNDING	G		BREAKER TRIP FROM RELAYS	G	
LUBRICATION OF CURRENT PARTS	G		COUNTER AS FOUND/AS LEFT 14 / 37	G	

PNEUMATIC MECHANISM

AIR COMPRESSOR OIL LEVEL: N/A	LEAK RATE N/A PSIG/HR N/A	GOVERNOR SWITCH OPENS AT PSIG; N/A CLOSES AT PSIG N/A
LOW PRESSURE ALARM OPENS AT PSIG N/A CLOSES AT PSIG		LOW PRESSURE LOCKOUT OPENS AT PSIG N/A CLOSES AT PSIG N/A

SF6 PRESSURE SWITCH (TEMP-COMPENSATED)

ALARM SWITCH CLOSES AT: 75 PSIG ALARM AT: 73 °F	LOCKOUT SWITCH OPENS AT: 71 PSIG CUTOUT AT: 73 °F
SF6 PRESSURE AS LEFT: 88 PSIG AMB TEMPRATURE : 72 °F	AUXILIARY SWITCH OPERATION:
CHECK FOR LOOSE HARDWARE:	MOISTURE CONTENT: 79.96PPM, PURITY LEVEL: 99.8%, DEW POINT-44.0

SF6 CIRCUIT BREAKER TEST (Page 2 of 2)

Electric Power Systems Electrical Testing and Engineering

Phoenix, AZ Office
Phone (480) 633-1490 Fax (480) 633-7092

FULL MEMBER

ELECTRICAL TESTS			
TIMING TESTS			
TRIP COIL ENERGIZED: MILLISEC. SEE TIMING RESULTS		CLOSE COIL ENERGIZED MILLISEC. SEE TIMING RESULTS	
	PHASE A	PHASE B	PHASE C
CHECK POLE UNIT INDICATOR TO BE WITHIN TOLERANCE IN CLOSED POSITION	GOOD	GOOD	GOOD
CONTACT PENETRATION (REQ. ONLY) IF 3.A.3 IS OUT OF TOLERANCE	N/A	N/A	N/A
DUCTOR TEST: CONTACT RESISTANCE IN MICRO-OHMS (100 AMPS)	micro ohms 79.7	micro ohms 78.6	micro ohms 78.9
MEGGER TEST: @ 10KV: RESISTANCE IN OHMS	See below	See below	See below

NOTES

MEGGER TEST: @10KV: RESISTANCE IN OHMS

OPEN	CLOSED
A: 13.6T	A-G: 432G
B: 10.3T	B-G: 681G
C: 11.0T	C-G: 522G
	A-B: 5.67T
	B-C: 607G
	C-A: 3.43T

ELECTRIC POWER SYSTEMS

ELECTRICAL TESTING & ENGINEERING

HV CIRCUIT SWITCHES

CUSTOMER DATA					
Customer:	Hotline Construction	Location:	Mojave Solar	Job Number:	A13024
Equipment:	245 kV Gang Switch	Circuit Designation:	Beta North	Date:	18MAY13
Test Equipment:	PHX0045 Ductor (7FEB13), PHX0044 DC HiPot (30AUG13)			Tested By:	RDB

DISCONNECT DATA			
Manufacturer: Coelme	Style: SLOB-E	Type: N/A	Serial Number: C61592 1/3
Voltage Rating: 245 kV		Phase: 3	Bil: 900kA
Current Rating: 1200A	Fuses: N/A		Mfg Date: 2011

OPERATOR DATA			
Manufacturer: Coelme	Style: N/A	Type: N/A	Serial #: N/A
Mfg Date: 2012			Voltage Rating: N/A
Control Voltage: 125 VDC	Fuses: N/A		Current Rating:N/A

ELECTRICAL TESTS					
CONTACT RESISTANCE in Micro-Ohms @ 100 AMPS AT Switch PADS					
AØ:	92.5	BØ:	91.0	CØ:	93.0
CONTACT RESISTANCE in Micro-Ohms @ 100 AMPS AT Cable before crimp					
AØ:	111.2	BØ:	109.8	CØ:	109.1

INSULATION RESISTANCE					
Acceptance Criterion:	100 Giga-Ohms per NETA				
Test Voltage: **40kv**					
A∅- GND:	400 GΩ	B∅-GND:	400 GΩ	C∅-GND:	400 GΩ

CONTROL CHECKS			
Indicating Lights	N/A	Control Switch Functions	N/A
Functional Test	N/A	Fuses Correct Size	N/A
Shunt Trip Checked	N/A	Drive Coupling Pin	N/A
Control Cams Set	N/A	Indicating Cams Set	N/A

REMARKS: Motor control wiring not yet installed. No designation for switches at this time.
All pass per NETA ATS 2009. all within 50% of lowest value on ductor readings

ELECTRIC POWER SYSTEMS

ELECTRICAL TESTING & ENGINEERING

HV CIRCUIT SWITCHES

CUSTOMER DATA					
Customer:	Hotline Construction	Location:	Mojave Solar	Job Number:	A13024
Equipment:	245 kV Gang Switch	Circuit Designation:	Beta South	Date:	18MAY13
Test Equipment:	PHX0045 Ductor (7FEB13), PHX0044 DC HiPot (30AUG13)			Tested By:	RDB

DISCONNECT DATA			
Manufacturer: Coelme	Style: SLOB-E	Type: N/A	Serial Number: C61591 1/3
Voltage Rating: 245 kV		Phase: 3	Bil: 900kA
Current Rating: 1200A	Fuses: N/A		Mfg Date: 2011

OPERATOR DATA			
Manufacturer: Coelme	Style: N/A	Type: N/A	Serial #: N/A
Mfg Date: 2012			Voltage Rating:N/A
Control Voltage: 125 VDC	Fuses:N/A		Current Rating:N/A

ELECTRICAL TESTS					
CONTACT RESISTANCE in Micro-Ohms @ 100 AMPS AT Switch PADS					
AØ:	87.1	BØ:	90.7	CØ:	90.9
CONTACT RESISTANCE in Micro-Ohms @ 100 AMPS AT Cable before crimp (1)					
AØ:	95.4	BØ:	100.2	CØ:	99.3

INSULATION RESISTANCE					
Acceptance Criterion:	100 Giga-Ohms per NETA				
Test Voltage: **40kv**					
A∅- GND:	400 GΩ	B∅-GND:	400 GΩ	C∅-GND:	400 GΩ

CONTROL CHECKS			
Indicating Lights	N/A	Control Switch Functions	N/A
Functional Test	N/A	Fuses Correct Size	N/A
Shunt Trip Checked	N/A	Drive Coupling Pin	N/A
Control Cams Set	N/A	Indicating Cams Set	N/A

REMARKS: Motor control wiring not yet installed. No designation for switches at this time.
1) Cable on line-side not yet installed.
All pass per NETA ATS 2009. all within 50% of lowest value on ductor readings

T12171710_CC

Report Source **CouplingCapacitor**

Session Test Date 5/13/2013 11:53:02 AM

Nameplate - Coupling Capacitor Potential Device

Company	EPS	**Serial Number**	T12171710
Location	MOJAVE PP BETA SS	**Special ID**	PHASE A 1
Division	PHX	**Circuit Designation**	
Manufacturer	Trench Electric	**Weight**	875 LB
Year Manufactured	2013	**Type**	TEMF
Mfr Location		**BIL**	242 kV
Impedance	*	**Amps**	*
kV	239	**Max. Rated BIL**	900
Line to Ground	138 kV		
C2(CAR-POT)	38506.000	**%PF**	*
C1-1(B1-POT)	7614.005	**%PF**	*
C2 ser C1-1	6357.000	**%PF**	*
C1-2(B2-B1)	6254.000	**%PF**	*
Primary Magnetic Unit			
Volts	138000.000	**Amps**	*
Secondary Magnetic Unit			
Volts	120	**Amps**	*
Cap Arrangement	Oil-Filled Base, Two Porcelains		

Test Date	5/13/2013	**Test Time**	11:53 AM	**Weather**	Sunny
Air Temperature	94°C	**Tank Temperature**	94°C	**Rel. Humidity**	*
Tested By	RG	**Work Order#**		**Last Test Date**	
Checked By		**Test Set Type**	M4000	**Retest Date**	
Checked Date		**Set Top S/N**	031120882	**Reason**	ACCEPTANCE
Last Sheet#		**Set Bottom S/N**		**Travel Time**	
P.O.#		**Ins. Book#**		**Duration**	
Copies		**Sheet#**		**Crew Size**	3

Session Notes

As per doble C CVT power factor limits are 0.01-0.2

Overall Tests

Measure	Insulation	Porc	Test kV	mA	Watts	% PF meas	Cap(pF)	FRANK™	Manual
C2 (CAR-POT)	C2(CAR-POT)	Bottom	1.994	144.972	0.892	0.062	38454.600		Good
C1-1 (B1 -POT)	C1-1(B1-POT)	Bottom	10.000	28.156	0.160	0.057	7468.640		Good
C1-2 (B2-B1)	C1-2(B2-B1)	Second	9.998	23.851	0.129	0.054	6326.660		Good

LSR	mA: 144.972/144.972, 1/1	Watts: 0.892/0.892, 1/1	Cap (pF): 38454.600/38454.600, 1/1
LSR	mA: 28.156/28.156, 1/1	Watts: 0.160/0.160, 1/1	Cap (pF): 7468.640/7468.640, 1/1
LSR	mA: 23.851/23.851, 1/1	Watts: 0.129/0.129, 1/1	Cap (pF): 6326.660/6326.660, 1/1

Doble Ratio Tests

			True Cap			HV Winding				LV Winding	
			*								
Connections			-				-			-	
			-				-			-	
DETC	NP Volt	LTC	NP Volt	Cal	Ratio 1	Ratio 2	Ratio 3	Min. Lim	Max. Lim	FRANK™	Manual
	*		*	*	*	*	*	*	*		
LSR			mA: */*, 1/1			Watts: */*, 1/1			Cap (pF): */*, 1/1		
LSR			mA: */*, 1/1			Watts: */*, 1/1			Cap (pF): */*, 1/1		
LSR			mA: */*, 1/1			Watts: */*, 1/1			Cap (pF): */*, 1/1		

Turns Ratio Tests

			Serial Number			HV Winding				LV Winding	
Connections			-				-			-	
			-				-			-	
Tap	NP Volt	Tap	NP Volt	Cal	Ratio 1	Ratio 2	Ratio 3	Min. Lim	Max. Lim	FRANK™	Manual
	138000.000		120	1150.000	1160.09	1161.44	*	*	*	Investigate	Investigate
	138000.000		72	1916.667	1930.5	1934.24	*	*	*	Investigate	Investigate

T12171711_CC

Report Source **CouplingCapacitor**

Session Test Date 5/13/2013 12:27:03 PM

Nameplate - Coupling Capacitor Potential Device

Company	EPS	**Serial Number**	T12171711
Location	MOJAVE PP BETA SS	**Special ID**	PHASE B 1
Division	PHX	**Circuit Designation**	
Manufacturer	Trench Electric	**Weight**	875 LB
Year Manufactured	2013	**Type**	TEMF
Mfr Location		**BIL**	242 kV
Impedance	*	**Amps**	*
kV	239	**Max. Rated BIL**	900
Line to Ground	138 kV		
C2(CAR-POT)	39228.000	**%PF**	*
C1-1(B1-POT)	7549.396	**%PF**	*
C2 ser C1-1	6331.000	**%PF**	*
C1-2(B2-B1)	6317.000	**%PF**	*
Primary Magnetic Unit			
Volts	138000.000	**Amps**	*
Secondary Magnetic Unit			
Volts	120	**Amps**	*
Cap Arrangement	Oil-Filled Base, Two Porcelains		

Test Date	5/13/2013	**Test Time**	12:27 PM	**Weather**	
Air Temperature	*	**Tank Temperature**	*	**Rel. Humidity**	*
Tested By	RG	**Work Order#**		**Last Test Date**	
Checked By		**Test Set Type**	M4000	**Retest Date**	
Checked Date		**Set Top S/N**	031120882	**Reason**	
Last Sheet#		**Set Bottom S/N**		**Travel Time**	
P.O.#		**Ins. Book#**		**Duration**	
Copies		**Sheet#**		**Crew Size**	3

Session Notes

As per doble C CVT power factor limits are 0.01-0.2

Overall Tests

Measure	Insulation	Porc	Test kV	mA	Watts	% PF meas	Cap(pF)	FRANK™	Manual
C2 (CAR-POT)	C2(CAR-POT)	Bottom	1.993	147.376	0.895	0.061	39092.900		Good
C1-1 (B1 -POT)	C1-1(B1-POT)	Bottom	9.999	28.356	0.160	0.057	7521.640		Good
C1-2 (B2-B1)	C1-2(B2-B1)	Second	9.997	23.737	0.121	0.051	6296.475		Good

LSR	mA: 147.376/147.376, 1/1	Watts: 0.895/0.895, 1/1	Cap (pF): 39092.900/39092.900, 1/1
LSR	mA: 28.356/28.356, 1/1	Watts: 0.160/0.160, 1/1	Cap (pF): 7521.640/7521.640, 1/1
LSR	mA: 23.737/23.737, 1/1	Watts: 0.121/0.121, 1/1	Cap (pF): 6296.475/6296.475, 1/1

Doble Ratio Tests

			True Cap			HV Winding			LV Winding		
			*								
Connections			-			-			-		
			-			-			-		
DETC	NP Volt	LTC	NP Volt	Cal	Ratio 1	Ratio 2	Ratio 3	Min. Lim	Max. Lim	FRANK™	Manual
	*		*	*	*	*	*	*	*		
LSR			mA: */*, 1/1			Watts: */*, 1/1			Cap (pF): */*, 1/1		
LSR			mA: */*, 1/1			Watts: */*, 1/1			Cap (pF): */*, 1/1		
LSR			mA: */*, 1/1			Watts: */*, 1/1			Cap (pF): */*, 1/1		

Turns Ratio Tests

			Serial Number			HV Winding			LV Winding		
Connections			-			-			-		
			-			-			-		
Tap	NP Volt	Tap	NP Volt	Cal	Ratio 1	Ratio 2	Ratio 3	Min. Lim	Max. Lim	FRANK™	Manual
	138000.000		120	1150.000	1153.4	1152.74	*	*	*	Good	Good
	138000.000		72	1916.667	1921.23	1919.38	*	*	*	Good	Good

T12171712_CC

Report Source **CouplingCapacitor**

Session Test Date 5/13/2013 1:00:40 PM

Nameplate - Coupling Capacitor Potential Device

Company	EPS	**Serial Number**	T12171712
Location	MOJAVE PP BETA SS	**Special ID**	PHASE C 1
Division	PHX	**Circuit Designation**	
Manufacturer	Trench Electric	**Weight**	875 LB
Year Manufactured	2013	**Type**	TEMF
Mfr Location		**BIL**	242 kV
Impedance	*	**Amps**	*
kV	239	**Max. Rated BIL**	900
Line to Ground	138 kV		
C2(CAR-POT)	38463.000	**%PF**	*
C1-1(B1-POT)	7651.596	**%PF**	*
C2 ser C1-1	6382.000	**%PF**	*
C1-2(B2-B1)	6353.000	**%PF**	*
Primary Magnetic Unit			
Volts	138000.000	**Amps**	*
Secondary Magnetic Unit			
Volts	120	**Amps**	*
Cap Arrangement	Oil-Filled Base, Two Porcelains		

Test Date	5/13/2013	**Test Time**	1:00 PM	**Weather**	Sunny
Air Temperature	97°C	**Tank Temperature**	97°C	**Rel. Humidity**	*
Tested By	RG	**Work Order#**		**Last Test Date**	
Checked By		**Test Set Type**	M4000	**Retest Date**	
Checked Date		**Set Top S/N**	031120882	**Reason**	ACCEPTANCE
Last Sheet#		**Set Bottom S/N**		**Travel Time**	
P.O.#		**Ins. Book#**		**Duration**	
Copies		**Sheet#**		**Crew Size**	3

Session Notes

As per doble C CVT power factor limits are 0.01-0.2

Overall Tests

Measure	Insulation	Porc	Test kV	mA	Watts	% PF meas	Cap(pF)	FRANK™	Manual
C2 (CAR-POT)	C2(CAR-POT)	Bottom	1.991	144.441	0.846	0.059	38314.351		Good
C1-1 (B1 -POT)	C1-1(B1-POT)	Bottom	9.998	28.818	0.172	0.060	7644.090		Good
C1-2 (B2-B1)	C1-2(B2-B1)	Second	9.996	23.806	0.141	0.059	6314.660		Good

LSR	mA: 144.441/144.441, 1/1	Watts: 0.846/0.846, 1/1	Cap (pF): 38314.351/38314.351, 1/1
LSR	mA: 28.818/28.818, 1/1	Watts: 0.172/0.172, 1/1	Cap (pF): 7644.090/7644.090, 1/1
LSR	mA: 23.806/23.806, 1/1	Watts: 0.141/0.141, 1/1	Cap (pF): 6314.660/6314.660, 1/1

Doble Ratio Tests

			True Cap			HV Winding			LV Winding		
			*								
Connections			-				-			-	
			-				-			-	
DETC	NP Volt	LTC	NP Volt	Cal	Ratio 1	Ratio 2	Ratio 3	Min. Lim	Max. Lim	FRANK™	Manual
	*		*	*	*	*	*	*	*		
LSR			mA: */*, 1/1			Watts: */*, 1/1			Cap (pF): */*, 1/1		
LSR			mA: */*, 1/1			Watts: */*, 1/1			Cap (pF): */*, 1/1		
LSR			mA: */*, 1/1			Watts: */*, 1/1			Cap (pF): */*, 1/1		

Turns Ratio Tests

			Serial Number			HV Winding			LV Winding		
Connections			-				-			-	
			-				-			-	
Tap	NP Volt	Tap	NP Volt	Cal	Ratio 1	Ratio 2	Ratio 3	Min. Lim	Max. Lim	FRANK™	Manual
	138000.000		120	1150.000	1146.8	1147.45	*	*	*	Good	Good
	138000.000		72	1916.667	1915.71	1915.71	*	*	*	Good	Good

T12171707_CC

Report Source **CouplingCapacitor**

Session Test Date 5/13/2013 9:59:16 AM

Nameplate - Coupling Capacitor Potential Device

Company	EPS	**Serial Number**	T12171707
Location	MOJAVE PP BETA SS	**Special ID**	PHASE A 2
Division	PHX	**Circuit Designation**	
Manufacturer	Trench Electric	**Weight**	875 LB
Year Manufactured	2013	**Type**	TEMF
Mfr Location		**BIL**	242 kV
Impedance	*	**Amps**	*
kV	239	**Max. Rated BIL**	900
Line to Ground	138 kV		
C2(CAR-POT)	38503.000	**%PF**	*
C1-1(B1-POT)	7638.524	**%PF**	*
C2 ser C1-1	6374.000	**%PF**	*
C1-2(B2-B1)	6340.000	**%PF**	*
Primary Magnetic Unit			
Volts	138000.000	**Amps**	*
Secondary Magnetic Unit			
Volts	120	**Amps**	*
Cap Arrangement	Oil-Filled Base, Two Porcelains		

Test Date	5/13/2013	**Test Time**	9:59 AM	**Weather**	Sunny
Air Temperature	85°C	**Tank Temperature**	85°C	**Rel. Humidity**	*
Tested By	RG	**Work Order#**		**Last Test Date**	
Checked By		**Test Set Type**	M4000	**Retest Date**	
Checked Date		**Set Top S/N**	031120882	**Reason**	ACCEPTANCE
Last Sheet#		**Set Bottom S/N**		**Travel Time**	
P.O.#		**Ins. Book#**		**Duration**	
Copies		**Sheet#**		**Crew Size**	3

Session Notes

As per doble C CVT power factor limits are 0.01-0.2

Overall Tests

Measure	Insulation	Porc	Test kV	mA	Watts	% PF meas	Cap(pF)	FRANK™	Manual
C2 (CAR-POT)	C2(CAR-POT)	Bottom	1.993	144.935	0.842	0.058	38444.799		Good
C1-1 (B1 -POT)	C1-1(B1-POT)	Bottom	10.000	28.641	0.161	0.056	7597.210		Good
C1-2 (B2-B1)	C1-2(B2-B1)	Second	9.997	23.941	0.134	0.056	6350.555		Good

LSR	mA: 144.935/144.935, 1/1	Watts: 0.842/0.842, 1/1	Cap (pF): 38444.799/38444.799, 1/1
LSR	mA: 28.641/28.641, 1/1	Watts: 0.161/0.161, 1/1	Cap (pF): 7597.210/7597.210, 1/1
LSR	mA: 23.941/23.941, 1/1	Watts: 0.134/0.134, 1/1	Cap (pF): 6350.555/6350.555, 1/1

Doble Ratio Tests

			True Cap			HV Winding			LV Winding		
			*								
Connections			-			-			-		
			-			-			-		
DETC	NP Volt	LTC	NP Volt	Cal	Ratio 1	Ratio 2	Ratio 3	Min. Lim	Max. Lim	FRANK™	Manual
	*		*	*	*	*	*	*	*		
LSR			mA: */*, 1/1			Watts: */*, 1/1			Cap (pF): */*, 1/1		
LSR			mA: */*, 1/1			Watts: */*, 1/1			Cap (pF): */*, 1/1		
LSR			mA: */*, 1/1			Watts: */*, 1/1			Cap (pF): */*, 1/1		

Turns Ratio Tests

			Serial Number			HV Winding			LV Winding		
Connections			-			-			-		
			-			-			-		
Tap	NP Volt	Tap	NP Volt	Cal	Ratio 1	Ratio 2	Ratio 3	Min. Lim	Max. Lim	FRANK™	Manual
	138000.000		120	1150.000	1154.07	1153.4	*	*	*	Good	Good
	138000.000		72	1916.667	1923.000	1923.000	*	*	*	Good	Good

T12171708_CC

Report Source **CouplingCapacitor**

Session Test Date 5/13/2013 9:04:35 AM

Nameplate - Coupling Capacitor Potential Device

Company	EPS	**Serial Number**	T12171708
Location	MOJAVE PP BETA SS	**Special ID**	PHASE B 2
Division	PHX	**Circuit Designation**	
Manufacturer	Trench Electric	**Weight**	875 LB
Year Manufactured	2013	**Type**	TEMF
Mfr Location		**BIL**	242 kV
Impedance	*	**Amps**	*
kV	239	**Max. Rated BIL**	900
Line to Ground	138 kV		
C2(CAR-POT)	38846.000	**%PF**	*
C1-1(B1-POT)	7605.139	**%PF**	*
C2 ser C1-1	6360.000	**%PF**	*
C1-2(B2-B1)	6348.000	**%PF**	*
Primary Magnetic Unit			
Volts	138000.000	**Amps**	*
Secondary Magnetic Unit			
Volts	120	**Amps**	*
Cap Arrangement	Oil-Filled Base, Two Porcelains		

Test Date	5/13/2013	**Test Time**	9:04 AM	**Weather**	Sunny
Air Temperature	80°C	**Tank Temperature**	80°C	**Rel. Humidity**	*
Tested By	RG	**Work Order#**		**Last Test Date**	
Checked By		**Test Set Type**	M4000	**Retest Date**	
Checked Date		**Set Top S/N**	031120882	**Reason**	ACCEPTANCE
Last Sheet#		**Set Bottom S/N**		**Travel Time**	
P.O.#		**Ins. Book#**		**Duration**	
Copies		**Sheet#**		**Crew Size**	3

Session Notes

As per doble C CVT power factor limits are 0.01-0.2

Overall Tests

Measure	Insulation	Porc	Test kV	mA	Watts	% PF meas	Cap(pF)	FRANK™	Manual
C2 (CAR-POT)	C2(CAR-POT)	Bottom	1.994	146.852	0.837	0.057	38953.250		Good
C1-1 (B1 -POT)	C1-1(B1-POT)	Bottom	10.000	28.696	0.151	0.053	7611.890		Good
C1-2 (B2-B1)	C1-2(B2-B1)	Second	9.998	23.961	0.127	0.053	6355.780		Good

LSR	mA: 146.852/146.852, 1/1	Watts: 0.837/0.837, 1/1	Cap (pF): 38953.250/38953.250, 1/1
LSR	mA: 28.696/28.696, 1/1	Watts: 0.151/0.151, 1/1	Cap (pF): 7611.890/7611.890, 1/1
LSR	mA: 23.961/23.961, 1/1	Watts: 0.127/0.127, 1/1	Cap (pF): 6355.780/6355.780, 1/1

Doble Ratio Tests

			True Cap			HV Winding			LV Winding		
			*								
Connections			-			-			-		
			-			-			-		
DETC	NP Volt	LTC	NP Volt	Cal	Ratio 1	Ratio 2	Ratio 3	Min. Lim	Max. Lim	FRANK™	Manual
	*		*	*	*	*	*	*	*		
LSR			mA: */*, 1/1			Watts: */*, 1/1			Cap (pF): */*, 1/1		
LSR			mA: */*, 1/1			Watts: */*, 1/1			Cap (pF): */*, 1/1		
LSR			mA: */*, 1/1			Watts: */*, 1/1			Cap (pF): */*, 1/1		

Turns Ratio Tests

			Serial Number			HV Winding			LV Winding		
Connections			-			-			-		
			-			-			-		
Tap	NP Volt	Tap	NP Volt	Cal	Ratio 1	Ratio 2	Ratio 3	Min. Lim	Max. Lim	FRANK™	Manual
	138000.000		120	1150.000	1153.4	1152.07	*	*	*	Good	
	138000.000		72	1916.667	1915.71	1919.38	*	*	*	Good	

T12171709_CC

Report Source **CouplingCapacitor**

Session Test Date 5/13/2013 8:14:01 AM

Nameplate - Coupling Capacitor Potential Device

Company	EPS	**Serial Number**	T12171709
Location	MOJAVE PP BETA SS	**Special ID**	PHASE C 2
Division	PHX	**Circuit Designation**	
Manufacturer	Trench Electric	**Weight**	875 LB
Year Manufactured	2013	**Type**	TEMF
Mfr Location		**BIL**	242 kV
Impedance	*	**Amps**	*
kV	239	**Max. Rated BIL**	900
Line to Ground	138 kV		
C2(CAR-POT)	38567.000	**%PF**	*
C1-1(B1-POT)	7656.111	**%PF**	*
C2 ser C1-1	6388.000	**%PF**	*
C1-2(B2-B1)	6241.000	**%PF**	*
Primary Magnetic Unit			
Volts	138000.000	**Amps**	*
Secondary Magnetic Unit			
Volts	120	**Amps**	*
Cap Arrangement	Oil-Filled Base, Two Porcelains		

Test Date	5/13/2013	**Test Time**	8:14 AM	**Weather**	Sunny
Air Temperature	80°C	**Tank Temperature**	80°C	**Rel. Humidity**	*
Tested By	RG	**Work Order#**		**Last Test Date**	
Checked By		**Test Set Type**	M4000	**Retest Date**	
Checked Date		**Set Top S/N**	031120882	**Reason**	ACCEPTANCE
Last Sheet#		**Set Bottom S/N**		**Travel Time**	
P.O.#		**Ins. Book#**		**Duration**	
Copies		**Sheet#**		**Crew Size**	3

Session Notes

As per doble C CVT power factor limits are 0.01-0.2

Overall Tests

Measure	Insulation	Porc	Test kV	mA	Watts	% PF meas	Cap(pF)	FRANK™	Manual
C2 (CAR-POT)	C2(CAR-POT)	Bottom	1.994	145.619	0.827	0.057	38626.549		Good
C1-1 (B1 -POT)	C1-1(B1-POT)	Bottom	10.000	28.725	0.165	0.058	7619.505		Good
C1-2 (B2-B1)	C1-2(B2-B1)	Second	9.998	24.075	0.131	0.054	6385.940		Good

LSR	mA: 145.619/145.619, 1/1	Watts: 0.827/0.827, 1/1	Cap (pF): 38626.549/38626.549, 1/1
LSR	mA: 28.725/28.725, 1/1	Watts: 0.165/0.165, 1/1	Cap (pF): 7619.505/7619.505, 1/1
LSR	mA: 24.075/24.075, 1/1	Watts: 0.131/0.131, 1/1	Cap (pF): 6385.940/6385.940, 1/1

Doble Ratio Tests

			True Cap			HV Winding				LV Winding	
			*								
Connections			-				-			-	
			-				-			-	
DETC	NP Volt	LTC	NP Volt	Cal	Ratio 1	Ratio 2	Ratio 3	Min. Lim	Max. Lim	FRANK™	Manual
	*		*	*	*	*	*	*	*		
LSR			mA: */*, 1/1			Watts: */*, 1/1			Cap (pF): */*, 1/1		
LSR			mA: */*, 1/1			Watts: */*, 1/1			Cap (pF): */*, 1/1		
LSR			mA: */*, 1/1			Watts: */*, 1/1			Cap (pF): */*, 1/1		

Turns Ratio Tests

			Serial Number			HV Winding				LV Winding	
Connections			-				-			-	
			-				-			-	
Tap	NP Volt	Tap	NP Volt	Cal	Ratio 1	Ratio 2	Ratio 3	Min. Lim	Max. Lim	FRANK™	Manual
	138000.000		120	1150.000	1154.07	1154.73	*	*	*	Good	Good
	138000.000		72	1916.667	1915.71	1912.04	*	*	*	Good	Good

Vanguard Instruments Company, Inc.
1520 S. Hellman Avenue, Ontario, CA 91761, USA Phone: 909.923.9390 FAX: 909.923.9391
www.vanguard-instruments.com

FILENAME:	CT X T121716-04 A PHASE BET	MFR:	TRENCH LIMITED
DATE:	05/13/13 13:52:48	MODEL:	10SK 245
COMPANY:	HOTLINE CONSTRUCTION	SN:	T-121716-04
STATION:	MOJAVE PP BETA SS	OPERATOR:	RG/BR
CIRCUIT:	T-121716-04 APHASE X	COMMENTS:	

SUMMARY REPORT
KNEE TYPE: IEEE 30 Deg
FREQUENCY: 60 Hz

Test	Tap	IEEE30	IEEE45	IEC 10/50	NP-Ratio	M-Ratio	% Error	Phase Angle	Winding Res
1 [redacted]	X1-X2	24.20	20.68	29.16	800/5.0	160.042	0.0263 %	1.16°	222.46 m-ohms

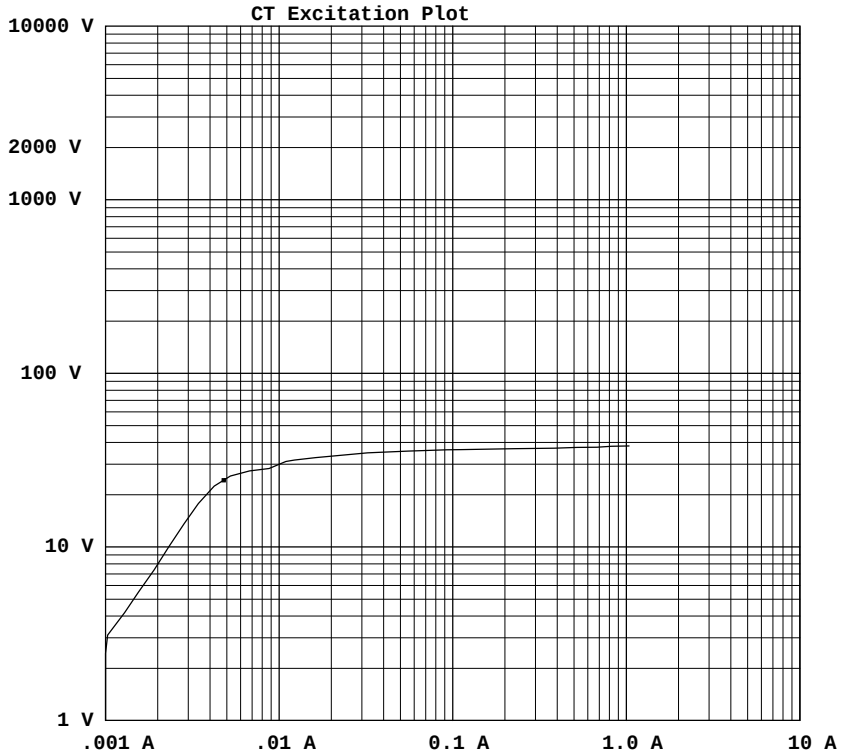

1000V INSULATION RES TEST RESULTS

VOLTAGE: 997.7 V
CURRENT: 0.19 MICRO-AMPS
RESISTANCE: >1,000 MEG-OHMS

BURDEN TEST RESULTS

5 AMP BURDEN TEST

MEASURED CURRENT: 4.957 A
MEASURED VOLTAGE: 39.705 V, 39.28 DEG
IMPEDANCE (Z): 8.010 OHMS
BURDEN: 200.390 VA
POWER FACTOR: 0.77

Test Notepad

Vanguard Instruments Company, Inc.
1520 S. Hellman Avenue, Ontario, CA 91761, USA Phone: 909.923.9390 FAX: 909.923.9391
www.vanguard-instruments.com

FILENAME: CT Y T-121716-04 A PHASE BE
DATE: 05/13/13 13:59:45
COMPANY: HOTLINE CONSTRUCTION
STATION: MOJAVE PP BETA SS
CIRCUIT: T-121716-04 APHASE Y

MFR: TRENCH LIMITED
MODEL: 10SK 245
SN: T-121716-04
OPERATOR: RG/BR
COMMENTS:

SUMMARY REPORT
KNEE TYPE: IEEE 30 Deg
FREQUENCY: 60 Hz

Test	Tap	IEEE30	IEEE45	IEC 10/50	NP-Ratio	M-Ratio	% Error	Phase Angle	Winding Res
1 [redacted]	X1-X2	30.64	30.36	29.04	800/5.0	159.980	0.0122 %	-0.02°	242.55 m-ohms

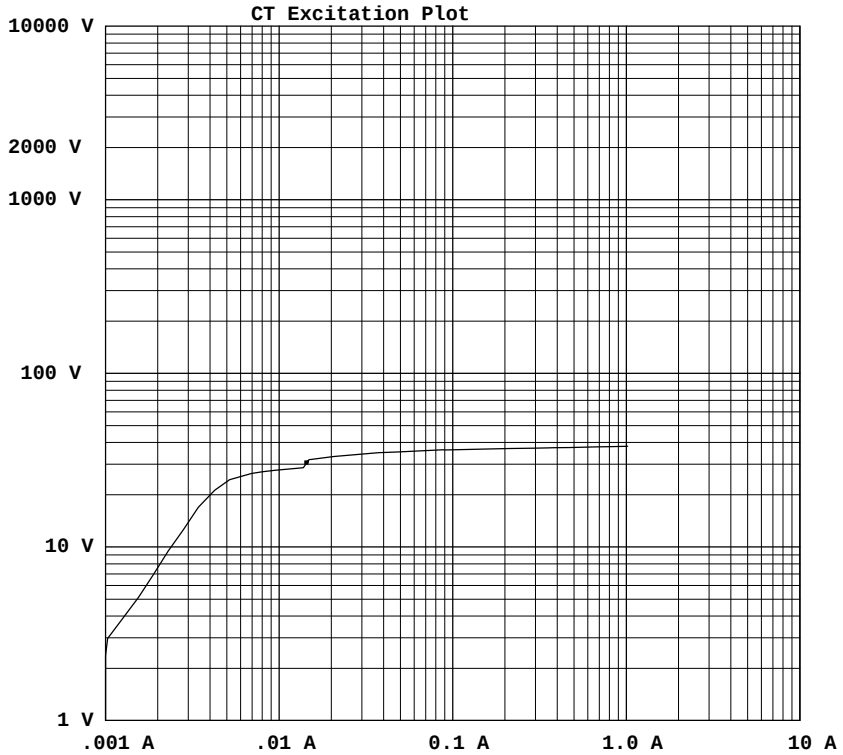

1000V INSULATION RES TEST RESULTS

VOLTAGE: 1006.6 V
CURRENT: 0.16 MICRO-AMPS
RESISTANCE: >1,000 MEG-OHMS

BURDEN TEST RESULTS

5 AMP BURDEN TEST

MEASURED CURRENT: 5.005 A
MEASURED VOLTAGE: 39.658 V, 39.49 DEG
IMPEDANCE (Z): 7.924 OHMS
BURDEN: 198.094 VA
POWER FACTOR: 0.77

Test Notepad

Vanguard Instruments Company, Inc.
1520 S. Hellman Avenue, Ontario, CA 91761, USA Phone: 909.923.9390 FAX: 909.923.9391
www.vanguard-instruments.com

FILENAME: CT X T-121716-05 B PHASE BE
DATE: 05/13/13 13:14:23
COMPANY: HOTLINE CONSTRUCTION
STATION: MOJAVE PP BETA SS
CIRCUIT: T-121716-05 BPHASE X

MFR: TRENCH LIMITED
MODEL: 10SK 245
SN: T-121716-05
OPERATOR: RG/BR
COMMENTS:

SUMMARY REPORT
KNEE TYPE: IEEE 30 Deg
FREQUENCY: 60 Hz

Test	Tap	IEEE30	IEEE45	IEC 10/50	NP-Ratio	M-Ratio	% Error	Phase Angle	Winding Res
1 [redacted]	X1-X2	20.40	17.40	28.64	800/5.0	159.994	0.0038 %	-0.18°	212.80 m-ohms

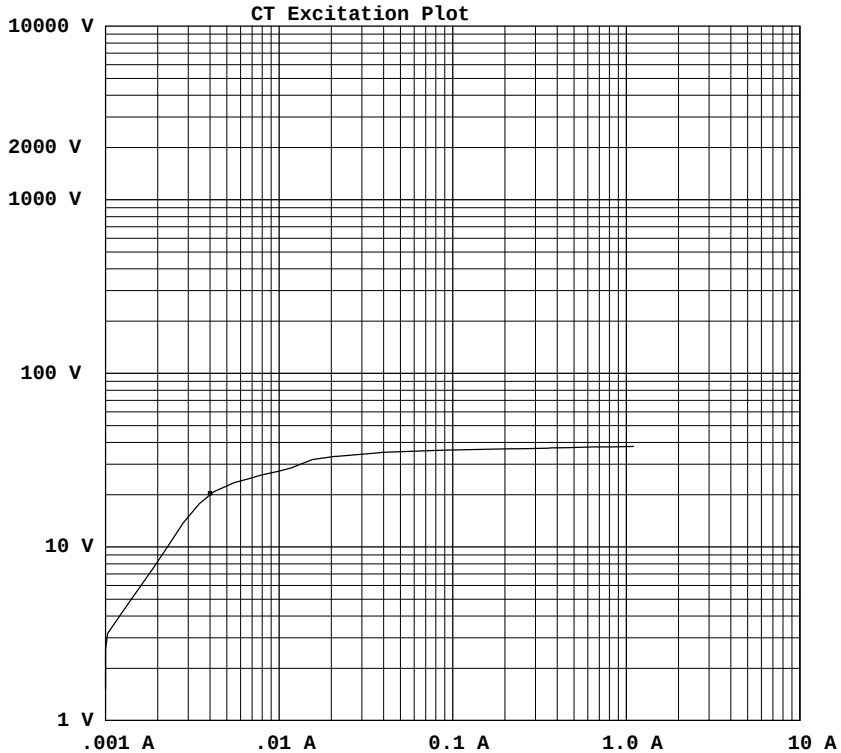

1000V INSULATION RES TEST RESULTS

VOLTAGE: 1004.4 V
CURRENT: 0.19 MICRO-AMPS
RESISTANCE: >1,000 MEG-OHMS

BURDEN TEST RESULTS

5 AMP BURDEN TEST

MEASURED CURRENT: 4.963 A
MEASURED VOLTAGE: 39.039 V, 38.27 DEG
IMPEDANCE (Z): 7.866 OHMS
BURDEN: 196.485 VA
POWER FACTOR: 0.78

Test Notepad

Vanguard Instruments Company, Inc.
1520 S. Hellman Avenue, Ontario, CA 91761, USA Phone: 909.923.9390 FAX: 909.923.9391
www.vanguard-instruments.com

FILENAME:	CT Y T-121716-05 B PHASE BE	MFR:	TRENCH LIMITED
DATE:	05/13/13 13:21:07	MODEL:	10SK 245
COMPANY:	HOTLINE CONSTRUCTION	SN:	T-121716-05
STATION:	MOJAVE PP BETA SS	OPERATOR:	RG/BR
CIRCUIT:	T-121716-05 BPHASE Y	COMMENTS:	

SUMMARY REPORT
KNEE TYPE: IEEE 30 Deg
FREQUENCY: 60 Hz

Test	Tap	IEEE30	IEEE45	IEC 10/50	NP-Ratio	M-Ratio	% Error	Phase Angle	Winding Res
1 [redacted]	X1-X2	29.88	19.56	28.76	800/5.0	160.041	0.0257 %	-2.10°	220.94 m-ohms

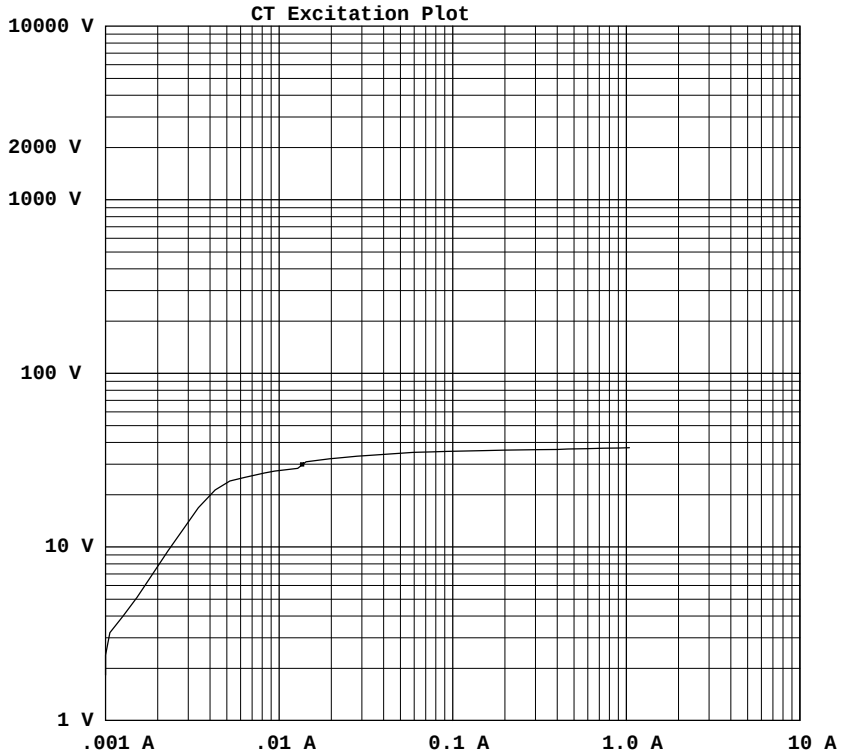

1000V INSULATION RES TEST RESULTS

VOLTAGE: 1002.9 V
CURRENT: 0.12 MICRO-AMPS
RESISTANCE: >1,000 MEG-OHMS

BURDEN TEST RESULTS

5 AMP BURDEN TEST

MEASURED CURRENT: 5.039 A
MEASURED VOLTAGE: 39.215 V, 39.01 DEG
IMPEDANCE (Z): 7.782 OHMS
BURDEN: 194.466 VA
POWER FACTOR: 0.78

Test Notepad

Vanguard Instruments Company, Inc.
1520 S. Hellman Avenue, Ontario, CA 91761, USA Phone: 909.923.9390 FAX: 909.923.9391
www.vanguard-instruments.com

FILENAME:	CT X T-121716-06 C PHASE BE	MFR:	TRENCH LIMITED
DATE:	05/13/13 12:49:36	MODEL:	10SK 245
COMPANY:	HOTLINE CONSTRUCTION	SN:	T12171606
STATION:	MOJAVE PP BETA SS	OPERATOR:	RG/BR
CIRCUIT:	T-121716-06 CPHASE X	COMMENTS:	

SUMMARY REPORT
KNEE TYPE: IEEE 30 Deg
FREQUENCY: 60 Hz

Test	Tap	IEEE30	IEEE45	IEC 10/50	NP-Ratio	M-Ratio	% Error	Phase Angle	Winding Res
1 [redacted]	X1-X2	21.76	17.56	29.08	800/5.0	160.002	0.0015 %	-0.06°	212.87 m-ohms

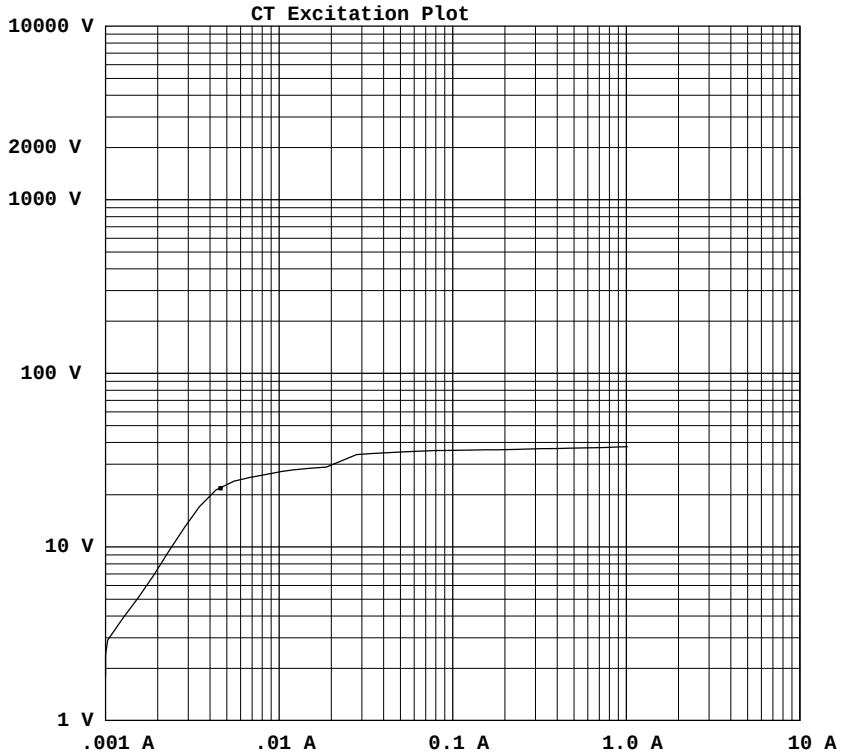

1000V INSULATION RES TEST RESULTS

VOLTAGE: 991.0 V
CURRENT: 0.19 MICRO-AMPS
RESISTANCE: >1,000 MEG-OHMS

BURDEN TEST RESULTS

5 AMP BURDEN TEST

MEASURED CURRENT: 5.052 A
MEASURED VOLTAGE: 39.611 V, 38.94 DEG
IMPEDANCE (Z): 7.841 OHMS
BURDEN: 196.116 VA
POWER FACTOR: 0.78

Test Notepad

Vanguard Instruments Company, Inc.
1520 S. Hellman Avenue, Ontario, CA 91761, USA Phone: 909.923.9390 FAX: 909.923.9391
www.vanguard-instruments.com

FILENAME: CT Y T-121716-06 C PHASE BE
DATE: 05/13/13 12:56:47
COMPANY: HOTLINE CONSTRUCTION
STATION: MOJAVE PP BETA SS
CIRCUIT: T-121716-06 CPHASE Y

MFR: TRENCH LIMITED
MODEL: 10SK 245
SN: T-121716-06
OPERATOR: RG/BR
COMMENTS:

SUMMARY REPORT
KNEE TYPE: IEEE 30 Deg
FREQUENCY: 60 Hz

Test	Tap	IEEE30	IEEE45	IEC 10/50	NP-Ratio	M-Ratio	% Error	Phase Angle	Winding Res
1 [redacted]	X1-X2	20.16	17.92	29.00	800/5.0	159.796	0.1275 %	-0.42°	219.76 m-ohms

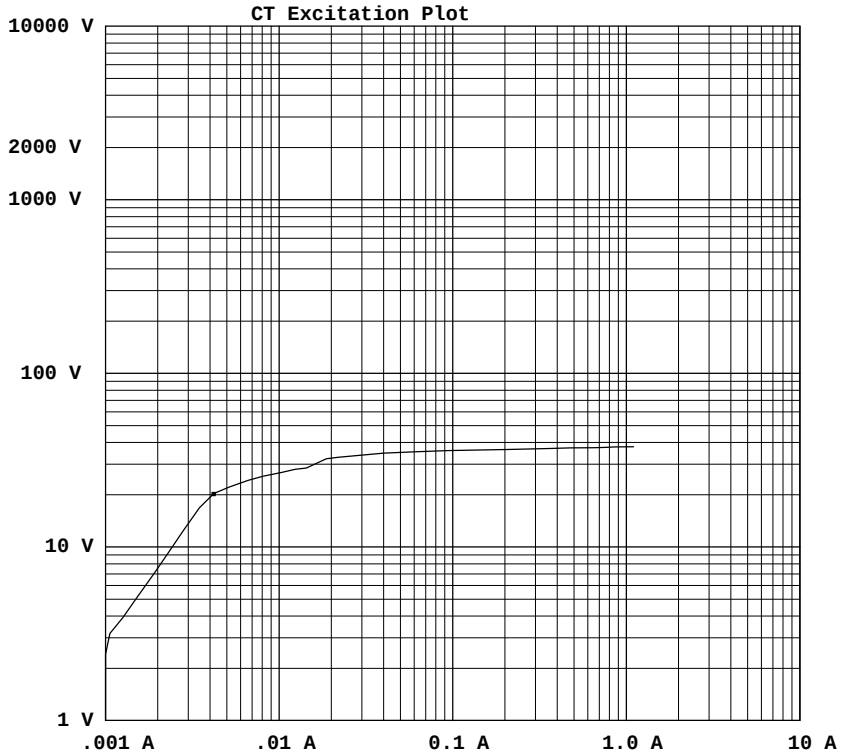

1000V INSULATION RES TEST RESULTS

VOLTAGE: 1004.3 V
CURRENT: 0.09 MICRO-AMPS
RESISTANCE: >1,000 MEG-OHMS

BURDEN TEST RESULTS

5 AMP BURDEN TEST

MEASURED CURRENT: 4.982 A
MEASURED VOLTAGE: 39.332 V, 38.46 DEG
IMPEDANCE (Z): 7.895 OHMS
BURDEN: 197.526 VA
POWER FACTOR: 0.78

Test Notepad

ELECTRIC POWER SYSTEMS

557 E. Juanita Ave. Ste. 4, Mesa, AZ 85204 *Phone (480) 633-1490 Fax (480) 633-7092*

CLIENT:	HOTLINE ELECTRIC	LOCATION:	BETA SS MOJAVE PP	JOB #:	A13024
EQUIPMENT:	SS GROUNDING			DATE:	5/16/2013
TEST EQUIPMENT:	DET5-4R			TESTED BY:	RG
C2 - DISTANCE TO CURRENT ELECTRODE:	350 FEET	EARTH RESISTANCE: 0.55Ω		**SEE NOTE**	OHMS

FULL MEMBER

P2 - DISTANCE TO POTENTIAL ELECTRODE	Resistance in ohms
70 FEET	0.40
105 FEET	0.43
140 FEET	0.45
175 FEET	0.50
210 FEET	0.55
245 FEET	0.57
280 FEET	0.63
315 FEET	0.870

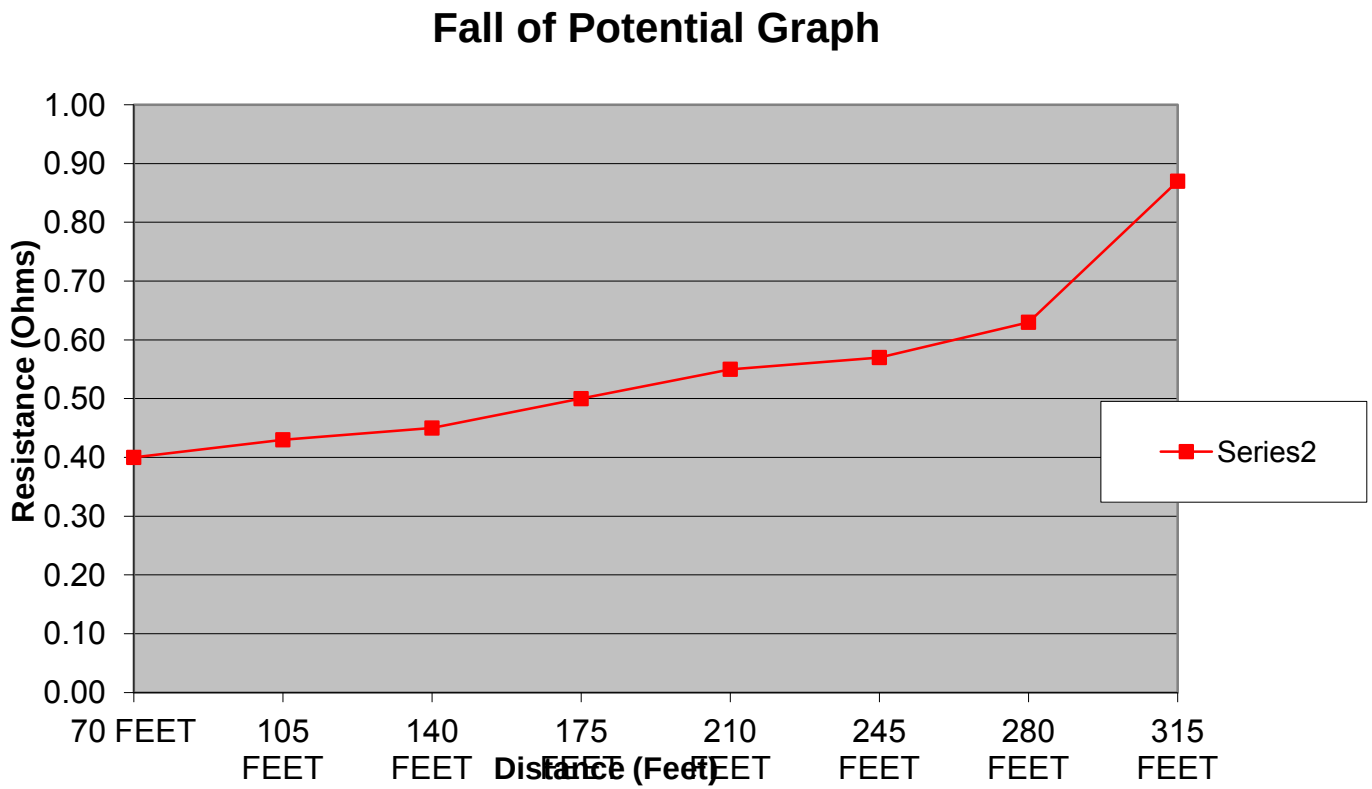

Notes: All pass. The resistance between the main grounding electrode and ground shall be no greater than 1.0 ohm or less for generating or transmission station grounds unless otherwise specified by the owner. (Reference ANSI/IEEE Standard 142)

Electric Power Systems ELECTRICAL TESTING & ENGINEERING

557 E Juanita Ave, Ste 4 • Mesa, AZ 85204 • Phone 480-633-1490 • Fax 480-633-7092

V. NETA Standards

APPENDIX B

Frequency of Maintenance Tests

NETA recognizes that the ideal maintenance program is reliability-based, unique to each plant and to each piece of equipment. In the absence of this information and in response to requests for a maintenance timetable, NETA's Standards Review Council presents the following time-based maintenance schedule and matrix.

One should contact a NETA Accredited Testing Company for a reliability-based evaluation.

The following matrix is to be used in conjunction with Appendix B, Inspections and Tests. Application of the matrix is recognized as a guide only.

Specific condition, criticality, and reliability must be determined to correctly apply the matrix. Application of the matrix, along with the culmination of historical testing data and trending, should provide a quality electrical preventive maintenance program**.**

MAINTENANCE FREQUENCY MATRIX				
		EQUIPMENT CONDITION		
		POOR	AVERAGE	GOOD
EQUIPMENT RELIABILITY REQUIREMENT	LOW	1.0	2.0	2.5
	MEDIUM	0.50	1.0	1.5
	HIGH	0.25	0.50	0.75

APPENDIX B

Frequency of Maintenance Tests (*continued*)

Inspections and Tests Frequency in Months (Multiply These Values by the Factor in the Maintenance Frequency Matrix)				
Section	**Description**	**Visual**	**Visual & Mechanical**	**Visual & Mechanical & Electrical**
7.1	Switchgear & Switchboard Assemblies	12	12	24
7.2	Transformers			
7.2.1.1	Small Dry-Type Transformers	2	12	36
7.2.1.2	Large Dry-Type Transformers	1	12	24
7.2.2	Liquid-Filled Transformers	1	12	24
	Sampling	–	–	12
7.3	Cables			
7.3.1	Low-Voltage, Low-Energy	–	–	–
7.3.2	Low-Voltage, 600 Volt Maximum	2	12	36
7.3.3	Medium- and High-Voltage	2	12	36
7.4	Metal-Enclosed Busways	2	12	24
	Infrared Only	–	–	12
7.5	Switches			
7.5.1.1	Air, Low-Voltage	2	12	36
7.5.1.2	Air, Medium-Voltage, Metal-Enclosed	–	12	24
7.5.1.3	Air, Medium- and High-Voltage Open	1	12	24
7.5.2	Oil, Medium-Voltage	1	12	24
7.5.3	Vacuum, Medium-Voltage	1	12	24
7.5.4	Medium-Voltage, SF_6	1	12	24
7.5.5	Cutouts	12	24	24
7.6	Circuit Breakers			
7.6.1.1	Air, Insulated-Case/Molded-Case	1	12	36
7.6.1.2	Air, Low-Voltage Power	1	12	36
7.6.1.3	Air, Medium-Voltage	1	12	36
7.6.2	Oil, Medium-Voltage	1	12	36
	Sampling	–	–	12
7.6.2	Oil, High-Voltage	1	12	12
	Sampling	–	–	12
7.6.3	Vacuum, Medium-Voltage	1	12	24
7.6.4	SF_6	1	12	12
7.7	Circuit Switchers	1	12	12
7.8	Network Protectors	12	12	24

APPENDIX B

Frequency of Maintenance Tests (*continued*)

Inspections and Tests Frequency in Months (Multiply These Values by the Factor in the Maintenance Frequency Matrix)				
Section	**Description**	**Visual**	**Visual & Mechanical**	**Visual & Mechanical & Electrical**
7.9	Protective Relays			
7.9.1	Electromechanical and Solid State	1	12	12
7.9.2	Microprocessor-Based	1	12	12
7.10	Instrument Transformers	12	12	36
7.11	Metering Devices			
7.11.1	Electromechanical and Solid-State	12	12	36
7.11.2	Microprocessor-Based	12	12	36
7.12	Regulating Apparatus			
7.12.1.1	Step-Voltage Regulators	1	12	24
	Sample Liquid	–	–	12
7.12.1.2	Induction Regulators	12	12	24
7.12.2	Current Regulators	1	12	24
7.12.3	Load Tap-changers	1	12	24
	Sample Liquid	–	–	12
7.13	Grounding Systems	2	12	24
7.14	Ground-Fault Protection Systems	2	12	12
7.15	Rotating Machinery			
7.15.1	AC Induction Motors and Generators	1	12	24
7.15.2	Synchronous Motors and Generators	1	12	24
7.15.3	DC Motors and Generators	1	12	24
7.16	Motor Control			
7.16.1.1	Motor Starters, Low-Voltage	2	12	24
7.16.1.2	Motor Starters, Medium-Voltage	2	12	24
7.16.2.1	Motor Control Centers, Low-Voltage	2	12	24
7.16.2.2	Motor Control Centers, Medium-Voltage	2	12	24
7.17	Adjustable-Speed Drive Systems	1	12	24
7.18	Direct-Current Systems			
7.18.1	Batteries	1	12	12
7.18.2	Battery Chargers	1	12	12
7.18.3	Rectifiers	1	12	24
7.19	Surge Arresters			
7.19.1	Low-Voltage Surge Protection Devices	2	12	24
7.19.2	Medium- and High-Voltage Surge Protection Devices	2	12	24

APPENDIX B

Frequency of Maintenance Tests (*continued*)

Inspections and Tests Frequency in Months (Multiply These Values by the Factor in the Maintenance Frequency Matrix)				
Section	**Description**	**Visual**	**Visual & Mechanical**	**Visual & Mechanical & Electrical**
7.20	Capacitors and Reactors			
7.20.1	Capacitors	1	12	12
7.20.2	Capacitor Control Devices	1	12	12
7.20.3.1	Reactors, (Shunt and Current-Limiting) Dry-Type	2	12	24
7.20.3.2	Reactors, (Shunt and Current-Limiting) Liquid-Filled	1	12	24
	Sampling	–	–	12
7.21	Outdoor Bus Structures	1	12	36
7.22	Emergency Systems			
7.22.1	Engine Generator	1	2	12
	Functional Testing	–	–	2
7.22.2	Uninterruptible Power Systems	1	12	12
	Functional Testing	–	–	2
7.22.3	Automatic Transfer Switches	1	12	12
	Functional Testing	–	–	2
7.23	Telemetry/Pilot Wire SCADA	1	12	12
7.24	Automatic Circuit Reclosers and Line Sectionalizers			
7.24.1	Automatic Circuit Reclosers, Oil/Vacuum	1	12	24
	Sample	–	–	12
7.24.2	Automatic Line Sectionalizers, Oil	1	12	24
	Sample	–	–	12
7.27	EMF Testing	12	12	12

TABLE 100.1

Insulation Resistance Test Values
Electrical Apparatus and Systems

Nominal Rating of Equipment (Volts)	Minimum Test Voltage (DC)	Recommended Minimum Insulation Resistance (Megohms)
250	500	25
600	1,000	100
1,000	1,000	100
2,500	1,000	500
5,000	2,500	1,000
8,000	2,500	2,000
15,000	2,500	5,000
25,000	5,000	20,000
34,500 and above	15,000	100,000

In the absence of consensus standards dealing with insulation-resistance tests, the NETA Standards Review Council suggests the above representative values.

See Table 100.14 for temperature correction factors.

Test results are dependent on the temperature of the insulating material and the humidity of the surrounding environment at the time of the test.

Insulation-resistance test data may be used to establish a trending pattern. Deviations from the baseline information permit evaluation of the insulation.

7.6.4 Circuit Breakers, SF_6

1. Visual and Mechanical Inspection

1. Compare equipment nameplate data with drawings and specifications.

2. Inspect physical and mechanical condition.

3. Inspect anchorage, alignment, and grounding.

4. Verify that all maintenance devices such as special tools and gauges specified by the manufacturer are available for servicing and operating the breaker.

5. Verify the unit is clean.

*6. When provisions are made for sampling, remove a sample of SF_6 gas and test in accordance with Table 100.13. Do not break seal or distort “sealed-for-life” interrupters.

7. Inspect operating mechanism and/or hydraulic or pneumatic system and SF_6 gas-insulated system in accordance with manufacturer’s published data.

8. Test for SF_6 gas leaks in accordance with manufacturer’s published data.

9. Verify correct operation of alarms and pressure-limit switches for pneumatic, hydraulic, and SF_6 gas pressure in accordance with manufacturer’s published data.

10. If recommended by manufacturer, slow close/open breaker and check for binding, friction, contact alignment, and penetration. Verify that contact sequence is in accordance with manufacturer’s published data. In the absence of manufacturer’s published data, refer to ANSI/IEEE C37.04.

11. Perform all mechanical operation tests on the operating mechanism in accordance with the manufacturer’s published data.

12. Inspect all bolted electrical connections for high resistance using one or more of the following methods:

    1. Use of a low-resistance ohmmeter in accordance with Section 7.6.4.2.

    2. Verify tightness of accessible bolted electrical connections by calibrated torque-wrench method in accordance with manufacturer’s published data or Table 100.12.

    3. Perform a thermographic survey in accordance with Section 9.

13. Verify the appropriate lubrication on moving current-carrying parts and on moving and sliding surfaces.

14. Perform time-travel analysis.

* Optional

7.6.4 Circuit Breakers, SF_6 (*continued*)

15. Record as-found and as-left operation counter readings.

2. Electrical Tests

1. Perform resistance measurements through all bolted connections with a low-resistance ohmmeter, if applicable, in accordance with Section 7.6.4.1.

2. Perform insulation-resistance tests in accordance with Table 100.1 from each pole-to-ground with breaker closed and across open poles at each phase. For single-tank breakers, perform insulation resistance tests in accordance with Table 100.1 from pole-to-pole.

3. Perform a contact/pole-resistance test.

*4. Perform insulation-resistance tests on all control wiring with respect to ground. Applied potential shall be 500 volts dc for 300-volt rated cable and 1000 volts dc for 600-volt rated cable. Test duration shall be one minute. For units with solid-state components or for control devices that can not tolerate the voltage, follow manufacturer's recommendation.

5. Perform minimum pickup voltage tests on trip and close coils in accordance with manufacturer's published data.

6. Verify correct operation of any auxiliary features such as electrical close and trip operation, trip-free, and antipump function. Reset all trip logs and indicators.

7. Trip circuit breaker by operation of each protective device.

8. Perform power-factor or dissipation-factor tests on each pole with the breaker open and on each phase with the breaker closed.

9. Perform power-factor or dissipation-factor tests on each bushing equipped with a power-factor/ capacitance tap. In the absence of a power-factor/ capacitance tap, perform hot-collar tests. These tests shall be in accordance with the test equipment manufacturer's published data.

*10. Perform a dielectric withstand voltage test in accordance with manufacturer's published data.

11. Verify operation of heaters.

12. Test instrument transformers in accordance with Section 7.10.

3. Test Values

3.1 Test Values – Visual and Mechanical

1. SF_6 gas shall have values in accordance with Table 100.13. (7.6.4.1.6)

2. Results of the SF_6 gas leak test shall confirm that no SF_6 gas leak exists. (7.6.4.1.8)

* Optional

7.6.4 Circuit Breakers, SF_6 (*continued*)

3. Settings for alarm, pressure, and limit switches shall be in accordance with manufacturer's published data. (7.6.4.1.9)

4. Compare bolted connection resistance values to values of similar connections. Investigate values which deviate from those of similar bolted connections by more than 50 percent of the lowest value. (7.6.4.1.12.1)

5. Bolt-torque levels shall be in accordance with manufacturer's published data. In the absence of manufacturer's published data, use Table 100.12. (7.6.4.1.12.2)

6. Results of the thermographic survey shall be in accordance with Section 9. (7.6.4.1.12.3)

7. Circuit breaker travel and velocity values shall be in accordance with manufacturer's published data. (7.6.4.1.14)

8. Operations counter shall advance one digit per close-open cycle. (7.6.4.1.15)

3.2 Test Values – Electrical

1. Compare bolted connection resistance values to values of similar connections. Investigate values which deviate from those of similar bolted connections by more than 50 percent of the lowest value.

2. Insulation-resistance values of circuit breakers shall be in accordance with manufacturer's published data. In the absence of manufacturer's published data, use Table 100.1. Values of insulation resistance less than this table or manufacturer's recommendations should be investigated.

3. Microhm or dc millivolt drop values shall not exceed the high levels of the normal range as indicated in the manufacturer's published data. In the absence of manufacturer's published data, investigate values that deviate from adjacent poles or similar breakers by more than 50 percent of the lowest value.

4. Insulation-resistance values of control wiring shall not be less than two megohms.

5. Minimum pickup voltage of the trip and close coils shall conform to the manufacturer's published data. In the absence of the manufacturer's published data, refer to Table 100.20.

6. Auxiliary features shall operate in accordance with manufacturer's published data.

7. Protective devices shall operate the breaker per the system design.

8. Power-factor or dissipation-factor values shall be compared to manufacturer's published data. In the absence of manufacturer's published data, the comparison shall be made to test data from similar breakers or data from test equipment manufacturers.

* Optional

7.6.4 Circuit Breakers, SF_6 (*continued*)

9. Power-factor or dissipation-factor and capacitance test values shall be within ten percent of nameplate rating for bushings. Hot collar tests are evaluated on a milliampere/milliwatt loss basis, and the results shall be compared to values of similar bushings.

10. If no evidence of distress or insulation failure is observed by the end of the total time of voltage application during the dielectric withstand test, the test specimen is considered to have passed the test.

11. Heaters shall be operational.

12. Results of electrical tests on instrument transformers shall be in accordance with Section 7.10.

* Optional

TABLE 100.13

SF_6 Gas Tests

Test	Method	Serviceability Limits [a]
Moisture	Hygrometer	Per manufacturer or ≥ 200 ppm[b]
SF_6 decomposition byproducts	ASTM D 2685	≥ 500 ppm
Air	ASTM D 2685	≥ 5000 ppm[c]
Dielectric breakdown hemispherical contacts	0.10 inch gap at atmospheric pressure	11.5 - 13.5 kV[d]

a. In the absence of consensus standards dealing with SF_6 circuit breaker gas tests, the NETA Standards Review Council suggests the above representative values.

b. According to some manufacturers.

c. Dominelli, N. and Wylie, L., *Analysis of SF_6 Gas as a Diagnostic Technique for GIS*, Electric Power Research Institute, Substation Equipment Diagnostics Conference IV, February 1996.

d. Per Even, F.E., and Mani, G. Sulfur Fluorides, Kirk, *Othmer Encyclopedia of Chemical Technology*, 4th ed., 11,428, 1994.

Reference: IEC 61634 High-Voltage Switchgear and Controlgear - *Use and Handling of Sulfur Hexafluoride (SF_6) in High-Voltage Switchgear and Controlgear*.

7.5.1.3 Switches, Air, Medium- and High-Voltage, Open

1. Visual and Mechanical Inspection

1. Compare equipment nameplate data with drawings and specifications.
2. Inspect physical and mechanical condition.
3. Inspect anchorage, alignment, grounding, and required clearances.
4. Verify the unit is clean.
5. Perform mechanical operator tests in accordance with manufacturer's published data, if applicable.
6. Verify correct operation and adjustment of motor operator limit switches and mechanical interlocks, if applicable.
7. Verify correct blade alignment, blade penetration, travel stops, arc interrupter operation, and mechanical operation.
8. Verify operation and sequencing of interlocking systems.
9. Verify that each fuse has adequate mechanical support and contact integrity, if applicable.
10. Verify that fuse sizes and types are in accordance with drawings, short-circuit study, and coordination study.
11. Inspect bolted electrical connections for high resistance using one or more of the following methods:
    1. Use of low-resistance ohmmeter in accordance with Section 7.5.1.3.2.
    2. Verify tightness of accessible bolted electrical connections by calibrated torque-wrench method in accordance with manufacturer's published data or Table 100.12.
    3. Perform thermographic survey in accordance with Section 9.
12. Verify correct operation of all indicating and control devices, if applicable.
13. Verify appropriate lubrication on moving current-carrying parts and on moving and sliding surfaces.
14. Record as-found and as-left operation counter readings.

* Optional

7.5.1.3 Switches, Air, Medium- and High-Voltage, Open (*continued*)

2. Electrical Tests

1. Perform resistance measurements through bolted connections with a low-resistance ohmmeter, if applicable, in accordance with Section 7.5.1.3.1.

2. Perform contact-resistance test across each switchblade and fuseholder.

3. Perform insulation-resistance tests for one minute on each pole, phase-to-phase and phase-to-ground with switch closed, and across each open pole. Apply voltage in accordance with manufacturer's published data. In the absence of manufacturer's published data, use Table 100.1.

*4. Perform insulation-resistance tests on all control wiring with respect to ground. Applied potential shall be 500 volts dc for 300-volt rated cable and 1000 volts dc for 600-volt rated cable. Test duration shall be one minute. For units with solid-state components or control devices that can not tolerate the applied voltage, follow manufacturer's recommendation.

5. Perform a dielectric withstand voltage test on each pole with switch closed. Test each pole-to-ground with all other poles grounded. Test voltage shall be in accordance with manufacturer's published data. In the absence of manufacturer's published data, use Table 100.19.

3. Test Values

3.1 Test Values – Visual and Mechanical

1. Compare bolted connection resistance values to values of similar connections. Investigate values which deviate from those of similar bolted connections by more than 50 percent of the lowest value. (7.5.1.3.1.11.1)

2. Bolt-torque levels shall be in accordance with manufacturer's published data. In the absence of manufacturer's published data, use Table 100.12. (7.5.1.3.1.11.2)

3. Results of the thermographic survey shall be in accordance with Section 9. (7.5.1.3.1.11.3)

4. Operation counter should advance one digit per close-open cycle.(7.5.1.3.1.14)

3.2 Test Values – Electrical

1. Compare bolted connection resistance values to values of similar connections. Investigate values which deviate from those of similar bolted connections by more than 50 percent of the lowest value.

2. Microhm or dc millivolt drop values shall not exceed the high levels of the normal range as indicated in the manufacturer's published data. In the absence of manufacturer's published data, investigate values that deviate from adjacent poles or similar switches by more than 50 percent of the lowest value.

* Optional

7.5.1.3 Switches, Air, Medium- and High-Voltage, Open (*continued*)

3. Insulation-resistance values shall be in accordance with manufacturer's published data. In the absence of manufacturer's published data, use Table 100.1. Values of insulation resistance less than this table or manufacturer's recommendations should be investigated. Dielectric withstand voltage tests should not proceed until insulation-resistance levels are raised above minimum values.

4. Minimum insulation-resistance values of control wiring shall not be less than two megohms.

5. If no evidence of distress or insulation failure is observed by the end of the total time of voltage application during the dielectric withstand test, the test specimen is considered to have passed the test.

* Optional

7. INSPECTION AND TEST PROCEDURES

7.10 Instrument Transformers

1. Visual and Mechanical Inspection

1. Compare equipment nameplate data with drawings and specifications.

2. Inspect physical and mechanical condition.

3. Verify correct connection of transformers with system requirements.

4. Verify that adequate clearances exist between primary and secondary circuit wiring.

5. Verify the unit is clean.

6. Inspect bolted electrical connections for high resistance using one or more of the following methods:

    1. Use of low-resistance ohmmeter in accordance with Section 7.10.2.1 and 7.10.2.2.

    2. Verify tightness of accessible bolted electrical connections by calibrated torque-wrench method in accordance with manufacturer's published data or Table 100.12.

    3. Perform thermographic survey in accordance with Section 9.

7. Verify that all required grounding and shorting connections provide contact.

8. Verify correct operation of transformer withdrawal mechanism and grounding operation.

9. Verify correct primary and secondary fuse sizes for voltage transformers.

10. Verify appropriate lubrication on moving current-carrying parts and on moving and sliding surfaces.

2.1 Electrical Tests - Current Transformers

1. Perform resistance measurements through bolted connections with a low-resistance ohmmeter, if applicable, in accordance with Section 7.10.1.

2. Perform insulation-resistance test of each current transformer and its secondary wiring with respect to ground at 1000 volts dc for one minute. For units with solid-state components that cannot tolerate the applied voltage, follow manufacturer's recommendations.

3. Perform a polarity test of each current transformer in accordance with ANSI/IEEE C57.13.1.

4. Perform a ratio-verification test using the voltage or current method in accordance with ANSI/IEEE C57.13.1.

5. Perform an excitation test on transformers used for relaying applications in accordance with ANSI/IEEE C57.13.1.

* Optional

7.10 Instrument Transformers (*continued*)

6. Measure current circuit burdens at transformer terminals in accordance with ANSI/IEEE C57.13.1.

7. When applicable, perform insulation-resistance tests on the primary winding with the secondary grounded. Test voltages shall be in accordance with Table 100.5.

8. When applicable, perform dielectric withstand tests on the primary winding with the secondary grounded. Test voltages shall be in accordance with Table 100.9.

9. Perform power-factor or dissipation-factor tests in accordance with test equipment manufacturer's published data.

10. Verify that current transformer secondary circuits are grounded and have only one grounding point in accordance with ANSI/IEEE C57.13.3. That grounding point should be located as specified by the engineer in the project drawings.

2.2 Electrical Tests - Voltage Transformers

1. Perform resistance measurements through bolted connections with a low-resistance ohmmeter, if applicable, in accordance with Section 7.10.1.

2. Perform insulation-resistance tests winding-to-winding and each winding-to-ground. Test voltages shall be applied for one minute in accordance with Table 100.5. For units with solid-state components that cannot tolerate the applied voltage, follow manufacturer's recommendations.

3. Perform a polarity test on each transformer to verify the polarity marks or H_1- X_1 relationship as applicable.

4. Perform a turns-ratio test on all tap positions.

5. Measure voltage circuit burdens at transformer terminals.

*6. Perform a dielectric withstand test on the primary windings with the secondary windings connected to ground. The dielectric voltage shall be in accordance with Table 100.9. The test voltage shall be applied for one minute.

7. Perform power-factor or dissipation-factor tests in accordance with test equipment manufacturer's published data.

8. Verify that voltage transformer secondary circuits are grounded and have only one grounding point in accordance with ANSI/IEEE C57.13.3. The grounding point should be located as specified by the engineer in the project drawings.

* Optional

2.3 Electrical Tests - Coupling-Capacitor Voltage Transformers

1. Perform resistance measurements through bolted connections with a low-resistance ohmmeter, if applicable, in accordance with Section 7.10.1.

2. Perform insulation-resistance tests winding-to-winding and each winding-to-ground. Test voltages shall be applied for one minute in accordance with Table 100.5. For units with solid-state components that cannot tolerate the applied voltage, follow manufacturer's recommendations.

3. Perform a polarity test on each transformer to verify the polarity marking. See ANSI/IEEE C93.1 for standard polarity marking.

4. Perform a turns-ratio test on all tap positions, if applicable.

5. Measure voltage circuit burdens at transformer terminals.

*6. Perform a dielectric withstand test on the primary windings with the secondary windings connected to ground. The dielectric voltage shall be in accordance with Table 100.9. The test voltage shall be applied for one minute.

7. Measure capacitance of capacitor sections.

8. Perform power-factor or dissipation-factor tests in accordance with test equipment manufacturer's published data.

9. Verify that the coupling-capacitor voltage transformer circuits are grounded and have only one grounding point in accordance with ANSI/IEEE C57.13.3. That grounding point should be located as specified by the engineer in the project drawings.

2.4 Electrical Tests – High-Accuracy Instrument Transformers (Reserved)

3. Test Values

3.1 Test Values – Visual and Mechanical

1. Compare bolted connection resistance values to values of similar connections. Investigate values which deviate from those of similar bolted connections by more than 50 percent of the lowest value. (7.10.1.6.1)

2. Bolt-torque levels shall be in accordance with manufacturer's published data. In the absence of manufacturer's published data, use Table 100.12. (7.10.1.6.2)

3. Results of the thermographic survey shall be in accordance with Section 9. (7.10.1.6.3)

* Optional

7.10 Instrument Transformers (*continued*)

3.2.1 Test Values – Current Transformers – Electrical

1. Compare bolted connection resistance values to values of similar connections. Investigate values which deviate from those of similar bolted connections by more than 50 percent of the lowest value.

2. Insulation-resistance values of instrument transformers shall not be less than values shown in Table 100.5.

3. Polarity results shall agree with transformer markings.

4. Ratio errors shall be in accordance with C57.13.

5. Excitation results shall match the curve supplied by the manufacturer or be in accordance with ANSI C57.13.1.

6. Measured burdens shall be compared to instrument transformer ratings.

7. Insulation-resistance values of instrument transformers shall be in accordance with manufacturer's published data. In the absence of manufacturer's published data, use Table 100.5.

8. If no evidence of distress or insulation failure is observed by the end of the total time of voltage application during the dielectric withstand test, the primary winding is considered to have passed the test.

9. Power-factor or dissipation-factor values shall be in accordance with manufacturer's published data. In the absence of manufacturer's published data, use test equipment manufacturer's published data.

10. Test results shall indicate that the circuits have only one grounding point.

3.2.2 Test Values –Voltage Transformers – Electrical

1. Compare bolted connection resistance values to values of similar connections. Investigate values which deviate from those of similar bolted connections by more than 50 percent of the lowest value.

2. Insulation-resistance values of instrument transformers shall be in accordance with manufacturer's published data. In the absence of manufacturer's published data, use Table 100.5.

3. Polarity results shall agree with transformer markings.

4. Ratio errors shall be in accordance with C57.13.

5. Measured burdens shall be compared to instrument transformer ratings.

* Optional

7.10 Instrument Transformers (*continued*)

6. If no evidence of distress or insulation failure is observed by the end of the total time of voltage application during the dielectric withstand test, the primary windings are considered to have passed the test.

7. Power-factor or dissipation-factor values shall be in accordance with manufacturer's published data. In the absence of manufacturer's published data, use test equipment manufacturer's published data.

8. Test results shall indicate that the circuits are grounded at only one point.

3.2.3 Test Values – Coupling Capacitor Voltage Transformers

1. Compare bolted connection resistance values to values of similar connections. Investigate values which deviate from those of similar bolted connections by more than 50 percent of the lowest value.

2. Insulation-resistance values of instrument transformers shall not be less than values shown in Table 100.5.

3. Polarity results shall agree with transformer markings.

4. Ratio errors shall be in accordance with C57.13.

5. Measured burdens shall be compared to instrument transformer ratings.

6. If no evidence of distress or insulation failure is observed by the end of the total time of voltage application during the dielectric withstand test, the test specimen is considered to have passed the test.

7. Capacitance of capacitor sections of coupling-capacitor voltage transformers shall be in accordance with manufacturer's published data.

8. Power-factor or dissipation-factor values shall be in accordance with manufacturer's published data. In the absence of manufacturer's published data, use test equipment manufacturer's published data.

9. Test results shall indicate that the circuits are grounded at only one point.

3.2.4 Test Values – High-Accuracy Instrument Transformers (Reserved)

* Optional

7. INSPECTION AND TEST PROCEDURES

7.13 Grounding Systems

1. Visual and Mechanical Inspection

1. Verify ground system is in compliance with drawings, specifications, and NFPA 70 *National Electrical Code Article 250.*

2. Inspect physical and mechanical condition.

3. Inspect bolted electrical connections for high resistance using one or more of the following methods:

    1. Use of low-resistance ohmmeter in accordance with Section 7.13.2.

    2. Verify tightness of accessible bolted electrical connections by calibrated torque-wrench method in accordance with manufacturer's published data or Table 100.12.

4. Inspect anchorage.

2. Electrical Tests

1. Perform resistance measurements through bolted connections with a low-resistance ohmmeter, if applicable, in accordance with section 7.13.1.

2. Perform fall-of-potential or alternative test in accordance with ANSI/IEEE 81 on the main grounding electrode or system.

3. Perform point-to-point tests to determine the resistance between the main grounding system and all major electrical equipment frames, system neutral, and derived neutral points.

3. Test Values

3.1 Test Values – Visual and Mechanical

1. Grounding system electrical and mechanical connections shall be free of corrosion. (7.13.1.2)

2. Compare bolted connection resistance values to values of similar connections. Investigate values which deviate from those of similar bolted connections by more than 50 percent of the lowest value. (7.13.1.3.1)

3. Bolt-torque levels shall be in accordance with manufacturer's published data. In the absence of manufacturer's published data, use Table 100.12. (7.13.1.3.2)

3.2 Test Values – Electrical

1. Compare bolted connection resistance values to values of similar connections. Investigate values which deviate from those of similar bolted connections by more than 50 percent of the lowest value.

* Optional

7.13 Grounding Systems (*continued*)

2. The resistance between the main grounding electrode and ground shall be no greater than five ohms for large commercial or industrial systems and 1.0 ohm or less for generating or transmission station grounds unless otherwise specified by the owner. (Reference ANSI/IEEE Standard 142)

3. Investigate point-to-point resistance values that exceed 0.5 ohm.

* Optional

557 E Juanita Ave, Ste 4 • Mesa, AZ 85204 • Phone 480-633-1490 • Fax 480-633-7092

Appendix VI
EPS Test Plan

ELECTRIC POWER SYSTEMS
ELECTRICAL TESTING
& ENGINEERING

557 E Juanita Ave, Ste 4 • Mesa, AZ 85204 • Phone 480-633-1490 • Fax 480-633-7092

A13024

Test Plan
For
Abengoa
Mojave Substations
Alpha and Beta

Hotline Construction, Inc.
9020 Brentwood Blvd., Suite D
Brentwood, CA 94513
Santos Tobar
Substation Superintendent
Office (925) 634-9333
Mobile (925) 813-1440
stobar@hotlineconstructioninc.com

The following is a list of procedures for the acceptance testing at Abengoa Mojave Alpha and Beta Substations.

There will be a total of four EPS employees assigned to the testing at the Mojave Substations.

The acceptance testing will begin around 0930hrs on Tuesday, May 7th with all EPS Field Technicians undergoing safety training at 0700hrs.

EPS will perform JHA with Hotline Construction present. EPS personnel will coordinate this meeting and will use Form in Appendix C. Also, EPS will follow all EPS Safety Procedure attached in the same Appendix as applicable to this job.

EPS Testing Procedures and Schedule

Tuesday, May 7th (0930-1630) (4 EPS Field Technicians Assigned); Ron Bauer, Brian Redlin, Manuel Kinsey, Ruel Guanzon.

The vehicles will be packed on Monday May 6th by all assigned technicians. Equipment needed will be; Doble M4000, Vanguard 100A Ductor, 15kV Megger, DC HiPot, AC HiPot, Purity Meter, Leak Detector, TDR-9000 Timing Set, Dew Point Meter, EZCT, Single Phase TTR, Earth Resistance Test Set and accessories, Temperature Well Calibrator, ladders, the VariAC, an extra generator. Technicians will travel to the hotel that night and be on-site at Abengoa at 0700 hrs for safety training.

The following procedures will be completed at Beta Substation and then repeated at Alpha Substation. Isolation and or grounding will be performed at each site on the first day of testing. Any necessary lock-out/tag-out will also be performed at this time. Man-lifts will be operated per manufacturer instructions with harness and lanyard employed at all times. If testing could pose an immediate danger to other contractors or personnel in the area, the use of red danger tape will be mandated.

SF6 Breaker Gas Filled Power Circuit Breakers quantity (1) One

Manuel Kinsey and Ron Bauer will perform all tests in relation to the SF6 circuit breaker. These tests include: Doble Power Factor, Breaker Timing, Contact Resistance, Insulation Resistance, Dew Point Check, Purity

Check, Leak Check, and CT testing. EPS personnel will also review and fill out the installation testing sheet that is found within the breaker manual and the EPS breaker checkout sheet. EPS personnel will perform the Doble power factor test in the open and closed positions. This test will be performed on all poles using the Doble M4000. EPS will also perform geometry measurements and contact wipe. The timing tests include close test, open test, close-open test, close-open with a 50ms delay, close-open test with a 500ms delay and an open-close test with a 50ms delay. Kinsey and Bauer will also test the trip and close coil pick-up and drop out minimum voltage measurements. While EPS is testing the instruction manual will carefully be checked for all "Caution" indicators. The mechanism dimensions will be checked and compared to Table 1 on page 49 in the Instruction Manual (Appendix B). If any adjustments are needed a signed change order will be complete before EPS does any modifications. The CTs will be tested with the EZCT and will include ratio testing, polarity and saturation test. Each breaker unit will take two (2) days to complete. If Kinsey and Bauer get done early they will assist the other EPS personnel with the rest of the Scope.

Six (6) 230 kV CCVTs

Brian Redlin and Ruel Guanzon will test the CCVTs. Power factor testing and ratio checks will be performed on the CCVTs. EPS personnel will also refer to the installation instructions found in Appendix C for visual inspections. If Redlin gets done early he will assist the other EPS personnel with the rest of the Scope. The CCVTs will take 4-5 hrs to complete.

Three (3) Disconnect Switches

The disconnect switches will be tested by Ruel Guanzon and Brian Redlin. Insulation resistance will be measured with the DC HiPot at 75 kV for 230kV switches and 15 kV for 15 kV switches. The contact resistance measurements will be made with the 100A Ductor. Disconnect switches will take appx. 4 hrs to complete.

Three (3) 230kV CTs

The stand-alone single-phase CTs will be tested by Ruel Guanzon and Brian Redlin. Ratio, polarity, saturation and insulation resistance will all be measured with the Vanguard EZCT-2000B. CTs will take approximately 3 hours to complete.

Sincerely,
Louis Gilbert

ELECTRIC POWER SYSTEMS
ELECTRICAL TESTING & ENGINEERING
Branch Manager- AZ
557 E. Juanita Avenue
Suite 4
Mesa, AZ 85204
Office:(480)633-1490
Mobile:(480)213-2881
email: l.gilbert@eps-international.com
www.eps-international.com

Appendix A: EPS JHA Form
Appendix B: Circuit Breaker Instruction Manual

Electric Power Systems, Inc.
21 Millpark Court
Phone: 314-890-9999

Corporate Office
Maryland Heights, Missouri 63043
Fax: 314-428-3062

Job Hazard Assessment Form

This form is to be utilized as a tool to identify and predict hazards of the workplace, provide guidance on what applicable programs of the Electric Power Systems, Inc. Safety and Health manual may apply to various operations, and document the preventative measures, engineering controls, work practices, and personal protective equipment needed to protect our personnel.

PRE-JOB BRIEF CHECK SHEET 1

Customer	Job Location	Job Number	Crew Leader
Hotline Construction	Hinkley, CA	A13024	Ron Bauer

JOB BEING PERFORMED (IN DETAIL)

SF6 Circuit Breaker ATS, Switches, PTs, CTs

DATE	EMPLOYEES NAMES	EMPLOYEES SIGNATURES

☐ N/A **HAZARDOUS ENERGY SOURCE CONTROL**

SWITCHING DIRECTOR CLEARANCE:	OTHER LOCK-OUT TAG-OUT:	WORK PLANNED:
Date: Time: Order #:	Completed: ☐ Yes ☐ No	☐ Grounded ☐ Energized

☐ N/A **RELAY PERMISSION / CLEARANCE RESTRICTIONS**

EQUIPMENT:	TRIP TEST ☐ Yes ☐ No ☐ Breaker(s) ☐ 86 LO Other_____	BREAKER FAILURE: Yes ☐ No ☐ Need to Defeat ☐

☐ N/A **WARNING TAG(S)**

TAG ID #:	DESCRIPTION/CONDITION:	RESPONSIBLE NAME:

GRAVITY	ELECTRICAL	MECHANICAL	KINETIC	ENVIRONMENTAL
☐ Falling from height	☐ Electrical contact	☐ Equipment failure	☐ Traffic	☐ Asbestos/Lead
☐ Falling objects	☐ Induced voltage	☐ Hoisting/Rigging	☐ Driving conditions	☐ Chemicals/PCB's/Oil
☐ Falling structures	☐ Back feed	☐ Breaker mech.	☐ Moving/Shifting loads	☐ Confined space
☐ Aerial device oper.	☐ Flash potential	☐ Moving parts	☐ Rotating machinery	☐ Excavations
☐ Open holes	☐ Step potential	☐	☐ Vehicle stability	☐ Hot surfaces
☐ Fall protection	☐ Static charge	☐	☐ Heavy equipment	☐ Extreme heat/cold
☐	☐ Boom contact	☐	☐	☐ Pressurized gas/fluid
☐	☐ CT Circuits	☐	☐	☐
PRECAUTIONS	**TOOLS/EQUIPMENT**	**PPE**	**PEOPLE**	**WORK PROCEDURES**
☐ Weather cond.	☐ Insulated tools	☐ Hard hat	☐ Worker fatigue	☐ Equipment isolation
☐ Work area control	☐ Body harness	☐ Safety glasses	☐ Assignments	☐ Check for voltage
☐ Ice/Snow present	☐ Inspection of tools	☐ FR clothing	☐ Public safety	☐ Grounding procedures
☐	☐ Special tools	☐ HV gloves	☐ Pedestrian control	☐ Vehicle grounds
☐	☐ Correct tools	☐ Hearing protection	☐ Other contractors	☐ Working clearances
☐	☐ Drop cord testing	☐ Protective footwear	☐ Utility workers	☐ 911 Protocol
☐	☐	☐ Reflective vest	☐	☐ Lockout/tagout
☐	☐	☐ PPE inspection	☐	☐

PRE-JOB BRIEF CHECK SHEET 2

Electric Power Systems, Inc.
21 Millpark Court
Phone: 314-890-9999

Corporate Office
Maryland Heights, Missouri 63043
Fax: 314-428-3062

Human Performance/Error Elimination	
Traps Present	**Tools To Eliminate Traps**
☐ Time constraints	
☐ Distractions/Interruptions	
☐ Multiple tasks	
☐ Overconfidence	
☐ Vague or interpretive	
☐ Unusual time of day	
☐ Peer pressure	
☐ Physical environment	
☐ Mental stress	
☐ Confined space	

Emergency Response Information	
Questions	**Comments**
What is the exact work location/911 address?	
Who will meet Emergency Responders?	
Where will they meet Emergency Responders?	
Who will notify Emergency Responders?	
How will Emergency Responders be notified?	
Are communications devices working properly?	
Are first aid supplies/eye wash readily available?	
Is there a fire extinguisher available if required?	

Hazard Risk Assessment	
Questions	**Comments**
What voltages are present?	
Has an arc flash hazard analysis been performed?	
What is hazard risk category/Minimum arc rating?	
Has a shock hazard analysis been performed?	
What is the Restricted Approach Boundary for a qualified worker?	
What is the Prohibited Approach Boundary for a qualified worker?	
Is an Energized Electrical Work Permit required?	
Has the equi-potential zone of protection established?	

Approach Distances To Exposed Electrical Equipment		
Voltage Phase to Phase	**Restricted Approach Boundary**	**Prohibited Approach Boundary**
0 – 300 volts	Avoid contact	Avoid contact
301 – 750 volts	1 foot. 0 inches	0 feet, 1 inch
751 volts – 15kV	2 feet, 2 inches	0 feet, 7 inches
15.1kV – 36kV	2 feet, 7 inches	0 feet, 10 inches
36.1kV – 46kV	2 feet, 9 inches	1 foot, 5 inches
46.1kV – 72.5kV	3 feet, 3 inches	2 feet, 2 inches
72.6kV – 121kV	3 feet, 4 inches	2 feet, 9 inches
138kV – 145kV	3 feet, 10 inches	3 feet, 4 inches
161kV – 169kV	4 feet, 3 inches	3 feet, 9 inches
230kV – 242kV	5 feet, 8 inches	5 feet, 2 inches
345kV – 362kV	9 feet, 2 inches	8 feet, 8 inches

SIEMENS

Instructions

Installation
Adjustment
Maintenance

Type SPS2-245 kv, 40, 50 & 63 kA Gas Circuit Breaker Spring Operating Mechanism PB 3998-04

For Emergency Service
Call: 1-877-742-3309

Siemens Energy, Inc.

Contents

Table of Contents

Page

General
- Introduction 1
- Qualified Person 1

Installation and Maintenance Alerts
- Pre-Operational Checks 2
- Maintenance 2
- Maintenance Closing Device 3
- Current Transformers 3

Description
- Breaker Overview 4
- Supporting Legs 4
- Spring Operating Mechanism 4
- Operating Linkage 4
- Bushings 4
- SF_6 Puffer Interrupter 5
- Current Transformer 5
- Rupture Disk 5
- Pressure Gauge 5
- Ground Pads 5
- Lifting Lugs 5
- Characteristics of SF_6 5
- SF_6 Density Switch 6

Receiving, Handling and Storage
- Receiving 7
- Unpacking Parts and Accessories 7
- Handling Procedure 7
- Storage of Breaker and Breaker Parts 7

Installation
- Tools and Service Equipment 8
- Selecting the Location 8
- Placement of the Circuit Breakers 8
- Grounding Connections 9
- Control Wiring 9
- Connecting Current Transformers 9
- Line to Ground Capacitors 9
- Filling A De-Energized Breaker with SF_6 9
- Checking the Spring Operator Mechanism 10

Page

- Breaker Inspection 10
- Timing Tests 10
- Contact Resistance 11
- Line Connections 11
- Bushings 11
- Final Installation, Connections and Inspection Summary 12

Principles of Operation
- Closing 15
- Opening 15
- Spring Operating Mechanism 15
- Opening Spring 15
- Operating Shaft Assemblies 15
- Interrupter Assemblies 15
- Interrupter Operation 16

Inspection
- Inspection 17
- General 17
- Periodic Inspection 18
- Timing Tests 18
- Pole Unit Inspection 18
- Periodic Inspection Check List 19
- Pole Unit Inspection Check List 23

Maintenance/Part Replacement
- General 25
- Ordering Replacement Parts 26
- Maintenance Tools, Materials and Equipment 27
- Recommended Spare Parts List 28

Maintenance/Adjustment and Lubrication
- Opening the Pole Units 29
- Rupture Disk / Molecular Sieve Replacement 29
- Bushing Removal 29
- Bushing Installation 30
- Removing the Interrupter 30
- Filling an Energized Breaker with SF_6 Gas 31
- Leak Checking 31

Important

The information contained herein is general in nature and not intended for specific application purposes. It does not relieve the user of responsibility to use sound practices in application, installation, operation, and maintenance of the equipment purchased. Siemens reserves the right to make changes in the specifications shown herein or to make improvements at any time without notice or obligations. Should a conflict arise between the general information contained in this publication and the contents of drawings or supplementary material, or both, the latter shall take precedence.

Contents

Illustrations - Breaker Section

		Page
Figure 1	Outline	32
Figure1a	Outline(IPO)	33
Figure 2	Cabinet	34
Figure 2a	Cabinet (IPO)	35
Figure 3	Linkage Adjustment	36
Figure 4	Travel Transducer	37
Figure 5	Travel Record - Opening	38
Figure 6	Travel Record - Closing	39
Figure 7	Operations vs Interrupting Current	40
Figure 8	Interrupter Unit-Arc Quenching	41
Figure 9	Typical SF6 Pressure Temp Curve	42
Figure 10	Molecular Sieve Filter and Rupture Disk	43
Figure 11	Pole Unit Assembly	44
Figure 12	Temperature Compensation Pressure Switch	45
Figure 13	Breaker Lifting	46
Figure 13a	Breaker Lifting(IPO)	47
Figure 14	Insulator Lifting & Installation	48
Figure 15	Bleed Cap Instructions	49
Figure 16	Temp. Comp. Density Switch-Solon	50
Figure 16a	Temp. Comp. Density Switch-Trafag	51
Figure 17	Pressure Check Tool	52
Table 1	Operating Characteristics	53

Appendix I

Table of Contents 54

.

Appendix - I

Introduction for Type FA-4/FA-2 Mechanism 55

Appendix II

Appendix - II

Field Testing Current Transformers 76

Appendix III

Appendix - III

Capacitor Mounting.....78

Summary

These instructions do not purport to cover all details or variations in equipment, nor to provide for every possible contingency to be met in connection with installation, operation or maintenance. Should information be desired or should particular problems arise which are not covered sufficiently for the purchaser's purposes, the matter should be referred to the local Siemens sales office.

The contents of this instruction manual should not become part of or modify any prior or existing agreement, commitment or relationship. The sales contract contains the entire obligation of Siemens. The warranty contained in the contract between the parties is the sole warranty of Siemens. Any statements contained herein do not create new warranties or modify the existing warranty.

General

Introduction

The SF_6 circuit breaker is one of the most important units in electrical power systems. The protection, stability, and continuity of service of the entire system depend largely on the efficiency of its operation. Designed for use on 245 kV systems, Siemens Type SPS2 circuit breakers protect electric utility systems by interrupting fault currents and switching line, load, and exciting currents.

Siemens outdoor circuit breakers are precision built devices designed to function efficiently under normal operating conditions. They are designed and manufactured to operate within the IEEE C37 (ANSI) and IEC 60056 standards applicable to the breaker rating.

The successful field performance of these breakers depends as much on proper installation and maintenance as it does on good design and careful manufacture. Refer to these sections of this manual before performing any installation or maintenance.

The instructions included in this book are necessary for safe installation, maintenance and operation and to aid you in obtaining longer and more economical service from your Siemens circuit breakers. For proper installation and operation - resulting in better service and lower maintenance costs - this information should be distributed to your operators and engineers.

By carefully following these instructions, difficulties should be avoided. However, they are not intended to cover all details or variations that may be encountered during the installation, operation and maintenance of this equipment.

Should additional information be desired, including replacement instruction books, contact your Siemens representative.

Distinctive signal words (DANGER, WARNING, CAUTION) are used in this instruction book to indicate degrees of hazard that may be encountered by the user. For the purpose of this manual and product labels these signal words are defined below.

DANGER — Indicates an imminently hazardous situation which, if not avoided, **will** result in death or serious injury.

WARNING — Indicates a potentially hazardous situation which, if not avoided, **could** result in death or serious injury.

CAUTION — Indicates a potentially hazardous situation which, if not avoided, **may** result in minor or moderate injury.

DANGER

Hazardous voltage and mechanisms.
Death or serious injury from electrical shock, burns and entanglement in moving parts will result from misuse.

To prevent:

Do not service or touch until you have deenergized high voltage, grounded all terminals and turned off control voltage. Do not ground terminals with line to ground capacitors due to risk of a small arc.

Only qualified personnel should work on or around this equipment after becoming thoroughly familiar with all warnings, safety notices, instructions and maintenance procedures contained herein.

The successful and safe operation of this equipment is dependent upon proper handling, installation, operation and maintenance.

Qualified Person

For the purpose of this manual, a qualified person is one who is familiar with the installation, construction and operation of the equipment, and the hazards involved. In addition, he or she has the following qualifications:

a) Is trained and authorized to energize, de-energize, clear, ground, and tag circuits and equipment in accordance with established safety practices.

b) Is trained in the proper care and use of protective equipment such as rubber gloves, hard hat, safety glasses or face shields, flash clothing, etc., in accordance with established safety practices.

c) Is trained in rendering first aid.

Installation and Maintenance Alerts

Pre-Operational Checks

When installing, adjusting, maintaining, inspecting or replacing parts of a breaker, the following pre-operational checks should be followed for ease of operation and safety.

1. Read the circuit breaker instruction book supplied with the breaker.
2. Check for proper installation and/or alignment by following the "installation" section.
3. Check for the proper maintenance procedures by following the "Maintenance/Parts Replacement" section.
4. Do not operate the breaker until the items listed above are completed and functioning properly.

DANGER

Hazardous voltage and mechanisms. Death or serious injury from electrical shock, burns and entanglement in moving parts will result from misuse.

To prevent:

This equipment should be installed, operated and maintained only by qualified persons thoroughly familiar with equipment INSTRUCTION MANUALS and drawings.

No attempt to operate the breakers should be made until all shipping braces and/or ties have been removed, the breaker has been inspected and the breaker has been filled with SF_6 gas.

The wiring and schematic connection diagrams supplied with the breaker should be used when testing and checking the operating mechanism and control circuits. Check all wiring for looseness.

Maintenance

Work on the breaker should be performed only by qualified personnel. The breaker should be in the open position and with the energy storage system of the operator indicating discharged. In addition, all electric power to the breaker and its controls should be disconnected and the breaker properly grounded.

DANGER

Hazardous voltage and mechanisms. Death or serious injury due to electrical shock, burns and entanglement in moving parts; or property damage will result if safety instructions are not followed.

To prevent:

1. Do not service or touch until you have de-energized high voltage, grounded all terminals and turned off control voltage.
2. Do not trip or close the breaker unless you are clear of all moving parts.
3. Discharge the breaker's energy storage system before performing maintenance or inspection.
4. Breaker and its mechanism must be disconnected from all electrical power before performing maintenance or inspection. Grounding leads should be properly attached and framework grounded.
5. Do not operate the breaker manually while it is energized or control power is connected.
6. Only qualified personnel should work on or around this equipment after becoming thoroughly familiar with all warnings, safety notices, instructions and maintenance procedures contained herein. The successful and safe operation of this equipment is dependent upon proper handling, installation, operation and maintenance.

Maintenance Closing Device

A slow close device is available as a special tool. It is not required for normal maintenance, adjustment, or installation of a SPS2 circuit breaker. The device is required for disassembly of the FA4/FA2 spring mechanism. No mechanism adjustments require using this device.

DANGER

Hazardous voltage and mechanisms.
Death or serious injury from electrical shock, burns and entanglement in moving parts will result from misuse.

To prevent:

Do not service or touch until you have de-energized high voltage, grounded all terminals and turned off control voltage. Do not ground terminals with line to ground capacitors due to the risk of a small arc.

Only qualified personnel should work on or around this equipment after becoming thoroughly familiar with all warnings, safety notices, instructions and maintenance procedures contained herein.

The successful and safe operation of this equipment is dependent upon proper handling, installation, operation and maintenance.

Current Transformers

DANGER

Hazardous voltage.
Death, serious injury, or damage to the circuit breaker will result.

To prevent:

Do not operate current transformers with an open circuit. Connect to a burden or short circuit and ground at the terminal blocks.

If a short circuit is to be made, the connection should be across the taps of the highest ratio, otherwise, dangerous voltages may occur across the open transformer secondary terminals.

Description

Breaker Overview

Each breaker consists of three pole units mounted on a breaker frame. Each pole unit consists of two SF_6 gas bushings mounted on a grounded metal housing which contains the interrupter. Each interrupter is mechanically connected to the operating mechanism through a connecting rod, operating shaft assembly, lever, and horizontal pull rod. The spring mechanism contains the opening and closing springs. Bushing type current transformers, when ordered, are mounted to each pole unit. The circuit breaker is filled with 5 psig SF_6 gas at the factory to maintain a positive pressure. In the field SF_6 is added during installation. See breaker nameplate for fill pressure.

Supporting Legs

To facilitate shipment the breaker was designed with a low profile. Four legs are shipped along with the breaker frame. At installation raise the breaker using the lifting lugs and install the legs to the proper height.
See Fig. 13 and 13A for breaker lifting.

Spring Operating Mechanism

A Type FA4/FA2 stored energy mechanism is used to operate the Type SPS2 breaker. The mechanism is electrically trip-free. Each mechanism is complete with its own motor for open-close-open operations. The weatherproof cabinet has a large access doorway, sealed with rubber gaskets, to provide easy access for inspection and maintenance. A heater provides continuous inside-outside temperature differential, with additional thermostatically controlled heaters for winter use when required. Included in the housing are necessary auxiliary switches, cut-off switch, alarm switch and operation counter. The control relays and control switches (one each for the control circuit, motor, and heater circuit) are also mounted inside. Terminal blocks inside the housing are provided for control and transformer wiring. The FA4/FA2 mechanism provides minimum reclosing times of approximately four and one-half cycles.

DANGER

Hazardous voltage and mechanisms.
Death or serious injury from electrical shock, burns and entanglement in moving parts will occur from misuse.

To prevent:

Do not service or touch until you have de-energized high voltage, grounded all terminals and turned off control voltage.

Only qualified personnel should work on or around this equipment after becoming thoroughly familiar with all warnings, safety notices, instructions and maintenance procedures contained herein.

The successful and safe operation of this equipment is dependent upon proper handling, installation, operation and maintenance.

Operating Linkage

The components of the operating linkage contained in the mechanism cabinet and linkage cover are as follows:

See Figure 3

1. An adjustable horizontal pull rod which connects the mechanism bellcrank lever to the first phase and operating lever assembly.

2. Non-adjustable links connect between phase 1 & 2 and phase 2 & 3 operating levers for gang operated breakers.

Bushings

The bushings are SF_6 gas insulated and have porcelain or composite weather casings.

SF_6 Puffer Interrupter

Each interrupter consists of a stationary contact assembly and a moving contact assembly mounted inside a pole unit housing. Electrical connections to the bushings are made through plug-in connections which are part of the interrupter subassembly.

Current Transformers

DANGER

Hazardous voltage.
Death, serious injury, or damage to the circuit breaker will result.

To prevent:

Current transformers must not be operated with an open circuit and must be either connected to a burden or short circuited and grounded at the terminal blocks.

If a short circuit is to be made, the connection should be across the taps of the highest ratio, otherwise, dangerous voltages may occur across the open transformer secondary terminals.

Current transformers can be mounted at the base of each bushing. Transformers are usually of the multi-ratio type, having five leads to provide a range of ratios. Transformer leads are brought through conduit to the mechanism cabinet where they are connected to terminal blocks. The transformers are normally of the relaying accuracy class; however, metering accuracy transformers and linear couplers are available.

Rupture Disc

A rupture disc is mounted in each pole. Should the pressure in the pole unit accidentally reach 154 psig ± 8 psig, the disc would rupture exhausting the SF_6 gas to atmosphere.

Pressure/Density Gauge

The breaker is equipped with either:

1.) A Bourdon tube-type pressure gauge, -14.5 PSI vacuum to 218 PSI [-100 to 1500 kPa], mounted inside the cabinet for monitoring the SF_6 gas pressure of all three phases. A pressure versus temperature table is required when verifying the pressure level.

2.) A density switch with integral density gauge mounted on the breaker frame for indicating the SF_6 density. This configuration may have one switch/gauge for monitoring all three phases collectively or three separate switches/gauges for monitoring each phase independently.

The face of the density gauge is color-coded to identify various density levels including fill, alarm, and lockout settings. Because the gauge is temperature compensated, no pressure versus temperature table is required when verifying density levels. The density levels are quantified on the gauge in PSI/kPa units at a reference temperature of 68°F (20°C).

The dial on the density gauge does not actuate until the breaker is filled with at least 40 PSI (@68°F/20°C). Therefore, breakers with frame mounted density switches/gauges are also provided with a pressure check tool, part of the Installation Tools Kit (See Figure 17), for checking values below this point.

Ground Pads

Two NEMA standard ground pads are mounted on the breaker frame, one on the left front and one on the right rear. One NEMA standard ground pad is mounted on the cabinet.

Lifting Lugs

Three lifting lugs are bolted to the breaker pole units. See Fig. 13 and 13A.

Characteristics of Sulfur Hexafluoride (SF_6)

Sulfur hexafluoride in a pure state is inert and exhibits exceptional thermal stability. It has excellent arc quenching properties. These characteristics combined with its good insulating properties make it an excellent medium for use in circuit breakers.

Chemically, SF_6 is one of the most stable compounds. In the pure state, it is inert, non-flammable, non-poisonous, odorless, and produces no harmful effects on personnel. However, after the gas has been exposed to an electric arc there will be some breakdown of the gas. Molecular sieve filters are used in the apparatus to remove most of the gaseous by-products and some of the gas-borne powders.

These by-products are injurious and exposure to them should be avoided by maintenance personnel. The precautions to be followed in handling the gas are covered in detail in the MAINTENANCE / PART REPLACEMENT section.

There is some depreciation of the gas properties after extended periods of arcing; however, such change is very slight and has a negligible effect upon the dielectric strength and arc interrupting ability. Furthermore, the solid arc products formed at arc temperatures are the metallic fluorides, which are good insulators under the conditions existing in the breaker.

Sulfur hexafluoride is furnished in standard industrial type cylinders. The cylinders have special size (.965" diameter - 14 threads/inch Nat. Std. left hand) pressure connections supplied for absolute safety. The adapter for connection to the cylinder is a CGA #590 bullet-shaped coupling nipple with .960 left hand, external male thread, 14 threads/inch. The gas is stored in the cylinders at approximately 300 psig pressure which is the vaporization pressure at 75oF.

SF_6 Density Switch

The breaker is equipped with one of the following.

1.) A temperature-compensated pressure switch, which is located inside the cabinet. The temperature sensing bulb extends through the cabinet under the linkage cover.

2.) A frame-mounted density switch with integral density gauge for indicating the SF_6 density of all three phases.

3.) Three frame-mounted density switches with integral density gauges for indicating the SF_6 density of each phase independently.

See the breaker nameplate for switch alarm and lockout settings.

Receiving, Handling and Storage

Receiving

All type SPS2 breakers are assembled and production tested at the factory, after which they are carefully inspected and prepared for shipment. Breakers covered by this instruction book are normally shipped completely assembled, except for the four legs which are removed to facilitate shipment. Each breaker is shipped from the factory with approximately 5 psig SF_6 gas to insure a dry atmosphere during transit in order to protect the insulation.

NOTE Upon receipt of a circuit breaker, it should be examined for any damage sustained in transit. Damage should be reported immediately to the carrier and the nearest Siemens sales office.

Unpacking Parts and Accessories

Check all parts against the shipping list as they are unpacked and identified. Search the packing material carefully for bolts, nuts, screws, etc., which may have loosened in transit. Instruction books, cards, or leaflets shipped with the breaker should be kept with the breaker.

Handling Procedure

WARNING

Heavy equipment with a high center of gravity.
Death, serious injury, or damage to the circuit breaker could result.

To prevent:

Follow instructions below during handling to prevent the breaker from tipping over and/or being suddenly dropped.

The weight of the breaker is listed on the nameplate. Breakers must be lifted by hooking onto three lifting eyes on the breaker pole units. See Fig. 13 and 13A for lifting instructions.

Do not place the breaker, without legs assembled, on soft ground. Temporary matting boards are recommended to prevent damage to breaker.

WARNING

Pressurized bushings.
Death, serious injury, or damage to the circuit breaker during handling could result.

To prevent:

Do not strike, shock or strain the bushings or in any way cause the bushings to rupture.

Do not move the breaker if the SF_6 pressure is above 10 psig.

When moving breaker, do not lash the breaker down by the bushings or current transformers.

Storage Of Breaker And Breaker Parts

Even though the breaker may not be placed into service immediately, installation in its permanent location is recommended. If this is not practicable, it should be stored in a place where it can be protected from mechanical damage. The following precautions should be taken:

Each breaker is shipped from the factory charged with approximately 5 psig of SF_6 to ensure a dry atmosphere during transit in order to protect the insulation. This positive pressure must be maintained during storage. Pressure readings should be monitored and recorded monthly during storage. Breakers with frame-mounted density switches/gauges are provided with a pressure check tool, part of the Installation Tools Kit (See Figure 17), for checking for the shipping pressure. If for some reason the shipping pressure is lost and leakage is suspected, the source of leakage should be located and repaired. The breaker should be purged of moist atmosphere by changing the molecular sieve filter, and evacuating to approximately 2 millimeters of mercury. SF_6 should then be admitted to a pressure of 5 psig and maintained during storage.

All accessories, spare parts, and tools should be stored indoors and protected from dirt and moisture.

The operating mechanism and controls should be protected against corrosion. This is best accomplished by closing the cabinet doors and energizing the space heaters. This is recommended even if it requires the use of a temporary electrical circuit to the heaters.

NOTE

The Type SPS2 breaker has been completely assembled, tested, and inspected at the factory and requires a minimum of field checks during installation.

The installation checklist located at the end of this section is intended to provide a tabulation of those checks and tests necessary to effect a proper installation. Actual measured values should be entered on the blank spaces rather than an indication that the values were within the prescribed tolerances as the installation checklist is also intended to be used as a reference when inspection and maintenance is performed.

Tools And Service Equipment

The following material and equipment is required for the installation of the Type SPS circuit breaker, and should be available before commencing work. These items are not supplied by Siemens.

1. Leak-tec for leak testing.
2. Ten (10) ton crane with a working height of 25 feet.
3. Two (2) 9' long and two (2) 9.5' long hook chains and See Fig. 13.
4. Shim material - various thicknesses.
5. Wrenches - standard metric sizes of open end or box type.
6. 0 to 100 ft.-lb. and 0 to 400 ft.-lb. torque wrench and metric sockets.
7. Thermometer accurate within 2°F.
8. 1/4 inch blade screwdriver.
9. Timing equipment and mounting hardware - see Timing Tests, Page 10.
10. Corrosive-resistant conductive joint compound and wire brush or steel wool.
11. Ductor or equivalent 100 Amp. DC source with micro-ohmmeter.

The following items are more difficult to procure and are provided by Siemens with each breaker order.

1. Adapter fitting for SF_6 filling.
2. Service hose for SF_6 filling.
3. SF_6 gas, if ordered.
4. Timer mounting bracket.
5. Manual charging wrench
6. SF_6 bleed cap assembly.
7. Pressure check tool. (Breakers with frame mounted density switches/gauges).

Selecting The Location

The breaker should be installed with sufficient space for cleaning, inspecting, and opening doors. Refer to the outline drawing located in the pocket of the mechanism cabinet door.

The foundation should be prepared before the breaker arrives and should be level within .25" at the four stud locations. Use shims to level breaker when setting breaker on foundation. Consult the outline for necessary dimensions and foundation bolt locations. The breaker foundations should be high enough to prevent flood water from entering the mechanism housing.

Placement Of The Circuit Breaker

Place the breaker on the permanent foundation. The precautions described under “Handling Procedure”, Receiving, Handling and Storing section, Page 7, must be observed.

WARNING

Pressurized bushings.
Death, serious injury, or damage to the circuit breaker during handling could result.

To prevent:

Do not strike, shock or strain the bushings or in any way cause the bushings to rupture.

Do not move the breaker if the SF_6 pressure is above 10 psig.

The breaker must be lifted in order to attach the four legs. The legs should be first assembled to the breaker, then the breaker assembly bolted to the foundation. Bolts should be firm but not tight to allow proper alignment. Insert shims, if necessary, under the legs to level the breaker before tightening the foundation bolts. The circuit breaker should be level so that moving parts within the breaker can operate freely; otherwise, friction may develop and undue strains may be imposed which could result in breaker malfunction. When breaker and legs are properly aligned and leveled, tighten all bolts securely to the torque value specified on Figure 1.

Grounding Connections

Two NEMA standard ground pads are located on the breaker frame, one on the left side and one on the right side. One NEMA standard ground pad is located on the cabinet. A connection should be made from these pads to the station grounding network. The grounding conductor should be capable of carrying the maximum short circuit current for the duration of the fault. All joints must be clean, bright and free from burrs or surface roughness.

WARNING

Failure to properly ground circuit breaker could cause death, serious injury, or damage to the circuit breaker.

To prevent:

Connect the circuit breaker to a permanent low resistance ground.

Control Wiring

All control wires to the circuit breaker should be in conduit where practical. A control wiring diagram is located in the pocket on the inside of the mechanism cabinet door. The control wiring should be installed so that trouble with any other equipment cannot be communicated to the control wiring of this breaker. The breaker requires the full rated control voltage as specified on the nameplate in order to perform a close or trip operation.

The proper wire size should be selected to minimize the voltage drop; otherwise, tripping time could be increased.

Connecting Current Transformers

DANGER

Hazardous voltage.
Will cause death, serious injury, or damage to the circuit breaker.

To prevent:

Do not operate current transformers with an open circuit. Connect to a burden or short circuit and ground at the terminal blocks.

If a short circuit is to be made, the connection should be across the taps of the highest ratio, otherwise, dangerous voltages may occur across the open transformer secondary terminals.

Bushing-type current transformers, supplied only when ordered, are mounted externally on the pole unit (see Figure 1).

Transformers are usually of the multi-ratio type with five leads to provide a wide range of ratios. These leads are brought into the mechanism cabinet to terminal blocks. Each lead has an identification lettered on the terminal block marking strips. Refer to the table on the current transformer nameplate, which is mounted to the inside of the cabinet door, to determine the transformer taps required to obtain the desired ratio. Care must be exercised so as not to confuse the polarity of the transformers. If there is any question as to the proper method of connection, refer to the polarity, ratio, and connection diagrams. These diagrams are supplied as part of the detail drawings for the order.

Line to Ground Capacitors

See Appendix III for capacitor mounting requirements.

Filling A De-energized Breaker With SF_6

Each breaker is shipped with a positive pressure of approximately 5 psig of SF_6. Evacuation is not required before filling. Before filling with SF_6 check the pressure gauge to confirm that pressure has not been lost due to damage or leakage. Breakers with frame-mounted density switches/gauges are provided with a pressure check tool, part of the Installation Tools Kit (See Figure 17), for checking for the shipping pressure. If pressure is reduced to 0 psig it will be necessary to find and repair the cause of the leakage and then pull a vacuum to 2 mm of Hg before filling with SF_6.

Before the breaker is operated or placed into service it must be filled with sulfur hexafluoride gas to 87 psig @ 68 deg F. For breakers with cabinet mounted pressure gauge/density switches, take into consideration the ambient temperature (see Figure 9). For breakers with frame mounted temperature compensated density gauges the pressure may be read directly from the gauge (see Figure 16).

Equipment required to fill from a bottle:

1. SF_6 pressure regulator (preferred) or the SF_6 cylinder adapter supplied with the breaker tool kit.

2. Hose supplied with the tool kit.

3. Adapter fitting supplied with the tool kit.

4. Wrenches
   a. 3/4" b. 13/16" c. 7/8"
   d. 1 1/8 e. 1 1/4 f. 17 mm
   g. 32 mm h. 3/8 Hex Key
   (or 8" and 10" adjustable wrenches)

5. Thermometer for ambient temperature measurement. (For breakers with cabinet mounted pressure gauge/density switches).

The 40, 50 & 63 kA breakers require approximately 161 lbs. of sulfur hexafluoride (SF_6) (53.6 lbs. per pole) to fill to the recommended operating pressure when starting from a vacuum. The breaker is shipped with 5 psig or 28 lbs of SF_6 (9.6 lbs. per pole). Proportionally less gas is required to fill a partially filled unit.

Proceed as follows:

a. Remove cap from the SF_6 cylinder fitting and attach the SF_6 pressure regulator or the special adapter.
b. Remove cap from the breaker fill valve fitting.
c. Attach and tighten hose to regulator or adapter.
d. "Crack" SF_6 cylinder valve and the hose end quick connect fitting and allow SF_6 gas to flow through hose to the fill valve.
e. Shut off cylinder valve and connect the hose to the fill valve.
f. Open SF_6 cylinder valve slowly and fill to proper SF_6 pressure.
g. After the proper pressure is obtained shut the cylinder valve. Disconnect the hose from the breaker fill valve fitting. Replace the cap on the breaker fill valve.

Refill and check for leaks if the pressure falls below the minimum pressure required. See above.

The moisture content of the SF_6 should be no higher than 300 ppm(v). If the pole units have not been opened and exposed to a humid atmosphere, it will not be necessary to check for moisture after filling from an SF_6 bottle. If there is reason to suspect high moisture, do not use the rubber filling hose for checking. Use stainless steel tubing for this purpose.

Checking The Spring Operating Mechanism

Read carefully the Operating Mechanism Instruction Book (Appendix I) included with this instruction book for information on the operation and maintenance of the spring mechanism. Inspect all insulated wiring for damage.

Breaker Inspection

The Type SPS2 breaker has been completely assembled, tested, and inspected at the factory. However, to preclude breaker malfunction due to shipping damage, it is recommended that a final check should be made for loose hardware, wire connections and locking devices.

Timing Test (Optional)

To check the breaker timing, a Doble type travel analyzer or slide wire/oscillograph may be used.

The travel analyzer transducer or slide wire may be mounted on linkage cover as shown in Figure 4.

Make a trip operation and measure the contact part time. If the contact part time exceeds 30.0 ms (1.8 cycles), the difficulty may be due to excessive voltage drop in the d-c control cable to the breaker.

In some instances, breaking of the main contacts may be followed in one or more poles by intermittent touching of the arc ring and the stationary contact. On a travel analyzer trace or an oscillogram, this would appear as if the main contacts reclose, or "bounce", for a period of up to 3 ms following contact separation. This behavior is completely normal and not cause for concern.

Perform a close operation and measure contact make time. Contact make time should be 3.0 to 4.0 cycles (50 to 66 ms).

As with an open operation, arc rings touching the stationary contacts may result in premature, intermittent indication of contact make, up to 5 ms before actual contact make. Contact velocity during open and close operations is set at the factory and need not be checked or adjusted prior to installation.

If, however, you check contact velocity and find it out of limits, be sure the test equipment is functioning properly. If possible, recheck the results with another test set. If the breaker is still out of specification, consult the factory.

Perform an open-close-open operation. Measure the reclose time and the in-contact time. Unless specifically ordered otherwise, the reclose time will be approximately 10 cycles. If a special reclose time was ordered, an adjustable time-delay relay (79X) will be provided. Adjust this relay, if necessary, to obtain the desired reclose time.

In-contact time should be 20-40 ms. If a substantially different time is measured, check the angular position of the auxiliary switch 52a contact in the trip circuit. This contact should be positioned in a horizontal plane with the breaker in the open position (see Figure 15a). Refer to the APPENDIX I section of this manual for auxiliary switch adjustment instructions.

Contact Resistance

Measure the contact resistance terminal to terminal with a ductor, or equivalent 100 amp d-c source. Record the contact resistance of each pole to provide a permanent base-line reference against which future measurements can be compared. The maximum value for a new breaker is 140 micro-ohms.

Establishing a base-line value is particularly important for contact resistance measurements. Small variations in the chemical makeup of the conductor alloy from one lot to another are inevitable, and these can result in appreciable differences in the pole unit resistance. In diagnosing impending problems, the change in contact resistance with time is far more significant than the absolute value of the resistance.

Bushing	Resistance New Contacts MΩ
900 kV BIL	140
1050 kVBIL	160
382 in. creep	180

Line Connections

Line connections should have sufficient flexibility and support to limit the load on the bushings (384 lbs. max.). Conductor and connector must have adequate current carrying capacity to prevent heat transfer into the breaker bushing. All joints must be clean, bright and free from burrs or surface roughness, and assembled using "joint compound".

The contact faces of the terminal plates and connecting parts should be rubbed vigorously with a stainless steel brush, which should be used for copper or aluminum only, until bright metal shows and, in the case of aluminum, until they become slightly roughened. Wipe the faces with a rag and apply a coating of corrosion resistant, conductive compound such as Alcoa No. 2 Electrical Joint Compound on both surfaces.

The terminal plates are made of aluminum. If copper connecting parts are used, insert copper/aluminum adapter plates. Firmly tighten the connecting bolts.

Bushings

The bushings should be cleaned with alcohol, or other approved solvent.

Final Installation, Connections and Inspection Summary

Station _____.

Bus or Line _____

Installation Date _____

1. Nameplate Data

   1.1 Breaker Type SPS2-245

   Serial-S.O. _____

   1.2 Mechanism Type FA4/FA2 (IPO)

   Control Diagram _____

   Amp. _____

   I.B. PB-3998

   I.B. APPENDIX-I

   Control Voltage _____

   Motor and Heater Voltage _____

2. General Condition of Breaker when Received: _____

Note The following checks are to be made after the breaker has been set, leveled, and bolted to its permanent foundation.

3. Breaker Bolted to its Permanent Foundation and Shipping Braces Removed

4. Grounding Connections Installed (Left) _____

   (Right) _____

   (Cabinet) _____

CAUTION

Improper operation may result in breaker damage.

To prevent:

Do not operate the breaker until all tests and inspections are completed.

6. Current Transformer _____

Hazardous voltage.
Death, serious injury, or damage to the circuit breaker will result.

To prevent:

Current transformers must not be operated with an open circuit and must be either connected to a burden or short circuited and grounded at the terminal blocks.

If a short circuit is to be made, the connection should be across the taps of the highest ratio, otherwise, dangerous voltages may occur across the open transformers secondary terminals.

6.1 Connections made _____

7. Breaker Filled with SF_6

7.1 Breakers with pressure gauge/density switch inside cabinet.

SF_6 Pressure _____ PSIG

Ambient Temperature _____ ^oF

7.2 Breakers with frame mounted density switch/ gauge.

Pole A _____ psig (@ 68°F REF)

Pole B (if applicable) _____ psig (@ 68°F REF)

Pole C (if applicable) _____ psig (@ 68°F REF)

8. Spring Mechanism (See Appendix I)

9. Breaker Inspection

9.1 Final check for loose hardware. _____

10. **Timing Tests (Optional) (made at normal operating voltage and SF_6 fill pressure) Attach timing device to linkage. (Figure 4)**

	Pole A	Pole B	Pole C	
10.1 Trip coil energized until contacts part (24-30 milliseconds). Tolerance between phases 2 millisecond max.	_____	_____	_____	milliseconds
10.2. Open velocity during 10 m/sec after contacts part (5.0-5.7 m/sec). (Figure 5)	_____			milliseconds
10.3 **Close coil energized until contacts touch (50-66 milliseconds).** Tolerance between phases 3 millisecond max.	_____	_____	_____	milliseconds
10.4 Close velocity during 10 m/sec before contacts touch (3.5-4.6 m/sec). (Figure 6)	_____			milliseconds
10.5 Close-open in-contact time (25-45 milliseconds).	_____			milliseconds
10.6 Reclose time (if required) trip coil energized until contacts touch. (300 m/sec maximum)	_____			milliseconds

11. Contact resistance terminal to terminal measured with ductor or equivalent 100 amp d-c source 90 micro-ohms maximum for new contacts.

(Pole A)_____micro-ohms
(Pole B)_____micro-ohms

12. SF_6 Pressure Switch Operation

_____

12.1 Breakers with pressure gauge/density switch inside cabinet.

The density switch operation can be checked by closing the shut-off valve and dropping the pressure with the bleed cap assembly found in the Installations Tools Kit. See Figure 15 for instructions on this procedure. The switch should be set to operate to follow the curve in Figure 9, within +2 psig. See Figure 12 for setting directions.

Alarm switch #1 closes _____ psig _____°F

Lockout switch #2 closes _____ psig _____°F

12.2 Breakers with frame-mounted density switch/ gauge.

The density switch/gauge operation can be checked by parting the quick disconnect fitting and dropping the pressure with the bleed cap assembly found in the Installations Tools Kit. See Figure 15 for instructions on this procedure.

Pole A
Alarm switch #1 closes _____ psig (@ 68°F REF)
Lockout switch #2 closes _____ psig (@ 68°F REF)
Lockout switch #3 closes _____ psig (@ 68°F REF)

Pole B (if applicable)
Alarm switch #1 closes _____ psig (@ 68°F REF)
Lockout switch #2 closes _____ psig (@ 68°F REF)
Lockout switch #3 closes _____ psig (@ 68°F REF)

Pole C (if applicable)
Alarm switch #1 closes _____ psig (@ 68°F REF)
Lockout switch #2 closes _____ psig (@ 68°F REF)
Lockout switch #3 closes _____ psig (@ 68°F REF)

CAUTION

A closed SF_6 shut-off valve or parted quick disconnect fitting on an energized breaker could result in death, serious injury or substantial property damage.

To prevent:

Open shut-off valve or join quick disconnect fitting before energizing breaker. Do not close shut-off valve or part quick disconnect fitting while breaker is energized.

13. Record Operation Counter Reading.

_____

14. Record SF_6 Gas Pressure & Temperature.

14.1 Breakers with pressure gauge/density switch inside cabinet.

SF_6 Pressure _____ psig

Ambient Temperature _____ °F

14.2 Breakers with frame-mounted density switch/ gauge.

Pole A _____ psig (@ 68°F REF)

Pole B (if applicable)_____ psig (@ 68°F REF)

Pole C (if applicable)_____ psig (@ 68°F REF)

15. Check all labels and nameplates attached to the breaker to be sure that they are securely fastened in place and are readable.

Closing

CAUTION

Improper operation may result in breaker damage.

To prevent:

Do not operate the breaker until all tests and inspections are completed.

To close the breaker, a low energy electrical signal actuates a solenoid on the Type SPS2-FA4/FA2 mechanism. The energy stored in the operating mechanism closing spring charges the opening spring and moves the moving contacts to the closed position. Having reached the full closed position a mechanical latch in the Type SPS2-FA4/FA2 mechanism is engaged to hold the breaker in the closed position.

Opening

Energy for opening is stored in the opening accelerating spring located inside the mechanism. When the breaker is tripped, the spring transmits its energy through linkage to a lever at each interrupter. The levers transfer the motion to the moving contact assemblies. As the breaker opens, the contacts separate and an electric arc is formed in the chambers between the moving and stationary contacts. The internal construction of the interrupter assures efficient extinction of the arc. Since the interrupter performance is velocity dependent, the opening spring controls the moving contact velocity throughout the opening stroke.

Spring Operating Mechanism

The Type SPS2-FA4/FA2 spring mechanism is used to operate the Type SPS2 breaker. Details of the operation of the mechanism are contained in Instruction Book Appendix I.
An electric motor in the operating mechanism is used to compress a large spring. When compressed, the spring stores sufficient energy to close the breaker and charge the opening spring. The mechanism spring force is transmitted through a crank and cam arrangement to an output crank. This crank is coupled by an adjustable pullrod to a lever which operates the levers on each phase.

The mechanism is connected by a separate linkage to the breaker auxiliary switch. A position indicator in the breaker cabinet is linked to the operating mechanism, and shows whether the breakers is open or closed.

Opening Spring

The opening spring is located in the FA4/FA2 operating mechanism. This spring provides the energy to open the breaker at the proper velocity and within the proper contact part time. When the breaker closes, the spring is compressed and is in position for the next open operation.

Operating Shaft Assemblies

At each pole unit, a link is connected by a lever to a shaft which penetrates the pole unit end housing. The linear motion of the link is converted to a rotary motion of the shaft. Inside the end housing, the shaft is connected to another lever and linkage which change the rotary motion of the shaft to linear motion of the moving contact. A sealing arrangement between the shaft and the housing prevents leakage of SF_6 from the pole units.

Interrupter Assemblies

(Figure 11)

The interrupter consists of two separate assemblies -- a moving contact assembly and a stationary contact assembly. The moving contact is attached to the end housing assembly casting with a bolted flange joint. The stationary contact is attached to the end plate casting also with a glued flange joint. Each assembly contains a flange, an insulating support tube, and a contact carrier to which the contacts are assembled. Both contact carriers contain plug in contacts for the bushing leads. There is no insulating tube enclosing the stationary and moving contact assemblies.

Interrupter Operation

(Figure 8)

With the interrupter in the closed position, the main current path is through the continuous current fingers which are parallel to the arcing contacts. Since the continuous current fingers are not arced during interruption, they maintain low resistance for the life of the interrupter.

During the opening operation, the piston compresses the SF_6 in the compression volume. When the arcing contacts have parted, gas flows through the heating volume and along the arc which is contained in the Teflon nozzle and exhausts through the hollow moving arcing contact and through the stationary contact assembly. This puffer action is sufficient for low current faults and switching operations. During high current interruptions, heat from the arc causes the pressure to rise in the heating volume which closes the check valve. The pressure in the heating volume continues to rise until the throat of the nozzle clears the stationary arcing contact, allowing the high pressure gas from the heating volume to flow through the nozzle extinguishing the arc. The gas that is trapped in the compression volume after the check valve closes is vented into the tank across the relief valve in order to prevent a decrease in contact velocity during high current interruptions. All of the hot gas and arc products are contained in the pole unit housing.

Inspection

The SPS2 breaker has been designed for very low maintenance. Actual inspection frequency depends on installation site, weather and atmospheric conditions, experience of operating personnel and special operating conditions.

It is desirable to maintain a permanent record of each circuit breaker. Included in this log should be the complete records of installation, inspection and maintenance work performed. Periodic and Pole Unit check lists should be included as well as information relative to the number and magnitude of faults that the breaker has been required to interrupt.

An effective maintenance program begins during the installation of the equipment. A copy of an installation check list follows the INSTALLATION section of this book. This information is then used as a base reference for future maintenance.

General

Thorough, periodic inspection is important to satisfactory operation. Inspection and maintenance frequency depends on installation site, weather and atmosphere conditions, experience of operating personnel and special operation requirements. Because of this, a well-planned and effective maintenance program depends largely on experience and practice.

DANGER

Hazardous voltage and mechanisms. Death or serious injury from electrical shock, burns, and entanglement in rapidly moving parts will result.

To prevent:

1. Do not service or touch until you have de-energized high voltage, grounded all terminals and turned off control voltage. Grounding terminals with line to ground capacitors may produce a small arc.
2. Do not trip or close the breaker unless you are clear of all moving parts.
3. Discharge the breaker's mechanical systems before performing maintenance or inspection.
4. Secure the operator against accidental tripping when adjustments require breaker in closed position.
5. Breaker and its mechanism must be disconnected from all electrical power before performing maintenance or inspection. Grounding leads should be properly attached and framework grounded.
6. Do not operate the breaker while it is energized or control power is connected.
7. Remove the maintenance closing device before operating the breaker.
8. Only qualified personnel thouroughly familiar with all warnings, safety notices, instructions and maintenance procedures contained herein, should work on or around this equipment. The successful and safe operation of this equipment is dependent upon proper handling, installation, operation and maintenance.

WARNING

Failure to properly maintain the equipment could result in death, serious injury, product failure, and prevent successful functioning of connected apparatus.

To prevent:

The instructions contained here should be carefully reviewed, understood and followed. The following maintenance procedures should be performed regularly.

STEP 1
Be sure that the circuit breaker and its mechanism is disconnected from all electric power, both high voltage and control voltage, before it is inspected or repaired.

STEP 2
After the circuit breaker has been disconnected from power lines, attach the grounding leads properly before touching any of the circuit breaker parts.

STEP 3
Keep the mechanism clean.

STEP 4
Be sure the circuit breaker is well grounded.

STEP 5
See that bolts, nuts, washers, cotter pins and all terminal connections are in place and tight.

STEP 6
After all inspections or maintenance operate the breaker to see that the mechanism works smoothly and correctly.

THIS CHECKLIST DOES NOT REPRESENT AN EXHAUSTIVE SURVEY OF MAINTENANCE STEPS NECESSARY TO ENSURE SAFE OPERATION OF THE EQUIPMENT.

PARTICULAR APPLICATIONS MAY REQUIRE FURTHER PROCEDURES. SHOULD FURTHER INFORMATION BE DESIRED OR SHOULD PARTICULAR PROBLEMS ARISE WHICH ARE NOT COVERED SUFFICIENTLY FOR THE PURCHASER'S PURPOSES, THE MATTER SHOULD BE REFERRED TO THE LOCAL SIEMENS SALES OFFICE.

WARNING

The use of unauthorized parts in the repair of the equipment could result in dangerous conditions which could cause death, serious injury, or equipment damage.

To prevent:

Follow all safety instructions contained herein.

Periodic Inspection

A periodic inspection should be made every 6 years. This includes a visual inspection for corrosion and loose hardware, and mechanical operations for timing and verification of controls. At the end of this section is a Periodic Inspection Checklist.

Timing Tests

See Timing Tests in Installation section for Timing Instructions.

Pole Unit Inspection

A pole unit inspection requires the removal of the gas from the breaker and opening the pole unit to determine the condition of the contacts and insulating components. A major inspection should be performed when:

1. The number of operations as a function of fault or switching current exceeds the permissible values shown in the chart (Figure 7).

2. 12 years of service.

This schedule should be modified based on information obtained during periodic inspections or experience of breaker duty.

Notes / Comments:

Periodic Inspection Checklist

Station _____ Bus or Line _____

Date of Inspection _____

1. Nameplate Data

   1.1 Breaker Type SPS2-245 Amp. _____

   Serial-S.O. _____ I.B. PB-3998

   1.2 Mechanism Type FA4/FA2 (IPO) I.B. APPENDIX-I

   Control Diagram _____ Control Voltage _____

   Motor and Heater Voltage _____

DANGER

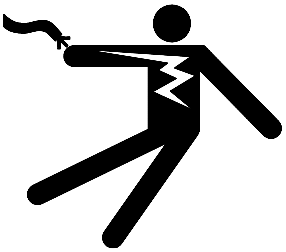

Hazardous voltage.
Death or serious injury due to electrical shock will result.

To prevent:

Prior to performing inspection of the breaker, trip the breaker and open adjacent breaker disconnect switches, solidly ground all bushing terminals to remove residual electrical charge and open all A-C and D-C switches.

2. General Condition of Breaker: _____

_____

_____

3. Breaker Hold Down Bolts Tight _____

4. Grounding Connections Tight (Left) _____

(Right) _____

CAUTION

Improper operation may result in breaker damage.

To prevent:

Do not operate the breaker until all tests and inspections are completed.

5. Spring Mechanism (APPENDIX I)

5.1 General Checks:

5.1.1 Condition of mechanism. Corrosion of hardware. Loose hardware. _____

5.1.2 Connections on terminal blocks, switches, and relays; tight and no corrosion. _____

5.1.3 Heater(s) operating properly. _____

5.1.4 Wiring: deteriorated or damaged insulation. _____

6. Minimum operating voltage. (See mechanism nameplate for voltage range.)

Trip _____ Vd-c

Close _____ Vd-c

7. Timing Tests (made at normal operating voltage and SF_6 fill pressure) Attach timing device to linkage. (Figure 4)

	Pole A	Pole B	Pole C	
7.1 Trip coil energized until contacts part (24-30 milliseconds). Tolerance between phases 2 millisecond max.	_____	_____	_____	milliseconds
7.2. Open velocity during 10 m/sec after contacts part (5.0-5.7 m/sec). (Figure 5)	_____			milliseconds
7.3 Close coil energized until contacts touch (50-66 milliseconds). Tolerance between phases 3 millisecond max.	_____	_____	_____	milliseconds
7.4 Close velocity during 10 m/sec before contacts touch (3.5-4.6m/sec). (Figure 6)	_____			milliseconds
7.5 Close-open in-contact time (25-45 milliseconds).	_____			milliseconds
7.6 Reclose time (if required) trip coil energized until contact touch. (approximately 300 m/sec including a 50 m/sec time delay)	_____			milliseconds

8. Measure contact resistance terminal to terminal with ductor or equivalent 100 amp d-c source. If measured micro-ohm values are greater than 160 micro-ohms, a pole unit inspection is required.

(Pole A)_____ micro-ohms

(Pole B)_____ micro-ohms

(Pole C)_____ micro-ohms

Bushing	Resistance Used Contacts MΩ
900 kV BIL	160
1050 kV BIL	180
382 in. creep	200

9. SF_6 Pressure Switches (See Installation Checklist for checking instructions.)

9.1 Breakers with pressure gauge/density switch inside cabinet.

Alarm switch #1 closes _____ psig _____°F

Lockout switch #2 closes _____ psig _____°F

9.2 Breakers with frame-mounted density switch/gauge.

Pole A
Alarm switch #1 closes _____ psig (@ 68°F REF)
Lockout switch #2 closes _____ psig (@ 68°F REF)
Lockout switch #3 closes _____ psig (@ 68°F REF)

Pole B (if applicable)
Alarm switch #1 closes _____ psig (@ 68°F REF)
Lockout switch #2 closes _____ psig (@ 68°F REF)
Lockout switch #3 closes _____ psig (@ 68°F REF)

Pole C (if applicable)
Alarm switch #1 closes _____ psig (@ 68°F REF)
Lockout switch #2 closes _____ psig (@ 68°F REF)
Lockout switch #3 closes _____ psig (@ 68°F REF)

10. Record Operation Counter Reading. _____

11. Record SF_6 Gas System Information.

11.1 Breakers with pressure gauge/density switch inside cabinet.

SF_6 Pressure _____ psig

Ambient Temperature _____ °F

11.2 Breakers with frame mounted temperature compensated density gauges.

(Pole A) _____ psig (@ 68°F REF)

(Pole B if applicable) _____ psig (@ 68°F REF)

(Pole C if applicable) _____ psig (@ 68°F REF)

Pole Unit Inspection Checklist

!CONTACT YOUR SIEMENS REPRESENTATIVE BEFORE REMOVING INTERRUPTER!

Station _____ Bus or Line _____

Date of Inspection _____

Installation Date _____

1. Nameplate Data

1.1 Breaker Type SPS2-245 Amp. _____

Serial-S.O. _____ I.B. PB-3998

1.2 Mechanism Type FA4/FA2 (IPO) I.B. APPENDIX-I

Control Diagram _____ Control Voltage _____

Motor and Heater Voltage _____

2.1 Breaker application (line switching, capacitor bank switching, reactor switching, generator breaker, and etc.). _____

2.2 Reason for opening pole units. (Number of operations, fault duty, and etc.). _____

2.3 List Inspection and parts replaced _____

Notes/Comments:

General

This instruction book section describes procedures to be followed when adjustments or part replacement is necessary as determined by the Installation, Periodic, or Pole Unit Inspection Checklist or by circuit breaker malfunction. The step-by-step instructions given should be followed carefully to assure proper equipment operation. Reference to the included instruction leaflets and instruction books may be necessary.

Thorough, periodic inspection is important to satisfactory operation. Inspection and maintenance frequency depends on installation, site, weather and atmospheric conditions, experience of operating personnel and special operation requirements. Because of this, a well-planned and effective maintenance program depends largely on experience and practice.

Inspection and maintenance can be improved and simplified by using tools available from Siemens identified as Major Inspection Tool Kit .

WARNING

Failure to properly maintain the equipment could result in death, serious injury, product failure, and prevent successful functioning of connected apparatus.

To prevent:

Perform regular maintenance procedures as specified in this manual.The Siemens Major Inspection Tool Kit may simplify this process.

The instructions contained herein should be carefully reviewed, understood and followed. The following maintenance procedures should be performed regularly:

STEP 1

Be sure that the circuit breaker and its mechanism are disconnected from all electric power, both high voltage and control voltage, before it is inspected or repaired.

STEP 2

After the circuit breaker has been disconnected from power lines, attach the grounding leads properly before touching any of the circuit breaker parts.

DANGER

Hazardous voltage and mechanisms. Death or serious injury due to electrical shock, burns and entanglement in moving parts; or property damage will result if safety instructions are not followed:

To prevent:

1. Do not service or touch until you have de-energized high voltage, grounded all terminals and turned off control voltage. Grounding terminals with line to ground capacitors may produce a small arc.
2. Do not trip or close the breaker unless you are clear of all moving parts.
3. Discharge the breaker's energy storage system before performing maintenance or inspection.
4. Secure the operator against accidental tripping when adjustments require breaker in closed position.
5. Breaker and its mechanism must be disconnected from all electrical power before performing maintenance or inspection. Grounding leads should be properly attached and framework grounded.
6. Do not operate the breaker manually while it is energized or control power is connected.
7. Remove the maintenance closing device before operating the breaker.
8. Only qualified personnel should work on or around this equipment after becoming thoroughly familiar with all warnings, safety notices, instructions and maintenance procedures contained herein. The successful and safe operation of this equipment is dependent upon proper handling, installation, operation and maintenance.

STEP 3

Be sure that the breaker is in the open position and that the mechanism closing spring is discharged before it is inspected or repaired.

STEP 4

Using Appendix I as a guide, visually inspect the operating mechanism periodically.

STEP 5

Keep the mechanism clean.

STEP 6

Be sure the circuit breaker is well grounded.

STEP 7

See that bolts, nuts, washers, cotter pins and all terminal connections are in place and tight.

STEP 8

After all inspections or maintenance operate the breaker to see that the mechanism works smoothly and correctly.

THIS CHECKLIST DOES NOT REPRESENT AN EXHAUSTIVE SURVEY OF MAINTENANCE STEPS NECESSARY TO ENSURE SAFE OPERATION OF THE EQUIPMENT. PARTICULAR APPLICATIONS MAY REQUIRE FURTHER PROCEDURES. SHOULD FURTHER INFORMATION BE DESIRED OR SHOULD PARTICULAR PROBLEMS ARISE WHICH ARE NOT COVERED SUFFICIENTLY FOR THE PURCHASER'S PURPOSES, THE MATTER SHOULD BE REFERRED TO THE LOCAL SIEMENS SALES OFFICE.

WARNING

The use of unauthorized parts in the repair of the equipment, tampering by unqualified personnel, or incorrect adjustments could result in dangerous conditions which can cause serious injury or equipment damage.

To prevent:

Properly trained and qualified personnel should follow instructions contained in this manual.

Ordering Replacement Parts

When ordering replacement parts for a Siemens Circuit Breaker, it is very important to give complete information. This information should include:

1. Breaker serial number. (On breaker and operator nameplates.)
2. Type of operator. (On operator nameplate.)
3. Type of breaker.
4. Rated amperes of breakers.
5. Rated voltage of breaker.
6. Description of part. Use instruction book description insofar as possible.
7. Operator instruction book number. (On breaker nameplate.)
8. Instruction book reference number.
9. Number of pieces required.

The operator can be identified by the serial number, which is located on the operating housing casting above the opening spring. Without this serial number Siemens cannot be sure of the correct identity of the desired parts. Additional information such as photographs or instruction book mark numbers may be required to identify specific parts in a mechanism.

If any doubt exists as to the instruction book reference number of the description, a dimensional sketch of the desired part will help to properly identify it.

Siemens recommends that a supply of repair parts be kept on hand so that emergency repairs can be made without waiting for shipment of parts from the factory.

Before removing any part to be replaced, observe its function and adjustment. This usually saves adjustment time during installation.

Maintenance Tools, Materials and Equipment

The following tools, material, and equipment are recommended to perform maintenance, adjustment and lubrication on the breaker:

PI - Periodic Inspection
PU- Pole Unit

(PI)(PU) 1. Wrenches - Standard metric sizes of open end or box type and Allen wrenches. 1/4", 3/8" and 1/2" drive ratchets, ratchet extensions and sockets.

(PI) 2. Thermometer.

(PI) 3. Screwdrivers - 1/8", 1/4" and 3/8" blade.

(PI)(PU) 4. Ductor or equivalent 100 ampere DC source with a micro-ohmmeter

(PU) 5. Leak-tec for leak testing.

(PU) 6. 1 1/2 ton crane with a working height of 24 feet and 2 rope slings (for removing the bushings, and if so equipped, the capacitor assemblies).

(PU) 7. 0-50 ft.-lb. torque wrench - 3/8" drive, (Snap-on Model TE 50 FFU-A recommended) and 0-100 ft.-lb. torque wrench.

(PU) 8. Timing equipment and mounting hardware. (See "Timing Tests" in INSTALLATION Section.)

(PI)(PU) 9. Corrosive resistant conductive joint compound and wire brush.

(PU) 10. Small vacuum pump (Robinair Model 15400 or 15600)with vacuum gauge measuring down to at least 1mm of mercury. This may be part of a SF_6 recover system.

(PU) 11. Alcohol and clean, lint-free cloths.

(PU) 12. Dust mask and gloves.

(PU) 13. SF_6 gas (140 lbs).

(PU) 14. Service hose and adapter for SF_6 filling (3).

(PU) 15. Terminal plate o-rings (1). (2)

(PU) 16. Bushing o-rings (1). (2)

(PU) 17. Vessel end cover o-ring (1). (2)

(PU) 18. Centoplex 24DL grease. (1) p/n 72-185-393-502

(PU) 19. Molecular sieve (1) p/n W 980-010-04

(PU) 20. Dow Corning 111 (1). p/n W 962-026

(PU) 21. Tectyl 506 (1) p/n 72-185-393-503

(PU) 22. Isoflex Topas L32 Grease (1) p/n W 962-036-01

(PU) 23. Zinc Anti-sieze Lubricant (1) p/n W 962-022

(PI)(PU) 24. Pressure Check Tool (3)

(1) Available from Siemens as Major Inspection Parts Kit, Part No. 72-182-863-808.

(2) Shelf life 1 year.

(3) Available from Siemens as Installation Tool Kit, Part No. 72-182-835-815 for breakers with (1) Dilo DN 20 or equivalent fill valve (mounted inside cabinet or externally on Pole A) or Part No. 72-182-835-817 for breakers with (3) Dilo DN 8 or equivalent fill valves (mounted externally on Poles A, B, & C).

Recommended Spare Parts List

DESCRIPTION	DRAWING OR CODE NUMBER	RECOMMENDED FOR STOCK	
		1-5 BRKRS	5 OR MORE
POLE UNIT			
Porcelain	Varies with Customer		
Switch Unit	Varies with Customer	1	2
Major Inspection Parts Kit (includes o-rings and grease)	72-182-863-808	1	2
Rupture Disk	72-183-253-002	1	2
Rupture Disk Gasket 5.25 solid	72-182-584-002	2	4
MECHANISM (FA4)			
Close Coil			
48 Volt	41-211-176-021	1	2
125 Volt	41-211-176-023	1	2
250 Volt	41-211-176-024	1	2
Opening Coil			
48 Volt	41-211-176-036	1	2
125 Volt	41-211-176-034	1	2
250 Volt	41-211-176-035	1	2
Motor with Drive Gear			
48 Volt	41-211-208-030	1	2
120 - 125 Volt AC/DC	41-211-208-031	1	2
240 - 250 Volt AC/DC	41-211-208-032	1	2
MECHANISM (FA2)			
Close Coil			
48 Volt	41-211-176-021	1	2
125 Volt	41-211-176-023	1	2
250 Volt	41-211-176-024	1	2
Opening Coil			
48 Volt	41-211-176-036	1	2
125 Volt	41-211-176-034	1	2
250 Volt	41-211-176-035	1	2
Motor with Drive Gear			
48 Volt	72-183-169-502	1	2
120 - 125 Volt AC/DC	72-183-169-503	1	2
240 - 250 Volt AC/DC	72-183-169-501	1	2

Opening The Pole Units

Place the breaker in the open position before removing SF_6 in preparation for opening the pole units. Remove SF_6 from the breaker through the fill valve . Disconnect and plug the SF_6 manifold from the pole unit to be opened. Plugs are included in the installation tool kit. This isolates an individual pole from the rest of the breaker and allows opening the pole unit without contaminating the rest of the breaker.

Rupture Disk and/or Molecular Sieve Replacement

The molecular sieve material is located in the lever housing under the cover (see Fig. 10). The Rupture disk is located on the cover on the opposite end of the breaker. The molecular sieve material should be replaced any time the pole unit has been exposed to the atmosphere.

To replace the filter material remove the cover from the lever housing. Remove the two screws and retaining plate and discard the old filter material. Remove the new filter from its' packaging and reinstall the filter, retaining plate and screws. Lubricate the 12mm bolts with Anti-sieze lubricant and install the cover tightening the bolts to 51 ft.-lbs [70 N-M]. The pole unit should be evacuated to 2mm of mercury vacuum, within 15 minutes of opening the filter pouch.

To replace the rupture disk, remove the 12mm screws from the retaining plate. Remove the rupture disk and gaskets. Install the new rupture disk and gaskets paying close attention to the flow direction arrow on the rupture disk. This arrow should be pointing to the outside of the pole housing. Lubricate the 12mm bolts with Anti-sieze lubricant and install the cover tightening the bolts to 51 ft.-lbs [70N-M]. Replace the filter material and evacuate the pole unit per the preceding paragraph.

⚠ WARNING ADVERTENCIA

Super heated gas, high velocity solid particles, compressed SF_6. Could result in death, serious injury, or damage to the circuit breaker.

To prevent:

Insure that the rupture disk is installed with the flow direction arrows pointing toward the outside.

Gas muy caliente, particulas sólidas de alta velocidad, gas compromido SF_6. Puede causar lesiones o muerte or daños al interruptor.

Para evitarlo:

Asegurar que el disco de ruptura este instalado con las flechas direcciónales dirigidas hacia afuera.

72 200 247 008

Bushing Removal

1. Remove breaker from service and open breaker control circuits (knife switches, breakers, and/or fuse blocks)
2. Discharge mechanism opening and closing springs.
3. Remove SF6 from breaker. Remove linkage cover and disconnect manifold from pole being serviced and plug (P/N 72-182-939-001 {1}).
4. Remove line terminal from bushing.
5. Support bushing with a crane, using a cloth type sling (see Fig. 14).
6. Remove the M12 mounting bolts from the bushing/ pole unit flange.
7. Lift the bushing from the pole unit using the crane while guiding the lower end, being careful not to damage the bushing voltage shield with the conductor.
8. Inspect the bushing conductor contact on the interrupter.

{1}Part of installation tool kit.

WARNING

Oxygen deficiency could result in death or injury.

To prevent:

1. Avoid dumping SF_6 into confined spaces or low lying areas. Use of a SF_6 recovery system to remove SF_6 gas from breaker is recommended.
2. Use fans and ventilating equipment before entering confined spaces or low lying areas where SF_6 has been accidentaly dumped until SF_6 is dissipated.
3. Use fans, ventilating, or breathing equipment inside SF_6 tanks, after covers have been removed, where a SF6 recovery system has not been used.

WARNING

SF_6 Arc gas and powder products may result in minor or moderate injury.

To prevent:

1. Wait until pungent odor dissipates after opening a breaker before proceeding with disassembly, inspection, maintenance.
2. Avoid breathing arc product powders..
3. Avoid direct skin exposure to arc powder products.
4. Use a vacuum cleaner to remove large concentrations of arc powder before cleaning breaker parts with a rag.

Bushing Installation

1. Inspect the bushing conductor contact on the interrupter.
2. Clean the bushing flange on the pole unit with alcohol and coat the area outside of the o-ring groove with Tectyl (P/N 72-185-393-503 {1}). See Fig. 11.
3. Coat a new o-ring (P/N 72-180-327-031 {1}) with silicone (P/N W 962026 {1}) and install in the o-ring groove.
4. Sling the bushing using 2 cloth type slings and a hoist. Use the hoist to adjust the angle of the bushing so that it hangs from the crane at the angle of an installed bushing. (See Fig. 14)
5. Apply a thin coat of grease (P/N W 962030 {1}) to the silver plated area on the bottom of the bushing conductor.
6. Slowly lower the bushing into place over the guide pins.
7. Insure that the bushing lead inserts into the interrupter contact. This may require small adjustments to angle of the bushing. If the bushing is well balanced on the sling and lowered slowly you can "feel" when the conductor inserts into the contact. Do not force the bushing into place. If the bushing does not seat, raise the bushing and try again.
8. Install the 12 mm bushing flange to pole unit bolts, and torque to 51 ft.-lbs [70 N-M].
9. Replace the filter material in the pole unit. See page 29 in this manual.
10. Reconnect the gas manifold and install the linkage cover.
11. Evacuate the breaker to 2mm Hg Vacuum.
12. Reinstall the line terminals.
13. Fill the breaker with SF_6 per the gas chart on the breaker.

{1} Part of Major Inspection Parts Kit
P/N 72-182-863-808
{2} Part of Insulation & Conductor Assembly Kit
P/N 72-182-934-801

Removing the Interrupter

!CONTACT YOUR SIEMENS REPRESENTATIVE BEFORE REMOVING INTERRUPTER!

Filling An Energized Breaker with SF_6 Gas

The preferred method of adding SF_6 gas to the breaker is with the breaker de-energized and isolated from the electrical system. However, SF_6 gas may be added to an energized breaker if the pressure has not fallen below lockout. The procedure for adding gas is the same as for filling the breaker during installation outlined on Page 10.

Leak Checking

The breaker has been thoroughly leak tested at the factory and will be essentially leak-free between the major maintenance periods. There are a minimum of leak sources. The “o” rings, gaskets, and fittings shown on Figure 11, provide the sealing to atmosphere on each phase.

Before beginning a leak check, pay careful attention to the pressure and temperature of the SF_6 gas. If the initial pressurizing is done according to the normal operating pressure curve in Figure 9, any other readings should fall on the same curve.

Use Leak-tec or equivalent to detect leaks. No leakage is permitted at any of the joints. During maintenance, if any seal has been removed, that seal should be leak-checked after a vacuum has been obtained and SF_6 added to the pole unit.

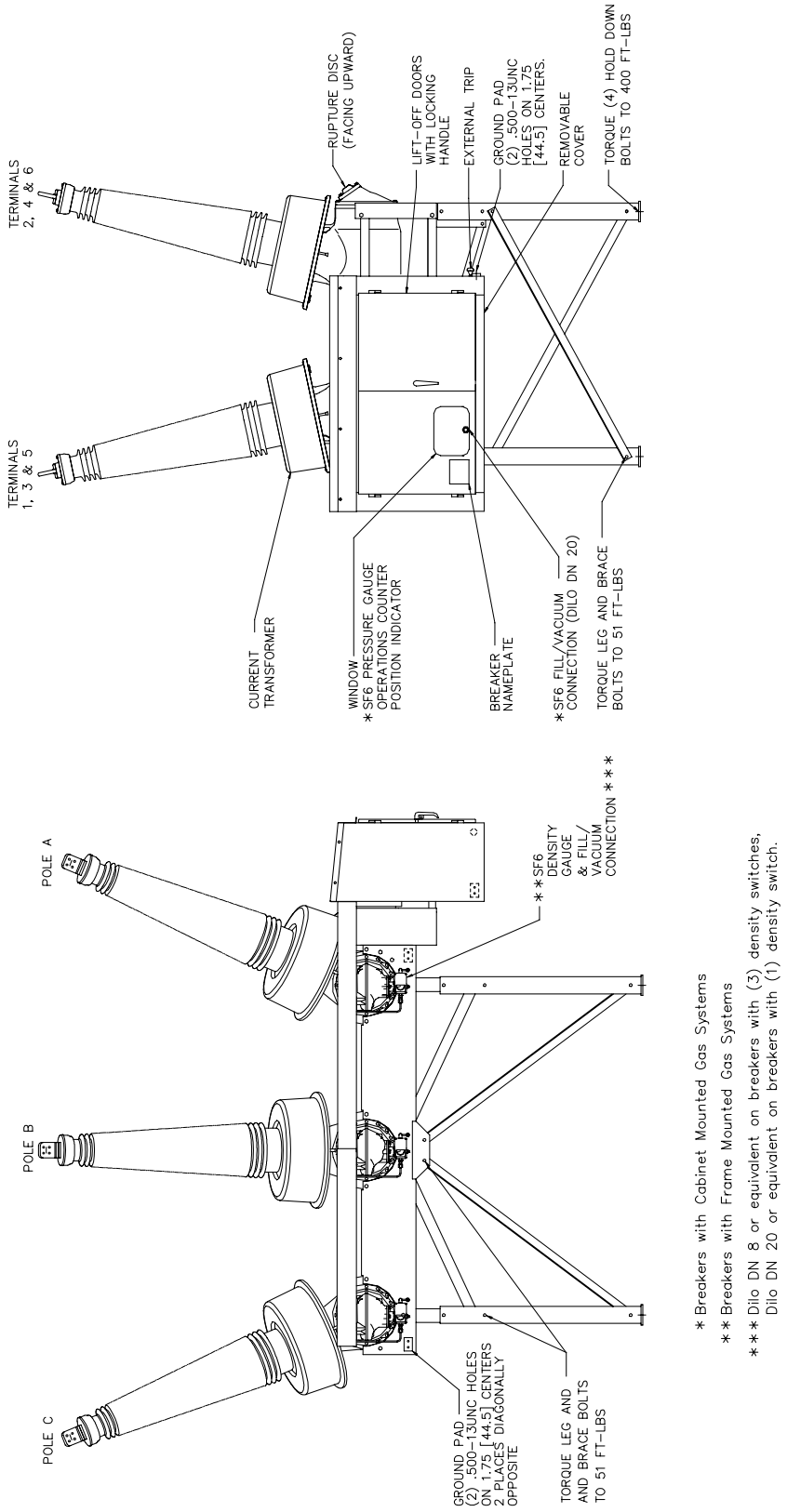

Figure 1. Outline - SPS-2 **72-281-446-403**

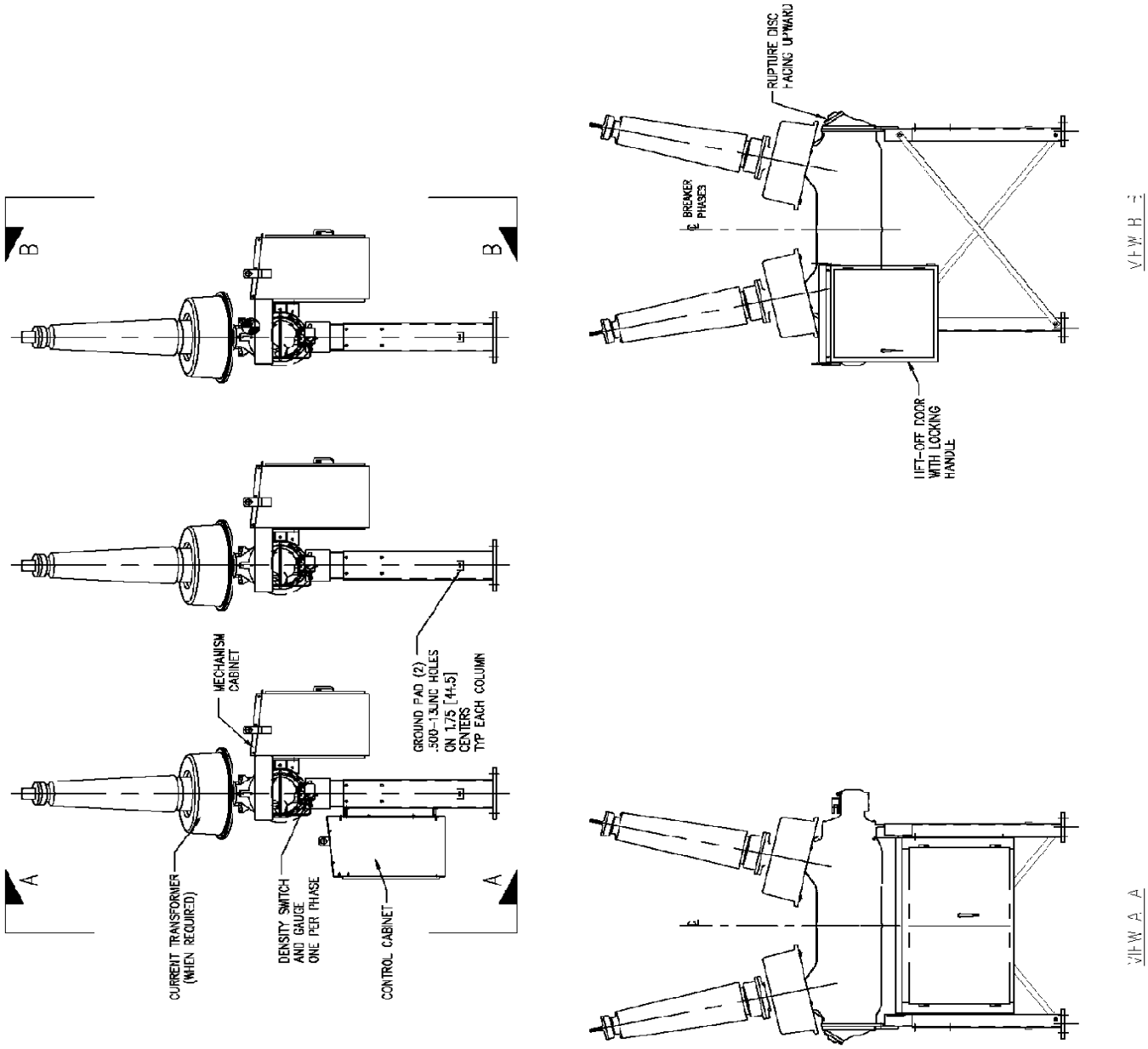

Figure 1A. Outline - IPO

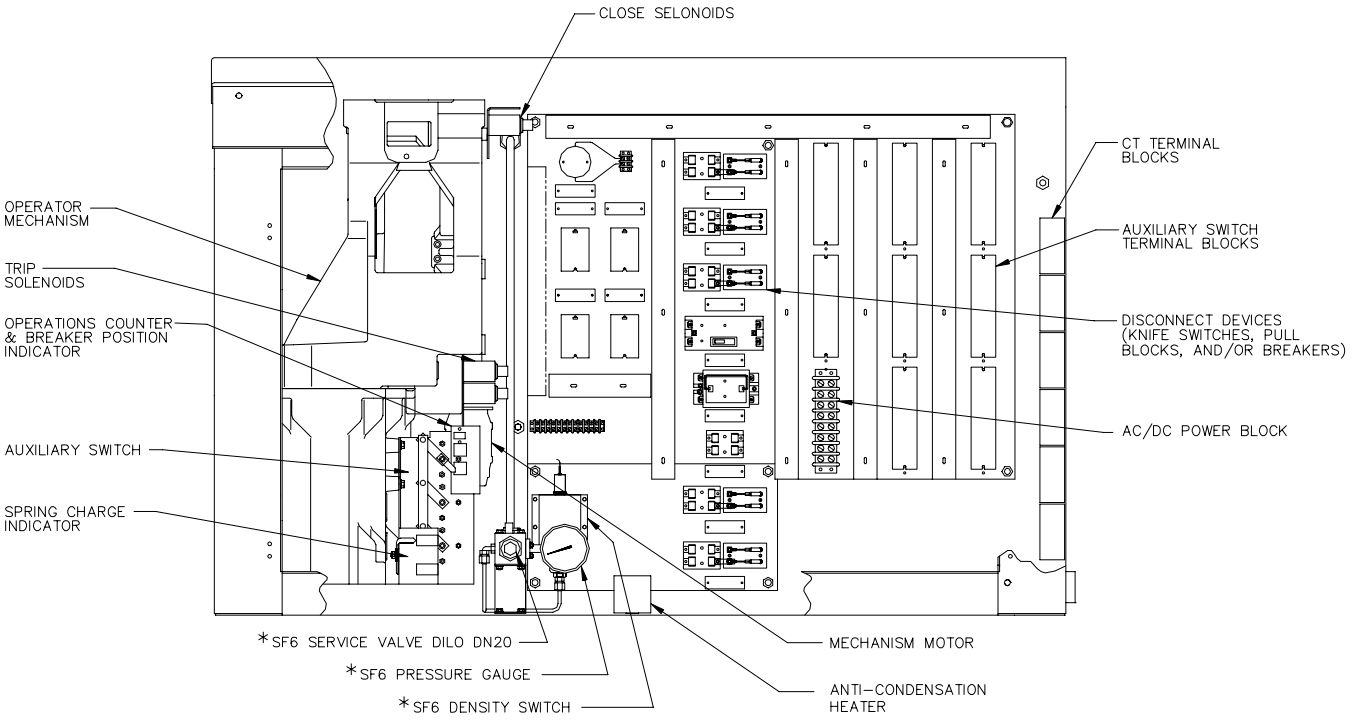

* BREAKERS WITH CABINET MOUNTED PRESSURE GAUGE / DENSITY SWITCH

Figure 2. Cabinet Layout **72-281-447-401**

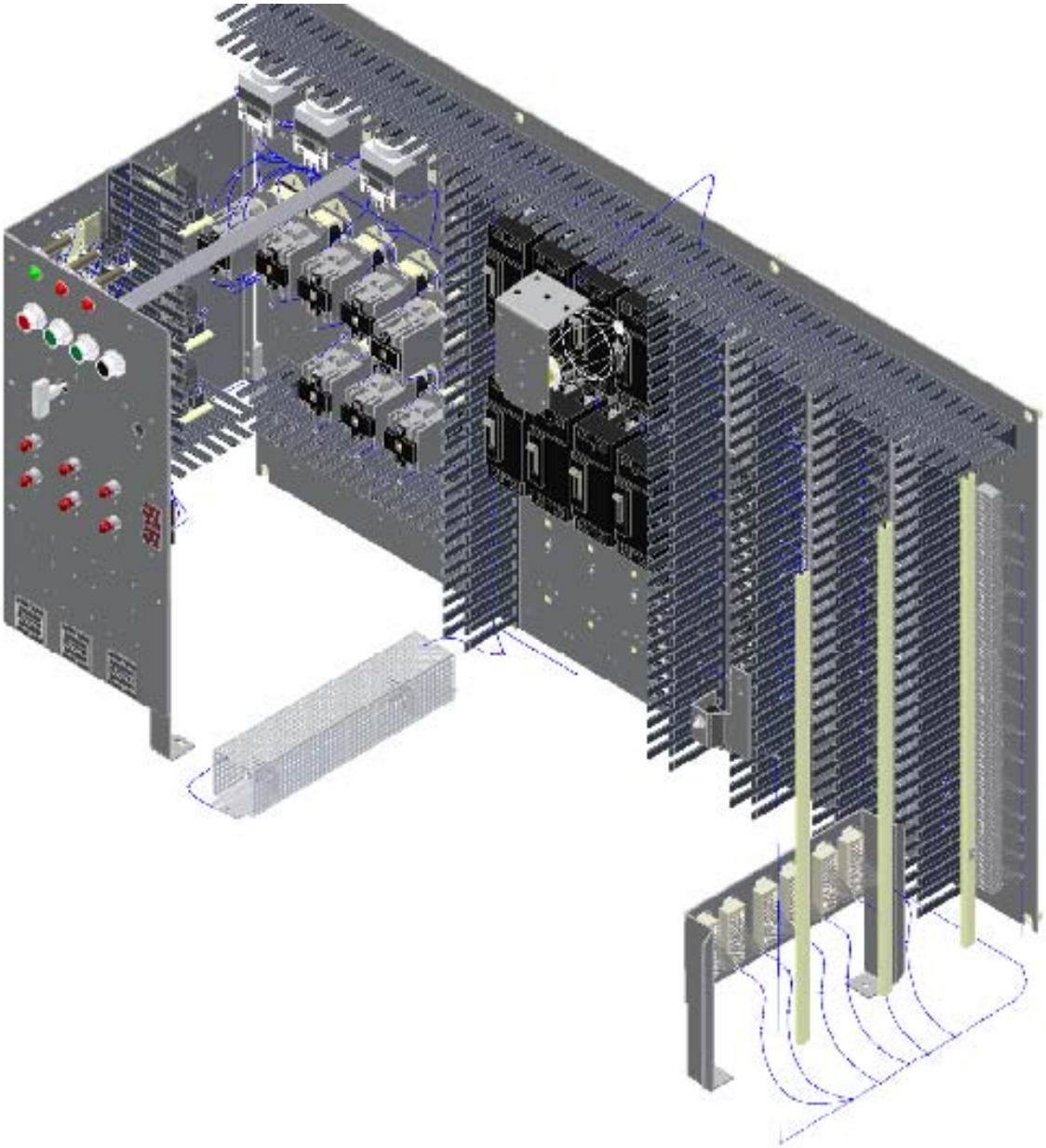

Figure 2a. Cabinet Layout (IPO)

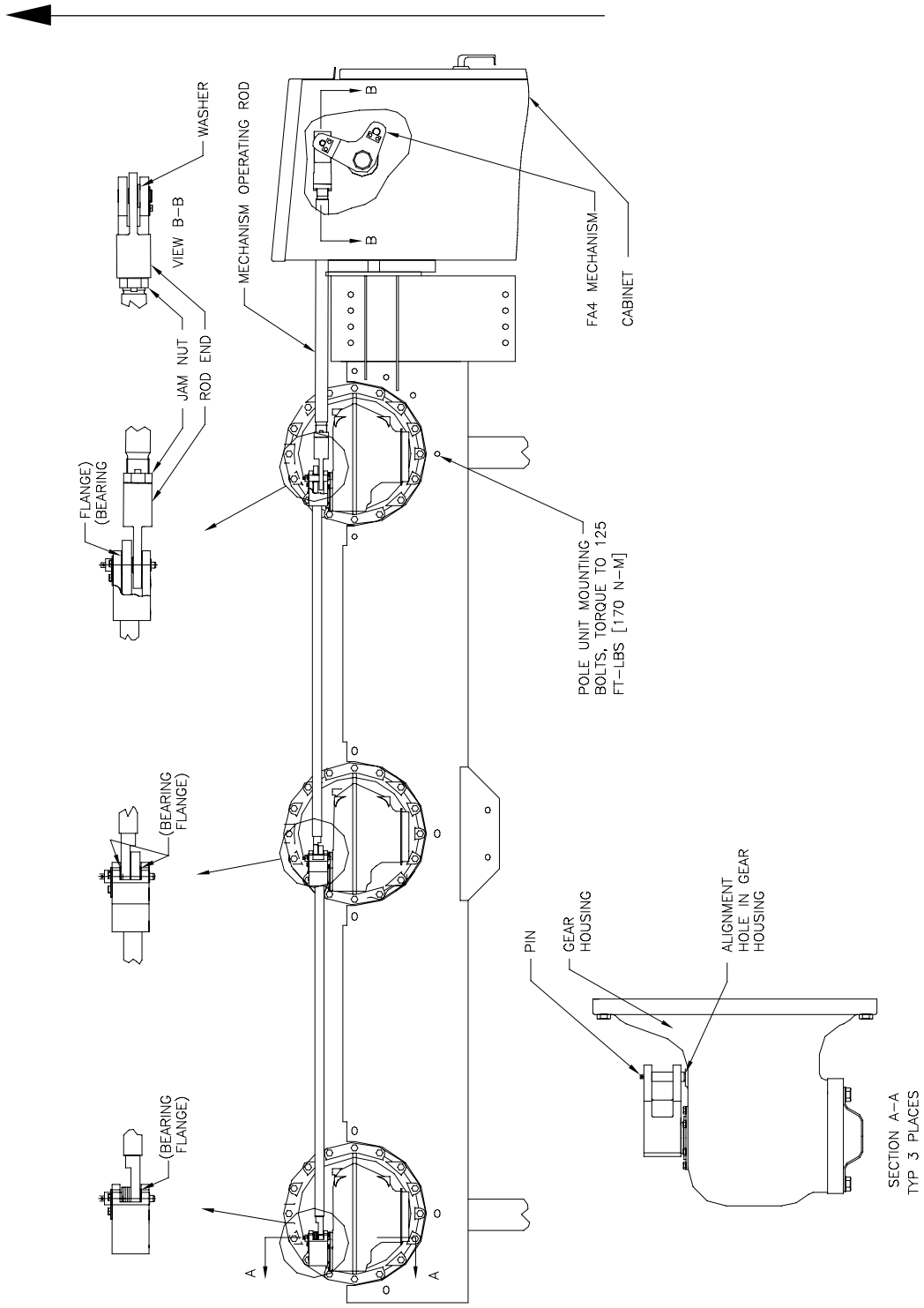

Figure 3. Linkage Adjustment **72-281-448-401**

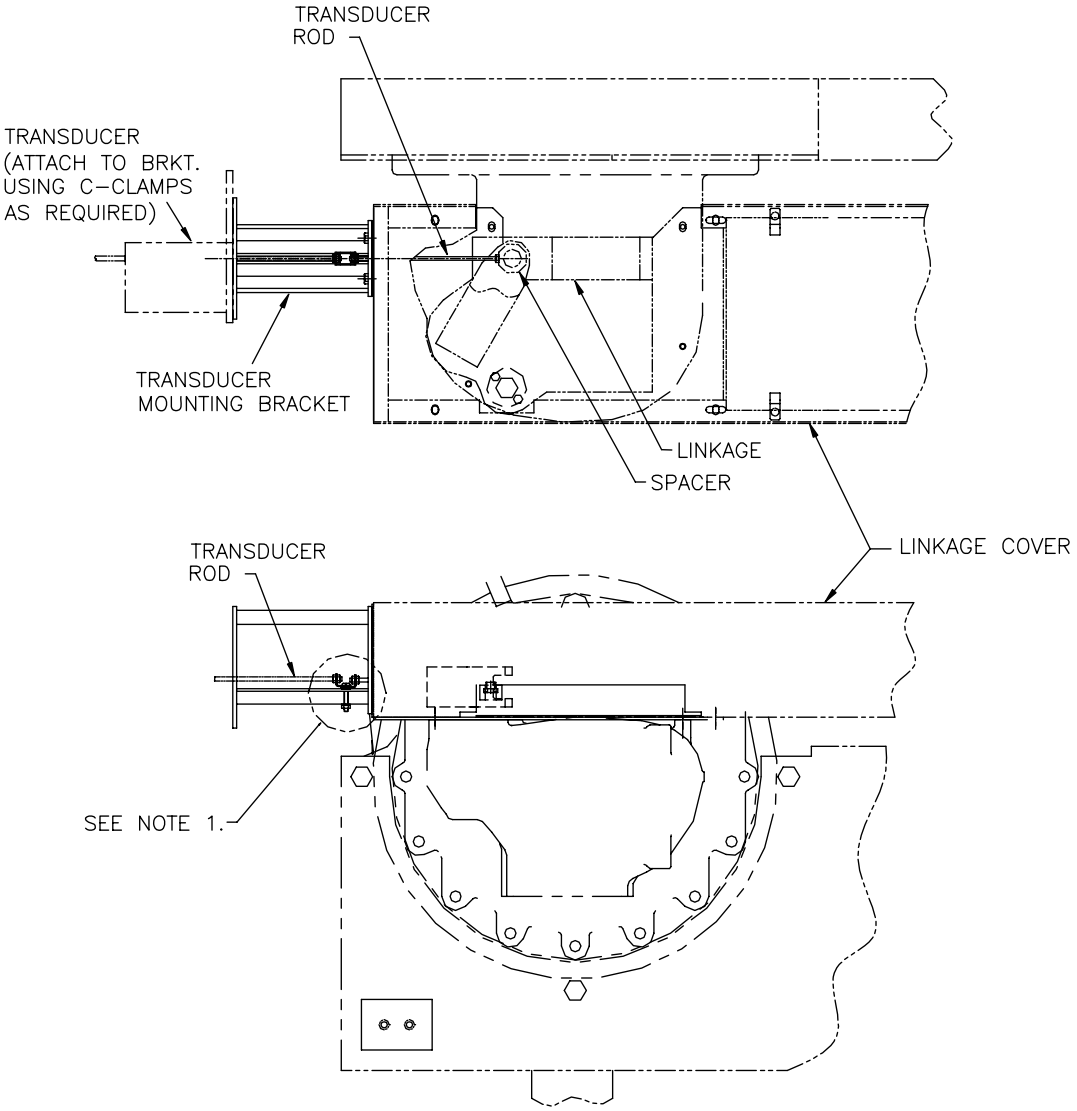

NOTE 1: IDLER ASSY MAY OR MAY NOT BE REQUIRED DEPENDENT UPON TRANSDUCER USED.

⚠ DANGER

Hazardous voltage and mechanisms.
Death or severe injuries from electrical shock, burns and entanglement in moving parts will occur from misuse.

To prevent:

1. Breaker must be in the open position and the mechanism closing spring discharged before attaching the travel transducer.

2. Keep hands free of the breaker while the operator is in use.

Figure 4. Travel Transducer Mounting **72-183-179-408**

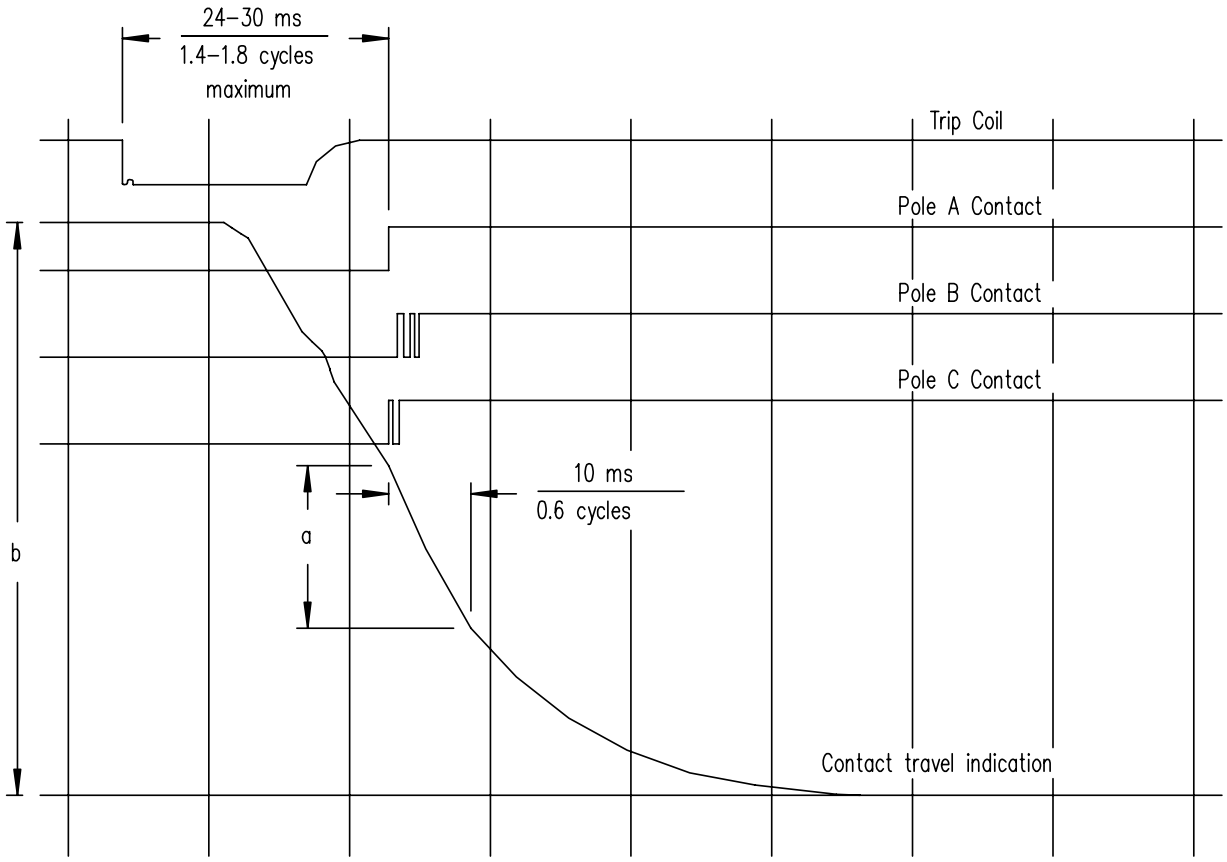

Example of Opening Operation Record

Calculation For Contact Opening Velocity=
V=15.0a/b meter/second

Note: a and b may be measured in any consistant units

Contact Stroke =150 mm
Transducer Stroke = 110 mm @ Linkage

Figure 5. Travel Record - Opening

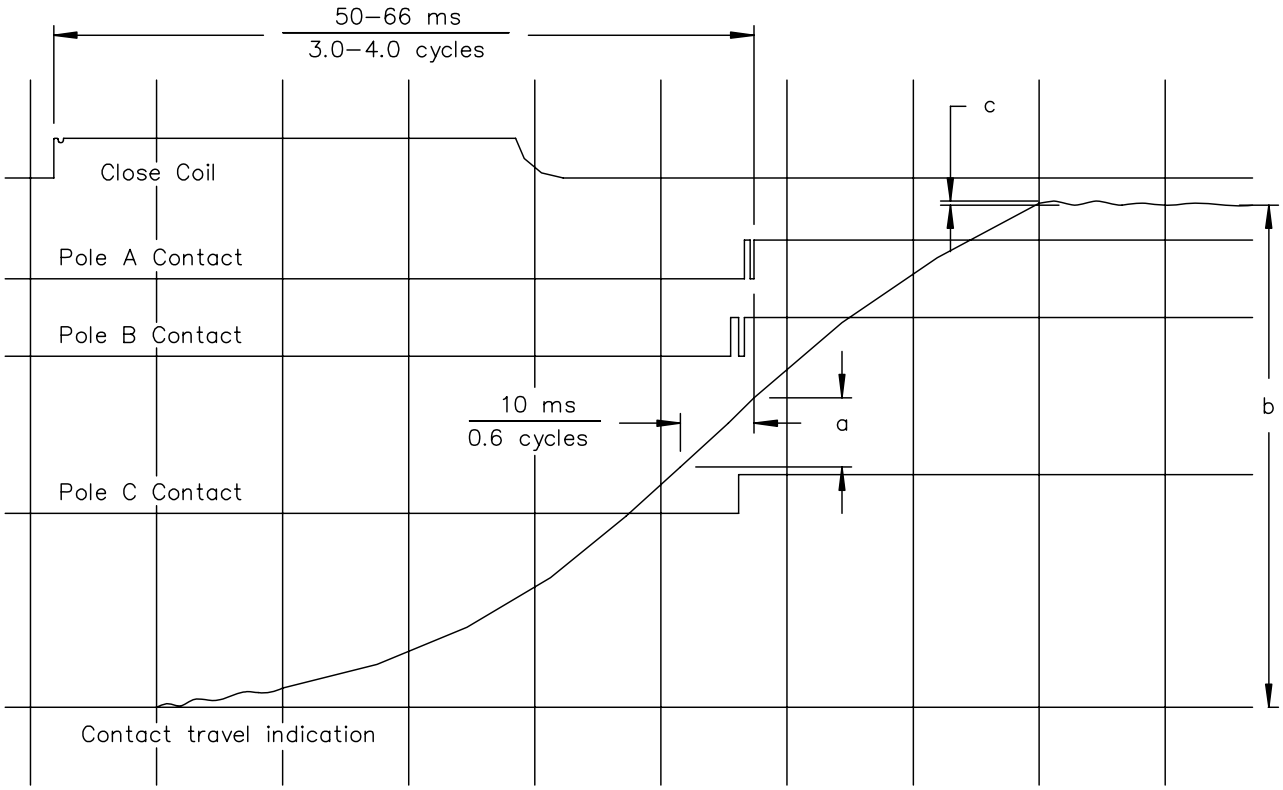

Example of Close Operation Record

Calculation For Contact Closing Velocity=
V=15.0a/b meter/second

Calculation For Overtravel/rebound=
S=15.0c/b meter/second

Note: a,b and c may be measured in any consistant units

Contact Stroke =150 mm
Transducer Stroke = 110 mm @ Linkage

Figure 6. Travel Record - Closing

N = Maximum Number of Operations
I = Breaking Current in kA per pole

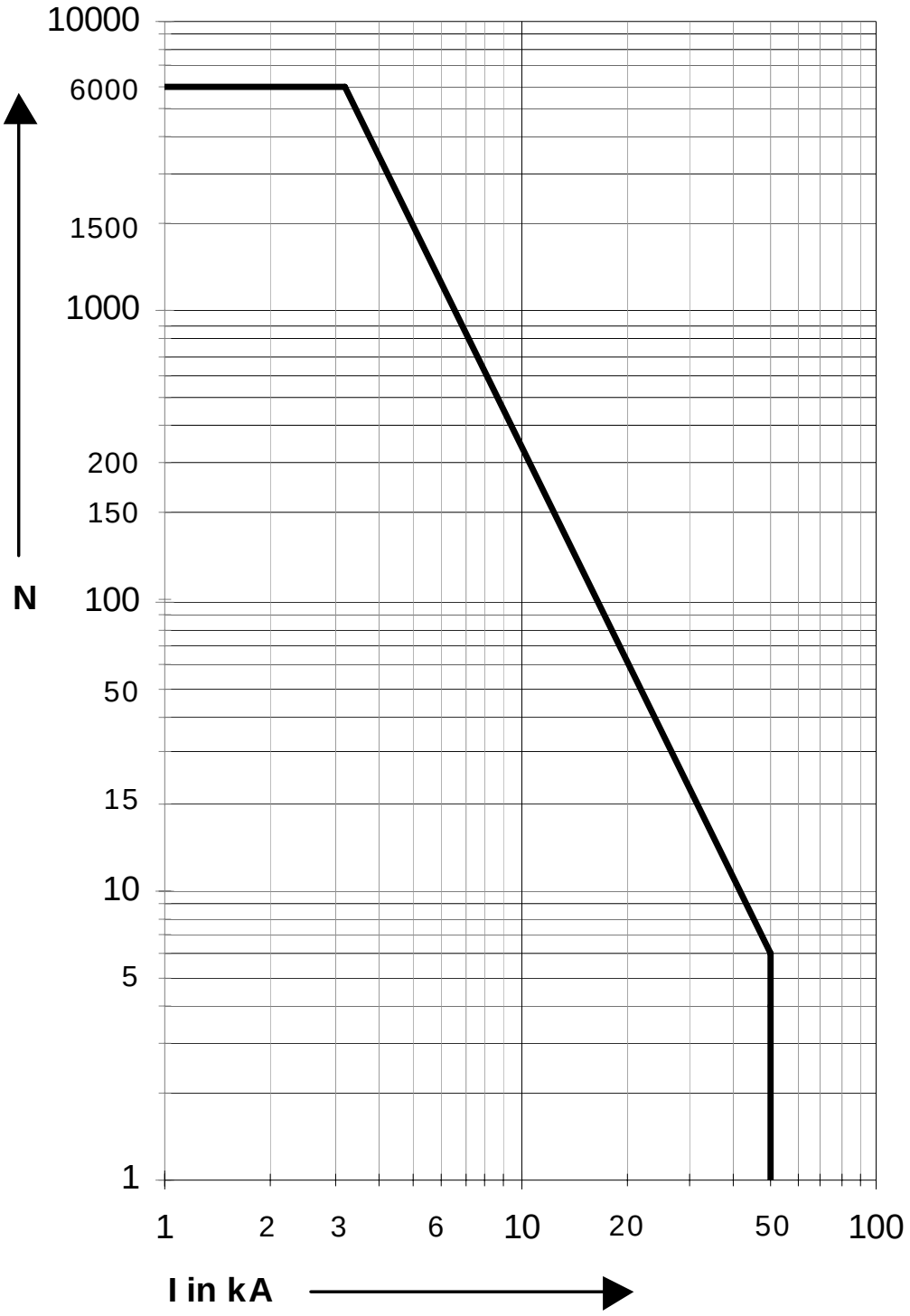

Figure 7. Operations vs Interrupting Current (Per Pole)

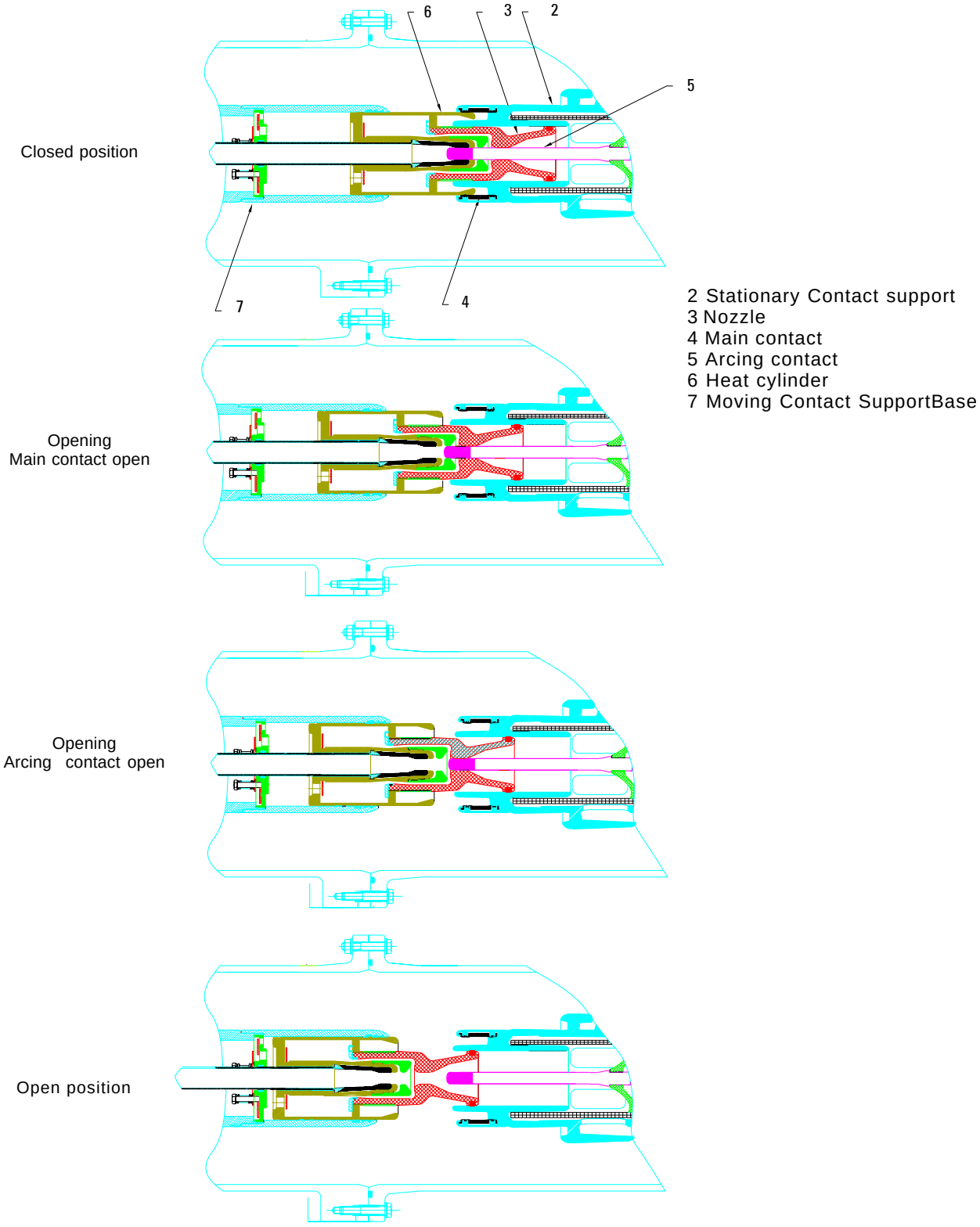

Figure 8. Interrupter Unit - Arc Quenching

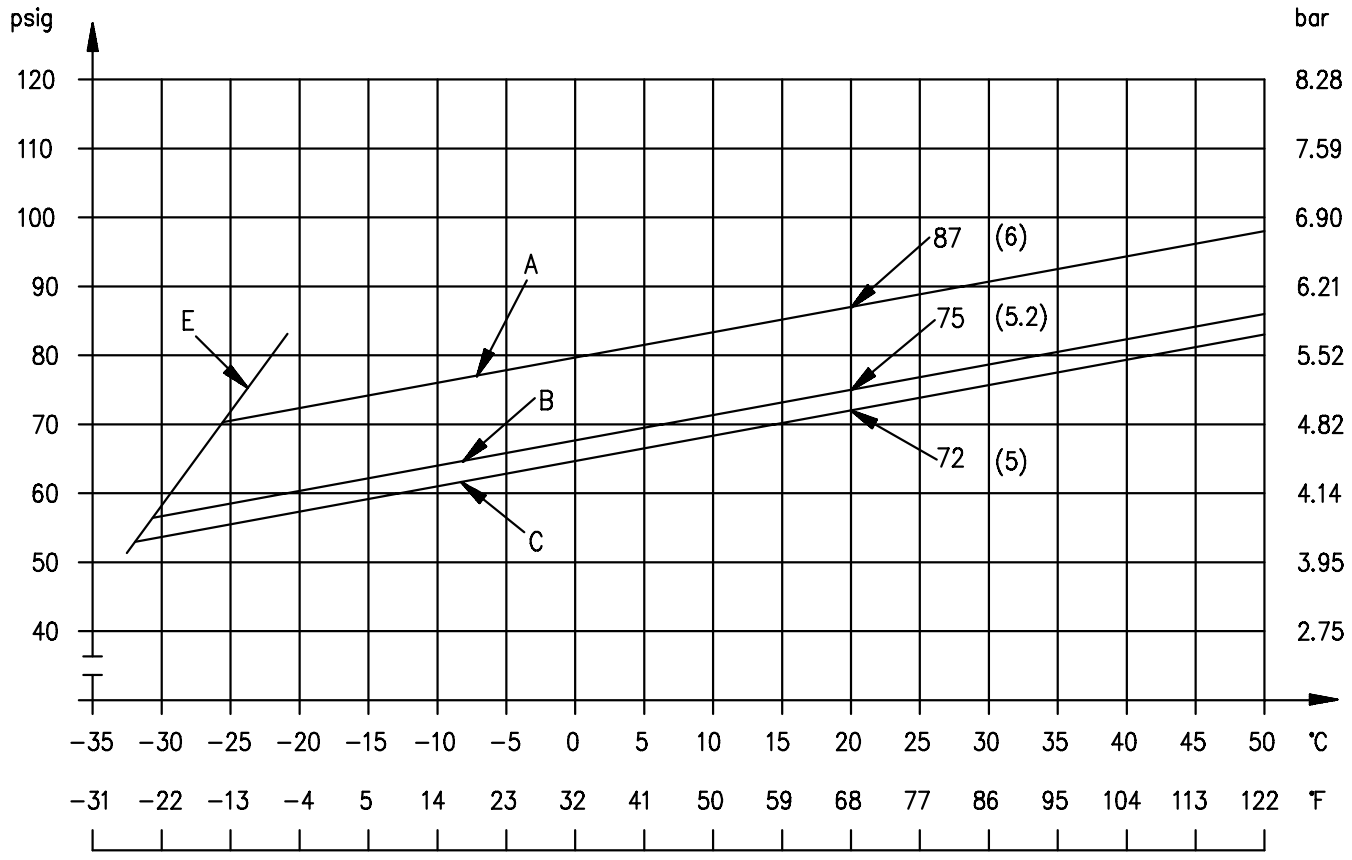

A Fill Pressure

B Low Pressure Alarm

C Minimum Pressure

E Condensation

Figure 9. Typical SF6 Pressure - Temperature Curve

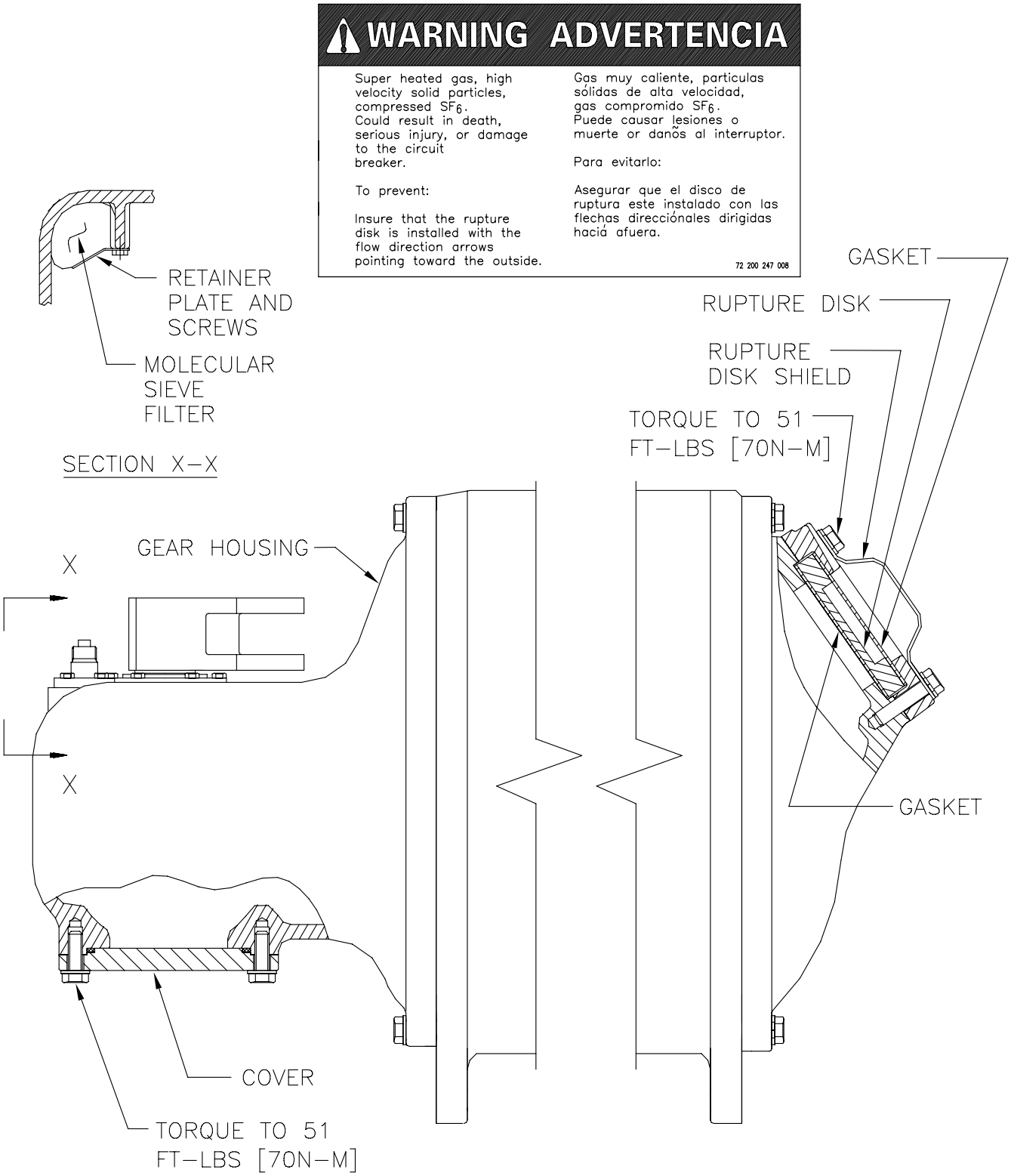

Figure 10 & 10a. Molecular Sieve Filter and Rupture Disk

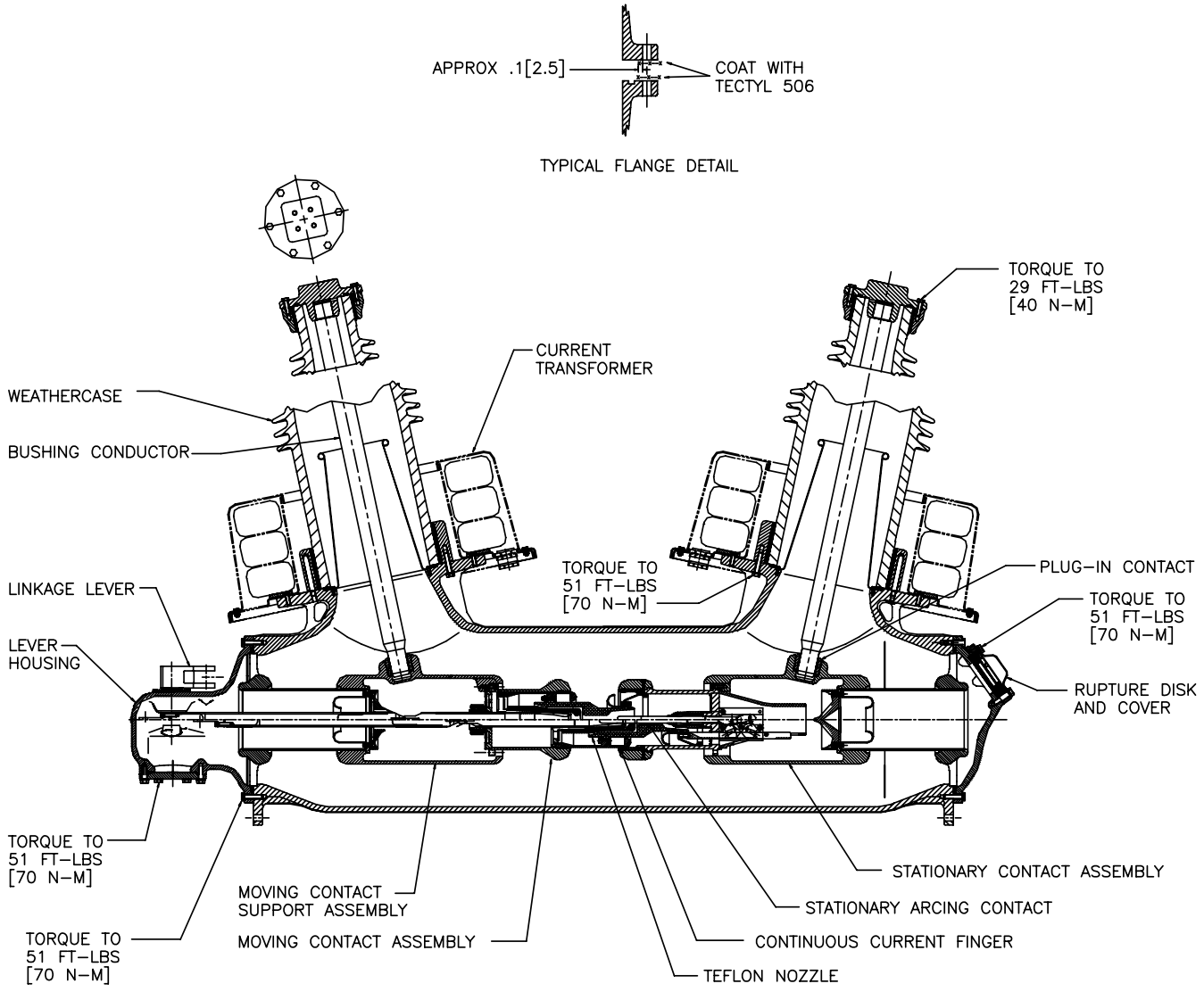

Figure 11. Pole Unit Assembly **72-183-460- 401**

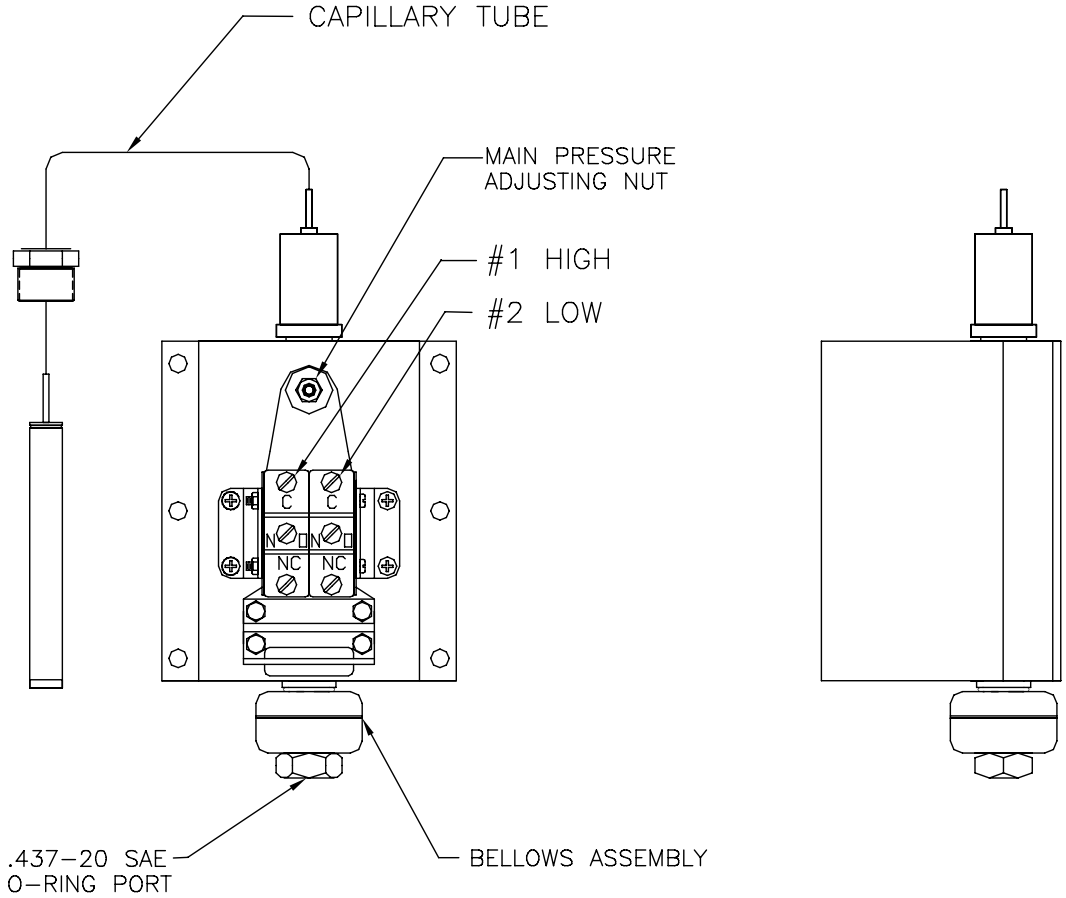

VIEW SHOWN WITH COVER REMOVED

1. Obtain a temperature/pressure curve (Fig.9 Page 40 for standard breaker) for the particular switch being tested.

2. Determine the temperature of the bulb as closely as possible. The temperature of the air around the bulb is not always an accurate indication of the temperature of the bulb itself. A thermocouple attached to the bulb, or immersing the bulb in a water bath of a known temperature are acceptable methods of determining bulb temperature.

3. Change the pressure to the switch and record the point(s) that switch action occurs. Typically the set points are calibrated on decreasing pressure, however some models are calibrated on increasing pressure. Check the temperature/pressure curve to determine if it is increasing or decreasing.

4. If the recorded set points coincide with the temperature-pressure curve, then it is reasonable to believe that the switch is in working order.

If there is reason to believe that the switch has been recalibrated in the field, the above procedure may not be adequate. A switch that has been recalibrated may be an indication of a problem, particularly if it has been recalibrated several times. If you are unsure, the following procedure will confirm the proper operation of the switch.

1. Follow previous steps 1 - 3.
2. Repeat steps 1 - 3 with the bulb at an elevated temperature. A minimum 40°F change is necessary to accurately check the change in set point due to temperature change. It will take 2-3 minutes for the bulb to adjust to a 70°F change in temperature. A thermos with hot water is an easy way to obtain this elevated temperature at remote locations. Do not exceed the maximum temperature of 140°F or damage could result. NOTE: Some special models are rated to 180°F.
3. If the set points are within tolerance at both temperatures, then the switch can be returned to service.
4. If the change in set point is the same as is called for in the graph, but the exact settings are not correct, it is possible to readjust all contacts at the same time with the main spring adjustment. By turning the main spring adjustment clockwisp all of the set points will increase together. It is considered good practice to double check the setpoints at two temperatures as a final check after final adjustments have been made. This is the only recommended field adjustment for this type switch.
5. If the change in set point is not as great as the graph cells for to the point that it is out of tolerance, then the charged bellows assembly has lost its fill. This cannot be repaired in the field and must be returned to the factory.

Figure 12. Temperature Compensated Pressure Switch

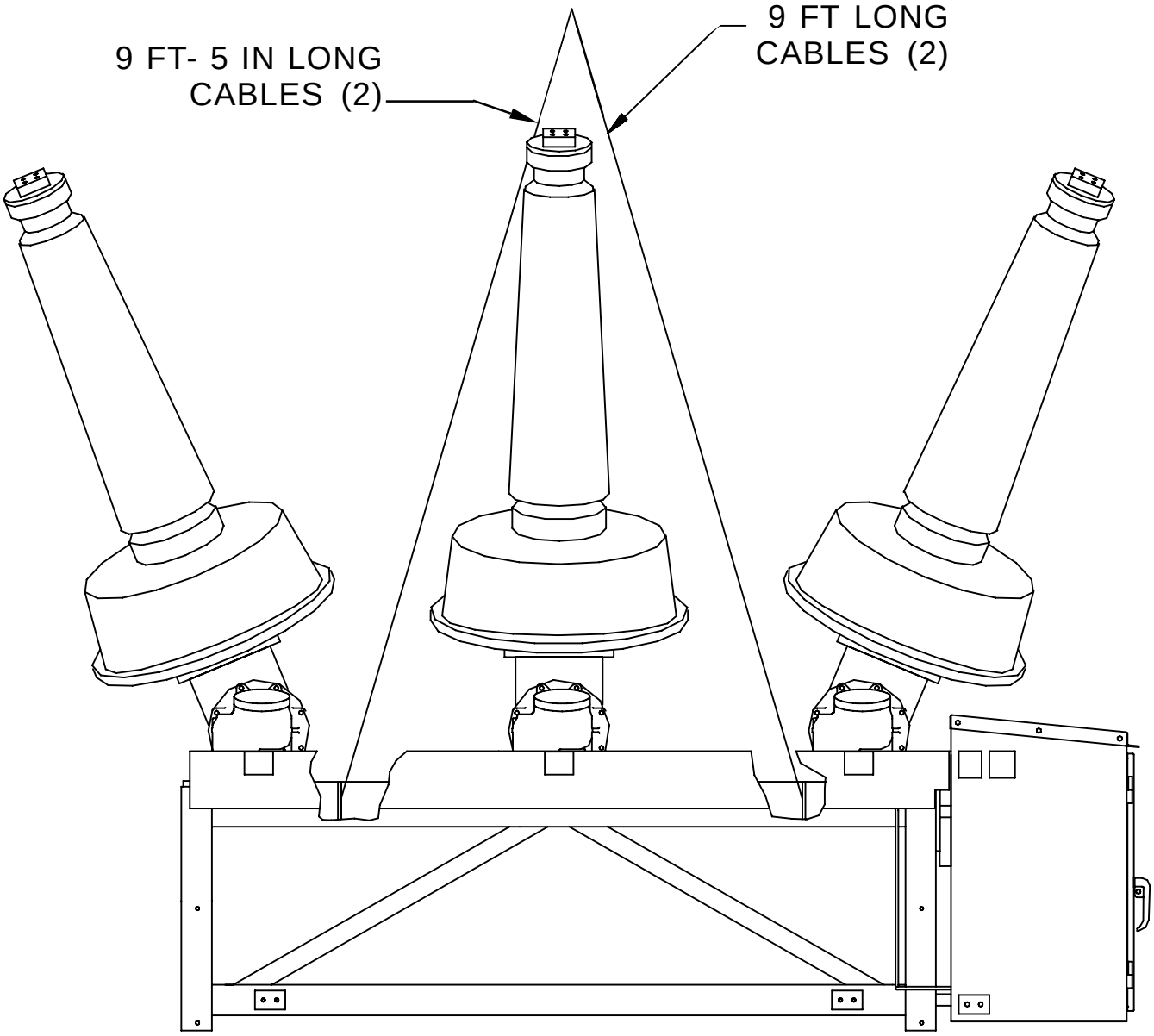

Figure 13. Breaker Lifting

72-182-945-401

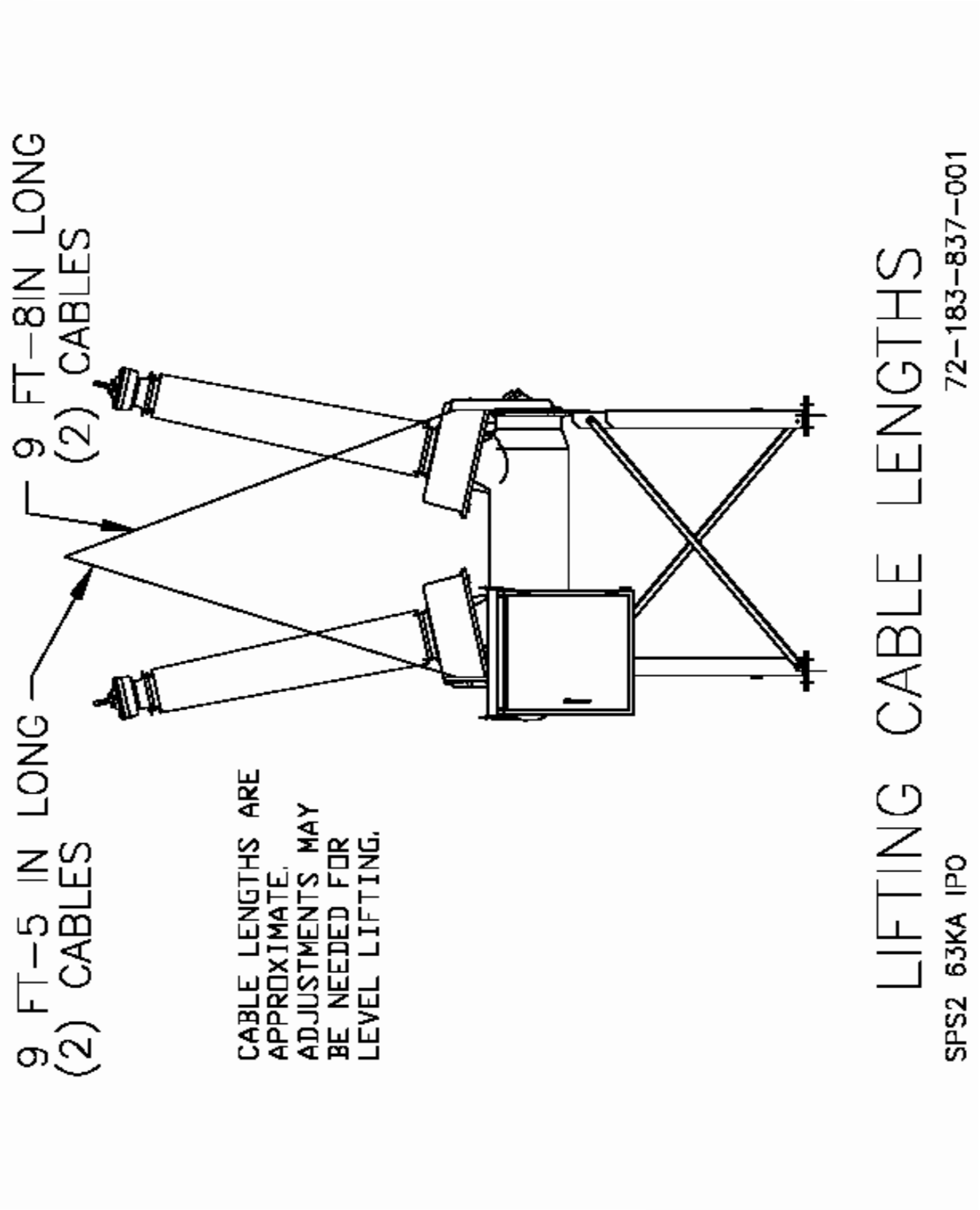
9 FT-5 IN LONG
(2) CABLES
9 FT-8IN LONG
(2) CABLES
CABLE LENGTHS ARE
APPROXIMATE.
ADJUSTMENTS MAY
BE NEEDED FOR
LEVEL LIFTING.
LIFTING CABLE LENGTHS
72-183-837-001
SPS2 63KA IPO

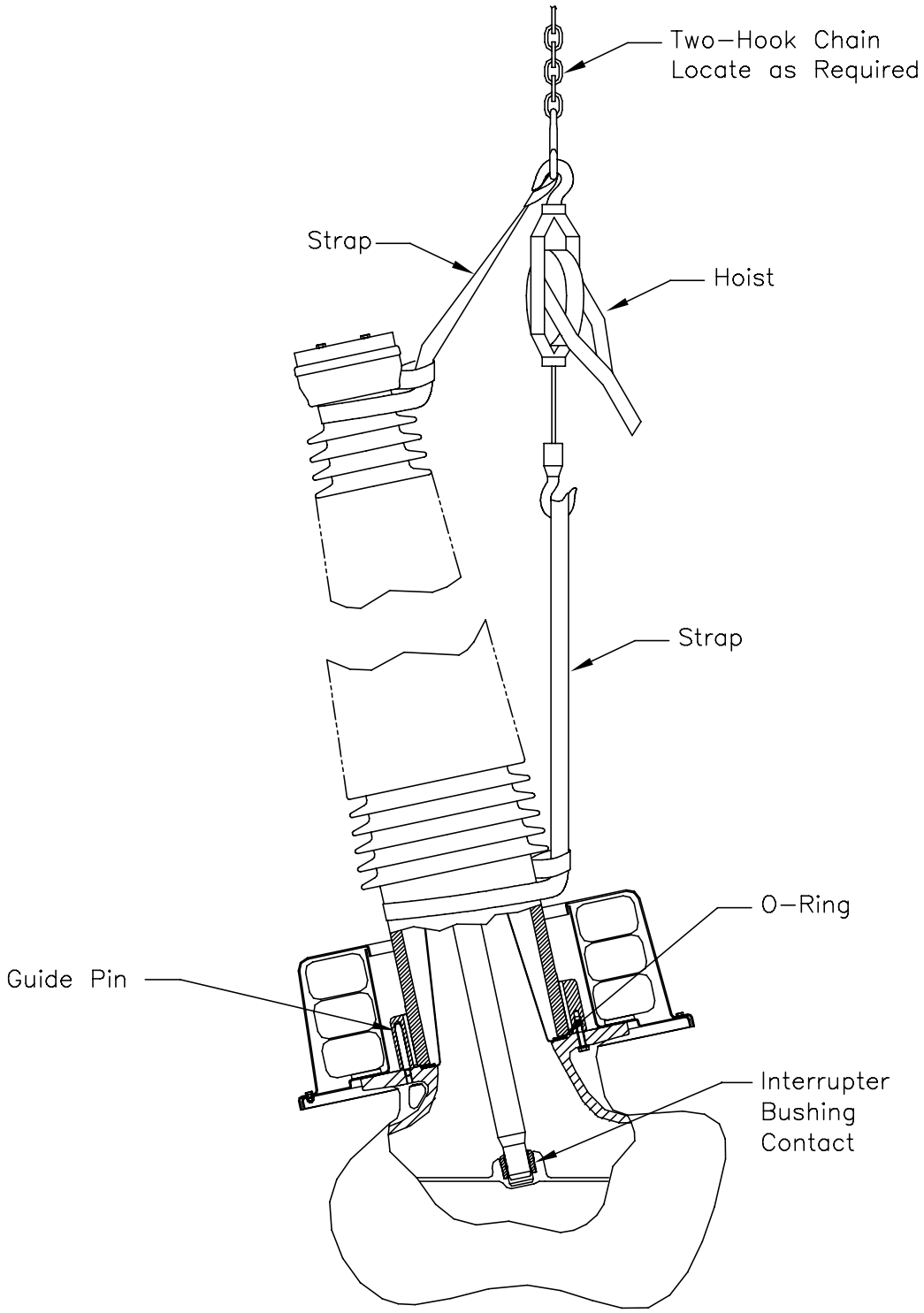

Figure 14. Insulator Lifting and Installation

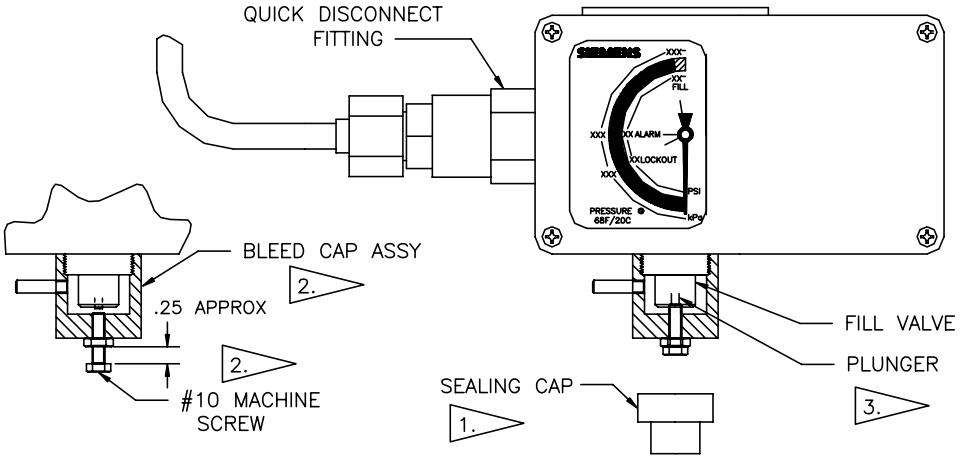

DENSITY SWITCH W/INTEGRAL GAUGE, EXTERNALLY MOUNTED

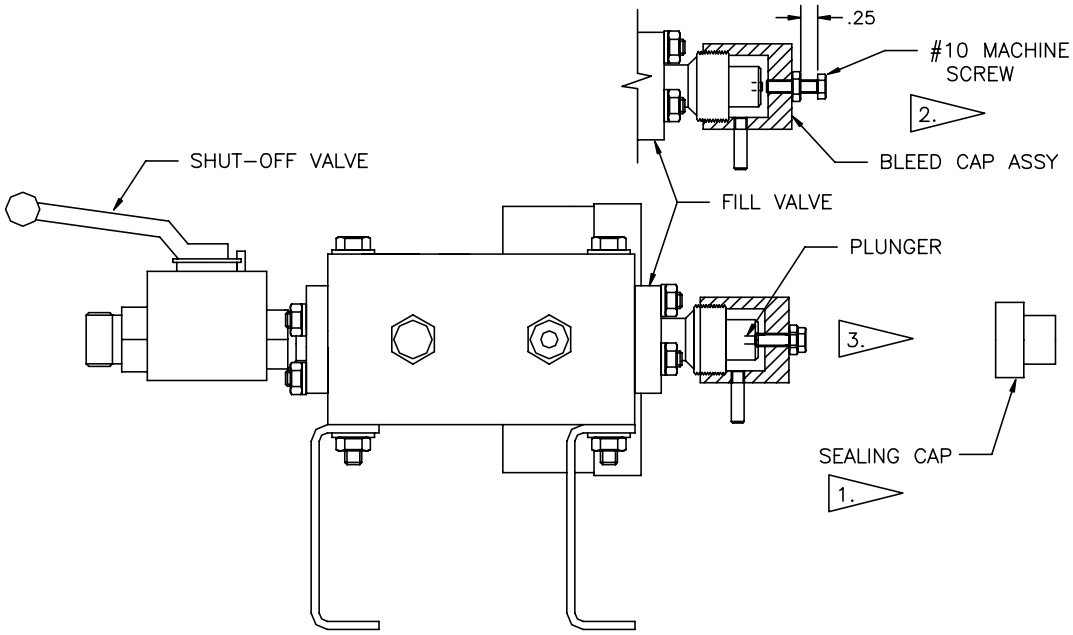

MANIFOLD ASSY, INSIDE CABINET

INSTRUCTIONS FOR USING BLEED CAP ASSY:

1. REMOVE AND RETAIN SEALING CAP.
2. WITH #10 MACHINE SCREW ADJUSTED TO APPROX. .25, SEAT BLEED CAP ASSY ONTO FILL VALVE.
3. TO BLEED UNIT, TURN SCREW CLOCKWISE TO DEPRESS PLUNGER IN FILL VALVE.
4. REVERSE PROCEDURE WHEN BLEEDING COMPLETE.

Figure 15. Bleed Cap Instructions

Density Switch/Gauge Testing Instructions

The standard density switch/gauge has a total of three form "C" contacts, one set to actuate at the alarm density level and two set to actuate at the minumum density level, which is typically a lock-out point. These switch settings are factory set and require no adjustment. Because the density switch and gauge are internally temperature compensated, testing of the switch actuation points is simplified and can be done using the following procedures.

1. From the fill point that is labelled on the gauge face, drop the density slowly.

2. Record the point at which the switch contacts actuate. This point should correspond closely to the set points labelled on the gauge face.

If a problem is suspected, contact the local Siemens Representative.

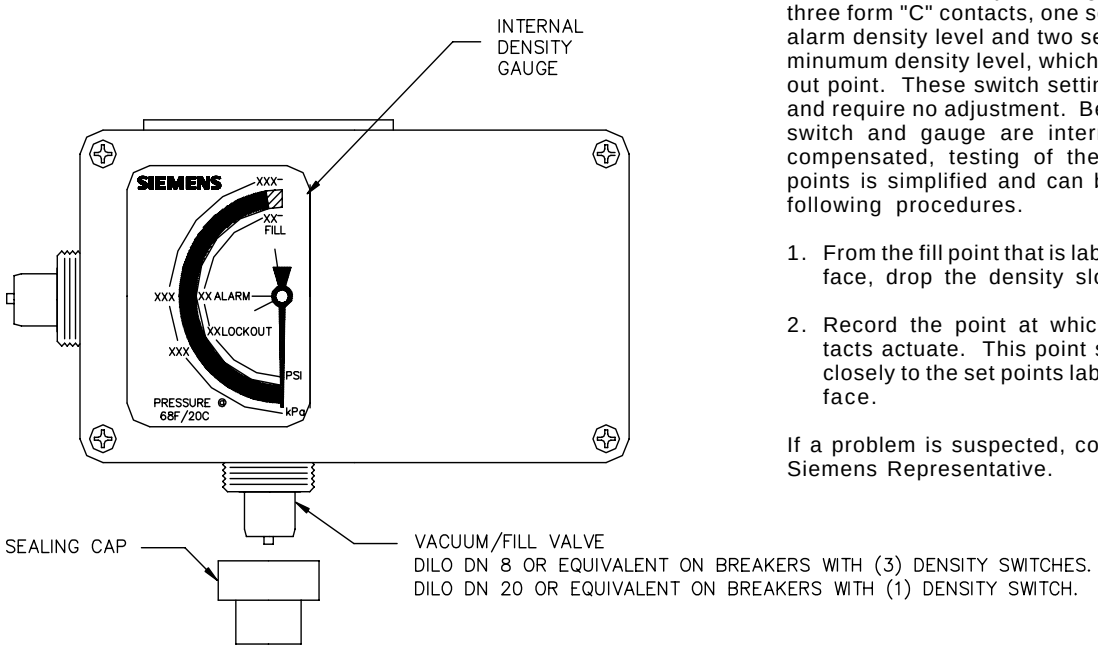

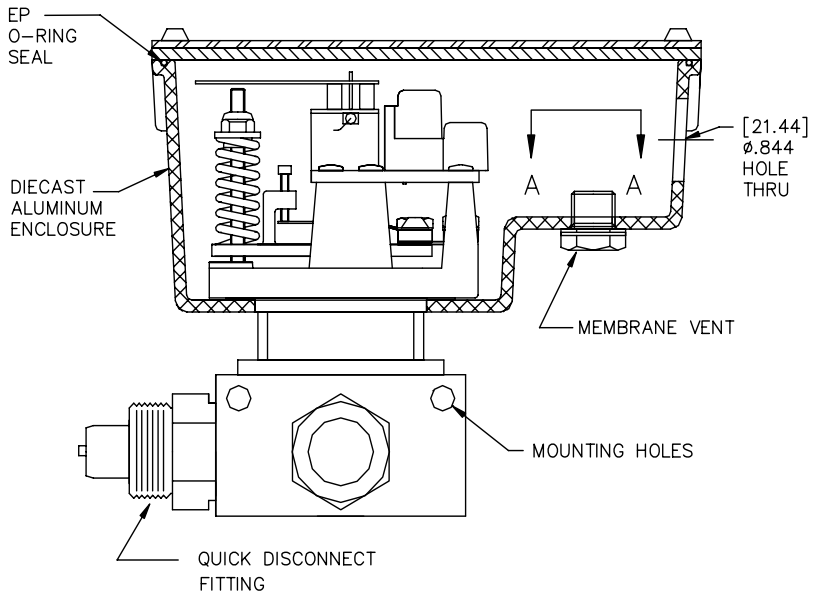

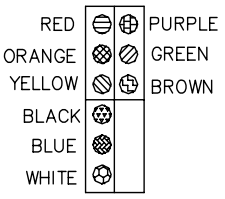

VIEW A–A
WIRE COLOR CODE LABEL

SWITCH 2 SET AT 71.0±1.5 PSI DEC @ 68F	NC NO C		NC NO C	SWITCH 3 SET AT 71.0±1.5 PSI DEC @ 68F
SWITCH 1 SET AT 74.6±1.5 PSI DEC @ 68F	NC NO C		NC NO C	UNUSED

WIRING SCHEMATIC

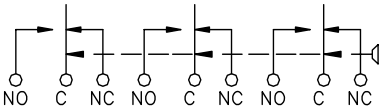

3 S.P.D.T. SWITCHES
WIRING DIAGRAM

Figure 16. Temperature Compensated Density Switch(Solon) **72-183-179-406**

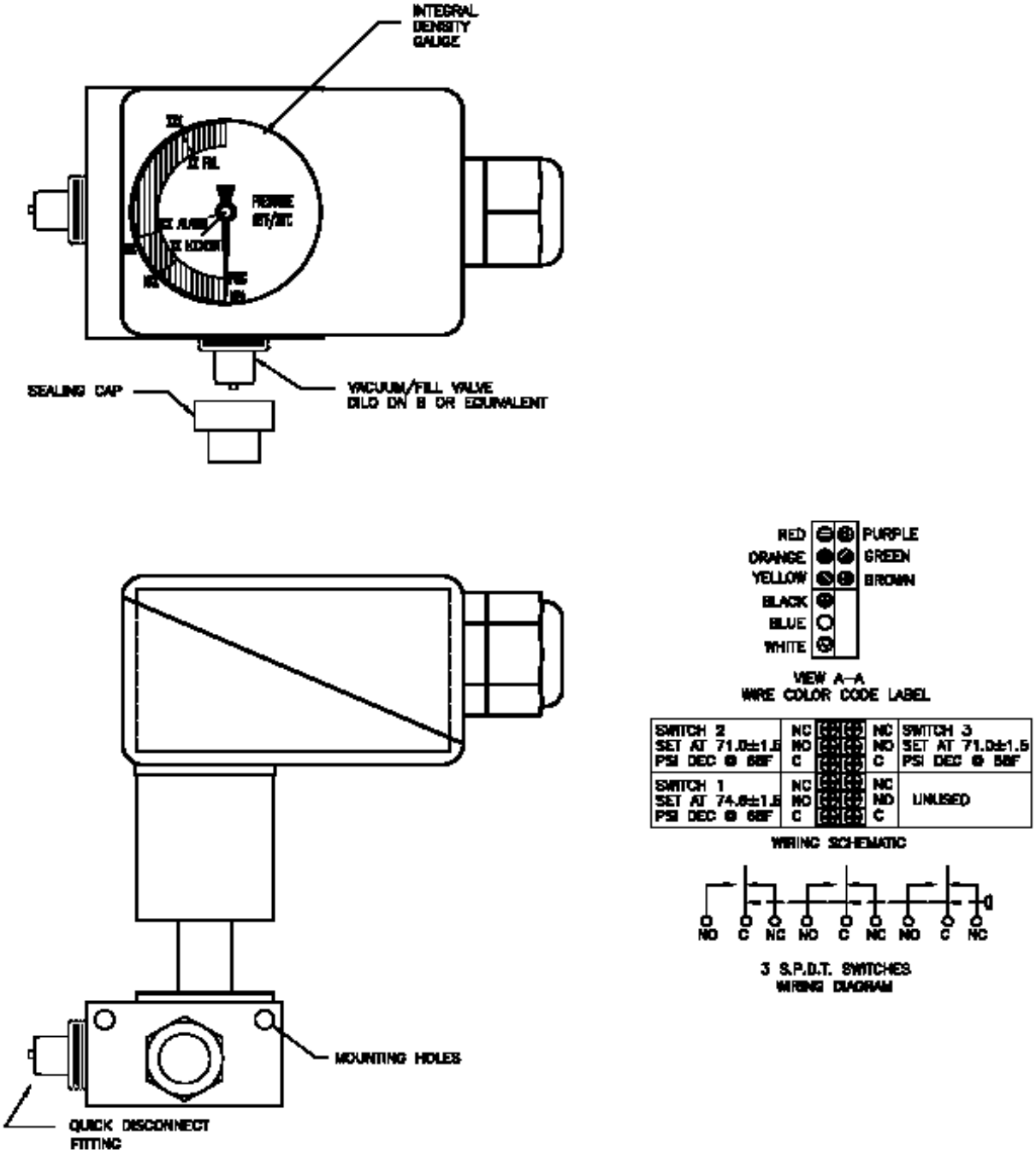

Figure 16.a Temperature Compensated Density Switch (Trafag)

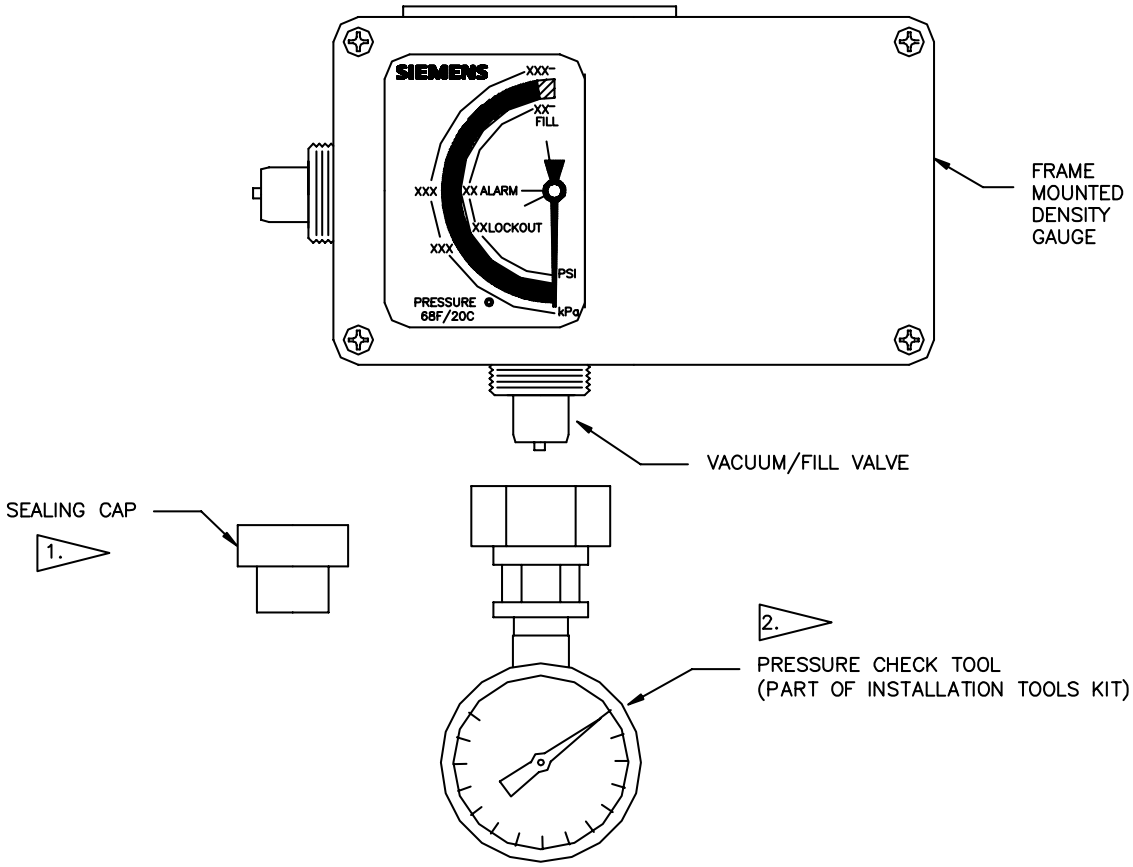

3.

CAUTION

Leaving the pressure check tool installed could cause the gas system to become de–pressurized.

Could result in death, serious injury, or damage to the circuit breaker.

To prevent:

Remove pressure check tool and install sealing cap.

INSTRUCTIONS FOR USING PRESSURE CHECK TOOL.

1. REMOVE AND RETAIN SEALING CAP.
2. INSTALL PRESSURE CHECK TOOL.
3. REMOVE PRESSURE CHECK TOOL AFTER USE AND REPLACE SEALING CAP.

Figure 17. Pressure Check Tool Instructions

TABLE 1

Operating Characteristics

A. SF_6 Switch

Fill Pressure	87 psig @ 68° F [6.0 bar @ 20° C]
Low Pressure Alarm	75 psig @ 68° F [5.2 bar @ 20° C]
Minimum Pressure	72 psig @ 68° F [5.0 bar @ 20° C]

B. Operating Requirements

Timing Data

Contact Part Time (Opening)	24 - 30 milliseconds
Opening Velocity	5.0 - 5.7 m/sec
Contact Make Time (Closing)	50-66 milliseconds max.
Closing Velocity	3.5 - 4.6 m/sec
Reclosing Time	300 milliseconds
Contact Stroke	5.91 in [150mm]
Transducer Stroke @ Linkage	4.33 in [110 mm]

C. Pole Unit Resistance

Current Rating	Bushing Rating	New Contact micro-ohms	Used Contact micro-ohms
1200-3000 amp	900 kV BIL	140	160
1200-3000 amp	1050 kV BIL	160	180
1200-3000 amp	382 in. Creep	180	200

Contents

Table of Contents for Appendixes

Appendix I **Page**

Safety Alerts

Introduction 55
Qualified Person 55
Pre-Operational Checks..... 56
Operating 56

Function of the Spring Stored Energy Mechanism

Charging the Closing Spring 57
Closing Process 57
Opening Process 57

Inspection, Maintenance and Part Replacement

Inspection 58
Functional Checks 58
Maintenance 58
Solenoid Installation and Replacement 58
Motor Installation and Replacement 58

Appendix II

Polarity Test With Oscilloscope 76
Insulation Resistance 77

Appendix III

Capacitor Mounting.....78

Illustrations **Page**

1a Function Diagram of Mechanism Latching..... 59

2a Function of Free-Wheel 60
Charging of the Closing Spring

3a Function Diagram of Mechanism Latching 61
Open State, Closing Spring Charged

4a Function of Free-Wheel 62
Uncoupling the Charging Gear

5a Function Diagram of Mechanism Latching 63
Release of Closing Latch

6a Function Diagram of Mechanism Latching 64
Closing

7a Function Diagram of Mechanism Latching 65
Overtravel of the Lever During Closing

8a Function Diagram of Mechanism Latching 66
Latched in the Closed Position

9a Function Diagram of Mechanism Latching 67
Latching of the Charged Closing Spring

10a Function Diagram of Mechanism Latching: 68
Release of the Opening Latch

11a Functional Diagram of Spring Drive 69
Mechanism and Linkage Assembly

12a Mechanism Motor Mounting 70
12b Mechanism Motor Mounting (IPO)..... 71
13a Trip and Close Solenoids 72
14a Typical Wiring Diagram 73
15a Typical Auxiliary Switch 74
16a Ratio Check Connections 75
17a Polarity Check Connections 76
18a Capacitor Mounting 78

Important

The information contained herein is general in nature and not intended for specific application purposes. It does not relieve the user of responsibility to use sound practices in application, installation, operation, and maintenance of the equipment purchased. Siemens reserves the right to make changes in the specifications shown herein or to make improvements at any time without notice or obligations. Should a conflict arise between the general information contained in this publication and the contents of drawings or supplementary material, or both, the latter shall take precedence.

Safety Alerts

Introduction

The successful field performance of this operating mechanism and the breaker in which it is installed depends as much on proper installation and maintenance as it does on good design and careful manufacture. Refer to the appropriate section of this manual before performing any installation or maintenance.

The instructions included in this book are necessary for safe installation, maintenance and operation and to aid you in obtaining longer and more economical service from your Siemens circuit breakers. For proper installation and operation - resulting in better service and lower maintenance costs - this information should be distributed to your operators and engineers.

By carefully following these instructions, difficulties should be avoided. However, they are not intended to cover all details or variations that may be encountered during the installation, operation and maintenance of this equipment.

Should additional information be desired, including replacement instruction books, contact your Siemens representative.

Distinctive signal words (DANGER, WARNING, CAUTION) are used in this instruction book to indicate degrees of hazard that may be encountered by the user. For the purpose of this manual and product labels these signal words are defined below.

DANGER	Indicates an imminently hazardous situation which, if not avoided, **will** result in death or serious injury.
WARNING	Indicates a potentially hazardous situation which, if not avoided, **could** result in death or serious injury.
CAUTION	Indicates a potentially hazardous situation which, if not avoided, **may** result in minor or moderate injury.

DANGER

Hazardous voltage and mechanisms. Death or serious injury from electrical shock, burns and entanglement in moving parts will result from misuse.

To prevent:

Do not service or touch until you have de-energized high voltage, grounded all terminals and turned off control voltage. Grounding terminals with line to ground capacitors may produce a small arc.

Only qualified personnel should work on or around this equipment after becoming thoroughly familiar with all warnings, safety notices, instructions and maintenance procedures contained herein.

The successful and safe operation of this equipment is dependent upon proper handling, installation, operation and maintenance.

Qualified Person

For the purpose of this manual, a qualified person is one who is familiar with the installation, construction involved. In addition, he or she has the following qualifications:

a) Is trained and authorized to energize, de-energize, clear, ground, and tag circuits and equipment in accordance with established safety practices.

b) Is trained in the proper care and use of protective equipment such as rubber gloves, hard hat, safety glasses or face shields, flash clothing, etc., in accordance with established safety practices.

c) Is trained in rendering first aid.

Safety Alerts

Pre-Operational Checks

When installing, adjusting, maintaining, inspecting or replacing parts of the operating mechanism, the following pre-operational checks should be followed.

1. Read the circuit breaker instruction book supplied with the circuit breaker. Check for proper installation and maintenance by following the appropriate sections of the book.
2. Read this entire instruction book. Become thoroughly familiar with all warnings, safety notices, instructions and maintenance procedures contained herein.
3. Discharge the energy storage springs, both the opening spring and the closing spring.
4. Disconnect control power to the operating mechanism.

DANGER

Manual operation of close or trip mechanisms in an energized breaker with insufficient SF_6 gas will result in death, serious injury, or damage to the circuit breaker.

To prevent:

Make sure that the SF_6 pressure is above the lockout value before manual operation.

Operating

The FA4/FA-2 operating mechanism stores the energy necessary to close the circuit breaker and at the same time charge the breaker opening spring. When operated, the mechanism moves with great speed and generates high forces. These factors dictate that the mechanism be installed and maintained correctly, and operated with due caution.

DANGER

Hazardous voltage and mechanisms.
Death or serious injury from electrical shock, burns and entanglement in moving parts will result from misuse.

To prevent:

This equipment should be installed, operated and maintained only by qualified persons thoroughly familiar with the equipment instruction manual and drawings.

Function of the Spring Stored Energy

Charging the Closing Spring

Starting position: the breaker is in the open state. The closing and opening springs are relaxed, i.e. a switching operation is not possible. The cam plate 18.6 and the connecting rod 18.10 are at the lower dead center point. The fixed coupled levers 18.7 and 18.24 are in the open position (Fig.1a).

To charge the closing spring, the charging shaft 18.14 is rotated by means of the charging motor 18.1 and gears 18.2. The free-wheel 18.3 engages in the cam of the charging shaft 18.14 (Fig.2a) and rotates it as far as the upper dead center point.

The charging shaft 18.14 is then turned as far as the closing latch 18.17 more quickly by the effect of the partly relaxed closing spring 18.4 than by the free- wheel, i.e. the form-fit between the free- wheel of the charging gear and the charging shaft is cancelled and the charging shaft outpaces the charging gear. Before the cam plate 18.6 is stopped in the position 10° beyond the upper dead center by means of the roller 18.23 and the closing latch 18.17 (Fig.3a), the cam 18.19 fixed to the mechanism housing disengages the free-wheel 18.3 from the charging shaft 18.14 (Fig.4a).

Charging shaft 18.14 and gear 18.2 are thereby separated. The motor is shut down automatically at 10° beyond the upper dead center and runs down with the gearing. The closing spring is charged and the operating mechanism ready for the closing process..

At the same time the opening spring 18.11 is charged by way of the operating lever 18.24 and the connecting rod 18.27. The opening latch 18.9 moves along the roller and the latch lever 18.91 (Fig.6a). At the end of the curve, the lever 18.7 over travels, with the result that the opening latch 18.9 can drop behind the roller of the latch lever 18.9.1 (Fig.7a).

At the end of the closing process, the roller 18.41.1 of the closing damper 18.41 moves along the cam of the backstop 18.18 and reduces the residual energy of the closing spring 18.4 (Fig.7a). The roller 18.41.1 then jumps behind the cam of the backstop 18.18 and prevents backswing of the charging shaft 18.14 (Fig. 8a).

When it leaves the cam 18.6, the lever 18.7 turns back a little in the opening direction, until the opening latch 18.9 is resting on the roller of the latch lever 18.9.1 (Fig. 8a). The circuit breaker is now latched in the closed state.

As the closing process takes place, the charging motor is switched on. The charging of the closing spring is repeated according to paragraph "05 - Charging the Closing Spring".

The charging shaft is subsequently latched with the charged closing spring at a position about 10° beyond the upper dead center (Fig.9a). Repeated actuation of the closing trip coil is prevented by mechanical interlocking 18.31 (see Fig.9a).

The closing and opening springs are charged and the circuit breaker is consequently ready for an O-C-O switching sequence.

Closing Process

Activation of the closing coil 18.16 disengages the lever and the closing latch 18.17.1 / 18.17 (Fig.5a).

The effect of the closing spring turns the charging shaft 18.14 (Fig.6a). The roller 18.7.1 of the lever 18.7 moves along the cam 18.6 and transmits the movement to the operating shaft 18.22. The movement is then transmitted by the lever 18.24 (fixed to the operating shaft 18.22) via the connecting rod 18.27 and the operating mechanism rod 18.27.1 to the interrupter unit 22. The contacts of the interrupter unit 22. are closed.

Opening Process

Activation of the trip coil "Open" 18.8 disengages the opening latch 18.9 via levers 18.9.1 and 18.9.2. The lever 18.24 with lever 18.7 is moved into the open position by the opening spring 18.11 via the connecting rod 18.27 (Fig.10a). At the same time the contacts of the interrupter unit 22. are moved in to the open position by way of the operating mechanism rod 18.27.1.

At the end of the opening movement the kinetic energy is absorbed by the damper (for opening) 18.15. The damper serves also as end stop.

Inspection Maintenance and Part Replacement

Inspection

1. Visually check the trip and close dampers for any leaks (oil on damper, cylinders, or springs).

2. Check for loose hardware.

Functional Checks

Perform open, close, close-open, and open-close-open operations to insure satisfactory operation of the mechanism.

Maintenance

No mechanical adjustment of the FA-4/FA-2 mechanism is required or provided for. User serviceable parts are limited to the replacement of the motor and close and trip solenoids. Contact your Siemens representative if any problems not related to the electrical control of the mechanism occur.

Solenoid Installation and Replacement

The procedure for replacing the trip and close solenoids are identical.

1. Remove the solenoid mounting plate and solenoid to be replaced.

2. Set the plunger on the solenoid to be installed to .890+-.012 in [22.6+-0.3 mm] using the adjusting nut and jam nut. See Fig 13a, Detail Y.

3. Assemble the solenoid to the mounting plate in the proper position per Fig. 13a. Torque the solenoid mounting bolts to 27 in. lbs. [3N-M].

4. Reattach the solenoids and mounting plate to the mechanism. Torque the mounting plate bolts to 71 in. lbs. [8N-M].

Motor Installation and Replacement

See Fig. 12a. (FA-4)

1. Support the motor and remove the motor mounting plate to mechanism screws.
2. Lower the motor and plate from the mechanism.
3. Remove the mounting plate from the motor.
4. Assemble the new motor to the mounting plate. Lubricate the motor to mounting plate screws and torque to 71 in.lbs. [8N-M].
5. Install the new motor with backing plate in the mechanism. Lubricate and torque the mounting plate to mechanism screws to 15 ft.lbs. [20N-M].

See Fig. 12b. (FA-2)

1. Remove the retaining ring and washer from the motor gear shaft. Support the motor and remove the motor mounting place to mechanism screws.
2. Lower the motor from the mechanism.
3. Remove the mounting plate from the motor.
4. Assemble the new motor to the mounting plate. Lubricate the motor to mounting plate screws and torque to 36 in. lbs. [8N-M].
5. Support the motor shaft and install the gear using the roll pin.
6. Lubricate the motor gear with Isoflex Topas L32 grease.
7. Hold the brake segments and springs in place and install the motor in the mechanism. Lubricate and torque the mounting plate to mechanism screws to 15 ft. lbs. [20N-M].
8. Install the washer and retaining ring on the end of the motor gear shaft.

DANGER

Hazardous voltage and mechanisms.
Death or serious injury from electrical shock, burns and entanglement in moving parts will result from misuse.

To prevent:

1. Do not trip or close the breaker unless you are clear of all moving parts.

2. Disconnect the breaker and its mechanism from all electrical power before performing maintenance or inspection. Grounding leads should be properly attached and the framework grounded.
3. Discharge the breaker's energy storage springs before performing maintenance, inspection, or part replacement.

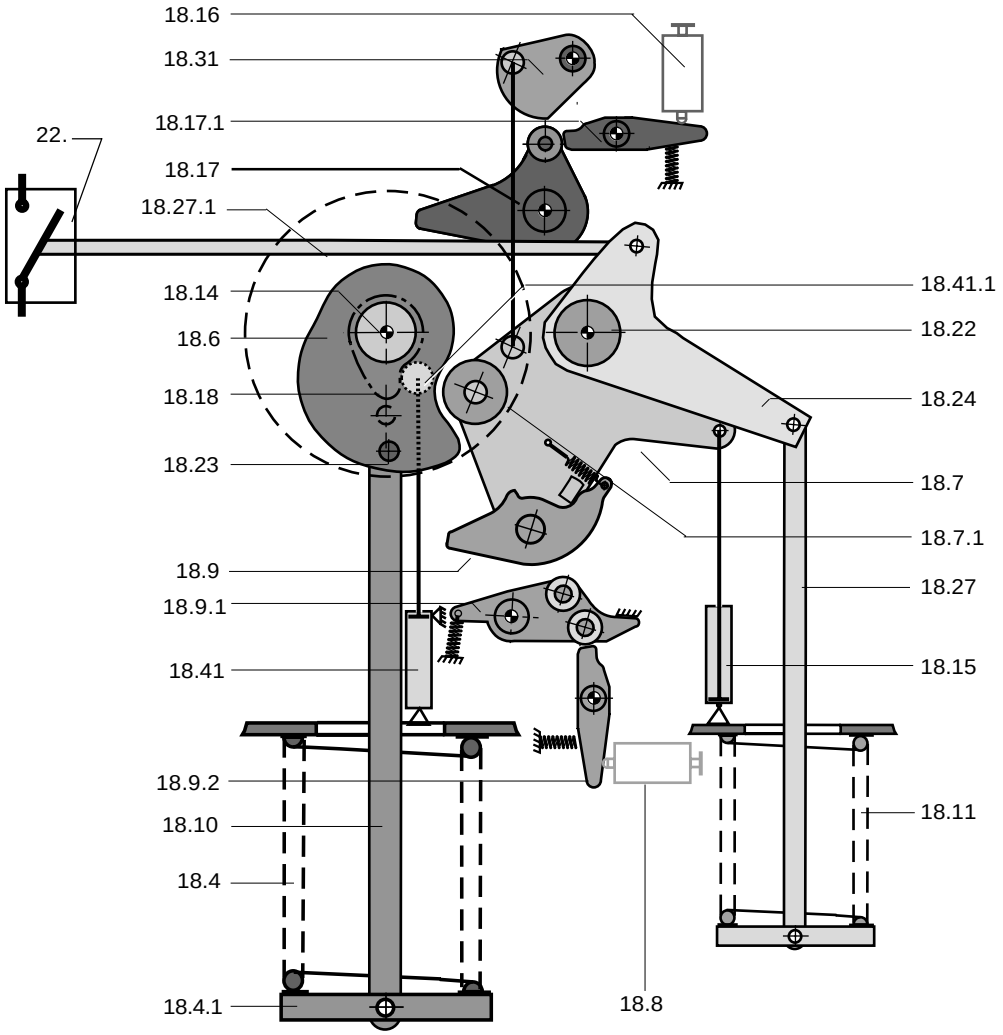

18.4	Closing spring
18.4.1	Spring washer
18.6	Cam plate
18.7	Lever
18.7.1	Roller
18.8	Tripping coil (for opening)
18.9	Opening latch
18.9.1	Latch lever
18.9.2	Lever
18.10	Connecting rod (for closing spring)
18.11	Opening spring
18.14	Charging shaft
18.15	Damper (for opening)
18.16	Closing coil
18.17	Closing latch
18.17.1	Lever
18.18	Backstop
18.22	Operating shaft
18.23	Roller
18.24	Operating lever
18.27	Connecting rod (for opening spring)
18.27.1	Operating mechanism rod
18.31	Mechanical closing interlock
18.41	Damper (for closing)
18.41.1	Roller
22.	Interrupter unit

Fig. 1a Function Diagram of Mechanism Latching

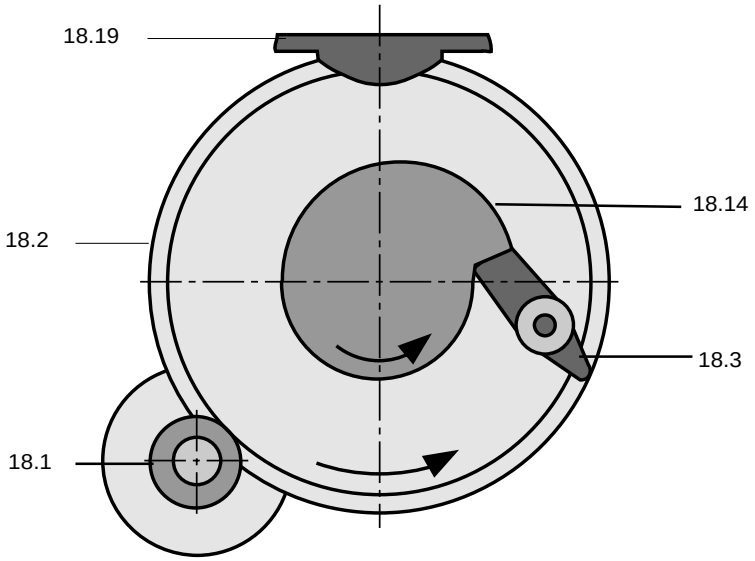

18.1	Charging motor
18.2	Charging gear
18.3	Free-wheel
18.14	Charging shaft
18.19	Cam

Fig. 2a Function of the Free-Wheel: Charging of the Closing Spring

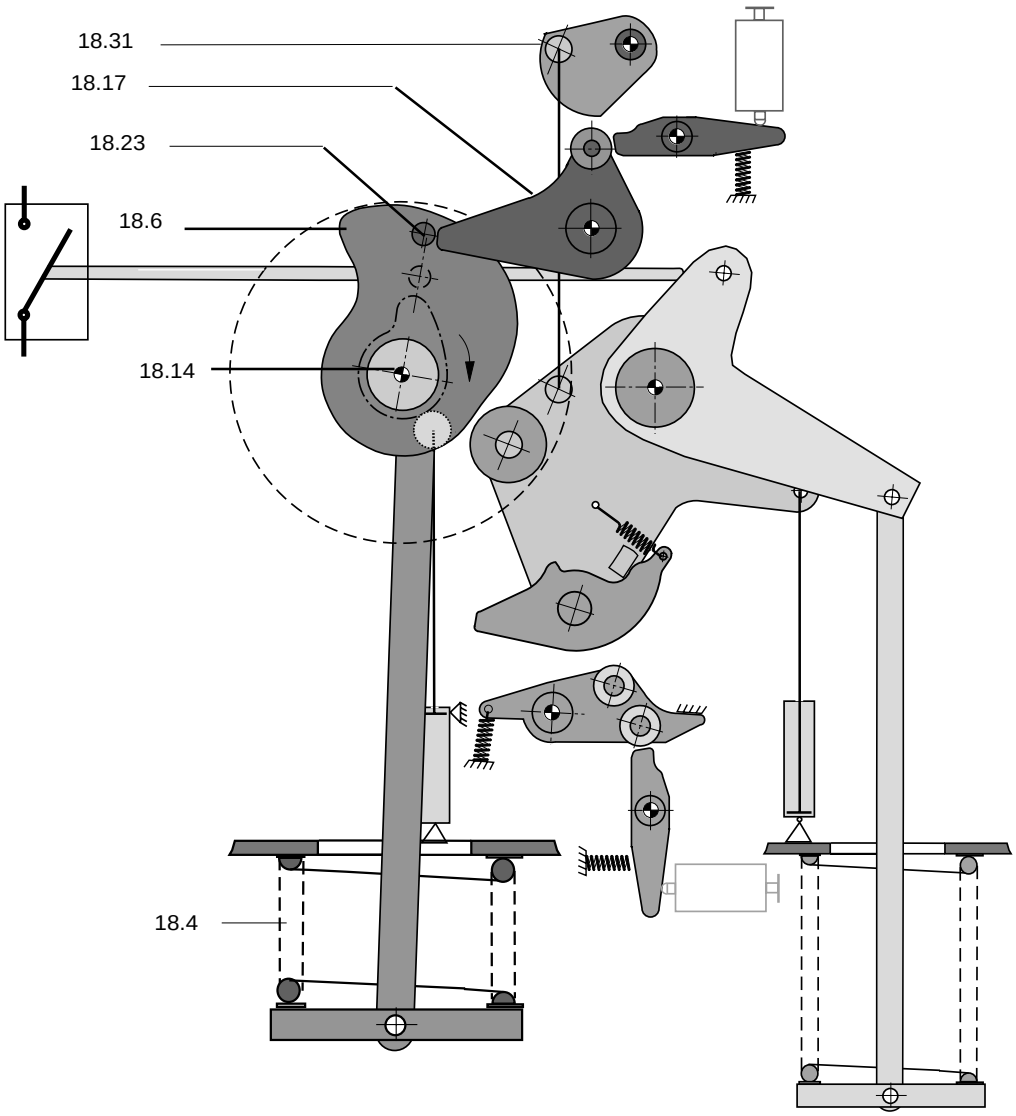

18.4	Closing spring
18.6	Cam plate
18.14	Charging shaft
18.17	Closing latch
18.23	Roller
18.31	Mecanical closing interlock

Fig. 3a Function Diagram of Mechanism Latching: Open State, Closing Spring Charged

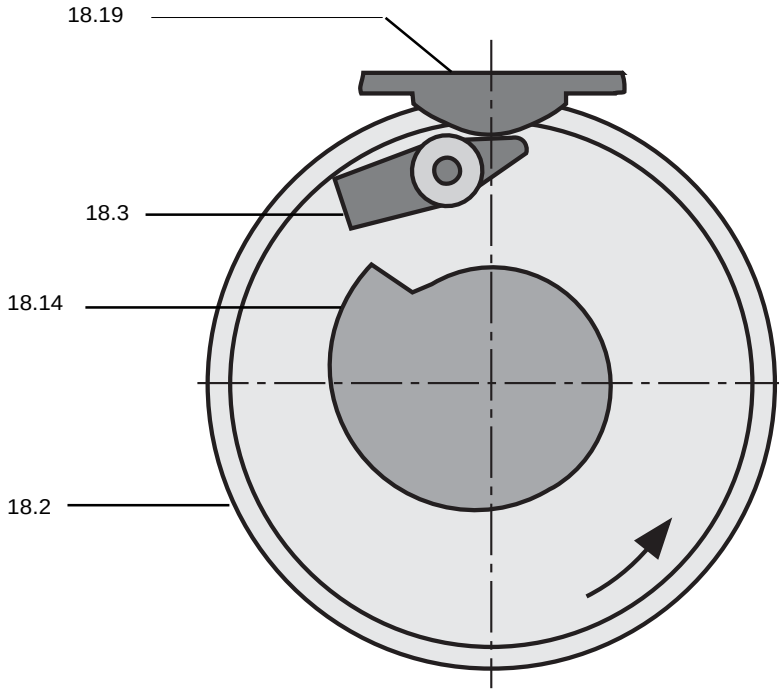

18.2 Charging gear
18.3 Free-wheel
18.14 Charging shaft
18.19 Cam

Fig. 4a Function of the Free-Wheel: Uncoupling the Charging Gear

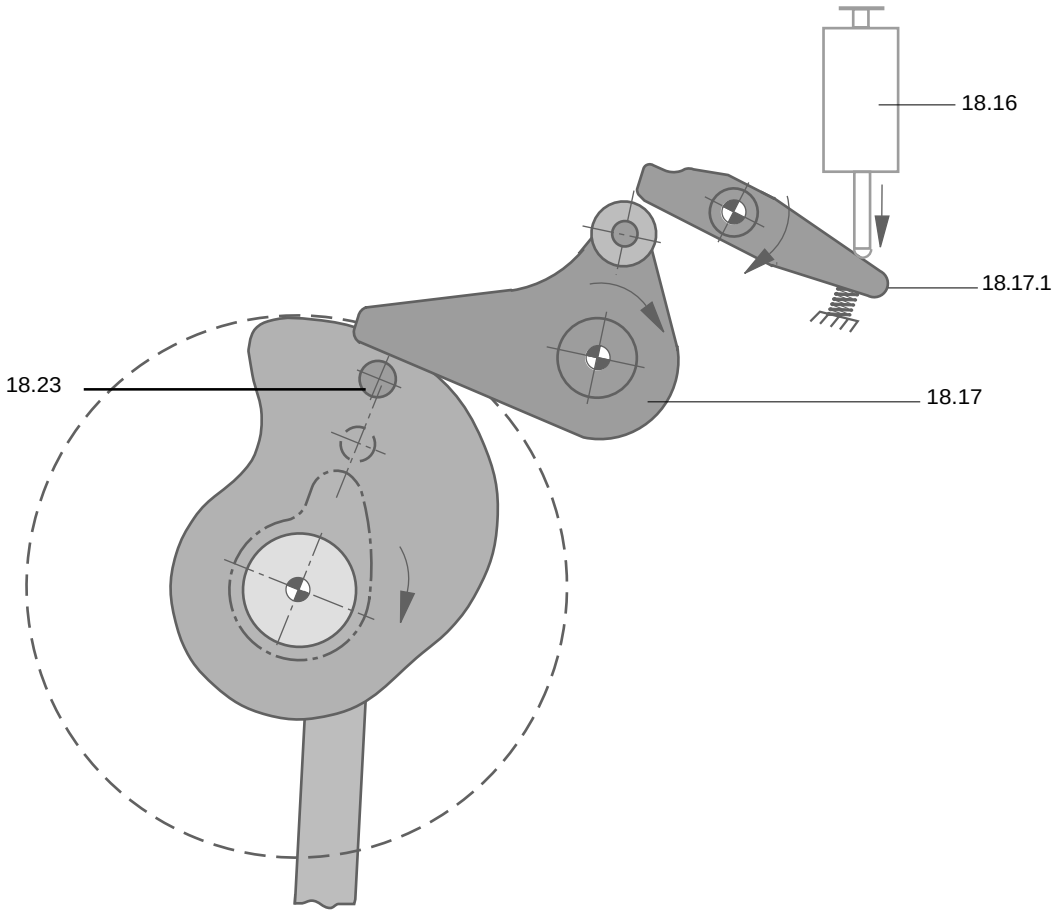

18.16	Closing coil
18.17	Closing latch
18.17.1	Lever
18.23	Roller

Fig. 5a Function Diagram of Mechanism Latching: Release of the Closing Latch

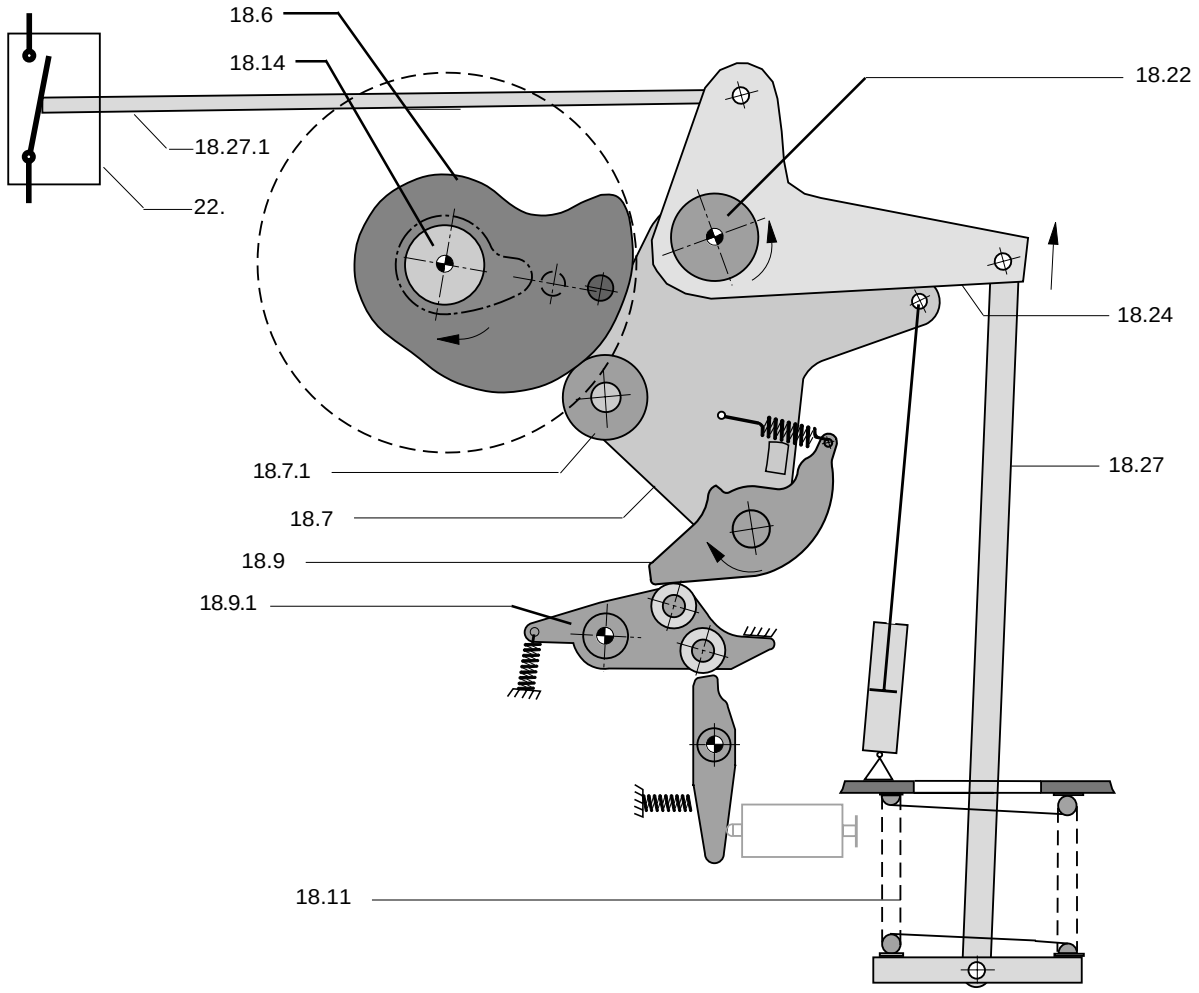

18.6	Cam
18.7	Lever
18.7.1	Roller
18.9	Opening latch
18.9.1	Latch lever
18.11	Opening spring
18.14	Charging shaft
18.22	Operating shaft
18.24	Operating lever
18.27	Connecting rod (for opening spring)
18.27.1	Operating mechanism rod
22.	Interrupter unit

Fig. 6a Function diagram of Mechanism latching: Closing

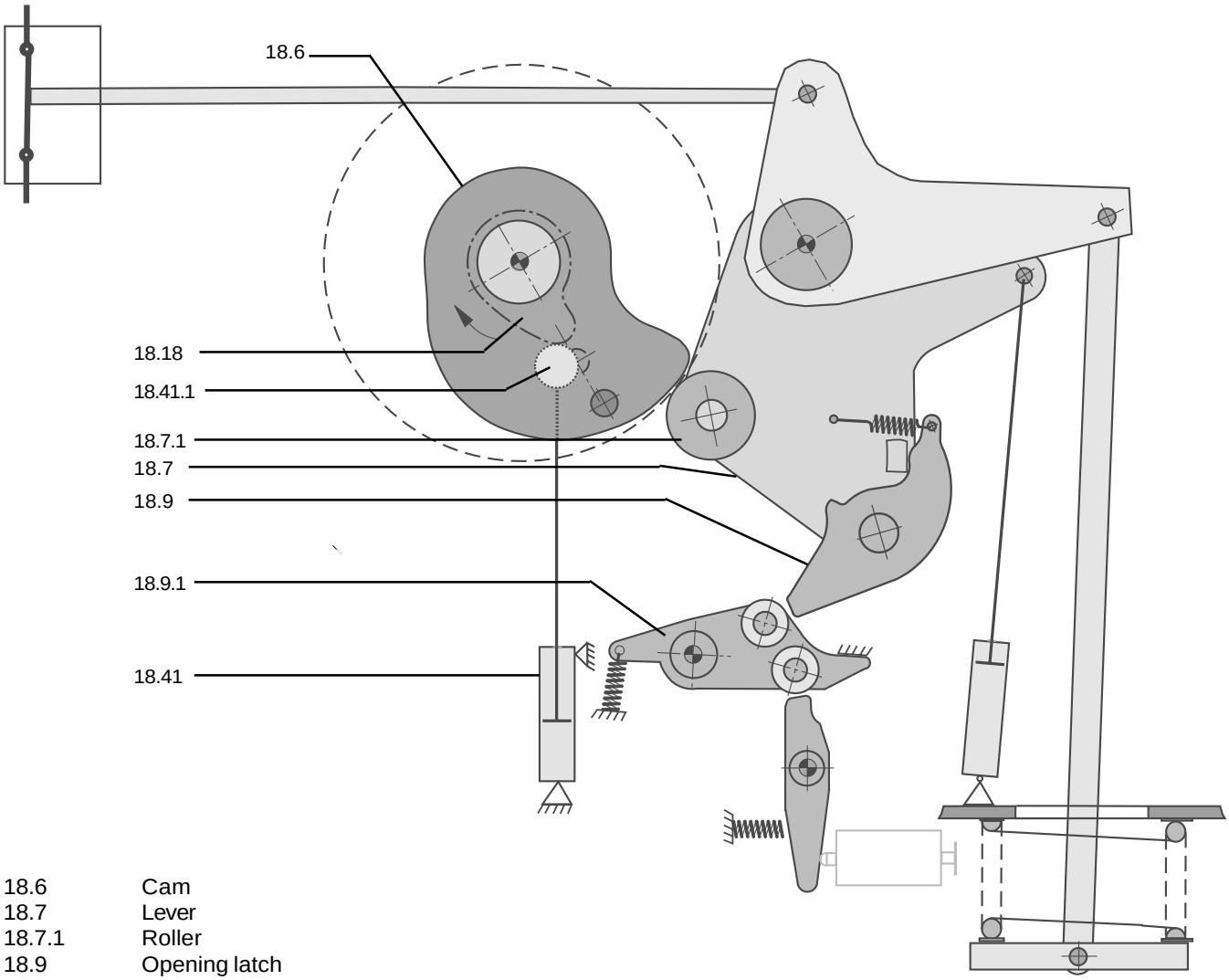

18.6	Cam
18.7	Lever
18.7.1	Roller
18.9	Opening latch
18.9.1	Latch lever
18.18	Backstop
18.41	Damper (for closing)
18.41.1	Roller

Fig. 7a Function Diagram of Mechanism Latching: Overtravel of the Lever During Closing

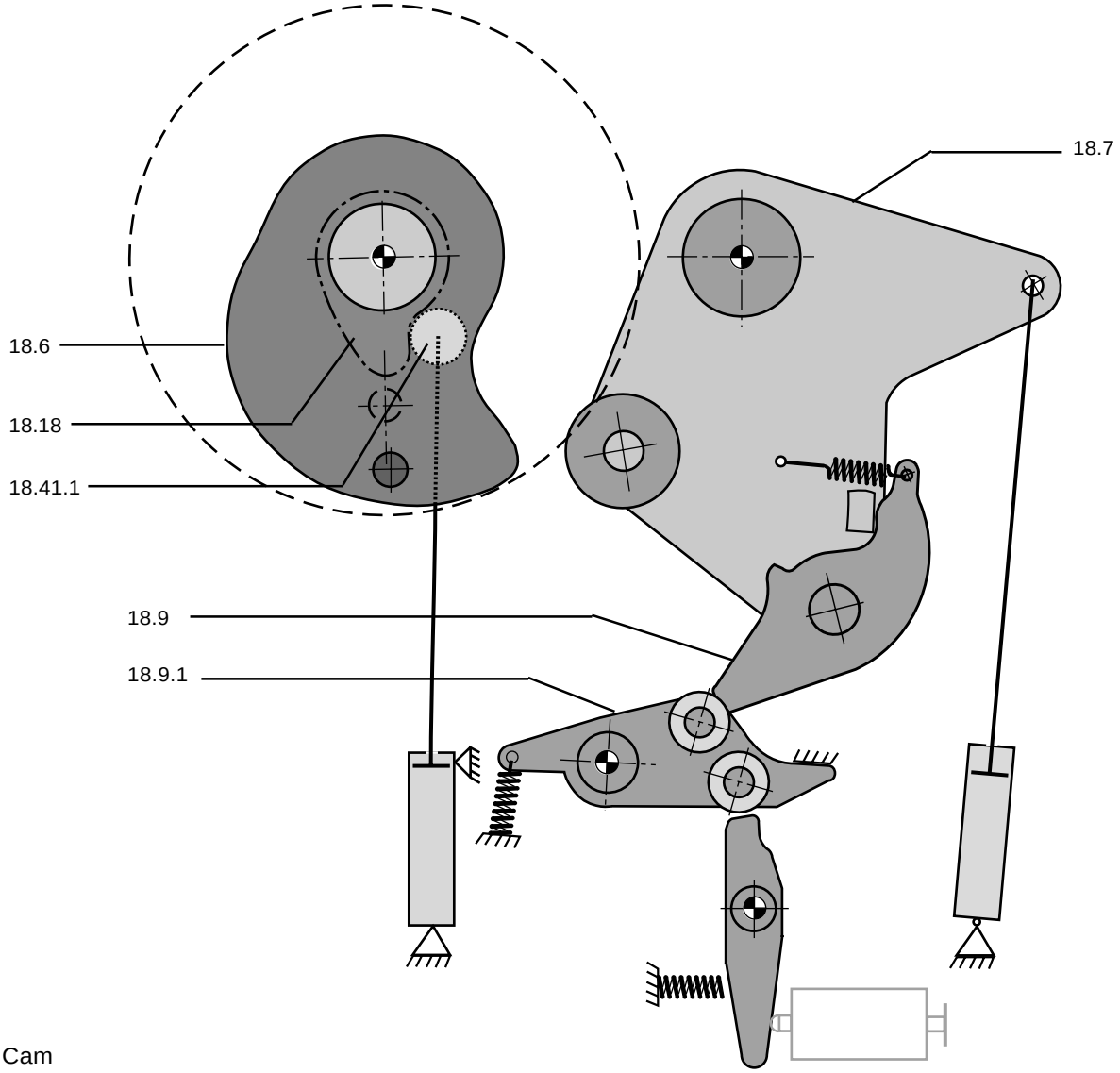

18.6	Cam
18.7	Lever
18.9	Opening latch
18.9.1	Latch lever
18.18	Backstop
18.41.1	Roller

Fig. 8a Function Diagram of Mechanism Latching: Latched in the Closed Position

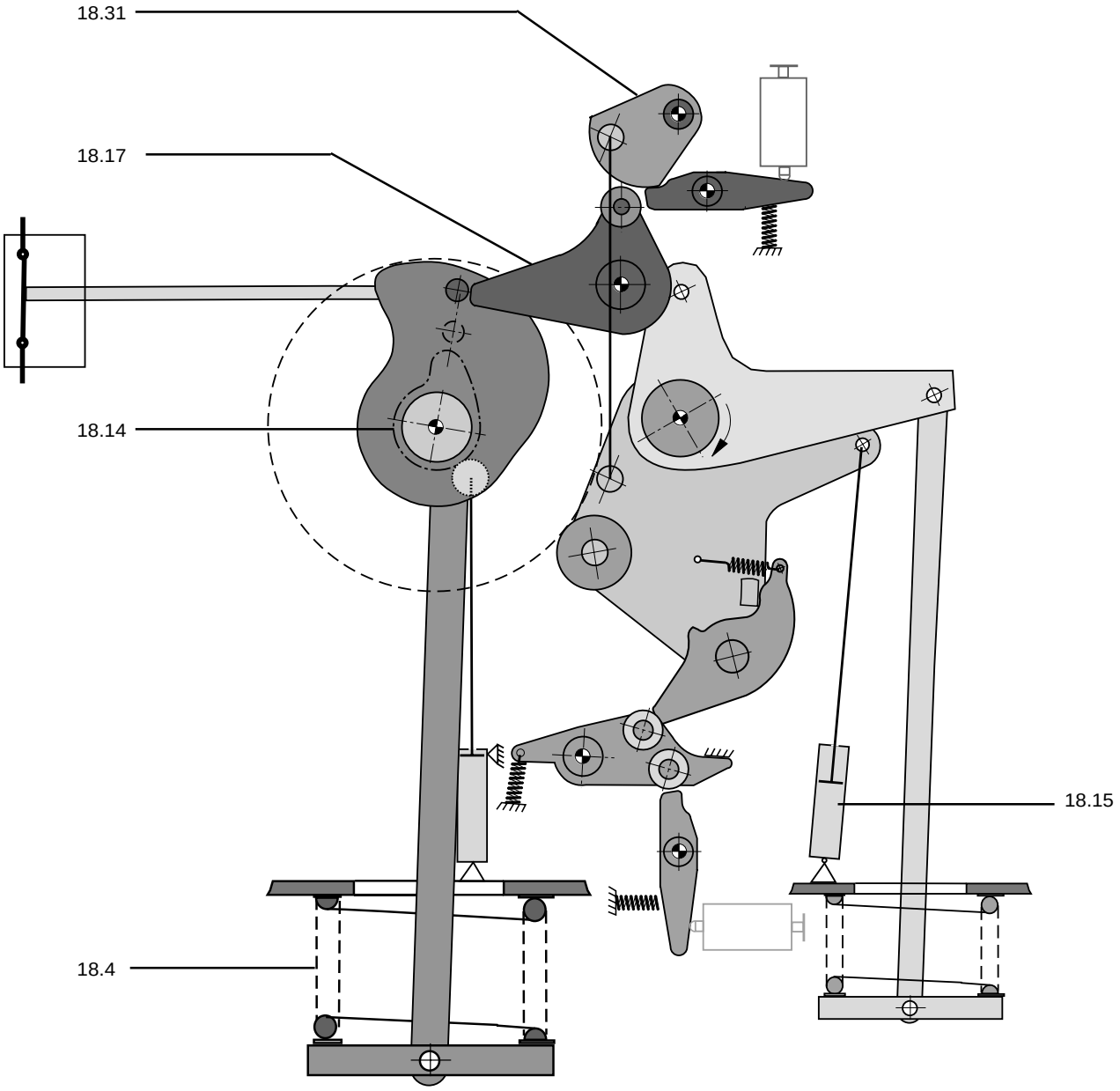

18.4 Closing spring
18.14 Charging shaft
18.15 Damper (for opening)
18.17 Closing latch
18.31 Mechanical closing interlock

Fig. 9a Function Diagram of Mechanism Latching: Latching of the Charged Closing Spring

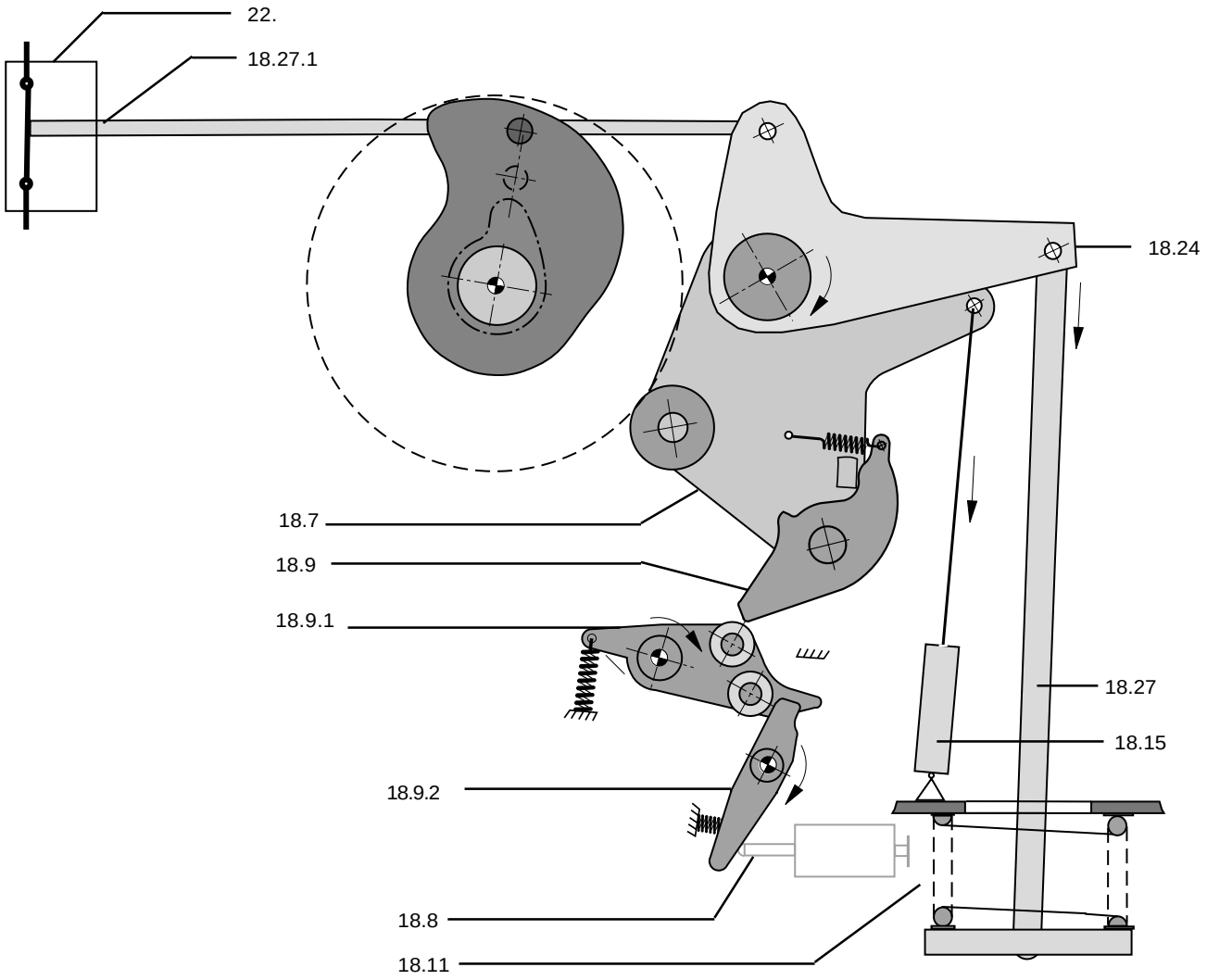

18. 7	Lever
18. 8	Trip coil "Open"
18. 9	Opening latch
18. 9.1	Latch lever
18. 9.2	Latch lever
18.11	Opening spring
18.15	Damper (for opening)
18.24	Operating lever
18.27	Connecting rod (for opening spring)
18.27.1	Operating mechanism rod
22.	Interrupter unit

Fig.10a Function diagram of Mechanism latching: Release of the opening latch

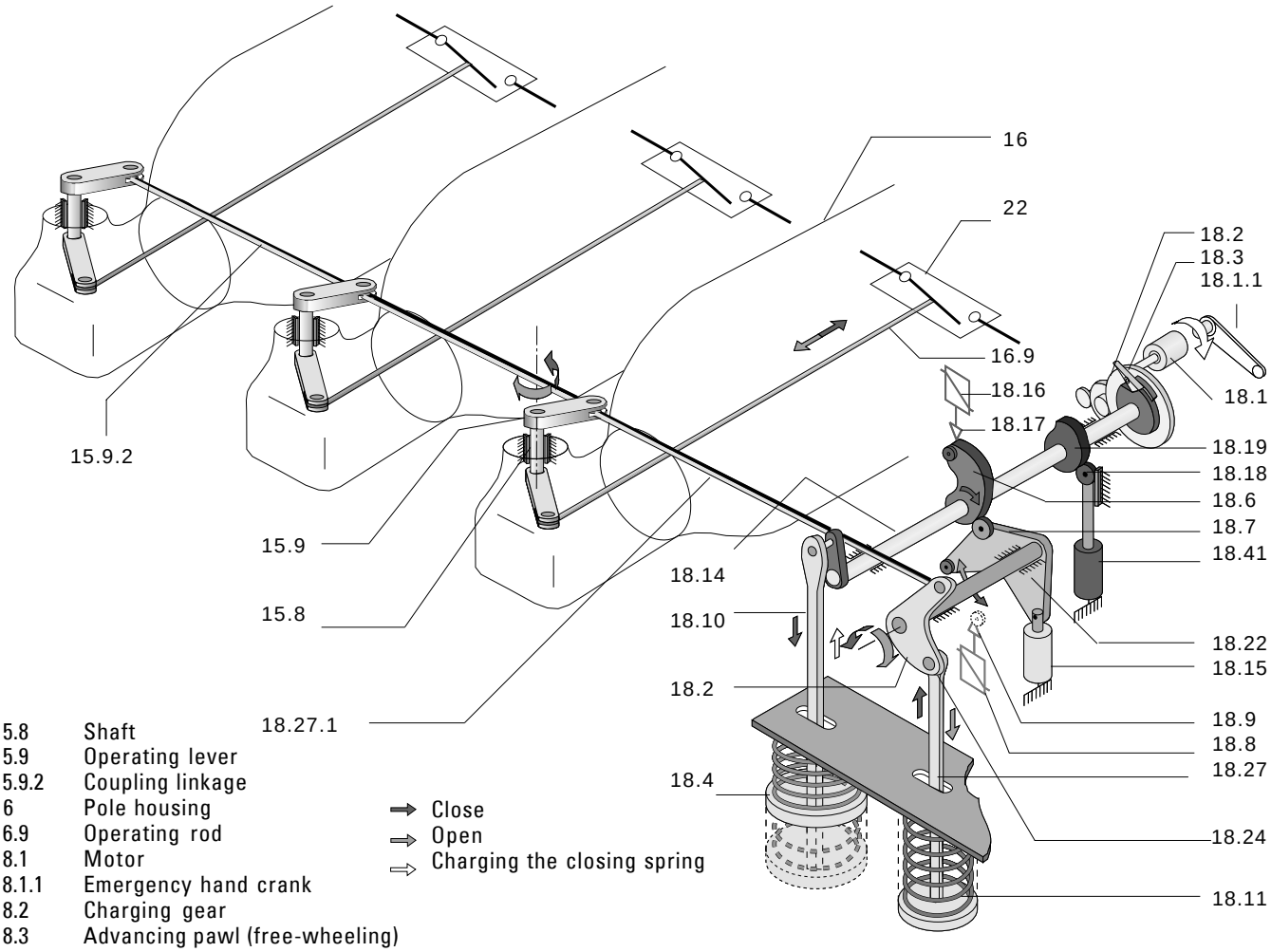

15.8	Shaft	
15.9	Operating lever	
15.9.2	Coupling linkage	
16	Pole housing	➡ Close
16.9	Operating rod	⇒ Open
18.1	Motor	⇨ Charging the closing spring
18.1.1	Emergency hand crank	
18.2	Charging gear	
18.3	Advancing pawl (free-wheeling)	
18.4	Closing spring	
18.6	Cam plate	
18.7	Lever	
18.8	Tripping coil (for opening)	
18.9	Opening latch	
18.10	Connecting rod (for closing spring)	
18.11	Opening spring	
18.14	Charging shaft	
18.15	Damper (for opening)	
18.16	Closing coil	
18.17	Closing latch	
18.18	Backstop	
18.19	Cam	
18.22	Operating shaft	
18.24	Operating lever	
18.27	Connecting rod (for opening spring)	
18.27.1	Operating mechanism rod	
18.41	Damper (for closing)	
22	Interrupter unit	

Fig. 11a Functional Diagram of Spring Drive Mechanism and Linkage Assembly

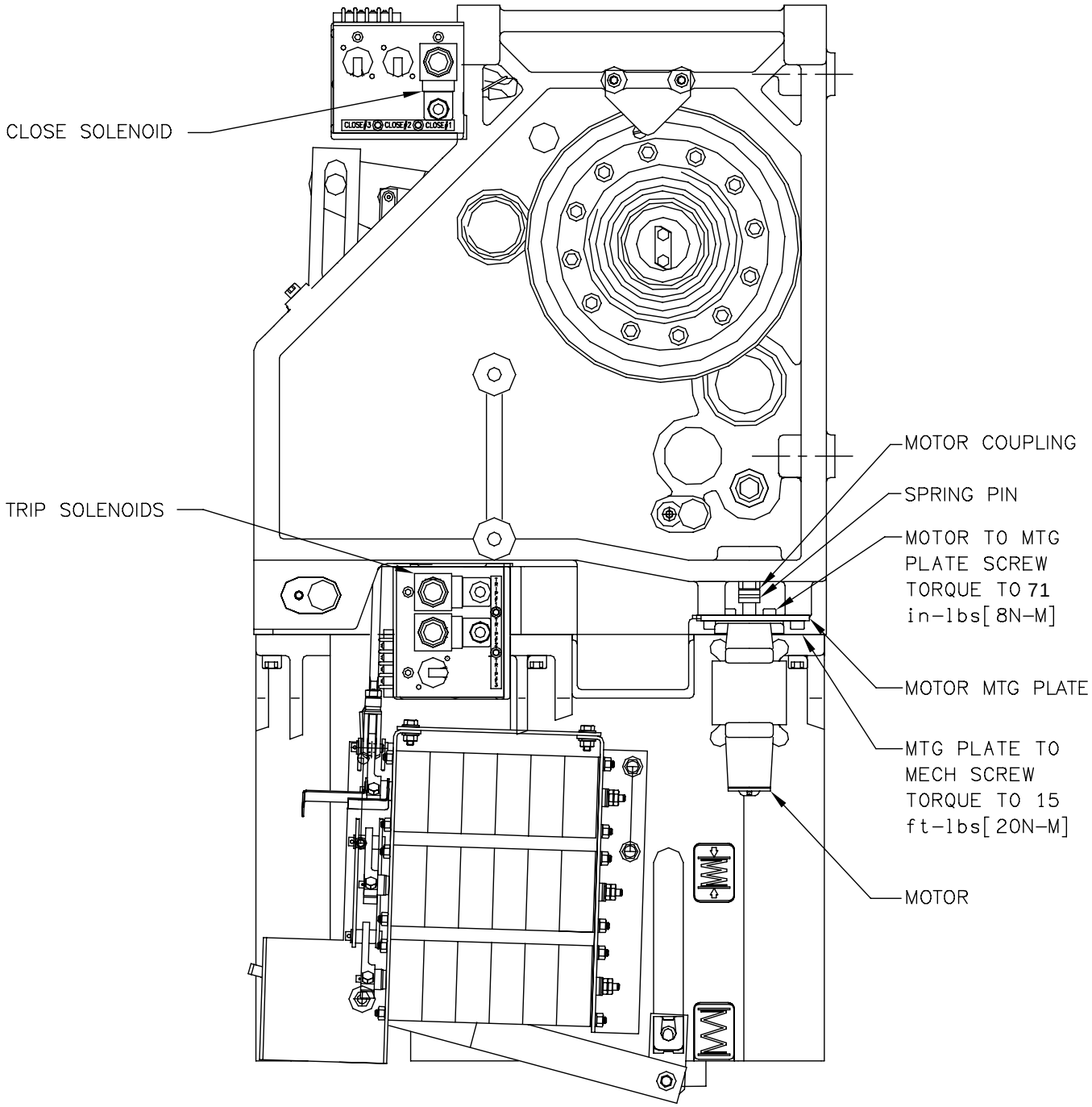

Fig. 12a Mechanism Motor Mounting

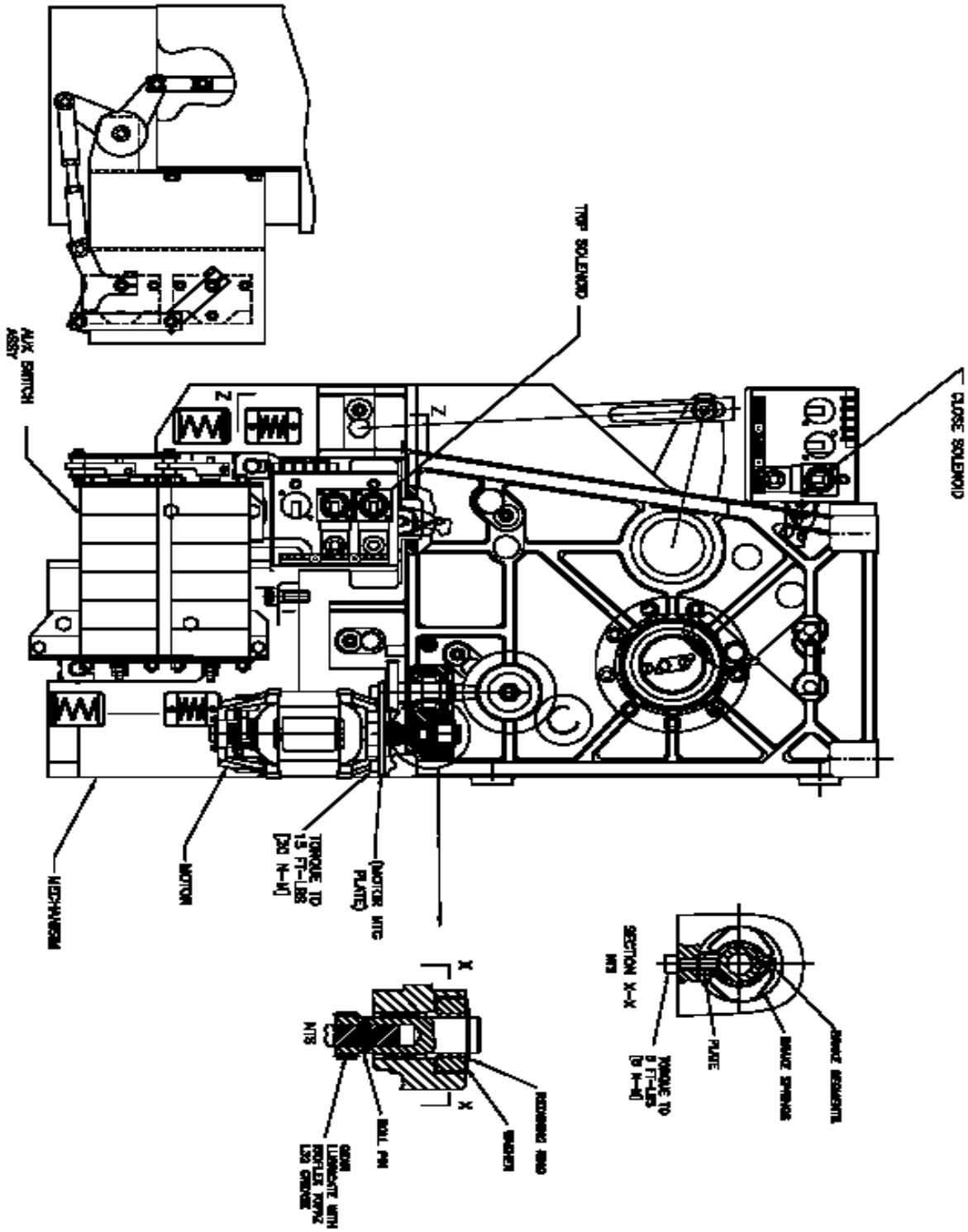

Fig. 12b Mechanism Motor Mounting (IPO)

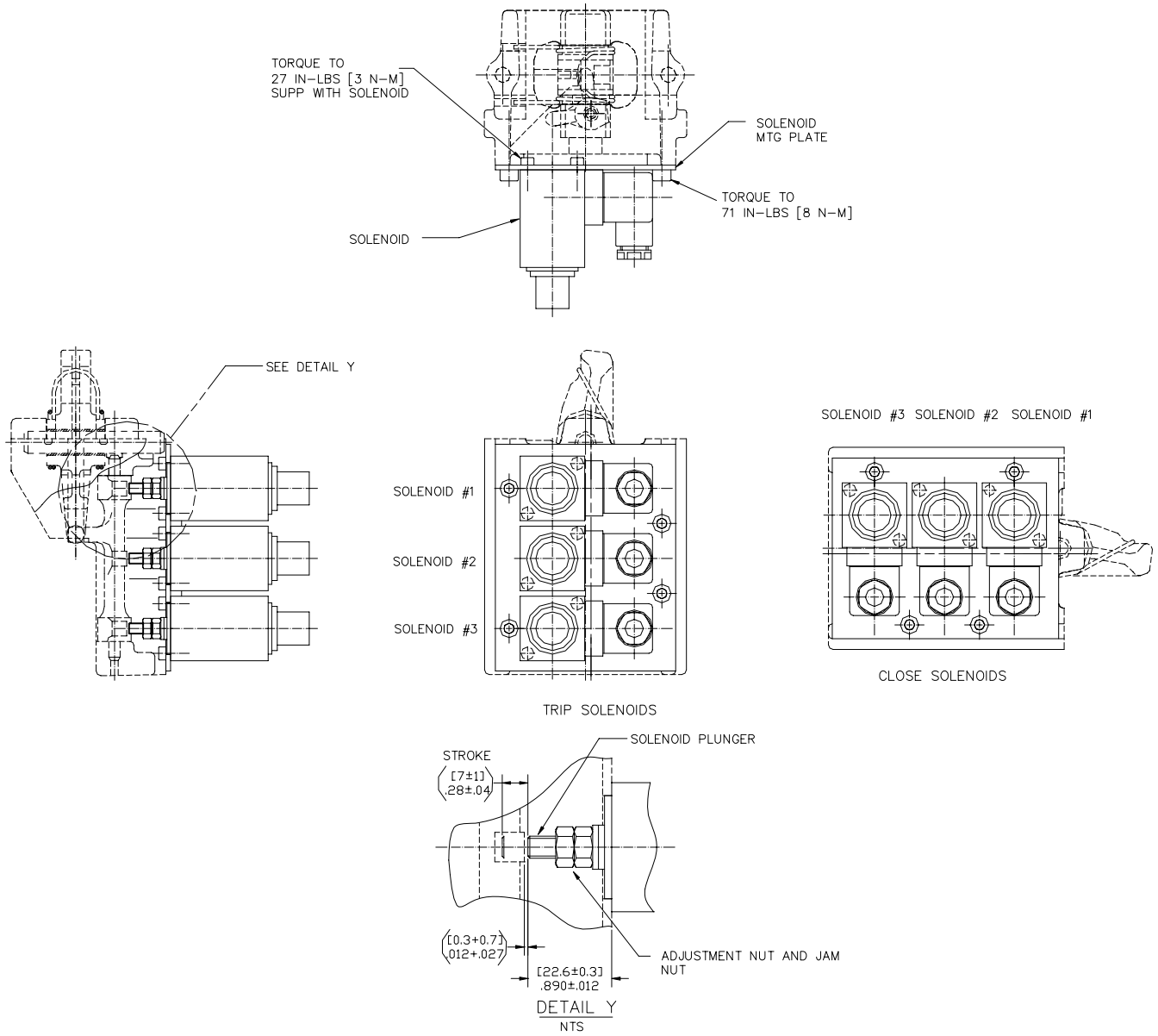

Fig. 13a Trip and Close Solenoids

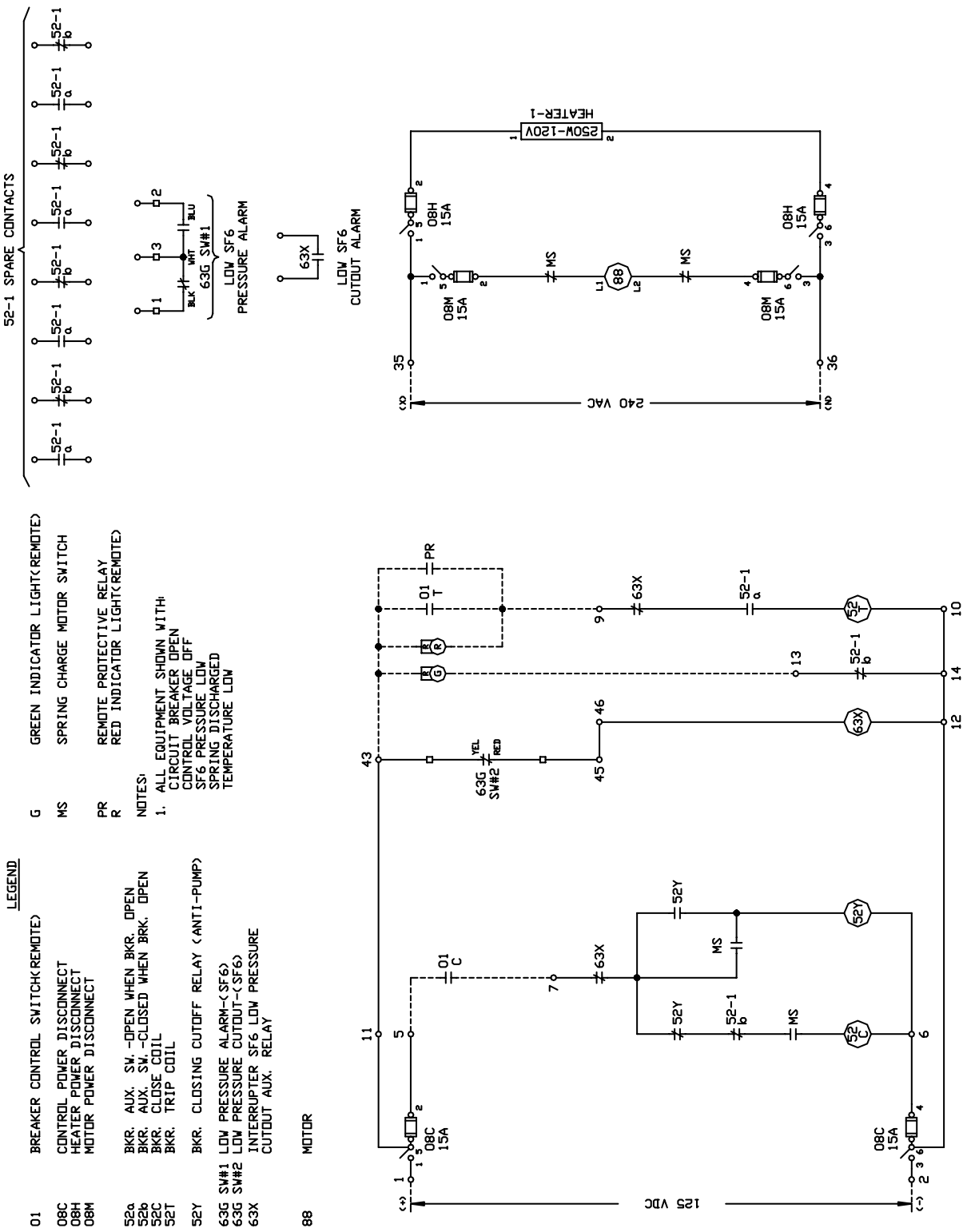

Fig. 14a Typical Wiring Diagram

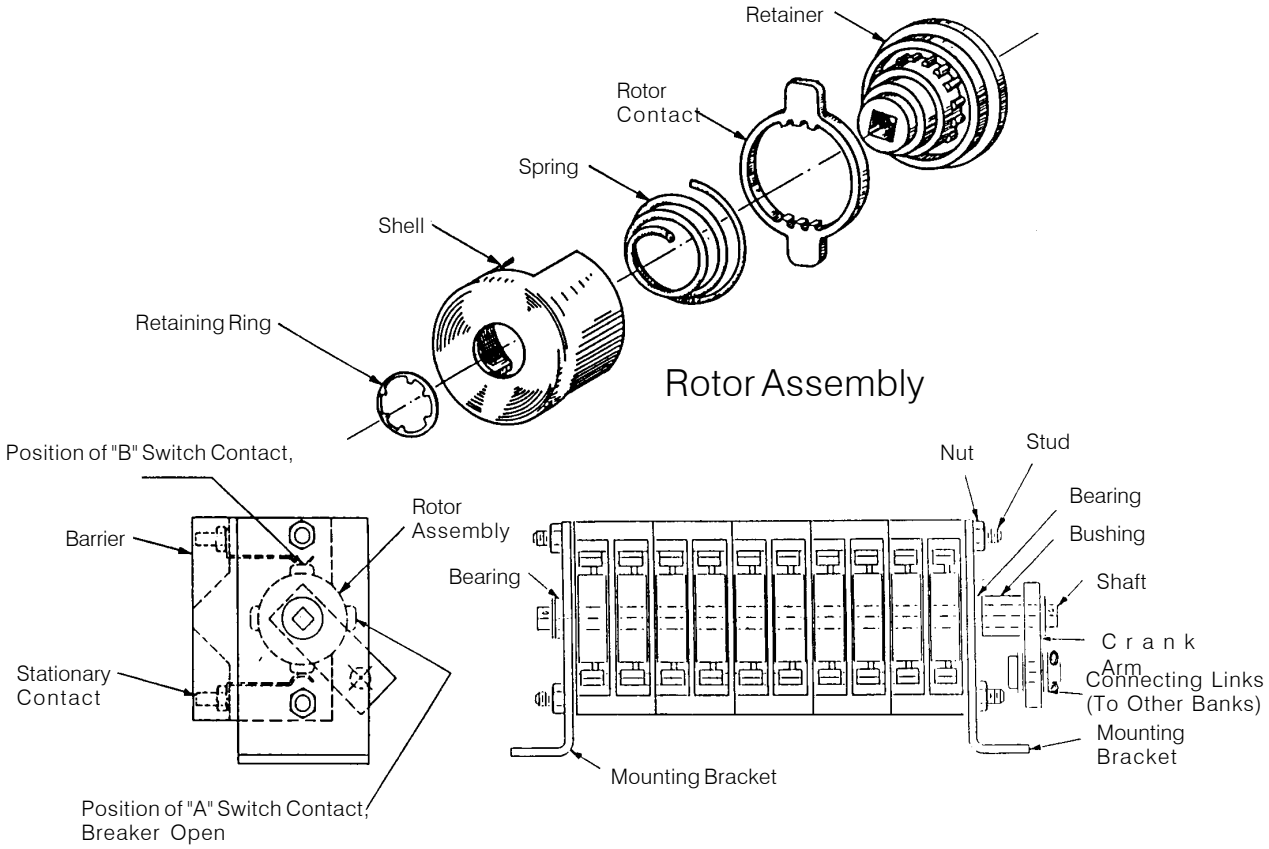

ADJUSTMENTS

To adjust the making point of any stage:

(a) Using a pair of pliers, press the rotor contact to one side against the spring. This disengages the rotor contact from the teeth in the molded base of the retainer.

(b) Turn the rotor in either direction to the new position, releasing pressure against the spring until the rotor contact falls into place, re-engaged by teeth in the newly desired position.

Contact surfaces are kept clean by complete wiping action of contacts during operation.

Fig. 15a Typical Auxiliary Switch

RELAYING TYPE CURRENT TRANSFORMERS FIELD TESTING

RATIO TEST

The voltage method and the current method are two common ways to measure transformer ratio. Since the voltage test requires simple apparatus to conduct, this method is discussed here.

Refer to Figure 16a. The burden or short circuit should be removed from all other transformers on the same pole.

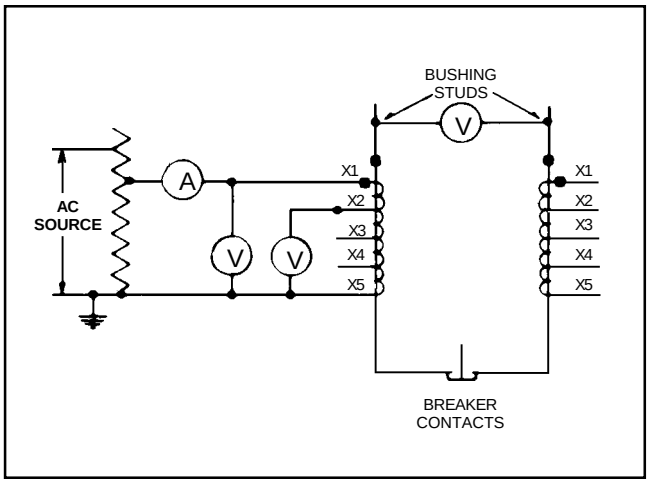

Figure 16a -- Ratio Check Connections

Some appropriate voltage below saturation, approximately 25% of the accuracy class, should be applied to the full winding of the secondary and the primary voltage read with a high impedance, 20,000 ohms/volt low range meter. The turns ratio is approximately equal to the voltage ratio. Refer to Table 1a for suggested applied voltages.

After the overall ratio is measured, the tap ratios can be measured by comparing the tap voltage to the full winding voltage. Tap voltage can be determined by the ratio:

$$\frac{\text{Full Winding Volts}}{\text{Full Winding Turns}} = \frac{\text{Tap Voltage}}{\text{Tap Turns}}$$

The turns ratio and accuracy class may be found on the transformer nameplate located on the mechanism housing door.

With the voltage in Table 1a applied on the respective trans-formers, the ammeter will read a very low current. If by accident a saturating voltage is applied the current will rise rapidly. When this occurs the voltage should be run slowly and continuously to zero and then the correct voltage applied.

Table 1a
Voltage Applied on Secondary - Full Winding

C.T. Ratio	Accuracy Class			
	C100	C200	C400	C800
600/5	24V (.2V)*	48V (.4V)	96V (.8V)	--
1200/5	--	48V (.2V)	72V (.3V)	120V (.5V)
2000/5	--	--	100V (.25V)	200V (.5V)
3000/5	--	--	60V (.1V)	120V (.2V)
4000/5	--	--	100V (.25V)	200V (.25V)
5000/5	--	--	100V (.1V)	200V (.2V)

**NOTE*: *Figures in ( ) = Primary Volts*

After the test the voltage should be run slowly and continuously to zero to prevent residual remaining in the core.

Hazardous voltage.
Death or serious injury due to electrical shock will result.

To prevent:

Do not operate current transformers with an open circuit. Connect to a burden or short circuit and ground at the terminal blocks.

If a short circuit is to be made, the connection should be across the taps of the highest ratio, otherwise, dangerous voltages may occur across the open transformer secondary terminals.

POLARITY TEST WITH OSCILLOSCOPE

A test set-up wired as per figure top right may be used for polarity check. The voltage applied should be lower than the saturation voltage so the values established by Table 1a for the ratio test are safe to use. Again any other transformers on the same pole should be open circuited.

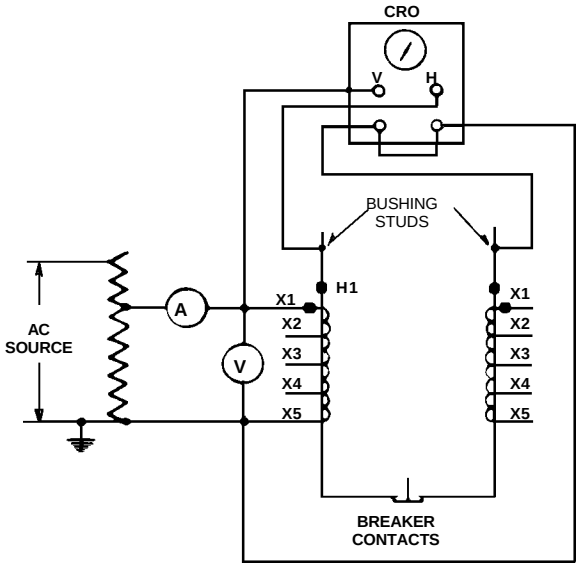

Fig. 17a

Polarity Check Connections

Figure 17a, above, shows a single channel cathode ray oscilloscope with the secondary voltage applied to the vertical input terminals and the primary voltage applied to the horizontal input terminals with the polarity as shown. If the slope of the line on the oscilloscope is positive as shown, then the polarity agrees with the terminal marking.

If the ratios of the transformer taps have been checked, and are correct, then the polarity of the individual taps will be correct. So it is only necessary to check the polarity of the total winding.

If a dual channel oscilloscope is used the primary and secondary voltages should be connected on separate channels. The polarity is correct if the resulting wave forms are in agreement, which they should be since the same voltage is applied to both channels.

With the voltages in Table 1a applied on the respective transformers the ammeter will read a very low current. If by accident a saturating voltage is applied the current will rise rapidly. When this occurs the voltage should be run slowly and continuously to zero and then the correct voltage applied.

After the test the voltage should be run slowly and continuously down to zero to prevent residual remaining in the core of the transformer.

If the polarity is proven to be incorrect then the transformer is mounted upside-down on the bushing.

Hazardous voltage.
Death or serious injury due to electrical shock will result.

To prevent:

Do not operate current transformers with an open circuit. Connect to a burden or short circuit and ground at the terminal blocks.

If a short circuit is to be made, the connection should be across the taps of the highest ratio, otherwise, dangerous voltages may occur across the open transformer secondary terminals.

INSULATION RESISTANCE

Insulation resistance between the current transformer secondary and ground may be measured with a 500 or 1000 volt megger or other conventional insulation test instrument.

The neutral ground must be disconnected from ground. All burdens should be removed. A wire jumper should be connected from X1 to X5 on each transformer. The neutral ground wire can then be used to test all the transformers simultaneously.

One megohm is usually considered the minimum insulation resistance acceptable. Any low reading should be thoroughly investigated and corrective action taken.

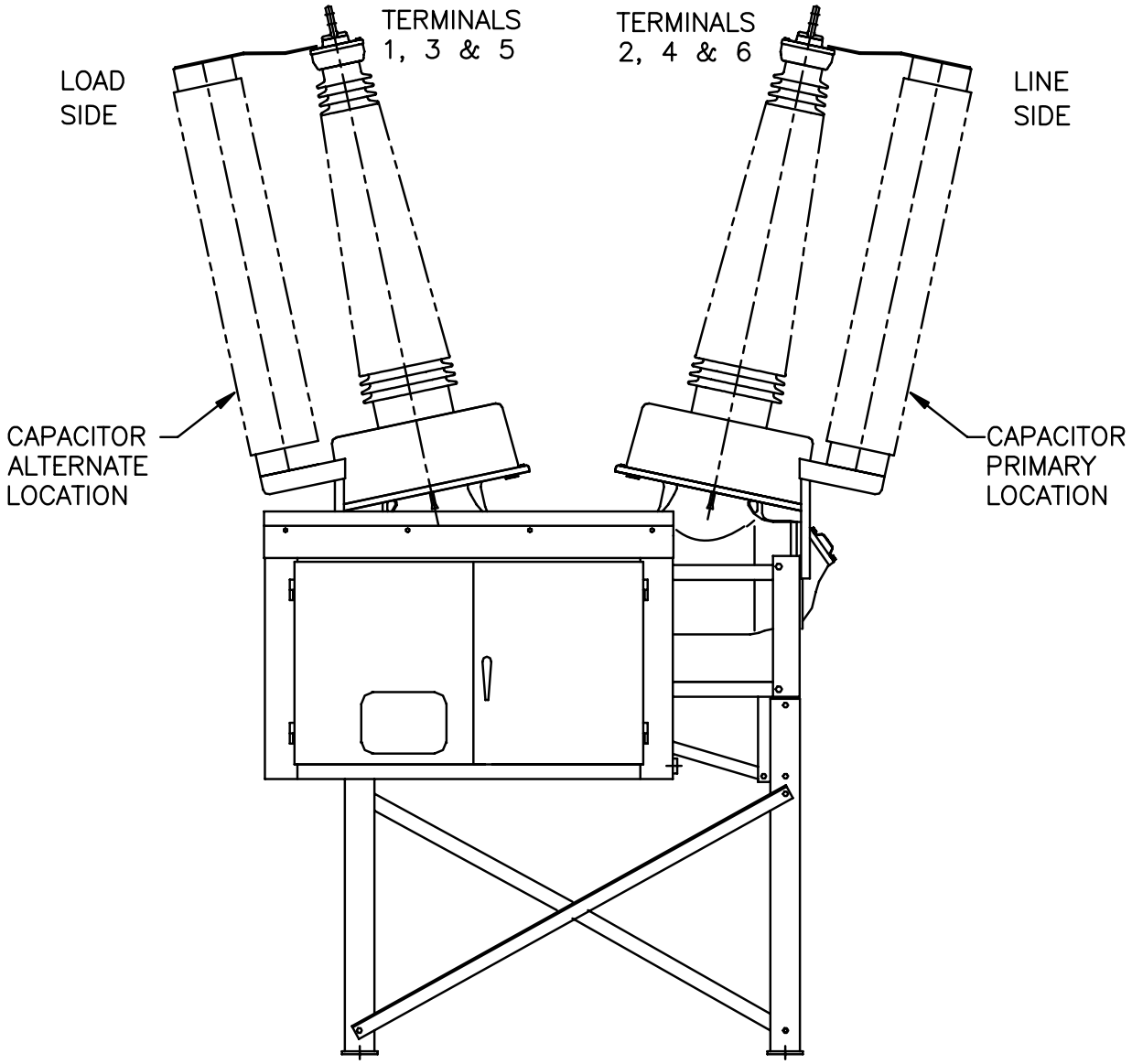

The SPS-2 245 kV 63kA breaker (see breaker nameplate to identify breaker) requires external capacitance to meet short line fault ratings. Normally 3 capacitors (1 per pole) are mounted on the line side of the breaker where short line faults might be expected on the electrical system. In applications where short line faults are possible on both sides of the breaker, bus ties for example, 6 capacitors (2 per pole) are required. In some applications, such as for cable circuits, the external capacitance may be sufficient so that additional line to ground capacitors are not required. Review these applications with your Siemens representative.

Capacitors must be installed before connecting the breaker to lines or busses. The breaker SF6 gas pressure should be less than 10 psig during installation. See installation instructions supplied with capacitors.

Figure 18a Capacitor Mounting 72–183–398–401

Siemens Energy, Inc.
P.O. Box 6289
Jackson, MS 39288-6289
Phone: 601-939-0550
Fax: 601-939-3606

PB-3998-04 PRINTED 10/08
11/03

© Siemens Energy, Inc.
Siemens is a registered trademark of Siemens AG

ABENGOA T&D

Traceabilty for Equipment Alpha & Beta Substations.

Item	Equipment Description	Brand	Model/Cat Num	Serial Number	Location
1	Relay House	SEL	Control Building	120372-28175	ALPHA
2	Relay House	SEL	Control Building	120372-28176	BETA
3	SF6 High Voltage Circuit Breaker	SIEMENS	SPS2-2454020	30111795-1	ALPHA
4	SF6 High Voltage Circuit Breaker	SIEMENS	SPS2-2454020	30111795-2	BETA
5	High Voltage Disconnect Switch	COELME	SLOB-E	HVS-TL-1	ALPHA
6	High Voltage Disconnect Switch	COELME	SLOB-E	HVS-TL-2	BETA
7	High Voltage Disconnect Switch	COELME	SLOB-E	HVS-MPT-1	ALPHA
8	High Voltage Disconnect Switch	COELME	SLOB-E	HVS-MPT-2	BETA
9	CVT Capacitor Voltage Transformer 245Kv	TRENCH	TEMF230	T121717-01	ALPHA
10	CVT Capacitor Voltage Transformer 245Kv	TRENCH	TEMF230	T121717-02	ALPHA
11	CVT Capacitor Voltage Transformer 245Kv	TRENCH	TEMF230	T121717-03	ALPHA
12	CVT Capacitor Voltage Transformer 245Kv	TRENCH	TEMF230	T121717-04	ALPHA
13	CVT Capacitor Voltage Transformer 245Kv	TRENCH	TEMF230	T121717-05	ALPHA
14	CVT Capacitor Voltage Transformer 245Kv	TRENCH	TEMF230	T121717-06	ALPHA
15	CVT Capacitor Voltage Transformer 245Kv	TRENCH	TEMF230	T121717-07	BETA
16	CVT Capacitor Voltage Transformer 245Kv	TRENCH	TEMF230	T121717-08	BETA
17	CVT Capacitor Voltage Transformer 245Kv	TRENCH	TEMF230	T121717-09	BETA

18	CVT Capacitor Voltage Transformer 245Kv	TRENCH	TEMF230	T121717-10	BETA
19	CVT Capacitor Voltage Transformer 245Kv	TRENCH	TEMF230	T121717-11	BETA
20	CVT Capacitor Voltage Transformer 245Kv	TRENCH	TEMF230	T121717-12	BETA
21	CT Current Transformer IOSK 245	TRENCH	IOSK 245	T121716-1	ALPHA
22	CT Current Transformer IOSK 245	TRENCH	IOSK 245	T121716-2	ALPHA
23	CT Current Transformer IOSK 245	TRENCH	IOSK 245	T121716-3	ALPHA
24	CT Current Transformer IOSK 245	TRENCH	IOSK 245	T121716-4	BETA
25	CT Current Transformer IOSK 245	TRENCH	IOSK 245	T121716-5	BETA
26	CT Current Transformer IOSK 245	TRENCH	IOSK 245	T121716-6	BETA
27	Surge Arrestor	SIEMENS	3EL2	URG124440-09	BETA
28	Surge Arrestor	SIEMENS	3EL2	URG124440-10	BETA
29	Surge Arrestor	SIEMENS	3EL2	URG124440-11	BETA
30	Surge Arrestor	SIEMENS	3EL2	URG124440-12	ALPHA
31	Surge Arrestor	SIEMENS	3EL2	URG124440-13	ALPHA
32	Surge Arrestor	SIEMENS	3EL2	URG124440-14	ALPHA

"Rundquist, Dale@Energy"
05/03/2013 02:33 PM

Send To	"Steven.Pochmara@abeinsaepc.abengoa.com" <Steven.Pochmara@abeinsaepc.abengoa.com>
cc	"holmes.bassette@solar.abengoa.com" <holmes.bassette@solar.abengoa.com>, "Frederick.Redell@solar.abengoa.com" <Frederick.Redell@solar.abengoa.com>, "william.grisolia@solar.abengoa.com" <william.grisolia@solar.abengoa.com>,
bcc	
Subject	RE: VIS-1

Hi Steven,
The submittal for VIS-1-01-03, Revision 4 has been reviewed and approved by staff.
Thank you,
Dale R.

From: Steven.Pochmara@abeinsaepc.abengoa.com [mailto:Steven.Pochmara@abeinsaepc.abengoa.com]

Sent: Wednesday, April 17, 2013 4:26 PM
To: Rundquist, Dale@Energy
Cc: holmes.bassette@solar.abengoa.com; Frederick.Redell@solar.abengoa.com; william.grisolia@solar.abengoa.com; angel.pimentel@abeinsaepc.abengoa.com; kyle.huber@abeinsaepc.abengoa.com; vernon.leeming@abeinsaepc.abengoa.com
Subject: VIS-1

Good Afternoon Dale,
Presented for your review and approval, please find attached VIS-1, Revision 4. A hardcopy of the complete package along with the color chips will follow in the mail. If you have any questions or concerns, don't hesitate to contact me.

Regards,

Steven Pochmara - Permit Manager

ABEINSA EPC
13911 Park Avenue, Suite 208
Victorville, CA 92392
Cell: +14802871419
Steven.Pochmara@teyma.abengoa.com
www.teyma.com
Eco-Tip: Printing e-mails is usually a waste.

**********Internet Email Confidentiality Footer**********

This email and any files transmitted with it are confidential and intended solely for the use of the organization or individual to whom they are addressed. It is expressly

forbidden to retransmit or copy email and/or this attached files without our permission. If you are not the addressee indicated in this message (or responsible for delivery of the message to such person), you may not copy or deliver this message to anyone. In such case, you should destroy this message and kindly notify the sender by reply email. Please advise immediately if you or your employer does not consent to Internet email for messages of this kind. Opinions, conclusions and other information in this message that do not relate to the official business of my firm shall be understood as neither given nor endorsed by it.

****** Confidencialidad de Correo electr?nico de Internet ******

Este correo electr?nico y cualquier archivo transmitido con el, es confidencial y destinado exclusivamente para el empleo de la organizaci?n o el individuo a quien esta dirigido. Esta expresamente prohibido su reenvio o copia del correo electr?nico y/o de los archivos anexados sin permiso del remitente. El contenido esta protegido seg?n la regulaci?n sobre la Protecci?n de Datos e Informaci?n Personal. Si usted no es el destinatario indicado en este mensaje (o responsable de la entrega del mensaje a tal persona), no puede copiar, reenviar o entregar este mensaje. En tal caso, usted debe destruir este mensaje y notificar al remitente por el correo electr?nico de respuesta. Puede notificar igualmente si no desea recibir correos electr?nicos de esta clase. Las opiniones, conclusiones y otra informaci?n en este mensaje que no se relaciona con la actividad de la compa??a ni ser?n entendidas como autorizadas por ?sta.

Appendix G
Compliance Matrix

Mojave Solar Project
Monthly Compliance Report
San Bernardino County, California

May 2013 Reporting Period

Date Modified: 5/1/2013		ABENGOA SOLAR	Document	COMPLIANCE MATRIX	
			Project	MOJAVE SOLAR PROJECT	
			Location	Harper Lake, California	
Cond. #	Sort Code	Verification/Action/Submittal Required by Project Owner	Timeframe	Date Due to CEC CPM	Status
COMPLIANCE-1	PC, CONS, COMM, OPS	The CPM, responsible Energy Commission staff, and delegated agencies or consultants shall be guaranteed and granted unrestricted access to the power plant site, related facilities, project-related staff, and the records maintained onsite, for the purpose of conducting audits, surveys, inspections, or general site visits. Although the CPM will normally schedule site visits on dates and times agreeable to the project owner, the CPM reserves the right to make unannounced visits at any time.	As required		Ongoing
COMPLIANCE-2	PC, CONS, COMM, OPS	Maintain project files on-site or at an alternative site approved by the CPM for the life of the project, unless a lesser period of time is specified by the Conditions. The files shall contain copies of all "as-built" drawings, documents submitted as verification for Conditions, and other project-related documents. Energy Commission staff and delegate agencies shall, upon request, be given unrestricted access to the files maintained pursuant to this Condition.	As required		Ongoing
COMPLIANCE-3	PC, CONS, COMM, OPS	Verification and Submittal Instructions	As required		Ongoing
COMPLIANCE-5	PC, CONS, COMM, OPS	A compliance matrix shall be submitted to the CPM along with each monthly and annual compliance report.	MCR/ACR	Monthly, Annually	Ongoing
COMPLIANCE-6	PC, CONS, COMM, OPS	The first MCR is due one month following the Energy Commission business meeting date upon which the project was approved, unless otherwise agreed to by the CPM. The first MCR shall include the AFC number and an initial list of dates for each of the events identified on the Key Events List found at the end of this section of the Decision. During pre-construction and construction of the project, submit an original and an electronic searchable version of the MCR within 10 working days after the end of each reporting month. MCR shall be clearly identified for the month being reported.	10 working days after end of each month	Monthly	Ongoing
COMPLIANCE-7	COMM, OPS	ACR: After construction is complete, the project owner shall submit Annual Compliance Reports instead of Monthly Compliance Reports. The reports are for each year of commercial operation and are due to the CPM each year at a date agreed to by the CPM. Annual Compliance Reports shall be submitted over the life of the project unless otherwise specified by the CPM.	ACR	Annually	Not Started
COMPLIANCE-9	PC, CONS, COMM, OPS	Annual Energy Facility Compliance Fee: Pursuant to the provisions of section 25806(b) of the Public Resources Code, the project owner is required to pay an annual compliance fee, which is adjusted annually.	Day of Comm. Dec., Annually thereafter by July 1	Sept. 16, 2010; Annually thereafter by July 1	Ongoing
COMPLIANCE-10	PC, CONS, COMM, OPS	The telephone number shall be posted at the project site and made easily visible to passersby during construction and operation. All recorded complaints shall be responded to within 24 hours.	within 24 hours of receipt	within 24 hours of receipt	
COMPLIANCE-10	PC, CONS, COMM, OPS	Any changes to the telephone number shall be submitted immediately to the CPM, who will update the web page.	As required		
COMPLIANCE-10	PC, CONS, COMM, OPS	The project owner shall report and provide copies to the CPM of all complaint forms, including noise and lighting complaints, notices of violation, notices of fines, official warnings, and citations, within 10 days of receipt. Complaints shall be logged and numbered. Noise complaints shall be recorded on the form provided in the NOISE Conditions of Certification. All other complaints shall be recorded on the complaint form located at the end of this section.	within 10 days of receipt	within 10 days of receipt	Ongoing
COMPLIANCE-11	OPS	Planned closure: In order to ensure that a planned facility closure does not create adverse impacts, a closure process that provides for careful consideration of available options and applicable laws, ordinances, regulations, standards, and local/regional plans in existence at the time of closure, will be undertaken. To ensure adequate review of a planned project closure, the project owner shall submit a proposed facility closure plan to the Energy Commission for review and approval at least 12 months (or other period of time agreed to by the CPM) prior to commencement of closure activities. The project owner shall file 120 copies (or other number of copies agreed upon by the CPM) of a proposed facility closure plan with the Energy Commission.	12 months (or other period of time agreed to by the CPM) prior to commencement of closure activities		Not Started
COMPLIANCE-11	OPS	Prior to submittal of the proposed facility closure plan, a meeting shall be held between the project owner and the Energy Commission CPM for the purpose of discussing the specific contents of the plan. In the event that there are significant issues associated with the proposed facility closure plan's approval, or the desires of local officials or interested parties are inconsistent with the plan, the CPM shall hold one or more workshops and/or the Energy Commission may hold public hearings as part of its approval procedure.	Prior to submittal of closure plan		Not Started

Cond. #	Sort Code	Verification/Action/Submittal Required by Project Owner	Timeframe	Date Due to CEC CPM	Status
COMPLIANCE-12	COMM	Unplanned Temporary Closure/On-Site Contingency Plan: In order to ensure that public health and safety and the environment are protected in the event of an unplanned temporary facility closure, it is essential to have an on-site contingency plan in place. The on-site contingency plan will help to ensure that all necessary steps to mitigate public health and safety impacts and environmental impacts are taken in a timely manner. The project owner shall submit an on-site contingency plan for CPM review and approval. The plan shall be submitted no less than 60 days (or other time agreed to by the CPM) prior to commencement of commercial operation. The approved plan must be in place prior to commercial operation of the facility and shall be kept at the site at all times.	60 days prior to COD		Not Started
COMPLIANCE-12	OPS	Other Unplanned Closure Instructions	Various	Various	When Needed
COMPLIANCE-13	OPS	Unplanned Permanent Closure/On-Site Contingency Plan: The on-site contingency plan required for unplanned temporary closure shall also cover unplanned permanent facility closure. All of the requirements specified for unplanned temporary closure shall also apply to unplanned permanent closure. In addition, the on-site contingency plan shall address how the project owner will ensure that all required closure steps will be successfully undertaken in the event of abandonment. In the event of an unplanned permanent closure, the project owner shall notify the CPM, as well as other responsible agencies, by telephone, fax, or e-mail, within 24 hours and shall take all necessary steps to implement the on-site contingency plan. The project owner shall keep the CPM informed of the status of all closure activities.	within 24 hours of unplanned temporary closure	within 24 hours of unplanned temporary closure	When Needed
COMPLIANCE-14	PC, CONS, COMM, OPS	Amendments, Ownership Changes, Staff Approved Project Modifications and Verification Change Instructions	As required		NA
AQ-SC3	CONS	Provide the CPM the following to demonstrate control of fugitive dust emissions: A summary of all actions taken to maintain compliance with this condition; Copies of any complaints filed with the District in relation to project construction; and Any other documentation deemed necessary by the CPM and AQCMM to verify compliance with this condition. Such information may be provided via electronic format or disk.	MCR	Monthly	Ongoing
AQ-SC4	CONS	Provide a summary of all actions taken to maintain compliance with this condition; copies of any complaints filed with the District in relation to project construction; and any other documentation deemed necessary by the CPM and AQCMM to verify compliance with this condition.	MCR	Monthly	Ongoing
AQ-SC5	CONS	Include the following to demonstrate control of diesel construction-related emissions: summary of all actions taken to control diesel construction related emissions; list of all heavy equipment used on site during that month, including the owner of that equipment and a letter from each owner indicating that equipment has been properly maintained; and any other documentation deemed necessary by the CPM or AQCMM to verify compliance with this condition. Such information may be provided via electronic format or disk.	MCR	Monthly	Ongoing
AQ-SC6	COMM	Submit to the CPM a copy of the plan that identifies the size and type of the on-site vehicle and equipment fleet and the vehicle and equipment purchase orders and contracts and/or purchase schedule.	30 days prior to COD		Not Started
AQ-SC6	OPS	The plan shall be updated every other year.	ACR	Biennially	Not Started
AQ-SC7	COMM	Submit to CPM for review and approval a copy of site ODCP that identifies the dust and erosion control procedures including effectiveness and environmental data for the proposed soil stabilizer, that will be used during operation of the project and that identifies all locations of the speed limit signs.	30 days prior to COD		Not Started
AQ-SC7	OPS	Provide CPM a report indentifying the locations of all speed limit signs and a copy of the project employee and contractor training manual that clearly identifies that project employees and contractors are required to comply with the dust and erosion control procedures and on-site speed limits.	60 days after COD		Not Started
AQ-SC8	CONS & OPS	Submit any ATC, PTO, and proposed federal air permit modifications to the CPM within five working days of its submittal either by 1) the project owner to an agency, or 2) receipt of proposed modifications from an agency. Submit all modified ATC/PTO documents and all federal air permits to the CPM within 15 days of reciept.	Within 5 days of its submittal or receipt		When Needed
AQ-1	COMM & OPS	Aux Boilers, operation: Make site available for inspection of records by representatives of the District, ARB, and the Energy Commission upon request.	As required		
AQ-2	COMM & OPS	Aux Boilers, fuel: Make the site available for inspection of records by representatives of the District, ARB, and the Energy Commission upon request.	As required		
AQ-3	OPS	Aux Boilers: Include information demonstrating compliance with boiler emission rates.	ACR	Annually	

Cond. #	Sort Code	Verification/Action/Submittal Required by Project Owner	Timeframe	Date Due to CEC CPM	Status
AQ-4	OPS	Aux Boilers, tuning: Make site available for inspection of records by representatives of the District, ARB, and the Energy Commission.	Prior to expiration date annually	Annually	
AQ-5	OPS	Aux Boilers, operations log: Make site available for inspection of records and equipment by representatives of the District, ARB, and the Energy Commission.	As required		
AQ-6	COMM	Aux Boilers, initial compliance tests: Notify the District and CPM prior to execution of test.	15 working days prior to test		
AQ-6	COMM	Submit test results to the District and CPM.	Within 180 days of initial startup		
AQ-7	OPS	Aux Boilers, annual compliance tests: Notify District of intention to perform tests.	15 business days prior to Annual test	15 business days prior to Annual test	
AQ-7	OPS	Test results submitted to the District and CPM.	6 weeks prior to expiration of permit		
AQ-8	OPS	Aux Boilers: Include information demonstrating compliance with boiler annual fuel use limit.	ACR	Annually	
AQ-9	OPS	HTF Ullage/Expansion System, operation: Make the site available for inspection of records by representatives of the District, ARB, and the Energy Commission.	As required		
AQ-10	OPS	Only HTF in system: Make the site available for inspection of records by representatives of the District, ARB, and the Energy Commission.	As required		
AQ-11	OPS	N2 blanket: Make the site available for inspection of records by representatives of the District, ARB, and the Energy Commission.	As required		
AQ-12	CONS & OPS	Temp. of N2 venting coolers: Provide the District and CPM manufacturer design specifications showing compliance with this condition . Have active temperature gauges that can be inspected to show compliance with this condition.	30 days prior to installation of ullage/expansion vent system		
AQ-13	CONS & OPS	HTF Storage Tank Temp./Cooler: Provide the District and CPM manufacturer design specifications showing compliance. Active temp. gauges should be available to be inspected to show compliance.	30 days prior to installation of HTF storage tanks		
AQ-14	CONS & OPS	Provide the District and CPM manufacturer design specifications showing compliance. Have active temperature gauges that can be inspected to show ongoing compliance.	30 days prior to installation of nitrogen condensing tanks		
AQ-16	CONS	The inspection and maintenance plan shall be submitted to the CPM for review and approval .	30 days before delivery of HTF		
AQ-16	OPS	Provide the quantity of used HTF fluid removed from the system and the amount of new HTF fluid added to the system each year.	ACR	Annually	
AQ-16	OPS	Make the site available for inspection of HTF piping Inspection and Maintenance Program records and HTF system equipment by representatives of the District, ARB, and the Energy Commission.	As required		
AQ-17	COMM	Provide a compliance test protocol to the District for approval and CPM for review	Less than 60 days after startup		
AQ-17	COMM	Submit a test plan to the District for approval and CPM for review.	30 days prior to the compliance tests		
AQ-17	COMM	Notify the District and the CPM before the execution of the compliance tests required in AQ-18 and AQ-19.	10 working days prior to tests		
AQ-17	COMM	Test results shall be submitted to the District and to the CPM.	within 45 days after tests conducted		
AQ-18	COMM	Submit the test results to the District and to the CPM.	within 180 days after initial startup		
AQ-19	OPS	Include the test results demonstrating compliance with this condition.	ACR	Annually	
AQ-19	OPS	Make site available for inspection of records by representatives of the District, ARB, and the Energy Commission.	As required		
AQ-20	OPS	Include the test results demonstrating compliance with this condition.	ACR	Annually	
AQ-20	OPS	Make the site available for inspection of records by representatives of the District, ARB, and the Energy Commission.	As required		
AQ-21	OPS	Submit a compliance plan of the toxic or hazardous substances for District approval and CPM review if current non-criteria substances in the HTF become regulated as toxic or hazardous substances.	As required		
AQ-22	OPS	Make site available for inspection of records and equipment by representatives of the District, ARB, and the Energy Commission.	As required	Annually	
AQ-23	OPS	Make site available for inspection of records and equipment by representatives of the District, ARB, and the Energy Commission.	As required		
AQ-24	COMM	The manufacturer guarantee data for the drift eliminator, showing compliance with this condition, shall be provided to the CPM and the District.	30 days prior to cooling tower operation		
AQ-24	OPS	Include information on operating emission rates to demonstrate compliance with this condition.	ACR	Annually	
AQ-25	COMM & OPS	The cooling tower recirculation water TDS content test results shall be provided to representatives of the District, ARB, and the Energy Commission upon request.	As required		

Cond. #	Sort Code	Verification/Action/Submittal Required by Project Owner	Timeframe	Date Due to CEC CPM	Status
AQ-26	COMM	Provide an emissions calculation and water sample testing protocol to the District for approval and CPM for review.	30 days prior cooling tower water test		
AQ-27	OPS	Submit to the CPM the cooling tower operating data demonstrating compliance with this condition.	ACR	Annually	
AQ-28	OPS	Make site available for inspection of records and equipment by representatives of the District, ARB, and the Energy Commission.	As required	As required	
AQ-29	OPS	Make available at request the written drift eliminator maintenance procedures for inspection by representatives of the District, ARB, and the Energy Commission.	As required	As required	
AQ-30	OPS	Make site available for inspection of equipment and records by representatives of the District, ARB, and the Energy Commission.	As required	As required	
AQ-31	OPS	Make site available for inspection of equipment and fuel purchase records by representatives of the District, ARB, and the Energy Commission.	As required		
AQ-32	CONS	Provide the District and the CPM the specification of the hour meter.	30 days prior to installation of engine		
AQ-33	OPS	Make the site available for inspection of records and equipment by representatives of the District, ARB, and the Energy Commission.	As required		
AQ-34	OPS	Submit records required by this condition that demonstrating compliance with the sulfur content and engine use limitations of conditions AQ-28 and AQ-30 including a photograph showing the annual reading of engine hours.	ACR		
AQ-34	OPS	Make site available for inspection of records by representatives of the District, ARB, and the Energy Commission.	As required		
AQ-35	OPS	Make site available for inspection of records and equipment by representatives of the District, ARB, and the Energy Commission.	As required		
AQ-36	OPS	Make site available for inspection of records and equipment by representatives of the District, ARB, and the Energy Commission.	As required		
AQ-37	OPS	Make site available for inspection of records and equipment by representatives of the District, ARB, and the Energy Commission.	As required		
AQ-38	COMM	Make site available for inspection of equipment by representatives of the District, ARB, and the Energy Commission.	As required		
AQ-39	OPS	Not necessary			
AQ-40	CONS	Submit engine specifications for review and approval demonstrating that the engines meet NSPS and ARB ATCM emission limit requirements at the time of engine purchase.	30 days prior to purchase		
AQ-41	COMM & OPS	Make site available for inspection of records and equipment by representatives of the District, ARB, and the Energy Commission.	As required		
AQ-42	OPS	Make site available for inspection of equipment and fuel purchase records by representatives of the District, ARB, and the Energy Commission.	As required		
AQ-43	OPS	Provide the District and the CPM the specification of the hour timer.	30 days prior to installation of engine		
AQ-44	OPS	Make the site available for inspection of records and equipment by representatives of the District, ARB, and the Energy Commission.	As required		
AQ-45	OPS	Submit records required by this condition that demonstrating compliance with the sulfur content and engine use limitations of conditions AQ-42, AQ-44 and AQ-46 including a photograph showing the annual reading of engine hours.	ACR	Annually	
AQ-45	OPS	Make the site available for inspection of records by representatives of the District, ARB, and the Energy Commission.	As required		
AQ-46	COMM & OPS	Make the site available for inspection of records and equipment by representatives of the District, ARB, and the Energy Commission.	As required		
AQ-47	COMM	Make site available for inspection of equipment by representatives of the District, ARB, and the Energy Commission.	As required		
AQ-48	OPS	Not necessary	None		
AQ-49	CONS	Submit the engine specifications for review and approval demonstrating that the engines meet NSPS and ARB ATCM emission limit requirements at the time of engine purchase.	30 days prior to purchase		
AQ-51	OPS	Maintain a log of all inspections, repairs and maintenance on equipment subject to Rule 461. Make site available for inspection of records by representatives of the District, ARB, and the Energy Commission.	As required		
AQ-52	CONS	Any modifications or changes to the piping or control fitting of the vapor recovery system requires prior approval from the District. Make the site available for inspection of records by representatives of the District, ARB, and the Energy Commission.	As required		
AQ-53	CONS	Vapor vent pipes are to be equipped with Husky 5885 pressure relief valves or as otherwise allowed by EO. Make the site available for inspection of records by representatives of the District, ARB, and the Energy Commission.	As required		
AQ-54	COMM	Perform tests. Determination of Static Pressure Performance of Vapor Recovery Systems at Gasoline Dispensing Facilities with Aboveground Storage Tanks, Phase I Adapters, Emergency Vents, Spill Container Drain Valve etc, Liquid Removal Test.	60 days after construction completion		

Cond. #	Sort Code	Verification/Action/Submittal Required by Project Owner	Timeframe	Date Due to CEC CPM	Status
AQ-54	OPS	Perform tests. Determination of Static Pressure Performance of Vapor Recovery Systems at Gasoline Dispensing Facilities with Aboveground Storage Tanks, Phase I Adapters, Emergency Vents, Spill Container Drain Valve etc, Liquid Removal Test.	ACR	Annually	
AQ-54		Notify the District prior to performing the required tests.	10 days prior to testing		
AQ-54	COMM & OPS	The test results shall be submitted to the District after completion of the tests and shall be made available to the CPM if requested.	30 days after completion of testing		
AQ-55	CONS & OPS	Shall be installed and maintained in accordance with EO VR-401-A for EVR Phase I, and standing loss requirements. Phase II Vapor Recovery System shall be installed and maintained per G-70-116-F with the exception that hanging hardware shall be EVR Balance Phase II type hanging hardware. Make site available for inspection of records by representatives of the District, ARB, and the Energy Commission.	As required		
AQ-56	COMM & OPS	Maintenance and repair of system components, including removal and installation of such components in the course of any required test, shall be performed by OPW Certified Technicians. Make site available for inspection of records by representatives of the District, ARB, and the Energy Commission.	As required		
AQ-57	OPS	Maintenance and repairs conducted by an OPW trained technician annually. Make site available for inspection of records by representatives of the District, ARB, and the Energy Commission.	As required		
AQ-58	OPS	Submit to the CPM gasoline throughput records demonstrating compliance.	ACR	Annually	
AQ-58	OPS	Maintain on site the annual gasoline throughput records and shall make the site available for inspection of records by representatives of the District, ARB, and the Energy Commission.	As required		
AQ-59	CONS & OPS	Install, maintain, and operate EVR Phase I in compliance with CARB EO VR-401-A, and Phase II vapor recovery in accordance with G-70-116-F. In the event of conflict between these permit conditions and/or the referenced EO's the more stringent requirements shall govern. Make the site available for inspection of records by representatives of the District, ARB, and the Energy Commission.	As required		
BIO-2	CONS	Submit to the CPM copies of all written reports and summaries that document biological resource compliance activities, including those conducted by Biological Monitors.	MCR	Monthly	Ongoing
BIO-4	CONS	Notify the CPM immediately (and no later than the following morning of the incident, or Monday morning in the case of a weekend) of any non-compliance or a halt of any site mobilization, ground disturbance, grading, construction, and operation activities. Also notify the CPM of the circumstances and actions being taken to resolve the problem.	Immediately as required		When Needed
BIO-4	CONS	Whenever corrective action is taken, a determination of success or failure will be made by the CPM within five working days after receipt of notice that corrective action is completed, or the project owner will be notified by the CPM that coordination with other agencies will require additional time before a determination can be made.	Immediately as required		When Needed
BIO-5	CONS	Provide the number of persons who have completed the training in the prior month and a running total of all persons who have completed the training to date.	MCR	Monthly	Ongoing
BIO-5	CONS, COMM & OPS	Training acknowledgement forms signed during construction shall be kept on file by the project owner for a period of at least six months after the start of commercial operation. During operation signed statements for operational personnel shall be kept on file for 6 months following termination of employment.	As required		
BIO-6	CONS	Implementation of BRMIMP measures will be reported.	MCR	Monthly	Ongoing
BIO-6	COMM	Provide to the CPM, for review and approval, a written construction closure report identifying which items of the BRMIMP have been completed etc. (see COC)	30 days after completion of construction		Not Started
BIO-7	OPS	Provide to the CPM, for review and approval, a written construction termination report identifying how measures have been completed. Additional copies shall be provided to CDFG and USFWS.	30 days after completion of construction		Not Started

Cond. #	Sort Code	Verification/Action/Submittal Required by Project Owner	Timeframe	Date Due to CEC CPM	Status
BIO-15	PC	Provide written verification to the CPM that the compensation lands or conservation easements have been aquired and recorded in favor of the approved recipients.	30 days prior to ground disturbance		Ongoing
BIO-15	COMM	Provide to the CPM verification that disturbance to desert tortoise and MGS habitat did not exceed 430 acres, and that construction activities did not result in impacts to desert tortoise, MGS, and burrowing owl habitat adjacent to work areas. If habitat disturbance exceeds that described in this analysis, the CPM shall notify of any additional funds required or lands that must be purchased.	90 days after construction completion		Not Started
BIO-15	PC	If electing to use an in-lieu fee provision, request from the Energy Commission a determination that the project's in-lieu fee proposal meets CEQA and CESA requirements.	As required		When Needed
BIO-16	CONS, COMM, OPS	The Designated Biologist shall submit annual reports to the CPM and CDFG describing the dates, durations and results of monitoring. Reports shall fully describe any actions taken to remedy regrowth. [Monitoring and maintenance of the site shall be conducted for five years unless less monitoring can be justified. Following the first year of monitoring, if the project owner petitions to terminate the monitoring program, staff and CDFG will determine whether more years are of monitoring are needed.]	ACR	Annually (for 1-5 years)	Not Started
BIO-16	CONS, OPS	The CPM and CDFG shall verify compliance with protective measures to ensure the accuracy of the PO's mitigation, monitoring and reporting efforts; and review relevant documents maintained by the project owner, interview the project owner's employees and agents, inspect the work site and take other actions as necessary to assess compliance with or effectiveness of protective measures.	None	Annually	Not Started
BIO-17	OPS	Reports to the CPM, CDFG and USFWS describing the dates, durations and results of monitoring. Reports shall provide a detailed description of any project related bird or wildlife deaths or injuries detected.	Quarterly after COD, for at least 2 years		Not Started
BIO-17	OPS	Annual Report summarizing the year's data, analyzes any Project-related bird fatalities or injuries detected, and provides recommendations for future monitoring and any adaptive management actions needed. Provided to the CPM, CDFG, and USFWS.	ACR	Annually	Not Started
BIO-17	OPS	Quarterly reports shall continue until the CPM, in consultation with CDFG and USFWS, determine whether more years of monitoring are needed, and whether mitigation and/or adaptive management measures are necessary.	As required		Not Started
BIO-17	OPS	Prepare a paper describing the study design and monitoring results to be submitted to a peer-reviewed scientific journal. Proof of submittal provided to the CPM within one year of concluding the monitoring study.	1 year after conclusion of study		Not Started
BIO-18	COMM & OPS	Provide to the CPM for review and approval a report identifying which items of the Raven Plan have been completed, a summary of all modifications to mitigation measures made during the project's construction phase, and which items are still outstanding.	30 days after completion of construction		
BIO-19	COMM & OPS	Submit a draft Evaporation Pond Monitoring and Adaptive Management plan to the CPM that incorporates the guidance in this condition.	90 days prior to operation of evaporation ponds		
BIO-19	COMM & OPS	Provide the CPM, USFWS, RWQCB and CDFG with the final version of the Plan that has been reviewed and approved by the CPM in consultation with USFWS, RWQCB, and CDFG.	30 days prior to operation of evap ponds		
BIO-20	CONS	Provide proof, to the satisfaction of the CPM, that the alternate well is completed and able to effectively convey a minimum of 75 acre feet per year to the Harper Dry Lake Marsh. Proof shall include, but not be limited to, a description of the well parameters, as constructed.	15 days prior to decomissioning well		
CUL-1	PC	If additional CRMs are obtained during the project, the CRS shall provide additional letters to the CPM identifying the CRMs and attesting to the qualifications of the CRMs.	5 days prior to CRMs beginning on-site duties		When Needed
CUL-1	PC	Resumes of specialists provided to CPM for review and approval.	10 days prior to specialists begin work		When Needed
CUL-2	PC	If there are changes to any project-related footprint, revised maps and drawings shall be provided.	15 days prior to ground disturbance		When Needed
CUL-2	PC	If project construction is phased, if not previously provided, submit the subject maps and drawings.	15 days prior to each phase		Ongoing
CUL-2	CONS	Current schedule of anticipated project activity shall be provided to the CRS and CPM by letter, e-mail or fax.	Weekly during ground disturbance		
CUL-2	CONS	Provide written notice of any changes to scheduling of construction phase.	within 5 days of identifying changes		
CUL-4	CONS	Submit the Cultural Resources Report (CRR) to the CPM for review and approval. If any reports have previously been sent to the California Historical Resource Information System (CHRIS), then receipt letters from the CHRIS or other verification of receipt shall be included in an appendix.	90 days after completion of ground disturbance (including landscaping)		Not Started

Cond. #	Sort Code	Verification/Action/Submittal Required by Project Owner	Timeframe	Date Due to CEC CPM	Status
CUL-4	CONS	Provide copy of agreement with, or other written commitment from, a curation facility that meets the standards stated in the CA State Historical Resources Commissions Guidelines for the Curation of Archeological Collections , to accept cultural materials, if any, from this project. Any agreements concerning curation will be retained and available for audit for the life of the project.	90 days after completion of ground disturbance (including landscaping)		Not Started
CUL-4	CONS	Provide documentation to the CPM confirming that copies of the CRR have been provided to the SHPO, the CHRIS and the curating institution, if archaeological materials were collected.	within 10 days of CPM approval		Not Started
CUL-4	CONS	Submit a draft CRR to the CPM for review and approval.	within 30 days after requesting a suspension of construction activities		Not Started
CUL-5	COMM	On a monthly basis, until ground disturbance is completed, the project owner shall provide in the MCR the WEAP Training Acknowledgement forms of workers at the project site and on the linear facilities who have completed training in the prior month and a running total of all persons who have completed training to date.	MCR	Monthly	Ongoing
CUL-6	CONS	While monitoring is on-going, include a copy of the monthly summary report of cultural resources-related monitoring prepared by the CRS.	MCR	Monthly	Ongoing
CUL-6	CONS	Daily, as long as no cultural resources are found, the CRS shall provide a statement that "no cultural resources over 50 years of age were discovered" to the CPM as an e-mail, or in some other form acceptable to the CPM. If the CRS concludes that daily reporting is no longer necessary, a letter or e-mail providing a detailed justification for the decision to reduce or end daily reporting shall be provided to the CPM for review and approval at least 24 hours prior to reducing or ending daily reporting.	Daily logs emailed to CPM		
CUL-6	CONS	Following the discovery of any Native American cultural materials, submit to the CPM copies of the information transmittal letters sent to the Chairperson of the Native American tribes or groups who requested the information. Additionally, submit to the CPM copies of letters of transmittal for all subsequent responses to Native American requests for notification, consultation, and reports and records and any comments or information provided in response by the Native Americans.	30 days after discovery of Native American Artifacts		When Needed
CUL-7	CONS	Completed DPR 523 forms for resources newly discovered during construction shall be submitted to the CPM for review and approval no later than 24 hours following the notification of the CPM, or 48 hours following the completion of data recordation/recovery, whichever the CRS decides is more appropriate for the subject cultural resource.	24 hours following the notification of the CPM,		When Needed
HAZ-1	OPS	Provide to the CPM a list of hazardous materials contained at the facility.	ACR	Annually	
HAZ-2	CONS	At least 60 days prior to receiving any hazardous material on the site for commissioning or operations, the project owner shall provide a copy of a final Hazardous Materials Business Plan, Spill Prevention, Control, and Countermeasure Plan, and a Process Safety Management Plan to the CPM for approval.	60 days prior to receiving hazardous material for COMM or OPS		
HAZ-4	CONS	Provide the design drawings as described in COC HAZ-4 to the CPM for review and approval. [The project owner shall place an adequate number of isolation valves in the Heat transfer Fluid (HTF) pipe loops so as to be able to isolate a solar collector loop in the event of a leak of fluid.]	60 days prior to commencement of solar array construction		
HAZ-6	COMM	The project owner shall notify the CPM that a site-specific operations site security plan is available for review and approval.	30 days prior to initial receipt of hazardous materials on-site		
HAZ-6	COMM & OPS	In the annual compliance report, the project owner shall include a statement that all current project employee and appropriate contractor background investigations have been performed, and that updated certification statements have been appended to the operations security plan. In the annual compliance report, the project owner shall include a statement that the operations security plan includes all current hazardous materials transport vendor certifications for security plans and employee background investigations.	ACR	Annually	
HAZ-7	CONS	Provide the design drawings as described in COC HAZ-7 to the CPM for review and approval. [The project owner shall ensure that all pipes carrying heat transfer fluid (HTF), all command and control systems, and the fire water loop that are required to cross Harper Lake Road or Lockhart Road will be placed underground for the crossing.]	60 days prior to commencement of solar array piping construction		
LAND-1	OPS	Provide to the CPM updates on the status of farmland/easement purchase(s).	ACR	Annually	
LAND-2	OPS	Consistent with the requirements of COMPLIANCE-11, incorporate the applicable requirements of the San Bernardino County Development Code section 84.29.060, Decommissioning Requirements, into the AMS Facility Closure Plan, to the extent feasible, and in as much as the county requirements do not conflict with the California Energy Commission's requirements and standards related to the closure of power generating facilities. Consistent with the requirements of COMPLIANCE-11, submit the Facility Closure Plan to the CPM.	12 months prior to planned closure/decommissioning		

Cond. #	Sort Code	Verification/Action/Submittal Required by Project Owner	Timeframe	Date Due to CEC CPM	Status
NOISE-2	CONS & OPS	The project owner shall file a Noise Complaint Resolution Form, shown below, with both the local jurisdiction and the CPM, that documents the resolution of the complaint. If mitigation is required to resolve the complaint, and the complaint is not resolved within a three-day period, the project owner shall submit an updated Noise Complaint Resolution Form when the mitigation is performed and complete.	within 5 days of receiving complaint		When Needed
NOISE-4	OPS	Conduct a 25 hour survey at LT-1 on a windy day, it shall include measurement of one-third octave band sound pressure levels to ensure no new pure-tone noise components have been caused by the project.	within 90 days of project achieving sustained output >= 90% of rated capacity		Not Started
NOISE-4	OPS	Submit a summary report to the CPM. Include a description of any additional mitigation measures necessary to achieve compliance with the listed noise limit, and a schedule for implementing these measures. When the measures are in place the survey shall be repeated.	within 30 days of completing survey		Not Started
NOISE-5	OPS	The project owner shall conduct an occupational noise survey to identify any noise hazardous areas in the facility.	after achieving sustained output >= 90% of rated capacity		Not Started
NOISE-5	OPS	Submit noise survey report to the CPM. Make the report available to OSHA and Cal-OSHA on request.	within 30 days of completing survey		Not Started
NOISE-7	COMM	Notify all residents and business owners within two miles of the project site. The notification may be in the form of letters, phone calls, fliers, or other effective means as approved by the CPM. The notification shall include a description of the purpose and nature of the steam blow(s), the planned schedule, expected sound levels, and explanation that it is a one-time activity and not part of normal plant operation. During steam blow activities, noise levels will be monitored at receptor locations LT-1, ST-1 and ST-2 and the results reported to the CPM.	15 days prior to the first steam blow		Not Started
PUBLIC HEALTH-1	COMM	The Cooling Water Management Plan shall be provided to the CPM for review and approval.	60 days prior to commencement of cooling tower operations		Not Started
SOIL&WATER-1	CONS	Provide an analysis on the effectiveness of the drainage, erosion, and sediment control measures and the results of monitoring and maintenance activities.	MCR	Monthly	Ongoing
SOIL&WATER-1	OPS	Provide information on the results of storm water BMP monitoring and maintenance activities. Also indicate what maintenance activities were completed to maintain the project's on-site storm water flow.	ACR	Annually	Ongoing
SOIL&WATER-2	COMM	Provide documentation to the CPM, with copies to the Lahontan RWQCB, demonstrating compliance with the WDRs established in Appendices C, D, and E.	60 days prior to wastewater or stormwater discharge or use of land treatment units		
SOIL&WATER-2	OPS	The project owner shall pay the annual waste discharge permit fee associated with this facility to the Water Boards.	Annually		
SOIL&WATER-3	COMM	Submit to the CPM a Channel Maintenance Plan for review and approval.	60 days prior to commercial operation		
SOIL&WATER-3	CONS & OPS	Ensure that the AMS project Construction and Operations Managers receive training on the Channel Maintenance Plan.	As required		
SOIL&WATER-3	OPS	Submit an Annual Channel Maintenance Report that specifies which maintenance activities were completed during the year including type of work, location, and measure of the activity (e.g. cubic yards of sediment removed).	ACR	Annually	
SOIL&WATER-4	CONS	Provide to the CPM copies of the Well Completion Reports submitted to the DWR by the well driller. Submit to the CPM, together with the Well Completion Report, a copy of well drilling logs, water quality analyses, and any inspection reports.	60 days after installation of each well		
SOIL&WATER-4	OPS	Provide the CPM with 2 copies of all monitoring and other reports required for compliance with the County of San Bernardino water well standards and operation requirements.	As required		
SOIL&WATER-4	CONS	Submit documentation to the CPM confirming that well drilling activities were conducted in compliance with Title 23, California Code of Regulations, Chapter 15, Discharges of Hazardous Wastes to Land, (23 CCR, sections 2510 et seq.) requirements and that any on-site drilling sumps used for project drilling activities were removed in compliance with 23 CCR section 2511(c).	15 days after completion of wells		
SOIL&WATER-5	CONS	Prepare a semi-annual summary report of the amount of water used for construction purposes. The summary shall include the monthly range and monthly average of daily water usage in gallons per day.	6 months after start of construction & ea. 6 mos. of construction	Semiannually	Reported in MCR
SOIL&WATER-5	CONS & OPS	Prepare an annual summary report, which will include the maximum daily and monthly usage in gallons per day and the total monthly and annual usage in acre-feet. Following the first year of operation, the annual summary report will summarize the annual usage in tabular form. For calculating the total water use, the term "year" will corrsepond to the date established for the ACR submittal.	ACR	Annually	

Cond. #	Sort Code	Verification/Action/Submittal Required by Project Owner	Timeframe	Date Due to CEC CPM	Status
SOIL&WATER-6	CONS	Submit to the CPM quarterly reports presenting all the data and information required in Item B above. Submit to the CPM all calculations and assumptions made in development of the report data and interpretations.	Quarterly during construction		2011 quarterly report submitted. Compliance ongoing.
SOIL&WATER-6	OPS	Provide to the CPM, for review and approval, documentation showing that any mitigation to private well owners during project construction was satisfied, based on the requirements of the property owner as determined by the CPM.	60 days after commercial operation		
SOIL&WATER-6	OPS	Submit to CPM, applicable quarterly, semi-annual, and annual reports presenting all the data and information required in Item C above. Submit to the CPM all calculations and assumptions made in development of report data and interpretations, calculations, and assumptions used in development of any reports.	As required		
SOIL&WATER-6	OPS	Submit to the CPM for review and approval all documentation and calculations describing necessary compensation for energy costs associated with additional lift requirements.	30 days after CPM approval of well drawdown analysis		
SOIL&WATER-6	OPS	Submit to the CPM all calculations, along with any letters signed by the well owners indicating agreement with the calculations, and the name and phone numbers of those well owners that do not agree with the calculations.	As required		
SOIL&WATER-6	OPS	If mitigation includes monetary compensation, provide documentation to the CPM that compensation payments have been made by March 31 of each year of project operation or, if a lump-sum payment is made, payment shall be made by March 31 of the following year. Within 30 days after compensation is paid, submit to the CPM a compliance report describing compensation for increased energy costs necessary to comply with the provisions of this condition.	As required		
SOIL&WATER-6	OPS	After the first 5-year operational and monitoring period, and every subsequent 5-year period, submit a 5-year monitoring report to the CPM for review and approval. This report shall contain all monitoring data collected and provide a summary of the findings and a recommendation about whether the frequency of water level measurements should be revised or eliminated.	Every 5 years		
SOIL&WATER-7	CONS & OPS	Semi-annually, by March 31 and September 31, submit Groundwater Quality Reports in compliance with Item D to the CPM for review and approval and to the BLM for review.	Semi-annually	03/31/20XX & 9/30/20XX	
SOIL&WATER-7	OPS	After the first 5-year operational and monitoring period, and every subsequent 5-year period, submit a 5-year monitoring report to the CPM, for review and approval, that contains all groundwater quality data collected and provides a summary of the findings and a recommendation about whether the frequency of groundwater quality data collection should be revised or eliminated.	Every 5 years		
SOIL&WATER-8	COMM & OPS	Prior to transport and offsite disposal of any facility operation wastewaters that are not suitable for treatment and reuse on-site, test and classify the stored wastewater to determine proper management and disposal requirements. All records of this testing and classification shall be maintain at the project site. Ensure that the wastewater is transported and disposed of in accordance with the wastewater's characteristics and classification and all applicable LORS (including any CCR Title 22 Hazardous Waste and Title 23 Waste Discharges to Land requirements).	As required		
SOIL&WATER-9	COMM	Submit to the County of San Bernardino appropriate fees and plans for review and comment for the construction and operation of the project's sanitary waste septic system and leach field. A copy of these plans shall be simultaneously submitted to the CPM for review and approval. These plans shall demonstrate compliance with the sanitary waste disposal facility requirements of County of San Bernardino Codes Title 3, Division 3, Chapter 8, Waste Management, Article 5, Liquid Waste Disposal and Title 6, Division 3, Chapter 3, and the Uniform Plumbing Code.	60 days prior to commercial operation		Submitted to SBC and approved. Submitted to CPM.
SOIL&WATER-10	COMM & OPS	Supply updates annually for all monitoring requirements and submittals to County of San Bernardino related to the permit, and proof of annual renewal of the operating permit.	ACR	Annually	
SOIL&WATER-11	OPS	The volume of FPA sequestered shall be documented and submitted to the CPM and Watermaster. This documentation shall include a table showing the annual and cumulative total FPA sequestered.	ACR	Annually	

Cond. #	Sort Code	Verification/Action/Submittal Required by Project Owner	Timeframe	Date Due to CEC CPM	Status
SOIL&WATER-12	OPS	Submit to the CPM a copy of the receipt from the MWA for the annual contribution; and an accounting of the following: i. The annual and cumulative volume of groundwater used by the project in acre-feet per year; ii. The annual and cumulative volume of FPA sequestered by the project in acre-feet per year; iii. The numerical difference between annual and cumulative totals in Items i and ii above; and iv. The annual and cumulative monetary contribution and estimated annual and cumulative volume of water conserved by the project owner's contribution to MWA's turf replacement program, high-efficiency toilet program, or other water conservation program approved by the CPM.	ACR	Annually	
SOIL&WATER-12	OPS	If owner proposes to reduce the amount of the annual contribution based on the water conservation achieved through previous contributions, provide a plan demonstrating how the adjusted amount will ensure the water conservation program meets the requirements of this condition. The plan shall be provided for CPM review and approval 60 days prior to the annual contribution anniversary date.	60 days prior to the annual contribution anniversary date		When Needed
TRANS-1	PC	Notify the County of San Bernardino and the CPM that the park-and-ride lot(s) are ready for usage and available for inspection.	30 days prior to site mobilization		
TRANS-3	COMM	Submit an analysis of the roadway pavement conditions to San Bernardino County and Caltrans for review and comment and to the CPM for review and approval. The review will include photographs, the visual analysis of pavement and sub-surface conditions and a schedule for repair.	60 days after the end of construction activities		
TRANS-3	COMM	Submit a letter to San Bernardino County, Caltrans, and the CPM indicating such repairs are finished and ready for inspection.	After completion of repairs		When Needed
TRANS-5	COMM & OPS	A record of hazardous deliveries shall be provided to the CPM as required in HAZ-3.	As required		
TSLN-2	OPS	All reports of line-related complaints shall be summarized for the project-related lines and included during the first five years of plant operation in the Annual Compliance Report.	ACR	Annually	
TSLN-3	CONS	File copies of the pre-and post-energization measurements with the CPM after completion of the measurements.	60 days after completion of the measurements		
TSLN-4	OPS	During the first five years of operation, the project owner shall provide a summary of inspection results and any fire prevention activities carried out along the rights-of-way and provide such summaries in the ACR for transmission line safety and nuisance-related requirements.	ACR, for first 5 years of operation		
TSLN-5	COMM & OPS	The project owner shall ensure that all permanent metallic objects within the right-of-way of the project-related lines are grounded according to industry standards regardless of ownership. Transmit to the CPM a letter confirming compliance with this condition.	30 days before lines are energized		
VIS-1	COMM	The project owner shall notify the CPM that surface treatment of all listed structures and buildings has been completed and they are ready for inspection and shall submit one set of electronic color photographs from key observation points 1, 2, 3, 4, 5, 6, 7, and 8 analyzed in the Staff Assessment.	Prior to COD		
VIS-1	OPS	Provide a status report regarding surface treatment maintenance. Specify a): the condition of the surfaces of all structures and buildings at the end of the reporting year; b) maintenance activities that occurred during the reporting year; and c) the schedule of maintenance activities for the next year.	ACR	Annually	
VIS-2	COMM	The screening plan shall be submitted to the CPM for review and approval.	90 days prior to installation		
VIS-2	CONS	Completed DPR 523 forms for resources newly discovered during construction shall be submitted to the CPM for review and approval no later than 24 hours following the notification of the CPM, or 48 hours following the completion of data recordation/recover	7 days after completing screening		
VIS-2	OPS	Report maintenance activities, including replacement of plants that fail to thrive for the previous year of operation.	ACR, for first 5 years of operation	Annually	
VIS-3	CONS & OPS	Provide the CPM with a complaint resolution form report as specified in the Compliance General Conditions, including a proposal to resolve the complaint, and a schedule for implementation. A copy of the complaint resolution form report shall be submitted to the CPM within 30 days and included in the Annual Report.	Within 48 hours of receiving lighting complaint		
VIS-3	PC, CONS, & COMM	Notify the CPM that the temporary and permanent lighting has been completed and is ready for inspection. If after inspection the CPM says that modifications to the lighting are needed, within 30 days of receiving that notification owner shall implement the modifications and notify the CPM that the modifications have been completed and are ready for inspection.	Prior to construction [DONE] Prior to operation		Prior to Operation
VIS-4	CONS	Notify the CPM that the screening is ready for inspection.	7 days after completing screening install		
VIS-4	OPS	Report maintenance activities, including replacement of damaged or destroyed screening for the previous year of operation.	ACR	Annually	
WASTE-2	CONS & OPS	Project owner shall keep a copy of the identification number on file at the project site and provide documentation of the hazardous waste generation notification and receipt of the number to the CPM after receipt of the number. Submittal of the notification and issued number documentation to the CPM is only needed once unless there is a change in ownership, operation, waste generation, or waste characteristics that requires a new notification to USEPA.	MCR		

Cond. #	Sort Code	Verification/Action/Submittal Required by Project Owner	Timeframe	Date Due to CEC CPM	Status
WASTE-2	CONS & OPS	Documentation of any new or revised hazardous waste generation notifications or changes in identification number shall be provided to the CPM.	As required		
WASTE-4	PC	Submit any final reports filed by the professional engineer or professional geologist to the CPM.	within 5 days of receipt		Ongoing as needed
WASTE-4	PC	Notify the CPM within 24 hours of any orders issued to halt construction.	within 24 hours of orders to halt construction		
WASTE-7	CONS & OPS	Identify permitted solid waste facilities or recycling centers that receive construction waste and maintain copies of weigh tickets and manifests showing the type and volume of waste disposed. This information shall be maintained at the project site and made accessible to CPM and the San Bernardino County Environmental Health Service Department Solid Waste Program.	As required		
WASTE-9	COMM	Submit the Operation Waste Management Plan to the CPM for approval.	30 days prior to commercial operation		
WASTE-9	COMM	Submit any required revisions to the CPM.	20 days of notification from the CPM revisions required		
WASTE-9	OPS	Document the actual volume of wastes generated and the waste management methods used during the year; provide a comparison of the actual waste generation and management methods used to those proposed in the original Operation Waste Management Plan; and update the Operation Waste Management Plan, as necessary, to address current waste generation and management practices.	ACR	Annually	
WASTE-10	OPS	HTF Release and Spill Cleanup and Reporting Instructions	As required		When Needed
WASTE-11	COMM & OPS	Report the results of filter cake testing to the CPM. If two consecutive tests show that the sludge is non-hazardous, may apply to the CPM to discontinue testing.	within 30 days of sampling		
WASTE-11	OPS	The test results and method and location of sludge disposal shall reported in the ACR as required in Condition of Certification WASTE-9.	ACR	Annually	
WASTE-12	CONS & OPS	Document all unauthorized releases and spills of hazardous substances, materials, or wastes that are in excess of reportable quantities that occur on the project property or transmission corridors during construction and on the project property during operation.	As required		
WASTE-12	CONS & OPS	Copies of the unauthorized spill documentation shall be provided to the CPM.	within 30 days of the date the release was discovered		
WORKERSAFETY-2	COMM	Submit to the SBCFD the final Operations Fire Prevention Plan and Emergency Action for review and the final Project Operations and Maintenance Safety and Health Program to the CPM for approval.	30 days prior to start of commissioning		
WORKERSAFETY-3	CONS	The CSS shall submit in the MCR a monthly safety inspection report	MCR	Monthly	Ongoing
WORKERSAFETY-6	CONS	(1) A copy of the individual agreement with the SBCFD or, if the owner joins a power generation industry association, a copy of the group's bylaws and a copy of the group's agreement with the SBCFD; and evidence in each January Monthly Compliance Report that the project owner is in full compliance with the terms of such bylaws and/or agreement; or (2) A protocol, scope and schedule of work for the independent study and the qualifications of proposed contractor(s) for review and approval by the CPM; a copy of the completed study showing the precise amount the project owner shall pay for mitigation; and documentation that the amount has been paid.	five (5) days before construction of permanent aboveground structures		In Progress
WORKERSAFETY-6	OPS	Annually thereafter, the owner shall provide the CPM with verification of funding to the SBCFD if annual payments were approved or recommended under either of the above-described funding resolution options.	ACR	Annually	
WORKERSAFETY-9	COMM	Submit to the CPM proof that the joint training with the SBCFD is established.	10 days prior to commissioning		
WORKERSAFETY-9	OPS	Submit to the CPM proof that the joint training with the SBCFD was conducted. Include the date, list of participants, training protocol, and location in the yearly compliance report to the CPM.	ACR	Annually	
GEN-1	COMM	Submit to the CPM a statement of verification, signed by the responsible design engineer, attesting that all designs, construction, installation, and inspection requirements of the applicable LORS and the Energy Commission's decision have been met in the area of facility design. Provide the CPM a copy of the certificate of occupancy within 30 days of receipt from the CBO.	30 days of receipt of certificate of occupancy		
GEN-1	OPS	Once the certificate of occupancy has been issued, inform the CPM prior to any construction, addition, alteration, moving, demolition, repair, or maintenance to be performed on any portion(s) of the completed facility that requires CBO approval for compliance with the above codes. The CPM will then determine if the CBO needs to approve the work.	30 days prior to start of any activity listed requiring CBO approval		

Cond. #	Sort Code	Verification/Action/Submittal Required by Project Owner	Timeframe	Date Due to CEC CPM	Status
GEN-2	CONS	Provide schedule updates in the monthly compliance report.	MCR		
GEN-3	PC	Make the required payments to the CBO in accordance with the agreement. Send a copy of the CBO's receipt of payment to the CPM indicating that applicable fees have been paid. A copy of the contract between the project owner and the CBO shall be submitted to the CPM for review.	In next MCR		
GEN-4	PC	Notify the CPM of the CBO's approvals of the RE and other delegated engineer(s).	within 5 days of CBO's approval		Approved but ongoing
GEN-5	PC	Notify the CPM of the CBO's approvals of the responsible engineers.	within 5 days of the CBO's approval		Approved but ongoing
GEN-5	CONS	If the designated responsible engineer is subsequently reassigned or replaced, submit the resume and registration number of the newly assigned engineer to the CBO for review and approval.	within 5 days of replacement		
GEN-6	CONS	Submit to the CBO for review and approval, with a copy to the CPM, the name(s) and qualifications of the certified weld inspector(s), or other certified special inspector(s) assigned to the project to perform one or more of the duties set forth above.	15 days prior to start of activity requiring special inspection		Approved but ongoing
GEN-6	CONS	Also submit to the CPM a copy of the CBO's approval of the qualifications of all special inspectors.	in next MCR		
GEN-7	CONS	Transmit a copy of the CBO's approval of any corrective action taken to resolve a discrepancy to the CPM.	MCR		
GEN-7	CONS	If any corrective action is disapproved, advise the CPM, within five days, of the reason for disapproval and the revised corrective action to obtain CBO's approval.	within 5 days of disapproval by CBO		
GEN-8	CONS	Submit to the CBO, with a copy to the CPM, in the next monthly compliance report, (a) a written notice that the completed work is ready for final inspection, and (b) a signed statement that the work conforms to the final approved plans.	within 15 days of completion of CBO-approved work		
GEN-8	CONS	Submit to the CPM a letter stating both that the above documents have been stored and the storage location of those documents.	After storing the final approved engineering plans etc		
GEN-8	COMM	Provide to the CBO three sets of electronic copies of the above documents at the project owner's expense. These are to be provided in the form of "read only" (Adobe .pdf 6.0) files, with restricted (password-protected) printing privileges, on archive quality compact disks.	within 90 days of completion of construction		
CIVIL-2	CONS	Notify the CPM within 24 hours, when earthwork and construction is stopped as a result of unforeseen adverse geologic/soil conditions. Within 24 hours of the CBO's approval to resume earthwork and construction in the affected areas, provide to the CPM a copy of the CBO's approval.	24 hours following stop of construction; & within 24-hours of CBO's approval to resume		
CIVIL-3	CONS	RE shall transmit to the CBO and the CPM a non-conformance report (NCR), and the proposed corrective action for review and approval.	within 5 days of discovery of discrepancies		
CIVIL-3	CONS	Owner shall submit the details of the corrective action to the CBO and CPM.	within 5 days of resolution of NCR		
CIVIL-3	CONS	A list of NCRs, for the reporting month, shall be included in MCR.	monthly in MCR		
CIVIL-4	CONS	Submit to the CBO, for review and approval, the final grading plans (including final changes) and the responsible civil engineer's signed statement that the installation of the facilities and all erosion control measures were completed in accordance with the final approved combined grading plans, and that the facilities are adequate for their intended purposes, along with a copy of the transmittal letter to the CPM.	30 days of completion of erosion and sediment control work		
CIVIL-4	CONS	Submit a copy of the CBO's approval to the CPM in the next monthly compliance report.	In the next MCR following approval		
STRUC-1	PC	At least 60 days (or project owner and CBO approved alternative time frame) prior to the start of any increment of construction of any structure or component listed in the CBO-approved master drawing and master specifications list, the project owner shall submit to the CBO the above final design plans, specifications and calculations, with a copy of the transmittal letter to the CPM.	60 days prior to the start of construction of listed major structure		Approved but ongoing
STRUC-1	PC	Submit to the CPM, in the next monthly compliance report, a copy of a statement from the CBO that the proposed structural plans, specifications, and calculations have been approved and comply with the requirements set forth in applicable engineering LORS.	In the next MCR following approval		Approved but ongoing
STRUC-2	CONS	If a discrepancy is discovered in any of the above data, prepare and submit an NCR describing the nature of the discrepancies and the proposed corrective action to the CBO, with a copy of the transmittal letter to the CPM. The NCR shall reference the condition(s) of certification and the applicable CBC chapter and section.	within 5 days of discovery of discrepancies		

Cond. #	Sort Code	Verification/Action/Submittal Required by Project Owner	Timeframe	Date Due to CEC CPM	Status
STRUC-2	CONS	Submit a copy of the corrective action to the CBO and the CPM.	within 5 days of resolution of NCR		
STRUC-2	CONS	Transmit a copy of the CBO's approval or disapproval of the corrective action to the CPM .	within 15 days of CBO decision		
STRUC-2	CONS	If disapproved, advise the CPM, the reason for disapproval, and the revised corrective action to obtain CBO's approval.	within 5 days of disapproval by CBO		
STRUC-3	PC & CONS	Notify the CBO of the intended filing of design changes, and submit the required number of sets of revised drawings and the required number of copies of the other above-mentioned documents to the CBO, with a copy of the transmittal letter to the CPM.	on a schedule suitable to the CBO		
STRUC-3	PC & CONS	Notify the CPM, via monthly compliance report, when the CBO has approved the revised plans.	In the next MCR following approval		
STRUC-4	CONS	Prior to the start of installation of the tanks or vessels containing the specified quantities of toxic or hazardous materials, submit to the CBO for design review and approval final design plans, specifications, and calculations, including a copy of the signed and stamped engineer's certification.	30 days prior to installation		
STRUC-4	CONS	Send copies of the CBO approvals of plan checks to the CPM in the following monthly compliance report. Also transmit a copy of the CBO's inspection approvals to the CPM in the monthly compliance report following completion of any inspection.	In the next MCR following approval		
MECH-1	CONS	At least 30 days (or project owner- and CBO-approved alternative time frame) prior to the start of any increment of major piping or plumbing construction listed in the CBO-approved master drawing and master specifications list, the project owner shall submit to the CBO for design review and approval the final plans, specifications, and calculations, including a copy of the signed and stamped statement from the responsible mechanical engineer certifying compliance with applicable LORS.	30 days prior to the start of any increment of major piping or plumbing construction		
MECH-1	CONS	Send the CPM a copy of the transmittal letter.	in the next MCR		
MECH-1	CONS	Transmit to the CPM following completion of any inspection, a copy of the transmittal letter conveying the CBO's inspection approvals.	In the next MCR following inspection		
MECH-2	CONS	For all pressure vessels installed in the plant: Submit to the CBO for design review and approval, the listed documents, including a copy of the signed and stamped engineer's certification, with a copy of the transmittal letter to the CPM.	30 days prior to the start of PV on-site fabrication or installation		
MECH-2	CONS & COMM	Transmit to the CPM, following completion of any inspection, a copy of the transmittal letter conveying the CBO's and/or Cal-OSHA inspection approvals.	In the next MCR following inspection		
MECH-3	CONS	Prior to the start of construction of any HVAC or refrigeration system, submit to the CBO the required HVAC and refrigeration calculations, plans, and specifications, including a copy of the signed and stamped statement from the responsible mechanical engineer certifying compliance with the CBC and other applicable codes, with a copy of the transmittal letter to the CPM.	30 days prior to construction of any HVAC or refrigeration system		
ELEC-1	CONS	Prior to the start of each increment of electrical construction, submit to the CBO for design review and approval the above listed documents. Include in this submittal a copy of the signed and stamped statement from the responsible electrical engineer attesting compliance with the applicable LORS.	30 days prior to start of each increment of electrical construction		
ELEC-1	CONS	Send the CPM a copy of the transmittal letter in the next monthly compliance report.	in the next MCR		
PAL-1	CONS	Prior to the termination or release of a PRS, submit the resume of the proposed new PRS to the CPM for review and approval.	As required		When Needed
PAL-2	PC	If there are changes to the scheduling of the construction phases, submit a letter to the CPM.	within 5 days of identifying changes		When Needed
PAL-4	PC	If the owner requests an alternate paleontological trainer, the resume and qualifications of the trainer shall be submitted to the CPM for review and approval prior to installation of an alternate trainer. Alternate trainers shall not conduct training prior to CPM authorization.	As necessary	As necessary	When Needed
PAL-4	CONS	Provide copies of the WEAP certification of completion forms with the names of those trained and the trainer or type of training (in-person or other approved presentation format) offered that month. Also include a running total of all persons who have completed the training to date.	MCR	Monthly	
PAL-5	CONS	Ensure that the PRS submits the summary of monitoring and paleontological activities in the MCR.	MCR		
PAL-5	CONS	When feasible, the CPM shall be notified 10 days in advance of any proposed changes in monitoring different from the plan identified in the PRMMP. If there is any unforeseen change in monitoring, the notice shall be given as soon as possible prior to implementation of the change.	10 days in advance of proposed monitoring changes, or ASAP		

Cond. #	Sort Code	Verification/Action/Submittal Required by Project Owner	Timeframe	Date Due to CEC CPM	Status
PAL-6	OPS	Maintain in compliance file copies of signed contracts or agreements with the designated PRS and other qualified research specialists. Maintain these files for a period of three years after project completion and approval of the CPM-approved paleontological resource report (see Condition of Certification PAL-7). Shall be responsible for paying any curation fees charged by the museum for fossils collected and curated as a result of paleontological mitigation. A copy of the letter of transmittal submitting the fossils to the curating institution shall be provided to the CPM.	maintain for 3 years after project completion and CPM-approval of PR Report		
PAL-7	CONS	Submit the PRR under confidential cover to the CPM.	within 90 days of completion of ground disturbance		
TSE-1	PC	Submit the schedule, a Master Drawing List, and a Master Specifications List to the CBO and to the CPM. The schedule shall contain a description and list of proposed submittal packages for design, calculations, and specifications for major structures and equipment. Additions and deletions shall be made to the table only with CPM and CBO approval.	60 days prior to start of construction		Approved as "living document"
TSE-1	CONS	Provide schedule updates in the MCR.	MCR	Monthly	
TSE-2	PC	Notify CPM of the CBO's approval.	within 5 days of CBO approval		Approved but ongoing
TSE-2	PC & CONS	If the designated responsible engineer is subsequently reassigned or replaced, the project owner has five days in which to submit the name, qualifications, and registration number of the newly assigned engineer to the CBO for review and approval. The project owner shall notify the CPM of the CBO's approval of the new engineer within five days of the approval.	within 5 days of change in RE		
TSE-3	CONS	Submit a copy of CBO's approval or disapproval of any corrective action taken to resolve a discrepancy to the CPM.	within 15 days of receipt		
TSE-3	CONS	If disapproved, advise the CPM, the reason for disapproval, and the revised corrective action to obtain CBO's approval.	within 5 days of CBO disapproval		
TSE-4	CONS	Prior to the start of each increment of construction, submit to the CBO for review and approval the final design plans, specifications and calculations for equipment and systems of the power plant switchyard, outlet line and termination, including a copy of the signed and stamped statement from the responsible electrical engineer attesting to compliance with the applicable LORS.	30 days prior to start of each increment of construction		
TSE-4	CONS	Send the CPM a copy of the transmittal letter.	in the next MCR		
TSE-5	CONS	To ensure the proposed transmission facilities will conform to all applicable LORS, submit to the CBO for approval: Items A through G listed in the COC, including Design drawings, specifications and calculations, with design criteria, Electrical one-line diagrams, the Special Protection System (SPS) sequencing and timing if applicable, a letter stating the mitigation measures or projects selected by the transmission owners for each reliability criteria violation are acceptable, an Operational study report based on the expected or current COD from the California ISO and/or SCE, and a copy of the executed LGIA signed by the California ISO and the project owner.	60 days prior to construction of transmission facilities		
TSE-6	CONS	Inform the CBO and the CPM of any impending changes that may not conform to requirements of TSE-5 and request approval to implement such changes.	60 days prior to construction of transmission facilities		
TSE-7	COMM	Provide copies of the CAISO letter to the CPM when it is sent to the CAISO.	1 week prior to initial synchronization with grid		
TSE-7	COMM	Contact CAISO Outage Coordination Department, Mon thru Fri, btwn 0700 and 1530 at (916) 351-2300 at least one business day prior to synchronizing the facility with the grid for testing. A report of conversation with the CAISO shall be provided electronically to the CPM one day before synchronizing the facility with the CA transmission system for the first time.	1 day prior to initial synchronization with grid		
TSE-8	COMM	Transmit to the CPM and CBO: "As Builts" and one-line drawings of the electrical portion; "as built" engineering description of the mechanical, structural, and civil portion of the transmission facilities they shall be maintained at the power plant and made available if requested for CPM Audit; A summary of inspections of the completed transmission facilities. [See COC]	within 60 days after first synchronization		

Completed Conditions

Cond. #	Sort Code	Verification/Action/Submittal Required by Project Owner	Timeframe	Date Due to CEC CPM	Status
COMPLIANCE-4	PC	Prior to commencing construction, a compliance matrix addressing only conditions that must be fulfilled before the start of construction shall be submitted to the CPM. This matrix will be included in the first compliance submittal or prior to the first pre-construction meeting, whichever comes first. It will be submitted in the same format as the compliance matrix.	Prior to construction	9/2/2010	Complete

Cond. #	Sort Code	Verification/Action/Submittal Required by Project Owner	Timeframe	Date Due to CEC CPM	Status
COMPLIANCE-8	PC, CONS, COMM, OPS	Confidential Information Instructions	As required		NA
COMPLIANCE-10	PC, CONS, COMM, OPS	Reporting of Complaints, Notices, and Citations: Prior to the start of construction, the project owner must send a letter to property owners living within one mile of the project notifying them of a telephone number to contact project representatives with questions, complaints or concerns. If the telephone is not staffed 24 hours per day, it shall include automatic answering with date and time stamp recording.	Prior to construction	Prior to construction	Complete
AQ-SC1	PC	Submit to the CPM for approval the name, resume, qualifications and contact information for the onsite AQCMM and all Delegates.	30 days prior to ground disturbance		Complete
AQ-SC2	PC	Submit AQCMP to CPM for approval. Include effectiveness and environmental data for the proposed soil stabilizer. CPM will notify of any necessary modifications to the plan within 15 days from the date of reciept.	30 days prior to ground disturbance		Complete
AQ-SC9	PC	Provide to the CPM, a statement signed by the project owner's project manager stating that the owner or residents of the properties affected by this condition have been notified and that the residents have been offered paid relocation during the affected period of the initial grading/site preparation phase of construction. The statement shall list affected property owners/residents notified and the means of notification.	Prior to initial grading		Complete
AQ-SC9	CONS	Provide documentation regarding any requests from the residents to be relocated for longer periods during construction and the actions taken to evaluate those requests.	During Construction		Complete
AQ-15	CONS & OPS	Provide the District for review and approval and the CPM for review the required Inspection, Monitoring and Maintenance plan	30 days prior to installation of HTF storage tanks and vent systems		Complete
AQ-50	CONS	Toll free number 1-800-635-4617 must be posted. Make site available for inspection of records by representatives of the District, ARB, and the Energy Commission.	As required		
BIO-1	PC	Submit the resume. The CPM, CDFG, and USFWS have 30 days to approve or deny proposed Designated Biologists. No site or related facility activities shall commence until an approved Designated biologist is available to be on site	60 days prior to site mobilization		Complete
BIO-3	PC	Submit the specified information to the CPM, CDFG, and USFWS for approval. The CPM, CDFG, and USFWS have 30 days to approve or deny proposed Biological Monitor(s). Submit a written statement to the CPM confirming that Biological Monitor(s) have been trained.	60 days prior to site mobilization		Complete
BIO-5	PC	Worker Environmental Awareness Program: Provide the CPM the proposed WEAP and all supporting materials prepared or reviewed by the Designated Biologist and a resume of the person(s) administering the program. The CPM shall review and provide written comments within 15	45 days prior to site mobilization		Complete
BIO-5	PC	Prior to site and related facilities mobilization submit two copies of the CPM- approved materials.	10 days prior to site mobilization		Complete
BIO-6	PC	Biological Resources Mitigation Implementation and Monitoring Plan (BRMIMP) Development and Compliance: Provide the specified document prior to start of any site (or related facilities) mobilization. The CPM will determine the BRMIMP's acceptability within 30 days of receipt. If there are any permits that have not yet been received when the BRMIMP is first submitted, these permits shall be submitted to the CPM within 5 days of their receipt, and the BRMIMP shall be revised or supplemented to reflect the permit condition within 10 days of their receipt by the project owner. Ten days prior to pre-construction site mobilization the revised BRMIMP shall be resubmitted to the CPM.Site mobilization will not occur without an approved BRMIMP.	45 days prior to site mobilization		Complete
BIO-7	PC	All mitigation measures and their implementaion methods shall be included in the BRMIMP.	45 days prior to site mobilization		Complete

BIO-8	PC	Pre-Construction Nest Surveys and Impact Avoidance and Minimization Measures for Migratory Birds: Provide the CPM a letter-report describing the findings of the pre-construction nest surveys, including the time, date, and duration of the survey; identity and qualifications of the surveyor(s); and a list of species observed. If active nests are detected during the survey, the report shall include a map or aerial photo identifying the location of the nest and shall depict the boundaries of the no-disturbance buffer zone around the nest. Additional copies shall be provided to CDFG and USFWS.	10 days prior to site mobilization		Complete
BIO-9	PC	Golden Eagle Territory-Specific Management Plan: Submit a report to the CPM, CDFG, and USFWS. This report shall document the results of the inventory and monitoring as described in Pagel et al. 2010.	within 30 days of completion of GOEA breeding-season surveys		Complete
BIO-9	PC	Submit a report to the CPM, CDFG, and USFWS. This report shall document the results of the protocol surveys as described in Pagel et al. 2010 or more recent guidance by USFWS (e.g., Pagel et al, in prep).	within 30 days of completion of GOEA non-breeding- season surveys (late-summer/early winter 2010)		Complete
BIO-9	PC	Provide the CPM, CDFG, and USFWS with the final version of the Golden Eagle Territory-Specific Management Plan, based on breeding-season inventory results. This final Plan shall have been reviewed and approved by the CPM in consultation with USFWS. [or (see next entry below)]	30 days prior to site mobilization		Not Required
BIO-9	PC	If disturbance to eagles would not occur and a Plan is not warranted, a letter from USFWS documenting this determination shall be submitted to the CPM at least 10 days prior to the start of any pre-construction site mobilization.	10 days prior to site mobilization	As required	Complete
BIO-10	PC	Documentation of Bald and Golden Eagle Act Compliance: Submit to the CPM documentation that the project is in compliance with the Bald and Golden Eagle Protection Act (Title 16, United States Code, sections 668-668d). This shall include documentation from the USFWS in the form of written or electronic transmittal indicating the status of the permit, if required, and any follow up actions required by the project owner. Any additional actions shall be added to the BRMIMP and implemented.	10 days prior to site mobilization		Complete
BIO-11	PC	Provide the CPM with the final version of the Desert Tortoise Translocation Plan that has been approved by the Energy Commission staff, USFWS, and CDFG. The CPM will determine the plan's acceptability within 15 working days of receipt of receipt of the final plan.	45 days prior to site mobilization		Complete

Cond. #	Sort Code	Verification/Action/Submittal Required by Project Owner	Timeframe	Date Due to CEC CPM	Status
BIO-11	PC	Desert Tortoise Exclusion Fencing, Clearance Surveys, and Translocation Plan: The entire project site shall be fenced with desert tortoise exclusion fence. To avoid impacts to desert tortoise during fence construction, the proposed fence alignment shall be flagged and the alignment surveyed within 24 hours prior to fence construction.	Prior to ground disturbance		Complete
BIO-11	PC	Submit report to the CPM, USFWS, and CDFG describing how each of the mitigation measures described have been satisfied. The report shall include the desert tortoise survey results, capture and release locations of any translocated desert tortoises, and any other information needed to demonstrate compliance with the measures described.	30 days of completing Desert Tortoise clearance surveys		Complete
BIO-12	PC	Mohave Ground Squirrel Clearance Surveys: Submit a report to the CPM and CDFG describing how the measures described were implemented. The report shall include the MGS survey results, capture and release locations of any relocated squirrels, and any other information needed to demonstrate compliance with the measures described. [Survey required to be conducted after the installation of the desert tortoise exclusion fence and immediately prior to any ground disturbance.]	Report due within 30 days of completing MGS clearance surveys [Survey required after DT fencing, immed. prior to ground disturbance]		Complete
BIO-13	PC	Provide CPM and CDFG with the final version of the Burrowing Owl Monitoring and Mitigation Plan that has been reviewed and approved by the CPM in consultation with CDFG.	45 days prior to site mobilization		Complete
BIO-13	PC	An addendum to the plan, which includes the pre-construction survey results and the CDFG approved amount of compensatory mitigation, shall be submitted.	10 days after completing burrowing owl surveys		Complete
BIO-14	PC	American Badger and Desert Kit Fox Impact Avoidance and Minimization Measures: Submit report to CPM and CDFG after completion of badger and kit fox surveys. The report shall describe survey methods, results, mitigation measures implemented, and the results of the measures.	within 30 days of completion of surveys		Complete
BIO-15	PC	Submit a formal acquisition proposal to the CPM, CDFG and USFWS describing the parcels intended for purchase or title/easement transfer.	90 days prior to acquisition of property		Complete
BIO-15	PC, CONS	Provide CPM with a management plan for review and approval, in consultation with CDFG, for the compensation lands and associated funds.	within 6 months of land purchase		Complete
BIO-17	PC	Monitoring Impacts of Solar Collection Technology on Birds: Submit to the CPM, USFWS, and CDFG a draft Bird Monitoring Study.	60 days prior to ground disturbance		Complete
BIO-17	PC	Provide CPM with the final version of the Bird Monitoring Plan that has been reviewed and approved by the CPM, in consultation with CDFG and USFWS.	30 days prior to ground disturbance		Complete
BIO-16	PC	Project owner shall submit to the CPM a copy of the Energy Commission staff- and CDFG-approved Tamarisk Eradication Monitoring and Reporting Plan, including success criteria.	30 days prior to ground disturbance		Complete
BIO-18	PC	Submit to the CPM verification of payment to the REAT Account to support the regional raven monitoring plan. Payment shall be included in the AMS project's land management enhancement fund, pursuant to Condition of Certification BIO-15 (5(D)).	Prior to ground disturbance		Complete
BIO-18	PC	Provide CPM, USFWS and CDFG with the final version of the Raven Management Plan that has been reviewed and approved by USFWS and CDFG. CPM shall determine the plan's acceptability within 10 days of receipt of the final plan.	30 days prior to ground disturbance		Complete
BIO-21	PC	Submit to CPM copy of USFWS Biological Opinion. Verify that the permit terms and conditions of the Biological Opinion are incorporated into the BRMIMP and will be implemented.	45 days prior to site mobilization		Complete
CUL-1	PC	Submit resume for Cultural Resources Specialist (CRS), and alternates if desired, for review and approval.	45 days prior to ground disturbance		Complete
CUL-1	PC	CRS shall provide a letter naming anticipated CRMs for the project and stating that they meet the minimum requirements for cultural resource monitoring.	20 days prior to ground disturbance		Complete
CUL-1	PC	Project owner shall confirm in writing to the CPM that the approved CRS will be available for onsite work and is prepared to implement the cultural resources conditions.	10 days prior to ground disturbance		Complete
CUL-2	PC	The project owner shall provide the AFC, data responses, and confidential cultural resources documents to the CRS, if needed, and the subject maps and drawings to the CRS and CPM. The CPM will review submittals in consultation with the CRS and approve maps and drawings suitable for cultural resources planning activities.	40 days prior to ground disturbance		Complete
CUL-3	PC	Submit the Cultural Resources Monitoring and Mitigation Plan (CRMMP) to the CPM for review and approval.	30 days prior to ground disturbance		Complete
CUL-3	PC	Letter provided to the CPM indicating that the owner agrees to pay curation fees for any materials collected as a result of the archaeological investigations.	30 days prior to ground disturbance		Complete
CUL-5	PC	The CRS shall provide the training program draft text and graphics and the informational brochure to the CPM for review and approval. The CPM will provide to the project owner a WEAP Training Acknowledgement form for each WEAP-trained worker to sign.	30 days prior to ground disturbance		Complete
CUL-6	PC	CPM will provide to the CRS an electronic copy of a form to be used as a daily monitoring log.	30 days prior to ground disturbance		Complete

HAZ-3	PC	Provide a Safety Management Plan as described to the CPM for review and approval.	60 days prior to delivery of any liquid hazardous materials to facility		

Cond. #	Sort Code	Verification/Action/Submittal Required by Project Owner	Timeframe	Date Due to CEC CPM	Status
CUL-7	PC	Provide the CPM and CRS with a letter confirming that the CRS, alternate CRS and CRMs have the authority to halt construction activities in the vicinity of a cultural resource discovery, and that the project owner shall ensure that the CRS notifies the CPM within 24 hours of a discovery or by Monday morning if the cultural resources discovery occurs between 8:00 AM on Friday and 8:00 AM on Sunday morning.	30 days prior to ground disturbance		Complete
HAZ-5	PC	Notify the CPM that a site-specific Construction Security Plan is available for review and approval.	30 days prior to construction		Complete
LAND-1	PC	Provide a mitigation fee payment to an agricultural land trust such as the Transition Habitat Conservancy or any other land trust that has been previously approved by the CPM prior to the start of construction. The fee payment will be determined by an independent appraisal conducted on available, comparable, farmland property on behalf of the agricultural land trust. The project owner shall pay all costs associated with the appraisal.	prior to the start of construction		Complete
LAND-1	OPS	Provide documentation to the CPM that the fee has been paid and that the 128 acres of farmland and/or easements shall be purchased within three years of start of operation as compensation for the 128 acres of FMMP designated Important Farmland to be converted by the AMS project. The documentation also shall guarantee that the land/easements purchased by the trust will be located in San Bernardino County and will be available in perpetuity for productive agricultural use. If no available land or easements can be purchased in San Bernardino County, then the purchase of lands/easements in other areas within western Mojave or adjacent counties, such as Kern County or Riverside County, is acceptable.	3 years after commercial operation		Complete
LAND-3	PC	Submit evidence to the CPM, indicating approval of the merger of parcels by San Bernardino County, or written approval of another process that is acceptable to the county. Shall include evidence of compliance with all conditions and requirements associated with the approval of the Certificate of Merger and/or Notice of Lot Line Adjustment by the county. If all parcels or portions of parcels are not owned by the PO at the time of the merger, a separate deed shall be executed and recorded with the county recorder. A copy of the recorded deed shall be submitted to the CPM, as part of the compliance package.	30 days prior to construction		Complete
NOISE-1	PC	The project owner shall transmit to the compliance project manager (CPM) a statement, signed by the project owner's project manager, stating that the above notification has been performed, and describing the method of that notification. This communication shall also verify that the telephone number has been established and posted at the site, and shall provide that telephone number.	15 days prior to ground disturbance		Complete
NOISE-3	PC	Submit the noise control program to the CPM. Make the program available to Cal-OSHA upon request.	30 days prior to ground disturbance		Complete
NOISE-6	PC	Transmit to the CPM a statement acknowledging that the restrictions will be observed throughout the construction of the project.	Prior to ground disturbance		Complete
SOIL&WATER-1	PC	Submit a copy of the Drainage, Erosion, and Sediment Control Plan (DESCP) to the County of San Bernadino and the RWQCB for review and comment. CPM shall consider comments from county and RWQCB and approve the DESCP based upon comments as appropriate.	60 days prior to site mobilization		Complete; Approved as "living document"
SOIL&WATER-4	CONS	Submit to the CPM a copy of the water well abandonment and construction packet submitted to the County of San Bernardino for review and comment.	60 days prior to the abandonment and const. of the on-site groundwater wells		
SOIL&WATER-4	CONS	Submit a copy of any written comments received from the County of San Bernardino indicating whether the proposed well abandonment and construction activities comply with all county well requirements and meet the requirements established by the county's water well permit program.	30 days prior to construction of on-site water supply wells		
SOIL&WATER-4	CONS	Submit a Groundwater Monitoring and Management Plan to the County of San Bernardino for review and comment (see Condition of Certification SOIL&WATER-6).	60 days prior to construction of on-site groundwater wells		Complete
SOIL&WATER-5	PC	Submit to the CPM a copy of evidence that metering devices have been installed and are operational.	60 days prior to start of construction		Complete
SOIL&WATER-6	PC	Submit to the CPM, for review and approval, a comprehensive plan (Groundwater Level Monitoring and Reporting Plan) presenting all the data and information required in Item A above.Submit to the both the CPM all calculations and assumptions made in development of the plan.	60 days prior to construction		Complete
SOIL&WATER-7	PC	Groundwater Quality Monitoring and Reporting Plan in compliance with Item A shall be submitted to the CPM for review and approval.	60 days prior to construction		Complete
SOIL&WATER-7	PC	Pre-construction groundwater quality report in compliance with Item B shall be submitted to the CPM for review and approval.	30 days prior to construction		Complete
SOIL&WATER-10	PC	Obtain a permit to operate a non-transient, noncommunity water system with the County of San Bernardino .	60 days prior to construction		Complete

TRANS-1	PC	Propose new park-and-ride lot(s) to the County of San Bernardino for review and comment and the CPM for review and approval. The proposal shall include a rationale for the location of the lot(s) based upon the expected geographic distribution of employees and availability of suitable sites.	90 days prior to site mobilization		Complete
TRANS-2	PC	Provide to the County of San Bernardino for review and comment and the CPM for review and approval a copy of the construction traffic control plan. The plan must document consultation with Caltrans.	60 days prior to site mobilization		Complete

Cond. #	Sort Code	Verification/Action/Submittal Required by Project Owner	Timeframe	Date Due to CEC CPM	Status
TRANS-3	PC	Submit a review of existing roadway pavement conditions to San Bernardino County and Caltrans for review and comment and the CPM for review and approval. This review will include photographs and the visual analysis of pavement and sub-surface conditions. The CPM will need to approve the summary of existing pavement conditions prior to commencement of construction.	90 days prior to site mobilization		Complete
TRANS-4	PC	Include these restrictions in the construction traffic control plan required by TRANS-2	60 days prior to site mobilization		Complete
TSLN-1	CONS	Submit to the CPM a letter signed by a California registered electrical engineer affirming that the lines will be constructed according to the requirements stated in the condition.	30 days prior to construction of transmission line or related structures and facilities		Complete
VIS-1	PC	At least 90 days prior to specifying to the vendor the colors and finishes of the first structures or buildings that are surface treated during manufacture, the project owner shall submit the proposed treatment plan to the CPM for review and approval. If the CPM determines that the plan requires revision, the project owner shall provide to the CPM a plan with the specified revision(s) for review and approval by the CPM before any treatment is applied. Any modifications to the treatment plan must be submitted to the CPM for review and approval. The review of any subsequent revisions shall be completed by the CPM within 15 days of receipt of the revisions.	90 days prior to specifying colors to vendor		Complete
VIS-3	CONS	Contact the CPM to show compliance with all of the above requirements. This shall include: final lighting plans, fixture and control schedules, fixture and control cut sheets and specifications, a photometric plan showing vertical and horizontal footcandles at all property lines to a height of 20 feet, and the proposed time clock schedule.	90 days prior to ordering exterior lighting		Submitted and approved for temporary lighting
VIS-4	PC	The screening plan shall be submitted to the CPM for review and approval.	90 days prior to installation		Complete
WASTE-1	PC	Provide the plans to remove the underground storage tanks to the CPM for review and approval.	60 days prior to site mobilization		Complete
WASTE-1	PC	Inform the CPM of the data when all USTs were removed from the site.	MCR	after removal	Complete
WASTE-2	PC & CONS	Obtain a hazardous waste genereator identification number form the USEPA prior to generating any hazardous waste during project construction and operations.	Prior to Haz Waste generation	Prior to Haz Waste generation	
WASTE-3	PC	Submit to the CPM copies of all pertinent correspondence, work plans, agreements, and authorizations between the AMS Project and DTSC regarding Voluntary Site Cleanup Program requirements and activities at the AMS project site. The CPM shall revew and comment on the proposed Cleanup Program requirements and activities. Provide to the CPM written notice from DTSC that the AMS site has been investigated and remediated, as necessary, for compliance with the Voluntary Cleanup Program.	60 days prior to site mobilization		Complete
WASTE-5	PC	Submit the resume to the CPM for review and approval.	30 days prior to site mobilization		Complete
WASTE-6	PC	Submit the Construction Waste Management Plan to the CPM for approval.	30 days prior to site mobilization		Complete
WASTE-8	PC	Provide the Asbestos Demolition Notification Form to the CPM for review and approval.	60 days prior to commencement of structure demolition		Complete
WASTE-8	CONS	Inform the CPM of the data when all ACM is removed from the site.	MCR	after removal	Complete
WORKERSAFETY-1	PC	Submit to the SBCFD a copy of the Construction Fire Prevention Plan and Emergency Action Plan for review and comment and a copy of the Project Construction Safety and Health Program to the CPM for review and approval.	30 days prior to start of construction		Complete
WORKERSAFETY-3	PC	Submit to the CPM the name and contact information for the Construction Safety Supervisor (CSS). The contact information of any replacement CSS shall be submitted to the CPM within one business day.	60 days prior to site mobilization		Complete
WORKERSAFETY-4	PC	Provide proof of its agreement to fund the Safety Monitor services to the CPM for review and approval.	60 days prior to start of construction		Complete
WORKERSAFETY-5	PC	Submit to the CPM proof that a portable automatic external defibrillator exists on site and a copy of the training and maintenance program for review and approval.	30 days prior to site mobilization		Complete
WORKERSAFETY-7	PC	Provide a $200,000 payment to San Bernardino County Fire Department prior to the start of construction. Provide documentation of the payment described above to the CPM. The CPM shall adjust the payments initially required by WORKER SAFETY-6 based upon the accounting provided by the SBCFD.	5 days prior to start of construction		Complete
WORKERSAFETY-8	PC	Enhanced Dust Control Plan shall be provided to the CPM for review and approval.	60 days prior to site mobilization		Complete
GEN-2	PC	Submit to the CBO and to the CPM the schedule, and the master drawings and master specifications list of documents to be submitted to the CBO for review and approval. These documents shall be the pertinent design documents for the major structures, systems, and equipment defined above in Condition of Certification GEN-2. Major structures and equipment shall be added to or deleted from the list only with CPM approval.	60 days prior to start of grading		Complete; Approved as "living document"

GEN-4	PC	Submit to the CBO for review and approval, the resume and registration number of the resident engineer (RE) and any other delegated engineers assigned to the project. If the RE or the delegated engineer(s) is subsequently reassigned or replaced, the project owner has five days to submit the resume and registration number of the newly assigned engineer to the CBO for review and approval.	30 days prior to start of grading		Complete

Cond. #	Sort Code	Verification/Action/Submittal Required by Project Owner	Timeframe	Date Due to CEC CPM	Status
GEN-5	PC	Submit to the CBO for review and approval, resumes and registration numbers of the responsible civil engineer, soils (geotechnical) engineer and engineering geologist assigned to the project.	30 days prior to start of grading		Complete
GEN-5	PC	Submit to the CBO for review and approval, resumes and registration numbers of the responsible design engineer, mechanical engineer, and electrical engineer assigned to the project.	30 days prior to start of construction		Complete
CIVIL-1	PC	Submit the 1. Design of the proposed drainage structures and the grading plan; 2. An erosion and sedimentation control plan; 3. Related calculations and specifications signed and stamped by the responsible civil engineer; and 4. Soils, geotechnical, or foundation investigations reports required by the 2007 CBC to the CBO for design review and approval.	15 days prior to site grading	following approval	Complete
CIVIL-1	PC	Submit a written statement certifying that the documents have been approved by the CBO.	in the next MCR		Complete
PAL-1	PC	Submit a resume and statement of availability of its designated paleontological resource specialist (PRS) for on-site work.	60 days prior to ground disturbance		Complete
PAL-1	PC	Provide a letter with resumes naming anticipated monitors for the project, stating that the identified monitors meet the minimum qualifications for paleontological resource monitoring required by the condition. If additional monitors are obtained during the project, the PRS shall provide additional letters and resumes to the CPM. The letter shall be provided to the CPM no later than one week prior to the monitor's beginning on-site duties.	20 days prior to ground disturbance		Complete
PAL-2	PC	Provide the maps and drawings to the PRS and CPM.	30 days prior to ground disturbance		Complete
PAL-2	PC	If there are changes to the footprint of the project, revised maps and drawings shall be provided to the PRS and CPM.	15 days prior to ground disturbance		Complete
PAL-3	PC	Provide a copy of a paleontological resources monitoring and mitigation plan (PRMMP) to the CPM. The PRMMP shall include an affidavit of authorship by the PRS and acceptance of the PRMMP by the project owner evidenced by a signature.	30 days prior to ground disturbance		Complete
PAL-4	PC	Submit the proposed Worker Environmental Awareness Program (WEAP), including the brochure, with the set of reporting procedures for workers to follow.	30 days prior to ground disturbance		Complete
PAL-4	PC	Submit the training program presentation/ materials to the CPM for approval if planning to use a presentation format other than an in-person trainer for training.	30 days prior to ground disturbance		Complete
TSE-2	PC	Submit to CBO for review and approval, the names, qualifications and registration numbers of all the responsible engineers assigned to the project.	30 days prior to rough grading		Complete