DOCKET
09-AFC-5
DATE MAY 04 2010
RECD. MAY 04 2010

ABENGOA SOLAR INC
11500 West 13th Avenue
Lakewood, CO. 80215
Phone: 303-928-8500
Fax: 303-928-8510

May 4, 2010

Mr. Craig Hoffman
Project Manager
California Energy Commission
Siting, Transmission and Environmental Protection Division
1516 Ninth Street, MS 15
Sacramento, CA 95814

Re: Abengoa Mojave Solar Project (09-AFC-5)
One-Line Diagram of Interconnection to Lockhart Substation

Dear Craig;

Enclosed is a one-line diagram of the proposed interconnection to Lockhart Substation, provided to Abengoa Solar Inc by Southern California Edison. Mr. Ajoy Guha of your staff had requested it.

Thank you for your and your staff's continued efforts in this permitting process. Please contact me with any questions.

Sincerely,

Kathleen Sullivan

Kathleen L Sullivan, PE

Enclosure
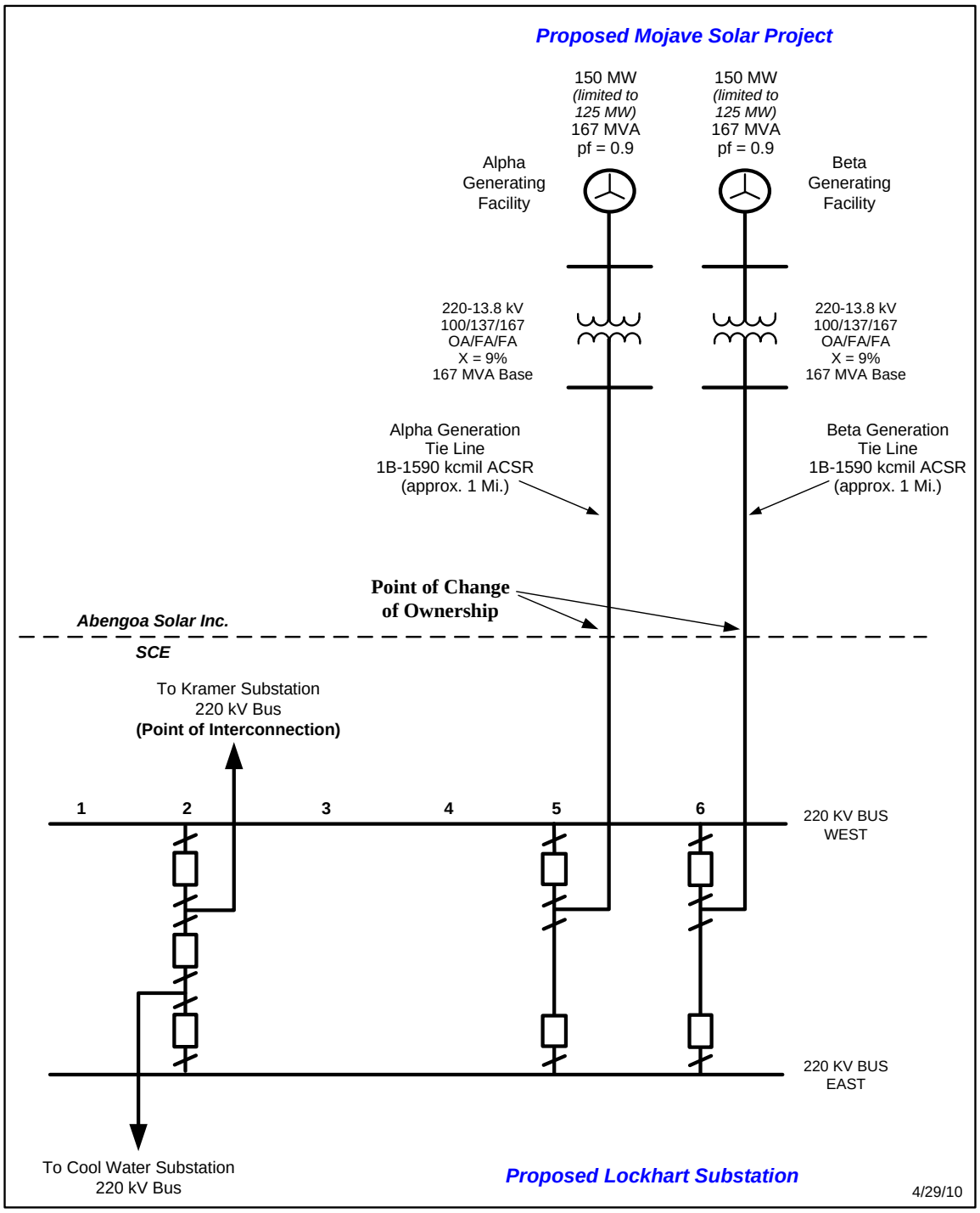
One-Line Diagram of Interconnection to Lockhart Substation: