Table of Contents

2.0 Project Description 1
2.1 Project Overview 1
2.2 Project Objectives 2
2.3 Site Surveys and Engineering Design Criteria 3
2.4 Generation Facility Description, Design, and Operation 3
Site Arrangement 3
2.4.1 Process Description 4
2.4.2 Energy Conversion Facilities Description 6
2.4.2.1 Solar Thermal Field 6
Description of Technology 6
Major Solar Equipment and Material 6
2.4.2.2 Steam Turbine-Generator (STG) 8
2.4.3 Electrical System Description 9
2.4.3.1 Major Electrical Equipment and Systems 9
2.4.3.2 Grounding and Surge Protection 9
2.4.3.3 Electrical Generation 10
2.4.3.4 Electrical System for Plant Auxiliaries 11
2.4.3.5 DC Power Supply System 12
2.4.3.6 Essential-Service AC System 12
2.4.4 Plant Auxiliary Systems 12
2.4.4.1 Auxiliary Boiler 12
2.4.4.2 Fuel Supply and Use 13
2.4.4.3 Water Supply and Use 13
Water Requirements 14
Water Source and Quality 14
2.4.4.4 Water Treatment 15
Groundwater 15
Circulating Water Treatment 15
Solar Collector Array Washing Water 17
Steam Cycle Process Water 17
Wastewater 18

2.4.4.5 Cooling Systems 18
Steam Cycle Heat Rejection System 18
Closed Cooling Water System 19
2.4.4.6 Waste Generation and Management 19
Evaporation Ponds for Industrial Wastewater 19
Septic System for Sanitary Wastewater 19
On-Site Bioremediation/Land Farm System 20
Other Non-Hazardous Solid Waste 20
Hazardous Solid and Liquid Waste 20
2.4.4.7 Hazardous Materials Management 20
2.4.4.8 Fire Protection 21
2.4.4.9 Other Auxiliary Systems 21
Distributed Control System 21
Lighting System 22
Cathodic Protection System 22
Freeze Protection Systems 23
Service Air and Instrument Air Systems 23
Telemetry 23
HTF Leak Detection 23
2.4.5 Project Civil/Structural Features 23
2.4.5.1 SSG System, STG and Associated Equipment 23
2.4.5.2 Solar Array Support Structures 24
2.4.5.3 Buildings 24
2.4.5.4 Water Storage Tanks 24
2.4.5.5 Roads, Fencing, and Security 24
2.4.5.6 Offsite Storm Water Flow 25
2.4.5.7 Site Drainage and Earthwork 25
2.4.5.8 Roadway and Drainage Channel Crossing Improvements 26
2.4.6 Construction of Generating Facilities 27
2.4.6.1 Employment 27
2.4.6.2 Logistics 27
2.4.7 Project Operations 28
2.5 Natural Gas Supply 28

2.5.1 Existing Facilities 28
2.5.2 Proposed Onsite Routing 28
2.5.3 Construction Practices 29
2.5.4 Metering 30
2.5.5 Operation 30
2.6 Transmission Lines Description, Design, and Operation 30
2.6.1 Existing Transmission Facilities 30
2.6.2 Proposed Transmission Interconnection 31
2.6.2.1 Onsite Transmission Lines 32
2.6.2.2 Onsite Interconnection Substation 32
2.6.2.3 Construction Practices 32
2.6.2.4 Metering 33
2.6.2.5 Operation 33
2.6.3 Transmission System Impacts and Improvements 33

List of Tables

Table 2-1. Typical Natural Gas Composition 13
Table 2-2. Water Use (for each Plant site) 14
Table 2-3. Water Quality Data in the Project Area 15

List of Figures

Figure 2-1. Project Boundary 35
Figure 2-2(a). Center of Beta Field at Southern Border Looking NW 36
Figure 2-2(b). SW Corner of Alpha Looking NNE Foundation for Home and General Debris 37
Figure 2-2(c). West Side of Harper Lake Road Looking East just North of Lockhart Ranch Road 38
Figure 2-2(d). Miscellaneous Abandoned Structures West of Harper Lake Road just North of Lockhart Ranch Road. 39
Figure 2-2(e). Center of Beta Field at Northern Border Looking South 40
Figure 2-3(a). Project Site Map - Overall 41
Figure 2-3(b). Project Site Map - Detail A - West Site of Alpha Plant Site 42
Figure 2-3(c). Project Site Map - Detail B - East Side of Alpha Plant Site 43
Figure 2-3(d). Project Site Map - Detail C - Beta Plant Site 44
Figure 2-3(e). Project Site Map - Detail D - Alpha Power Island 45

Figure 2-3(f). Project Site Map - Detail E - Beta Power Island 46
Figure 2-3(g). Project Site Map - Sections [A-A, B-B] 47
Figure 2-3(h). Project Site Map - Sections [B-B, C-C, D-D, E-E]..... 48
Figure 2-3(i). Project Site Map - Sections [F-F, G-G, H-H, I-I] 49
Figure 2-3(j). Project Site Map - Sections [J-J, K-K]..... 50
Figure 2-3(k). Project Site Map - Sections [L-L, M-M]..... 51
Figure 2-4. Power Island Layout (Alpha or Beta)..... 52
Figure 2-5(a). Power Block Elevation View - Looking West 53
Figure 2-5(b). Power Block Elevation View - Looking South..... 54
Figure 2-6. Mass and Energy (Heat) Balance per Plant..... 55
Figure 2-7(a). Electrical One-Line Diagram - Symbols List..... 56
Figure 2-7(b). General One-Line Diagram - Alpha Site..... 57
Figure 2-7(c). General One-Line Diagram - Beta Site 58
Figure 2-7(d). General One-Line Diagram - 230kV Substation (Switchyard) - Alpha Site..... 59
Figure 2-7(e). General One-Line Diagram - 230kV Substation (Switchyard) - Beta Site..... 60
Figure 2-7(f). 230kV Metering & Relaying Protection Zone One-Line - Alpha Site.. 61
Figure 2-7(g). 230kV Metering & Relaying Protection Zone One-Line - Beta Site... 62
Figure 2-7(h). 230kV Metering & Relaying One-Line - STG1A (STG1B) - Alpha (Beta) Site..... 63
Figure 2-7(i). 230kV Metering & Relaying One-Line - APT1A (APT1B) - Alpha (Beta) Site..... 64
Figure 2-7(j). 230kV Metering & Relaying One-Line - TL1A (TL1B) - Alpha (Beta) Site 65
Figure 2-8. Water Balance Diagram - Per Plant..... 66
Figure 2-9. General One-Line Diagram - 230kV Substation - Utility Interconnection 67
Figure 2-10. Hinkley Substation - Plot Plan 68
Figure 2-11. Typical Transmission Pole Drawing..... 69

2.0 Project Description

2.1 Project Overview

Mojave Solar LLC (herein "MSLLC" or "Applicant"), is proposing to construct, own and operate the Mojave Solar Project (herein "MSP" or "Project"). MSLLC is a Delaware limited liability company. Abengoa Solar Inc. (ASI), a Delaware corporation, specializes in solar technologies and is the sole member of MSLLC. The Project is a solar electric generating facility proposed on approximately 1,765 acres in unincorporated San Bernardino County, California approximately nine miles northwest of Hinkley, CA. The site is largely fallow agricultural land specifically sited and configured to minimize environmental impacts. This land was originally sited as Solar Electric Generating Stations (SEGS) XI and XII and is located next to the existing SEGS VIII and IX facilities.

The Project will implement well-established parabolic trough technology to solar heat a heat transfer fluid (HTF). This hot HTF will generate steam in solar steam generators (SSGs), which will expand through a steam turbine generator (STG) to produce electrical power.

The Project will have a combined nominal electrical output of 250 megawatts (MW) from twin, independently-operable solar fields, each feeding a 125-MW power island. The plant sites, identified as Alpha (the northwest portion of the Project area) and Beta (the southeast portion of the Project area), will be 884 acres and 800 acres respectively and joined at the transmission line interconnection substation to form one full-output transmission interconnection. An additional 81 acres shared between the plant sites will be utilized for receiving and discharging offsite drainage improvements. Start of commercial operation is planned for winter of 2012, subject to timing of regulatory approvals and Applicant achievement of Project equipment procurement and construction milestones.

The sun will provide 100 percent (%) of the power supplied to the Project through solar-thermal collectors; no supplementary fossil-based energy source (e.g., natural gas) is proposed for electrical power production. However, each power island will have a natural-gas-fired auxiliary boiler to provide equipment freeze protection and HTF freeze protection. The auxiliary boiler will supply steam to HTF heat exchangers as needed during offline hours to keep the HTF in a liquid state when ambient temperatures fall below its freezing point of 54 degrees Fahrenheit (°F). Each power island will also have a diesel engine-driven firewater pump for fire protection and a diesel engine-driven backup generator for power plant essentials.

The Project is proposing interconnection to connect to the Kramer-Cool Water 230-kV transmission line which is owned by Southern California Edison (SCE), and located adjacent to the southern border of the Project. The Interconnection System Impact Study (ISIS) has been completed in coordination with the California Independent System Operator (CAISO) and is located in Appendix N. The Interconnection Facilities Study (IFS) is in progress to detail the on-the-ground system-wide improvements. As a separate process, SCE will lead the permitting effort for the transmission improvements beyond the Project-specific interconnection to the statewide system. All Project-related transmission facilities are

within the Project boundaries except the connection within the existing transmission right-of-way adjacent to the site.

The Project proposes to use wet cooling towers for power plant cooling and owns adjudicated water rights for this purpose. This onsite water is brackish. The Mojave Water Agency (MWA) administers the adjudication and manages water rights for all users through the Watermaster. Water for cooling tower makeup, process water makeup, and other industrial uses such as Solar Collector Array (SCA) washing will be supplied from onsite groundwater wells drawing from these water rights and will also be used to supply potable water for employee use (e.g., drinking, showers, sinks, and toilets). A packaged water treatment system will be used to treat the water to meet potable standards since the source is brackish. No offsite backup cooling water supply is planned; the use of multiple onsite water supply wells, redundancy in the well equipment, and reserve water storage will provide an inherent backup in the event of outages affecting one of the onsite supply wells. The aquifer has been characterized as prolific and studies indicated that the health of the basin will not degrade during the life of the plant due to the Project. Details of basin investigations are included in Section 5.17, Water Resources, and Appendix A, Basin Conceptual Model.

A sanitary septic system and onsite leach field will be used to dispose of sanitary wastewater on each power island. Project cooling water blowdown will be piped to lined, onsite evaporation ponds for each plant area. The ponds will be sized to retain all solids generated during the life of the plant. However, if required for maintenance, dewatered residues from the ponds could be sent to an appropriate offsite landfill as non-hazardous waste.

Natural gas for the Project's ancillary purposes, such as the auxiliary boilers, space heating, and the like will be supplied by a Southwest Gas Corporation (SGC) owned pipeline that runs to the Project boundary near the Alpha power island. No offsite pipeline facilities are proposed as a part of this Project. SGC was contacted and studied the demand requested and indicates that sufficient capacity exists to supply the Project. Confirmation from SGC is included in Appendix O.

2.2 Project Objectives

The Project is expected to supply renewable energy to the California energy market. The objectives of the MSP are as follows:

- To help achieve the State of California renewable energy objectives and to support the state's electric utility requirements with the long term production of renewable electric energy,
- To safely and economically construct, operate and maintain an efficient, reliable, and environmentally-sound power generating facility,
- To develop a Project using up-to-date and improved versions of an already-proven renewable energy technology, minimizing technical risk and improving the financial viability of the Project,
- To maximize the renewable energy from a site with an excellent solar resource, appropriate slope and grading, availability of water rights and availability of

transportation and other infrastructure in order to minimize the cost of renewable energy for consumers,

- To reduce or eliminate potentially significant adverse environmental impacts by locating away from sensitive noise and visual receptors and sensitive species,
- To electrically interconnect to suitable electrical transmission while minimizing environmental impacts associated with interconnection and minimizing cost, and
- To develop a site with close proximity to natural gas infrastructure in order to minimize environmental impacts and cost.

2.3 Site Surveys and Engineering Design Criteria

Detailed land and topographic surveys were performed to establish local benchmarks and site boundaries and to understand grading and drainage-related requirements. A geotechnical evaluation of the Project plant site was performed to evaluate general subsurface conditions, seismicity and other geologic hazards and to provide recommendations for design and construction of the foundations for Project structures. A copy of the evaluation is included as Appendix B. Overall, the study found the site geotechnically feasible for construction of the proposed solar plant. Additional geotechnical investigations (e.g., additional soil borings at specific equipment locations), will be performed as part of the detailed facility design and construction.

Engineering design criteria for the Project, including mechanical, electrical, civil, and structural are provided in AFC Appendix J.

2.4 Generation Facility Description, Design, and Operation

The following sections describe the proposed Project plant site arrangement and the processes, systems, and equipment that constitute the power plant. All plant facilities will be designed, constructed, and operated in accordance with applicable laws, ordinances, regulations and standards (LORS). Note that the generating facilities described in this section, along with the associated construction/operating footprint all occur within the approximately 1,765-acre plant site boundary depicted in Figure 2-1, Project Boundary.

Site Arrangement

Figures 2-3(a) through 2-3(k) show the layout of proposed Project facilities including:

- Overall Project area and facilities footprint,
- Two separate power island areas, one each for the Alpha and Beta Plant areas,
- Construction laydown and solar collector assembly building locations,
- Solar collector field arrangement,
- Evaporation ponds for each Plant area,
- Bioremediation/landfarm unit for each Plant area,

- Onsite transmission and interconnection facilities with interconnection location adjacent to Beta area,
- Onsite gas pipeline facilities with connection point to existing pipeline,
- Drainage improvements to convey offsite storm water around the Project,
- Groundwater well locations used for water supply, and
- Access Roads.

Figure 2-4 shows the general arrangement of the proposed Project's power islands. Each power island is largely identical. As shown, major components of each Alpha and Beta power island include:

- Solar steam generators (SSG) and associated heat exchangers,
- One steam turbine-generator (STG) and condenser,
- Electrical switchyard with step-up transformer and auxiliary transformer,
- One wet cooling tower,
- One natural-gas-fired auxiliary boiler,
- Steam-fed HTF freeze protection heat exchangers,
- HTF expansion vessels and HTF expansion tanks,
- Firewater pump and pump house with associated diesel fuel tank,
- One raw water storage tank,
- One combined service water and firewater storage tank,
- Various water treatment storage tanks,
- Demineralized water storage tank, and
- Ancillary equipment.

Elevation drawings of proposed plant facilities are provided in Figure 2-5(a), Elevation Drawing Looking West, and Figure 2-5(b), Elevation Drawing Looking South; each elevation represents a view of the power island area and a representative portion of the solar collector arrays.

2.4.1 Process Description

This section describes the power generation process and thermodynamic cycle employed by the Project at both the Alpha and Beta power islands. The major elements of each power island are the following:

- One STG,
- SSGs and associated SSG heat exchangers,
- One water-cooled condenser,
- Feedwater pumps,

- One deaerator,
- Multiple feedwater heaters, and
- One wet cooling tower.

The proposed power cycle is the Rankine-with-reheat thermodynamic cycle with heat supplied via HTF, heated by the solar field to a temperature of approximately 740°F. Each plant site utilizes approximately 710 acres of the total land for solar thermal collector arrays. A preliminary heat balance diagram for the process is included in Figure 2-6, Heat Balance Diagram.

Overall annual availability of the proposed Project facilities is expected to be a minimum of 95 percent, excluding non-daylight hours. The Project's capacity factor depends on the local solar insolation, but estimated to be approximately 600,000 to 630,000 megawatt-hours (MWh) per year net (both Plants combined) while operating for approximately 3,024 hours per year. This production estimate was made using the Solar Advisor Model software developed and maintained by the National Renewable Energy Laboratory.

The Project will use the Rankine-with-reheat thermodynamic cycle, described as follows:

- Process 1: The working fluid (water) is pumped from low to high pressure. During this process, steam extracted from the STG is used to preheat the water prior to entering the SSG system, which increases overall cycle efficiency.
- Process 2: The high pressure working fluid enters the SSG system where it is heated by the HTF to become superheated steam.
- Process 3: The superheated steam expands through the high pressure section of the steam turbine turning the generator to produce electricity. This steam is then reheated in a reheater that is part of the SSG system and sent to the low pressure steam turbine. All sections of the STG decrease the temperature and pressure of the steam with the low pressure section extracting the last available energy from the steam until the steam is operating under vacuum pressure.
- Process 4: The wet steam from the low pressure section of the steam turbine then enters the condenser where it is condensed back into a saturated liquid. The condensed liquid returns to Process 1.

The solar field provides the heat input in Process 2 and for the reheater in Process 3. As the HTF is circulated through the solar field, light from the sun reflects off the solar collector's parabolic troughs and is concentrated on the heat collection elements (HCEs) located at the focal point of the parabola. HTF flowing through these HCEs absorbs the heat and provides a high-temperature energy source for the Rankine cycle.

Low quality waste heat is rejected in Process 4. As the turbine exhaust is condensed, the heat is transferred to the cooling-tower circulating water. The warm cooling tower circulating water carries the heat to the wet, mechanical draft cooling tower where the heat is rejected via evaporation and convection, returning cooled water to the condenser.

2.4.2 Energy Conversion Facilities Description

This section describes the major energy conversion components of the Project including the STG, SSG, auxiliary boilers, HTF freeze protection heat exchangers and solar thermal field.

2.4.2.1 Solar Thermal Field

The following subsections describe the Project's solar thermal component.

Description of Technology

The proposed collector fields are made up of two large fields of single-axis-tracking parabolic trough solar collectors: the Alpha solar field and the Beta solar field. These collectors are modular in nature and comprise many parallel rows of solar collectors, aligned on a north-south axis (see Figure 2-3, Project Site Plan). Each solar collector has a linear, parabolic-shaped reflector that focuses the sun's radiation on a linear receiver known as an HCE located at the focus of the parabola.

The collectors track the sun from east to west during the diurnal cycle to ensure that the maximum amount of the sun's radiation is continuously focused on the HCE. A more specific description of the HCE is provided below under "Solar Field Components." The HTF is heated to approximately 740 °F as it circulates through the HCEs and returns to a series of heat exchangers where the fluid is used to generate steam in the SSG system at the power island, providing steam to the Plant's STG.

Major Solar Equipment and Material

The major pieces of equipment for the proposed solar portion of each Plant are as follows:

- Solar collector arrays (SCA),
- (SCA components) Mirrors, HCEs, ball-joint connectors, etc.,
- HTF,
- SSG System,
- HTF freeze-protection heat exchangers,
- HTF pumps,
- HTF expansion vessels and tanks, and
- HTF piping headers.

Each solar field encompasses approximately 710 acres of the plant sites and utilizes solar trough technology similar to the nine existing SEGS units but with design improvements to enhance performance.

Solar Collector Arrays. The SCA are the mirrored, parabolic trough structures. Each SCA will be 125 to 150 meters long. The SCA rotate around a north-south axis to track the sun through the sky during the day. The axis of rotation is located near the collector center of mass to minimize the required tracking power. The drive system will use hydraulic rams or electric motors to position the collector depending on final design. The closed-loop tracking system relies on a sun sensor or position feedback sensor for the precise alignment

required to focus the sun on the HCE during operation. The tracking is controlled by a local controller on each SCA. The local controller also monitors the HTF temperature and reports operational status, alarms, and diagnostics to the main solar field control computer in the control room. It is expected the SCA will be designed for site-specific seismic conditions and normal operation in winds up to 40 miles per hour (mph) and safe operation in winds up to 85 mph. The SCAs are designed to survive winds up to 85 mph when in their stowed position (the collector aimed approximately 10 degrees below eastern horizon).

Mirrors. The SCA are fitted with curved mirrors which are specifically engineered and manufactured for solar parabolic trough applications. The current state-of-the-art, low-iron glass mirrors are highly reliable. There has been no long-term degradation in the reflective quality of the low-iron glass mirrors; ten year-old mirrors can be cleaned and brought back to like-new reflectivity. Long-term endurance of the mirror, as measured by the experience at SEGS, indicates that mirror life of 30 years or more can be expected for the Project.

Development of an efficient and cost-effective program for monitoring mirror reflectivity and washing is critical. Differing seasonal soiling rates (higher in the summer) require flexible procedures. Operations and Maintenance (O&M) procedures at the SEGS plants were well established and similar methods will be used for this Project. All cleaning methods use demineralized water for best effectiveness. The periodic monitoring of mirror reflectivity provides a valuable quality control tool for washing and helps to optimize wash labor. As a general rule, the reflectivity of glass mirrors can be maintained near design levels with a good washing program.

Heat collection elements. The HCE consists of a steel tube with a selective surface, surrounded by an evacuated glass tube insulator. The coating gives it excellent selective heat transfer properties with a high solar absorptivity and low thermal emissivity. The HCE incorporates glass-to-metal seals and metal bellows to achieve the vacuum-tight enclosure. The vacuum enclosure serves primarily to protect the selective surface and to reduce heat losses by insulating it while having high transmissivity.

The outer glass cylinder has an anti-reflective coating on the outer surfaces to reduce transmissive losses through the glass tube. Typically, getters (metallic substances that are designed to absorb gas molecules) are installed in the vacuum space to absorb hydrogen and other gases that permeate into the vacuum annulus over time to maintain its insulating properties.

Connectors. It is expected that a hard-piped assembly with ball joints will be used to connect the SCAs to the headers and SCAs to each other, similar to those being used at the SEGS plants at Harper Dry Lake. Based upon experiences at SEGS, the ball joint assembly has a number of advantages over previous designs using flexhoses, including reduced failures, lower cost, lower head loss, and reduced heat losses.

Heat Transfer Fluid. It is expected that Therminol™ VP-1, Dowtherm A, or equivalent will be used as the HTF. These synthetic oils are special high-temperature oils with an excellent operating history and are widely used in solar thermal and other high-temperature heat transfer applications. The Material Safety Data Sheets (MSDS) for Therminol™ are provided in Appendix L. These oils are aromatic hydrocarbons, specifically biphenyl-diphenyl oxide. The oil is regulated as a hazardous material by the State of California.

Solar Steam Generator System. SSGs are designed differently than conventional gas-fired boilers in that they are "fired" with hot HTF instead of hot combustion gases. The design uses natural circulation steam drums with shell-and-tube evaporators. The SSG system includes heat exchangers for preheating the condensate, for steam production, for superheating the steam, and for reheating steam.

HTF Freeze Protection Heat Exchangers. To eliminate the problem of HTF freezing, steam-fed shell-and-tube heat exchangers will be used to keep the HTF above 100 °F whenever the facility is offline and ambient temperature warrants. The auxiliary boilers will supply the heat for freeze protection. The use of steam-fed HTF heat exchangers reduces the number of individual emission sources (i.e. eliminates natural-gas-fired HTF heaters since an auxiliary boiler exists for other auxiliary purposes).

HTF Pumps. HTF pumps are used to circulate the HTF through the solar field and back to the power island for steam generation and are specifically designed for this high-temperature oil application. Pumps for high temperature applications typically include seal cooling and high temperature materials to preserve component function under extreme conditions.

HTF Expansion Vessels and Tanks. To accommodate the volumetric change that occurs when heating the HTF to the operating temperature, expansion vessels and tanks are required. Nitrogen will be used to provide a blanket on the headspace of the expansion vessels and tanks. The nitrogen blanket prevents oxidation and contamination of the HTF by reducing its exposure to atmospheric air. In the expansion vessels, the nitrogen also assists with meeting the net positive suction head requirements for the HTF pumps. HTF expansion tanks are at a lower pressure and temperature than expansion vessels to minimize HTF loss if venting is required during daily cyclical operations. It is anticipated that there will be eight expansion vessels and two overflow tanks on each power island.

HTF Piping Header. HTF is transported through the solar field using a supply-and-return header system. The header system assists in balancing flow through the SCA loops and their associated HCEs. Piping expansion loops will be located throughout the plant as required to maintain the composite pipe stress within ASME B31.3 code allowable limits. The composite pipe stress includes seismic and thermal stresses. It is anticipated that the solar field will be divided into sections with automatic or semiautomatic isolation valves. The isolation valves will either be triggered automatically (e.g., by ground acceleration in the event of an earthquake) or by the operator inside the control room. The isolation valves will be located to minimize the volume of HTF leakage during a pipe failure. The piping in the solar array will be designed and constructed to allow movement due to thermal expansion – the steel piping in the mirrored trough sections of the array will be connected to the HTF distribution headers with ball joints and the piping will not be rigidly mounted to foundations or other structures, structurally decoupling the system from seismic ground shaking in the event of an earthquake.

2.4.2.2 Steam Turbine-Generator (STG)

As described earlier, for each power island, steam from the SSGs is sent to the STG. The steam expands through the STG turbine blades to drive the steam turbine, which in turn drives the generator. The Project's STGs are expected to be two-casing, reheat type with multiple feedwater heater extraction points and axial low-pressure exhaust. The STG is

equipped with accessories required to provide efficient, safe, and reliable operation, including the following:

- Governor system,
- Steam admission system,
- Gland seal system,
- Lubrication oil system including oil coolers and filters,
- Generator coolers, and
- Metal enclosures designed for outdoor service for STG auxiliary systems.

2.4.3 Electrical System Description

This section describes the proposed Project's major electrical systems and equipment. All of the net power produced by the proposed facility is currently expected to be delivered to the statewide transmission grid through the Project's interconnection with the existing Kramer-Cool Water 230 kV transmission line (see Section 2.6). Roughly 10% of the Project's output will be used onsite for plant auxiliaries such as pumps, control systems, and general facility loads including lighting and heating, ventilation, and air conditioning (HVAC). Some of the power needed for on-site uses will be converted from alternating current (AC) to direct current (DC) for power plant control systems and emergency backup systems such as lube oil pumps and the STG turning gear. The descriptions of the major electrical systems and equipment provided in the following subsections reflect AC power unless otherwise noted. One-line diagrams of the major electrical systems are presented in Figures 2-7(a) through 2-7(j), Electrical Diagrams.

2.4.3.1 Major Electrical Equipment and Systems

On each power island, power will be generated by its STG at 13.8 kV (depending on the final generator selection) and stepped up by a fan-cooled generator step-up transformer in the 230-kV power island switchyard for connection to the transmission interconnection. Plant auxiliary load will be from an auxiliary power transformer fed from the 230-kV power island switchyard with a step-down transformer and distributed internally to the plant loads at 13.8 kV. There will be one emergency diesel engine-driven generator for each power island to provide standby power and facilitate plant shutdown in the event of power disruption. Each power island can be run independently.

2.4.3.2 Grounding and Surge Protection

All electrical systems are potentially susceptible to ground faults, lightning, and switching surges which could pose hazards to site personnel and electrical equipment if not properly grounded.

The station grounding system provides an adequate path to ground and bonding to permit the dissipation of current created by these events. The station-grounding grid will be designed for adequate capacity to withstand ground fault current and limit step and touch potentials in coordination with protective relaying and equipment purchased to limit the exposure to equipment and personnel.

Bare conductors will be installed below-grade in a grid pattern throughout the power island and solar field areas. Each junction of the grid will be bonded together by an exothermic weld or compression connection (above grade only). Soil resistivity readings will be used to determine the necessary numbers of ground rods and grid spacing to ensure safe step and touch potentials under severe fault conditions. Grounding stingers will be brought from the ground grid to connect to building steel and non-energized metallic parts of electrical equipment.

Surge Protection Devices (SPD), Surge Arrestors (SA) and equipment Basic Impulse Levels (BIL) shall be designed to protect against external lightning and switching.

2.4.3.3 Electrical Generation

The Project's STGs will tie into a 230-kV onsite switchyard for each power island. Each 230-kV onsite switchyard will be a 230-kV single-breaker design, see Figures 2-7(d) and 2-7(e), Electrical Diagrams. Each onsite switchyard connects to the interconnection substation on the Project site. The interconnection substation will be a 230-kV, four-position, breaker-and-a-half design consisting of one position for each of the power island interconnections.

Each generator will contain current transformers (CTs), surge arrestors, and neutral grounding transformers for protection and metering. The neutral grounding transformer will be approximately 20 kilovolt amps (kVA) on each unit. The eighteen CTs on each unit will be 8,000/5 amps (A). Surge arrestors will be metal oxide varistor (MOV) type rated for 30 kV Basic Insulation Level (BIL) to withstand high-voltage impulses.

Each generator will be connected to a main power transformer via an isolated phase bus (IPB). The IPB will be rated for 15 kV/8,000 A. Each IPB will be tapped with potential transformers and lightning arrestors for metering and protection. The potential transformers will be rated for 14.4/0.12 kV.

The main power transformer (MPT) will be approximately 175 megavolt-amps (MVA), 13.8/230 kV, two-winding, delta-wye grounded, 9 %Z (impedance) and fan-cooled (using oil-immersed natural circulation, multi-stage, forced air cooling). The neutral point of high-voltage winding will be solidly grounded. The main step-up transformer will have metal oxide surge arrestors connected to the high-voltage terminals and will have manual de-energized ("no-load") tap changers located in high-voltage windings to allow for a nominal secondary voltage plus or minus five percent with a 2.5 percent differential to allow for generator output voltage variations. The step-up transformer will rest on a concrete pad with a perimeter berm, designed to contain the transformer non-PCB insulating oil in the event of a leak or spill, and will have a deluge-type fire protection system.

The power island switchyard will be located near the Generator Step-up (GSU) and will require a minimum 556 thousand circular mils (kcmil) size steel-reinforced, aluminum conductor (ACSR) from the interconnection substation to each transformer. Each switchyard will consist of two 245 kV switchyard circuit breaker for the protection of the line to the grid, with 245 kV, 1200 A disconnect switches on each side of the breaker for maintenance and isolation of the associated transformer. The switchyard breaker will be of the dead tank design with 1200/5 multi-ratio current transformers on each bushing. Additionally each circuit breaker will be equipped with 230/0.12 kV capacitor-controlled

voltage transformers in a stand-alone cabinet for metering, synchronizing, and protection. Each circuit breaker shall be connected to each other with a 245 kV 1200 A bus to serve as the tie between the transmission line and the power transformers. This bus will be tubular aluminum alloy. Cable connections between the tube bus and equipment will be aluminum or aluminum alloy type cable. Tube, cables, and support structures will meet electrical and mechanical design standards. Each 245-kV bus will be equipped with 245/0.12 kV capacitor-controlled voltage transformers for metering and protection with the transmission line.

A disconnect switch will be located at the gen-tie line termination within the switchyard for line isolation. The switchyard will be equipped with sensitive 1200/5 A current transformers in each circuit breaker and 245/0.12 kV capacitor controlled voltage transformers located on the 230 kV switchyard bus for net revenue metering. Lightning arresters will be provided in the area of the takeoff towers to protect against surges due to lightning strikes and switching.

Electrical faults will be detected, isolated, and cleared in a safe and coordinated manner as soon as practical to ensure the safety of equipment, personnel, and the public. Protective relaying will meet Institute of Electrical and Electronic Engineers (IEEE) requirements and be coordinated with the interconnected transmission system owner.

2.4.3.4 Electrical System for Plant Auxiliaries

Power for each Plant's auxiliaries will be supplied at 13.8 kV from one non-redundant three-winding auxiliary power transformers (APT). Each APT is connected to the 15kV medium voltage switchgear via a 15 kV/1600 A non-segregated bus duct.

The APT will be approximately 20 MVA, 230/13.8 kV, two-winding, delta-wye grounded, 8 %Z (impedance) and fan-cooled (using oil-immersed natural circulation, multi-stage, forced air cooling). The neutral point of the low-voltage winding will be high-resistant grounded. The auxiliary step-up transformer will have metal oxide surge arrestors connected to the high-voltage terminals and have manual de-energized ("no-load") tap changers located in high-voltage windings to allow for a nominal secondary voltage plus or minus five percent with a 2.5 percent differential to allow for generator output voltage variations. The auxiliary power transformer will rest on a concrete pad with a perimeter berm designed to contain the transformer non-PCB insulating oil in the event of a leak or spill and has a deluge-type fire protection system.

The 15 kV medium-voltage switchgear distributes power to the plant's 4-kV and 0.48-kV motors through auxiliary transformers. The low voltage side of each of the auxiliary transformers connects to the 480-Volt (V) switchgear. The 480-V switchgear distributes power to the plant's large 480-V loads and to the various 480-V motor control centers (MCCs) supplying power to the smaller plant loads. The MCCs distribute power to the plant's intermediate 480-V loads and to power panels serving small 480-V loads.

In the event of power loss by the APT, an emergency diesel engine-driven generator will supply power to the 15-kV switchgear for proper shutdown of the plant, under a load-shedding scheme. The standby generator will be equipped with synchronizing breakers for maintenance testing under normal load conditions.

2.4.3.5 DC Power Supply System

Each proposed Plant is equipped with a (direct current) DC power supply system consisting of a bank of 125-VDC batteries, a 125-VDC battery charger, metering, ground detectors, and distribution panels. Under normal operating conditions, the battery charger supplies DC power to the DC loads. The battery charger receives 480-V, three-phase AC power from the electrical distribution system serving plant auxiliaries. The battery charger continuously charges the battery bank while supplying DC power to the DC loads. Under abnormal or emergency conditions when AC power is not available, the battery bank supplies DC power directly to the DC loads. The battery bank will be sized to power the DC loads and essential-service AC loads through an inverter for a sufficient amount of time to provide for safe and damage-free shutdown of the power plant. Recharging the battery bank will occur whenever AC power is reestablished.

The DC power supply system will provide power for critical control circuits, power for control of the 13.8-kV, 4.16-kV and 480-V switchgear, and power for DC emergency backup systems. Proposed emergency backup systems include DC lighting and DC lube-oil and seal-oil pumps for the STG.

2.4.3.6 Essential-Service AC System

An essential-service AC system (120 V, single-phase) will provide power to essential instrumentation, critical equipment loads, safety systems, and equipment protection systems that require uninterruptible AC power. The essential-service AC system and the DC power supply system will both be designed to ensure that critical safety and equipment protection control circuits are always energized and able to function in the event of unit trip or loss of AC power.

The proposed essential-service AC system consists of an inverter, a solid-state transfer switch, a manual bypass switch, an alternate AC source transformer and voltage regulator, and AC panel boards. The DC power supply system is the normal source of power to the essential-service AC system. Power flows from the DC power supply system through the inverter to the AC essential-service panel boards. The solid-state transfer switch continuously monitors both the inverter output and the alternate AC source. Upon loss of the inverter output and without interruption of power, the transfer switch automatically transfers essential-service AC loads from the inverter output to the alternate AC source. The manual bypass switch enables isolation of the inverter and transfer switch for testing and maintenance without interruption of power to the essential-service AC loads.

2.4.4 Plant Auxiliary Systems

The following subsections describe the various power plant auxiliary systems (fuel supply, water supply, water treatment, cooling systems, waste management, etc.) associated with the proposed Project.

2.4.4.1 Auxiliary Boiler

One nominal 15,000-pound-per-hour auxiliary boiler will be included on each power island. This auxiliary boiler will be able to provide steam to the HTF freeze protection heat exchangers, steam turbine seal system, deaerator and other components while the SSG is

offline. Once the plant commences normal operations, the use of the natural-gas-fired auxiliary boilers ceases.

Each boiler will require approximately 21.5 million British thermal units per hour (MMBtu/hr) of natural gas at full load. The estimated annual natural gas usage for the Project (both auxiliary boilers combined) is 94,280 MMBtu.

2.4.4.2 Fuel Supply and Use

As shown in Figure 2-3, Project Site Maps, and discussed in Section 2.5, the auxiliary boilers will be fueled by natural gas supplied from an existing 16-inch diameter pipeline that runs to the project under Harper Lake Road. This pipeline was installed for the original six SEGS projects envisioned at Harper Dry Lake. SGC, the owner of the pipeline, confirms that excess capacity exists in the pipeline due to the sizing of the pipeline for the SEGS projects, which used natural gas to fire full-capacity boilers. Natural gas delivered to the Project site will flow through a revenue-quality flow meter, pressure regulation station, and filtering equipment and will provide gas to the auxiliary boilers. Safety pressure relief valves are provided downstream of the pressure regulation valves. The peak natural gas rate is 21.5 million British thermal units per hour (MMBtu/hr) for each auxiliary boiler. A maximum of 94,280 MMBtu/year of fuel consumption will be expected for each boiler. Table 2-1 shows the typical composition of the natural gas used to fuel the Project's auxiliary boilers.

Table 2-1. Typical Natural Gas Composition

Component	Mole Percent (%)
Methane, CH_4	95
Ethane, C_2H_6	2
Carbon Dioxide, CO_2	1
Nitrogen, N_2	2
Total	100.00
Sulfur (grains per 100 dry standard cubic feet (dscf))	0.25
Higher Heating Value (Btu/scf)	1,025

2.4.4.3 Water Supply and Use

The Project's various water uses will include makeup for the circulating water system and cooling tower, makeup for the SSG, water for SCA washing, service water, potable water and fire protection water. A water balance diagram corresponding to peak summer operation (106 °F dry bulb/72 °F wet bulb/140 MW gross plant output) and average annual operation (79 °F dry bulb/58 °F wet bulb/105 MW gross plant output) of the power plant is presented in Figure 2-8, Water Balance Diagram.

Water Requirements

The estimated water requirements for the power plant's various water uses are presented in Table 2-2, Water Use (for each Plant site). They include the average, peak and annual usage for each Plant site; and are based on the modeled annual gross production. Equipment sizing will be consistent with peak (design) daily rates to ensure adequate design margin. Detail of the water uses and the treatment processes is contained in Figure 2-8, Water Balance Diagram, including process water, cooling water, SCA washing, etc.

Table 2-2. Water Use (for each Plant site)

Water Use	Average Rate (Gallons/Minute)	Peak Rate (Gallons/Minute)	Estimated Annual Use (Acre-Feet)
Plant Operation	667	1,093	1,077
Potable water	3.1	3.1	5

Water Source and Quality

Process and cooling water needs of the Project will be met by use of groundwater pumped from wells on the plant site. Water for domestic use by employees will also be provided by onsite groundwater treated to potable water standards by a packaged treatment unit. Several former agricultural wells exist on the site and were used to determine water quality and for pumping tests as detailed in Section 5.17, Water Resources. New water supply wells will need to be installed to provide the reliability needed during plant operations. These wells will draw from the adjudicated water rights owned by the Project developer.

The remaining agricultural wells may be used to monitor groundwater levels and quality. Those wells located within the solar array footprint will have their pump motors and bowls removed and cut down to near-surface grade elevations and decommissioned in accordance with applicable regulations. No offsite backup water source of supply will be included as part of the Project.

On both the Alpha and Beta plant sites, raw water and service water storage tanks, each having a capacity of 1,930,000 gallons will provide enough storage capacity for interruption of water supply to the facility of approximately one to two days. A portion (approximately 360,000 gallons) of the service water storage tank will be dedicated to the plant's fire protection water system. Based upon sampling of an existing on-site well, the quality of ground water that will be supplied by the wells is shown in Table 2-3, Water Quality Data in the Project Area. This data shows that that the groundwater quality supplying the Project is brackish. Complete water quality sample results are included in Section 5.17, Water Resources.

Table 2-3. Water Quality Data in the Project Area

Parameter	Result [1]
Chloride (Cl^-)	580-690 milligrams/liter (mg/l)
Total Dissolved Solids (TDS)	1500-1700 parts per million (ppm)
[1] Concentrations based on testing data gathered during a 7-day pumping test and over the months of August to November 2008. Sample well is an existing agricultural well located near the center of the Project area and constructed to a depth similar to that expected for supplying water to the Project.	

2.4.4.4 Water Treatment

The design (summer peak) and annual average water balance diagram is presented in Figure 2-8, Water Balance Diagram and shows the proposed power plant's various water uses and water treatment processes. The raw water, circulating water, process water, and SCA washing water all require onsite treatment and this treatment varies according to the quality required for each of these uses.

Groundwater

The groundwater will be pumped to the raw water storage tank and a biocide (sodium hypochlorite) is used to treat the water. When transferred to the service water tank the water is again treated with the biocide if needed. This water is used directly in the cooling tower as make-up water.

To conserve water, the lower TDS reverse osmosis (RO) reject streams will be recycled back to the Service Water storage tank for reuse in the cooling tower. Additionally, a clear well will be used and when the discharge exceeds the treatment system demand, the clear well discharge will be released to the cooling tower to further conserve water.

Circulating Water Treatment

In order to reduce overall water consumption and sizing of evaporation ponds, service water will first be used as makeup to the cooling tower and circulating water system. Water conditioning chemicals may be fed into the makeup water to minimize corrosion and to inhibit mineral scale formation and biofouling. Sulfuric acid will be fed into the circulating water system for alkalinity reduction in order to control the mineral scaling tendency of the circulating water. The sulfuric acid will be fed in an amount required to maintain a pH setpoint in the circulating water makeup flow. The sulfuric acid feed equipment will include a bulk storage tank and two full-capacity metering pumps.

To further inhibit mineral scale formation, an organic phosphate inhibitor solution may be fed into the circulating water system in an amount proportional to the circulating water blowdown flow. The inhibitor solution feed equipment will include a bulk storage tank and two full-capacity metering pumps. To inhibit biofouling, sodium hypochlorite will be

shock-fed into the circulating water system as a biocide. The sodium hypochlorite feed equipment will include a bulk storage tank and two full capacity metering pumps.

The blowdown from the circulating water/cooling tower system will be continually treated by lime-softening clarification (clarifier) and filtration processes, and then delivered to a clearwell. A portion of this stream will then be further treated for various plant uses that require higher purity water, such as SCA cleaning and steam system makeup. This will be a demand-based usage, where any excess flow out of the clearwell is simply recycled back to the cooling tower for further use in the circulating water system. The clarifier will use lime (calcium hydroxide) and soda ash (sodium carbonate) to precipitate hardness and alkalinity from the cooling tower blowdown water. Each of these systems will include a bulk dry storage bin, slurry makeup tank, and two full capacity delivery pumps. The clarifier also will use magnesium hydroxide slurry, a coagulant (ferric chloride), and a flocculent polymer to aid in settling/removing suspended solids in the clarification process. Each of these chemicals will include a bulk storage tank and two full capacity metering pumps.

The clarifier solids will be further concentrated in a thickener. The overflow or clear water from the Thickener will be recycled as makeup to the cooling tower. The thickener solids stream will then be delivered to a mechanical filter press, where remaining water will be removed, again for reuse in the cooling tower. The solid waste discharge from the filter press will be trucked to an appropriate land fill as described in Section 5.16, Waste Management. This process will allow for an efficient use of the water while reducing the capital and operating expense of other processes. This process reduces the metals content in the water prior to use elsewhere in the system along with extracting these prior to discharge in the evaporation ponds.

The overflow water from the clarifier will be delivered to the clarified water tank, and then pumped through a set of pressure filters. The pressure filters contain typical standard sand and anthracite granular media, and will remove the small amount of solids that carry over from the clarifier. The pressure filters will be backwashed periodically to remove accumulated solids. This backwash water will be recycled back to the clarifier for treatment, so that there is no net waste stream from the pressure filters. The pressure filter product stream will then be directed to the clear well tank.

Following the clear well, the water will be treated by the Cooling Tower Reverse Osmosis (CTRO) system, in order to be utilized for other plant requirements. As pre-treatment to the CTRO process, ion-exchange-type softeners will be utilized to remove any dissolved hardness minerals that remain after the clarifier. The softeners will be periodically regenerated using a salt (sodium chloride) solution. The waste from the softeners will be separated so that backwash and rinse water from the softeners will be recycled back to the clarifier for reuse and the brine stream will be delivered to the evaporation ponds.

The product stream from the CTRO is delivered to the RO surge tank. The flow out of the clear well and through the CTRO is demand-based, so that any excess clear well water will be recycled back to the cooling tower for further use. This format will minimize water usage of the Plant.

The CTRO utilizes several stages of reverse osmosis (RO) treatment to remove most of the mineral content of the water. The reject stream from the CTRO process will be brackish

water; and this will be discharged to the evaporation ponds. The CTRO process is designed to minimize the amount of waste water sent to the Ponds.

The RO surge tank water is withdrawn as required, for further treatment and ultimately for use in SCA washing and steam cycle makeup.

Solar Collector Array Washing Water

To facilitate dust and contaminant removal, partially deionized (demineralized) water will be used to clean the SCAs on a periodic basis, determined by the reflectivity monitoring program and other maintenance considerations. Washing the SCA maintains the mirror surface, the HCE, and other components clean and free to operate normally. This operation is generally completed at night and involves a water truck spraying deionized water on the SCAs in a drive-by fashion. The deionized water production facilities, already in place for SSG makeup water, will be sized to accommodate the additional SCA washing demand of about 60 gallons per minute (average) for each Plant site as shown on the water balance diagrams. Water from the SCA washing operation is expected to evaporate on the SCA with minimal water applied to the ground. No site runoff or recharge is anticipated from this process.

The RO surge tank water is further treated with another stage of RO to obtain water with very low mineral content. The product water from this RO stage will be stored in a surge tank, and will then be withdrawn only as needed for SCA cleaning, and for further treatment for steam cycle makeup.

The reject stream from the SCA cleaning RO treatment is recycled back to the raw water tank, where it will be used to supplement groundwater for cooling tower makeup. This method results in no waste stream from the SCA cleaning RO treatment.

Steam Cycle Process Water

Makeup water for the steam cycle must meet ASME Boiler Code for silica and dissolved solids. To meet these specifications, water will be processed through a demineralized water system. This system is anticipated to consist of multiple unit operations, concluding with mixed-bed demineralizers. Water produced by this system will only be used for makeup to the steam cycle.

The demineralized water treatment will consist of a final stage of RO treatment and mixed-bed ion-exchange polishers. The reject stream from the RO treatment is recycled back to the RO surge tank, resulting in no net waste stream. The mixed-bed ion-exchange units are designed for regeneration off-site, and also have no waste stream associated with this process.

Additional conditioning of the condensate and feedwater circulating in the steam cycle will be provided by means of a chemical feed system. To minimize corrosion, an oxygen scavenger for dissolved oxygen control and an alkaline solution for pH control are fed into the condensate. To minimize scale formation in the SSG, a solution of disodium phosphate (DSP) and trisodium phosphate (TSP) may be fed into each feedwater system. The chemical feed systems will include an oxygen scavenger feed tank, an alkaline solution (amine) feed tank, and a phosphate solution feed tank. The feed tanks will be provided with two full-capacity metering pumps.

A steam cycle sampling and analysis system will monitor the water quality at various points in the plant's steam cycle. The water quality data will be used to guide adjustments in water treatment processes and to determine the need for other corrective operational or maintenance measures. Steam and water samples are routed to a sample panel where steam samples are condensed and the pressure and temperature of all samples are reduced as necessary. The samples are then directed to automatic analyzers for continuous monitoring of conductivity and pH. All monitored values are indicated at the sample panel and critical values will be transmitted to the plant control room. Grab samples will be periodically obtained at the sample panel for chemical analyses that provide information on a range of water quality parameters.

Wastewater

The water balance diagram shows the wastewater streams and the disposition of wastewater (water treatment system effluent) discharging to evaporation ponds. As discussed previously, the cooling tower blowdown will be processed with various processes, including clarification and reverse osmosis, prior to reuse to make SCA washing and steam system makeup water. The reject water will be ultimately discharged to evaporation ponds for final dewatering. The residual solids will remain in the pond for the duration of the plant life, as is discussed below in Section 2.4.4.6.

Wastewater sources include the following:

- Reverse Osmosis/Demineralizer system wastewater, and
- General plant drains from the oil water separator.

2.4.4.5 Cooling Systems

Each of the power islands include two cooling systems; 1) the steam cycle heat rejection system (e.g., cooling tower) and, 2) the closed cooling water system (equipment cooling), each of which is discussed in this section.

Steam Cycle Heat Rejection System

The cooling system for heat rejection from the steam cycle consists of a surface condenser, circulating water system, and a wet cooling tower. The surface condenser receives exhaust steam from the low pressure section of the STG and condenses it to liquid for return to the SSG. The surface condenser is a shell-and-tube heat exchanger with wet, saturated steam condensing on the shell side and circulating water flowing through the tubes to provide cooling. The warmed circulating water exits the condenser and flows to the cooling tower to be cooled and reused.

The circulating water is distributed among multiple cells of the counter-flow cooling towers, where it cascades downward through each cell fill and then collects in the cooling tower basin. The mechanical draft cooling tower employs electric motor-driven fans to move air upward through each cooling tower cell fill. The cascading circulating water is partially evaporated, and the evaporated water is dispersed into the atmosphere as part of the moist air leaving each cooling tower cell. As discussed in Section 5.15, Visual Resources, because of climatic conditions at the site, visible moisture plumes are expected

to occur relatively infrequently and mainly in winter months; therefore, no need is expected for a plume-abated cooling tower.

The circulating water is cooled primarily through partial evaporation, and secondarily through heat transfer with the air. The cooled circulating water is pumped from the cooling tower basin back to the surface condenser and auxiliary cooling water system.

Closed Cooling Water System

The closed cooling water system uses water from the cooling tower for the purpose of cooling equipment including the STG lubrication oil cooler, the STG generator cooler, steam cycle sample coolers, large pumps, etc. The water picks up heat from the various equipment items being cooled and rejects the heat to the cooling tower through a closed loop heat exchanger.

2.4.4.6 Waste Generation and Management

Project wastes include industrial wastewater, sanitary wastewater, non-hazardous solid waste, hazardous solid waste, and hazardous liquid waste. Project waste streams and management details are discussed in Section 5.16, Waste Management and Section 5.17, Water Resources.

Evaporation Ponds for Industrial Wastewater

It is expected that each Plant site will have two double-lined evaporation ponds with a nominal surface area of five acres each for a total of ten acres per site or twenty acres for the entire Project. The ponds will be designed in accordance with Lahontan Regional Water Quality Control Board (RWQCB) requirements. Multiple ponds are planned to allow plant operations to continue in event that a pond needs to be taken out of service for some reason, e.g., needed maintenance. Each pond will have enough surface area so that the evaporation rate exceeds the cooling tower blowdown rate at maximum design conditions and at annual average conditions. Pond depth will be selected so that the ponds will not need to have residual solids removed during the life of the plant.

The pond liner system is expected to consist of a 60 mil high density polyethylene (HDPE) inner liner and a 50 mil HDPE outer liner. Between the liners is a synthetic drainage net that is used as part of the leachate collection and removal system (LCRS). Monitoring of the evaporation ponds will be required to detect the presence of liquid and/or constituents of concern. The LCRS will be monitored and a series of monitoring wells will also be used for the evaporation ponds. Based on the power plant process, chemicals used, and water quality, it is expected that the constituents of concern for this monitoring will include chloride, sodium, sulfate, TDS, biphenyl, diphenyl oxide, potassium, selenium, chromium and phosphate. The proposed detection monitoring program for the facility consists of monitoring the LCRS, lysimeters, and monitoring wells for the presence of liquid and/or constituents of concern.

Septic System for Sanitary Wastewater

The Project's sanitary system will collect wastewater from sanitary facilities such as sinks and toilets. This waste stream will be sent to onsite sanitary waste septic systems located at each power island.

On-Site Bioremediation/Land Farm System

The Project will include bioremediation/land farm units to treat soil contaminated with HTF in the event of a leak or spill. The proposed bioremediation and land farm facilities will cover an area of approximately 1.5 acres on each plant site. Appropriate contamination level for bioremediation and land farming of site-specific soils will be determined by Lahontan-approved testing to ensure the adequacy of the bioremediation/land farm unit design for HTF-contaminated soil. Contaminated soil that exceeds this level will be disposed of at an appropriate waste facility.

The bioremediation/land farm area will be designed in accordance with Lahontan RWQCB requirements and will include a leak detection system and monitoring wells. Treatment in the bioremediation unit involves the addition of nitrogen and phosphorous (i.e., fertilizers) as nutrients to the HTF-contaminated soil to stimulate consumption of HTF by the indigenous bacteria. The soil will remain in the bioremediation/land farm unit until concentrations are reduced to appropriate levels for use as fill material on the site.

Other Non-Hazardous Solid Waste

Construction, operation and maintenance of the Project will generate non-hazardous solid wastes typical of power generation or other industrial facilities (see Section 5.16, Waste Management). These wastes include scrap metal and plastic, insulation material, paper, glass, empty containers, and other miscellaneous solid wastes. These materials will be disposed of by means of contracted refuse collection and recycling services.

Hazardous Solid and Liquid Waste

Small quantities of hazardous wastes will be generated during Project construction and operation. Hazardous wastes generated during the construction phase include substances such as paint and primer, thinners, and solvents. Hazardous solid and liquid waste streams generated during Project operations include substances such as used HTF, used hydraulic fluids, oils, greases, filters, etc., as well as spent cleaning solutions and spent batteries. To the extent possible, both construction and operation-phase hazardous wastes will be recycled. Tables 5.16-5, Summary of Construction Waste Streams and Management Methods, and 5.16-6, Summary of Operation Waste Streams and Management Methods in Section 5.16, Waste Management summarize Project hazardous waste streams in terms of quantities, origin and composition, and management method(s).

2.4.4.7 Hazardous Materials Management

There will be a variety of hazardous materials used and stored during construction and operation of the Project, as summarized below. Section 5.6, Hazardous Materials Handling provides additional data on the hazardous materials that will be used during construction and operation, including quantities, associated hazards and permissible exposure limits, storage methods and special handling precautions.

Hazardous materials that will be used during construction include gasoline, diesel fuel, oil, lubricants, and small quantities of solvents and paints. All hazardous materials used during construction and operation will be stored onsite in storage tanks/vessels/containers that are specifically designed for the characteristics of the materials to be stored; as appropriate,

the storage facilities will include the necessary secondary containment in case of tank/vessel failure.

Carbon steel tanks will be used at each Plant site to store sodium hydroxide solution (7,500-gallon capacity), sulfuric acid (10,000-gallon capacity), and lube oil and diesel fuel (6,500-gallon capacity each). Secondary containment will be provided for these tanks

A variety of safety-related plans and programs will be developed and implemented to ensure safe handling, storage, and use of hazardous materials (e.g., Hazardous Material Business Plan). Plant personnel will be supplied with appropriate personal protective equipment (PPE) and will be properly trained in the use of PPE and the handling, use, and cleanup of hazardous materials used at the facility, as well as procedures to be followed in the event of a leak or spill. Adequate supplies of appropriate cleanup materials will be stored onsite. Details of safety plans are included in Section 5.18, Worker Safety.

2.4.4.8 Fire Protection

Fire protection systems will be provided to limit personnel injury, property loss, and Project downtime resulting from a fire. The systems include a fire protection water system and portable fire extinguishers.

The Project's fire protection water system will be supplied from a dedicated 360,000-gallon portion of the 1,930,000-gallon Service Water storage tanks located on each Plant site. One electric and one diesel-fueled backup firewater pump, each with a capacity of 3,000 gallons per minute, will deliver water to the fire-protection water piping network on each Plant site. A smaller electric motor-driven jockey pump will maintain pressure in the piping network.

The piping network will be configured in a loop so that a piping failure could be isolated with shutoff valves without interrupting the supply of water to a majority of the loop. The piping network will supply fire hydrants located at intervals throughout the power island; a sprinkler deluge system at each unit transformer, HTF expansion tank and circulating pump area; and sprinkler systems at the STG and in the operations and administration buildings. Portable fire extinguishers of appropriate sizes and types will be located throughout the plant site.

Fire protection for the solar field will be provided by zoned isolation of the HTF lines in the event of a rupture that results in fire. As vegetation or other combustible materials will not be allowed in the solar field, the HTF will be allowed to extinguish itself naturally, since the remainder of the field is of nonflammable material (aluminum, steel, and glass).

2.4.4.9 Other Auxiliary Systems

The following plant auxiliary systems will control, protect, and support the power plant and its operation.

<u>Distributed Control System</u>

The Distributed Control System (DCS) will provide control, monitoring, alarm, and data storage functions for power plant systems. These include:

- Control of the STG, SSG System and balance-of-plant systems in a coordinated manner,

- Monitoring of operating parameters from plant systems and equipment,
- Visual display of the associated operating data to control operators and technicians,
- Detection of abnormal operating parameters and parameter trends,
- Provision of visual and audible alarms to apprise control operators of such conditions, and
- Storage and retrieval of historical operating data.

The DCS is a microprocessor-based system. Redundant capability is provided for critical DCS components such that no single component failure will cause a plant outage. The DCS consists of the following major components:

- Computer monitor-based control operator interface (redundant),
- Computer monitor-based control engineering work station,
- Multi-function processors (redundant),
- Input/output processors (redundant for critical control parameters),
- Field sensors and distributed processors (redundant for critical control parameters),
- Historical data archive, and
- Printers, data highways, data links, control cabling, and cable trays.

The DCS is linked to the control systems furnished by the STG supplier and to the solar field controls. These data links will provide STG control, monitoring, alarm, and data storage functions via the control operator interface and control technician workstation of the DCS. The DCS has a supervisory control over the solar field. The control of SCA is done at SCA level and networking back to DCS, the methods could be fiber optic, Ethernet link or wireless control.

Lighting System

The Project's lighting system will provide operations and maintenance personnel with illumination in both normal and emergency conditions. The system will consist primarily of AC lighting, but will include DC lighting for activities or emergency egress required during an outage of the plant's AC electrical system. The lighting system will also provide AC convenience outlets for portable lamps and tools. Lighting will be designed to provide the minimum illumination needed to achieve safety and security objectives and will be shielded and oriented to focus illumination on the desired areas and minimize additional nighttime illumination in the site vicinity.

Cathodic Protection System

Cathodic protection systems protect against electrochemical corrosion of underground metal piping and structures. Underground metal structures will have necessary cathodic protection based on soil conditions.

Freeze Protection Systems

Freeze protection systems (heat tracing) will be employed to protect small water and condensate piping systems that cannot be easily drained. Also, due to the high freezing temperature of the solar field's HTF (54°F), steam-fed HTF Freeze Protection heat exchangers will be provided to protect the system during the night hours and colder months, in addition to electric heat tracing and insulation.

Service Air and Instrument Air Systems

The service air system supplies compressed air to hose connections located at intervals throughout the power plant. Compressors deliver compressed air at a regulated pressure to the service-air piping network.

The instrument air system provides dry, filtered air to pneumatic operators and devices throughout the power plant. Air from the service air system is dried, filtered, and pressure regulated prior to delivery to the instrument-air piping network.

Telemetry

The MSP will utilize electronic systems to control equipment and facilities' operations over a large site. Because of the presence of various important Department of Defense (DOD) facilities/activities in the general area (e.g., Edwards Air Force Base, China Lake Naval Weapons Center and associated ranges), the Project is sensitive to the need to ensure that use of the electronic spectrum by the MSP will not interfere with DOD activities. Detailed information on the Project's use of the electronic spectrum has not yet been developed at the current stage of the Project engineering design process. However, the Project will coordinate any telemetry selection with the DOD as needed to ensure compatibility.

HTF Leak Detection

Leak detection of HTF will be accomplished in a combination of ways. Small leaks, possible at ball joints or other connections, will be located based on daily inspection of the solar field. Those small leaks could then be corrected via repacking of joints or valves or by minor repairs if needed. The ability to isolate loops and sections of the field will allow for quick repairs. Larger sudden leaks are a greater concern. In order to identify and react to such leaks quickly, the Project is considering a combination of remote pressure sensing equipment and remote operating valves that will allow for isolation of large areas of the field, or possibly the entire field. Such features will be developed as part of the detail design process.

2.4.5 Project Civil/Structural Features

The following subsections describe civil/structural features of the Project as illustrated in the site arrangement presented in Figure 2-3, Project Site Map. The Project will be designed in conformance with the current edition of the California Building Code criteria for seismic conditions as detailed in the Geotechnical Evaluation, Appendix B.

2.4.5.1 SSG System, STG and Associated Equipment

The SSG System, STG and condenser will be supported on reinforced-concrete mat foundations. The one step-up transformer and GSU will be supported on reinforced-

concrete mat foundations. Balance-of-plant (BOP) mechanical and electrical equipment will be supported on individual reinforced-concrete pads. BOP components/materials include piping, valves, cables, switches, etc. are not included with major equipment and are generally installed or erected onsite.

2.4.5.2 Solar Array Support Structures

Each solar collector array will be supported by structures (pylons) that connect the parabolic troughs to the drive mechanism. Each array will be supported by multiple individual foundations. Foundation design will be based on site-specific geotechnical conditions to ensure that the solar array pylons are able to support all loading conditions (including wind loading) at the proposed Project site. Preliminary designs based on geotechnical and soils studies include pier foundations and spread footings.

2.4.5.3 Buildings

The Project will include a warehouse and control/admin building located in each power island. Solar collector array assembly buildings will be installed in the northeast portion of the Alpha solar field, which will be later converted to warehouses. The design and construction of the buildings will be consistent with normal building standards. Other plant site "buildings" will include the water treatment building, as well as a number of pre-engineered enclosures for mechanical and electrical equipment. Building columns will be supported on reinforced-concrete mat foundations or individual spread footings and the structures will rest on reinforced concrete slabs. The total square footage of the various proposed Project buildings and pre-engineered enclosures (e.g., control/admin building, warehouse, electrical equipment enclosures, etc.) is approximately 185,000 square feet for the entire Project.

2.4.5.4 Water Storage Tanks

There will be a number of covered water tanks on each site including a 1,930,000-gallon Raw Water storage tank for short-term backup cooling water supply, with a portion (360,000 gallons) dedicated to the plant's fire protection water system and a 1,930,000-gallon Service Water storage tank. There will also be a 164,500-gallon storage tank for storage of demineralized water. Water storage tanks will be vertical, cylindrical, field-erected steel tanks supported on foundations consisting of either a reinforced-concrete mat or a reinforced-concrete ring wall with an interior bearing layer of compacted sand supporting the tank bottom.

2.4.5.5 Roads, Fencing, and Security

Only a small portion of the overall plant site will be paved, primarily the site access road and portions of the power island (paved parking lot and roads encircling the STG and SSG areas). In total, each power island will be approximately 20 acres with approximately 1.75 acres of paved area. The solar field will remain unpaved and without a gravel surface in order to prevent rock damage from SCA wash vehicle traffic. An approved dust suppression coating will be used on the dirt roadways within and around the solar field. Roads and parking areas located within the power island area and adjacent to the administration building and warehouse will be paved with asphalt and are included in the total above.

The Project solar field and support facilities' perimeter will be secured with chain-link metal-fabric fencing, six to eight feet tall. The location is shown in Figure 2-3, Project Site map. Controlled access gates will be located at the power island entrances and serve as normal access to the solar fields. Desert tortoise exclusion fencing will be installed at the base of the chain link fence and tortoise-proof gates will be utilized.

2.4.5.6 Offsite Storm Water Flow

Stormwater from the watershed tributaries to the site enter the Project in the form of sheet flow along the southern and eastern site boundaries. Storm sheet flow will be intercepted as it enters the site, conveyed around the Project, and returned to its historical flow location and parameters as it flows into Harper Dry Lake. Earth-lined drainage channels will be constructed to intercept the flows entering the site boundary. These channels will be sized and designed to convey the calculated storm runoffs from the 100-year storm event following County of San Bernardino Flood Control District standards. Channel design and construction will incorporate measures to mitigate slope erosion, provide free-board allowances, and provide access for channel maintenance. Calculations of the off-site storm water flows and channel design parameters are discussed in Section 5.17, Water Resources and detailed in the Project Hydrology Report included in Appendix K.

2.4.5.7 Site Drainage and Earthwork

The proposed Project site is located in the arid Mojave Desert (average annual rainfall in the site vicinity reported as less than seven inches) and is largely fallow agricultural land. The existing topographic conditions of the Project site show an average slope of 1%. The property's existing conditions creates sheet drainage/run-off during infrequent large precipitation events. Grading, drainage and hydrology studies have been conducted and the preliminary drainage plan is contained in Appendix K and discussed in Section 5.17, Water Resources.

Site Drainage

The Alpha and Beta power island areas are centrally located within their respective solar fields. The power islands will drain via sheet flow away from equipment foundations to the solar fields. Local area containments will be provided around certain locations, such as oil-filled transformers and chemical storage areas. The water from these areas and from other plant drains will be sent to an onsite oil-water separator, which is designed to remove free floating oil, grease, and settleable oily-coated solids from oil/water discharges associated with plant processes. The oil-free water will then be rejected into the evaporation ponds.

The solar field areas will be graded generally following the existing contours of the site as planar tiers to accommodate the installation of the solar field components. Water in the solar field area will be allowed to settle in the solar fields and percolate. To facilitate this, bermed areas will be used around the solar-field tiers. Site runoff is not anticipated from the solar field.

Storm Water Management

As summarized in Section 5.17, Water Resources, and described in the preliminary draft Drainage, Erosion, and Sediment Control Plan (DESCP) provided in Appendix K, the Project will employ a comprehensive system of management controls, including site-specific Best

Management Practices (BMPs), to minimize storm water contact with contaminants and thus minimize pollutants in storm water. These management controls include:

- Employee Training Program,
- Erosion and Sediment Control,
- Good Housekeeping Programs,
- Preventive Maintenance Programs,
- Structural BMPs,
- Temporary containments during maintenance activities.
- Permanent secondary containment structures at chemical storage and process areas.
- Materials, Equipment and Vehicle Management Practices,
- Spill Prevention and Response Programs, and
- Inspection Programs.

Site Grading and Earthwork

Existing site elevations range from approximately 2,025 to 2,105 feet amsl. Mass grading of the site will occur at the beginning of the Project construction period. The grading will result in a range of slopes similar to the existing slope of the site. The preliminary site grading plan will be designed to be balanced; no import or export of soil will be expected for general earthwork. Earthwork associated with the proposed Project will include excavation for foundations and underground systems.

The Project's power islands and solar field areas will be graded to allow for a balanced distribution of material, so there will be no requirement to truck large quantities of earth materials to or from the site. The preliminary grading plan assumes appropriate soil shrinkage to achieve the balance of cut and fill material. The cut and fill grading necessary to create suitable conditions for Project construction will result in an elevation of approximately 2,065 feet amsl. Adjustments will be made to provide engineered fill as required for stabilization under equipment and structure foundations for the Project geotechnical report. Only soil materials approved by a geotechnical engineer for structural fill will be used. Additionally, specialized granular materials may need to be imported to the proposed site for road base and possible use below foundations.

2.4.5.8 Roadway and Drainage Channel Crossing Improvements

Access to the Project will be provided along Harper Lake Road and Lockhart Road. Road widths and pavement types will be designed and constructed to satisfy the requirements of the County of San Bernardino Transportation Department and the San Bernardino County Fire Marshall. All-weather, paved access will be provided to both power islands for emergency and fire access. Drainage channel crossings on Harper Lake Road and Lockhart Road will be constructed to convey the 100-year storm runoff flows beneath the roadway to maintain 24-hour access to the power islands. Access to the solar fields will be provided via fair-weather crossings along the channel bottoms. These crossings will provide

vehicular access during fair-weather, while allowing drainage flows to cross the roadways during periods of storm runoff.

2.4.6 Construction of Generating Facilities

2.4.6.1 Employment

The construction workforce will consist of laborers, craftsmen, supervisory personnel, support personnel, and construction management personnel. Table 5.11-9 in Section 5.11, Socioeconomics, provides a breakdown of the construction workforce by skill over the entire construction period. Employment peak and average construction employment levels are 1,162 and 830 respectively.

2.4.6.2 Logistics

Temporary construction laydown and parking areas will be located at logical locations on the Project site consistent with the material stored. An area in the northeast portion of the Alpha solar field, as shown in Figures 2-3, Project Site Map will be used to assemble the SCAs in buildings. Upon completion of construction, a portion of this area will be filled with SCAs and the SCA assembly buildings will remain as warehouses. The construction sequence for power plant construction includes the following general steps:

- *Site Preparation:* This includes detailed construction surveys, mobilization of construction staff, demolition of the small number of existing onsite structures, grading, and preparation of drainage features. Grading for the solar field and power island will be completed during the first six months of the construction schedule. Finish grading and repairs will occur during the remaining construction period as portions of the Project are completed.
- *Foundations:* This includes excavations for large equipment (STG, SSG, GSU, cooling tower, etc.), footings for the solar field, and ancillary foundations in the power island.
- *Major Equipment Installation:* Once the foundations are complete, the larger equipment will be installed. The solar field components will be assembled in the onsite SCA assembly buildings and installed on their foundations.
- *Balance of Plant:* With the major equipment in place, the remaining field work will be piping, electrical, and smaller component installations.
- *Testing and Commissioning:* Testing of subsystems will be done as they are completed. Major equipment will be tested once all supporting subsystems are installed and tested.

Equipment and materials will be delivered to the plant site by truck; large components (e.g., STG) and bulk deliveries will be received in Barstow by rail, transferred to truck and then delivered to the site. Details by vehicle type, traffic counts and employee bussing plans are included in Section 5.13, Traffic and Transportation.

To minimize impacts due to traffic, the Project plans to use a bussing service from a location in Barstow. This will significantly reduce the number of vehicles required to travel on Harper Lake Rd and alleviating any congestion at Harper Lake Road and Highway 58.

Details of the bussing, expected parking location and associated traffic analyses are included in Section 5.13 Traffic and Transportation.

The Project plans to receive shipments by rail at the Barstow BNSF Rail Facility. This facility currently exists and has sufficient capacity to receive and provide logistic support for the Project. Details of traffic from this facility and associated traffic analyses are included in Section 5.13, Traffic and Transportation.

2.4.7 Project Operations

The Project will have a moderate-sized workforce during operation; an estimated total workforce of full-time-equivalent personnel will be needed to staff the facility 24 hours per day/seven days per week. When the facility is not operating (i.e. not generating electricity), personnel will be present as necessary for maintenance, to prepare the plants for startup, and/or for site security.

The Project plans to have 63 fulltime employees and 10 seasonal employees during the peak operating months. The operations workforce will include management, supervisors, plant operators, engineering and maintenance staff, skilled labor, and unskilled labor. The details of the operations employment are included in Section 5.11, Socioeconomics.

The Project's operational traffic is detailed in 5.13, Traffic and Transportation, and includes employee and truck traffic for shipments.

2.5 Natural Gas Supply

This section discusses the natural gas supply for the Project. The natural gas pipeline to service the proposed Project exists in Harper Lake Rd and interconnection will occur at the Project boundary; no offsite pipeline is required.

2.5.1 Existing Facilities

Southwest Gas Corporation (SGC) is the local service provider. The existing pipeline was installed to support the existing and previously planned SEGS projects at Harper Dry Lake. The line was sized to support up to six SEGS-style projects. Existing capacity is sufficient to support the minimal use of natural gas for this Project and has been confirmed by SGC (see Appendix O).

The interconnection will service both power islands independently. A pipeline will be installed within the Project boundary to support the Beta Site power island from the interconnection location near the Alpha power island as shown in Figure 2-3, Project Site map.

2.5.2 Proposed Onsite Routing

Starting at the tap station adjacent to the west side of the Alpha power island, the pipeline is routed underground to the Alpha power island metering and reducing station. A tee will be installed downstream the tap in the line to supply the Alpha power island and to route gas to the Beta power island. To supply the Beta power island an underground pipeline will be installed from the tee and extend west to a point north of the Beta power island, turn south and terminate at the Beta power island metering and reducing station. The

total distance from the tee to the Beta metering and reducing station is approximately two miles.

2.5.3 Construction Practices

The natural gas pipeline will be constructed as part of the overall site construction. The pipeline will be installed in maintenance road right-of-ways to allow for future access if necessary. Prior to installation, the pipe will be laid along the route. Pipeline construction will take approximately one month and is expected to begin following the grubbing and clearing of the Project site and in coordination with mass grading. During non-work hours, the exposed trench will be covered with temporary coverings to provide safety. The pipe will have factory-applied corrosion protection coating. Joints will be welded and inspected using X-ray. The construction of the natural gas pipeline will consist of the following:

- *Trenching:* The optimal trench will be approximately 36 inches wide and four to ten feet deep. With loose soil, a trench up to eight feet wide at the top and three feet wide at the bottom may be required. The pipeline will be buried to provide a minimum cover of 36 inches. The excavated soil will be piled on one side of the trench and used for back filling after the pipe is installed.
- *Stringing:* Lengths of pipe are laid on wooden skids beside the open trench.
- *Installation:* This process consists of bending, welding, and coating the weld-joint areas of the pipe after it has been strung, padding the ditch with sand or fine spoil, and lowering the pipe string into the trench. Welding will meet the applicable standards and will be performed by qualified welders. Welds will be inspected in accordance with appropriate standards. Welds will undergo 100% inspection by an independent, qualified radiography contractor. All coating will be checked for defects and will be repaired before lowering the pipe into the trench.
- *Backfilling:* This process consists of returning spoil back into the trench around and on top of the pipe, ensuring that the surface is returned to its original grade or level. The backfill will be compacted to protect the stability of the pipe and to minimize subsequent subsidence.
- *Plating:* consists of covering any open trench in areas of foot or vehicle traffic at the end of a workday. Plywood plates will be used in areas of foot or wildlife traffic and steel plates will be used in areas of vehicle crossing to ensure public safety. Plates will be removed at the start of each workday. Efforts will be made to minimize the length of open trench along the ROW.
- *Hydrostatic testing:* consists of filling the pipeline with water, venting all air, increasing the pressure to the specified code requirements, and holding the pressure for a period of time. After hydrostatic testing, the test water will be chemically analyzed for contaminants and discharged to the surrounding area unless the analysis shows that the water is contaminated, in which case, the water will be trucked to an appropriate disposal facility.
- *Cleanup:* consists of restoring the surface of the right-of-way by removing any construction debris, grading to the original grade and contour.

- *Commissioning:* consists of cleaning and drying the inside of the pipeline, purging air from the pipeline, and filling the pipeline with natural gas.

2.5.4 Metering

A gas-metering station will be required at the tap point to measure and record gas volumes. In addition, facilities will be installed to regulate the gas pressure and to remove any liquids or solid particles. The metering station at the tap point will require an area of approximately 5,000 square feet. In addition, the two plant metering sets will require a fenced enclosure of approximately 1,000 square feet.

Construction activities related to the metering station and metering sets will include grading a pad and installing above and below ground gas piping, metering equipment, gas conditioning, pressure regulation, and possibly pigging facilities. A distribution power line for metering-station-operation lighting, communication equipment, and perimeter chain link fencing for security will also be installed.

2.5.5 Operation

Isolation block valves will be installed at both ends of the pipeline. These valves will be manually controlled, lockable, gear-operated ball valves. A pipeline Supervisory Control and Data Acquisition (SCDA) system will provide flow rate and pressure data to SGC, the gas vendor, and pipeline owner.

Communication with SGC or the gas vendor regarding pipeline operations will be by telephone lines or other means, such as Cellular Digital Pocket Data as appropriate.

2.6 Transmission Lines Description, Design, and Operation

Preliminary engineering of the proposed transmission interconnection was based on the results of the interconnection system impact study (ISIS) performed by SCE under the direction of CAISO.

2.6.1 Existing Transmission Facilities

The proposed Project site is located in southern California's Mojave Desert, immediately southwest of Harper Dry Lake and adjacent to a major transmission corridor. The corridor has facilities installed on the north side, the Kramer-Cool Water 230 kV radial line owned and operated by SCE and on the south side, the Mead-Adelanto 500 kV transmission line operated by the Los Angeles Department of Water and Power (LADWP). A lower voltage transmission line exists between the two. The transmission corridor's northern boundary is adjacent to the Project's southern boundary. A section view showing the line positions is included in Figure 2-3(j).

The Project proposes interconnection to the #1 Kramer-Cool Water line. The Project is located approximately 32 transmission-miles west of the Cool Water generating facility and approximately 13 transmission-miles east of the Kramer interconnection substation. This is the basis of the CAISO Interconnection Request (IR) and subsequent. SCE is currently performing the Facilities Study (FS) under the direction of the CAISO. Results of the

Facilities Study are currently expected in September 2009 followed by entering into a Large Generator Interconnection Agreement.

2.6.2 Proposed Transmission Interconnection

To accommodate this and other projects in the interconnection queue, SCE has subsequently proposed significant system-wide upgrades to the transmission system. These upgrades vary depending on queued-ahead projects. Permitting of offsite upgrades is being coordinated with SCE including communications to ensure SCE-owned facilities are developed consistent with Project timing.

To interconnect the Project into the existing Kramer-Cool Water No.1 230 kV transmission line, a new substation will be needed. This substation, located at the southwest corner of the Beta solar field and shown in Figure 2-3 (referred to in the ISIS as "Hinkley") is to be located approximately 13 transmission-miles east from the existing Kramer Substation and approximately 32 transmission-miles west of the existing Cool Water Substation. Further, the substation will allow SCE the ability to loop the existing Kramer-Cool Water #1 230 kV transmission line and provide for the required generation tie-line positions.

SCE has performed the ISIS to determine the adequacy of SCE's electrical system, including that portion of SCE's electrical system that is part of the CAISO Controlled Grid, to accommodate the Project. The study was performed for two system conditions: a year 2013 heavy summer with a one-in-ten load forecast and a 2013 light spring load forecast (65% of the heavy summer load). These conditions reflect the most critical expected loading conditions for the transmission system in SCE's service area. The study included all queued-ahead generation projects in the study area ahead of the Project regardless of the in-service dates of such prior projects. The system load condition assumptions were based on the latest in-service date of all queued-ahead projects.

In addition to the year 2013 cases, SCE performed a sensitivity study to evaluate if the Project could interconnect before implementing any transmission facility upgrades. These upgrades were triggered by a queued-ahead generation project. This sensitivity study was conducted to provide the information necessary to evaluate the risk of congestion exposure while the facility upgrades are being implemented.

The ISIS indicates the following minimum upgrades are required:

- Construction of a new breaker-and-a-half 230 kV Substation (Hinkley Substation), with a four bay position switch rack, equipping only two positions with a total of five circuit breakers.
- Installation of appropriate fully redundant and diverse telecommunication facilities to provide overall system protection.

Based on the study results, the existing SCE transmission facilities with only the above minimum set of facility upgrades required to interconnect the Project are not adequate to accommodate the Project when considering all other generation projects queued ahead. The draft CAISO ISIS is included as Appendix N.

The Hinkley substation and loop-in adjacent to the site are included for permitting in this AFC. All appropriate investigations that were included within the site boundary were also included in the area needed for loop in the Project within the transmission right-of-way,

adjacent to the Project boundary. The substation will be located on the Project site in the SW corner of the Beta field and will be designed to the Transmission Owner (TO), SCE's specifications. A preliminary interconnection substation one-line diagram is included as Figure 2-9 and a preliminary layout included as Figure 2-10.

2.6.2.1 Onsite Transmission Lines

Figure 2-11 illustrates the conceptual design of a typical pole. These pole designs were engineered to provide conceptual design limits for purposes of the electric and magnetic field (EMF) studies as detailed in Section 5.14, Transmission System Safety and Nuisance. Final design will be based on actual field conditions and site requirements.

The entire length of the transmission gen-tie line is located on the Project site and will be installed on approximately 23 new steel/concrete mono-poles from the Alpha Plant site and approximately nine poles from the Beta Plant site. The poles are expected to average approximately 80 feet in height (maximum pole height of 110 feet), with a span length expected to average approximately 500 feet. Access by vehicle to the Project transmission line route will be from maintenance roads within the Project boundary.

No offsite transmission line is required to interconnect the Project. System-wide impacts are included in the Interconnection System Impact Studies (Appendix N) to allow 100% deliverability of the proposed Project. Off-site improvements to be permitted with the Transmission Owner are discussed in Section 2.6.3, below.

2.6.2.2 Onsite Interconnection Substation

An Interconnection Station will be constructed at the boundary of the Project to intertie to the Kramer-Cool Water 230 kV transmission line. The station will utilize tubular aluminum alloy 1200A bus. Cable connections between the tube bus and equipment will be ACSR, AAAC, or AAC 795-kcmil cable. Tube, cables, and support structures will meet all electrical and mechanical design requirements. Instrument transformers (current and capacitive voltage transformers) will be included for protection. Shield wires and lightning arrestors will be included to protect switching station equipment and personnel against lightning strikes. Figure 2-10 shows the space needed and layout for the interconnection substation to be located at the southwest corner of the Beta solar field. Final switchyard and/or substation equipment will be determined during final engineering of the proposed interconnection and will be consistent with SCE standards. The interconnection is proposed on the Project site and the loop-in lines will extend to a point under the adjacent power lines in the transmission right-of-way.

2.6.2.3 Construction Practices

Transmission line construction will include the installation of power poles and a new interconnection station (currently named Hinkley) and involve the following sequence of activities:

- *Pole Erection:* Each pole will be assembled onsite, welded together, and dressed out with insulators and conductor hardware.
- *Conductors:* The conductors will be installed, sagged and permanently connected to the insulators.

- *Communication System:* The overhead ground/fiber optic communications cable will be installed and connected to the interconnection substation.

2.6.2.4 Metering

Revenue metering will occur at the Hinkley substation and communications for revenue metering included with system upgrades. The Project will be able to deliver power during operational times and receive power for auxiliaries at times of no operation.

2.6.2.5 Operation

Operation of the Hinkley substation will be conducted by SCE and CAISO. Communications necessary for the operation and delivery of power from the Project substation will be made as part of the system-wide improvements.

2.6.3 Transmission System Impacts and Improvements

System-wide improvements are necessary and are defined through the Facilities Study (FS) process. The ISIS, Appendix N, was used as the basis for the FS. To better coordinate system-wide transmission work, offsite transmission upgrades will be permitted by the TO, including communications. This is necessary due to the wide range of facility improvements needed as a result of the Project or as a result of queued-ahead projects' timing being scheduled or falling behind the Project's timing. The following facilities are being investigated as part of the Facilities Study, and to be used by SCE as the basis for detailed engineering and permitting by the TO once an LGIA is executed:

- Cost estimates and schedule for the construction of a new Hinkley Substation to loop the existing Cool Water-Kramer No.1 230 kV transmission line.
- Cost estimates and schedule for the looping of the existing Cool Water-Kramer 230 kV transmission line into the new Hinkley Substation.
- Cost estimate and schedule for the protection and telecom requirements to support the new Hinkley Substation.
- Develop cost estimates and schedule for the construction of a new Desert View substation to loop the existing Lugo-Pisgah No.2 230 kV transmission line. The Substation would be sized for 500/230/115 kV facilities and would be capable of ultimately accommodating four 500/230 kV transformer banks.
- Cost estimates and schedule for the removal of approximately 16 miles of existing Lugo-Pisgah No.1 230 kV transmission line between Lugo and proposed Desert View Substation.
- Cost estimates and schedule for the construction of a new 16-mile double-circuit 500 kV Lugo-Desert View transmission line with one circuit energized at 500 kV and the second circuit initially energized at 230 kV.
- Cost estimate and schedule for the protection and telecom requirements to support the new Desert View Substation.
- Cost estimates and schedule for the installation of the third Lugo 500/230 kV transformer bank.

- Cost estimates and schedule for the construction of a third Lugo-Victor 230 kV transmission line.
- Cost estimates and schedule for the construction of a new 37-mile double-circuit 230 kV Cool Water-Desert View transmission line (2B-1590 ACSR) with one initial circuit.
- Cost estimate and schedule for SPS required to trip HLSP under two specific single outage contingencies.

The Project is coordinating with the TO to identify opportunities to advance the transmission permitting process including the use of a Special Protection System and Congestion Management. This is detailed in Section 4.0, Alternatives.

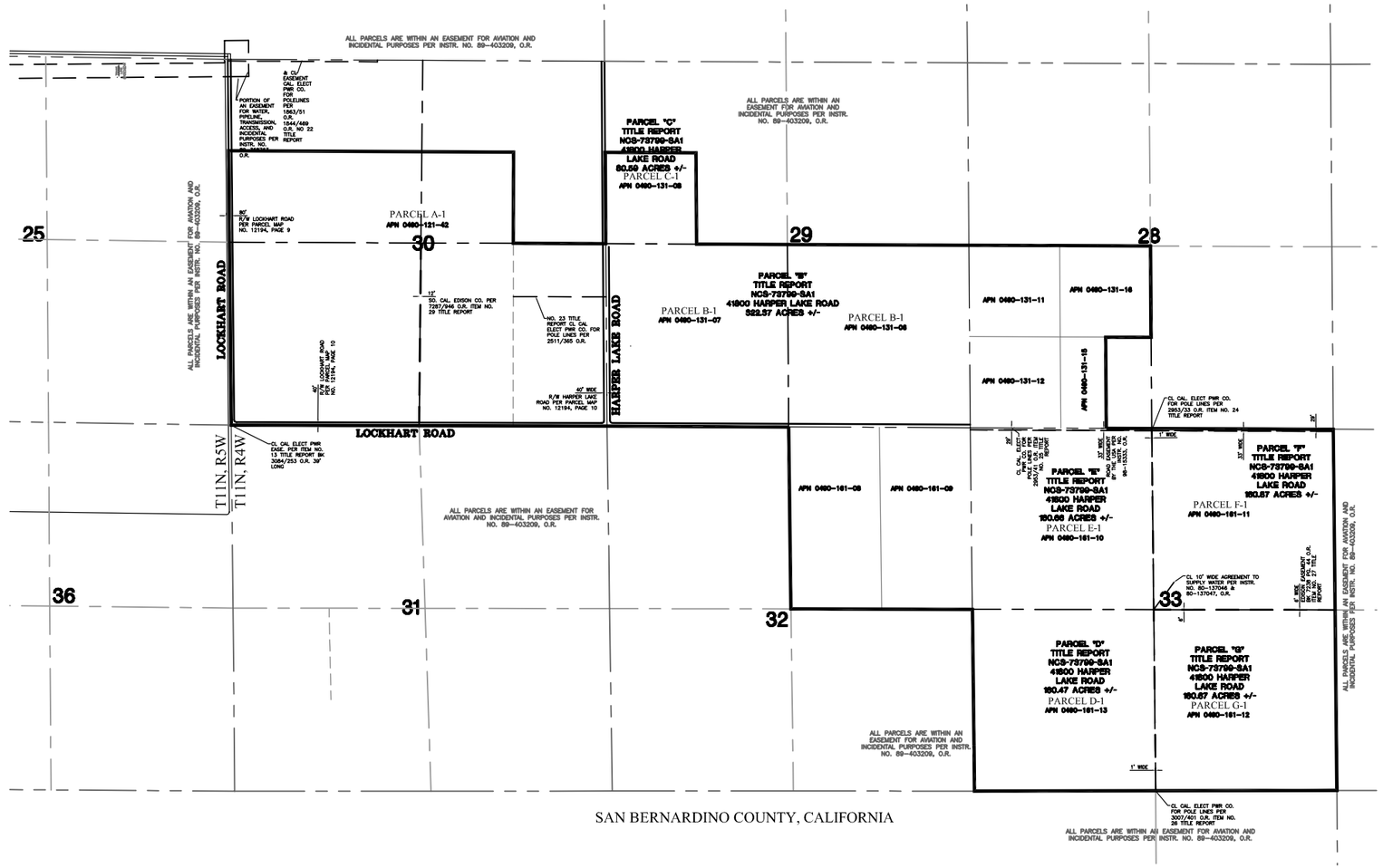

SAN BERNARDINO COUNTY, CALIFORNIA

MOJAVE SOLAR PROJECT

Figure 2-1
PROJECT BOUNDARY

0 1000' 2000' 3000'
SCALE: 1:24000

MOJAVE SOLAR LLC

Merrell-Johnson Engineering, Inc.

PROJECT:
DATE: 07/28/09

bjennings 3:10pm 28 July 2009 P:\3001-4 Hooper Lake GEN\2.0-Figure 2-1.dwg - FIG 2-3 Merrell-Johnson Engineering, Inc.

Figure 2-2(a). Center of Beta Field at Southern Border Looking NW

Figure 2-2(b). SW Corner of Alpha Looking NNE Foundation for Home and General Debris

Figure 2-2(c). West Side of Harper Lake Road Looking East just North of Lockhart Ranch Rd.

Figure 2-2(d). Miscellaneous Abandoned Structures West of Harper Lake Road Just North of Lockhart Ranch Road

Figure 2-2(e). Center of Beta Field at Northern Border Looking South

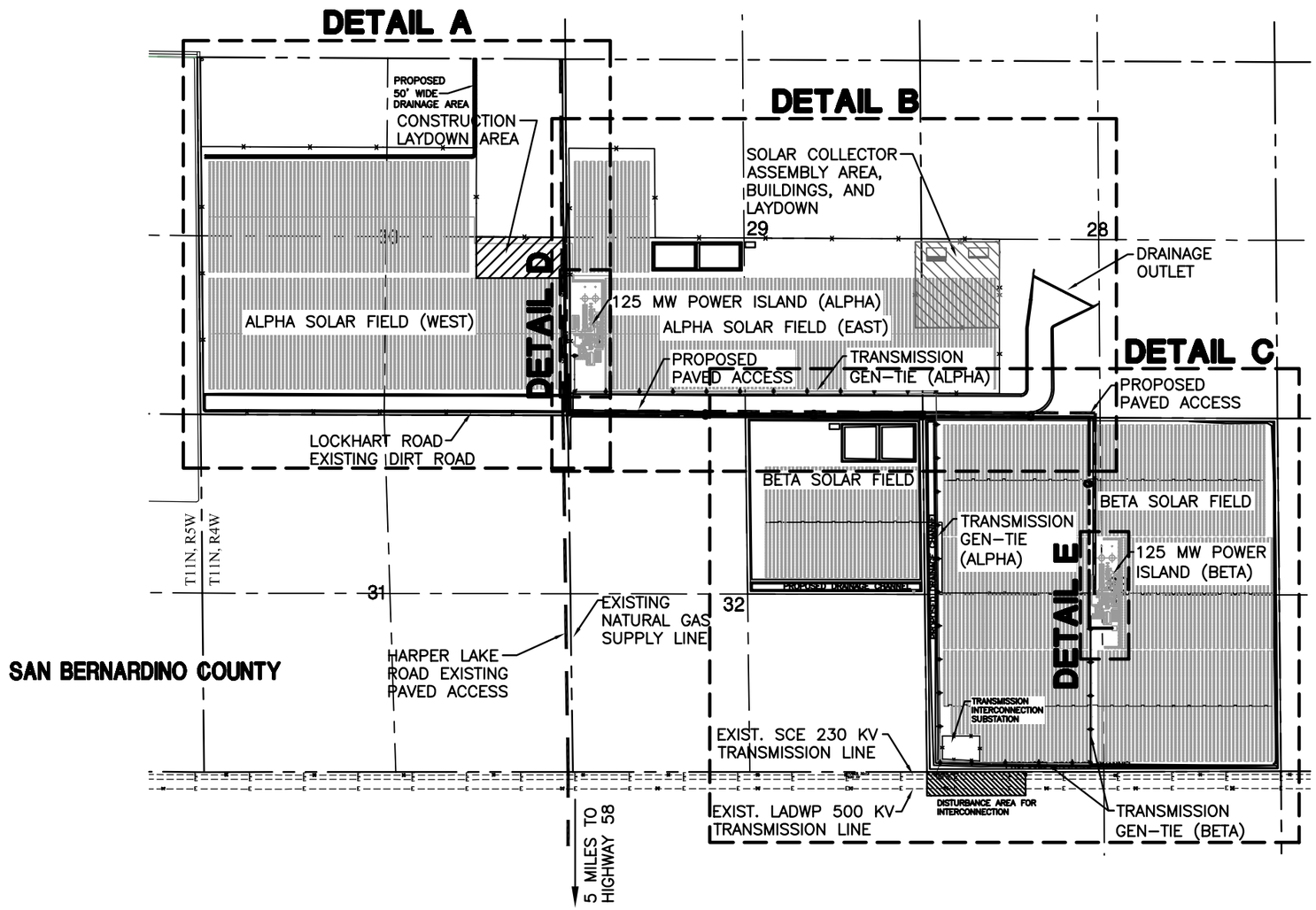

MAP LOCATION

LEGEND

- PROPOSED ACCESS ROUTES
- EXISTING ACCESS ROUTES
- PROPOSED TRANSMISSION LINE
- PROPOSED GAS LINE
- PROPOSED FENCE LINE
- SECTION LINE
- 1/4 SECTION LINE

MOJAVE SOLAR PROJECT

Figure 2-3a
PROJECT SITE MAP

0 1000' 2000' 3000'
SCALE: 1:24000

MOJAVE SOLAR LLC

Merrell-Johnson Engineering, Inc.

PROJECT:
DATE: 07/21/09

Submitted 11:22am 21 July 2009 PA3001-4 Harper Lake CEQA PROJECT SITE MAP.dwg – General arrangement Overall Merrell-Johnson Engineering, Inc.

PROPOSED 50' WIDE DRAINAGE AREA

M M

PROPOSED FENCE LINE AT PROPERTY LINE

N 2194878.98
E 6756732.50

L

N 2194860.21
E 6760835.69

N 2194853.61
E 6762213.18

N 2193526.10
E 6762138.85

N 2193531.69
E 6760833.60

30

CONSTRUCTION LAYDOWN AREA

F F

ALPHA SOLAR FEILD (WEST)

125 MW POWER ISLAND (ALPHA)

PROPOSED FENCE LINE AT RIGHT-OF-WAY LINE

PROPOSED NATURAL GAS INTERCONNECTION POINT

E A

PROPOSED DRAINAGE CHANNEL

PROPOSED GAS LINE

N 2190928.35
E 6756769.35

B

EXIST. LOCKHART ROAD (DIRT)

N 2190914.89
E 6762153.38

N 2190914.59
E 6762241.38

A

EXIST. HARPER LAKE ROAD (PAVED)

EXIST. SOUTHWEST GAS NATURAL GAS PIPELINE

MAP LOCATION

NV UT CA AZ MX

MOJAVE SOLAR PROJECT

Figure 2-3(b)
PROJECT SITE MAP
DETAIL A

0 400' 800' 1200'
SCALE: 1" = 800'

MOJAVE SOLAR LLC

Merrell-Johnson Engineering, Inc.

PROJECT:
DATE: 07/22/09

cshintoku 3:30pm 22 July 2009 P:\3001-4 Harper Lake CEQA\PROJECT SITE MAP.dwg -- General arrangement Alpha West Merrell-Johnson Engineering, Inc.

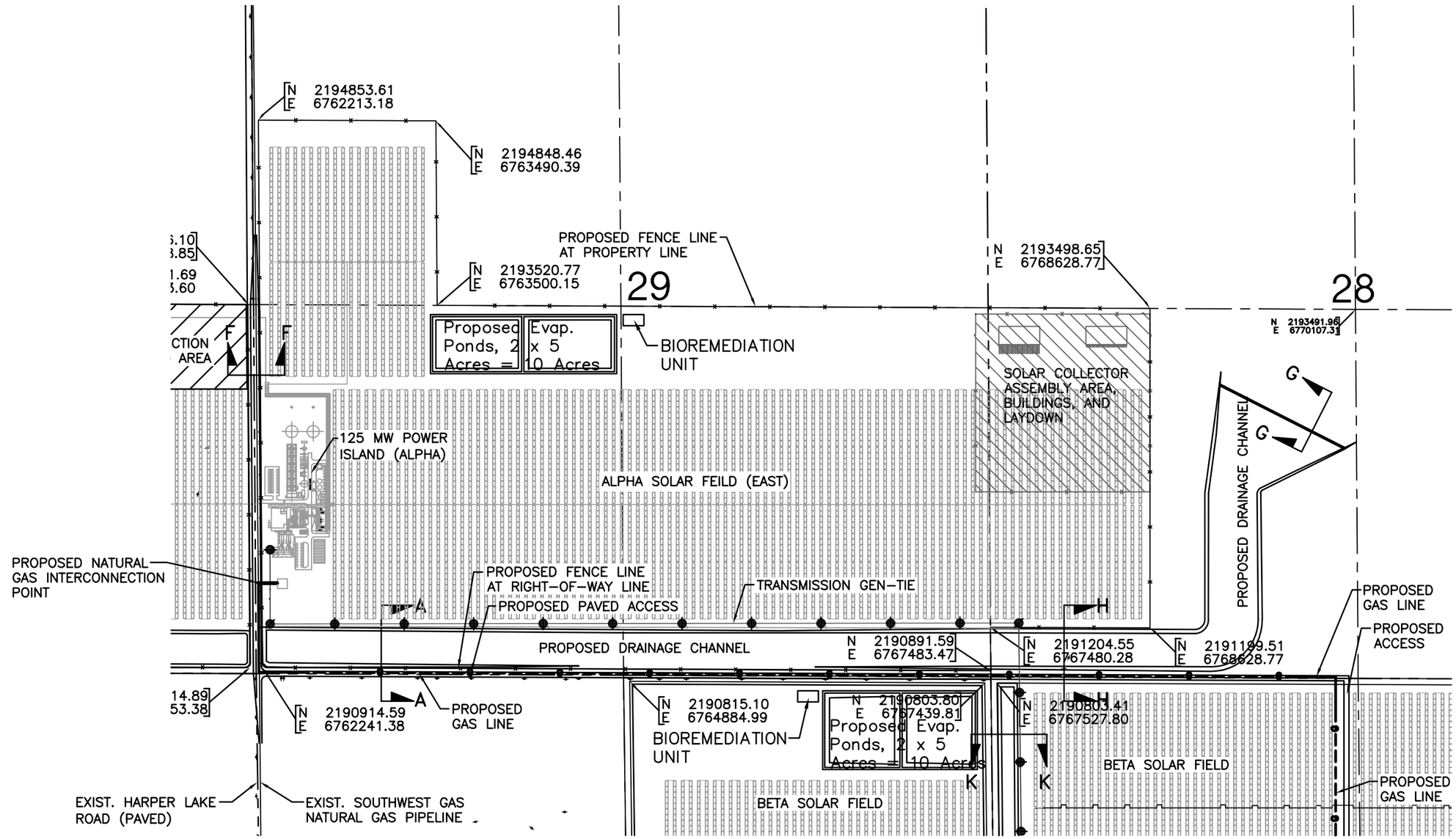

MAP LOCATION

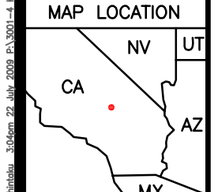

MOJAVE SOLAR PROJECT

Figure 2-3(c)
PROJECT SITE MAP
DETAIL B

0 400' 800' 1200'
SCALE: 1" = 800'

MOJAVE SOLAR LLC

Merrell-Johnson Engineering, Inc.

PROJECT:
DATE: 07/21/09

PROPOSED DRAINAGE CHANNEL

N 2190891.59
E 6767483.47

N 2191204.55
E 6767480.28

N 2191189.51
E 6768628.77

PROPOSED PAVED ACCESS

N 2190815.10
E 6764884.99

BIOREMEDIATION UNIT

N 2190803.80
E 6767439.81

Proposed Evap. Ponds, 2 x 5 Acres = 10 Acres

N 2190803.41
E 6767527.80

PROPOSED FENCE LINE AT RIGHT-OF-WAY LINE

N 2190780.61
E 6772725.31

PROPOSED GAS LINE

TRANSMISSION GEN-TIE FROM ALPHA

BETA SOLAR FEILD

BETA SOLAR FEILD

PROPOSED FENCE LINE AT RIGHT-OF-WAY LINE

125 MW POWER ISLAND (BETA)

PROPOSED DRAINAGE CHANNEL

32

33

N 2188252.64
E 6764918.31

N 2188247.65
E 6767470.55

PROPOSED DRAINAGE CHANNEL

TRANSMISSION INTERCONNECTION SUBSTATION

N 2185600.08
E 6767590.38

EXIST. SCE 230 KV TRANSMISSION LINE

TRANSMISSION GEN-TIE FROM BETA

PROPOSED FENCE LINE AT RIGHT-OF-WAY LINE

N 2185609.42
E 6772777.47

PROPOSED DRAINAGE CHANNEL

TOWER 30-3 230 KV

TOWER 30-3 230 KV

EXIST. LADWP 500 KV TRANSMISSION LINE

DISTURBANCE AREA FOR INTERCONNECTION

MAP LOCATION

NV UT CA AZ MX

MOJAVE SOLAR PROJECT

Figure 2-3(d)
PROJECT SITE MAP
DETAIL C

0 400' 800' 1200'
SCALE: 1" = 800'

MOJAVE SOLAR LLC

Merrell-Johnson Engineering, Inc.

PROJECT:
DATE: 07/21/09

Summing 11:27am 21 July 2009 P:\3001-4 Harper Lake CEQ\PROJECT SITE MAP.dwg — General arrangement Beta Merrell-Johnson Engineering, Inc.

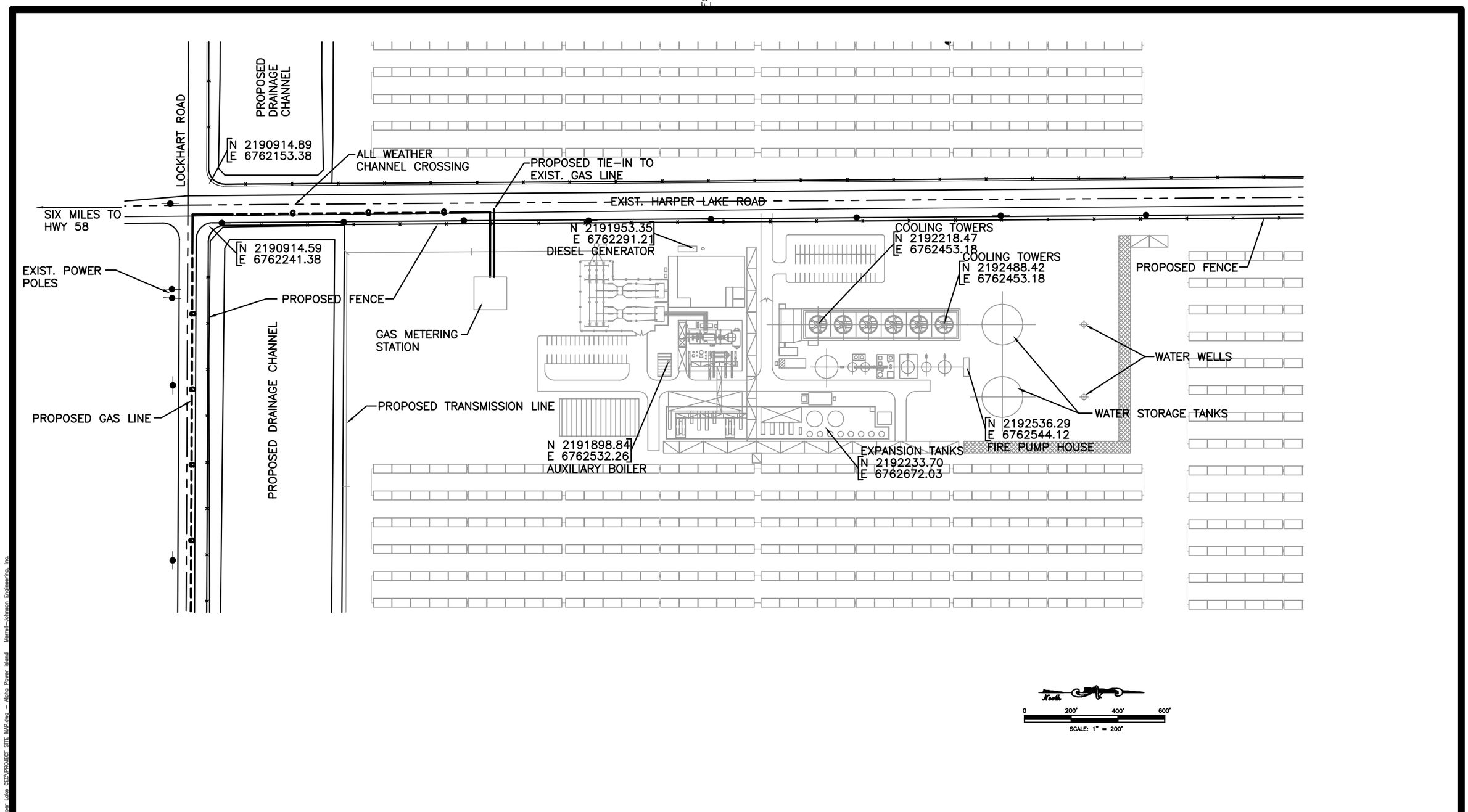

MAP LOCATION

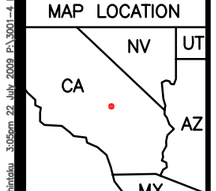

MOJAVE SOLAR PROJECT

Figure 2-3(e)
ALPHA POWER ISLAND
DETAIL D

MOJAVE SOLAR LLC

Merrell-Johnson Engineering, Inc.

PROJECT:
DATE: 07/21/09

cshindelar 3:05pm 22 July 2009 P:\3001-4 Harper Lake CEQA\PROJECT SITE MAP.dwg — Alpha Power Island Merrell-Johnson Engineering, Inc.

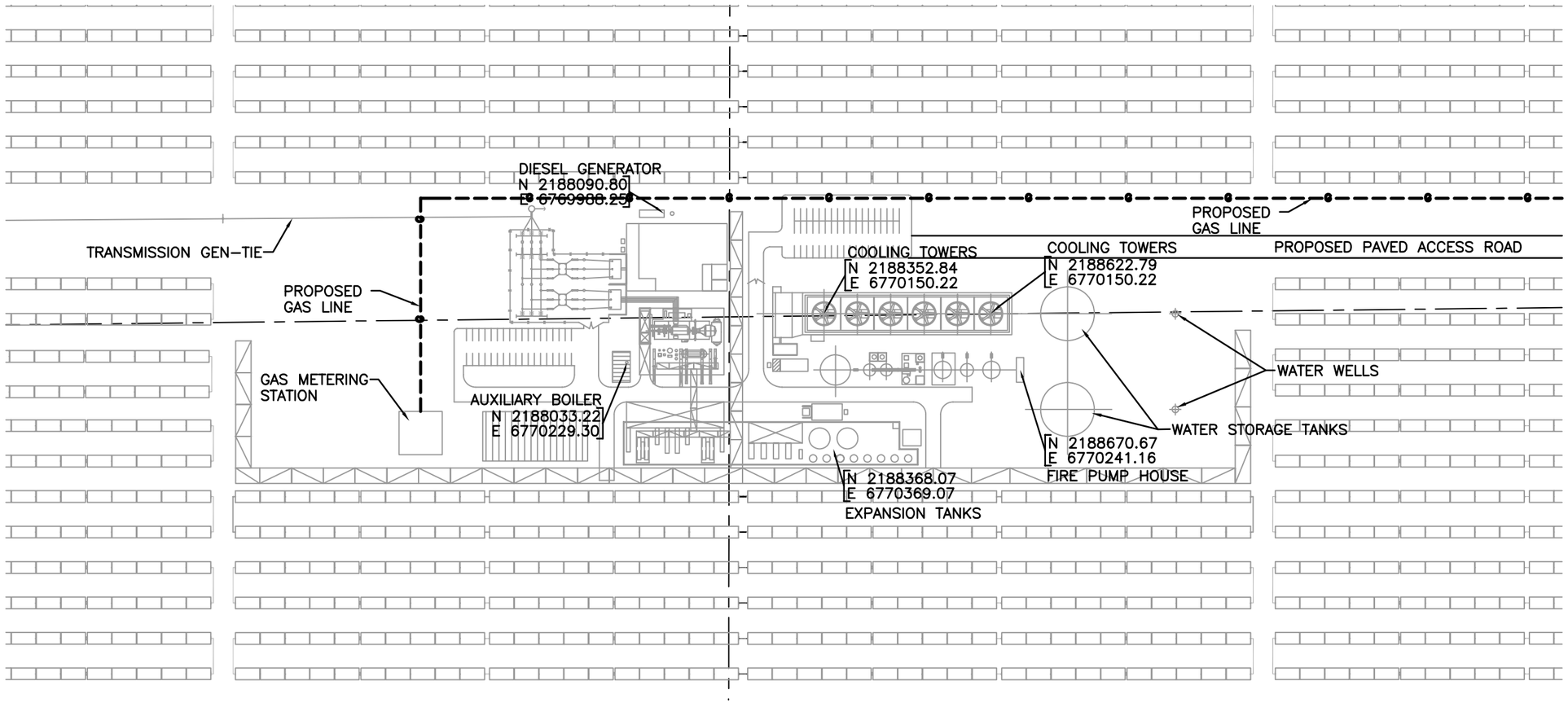

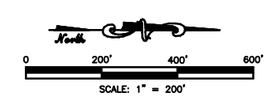

MAP LOCATION

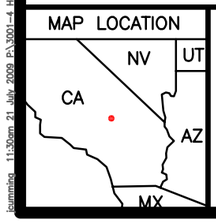

MOJAVE SOLAR PROJECT

Figure 2-3(f)
BETA POWER ISLAND
DETAIL E

MOJAVE SOLAR LLC

Merrell-Johnson Engineering, Inc.

PROJECT:
DATE: 07/21/09

jlemming 11:30am 21 July 2009 P:\3001-4 Harper Lake CFD\PROJECT SITE MAP.dwg - Beta Power Island Merrell-Johnson Engineering, Inc.

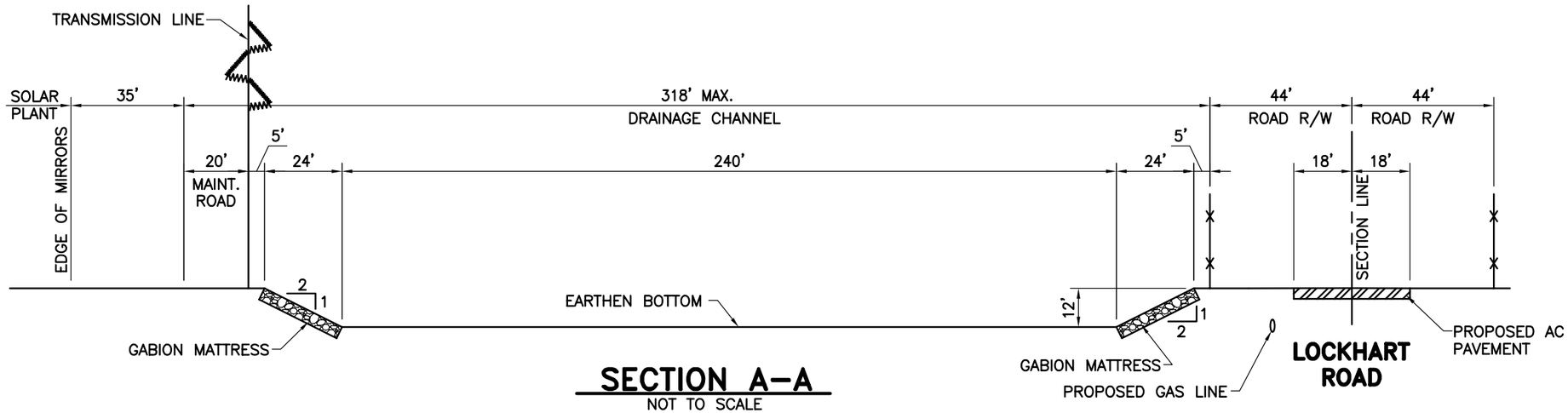

SECTION A–A

NOT TO SCALE

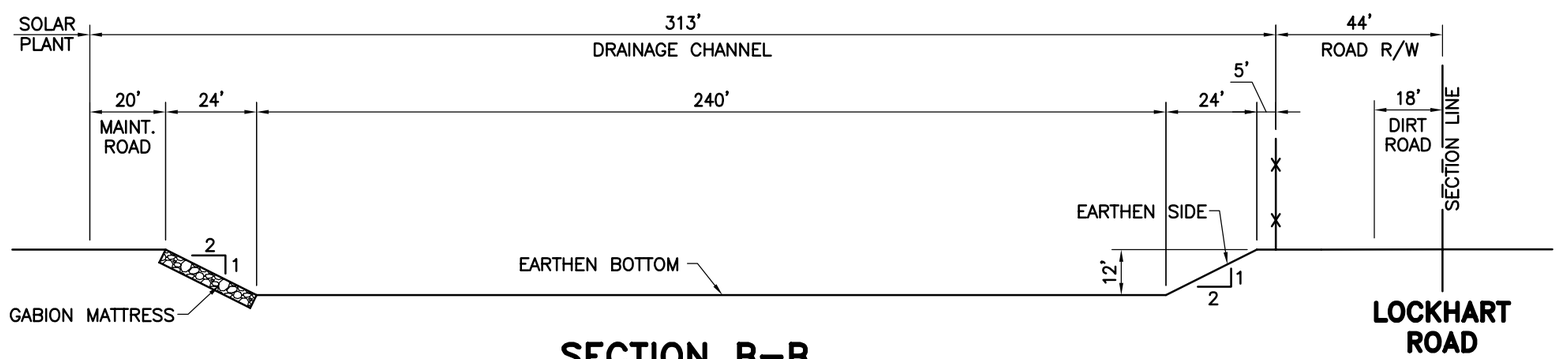

SECTION B–B

NOT TO SCALE

MAP LOCATION

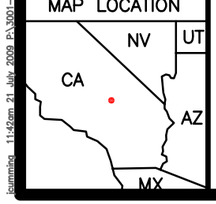

MOJAVE SOLAR PROJECT

Figure 2-3(g)
SECTIONS

MOJAVE SOLAR LLC

Merrell-Johnson Engineering, Inc.

PROJECT:
DATE: 07/21/09

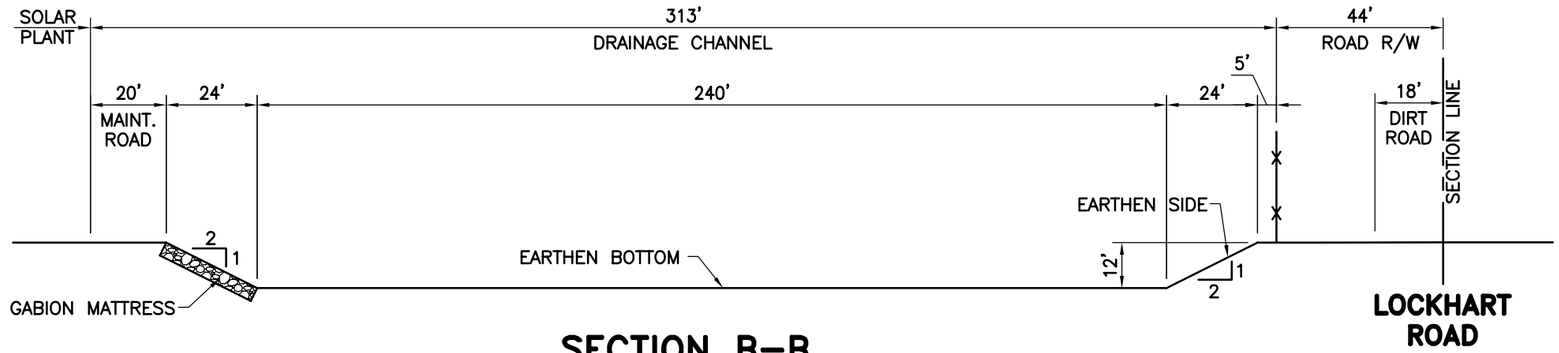

SECTION B–B

NOT TO SCALE

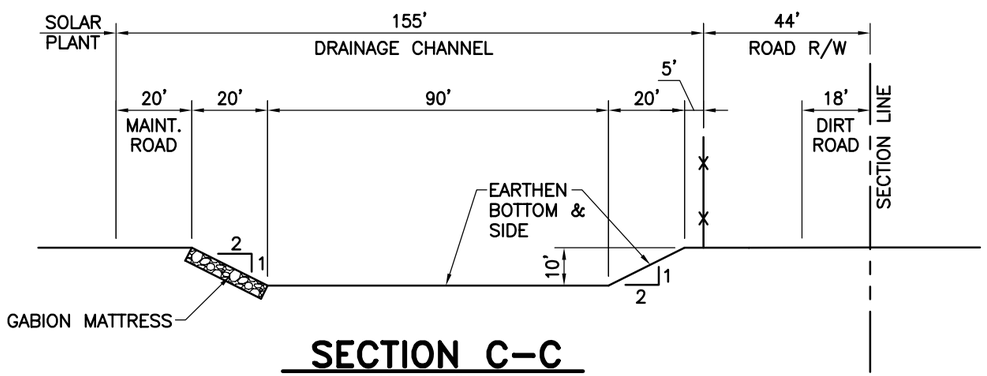

SECTION C–C

NOT TO SCALE

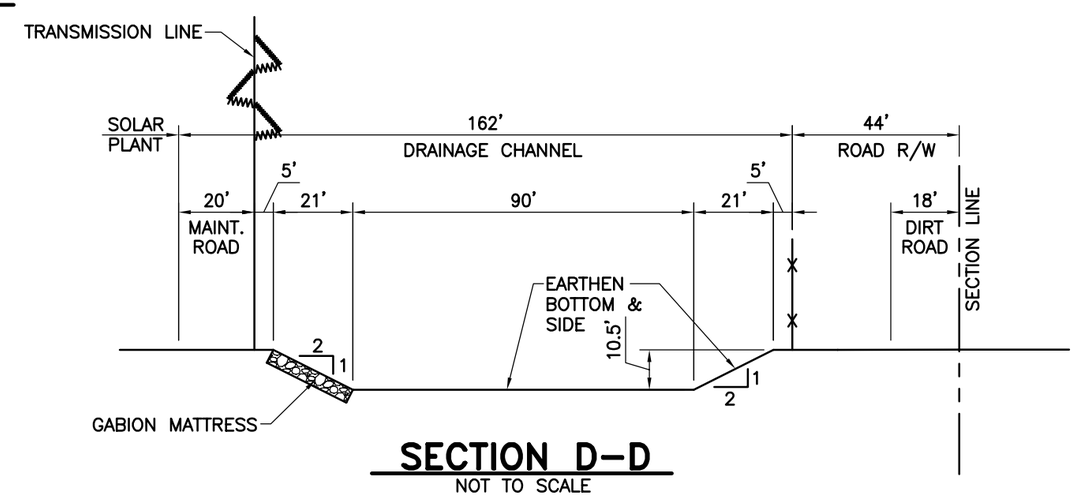

SECTION D–D

NOT TO SCALE

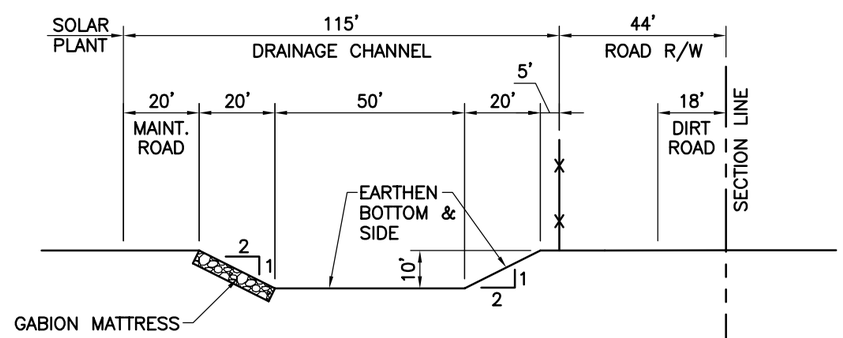

SECTION E–E

NOT TO SCALE

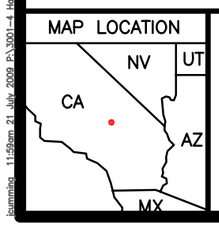

MOJAVE SOLAR PROJECT

Figure 2-3(h)
SECTIONS

MOJAVE SOLAR LLC

Merrell-Johnson Engineering, Inc.

PROJECT:

DATE: 07/21/09

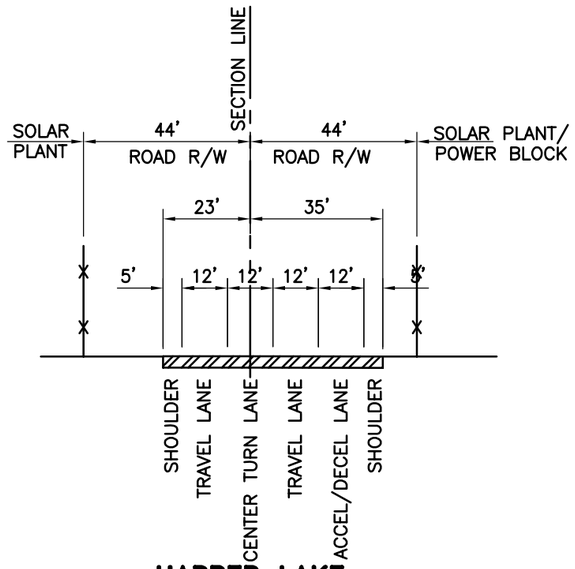

SECTION F–F
NOT TO SCALE

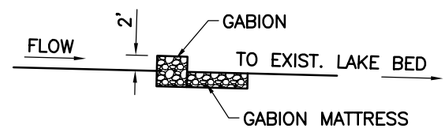

SECTION G–G
NOT TO SCALE

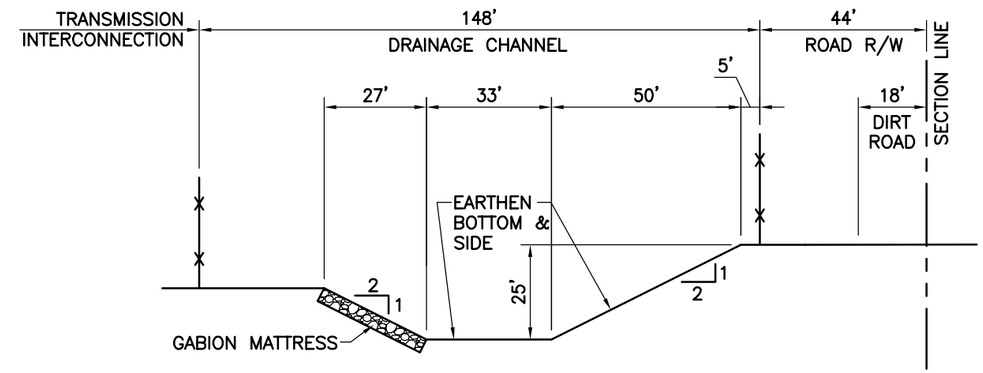

SECTION I–I
NOT TO SCALE

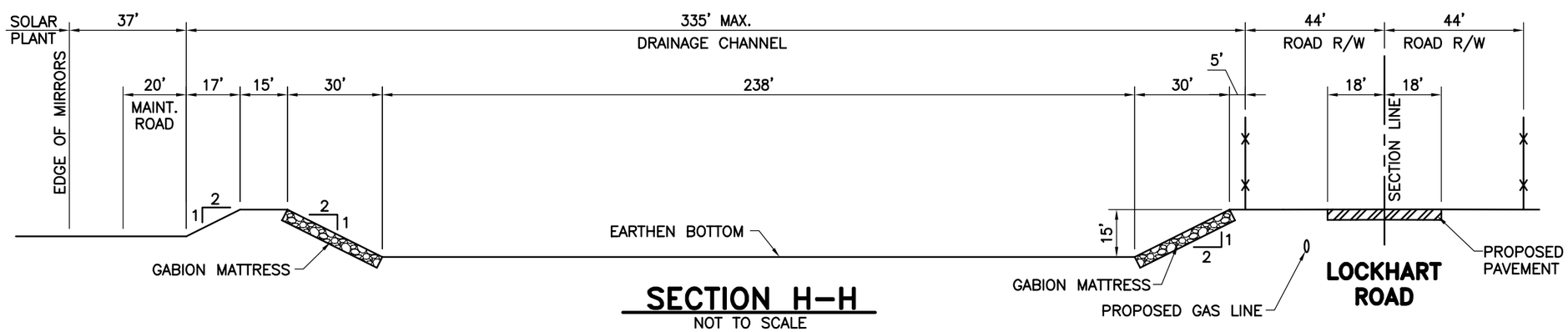

SECTION H–H
NOT TO SCALE

MAP LOCATION

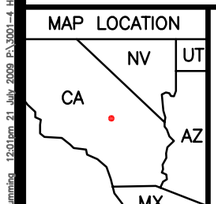

MOJAVE SOLAR PROJECT

Figure 2-3(i)
SECTIONS

MOJAVE SOLAR LLC

Merrell-Johnson Engineering, Inc.

PROJECT:
DATE: 07/21/09

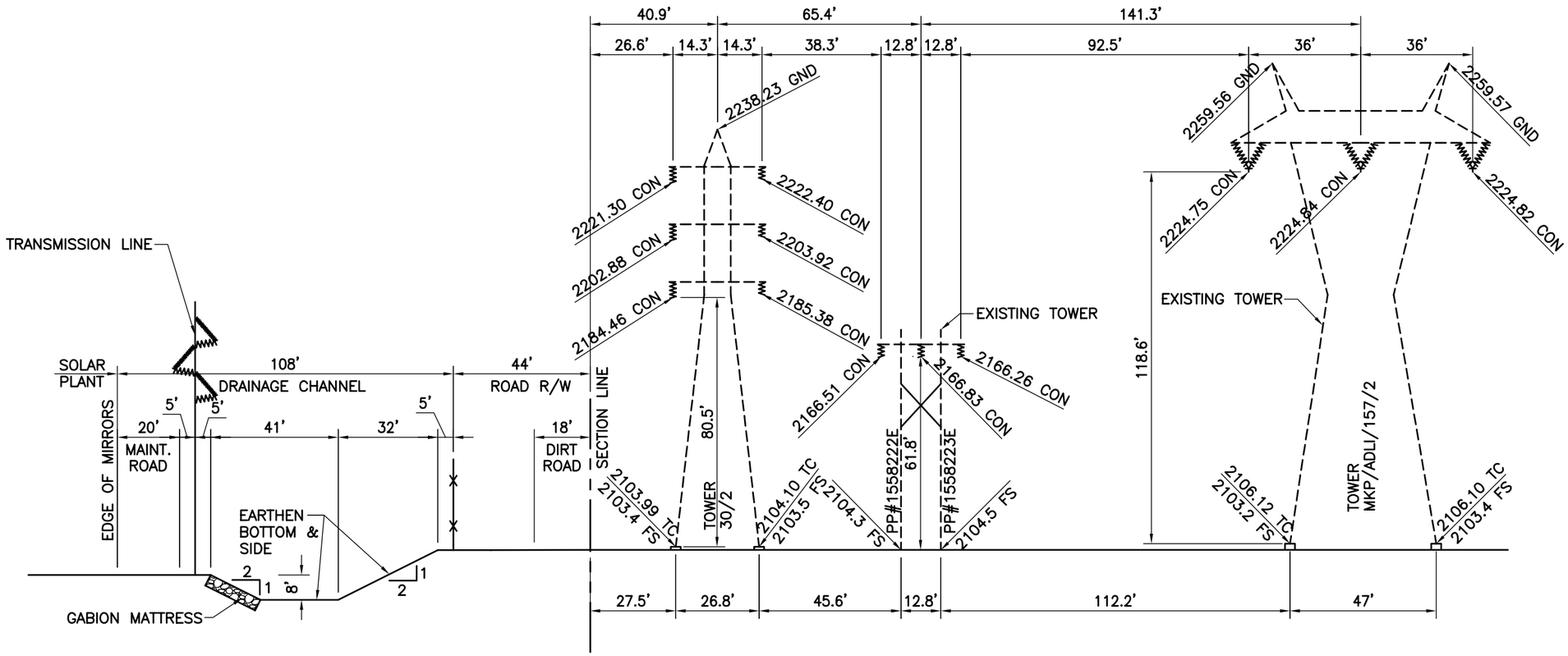

SECTION J–J

NOT TO SCALE

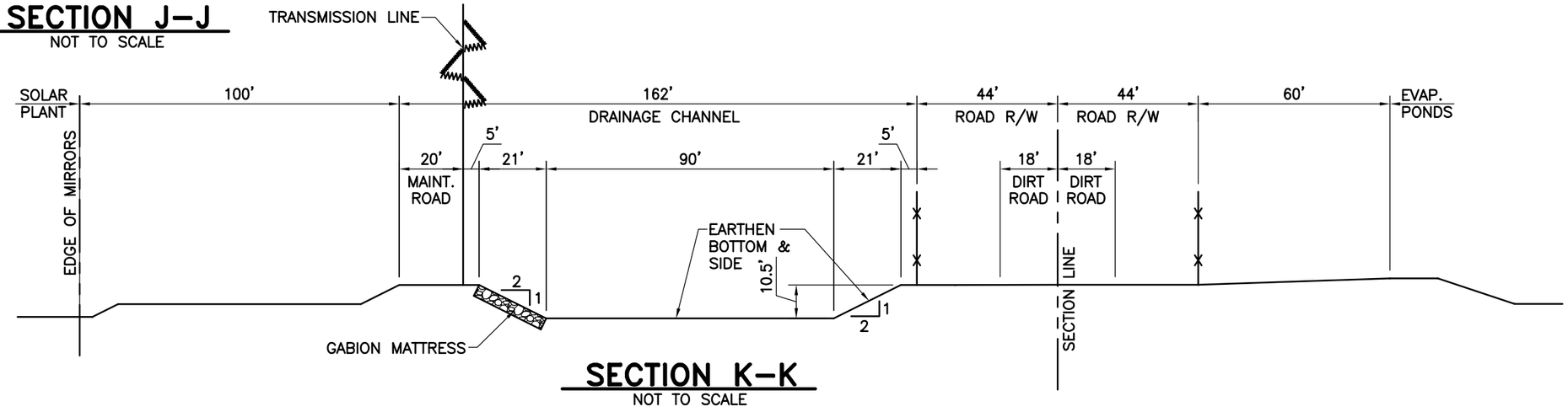

SECTION K–K

NOT TO SCALE

MAP LOCATION

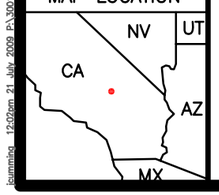

MOJAVE SOLAR PROJECT

Figure 2-3(j)
SECTIONS

MOJAVE SOLAR LLC

Merrell-Johnson Engineering, Inc.

PROJECT:

DATE: 07/21/09

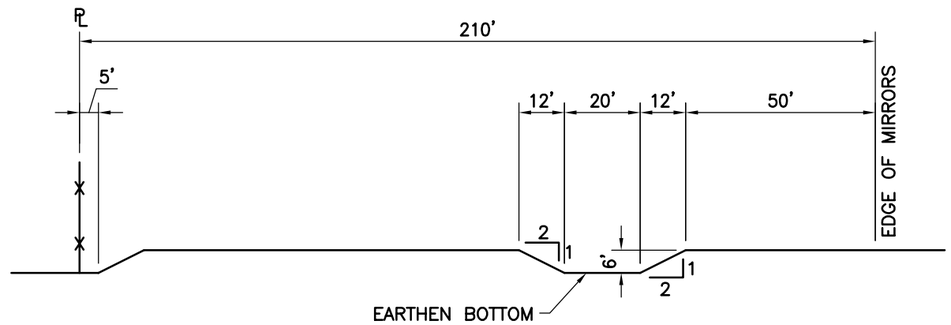

SECTION L–L

NOT TO SCALE

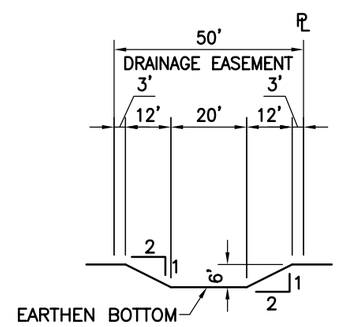

SECTION M–M

NOT TO SCALE

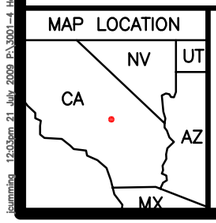

MOJAVE SOLAR PROJECT

Figure 2-3(k)
SECTIONS

MOJAVE SOLAR LLC

Merrell-Johnson Engineering, Inc.

PROJECT:
DATE: 07/21/09

Cummins 12:03pm 21 July 2009 P:\3001-4 Harper Lake CEC\PROJECT SITE MAP.dwg - Channel detail k Merrell-Johnson Engineering, Inc.

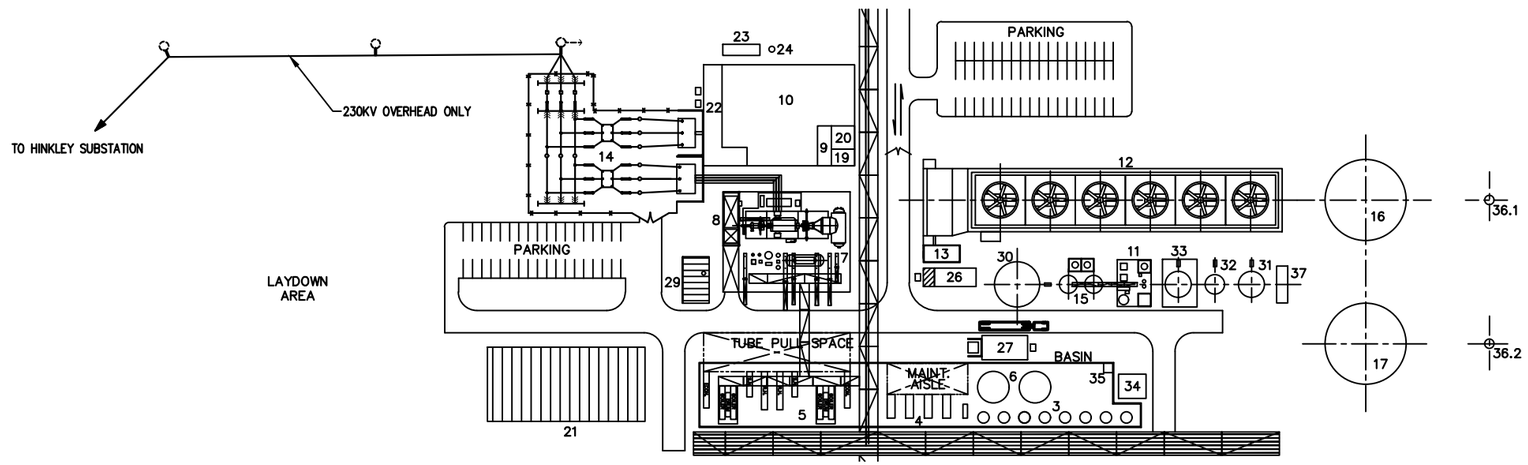

SYSTEM LIST	
1	NOT USED
2	NOT USED
3	EXPANSION VESSELS
4	HTF PUMPS
5	STEAM GENERATOR
6	EXPANSION TANKS
7	BFW HEATERS, DA, BFW PUMPS
8	STEAM TURBINE GENERATOR AREA
9	DISTRIBUTED CONTROL SYSTEM ROOM
10	CENTRAL E&C AND OPERATIONS BUILDING (OFFICES & MAINT. SHOPS)
11	WATER TREATMENT BUILDING
12	COOLING TOWER
13	CLOSED LOOP COOLING SYSTEM (CLCS)
14	SWITCHYARD
15	WATER/WASTEWATER TREATMENT SYSTEMS
16	FIREWATER/SERVICE WATER TANK
17	RAW WATER TANK
18	NOT USED
19	CONTROL ROOM
20	LUNCH ROOM
21	WAREHOUSE
22	CONTROL ELECTRICAL POWER ROOM
23	DIESEL GENERATOR
24	DG FUEL OIL STORAGE TANK
25	SUBSTATION RELAY HOUSE
26	CT ELECTRICAL BUILDING
27	HTF ELECTRICAL ROOM
28	NOT USED
29	AUXILIARY BOILER
30	COOLING TOWER BLOWDOWN TANK
31	R.O. WATER TANK
32	R.O. REJECT WATER TANK
33	POLISHED WATER TANK
34	NITROGEN UNIT
35	OILY WATER SUMP & OIL/WATER SEPARATOR
36.1	PRODUCTION WELL
36.2	PRODUCTION WELL
37	FIRE WATER PUMP HOUSE

0FT 50FT 100FT 150FT 200FT 250FT
DISTANCE IN FEET

FIGURE 2-4

ABENCS
Abener Engineering and Construction Services,
ST. LOUIS, MISSOURI

MOJAVE SOLAR PROJECT

ABENER DRAWING NUMBER

POWER ISLAND LAYOUT
ALPHA OR BETA

HARPER LAKE, CA

	BY	DATE	APP'D.	DATE	JOB NO.	REVISION
DRAWN	TLF				120010	
CHECKED					DRAWING NO.	
SCALE	1"=75'-0"					

REVISIONS

NO.	DATE	DESCRIPTION	BY	BY	BY

REFERENCES

DESCRIPTION

INFORMATION AND KNOW-HOW HEREON ARE CONFIDENTIAL AND PROPRIETARY AND MAY NOT BE USED, REPRODUCED, OR REVEALED TO OTHERS EXCEPT IN ACCORDANCE WITH THE TERMS OF A CONTRACT WITH OR OTHER WRITTEN PERMISSION OF Abener Engineering and Construction Services, LLC. ANY REPRODUCTIONS IN WHOLE OR PART INCLUDING SHOP DRAWINGS SHALL BEAR OR REFER TO THIS STAMP.

ISSUE DATE	PURPOSE OF ISSUE
	FOR REVIEW

Plot Date/Time/User: 16-Jul-09/8:54 AM/FREDERICK REDELL

C:\USERS\FREDERICK REDELL\DESKTOP\MDL103_FIG2_3.DWG

REV.	DESCRIPTION	APPROVED	DATE

NOTES:

1. ELEVATION DIMENSIONS ARE GIVEN IN FEET (ABOVE GRADE).
2. THIS IS A PRELIMINARY DRAWING AND IS NOT FOR CONSTRUCTION.
   IT IS MEANT FOR REFERENCE ONLY AND SHOWS THE GENERIC OUTLINES OF THE BUILDINGS, TANKS AND STRUCTURES.
3. THE TALLEST STRUCTURE SHOWN IS THE TRANSMISSION POLE.

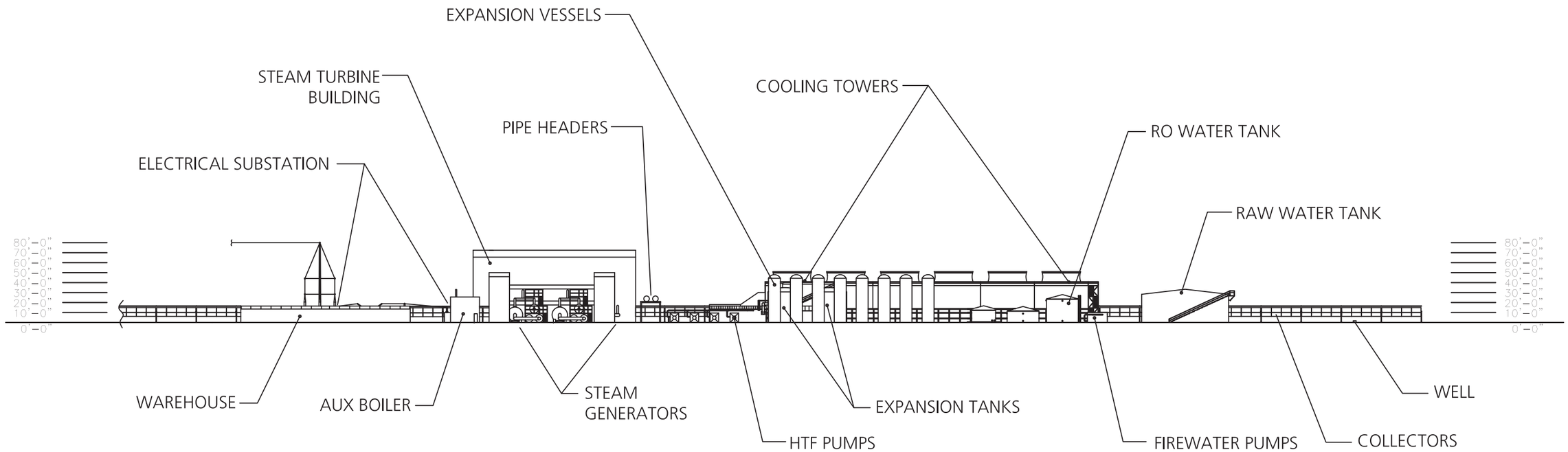

(POWER BLOCK SECTION VIEW LOOKING WEST)

Figure 2-5(a)

PRELIMINARY NOT FOR CONSTRUCTION

PROPRIETARY AND CONFIDENTIAL

THE INFORMATION CONTAINED IN THIS DRAWING IS THE SOLE PROPERTY OF ABENGOA SOLAR AND CONTAINS CONFIDENTIAL INFORMATION. THIS DOCUMENT MAY NOT BE COPIED NOR MAY THE INFORMATION IT CONTAINS BE DISCLOSED UNLESS AUTHORIZATION IN WRITING IS PROVIDED BY ABENGOA SOLAR. ACCEPTANCE OF THIS DOCUMENT INDICATES AGREEMENT TO RECEIVE SUCH INFORMATION IN CONFIDENCE.

ABENGOA SOLAR

	NAME	DATE
DRAWN	CH	06-05-2009
DESIGNED	-	-
ENG APPR.	-	-
MFG APPR.	-	-

UNLESS OTHERWISE SPECIFIED:
DIMENSIONS ARE IN INCHES [mm],
WEIGHTS ARE IN POUNDS AND
UNSPECIFIED TOLERANCES ARE:
.X ± .1
.XX ± .03
.XXX ± .010
.XXXX ± .0005
ANGLE ± .5 DEG

11500 W. 13th Avenue, Lakewood, CO, USA 80215
OFFICE: +1 303 928 8500 FAX: +1 303 928 8510

TITLE: POWER BLOCK ELEVATION VIEW -WEST

SIZE	DWG. NO.	REVISION
B	105-000002	-

SCALE: NONE | WEIGHT: LBS | SHEET 1 OF 1

REV.	DESCRIPTION	APPROVED	DATE

NOTES:

1. ELEVATION DIMENSIONS ARE GIVEN IN FEET (ABOVE GRADE).
2. THIS IS A PRELIMINARY DRAWING AND IS NOT FOR CONSTRUCTION.
   IT IS MEANT FOR REFERENCE ONLY AND SHOWS THE GENERIC OUTLINES OF THE BUILDINGS, TANKS AND STRUCTURES.
3. THE TALLEST STRUCTURE SHOWN IS THE TRANSMISSION POLE.

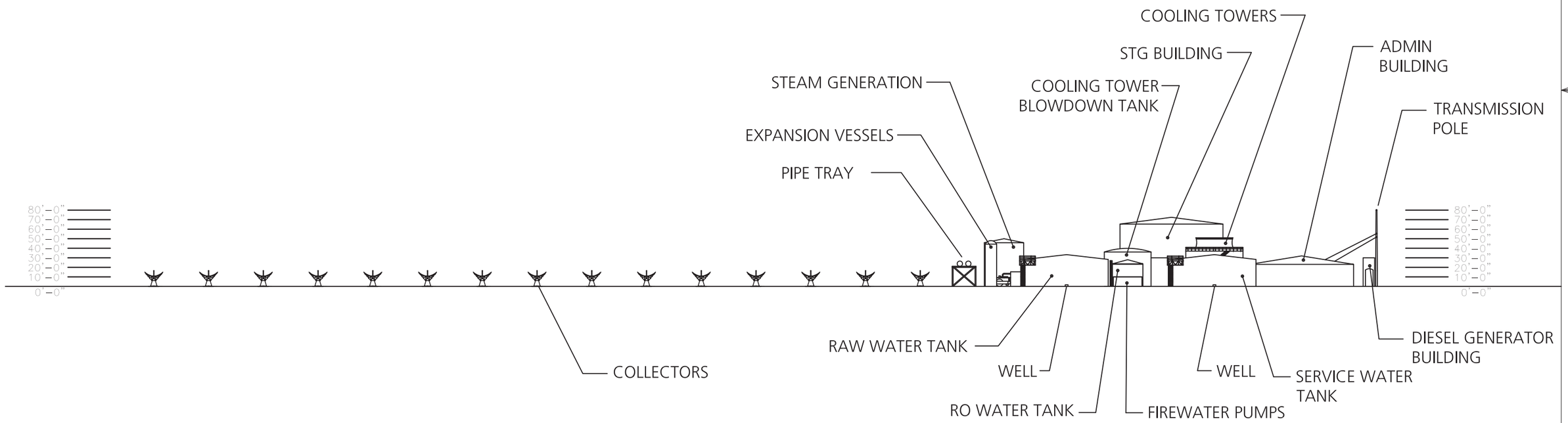

(POWER BLOCK SECTION VIEW LOOKING SOUTH)

Figure 2-5(b)

PRELIMINARY NOT FOR CONSTRUCTION

PROPRIETARY AND CONFIDENTIAL
THE INFORMATION CONTAINED IN THIS DRAWING IS THE SOLE PROPERTY OF ABENGOA SOLAR AND CONTAINS CONFIDENTIAL INFORMATION. THIS DOCUMENT MAY NOT BE COPIED NOR MAY THE INFORMATION IT CONTAINS BE DISCLOSED UNLESS AUTHORIZATION IN WRITING IS PROVIDED BY ABENGOA SOLAR. ACCEPTANCE OF THIS DOCUMENT INDICATES AGREEMENT TO RECEIVE SUCH INFORMATION IN CONFIDENCE.

ABENGOA SOLAR

	NAME	DATE
DRAWN	CH	06-05-2009
DESIGNED	-	-
ENG APPR.	-	-
MFG APPR.	-	-

UNLESS OTHERWISE SPECIFIED:
DIMENSIONS ARE IN INCHES [mm],
WEIGHTS ARE IN POUNDS AND
UNSPECIFIED TOLERANCES ARE:
.X ± .1
.XX ± .03
.XXX ± .010
.XXXX ± .0005
ANGLE ± .5 DEG

11500 W. 13th Avenue, Lakewood, CO, USA 80215
OFFICE: +1 303 928 8500 FAX: +1 303 928 8510

TITLE: POWER BLOCK ELEVATION VIEW -SOUTH

SIZE	DWG. NO.	REVISION
B	105-000001	-

SCALE: NONE WEIGHT: LBS SHEET 1 OF 1

DESIGN

	Stream	Flow (lb/hr)	Pressure (psia)	Temperature (°F)	Enthalpy (Btu/lb)	Enthalpy (MBtu/hr)	MW
**	1	12,382,553	420.6	561.2	241.5	2990.4	876.4
**	9	12,382,553	203	737.6	342.8	4244.7	1244.0
**	20	12,382,553	191	561.2	241.5	2990.4	876.4
	47	1,189,214	1515	421.9	400.0	475.7	139.4
	50	1,177,151	1495	715.3	1300.0	1530.3	448.5
	56	1,021,991	261.6	405	1191.1	1217.3	356.8
	58	1,021,991	246.7	715.3	1379.5	1409.8	413.2
	73	238	1495	715.3	1300.0	0.3	0.1
	80	11,746	1512	597.3	613.1	7.2	2.1
	82	11,746	174	370.3	343.3	4.0	1.2
	108	40,655,029	51.5	80.7	48.9	1988.0	582.6
	109	40,655,029	41.6	99.6	67.7	2752.3	806.6
	132	12,064	14.9	118	86.4	1.0	0.3

ANNUAL AVERAGE WHEN OPERATING

Stream	Flow (lb/hr)	Pressure (psia)	Temperature (°F)	Enthalpy (Btu/lb)	Enthalpy (MBtu/hr)	MW
1	7,271,044	125	521.6	211.1	1534.9	449.8
9	7,271,044	203	737.6	342.8	2492.5	730.5
20	7,271,044	196.5	521.6	211.1	1534.9	449.8
47	852,783	1109	395.1	370.8	316.2	92.7
50	844,371	1095	719.4	1331.6	1124.4	329.5
56	763,100	196.1	380.1	1195.5	912.3	267.4
58	763,100	184.9	720.3	1385.3	1057.1	309.8
73	238	1095	719.4	1331.6	0.3	0.1
80	8,413	1107.5	557.2	558.6	4.7	1.4
82	8,413	174	370.3	343.3	2.9	0.8
108	40,655,029	51.5	79.6	47.9	1947.4	570.7
109	40,655,029	41.6	94.1	62.3	2532.8	742.3
132	8,651	14.9	118	86.4	0.7	0.2

Stream	DESIGN Energy MW	ANNUAL AVG Energy MW
H1	140.0	105.0
H2	4.80	4.80
H3	2.49	1.82

Stream	DESIGN Energy Mbtu/hr	ANNUAL AVG Energy Mbtu/hr
H1	477.7	358.3
H2	16.38	16.38
H3	8.50	6.20

* REPRESENTS MULTIPLE STREAMS, SEE WATER BALANCE (FIGURE 2–8)
** HEAT TRANSFER FLUID

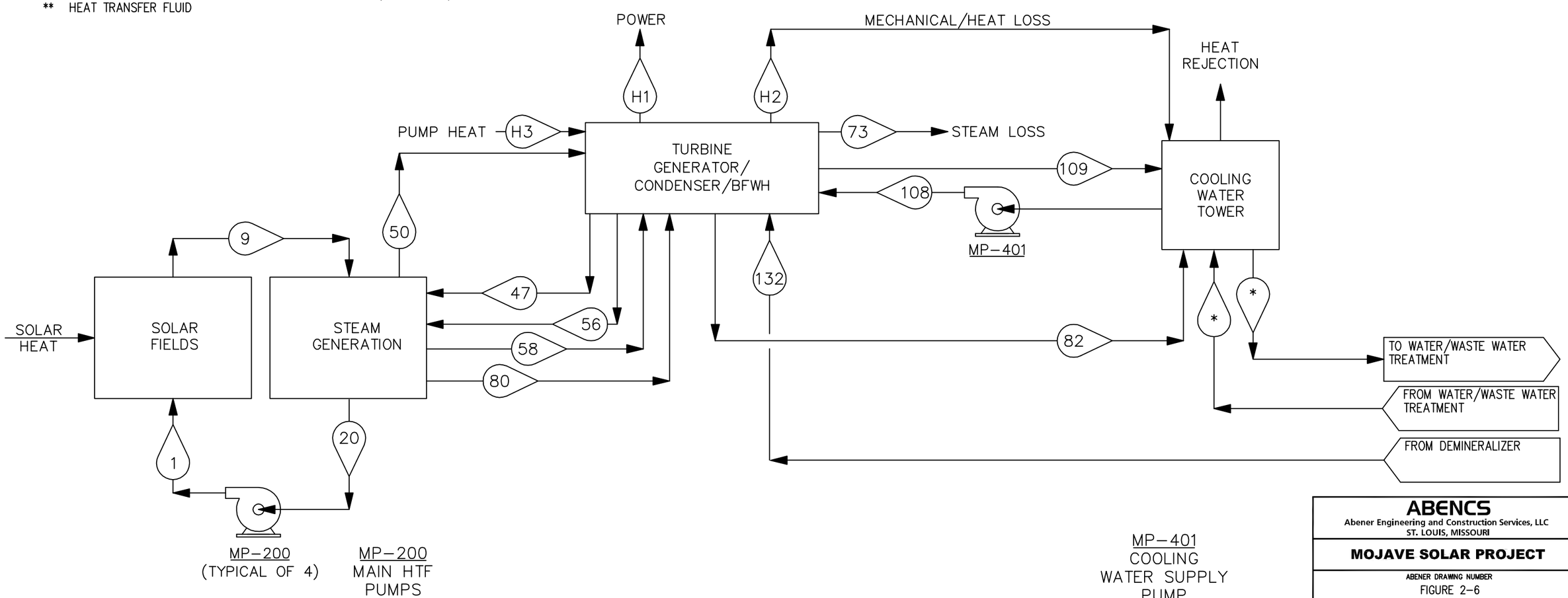

ABENCS
Abener Engineering and Construction Services, LLC
ST. LOUIS, MISSOURI

MOJAVE SOLAR PROJECT

ABENER DRAWING NUMBER
FIGURE 2–6

MASS AND ENERGY BALANCE PER PLANT

HARPER LAKE, CA

	BY	DATE	APP'D.	DATE	JOB NO.	REVISION
DRAWN					120010	
CHECKED					DRAWING NO. MD–F001	C
SCALE	NONE					

NO.	DATE	DESCRIPTION	BY	BY	BY

REVISIONS

NO.	DATE	DESCRIPTION	BY	BY	BY

REVISIONS

NO.	DATE	DESCRIPTION	BY	BY	BY

REVISIONS

DESCRIPTION

REFERENCES

THIS DRAWING IS THE PROPERTY OF
ABENCS
Abener Engineering and Construction Services, LLC
INFORMATION AND KNOWHOW HEREON ARE CONFIDENTIAL AND PROPRIETARY AND MAY NOT BE USED, REPRODUCED, OR REVEALED TO OTHERS EXCEPT IN ACCORDANCE WITH THE TERMS OF A CONTRACT WITH OR OTHER WRITTEN PERMISSION OF Abener Engineering and Construction Services, LLC. ANY REPRODUCTIONS IN WHOLE OR PART INCLUDING SHOP DRAWINGS SHALL BEAR OR REFER TO THIS STAMP.

ISSUE DATE	PURPOSE OF ISSUE
	PRELIMINARY

Plot Date/Time/User: 18–Jul–09/9:08 AM/MJSEDE

P:\PROJECTS\120010 ABSOLAR HARPER LAKE CALIFORNIA\PERMIT PROPOSAL\ISSUED TO CUSTOMER 2009\OVERALL MFD MD–F001.DWG

SYMBOLS (ON ONE-LINES)	DESCRIPTION
	DISCONNECT SWITCH
	FUSED DISCONNECT SWITCH
	FUSED CUTOUT SWITCH
	HORN GAP ISOLATING SWITCH
	LOW VOLTAGE CIRCUIT BREAKER DRAWOUT TYPE
	LOW VOLTAGE CIRCUIT BREAKER
	MEDIUM VOLTAGE CIRCUIT BREAKER DRAWOUT TYPE
	TRANSMISSION LINE CIRCUIT BREAKER
*	AC MOTOR (*) HORSEPOWER
GEN	GENERATOR
DG	DIESEL GENERATOR
LA	LIGHTNING ARRESTOR
	EARTH SWITCH
	DISTRIBUTION PANEL (DCP, DP, HTP, IPP, LP, PP, UPSP)

SYMBOLS (ON ONE-LINES)	DESCRIPTION
	ELECTRIC HEATER ELEMENT
	POTHEAD OR SERVICE HEAD
	PLUG-IN CONNECTOR OR DISCONNECTING DEVICE
*	POWER FACTOR CORRECTION CAPACITOR * RATING IN KVAR
R	FIXED RESISTOR
R	TAPPED RESISTOR
R	ADJUSTABLE RESISTOR
*	SINGLE OR THREE PHASE POWER TRANSFORMER (*) KVA AND VOLTAGE RATING
*	SINGLE OR THREE PHASE POWER TRANSFORMER WITH LOAD TAP CHANGER (*) KVA AND VOLTAGE RATING
** *	PT- POTENTAL TRANSFORMER (*) VOLTAGE LEVEL (**) QUANTITY
*	INDUCTIVE REACTOR (*) RATING IN KVA AND IMPEDANCE IN
* **	CURRENT TRANSFORMER ■ POLARITY MARK (*) RATIO (**) QUANTITY
* **	ZERO SEQUENCE CURRENT TRANSFORMER (*) RATIO (**) QUANTITY
R	– NEUTRAL GROUNDING TRANSFORMER W/SECONDARY LOADING RESISTOR
*	PROTECTIVE RELAY (*) TYPE OF RELAY
	BUS DUCT

SYMBOLS (ON ONE-LINES)	DESCRIPTION
*	LOW VOLTAGE COMBINATION STARTER (*) NEMA SIZE
	MEDIUM VOLTAGE STARTER WITH VACUUM CONTACTOR
	VACUUM CONTACTOR
L	LATCHING VACUUM CONTACTOR
S	SYNCHRONIZING BREAKER
M	MOTOR OPERATOR
SSM	SOLID STATE METERING
SS CP	SOLID STATE CIRCUIT PROTECTOR/MULTI-FUNCTION RELAY
STU	STATIC TRIP UNIT
SS MCP	SOLID STATE MOTOR CIRCUIT PROTECTOR
VSD	VARIABLE SPEED DRIVE
SS	SOFT START
A-# L-O	= KIRK KEY INTERLOCK A-# KEY INTERCHANGE NUMBER L-O LOCK DEVICE OPEN E INTERLOCK BOLT EXTENDED
A 1	= KIRK KEY

SYMBOLS (ON ONE-LINES)	DESCRIPTION
XX/YY ZZZZ	PROTECTIVE RELAY XX,YY – ANSI STANDARD DEVICE FUNCTION NUMBER ZZZZ – RELAY NUMBER IDENTIFICATION
	ANSI STANDARD DEVICE FUNCTIONS
25	SYNCHRONISM CHECK DEVICE
27	UNDERVOLTAGE RELAY
32	DIRECTIONAL POWER RELAY
40	FIELD RELAY
43	MANUAL TRANSFER DEVICE
46NC	PHASE-BALANCE NEUTRAL CURRENT RELAY
49X	MACHINE OR TRANSFORMER THERMAL RELAY (X= M-MACHINE, T-TRANSFORMER, T1- TRANSFORMER 1 WINDING, T2- TRANSFORMER 2 WINDING, T3- TRANSFORMER 3 WINDING)
50	INSTANTANEOUS OVERCURRENT RELAY
51	AC TIME-OVERCURRENT RELAY
50/51N	RESIDUAL GROUND FAULT RELAY
51TN	TRANSFORMER NEUTRAL TIME-OVERCURRENT RELAY
51G	GROUND TIME OVERCURRENT RELAY
51GS	ZERO SEQUENCE GROUND TIME-OVERCURRENT RELAY
51V	VOLTAGE-RESTRAINED OVERCURRENT RELAY
59	OVERVOLTAGE RELAY
59NC	UNBALANCED NEUTRAL OVERVOLTAGE RELAY
63X	PRESSURE SWITCH (X= T- TRANSFORMER, TCX- TAP CHANGER X ENCLOSURE TCY- TAP CHANGER Y ENCLOSURE)
67	AC DIRECTIONAL OVERCURRENT RELAY
71	LEVEL SWITCH
81	FREQUENCY RELAY
86X	LOCK-OUT RELAY (X = B-BUS, C-CAPACITOR, F-FEEDER, G-GENERATOR, T-TRANSFORMER)
87X	DIFFERENTIAL PROTECTIVE RELAY (X = B-BUS, F-FEEDER, G-GENERATOR, T-TRANSFORMER, TL – TRANSMISSION LINE)
11X	MULTIPURPOSE RELAY (X = B-BUS, F-FEEDER, G-GENERATOR, T-TRANSFORMER, TL – TRANSMISSION LINE)

PRELIMINARY

DATE 17FEB 09

Figure 2-7(a)

REFERENCES

DESCRIPTION	
17 FEB09	FOR REVIEW
ISSUE DATE	PURPOSE OF ISSUE

THIS DRAWING IS THE PROPERTY OF
ABENCS
Abener Engineering and Construction Services, LLC
INFORMATION AND KNOW-HOW HEREON ARE CONFIDENTIAL AND PROPRIETARY AND MAY NOT BE USED, REPRODUCED, OR REVEALED TO OTHERS EXCEPT IN ACCORDANCE WITH THE TERMS OF A CONTRACT WITH OR OTHER WRITTEN PERMISSION OF Abener Engineering and Construction Services, LLC. ANY REPRODUCTIONS IN WHOLE OR PART INCLUDING SHOP DRAWINGS SHALL BEAR OR REFER TO THIS STAMP.

ABENCS
Abener Engineering and Construction Services, LLC
ST. LOUIS, MISSOURI

ABENGOA SOLAR

ABENER DRAWING NUMBER
XXXX-PLN-BBB-28-21-0001

ELECTRICAL ONE LINE DIAGRAM
SYMBOLS LIST

ABENGOA SOLAR — HARPER LAKE, CA

	BY	DATE	APP'D.	DATE	JOB NO.	REVISION
DRAWN	MKB	2/09	GDT	17 FEB09	120010	0
CHECKED	SDE ~~JLN~~	17 FEB09 ~~17 FEB09~~			DRAWING NO. ED-0001	
SCALE	NONE					

Plot Date/Time/User: 17-Feb-09/3:31 PM/CGMBU

P:\PROJECTS\120010 ABSOLAR HARPER LAKE CALIFORNIA\CAD120010\ELECTRICAL\ED-0001.DWG

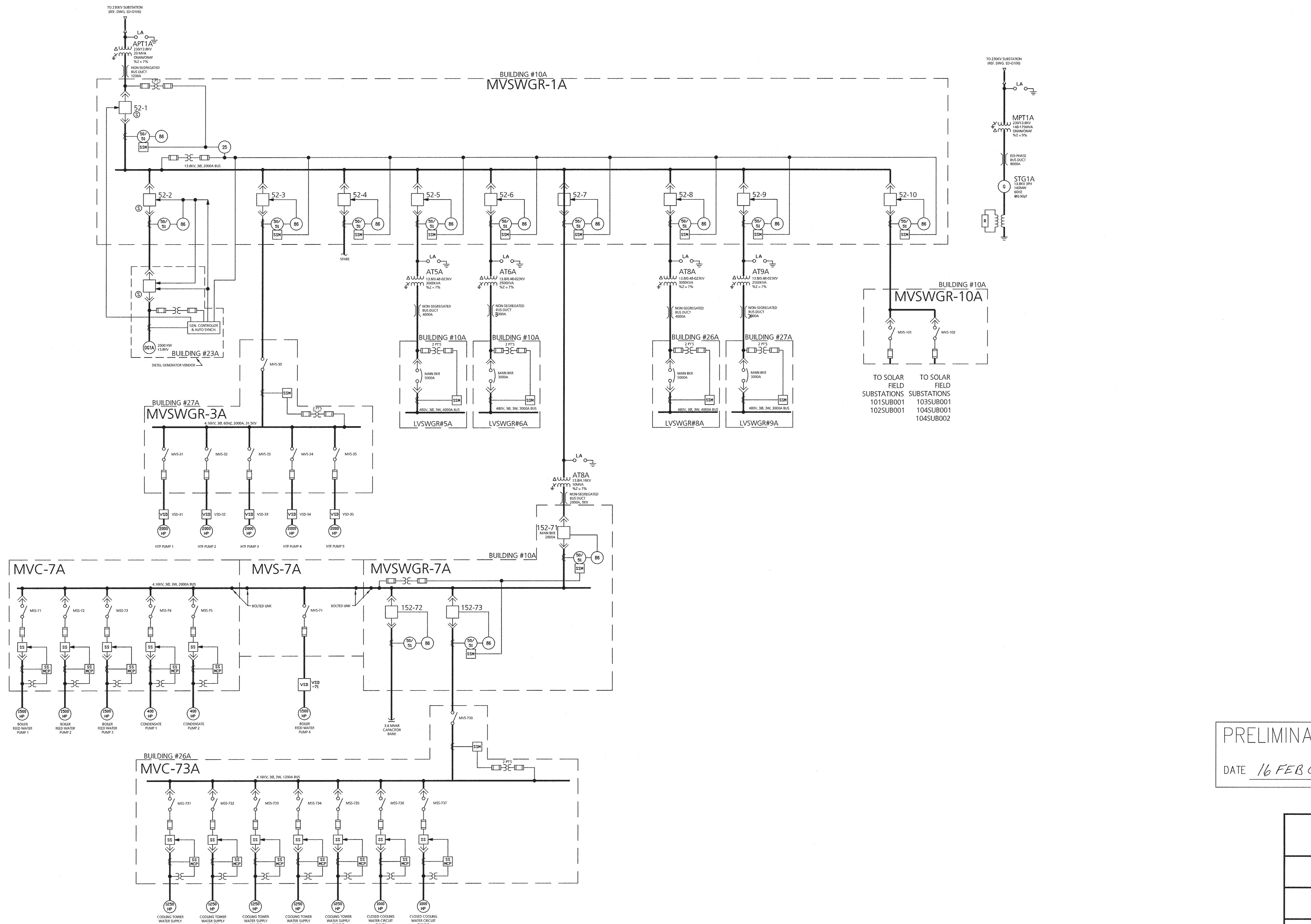

PRELIMINARY

DATE 16 FEB 09

Figure 2-7(b)

REVISIONS					
NO.	DATE	DESCRIPTION	BY	BY	BY

REVISIONS					
NO.	DATE	DESCRIPTION	BY	BY	BY

REVISIONS					
NO.	DATE	DESCRIPTION	BY	BY	BY

REFERENCES	
	DESCRIPTION

THIS DRAWING IS THE PROPERTY OF
ABENCS
Abener Engineering and Construction Services, LLC
INFORMATION AND KNOW-HOW HEREON ARE CONFIDENTIAL AND PROPRIETARY AND MAY NOT BE USED, REPRODUCED, OR REVEALED TO OTHERS EXCEPT IN ACCORDANCE WITH THE TERMS OF A CONTRACT WITH OR OTHER WRITTEN PERMISSION OF Abener Engineering and Construction Services, LLC. ANY REPRODUCTIONS IN WHOLE OR PART INCLUDING SHOP DRAWINGS SHALL BEAR OR REFER TO THIS STAMP.

16 FEB 09	FOR REVIEW
ISSUE DATE	PURPOSE OF ISSUE

ABENCS
Abener Engineering and Construction Services, LLC
ST. LOUIS, MISSOURI

ABENGOA SOLAR

ABENER DRAWING NUMBER
XXXX-PLN-BBB-28-21-0100

GENERAL ONE-LINE DIAGRAM
ALPHA SITE

ABENGOA SOLAR — HARPER LAKE, CA

	BY	DATE	APP'D.	DATE	JOB NO.	REVISION
DRAWN	MKB	2/09	GDT	17 FEB 09	120010	0
CHECKED	SDE / ZCY	16 FEB 09 / 16 FEB 09			DRAWING NO. ED-0100	
SCALE	NONE					

Plot Date/Time/User: 16-Feb-09/12:27 PM/KAWEAVE

P:\PROJECTS\120010 ABSOLAR HARPER LAKE CALIFORNIA\CAD120010\ELECTRICAL\ED-0100.DWG

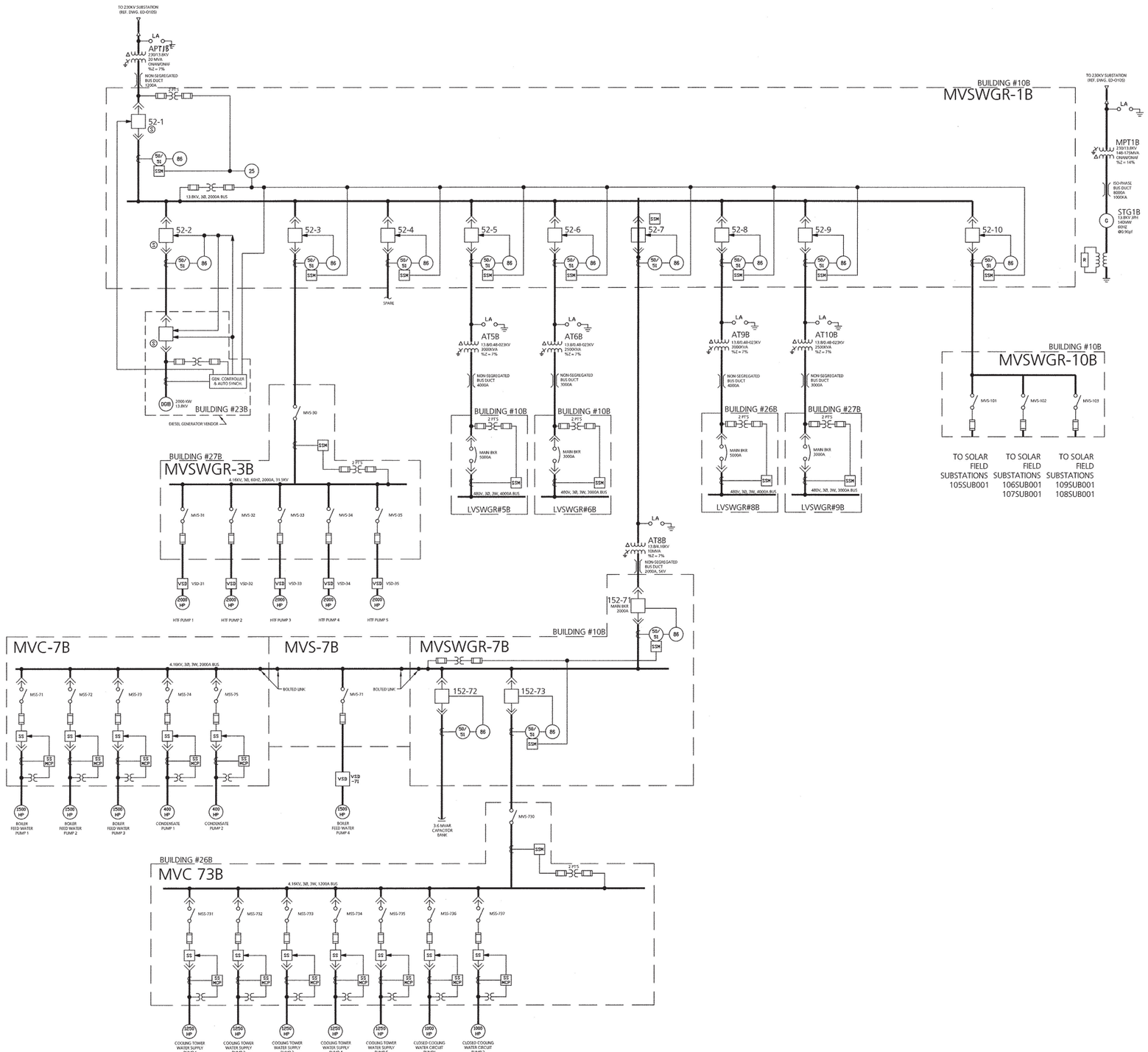

PRELIMINARY

DATE 16 FEB 09

Figure 2-7(c)

ABENCS

Abener Engineering and Construction Services, LLC
ST. LOUIS, MISSOURI

ABENGOA SOLAR

ABENER DRAWING NUMBER
XXXX-PLN-BBB-28-21-0101

GENERAL ONE-LINE DIAGRAM
BETA SITE

ABENGOA SOLAR — HARPER LAKE, CA

	BY	DATE	APP'D.	DATE	JOB NO.	REVISION
DRAWN	M.K.B.	2/09	G.D.T.	17 FEB 09	120010	0
CHECKED	S.E.				DRAWING NO. ED-0101	
SCALE	NONE					

REVISIONS					
NO.	DATE	DESCRIPTION	BY	BY	BY

REFERENCES	
DESCRIPTION	

THIS DRAWING IS THE PROPERTY OF
ABENCS
Abener Engineering and Construction Services, LLC
INFORMATION AND KNOW-HOW HEREON ARE CONFIDENTIAL AND PROPRIETARY AND MAY NOT BE USED, REPRODUCED, OR REVEALED TO OTHERS EXCEPT IN ACCORDANCE WITH THE TERMS OF A CONTRACT WITH OR OTHER WRITTEN PERMISSION OF Abener Engineering and Construction Services, LLC. ANY REPRODUCTIONS IN WHOLE OR PART INCLUDING SHOP DRAWINGS SHALL BEAR OR REFER TO THIS STAMP.

16 FEB 09 — ISSUE DATE
FOR REVIEW — PURPOSE OF ISSUE

Plot Date/Time/User: 16-Feb-09/12:27 PM/KAWEAVE

P:\PROJECTS\120010 ABSOLAR HARPER LAKE CALIFORNIA\CAD120010\ELECTRICAL\ED-0101.DWG

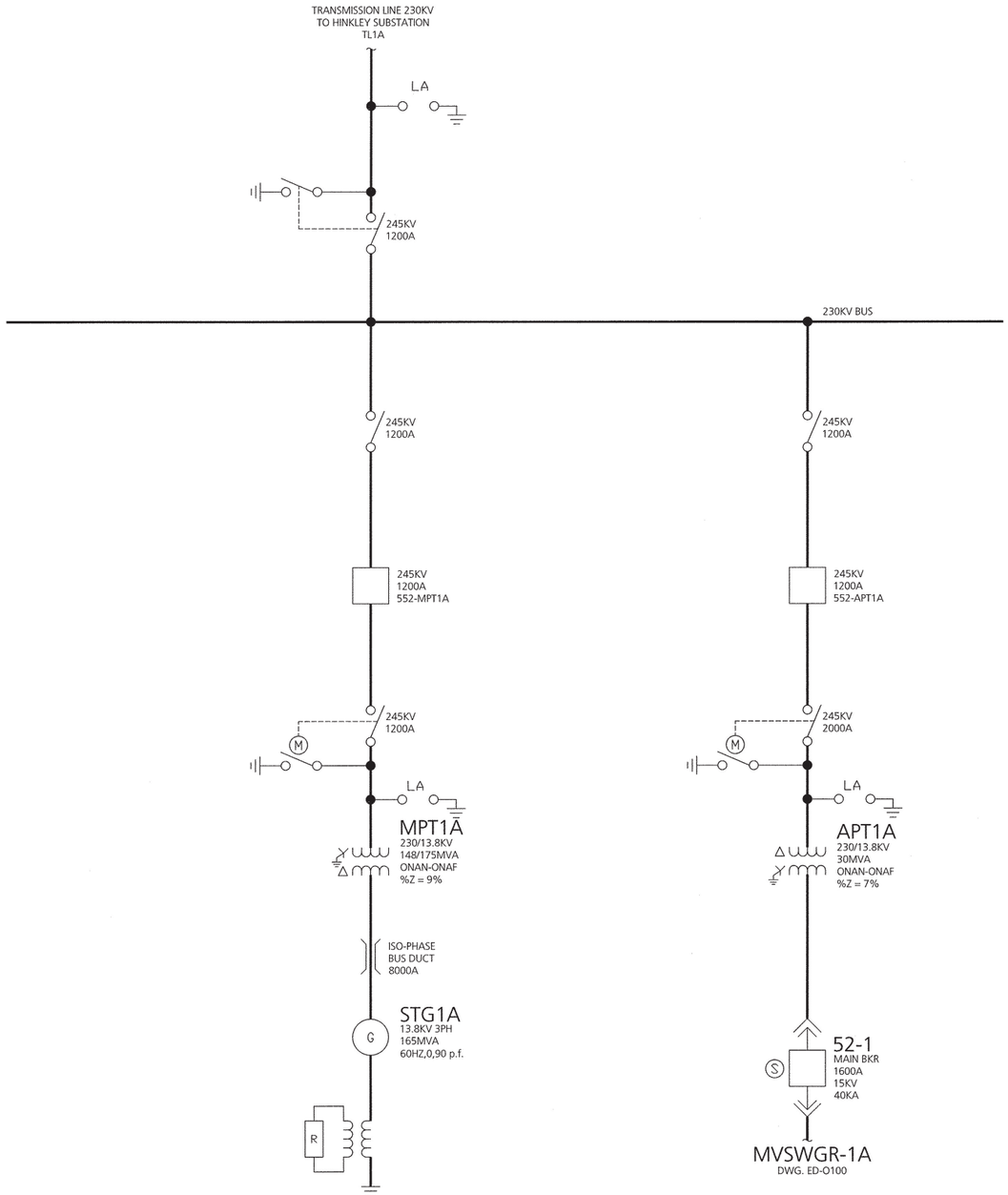

Figure 2-7(d)

NOTES:

1. ADDITIONAL COMPONETS FOR METERING AND PROTECTION WILL BE PROVIDED DURING DETAIL DESIGN.

PRELIMINARY

DATE 16 FEB 09

ABENCS
Abener Engineering and Construction Services, LLC
ST. LOUIS, MISSOURI

ABENGOA SOLAR

ABENER DRAWING NUMBER
XXXX–PLN–BBB–28–21–0105

GENERAL ONE–LINE DIAGRAM
230KV SUBSTATION
ALPHA SITE

ABENGOA SOLAR — HARPER LAKE, CA

	BY	DATE	APP'D.	DATE	JOB NO.	REVISION
DRAWN	MKB	2/09	GDT	17 FEB 09	120010	0
CHECKED	SDE	16 FEB 09			DRAWING NO.	
SCALE	NONE				ED–0105	

NO.	DATE	DESCRIPTION	BY	BY	BY

REVISIONS

REFERENCES

DESCRIPTION

ISSUE DATE	PURPOSE OF ISSUE
16 FEB 09	FOR REVIEW

THIS DRAWING IS THE PROPERTY OF
ABENCS
Abener Engineering and Construction Services, LLC
INFORMATION AND KNOW-HOW HEREON ARE CONFIDENTIAL AND PROPRIETARY AND MAY NOT BE USED, REPRODUCED, OR REVEALED TO OTHERS EXCEPT IN ACCORDANCE WITH THE TERMS OF A CONTRACT WITH OR OTHER WRITTEN PERMISSION OF Abener Engineering and Construction Services, LLC. ANY REPRODUCTIONS IN WHOLE OR PART INCLUDING SHOP DRAWINGS SHALL BEAR OR REFER TO THIS STAMP.

Plot Date/Time/User: 16–Feb–09/12:27 PM/KAWEAVE

P:\PROJECTS\120010 ABSOLAR HARPER LAKE CALIFORNIA\CAD120010\ELECTRICAL\ED–0105.DWG

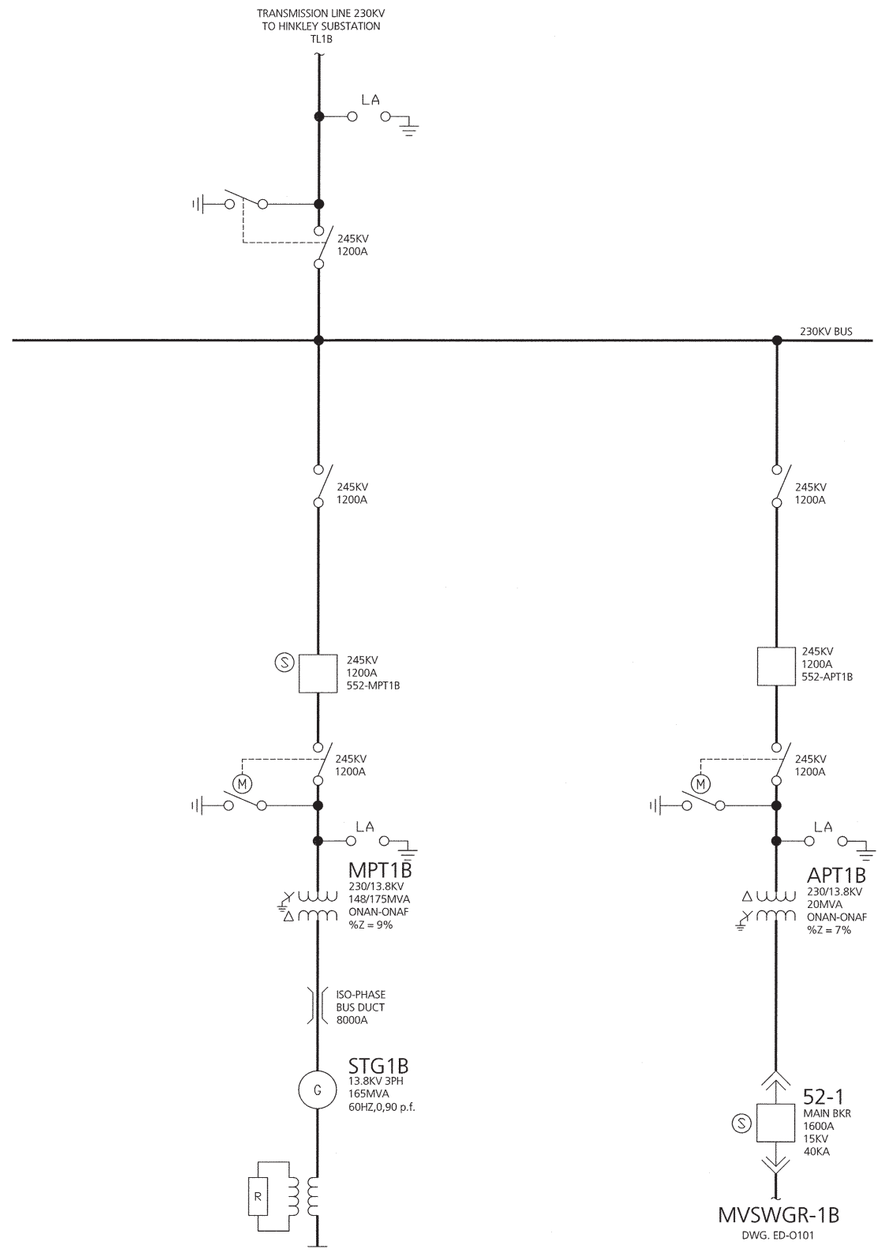

Figure 2-7(e)

NOTES:

1. ADDITIONAL COMPONETS FOR METERING AND PROTECTION WILL BE PROVIDED DURING DETAIL DESIGN.

PRELIMINARY

DATE 16 FEB 09

ABENCS
Abener Engineering and Construction Services, LLC
ST. LOUIS, MISSOURI

ABENGOA SOLAR

ABENER DRAWING NUMBER
XXXX-PLN-BBB-28-21-0106

GENERAL ONE-LINE DIAGRAM
230KV SUBSTATION
BETA SITE

ABENGOA SOLAR — HARPER LAKE, CA

	BY	DATE	APP'D.	DATE	JOB NO.	REVISION
DRAWN	MKB	2/09	GDT	17 FEB 09	120006	0
CHECKED	SDE 17 FEB 09	16 FEB 09			DRAWING NO. ED-0106	
SCALE	NONE					

REVISIONS	NO.	DATE	DESCRIPTION	BY	BY	BY

REFERENCES	DESCRIPTION

THIS DRAWING IS THE PROPERTY OF
ABENCS
Abener Engineering and Construction Services, LLC
INFORMATION AND KNOW-HOW HEREON ARE CONFIDENTIAL AND PROPRIETARY AND MAY NOT BE USED, REPRODUCED, OR REVEALED TO OTHERS EXCEPT IN ACCORDANCE WITH THE TERMS OF A CONTRACT WITH OR OTHER WRITTEN PERMISSION OF Abener Engineering and Construction Services, LLC. ANY REPRODUCTIONS IN WHOLE OR PART INCLUDING SHOP DRAWINGS SHALL BEAR OR REFER TO THIS STAMP.

ISSUE DATE	PURPOSE OF ISSUE
16 FEB 09	FOR REVIEW

Plot Date/Time/User: 16-Feb-09/12:27 PM/KAWEAVE

P:\PROJECTS\120010 ABSOLAR HARPER LAKE CALIFORNIA\CAD120010\ELECTRICAL\ED-0106.DWG

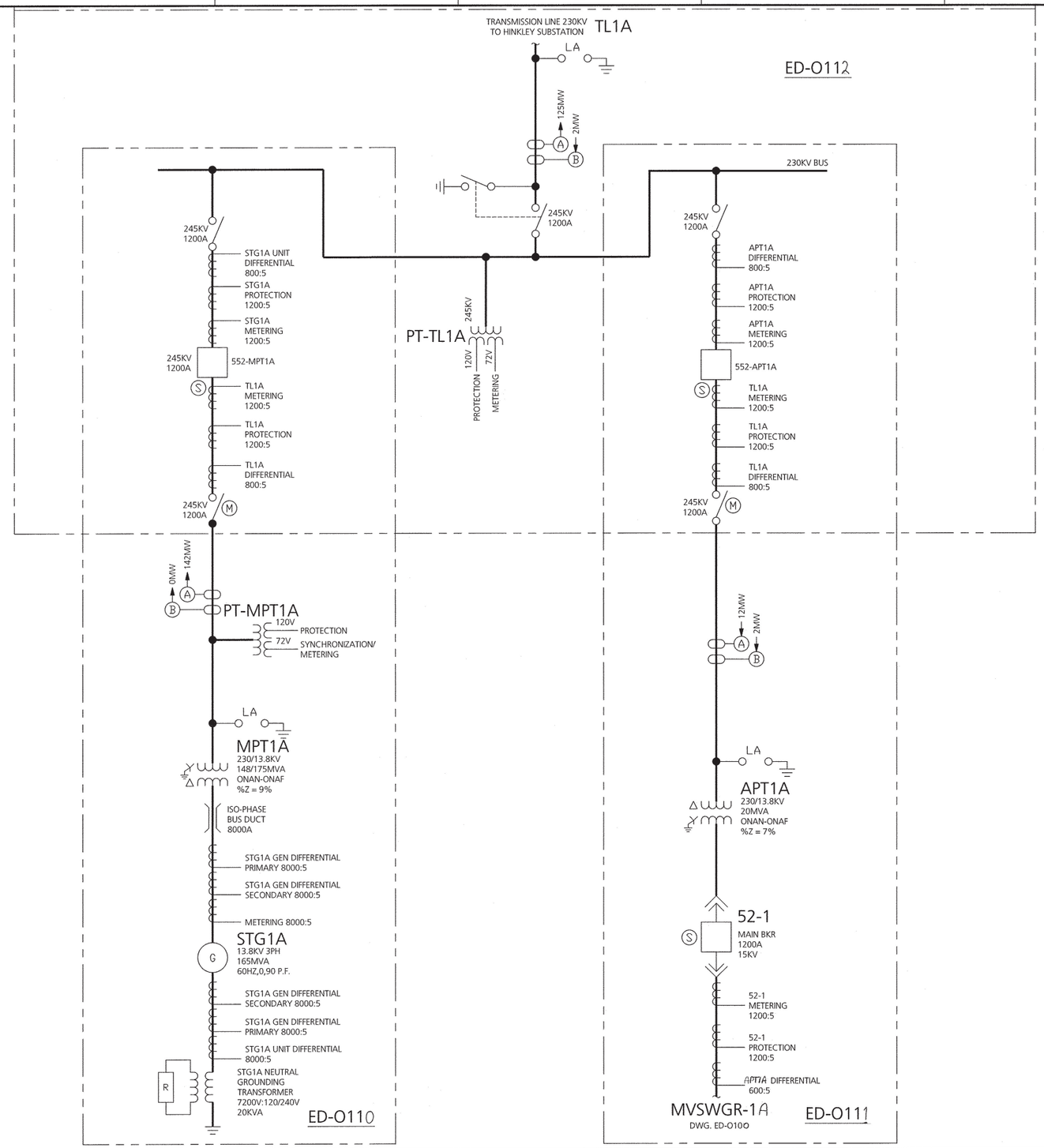

NOTES:

1. ADDITIONAL COMPONENTS FOR METERING AND PROTECTION WILL BE PROVIDED DURING DETAIL DESIGN.
2. ALPHA SITE HAS PRIMARY EQUIPMENT DESIGNATIONS. BETA SITE SEONDARY EQUIPMENT DESIGNATIONS AND ARE IN PARENTHESIS (####)

SYMBOLS

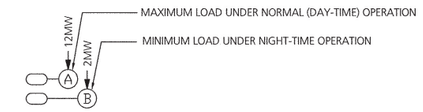

PRELIMINARY

DATE 16 FEB 09

Figure 2-7(f)

ABENCS
Abener Engineering and Construction Services, LLC
ST. LOUIS, MISSOURI

ABENGOA SOLAR

ABENER DRAWING NUMBER
XXXX-PLN-BBB-28-21-0108

230KV METERING & RELAYING
PROTECTION ZONE ONE LINE
ALPHA SITE

ABENGOA SOLAR — HARPER LAKE, CA

	BY	DATE	APP'D.	DATE	JOB NO.	REVISION
DRAWN	MKB	2/09	GDT	17 FEB 09	120010	0
CHECKED	BLM	16 FEB 09			DRAWING NO. ED-0108	
SCALE	NONE					

NO.	DATE	DESCRIPTION	BY	BY	BY
REVISIONS					
REFERENCES					

ISSUE DATE	PURPOSE OF ISSUE
16 FEB 09	FOR REVIEW

THIS DRAWING IS THE PROPERTY OF
ABENCS
Abener Engineering and Construction Services, LLC
INFORMATION AND KNOW-HOW HEREON ARE CONFIDENTIAL AND PROPRIETARY AND MAY NOT BE USED, REPRODUCED, OR REVEALED TO OTHERS EXCEPT IN ACCORDANCE WITH THE TERMS OF A CONTRACT WITH OR OTHER WRITTEN PERMISSION OF Abener Engineering and Construction Services, LLC. ANY REPRODUCTIONS IN WHOLE OR PART INCLUDING SHOP DRAWINGS SHALL BEAR OR REFER TO THIS STAMP.

Plot Date/Time/User: 17-Feb-09/12:30 PM/CGMBU

P:\PROJECTS\120010 ABSOLAR HARPER LAKE CALIFORNIA\CAD120010\ELECTRICAL\ED-0108.DWG

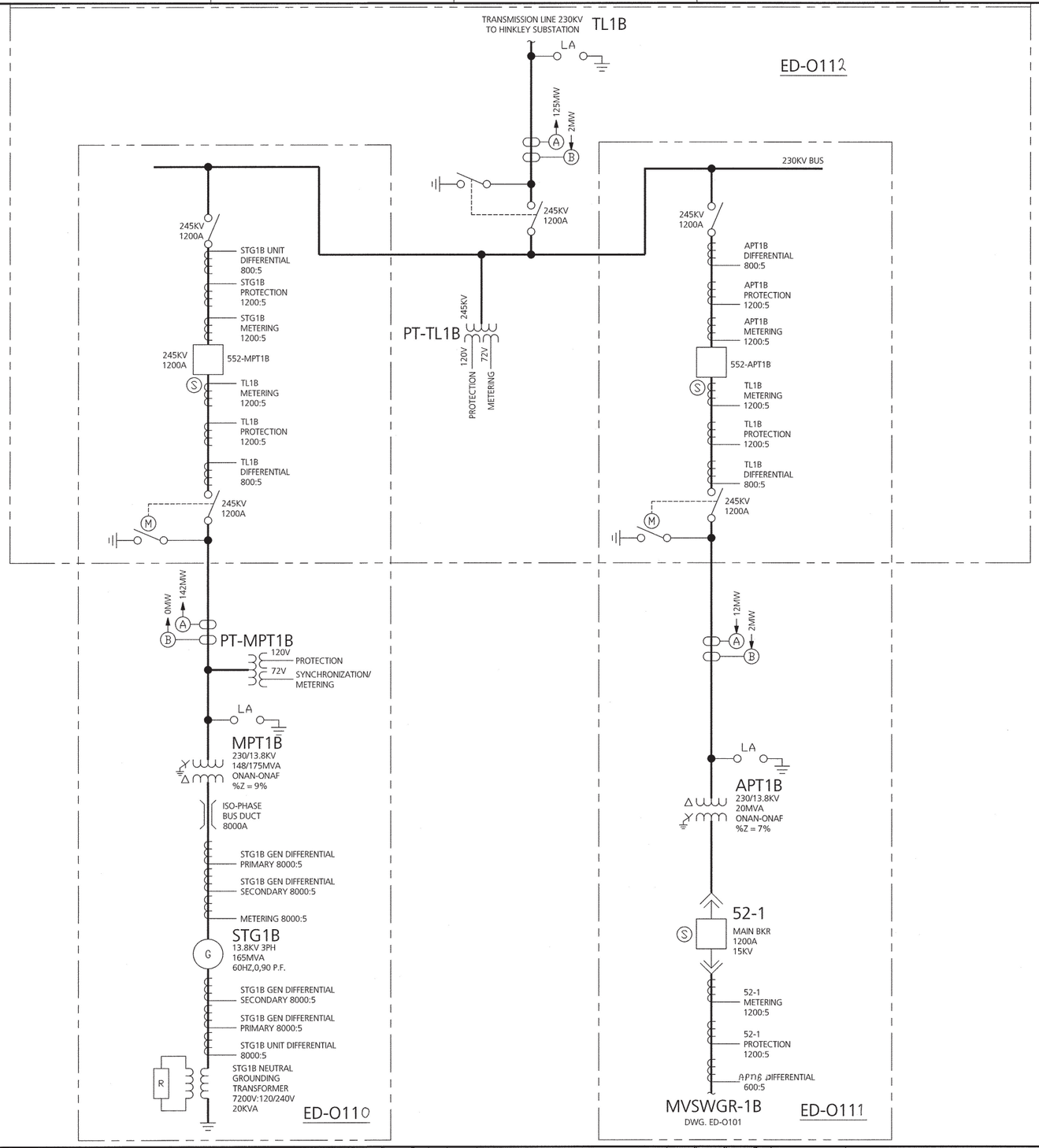

NOTES:

1. ADDITIONAL COMPONENTS FOR METERING AND PROTECTION WILL BE PROVIDED DURING DETAIL DESIGN.
2. ALPHA SITE HAS PRIMARY EQUIPMENT DESIGNATIONS. BETA SITE SEONDARY EQUIPMENT DESIGNATIONS AND ARE IN PARENTHESIS (####)

SYMBOLS

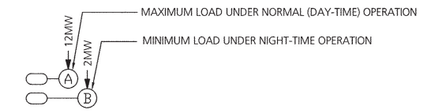

PRELIMINARY

DATE 17 FEB 09

Figure 2-7(g)

ABENCS
Abener Engineering and Construction Services, LLC
ST. LOUIS, MISSOURI

ABENGOA SOLAR

ABENER DRAWING NUMBER
XXXX-PLN-BBB-28-21-0109

230KV METERING & RELAYING PROTECTION ZONE ONE LINE BETA SITE

ABENGOA SOLAR — HARPER LAKE, CA

	BY	DATE	APP'D.	DATE	JOB NO.	REVISION
DRAWN	MKB	2/09	GBT	17 FEB 09	120010	0
CHECKED	SDE BBT	17 FEB 09			DRAWING NO. ED-0109	
SCALE	NONE					

REVISIONS				
NO.	DATE	DESCRIPTION	BY	BY	BY

REFERENCES	
	DESCRIPTION

THIS DRAWING IS THE PROPERTY OF
ABENCS
Abener Engineering and Construction Services, LLC
INFORMATION AND KNOW-HOW HEREON ARE CONFIDENTIAL AND PROPRIETARY AND MAY NOT BE USED, REPRODUCED, OR REVEALED TO OTHERS EXCEPT IN ACCORDANCE WITH THE TERMS OF A CONTRACT WITH OR OTHER WRITTEN PERMISSION OF Abener Engineering and Construction Services, LLC. ANY REPRODUCTIONS IN WHOLE OR PART INCLUDING SHOP DRAWINGS SHALL BEAR OR REFER TO THIS STAMP.

ISSUE DATE	PURPOSE OF ISSUE
17 FEB 09	FOR REVIEW

Plot Date/Time/User: 17-Feb-09/1:48 FM/CGMBU

P:\PROJECTS\120010 ABSOLAR HARPER LAKE CALIFORNIA\CAD120010\ELECTRICAL\ED-0109.DWG

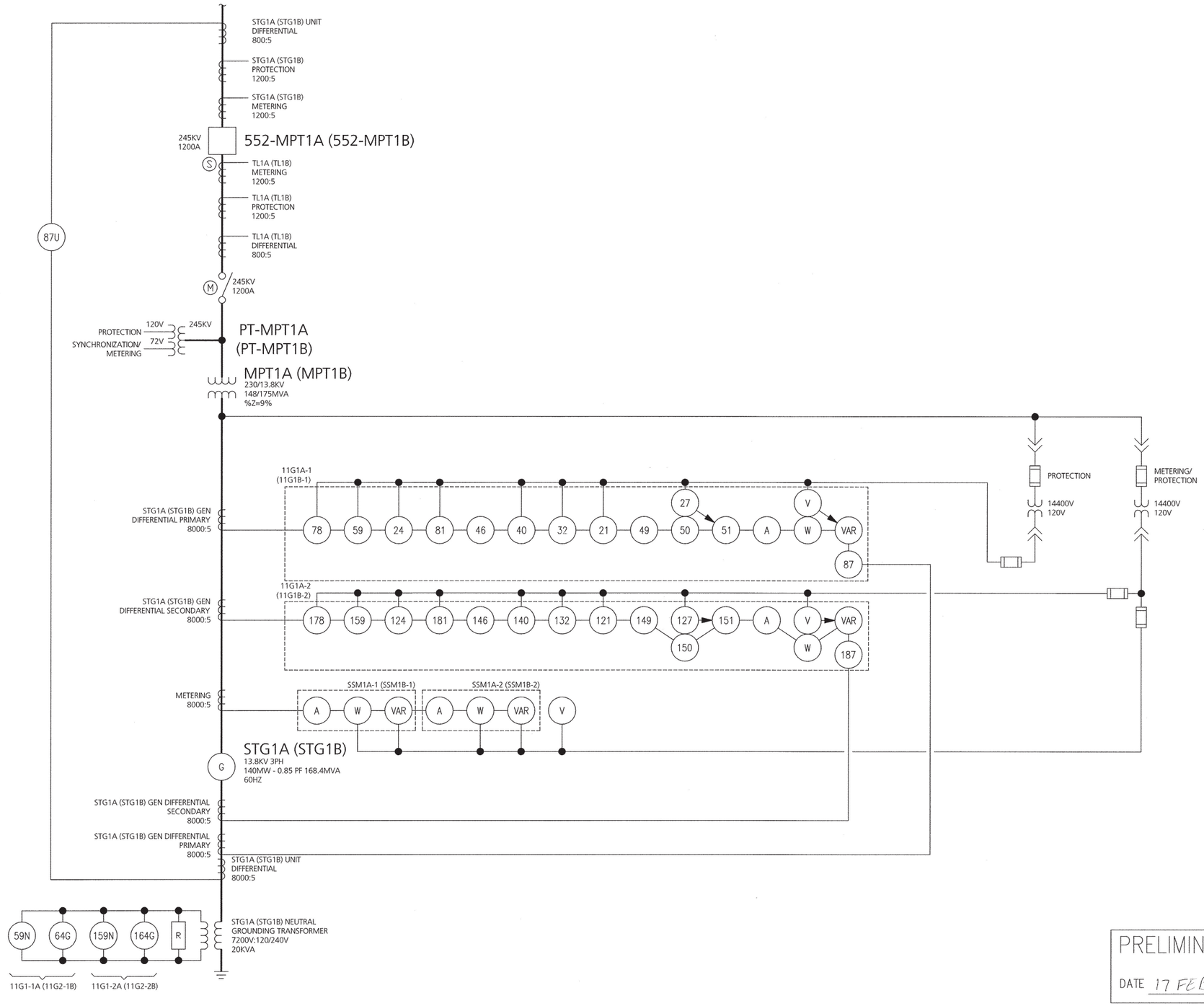

Figure 2-7(h)

PRELIMINARY

DATE 17 FEB 09

ABENCS
Abener Engineering and Construction Services, LLC
ST. LOUIS, MISSOURI

ABENGOA SOLAR

ABENER DRAWING NUMBER
XXXX-PLN-BBB-28-21-0110

230KV METERING & RELAYING
ONE LINE – STG1A (STG1B)
ALPHA (BETA) SITE

ABENGOA SOLAR — HARPER LAKE, CA

	BY	DATE	APP'D.	DATE	JOB NO.	REVISION
DRAWN	MKB	2/09	GDT	17 FEB 09	120010	0
CHECKED					DRAWING NO. ED-0110	
SCALE	NONE					

NO.	DATE	DESCRIPTION	BY	BY	BY

REVISIONS

REFERENCES

17 FEB 09	FOR REVIEW
ISSUE DATE	PURPOSE OF ISSUE

THIS DRAWING IS THE PROPERTY OF
ABENCS
Abener Engineering and Construction Services, LLC
INFORMATION AND KNOW-HOW HEREON ARE CONFIDENTIAL AND PROPRIETARY AND MAY NOT BE USED, REPRODUCED, OR REVEALED TO OTHERS EXCEPT IN ACCORDANCE WITH THE TERMS OF A CONTRACT WITH OR OTHER WRITTEN PERMISSION OF Abener Engineering and Construction Services, LLC. ANY REPRODUCTIONS IN WHOLE OR PART INCLUDING SHOP DRAWINGS SHALL BEAR OR REFER TO THIS STAMP.

Plot Date/Time/User: 17-Feb-09/12:31 PM/CGMBU

P:\PROJECTS\120010 ABSOLAR HARPER LAKE CALIFORNIA\CAD120010\ELECTRICAL\ED-0110.DWG

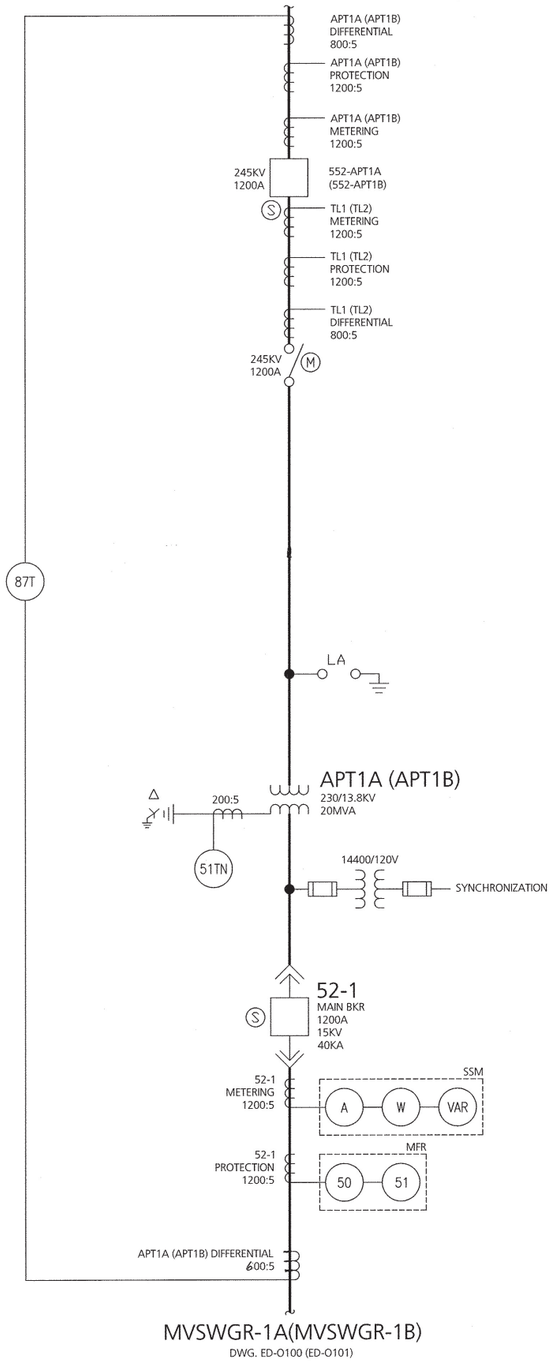

Figure 2-7(i)

PRELIMINARY

DATE 17 FEB 09

ABENCS

Abener Engineering and Construction Services, LLC

ST. LOUIS, MISSOURI

ABENGOA SOLAR

ABENER DRAWING NUMBER

XXXX-PLN-BBB-28-21-0111

230KV METERING & RELAYING
ONE LINE – APT1A (APT1B)
ALPHA (BETA) SITE

ABENGOA SOLAR — HARPER LAKE, CA

	BY	DATE	APP'D.	DATE	JOB NO.	REVISION
DRAWN	MKB	2/09	GDT	17 FEB 09	120010	0
CHECKED	SDC	17 FEB 09			DRAWING NO. ED-0111	
SCALE	NONE					

REVISIONS					
NO.	DATE	DESCRIPTION	BY	BY	BY

REVISIONS					
NO.	DATE	DESCRIPTION	BY	BY	BY

REVISIONS					
NO.	DATE	DESCRIPTION	BY	BY	BY

REFERENCES	
DESCRIPTION	

THIS DRAWING IS THE PROPERTY OF
ABENCS
Abener Engineering and Construction Services, LLC
INFORMATION AND KNOW-HOW HEREON ARE CONFIDENTIAL AND PROPRIETARY AND MAY NOT BE USED, REPRODUCED, OR REVEALED TO OTHERS EXCEPT IN ACCORDANCE WITH THE TERMS OF A CONTRACT WITH OR OTHER WRITTEN PERMISSION OF Abener Engineering and Construction Services, LLC. ANY REPRODUCTIONS IN WHOLE OR PART INCLUDING SHOP DRAWINGS SHALL BEAR OR REFER TO THIS STAMP.

ISSUE DATE	PURPOSE OF ISSUE
17 FEB 09	FOR REVIEW

Plot Date/Time/User: 17-Feb-09/1:21 PM/CGMBU

P:\PROJECTS\120010 ABSOLAR HARPER LAKE CALIFORNIA\CAD120010\ELECTRICAL\ED-0111.DWG

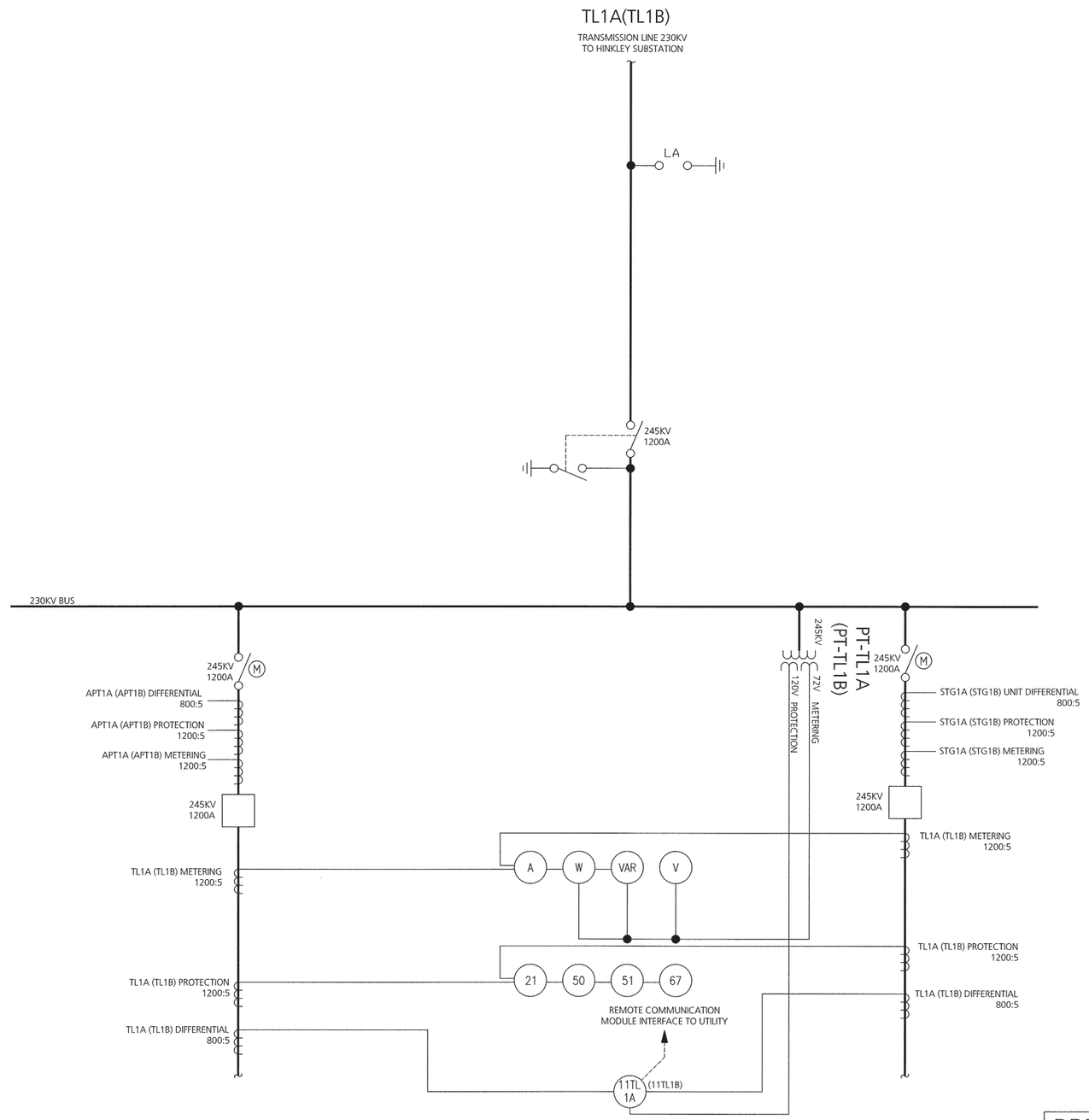

PRELIMINARY

DATE 17FEB 09

Figure 2-7(j)

ABENCS
Abener Engineering and Construction Services, LLC
ST. LOUIS, MISSOURI

ABENGOA SOLAR

ABENER DRAWING NUMBER
XXXX-PLN-BBB-28-21-0112

230KV METERING & RELAYING
ONE LINE – TL1A (TL1B)
ALPHA (BETA) SITE

ABENGOA SOLAR — HARPER LAKE, CA

	BY	DATE	APP'D.	DATE	JOB NO.	REVISION
DRAWN	MKB	2/09	GDT	17 FEB 09	120010	0
CHECKED	JDE	17 FEB 09			DRAWING NO. ED-0112	
SCALE	NONE					

REVISIONS					
NO.	DATE	DESCRIPTION	BY	BY	BY

REFERENCES	
	DESCRIPTION

THIS DRAWING IS THE PROPERTY OF
ABENCS
Abener Engineering and Construction Services, LLC
INFORMATION AND KNOW-HOW HEREON ARE CONFIDENTIAL AND PROPRIETARY AND MAY NOT BE USED, REPRODUCED, OR REVEALED TO OTHERS EXCEPT IN ACCORDANCE WITH THE TERMS OF A CONTRACT WITH OR OTHER WRITTEN PERMISSION OF Abener Engineering and Construction Services, LLC. ANY REPRODUCTIONS IN WHOLE OR PART INCLUDING SHOP DRAWINGS SHALL BEAR OR REFER TO THIS STAMP.

ISSUE DATE	PURPOSE OF ISSUE
17 FEB 09	FOR REVIEW

Plot Date/Time/User: 17-Feb-09/1:21 PM/CGMBU

P:\PROJECTS\120010 ABSOLAR HARPER LAKE CALIFORNIA\CAD120010\ELECTRICAL\ED-0112.DWG

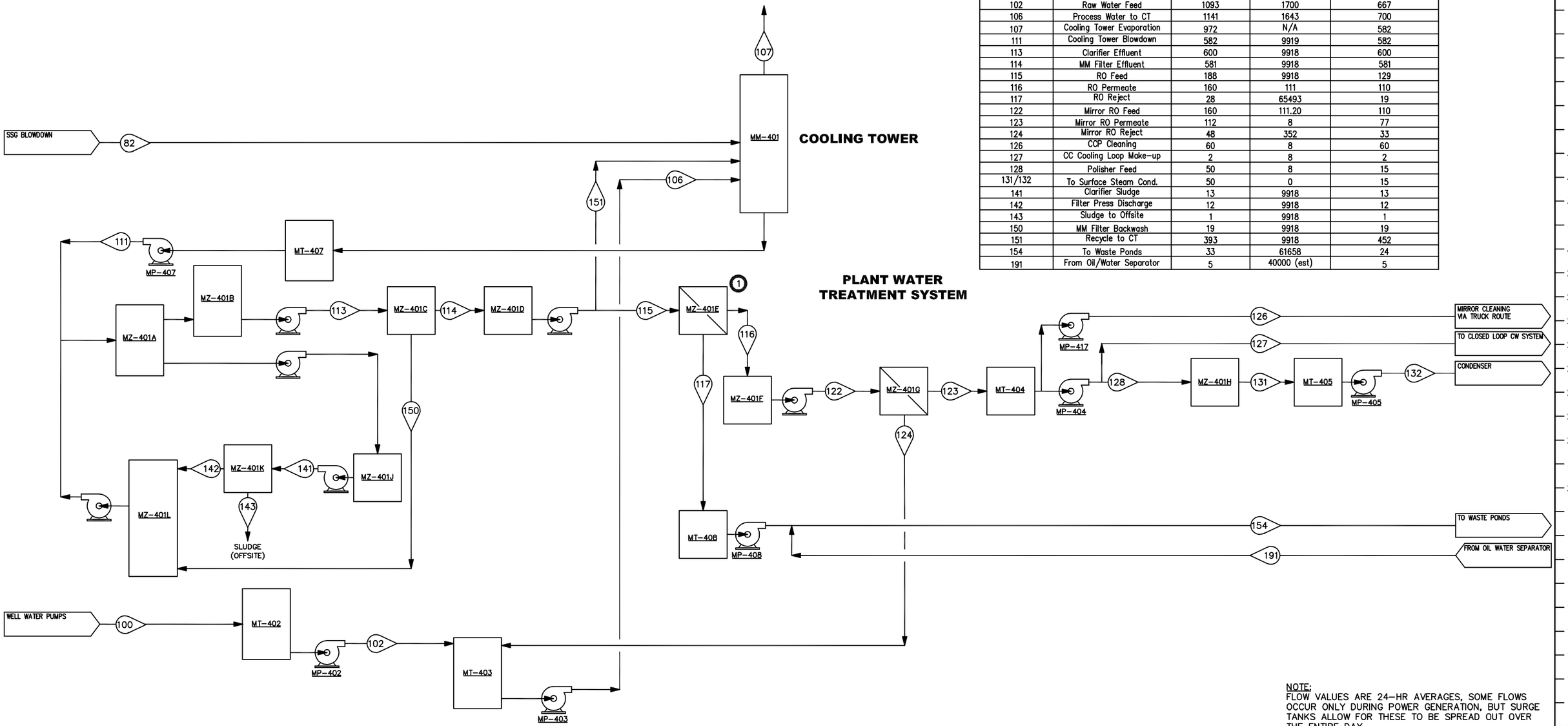

Stream	Description	Design Flow (gpm)	Design TDS (ppm)	Annual Average Flow (gpm)
82	Boiler Blowdown	20	100	12
100	Well Water	1093	1700	667
102	Raw Water Feed	1093	1700	667
106	Process Water to CT	1141	1643	700
107	Cooling Tower Evaporation	972	N/A	582
111	Cooling Tower Blowdown	582	9919	582
113	Clarifier Effluent	600	9918	600
114	MM Filter Effluent	581	9918	581
115	RO Feed	188	9918	129
116	RO Permeate	160	111	110
117	RO Reject	28	65493	19
122	Mirror RO Feed	160	111.20	110
123	Mirror RO Permeate	112	8	77
124	Mirror RO Reject	48	352	33
126	CCP Cleaning	60	8	60
127	CC Cooling Loop Make-up	2	8	2
128	Polisher Feed	50	8	15
131/132	To Surface Steam Cond.	50	0	15
141	Clarifier Sludge	13	9918	13
142	Filter Press Discharge	12	9918	12
143	Sludge to Offsite	1	9918	1
150	MM Filter Backwash	19	9918	19
151	Recycle to CT	393	9918	452
154	To Waste Ponds	33	61658	24
191	From Oil/Water Separator	5	40000 (est)	5

NOTE:
FLOW VALUES ARE 24-HR AVERAGES, SOME FLOWS OCCUR ONLY DURING POWER GENERATION, BUT SURGE TANKS ALLOW FOR THESE TO BE SPREAD OUT OVER THE ENTIRE DAY.

MZ-401A CLARIFIER
MZ-401K FILTER PRESS
MZ-401J SLUDGE TANK
MZ-401L BACKWASH TANK
MZ-401B RECARB TANK
MZ-401C MULTA MEDIA FILTERS
MZ-401D CLEAR WELL
MZ-401E PRIMARY RO
MT-408 REVERSE OSMOSIS REJECT TANK
MP-408 PUMP TO WASTE PONDS
MZ-401F RO SURGE TANK
MZ-401G MIRROR RO
MT-404 RO WATER TANK
MP-404 RO WATER PUMPS
MT-402 RAW WATER TANK
MP-407 COOLING TOWER BLOWDOWN TANK PUMP
MT-407 COOLING TOWER BLOWDOWN TANK
MT-403 PROCESS/FIRE WATER TANK
MP-403 PROCESS WATER PUMP
MP-417 RO WATER MIRROR CLEANING PUMPS
MZ-401H DEMINERALIZING POLISHERS
MP-405 POLISHED WATER PUMP
MP-402 RAW WATER TANK PUMPS
MM-401 COOLING TOWER (6 CELLS)
MT-405 POLISHED WATER TANK

1 MULTI-STAGE RO UNIT.

REVISIONS NO.	DATE	DESCRIPTION	BY	BY	BY

REFERENCES NO.	DATE	DESCRIPTION	BY	BY	BY

THIS DRAWING IS THE PROPERTY OF
ABENCS
Abener Engineering and Construction Services, LLC
INFORMATION AND KNOWHOW HEREON ARE CONFIDENTIAL AND PROPRIETARY AND MAY NOT BE USED, REPRODUCED, OR REVEALED TO OTHERS EXCEPT IN ACCORDANCE WITH THE TERMS OF A CONTRACT WITH OR OTHER WRITTEN PERMISSION OF Abener Engineering and Construction Services, LLC. ANY REPRODUCTIONS IN WHOLE OR PART INCLUDING SHOP DRAWINGS SHALL BEAR OR REFER TO THIS STAMP.

ISSUE DATE	PURPOSE OF ISSUE
	FOR REVIEW

Plot Date/Time/User: 16-Jul-09/9:08 AM/MJSEDE

ABENCS
Abener Engineering and Construction Services, LLC
ST. LOUIS, MISSOURI

MOJAVE SOLAR PROJECT

ABENER DRAWING NUMBER
FIGURE 2-8

WATER BALANCE PER PLANT

HARPER LAKE, CA

	BY	DATE	APP'D.	DATE	JOB NO.	REVISION
DRAWN					120010	
CHECKED					DRAWING NO. MD-F002	1
SCALE						

P:\PROJECTS\120010 ABSOLAR HARPER LAKE CALIFORNIA\CAD120010\P&ID\MD-F002.DWG

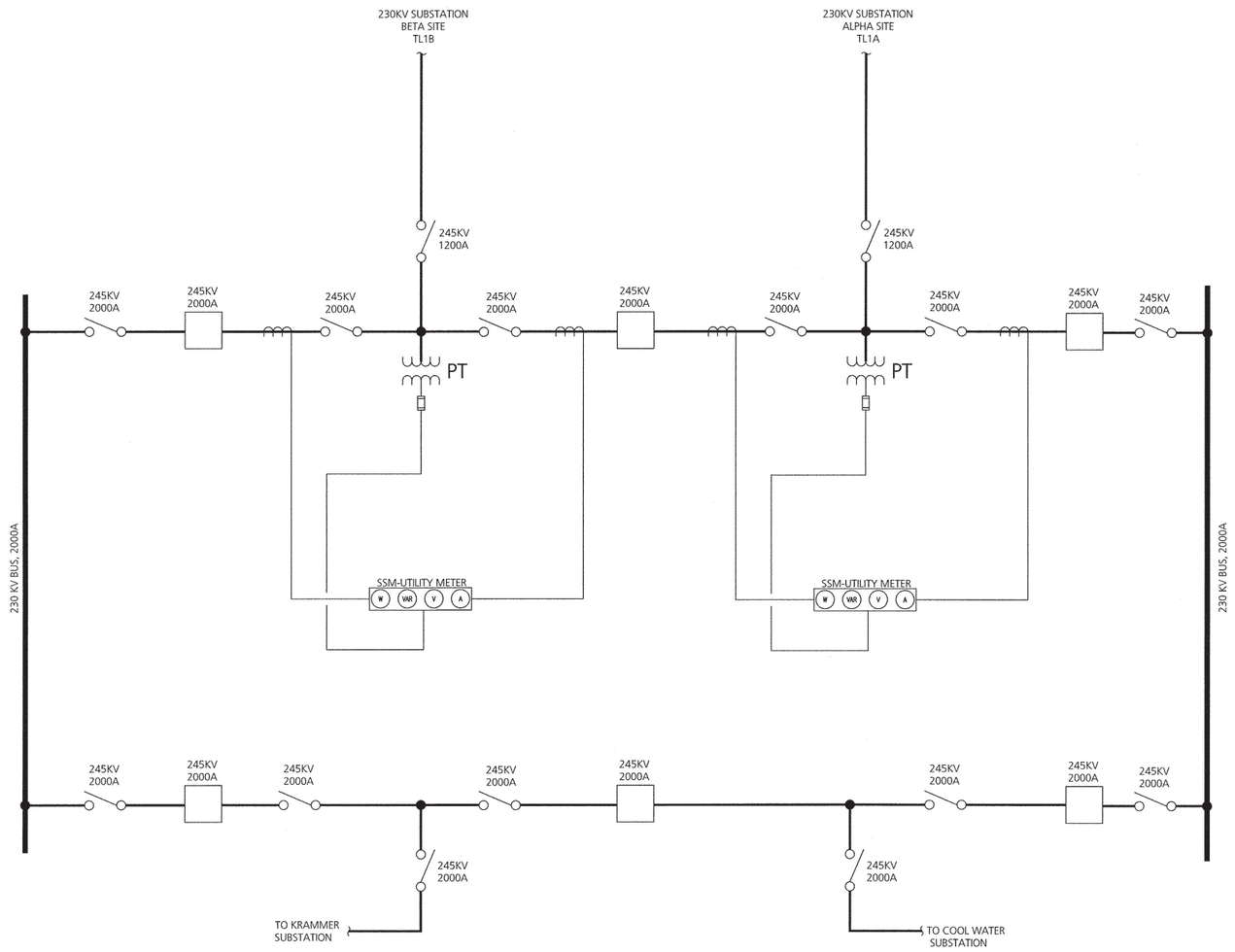

HINKLEY SUBSATION
BREAKER AND A HALF TYPE

Figure 2-9

NOTES:

1. DESIGN BY OTHERS.

PRELIMINARY

DATE 19 FEB 09

ABENCS
Abener Engineering and Construction Services, LLC
ST. LOUIS, MISSOURI

ABENGOA SOLAR

ABENER DRAWING NUMBER
XXXX-PLN-BBB-28-21-0107

GENERAL ONE-LINE DIAGRAM
230KV SUBSTATION
UTILITY INTERCONNECTION

ABENGOA SOLAR — HARPER LAKE, CA

	BY	DATE	APP'D.	DATE	JOB NO.	REVISION
DRAWN	MKB	2/09	GDT	19 FEB 09	120010	0
CHECKED	JJC 2/12/09	19 FEB 09			DRAWING NO. ED-0107	
SCALE	NONE					

REVISIONS					
NO.	DATE	DESCRIPTION	BY	BY	BY

REVISIONS					
NO.	DATE	DESCRIPTION	BY	BY	BY

REVISIONS					
NO.	DATE	DESCRIPTION	BY	BY	BY

REFERENCES	
	DESCRIPTION

THIS DRAWING IS THE PROPERTY OF
ABENCS
Abener Engineering and Construction Services, LLC
INFORMATION AND KNOW-HOW HEREON ARE CONFIDENTIAL AND PROPRIETARY AND MAY NOT BE USED, REPRODUCED, OR REVEALED TO OTHERS EXCEPT IN ACCORDANCE WITH THE TERMS OF A CONTRACT WITH OR OTHER WRITTEN PERMISSION OF Abener Engineering and Construction Services, LLC. ANY REPRODUCTIONS IN WHOLE OR PART INCLUDING SHOP DRAWINGS SHALL BEAR OR REFER TO THIS STAMP.

ISSUE DATE	PURPOSE OF ISSUE
19 FEB 09	FOR REVIEW

Plot Date/Time/User: 19-Feb-09/12:36 PM/CGMBU

P:\PROJECTS\120010 ABSOLAR HARPER LAKE CALIFORNIA\CAD120010\ELECTRICAL\ED-0107.DWG

KRAMER COOLWATER

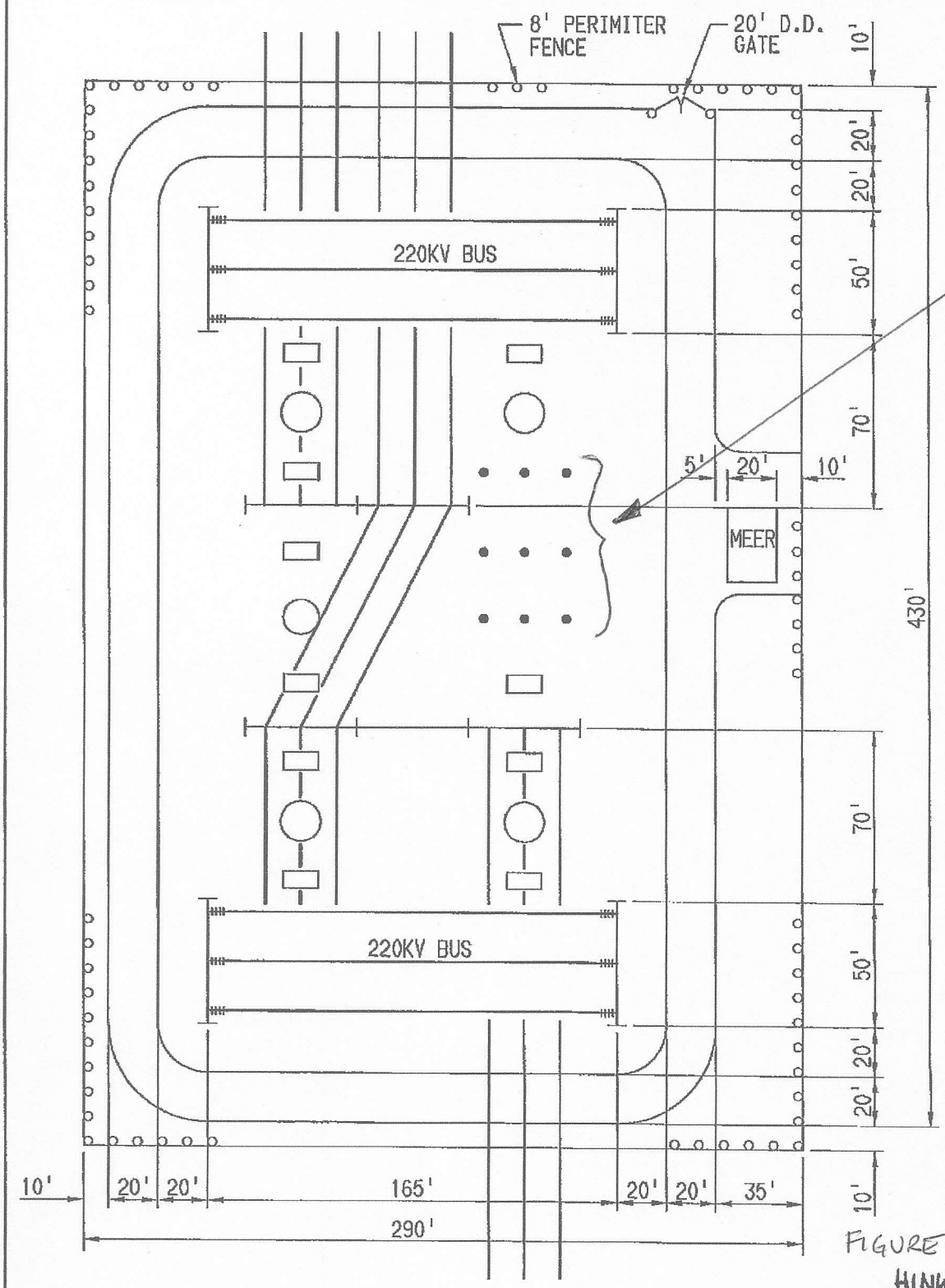

FIGURE 2-10

Approx 450' x 300'

GEN TIE (ALPHA)

HINKLEY

~~CABAWIND~~ SUBSTATION

PLOT PLAN FOR FACILITIES STUDY

CABAWINDPP.DWG

PRELIMINARY: FOR SIZE PLANNING ONLY.

230kV Single Circuit Steel Poles
80 ft. above ground + 10' Embedment
750 MCM ACSR on 650' spans

RELIAPOLE SOLUTIONS INC

	Tip Dia.	Butt Dia.	Thickness	Taper	Weight	Groundline Reactions			Unit Price
	(in)	(in)	(in)	(in/ft)	(lbs)	Moment	Shear	Axial	$'s
90H4	9.00	25.36	0.19685	0.19700	3889	427	5.65	2.87	$6,611

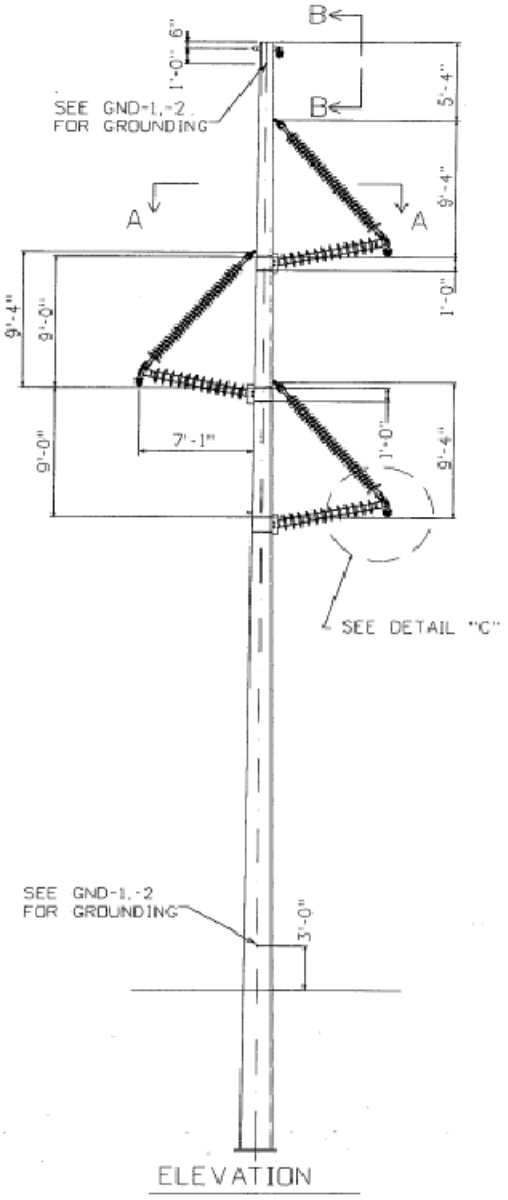

MAP LOCATION

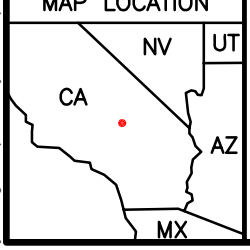

MOJAVE SOLAR PROJECT

Figure 2-11
TYPICAL TRANSMISSION POLE

MOJAVE SOLAR LLC

PROJECT:
DATE: 07/29/09

jcumming 2:03pm 29 July 2009 P:\3001-4 Harper Lake CEC\Figure 2-11.dwg - Layout1 Merrell-Johnson Engineering, Inc.