Appendix N

Interconnection System Impact Study

Interconnection System Impact Study

Generation Interconnection

Harper Lake, LLC.

Harper Lake Solar Plant Project

June 27, 2008

This study has been completed in coordination with Southern California Edison per the Large Generator Interconnection Procedures

EXECUTIVE SUMMARY

Harper Lake, LLC ("HLLLC") applied to the California Independent System Operator ("CAISO") for interconnection of the proposed Harper Lake Solar Plant Project ("HLSP Project") pursuant to section 3.5 of the Large Generator Interconnection Procedures ("LGIP") issued under the CAISO Tariff. The HLSP Project, a solar thermal generating facility to be located in Hinkley, California (San Bernardino County), approximately twelve miles east of Kramer Junction and just west of Harper Lake, will have a maximum net plant output of 250 MW. The HLSP Project will consist of two solar concentrated Siemens steam turbines and associated 230/13.8 kV generator transformers. HLLLC proposes to interconnect the HLSP Project into the SCE electrical system and deliver energy and/or ancillary services to the California Independent System Operator ("CAISO") Controlled Grid utilizing the existing Kramer-Cool Water No.1 230 kV radial transmission line. To interconnect the HLSP Project into the existing Kramer-Cool Water No.1 230 kV transmission line, a new substation will be needed. This substation (referred to in this study as "Hinkley"[1]) is to be located approximately 12.5 miles east from the existing Kramer Substation and approximately 31.7 miles northwest of the existing Cool Water Substation. The substation will also be needed to accommodate queued behind generation projects and will allow SCE the ability to loop the existing Kramer-Cool Water No.1 230 kV transmission line and provide for the required generation tie-line position. The HLSP Project's requested in-service date is January 1, 2010, with a commercial operation date of August 1, 2010.

SCE has performed the Interconnection System Impact Study (ISIS) to determine the adequacy of SCE's electrical system, including that portion of SCE's electrical system that is part of the CAISO Controlled Grid, to accommodate the HLSP Project. The Study was performed for two system conditions: a 2013 heavy summer with a one-in-ten load forecast and a 2013 light spring load forecast (65% of the heavy summer load). These conditions reflect the most critical expected loading condition for the transmission system in SCE's service area. The study included all queued ahead generation projects in the study area ahead of the HLSP Project regardless of the in-service dates of such prior projects. The system load condition assumptions were based on the latest in-service date of all queued ahead projects. In addition to the 2013 year cases, SCE performed a sensitivity study to evaluate if the project could interconnect in advance of implementing any transmission facility upgrades, which have been identified to be triggered by a queued ahead generation project. Such sensitivity was conducted as a means of providing HLLLC with the information required to evaluate the risk of congestion exposure while the facility upgrades are being implemented.

Results of the ISIS will be used as the basis to determine appropriate project cost allocation for facility upgrades in the Facilities Study. ***The study accuracy and results of the assessment of system adequacy are contingent on the accuracy of the technical data provided by HLLLC.*** Any changes from the data provided could void the study results. The ISIS report provides detailed study assumptions and conditions of the system in which the ISIS was conducted.

[1] The final name of the substation is subject to change once SCE finalizes the substation name evaluation efforts.

Please be aware that a restudy may be required to reflect the system configuration if a higher queued generation or transmission project that was modeled in the system impact study withdraws or is modified in accordance with applicable tariff allowances.

CONCLUSION

To interconnect the HLSP Project in a manner that addresses the generation needs in the area, avoids short-lived "piece-meal" solutions, minimizes environmental impacts, minimizes overall cost exposure to rate-payers, minimizes service interruptions, minimizes the need for generation curtailments while upgrades are implemented, and provides the minimum set of facilities for the HLSP Project, thus minimizing upfront cost responsibility, the following upgrades are required:

1. Construction of a new breaker-and-a-half 230 kV Substation (Hinkley Substation), with a four bay position switchrack,[2] equipping only two positions with a total of five circuit breakers.

2. Installation of appropriate fully redundant and diverse telecommunication facilities to provide overall system protection.

Based on the study results, the existing SCE transmission facilities with only the above minimum set of facility upgrades required to interconnect the HLSP Project are not adequate to accommodate the HLSP Project when considering all other generation projects queued ahead.

Power Flow

Without implementing any of the transmission upgrades identified to be triggered by the queued ahead projects, the existing system does not have sufficient transmission capability to deliver the total output of all queued generation projects up to and including the HLSP Project. Severe problems were identified under both heavy summer and light spring load conditions that resulted in a base case which would not solve due to voltage levels in the Lugo Area that would be well below acceptable limits. Consequently, a number of upgrades will be necessary to reliably interconnect and deliver the HLSP Project output as discussed below.

BASE CASE CONDITIONS

To mitigate problems triggered by queued ahead projects requesting interconnection along the Lugo-Pisgah corridor or to the Pisgah 230 kV Substation and along the Lugo-Victor-Kramer-Control corridor, the following transmission upgrades previously identified to be triggered by such queued ahead projects were included in the initial studies:

- Expansion of the existing SCE Pisgah 230 kV Substation to include 500 kV facilities.

[2] Standard SCE bus structures provide for up to four bay positions, but only the required bays will be equipped as part of the HLSP Project.

- Removal of the existing Lugo-Pisgah No. 2 230 kV transmission line and replacement with a new Lugo-Pisgah 500 kV transmission line.[3]
- Looping of the existing Eldorado-Lugo 500 kV transmission into the new 500 kV Pisgah Substation.
- Looping of the existing Lugo-Pisgah No. 1 230 kV transmission line into 3 new substations (Desert View, Abelia and Galway) forming new Lugo-Desert View 230 kV, Abelia-Desert View 230 kV (normally open), Abelia-Galway 230 kV, and Pisgah-Galway 230 kV transmission lines.
- Construction of a third Lugo-Victor 230 kV transmission line.
- Installation of the 3rd Lugo 500/230 kV transformer bank.

With the addition of the HLSP Project and all previously identified transmission upgrades, new base case overload problems were identified. Specifically, the HLSP Project triggers the following impacts:

Summer Load Conditions
Kramer-Lugo No.1 and No.2 230 kV Transmission Lines (85.4% → 106.5%)

Spring Load Conditions
Kramer-Lugo No.1 and No.2 230 kV Transmission Lines (97.2% → 118.7%)

To mitigate these base case overload problems, additional transmission will be required to increase the transfer capability south of Kramer Substation. Such increase in transmission capability south of Kramer Substation can best be provided by the following:

- Construction of a new Cool Water-Desert View double-circuit 230 kV transmission line with the installation of one initial circuit.

SINGLE OUTAGE CONTINGENCY (N-1)

Without the above additional facility upgrades in place to mitigate the identified base case overload problems, the study determined that the system is also inadequate to accommodate the full output of the HLSP Project under specific single outage contingencies. Because the HLSP Project results in increasing power flows on transmission facilities that are currently monitored as part of existing Kramer SPS (loss of the Lugo-Kramer No.1 or No.2 230 kV transmission lines), the HLSP Project will need to be added to the existing Kramer SPS if the additional transmission upgrades identified to mitigate the base case overloads are not implemented. The addition of the HLSP Project to the Kramer SPS will increase the amount of generation

[3] New right-of-way would be required west of the Mojave River to support a new 500 kV transmission line. A potential line routing alternative for this upgrade involves the use of existing right-of-way between the Mojave River and the Lugo Substation by removing both the existing Lugo-Pisgah No.1 and No.2 230 kV transmission lines and the construction of a new double-circuit 500 kV transmission line. One of the new 500 kV circuits would be used to connect to Pisgah and the other 500 kV circuit would be initially operated at 230 kV and connected to Desert View.

participating in the Kramer SPS from 863 MW to 1,113 MW. The actual amount of generation armed and tripped under the outage condition will be determined by the amount of power flow on the two Kramer-Lugo 230 kV transmission lines prior to the outage.

With the base case facility upgrades in place, the study determined that an SPS will still be needed to mitigate thermal and transient stability problems under loss of the Cool Water-Desert View and Lugo-Desert View 230 kV transmission lines. Outage of these lines results in loading the existing Kramer-Lugo No.1 and No.2 230 kV transmission lines as follows:

Overloaded Facility	Rating	Heavy Summer		Light Spring	
		Pre	Post	Pre	Post
Kramer-Lugo No.1 and No.2 230 kV T/Ls Loss of Cool Water-Desert View 230 kV T/L	1240 Amps (N) 1425 Amps (E)	N/A	106.5% 92.3%	N/A	118.7% 102.9%
Kramer-Lugo No.1 and No.2 230 kV T/Ls Loss of Lugo-Desert View 230 kV T/L	1240 Amps (N) 1425 Amps (E)	N/A	124.0% 107.4%	N/A	136.4% 118.3%

Under the loss of the Cool Water-Desert View 230 kV transmission line, the SPS should trip one of the HLSP generation units. Under the loss of the Lugo-Desert View 230 kV transmission line, the SPS should trip one of the HLSP generation units, as well as the generation projects directly connected to the Desert View Substation. Transfer tripping the generation projects directly connected to the Desert View Substation would not result in increasing the outage exposure of these projects, because the Desert View Substation would be connected in a radial fashion prior to adding the Cool Water-Desert View 230 kV transmission line. Such radial method of service would result in disconnecting from the source (Lugo Substation) without a second source line.

DOUBLE OUTAGE CONTINGENCY (N-2)

Without the above additional facility upgrades in place to mitigate the identified base case overload problems, the study determined that the system is also inadequate to accommodate the full output of the HLSP Project under specific double outage contingencies. The HLSP Project will need to be added to the existing Kramer SPS (loss of the Lugo-Kramer No.1 and No.2 230 kV transmission lines) if the additional transmission upgrades identified to mitigate the base case overloads are not implemented.

With the inclusion of the additional upgrades identified for mitigating the HLSP Project triggered base case thermal overloads, the study did not identify any N-2 thermal overload or transient stability problems for the local area. However, on an overall system level, the study determined that the total amount of Lugo Area generation export (South of Lugo and the Lugo-Vincent 500 kV transmission lines) is limited to approximately 7,800 MW. With the addition of more generation resources, in the North and East of Lugo areas, the amount of excess generation requiring export will eventually exceed 7,800 MW. To increase Lugo Area export limits, additional transmission capacity will be required. However, such requirement is not triggered solely by the addition of the HLSP Project, and therefore, such facility upgrades will be

evaluated and recommended as part of a larger study effort in the area (either through the RETI study process or the annual CAISO Transmission Expansion Planning Process).

Transient Stability

The study determined that with the inclusion of the additional upgrades identified for mitigating the HLSP Project triggered base case thermal overloads, the HLSP Project would not need to participate in the existing Kramer SPS. However, the study also identified that the tripping requirements for mitigating transient stability problems under the single line outage of the Lugo-Desert View 230 kV transmission line are more stringent than the tripping requirements for mitigating thermal overloads. Therefore, under this single line outage, an SPS will be required to trip the entire HLSP Project to mitigate transient stability problems identified in the ISIS.

Post-Transient Voltage

The study determined that without the facility upgrades identified under base case conditions, the HLSP Project aggravates previously identified voltage problems, including case non-convergence, which are indicative of a potential voltage collapse. The inclusion of the facility upgrades identified for queued ahead generation projects mitigate these problems.

Short-Circuit Duty

The short-circuit duty (SCD) analysis included all queued ahead generation projects, based on their application date, but did not model the corresponding transmission upgrades. The three-phase-to-ground short-circuit duty study identified two 500 kV, seven 230 kV, and four 115 kV substation locations requiring engineering review. The single-line-to-ground short circuit duty study identified two 500 kV, five 230 kV, and one 115 kV substation where duty was increased by more than 0.1 kA, and duty was in excess of 60% of the minimum circuit breaker rating.

Based on the SCD study results and engineering review, the addition of the HLSP Project triggers the need for circuit breaker replacement at the Kramer Substation. It should be noted that a number of projects have recently withdrawn from the interconnection queue or have modified technical parameters consistent with allowances under the LGIP. In addition, the transmission upgrades identified to mitigate the HLSP Project triggered base case overloads have not been included into the short-circuit duty analysis. Consequently, a reevaluation of short-circuit duty will be required as part of the Facilities Study to capture the recent generation interconnection queue withdrawals and modifications, as well as the facility upgrades associated with the mitigation plan identified in this analysis.

Deliverability Assessment

Separate studies entitled “Deliverability Assessments” were performed by the CAISO, which determined that the HLSP Project was not deemed deliverable to the Grid for Resource Adequacy (RA) purposes. The modeling assumptions for the Deliverability Assessment are different from the ones in this System Impact Study. For the details of the methodology and assumptions for Deliverability Assessment, please refer to the Baseline Generation Deliverability

Study – 2007 Q3 Study Plan posted at http://www.caiso.com/1c44/1c44b5c31cce0.html. In particular, the 2007 Q3 Deliverability Assessment modeled the following transmission upgrades:

- Lugo 500/230 kV No.3 Transformer Bank (AA-Bank)
- Kramer-Lugo No.3 230 kV Transmission Line[4]
- Victor-Lugo No.3 230 kV Transmission Line
- Replacement of the Lugo-Pisgah No.2 230 kV with a new 500 kV Transmission Line
- Operation of the remaining Lugo-Pisgah 230 kV line as two radial lines
    - Radial into Lugo connecting the new Desert View Substation
    - Radial into Pisgah connecting the new Abelia and new Galway Substations

The study did not include the new Cool Water-Desert View 230 kV transmission line(s) recommended in this study to mitigate the identified base case thermal overloads on the two Kramer-Lugo 230 kV transmission lines.

Cost Estimates

The ***Nonbinding*** Cost Estimate for the interconnection facilities and reliability network upgrades triggered by the HLSP Project is $131.7[5] million. The ***Nonbinding*** Cost Estimate for the maximum exposure for network upgrades triggered by queued ahead projects is $257.0[6] million. These estimates have been developed without detailed cost engineering and will be refined in the Facilities Study.

Facilities Study

A Facilities Study will be required for the HLSP Project. The Facilities Study will include detailed cost estimates for SCE network upgrades and direct assignment interconnection facilities required to interconnect the HLSP Project to the grid and should provide the following:

1. Develop cost estimates and schedule for the construction of a new Hinkley Substation to loop the existing Cool Water-Kramer No.1 230 kV transmission line. The Substation should consist of initially a 230 kV four-bay position with five circuit breakers to interconnect the project. (Case A).
2. Develop cost estimates and schedule for the looping of the existing Cool Water-Kramer 230 kV transmission line into the new Hinkley Substation (Case A).

[4] SPS was not modeled due to unknown specifications. With SPS and the additional Kramer-Lugo No.3 230 kV Transmission Line, the HLSP Project would be deemed deliverable.
[5] This cost estimate can increase to $227.2 million (excluding right-of-way for Cool Water-Desert View 230 kV transmission line) depending on the final routing alternative selected for queued ahead generation triggered reliability upgrades.
[6] This cost estimate can decrease to $216.3 million (excluding right-of-way) depending on the final routing alternative selected for queued ahead generation triggered reliability upgrades.

3. Develop cost estimate and schedule for the protection and telecom requirements to support the new Hinkley Substation (Case A).
4. Develop cost estimates and schedule for the construction of a new Desert View substation to loop the existing Lugo-Pisgah No.2 230 kV transmission line. The Substation would be sized for 500/230/115 kV facilities and would be capable of ultimately accommodating four 500/230 kV transformer banks, but would initially be equipped with eight 230 kV bay positions (Second four-bay position - Case A, Initial four-bay position - Case B) and 13 circuit-breakers (Two are Case A, five are Case B, two are future, and remaining four are generation direct assignment).
5. Develop cost estimates and schedule for the removal of approximately 16 miles of existing Lugo-Pisgah No.1 230 kV transmission line between Lugo and proposed Desert View Substation (Case B).
6. Develop cost estimates and schedule for the construction of a new 16-mile double-circuit 500 kV Lugo-Desert View transmission line with one circuit energized at 500 kV and the second circuit initially energized at 230 kV (Case B).
7. Develop cost estimate and schedule for the protection and telecom requirements to support the new Desert View Substation (Case B).
8. Develop cost estimates and schedule for the installation of the third Lugo 500/230 kV transformer bank (Case B).
9. Develop cost estimates and schedule for the construction of a third Lugo-Victor 230 kV transmission line (Case B).
10. Develop cost estimates and schedule for the construction of a new 37-mile double-circuit 230 kV Cool Water-Desert View transmission line (2B-1590 ACSR) with one initial circuit (Case A).
11. Develop cost estimate and schedule for SPS required to trip HLSP under two specific single outage contingencies (Case A).
12. Review identified substation locations shown in Table 2-4 through Table 2-7 to evaluate the need for circuit breaker replacements and develop corresponding cost estimates.
13. Perform any technical assessment required to account for potential queued ahead generation project withdrawals (CAISO #109, #110, #114, #115, #116, and #120) consistent with the CAISO Petition for Waiver of Tariff Provisions to Accommodate Transition to Reformed Large Generator Interconnection Procedures, and Motion to Shorten Comment Period FERC Filing, if approved at FERC.
14. SCE and the CAISO to determine the appropriate classification of the identified Network Upgrades (i.e. Reliability Network Upgrades versus Delivery Network Upgrades).

CONTENTS

EXECUTIVE SUMMARY ii

I. INTRODUCTION 1

II. STUDY CONDITIONS AND ASSUMPTIONS 2
- A. Planning Criteria 2
- B. Generation and Load Assumptions 4
- C. HLLLC – Harper Lake Solar Project 8
- D. Transmission Upgrades Included in the HLSP Base Cases 13
- E. Existing Special Protection Systems 15
- F. Power Flow Study 16
- G. Transient Stability Study 18
- H. Post-Transient Voltage Study 20
- I. Short-Circuit Duty Study 20
- J. Deliverability Assessment 21
- K. Cost Estimates 21
- L. Timelines for Implementing Facility Upgrades 22

III. GENERATOR ELECTRIC GRID FAULT RIDE-THROUGH CAPABILITY CRITERIA AND POWER FACTOR CRITERIA 22

IV. STUDY RESULTS 23
- A. Power Flow Analysis 23
- B. Transient Stability Analysis 38
- C. Post-Transient Stability Analysis 39
- D. Short Circuit Duty Study 39
- E. Deliverability Assessment 42

V. COST ESTIMATES 43

VI. ESTIMATED PROJECT TIMELINES 45

VII. CONCLUSIONS 45

APPENDIX A – HEAVY SUMMER TRANSIENT STABILITY PLOTS
APPENDIX B – LIGHT SPRING TRANSIENT STABILITY PLOTS

HARPER LAKE, LLC.
HARPER LAKE SOLAR PLANT PROJECT

SYSTEM IMPACT STUDY
June 27, 2008

I. INTRODUCTION

Harper Lake, LLC ("HLLLC") applied to the California Independent System Operator ("CAISO") for interconnection of the proposed Harper Lake Solar Plant Project ("HLSP Project") pursuant to section 3.5 of the Large Generator Interconnection Procedures ("LGIP") issued under the CAISO Tariff. The HLSP Project, a solar thermal generating facility to be located in Hinkley, California (San Bernardino County), approximately twelve miles east of Kramer Junction and just west of Harper Lake, will have a maximum net plant output of 250 MW. The HLSP Project will consist of two solar concentrated Siemens steam turbines and associated 230/13.8 kV generator transformers. HLLLC proposes to interconnect the HLSP Project into the SCE electrical system and deliver energy and/or ancillary services to the California Independent System Operator ("CAISO") Controlled Grid utilizing the existing Kramer-Cool Water No.1 230 kV radial transmission lines. To interconnect the HLSP Project into the existing Kramer-Cool Water No.1 230 kV transmission line, a new substation will be needed. This substation (referred to in this study as "Hinkley"[7]) is to be located approximately 12.5 miles east from the existing Kramer Substation and approximately 31.7 miles northwest of the existing Cool Water Substation. The substation will also be needed to accommodate queued behind generation projects and will allow SCE the ability to loop the existing Kramer-Cool Water No.1 230 kV transmission line and provide for the required generation tie-line position. The HLSP Project's requested in-service date is January 1, 2010, with a commercial operation date of August 1, 2010.

SCE has performed the Interconnection System Impact Study (ISIS) to determine the adequacy of SCE's electrical system, including that portion of SCE's electrical system that is part of the CAISO Controlled Grid, to accommodate the HLSP Project. The Study was performed for two system conditions: a 2013 heavy summer with a one-in-ten load forecast and a 2013 light spring load forecast (65% of the heavy summer load). These conditions reflect the most critical expected loading condition for the transmission system in SCE's area. The study included all queued ahead generation projects in the study area ahead of the HLSP Project regardless of the in-service dates of such prior projects. The system load condition assumptions were based on the latest in-service date of all queued ahead projects. In addition to the 2013 year cases, SCE performed a sensitivity study to evaluate if the project could interconnect in advance of implementing any transmission facility upgrades which have been identified to be triggered by a queued ahead generation project. Such sensitivity was conducted as a means of providing HLLLC with the information required to evaluate the risk of congestion exposure while the facility upgrades are being implemented.

[7] The final name of the substation is subject to change once SCE finalizes the substation name evaluation efforts.

Results of the ISIS will be used as the basis to determine appropriate project cost allocation for facility upgrades in the Facilities Study. ***The study accuracy and results of the assessment of system adequacy are contingent on the accuracy of the technical data provided by HLLLC.*** Any changes from the data provided could void the study results. The ISIS report provides detailed Study assumptions and conditions of the system in which the ISIS was conducted.

II. STUDY CONDITIONS AND ASSUMPTIONS

A. Planning Criteria

The study was conducted by applying the NERC/WECC/CAISO Reliability Criteria. More specifically, the main criteria applicable to this study are as follows:

Power Flow Analysis

The following contingencies are considered for transmission and sub-transmission lines and 500/230 kV transformer banks ("AA-Banks"):

- Single Contingencies – Loss of one line or one AA-Bank and selected overlapping outages of one generating unit and one line
- Double Contingencies – Loss of two lines or one line and one AA-Bank identified as common mode failure elements (Outages of two AA-Banks are beyond the Planning Criteria)

The following reliability criteria are used:

Transmission Lines	Base Case	Limiting Component Normal Rating
	N-1	Limiting Component A-Rating
	N-2	Limiting Component B-Rating
AA-Banks (500/230 kV) Transformer Banks	Base Case	Normal Loading Rating
	Long Term & Short Term	As defined by SCE Operating Bulletin

System upgrades for transmission lines are generally recommended for all reliability criteria violations. Special Protection Systems (SPS) may be allowed for single contingency and credible double contingencies reliability criteria violations in place of system upgrades, provided that the SPS complies with the CAISO Planning Standards' New Generator SPS Guidelines.

The following principles were used in determining whether congestion management, SPS, or facility upgrades are required to mitigate base case, single contingency, and/or double contingency overloads:

- Congestion management, as a means to mitigate base case overloads, can be used if it is determined to be manageable and CAISO Operations concurs with the

implementation. Congestion management to mitigate criteria violations may include curtailment of the proposed generation project in real time as needed.

- Facility upgrades will be required if it is determined that the use of congestion management for base case overloads is unmanageable.

- SPS will be recommended for criteria violations under outage conditions if it effectively mitigates system problems, does not jeopardize system integrity, does not exceed the current CAISO single and double contingency tripping limitations, does not adversely impact existing or proposed SPS in the area, and conforms to existing CAISO SPS Guidelines.

- Facility upgrades will be required if the use of an SPS is determined to be ineffective, system integrity is jeopardized, the amount of generation tripping exceeds the current CAISO single and double contingency tripping limitations, adverse impacts are identified to existing or proposed SPS in the area, or the SPS does not conform with the existing SPS Guidelines.

The following study method was implemented to assess the extent of possible congestion:

a) Under Base Case with all transmission facilities in service, the system was evaluated with all existing interconnected generation and all generation requests in the area that have a queue position ahead of this request (pre-project). Included in the study are CAISO-approved transmission projects queued ahead of the generation interconnection request.

b) Under Base Case with all transmission facilities in service, the system was reevaluated with the inclusion of the Project (post-project).

If the normal loading limits of facilities are exceeded in (a), the overload is identified as an existing overload that was triggered by a project in queue ahead of the HLSP Project. If the normal loading limits of facilities are exceeded in (b) and were not exceeded in (a), the overload is identified as triggered by the addition of the HLSP Project. The HLSP Project and other market participants in the area may be subjected to congestion management, potential upgrade cost and/or participation of any proposed SPS if the project addition aggravates or triggers the overload. Additionally, the HLSP Project may have to participate in mitigation of overloads triggered by subsequent projects in queue, subject to FERC protocols and policies.

Results of these studies should identify:

a) If capacity is available to accommodate the proposed HLSP Project and all projects ahead in queue without the need for congestion management, SPS, or facility upgrades

b) if base case overloads exist in the area after the addition of all projects in queue ahead of the HLSP Project

c) if base case overloads are triggered in the area after the addition of the HLSP Project

The range of base case congestion for the HLSP Project will be determined by reducing market generation in the area including the HLSP Project. For single and double element outage conditions, the same methodology will be used to identify how much generation tripping is required in order to determine if the use of an SPS is appropriate. Use of an SPS will be deemed inappropriate if the total amount of generation reduction is found to exceed 1,150 MW under loss of one transmission element and 1,400 MW under loss of two transmission elements. These limits are established by the CAISO utilizing the current Spinning Reserve Criteria.

B. Generation and Load Assumptions

To simulate the SCE transmission system for analysis, the study used databases that were developed to conduct SCE's Annual CAISO Controlled Facilities Expansion Program. The study considered two load conditions: 2013 heavy summer and a 2013 light spring case which assumed 65% of heavy summer load forecast. In addition, the study evaluated conditions with dispatch of generation inside and outside of the SCE service territory and electrical system in a manner that maximized loadings in the north of Lugo area. This included adjusting SCE imports on the West-of-River (Path 46) and modeling all pertinent queued ahead generation projects in the vicinity of the HLSP Project. Generation assumptions are provided below in Table 1-1. Heavy summer and light spring load study assumptions are provided below in Tables 1-2 and Table 1-3 respectively.

Table 1-1
ACTIVE QUEUED GENERATION PROJECTS MODELED IN THE STUDY

CAISO Queue #	Interconnection Point	(MW)	Requested Operating Date
SCE WDT112	Casa Diablo 115kV	16.54	2007
11	Mountain Pass 115kV	63	2010
33	Control 115kV Bus	10	In-Service
SCE WDT164	Gale 115kV Bus	80	2006
58	Churchill-Bishop	62	2007
68	Pisgah	850	2009
83	Lugo-Pisgah 230kV	60	2008
89	Victor 230kV Bus	570	2010
106	Mohave 500 kV	635 [2]	2009
109[3]	Pisgah 230kV	550	2010
110[3]	Pisgah 230kV	1400 [2]	2013
114[3]	Lugo-Pisgah 230 kV	150	2008
115[3]	Lugo-Pisgah 230 kV	150	2008
116[3]	Lugo-Pisgah 230 kV	50	2008
~~118~~	~~Mohave 500 kV~~	~~550~~ [1]	~~2009~~
120[3]	Mohave 500 kV	1200 [2]	2011
125	**Kramer 230 kV**	**250**	**2010**

[1] This project was initially included in the System Impact Study Plan but has since been withdrawn and was thus not modeled in the study.

[2] These projects were included in the base case but were not dispatched in the study for the following reasons:

- The projects are injecting power directly to the 500 kV bulk power system and do not contribute impacts to the 230 kV network used to interconnect the HLSP Project.
- These projects not dispatched will utilize available capacity on Path 46 and Path 49 thereby limiting the amount of power to no more than the established WECC Path Ratings.
- The amount of transmission capacity available to export Lugo Area excess power is less than the total amount of generation interconnection requests up to and including the HLSP Project. Consequently, congestion management will be required to ensure system dispatch conditions are such that the total amount of Lugo Area export is maintained to within limits.

[3] These projects have been identified to be moved into the Transition Cluster in the CAISO's Petition for Waiver of Tariff Provisions to Accommodate Transition to Reformed Large Generator Interconnection Procedures, and Motion to Shorten Comment Period FERC Filing. If approved, these projects will need to be removed from the HLSP Project starting base cases and a Technical Study will be required to identify the revised system impacts.

Table 1-2
Heavy Summer Load (MW) Assumptions

SUBSTATION	2008	2009	2010	2011	2012	2013	2014	2015	2016	2017
ALAMITOS	196	198	201	203	200	199	199.2	194	194	194
ANTELOPE-BAILEY	814	897	925	970	1037	729	738.3	805	825	833
ANTELOPE EAST	0	0	0	0	0	334	333.9	334	340	355
BARRE	736	743	804	816	830	837	847.5	854	864	877
BLYTHE	56	57	58	59	59	60	60.3	61	61	61
CAMINO	2	2	2	2	2	2	2.0	2	2	2
CENTER	507	513	522	528	529	527	527.9	532	535	538
CHEVMAIN	130	130	130	130	130	130	130.0	130	130	130
CHINO	758	776	930	960	974	993	998.3	1010	1018	1049
CIMA	1	1	1	1	1	1	1.0	1	1	1
DEL AMO	513	520	477	485	484	485	486.3	497	499	497
DEVERS - MIRAGE	1026	474	488	500	516	529	542.3	553	565	578
EAGLE MT.	2	2	2	2	2	2	2.0	2	2	2
EAGLE ROCK	203	205	208	210	213	215	210.3	212	213	214
EL CASCO	0	182	195	206	214	222	228.2	234	241	248
ELLIS	656	670	682	696	701	713	720.6	730	738	747
EL NIDO	366	369	373	377	378	378	378.7	377	379	380
ETIWANDA	620	645	668	687	703	720	730.7	745	759	777
ETIWANDA "AMERON"	70	70	70	70	70	70	70.0	70	70	70
GOLETA	280	284	287	291	292	292	293.0	295	296	297
GOULD	122	124	126	129	130	133	134.5	138	140	142
HINSON	557	562	569	573	571	570	568.5	568	570	570
JOHANNA	454	468	475	529	524	525	526.0	528	532	542
JURUPA (city Riverside)	0	270	273	276	275	276	275.4	277	276	276
KRAMER	335	359	376	389	398	407	416.0	420	426	447
LA CIENEGA	497	504	510	516	517	518	528.5	531	534	537
LA FRESA	684	691	699	705	704	703	702.8	706	708	709
LAGUNA BELL	596	602	607	613	612	612	612.4	614	616	616
LEWIS	548	553	564	569	573	577	575.7	576	579	577
LIGHTHIPE	521	528	533	540	540	541	542.4	541	544	545
MESA	607	615	627	638	639	642	641.2	644	649	651
MIRAGE	0	503	527	549	565	575	584.3	596	609	622
MIRA LOMA	826	849	745	767	779	785	804.0	822	784	780
MOORPARK	800	828	888	883	892	899	905.8	914	925	940
OAK VALLEY	0	0	0	0	0	0	0.0	0	0	0
OLINDA	410	428	437	446	451	456	460.1	469	474	479
PADUA	696	703	707	716	715	717	725.2	733	742	745
RECTOR	735	769	797	820	843	872	884.5	514	526	537
RIO HONDO	719	733	745	753	754	754	758.4	761	767	771
SAN BERNARDINO	628	632	646	662	672	682	689.5	702	716	725
SAN JOAQUIN	0	0	0	0	0	0	0.0	392	402	410
SANTA CLARA	621	638	628	672	682	692	699.2	704	713	722
SANTIAGO	756	788	815	846	867	881	896.4	910	923	943
SAUGUS	773	793	812	834	850	866	881.4	901	919	937
SPRINGVILLE	229	233	241	255	262	262	275.2	281	288	295
VALLEY	1742	1833	1916	1995	1769	1809	1848.7	1878	1927	1951
ALBERHILL	0	0	0	0	271	284	296.5	323	334	340
VESTAL	146	148	151	153	153	154	154.5	156	157	158
VICTOR	627	656	676	706	715	728	750.8	761	776	799
VIEJO	358	366	377	382	385	387	389.6	393	396	400
VILLA PARK	760	768	779	745	745	745	741.4	737	739	737
VISTA 66 KV	1052	772	783	797	809	819	825.9	835	900	919
VISTA 115 KV	686	589	601	613	614	614	621.3	623	627	630
WALNUT	737	748	752	758	759	758	756.4	758	758	759
Total	**25,159**	**25,795**	**26,409**	**27,023**	**27,369**	**27,680**	**27,973**	**28,343**	**28,711**	**29,062**

Southern California Edison Protected Materials, **Confidential: Contains Critical Energy Infrastructure Information (CEII)**

Table 1-3
Light Spring Load (MW) Assumptions

SUBSTATION	2008	2009	2010	2011	2012	2013	2014	2015	2016	2017
ALAMITOS	127	129	131	132	130	130	129	126	126	126
ANTELOPE-BAILEY	529	583	602	630	674	474	480	523	536	541
ANTELOPE EAST	0	0	0	0	0	217	217	217	221	231
BARRE	478	483	522	530	539	544	551	555	562	570
BLYTHE	36	37	38	38	39	39	39	40	39	40
CAMINO	1	1	1	1	1	1	1	1	1	1
CENTER	329	334	339	343	344	342	343	346	348	349
CHEVMAIN	85	85	85	85	85	85	85	85	85	85
CHINO	493	504	605	624	633	645	649	657	661	682
CIMA	1	1	1	1	1	1	1	1	1	1
DEL AMO	334	338	310	315	315	315	316	323	325	323
DEVERS - MIRAGE	667	308	317	325	336	344	352	360	367	376
EAGLE MT.	1	1	1	1	1	1	1	1	1	1
EAGLE ROCK	132	134	135	137	138	140	137	138	139	139
EL CASCO	0	119	127	134	139	144	148	152	157	161
ELLIS	426	435	443	452	455	464	468	475	480	486
EL NIDO	238	240	243	245	245	246	246	245	247	247
ETIWANDA	403	419	434	446	457	468	475	485	494	505
ETIWANDA "AMERON"	46	46	46	46	46	46	46	46	46	46
GOLETA	182	184	187	189	190	190	190	191	193	193
GOULD	79	81	82	84	85	86	87	90	91	92
HINSON	362	365	370	372	371	370	370	370	370	370
JOHANNA	295	304	309	344	341	341	342	343	346	352
JURUPA (city Riverside)	0	176	178	179	179	179	179	180	180	180
KRAMER	218	234	245	253	258	264	270	273	277	291
LA CIENEGA	323	327	331	335	336	337	344	345	347	349
LA FRESA	445	449	454	458	458	457	457	459	460	461
LAGUNA BELL	387	391	395	398	398	398	398	399	400	401
LEWIS	356	360	367	370	372	375	374	375	376	375
LIGHTHIPE	339	343	347	351	351	352	353	351	353	354
MESA	394	400	408	414	415	417	417	419	422	423
MIRAGE	0	327	343	357	367	373	380	388	396	404
MIRA LOMA	537	552	484	499	506	510	523	534	510	507
MOORPARK	520	538	577	574	580	584	589	594	601	611
OAK VALLEY	0	0	0	0	0	0	0	0	0	0
OLINDA	266	278	284	290	293	297	299	305	308	312
PADUA	452	457	460	466	464	466	471	476	483	484
RECTOR	478	500	518	533	548	567	575	334	342	349
RIO HONDO	467	476	485	489	490	490	493	495	499	501
SAN BERNARDINO	408	411	420	430	437	443	448	456	465	471
SAN JOAQUIN	0	0	0	0	0	0	0	255	261	267
SANTA CLARA	403	415	408	437	443	450	454	458	463	469
SANTIAGO	491	512	530	550	564	573	583	592	600	613
SAUGUS	503	516	528	542	553	563	573	586	598	609
SPRINGVILLE	149	152	156	166	171	170	179	183	187	192
VALLEY	1133	1192	1246	1297	1150	1176	1202	1221	1252	1268
ALBERHILL	0	0	0	0	176	185	193	210	217	221
VESTAL	95	96	98	100	99	100	100	101	102	103
VICTOR	407	426	439	459	464	473	488	494	505	519
VIEJO	233	238	245	249	250	252	253	255	258	260
VILLA PARK	494	499	506	484	484	484	482	479	480	479
VISTA 66 KV	684	502	509	518	526	532	537	543	585	597
VISTA 115 KV	446	383	390	398	399	399	404	405	408	410
WALNUT	479	486	489	493	494	493	492	493	493	493
Total	**16,353**	**16,767**	**17,166**	**17,565**	**17,790**	**17,992**	**18,182**	**18,423**	**18,662**	**18,890**

Southern California Edison Protected Materials, **Confidential: Contains Critical Energy Infrastructure Information (CEII)**

C. HLLLC – Harper Lake Solar Plant Project

The Harper Lake Solar Plant (HLSP) Project is geographically located in Hinkley, California approximately twelve miles east of Kramer Junction and west of Harper Lake. Specifically, the project will be in San Bernardino County in portions of Township 11N, Range 6W, Sections 25, 28, 29, 30, 32, and 33. The HLSP Project will consist of two Siemens solar concentrated steam turbines with a total net output of 250 MW and their associated 230/13.8 kV generator step-up transformers. It should be noted that each unit is capable of 150 MW but the output will be limited to no more than 250 MW combined.

HLLLC requested the Point of Interconnection (POI) for the HLSP Project to be one of the existing Kramer-Cool Water (northern circuit) 230 kV transmission lines. The HLSP Project would be interconnected to this transmission line by constructing a new 230 kV switching substation, referred to in this study as Hinkley, in order to loop the existing Kramer-Cool Water No.1 230 kV transmission line. The HLSP Project would then be connected to the Hinkley Substation by a customer owned 230 kV generation tie-line as shown below in Figure 1-1. The HLSP Project requested an interconnection date of January 1, 2010 and commercial operating date of August 1, 2010.

Figure 1-1
HLLLC – Harper Lake Solar Plant Project
One-Line Diagram

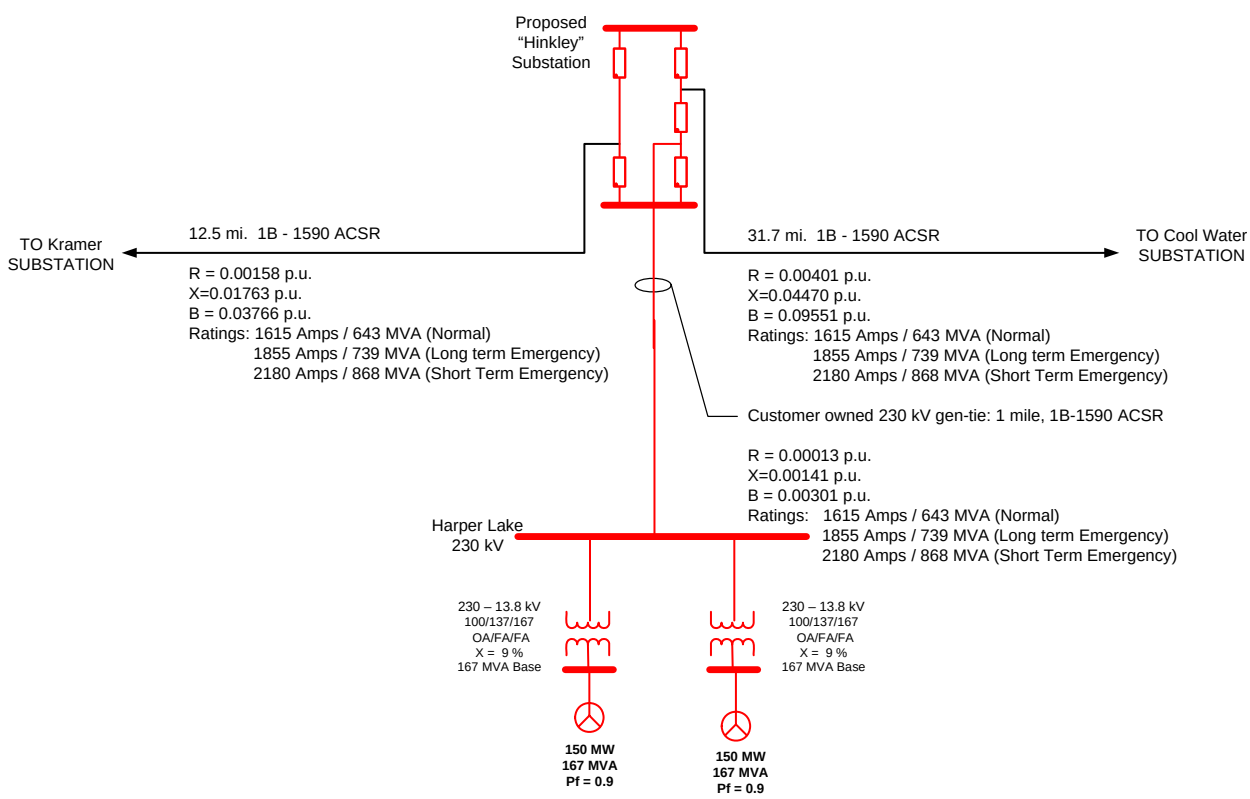

The HLSP Project includes one solar concentrating thermal power plant, based on parabolic trough technology. The parabolic trough is a solar thermal energy collector constructed as a long parabolic mirror. Each solar trough mirror will track the sun throughout the day and reflect concentrated solar energy to a receiver tube known as a Dewar tube, which runs the length of the parabolic trough. The receiver tube is filled with a heat transfer fluid, such as oil, which absorbs the concentrated sunlight and is used to heat steam in a standard turbine generator. The high temperature oil circulates through a heat exchanger to generate steam which is used to run a conventional steam turbine. Dynamics data used to represent the steam turbine generator in the GE PSLF Dynamic Software, as provided by the project developer, are shown below in Table 1-4 (generator), Table 1-5 (excitation system), Table 1-6 (governor) and Table 1-7 (power system stabilizer).

TABLE 1-4
STEAM TURBINE GENERATOR MODEL (GENROU)

Variable	Value	Description
MVA	167.0	Generator MVA Base
Tpdo	9.191	D-axis transient rotor time constant, sec
Tppdo	0.043	D-axis sub-transient rotor time constant, sec
Tpqo	2.50	Q-axis transient rotor time constant, sec
Tppqo	0.15	Q-axis sub-transient rotor time constant, sec
H	3.33228	Inertia constant, sec
D	0.0	Damping factor, per-unit
Ld	2.36	D-axis synchronous reactance, per-unit
Lq	2.24	Q-axis synchronous reactance, per-unit
Lpd	0.267	D-axis transient reactance, per-unit
Lpq	0.473	Q-axis transient reactance, per-unit
Lppd	0.183	D-axis sub-transient reactance, per-unit
Lppq	0.183	Q-axis sub-transient reactance, per-unit
Ll	0.143	Stator leakage reactance, per-unit
S1	0.115	Saturation factor at 1.0 per-unit flux
S12	0.571	Saturation factor at 1.2 per-unit flux
Ra	0.0	Stator resistance, per-unit
Rcomp	0.0	Compounding resistance for voltage control, per-unit
Xcomp	0.0	Compounding reactance for voltage control, per-unit

TABLE 1-5
STEAM TURBINE EXCITATION SYSTEM MODEL (EXST4B)

Variable	Value	Description
Tr	0.02	Filter time constant, sec
Kpr	3.15	Proportional gain, per-unit
Kir	3.15	Integral gain, per-unit
Ta	0.02	Time constant, sec
Vrmax	1.00	Maximum controller output, per-unit
Vrmin	-0.87	Minimum controller output, per-unit
Kpm	1.00	Proportional gain of field voltage regulator, per-unit
Kim	0.00	Integral gain of field voltage regulator, per-unit
Vmmax	1.00	Maximum field voltage regulator output, per-unit
Vmmin	-0.87	Minimum field voltage regulator output, per-unit
Kg	0.00	Excitation limiter gain, per-unit
Kp	6.50	Potential source gain, per-unit
Angp	0.00	Phase angle of potential source, degrees
Ki	0.00	Current source gain, per-unit
Kc	0.08	Excitation regulation factor, per-unit
Xl	0.00	Main generator leakage reactance, per-unit
Vbmax	8.00	Maximum excitation voltage

TABLE 1-6
STEAM TURBINE GOVERNOR MODEL (GGOV1)

Variable	Value	Description
r	0.05	Permanent of droop, per-unit
rselect	1.0	Feedback signal for droop
Tpelec	1.0	Electrical power transducer time constant, sec
maxerr	0.05	Maximum value for speed error signal
minerr	-0.05	Minimum value for speed error signal
Kpgov	10.0	Governor proportional gain
Kigov	2.0	Governor integral gain
Kdgov	0.0	Governor derivative gain
Tdgov	1.0	Governor derivative controller time constant
vmax	1.0	Maximum valve position limit
Vmin	0.15	Minimum valve position limit
Tact	0.5	Actuator time constant
Kturb	1.5	Turbine gain
Wfnl	0.2	No load fuel flow, per-unit
Tb	0.5	Turbine lag time constant
Tc	0.0	Turbine lead time constant
Flag	1.0	Switch for fuel source characteristic
Teng	0.0	Transport lag time constant for diesel engine
Tfload	3.0	Load limiter time constant
Kpload	2.0	Load limiter proportional gain for PI controller
Kiload	0.67	Load limiter integral gain for PI controller
Ldref	1.0	Load limiter reference value, per-unit
Dm	0.0	Speed sensitivity coefficient, per-unit
ropen	0.10	Maximum valve opening rate, per-unit / second
rclose	-0.10	Minimum valve opening rate, per-unit / second
Kimw	0.002	Power controller (reset) gain
Pmwset	75.0	Power controller setpoint, MW
aset	0.01	Acceleration limiter setpoint, per-unit / second
Ka	10.0	Acceleration limiter gain
Ta	0.1	Acceleration limiter time constant, second
db	0.0	Speed governor dead band
Tsa	4.0	Temperature detection lead time constant, second
Tsb	5.0	Temperature detection lag time constant, second
rup	99.0	Maximum rate of load limit increase
rdown	-99.0	Minimum rate of load limit increase

TABLE 1-7
STEAM TURBINE POWER SYSTEM STABILIZER MODEL (PSS2A)

Variable	Value	Description
J1	1.0	Input signal #1 code
K1	0.0	Input signal #1 remote bus number
J2	3.0	Input signal #2 code
K2	0.0	Input signal #2 remote bus number
Tw1	2.0	First washout on signal #1, sec
Tw2	2.0	Second washout on signal #1, sec
Tw3	2.0	First washout on signal #2, sec
Tw4	0.0	Second washout on signal #2, sec
T6	0.0	Time constant on signal #1, sec
T7	2.0	Time constant on signal #2, sec
Ks2	0.2	Gain on signal #2
Ks3	1.0	Gain on signal #2
Ks4	1.0	Gain on signal #2
T8	0.5	Lead ramp tracking filter
T9	0.1	Lag ramp tracking filter
n	1.0	Order of ramp tracking filter
m	5.0	Order of ramp tracking filter
Ks1	10.0	Stabilizer gain
T1	0.25	Lead/lag time constant, sec
T2	0.04	Lead/lag time constant, sec
T3	0.20	Lead/lag time constant, sec
T4	0.03	Lead/lag time constant, sec
Vstmax	0.1	Stabilizer output max limit, per-unit
Vstmin	-0.1	Stabilizer output min limit, per-unit
a	1.0	Lead/lag num. gain (not in IEEE model)
Ta	0.0	Lead/lag time constant, sec (not in IEEE model)
Tb	0.0	Lead/lag time constant, sec (not in IEEE model)

D. Transmission Upgrades to be Included in the HLSP Project Base Cases

A number of transmission upgrades are needed to support queued ahead generation projects in the North of Lugo and East of Lugo areas. These projects, outlined below, were included into the base cases in order for the System Impact Study to determine if additional facilities would be needed to support the HLSP Project.

PISGAH AREA

The studies performed for the queued ahead generation projects in the Pisgah area identified a number of facility upgrades to be required. These upgrades involved the following:

- Expansion of the existing SCE Pisgah 230 kV Substation, sized to accommodate 500/230 kV facilities, with up to four 500/230 kV transformers, two sets of 200 MVAr 500 kV capacitor banks, and four sets of 79.2 MVAr 230 kV capacitor banks.

- Removal of one existing Lugo-Pisgah 230 kV transmission line and replacement with a new Lugo-Pisgah 500 kV transmission line.[8]

- Looping of the existing Lugo-Eldorado 500 kV transmission line into the new 500 kV portion of the expanded Pisgah Substation, by "cutting" the line near the Pisgah Substation and connecting each portion to the Pisgah Substation.

- Installation of appropriate fully redundant and diverse telecommunication facilities to support both a special protection system that would trip generation projects connecting to the Pisgah Substation under specific outage contingencies, as well as provide overall system protection.

LUGO TO PISGAH 230 kV CORRIDOR

Feasibility and System Impact Studies have been performed for four queued ahead projects that have requested interconnection to the existing 230 kV transmission facilities connecting the Lugo Substation with the Pisgah Substation. Because one of the existing lines has been identified to be removed in order to make room for a new 500 kV transmission line (as discussed above), only one of the two existing Lugo-Pisgah 230 kV transmission lines (northern circuit) will be available. This remaining Lugo-Pisgah 230 kV transmission line has a relatively low capacity value of 289 MVA (725 amps) with no emergency capability. The total amount of generation projects in queue ahead of the HLSP Project requesting interconnection to this transmission line is in excess of 400 MW. In order to interconnect these projects, three new substations will be required and the line will need to be "cut" into two segments, with one ultimately connecting to Lugo and the other ultimately connecting to

[8] Actual design of these transmission upgrades will depend on many factors including the development of upgrade alternatives necessary to support a Proponent's Environmental Assessment (PEA) and an Application for a Certificate of Public Convenience and Necessity (CPCN). Some of the alternatives that would be considered include, but are not limited to: 1) the removal of both existing single-circuits and replacement with a new 500 kV double-circuit transmission line, 2) the construction of a new single-circuit on new right-of-way without removing any existing facilities, and 3) a combination of both.

Pisgah, as shown below in Figure 1-2. The three new substations modeled in the base case include the following:

- New Desert View Substation, designed to ultimately accommodate 500/230/115 kV facilities, with up to four 500/230 kV transformer banks, and is assumed to be located approximately 16 miles east of the Lugo Substation and operated in a radial configuration to the Lugo Substation.

- New Abelia 230 kV Switching Station, designed as a collector substation for new generation interconnection projects, and is assumed to be located approximately 21 miles east of the new Desert View Substation.

- New Galway 230 kV Switching Station, designed as a collector substation for new generation interconnection projects, and is assumed to be located approximately 15 miles west of the Pisgah Substation.

Figure 1-2
Upgrades for Queued Ahead Generation Projects
Lugo-Pisgah 230 kV Transmission Corridor

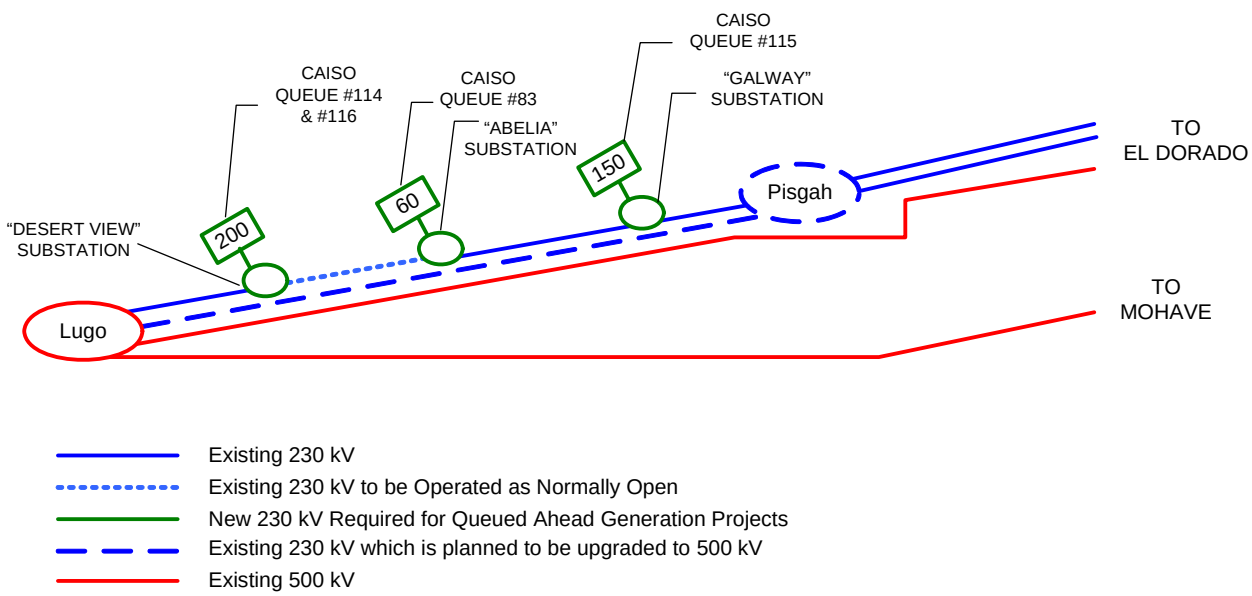

In addition to the above three new substations, the line segment of the existing Lugo-Pisgah No.1 230 kV (northern circuit) transmission line may be rebuilt as part of the removal of the existing Lugo-Pisgah No.1 230 kV and replacement with 500 kV. One of the alternatives for the 500 kV upgrade involves utilizing existing right-of-way between Lugo Substation and the Mojave River. To allow for use of existing right-of-way, the alternative would involve the removal of both single circuit 230 kV lines and replacement with one new double-circuit 500 kV transmission line, with one of the circuits initially energized at 230 kV and connected to the remainder of the Lugo-Pisgah No.2 230 kV transmission line east of the Mojave River. If this alternative is not selected, then the existing Lugo-Pisgah No.1 230 kV transmission line will remain as is. As part of this ISIS, no upgrades were assumed on the existing Lugo-Pisgah No.1 230 kV transmission line.

LUGO TO CONTROL CORRIDOR

System Impact Studies and Technical Assessments have been performed for five queued ahead projects that have requested interconnection to transmission facilities north of Lugo (injecting power into the Victor and Control Substations). Results of these studies identified the need for a number of facility upgrades. These upgrades involved the following:

- Replacement of the existing 115 kV phase-shift transformer located at Inyo Substation with a greater phase-angle transformer.
- Construction of a new 230 kV transmission line between the Lugo Substation and Victor Substation (approximately 10-12 miles).
- Installation of third 500/230 kV transformer bank at Lugo Substation.
- Installation of appropriate fully redundant and diverse telecommunication facilities to support modification to existing special protection systems (Bishop, HDPP and Kramer SPS).

E. Existing Special Protection Systems

The SCE North of Lugo transmission system is equipped with three existing special protection systems to mitigate existing reliability issues under specific outage conditions. The addition of the HLSP Project may necessitate the need to upgrade some of these existing special protection systems, mainly the High Desert Power Project SPS and the Kramer SPS.

HIGH DESERT POWER PROJECT SPS

This SPS is designed to prevent transmission line or transformer bank overloads, as well as system instability. These problems could occur during high generation conditions under certain transmission component outages. The following outlines the outages that can result in the potential operation of the HDPP SPS:

Single Outages

1. Loss of Lugo-Victor No.1 230 kV Transmission Line
2. Loss of Lugo-Victor No.2 230 kV Transmission Line
3. Loss of Lugo 500/230 No.1 Transformer Bank (AA-Bank)
4. Loss of Lugo 500/230 No.2 Transformer Bank (AA-Bank)

Double Outages

1. Loss of Lugo-Victor No.1 and No.2 230 kV Transmission Lines
2. Loss of Lugo 500/230 kV No.1 and No.2 Transformer Banks ("Safety Net")

Arming of the HDPP SPS is based on the Lugo-Victor No.1 and No.2 230 kV line flows, as well as the Lugo AA-Bank flows. The "Safety Net" is armed based on the sum flows of the two Lugo AA-Banks. Adding generation north of Lugo may result in changes to existing line

flows and may adversely affect the current arming levels. In addition to tripping generation under outage conditions, SCE System Operating Bulletin No.283 allows for curtailment of generation in the Victor Area when the SPS is inoperative.

KRAMER SPS

The Kramer SPS is designed to prevent transmission line or transformer bank overloads, as well as system instability in the Kramer Junction area. These problems could occur during high generation conditions under certain transmission component outages. The following outlines the outages that can result in the potential operation of the Kramer SPS:

Single Outages

1. Loss of Kramer-Inyokern-Randsburg No.1 115 kV Line
2. Loss of Kramer-Lugo No.1 230 kV Transmission Line
3. Loss of Kramer-Lugo No.2 230 kV Transmission Line

Double Outages

1. Loss of both Kramer-Lugo No.1 and No.2 230 kV Transmission Lines
2. Loss of both Lugo 500/230 kV No.1 and No.2 Transformer Banks (Safety Net)

In addition to tripping generation under outage conditions, SCE System Operating Bulletin No.209 allows for curtailment of generation in the Inyokern Area when the 115 kV portion of the SPS is inoperative. SCE System Operating Bulletin No.209 also allows for curtailment of generation in the Kramer area when the 230 kV portion of the SPS is inoperative.

Arming of the 115 kV Kramer SPS portion is based on Kramer-Inyokern-Randsburg No.3 115 kV line flow, while arming of the 230 kV Kramer SPS portion is based on Kramer-Lugo No.1 and No.2 230 kV line flows. The "Safety Net" is armed based on the sum flows of the two Lugo AA-Banks. Adding generation north of Lugo may result in changes to existing line flows and may adversely affect the current arming levels.

F. Power Flow Study

The HLSP Project ISIS considered two power flow study scenarios. Each case was derived from the most current CAISO Transmission Expansion Plan Study base cases. Further description of the case assumptions are provided below and are summarized in Table 1-8:

a). SCE System with a 2013 Heavy Summer load forecast and all generation projects in queue ahead of the HLSP Project and associated upgrades if known, Case 1.

The study considered heavy load conditions with generation patterns and Path 46 imports dispatched in a manner that would stress the SCE system in the area of the interconnection of the HLSP Project. This was done in order to identify the extent of potential congestion. Generation in the area included regulatory must-take, all other existing generation in the North and East of Lugo areas, and all proposed generation

projects in queue ahead of the HLSP Project.

b). SCE System with a 2013 Heavy Summer load forecast and all generation projects in queue ahead of the HLSP Project and associated upgrades, if known, and the inclusion of the HLSP Project, Case 2.

Case 1 modified to include the HLSP Project with a net generation of 250 MW.

c). SCE System with a 2013 Light Spring load forecast and all generation projects in queue ahead of the HLSP Project and associated upgrades if known, Case 3

The study considered light load conditions with generation patterns and Path 46 imports dispatched in a manner that would stress the SCE system in the area of the interconnection of the HLSP Project. This was done in order to identify the extent of potential congestion. Generation in the area included regulatory must-take, all other existing generation in the North and East of Lugo areas, and all proposed generation projects in queue ahead of the HLSP Project.

d). SCE System with a 2013 Light Spring load forecast and all generation projects in queue ahead of the HLSP Project and associated upgrades, if known, and the inclusion of the HLSP Project, Case 4

Case 3 modified to include the HLSP Project with a net generation of 250 MW.

In addition to these base cases, a few sensitivity cases were examined to adequately identify the extent of potential congestion amounts by the proposed in-service date of January 1, 2010.

TABLE 1-8
POWER FLOW STUDY ASSUMPTIONS (MW)

	2013 Heavy Summer		2013 Light Spring	
Area Assumptions	Case 1 Pre-Project	Case 2 Post-Project	Case 3 Pre-Project	Case 4 Post-Project
Generation	21,513	21,535	11,518	11,551
Import	7,142	7,144	7,482	7,482
Load	27,996	27,996	18,456	18,456
Losses	659	684	543	577
Path Flows and Area Imports				
East-of-River (Path 49)	5,167	5,165	5,851	5,852
West-of-River (Path 46)	7,667	7,667	8,136	8,139
Midway-Vincent (Path 26)	1,140	1,146	800	816
South of Kramer	832	1,022	900	1,108
Local Lugo Area (230 kV)	2,187	2,403	2,209	2,425
Lugo Area Export (500 kV)	7,714	7,844	7,469	7,637
South of Lugo	6,192	6,227	5,357	5,478
Mira Loma Area Import	6,558	6,572	5,426	5,553
So. California Import Transfer	14,147	14,367	14,340	14,297

G. Transient Stability Study

For transient stability evaluation, three-phase-to-ground faults with normal clearing are studied for single contingencies; single-line-to-ground faults with delayed clearing are studied for double contingencies according to NERC/WECC planning criteria. The evaluation was conducted for the critical single and double contingencies affecting the area of interest listed below in Table 1-9. All outage cases were evaluated with the assumption that existing SPS would operate as designed where required. Tripping of the HLSP Project will be included if stability studies indicate that an SPS for the HLSP Project is required. Study results were evaluated utilizing the applicable planning criteria as summarized in Table 1-10.

TABLE 1-9
TRANSIENT STABILITY CRITICAL STUDY CASES

Bus Fault Location		Fault Type	Fault Duration	Outage	SPS
Substation	**Voltage**				
Lugo	500 kV	3θ	4 cycles	Lugo-Rancho Vista 500 kV T/L	
Lugo	500 kV	3θ	4 cycles	Lugo-Mira Loma No.2 500 kV T/L	
Lugo	500 kV	3θ	4 cycles	Lugo-Vincent No.1 500 kV T/L	
Lugo	500 kV	3θ	4 cycles	Lugo-Victorville 500 kV	
Lugo	500 kV	3θ	4 cycles	Lugo-Pisgah No.1 500 kV T/L	
Victor	230 kV	3θ	6 cycles	Victor-Caldwell 230 kV T/L	
Kramer	230 kV	3θ	6 cycles	Kramer-Lugo No.1 230 kV T/L	Kramer
Lugo	230 kV	3θ	6 cycles	Lugo-Victor No.1 230 kV T/L	
Desert View	230 kV	3θ	6 cycles	Lugo-Desert View 230 kV T/L	
Kramer	115 kV	3θ	7 cycles	Kramer-Victor 115 kV Line	
Lugo	500 kV	1θ	12 cycles	Lugo-Mira Loma No.2 and No.3 500 kV T/Ls	
Lugo	500 kV	1θ	12 cycles	Lugo-Vincent No.1 and No.2 500 kV T/Ls	
Lugo	500 kV	1θ	12 cycles	Lugo-Pisgah No.1 and No.2 500 kV T/Ls	Other
Kramer	230 kV	1θ	12 cycles	Kramer-Lugo No.1 and No.2 230 kV T/Ls	Kramer
Lugo	230 kV	1θ	12 cycles	Lugo-Victor No.1 and No.2 230 kV T/Ls	HDPP
Kramer	115 kV	1θ	7 cycles	Kramer-Victor 115 kV and Kramer-Roadway-Victor 115 kV Lines	
Lugo	500 kV	1θ	12 cycles	Lugo-Victorville 500 kV	

Table 1-10
WECC DISTURBANCE-PERFORMANCE TABLE OF ALLOWABLE EFFECTS ON OTHER SYSTEMS
(in addition to NERC requirements)

NERC and WECC Categories	Outage Frequency Associated with the Performance Category (Outage/Year)	Transient Voltage Dip Standard	Minimum Transient Frequency Standard	Post-Transient Voltage Deviation Standard (See Note 2)
A	Not Applicable	Nothing in Addition to NERC		
B	≥ 0.33	Not to exceed **25%** at load buses or **30%** at non-load buses. Not to exceed **20% for more than 20 cycles** at load buses.	Not below **59.6 Hz** for 6 cycles or more at a load bus	Not to exceed **5%** at any bus
C	0.033 – 0.33	Not to exceed 30% at any bus. Not to exceed **20% for more than 40 cycles** at load buses.	Not below **59.0 Hz** for 6 cycles or more at a load bus	Not to exceed **10%** at any bus
D	< 0.033	Nothing in Addition to NERC		

Note 2: As an example in applying the WECC Disturbance-Performance Table, Category B disturbance in one system shall not cause a transient voltage dip in another system that is greater than 20% for more than 20 cycles at load buses, or exceed 25% at load buses or 30% at non-load buses at any time other than during the fault.

H. Post-Transient Voltage Study

The power flow study voltage results were used as a screen to identify those contingencies that may require additional post-transient voltage studies. Single and double contingencies identified in the power flow to have a voltage drop in excess of 5% were selected for post-transient voltage analysis. The Post-transient voltage studies compare voltage deviations to the NERC/WECC/CAISO reliability requirements including the SCE guidelines of 7% for single contingency outages and 10% for double contingency outages, and identify those outages which result in a criteria violation. Mitigation measures will be recommended for any criteria violation identified.

I. Short-Circuit Duty Study

To determine the impact on short-circuit duty, within SCE's electrical system, after inclusion of the HLSP Project, the study calculated the maximum symmetrical three-phase-to-ground short-circuit duties. Generator and transformer data represented in the generator and transformer data sheets provided by the customer were utilized. Bus locations where short-circuit duty was increased with the proposed HLSP Project by at least 0.1 kA and the duty was in excess of 60% of the minimum breaker nameplate rating were flagged for further review. Upon completion of the detailed circuit breaker review, circuit breakers exposed to

fault currents in excess of 100 percent of their interrupting capacities will need to be replaced or upgraded, whichever is appropriate. It should be noted that other WECC entities may request specific information within the WECC process to evaluate potential impact to their respective systems for this project addition.

J. Deliverability Assessment

In accordance with LGIP sections 3.3.2 and 3.3.3, a Deliverability Assessment was performed to determine the qualified capacity of the Project from a Resource Adequacy perspective. The study focused on the ability of the system to accommodate the output of the Project to the aggregate of load under the conditions when resources are needed the most, such as during summer peak conditions when resource shortage is more likely to occur. For more details regarding Deliverability Assessment, including the methodology and modeling requirements for the deliverability base case, please refer to the following CAISO website link: http://www.caiso.com/1c44/1c44b5c31cce0.html.

As required by the LGIP, deliverability assessment results need to provide the following information for this Project regarding its level of deliverability:

- The amount of capacity that can be deemed deliverable without additional upgrade(s).
- The upgrade(s) needed for this project to be deemed fully deliverable.

Please note that upgrades identified through this deliverability assessment (Delivery Network Upgrades) are discretional upgrades implemented for those customers who want their project to be fully deliverable. Generation projects may proceed to interconnect to the CAISO Controlled Grid without Delivery Network Upgrades provided that all the required Reliability Network Upgrades have been implemented. However, a developer's decision to interconnect without the identified Delivery Network Upgrade(s) could result in the project losing its eligibility to receive capacity payments, as allowed under the CPUC Resource Adequacy program.

K. Cost Estimates

Non-binding cost estimates will be derived for the "phased" portion of the facility upgrades identified as needed to reliably interconnect the HLSP Project to the grid. These estimates will be developed without the benefit of:

- Detailed substation site review,
- Detailed right-of-way review,
- Detailed telecommunication facility review,
- Detailed system protection review,
- Detailed weather studies,
- Detailed environmental assessments, and
- Preliminary engineering

These limitations could affect the scope of facilities, the phasing of the identified facilities, the cost, and the viability of the mitigation plans identified in this study.

L. Timelines for Implementing Facility Upgrades

Timelines for the completion of facility upgrades to accommodate new projects are based on a number of factors. For the most part, the driving factors include the following:

- Time requirements to prepare the Proponents Environmental Assessment (PEA) in support of an application for a Certificate of Public Convenience and Necessity (CPCN) or Permit to Construct (PTC)
- CPCN or PTC Application review and approval process (by State and Federal Agencies)
- Estimated material acquisition lead times
- Construction of facilities

III. GENERATOR ELECTRIC GRID FAULT RIDE-THROUGH CAPABILITY CRITERIA AND POWER FACTOR CRITERIA

WECC has adopted a Generator Electrical Grid Fault Ride-Through Capability Criteria. SCE currently supports a Low Voltage Ride-Through Criteria to ensure continued reliable service. The Criteria is summarized as follows:

1. Generator is to remain in-service during system faults (three phase faults with normal clearing and single-line-to-ground with delayed clearing) unless clearing the fault effectively disconnects the generator from the system.

2. During the transient period, a generator is required to remain in-service for the low voltage and frequency excursions specified in WECC Table W-1 as applied to the load bus constraint. These performance criteria are applied to the generator interconnection point, not to the generator terminals.

3. Generators may be tripped after the fault period if this action is intended as part of a SPS.

4. This Standard will not apply to individual units or to a site where the sum of the installed capabilities of all machines is less than 10 MVA, unless it can be proven that reliability concerns exist.

5. The performance criteria of this Standard may be satisfied with performance of the generators or by installing equipment to satisfy the performance criteria.

6. The performance criterion of this Standard applies to any generation independent of the interconnected voltage level.

7. No exemption from this Standard will be given because of minor impact to the interconnected system.

8. Existing generators that go through any refurbishments or any replacements are then required to meet this Standard.

IV. STUDY RESULTS

A. Power Flow Analysis

The study focused on identifying system thermal overload problems within SCE's service territory and electrical system.

Pre-Project Conditions

Previous studies for higher queued projects have identified significant thermal overloads and voltage depression in the Lugo and Pisgah areas. The base cases would not solve when all the higher queued projects were modeled without the corresponding system upgrades, due to system voltages being severely depressed to the point of collapsing. Not dispatching queued ahead projects with requested in-service dates later than 2010 resulted in solved base cases with thermal overloads on the following set of existing transmission facilities:

- Lugo-Pisgah No.1 and No.2 230 kV transmission lines
- Lugo-Victor No.1 and No.2 230 kV transmission lines
- Lugo 500/230 kV No.1 and No.2 transformer banks

The addition of the HLSP Project would aggravate overloads on the Lugo 500/230 kV transformer banks, as well as overloads on the two Lugo-Victor 230 kV transmission lines. Therefore, the system can not accommodate the addition of the HLSP Project without the system upgrades identified for the higher-queued projects.

Base Case Conditions

To determine whether additional facilities would be needed to support the HLSP Project, the system upgrades in the Lugo and Pisgah areas, as listed in Section II.D, were modeled. In addition, in order to provide acceptable base cases which would properly solve, some higher queued projects that would inject power directly into the 500 kV bulk power system at the Eldorado, Mohave, and Pisgah (proposed) 500 kV Substations were not dispatched in the study as indicated in Table 1-1.

With the above assumptions made and the proposed system upgrades in place, the studies identified that the addition of the HLSP Project triggers new base case overloads under both summer and spring load conditions as summarized below in Table 2-1, and illustrated in Figure 2-1 through Figure 2-4.

Table 2-1
Base Case Thermal Overloads with All Prior Triggered Upgrades Included

Overloaded Facility	Rating	Summer		Spring	
		Pre	Post	Pre	Post
Kramer-Lugo No.1 230 kV T/L	494 MVA 1240 Amps	85.4%	**106.5%**	97.2%	**118.7%**
Kramer-Lugo No.2 230 kV T/L	494 MVA 1240 Amps	85.4%	**106.5%**	97.2%	**118.7%**

Figure 2-1
Summer Power Flow Plot
Pre-Project with Reliability Upgrades for Queued Ahead Projects Modeled

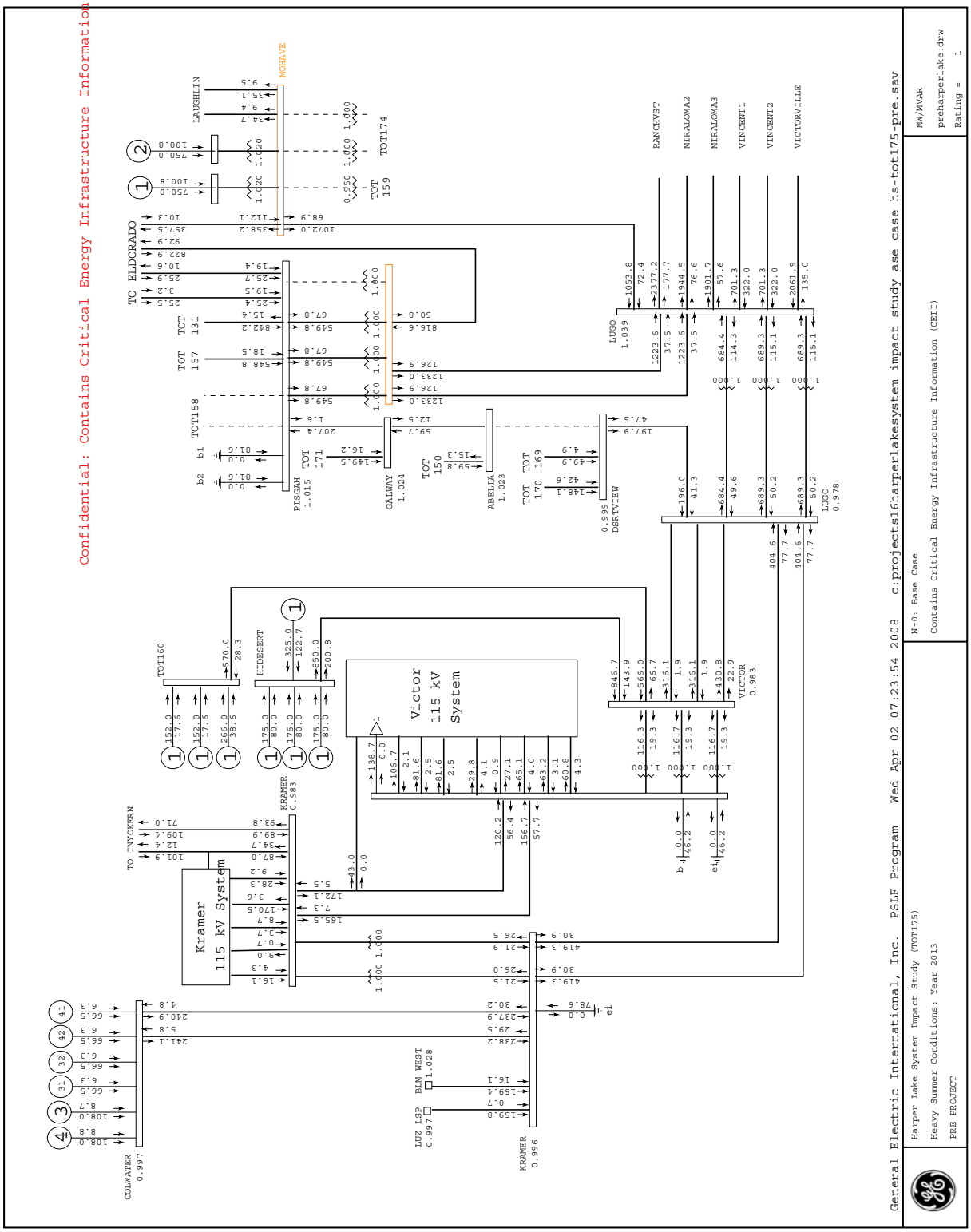

Figure 2-2
Summer Power Flow Plot
Post-Project with Reliability Upgrades for Queued Ahead Projects Modeled

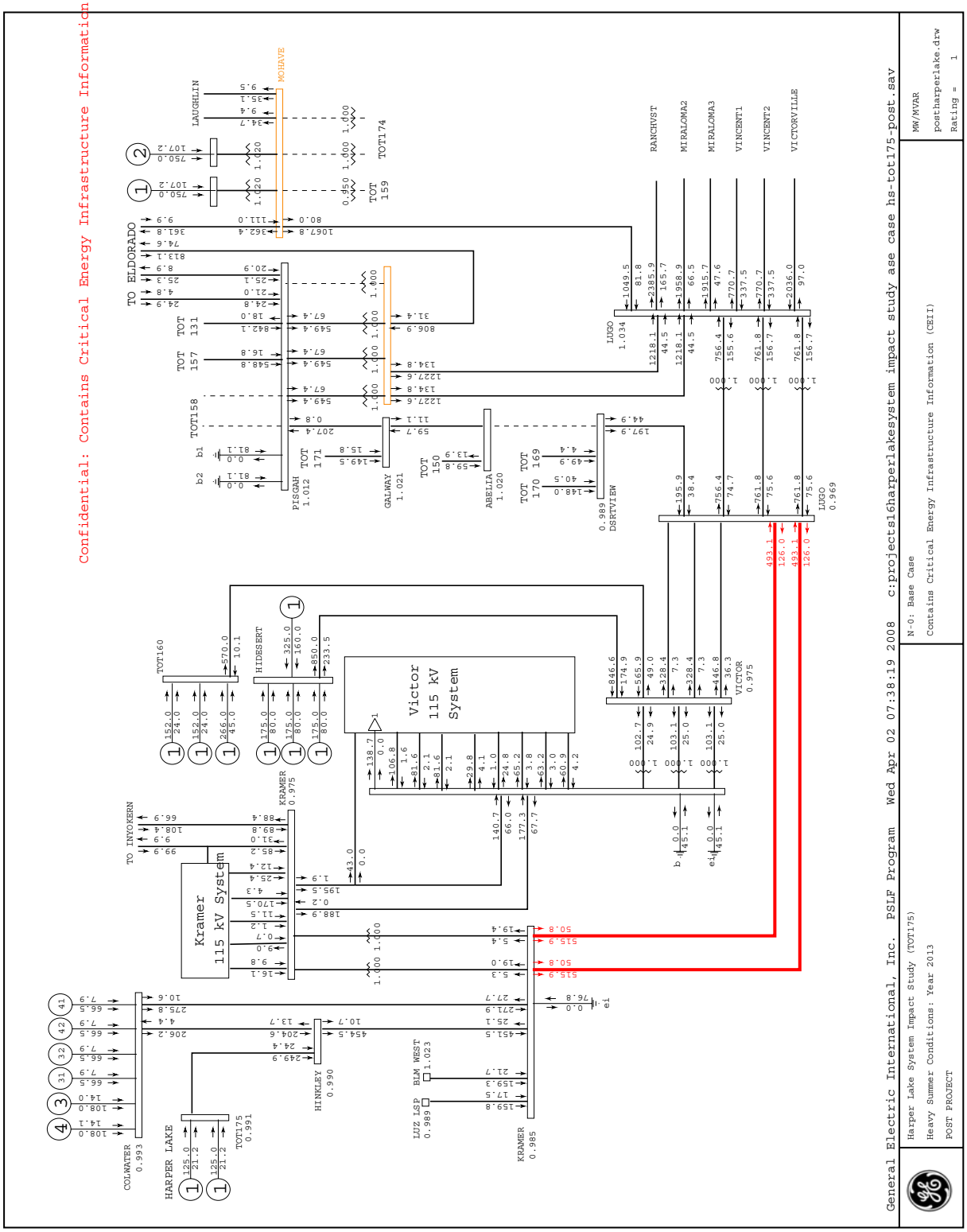

Figure 2-3
Spring Power Flow Plot
Pre-Project with Reliability Upgrades for Queued Ahead Projects Modeled

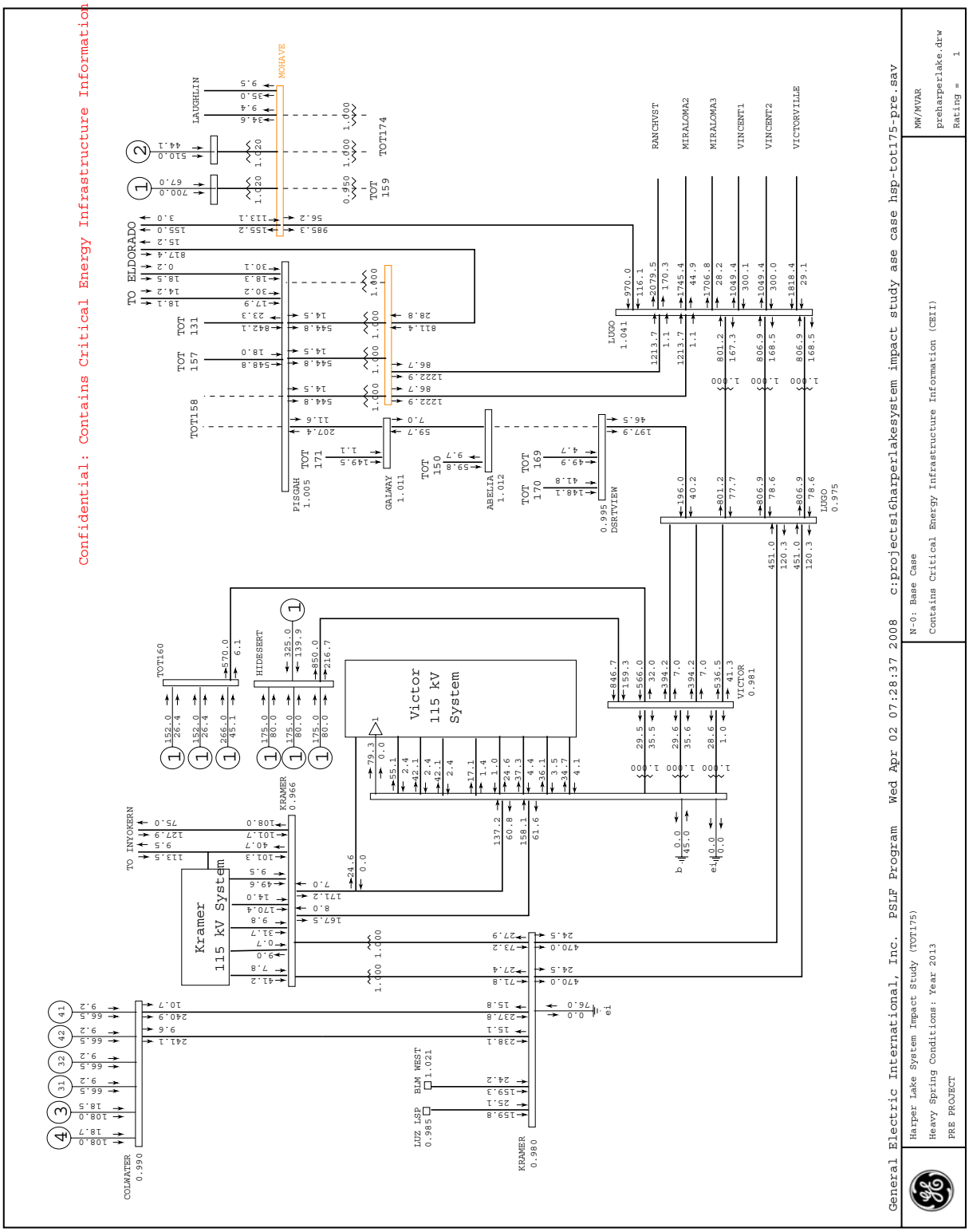

Figure 2-4
Spring Power Flow Plot
Post-Project with All Upgrades for Queued Ahead Projects Modeled

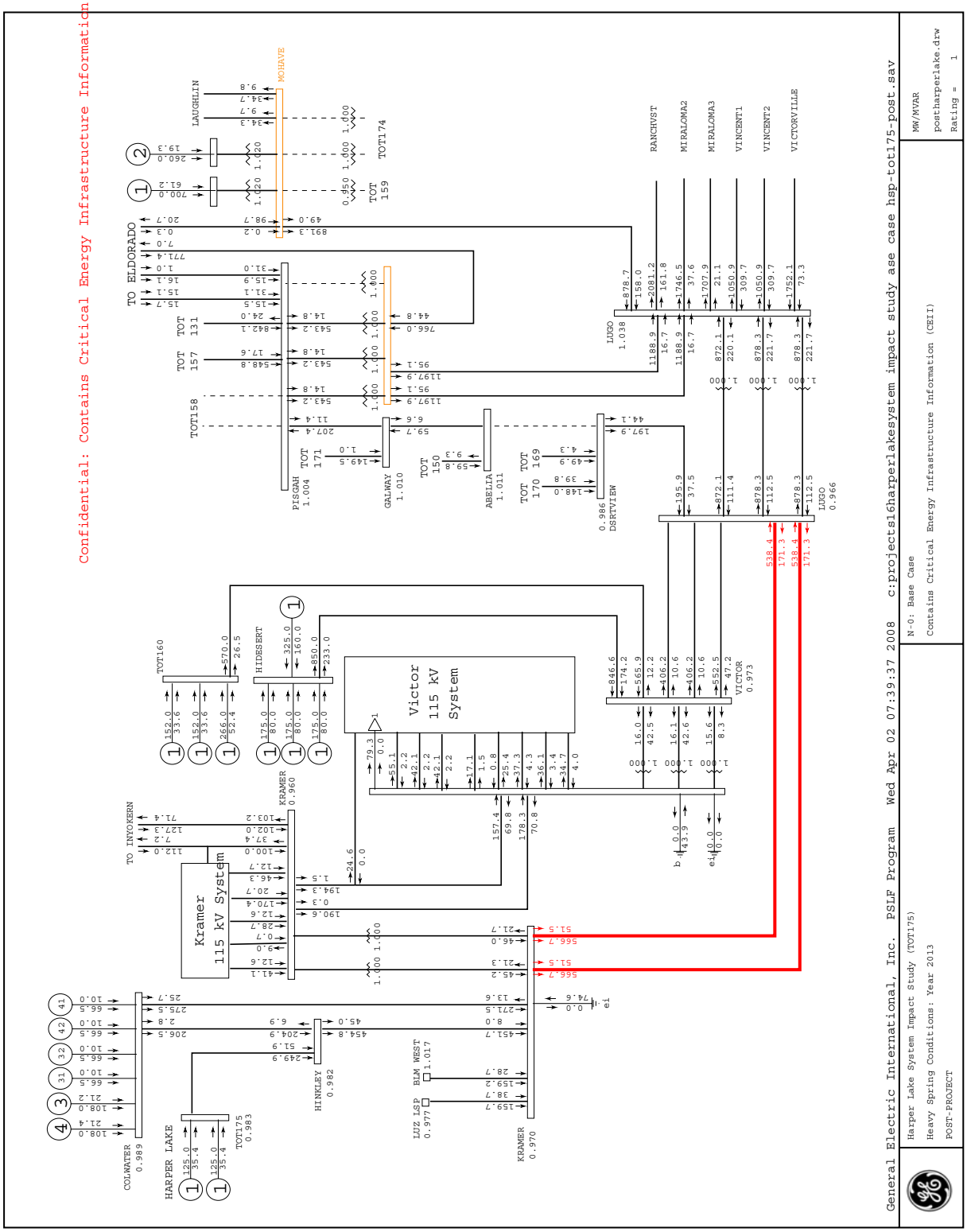

Based on these study results, the addition of the transmission upgrades needed to mitigate all prior queued overloads does not provide sufficient transmission capability south of Kramer to accommodate the addition of the HLSP Project. Therefore, the addition of the HLSP Project ***triggers the need for additional South of Kramer transmission capability*** under both summer and spring load conditions. Because pre-project loadings under spring load conditions are already near their maximum level, the full HLSP Project could be subject to potential congestion management if additional upgrades, beyond those identified to mitigate the pre-project overloads, are not implemented.

To mitigate the identified base case overload without implementing congestion management, additional transmission would be required to support increased south of Kramer flows. This additional transmission can be accomplished by one of the following two methods:

- Constructing a new double-circuit 230 kV transmission line with one initial circuit between Kramer and Lugo **or**

- Constructing a new double-circuit 230 kV transmission line with one initial circuit between the existing Cool Water 230 kV Substation and the new Desert View 230 kV Substation[9].

Housing development in the Victorville and Lugo Substation (City of Hesperia) surrounding areas will make the first alternative extremely difficult to locate along existing right-of-way and terminate into the Lugo Substation. The second alternative will increase system reliability due to the added geographic diversity (different corridor) and avoid the possibility of adverse impacts to residential and commercial development. In addition, the second alternative is estimated to require approximately 37 miles of new right-of-way, whereas the first alternative is estimated to require approximately 48 miles of new right-of-way. Lastly, the second alternative addresses the need for additional transmission for renewable resources queued behind the HLSP Project that are located in the Cool Water Substation area.

The second alternative is the best option to pursue because it provides a transmission solution that addresses the generation needs in the area, avoids short-lived "piece-meal" solutions, minimizes environmental impacts, minimizes the overall cost exposure to rate-payers, minimizes service interruptions, minimizes the need for generation curtailments while upgrades are implemented, improves overall system reliability and provides the minimum set of facilities for the HLSP Project, thus minimizing upfront cost responsibility. Base case power flow plots with the inclusion of the second alternative are illustrated in Figure 2-5 and Figure 2-6 for summer and spring load conditions respectively.

[9] Upgrade to the Lugo-Desert View 230 kV transmission line with 500 kV design construction standard, but initially energized at 230 kV, was assumed to be undertaken as part of the Lugo-Pisgah 500 kV upgrade triggered by a queued ahead generation project.

Figure 2-5
Summer Power Flow Plot
Post-Project with Additional Transmission Modeled to Increase South of Kramer

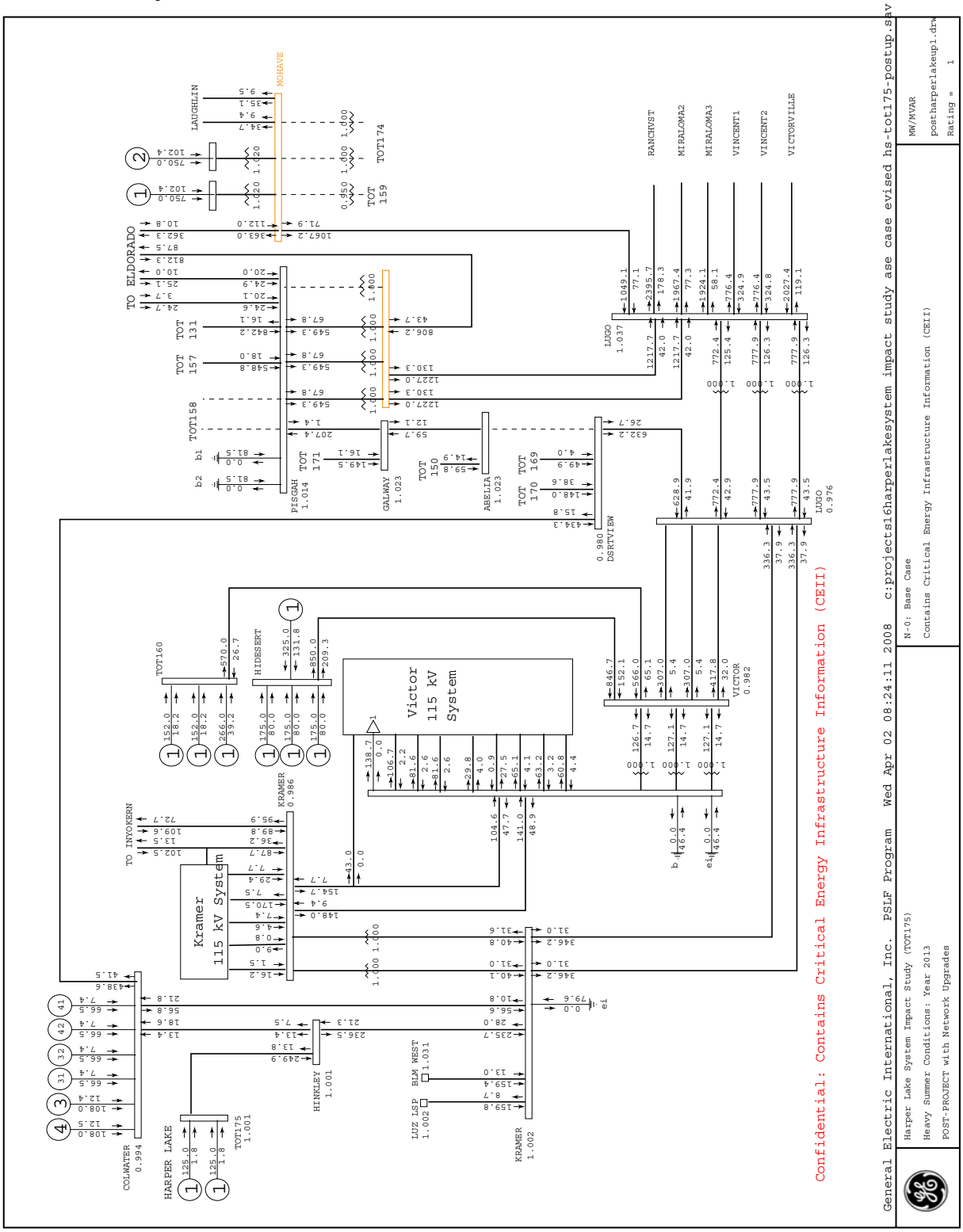

Figure 2-6
Spring Power Flow Plot
Post-Project with Additional Transmission Modeled to Increase South of Kramer

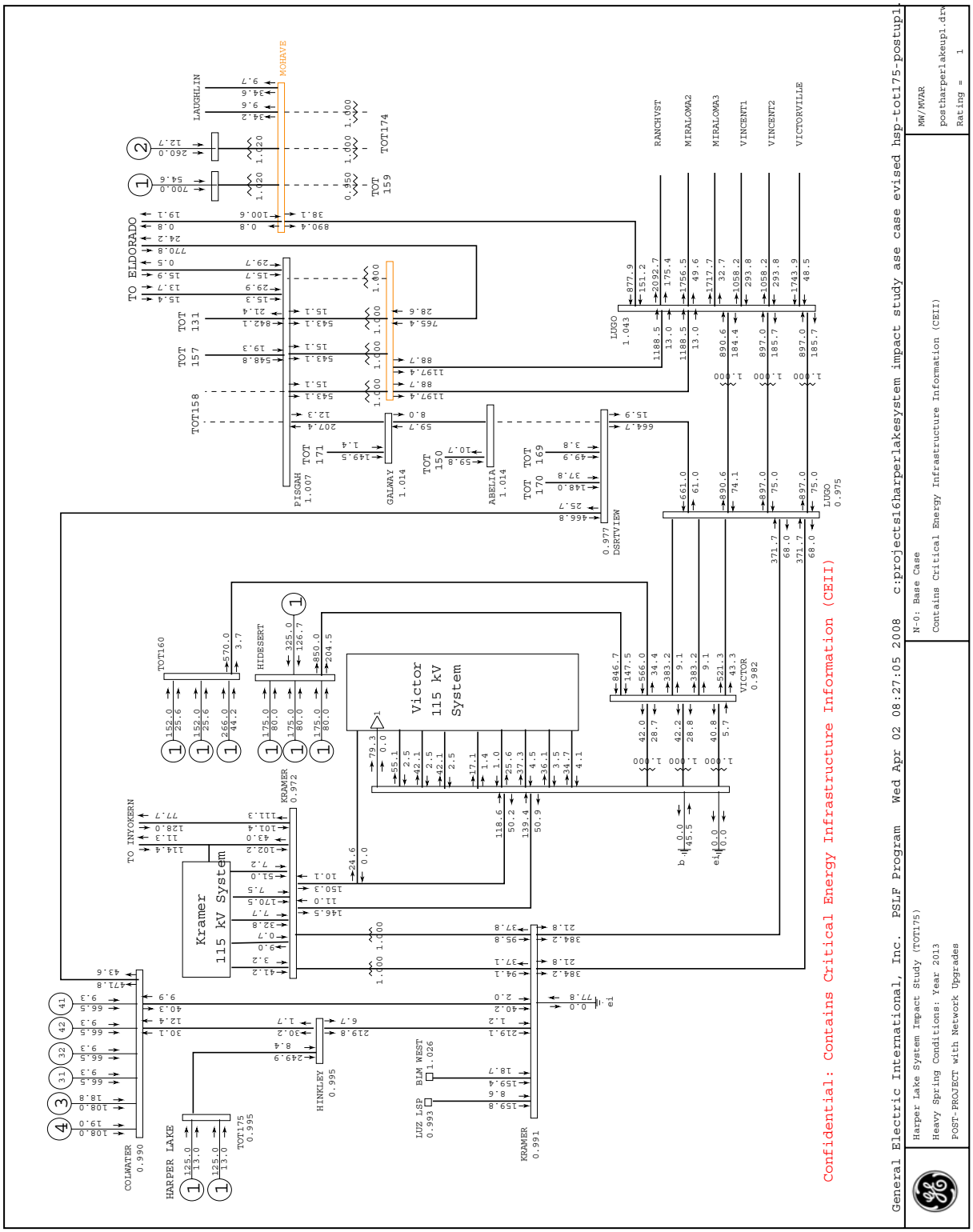

Single Contingency Outage Conditions (N-1)

As discussed above in Section II.E, the existing system already has an SPS in place which arms local Kramer area generation and trips under the specific transmission line outages shown below in Table 2-2.

Table 2-2
Existing Kramer SPS and Arming Thresholds

	South of Kramer Flow Arming Level	Amount of Generation Armed
Lugo-Kramer No.1 **or** No.2 230 kV transmission line	650 – 950 MW	Up to 480 MW
Lugo-Kramer No.1 **and** No.2 230 kV transmission lines	250 – 950 MW	Up to 810 MW

Because the addition of the HLSP Project results in increasing flows on these transmission facilities and the existing SPS are in place to maintain system reliability, the HLSP Project will need to participate in the Kramer SPS (loss of Lugo-Kramer No.1 or No.2 transmission lines) if additional transmission upgrades beyond those identified to mitigate the pre-project overloads are not implemented.

In addition to the transmission line outages above, the existing system also has in place two SPSs which arm and trip local Kramer and Victor area generation under the loss of one or both existing Lugo 500/230 kV transformer banks as shown below in Table 2-3.

Table 2-3
Existing HDPP and Kramer SPS Lugo AA-Bank Arming Thresholds

	Lugo AA-Bank Flow Arming Level	Amount of Generation Armed
Lugo No.1 **or** No.2 500/230 kV transformer bank	650 – 950 MW	Up to 480 MW
Lugo No.1 **and** No.2 500/230 kV transformer banks	1250 – 2050 MW	Up to 1,660 MW

Because a third transformer bank is proposed to be added to support a queued ahead generation project, the installation of the third transformer bank will provide for an additional 1120 MVA capability under base case conditions and 1230 MVA under a single bank outage contingency. The total MW additions, up to and including the HLSP Project, is 1,020 MW, which is less than the added capability of the third transformer bank. Consequently, continued reliance on the existing HDPP SPS and Kramer SPS to trip existing generation units which are currently participating in each SPS is recommended.

With the additional upgrades identified for mitigating the HLSP Project triggered base case thermal overloads, the study identified two single contingency outages which would require the need for the HLSP Project to participate in a new SPS. Under the loss of the Lugo-Desert View 230 kV transmission line, the generation that was connected in a radial manner to the

Desert View Substation (CAISO #114 and CAISO #116) would be transmitted north to the Cool Water Substation, where it would then head west to the Kramer Substation, and ultimately together with the HLSP Project, head south to the Lugo Substation overloading the Kramer-Lugo No.1 and No.2 230 kV transmission lines. Under the loss of the Cool Water-Desert View 230 kV transmission line, the generation of the HLSP Project would be transmitted south to Lugo overloading the existing Kramer-Lugo No.1 and No.2 230 kV transmission lines. Results of this outage are summarized below in Table 2-4, and illustrated in Figure 2-7 through Figure 2-10.

Table 2-4
Single Contingency Overload
All Prior Triggered Upgrades and HLSP Project Upgrades Included

Overloaded Facility	Rating	Summer		Spring	
		Pre	Post	Pre	Post
Kramer-Lugo No.1 and No.2 230 kV T/Ls Loss of Cool Water-Desert View 230 kV	1240 Amps (N) 1425 Amps (E)	N/A	106.5% 92.3%	N/A	118.7% 102.9%
Kramer-Lugo No.1 and No.2 230 kV T/Ls Loss of Lugo-Desert View 230 kV	1240 Amps (N) 1425 Amps (E)	N/A	124.0% 107.4%	N/A	136.4% 118.3%

Figure 2-7
Summer Power Flow Plot
Post-Project with Additional Upgrades for the HLSP Project Modeled
(Loss of Cool Water-Desert View 230 kV T/L)

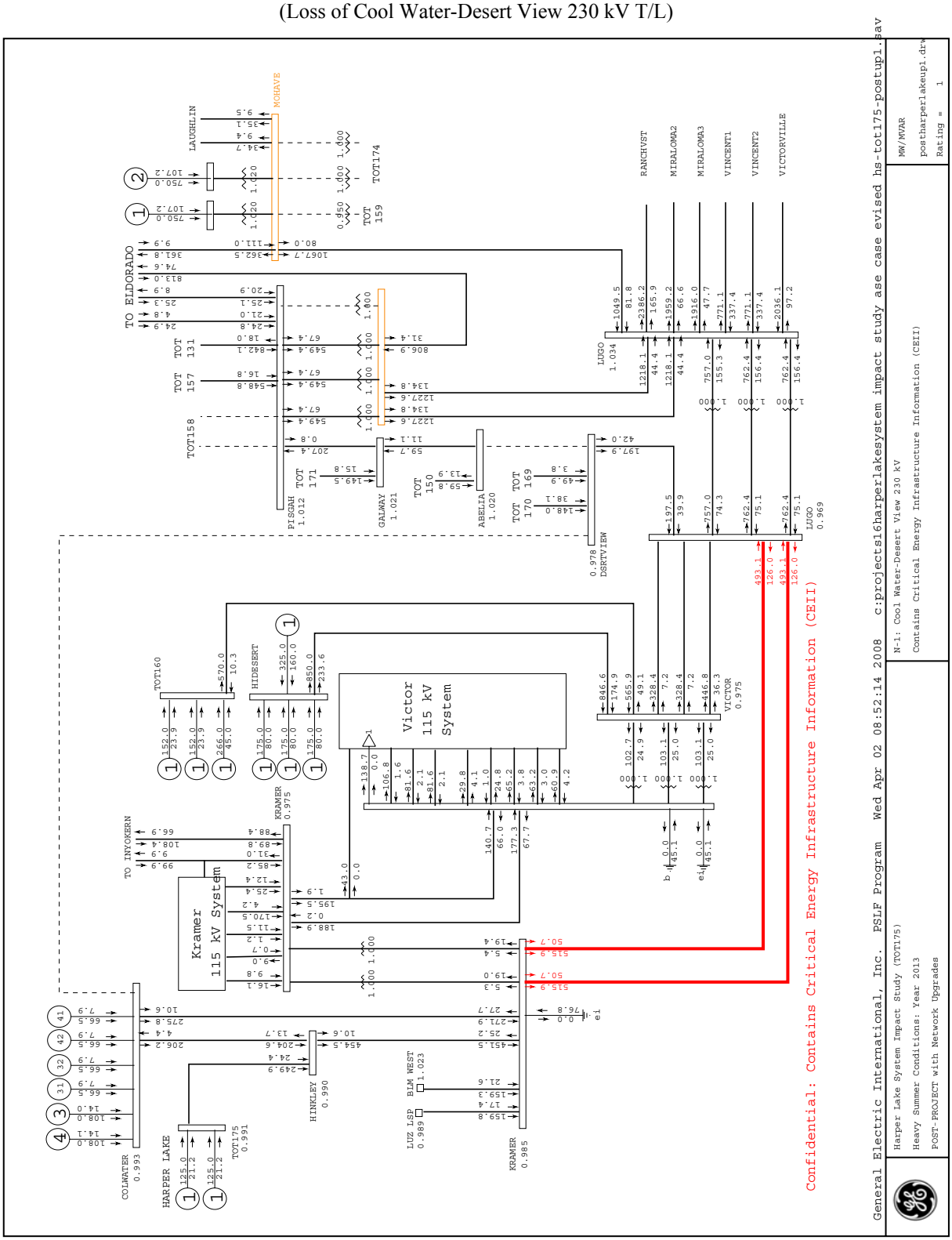

Figure 2-8
Spring Power Flow Plot
Post-Project with Additional Upgrades for the HLSP Project Modeled
(Loss of Cool Water-Desert View 230 kV T/L)

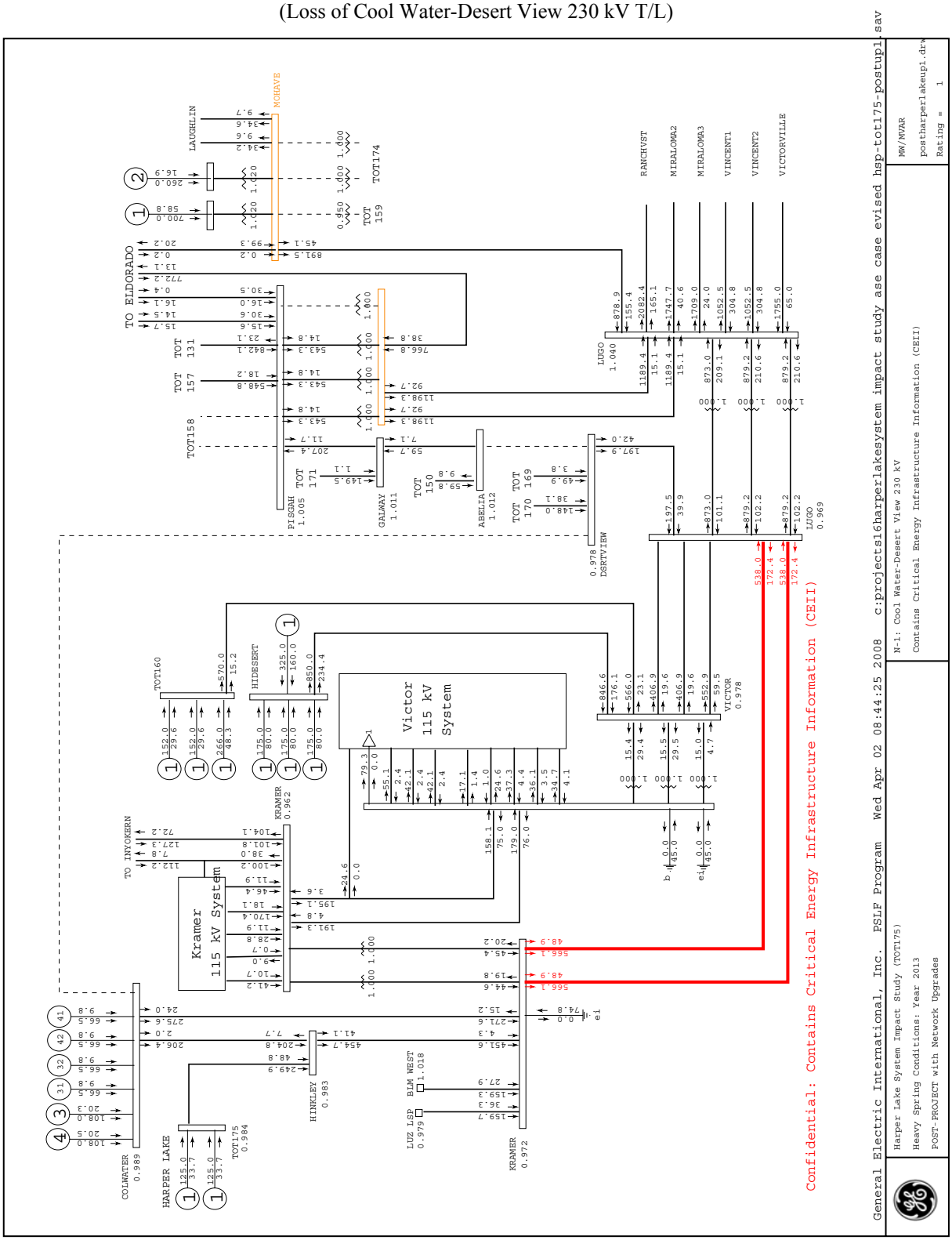

Figure 2-9
Summer Power Flow Plot
Post-Project with Additional Upgrades for the HLSP Project Modeled
(Loss of Lugo-Desert View 230 kV T/L)

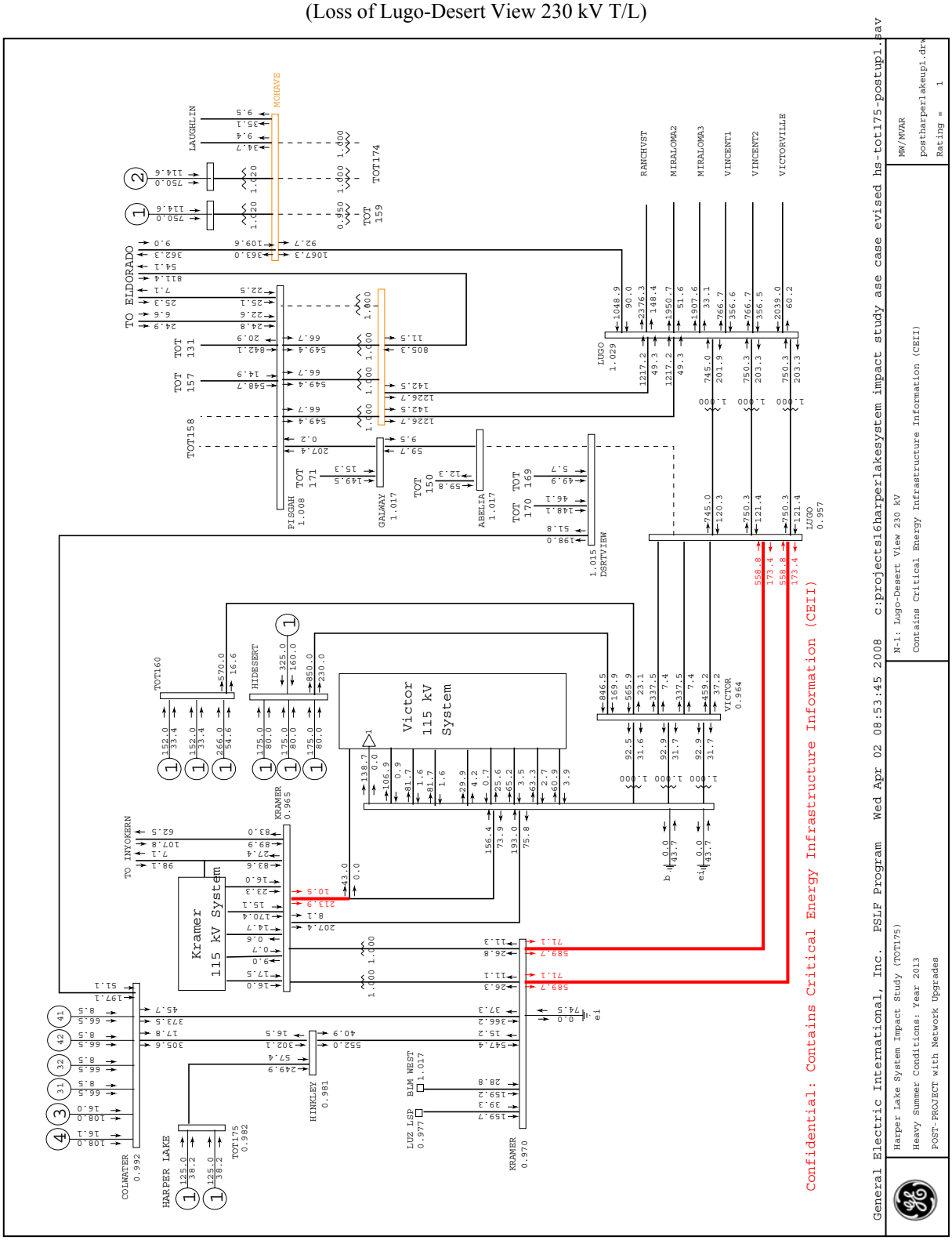

Figure 2-10
Spring Power Flow Plot
Post-Project with Additional Upgrades for the HLSP Project Modeled
(Loss of Lugo-Desert View 230 kV T/L)

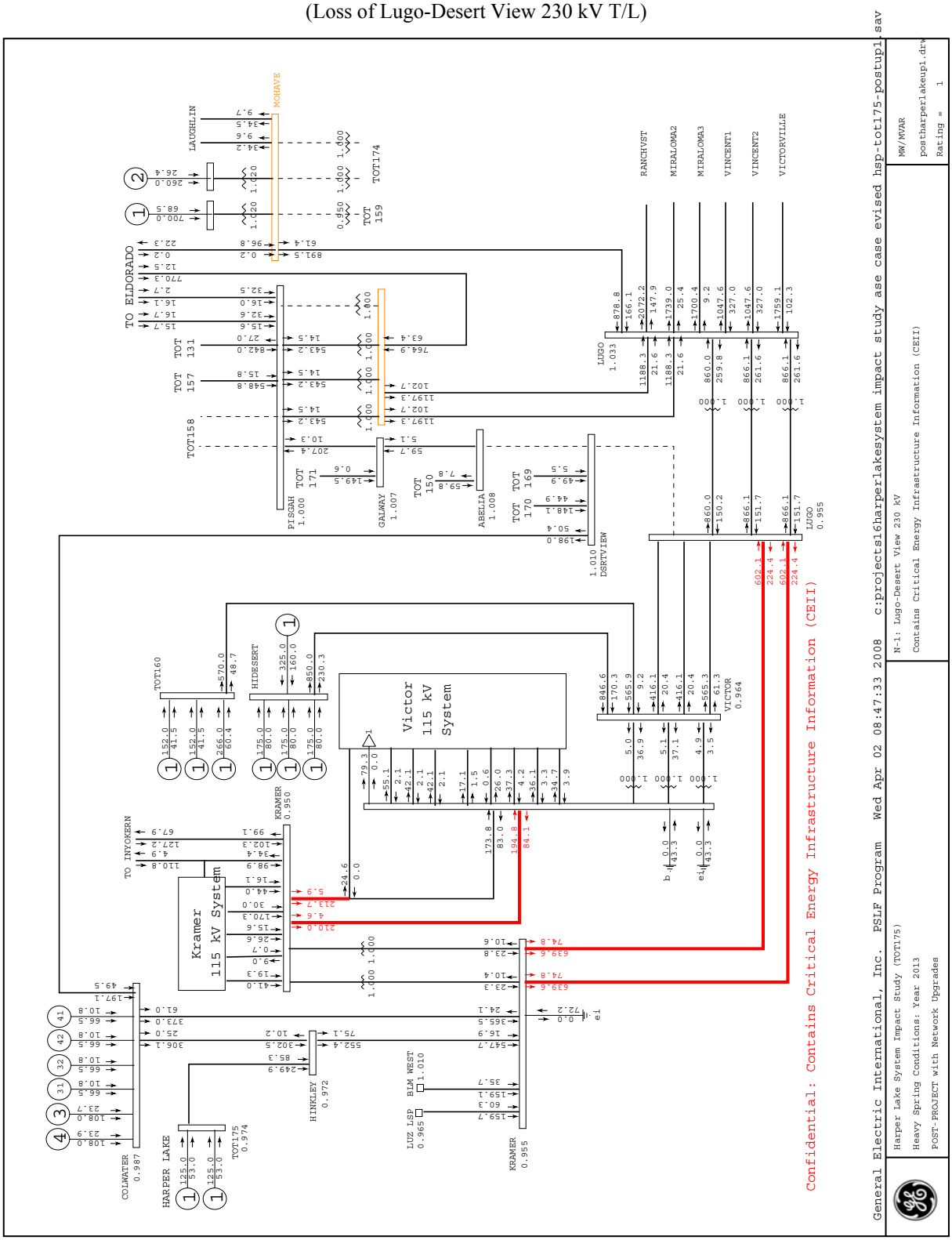

The following two mitigation alternatives are feasible to mitigate the thermal overload identified under the loss of the Cool Water-Desert View 230 kV transmission line:

- Install the second circuit on the double-circuit 230 kV transmission line between Cool Water and the new Desert View Substations.
- Implement an SPS to trip one of the two generation units at the HLSP.

An SPS is recommended to mitigate the thermal overload identified under outage of the Lugo-Desert View 230 kV transmission line. The SPS would need to transfer trip the generation tie-line circuit breakers connecting the two generation projects at Desert View, as well as trip one of the two generation units at the HLSP.

It should be noted that transfer tripping the two generation projects connecting to the Desert View Substation would not result in increasing outage exposure to these two projects because under the pre-project upgrade condition, these two projects would be tripped for the same outage, since they would be disconnected from the source (Lugo Substation) without a second source line.

Local Area Outage Conditions (N-2)

Similar to the discussion for single outage conditions, the HLSP Project will need to participate in the Kramer SPS (loss of both Lugo-Kramer No.1 and No.2 transmission lines) if additional transmission upgrades beyond those identified to mitigate the pre-project overloads are not implemented. With the additional upgrades identified for mitigating the HLSP Project triggered base case thermal overloads, the study did not identify any additional N-2 thermal overload problems.

System Wide Double Contingency Outage Conditions (N-2)

In addition to the local area double outage conditions identified above, the study determined that the total amount of Lugo Area generation export (through South of Lugo and Lugo-Vincent 500 kV transmission lines) is limited to approximately 7,800 MW. With the addition of more generation resources in the North and East of Lugo areas, the amount of excess generation requiring export will eventually exceed 7,800 MW. Consequently, additional transmission capacity will be required if the total amount of area export is to be increased. However, such requirement is not triggered solely by the addition of the HLSP Project. Therefore, this facility upgrade will be evaluated and recommended as part of a larger study effort in the area (either through the RETI study process or the annual CAISO Transmission Expansion Planning Process).

B. Transient Stability Analysis

Transient stability studies were performed for the outages specified in Table 1-9. The HLSP Project was found to satisfy the low-voltage ride-through requirements, but will need to participate in the Kramer SPS (loss of one or both Lugo-Kramer No.1 and No.2 transmission lines) if additional transmission upgrades beyond those identified to mitigate the pre-project overloads are not implemented.

With the additional upgrades identified for mitigating the base case thermal overloads triggered by the HLSP Project, the study identified transient stability problems under the following outage conditions:

- Single outage of the Lugo-Desert View 230 kV transmission line.
- Double outage of the Kramer-Lugo No.1 and No.2 230 kV transmission lines.

The study determined that with the addition of the Cool Water-Desert View 230 kV transmission line, the HLSP Project will not need to participate in the existing Kramer SPS for a double outage of the Kramer-Lugo No.1 and No.2 230 kV transmission lines. However, the study identified that the tripping requirements for mitigating transient stability problems under a single outage of the Lugo-Desert View 230 kV transmission line are more stringent than the tripping requirements for mitigating thermal overloads. Under this outage, the SPS should include tripping of the entire HLSP. Transient stability plots for summer and spring load conditions are provided in Appendix A and Appendix B respectively.

C. Post-Transient Stability Analysis

As discussed in the power flow section of the report, the addition of the HLSP Project did not trigger any new post-transient voltage criteria violations. However, the study determined that without the facility upgrades identified under base case conditions, the HLSP Project aggravates previously identified voltage problems, including case non-convergence, which are indicative of a potential voltage collapse condition.

These voltage problems are found to be mitigated with the implementation of the pre-project transmission upgrades identified for queued ahead generation projects.

D. Short Circuit Duty Study

The short-circuit duty analysis included all the queued ahead generation projects based on their application date, including the corresponding transmission upgrades identified to date. The short-circuit duty study results shown below in Table 2-5 and Table 2-6 present the impact attributed to the addition of the HLSP Project, while the results shown below in Table 2-7 and Table 2-8 present the incremental impact attributed to the addition of the upgrades identified to be triggered by the HLSP Project.

Table 2-5
Three Phase (3PH)
Short Circuit Duty Study Results
Addition of the HLSP Project Only

		Pre-Project		Post-Project		DELTA
Bus Name	Bus KV	X/R	KA	X/R	KA	KA
LUGO	500	23.0	51.5	22.9	51.6	0.1
MIRA LOMA	500	24.0	39.8	23.9	39.9	0.1
SERRANO	500	24.4	33.6	24.4	33.7	0.1
WHIRLWIND	500	17.3	29.8	17.3	29.9	0.1
CHINO	230	16.7	50.5	16.7	50.6	0.1
HINKLEY	230	15.3	9.2	20.6	12.7	3.5
KRAMER	230	14.7	16.2	15.8	18.3	2.1
LUGO	230	37.7	49.0	36.7	49.4	0.4
MIRALOMA (W)	230	19.7	53.0	19.7	53.1	0.1
SYLMAR S	230	19.1	59.5	19.1	59.6	0.1
VICTOR	230	19.0	33.6	18.8	33.8	0.2
INYOKERN	115	3.7	7.3	3.7	7.4	0.1
KRAMER	115	10.9	23.4	11.4	24.1	0.7
VICTOR	115	20.0	24.5	19.9	24.6	0.1

Table 2-6
Single Line to Ground (SLG)
Short Circuit Duty Study Results
Addition of the HLSP Project Only

		Pre-Project		Post-Project		DELTA
Bus Name	Bus KV	X/R	KA	X/R	KA	KA
LUGO	500	12.9	42.7	12.9	42.8	0.1
ETIWANDA	230	17.5	57.8	17.5	57.9	0.1
KRAMER	230	10.9	13.4	10.9	15.5	2.1
LUGO	230	25.0	51.1	24.7	51.4	0.3
MIRA LOMA (W)	230	11.6	63.9	11.6	64.0	0.1
VICTOR	230	12.7	30.6	12.6	30.7	0.1
VICTOR	115	20.4	28.8	20.4	28.9	0.1

As can be seen, the three-phase-to-ground short-circuit duty study with only the HLSP Project identified four 500 kV, seven 230 kV, and three 115 kV substation locations requiring engineering review. The single-line-to-ground short-circuit duty study identified one 500 kV, five 230 kV and one 115 kV substations requiring engineering review. Detailed review of these substation locations will be performed as part of the Facilities Study for determination of breaker replacement need.

Table 2-7
Three Phase (3PH) Short Circuit Duty Study Results
Addition of Upgrades Triggered by the HLSP Project

		Pre-Upgrades		Post-Upgrades		DELTA
Bus Name	Bus KV	X/R	KA	X/R	KA	KA
ANTELOPE	500	21.2	32.6	21.2	32.7	0.1
ELDORADO	500	18.9	47.4	19.0	47.5	0.1
LUGO	500	22.9	51.6	23.4	52.3	0.7
MIRA LOMA	500	23.9	39.9	24.1	40.0	0.1
PISGAH	500	20.3	23.4	20.4	23.5	0.1
RANCHO VISTA	500	28.6	28.1	28.8	28.2	0.1
VINCENT	500	18.8	45.0	18.9	45.2	0.2
ANTELOPE	230	24.7	36.0	24.7	36.1	0.1
COOL WATER	230	30.1	11.5	28.4	17.0	5.5
DESERT VIEW	230	6.1	8.7	26.7	16.7	8
ETIWANDA	230	25.8	59.7	25.9	59.8	0.1
HINKLEY	230	20.6	12.7	19.6	13.4	0.7
KRAMER	230	15.8	18.3	15.6	18.9	0.6
LEWIS	230	21.5	46.0	21.6	46.1	0.1
LUGO	230	36.7	49.4	38.6	51.9	2.5
MIRA LOMA(E)	230	23.2	65.3	23.3	65.4	0.1
PARDEE	230	16.3	57.3	16.3	57.4	0.1
RANCHO VISTA	230	26.2	60.9	26.3	61.0	0.1
SAN BERNARDINO	230	21.5	40.1	21.5	40.2	0.1
VICTOR	230	18.8	33.8	18.5	34.5	0.7
VINCENT	230	24.1	60.9	24.1	61.0	0.1
VISTA	230	18.7	48.3	18.7	48.4	0.1
KRAMER	115	11.4	24.1	11.5	24.2	0.1
VICTOR	115	19.9	24.6	19.9	24.7	0.1

Table 2-8
Single Line to Ground (SLG) Short Circuit Duty Study Results
Addition of Upgrades Triggered by the HLSP Project

		Pre-Project		Post-Project		DELTA
Bus Name	Bus KV	X/R	KA	X/R	KA	KA
LUGO	500	12.9	42.8	13.0	43.1	0.3
MIRA LOMA	500	10.8	36.6	10.9	36.7	0.1
PISGAH	500	21.7	21.8	21.6	21.9	0.1
RANCHO VISTA	500	8.3	25.4	8.3	25.5	0.1
CHINO	230	12.5	40.6	12.5	40.7	0.1
COOL WATER	230	30.7	12.4	29.8	16.7	4.3
KRAMER	230	10.9	15.5	10.7	15.7	0.2
LUGO	230	24.7	51.4	25.1	53.5	2.1
MIRA LOMA (W)	230	13.3	56.9	13.4	57.0	0.1
PISGAH	230	29.8	44.4	29.8	44.5	0.1
RANCHO VISTA	230	16.4	61.5	16.5	61.6	0.1
VICTOR	230	12.6	30.7	12.5	31.1	0.4
VILLA PARK	230	15.8	44.3	15.8	44.4	0.1
VICTOR	115	20.4	28.9	20.4	29.0	0.1

As can be seen, the addition of the facility upgrades required to support the HLSP Project further increases three-phase-to-ground short-circuit duty at seven 500 kV, fifteen 230 kV, and two 115 kV substation locations requiring engineering review. The addition of the facility upgrades required to support the HLSP Project was found to further increase single-line-to-ground short-circuit duty at four 500 kV, nine 230 kV and one 115 kV substation locations requiring engineering review. Detailed review of these substation locations will be performed as part of the Facilities Study for determination of breaker replacement need.

As part of the System Impact Study, the substation locations identified without the facility upgrades required to support the HLSP Project were reviewed to determine the need for circuit breaker replacement, and to determine if the need was triggered by the HLSP Project. Based on the engineering review, the addition of the HLSP Project triggers the need for circuit breaker replacement at the Kramer Substation. Table 2-9 summarizes the results of the engineering review.

Table 2-9
Engineering Review of Circuit Breakers

Bus Name	Bus KV	Replace	Upgrade	Cost Allocation
KRAMER	230	5	0	Case A
LUGO	500	0	3	Case B
ETIWANDA	230	24	0	Case B
LAGUNA BELL	230	2	14	Case B
LUGO	230	3	2	Case B
PISGAH	230	12	0	Case B
INYOKERN	115	2	0	Case B
VICTOR	115	2	0	Case B

It should be noted that additional need for breaker replacements may be identified when considering the transmission upgrades identified to mitigate the HLSP Project triggered base case overloads. Consequently, the cost estimates provided in this report are for informational purposes only, as detailed review of substations identified in Table 2-7 and Table 2-8 will be performed as part of the Facilities Study.

E. Deliverability Assessment

Separate studies entitled "Deliverability Assessments" were performed by the CAISO, which determined that the HLSP Project is not deemed as deliverable to the grid for Resource Adequacy (RA) purposes. The modeling assumptions for the Deliverability Assessment are slightly different from the modeling assumptions in this ISIS. For details regarding the methodology and assumptions for performing the Deliverability Assessment, refer to the Baseline Generation Deliverability Study – 2007 Q3 Study Plan posted at: http://www.caiso.com/1c5d/1c5ddc8a63cd0.pdf.

In particular, the 2007 Q3 Deliverability Assessment modeled the following upgrades:

- Lugo 500/230 kV No.3 Transformer Bank (AA-Bank)

- Kramer-Lugo No. 3 230 kV Transmission Line[10]
- Victor-Lugo No.3 230 kV Transmission Line
- Replacement of the Lugo-Pisgah No.2 230 kV with a new 500 kV Transmission Line
- Operation of the remaining Lugo-Pisgah 230 kV line as two radial lines
    - Radial into Lugo connecting the new Desert View Substation
    - Radial into Pisgah connecting the new Abelia and new Galway Substations

The study did not include the new Cool Water-Desert View 230 kV transmission line(s) recommended in this study to mitigate the identified base case thermal overloads on the two Kramer-Lugo 230 kV transmission lines.

V. COST ESTIMATES

The cost estimates of facility upgrades that have been identified to mitigate planning criteria violations triggered by queued ahead projects, or by the addition of the HLSP Project, are provided below in Table 2-10. ***All cost estimates are rough, order of magnitude estimates and are non-binding.*** The *Nonbinding* Cost Estimate for the HLSP Project Facilities is $131.7 million in 2010 dollars (the ITCC component will be collected via a Letter of Credit). The *Nonbinding* Cost Estimate for upgrades triggered by queued ahead projects is $257.0 million, also in 2010 dollars.

[10] SPS was not modeled due to unknown specifications. With SPS and the additional Kramer-Lugo No.3 Transmission Line, the HLSP Project would be deemed deliverable.

Table 2-10
Cost Estimates[11] Provided in Millions

Facility Upgrade	Triggered by Queued Ahead Project[12] (CASE B)	Triggered by the HLSP Project (CASE A)
Install 3rd Lugo 500/230 kV Transformer Bank	$57.0	-
New Lugo-Victor No.3 230 kV Transmission Line including: • 10-12 mile 230 kV line • Lugo and Victor Substation work to support new line • 115 kV line rearrangements to make room in existing right-of-way	$37.2	-
New 37-mile (approximate) Cool Water-Desert View double-circuit 230 kV Transmission Line (2B-1590 ACSR) with one initial circuit	-	$110.0[13]
Equip one double-breaker 230 kV positions at Cool Water	-	$3.3
New Desert View Substation (breaker-and-a-half) sized for ultimate four 500/230 kV transformers initially equipped as follows: • Initial 4-bay position equipping two with 5 CBs • Two other positions equipped with four CBs for gen-ties, but cost not included in this estimate (direct assign costs to specific queued ahead projects) • Second 4-bay position equipping one with two CBs (triggered by HLSP)	$10.0	$4.7
Remove existing Lugo-Pisgah No.1 and No.2 230 kV transmission line sections between Lugo and Desert View	$15.5[14]	-
New 16-mile double-circuit 500 kV transmission line	$105.2	$0.0[15]
New Hinkley 230 kV Substation 4-bay (breaker-and-a-half) with two positions initially equipped with five CBs	-	$10.0
Circuit Breaker Upgrades: • Lugo 500 kV (3) • Laguna Bell 230 kV (14) and Lugo 230 kV (2)	$3.7	-
Circuit Breaker Replacements identified in Feasibility Study: • Etiwanda 230 kV (24) and Mira Loma 230 kV (12)[16] • Kramer 230 kV (5) • Laguna Bell 230 kV (2) and Lugo 230 kV (3) • Inyokern 115 kV (2) and Victor 115 kV (2)	$28.4	$2.7
Protection, Telecom, and Special Protection System	-	$1.0
Total	$257.0	$131.7[17]

[11] Shown in 2010 Year Dollars and does not include any ITCC Tax.
[12] Cost of such additional facilities may later be assigned to the HLSP Project if modifications to queued ahead projects (consistent with LGIP) or project withdrawals result in the HLSP Project triggering the need for the upgrade (as determined by a restudy).
[13] Estimate does not include the costs associated with right-of-way acquisition or cost associated with telecommunications. Installation of second circuit estimated at $28.5 million.
[14] Cost estimates assume alternative selected for queued ahead project result in construction of double-circuit 500 kV along existing right-of-way. If a different right-of-way is selected for queued ahead project, the $15.5 million removal cost shown as triggered by queued ahead project will become the responsibility of HLSP.
[15] Estimates are based on the same assumptions discussed in footnote 8. If a different route is selected, the Case B cost would be zero, and Case A cost would increase to $80 million to reflect a new single-circuit 500 kV transmission line.
[16] Excludes costs associated with station conversion from 63 kA to 80 kA.
[17] Facility classification, interconnection or reliability, will be done as part of the Facilities Study.

VI. ESTIMATED PROJECT TIMELINES

A significant amount of transmission facilities are necessary to mitigate pre-project base case overloads, and single contingency and double contingency outage thermal overload problems, which are aggravated with the addition of the HLSP Project. These transmission upgrades require detailed environmental assessments sufficient to support filing for a Certificate of Public Convenience and Necessity (CPCN) at the California Public Utilities Commission (CPUC). As a result, the following timelines are SCE's best judgment based on past permitting requirements. Such timelines should be viewed as ***nonbinding estimates*** and are not meant to imply that a CPCN will be issued by the appropriate permitting agencies.

a). The time required for the preparation of the Environmental Impact Statement and/or Environmental Impact Report, as required per CEQA and NEPA, is estimated at 18-24 months once a complete project scope is defined.

b). The time required for review and approval by CPUC and other permitting agencies is estimated to range between 12-24 months once the application submittal is deemed complete by the permitting agencies.

c). The time required to complete final engineering, material procurement and construction of the proposed scope of work is estimated to range between 18 and 24 months after obtaining project authorization and funding, receiving all necessary approvals and permits from the CPUC, and obtaining all other required regulatory agency approvals.

These activities are typically sequential in nature, and therefore, the overall timeline requirements range from 48 months to 72 months once a complete project scope is defined and preliminary engineering is complete. The complete project scope definition is typically done as part of the Interconnection Facilities Study, but can be advanced, subject to the availability of SCE available resources, under an Engineering and Design Letter Agreement. SCE will evaluate resource availability at the time a request for a Letter Agreement is made. It's also important to note that SCE cannot guarantee complete project scope definition under such Letter Agreements because the Facilities Studies may identify other issues that may not be known at the time a Letter Agreement is executed. However, these conditions are typically not the norm, and the work done in advance can help advance the project CPCN filing date.

VII. CONCLUSIONS

To interconnect the HLSP Project in a manner that addresses the generation needs in the area, avoids short-lived "piece-meal" solutions, minimizes environmental impacts, minimizes overall cost exposure to rate-payers, minimizes service interruptions, minimizes the need for generation curtailments while upgrades are implemented, and provides the minimum set of facilities for the HLSP Project, thus minimizing upfront cost responsibility, the following upgrades are required:

1. Construction of a new breaker-and-a-half 230 kV Substation (Hinkley Substation) with a four bay position switchrack,[18] equipping only two positions with a total of five circuit breakers.

2. Installation of appropriate fully redundant and diverse telecommunication facilities to provide overall system protection.

Based on the study results, the existing SCE transmission facilities, with only the above minimum set of facility upgrades required to interconnect the HLSP Project, are not adequate to accommodate the HLSP Project, when considering all other generation projects queued ahead.

Power Flow

Without implementing any of the transmission upgrades identified to be triggered by the queued ahead projects, the existing system does not have sufficient transmission capability to deliver the total output of all queued generation projects, up to, and including, the HLSP Project. Severe problems were identified under both heavy summer and light spring load conditions that resulted in a base case which would not solve, due to voltage levels in the Lugo Area that would be well below acceptable limits. Consequently, a number of upgrades will be necessary to reliably interconnect and deliver the HLSP Project output as discussed below.

BASE CASE CONDITIONS

To mitigate problems triggered by queued ahead projects requesting interconnection along the Lugo-Pisgah corridor or to the Pisgah 230 kV Substation and along the Lugo-Victor-Kramer-Control corridor, the following transmission upgrades previously identified to be triggered by such queued ahead projects were included in the initial studies:

- Expansion of the existing SCE Pisgah 230 kV Substation to include 500 kV facilities.
- Removal of the existing Lugo-Pisgah No. 2 230 kV transmission line and replacement with a new Lugo-Pisgah 500 kV transmission line.[19]
- Looping of the existing Eldorado-Lugo 500 kV transmission into the new 500 kV Pisgah Substation.
- Looping of the existing Lugo-Pisgah No. 1 230 kV transmission line into 3 new substations (Desert View, Abelia and Galway) forming new Lugo-Desert View 230 kV, Abelia-Desert View 230 kV (normally open), Abelia-Galway 230 kV, and Pisgah-Galway 230 kV transmission lines.
- Construction of a third Lugo-Victor 230 kV transmission line.

[18] Standard SCE bus structures provide for up to four bay positions, but only the required bays will be equipped as part of the HLSP Project.

[19] New right-of-way would be required west of the Mojave River to support a new 500 kV transmission line. A potential line routing alternative for this upgrade involves the use of existing right-of-way between the Mojave River and the Lugo Substation by removing both the existing Lugo-Pisgah No.1 and No.2 230 kV transmission lines and the construction of a new double-circuit 500 kV line. One of the new 500 kV circuits would be used to connect to Pisgah, and the other 500 kV circuit would be initially operated at 230 kV and connected to Desert View.

- Installation of the 3rd Lugo 500/230 kV transformer bank.

With the addition of the HLSP Project and all previously identified transmission upgrades, new base case overload problems were identified. Specifically, the HLSP Project triggers the following impacts:

Summer Load Conditions
Kramer-Lugo No.1 and No.2 230 kV Transmission Lines (85.4% → 106.5%)

Spring Load Conditions
Kramer-Lugo No.1 and No.2 230 kV Transmission Lines (97.2% → 118.7%)

To mitigate these base case overload problems, additional transmission will be required to increase the transfer capability south of Kramer. Such increase in transmission capability south of Kramer can best be provided by the

- Construction of a new Cool Water-Desert View double-circuit 230 kV transmission line with the installation of one initial circuit.

SINGLE OUTAGE CONTINGENCY (N-1)

Without the above additional facility upgrades in place to mitigate the identified base case overload problems, the study determined that the system is also inadequate to accommodate the full output of the HLSP Project under specific single outage contingencies. Because the HLSP Project results in increasing power flows on transmission facilities that are currently monitored as part of existing Kramer SPS (loss of Lugo-Kramer No.1 or No.2 230 kV transmission lines), the HLSP Project will need to be added to the existing Kramer SPS if the additional transmission upgrades identified to mitigate the base case overloads are not implemented. The addition of the HLSP Project to the Kramer SPS will increase the amount of generation participating in the Kramer SPS from 863 MW to 1,113 MW. The actual amount of generation armed and tripped under the outage condition will be determined by the amount of power flow on the two Kramer-Lugo 230 kV transmission lines prior to the outage.

With the base case facility upgrades in place, the study determined that an SPS will still be needed to mitigate thermal and transient stability problems under the loss of the Cool Water-Desert View and Lugo-Desert View 230 kV transmission lines. Outage of these lines results in loading the existing Kramer-Lugo No.1 and No.2 230 kV transmission lines as follows:

Overloaded Facility	Rating	Heavy Summer		Light Spring	
		Pre	Post	Pre	Post
Kramer-Lugo No.1 and No.2 230 kV T/Ls Loss of Cool Water-Desert View 230 kV T/L	1240 Amps (N) 1425 Amps (E)	N/A	106.5% 92.3%	N/A	118.7% 102.9%
Kramer-Lugo No.1 and No.2 230 kV T/Ls Loss of Lugo-Desert View 230 kV T/L	1240 Amps (N) 1425 Amps (E)	N/A	124.0% 107.4%	N/A	136.4% 118.3%

Under the loss of the Cool Water-Desert View 230 kV transmission line, the SPS should trip one of the HLSP generation units. Under the loss of the Lugo-Desert View 230 kV transmission line, the SPS should trip one of the HLSP generation units, as well as the generation projects directly connected to the Desert View Substation. Transfer tripping the generation projects directly connected to the Desert View Substation would not result in increasing the outage exposure of these projects, because the Desert View Substation is connected in a radial fashion prior to adding the Cool Water-Desert View 230 kV transmission line. Such radial method of service would result in disconnecting from the source (Lugo Substation), without a second source line.

DOUBLE OUTAGE CONTINGENCY (N-2)

Without the above additional facility upgrades in place to mitigate the identified base case overload problems, the study determined that the system is also inadequate to accommodate the full output of the HLSP Project under specific double outage contingencies. The HLSP Project will need to be added to the existing Kramer SPS (loss of the Lugo-Kramer No.1 and No.2 230 kV transmission lines) if the additional transmission upgrades identified to mitigate the base case overloads are not implemented.

With the inclusion of the additional upgrades identified for mitigating the HLSP Project triggered base case thermal overloads, the study did not identify any N-2 thermal overload or transient stability problems for the local area. However, on an overall system level, the study determined that the total amount of Lugo Area generation export (South of Lugo and Lugo-Vincent 500 kV transmission lines) is limited to approximately 7,800 MW. With the addition of more generation resources in the North and East of Lugo areas, the amount of excess generation requiring export will eventually exceed 7,800 MW. To increase Lugo Area export limits, additional transmission capacity will be required. However, such requirement is not triggered solely by the addition of the HLSP Project, and therefore, such facility upgrades will be evaluated and recommended as part of a larger study effort in the area (either through the RETI study process or the annual CAISO Transmission Expansion Planning Process).

Transient Stability

The study determined that with the inclusion of the additional upgrades identified for mitigating the HLSP Project triggered base case thermal overloads, the HLSP Project will not need to participate in the existing Kramer SPS. However, the study identified that the tripping requirements for mitigating transient stability problems under single outage of the Lugo-Desert View 230 kV transmission line are more stringent than the tripping requirements for mitigating thermal overloads. Under this outage, the SPS should include tripping of the entire HLSP Project.

Post-Transient Voltage

The study determined that without the facility upgrades identified under base case conditions, the HLSP Project aggravates previously identified voltage problems, including case non-convergence, which are indicative of a potential voltage collapse. The inclusion of the facility upgrades identified for queued ahead generation projects mitigates these problems.

Short-Circuit Duty

The short-circuit duty (SCD) analysis included all queued ahead generation projects based on their application date, but did not model corresponding transmission upgrades. Three-phase-to-ground short-circuit duty study identified two 500 kV, seven 230 kV, and four 115 kV substation locations requiring engineering review. Single-line-to-ground short circuit duty study identified two 500 kV, five 230 kV and one 115 kV substation where duty was increased by more than 0.1 kA, and duty was in excess of 60% of the minimum circuit breaker rating.

Based on the SCD study results and engineering review, the addition of the HLSP Project triggers the need for circuit breaker replacement at the Kramer Substation. It should be noted that a number of projects have recently withdrawn from the interconnection queue or have modified technical parameters consistent with allowances under the LGIP. In addition, the transmission upgrades identified to mitigate the HLSP Project triggered base case overloads have not been included into the short-circuit duty analysis. Consequently, a reevaluation of short-circuit duty will be required as part of the Facilities Study to capture the recent generation interconnection queue withdrawals and modifications, as well as the facility upgrades associated with the mitigation plan identified in this analysis.

Deliverability Assessment

Separate studies entitled "Deliverability Assessments" were performed by the CAISO, which determined that the HLSP Project was not deemed deliverable to the Grid for Resource Adequacy (RA) purposes. The modeling assumptions for the Deliverability Assessment are different from the modeling assumptions in this System Impact Study. For details of the methodology and assumptions for performing the Deliverability Assessment, please refer to the Baseline Generation Deliverability Study – 2007 Q3 Study Plan posted at http://www.caiso.com/1c5d/1c5ddc8a63cd0.pdf. In particular, the 2007 Q3 Deliverability Assessment modeled the following transmission system upgrades:

- Lugo 500/230 kV No.3 Transformer Bank (AA-Bank);
- Kramer-Lugo No.3 230 kV Transmission Line;[20]
- Victor-Lugo No.3 230 kV Transmission Line;
- Replacement of the Lugo-Pisgah No.2 230 kV with a new 500 kV Transmission Line;
- Operation of the remaining Lugo-Pisgah 230 kV line as two radial lines
    - Radial into Lugo connecting the new Desert View Substation;
    - Radial into Pisgah connecting the new Abelia and new Galway Substations.

The study did not include the new Cool Water-Desert View 230 kV transmission line(s) recommended in this study to mitigate the identified base case thermal overloads on the two Kramer-Lugo 230 kV transmission lines.

[20] SPS was not modeled due to unknown specifications. With SPS and the additional Kramer-Lugo No.3 Transmission Line, the HLSP Project would be deemed deliverable.

Cost Estimates

The ***Nonbinding*** Cost Estimate for the interconnection facilities and reliability network upgrades triggered by the HLSP Project is $131.7[21] million. The ***Nonbinding*** Cost Estimate for the maximum exposure for network upgrades triggered by queued ahead projects is $257.0[22] million. These estimates have been developed without detailed cost engineering, and will be refined in the Facilities Study.

Facilities Study

A Facilities Study will be required for the HLSP Project. The Facilities Study will include detailed cost estimates for SCE network upgrades and direct assignment interconnection facilities required to interconnect the HLSP Project to the grid and should:

1. Develop cost estimates and schedule for the construction of a new Hinkley Substation to loop the existing Cool Water-Kramer No.1 230 kV transmission line. The Substation should initially consist of a 230 kV four-bay position, with five circuit breakers to interconnect the project. (Case A)

2. Develop cost estimates and schedule for the looping of the existing Cool Water-Kramer 230 kV transmission line into the new Hinkley Substation. (Case A)

3. Develop cost estimate and schedule for the protection and telecom requirements to support the new Hinkley Substation. (Case A)

4. Develop cost estimates and schedule for the construction of a new Desert View substation to loop the existing Lugo-Pisgah No.1 230 kV transmission line. The Substation would be sized for 500/230/115 kV facilities and would be capable of ultimately accommodating four 500/230 kV transformer banks, but would initially be equipped with eight 230 kV bay positions. (Second four-bay position - Case A, Initial four-bay position - Case B) and 13 circuit-breakers (Four are Case A, five are Case B, and remaining 4 are generation direct assignment).

5. Develop cost estimates and schedule for the removal of approximately 16-miles of existing Lugo-Pisgah No.1 230 kV transmission line between Lugo and the proposed Desert View Substation. (Case B)

6. Develop cost estimates and schedule for the construction of a new 16-mile double-circuit 500 kV Lugo-Desert View transmission line with one circuit energized at 500 kV and the second circuit initially energized at 230 kV. (Case B)

7. Develop cost estimate and schedule for the protection and telecom requirements to support the new Desert View Substation. (Case B)

[21] This cost estimate can increase to $227.2 million (excluding right-of-way for Cool Water-Desert View 230 kV transmission line) depending on the final routing alternative selected for queued ahead generation triggered reliability upgrades.
[22] This cost estimate can decrease to $216.3 million (excluding right-of-way) depending on the final routing alternative selected for queued ahead generation triggered reliability upgrades.

8. Develop cost estimates and schedule for the installation of the third Lugo 500/230 kV transformer bank. (Case B)

9. Develop cost estimates and schedule for the construction of a third Lugo-Victor 230 kV transmission line. (Case B)

10. Develop cost estimates and schedule for the construction of a new 37-mile double-circuit 230 kV Cool Water-Desert View transmission line (2B-1590 ACSR) with one initial circuit. (Case A)

11. Develop cost estimate and schedule for the SPS required to trip the HLSP under two specific single outage contingencies. (Case A)

12. Review identified substation locations shown in Table 2-5 through Table 2-8 to evaluate the need for circuit breaker replacements and develop corresponding cost estimates.

13. Perform any technical assessment required to account for potential queued ahead generation project withdrawals (CAISO #109, #110, #114, #115, #116, and #120) consistent with the CAISO Petition for Waiver of Tariff Provisions to Accommodate Transition to Reformed Large Generator Interconnection Procedures, and Motion to Shorten Comment Period FERC Filing, if approved at FERC.

14. SCE and the CAISO to determine the appropriate classification of the identified Network Upgrades (i.e. Reliability Network Upgrades versus Delivery Network Upgrades.)

Interconnection System Impact Study

Appendix A – Stability Plots

BUS_VOLT_MAG FOR SCE North of Lugo

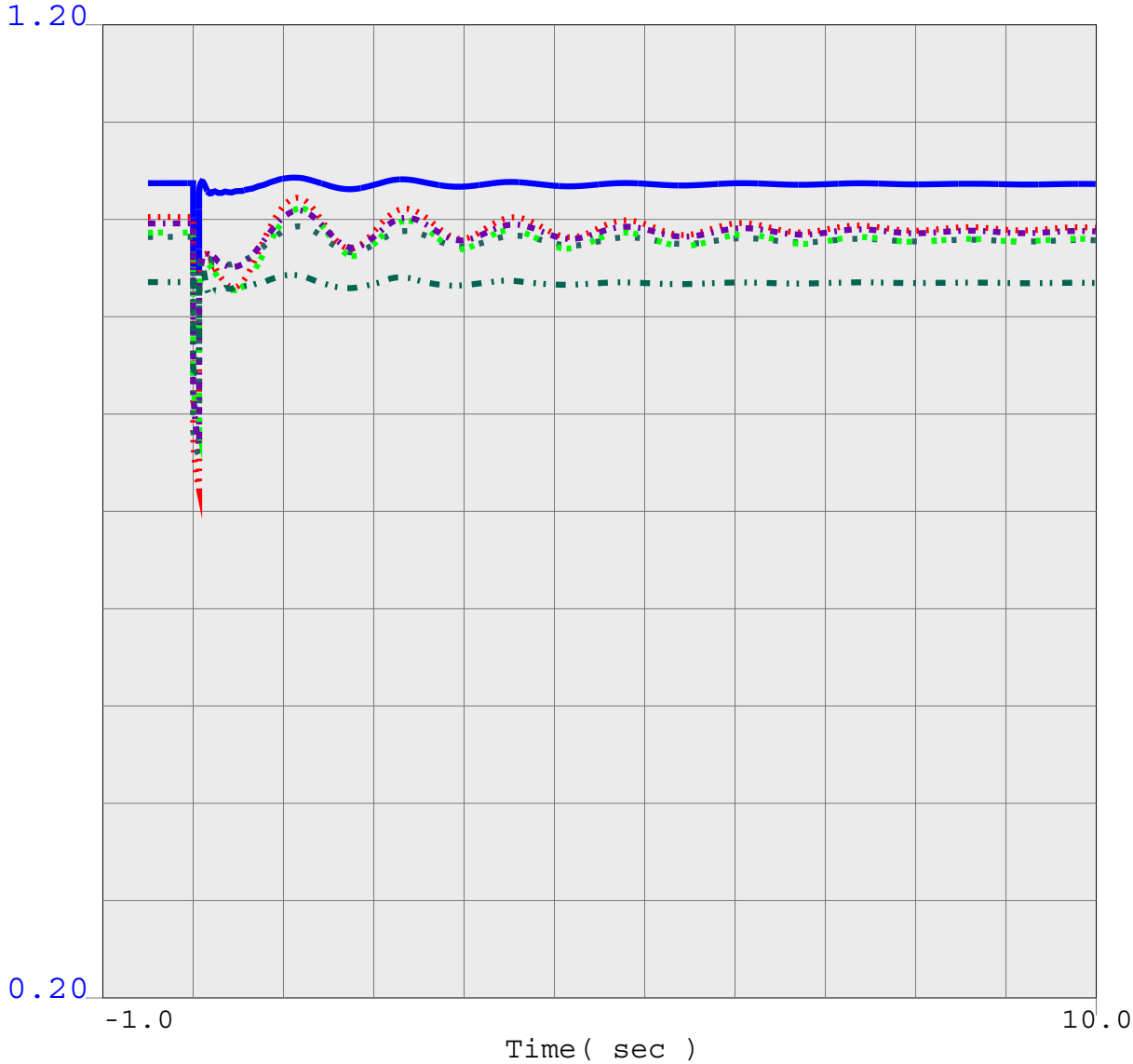

0.2000	vbus	24086	LUGO 500.0	0	0.0	1	1	1.2000
0.2000	vbus	24701	KRAMER 230.0	0	0.0	1	1	1.2000
0.2000	vbus	24601	VICTOR 230.0	0	0.0	1	1	1.2000
0.2000	vbul	24702	KRAMER 115.0	0	0.0	1	1	1.2000
0.2000	vbul	24602	VICTOR 115.0	0	0.0	1	1	1.2000
0.7000	vbus	24156	VINCENT 500.0	0	0.0	1	1	1.2000

Harper Lake System Impact Study (TOT175)
Heavy Summer Conditions: Year 2013
POST-PROJECT with Network Upgrades
N-0: Sensitivity Study Case
Contains Critical Energy Infrastructure Information (CEII)

tr-13HS-TOT175-postup-cwdv2_Coolwater-Dsrtview-slo-SPS.chf

.

Thu Mar 27 11:51:30 2008

BUS_VOLT_MAG FOR SCE North of Lugo

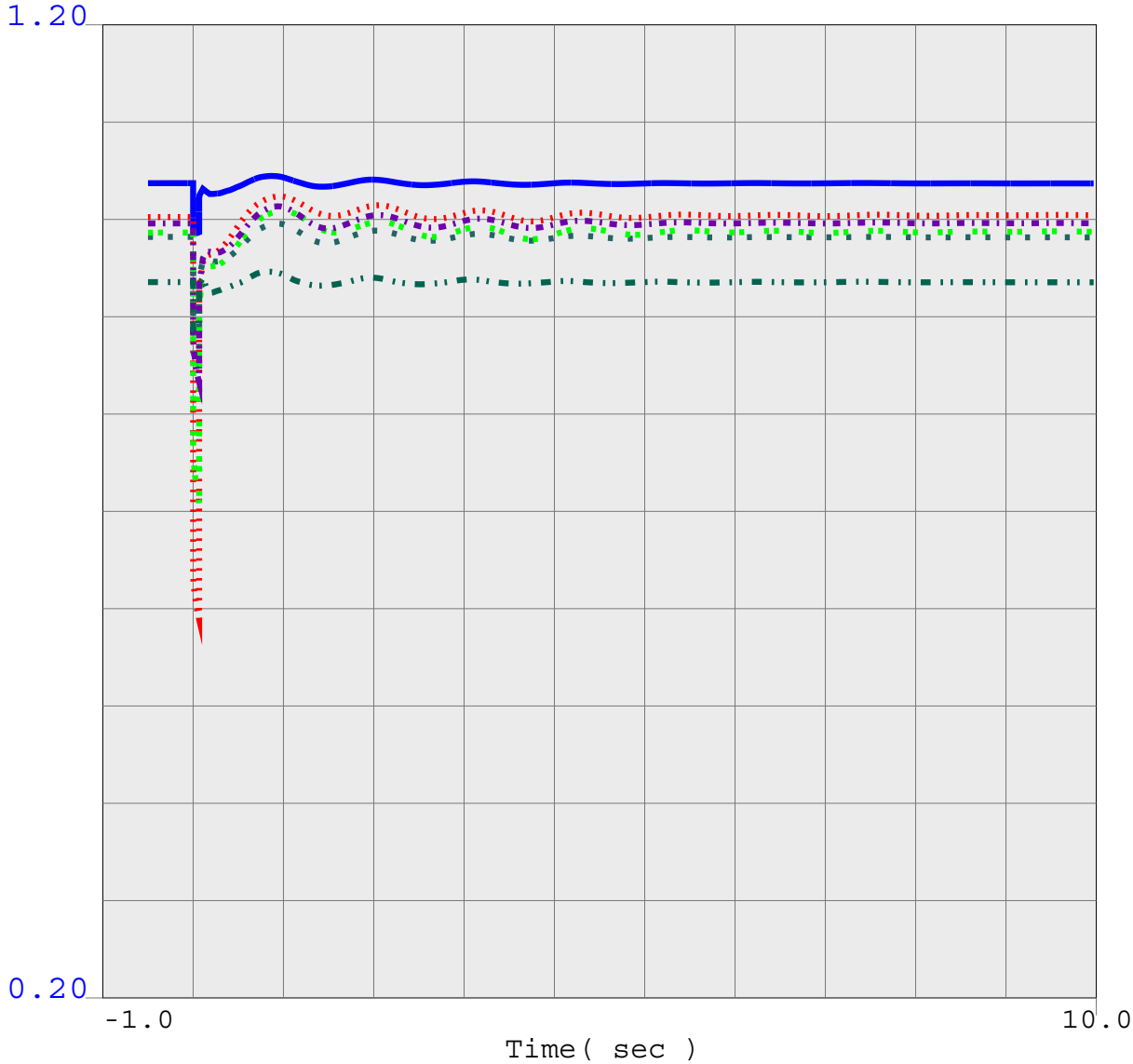

0.2000	vbus	24086	LUGO	500.0	0	0.0	1	1	1.2000
0.2000	vbus	24701	KRAMER	230.0	0	0.0	1	1	1.2000
0.2000	vbus	24601	VICTOR	230.0	0	0.0	1	1	1.2000
0.2000	vbul	24702	KRAMER	115.0	0	0.0	1	1	1.2000
0.2000	vbul	24602	VICTOR	115.0	0	0.0	1	1	1.2000
0.7000	vbus	24156	VINCENT	500.0	0	0.0	1	1	1.2000

Harper Lake System Impact Study (TOT175)
Heavy Summer Conditions: Year 2013
POST-PROJECT with Network Upgrades
N-0: Sensitivity Study Case
Contains Critical Energy Infrastructure Information (CEII)

tr-13HS-TOT175-postup-cwdv2_Cwater-HinkleyKramer-dlo.chf

.

Thu Mar 27 11:51:33 2008

BUS_VOLT_MAG FOR SCE North of Lugo

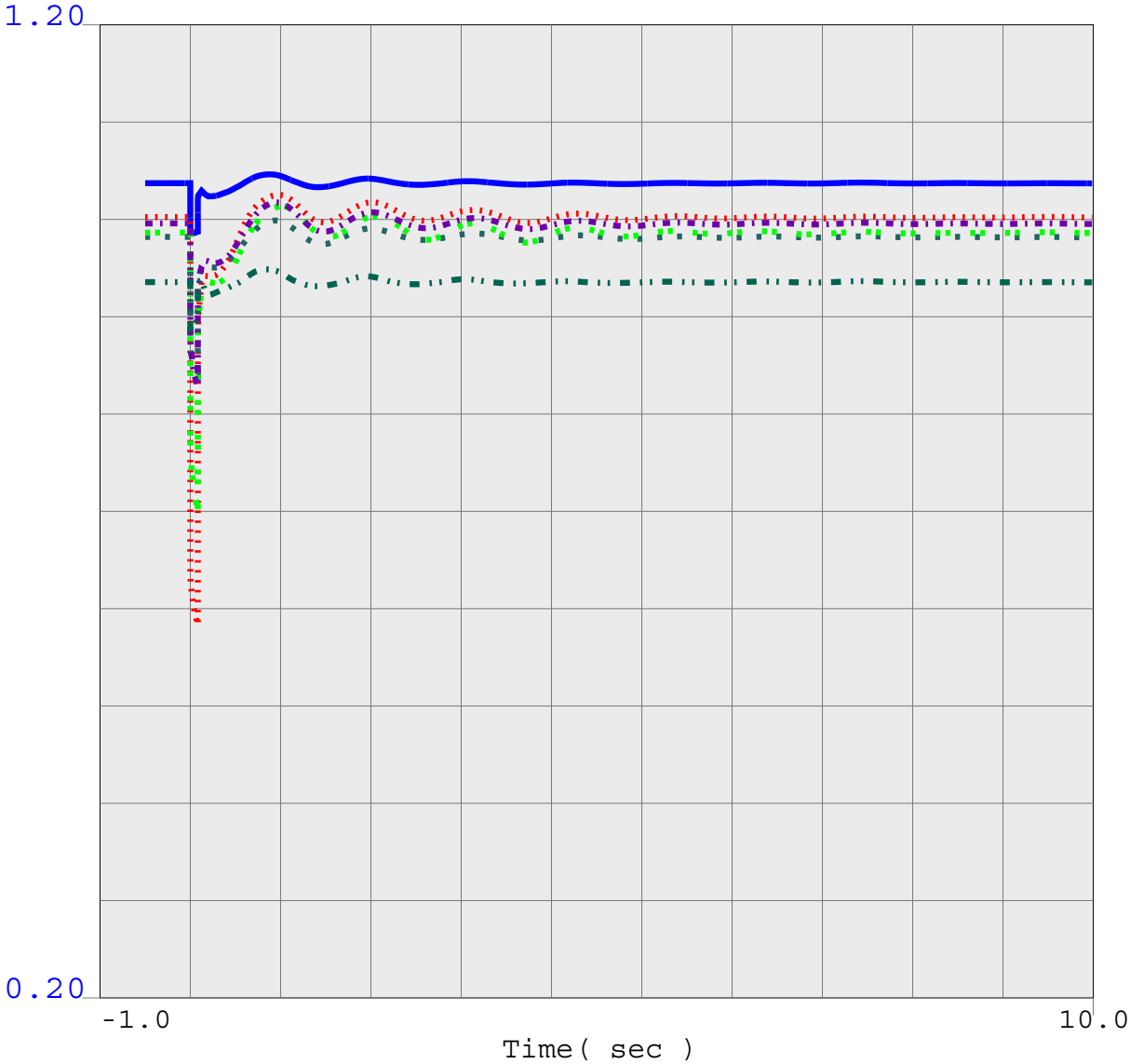

0.2000 vbus	24086	LUGO 500.0	0	0.0	1	1	1.2000
0.2000 vbus	24701	KRAMER 230.0	0	0.0	1	1	1.2000
0.2000 vbus	24601	VICTOR 230.0	0	0.0	1	1	1.2000
0.2000 vbul	24702	KRAMER 115.0	0	0.0	1	1	1.2000
0.2000 vbul	24602	VICTOR 115.0	0	0.0	1	1	1.2000
0.7000 vbus	24156	VINCENT 500.0	0	0.0	1	1	1.2000

Harper Lake System Impact Study (TOT175)
Heavy Summer Conditions: Year 2013
POST-PROJECT with Network Upgrades
N-0: Sensitivity Study Case
Contains Critical Energy Infrastructure Information (CEII)

tr-13HS-TOT175-postup-cwdv2_Cwater-Hinkley-slo.chf

.

Thu Mar 27 11:51:31 2008

BUS_VOLT_MAG FOR SCE North of Lugo

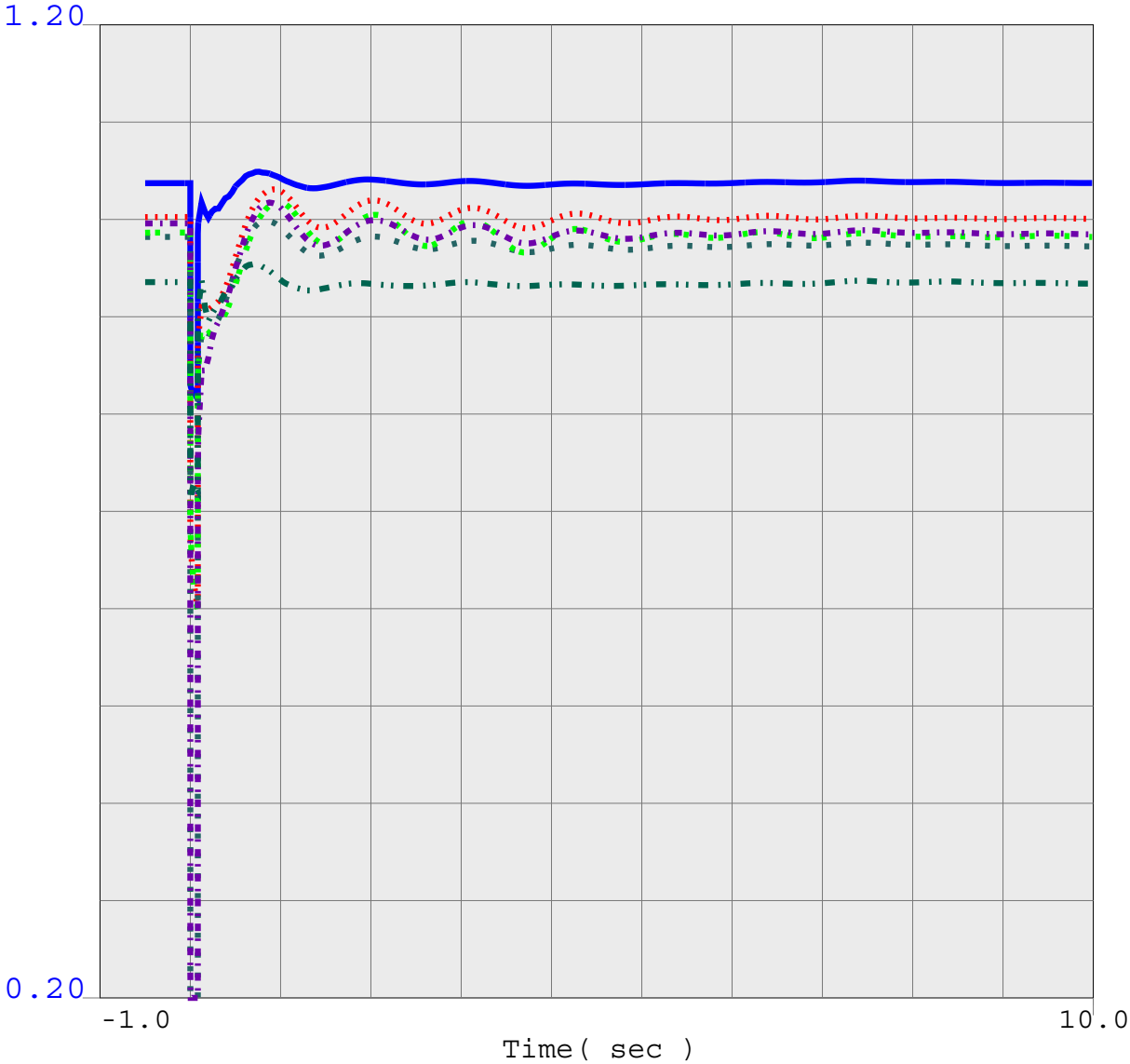

0.2000 vbus	24086	LUGO 500.0	0	0.0	1	1	1.2000
0.2000 vbus	24701	KRAMER 230.0	0	0.0	1	1	1.2000
0.2000 vbus	24601	VICTOR 230.0	0	0.0	1	1	1.2000
0.2000 vbul	24702	KRAMER 115.0	0	0.0	1	1	1.2000
0.2000 vbul	24602	VICTOR 115.0	0	0.0	1	1	1.2000
0.7000 vbus	24156	VINCENT 500.0	0	0.0	1	1	1.2000

Harper Lake System Impact Study (TOT175)
Heavy Summer Conditions: Year 2013
POST-PROJECT with Network Upgrades
N-0: Sensitivity Study Case
Contains Critical Energy Infrastructure Information (CEII)

tr-13HS-TOT175-postup-cwdv2_Hidesert-Victor-slo.chf

.

Thu Mar 27 11:51:34 2008

BUS_VOLT_MAG FOR SCE North of Lugo

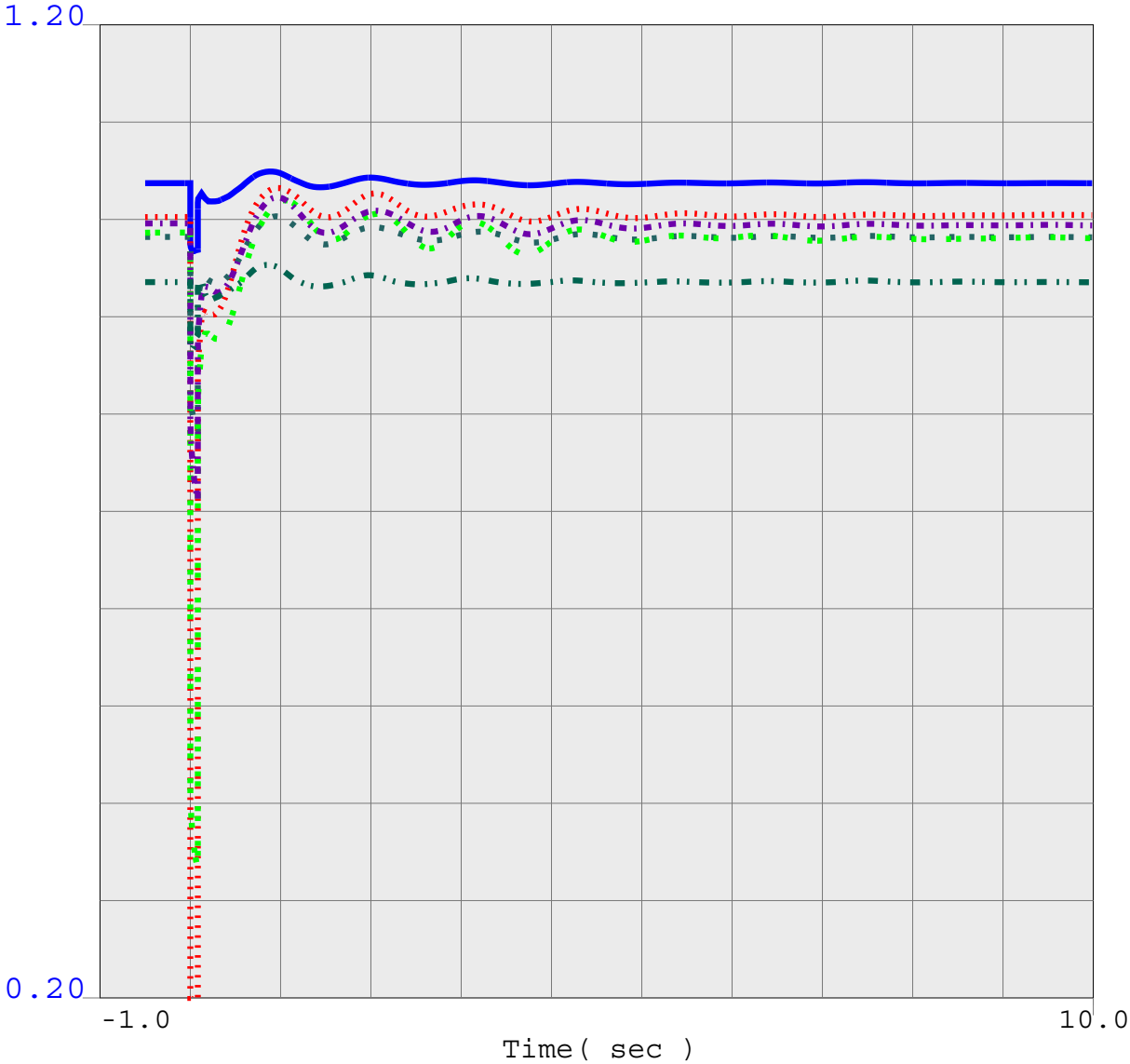

0.2000	vbus	24086	LUGO 500.0	0	0.0	1	1	1.2000
0.2000	vbus	24701	KRAMER 230.0	0	0.0	1	1	1.2000
0.2000	vbus	24601	VICTOR 230.0	0	0.0	1	1	1.2000
0.2000	vbul	24702	KRAMER 115.0	0	0.0	1	1	1.2000
0.2000	vbul	24602	VICTOR 115.0	0	0.0	1	1	1.2000
0.7000	vbus	24156	VINCENT 500.0	0	0.0	1	1	1.2000

Harper Lake System Impact Study (TOT175)
Heavy Summer Conditions: Year 2013
POST-PROJECT with Network Upgrades
N-0: Sensitivity Study Case
Contains Critical Energy Infrastructure Information (CEII)

tr-13HS-TOT175-postup-cwdv2_KRAMER-1BNK-slo.chf

.

Thu Mar 27 11:51:36 2008

BUS_VOLT_MAG FOR SCE North of Lugo

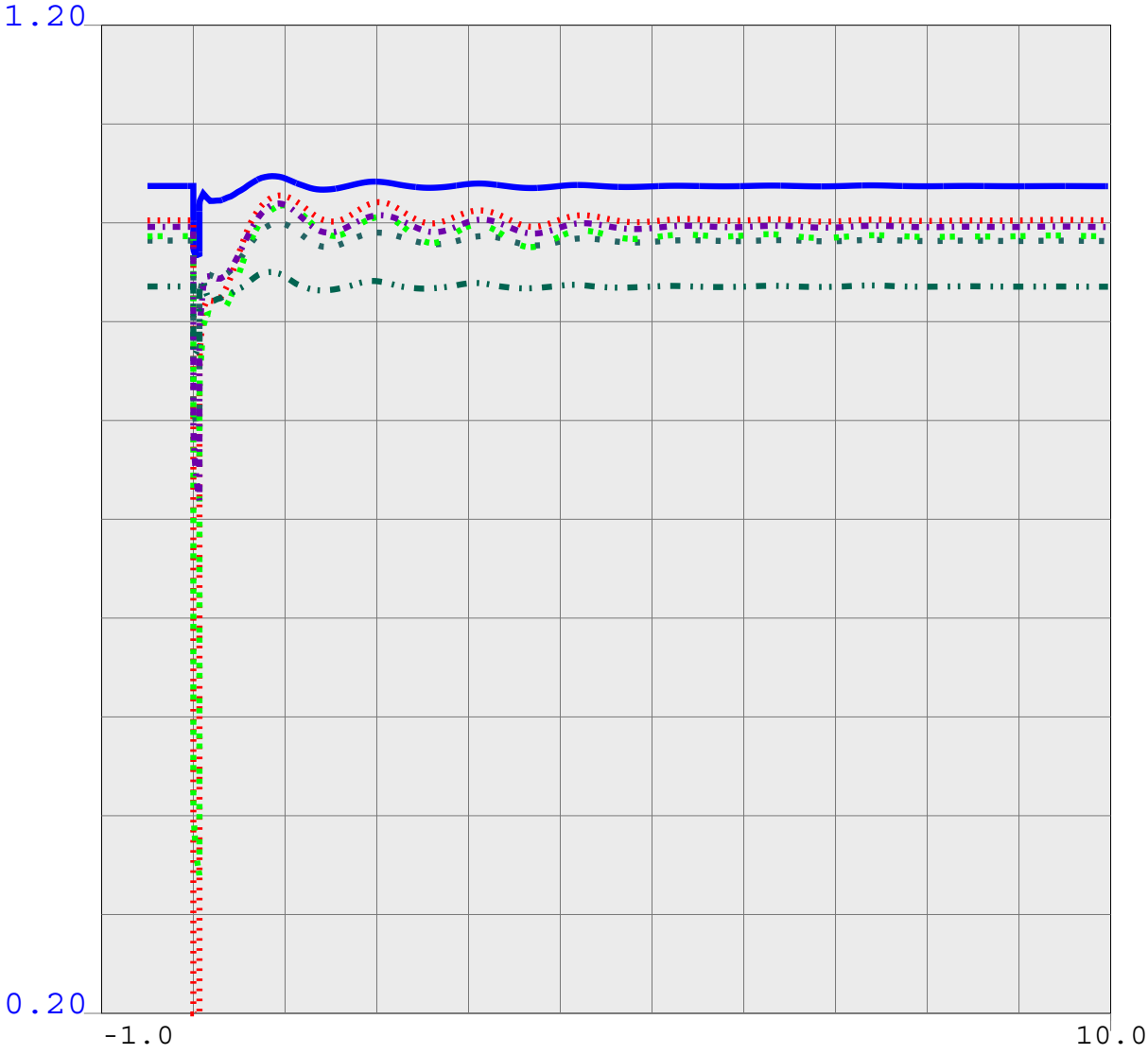

0.2000	vbus	24086	LUGO	500.0	0	0.0	1	1	1.2000
0.2000	vbus	24701	KRAMER	230.0	0	0.0	1	1	1.2000
0.2000	vbus	24601	VICTOR	230.0	0	0.0	1	1	1.2000
0.2000	vbul	24702	KRAMER	115.0	0	0.0	1	1	1.2000
0.2000	vbul	24602	VICTOR	115.0	0	0.0	1	1	1.2000
0.7000	vbus	24156	VINCENT	500.0	0	0.0	1	1	1.2000

Harper Lake System Impact Study (TOT175)
Heavy Summer Conditions: Year 2013
POST-PROJECT with Network Upgrades
N-0: Sensitivity Study Case
Contains Critical Energy Infrastructure Information (CEII)

tr-13HS-TOT175-postup-cwdv2_Kramer-Cwater-slo.chf

.

Thu Mar 27 11:51:38 2008

BUS_VOLT_MAG FOR SCE North of Lugo

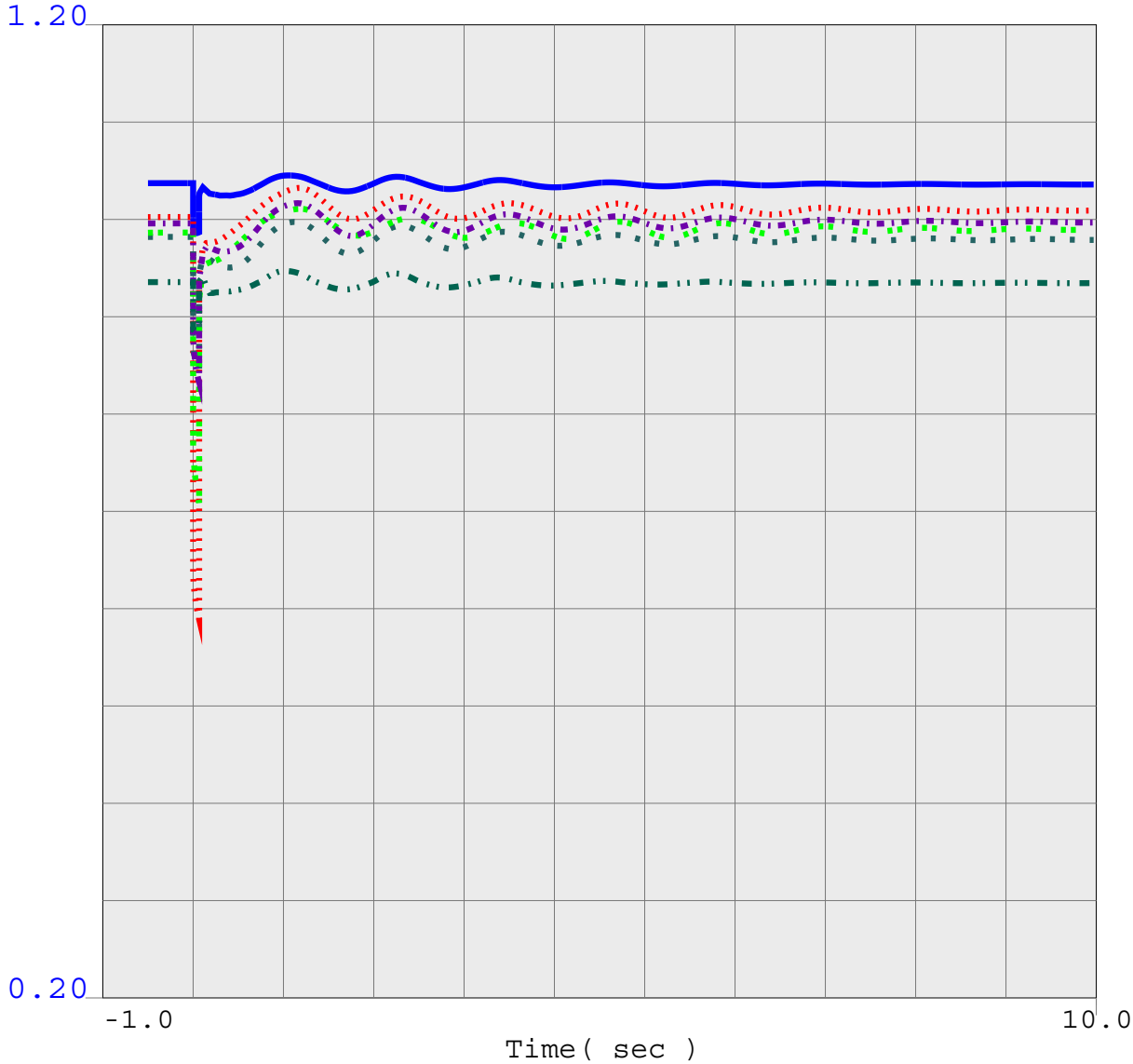

0.2000 vbus	24086	LUGO 500.0	0	0.0	1	1	1.2000
0.2000 vbus	24701	KRAMER 230.0	0	0.0	1	1	1.2000
0.2000 vbus	24601	VICTOR 230.0	0	0.0	1	1	1.2000
0.2000 vbul	24702	KRAMER 115.0	0	0.0	1	1	1.2000
0.2000 vbul	24602	VICTOR 115.0	0	0.0	1	1	1.2000
0.7000 vbus	24156	VINCENT 500.0	0	0.0	1	1	1.2000

Harper Lake System Impact Study (TOT175)
Heavy Summer Conditions: Year 2013
POST-PROJECT with Network Upgrades
N-0: Sensitivity Study Case
Contains Critical Energy Infrastructure Information (CEII)

tr-13HS-TOT175-postup-cwdv2_Kramer-HinkleyCwater-dlo.chf

.

Thu Mar 27 11:51:41 2008

BUS_VOLT_MAG FOR SCE North of Lugo

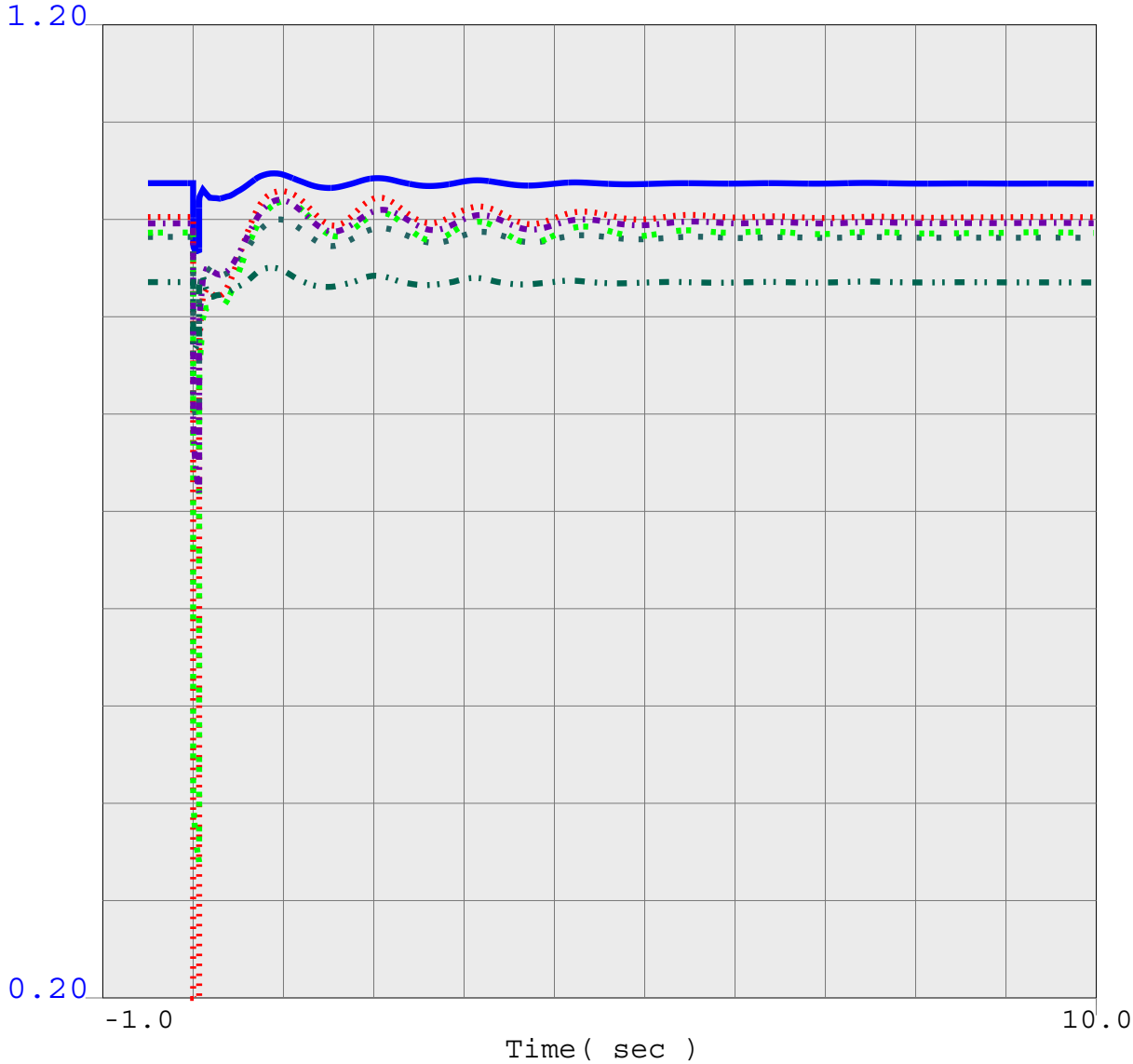

0.2000 vbus	24086	LUGO 500.0	0	0.0	1	1	1.2000
0.2000 vbus	24701	KRAMER 230.0	0	0.0	1	1	1.2000
0.2000 vbus	24601	VICTOR 230.0	0	0.0	1	1	1.2000
0.2000 vbul	24702	KRAMER 115.0	0	0.0	1	1	1.2000
0.2000 vbul	24602	VICTOR 115.0	0	0.0	1	1	1.2000
0.7000 vbus	24156	VINCENT 500.0	0	0.0	1	1	1.2000

Harper Lake System Impact Study (TOT175)
Heavy Summer Conditions: Year 2013
POST-PROJECT with Network Upgrades
N-0: Sensitivity Study Case
Contains Critical Energy Infrastructure Information (CEII)

tr-13HS-TOT175-postup-cwdv2_Kramer-Hinkley-slo.chf

.

Thu Mar 27 11:51:39 2008

BUS_VOLT_MAG FOR SCE North of Lugo

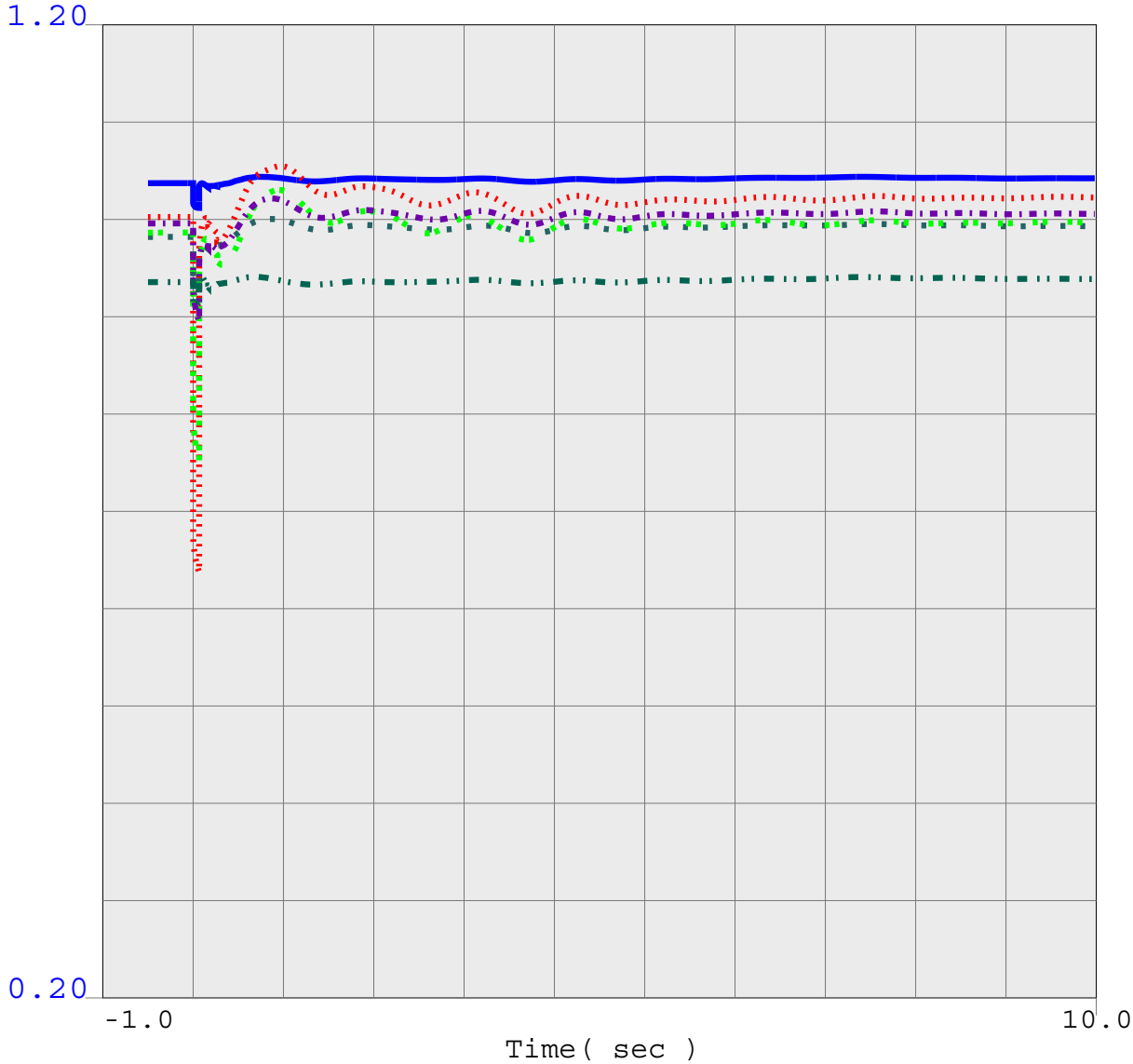

0.2000 vbus	24086	LUGO 500.0	0	0.0	1	1	1.2000
0.2000 vbus	24701	KRAMER 230.0	0	0.0	1	1	1.2000
0.2000 vbus	24601	VICTOR 230.0	0	0.0	1	1	1.2000
0.2000 vbul	24702	KRAMER 115.0	0	0.0	1	1	1.2000
0.2000 vbul	24602	VICTOR 115.0	0	0.0	1	1	1.2000
0.7000 vbus	24156	VINCENT 500.0	0	0.0	1	1	1.2000

Harper Lake System Impact Study (TOT175)
Heavy Summer Conditions: Year 2013
POST-PROJECT with Network Upgrades
N-0: Sensitivity Study Case
Contains Critical Energy Infrastructure Information (CEII)

tr-13HS-TOT175-postup-cwdv2_Kramer-Lugo-dlo-SPS-slg.chf

.

Thu Mar 27 11:51:42 2008

BUS_VOLT_MAG FOR SCE North of Lugo

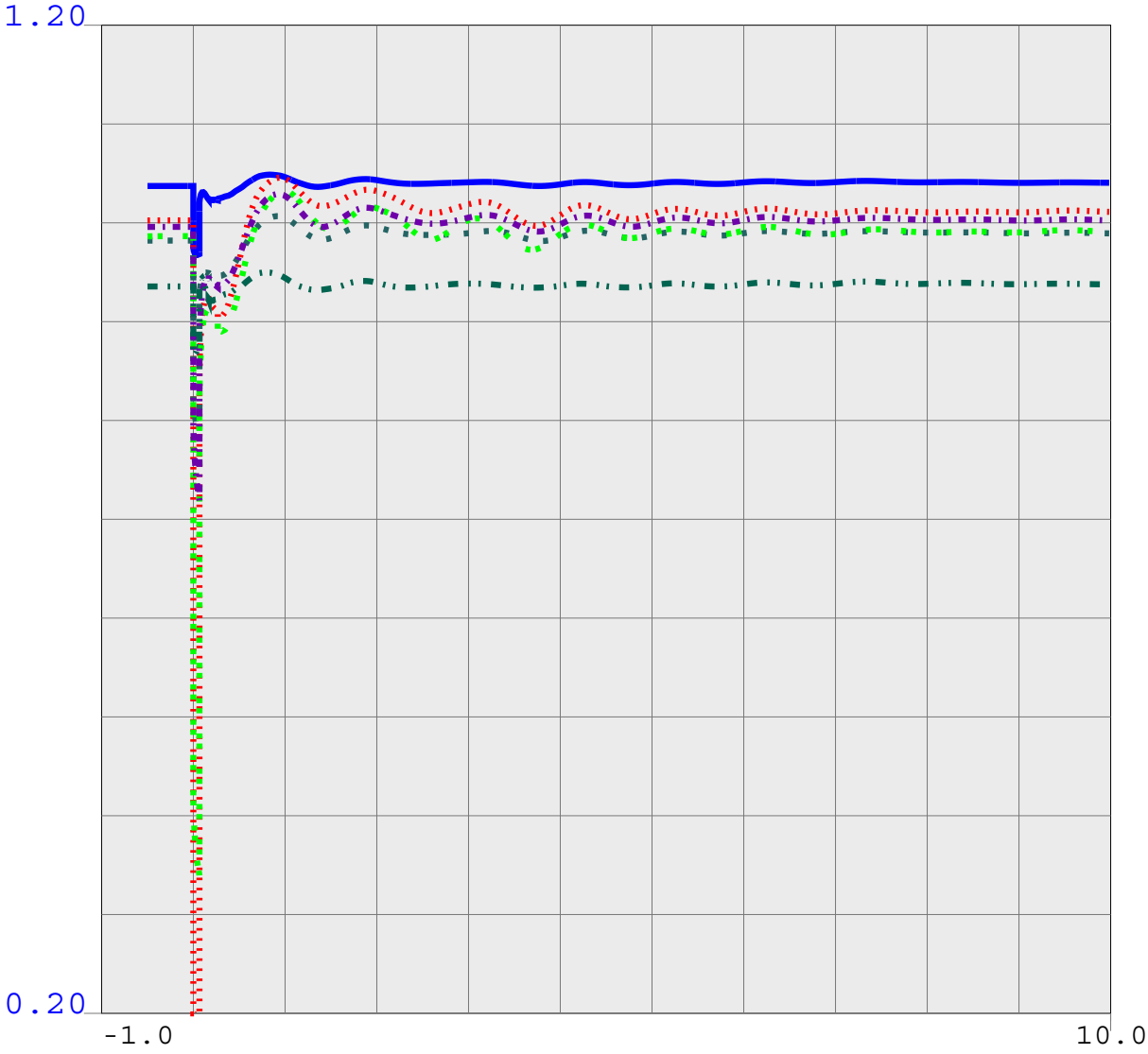

0.2000	vbus	24086	LUGO 500.0	0	0.0	1	1	1.2000
0.2000	vbus	24701	KRAMER 230.0	0	0.0	1	1	1.2000
0.2000	vbus	24601	VICTOR 230.0	0	0.0	1	1	1.2000
0.2000	vbul	24702	KRAMER 115.0	0	0.0	1	1	1.2000
0.2000	vbul	24602	VICTOR 115.0	0	0.0	1	1	1.2000
0.7000	vbus	24156	VINCENT 500.0	0	0.0	1	1	1.2000

Harper Lake System Impact Study (TOT175)
Heavy Summer Conditions: Year 2013
POST-PROJECT with Network Upgrades
N-0: Sensitivity Study Case
Contains Critical Energy Infrastructure Information (CEII)

tr-13HS-TOT175-postup-cwdv2_Kramer-Lugo-slo-SPS.chf

.

Thu Mar 27 11:51:44 2008

BUS_VOLT_MAG FOR SCE North of Lugo

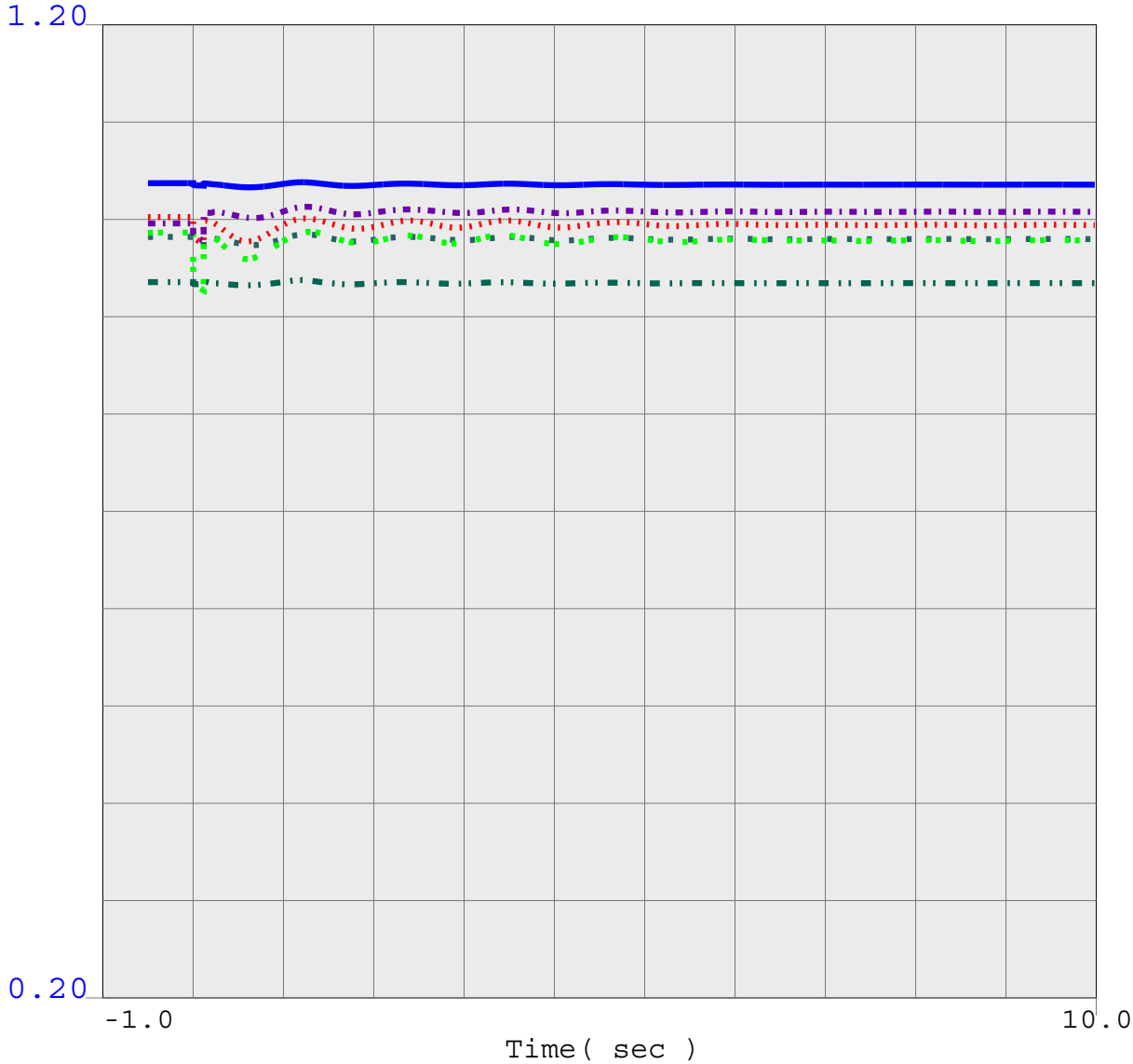

0.2000 vbus	24086	LUGO 500.0	0	0.0	1	1	1.2000
0.2000 vbus	24701	KRAMER 230.0	0	0.0	1	1	1.2000
0.2000 vbus	24601	VICTOR 230.0	0	0.0	1	1	1.2000
0.2000 vbul	24702	KRAMER 115.0	0	0.0	1	1	1.2000
0.2000 vbul	24602	VICTOR 115.0	0	0.0	1	1	1.2000
0.7000 vbus	24156	VINCENT 500.0	0	0.0	1	1	1.2000

Harper Lake System Impact Study (TOT175)
Heavy Summer Conditions: Year 2013
POST-PROJECT with Network Upgrades
N-0: Sensitivity Study Case
Contains Critical Energy Infrastructure Information (CEII)

tr-13HS-TOT175-postup-cwdv2_Kramer-Victor-dlo-slg.chf

.

Thu Mar 27 11:51:45 2008

BUS_VOLT_MAG FOR SCE North of Lugo

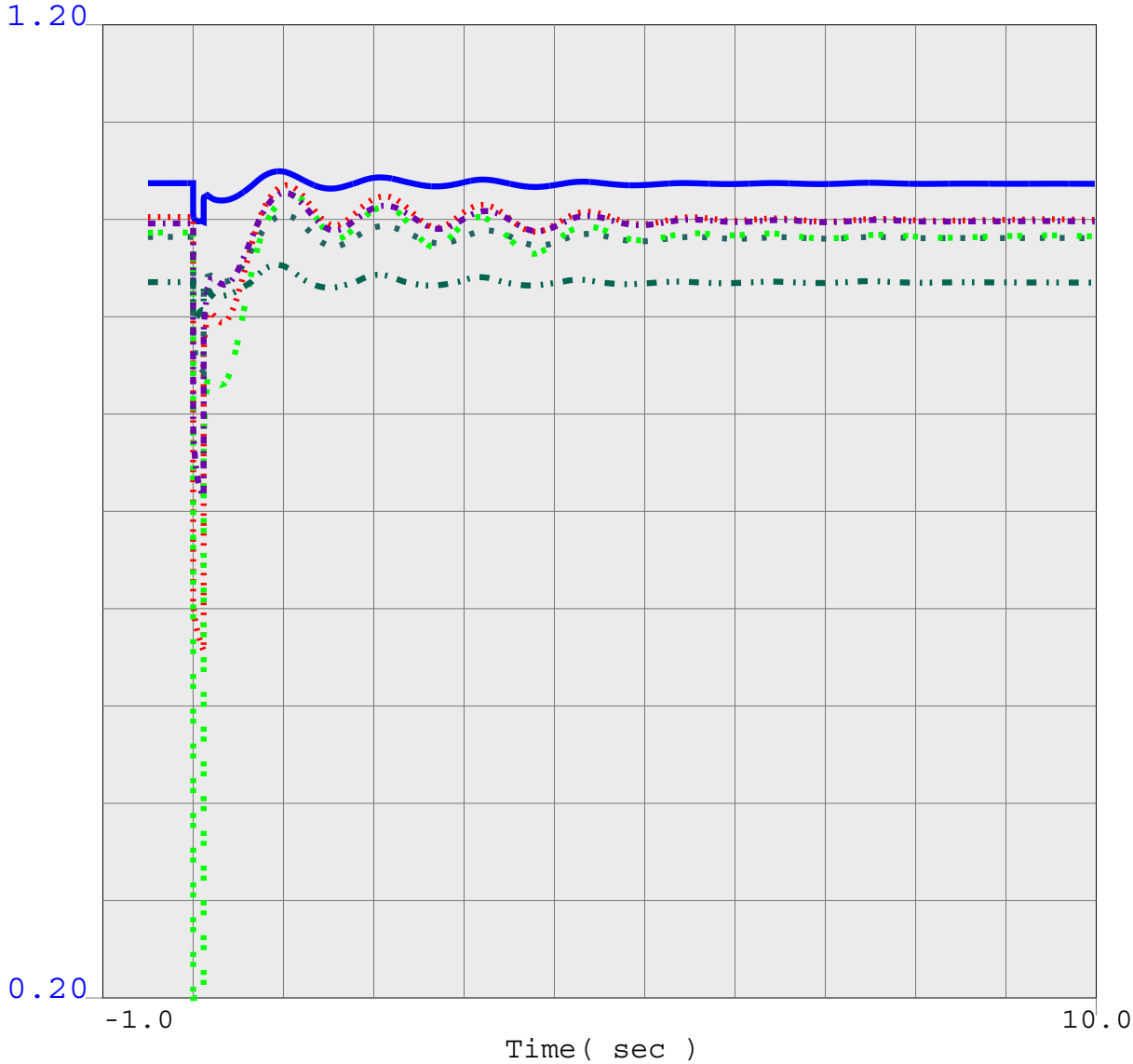

0.2000	vbus	24086	LUGO	500.0	0	0.0	1	1	1.2000
0.2000	vbus	24701	KRAMER	230.0	0	0.0	1	1	1.2000
0.2000	vbus	24601	VICTOR	230.0	0	0.0	1	1	1.2000
0.2000	vbul	24702	KRAMER	115.0	0	0.0	1	1	1.2000
0.2000	vbul	24602	VICTOR	115.0	0	0.0	1	1	1.2000
0.7000	vbus	24156	VINCENT	500.0	0	0.0	1	1	1.2000

Harper Lake System Impact Study (TOT175)
Heavy Summer Conditions: Year 2013
POST-PROJECT with Network Upgrades
N-0: Sensitivity Study Case
Contains Critical Energy Infrastructure Information (CEII)

tr-13HS-TOT175-postup-cwdv2_Kramer-Victor-slo.chf

.

Thu Mar 27 11:51:47 2008

BUS_VOLT_MAG FOR SCE North of Lugo

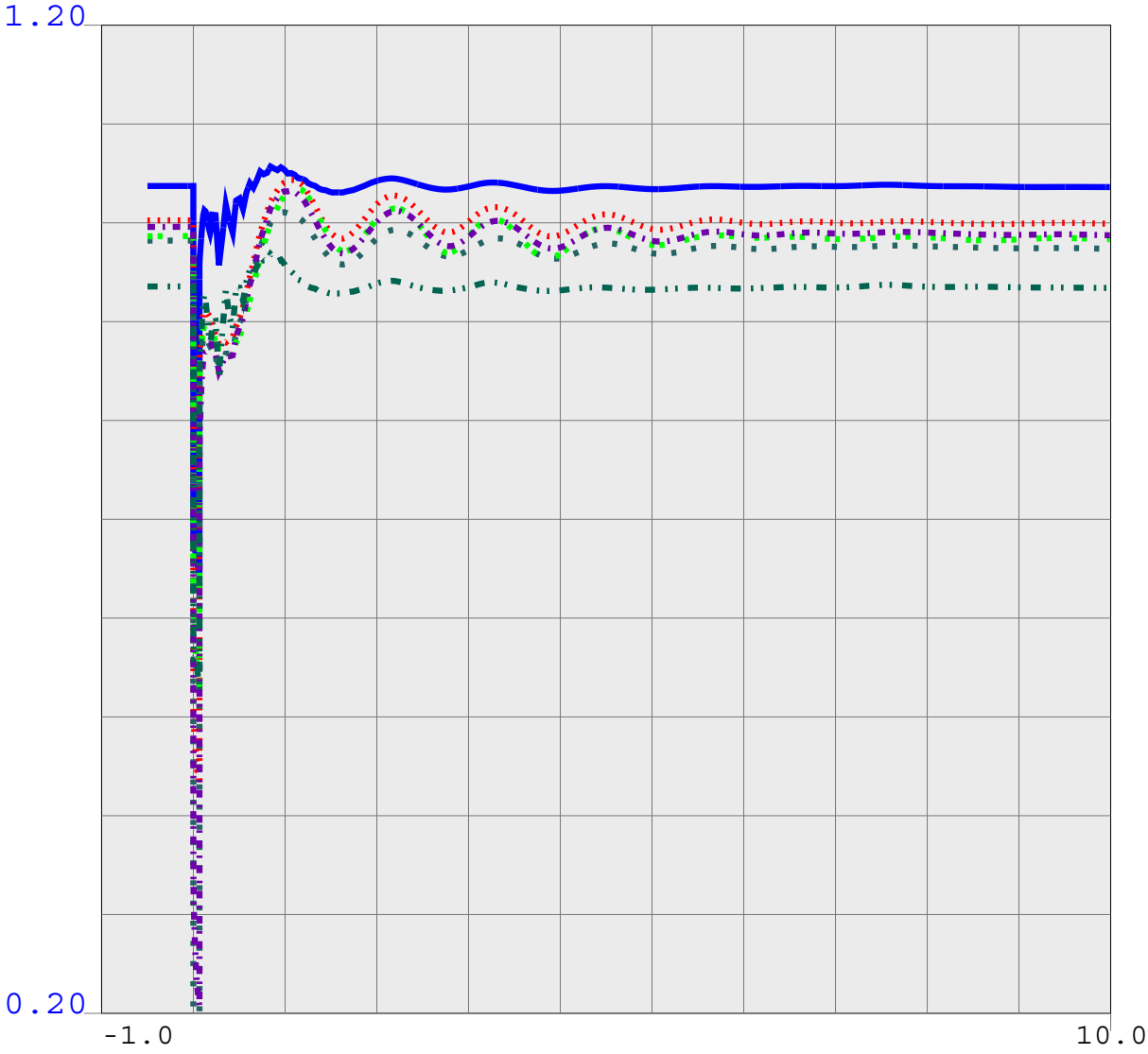

0.2000 vbus	24086	LUGO 500.0	0	0.0	1	1	1.2000
0.2000 vbus	24701	KRAMER 230.0	0	0.0	1	1	1.2000
0.2000 vbus	24601	VICTOR 230.0	0	0.0	1	1	1.2000
0.2000 vbul	24702	KRAMER 115.0	0	0.0	1	1	1.2000
0.2000 vbul	24602	VICTOR 115.0	0	0.0	1	1	1.2000
0.7000 vbus	24156	VINCENT 500.0	0	0.0	1	1	1.2000

Harper Lake System Impact Study (TOT175)
Heavy Summer Conditions: Year 2013
POST-PROJECT with Network Upgrades
N-0: Sensitivity Study Case
Contains Critical Energy Infrastructure Information (CEII)

tr-13HS-TOT175-postup-cwdv2_LUGOAA-1BNK-slo-SPS.chf

.

Thu Mar 27 11:51:48 2008

BUS_VOLT_MAG FOR SCE North of Lugo

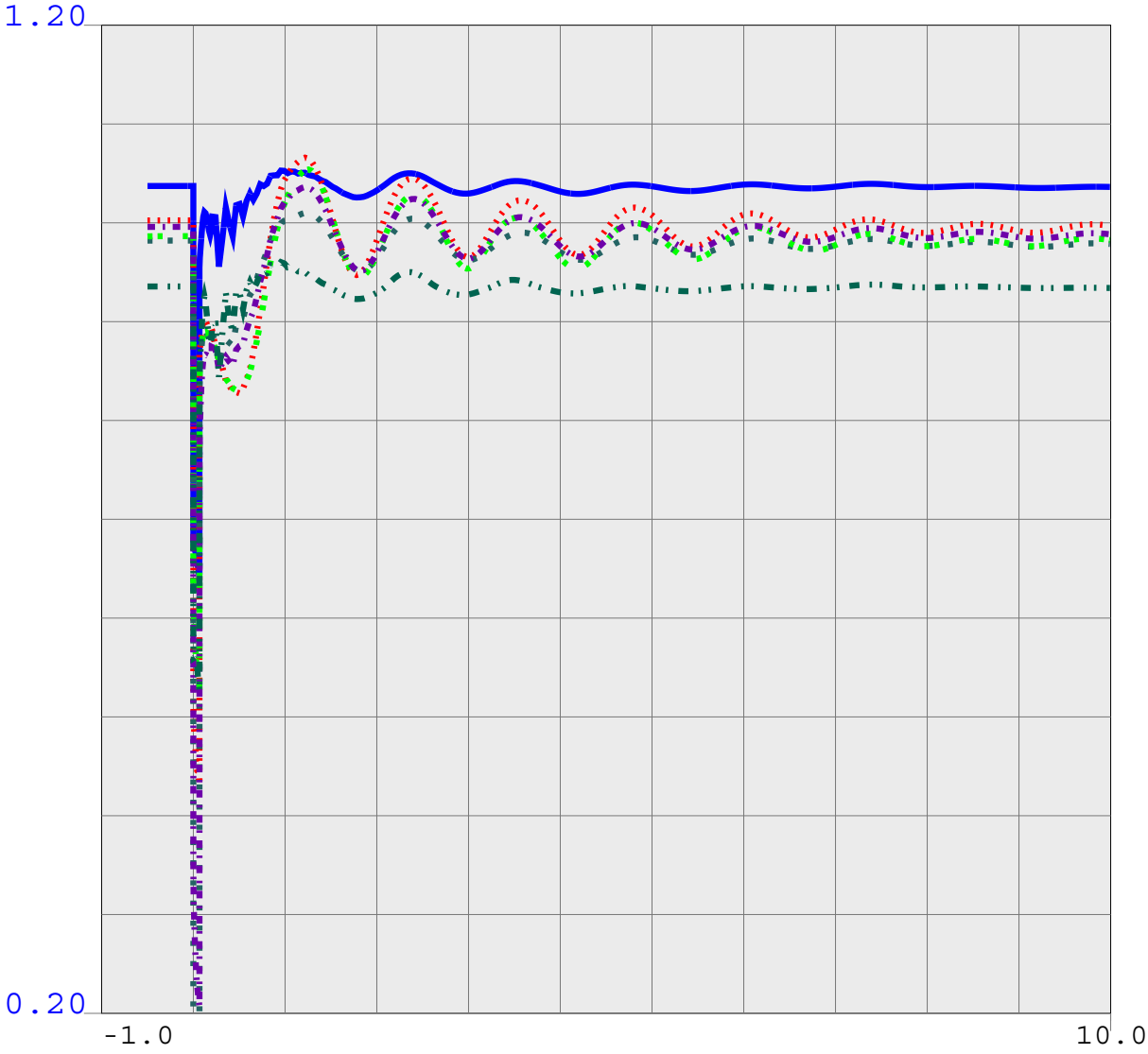

0.2000	vbus	24086	LUGO 500.0	0	0.0	1	1	1.2000
0.2000	vbus	24701	KRAMER 230.0	0	0.0	1	1	1.2000
0.2000	vbus	24601	VICTOR 230.0	0	0.0	1	1	1.2000
0.2000	vbul	24702	KRAMER 115.0	0	0.0	1	1	1.2000
0.2000	vbul	24602	VICTOR 115.0	0	0.0	1	1	1.2000
0.7000	vbus	24156	VINCENT 500.0	0	0.0	1	1	1.2000

Harper Lake System Impact Study (TOT175)
Heavy Summer Conditions: Year 2013
POST-PROJECT with Network Upgrades
N-0: Sensitivity Study Case
Contains Critical Energy Infrastructure Information (CEII)

tr-13HS-TOT175-postup-cwdv2_Lugo-Dsrtview-slo-SPS.chf

.

Thu Mar 27 11:51:50 2008

BUS_VOLT_MAG FOR SCE North of Lugo

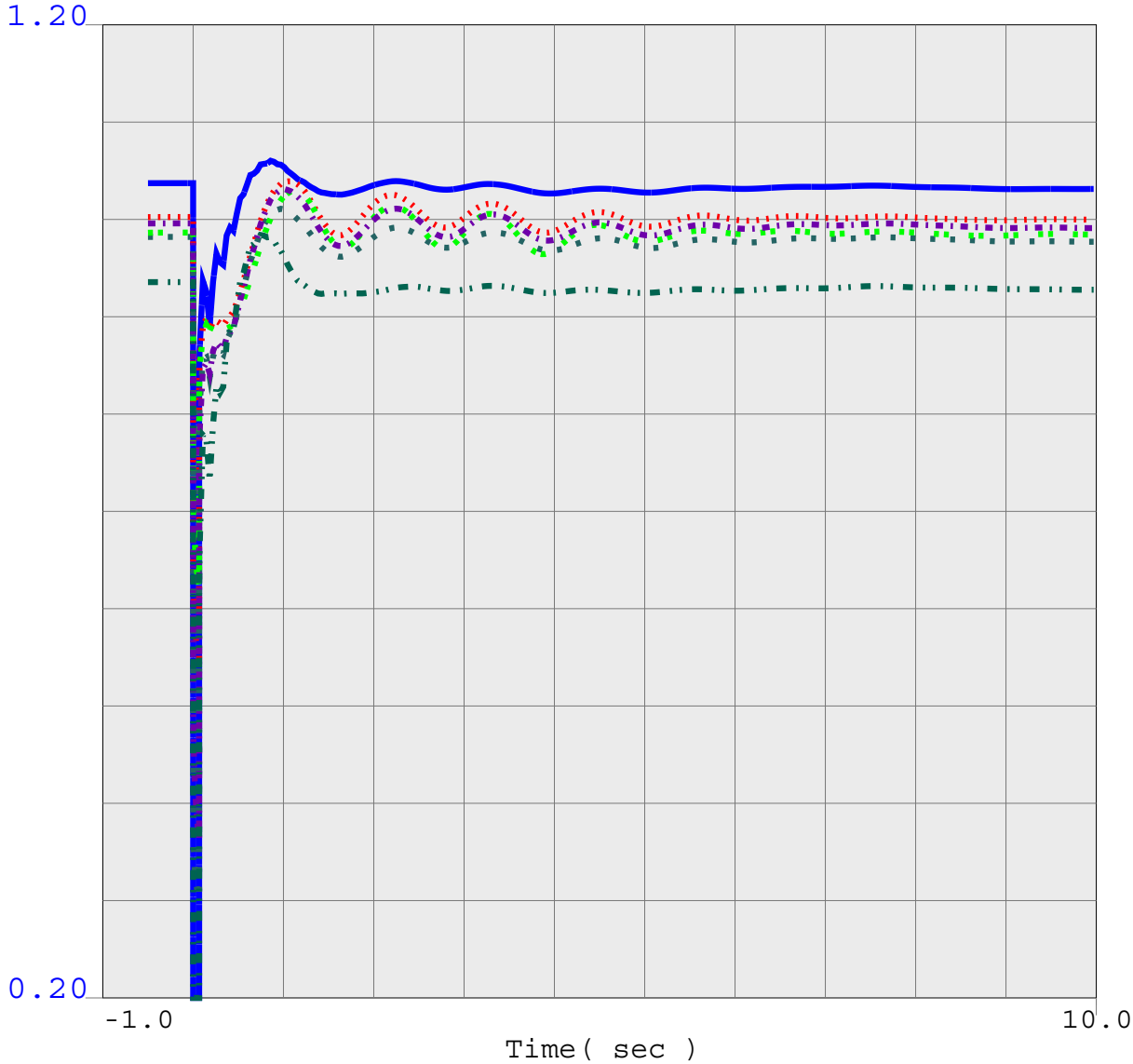

0.2000	vbus	24086	LUGO 500.0	0	0.0	1	1	1.2000
0.2000	vbus	24701	KRAMER 230.0	0	0.0	1	1	1.2000
0.2000	vbus	24601	VICTOR 230.0	0	0.0	1	1	1.2000
0.2000	vbul	24702	KRAMER 115.0	0	0.0	1	1	1.2000
0.2000	vbul	24602	VICTOR 115.0	0	0.0	1	1	1.2000
0.7000	vbus	24156	VINCENT 500.0	0	0.0	1	1	1.2000

Harper Lake System Impact Study (TOT175)
Heavy Summer Conditions: Year 2013
POST-PROJECT with Network Upgrades
N-0: Sensitivity Study Case
Contains Critical Energy Infrastructure Information (CEII)

tr-13HS-TOT175-postup-cwdv2_Lugo-Miraloma-slo.chf

.

Thu Mar 27 11:51:52 2008

BUS_VOLT_MAG FOR SCE North of Lugo

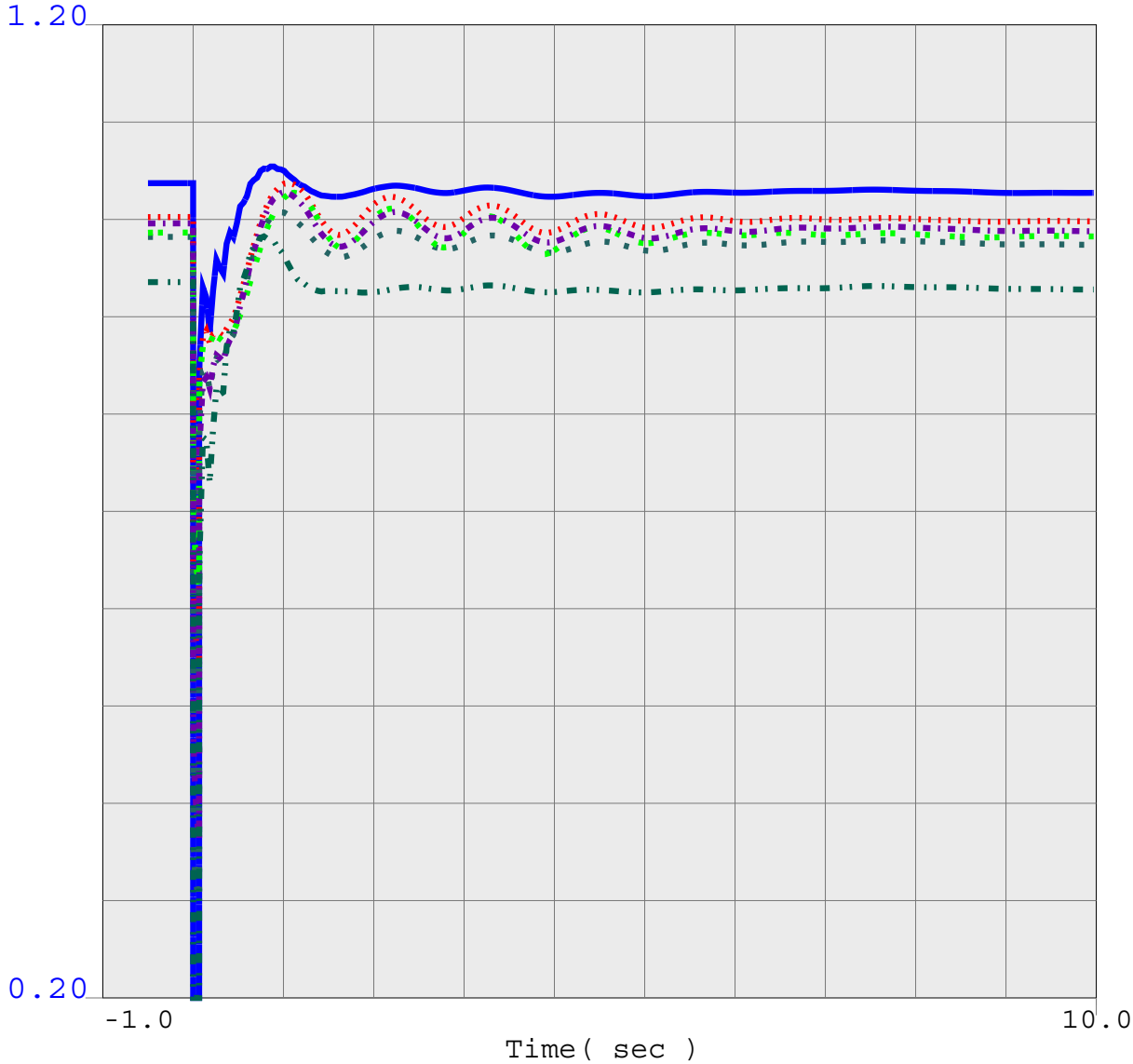

0.2000	vbus	24086	LUGO 500.0	0	0.0	1	1	1.2000
0.2000	vbus	24701	KRAMER 230.0	0	0.0	1	1	1.2000
0.2000	vbus	24601	VICTOR 230.0	0	0.0	1	1	1.2000
0.2000	vbul	24702	KRAMER 115.0	0	0.0	1	1	1.2000
0.2000	vbul	24602	VICTOR 115.0	0	0.0	1	1	1.2000
0.7000	vbus	24156	VINCENT 500.0	0	0.0	1	1	1.2000

Harper Lake System Impact Study (TOT175)
Heavy Summer Conditions: Year 2013
POST-PROJECT with Network Upgrades
N-0: Sensitivity Study Case
Contains Critical Energy Infrastructure Information (CEII)

tr-13HS-TOT175-postup-cwdv2_Lugo-Mohave-slo.chf

.

Thu Mar 27 11:51:53 2008

BUS_VOLT_MAG FOR SCE North of Lugo

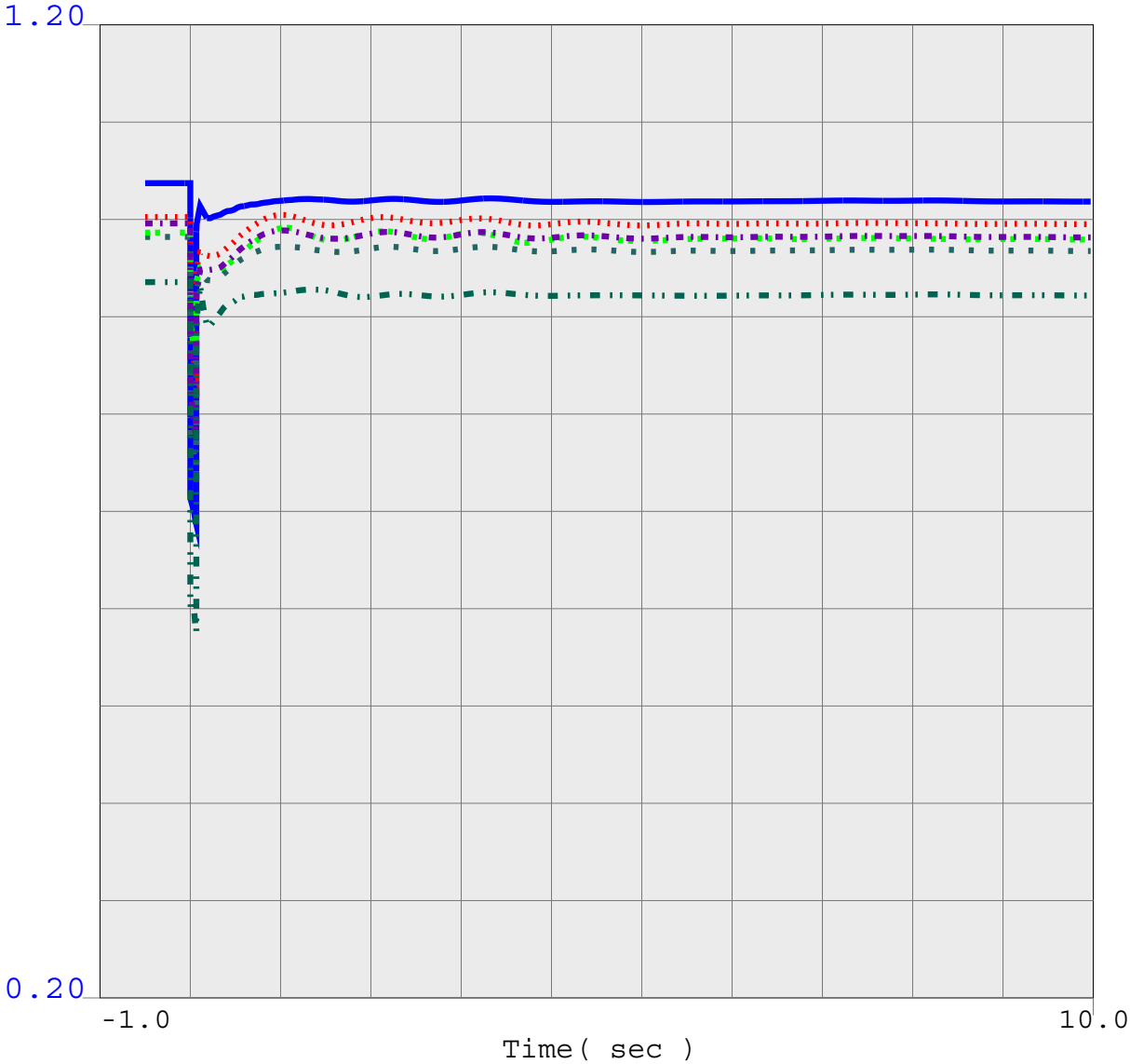

0.2000 vbus	24086	LUGO 500.0	0	0.0	1	1	1.2000
0.2000 vbus	24701	KRAMER 230.0	0	0.0	1	1	1.2000
0.2000 vbus	24601	VICTOR 230.0	0	0.0	1	1	1.2000
0.2000 vbul	24702	KRAMER 115.0	0	0.0	1	1	1.2000
0.2000 vbul	24602	VICTOR 115.0	0	0.0	1	1	1.2000
0.7000 vbus	24156	VINCENT 500.0	0	0.0	1	1	1.2000

Harper Lake System Impact Study (TOT175)
Heavy Summer Conditions: Year 2013
POST-PROJECT with Network Upgrades
N-0: Sensitivity Study Case
Contains Critical Energy Infrastructure Information (CEII)

tr-13HS-TOT175-postup-cwdv2_Lugo-Pisgah500-dlo-slg.chf

.

Thu Mar 27 11:51:55 2008

BUS_VOLT_MAG FOR SCE North of Lugo

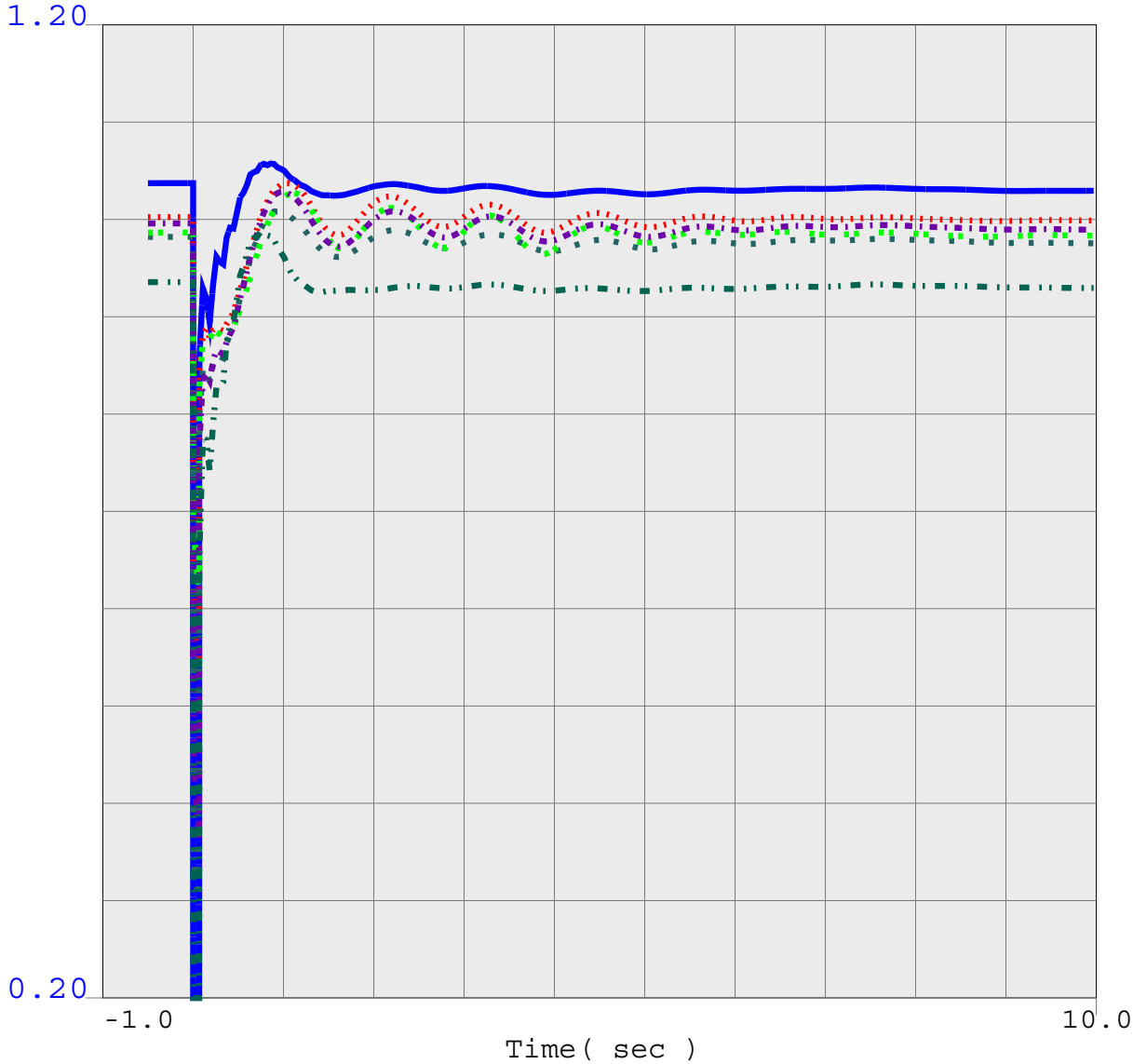

0.2000 vbus	24086	LUGO 500.0	0	0.0	1	1	1.2000
0.2000 vbus	24701	KRAMER 230.0	0	0.0	1	1	1.2000
0.2000 vbus	24601	VICTOR 230.0	0	0.0	1	1	1.2000
0.2000 vbul	24702	KRAMER 115.0	0	0.0	1	1	1.2000
0.2000 vbul	24602	VICTOR 115.0	0	0.0	1	1	1.2000
0.7000 vbus	24156	VINCENT 500.0	0	0.0	1	1	1.2000

Harper Lake System Impact Study (TOT175)
Heavy Summer Conditions: Year 2013
POST-PROJECT with Network Upgrades
N-0: Sensitivity Study Case
Contains Critical Energy Infrastructure Information (CEII)

tr-13HS-TOT175-postup-cwdv2_Lugo-Pisgah500-slo.chf

.

Thu Mar 27 11:51:56 2008

BUS_VOLT_MAG FOR SCE North of Lugo

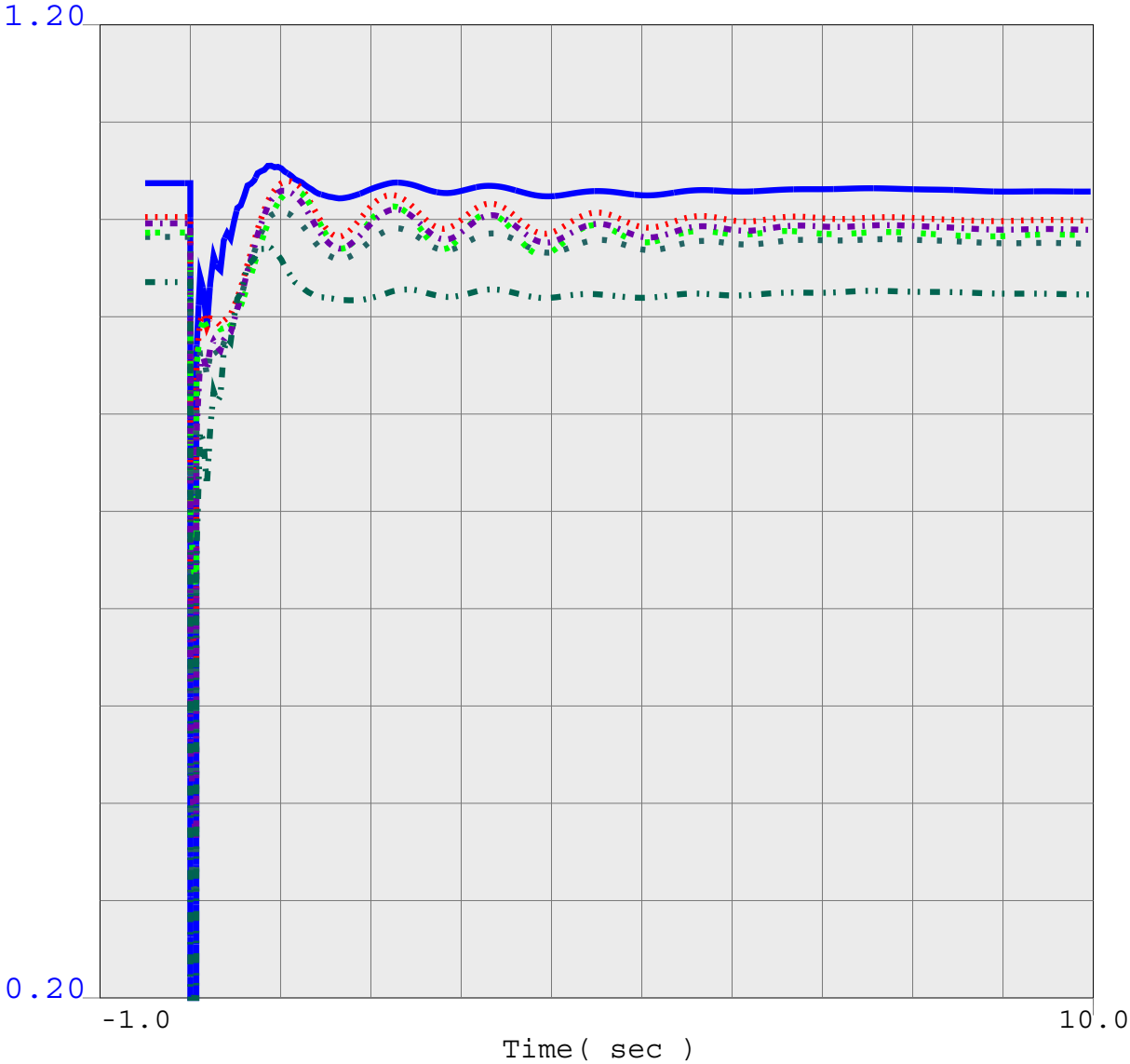

0.2000 vbus	24086	LUGO 500.0	0	0.0	1	1	1.2000
0.2000 vbus	24701	KRAMER 230.0	0	0.0	1	1	1.2000
0.2000 vbus	24601	VICTOR 230.0	0	0.0	1	1	1.2000
0.2000 vbul	24702	KRAMER 115.0	0	0.0	1	1	1.2000
0.2000 vbul	24602	VICTOR 115.0	0	0.0	1	1	1.2000
0.7000 vbus	24156	VINCENT 500.0	0	0.0	1	1	1.2000

Harper Lake System Impact Study (TOT175)
Heavy Summer Conditions: Year 2013
POST-PROJECT with Network Upgrades
N-0: Sensitivity Study Case
Contains Critical Energy Infrastructure Information (CEII)

tr-13HS-TOT175-postup-cwdv2_Lugo-Ranchvst-slo.chf

.

Thu Mar 27 11:51:58 2008

BUS_VOLT_MAG FOR SCE North of Lugo

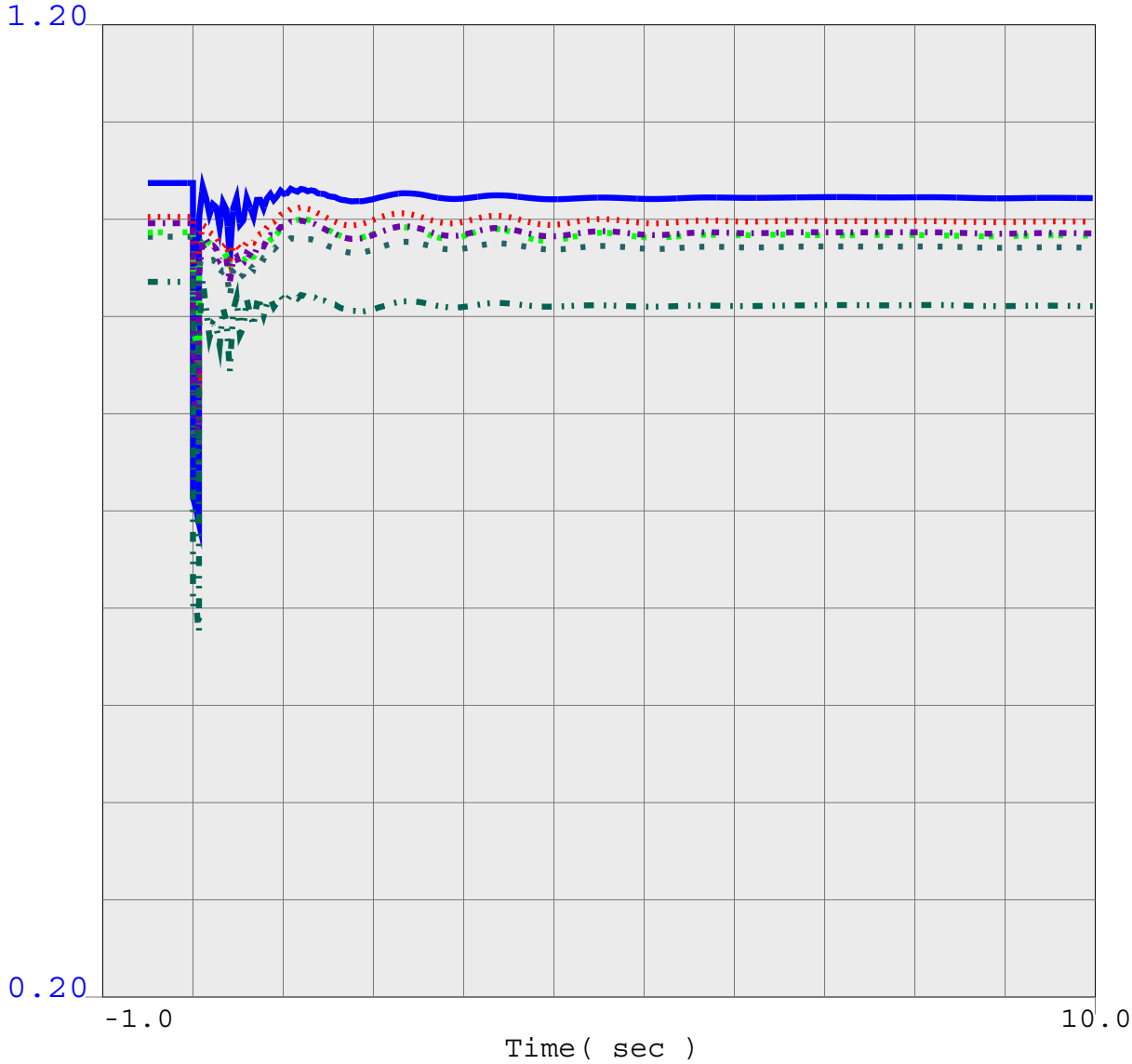

0.2000 vbus	24086	LUGO 500.0	0	0.0	1	1	1.2000
0.2000 vbus	24701	KRAMER 230.0	0	0.0	1	1	1.2000
0.2000 vbus	24601	VICTOR 230.0	0	0.0	1	1	1.2000
0.2000 vbul	24702	KRAMER 115.0	0	0.0	1	1	1.2000
0.2000 vbul	24602	VICTOR 115.0	0	0.0	1	1	1.2000
0.7000 vbus	24156	VINCENT 500.0	0	0.0	1	1	1.2000

Harper Lake System Impact Study (TOT175)
Heavy Summer Conditions: Year 2013
POST-PROJECT with Network Upgrades
N-0: Sensitivity Study Case
Contains Critical Energy Infrastructure Information (CEII)

tr-13HS-TOT175-postup-cwdv2_Lugo-South-dlo-slg.chf

.

Thu Mar 27 11:51:59 2008

BUS_VOLT_MAG FOR SCE North of Lugo

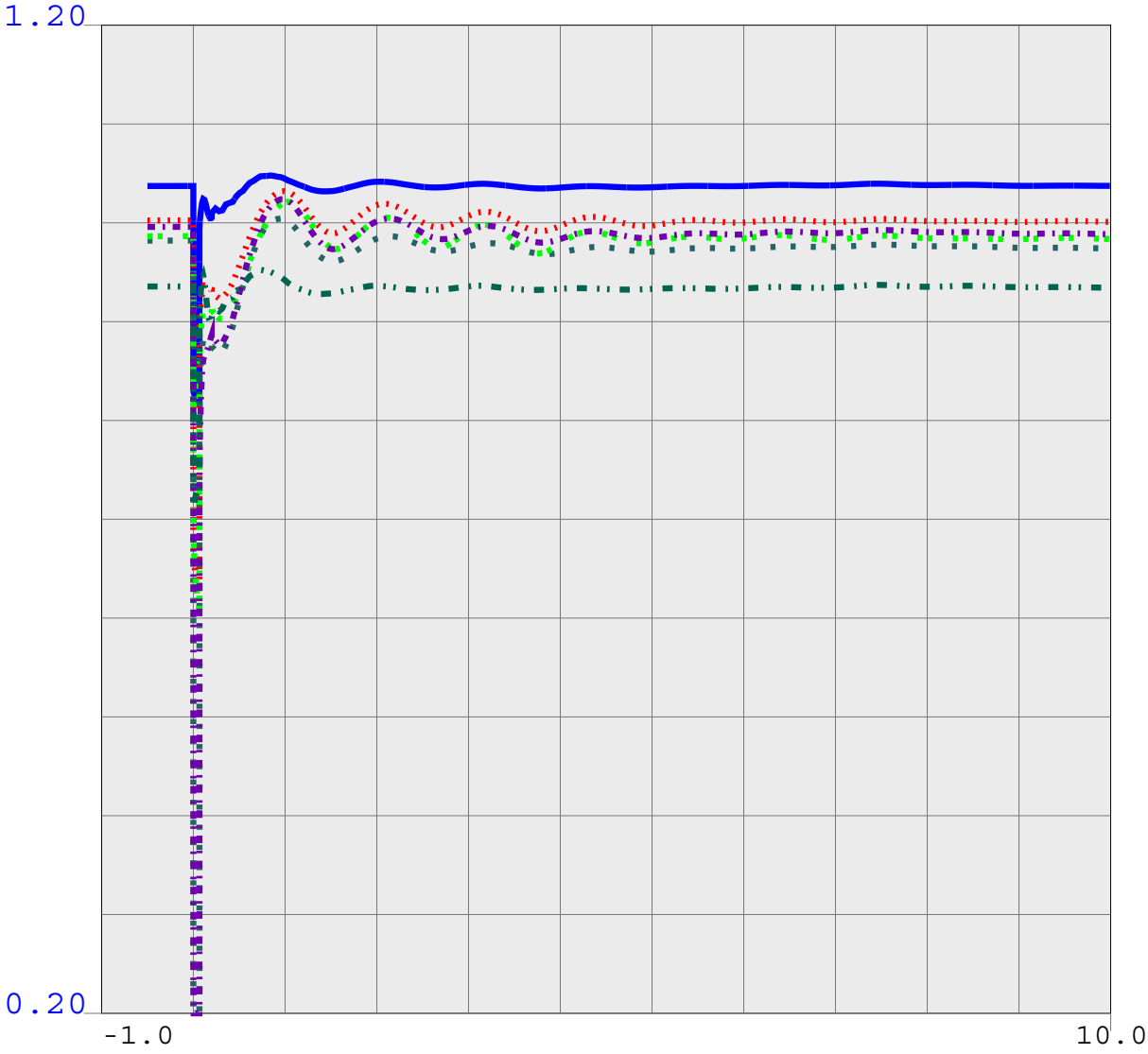

0.2000 vbus	24086	LUGO 500.0	0	0.0	1	1	1.2000
0.2000 vbus	24701	KRAMER 230.0	0	0.0	1	1	1.2000
0.2000 vbus	24601	VICTOR 230.0	0	0.0	1	1	1.2000
0.2000 vbul	24702	KRAMER 115.0	0	0.0	1	1	1.2000
0.2000 vbul	24602	VICTOR 115.0	0	0.0	1	1	1.2000
0.7000 vbus	24156	VINCENT 500.0	0	0.0	1	1	1.2000

Harper Lake System Impact Study (TOT175)
Heavy Summer Conditions: Year 2013
POST-PROJECT with Network Upgrades
N-0: Sensitivity Study Case
Contains Critical Energy Infrastructure Information (CEII)

tr-13HS-TOT175-postup-cwdv2_Lugo-Victor-dlo-SPS.chf

.

Thu Mar 27 11:52:01 2008

BUS_VOLT_MAG FOR SCE North of Lugo

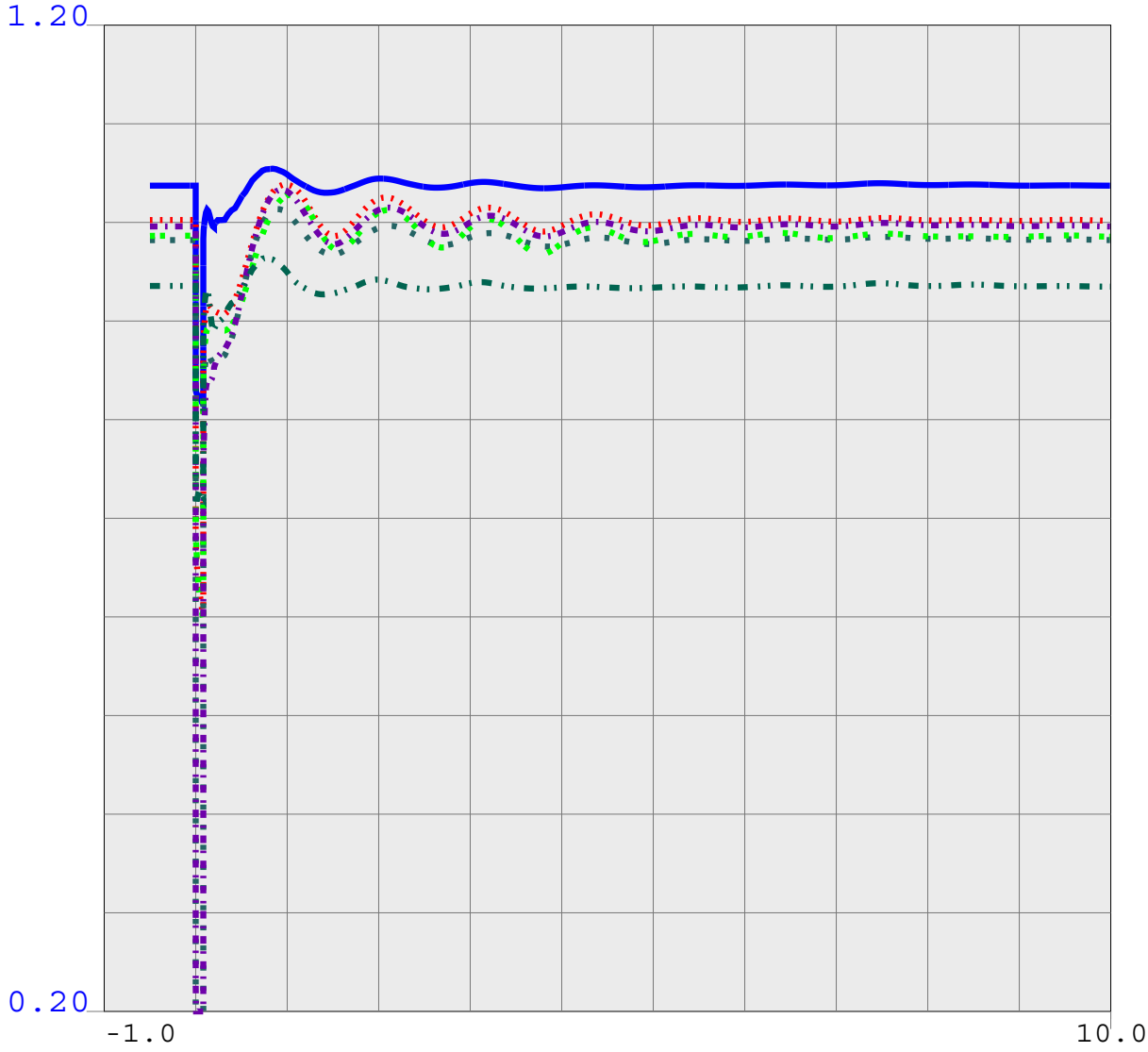

0.2000	vbus	24086	LUGO 500.0	0	0.0	1	1	1.2000
0.2000	vbus	24701	KRAMER 230.0	0	0.0	1	1	1.2000
0.2000	vbus	24601	VICTOR 230.0	0	0.0	1	1	1.2000
0.2000	vbul	24702	KRAMER 115.0	0	0.0	1	1	1.2000
0.2000	vbul	24602	VICTOR 115.0	0	0.0	1	1	1.2000
0.7000	vbus	24156	VINCENT 500.0	0	0.0	1	1	1.2000

Harper Lake System Impact Study (TOT175)
Heavy Summer Conditions: Year 2013
POST-PROJECT with Network Upgrades
N-0: Sensitivity Study Case
Contains Critical Energy Infrastructure Information (CEII)

tr-13HS-TOT175-postup-cwdv2_Lugo-Victor-slo-SPS.chf

.

Thu Mar 27 11:52:02 2008

BUS_VOLT_MAG FOR SCE North of Lugo

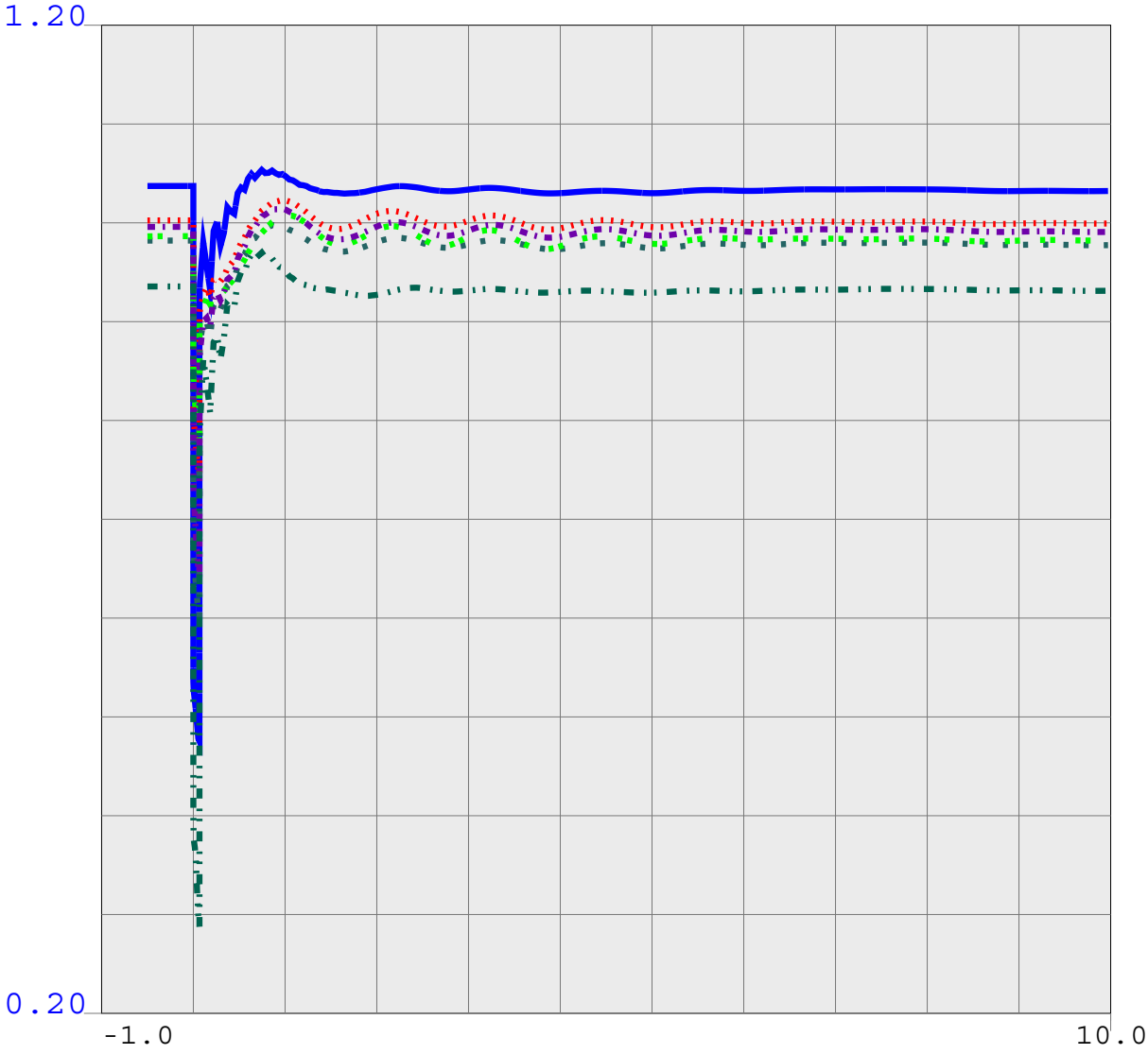

0.2000 vbus	24086	LUGO 500.0	0	0.0	1	1	1.2000
0.2000 vbus	24701	KRAMER 230.0	0	0.0	1	1	1.2000
0.2000 vbus	24601	VICTOR 230.0	0	0.0	1	1	1.2000
0.2000 vbul	24702	KRAMER 115.0	0	0.0	1	1	1.2000
0.2000 vbul	24602	VICTOR 115.0	0	0.0	1	1	1.2000
0.7000 vbus	24156	VINCENT 500.0	0	0.0	1	1	1.2000

Harper Lake System Impact Study (TOT175)
Heavy Summer Conditions: Year 2013
POST-PROJECT with Network Upgrades
N-0: Sensitivity Study Case
Contains Critical Energy Infrastructure Information (CEII)

tr-13HS-TOT175-postup-cwdv2_Lugo-Victvl-slo.chf

.

Thu Mar 27 11:52:04 2008

BUS_VOLT_MAG FOR SCE North of Lugo

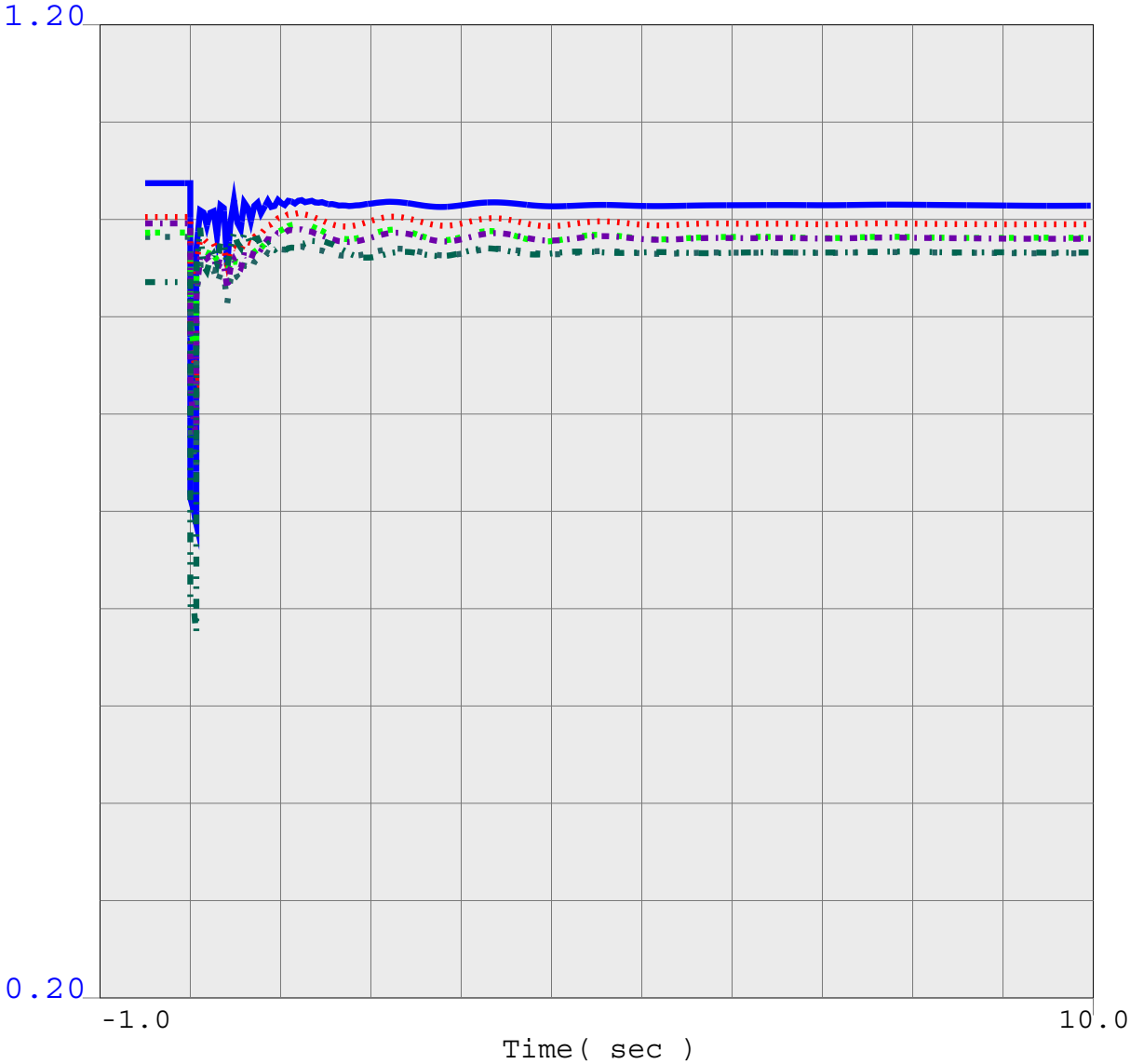

0.2000 vbus	24086	LUGO 500.0	0	0.0	1	1	1.2000
0.2000 vbus	24701	KRAMER 230.0	0	0.0	1	1	1.2000
0.2000 vbus	24601	VICTOR 230.0	0	0.0	1	1	1.2000
0.2000 vbul	24702	KRAMER 115.0	0	0.0	1	1	1.2000
0.2000 vbul	24602	VICTOR 115.0	0	0.0	1	1	1.2000
0.7000 vbus	24156	VINCENT 500.0	0	0.0	1	1	1.2000

Harper Lake System Impact Study (TOT175)
Heavy Summer Conditions: Year 2013
POST-PROJECT with Network Upgrades
N-0: Sensitivity Study Case
Contains Critical Energy Infrastructure Information (CEII)

tr-13HS-TOT175-postup-cwdv2_Lugo-Vincent-dlo-slg.chf

.

Thu Mar 27 11:52:06 2008

BUS_VOLT_MAG FOR SCE North of Lugo

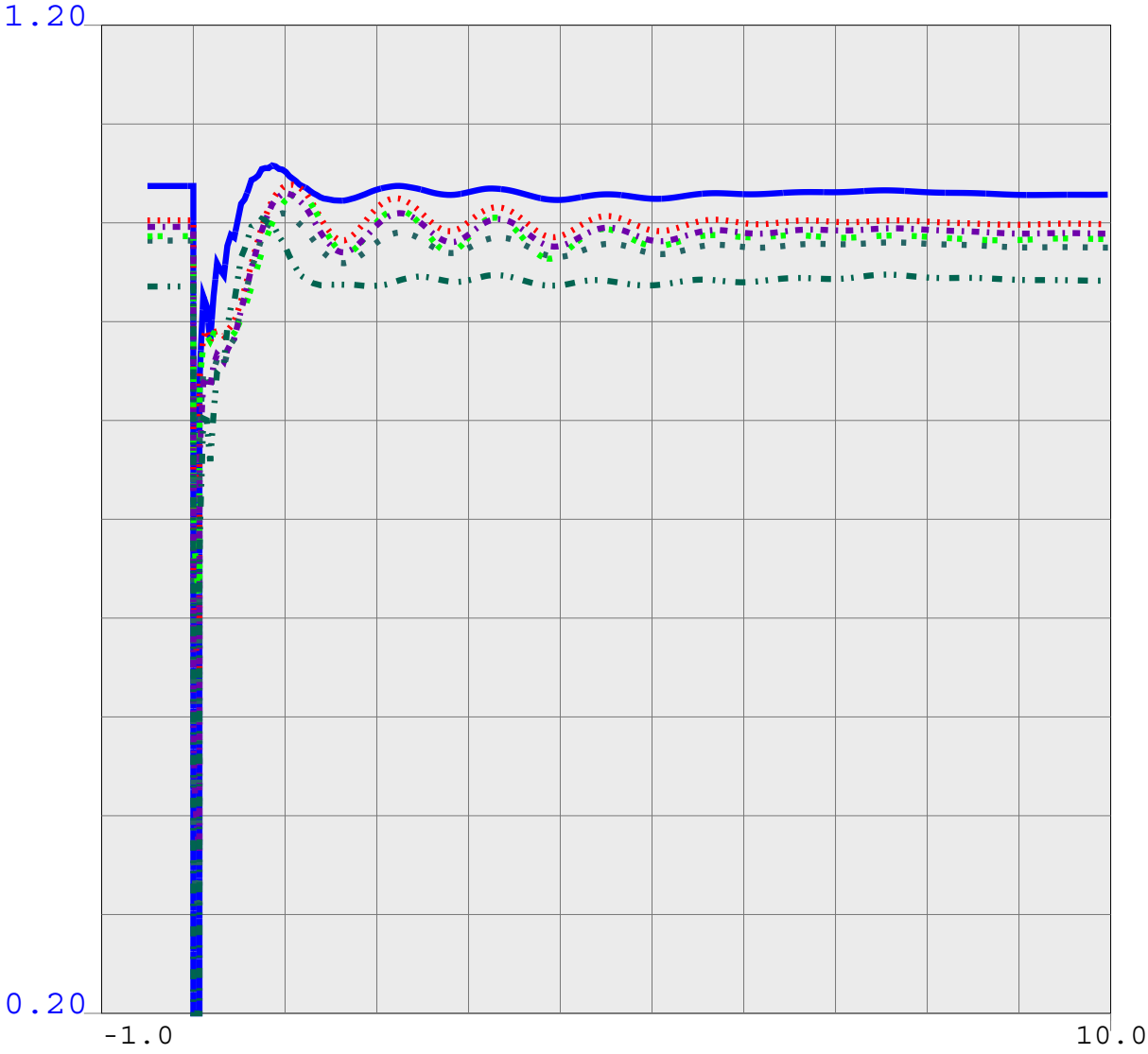

0.2000 vbus	24086	LUGO 500.0	0	0.0	1	1	1.2000
0.2000 vbus	24701	KRAMER 230.0	0	0.0	1	1	1.2000
0.2000 vbus	24601	VICTOR 230.0	0	0.0	1	1	1.2000
0.2000 vbul	24702	KRAMER 115.0	0	0.0	1	1	1.2000
0.2000 vbul	24602	VICTOR 115.0	0	0.0	1	1	1.2000
0.7000 vbus	24156	VINCENT 500.0	0	0.0	1	1	1.2000

Harper Lake System Impact Study (TOT175)
Heavy Summer Conditions: Year 2013
POST-PROJECT with Network Upgrades
N-0: Sensitivity Study Case
Contains Critical Energy Infrastructure Information (CEII)

tr-13HS-TOT175-postup-cwdv2_Lugo-Vincent-slo.chf

.

Thu Mar 27 11:52:07 2008

BUS_VOLT_MAG FOR SCE North of Lugo

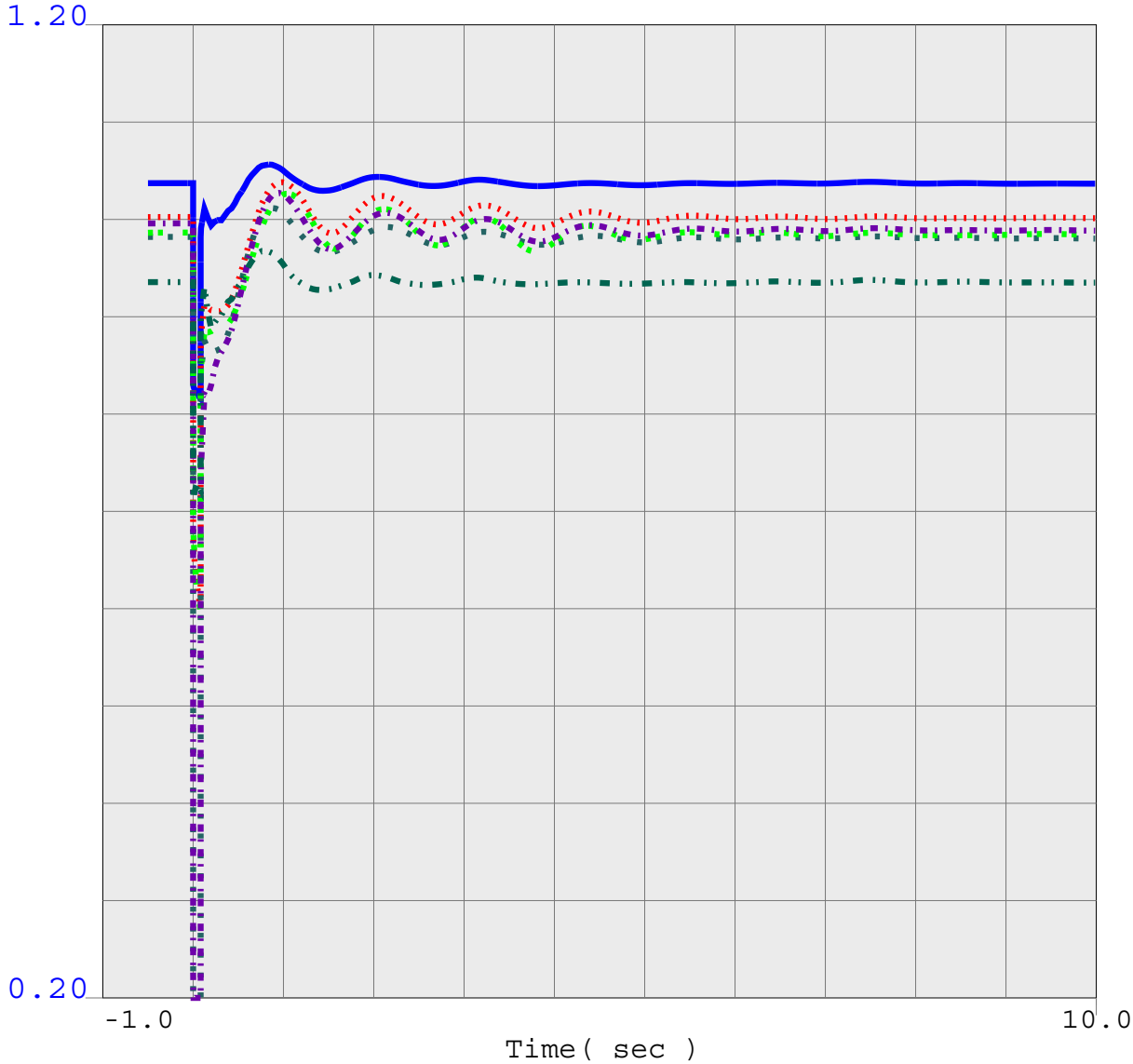

0.2000	vbus	24086	LUGO 500.0	0	0.0	1	1	1.2000
0.2000	vbus	24701	KRAMER 230.0	0	0.0	1	1	1.2000
0.2000	vbus	24601	VICTOR 230.0	0	0.0	1	1	1.2000
0.2000	vbul	24702	KRAMER 115.0	0	0.0	1	1	1.2000
0.2000	vbul	24602	VICTOR 115.0	0	0.0	1	1	1.2000
0.7000	vbus	24156	VINCENT 500.0	0	0.0	1	1	1.2000

Harper Lake System Impact Study (TOT175)
Heavy Summer Conditions: Year 2013
POST-PROJECT with Network Upgrades
N-0: Sensitivity Study Case
Contains Critical Energy Infrastructure Information (CEII)

tr-13HS-TOT175-postup-cwdv2_VICTOR-1BNK-slo.chf

.

Thu Mar 27 11:52:09 2008

Interconnection System Impact Study

Appendix B – Stability Plots

BUS_VOLT_MAG FOR SCE North of Lugo

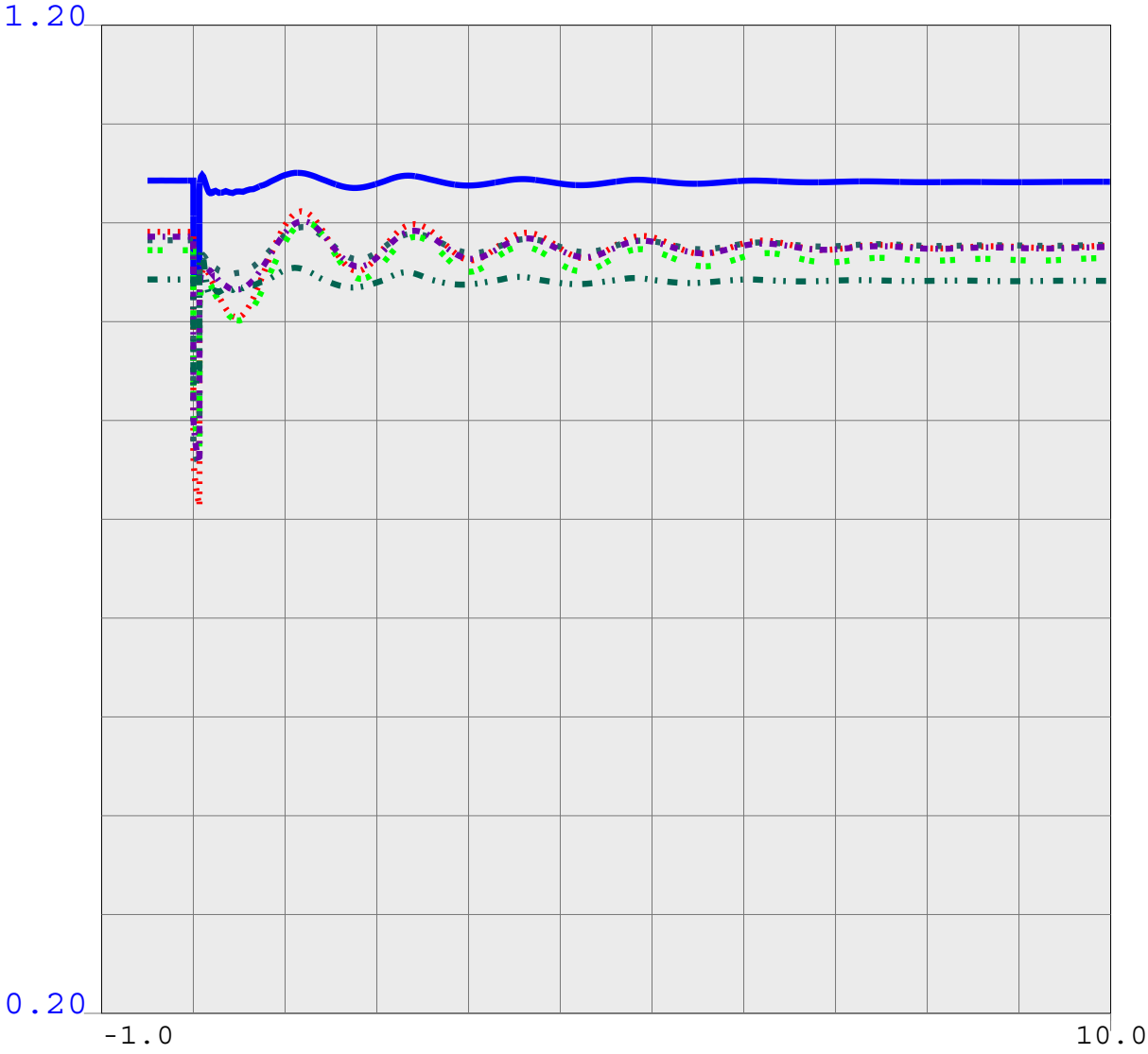

0.2000	vbus	24086	LUGO 500.0	0	0.0	1	1	1.2000
0.2000	vbus	24701	KRAMER 230.0	0	0.0	1	1	1.2000
0.2000	vbus	24601	VICTOR 230.0	0	0.0	1	1	1.2000
0.2000	vbul	24702	KRAMER 115.0	0	0.0	1	1	1.2000
0.2000	vbul	24602	VICTOR 115.0	0	0.0	1	1	1.2000
0.7000	vbus	24156	VINCENT 500.0	0	0.0	1	1	1.2000

Harper Lake System Impact Study (TOT175)
Heavy Spring Conditions: Year 2013
POST-PROJECT with Network Upgrades
N-0: Sensitivity Study Case
Contains Critical Energy Infrastructure Information (CEII)

tr-13HSP-TOT175-postup-cwdv2_Coolwater-Dsrtview-slo-SPS.chf

.

Thu Mar 27 11:52:10 2008

BUS_VOLT_MAG FOR SCE North of Lugo

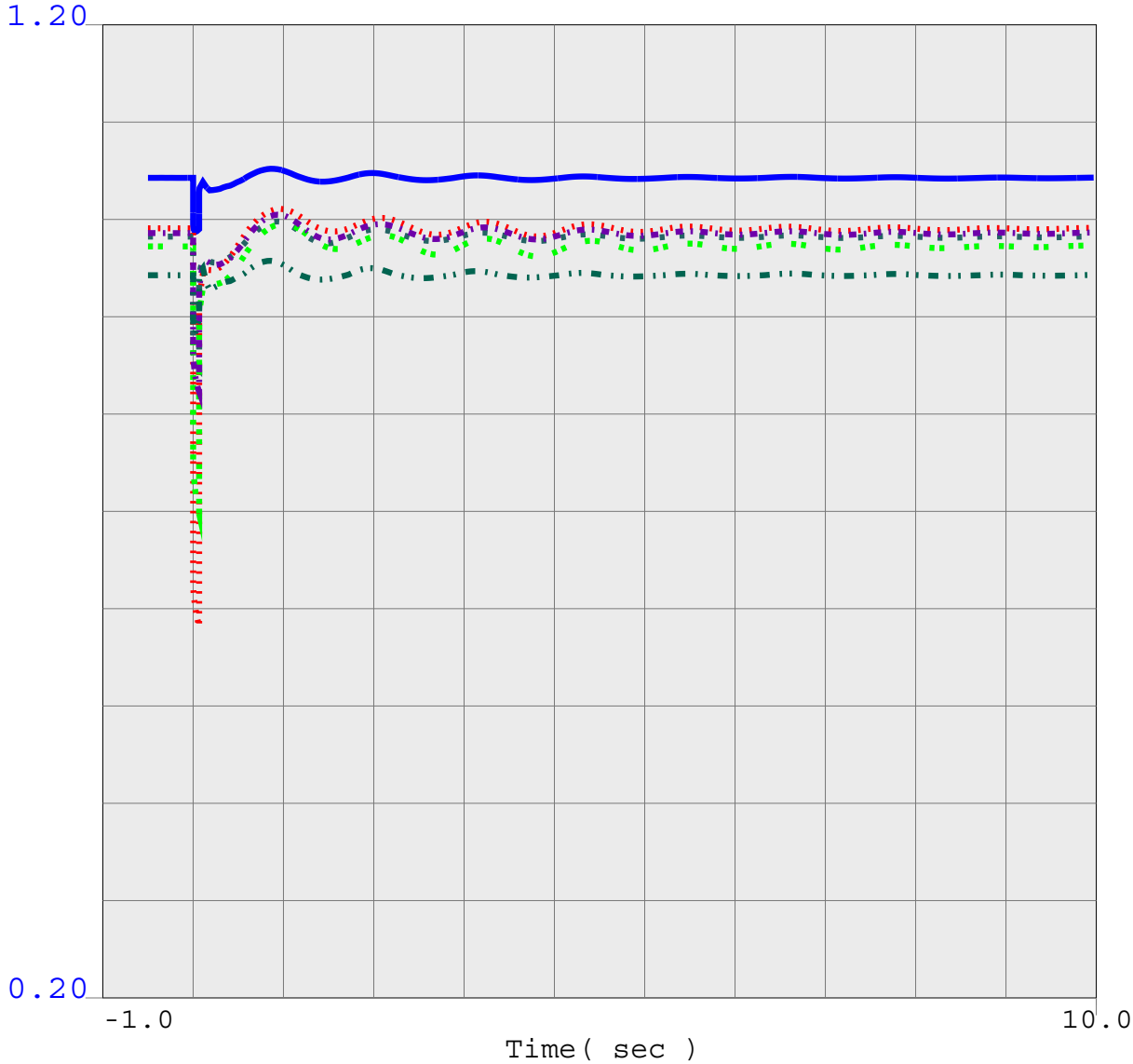

0.2000 vbus	24086	LUGO 500.0	0	0.0	1	1	1.2000
0.2000 vbus	24701	KRAMER 230.0	0	0.0	1	1	1.2000
0.2000 vbus	24601	VICTOR 230.0	0	0.0	1	1	1.2000
0.2000 vbul	24702	KRAMER 115.0	0	0.0	1	1	1.2000
0.2000 vbul	24602	VICTOR 115.0	0	0.0	1	1	1.2000
0.7000 vbus	24156	VINCENT 500.0	0	0.0	1	1	1.2000

Harper Lake System Impact Study (TOT175)
Heavy Spring Conditions: Year 2013
POST-PROJECT with Network Upgrades
N-0: Sensitivity Study Case
Contains Critical Energy Infrastructure Information (CEII)

tr-13HSP-TOT175-postup-cwdv2_Cwater-HinkleyKramer-dlo.chf

.

Thu Mar 27 11:52:13 2008

BUS_VOLT_MAG FOR SCE North of Lugo

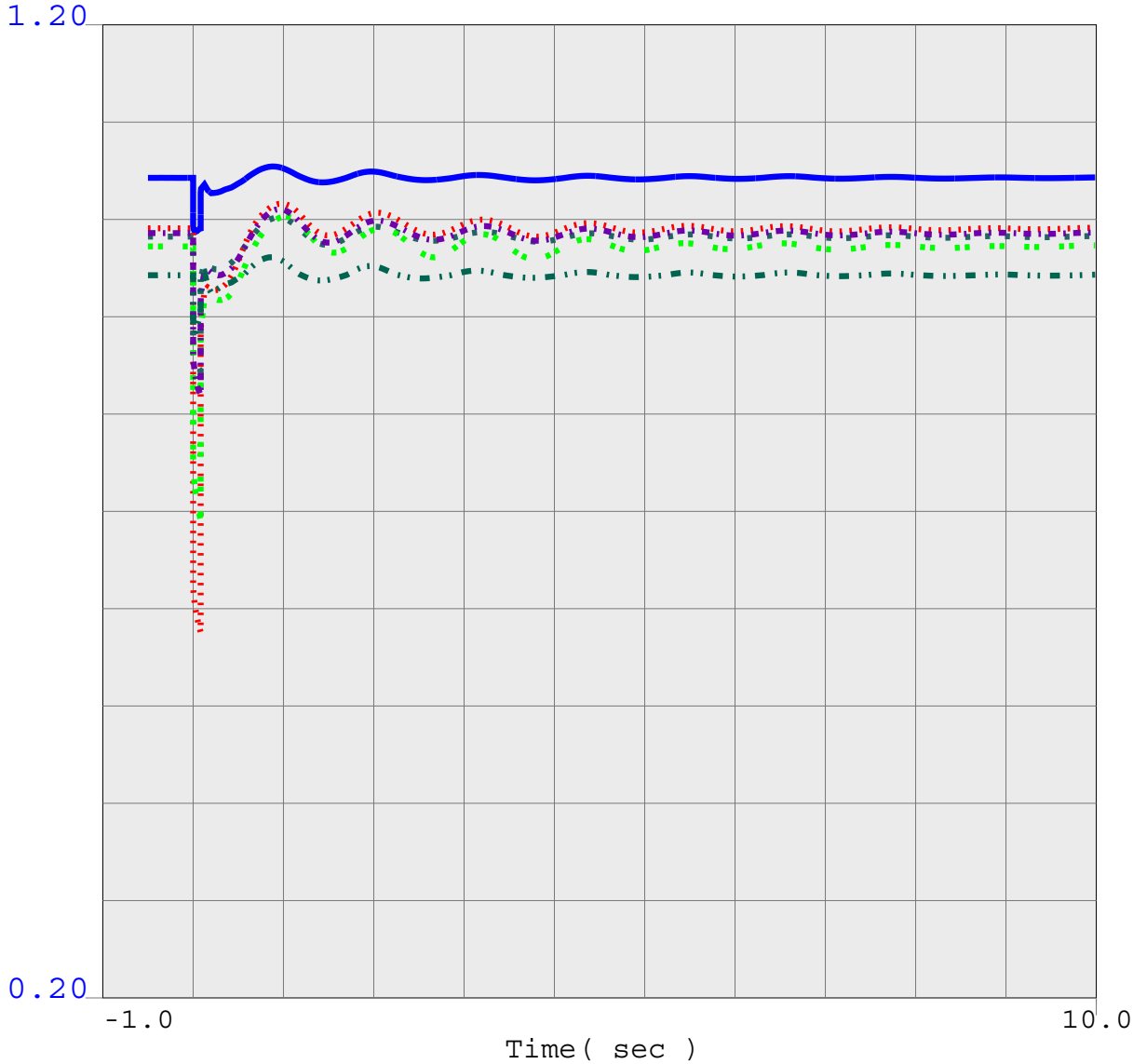

0.2000	vbus	24086	LUGO	500.0	0	0.0	1	1	1.2000
0.2000	vbus	24701	KRAMER	230.0	0	0.0	1	1	1.2000
0.2000	vbus	24601	VICTOR	230.0	0	0.0	1	1	1.2000
0.2000	vbul	24702	KRAMER	115.0	0	0.0	1	1	1.2000
0.2000	vbul	24602	VICTOR	115.0	0	0.0	1	1	1.2000
0.7000	vbus	24156	VINCENT	500.0	0	0.0	1	1	1.2000

Harper Lake System Impact Study (TOT175)
Heavy Spring Conditions: Year 2013
POST-PROJECT with Network Upgrades
N-0: Sensitivity Study Case
Contains Critical Energy Infrastructure Information (CEII)

tr-13HSP-TOT175-postup-cwdv2_Cwater-Hinkley-slo.chf

.

Thu Mar 27 11:52:12 2008

BUS_VOLT_MAG FOR SCE North of Lugo

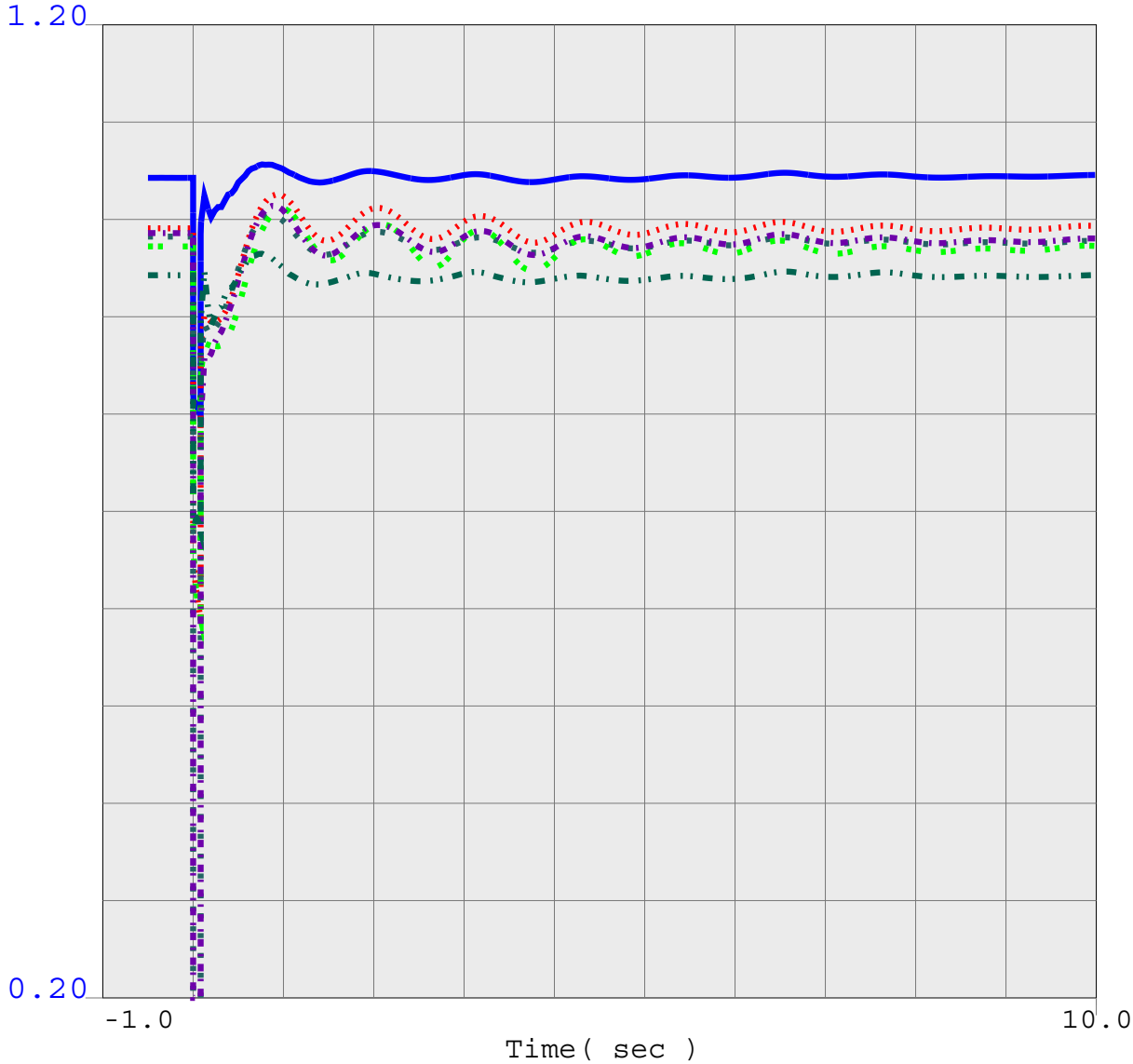

0.2000 vbus	24086	LUGO 500.0	0	0.0	1	1	1.2000
0.2000 vbus	24701	KRAMER 230.0	0	0.0	1	1	1.2000
0.2000 vbus	24601	VICTOR 230.0	0	0.0	1	1	1.2000
0.2000 vbul	24702	KRAMER 115.0	0	0.0	1	1	1.2000
0.2000 vbul	24602	VICTOR 115.0	0	0.0	1	1	1.2000
0.7000 vbus	24156	VINCENT 500.0	0	0.0	1	1	1.2000

Harper Lake System Impact Study (TOT175)
Heavy Spring Conditions: Year 2013
POST-PROJECT with Network Upgrades
N-0: Sensitivity Study Case
Contains Critical Energy Infrastructure Information (CEII)

tr-13HSP-TOT175-postup-cwdv2_Hidesert-Victor-slo.chf

.

Thu Mar 27 11:52:15 2008

BUS_VOLT_MAG FOR SCE North of Lugo

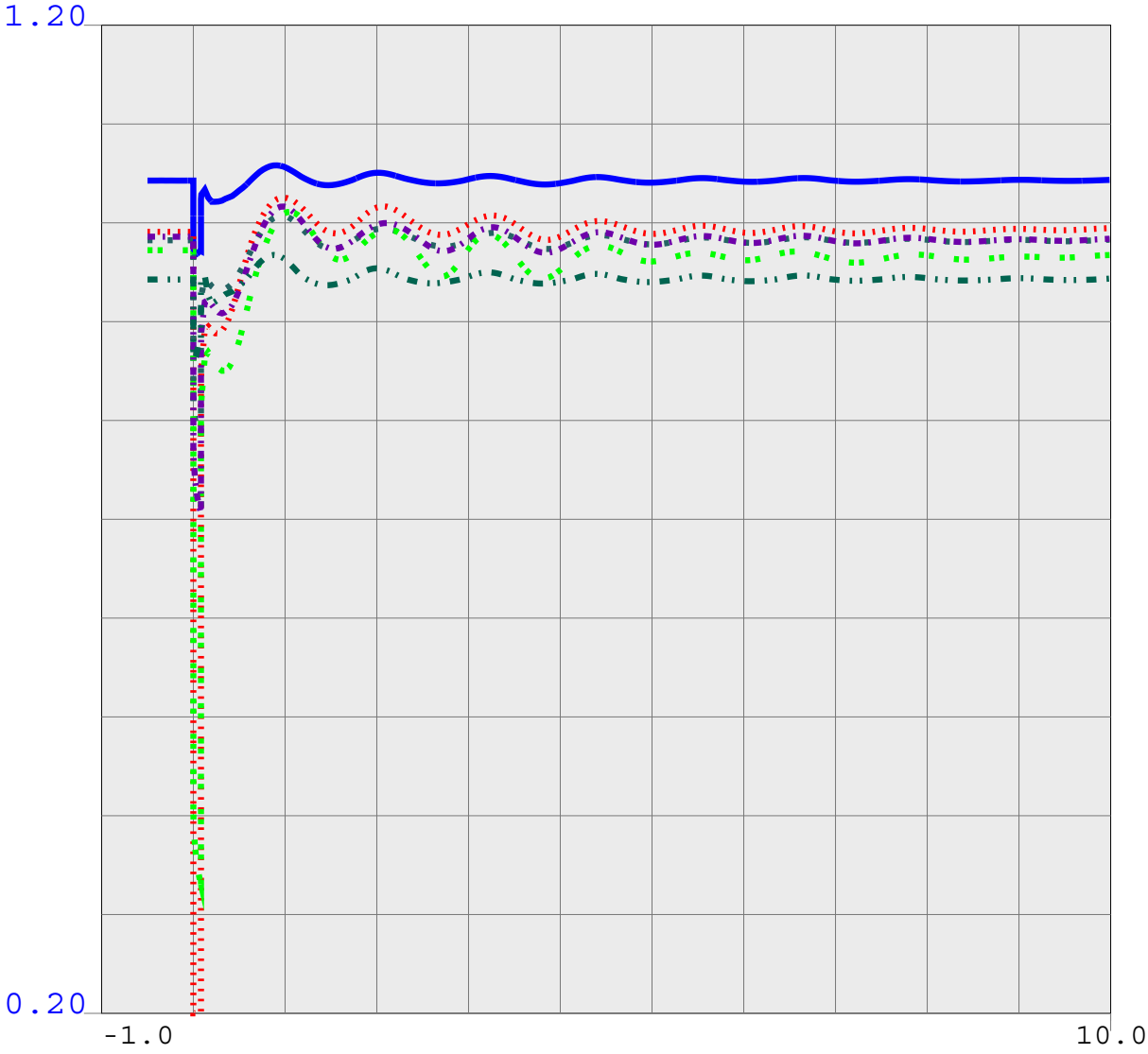

0.2000 vbus	24086	LUGO 500.0	0	0.0	1	1	1.2000
0.2000 vbus	24701	KRAMER 230.0	0	0.0	1	1	1.2000
0.2000 vbus	24601	VICTOR 230.0	0	0.0	1	1	1.2000
0.2000 vbul	24702	KRAMER 115.0	0	0.0	1	1	1.2000
0.2000 vbul	24602	VICTOR 115.0	0	0.0	1	1	1.2000
0.7000 vbus	24156	VINCENT 500.0	0	0.0	1	1	1.2000

Harper Lake System Impact Study (TOT175)
Heavy Spring Conditions: Year 2013
POST-PROJECT with Network Upgrades
N-0: Sensitivity Study Case
Contains Critical Energy Infrastructure Information (CEII)

tr-13HSP-TOT175-postup-cwdv2_KRAMER-1BNK-slo.chf

.

Thu Mar 27 11:52:17 2008

BUS_VOLT_MAG FOR SCE North of Lugo

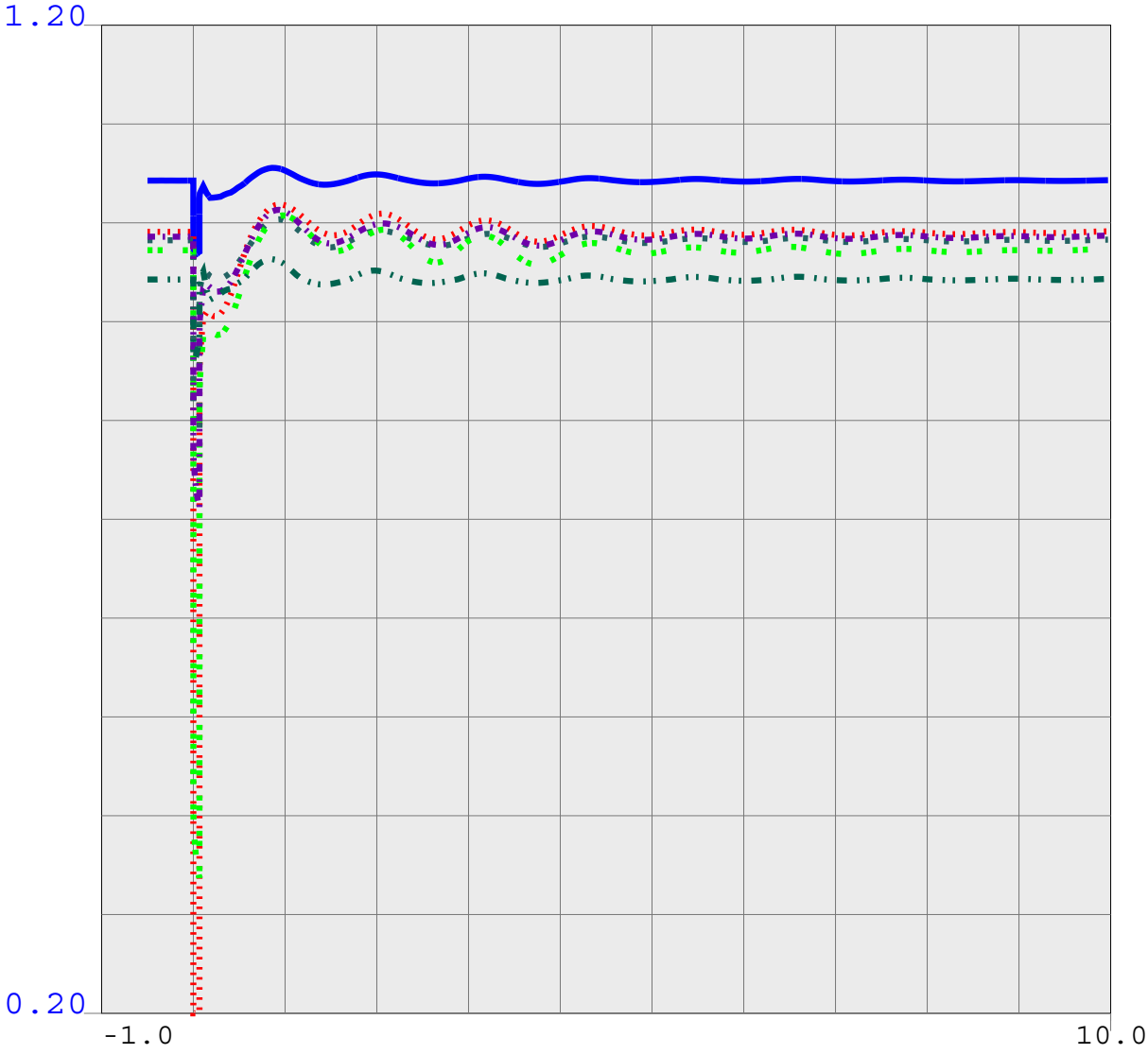

0.2000	vbus	24086	LUGO 500.0	0	0.0	1	1	1.2000
0.2000	vbus	24701	KRAMER 230.0	0	0.0	1	1	1.2000
0.2000	vbus	24601	VICTOR 230.0	0	0.0	1	1	1.2000
0.2000	vbul	24702	KRAMER 115.0	0	0.0	1	1	1.2000
0.2000	vbul	24602	VICTOR 115.0	0	0.0	1	1	1.2000
0.7000	vbus	24156	VINCENT 500.0	0	0.0	1	1	1.2000

Harper Lake System Impact Study (TOT175)
Heavy Spring Conditions: Year 2013
POST-PROJECT with Network Upgrades
N-0: Sensitivity Study Case
Contains Critical Energy Infrastructure Information (CEII)

tr-13HSP-TOT175-postup-cwdv2_Kramer-Cwater-slo.chf

.

Thu Mar 27 11:52:18 2008

BUS_VOLT_MAG FOR SCE North of Lugo

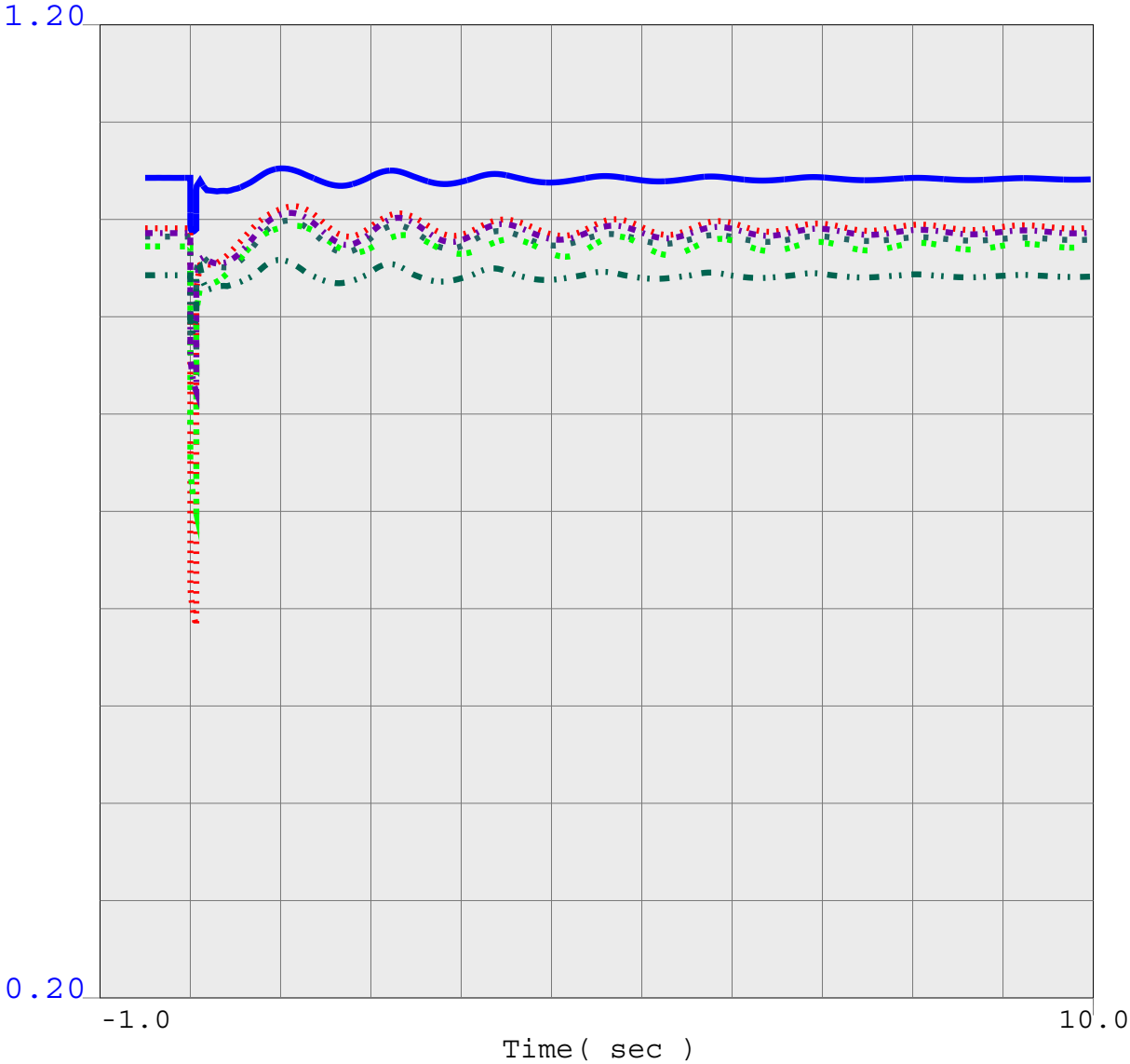

0.2000 vbus	24086	LUGO 500.0	0	0.0	1	1	1.2000
0.2000 vbus	24701	KRAMER 230.0	0	0.0	1	1	1.2000
0.2000 vbus	24601	VICTOR 230.0	0	0.0	1	1	1.2000
0.2000 vbul	24702	KRAMER 115.0	0	0.0	1	1	1.2000
0.2000 vbul	24602	VICTOR 115.0	0	0.0	1	1	1.2000
0.7000 vbus	24156	VINCENT 500.0	0	0.0	1	1	1.2000

Harper Lake System Impact Study (TOT175)
Heavy Spring Conditions: Year 2013
POST-PROJECT with Network Upgrades
N-0: Sensitivity Study Case
Contains Critical Energy Infrastructure Information (CEII)

tr-13HSP-TOT175-postup-cwdv2_Kramer-HinkleyCwater-dlo.chf

.

Thu Mar 27 11:52:21 2008

BUS_VOLT_MAG FOR SCE North of Lugo

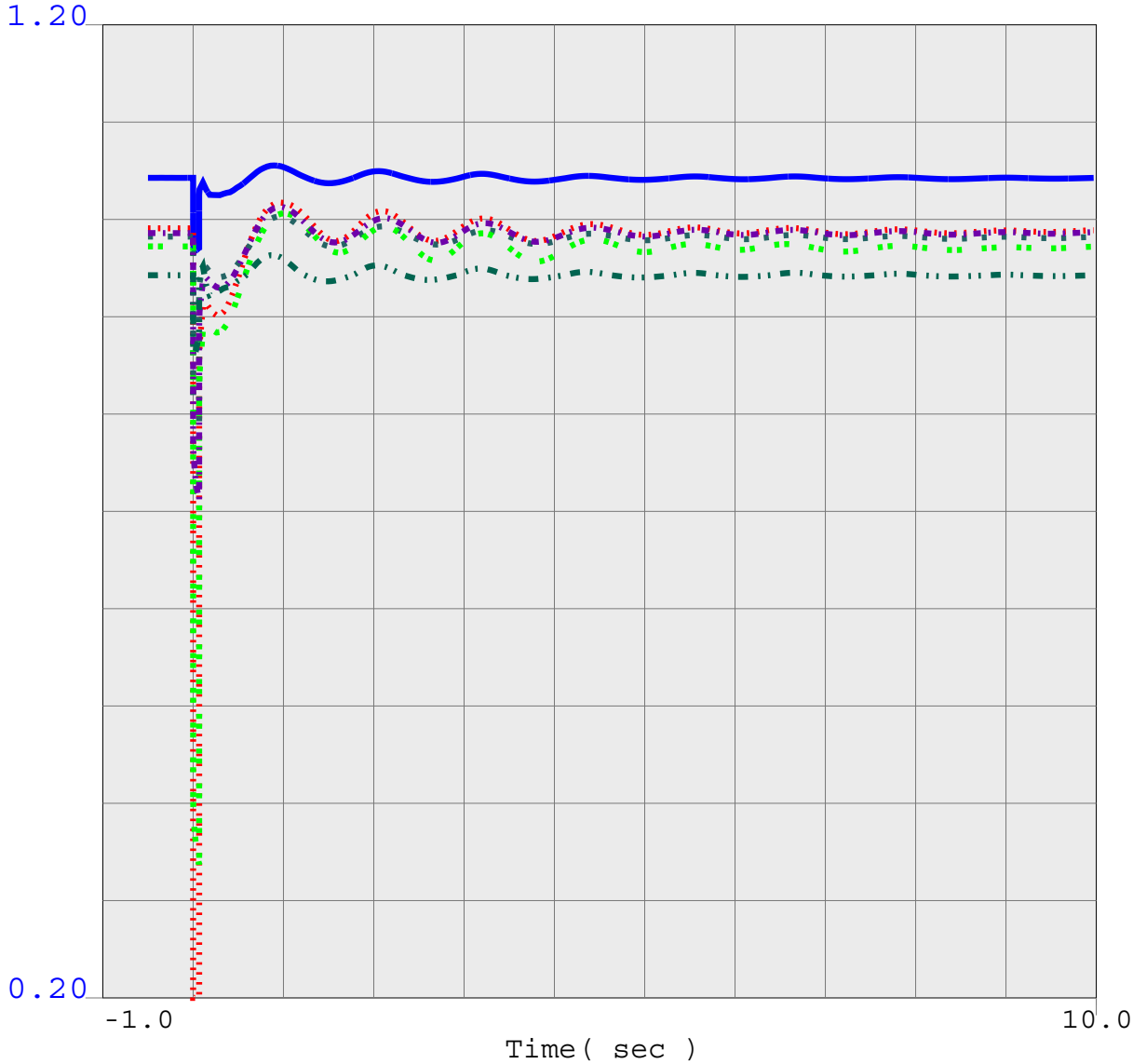

0.2000 vbus	24086	LUGO 500.0	0	0.0	1	1	1.2000
0.2000 vbus	24701	KRAMER 230.0	0	0.0	1	1	1.2000
0.2000 vbus	24601	VICTOR 230.0	0	0.0	1	1	1.2000
0.2000 vbul	24702	KRAMER 115.0	0	0.0	1	1	1.2000
0.2000 vbul	24602	VICTOR 115.0	0	0.0	1	1	1.2000
0.7000 vbus	24156	VINCENT 500.0	0	0.0	1	1	1.2000

Harper Lake System Impact Study (TOT175)
Heavy Spring Conditions: Year 2013
POST-PROJECT with Network Upgrades
N-0: Sensitivity Study Case
Contains Critical Energy Infrastructure Information (CEII)

tr-13HSP-TOT175-postup-cwdv2_Kramer-Hinkley-slo.chf

.

Thu Mar 27 11:52:20 2008

BUS_VOLT_MAG FOR SCE North of Lugo

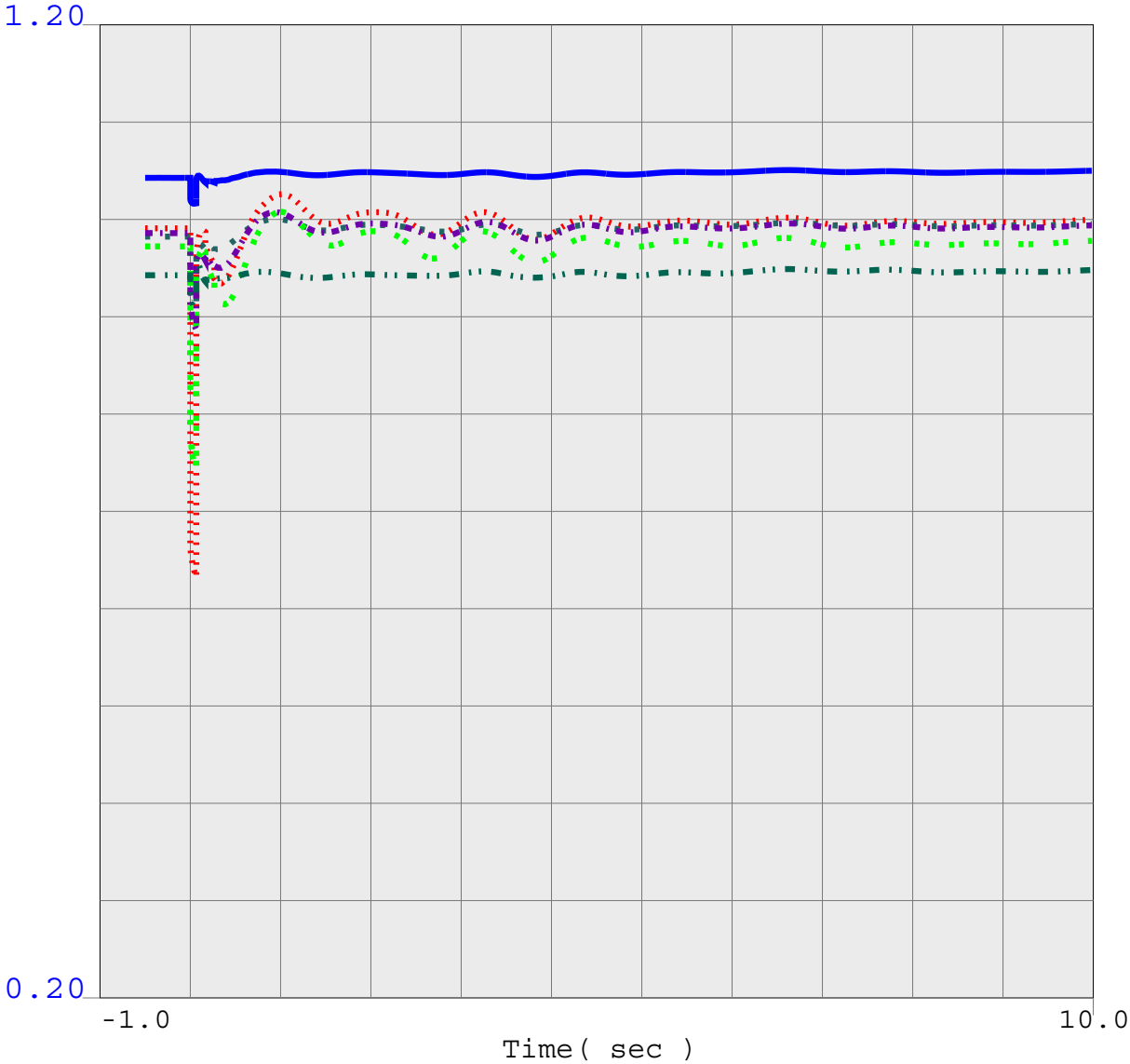

0.2000 vbus	24086	LUGO 500.0	0	0.0	1	1	1.2000
0.2000 vbus	24701	KRAMER 230.0	0	0.0	1	1	1.2000
0.2000 vbus	24601	VICTOR 230.0	0	0.0	1	1	1.2000
0.2000 vbul	24702	KRAMER 115.0	0	0.0	1	1	1.2000
0.2000 vbul	24602	VICTOR 115.0	0	0.0	1	1	1.2000
0.7000 vbus	24156	VINCENT 500.0	0	0.0	1	1	1.2000

Harper Lake System Impact Study (TOT175)
Heavy Spring Conditions: Year 2013
POST-PROJECT with Network Upgrades
N-0: Sensitivity Study Case
Contains Critical Energy Infrastructure Information (CEII)

tr-13HSP-TOT175-postup-cwdv2_Kramer-Lugo-dlo-SPS-slg.chf

.

Thu Mar 27 11:52:23 2008

BUS_VOLT_MAG FOR SCE North of Lugo

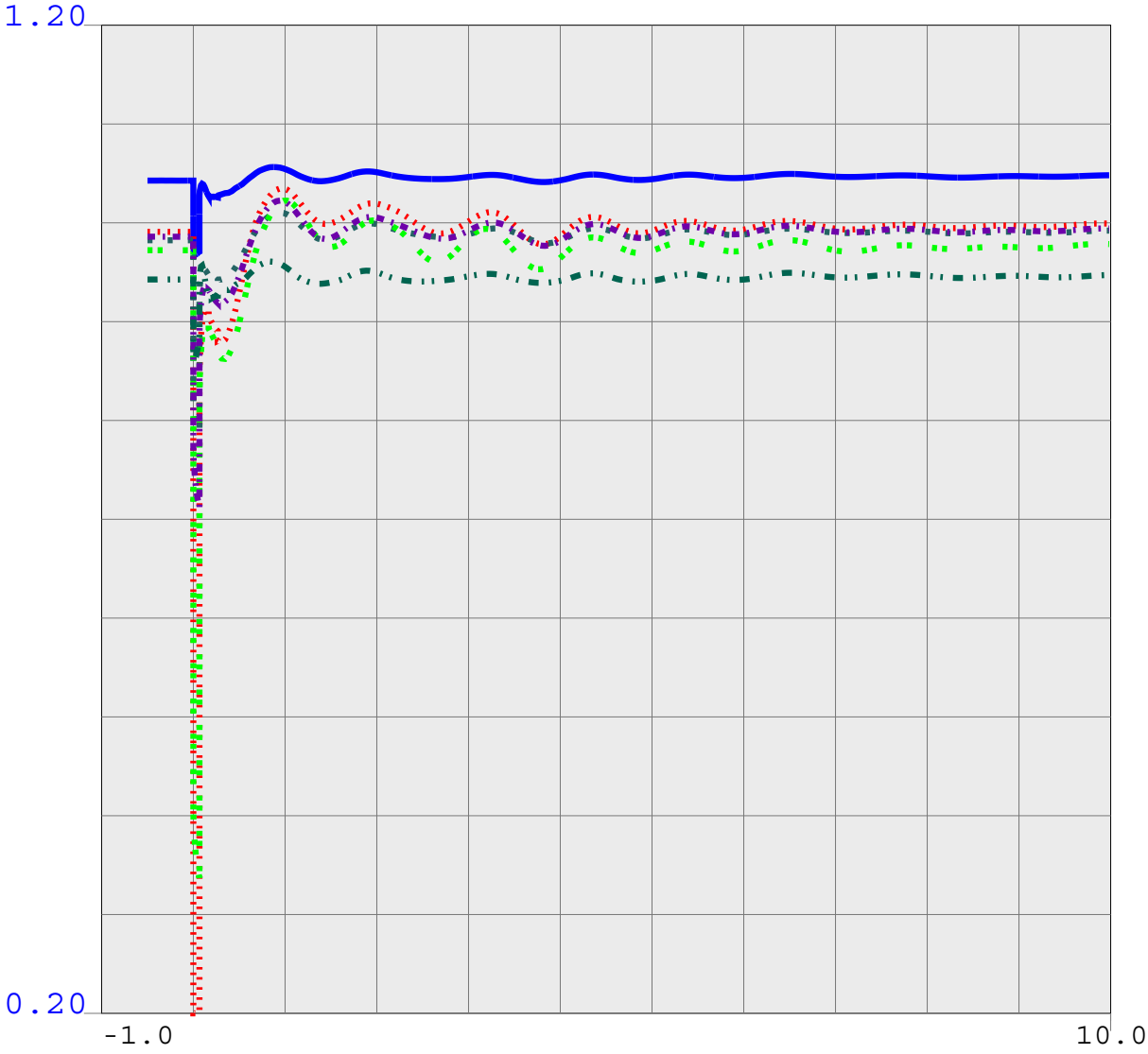

0.2000	vbus	24086	LUGO 500.0	0	0.0	1	1	1.2000
0.2000	vbus	24701	KRAMER 230.0	0	0.0	1	1	1.2000
0.2000	vbus	24601	VICTOR 230.0	0	0.0	1	1	1.2000
0.2000	vbul	24702	KRAMER 115.0	0	0.0	1	1	1.2000
0.2000	vbul	24602	VICTOR 115.0	0	0.0	1	1	1.2000
0.7000	vbus	24156	VINCENT 500.0	0	0.0	1	1	1.2000

Harper Lake System Impact Study (TOT175)
Heavy Spring Conditions: Year 2013
POST-PROJECT with Network Upgrades
N-0: Sensitivity Study Case
Contains Critical Energy Infrastructure Information (CEII)

tr-13HSP-TOT175-postup-cwdv2_Kramer-Lugo-slo-SPS.chf

.

Thu Mar 27 11:52:24 2008

BUS_VOLT_MAG FOR SCE North of Lugo

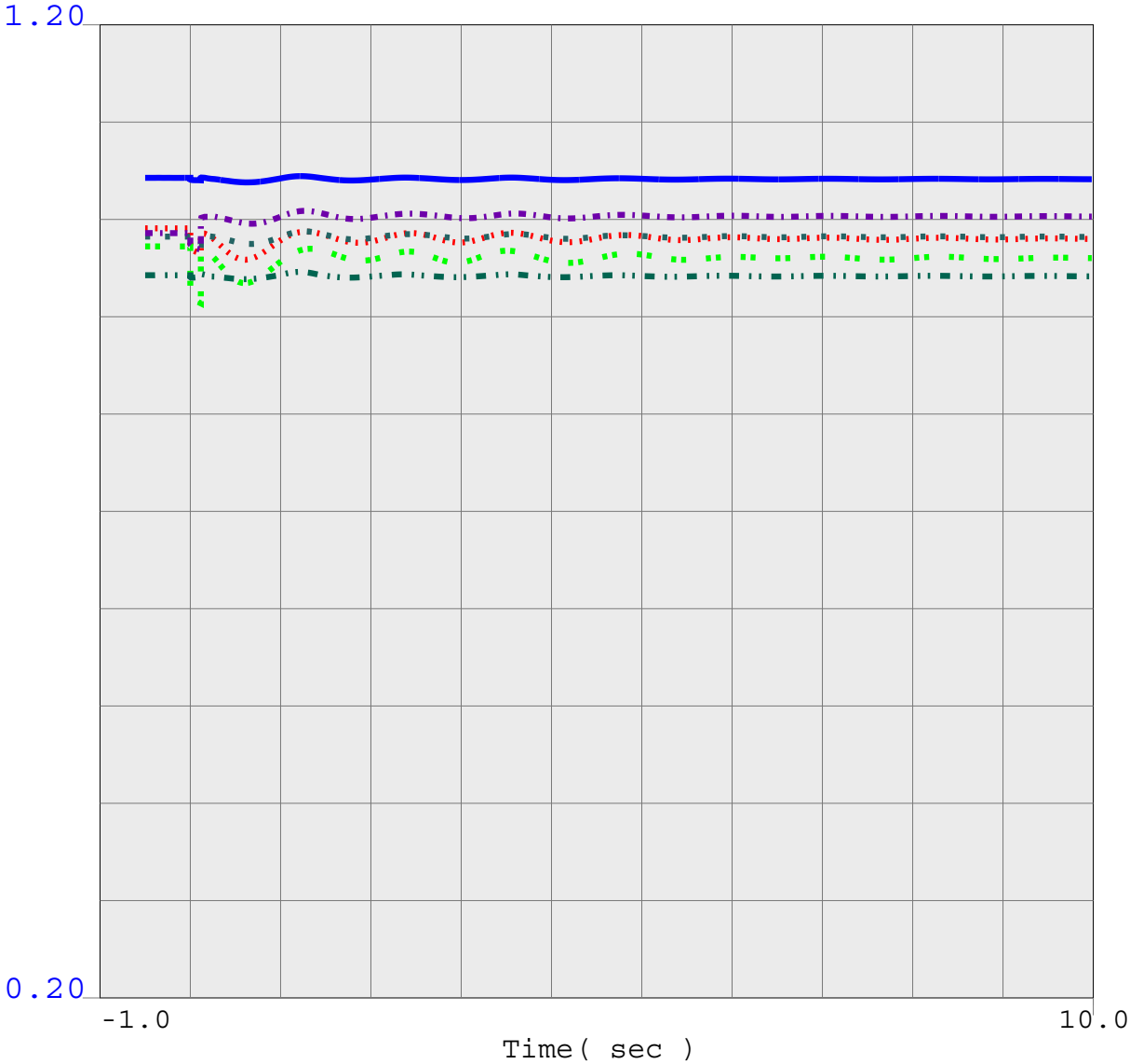

0.2000 vbus	24086	LUGO 500.0	0	0.0	1	1	1.2000
0.2000 vbus	24701	KRAMER 230.0	0	0.0	1	1	1.2000
0.2000 vbus	24601	VICTOR 230.0	0	0.0	1	1	1.2000
0.2000 vbul	24702	KRAMER 115.0	0	0.0	1	1	1.2000
0.2000 vbul	24602	VICTOR 115.0	0	0.0	1	1	1.2000
0.7000 vbus	24156	VINCENT 500.0	0	0.0	1	1	1.2000

Harper Lake System Impact Study (TOT175)
Heavy Spring Conditions: Year 2013
POST-PROJECT with Network Upgrades
N-0: Sensitivity Study Case
Contains Critical Energy Infrastructure Information (CEII)

tr-13HSP-TOT175-postup-cwdv2_Kramer-Victor-dlo-slg.chf

.

Thu Mar 27 11:52:26 2008

BUS_VOLT_MAG FOR SCE North of Lugo

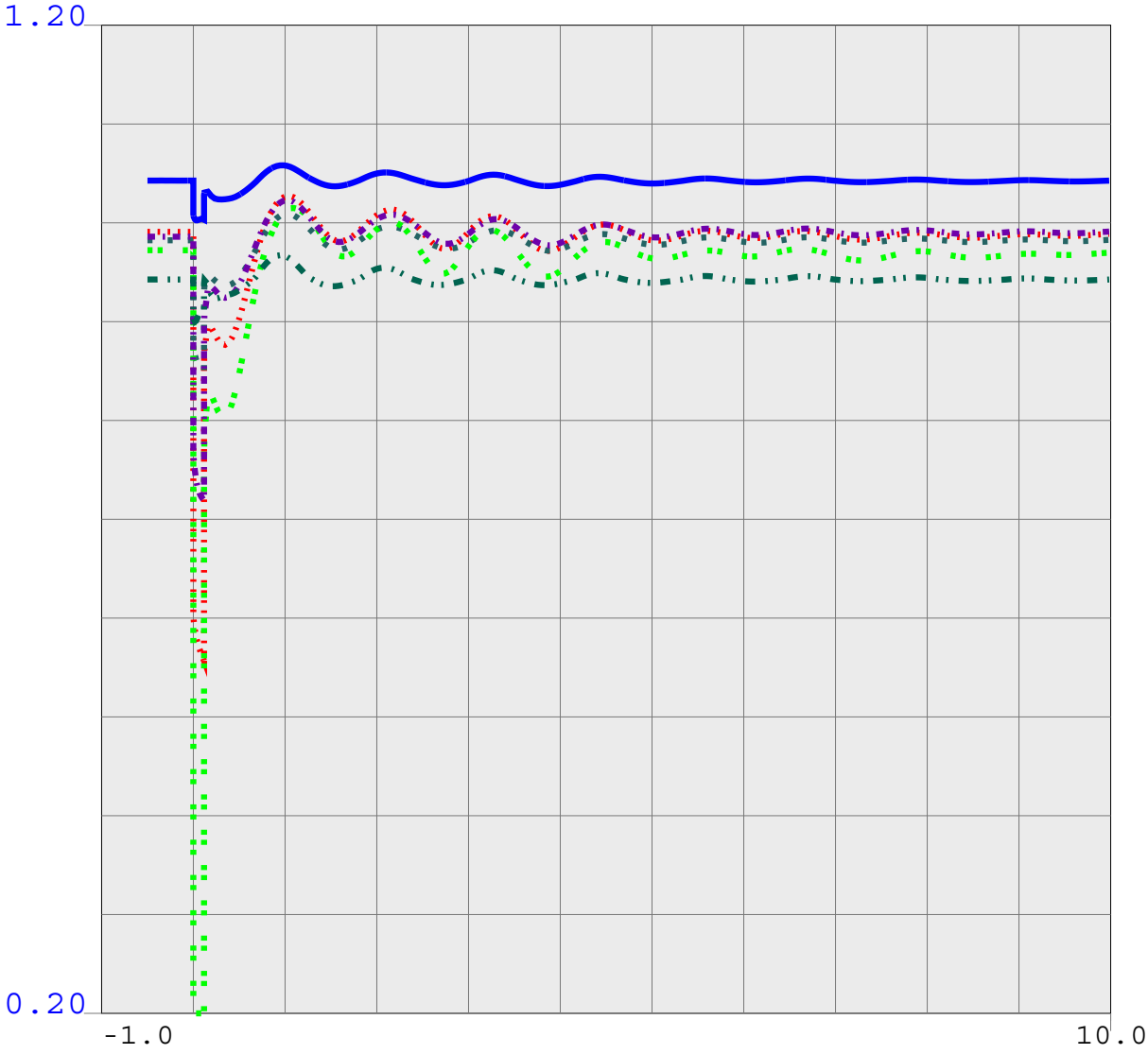

0.2000	vbus	24086	LUGO	500.0	0	0.0	1	1	1.2000
0.2000	vbus	24701	KRAMER	230.0	0	0.0	1	1	1.2000
0.2000	vbus	24601	VICTOR	230.0	0	0.0	1	1	1.2000
0.2000	vbul	24702	KRAMER	115.0	0	0.0	1	1	1.2000
0.2000	vbul	24602	VICTOR	115.0	0	0.0	1	1	1.2000
0.7000	vbus	24156	VINCENT	500.0	0	0.0	1	1	1.2000

Harper Lake System Impact Study (TOT175)
Heavy Spring Conditions: Year 2013
POST-PROJECT with Network Upgrades
N-0: Sensitivity Study Case
Contains Critical Energy Infrastructure Information (CEII)

tr-13HSP-TOT175-postup-cwdv2_Kramer-Victor-slo.chf

.

Thu Mar 27 11:52:28 2008

BUS_VOLT_MAG FOR SCE North of Lugo

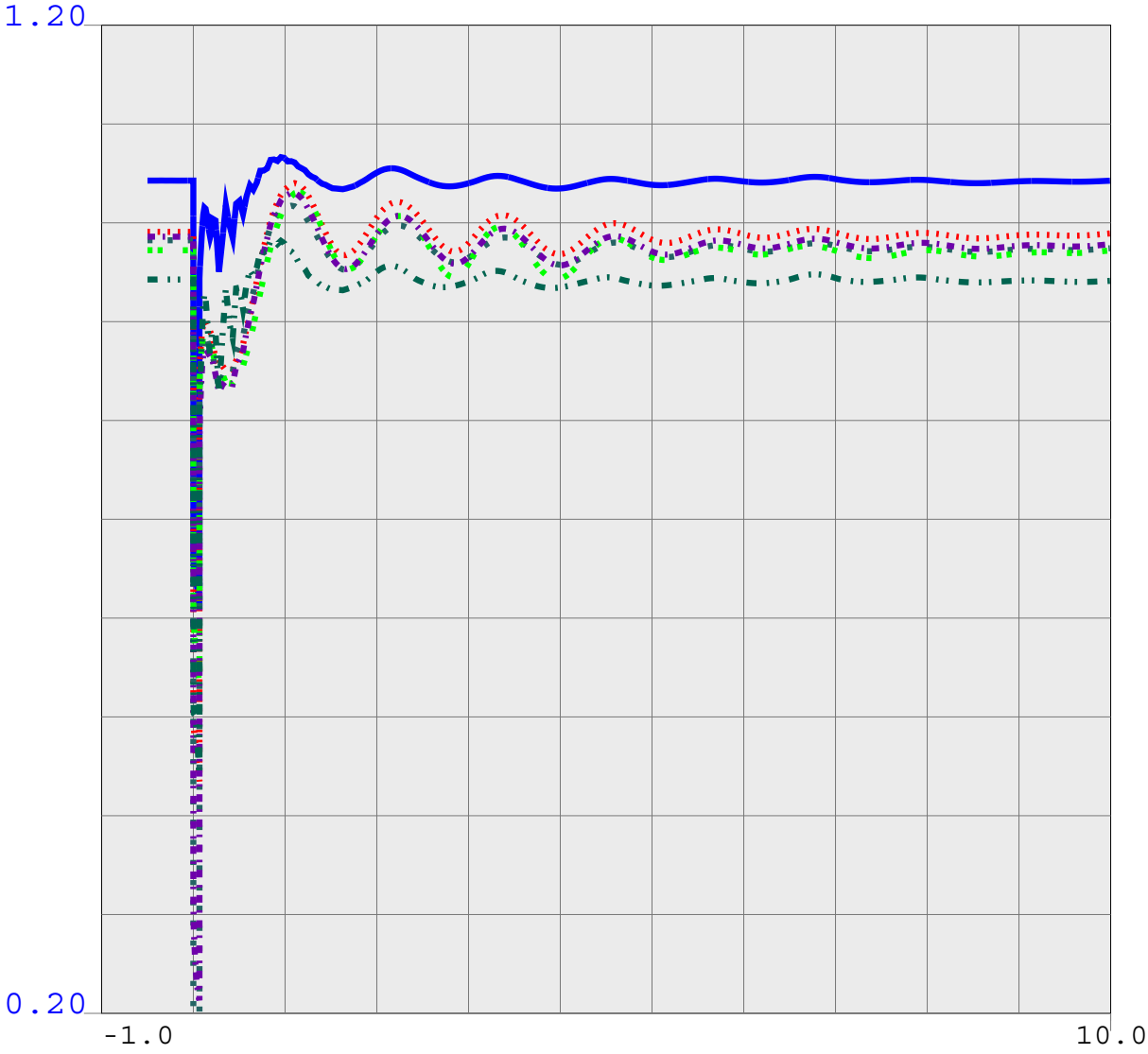

0.2000 vbus	24086	LUGO 500.0	0	0.0	1	1	1.2000
0.2000 vbus	24701	KRAMER 230.0	0	0.0	1	1	1.2000
0.2000 vbus	24601	VICTOR 230.0	0	0.0	1	1	1.2000
0.2000 vbul	24702	KRAMER 115.0	0	0.0	1	1	1.2000
0.2000 vbul	24602	VICTOR 115.0	0	0.0	1	1	1.2000
0.7000 vbus	24156	VINCENT 500.0	0	0.0	1	1	1.2000

Harper Lake System Impact Study (TOT175)
Heavy Spring Conditions: Year 2013
POST-PROJECT with Network Upgrades
N-0: Sensitivity Study Case
Contains Critical Energy Infrastructure Information (CEII)

tr-13HSP-TOT175-postup-cwdv2_LUGOAA-1BNK-slo-SPS.chf

.

Thu Mar 27 11:52:30 2008

BUS_VOLT_MAG FOR SCE North of Lugo

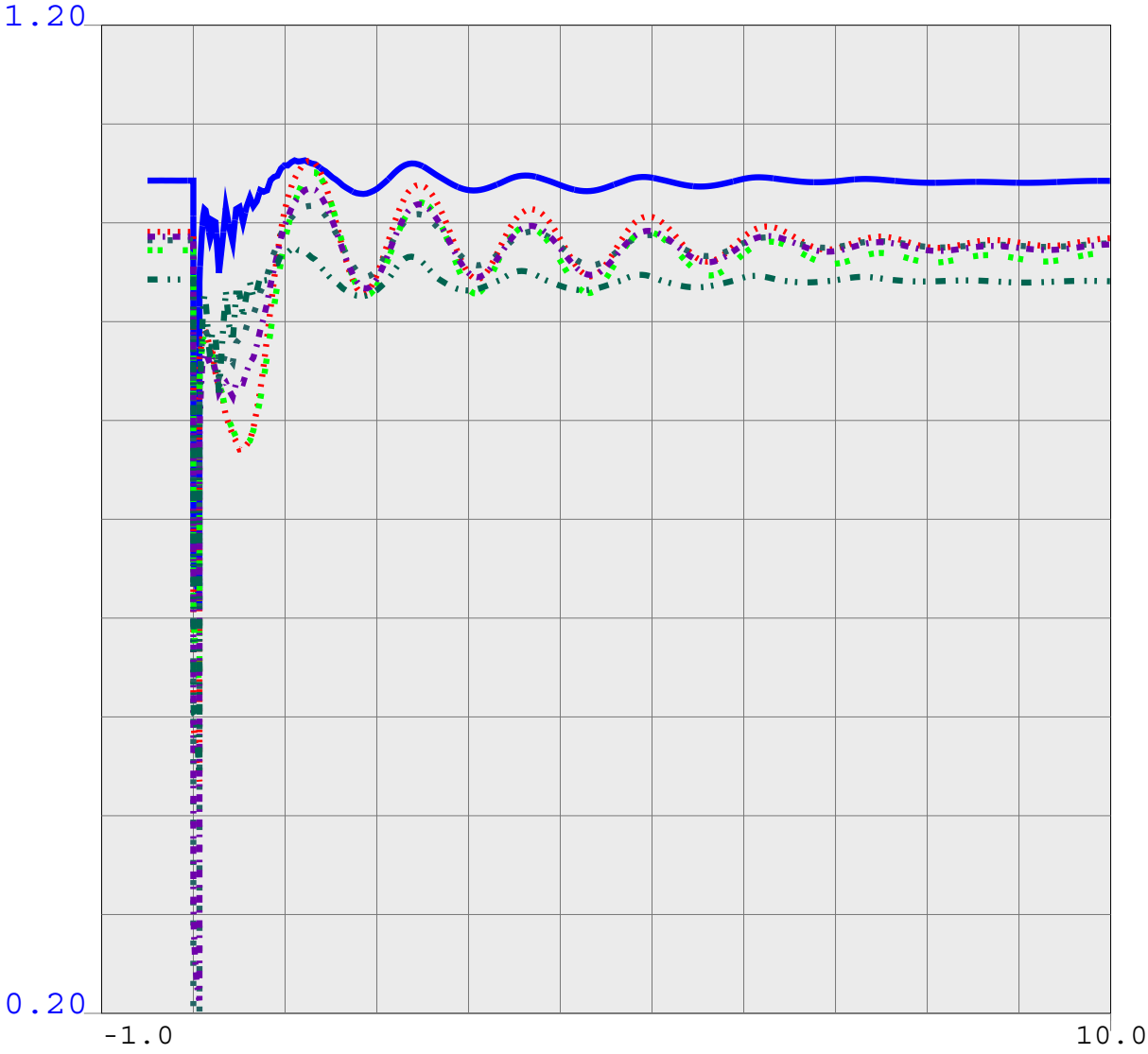

0.2000 vbus	24086	LUGO 500.0	0	0.0	1	1	1.2000
0.2000 vbus	24701	KRAMER 230.0	0	0.0	1	1	1.2000
0.2000 vbus	24601	VICTOR 230.0	0	0.0	1	1	1.2000
0.2000 vbul	24702	KRAMER 115.0	0	0.0	1	1	1.2000
0.2000 vbul	24602	VICTOR 115.0	0	0.0	1	1	1.2000
0.7000 vbus	24156	VINCENT 500.0	0	0.0	1	1	1.2000

Harper Lake System Impact Study (TOT175)
Heavy Spring Conditions: Year 2013
POST-PROJECT with Network Upgrades
N-0: Sensitivity Study Case
Contains Critical Energy Infrastructure Information (CEII)

tr-13HSP-TOT175-postup-cwdv2_Lugo-Dsrtview-slo-SPS.chf

.

Thu Mar 27 11:52:31 2008

BUS_VOLT_MAG FOR SCE North of Lugo

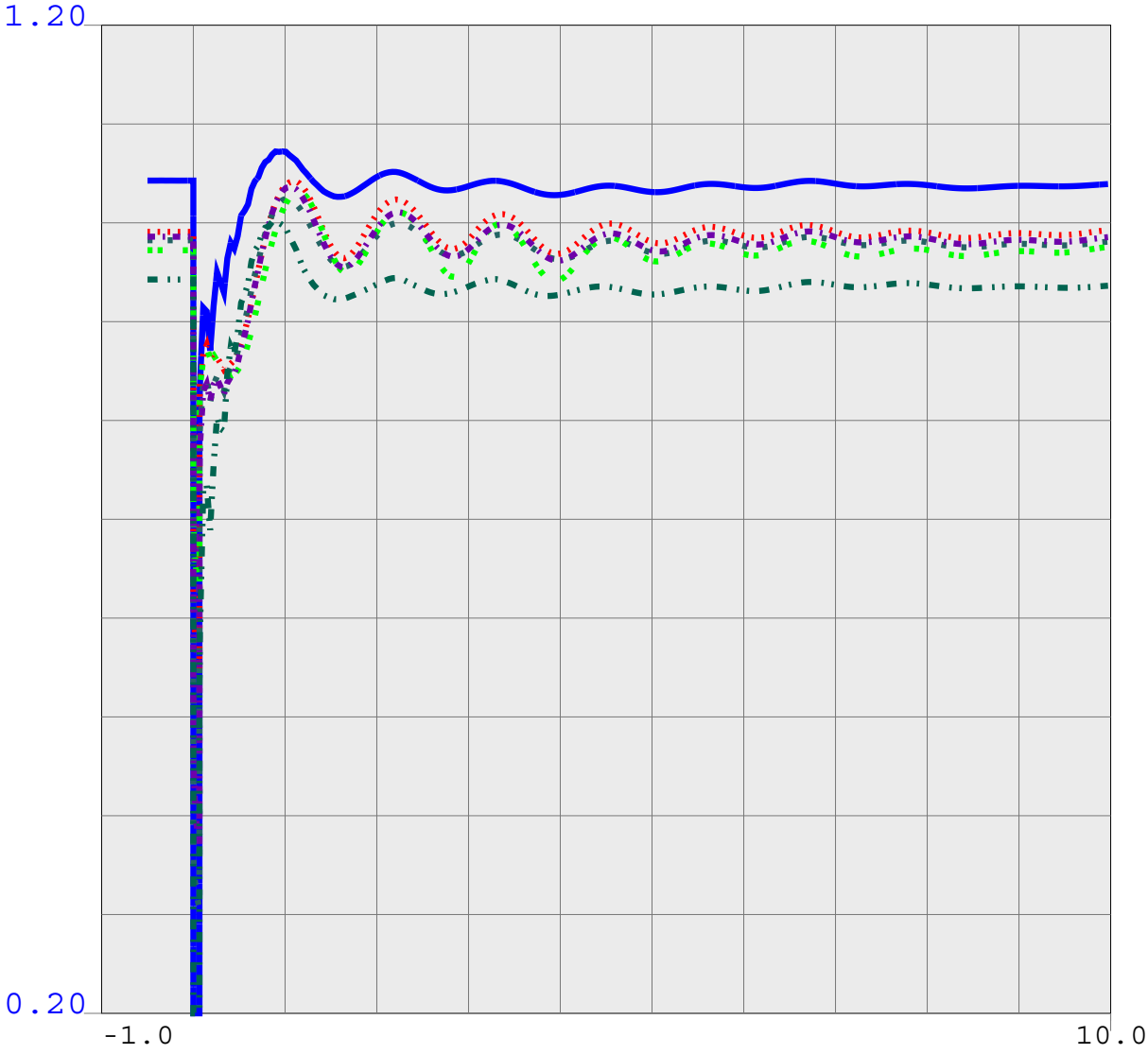

0.2000 vbus	24086	LUGO 500.0	0	0.0	1	1	1.2000
0.2000 vbus	24701	KRAMER 230.0	0	0.0	1	1	1.2000
0.2000 vbus	24601	VICTOR 230.0	0	0.0	1	1	1.2000
0.2000 vbul	24702	KRAMER 115.0	0	0.0	1	1	1.2000
0.2000 vbul	24602	VICTOR 115.0	0	0.0	1	1	1.2000
0.7000 vbus	24156	VINCENT 500.0	0	0.0	1	1	1.2000

Harper Lake System Impact Study (TOT175)
Heavy Spring Conditions: Year 2013
POST-PROJECT with Network Upgrades
N-0: Sensitivity Study Case
Contains Critical Energy Infrastructure Information (CEII)

tr-13HSP-TOT175-postup-cwdv2_Lugo-Miraloma-slo.chf

.

Thu Mar 27 11:52:33 2008

BUS_VOLT_MAG FOR SCE North of Lugo

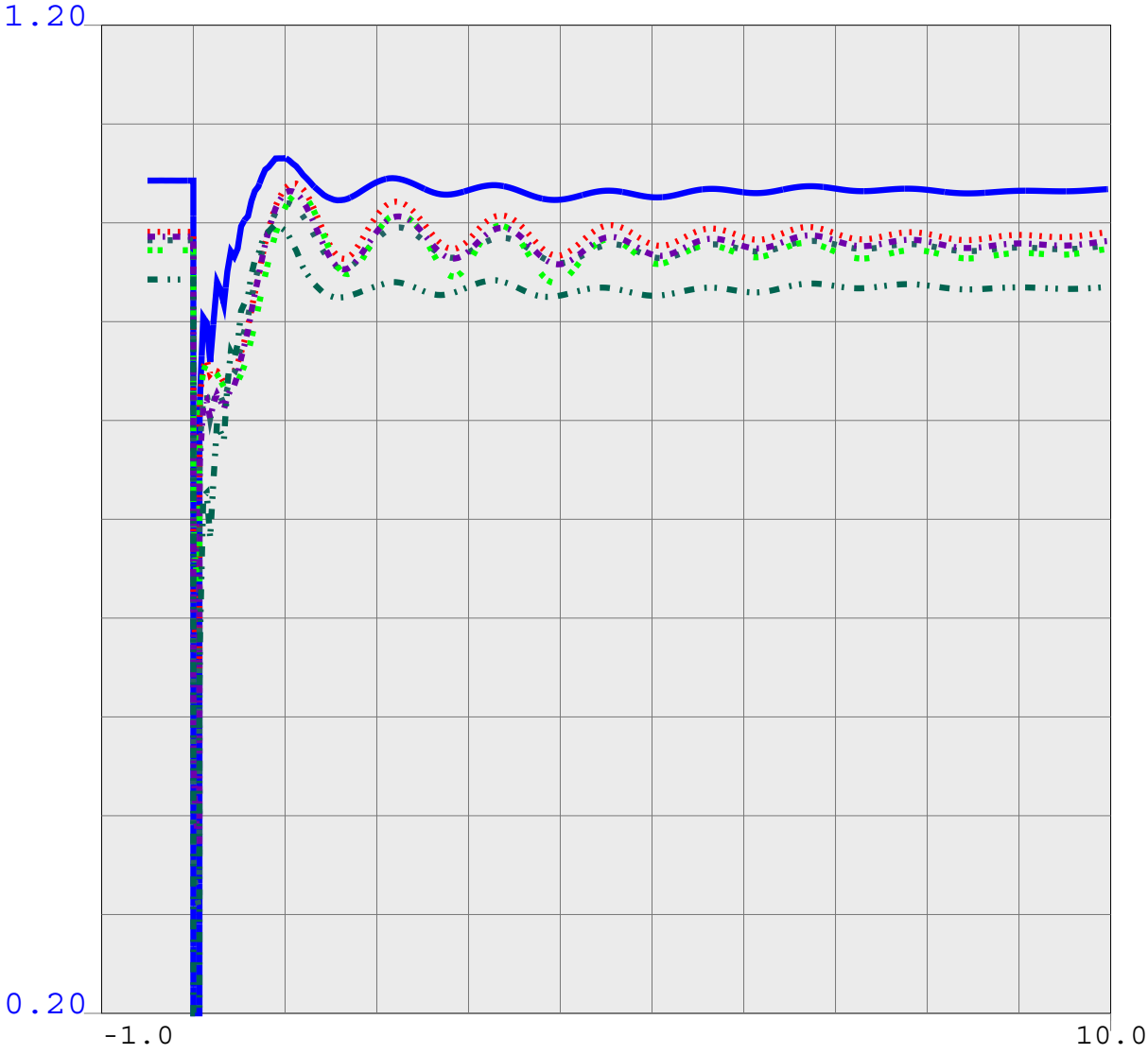

0.2000	vbus	24086	LUGO 500.0	0	0.0	1	1	1.2000
0.2000	vbus	24701	KRAMER 230.0	0	0.0	1	1	1.2000
0.2000	vbus	24601	VICTOR 230.0	0	0.0	1	1	1.2000
0.2000	vbul	24702	KRAMER 115.0	0	0.0	1	1	1.2000
0.2000	vbul	24602	VICTOR 115.0	0	0.0	1	1	1.2000
0.7000	vbus	24156	VINCENT 500.0	0	0.0	1	1	1.2000

Harper Lake System Impact Study (TOT175)
Heavy Spring Conditions: Year 2013
POST-PROJECT with Network Upgrades
N-0: Sensitivity Study Case
Contains Critical Energy Infrastructure Information (CEII)

tr-13HSP-TOT175-postup-cwdv2_Lugo-Mohave-slo.chf

.

Thu Mar 27 11:52:34 2008

BUS_VOLT_MAG FOR SCE North of Lugo

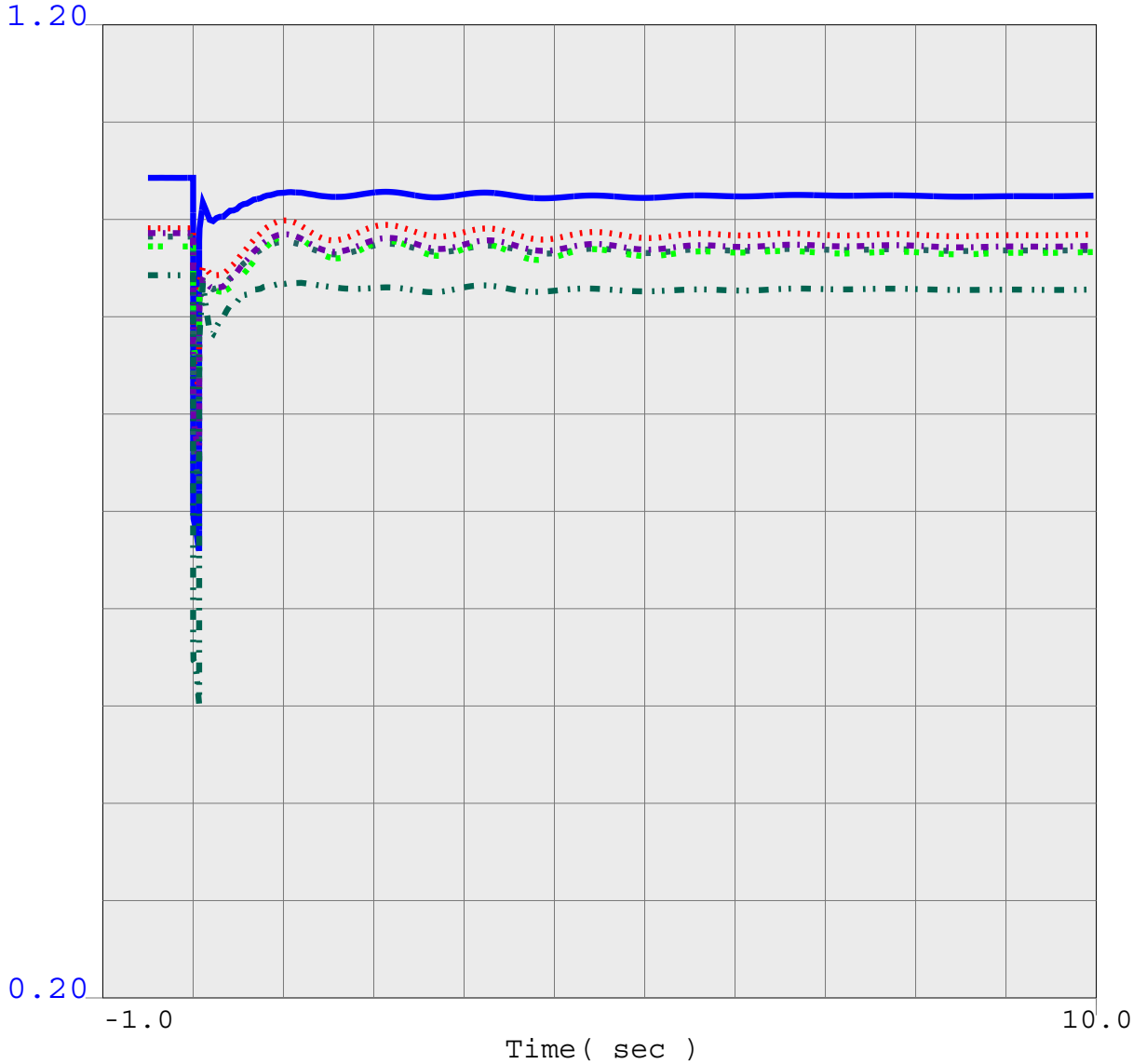

0.2000	vbus	24086	LUGO 500.0	0	0.0	1	1	1.2000
0.2000	vbus	24701	KRAMER 230.0	0	0.0	1	1	1.2000
0.2000	vbus	24601	VICTOR 230.0	0	0.0	1	1	1.2000
0.2000	vbul	24702	KRAMER 115.0	0	0.0	1	1	1.2000
0.2000	vbul	24602	VICTOR 115.0	0	0.0	1	1	1.2000
0.7000	vbus	24156	VINCENT 500.0	0	0.0	1	1	1.2000

Harper Lake System Impact Study (TOT175)
Heavy Spring Conditions: Year 2013
POST-PROJECT with Network Upgrades
N-0: Sensitivity Study Case
Contains Critical Energy Infrastructure Information (CEII)

tr-13HSP-TOT175-postup-cwdv2_Lugo-Pisgah500-dlo-slg.chf

.

Thu Mar 27 11:52:36 2008

BUS_VOLT_MAG FOR SCE North of Lugo

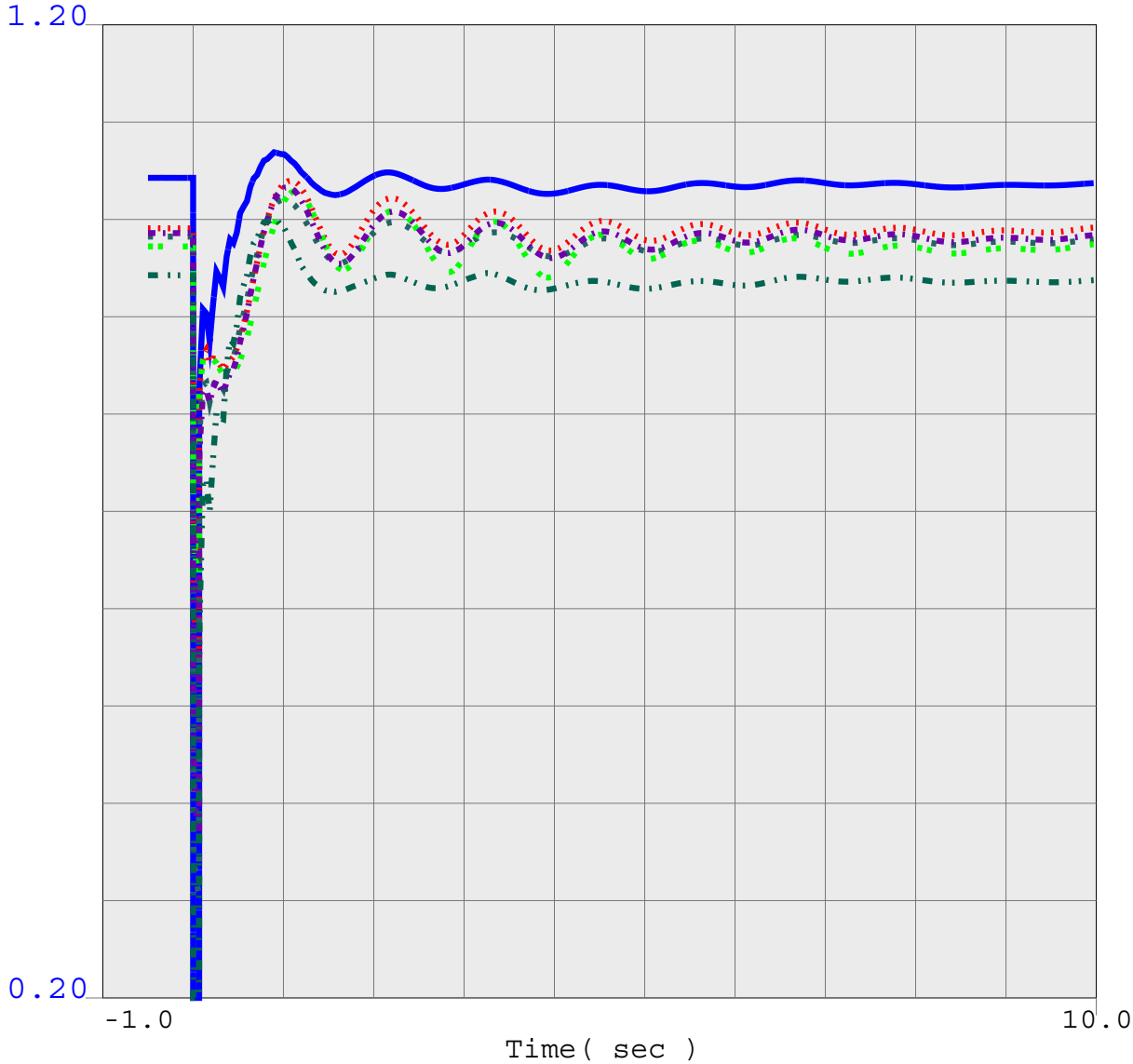

0.2000	vbus	24086	LUGO 500.0	0	0.0	1	1	1.2000
0.2000	vbus	24701	KRAMER 230.0	0	0.0	1	1	1.2000
0.2000	vbus	24601	VICTOR 230.0	0	0.0	1	1	1.2000
0.2000	vbul	24702	KRAMER 115.0	0	0.0	1	1	1.2000
0.2000	vbul	24602	VICTOR 115.0	0	0.0	1	1	1.2000
0.7000	vbus	24156	VINCENT 500.0	0	0.0	1	1	1.2000

Harper Lake System Impact Study (TOT175)
Heavy Spring Conditions: Year 2013
POST-PROJECT with Network Upgrades
N-0: Sensitivity Study Case
Contains Critical Energy Infrastructure Information (CEII)

tr-13HSP-TOT175-postup-cwdv2_Lugo-Pisgah500-slo.chf

.

Thu Mar 27 11:52:37 2008

BUS_VOLT_MAG FOR SCE North of Lugo

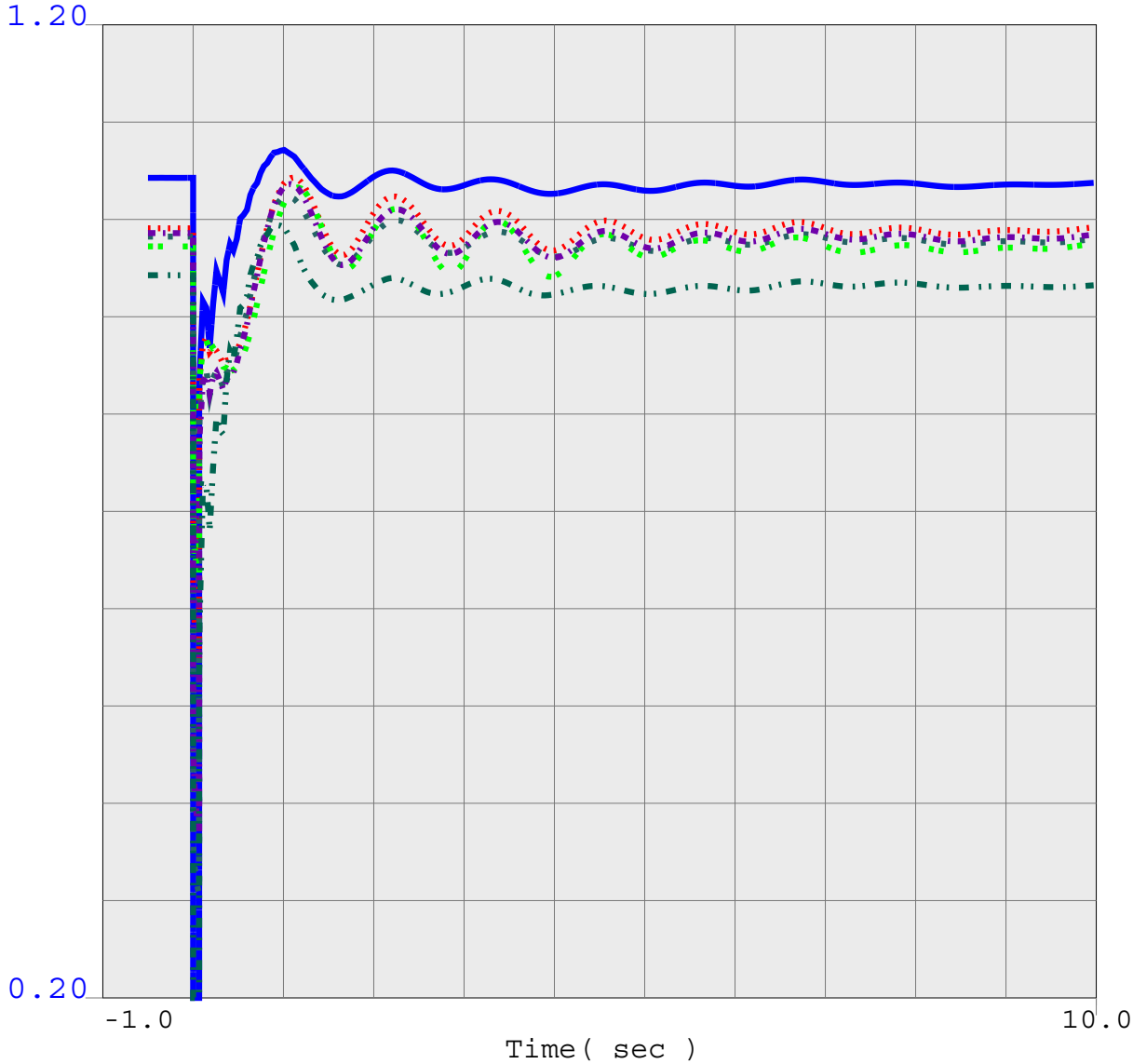

0.2000	vbus	24086	LUGO 500.0	0	0.0	1	1	1.2000
0.2000	vbus	24701	KRAMER 230.0	0	0.0	1	1	1.2000
0.2000	vbus	24601	VICTOR 230.0	0	0.0	1	1	1.2000
0.2000	vbul	24702	KRAMER 115.0	0	0.0	1	1	1.2000
0.2000	vbul	24602	VICTOR 115.0	0	0.0	1	1	1.2000
0.7000	vbus	24156	VINCENT 500.0	0	0.0	1	1	1.2000

Harper Lake System Impact Study (TOT175)
Heavy Spring Conditions: Year 2013
POST-PROJECT with Network Upgrades
N-0: Sensitivity Study Case
Contains Critical Energy Infrastructure Information (CEII)

tr-13HSP-TOT175-postup-cwdv2_Lugo-Ranchvst-slo.chf

.

Thu Mar 27 11:52:39 2008

BUS_VOLT_MAG FOR SCE North of Lugo

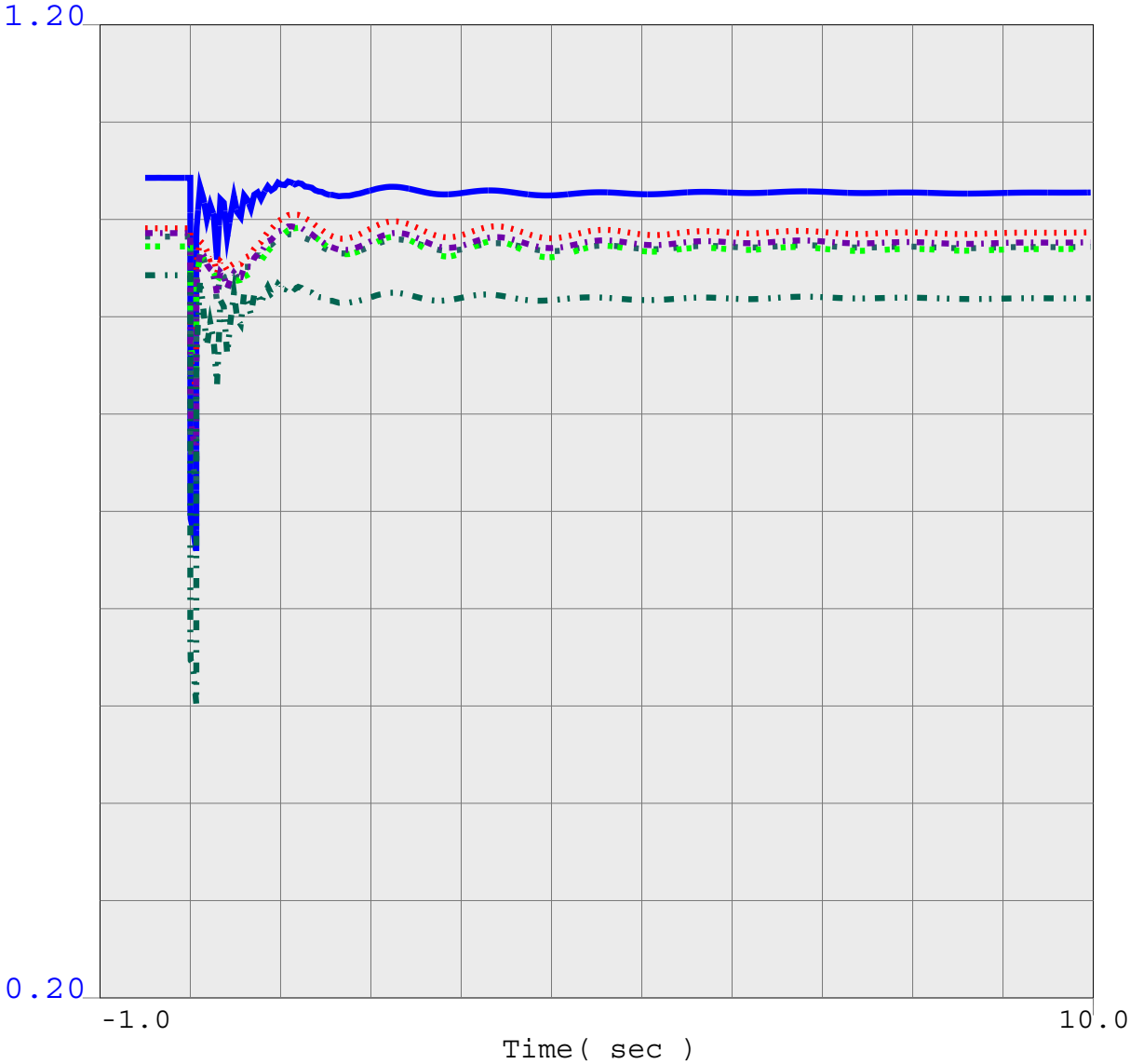

0.2000 vbus	24086	LUGO 500.0	0	0.0	1	1	1.2000
0.2000 vbus	24701	KRAMER 230.0	0	0.0	1	1	1.2000
0.2000 vbus	24601	VICTOR 230.0	0	0.0	1	1	1.2000
0.2000 vbul	24702	KRAMER 115.0	0	0.0	1	1	1.2000
0.2000 vbul	24602	VICTOR 115.0	0	0.0	1	1	1.2000
0.7000 vbus	24156	VINCENT 500.0	0	0.0	1	1	1.2000

Harper Lake System Impact Study (TOT175)
Heavy Spring Conditions: Year 2013
POST-PROJECT with Network Upgrades
N-0: Sensitivity Study Case
Contains Critical Energy Infrastructure Information (CEII)

tr-13HSP-TOT175-postup-cwdv2_Lugo-South-dlo-slg.chf

.

Thu Mar 27 11:52:41 2008

BUS_VOLT_MAG FOR SCE North of Lugo

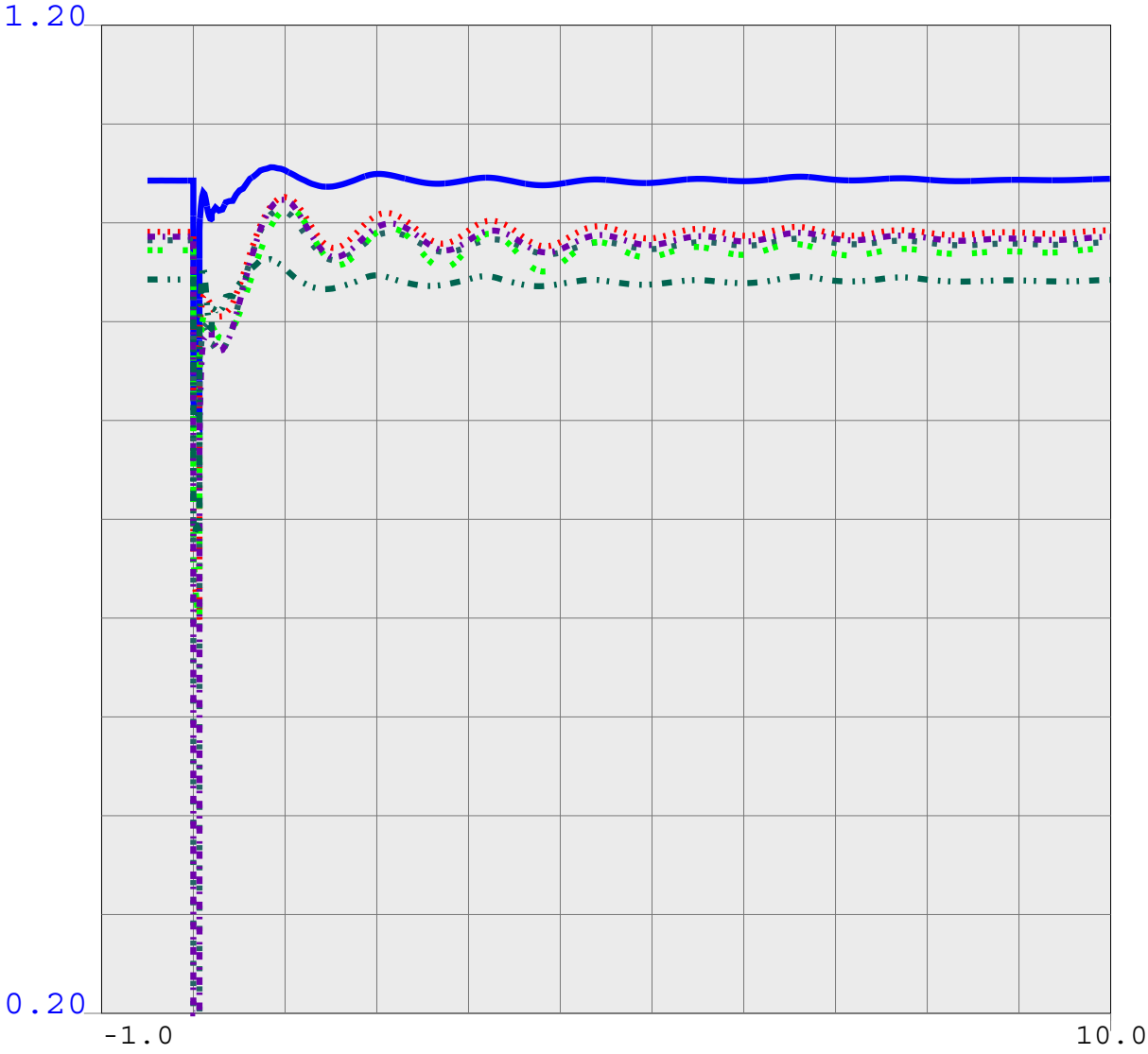

0.2000 vbus	24086	LUGO 500.0	0	0.0	1	1	1.2000
0.2000 vbus	24701	KRAMER 230.0	0	0.0	1	1	1.2000
0.2000 vbus	24601	VICTOR 230.0	0	0.0	1	1	1.2000
0.2000 vbul	24702	KRAMER 115.0	0	0.0	1	1	1.2000
0.2000 vbul	24602	VICTOR 115.0	0	0.0	1	1	1.2000
0.7000 vbus	24156	VINCENT 500.0	0	0.0	1	1	1.2000

Harper Lake System Impact Study (TOT175)
Heavy Spring Conditions: Year 2013
POST-PROJECT with Network Upgrades
N-0: Sensitivity Study Case
Contains Critical Energy Infrastructure Information (CEII)

tr-13HSP-TOT175-postup-cwdv2_Lugo-Victor-dlo-SPS.chf

.

Thu Mar 27 11:52:42 2008

BUS_VOLT_MAG FOR SCE North of Lugo

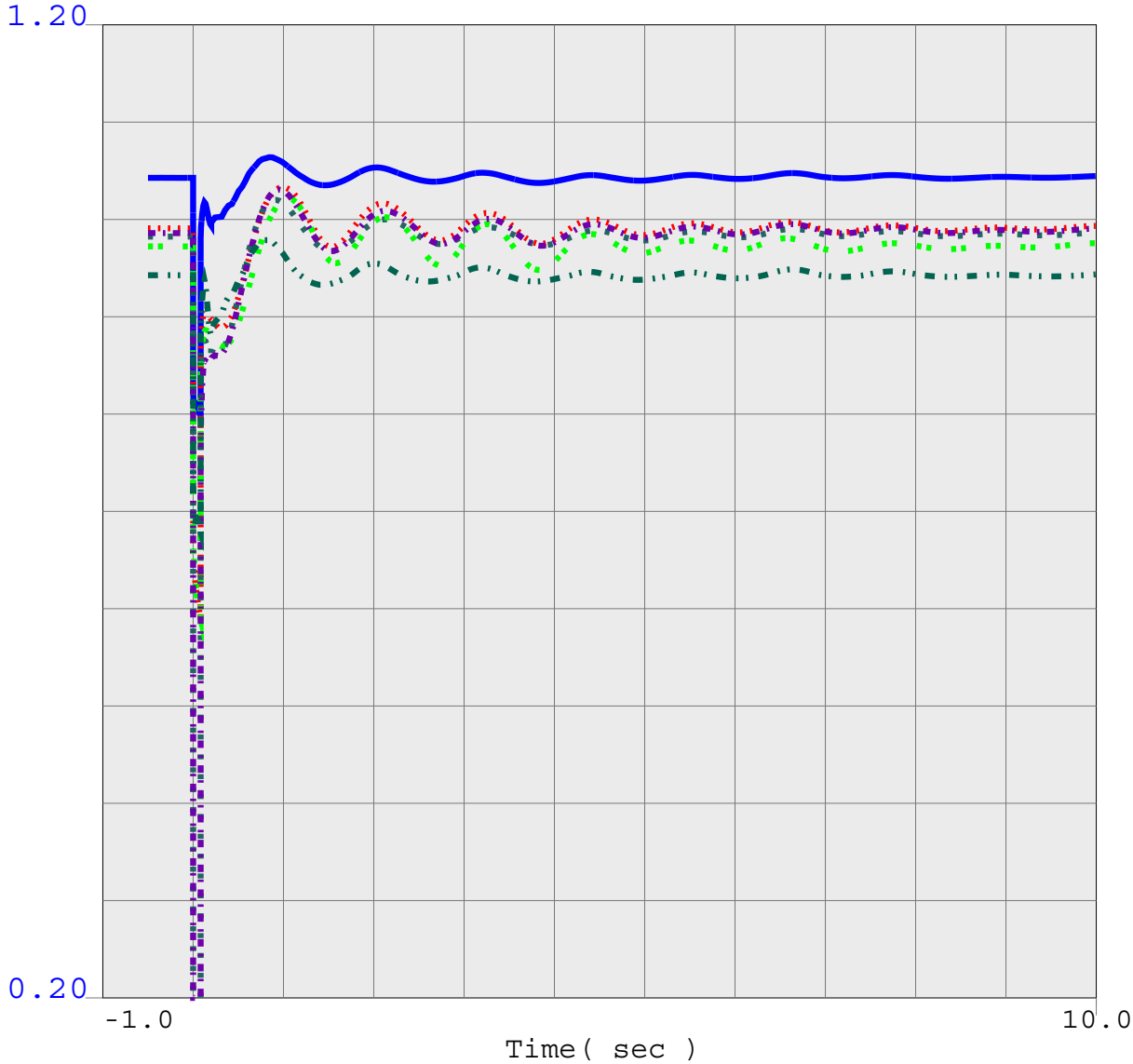

0.2000 vbus	24086	LUGO 500.0	0	0.0	1	1	1.2000
0.2000 vbus	24701	KRAMER 230.0	0	0.0	1	1	1.2000
0.2000 vbus	24601	VICTOR 230.0	0	0.0	1	1	1.2000
0.2000 vbul	24702	KRAMER 115.0	0	0.0	1	1	1.2000
0.2000 vbul	24602	VICTOR 115.0	0	0.0	1	1	1.2000
0.7000 vbus	24156	VINCENT 500.0	0	0.0	1	1	1.2000

Harper Lake System Impact Study (TOT175)
Heavy Spring Conditions: Year 2013
POST-PROJECT with Network Upgrades
N-0: Sensitivity Study Case
Contains Critical Energy Infrastructure Information (CEII)

tr-13HSP-TOT175-postup-cwdv2_Lugo-Victor-slo-SPS.chf

.

Thu Mar 27 11:52:44 2008

BUS_VOLT_MAG FOR SCE North of Lugo

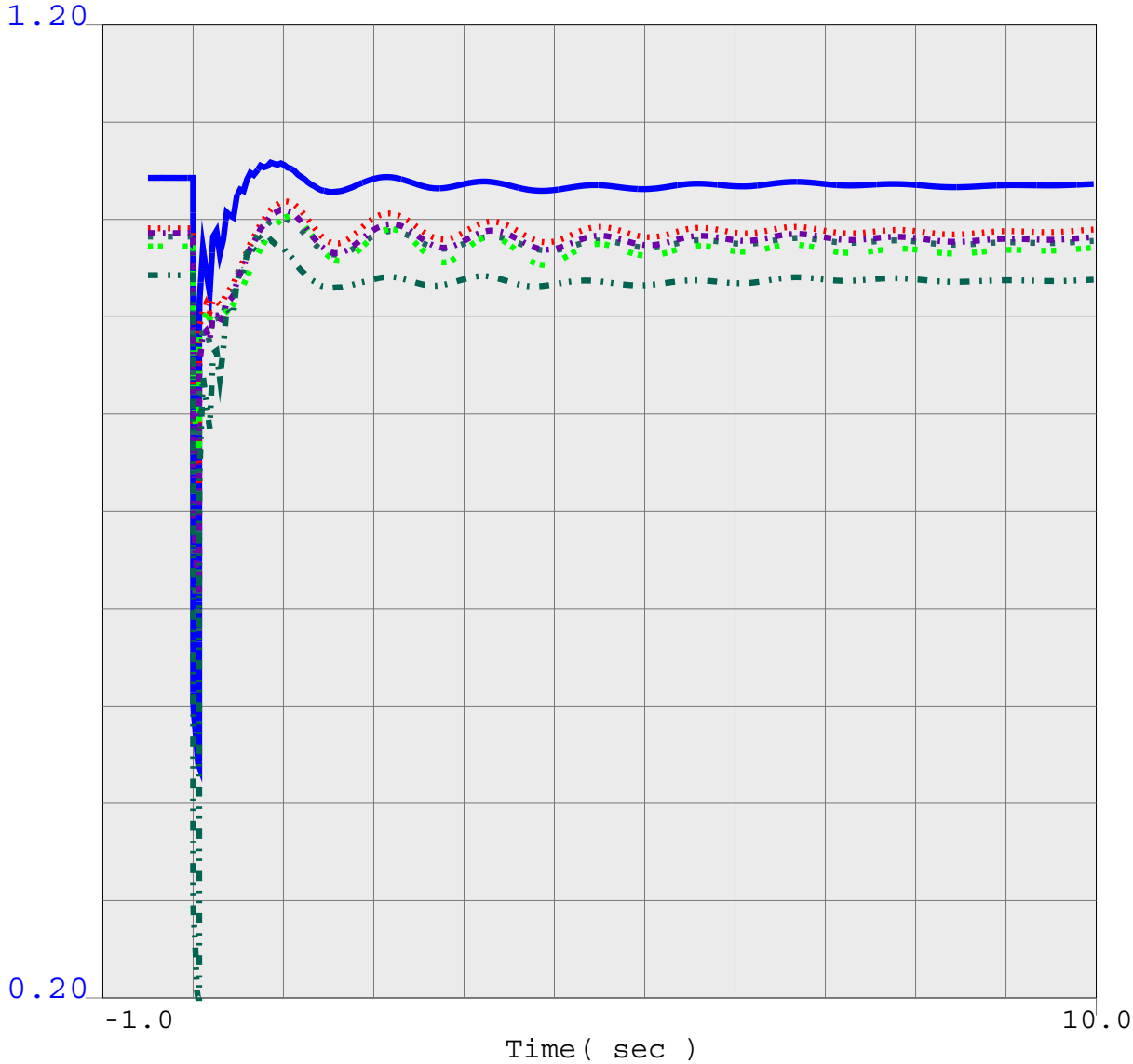

0.2000 vbus	24086	LUGO 500.0	0	0.0	1	1	1.2000
0.2000 vbus	24701	KRAMER 230.0	0	0.0	1	1	1.2000
0.2000 vbus	24601	VICTOR 230.0	0	0.0	1	1	1.2000
0.2000 vbul	24702	KRAMER 115.0	0	0.0	1	1	1.2000
0.2000 vbul	24602	VICTOR 115.0	0	0.0	1	1	1.2000
0.7000 vbus	24156	VINCENT 500.0	0	0.0	1	1	1.2000

Harper Lake System Impact Study (TOT175)
Heavy Spring Conditions: Year 2013
POST-PROJECT with Network Upgrades
N-0: Sensitivity Study Case
Contains Critical Energy Infrastructure Information (CEII)

tr-13HSP-TOT175-postup-cwdv2_Lugo-Victvl-slo.chf

.

Thu Mar 27 11:52:46 2008

BUS_VOLT_MAG FOR SCE North of Lugo

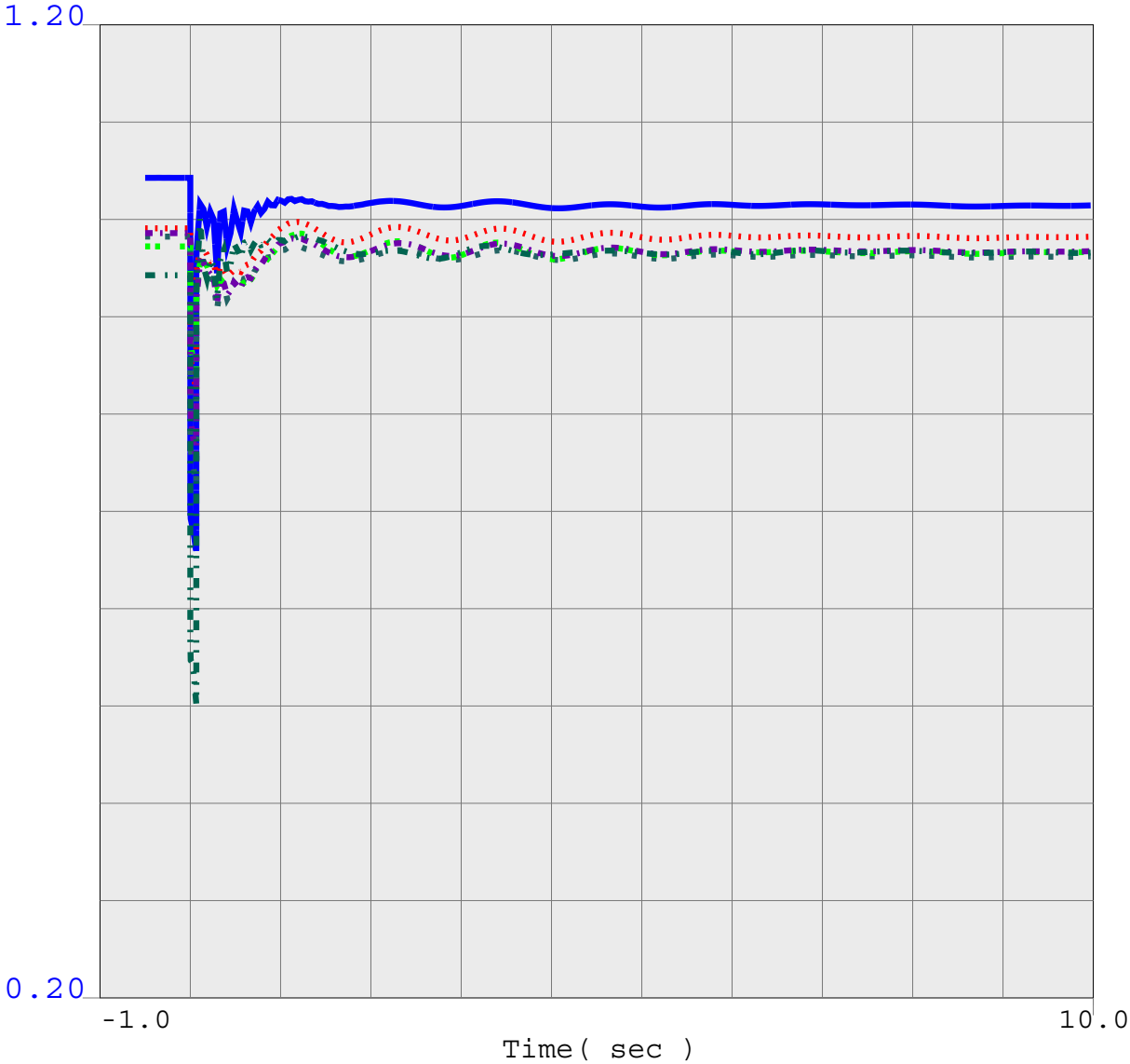

0.2000 vbus	24086	LUGO 500.0	0	0.0	1	1	1.2000
0.2000 vbus	24701	KRAMER 230.0	0	0.0	1	1	1.2000
0.2000 vbus	24601	VICTOR 230.0	0	0.0	1	1	1.2000
0.2000 vbul	24702	KRAMER 115.0	0	0.0	1	1	1.2000
0.2000 vbul	24602	VICTOR 115.0	0	0.0	1	1	1.2000
0.7000 vbus	24156	VINCENT 500.0	0	0.0	1	1	1.2000

Harper Lake System Impact Study (TOT175)
Heavy Spring Conditions: Year 2013
POST-PROJECT with Network Upgrades
N-0: Sensitivity Study Case
Contains Critical Energy Infrastructure Information (CEII)

tr-13HSP-TOT175-postup-cwdv2_Lugo-Vincent-dlo-slg.chf

.

Thu Mar 27 11:52:47 2008

BUS_VOLT_MAG FOR SCE North of Lugo

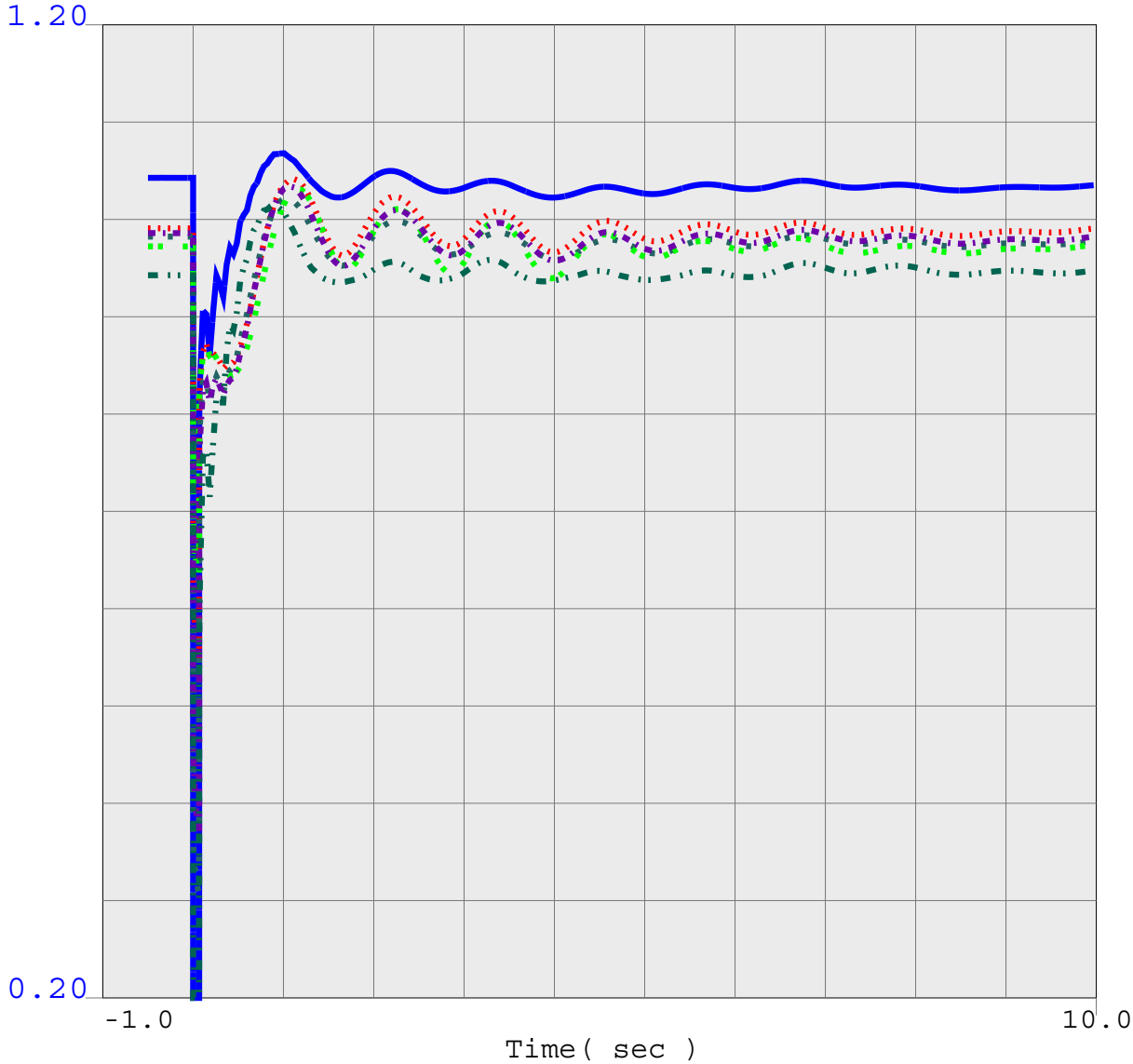

0.2000 vbus	24086	LUGO 500.0	0	0.0	1	1	1.2000
0.2000 vbus	24701	KRAMER 230.0	0	0.0	1	1	1.2000
0.2000 vbus	24601	VICTOR 230.0	0	0.0	1	1	1.2000
0.2000 vbul	24702	KRAMER 115.0	0	0.0	1	1	1.2000
0.2000 vbul	24602	VICTOR 115.0	0	0.0	1	1	1.2000
0.7000 vbus	24156	VINCENT 500.0	0	0.0	1	1	1.2000

Harper Lake System Impact Study (TOT175)
Heavy Spring Conditions: Year 2013
POST-PROJECT with Network Upgrades
N-0: Sensitivity Study Case
Contains Critical Energy Infrastructure Information (CEII)

tr-13HSP-TOT175-postup-cwdv2_Lugo-Vincent-slo.chf

.

Thu Mar 27 11:52:49 2008

BUS_VOLT_MAG FOR SCE North of Lugo

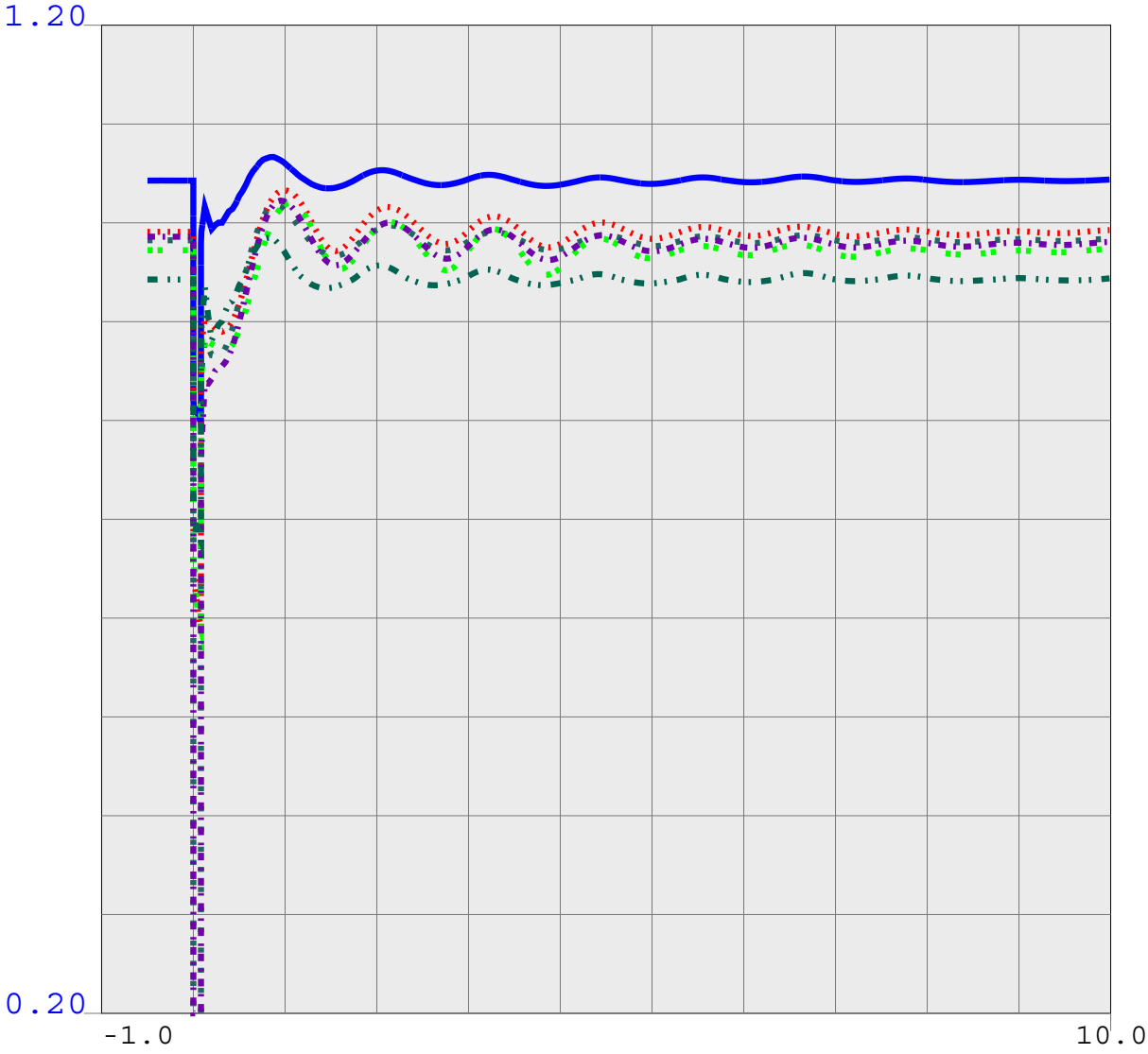

0.2000 vbus	24086	LUGO 500.0	0	0.0	1	1	1.2000
0.2000 vbus	24701	KRAMER 230.0	0	0.0	1	1	1.2000
0.2000 vbus	24601	VICTOR 230.0	0	0.0	1	1	1.2000
0.2000 vbul	24702	KRAMER 115.0	0	0.0	1	1	1.2000
0.2000 vbul	24602	VICTOR 115.0	0	0.0	1	1	1.2000
0.7000 vbus	24156	VINCENT 500.0	0	0.0	1	1	1.2000

Harper Lake System Impact Study (TOT175)
Heavy Spring Conditions: Year 2013
POST-PROJECT with Network Upgrades
N-0: Sensitivity Study Case
Contains Critical Energy Infrastructure Information (CEII)

tr-13HSP-TOT175-postup-cwdv2_VICTOR-1BNK-slo.chf

.

Thu Mar 27 11:52:50 2008