APPENDIX 5.4B

Geotechnical Reports

REPORT
GEOTECHNICAL INVESTIGATION
PROPOSED COMBUSTION TURBINE PROJECT
TURLOCK IRRIGATION DISTRICT
CERES, CALIFORNIA

KLEINFELDER

ECEIVE
1993
55101-8405

REPORT
GEOTECHNICAL INVESTIGATION
PROPOSED COMBUSTION TURBINE PROJECT
TURLOCK IRRIGATION DISTRICT
CERES, CALIFORNIA

PREPARED FOR: NOELL, INC.
2411 DULLES CORNER PARK, SUITE 410
HERNDON, VIRGINIA 22071

ATTENTION: MR. PETER LUMINI

BY: KLEINFELDER, INC.
2825 EAST MYRTLE STREET
STOCKTON, CALIFORNIA 95205

DATE: FEBRUARY 8, 1993

Copyright 1993 Kleinfelder, Inc.
All Rights Reserved

THIS DOCUMENT WAS PREPARED FOR USE ONLY BY THE CLIENT, ONLY FOR THE PURPOSES STATED, AND WITHIN A REASONABLE TIME FROM ITS ISSUANCE. PLEASE READ THE "LIMITATIONS" SECTION OF THIS REPORT.

Copyright 1993 Kleinfelder, Inc.

KLEINFELDER

File No-20-3693-02.001
February 8, 1993

Mr. Peter Lumini
Noell, Inc.
2411 Dulles Corner Park, Suite 410
Herndon, Virginia 22071

Subject: GEOTECHNICAL INVESTIGATION REPORT
PROPOSED COMBUSTION TURBINE PROJECT
TURLOCK IRRIGATION DISTRICT
CERES, CALIFORNIA

Dear Mr. Lumini:

Kleinfelder, Inc. is pleased to present the attached geotechnical investigation report for the proposed Turlock Irrigation District combustion turbine project to be located in Ceres, California. The purpose of our investigation was to explore and evaluate the subsurface conditions at requested locations on the site in order to provide geotechnical parameters and recommendations for use in design.

Based on the results of our field explorations and laboratory testing, it is our professional opinion that the site can be developed as planned. We recommend that the heavier structures of the facility be supported on mat or spread foundations underlain by Engineered Fill. In our opinion, the more lightly-loaded structures can be supported directly on existing soils provided the soils are prepared as recommended in the attached report. Due to the presence of loose, near-surface sandy soils, it may be necessary to overexcavate and recompact these soils, or use dynamic compaction techniques, in the vicinity of the heavier, more sensitive elements of the facility in order to reduce the risk of differential settlement. Our comments, geotechnical parameters, and recommendations regarding site earthwork and foundation design are presented in the attached report.

Recommendations provided herein are contingent on the provisions outlined in the "ADDITIONAL SERVICES" and "LIMITATIONS" sections of this report. The project owner should become familiar with these provisions in order to assess further involvement by Kleinfelder, Inc. and other potential impact on the proposed project.

Copyright 1993 Kleinfelder, Inc.

KLEINFELDER 2825 East Myrtle Street, Stockton, CA 95205 (209) 948-1345

File No. 20-3693-02.001
February 8, 1993

We appreciate the opportunity of providing our services for this project and look forward to providing further assistance during construction. If you have any questions regarding this report or if we can be of further assistance, please contact the undersigned.

Very truly yours,

KLEINFELDER, INC.

Patrick C. Dell, C.E.
Project Engineer

Ron Heinzen, G.E.
Regional Manager

GSM:md 1/93
Attachments
cc: ESA Engineering Corp. - Laguna Hills, California
Noell, Inc. - Long Beach, California

Copyright 1993 Kleinfelder, Inc.

IMPORTANT INFORMATION
ABOUT YOUR
GEOTECHNICAL ENGINEERING REPORT

More construction problems are caused by site subsurface conditions than any other factor. As troublesome as subsurface problems can be, their frequency and extent have been lessened considerably in recent years, due in large measure to programs and publications of ASFE/ The Association of Engineering Firms Practicing in the Geosciences.

The following suggestions and observations are offered to help you reduce the geotechnical-related delays, cost-overruns and other costly headaches that can occur during a construction project.

A GEOTECHNICAL ENGINEERING REPORT IS BASED ON A UNIQUE SET OF PROJECT-SPECIFIC FACTORS

A geotechnical engineering report is based on a subsurface exploration plan designed to incorporate a unique set of project-specific factors. These typically include: the general nature of the structure involved, its size and configuration; the location of the structure on the site and its orientation; physical concomitants such as access roads, parking lots, and underground utilities; and the level of additional risk which the client assumed by virtue of limitations imposed upon the exploratory program. To help avoid costly problems, consult the geotechnical engineer to determine how any factors which change subsequent to the date of the report may affect its recommendations.

Unless your consulting geotechnical engineer indicates otherwise *your geotechnical engineering report should not be used:*

- When the nature of the proposed structure is changed, for example, if an office building will be erected instead of a parking garage, or if a refrigerated warehouse will be built instead of an unrefrigerated one;
- when the size or configuration of the proposed structure is altered;
- when the location or orientation of the proposed structure is modified;
- when there is a change of ownership, or
- for application to an adjacent site.

Geotechnical engineers cannot accept responsibility for problems which may develop if they are not consulted after factors considered in their report's development have changed.

MOST GEOTECHNICAL "FINDINGS" ARE PROFESSIONAL ESTIMATES

Site exploration identifies actual subsurface conditions only at those points where samples are taken, when they are taken. Data derived through sampling and subsequent laboratory testing are extrapolated by geotechnical engineers who then render an opinion about overall subsurface conditions, their likely reaction to proposed construction activity, and appropriate foundation design. Even under optimal circumstances actual conditions may differ from those inferred to exist, because no geotechnical engineer, no matter how qualified, and no subsurface exploration program, no matter how comprehensive, can reveal what is hidden by earth, rock and time. The actual interface between materials may be far more gradual or abrupt than a report indicates. Actual conditions in areas not sampled may differ from predictions. *Nothing can be done to prevent the unanticipated, but steps can be taken to help minimize their impact.* For this reason, *most experienced owners retain their geotechnical consultants through the construction stage*, to identify variances, conduct additional tests which may be needed, and to recommend solutions to problems encountered on site.

SUBSURFACE CONDITIONS CAN CHANGE

Subsurface conditions may be modified by constantly-changing natural forces. Because a geotechnical engineering report is based on conditions which existed at the time of subsurface exploration, *construction decisions should not be based on a geotechnical engineering report whose adequacy may have been affected by time.* Speak with the geotechnical consultant to learn if additional tests are advisable before construction starts.

Construction operations at or adjacent to the site and natural events such as floods, earthquakes or groundwater fluctuations may also affect subsurface conditions and, thus, the continuing adequacy of a geotechnical report. The geotechnical engineer should be kept apprised of any such events, and should be consulted to determine if additional tests are necessary.

GEOTECHNICAL SERVICES ARE PERFORMED FOR SPECIFIC PURPOSES AND PERSONS

Geotechnical engineers' reports are prepared to meet the specific needs of specific individuals. A report prepared for a consulting civil engineer may not be adequate for a construction contractor, or even some other consulting civil engineer. Unless indicated otherwise, this report was prepared expressly for the client involved and expressly for purposes indicated by the client. Use by any other persons for any purpose, or by the client for a different purpose, may result in problems. *No individual other than the client should apply this report for its intended purpose without first conferring with the geotechnical engineer. No person should apply this report for any purpose other than that originally contemplated without first conferring with the geotechnical engineer.*

File No. 20-3693-02.001
February 8, 1993

GEOTECHNICAL INVESTIGATION REPORT
PROPOSED COMBUSTION TURBINE PROJECT
TURLOCK IRRIGATION DISTRICT
CERES, CALIFORNIA

INTRODUCTION

This report are presents the results of our geotechnical investigation performed for the proposed Turlock Irrigation District combustion turbine project to be located approximately ½ mile east of Crows Landing Road, north of the Turlock Irrigation Lateral No. 2 in Ceres, California. A plot plan and vicinity map showing the facility layout and site location are presented on Plate A-1 of the appendix.

This report includes geotechnical parameters and recommendations for use in site development and structure design. The conclusions and recommendations presented in this report are based on the subsurface conditions encountered at the locations of our field explorations and on our general knowledge of soil and foundation conditions within the site area.

PROPOSED CONSTRUCTION

The proposed project will involve construction of a combustion turbine/generator; water, ammonia, and fuel storage tanks; transformers and other electrical equipment; gas compressors; a stormwater pond; and warehouse and support structures. A 25-foot wide road will extend around the planned structures. A 10-foot wide berm is also planned around the perimeter of the project, except along the irrigation lateral. The location and dimensions for key elements of the project were provided on your Drawing No. 55101-M-10, Dwg. C-15, dated December 22, 1992, and a plot date of January 15, 1993.

Grading plans were not available at the time this report was prepared. However, as the site topography is essentially level, minor earthwork cuts and fills are expected in order to level the building pads and provide vehicular access and positive site drainage. Earthwork cuts on the order of approximately 5 feet deep are expected in order to construct the stormwater pond at the north end of the site.

PURPOSE AND SCOPE OF INVESTIGATION

The purpose of our geotechnical investigation has been to explore and evaluate the subsurface conditions at requested locations on the site in order to provide geotechnical parameters and recommendations for use in design. Our scope of services was outlined in our proposal dated November 19, 1992 and consisted of following:

Copyright 1993 Kleinfelder, Inc.

1. Exploration, using twelve test borings, of the subsurface conditions at requested locations within the area of the proposed construction (fourteen borings were actually drilled)

2. Laboratory testing of representative samples obtained during the field explorations to evaluate relevant engineering parameters of the subsurface soils

3. Preparation of this report which consists of:

   a. A description of the proposed project

   b. A description of the surface and subsurface site conditions encountered during our field explorations

   c. Summary of geological hazards, including liquefaction potential

   d. Comments and recommendations regarding site preparation, Engineered Fill, and anticipated excavation conditions

   e. Recommendations for various foundation support systems and associated geotechnical parameters applicable to the proposed construction

   f. Geotechnical parameters and recommendations regarding concrete slabs supported-on-grade

   g. Recommended asphalt concrete and concrete pavement sections

   h. Results of a field resistivity survey

   i. A summary of the field explorations and laboratory testing programs

SITE CONDITIONS

Surface

The essentially flat site is roughly rectangularly shaped and was covered by recently-harvested alfalfa at the time of our field investigation. The site is bounded by agricultural fields to the north and west, the Union Pacific Railroad tracks to the east, and the Turlock Irrigation Lateral No. 2 to the south. Additionally, overhead utilities were observed approximately 20 feet north of the irrigation lateral. The locations of any underground utilities or other buried objects at the site are not known to our firm.

Copyright 1993 Kleinfelder, Inc.

Subsurface

In general, the surface soils encountered in the fourteen test borings completed for this project consisted of loose silty to relatively clean sands that extended to depths of approximately 4 to 9½ feet below existing ground surface. At these depths, alternating layers and mixtures of very stiff to hard sandy silts and partially cemented medium dense to very dense silty and relatively clean sands were encountered which extended to the maximum depths explored of approximately 51½ feet.

Free groundwater was encountered in our deeper borings at depths of between approximately 21½ and 23 feet below existing ground surface. We note that groundwater conditions in this area may vary depending on rainfall, irrigation, groundwater withdrawal, construction activities, canal leakage, or other conditions not apparent at the time of our field explorations. A discussion of the field exploration and laboratory testing programs is presented in the appendix of this report. Detailed descriptions of the soils encountered in the borings are presented on the Logs of Borings, Plates A-3 through A-16 of the appendix.

REGIONAL AND LOCAL GEOLOGY

Ceres is located in the central part of the Great Valley geomorphic province of California. The valley is situated between the Sierra Nevada mountains on the east and the Coast Ranges mountains on the west. These mountain ranges were formed by uplifts which occurred during the late Tertiary[1] and Quaternary periods. The structural trough or depression in bedrock formations between the ranges has been filled with alluvial, lacustrine, and some marine sediments that attain a maximum thickness of about 30,000 feet near the western margin. The bedrock complex is composed of metamorphosed marine sediments similar to those found in the foothills of the western Sierra Nevada and the core of the Coast Ranges.

The portion of the valley in the central Ceres area exhibits a fairly complete stratigraphic section of Cretaceous, Tertiary and Quaternary deposits. The sediments deposited prior to mid-Tertiary time were in a marine environment. Changes in sea level, valley filling, and uplift resulted in deposition of sediments in a continental environment after mid-Tertiary time. These continental sediments are exposed at the surface in the site area. Near-surface sediments in the site area have been deposited primarily during flood stages of the Tuolumne and San Joaquin River systems, prior to the present-day flood-control systems.

FAULTS AND SEISMICITY

The Central Valley of California is considered to be an area of relatively low seismicity in a state which is characterized by moderate-to-high seismic activity. During the formation of the Coast Ranges and the Sierra Nevada mountains, numerous faults and shear zones

[1] See "Geologic Time Scale," Appendix, Plate A-21

Copyright 1993 Kleinfelder, Inc.

developed. These faults are primarily in the Sierra Nevada foothills and the Coast Ranges; however, a few extend beneath the valley sediments.

The site is not located within a special study zone as delineated by the Alquist-Priolo Special Studies Zones Act of 1972, and no active or potentially active faults are known to reach the surface within Ceres. The Tesla-Ortigalita fault zone is located along the east portion of the Coast Ranges west of Ceres. This fault zone is considered inactive north of San Luis Reservoir and potentially active south of San Luis Reservoir, approximately 40 miles southwest of the site. Several faults beneath the valley that displace "basement" rocks and some of the overlying sediments are known from subsurface oil and gas exploration. The nearest of these buried faults are the Midland fault and the Tracy-Stockton fault. Neither of these faults is located within approximately 35 miles of the site, and there is no evidence to suggest that either fault is likely to cause surface displacement in the Ceres area.

The major faults which have historically produced earthquakes of greatest magnitudes in central California are the Calaveras, Hayward, and San Andreas faults in the Coast Ranges; the Greenville and Midland (suspected) faults on the west side of the Great Valley; and the Sierra Nevada and Owens Valley faults east of the Sierra Nevada mountains. A map showing the locations of the major faults of central California, in relation to the site, is presented on Plate A-22 of the appendix. A map showing the locations of historical earthquakes with Richter magnitudes greater than 5.0 that occurred between 1800 and 1991 within approximately 100 miles of the site is presented on Plate A-23 of the appendix.

The closest fault system to the proposed Ceres combustion turbine project site, excluding the inactive Tesla-Ortigalita fault zone, is the Foothills fault system containing the Bear Mountains and Melones fault zones, located approximately 25 miles east of the site. In the past, the Foothills fault system has been considered inactive, with no known creep or displacement of sediments or geologic features since late Cretaceous time. On August 1, 1975, an earthquake of Richter magnitude 5.7 occurred approximately 6 miles southeast of Oroville. As a result of this event and the subsequent aftershocks, a reevaluation of the potential activity of the Foothills fault system took place. It has been proposed, based on the Oroville event, that a Richter magnitude 6.5 earthquake may occur almost anywhere in the Foothills fault system.

The Maximum Credible Earthquake (MCE) is defined as "the maximum earthquake that appears to be reasonably capable of occurring under the conditions of the presently known 'geologic framework.'" The Maximum Probable Earthquake (MPE) is defined as "the maximum earthquake that appears to be reasonably expectable within a 100-year period." Ground accelerations anticipated to be associated with the MCE's and MPE's, presented on the following table, are derived from attenuation relationships developed by Donovan and Bornstein (1978).

Copyright 1993 Kleinfelder, Inc.

TABLE I
DETERMINISTIC SITE PARAMETERS

Fault Name	Approximate Distance (mi)	Maximum Credible Event		Maximum Probable Event	
		Max. Cred. Mag.	Peak Site Acc.(g)	Max. Peak Mag.	Peak Site Acc.(g)
Calaveras	44	7.5	0.10	7.0	0.07
Greenville	33	7.0	0.11	5,25	0.03
Hayward	46	7.5	0.10	7.0	0.07
San Andreas	60	8.5	0.22	8.25	0.18
Foothills (Bear Mntns)	25	6.5	0.09	---	---

Listing peak accelerations is a convenient method of categorizing and comparing earthquakes for geologic purposes. However, peak acceleration values are poor indications of potential building performance during earthquakes. The duration of shaking, the frequency content of the motion, localized subsurface conditions and the details of the structures involved are all important factors in influencing building performance.

LIQUEFACTION POTENTIAL

The analysis of the liquefaction potential for sediments beneath the site followed procedures outlined by Seed and Idriss. Soils most susceptible to liquefaction are uniformly graded soils and of these soils, fine sands tend to liquefy more easily than do coarse sands, gravelly soils, silts or clays. Other factors involved with liquefaction potential are the relative density of the soil, the amount and type of overburden, the shape and arrangement of soil particles, groundwater elevation, and seismic parameters of anticipated earthquakes.

Although there were significant amounts of loose to medium dense silty to relatively clean sands encountered in the surface 5 to 10 feet of soil (see Logs of Test Borings), it is our opinion that due to the underlying predominately medium to very dense and partially cemented soils and relatively low groundwater table, the potential for liquefaction beneath the site is very low.

OTHER GEOLOGIC HAZARDS AND CONCLUSIONS

In considering other possible geologic hazards to the site, we evaluated the potential for ground lurching, landsliding, earthquake-induced flooding, tsunamis, and seiches. Based on our evaluation, we find that because of the topography and location of the site, it is highly

Copyright 1993 Kleinfelder, Inc.

improbable that damage would occur to the proposed Ceres combustion turbine project Facility as a result of any of these possible hazards.

As a result of our evaluation, the following conclusions were reached regarding the geologic and seismic hazards at the proposed Ceres Combustion Turbine project site.

- The potential for landslides or other downslope earth movements is very low due to the relatively flat topography.
- There are no known faults or shear zones crossing the site which would endanger the structures due to ground rupture.
- The potential for damaging strong motions associated with earthquakes in the site area, based on history, is low compared to much of California.
- Based on available data, it is anticipated that the maximum peak site acceleration would not exceed approximately 0.22g based on a MCE of Richter magnitude 8.5 occurring on the closest point of the San Andreas fault zone, approximately 60 miles from Ceres.
- The potential for liquefaction beneath the site is very low due to the very dense soil conditions and low groundwater table encountered.
- The inland location of the site makes damage due to tsunamis or seiches unlikely.
- Minor flooding of the site could occur from a strong seismic event if the adjacent irrigation lateral sustained damage while full.

Based on our experience in this area and on our review of available literature, the structures should, as a minimum, be designed to meet seismic requirements stipulated by the current Uniform Building Code for Seismic Zone 3 or California Administration Code, Title 24, whichever governs.

SITE PREPARATION AND GRADING

Stripping and Grubbing

Prior to general site grading, all vegetation should be stripped and disposed of outside the construction limits. Deeper stripping or grubbing may be required where concentrations of organic soils are encountered during site grading. Although not encountered during our field investigation, it is possible that abandoned utility lines, septic tanks, cesspools, wells and/or foundations may exist on site. Since this is an agricultural site, the potential for such structures to have existed on this site is relatively low. If encountered, these items should be

Copyright 1993 Kleinfelder, Inc.

removed and disposed of off-site. Existing wells should be abandoned in accordance with applicable regulatory requirements.

Should site grading be performed during the winter or early spring, we anticipate near-surface site soils may be significantly above the optimum moisture content. These conditions could hamper equipment maneuverability on the site and efforts to compact the site soils to the recommended compaction criteria. Disking to aerate, chemical treatment, replacement with drier materials, or other methods may be required to reduce excessive soil moisture.

Anticipated Excavation Conditions

We anticipate earthwork grading and trench excavation should be possible using conventional earthwork equipment and techniques. However, somewhat slower excavations should be anticipated if cemented soils are encountered near the surface. Cemented surface soils were not encountered in our investigation.

Temporary Excavations

All excavations will have to comply with the requirements of Cal/OSHA. Additionally, all excavations deeper than 5 feet and involving personnel working within the excavation will have to be sloped and/or shored. Temporary excavations to a depth of approximately 10 feet below surrounding grade will likely require excavated slopes of 1:1 (1 horizontal to 1 vertical) or flatter, unless cemented materials are encountered. Steeper cuts can be utilized for excavations less than 5 feet deep, depending on the strength, moisture content and homogeneity of the soils observed in the field. Based on our experience, we anticipate that portions of the upper, more silty sand soils can be excavated to shallow depths of 5 feet or less at near-vertical slopes. **Note: Flatter slopes and/or trench shields may be required where less silty and/or clean sand soils are encountered.**

Groundwater Considerations

Based on our borings and experience, groundwater should not be a factor during construction on the site.

Engineered Fill

We anticipate that the majority of the on-site soils can be used as Engineered F Engineered Fill should be placed in loose lifts a maximum of 8 inches thick and should compacted to at least 90 percent of the maximum dry density as determined by the ASTM 1557 test procedure in all areas except beneath pavement areas and mat or other heav loaded foundation areas where the recommended minimum compaction should be increa to 95 percent. We note that the more-silty, on-site materials are considered "moist sensitive" and may be difficult to compact if the moisture content is elevated more than 2 3 percent above optimum.

Copyright 1993 Kleinfelder, Inc.

If imported fill is required to achieve final grades, we recommend that imported materials consist of granular, nonexpansive soil having a maximum percentage passing the No. 200 sieve of 40, a maximum plasticity index of 8, and a minimum Resistance-Value (R-Value) of 40. Samples of any proposed imported fill should be submitted to the soils engineer for approval prior to being taken to the site.

We recommend that fill placed to construct the drainage basin levees and the perimeter berms be placed in the same manner as Engineered Fill. We recommend maximum 2:1 and 3:1 slopes for exterior and interior fill slopes, respectively, unless the slopes are protected from erosion by vegetation, or by other means.

FOUNDATIONS - SPREAD FOOTINGS

In our opinion, lightly-loaded structures which are not sensitive to settlement, such as office or warehouse buildings, can be supported on spread foundations bearing on the existing recompacted soils. We recommend that foundations extend at least 18 inches below grade. Due to the loose soils encountered in order to provide more uniform support to the foundations, we recommend the bottom of foundations be compacted to a minimum of 90 percent of the maximum dry density as determined by the ASTM D-1557 test method. Any extremely loose soils encountered should be overexcavated and recompacted. With these provisions, we recommend that a maximum allowable soil-bearing pressure of 2,000 pounds per square foot (psf) for dead plus live loads be used in the design. An increase of ⅓ for short-term loading due to wind or seismic forces will also be applicable.

I used 2250 ps

Total settlement of an individual foundation will vary depending on the plan dimensions of the foundation and the actual load supported. Based on an assumed maximum foundation load of 50 kips (dead plus live loads) bearing on the loose upper soils, we anticipate a maximum settlement on the order of ½ inch. Differential settlement between similarly loaded, adjacent footings is expected to be approximately one-half these values. Due to the predominantly sandy nature of the near-surface soils encountered across the site, settlement resulting from foundations bearing directly on the upper loose sandy soils should be in the form of elastic compression of the underlying sandy soils. The majority of settlement should occur during construction and as the structural loads are applied.

FOUNDATIONS - HEAVILY LOADED/SETTLEMENT-SENSITIVE STRUCTURES

Heavily-loaded and/or settlement-sensitive structures, such as the combustion turbine, will likely require some recompaction of the underlying materials in order to reduce anticipated settlement and to use higher bearing pressures. We anticipate that many of the heavier elements of the project will be supported on mat foundations extending 3 to 4 feet below grade. We understand that the combustion turbine and heat recovery structures' mat foundations will exert contact pressures for the soil of approximately 2,000 psf. We recommend that spread foundations supporting relatively large point loads be underlain by a minimum of 3 feet of Engineered Fill. The thickness of Engineered Fill beneath foundations

Copyright 1993 Kleinfelder, Inc.

should be increased to at least 5 feet where mat foundations are being considered. We also recommend a minimum embedment depth for spread foundations of 18 inches. With these provisions, it is our opinion that a maximum allowable soil-bearing pressure of 4,000 psf can be used for both spread and mat foundations underlain by Engineered Fill. As with the more lightly loaded spread foundations, we anticipate that settlement will be in the form of elastic compression of the underlying soils. With between 3 and 5 feet of Engineered Fill beneath the more heavily loaded foundations, we anticipate that settlement could be on the order of ¼ to ½ inch for spread foundations and ½ to ¾ inches for mat foundations based on the assumed loading conditions. We anticipate that the differential movement of mat foundations will be within approximate ¼ inch in 20 feet.

The recommended bearing pressure can be increased, if desired, provided additional elastic compression is acceptable. As alternatives, mat foundations can be extended to reduce the actual bearing pressure and/or the thickness of Engineered Fill beneath foundations can be increased to more than the 3 to 5 feet recommended above.

LATERAL PRESSURES

Resistance to lateral loads (including those due to wind or seismic forces) can be provided by frictional resistance between the bottom of concrete foundations and the underlying soils and by passive soil pressure against the sides of the foundations. We recommend coefficients of friction of 0.35 and 0.40 be used between cast-in-place concrete foundations and the underlying existing soils and Engineered Fill, respectively. The passive resistance can be taken as equivalent to the pressure exerted by a fluid weighing 250 pounds per cubic foot (pcf) for undisturbed existing soil and 350 pcf for Engineered Fill. The values recommended above include a calculated factor of safety of at least 1.5; therefore, frictional and passive pressure resistances may be used in combination without reduction.

DYNAMIC SOIL ANALYSIS PARAMETERS

In our opinion, the following parameters can be used for a dynamic soils analysis:

- Poisson's Ratio - 0.2 or 0.4
- Shear Modulus - 1,500 pounds per square inch (psi)
- Modulus of Elasticity - 40,000 psi
- Soil Density - 120 pcf
- Angle of Internal Friction - 30°
- Modulus of Subgrade Reaction:

Copyright 1993 Kleinfelder, Inc.

Vertical (Engineered Fill) - 200 pounds per cubic inch (pci)
Horizontal - Depends on depth

These approximate values are based on field and laboratory test results, past experience and literature research.

CONCRETE SLABS SUPPORTED ON GRADE

We anticipate most concrete slabs within the planned structures will be supported on compacted Engineered Fill at least 12 inches in thickness. For the preliminary design of slabs and estimating slab deflections, a modulus of subgrade reaction of 200 pounds per square inch per inch of deflection may be used for slabs supported on non-expansive, compacted Engineered Fill at least 12 inches in thickness.

PAVEMENT SECTIONS

We performed one Resistance-Value test on a sample of the near-surface soils obtained from the approximate location shown on Plate A-1 the appendix. The test results indicate an R-Value of 81 at an exudation pressure of 300 psi. The detailed R-Value test results are presented on Plate A-29 of the appendix.

The Caltrans method of design for flexible pavements permits the use of a maximum R-Value of 50 in design. Based on the design method presented in Topic 608 of the Caltrans Highway Design Manual, a design R-Value of 50 and assumed traffic indices, we recommend the following asphalt concrete and concrete pavement sections:

Pavement Area	Assumed Traffic Index	Minimum Thickness of Asphalt Concrete	Minimum Thickness of Class II Aggregate Base	Minimum Thickness of Concrete Paving
General Parking	4.0	2"	4"	-
		-	-	4"
Main Aisles and Truck Lanes	5.0	2"	5"	-
		-	-	5"
	6.0	2½"	5½"	-
		-	-	6"
	7.0	3"	6½"	-
		-	-	7"
	8.0	5"	5"	-
		-	-	8"

Copyright 1993 Kleinfelder, Inc.

The subgrade soils over which the concrete paving materials are to be placed should be compacted to a minimum depth of 12 inches to a minimum of 95 percent of the ASTM D-1557 maximum dry density. In areas to receive asphalt concrete paving, the depth of compaction can be reduced to a minimum depth of 6 inches at a moisture content near optimum. In addition, it is recommended that all pavements conform to the following criteria:

- All trench backfills, including utility and sprinkler lines, should be properly placed and adequately compacted to provide a stable subgrade.
- An adequate drainage system should be provided to prevent surface water or subsurface seepage from saturating the subgrade soil.
- The aggregate base should be compacted to a minimum of 95 percent of the maximum dry density as determined by the ASTM D-1557 test method.
- The aggregate base, asphalt concrete, and concrete pavement materials should conform to the specifications stated in Sections 26, 39, and 40, respectively, of the State of California Standard Specifications, latest edition.
- The pavement section recommendations presented assume that periodic maintenance of pavements will be done, including sealing of cracks.
- All curbs surrounding landscape areas should be embedded at least 6 inches below subgrade to minimize the movement of moisture beneath pavements.

The concrete paving should be air-entrained to provide air content of between 3 and 5 percent. We recommend that the concrete provide a 28-day compressive strength exceeding 4,000 pounds per square inch and a modulus of rupture (flexural strength) exceeding 500 pounds per square inch. In addition, it is recommended that the cement factor be a minimum of 5.5 sacks per cubic yard. The concrete mix should also be designed for a slump not exceeding 4 inches. For all outside edges of the pavement, it is recommended that they be thickened in accordance with PCA guidelines.

The concrete pavement should be constructed in an approximate 15 foot square grid system. If a square system is impractical, rectangular panels can be used in the form of 15 feet maximum. Joints should be spaced at each grid line location, a maximum of 15 feet apart.

RESISTIVITY TESTS

Three resistivity tests were performed at the locations shown on Plate A-1 using a Soiltest model R-40C resistivity meter. The Wenner four-point configuration was used. The tests were performed with electrode spacing as specified of 2.5, 5.0, 10 and 15 feet. The test results are summarized in the following table.

Copyright 1993 Kleinfelder, Inc.

FIELD RESISTIVITY TESTS

				Resistivity (ohm-cm)	
Location	Electrode Spacing Feet	Layer Depth Feet	Layer Thickness Feet	Layer	Surface to Layer Bottom
R-1	2.5	0 - 2.5	2.5	26019	26058
	5.0	2.5 - 5.0	2.5	16798	20423
	10	5 - 10	5	7741	11222
	15	10 - 15	5	4925	7871
R-2	2.5	0 - 2.5	2.5	29192	29146
	5.0	2.5 - 5.0	2.5	17159	21620
	10	5 - 10	5	14914	17656
	15	10 - 15	5	10285	14248
R-3	2.5	0 - 2.5	2.5	26019	26058
	5.0	2.5 - 5	2.5	16798	20423
	10	5 - 10	5	7741	11222
	15	10 - 15	5	4925	7871

ADDITIONAL SERVICES

The review of plans and specifications, field observations, and testing by Kleinfelder, Inc. are an integral part of the conclusions and recommendations made in this report. The tests and observations requested at this time to be performed by Kleinfelder, Inc. during construction are as follows:

- Observation and testing during site preparation and grading and placement of Engineered Fill
- Observation of foundation excavations prior to placement of reinforcing steel

The above listed testing and observations are additional services to be provided by our firm. The costs for these services are included in our current fee arrangements.

Additional tests and consultations may be requested by the client during construction. These may include the following:

- Consultation during construction regarding items not covered in this report
- Testing of concrete during construction of facilities

Copyright 1993 Kleinfelder, Inc.

- Testing of trench backfill

LIMITATIONS

- The conclusions and recommendations in this report are for design purposes for the proposed Turlock Irrigation District combustion turbine project as described in the text of this report. The conclusions and recommendations in this report are invalid if:
  - The assumed design loads change
  - The report is used for adjacent or other property
  - Changes of grades and/or groundwater occur between the issuance of this report and construction.
  - Any other change is implemented which materially alters the project from that proposed at the time this report was prepared.
- The conclusions and recommendations in this report are based on the field explorations performed for this investigation. It is possible that variations in the soil conditions exist between or beyond the points of exploration, or the groundwater elevation may change, both of which may require additional investigations, consultation and possible design revisions.
- This report was prepared in accordance with the generally accepted standard of practice which existed in Stanislaus County at the time the report was written. No warranty, expressed or implied, is made.
- It is the CLIENT'S responsibility to see that all parties to the project, including the designer, contractor, subcontractor, etc., are made aware of this report in its entirety.
- This report may be used only by the client and only for the purposes stated, within a reasonable time from its issuance. Land use, site conditions (both on site and off site) or other factors may change over time, and additional work may be required with the passage of time. Any party other than the client who wishes to use this report shall notify Kleinfelder, Inc. of such intended use. Based on the intended use of the report, Kleinfelder, Inc. may require that additional work be performed and that an updated report be issued. Non-compliance with any of these requirements by the client or anyone else will release Kleinfelder, Inc. from any liability resulting from the use of this report by any unauthorized party.

Copyright 1993 Kleinfelder, Inc.

File No. 20-3693-02.001
February 8, 1993

ADDITIONAL COPIES OF REPORT

We are providing Noell, Inc. with six bound copies of this report. If additional copies are required, we can provide them at an additional cost (in accordance with our current fee schedule) and after receipt of a written request from our client. **Under no circumstances will we provide a copy of the report to other design consultants or contractors without permission from our client.**

If you have any questions or need additional information, please contact us.

Respectfully submitted,

KLEINFELDER, INC.

Patrick C. Dell, C.E.
Project Engineer

Ron Heinzen, G.E.
Regional Manager

PCD:md 1/93
Attachments
cc: ESA Engineering Corp. - Laguna Hills, California
Noell, Inc. - Long Beach, California

Copyright 1993 Kleinfelder, Inc.

APPENDIX

File No. 20-3693-02.001
February 8, 1993

APPENDIX

FIELD INVESTIGATION AND LABORATORY TESTING

FIELD INVESTIGATION

General

The subsurface conditions at the site were explored between January 18 and 19, 1993, by drilling fourteen borings to depths ranging from approximately 10 to 51½ feet below existing grade. In addition, three resistivity tests were performed on January 25, 1993. The borings were performed at the approximate locations requested on the plans provided. The borings were drilled using a truck-mounted drill rig equipped with 6-inch-diameter hollow-stem augers. The locations of the field explorations performed for this investigation are shown on Plate A-1. Note: The borings and resistivity test locations were located in the field by measuring with a tape measure from staked property corners. Therefore, the location of borings and resistivity tests shown on Plate A-1 should be relatively close to the locations requested.

Representatives of our firm maintained continuous logs of the borings, visually classified soils encountered according to the Unified Soil Classification System (See Plate A-2), and obtained relatively undisturbed soil samples of the subsurface materials. A key to the Logs of Borings is presented on Plate A-2 of this appendix; Logs of Borings are presented on Plates A-3 through A-16.

Sampling Procedures

Soil samples were obtained from the borings using a Modified California Sampler and Standard Penetration Sampler driven 18 inches (unless otherwise noted) into undisturbed soil using a 30-inch drop of a 140-pound hammer. Blow counts were recorded at 6-inch intervals for each sample attempt and are reported on Plates A-3 through A-16 in terms of blow-per-foot for the last foot of penetration. Soil samples obtained from the borings were packaged and sealed in the field to reduce moisture loss and disturbance, and returned to our Stockton laboratory for further testing. After borings were completed, they were backfilled with the drill cuttings.

LABORATORY TESTING

General

Laboratory tests were performed on selected samples to aid in soil classification and to evaluate physical properties of the soils which may affect the geotechnical aspects of project

Copyright 1993 Kleinfelder, Inc.

design and construction. A description of the laboratory testing program is presented below; a summary of all laboratory tests performed is presented on Plate A-17.

Moisture Content and Dry Unit Weight

Moisture content and dry unit weight tests were performed to evaluate moisture-conditioning requirements during site preparation and earthwork grading; soil overburden, and active and passive earth pressures; and relative soil strength and compressibility. Moisture content was evaluated in general accordance with ASTM Test Method D 2216; dry unit weight was evaluated using procedures similar to ASTM Test Method D 2937. Results of these tests are presented on the logs and are summarized on Plate A-17.

Sieve Analysis

Sieve analyses and No. 200 Sieve Washings were performed to evaluate the gradational characteristics of the materials and to aid in soil classification. Tests were performed in general accordance with ASTM Test Methods C-136 and D-422. Results of these tests are presented on the logs and are also summarized on Plate A-17.

Maximum Density-Optimum Moisture Content

A bulk sample of the surface soils at the site was obtained and returned to our laboratory to determine the maximum dry density and optimum moisture content of the soil. The test procedure was performed in accordance with ASTM Test Method D 1557. Results of this test are presented on Plate A-25.

Consolidation

A consolidation test was performed on one sample obtained from the test borings to evaluate the consolidation characteristics of the soil. These test results were then used to estimate the approximate settlement that can be expected at this site based on the anticipated loading conditions. The test was performed in general accordance with the procedures outlined in ASTM Test Method D 2435. Results of this test are presented on Plate A-24.

Direct Shear

Direct shear tests were performed on selected samples obtained from our test borings. These tests were performed to determine the drained shear strength and angle of internal friction of the native sandy soils. The tests were performed in general accordance with ASTM Test Method D 3080. Results of the direct shear tests are presented on Plates A-19 through A-23.

Unconfined Compression

Unconfined compression tests were performed on selected samples to evaluate the undrained shear strength of the fine-grained site soils. Test procedures were in general accordance with ASTM Test Method D 2166. Results of these tests are presented on Plate A-18.

Copyright 1993 Kleinfelder, Inc.

REFERENCES

1. Anon. (1964). "Crustal Strain and Fault Movement Investigation, Faults and Earthquake Epicenters in California," Department of Water Resources Bulletin No. 116-2.

2. Anon. (1966). "Geology of Northern California," California Division of Mines and Geology Bulletin 190.

3. Biggar, Norma, etal. (1978). "Geologic and Seismologic Investigations, New Melones Dam Project, California," Woodward-Clyde Consultants.

4. Bowen, Oliver E. Jr. (1962). "Geologic Guide to the Gas and Oil Fields of Northern California," California Division of Mines and Geology Bulletin 181.

5. Donovan, N.C. and Bornstein, A.E. (1978), "Uncertainties in Seismic Risk Procedures," American Society of Civil Engineers Journal of Geotechnical Engineering Division, vol. 104, no. GT7, pp. 869-887.

6. Greensfelder, R.W. (1972). "Crustal Movement Investigation of California: Their History, Data and Significance," California Division of Mines and Geology.

7. Greensfelder, R.W. (1974). "Maximum Credible Rock Accelerations from Earthquakes in California," California Division of Mines and Geology, Map Sheet 23.

8. Hart, Earl W. (1980). "Fault-Rupture Hazard Zones in California." Alquist-Priolo Special Studies Zones Act of 1972. California Division of Mines and Geology.

9. Kulp, J.L. (1961). "Geologic Time Scale," Science, Volume 133, No. 3459, p. 1111, AAAS, Washington, D.C.

10. San Joaquin County Counsel of Governments (1973), Seismic Safety Element.

11. Seed, H.B., and Idriss, I.M., "Simplified Procedure for Evaluating Soil Liquefaction Potential," Journal of the Soil Mechanics and Foundations Division, ASCE, Vol. 97, No. SM9, Sept. 1971, pp. 1249-1274.

Copyright 1993 Kleinfelder, Inc.

12. Seed, H.B. and Idriss, I.M., "Influence of Soil Conditions on Ground Motions During Earthquakes," Journal of the Soil Mechanics and Foundations Division, ASCE, January, 1969. Attenuation.

13. Seed, H.B. and Idriss, I.M., and Kiefer, Fred W., "Characteristics of Rock Motions During Earthquakes," Journal of the Soil Mechanics and Foundations Division, ASCE; September, 1969.

14. Stanislaus Area Association of Governments (1974), Geology and Seismic Safety.

15. Toppozada, et. al. (1981). "Preparation of Isoseismal maps and summaries of reported effects for pre-1900 California earthquakes," Open-file report 81-11, California Division of Mines and Geology.

16. Vanta Enterprises (1980). "Earthquakes and Earthquake Faults of California."

Copyright 1993 Kleinfelder, Inc.

LIST OF ATTACHMENTS

	PLATE NO.
PLOT PLAN AND VICINITY MAP	A-1
UNIFIED SOIL CLASSIFICATION SYSTEM	A-2
LOGS OF BORINGS	A-3 THROUGH A-16
LABORATORY TESTS	A-17
DIRECT SHEAR TESTS	A-18 THROUGH A-23
CONSOLIDATION TEST	A-24
MAXIMUM DENSITY-OPTIMUM MOISTURE DETERMINATION	A-25
GRAIN SIZE DISTRIBUTION TEST	A-26 THROUGH A-28
RESISTANCE-VALUE TEST	A-29
GEOLOGIC FAULT MAP	A-30
CALIFORNIA FAULT MAP	A-31
HISTORICAL EARTHQUAKE MAP	A-32

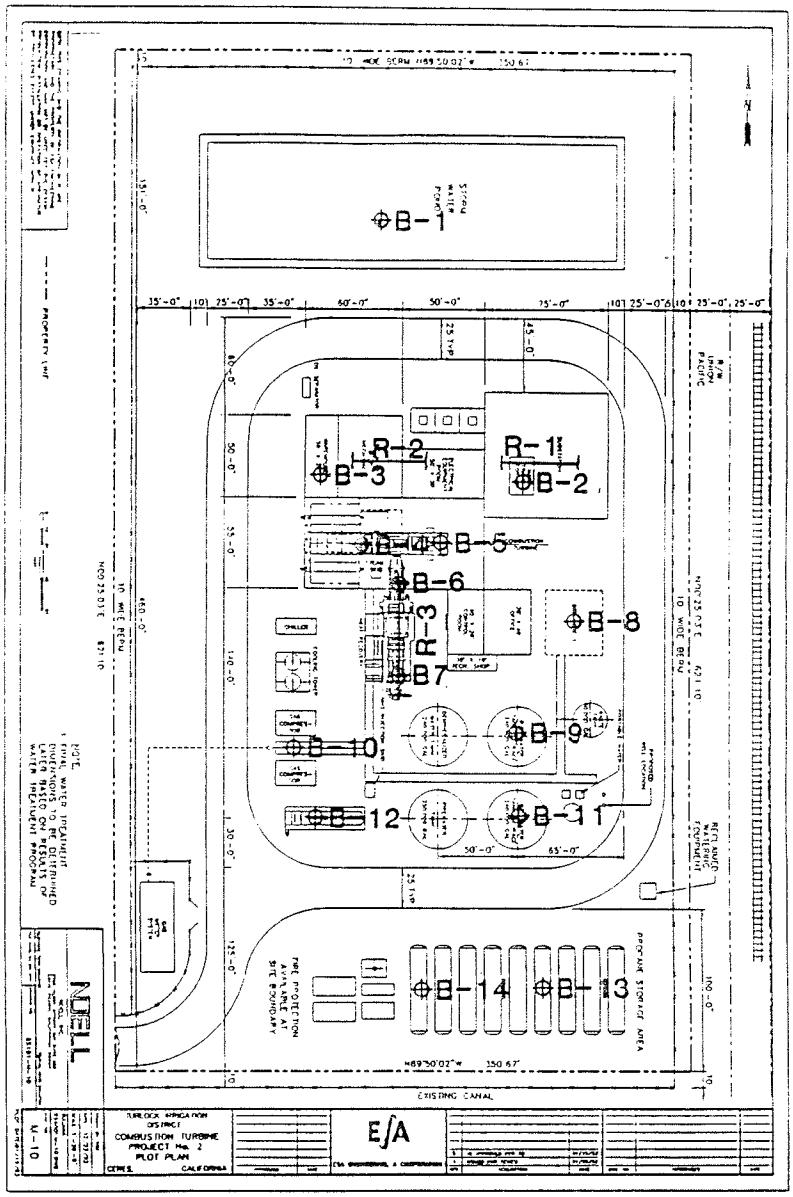

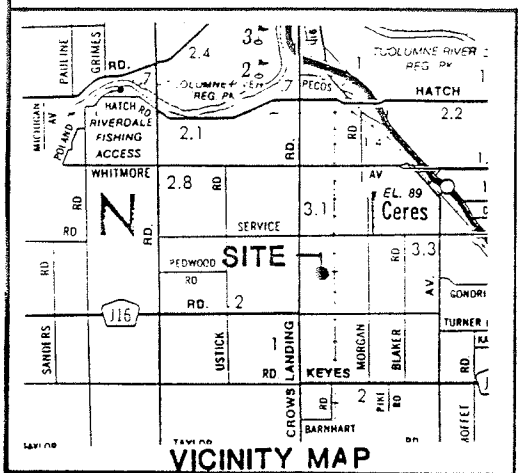

VICINITY MAP

⊕B-1 DENOTES NUMBERS AND APPROXIMATE LOCATIONS OF BORINGS DRILLED FOR THIS STUDY

R-1 ⟝ DENOTES NUMBER AND APPROXIMATE LOCATION OF RESISTIVITY TRAVERSE PERFORMED FOR THIS STUDY

KLEINFELDER

PROJECT NO. 20-3693-02.001

PLOT PLAN AND VICINITY MAP
COMBUSTION TURBINE PROJECT
CERES, CALIFORNIA

PLATE
A-1

UNIFIED SOIL CLASSIFICATION SYSTEM

MAJOR DIVISIONS		LTR	DESCRIPTION	MAJOR DIVISIONS		LTR	DESCRIPTION
COARSE GRAINED SOILS	GRAVEL AND GRAVELLY SOILS	G W	Well-graded gravels or gravel sand mixtures, little or no fines.	FINE GRAINED SOILS	SILTS AND CLAYS LL < 50	M L	Inorganic silts and very fine sands, rock flour, silty or clayey fine sands or clayey silts with slight plasticity.
		G P	Poorly-graded gravels or gravel sand mixture, little or no fines.			C L	Inorganic clays of low to medium plasticity, gravelly clays, sandy clays, silty clays, lean clays.
		G M	Silty gravels, gravel-sand-silt mixtures.			O L	Organic silts and organic silt-clays of low plasticity.
		G C	Clayey gravels, gravel-sand-clay mixtures.		SILTS AND CLAYS LL > 50	M H	Inorganic silts, micaceous or diatomaceous fine or silty soils, elastic silts.
	SAND AND SANDY SOILS	S W	Well-graded sands or gravelly sands, little or no fines.			C H	Inorganic clays of high plasticity, fat clays.
		S P	Poorly-graded sands or gravelly sands, little or no fines.			O H	Organic clays of medium to high plasticity.
		S M	Silty sands, sand, and silt mixtures.	HIGHLY ORGANIC SOILS		P t	Peat and other highly organic soils.
		S C	Clayey sands, and clay mixtures.				

Standard penetration split spoon sample

Modified California sampler

Shelby tube sample

Water level observed in boring

* No recovery

NFWE No free water encountered

NOTE: The lines separating strata on the logs represent approximate boundaries only. The actual transition may be gradual. No warranty is provided as to the continuity of soil strata between borings. Logs represent the soil section observed at the boring location on the date of drilling only.

KLEINFELDER

BORING LOG LEGEND

PROJECT NO. 20-3693-02.001

PLATE

A-2

Date Completed: 1/19/93

Logged By: JMY

Total Depth: 10 feet

Surface Conditions: Low Cut Alfalfa

Groundwater: Not Encountered

Depth, ft	FIELD: Sample	FIELD: Blows/ft	LABORATORY: Dry Density pcf	LABORATORY: Moisture Content %	LABORATORY: Compress. Strength ksf	LABORATORY: Other Tests	DESCRIPTION / USCS Classification
0							(SM) SILTY SAND - Brown, Very Fine to Fine Grained, Very Moist
5							(SM) SILTY SAND - Light Gray, Very Fine Grained, Moist
10							END OF BORING
15							
20							
25							
30							
35							

KLEINFELDER

PROJECT NO. 20-3693-02.001

COMBUSTION TURBINE PROJECT
CERES, CALIFORNIA
LOG OF BORING B-1

PLATE 1 of 1

A-3

Date Completed: 1/19/93

Logged By: ETH

Total Depth: 41.5 feet

Surface Conditions: Low Cut Alfalfa

Groundwater: Encountered at 24-Ft. Depth, Rose to 21-1/2-Ft. Depth

Depth, ft	FIELD: Sample	FIELD: Blows/ft	LABORATORY: Dry Density pcf	LABORATORY: Moisture Content %	LABORATORY: Compress. Strength ksf	LABORATORY: Other Tests	DESCRIPTION / USCS Classification
0		6				-#200 = 29% Sp.Gr. = 2.62	(SM) SILTY SAND - Dark Brown-Brown, Grades More Silt With Depth, Very Fine to Fine Grained, Loose to Medium Dense, Moist
5		10				Direct Shear	
10		56				Gradation	(SM) SILTY SAND - Brown, Very Fine to Fine Grained, Very Dense, Moist Interbedded Cemented Silts and Sands
15		18					(SM) SILTY SAND - Gray-Blue-Green, Very Fine to Fine Grained, Medium Dense, Moist
20		28	93	30	1.5	Groundwater After Drilling	(ML) SANDY SILT - Brown With Rust Colored Stains, Very Fine Grained, Very Stiff, Very Moist to Wet
25		45				Groundwater During Drilling	(SM/SP) SILTY SAND/SAND - Brown to Gray-Brown, Fine to Medium Grained, Dense, Wet
30		33 for 6"	114	17		-#200 = 26%	(SM) SILTY SAND - Brown-Red, Very Fine to Fine Grained, Very Dense, Wet
35							

KLEINFELDER

PROJECT NO. 20-3693-02.001

COMBUSTION TURBINE PROJECT
CERES, CALIFORNIA
LOG OF BORING B-2

PLATE 1 of 2

A-4

Depth, ft	FIELD		LABORATORY				DESCRIPTION
	Sample	Blows/ft	Dry Density pcf	Moisture Content %	Compress. Strength ksf	Other Tests	(Continued from previous plate)
		31					(SP) SAND - Gray-Red, Fine Grained, Grades More Coarse With Depth, Dense, Wet No Sample Recovery at 40 Feet Due to Heaving Sands
40							END OF BORING
45							
50							
55							
60							
65							
70							

KLEINFELDER

PROJECT NO. 20-3693-02.001

COMBUSTION TURBINE PROJECT
CERES, CALIFORNIA
LOG OF BORING B-2

PLATE 2 of 2

A-4

Date Completed: 1/19/93

Logged By: ETH

Total Depth: 21.5 feet

Surface Conditions: Low Cut Alfalfa

Groundwater: Not Encountered

Depth, ft	FIELD Sample	FIELD Blows/ft	LABORATORY Dry Density pcf	LABORATORY Moisture Content %	LABORATORY Compress. Strength ksf	LABORATORY Other Tests	DESCRIPTION USCS Classification
		6					(SM) SILTY SAND - Dark Brown, Fine Grained, Loose, Moist
5		8	114	12			(SP) SAND - Brown-Gray, Slightly Silty, Medium to Fine Grained, Loose, Moist
10		28	118	12			(SM) SILT - Gray-Brown, Medium Dense
15		44					(SM) SILTY SAND - Light Gray, Very Fine to Fine Grained, Dense, Moist
20		20	87	32			(ML) SANDY SILT - Light Gray, Very Fine to Fine Grained, Very Stiff, Moist
25							END OF BORING
30							
35							

KLEINFELDER

PROJECT NO. 20-3693-02.001

COMBUSTION TURBINE PROJECT
CERES, CALIFORNIA
LOG OF BORING B-3

PLATE 1 of 1

A-5

Date Completed: 1/19/93

Logged By: ETH

Total Depth: 51.5 feet

Surface Conditions: Low Cut Alfalfa

Groundwater: Encountered at 25-Ft. Depth, Rose to 21-1/2-Ft. Depth

Depth, ft	FIELD Sample	FIELD Blows/ft	LABORATORY Dry Density pcf	LABORATORY Moisture Content %	LABORATORY Compress. Strength ksf	LABORATORY Other Tests	DESCRIPTION USCS Classification
		6					(SM) SILTY SAND - Brown, Very Fine to Fine Grained, Loose, Very Moist
5		13					(SM) SILTY SAND - Light Brown, Very Fine to Fine Grained, Medium Dense, Moist
10		22				Gradation	
15		26					(SM) SILTY SAND - Light Brown-Gray, Very Fine to Fine Grained, Medium Dense, Moist
20		30 for 2.5"			2.8	Groundwater After Drilling	(ML) SANDY SILT - Light Gray-Brown, Very Fine Grained, Hard, Moist
25		29				Groundwater During Drilling	(SP) SAND - Brown, Fine to Medium Grained, Dense, Wet
30		30 for 3"	119	16		-#200 = 23%	(SM) SILTY SAND - Brown, Fine Grained, Dense, Moist
35							(SM) SILTY SAND - Brown to Light Gray,

KLEINFELDER

PROJECT NO. 20-3693-02.001

COMBUSTION TURBINE PROJECT
CERES, CALIFORNIA
LOG OF BORING B-4

PLATE 1 of 2

A-6

Depth, ft	FIELD Sample	FIELD Blows/ft	LABORATORY Dry Density pcf	LABORATORY Moisture Content %	LABORATORY Compress. Strength ksf	LABORATORY Other Tests	DESCRIPTION
							(Continued from previous plate)
		21					Very Fine to Fine Grained, Medium Dense, Wet
40							(SM) SILTY SAND - Brown-Gray, Very Fine to Fine Grained, Wet
45		45		19		-#200 = 31%	(SM) SILTY SAND - Brown-Gray, Very Fine to Fine Grained, Dense, Wet
50		55					END OF BORING
55							
60							
65							
70							

KLEINFELDER

PROJECT NO. 20-3693-02.001

COMBUSTION TURBINE PROJECT
CERES, CALIFORNIA
LOG OF BORING B-4

PLATE 2 of 2

A-6

Date Completed: 1/19/93

Logged By: ETH

Total Depth: 41.5 feet

Surface Conditions: Low Cut Alfalfa

Groundwater: Encountered at 25-Ft. Depth, Rose to 21-1/2-Ft. Depth

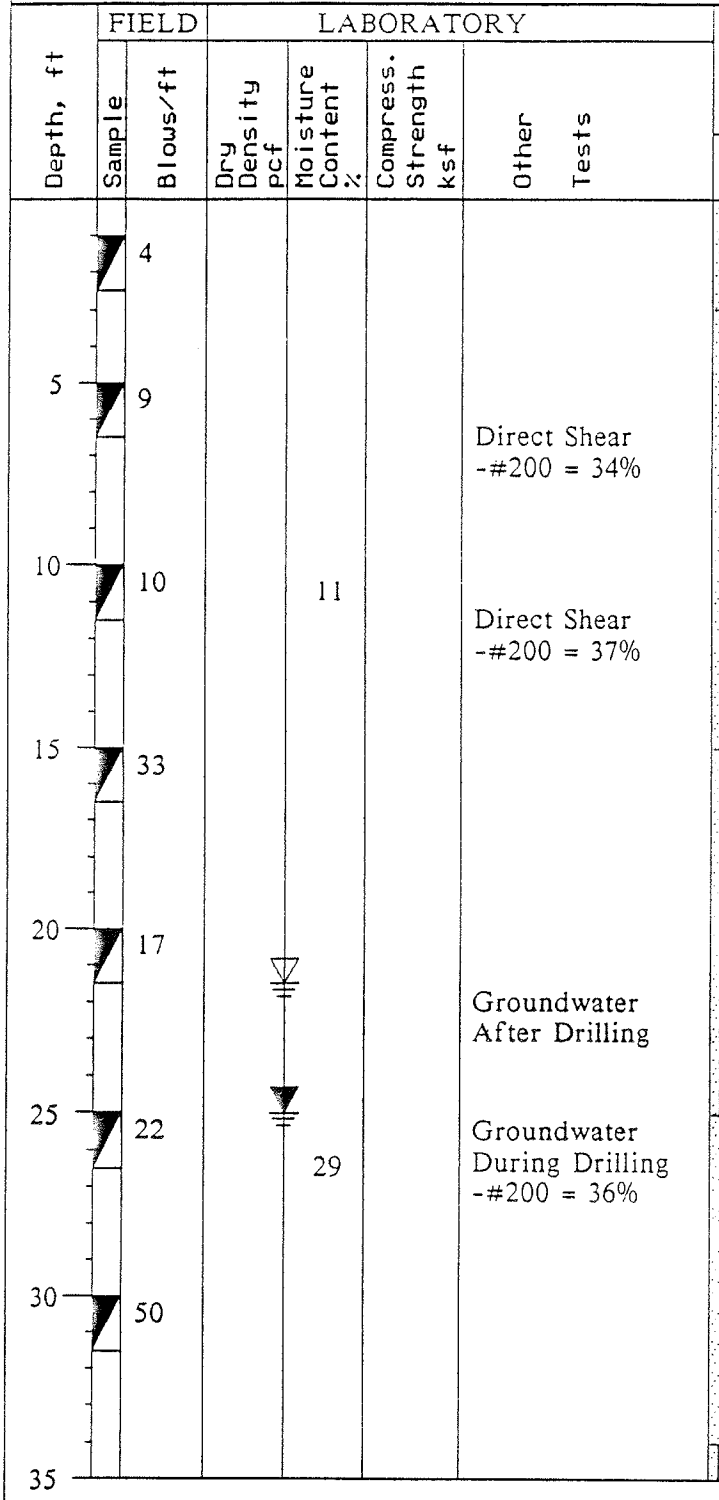

DESCRIPTION

USCS Classification

(SM) SILTY SAND/SILT - Brown, Fine Grained, Loose, Moist

(SM) SILTY SAND - Brown-Gray, Very Fine to Fine Grained, Loose, Moist

(SM) SILTY SAND - Gray-Brown, Very Fine to Fine Grained, Medium Dense, Moist to Wet

(SM) SILTY SAND - Brown, Very Fine to Fine Grained, Medium Dense, Wet

Grades Fine to Medium Grained, Very Dense

KLEINFELDER

PROJECT NO. 20-3693-02.001

COMBUSTION TURBINE PROJECT
CERES, CALIFORNIA
LOG OF BORING B-5

PLATE 1 of 2

A-7

Depth, ft	FIELD		LABORATORY				DESCRIPTION
	Sample	Blows/ft	Dry Density pcf	Moisture Content %	Compress. Strength ksf	Other Tests	
							(Continued from previous plate)
		16					(SM) SILTY SAND - Brown-Gray, Very Silty, Very Fine to Fine Grained, Medium Dense, Wet
40		35					(SP/SM) SAND/SILTY SAND - Brown, Some Silt, Fine Grained, Dense, Wet
							END OF BORING
45							
50							
55							
60							
65							
70							

KLEINFELDER

PROJECT NO. 20-3693-02.001

COMBUSTION TURBINE PROJECT
CERES, CALIFORNIA
LOG OF BORING B-5

PLATE 2 of 2

A-7

Date Completed: 1/19/93

Logged By: ETH

Total Depth: 51.5 feet

Surface Conditions: Low Cut Alfalfa

Groundwater: Encountered at 24-Ft. Depth, Rose to 21-1/2-Ft. Depth

Depth, ft	FIELD Sample	FIELD Blows/ft	LABORATORY Dry Density pcf	LABORATORY Moisture Content %	LABORATORY Compress. Strength ksf	LABORATORY Other Tests	DESCRIPTION / USCS Classification
		6	112	13		Direct Shear	(SM) SILTY SAND - Dark Brown, Fine Grained, Loose, Moist
5		17					(SM/ML) SILTY SAND/SANDY SILT - Light Brown-Gray, Very Fine to Fine Grained, Medium Dense, Moist
10		36					(SP) SAND - Light Brown, Slightly Silty, Medium to Fine Grained, Dense, Moist
15		30 for 4"	96	12	0.3		(SM/ML) SILTY SAND/SANDY SILT - Light Brown-Gray, Partially Cemented, Very Fine to Fine Grained, Dense, Moist
20		33				Groundwater After Drilling	Grades More Cemented
25		39	104	21		Groundwater During Drilling -#200 = 10%	(SP) SAND - Brown-Gray, Very Fine to Fine Grained, Dense, Wet
30		51	109	22	0.7	-#200 = 31%	(SM) SILTY SAND - Brown to Dark Brown, Very Fine to Fine Grained, Very Very Dense, Wet
35							

KLEINFELDER

PROJECT NO. 20-3693-02.001

COMBUSTION TURBINE PROJECT
CERES, CALIFORNIA
LOG OF BORING B-6

PLATE 1 of 2

A-8

Depth, ft	FIELD		LABORATORY				DESCRIPTION
	Sample	Blows/ft	Dry Density pcf	Moisture Content %	Compress. Strength ksf	Other Tests	
							(Continued from previous plate)
		30 for 5"	101	26			(SM) SILTY SAND - Brown, Very Fine to Fine Grained, Very Dense, Wet
40							(SP) SAND - Brown, Medium to Fine Grained, Wet
45							
50							(SM) SILTY SAND - Brown, Packed Sampler
							END OF BORING
55							
60							
65							
70							

KLEINFELDER

PROJECT NO. 20-3693-02.001

COMBUSTION TURBINE PROJECT
CERES, CALIFORNIA
LOG OF BORING B-6

PLATE 2 of 2

A-8

Date Completed: 1/19/93

Logged By: ETH

Total Depth: 41.5 feet

Surface Conditions: Low Cut Alfalfa

Groundwater: Encountered at 24-Ft. Depth, Rose to 21-1/2-Ft. Depth

Depth, ft	FIELD Sample	FIELD Blows/ft	LABORATORY Dry Density pcf	LABORATORY Moisture Content %	LABORATORY Compress. Strength ksf	LABORATORY Other Tests	DESCRIPTION / USCS Classification
0		5				pH = 7.8	(SP-SM) SAND - Dark Brown, Some Silt, Medium to Fine Grained, Loose, Moist
5							
10		30				Direct Shear -#200 = 50%	(SM) SILTY SAND/SANDY SILT - Brown-Light Brown, Very Fine to Fine Grained, Dense, Moist
15							
20		13	105	20		Gradation Groundwater After Drilling	(SM) SILTY SAND - Brown-Light Brown, Medium to Fine Grained, Medium Dense, Very Moist
25						Groundwater During Drilling	
30		31					(SM/ML) SILTY SAND/SANDY SILT - Brown-Gray, Very Fine to Fine Grained, Dense, Moist to Wet
35							

KLEINFELDER

PROJECT NO. 20-3693-02.001

COMBUSTION TURBINE PROJECT
CERES, CALIFORNIA
LOG OF BORING B-7

PLATE 1 of 2

A-9

Depth, ft	FIELD: Sample	FIELD: Blows/ft	LABORATORY: Dry Density pcf	LABORATORY: Moisture Content %	LABORATORY: Compress. Strength ksf	LABORATORY: Other Tests	DESCRIPTION
							(Continued from previous plate)
40							(SP) SAND - Brown, Coarse to Medium Grained, Packed Sampler, Wet
							END OF BORING
45							
50							
55							
60							
65							
70							

KLEINFELDER

PROJECT NO. 20-3693-02.001

COMBUSTION TURBINE PROJECT
CERES, CALIFORNIA
LOG OF BORING B-7

PLATE 2 of 2

A-9

Date Completed: 1/19/93

Logged By: ETH

Total Depth: 41.5 feet

Surface Conditions: Low Cut Alfalfa

Groundwater: Encountered at 25-Ft. Depth, Rose to 21-1/2-Ft. Depth

Depth, ft	FIELD Sample	FIELD Blows/ft	LABORATORY Dry Density pcf	LABORATORY Moisture Content %	LABORATORY Compress. Strength ksf	LABORATORY Other Tests	DESCRIPTION / USCS Classification
		7		13		-#200 = 33%	(SM) SILTY SAND - Brown, Very Fine to Fine Grained, Loose, Moist
5		22					(ML) SILT - Gray, Very Fine to Fine Grained, Very Stiff, Moist
10		27	109	8			(SP) SAND - Brown, Slightly Silty, Fine to Medium Grained, Medium Dense, Moist
15		57					(ML) SILT - Gray, Cemented, Slightly Sandy, Very Fine to Fine Grained, Very Stiff, Moist
20		31	98	26	2.9	Groundwater After Drilling	(SM/ML) SILTY SAND/SANDY SILT - Gray-Brown, Very Silty, Very Fine to Fine Grained, Dense, Moist
25		45				Groundwater During Drilling	(SP) SAND - Brown, Slightly Silty, Fine to Medium Grained, Dense, Wet
30		50 for 5.5"					(SM) SILTY SAND - Brown, Partially Cemented, Very Fine to Fine Grained, Very Dense, Wet
35							

KLEINFELDER

PROJECT NO. 20-3693-02.001

COMBUSTION TURBINE PROJECT
CERES, CALIFORNIA
LOG OF BORING B-8

PLATE 1 of 2

A-10

Depth, ft	FIELD		LABORATORY				DESCRIPTION
	Sample	Blows/ft	Dry Density pcf	Moisture Content %	Compress. Strength ksf	Other Tests	
							(Continued from previous plate)
		30 for 4.5"					(SP) SAND - Brown, Partially Cemented, Slightly Silty, Very Fine to Fine Grained, Very Dense, Wet
40							(SP) SAND - Brown, Relatively Clean, Wet
							END OF BORING
45							
50							
55							
60							
65							
70							

KLEINFELDER

PROJECT NO. 20-3693-02.001

COMBUSTION TURBINE PROJECT
CERES, CALIFORNIA
LOG OF BORING B-8

PLATE 2 of 2

A-10

Date Completed: 1/19/93

Logged By: ETH

Total Depth: 31.5 feet

Surface Conditions: Lot Cut Alfalfa

Groundwater: Encountered at 24-Ft. Depth, Rose to 21-1/2-Ft. Depth

Depth, ft	FIELD Sample	FIELD Blows/ft	LABORATORY Dry Density pcf	LABORATORY Moisture Content %	LABORATORY Compress. Strength ksf	LABORATORY Other Tests	DESCRIPTION / USCS Classification
		6					(SM) SILTY SAND - Dark Brown, Fine Grained, Loose, Moist
5		12				Consolidation	(SM) SILTY SAND - Brown, Grades More Silty, Very Fine to Fine Grained, Medium Dense, Moist
10		35					(SP/SM) SAND/SILTY SAND - Brown, Medium to Fine Grained, Dense, Moist
15		20	103	14			(SM) SILTY SAND - Brown-Green-Gray, Partially Cemented, Very Silty, Very Fine to Fine Grained, Medium Dense, Moist
20		26				Groundwater After Drilling	(ML) SANDY SILT - Gray, Slightly Sandy, Very Fine Grained, Very Stiff, Moist to Wet
25		30	98	26		Groundwater During Drilling -#200 = 44%	(SM) SILTY SAND - Brown-Red, Very Fine Grained, Dense, Wet
30		52 for 6"					(SM) SILTY SAND - Gray-Brown, Slightly Silty, Very Fine Grained, Very Dense, Wet
35							END OF BORING

KLEINFELDER

PROJECT NO. 20-3693-02.001

COMBUSTION TURBINE PROJECT
CERES, CALIFORNIA
LOG OF BORING B-9

PLATE 1 of 1

A-11

Date Completed: 1/19/93

Logged By: ETH

Total Depth: 30 feet

Surface Conditions: Low Cut Alfalfa

Groundwater: Encountered at 23-Foot Depth

Depth, ft	FIELD: Sample	FIELD: Blows/ft	LABORATORY: Dry Density pcf	LABORATORY: Moisture Content %	LABORATORY: Compress. Strength ksf	LABORATORY: Other Tests	DESCRIPTION / USCS Classification
0							(SM) SILTY SAND - Brown, Very Fine to Fine Grained, Very Moist
5							
10							(SM/SP) SILTY SAND - Less Silty, Moist
15							
20							(SM/ML) SANDY SILT/SILT - Light Gray-Brown, Very Fine Grained, Moist to Wet
25						Groundwater	(SM/SP) SILTY SAND - Light Brown, Very Fine Grained, Moist
30							END OF BORING
35							

KLEINFELDER

PROJECT NO. 20-3693-02.001

COMBUSTION TURBINE PROJECT
CERES, CALIFORNIA
LOG OF BORING B-10

PLATE 1 of 1

A-12

Date Completed: 1/19/93

Logged By: ETH

Total Depth: 30 feet

Surface Conditions: Low Cut Alfalfa

Groundwater: Not Encountered

Depth, ft	FIELD: Sample	FIELD: Blows/ft	LABORATORY: Dry Density pcf	LABORATORY: Moisture Content %	LABORATORY: Compress. Strength ksf	LABORATORY: Other Tests	DESCRIPTION / USCS Classification
0							(SM) SILTY SAND - Brown, Very Fine to Fine Grained, Very Moist
5							
10							(SM) SILTY SAND - Light Gray, Medium to Fine Grained, Moist
15							
20							(SM/ML) SANDY SILT/SILT - Light Gray, Very Fine to Fine Grained, Moist
							(SM/SP) SAND/SILTY SAND - Light Orange-Brown, Slightly Silty, Very Fine Grained, Moist
25							(SM) SILTY SAND - Light Gray-Brown, Very Silty, Very Fine Grained, Moist
30							END OF BORING
35							

KLEINFELDER

PROJECT NO. 20-3693-02.001

COMBUSTION TURBINE PROJECT
CERES, CALIFORNIA
LOG OF BORING B-11

PLATE 1 of 1

A-13

Date Completed: 1/19/93

Logged By: ETH

Total Depth: 36.5 feet

Surface Conditions: Low Cut Alfalfa

Groundwater: Encountered at 25-Ft.Depth, Rose to 21-1/2-Ft. Depth

Depth, ft	FIELD: Sample	FIELD: Blows/ft	LABORATORY: Dry Density pcf	LABORATORY: Moisture Content %	LABORATORY: Compress. Strength ksf	LABORATORY: Other Tests	DESCRIPTION / USCS Classification
0							(SM) SILTY SAND/SANDY SILT - Dark Brown, Fine Grained, Loose, Moist
5		7		12			
10							(SP) SAND - Brown, Slightly Silty, Medium to Fine Grained, Very Dense, Moist
15		51				Direct Shear	
20						Groundwater After Drilling	
25		44				Groundwater During Drilling	(SP) SAND - Dark Brown, Slightly Silty, Medium to Fine Grained, Dense, Wet
30							
35							

KLEINFELDER

PROJECT NO. 20-3693-02.001

COMBUSTION TURBINE PROJECT
CERES, CALIFORNIA
LOG OF BORING B-12

PLATE 1 of 2

A-14

Depth, ft	FIELD		LABORATORY				DESCRIPTION
	Sample	Blows/ft	Dry Density pcf	Moisture Content %	Compress. Strength ksf	Other Tests	(Continued from previous plate)
		20					(SP) SAND - Brown, Slightly Silty, Fine to Coarse Grained, Medium Dense, Wet
							END OF BORING
40							
45							
50							
55							
60							
65							
70							

KLEINFELDER

PROJECT NO. 20-3693-02.001

COMBUSTION TURBINE PROJECT
CERES, CALIFORNIA
LOG OF BORING B-12

PLATE 2 of 2

A-14

Date Completed: 1/19/93

Logged By: ETH

Total Depth: 31.5 feet

Surface Conditions: Low Cut Alfalfa

Groundwater: Encountered at 25-Ft. Depth, Rose to 21-1/2-Ft. Depth

Depth, ft	FIELD Sample	FIELD Blows/ft	LABORATORY Dry Density pcf	LABORATORY Moisture Content %	LABORATORY Compress. Strength ksf	LABORATORY Other Tests	DESCRIPTION / USCS Classification
		5					(SM) SILTY SAND - Dark Brown, Slightly Silty, Fine Grained, Loose, Moist
5		26	106	17		-#200 = 28%	(SM) SILTY SAND - Red-Brown, Medium to Fine Grained, Medium Dense, Moist
10		12					(SP) SAND - Light Brown, Relatively Clean, Medium Grained, Medium Dense, Moist
15		56	118	7			(SP) SAND - Brown, Slightly Silty, Medium to Fine Grained, Very Dense, Moist
20		27	113	16			Grades Coarser
25						Groundwater	(SP) SAND - Light Brown, Heaving Sands, Coarse to Medium Grained, Wet
30		55					(SM) SILTY SAND - Brown, Very Silty, Fine Grained, Very Dense, Wet
35							END OF BORING

KLEINFELDER

PROJECT NO. 20-3693-02.001

COMBUSTION TURBINE PROJECT
CERES, CALIFORNIA
LOG OF BORING B-13

PLATE 1 of 1

A-15

Date Completed: 1/19/93

Logged By: ETH

Total Depth: 30 feet

Surface Conditions: Low Cut Alfalfa

Groundwater: Not Encountered

Depth, ft	FIELD		LABORATORY				DESCRIPTION
	Sample	Blows/ft	Dry Density pcf	Moisture Content %	Compress. Strength ksf	Other Tests	USCS Classification
0							(SM) SAND/SILTY SAND - Dark Brown, Fine Grained, Moist
5							(SM/SP) SAND/SILTY SAND - Brown, Slightly Silty, Medium to Fine Grained, Moist
10							
15							(SM/SP) SILTY SAND - Brown, Grades Clean With Depth, Medium to Fine Grained, Moist
20							
25							
30							(ML/SM) SILT/SANDY SILT - Brown-Red, Very Fine to Fine Grained, Wet (ML) SILT - Brown-Gray, Very Fine to Fine Grained, Wet END OF BORING
35							

KLEINFELDER

PROJECT NO. 20-3693-02.001

COMBUSTION TURBINE PROJECT
CERES, CALIFORNIA
LOG OF BORING B-14

PLATE 1 of 1

A-16

PROJECT NO. 20-3693-02.001

KLEINFELDER

LABORATORY TESTS

BORING NO.	SAMPLE NO.	DRY UNIT WEIGHT lb/ft³	MOISTURE CONTENT % OF DRY WEIGHT	GRADING ANALYSES: SIEVE SIZE - PERCENT PASSING 1"	3/4"	4	10	40	200	HYDROMETER ANALYSES: SILT SIZE	CLAY SIZE	COLLOIDS	ATTERBERG LIMITS: L.L.	P.I.	UNCONFINED COMPRESSIVE STRENGTH kips/ft²
B-2	2-1								29						
B-2	20-1	93	30												1.5
B-2	31-1	114	17						26						
B-3	5-1	114	12												
B-3	10-1	118	12												
B-3	20-1	87	32												
B-4	20-1														2.8
B-4	30-1	119	16						23						
B-4	45-1		19						31						
B-5	5-1								34						
B-5	10-1		11						37						
B-5	25-1		29						36						
B-6	2-1	112	13												
B-6	15-1	96	12												0.3
B-6	25-1	104	21						10						
B-6	30-1	109	22						31						0.7
B-6	35-1	101	26												
B-7	10-1								50						
B-7	20-1	105	20												
B-7	2-1			pH = 7.8											

KLEINFELDER

PROJECT NO. 20-3693-02.001

LABORATORY TESTS

BORING NO.	SAMPLE NO.	DRY UNIT WEIGHT lb/ft³	MOISTURE CONTENT % OF DRY WEIGHT	GRADING ANALYSES: SIEVE SIZE - PERCENT PASSING						HYDROMETER ANALYSES			ATTERBERG LIMITS		UNCONFINED COMPRESSIVE STRENGTH kips/ft²
				1"	3/4"	4	10	40	200	SILT SIZE	CLAY SIZE	COLLOIDS	L.L.	P.I.	
B-8	1-1		13						33						
B-8	10-1	109	8												
B-8	20-1	98	26												2.9
B-9	15-1	103	14												
B-9	25-1	98	26						44						
B-12	2-1		12												
B-13	5-1	106	17						28						
B-13	15-1	118	7												
B-13	20-1	113	16												

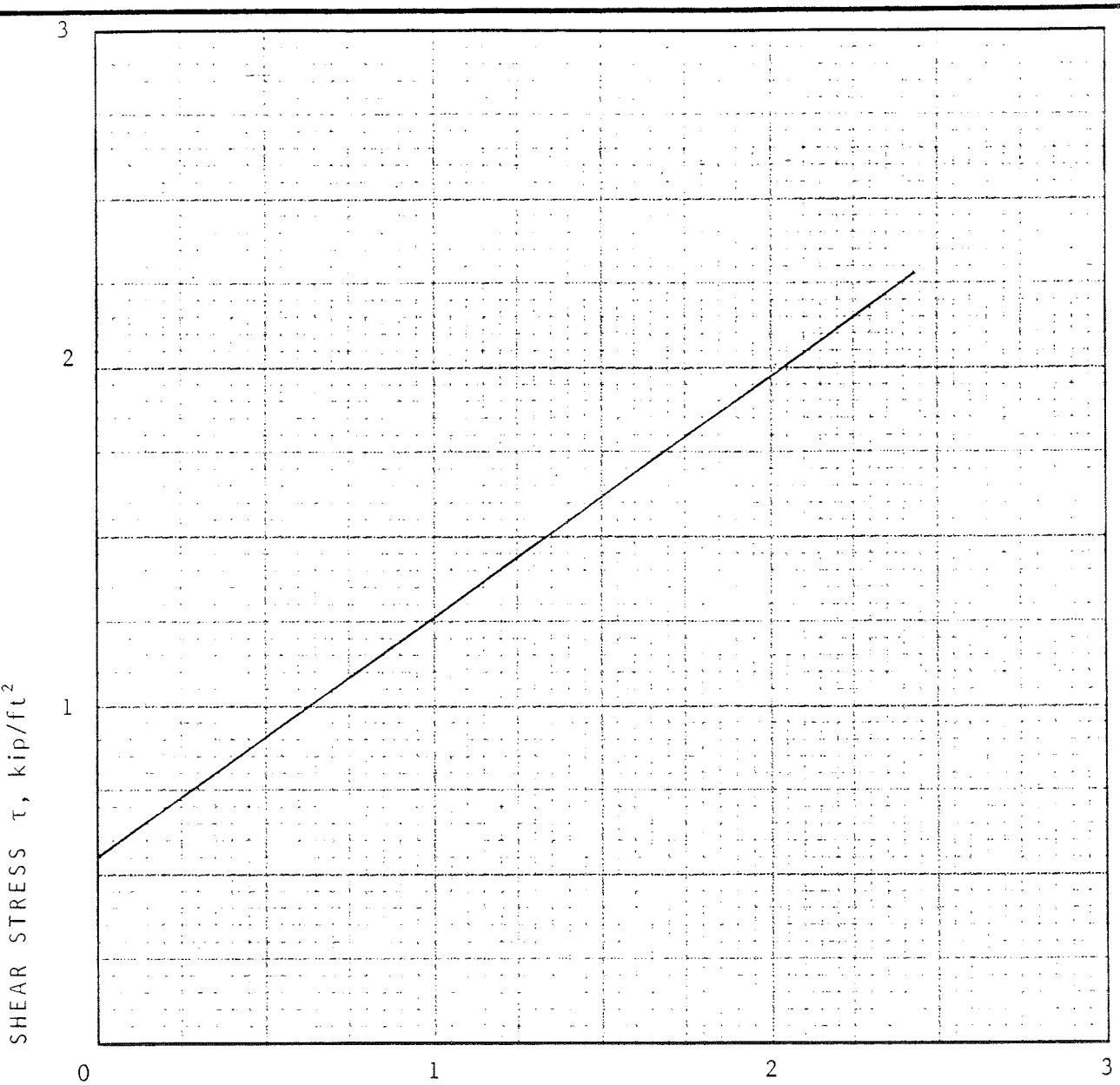

BORING NO. B-2 SAMPLE NO. 1 DEPTH, ft 10

DESCRIPTION Silty Sand

SYMBOL			
DRY DENSITY lb/ft³	119.9		
INITIAL WATER CONTENT %	8.3		
FINAL WATER CONTENT %			
NORMAL STRESS σ, kip/ft²	0.62	1.16	2.25
SHEAR STRESS τ, kip/ft²	0.99	1.41	2.09

ANGLE OF INTERNAL FRICTION, ϕ 35°

COHESION, kip/ft² 0.55

KLEINFELDER

PROJECT NO. 20-3693-02.001

DIRECT SHEAR TEST

PLATE A-18

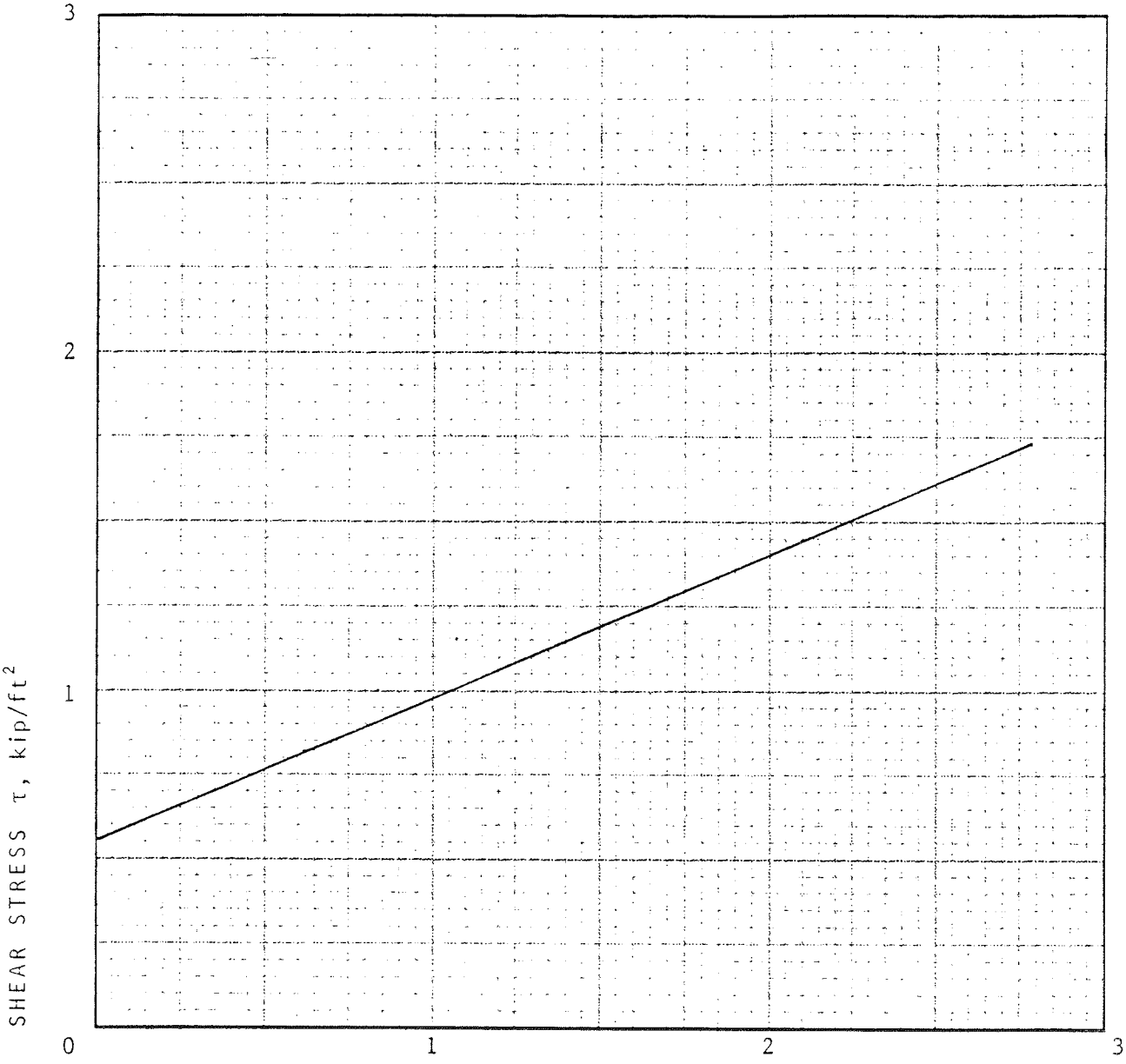

BORING NO. B-5 SAMPLE NO. 1 DEPTH, ft 5

DESCRIPTION Silty Sand, Remolded to Approximate 95% Relative Compaction

SYMBOL			
DRY DENSITY lb/ft³	116.0		
INITIAL WATER CONTENT %	10.8		
FINAL WATER CONTENT %			
NORMAL STRESS σ, kip/ft²	0.62	1.15	2.24
SHEAR STRESS τ, kip/ft²	0.82	1.07	1.45

ANGLE OF INTERNAL FRICTION, ϕ 23°

COHESION, kip/ft² 0.55

KLEINFELDER

PROJECT NO. 20-3693-02.001

DIRECT SHEAR TEST

PLATE A-19

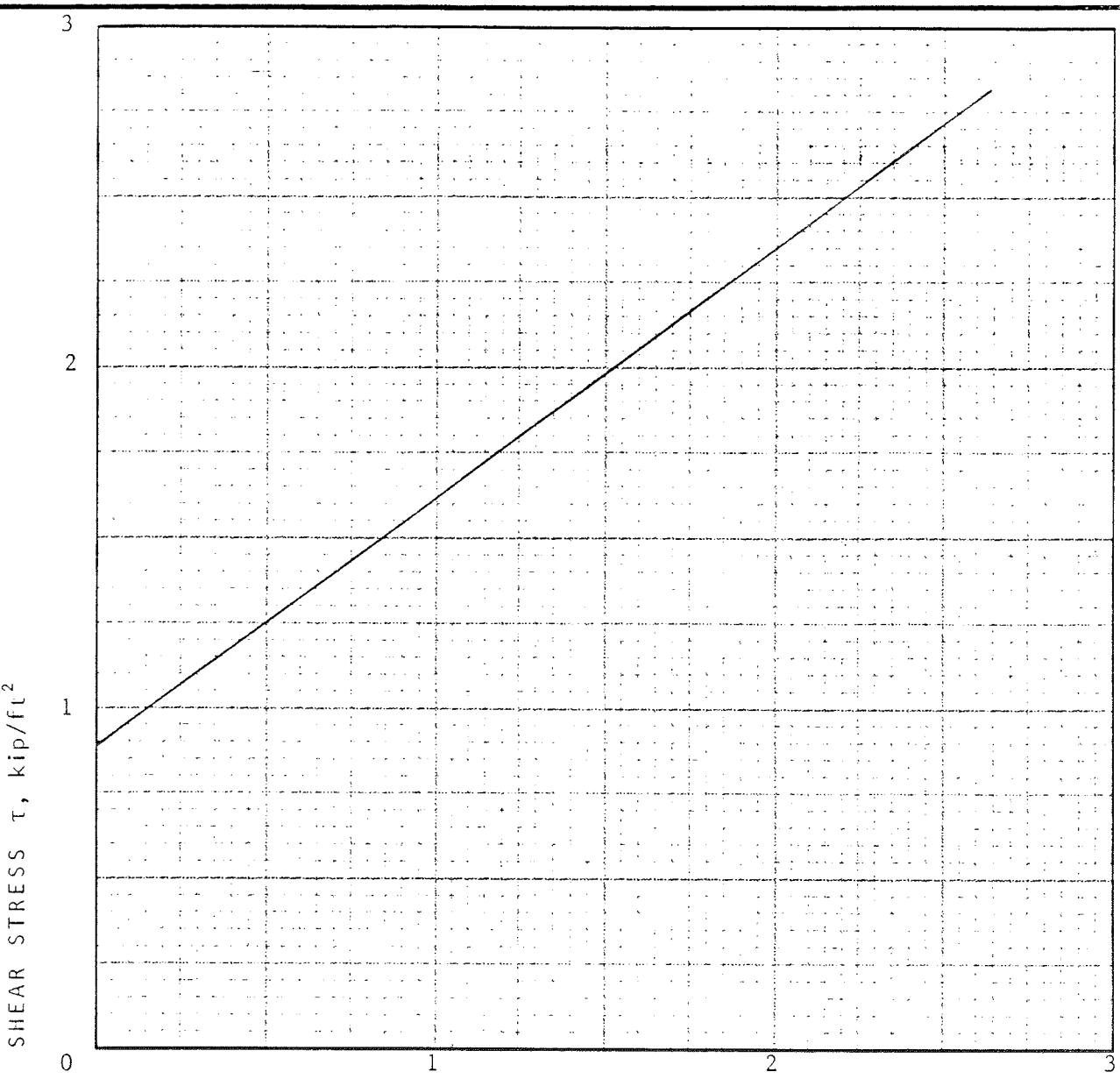

BORING NO. B-5 SAMPLE NO. 1 DEPTH, ft 10

DESCRIPTION Silty Sand, Remolded to Approximate 95% Relative Compaction

SYMBOL			
DRY DENSITY lb/ft³	118.4		
INITIAL WATER CONTENT %			
FINAL WATER CONTENT %			
NORMAL STRESS σ, kip/ft²	0.62	1.15	2.25
SHEAR STRESS τ, kip/ft²	1.42	1.62	2.63

ANGLE OF INTERNAL FRICTION, ϕ 36°

COHESION, kip/ft² 0.88

KLEINFELDER

PROJECT NO. 20-3693-02.001

DIRECT SHEAR TEST

PLATE A-20

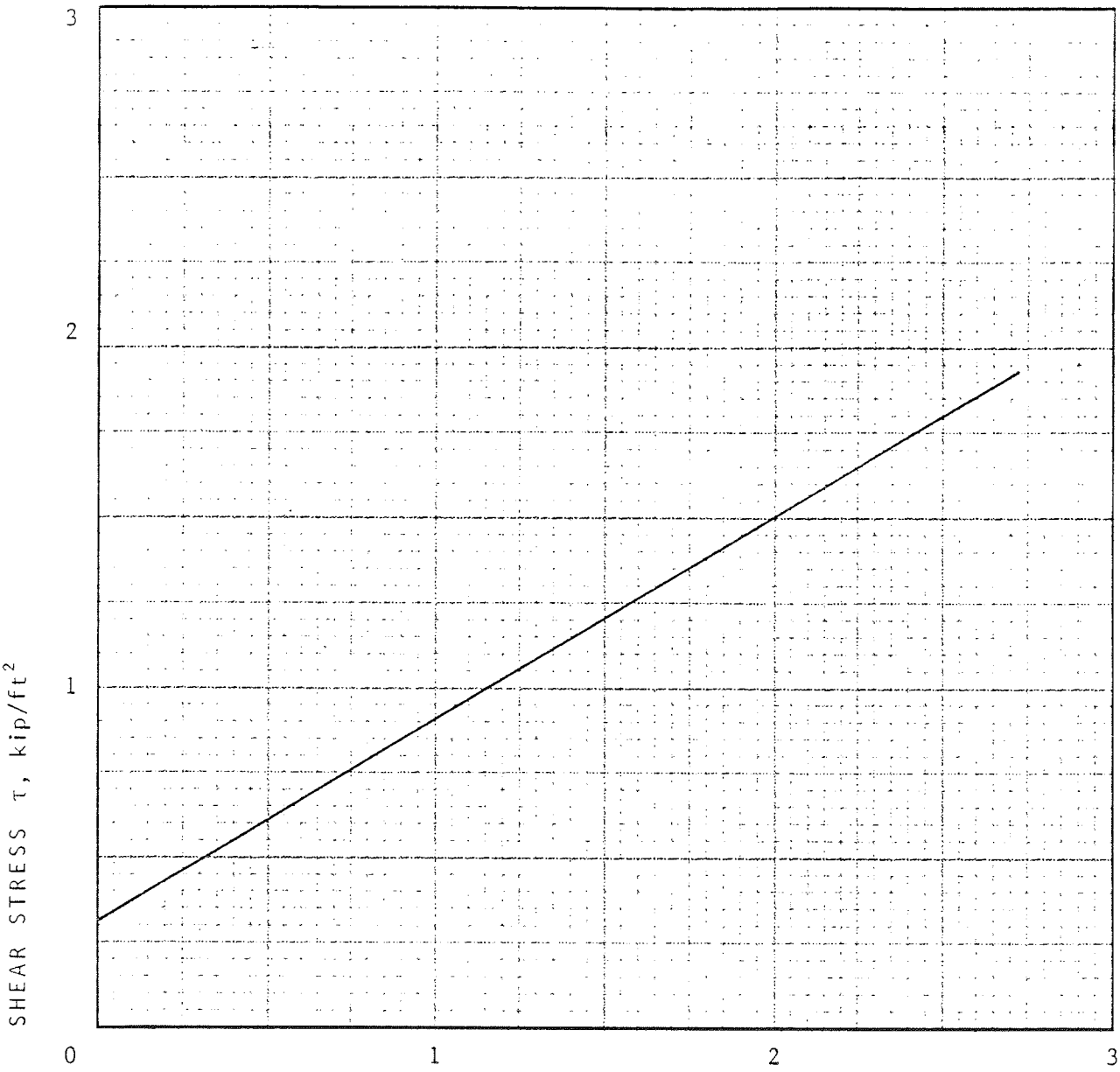

BORING NO. B-6 SAMPLE NO. 1 DEPTH, ft 2

DESCRIPTION Silty Sand, Remolded to Approximate 95% Relative Compaction

SYMBOL			
DRY DENSITY lb/ft³	114.6		
INITIAL WATER CONTENT %	10.0		
FINAL WATER CONTENT %			
NORMAL STRESS σ, kip/ft²	0.63	1.17	2.27
SHEAR STRESS τ, kip/ft²	0.70	1.03	1.63

ANGLE OF INTERNAL FRICTION, φ 30°

COHESION, kip/ft² 0.35

KLEINFELDER

PROJECT NO. 20-3693-02.001

DIRECT SHEAR TEST

PLATE A-21

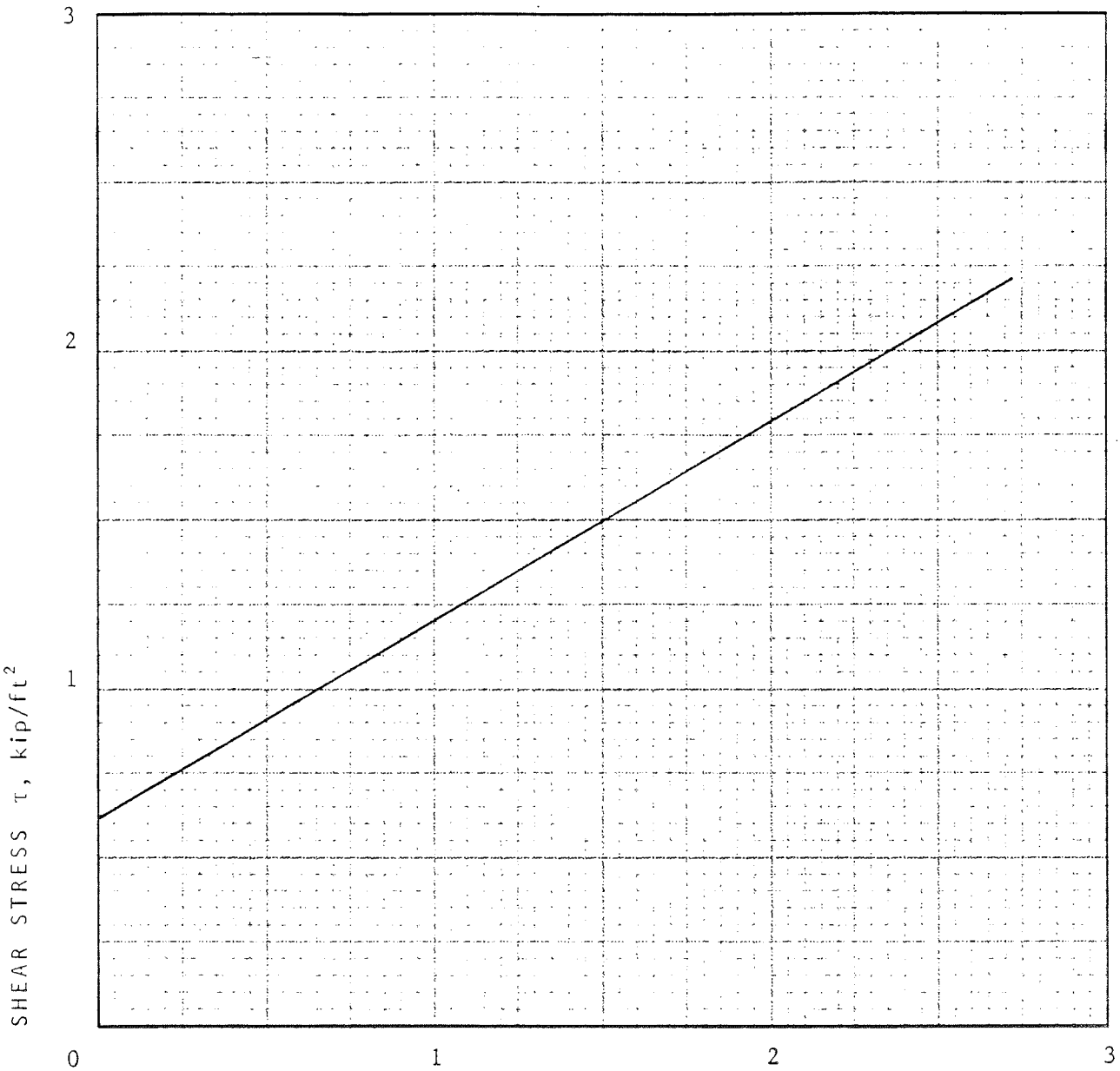

BORING NO. 7 SAMPLE NO. 1 DEPTH, ft 10

DESCRIPTION Silty Sand/Sandy Silt

SYMBOL			
DRY DENSITY lb/ft³	113.5		
INITIAL WATER CONTENT %	11.1		
FINAL WATER CONTENT %			
NORMAL STRESS σ, kip/ft²	0.62	1.16	2.29
SHEAR STRESS τ, kip/ft²	1.00	1.29	1.96

ANGLE OF INTERNAL FRICTION, ϕ 31°

COHESION, kip/ft² 0.6

KLEINFELDER

PROJECT NO. 02-3693-02.001

DIRECT SHEAR TEST

PLATE A-22

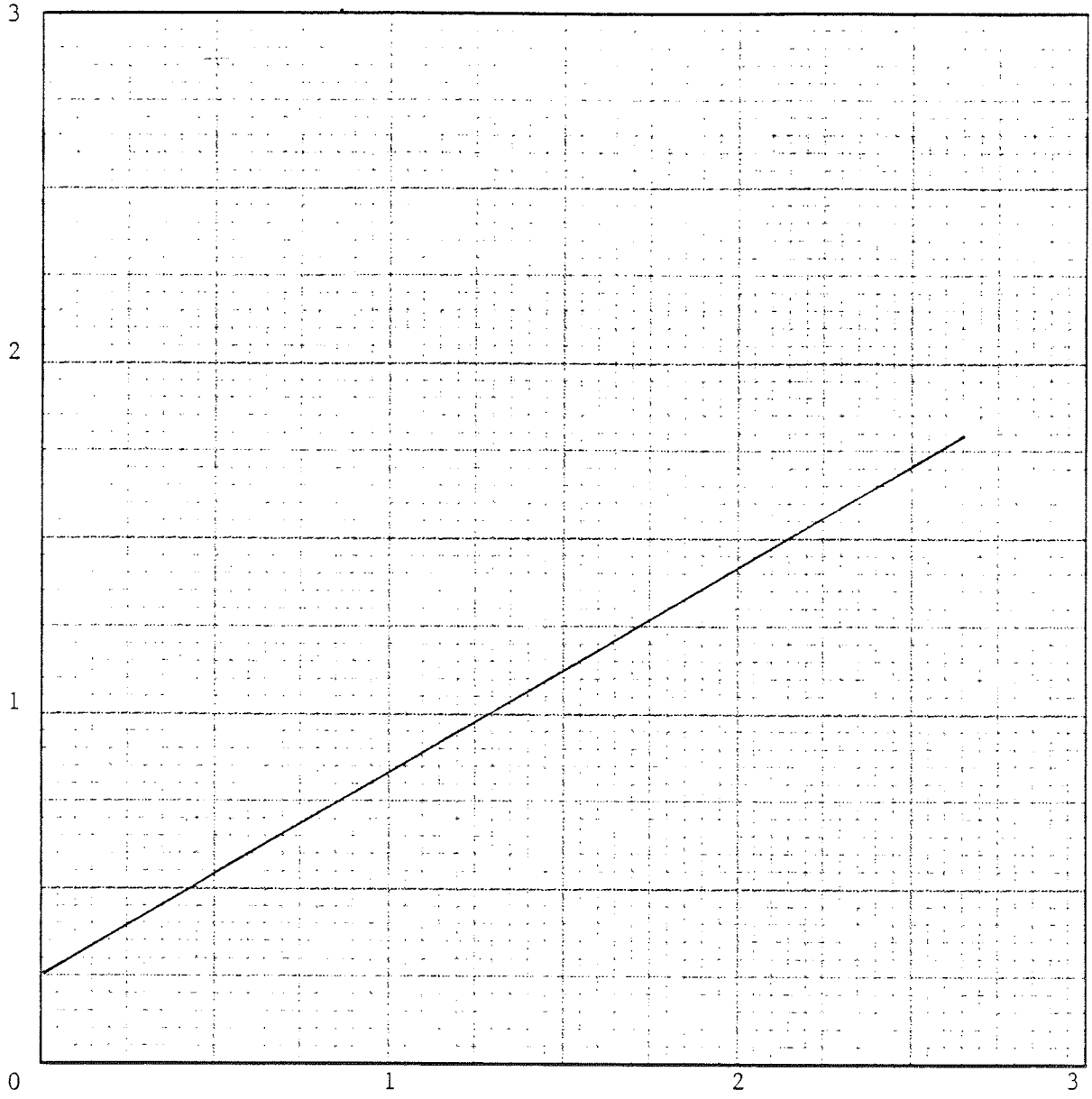

BORING NO. B-12 SAMPLE NO. 1 DEPTH, ft 15

DESCRIPTION Sand

SYMBOL			
DRY DENSITY lb/ft³	115.3		
INITIAL WATER CONTENT %	6.8		
FINAL WATER CONTENT %			
NORMAL STRESS σ, kip/ft²	0.63	1.18	2.36
SHEAR STRESS τ, kip/ft²	0.64	0.93	1.62

ANGLE OF INTERNAL FRICTION, ϕ 30°

COHESION, kip/ft² 0.25

KLEINFELDER

PROJECT NO. 20-3693-02.001

DIRECT SHEAR TEST

PLATE A-23

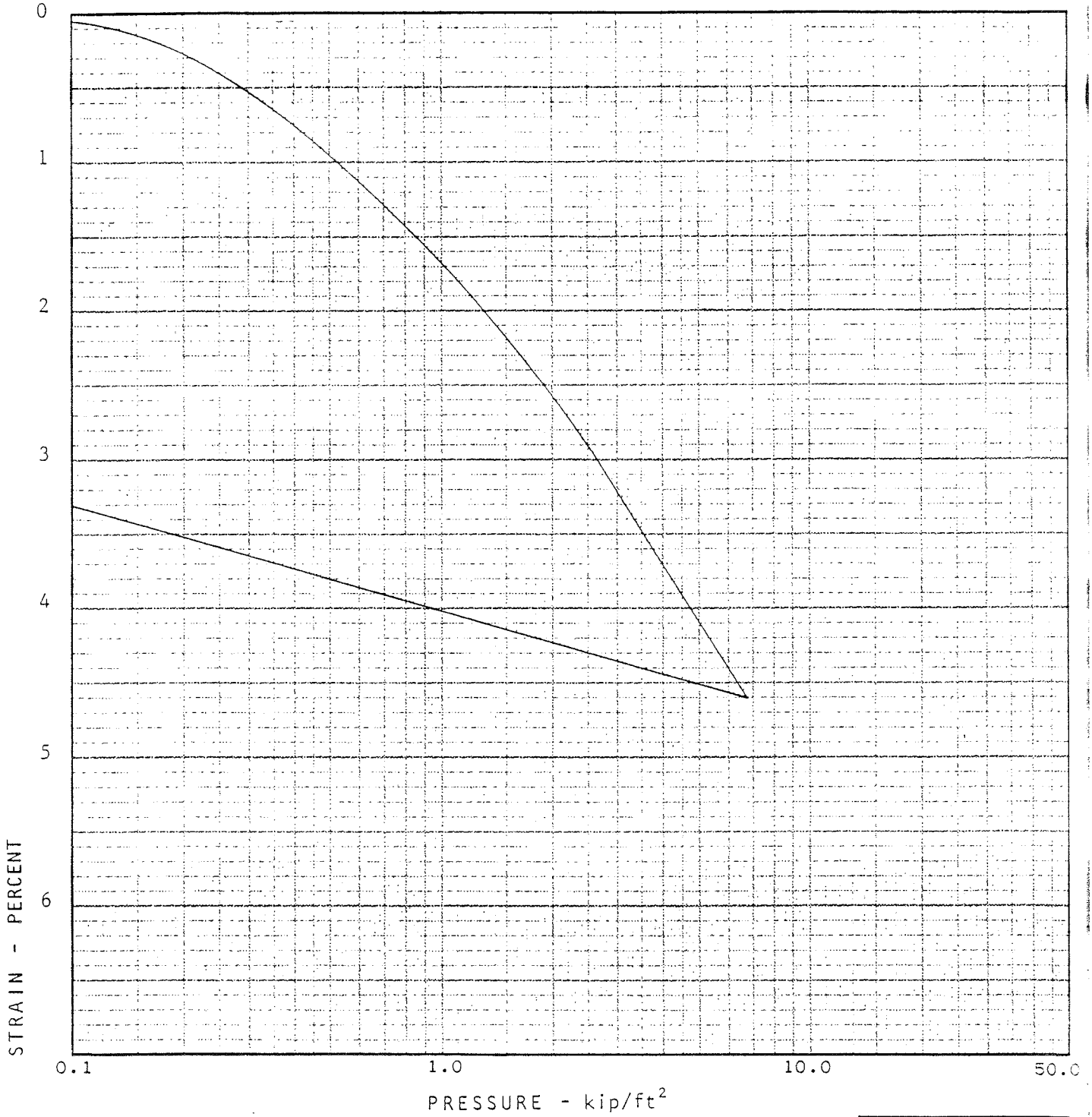

BORING NO. B-9
DEPTH 5
SAMPLE DESCRIPTION Brown Silty Sand (SM)
OVERBURDEN PRESSURE 700 psf
PRECONSOLIDATION PRESSURE 700 psf
COMPRESSION INDEX, C_c .045
RECOMPRESSION INDEX, C_r .007

	INITIAL	FINAL
DRY DENSITY - lb/ft³	106.9	112.1
WATER CONTENT - %	6.6	13.7
VOID RATIO		
DEGREE OF SATURATION, %		100
SAMPLE HEIGHT - inches	1.00	0.954

J.H. KLEINFELDER & ASSOCIATES
GEOTECHNICAL CONSULTANTS • MATERIALS TESTING

PROJECT NO. 20-3693-02.001

CONSOLIDATION TEST

PLATE
A-24

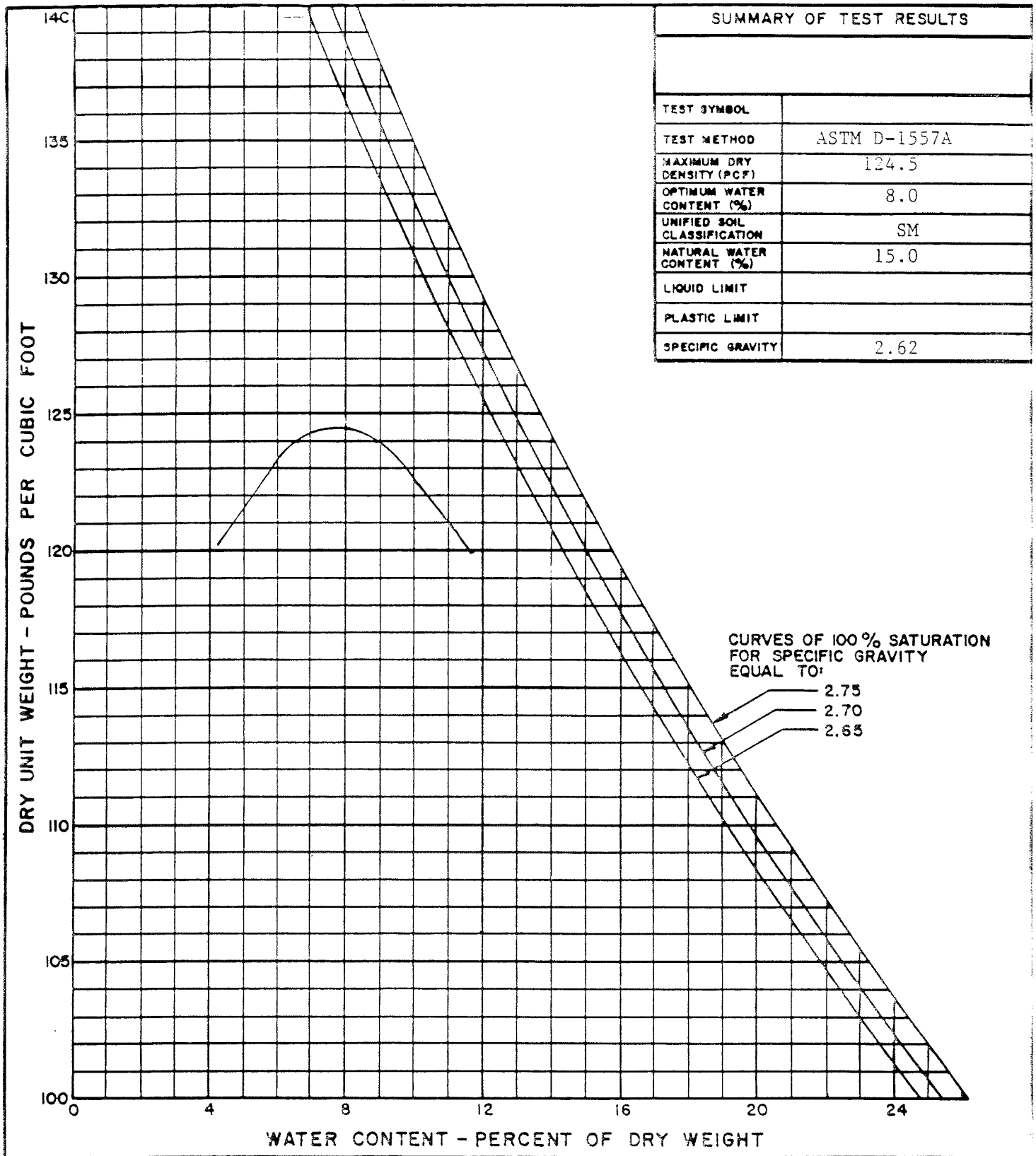

SUMMARY OF TEST RESULTS

TEST SYMBOL	
TEST METHOD	ASTM D-1557A
MAXIMUM DRY DENSITY (PCF)	124.5
OPTIMUM WATER CONTENT (%)	8.0
UNIFIED SOIL CLASSIFICATION	SM
NATURAL WATER CONTENT (%)	15.0
LIQUID LIMIT	
PLASTIC LIMIT	
SPECIFIC GRAVITY	2.62

DESCRIPTION OF TESTS

TEST METHOD	AASHO T99-	AASHO T180-	
VOLUME OF CYLINDER (CU. FT.)			
HAMMER WEIGHT (LBS.)	5 1/2	10	
HAMMER DROP (IN.)	12	18	
HAMMER BLOWS PER LAYER			
NUMBER OF LAYERS	3	5	
COMPACTION ENERGY (FT. LBS. PER CU FT.)	12,400	56,300	

COMPACTION DIAGRAM

DRWN. BY:	DATE:	JOB NO.	PLATE NO.
CHKD. BY:	DATE:	3693-02	A-25

J. H. KLEINFELDER AND ASSOCIATES
Soil and Foundation Engineers
Engineering Laboratories

J.H. KLEINFELDER & ASSOCIATES

GEOTECHNICAL CONSULTANTS • MATERIALS TESTING

PROJECT NO. 20-3693-02.001

GRAIN SIZE DISTRIBUTION

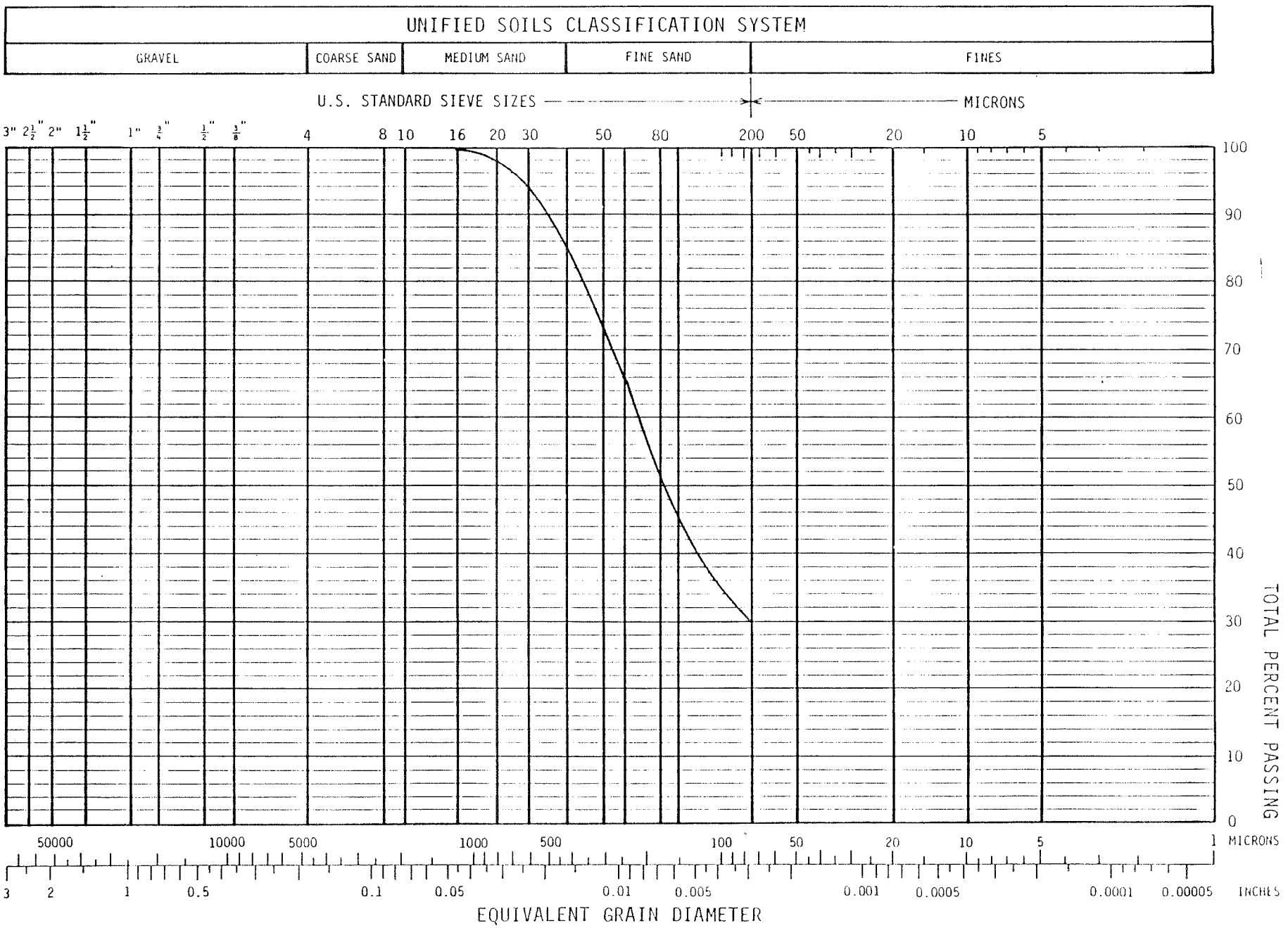

SYMBOL	BORING NO.	SAMPLE NO.	CLASSIFICATION
	B4-10-1		

PLATE A-26

J.H. KLEINFELDER & ASSOCIATES
GEOTECHNICAL CONSULTANTS • MATERIALS TESTING

PROJECT NO. 20-3693-02.001

GRAIN SIZE DISTRIBUTION

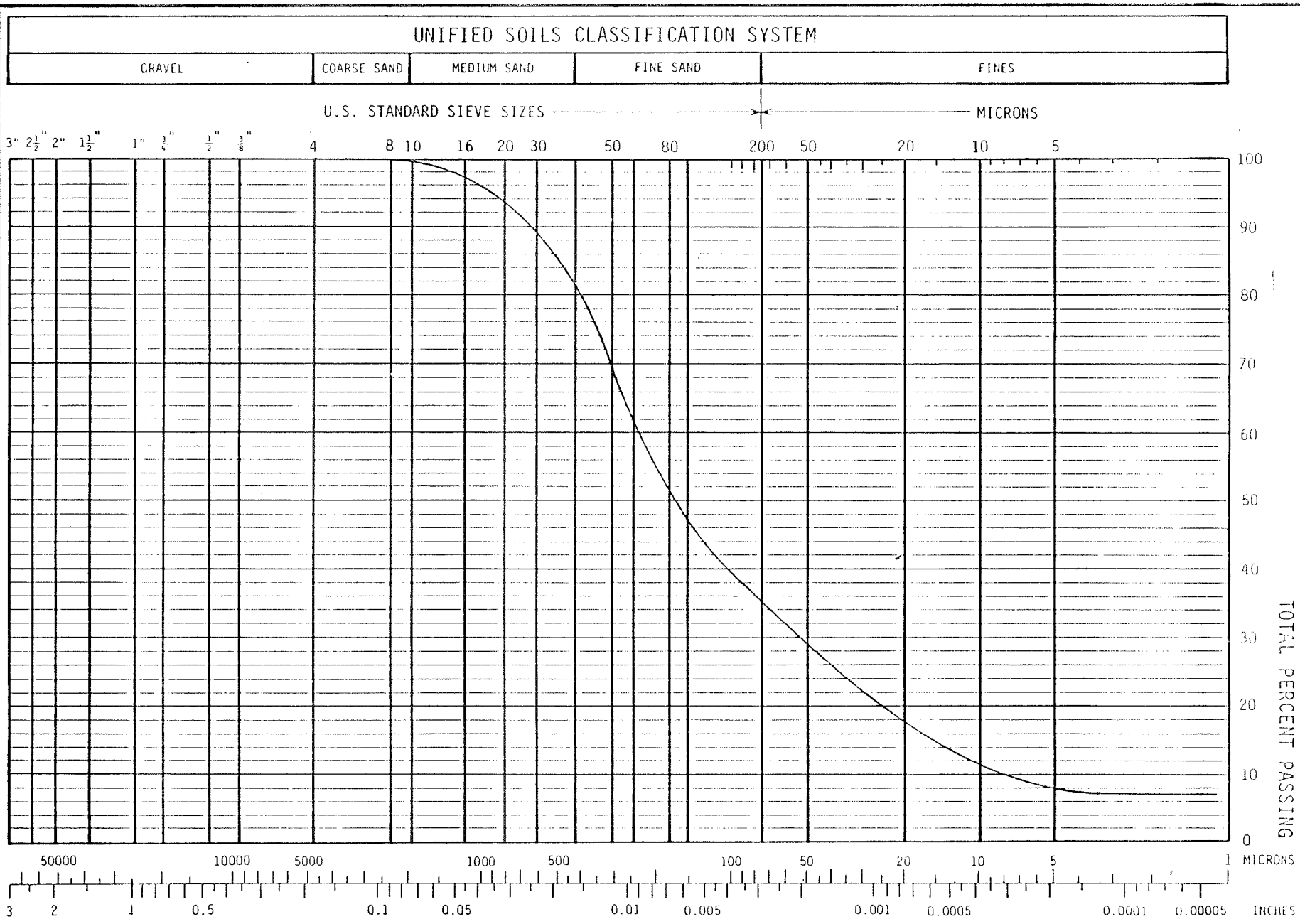

SYMBOL	BORING NO.	SAMPLE NO.	CLASSIFICATION
	B4-10-1		

PLATE A-27

J.H. KLEINFELDER & ASSOCIATES
GEOTECHNICAL CONSULTANTS • MATERIALS TESTING

PROJECT NO. 20-3693-02.001

GRAIN SIZE DISTRIBUTION

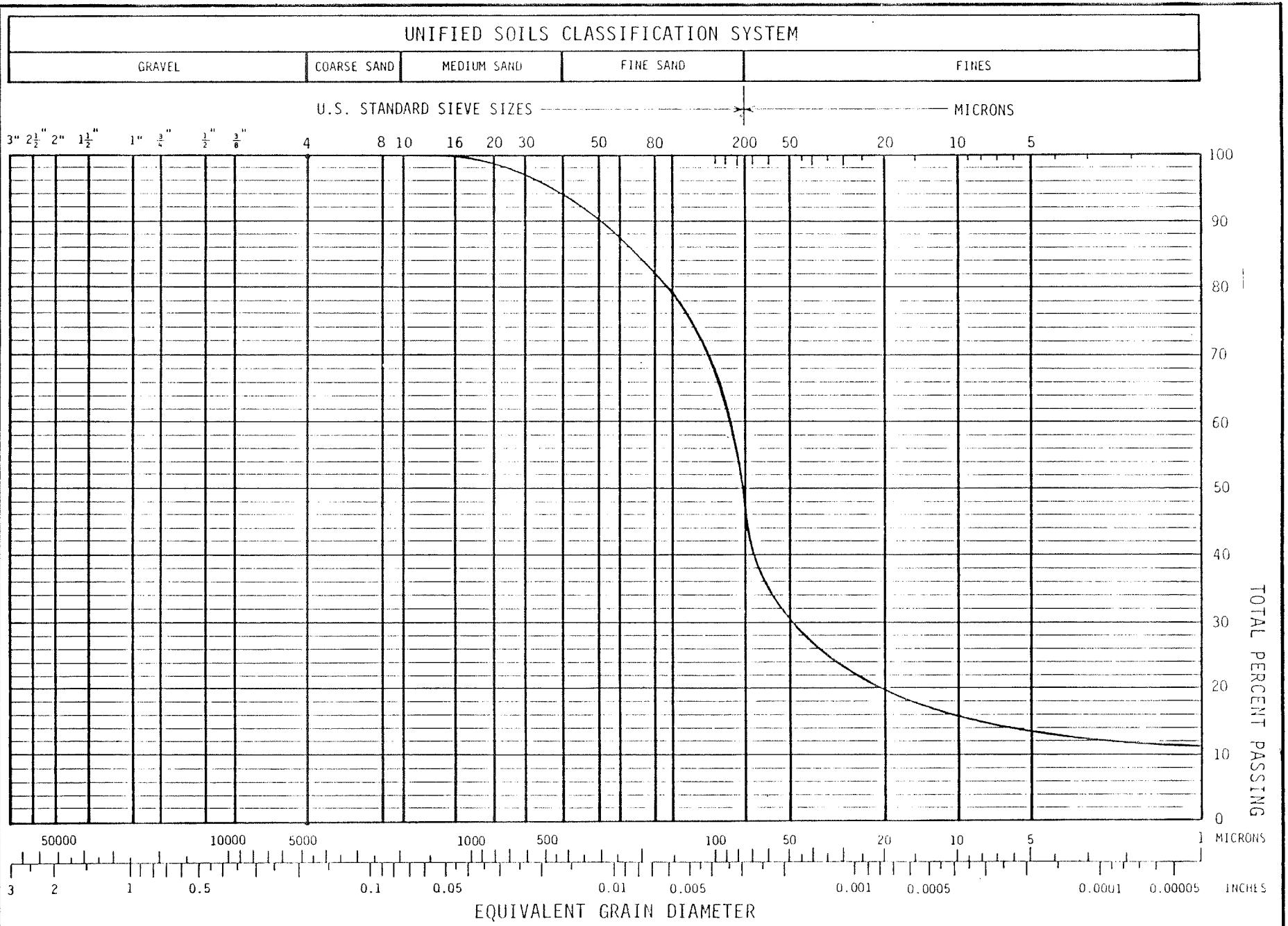

SYMBOL	BORING NO.	SAMPLE NO.	CLASSIFICATION
	B7-20-1		

PLATE A-28

SAMPLE LOCATION: ON-SITE SURFACE SOIL

SAMPLE DESCRIPTION: BROWN SILTY SAND

DATE SAMPLED: JANUARY 20, 1993

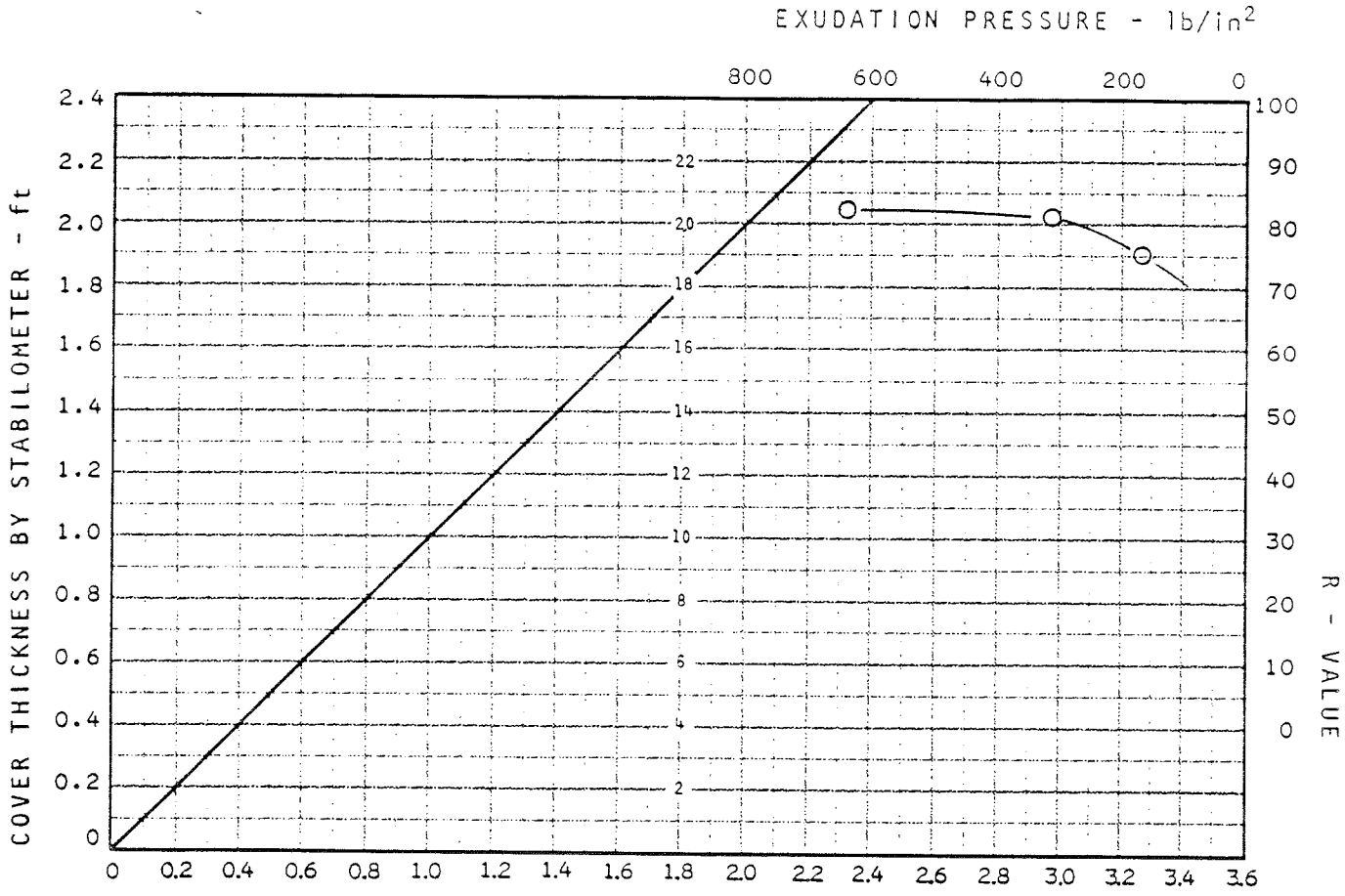

SPECIMEN	A	B	C
EXUDATION PRESSURE, lb/in²	170	310	640
EXPANSION DIAL (.0001")	0	3	12
EXPANSION PRESSURE, lb/ft²	0	13	52
RESISTANCE VALUE, R	75	81	82
% MOISTURE AT TEST	11.0	9.3	8.4
DRY DENSITY AT TEST, lb/ft³	120.7	120.3	122.0
R VALUE AT 300 lb/in² EXUDATION PRESSURE		81	
R VALUE BY EXPANSION PRESSURE (TI =)			

KLEINFELDER

PROJECT NO. 20-3693-02.001

RESISTANCE VALUE

PLATE A-29

Era	Time Period or Rock System	Epoch	Rock Series	Estimated Duration, Years	Estimated Years Since Beginning
Cenozoic Era	Quaternary	Recent Epoch Pleistocene	Recent Pleistocene	1 million	10 to 25,000 1 million
	Tertiary	Pliocene Miocene Oligocene Eocene Paleocene	Pliocene Miocene Oligocene Eocene Paleocene	12 million 12 million 11 million 22 million 5 million	13 million 25 million 36 million 58 million 63 million
Mesozoic Era	Cretaceous	Late Cretaceous Early Cretaceous	Upper Cretaceous Lower Cretaceous	62 million	135 million
	Jurassic	Late Jurassic Early Jurassic	Upper Jurassic Lower Jurassic	46 million	181 million
	Triassic	Late Triassic Early Triassic	Upper Triassic Lower Triassic	49 million	230 million
Paleozoic Era	Permian	Late Permian Early Permian	Upper Permian Lower Permian	50 million	280 million
	*Pennsylvanian	Late Pennsylvanian Middle Pennsylvanian Early Pennsylvanian	Upper Pennsylvanian Middle Pennsylvanian Lower Pennsylvanian	65 million	
	*Mississippian	Late Mississippian Early Mississippian	Upper Mississippian Lower Mississippian		345 million
	Devonian	Late Devonian Middle Devonian Early Devonian	Upper Devonian Middle Devonian Lower Devonian	60 million	405 million
	Silurian	Late Silurian Middle Silurian Early Silurian	Upper Silurian Middle Silurian Lower Silurian	20 million	425 million
	Ordovician	Late Ordovician Middle Ordovician Early Ordovician	Upper Ordovician Middle Ordovician Lower Ordovician	75 million	500 million
	Cambrian	Late Cambrian Middle Cambrian Early Cambrian	Upper Cambrian Middle Cambrian Lower Cambrian	100 million	600 million
	Precambrian	Informal subdivisions used locally		Over 3 billion	

*Considered subdivisions of the Carboniferous Rock System

KLEINFELDER

GEOLOGIC TIME SCALE

PREPARED BY: GS.Mahnke DATE: 1/22/93

CHECKED BY: Ron HeinzenDATE: 1/25/93

PROJECT NO.20-3693-2 | PLATE NO. A-30

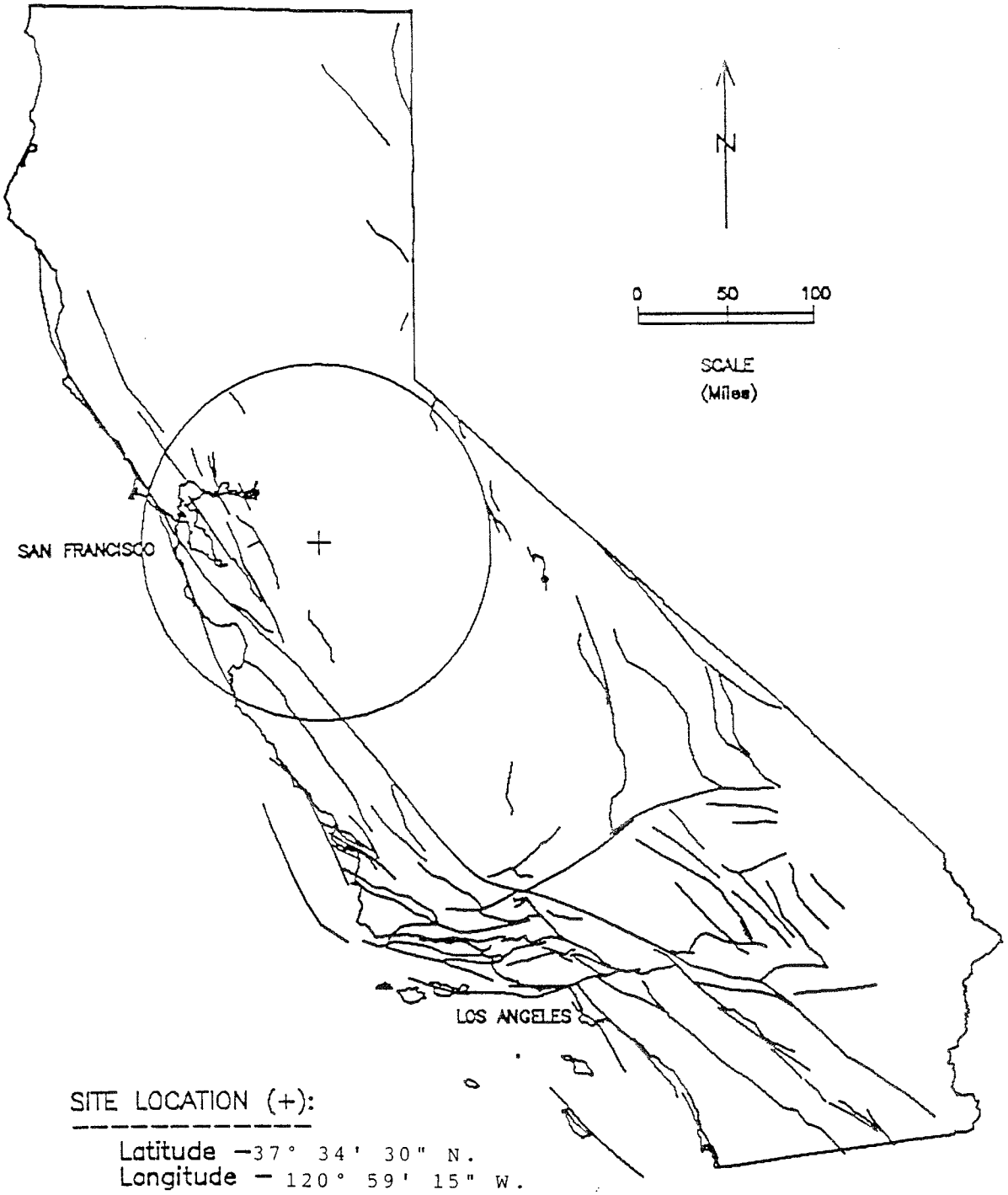

SITE LOCATION (+):

Latitude −37° 34' 30" N.
Longitude − 120° 59' 15" W.

CALIFORNIA FAULT MAP

KLEINFELDER

PROPOSED COMBUSTION TURBINE PROJ.
TURLOCK IRRIGATION DISTRICT
CERES, CALIFORNIA

PLATE
A-31

PROJECT NO. 20-3696-02.001

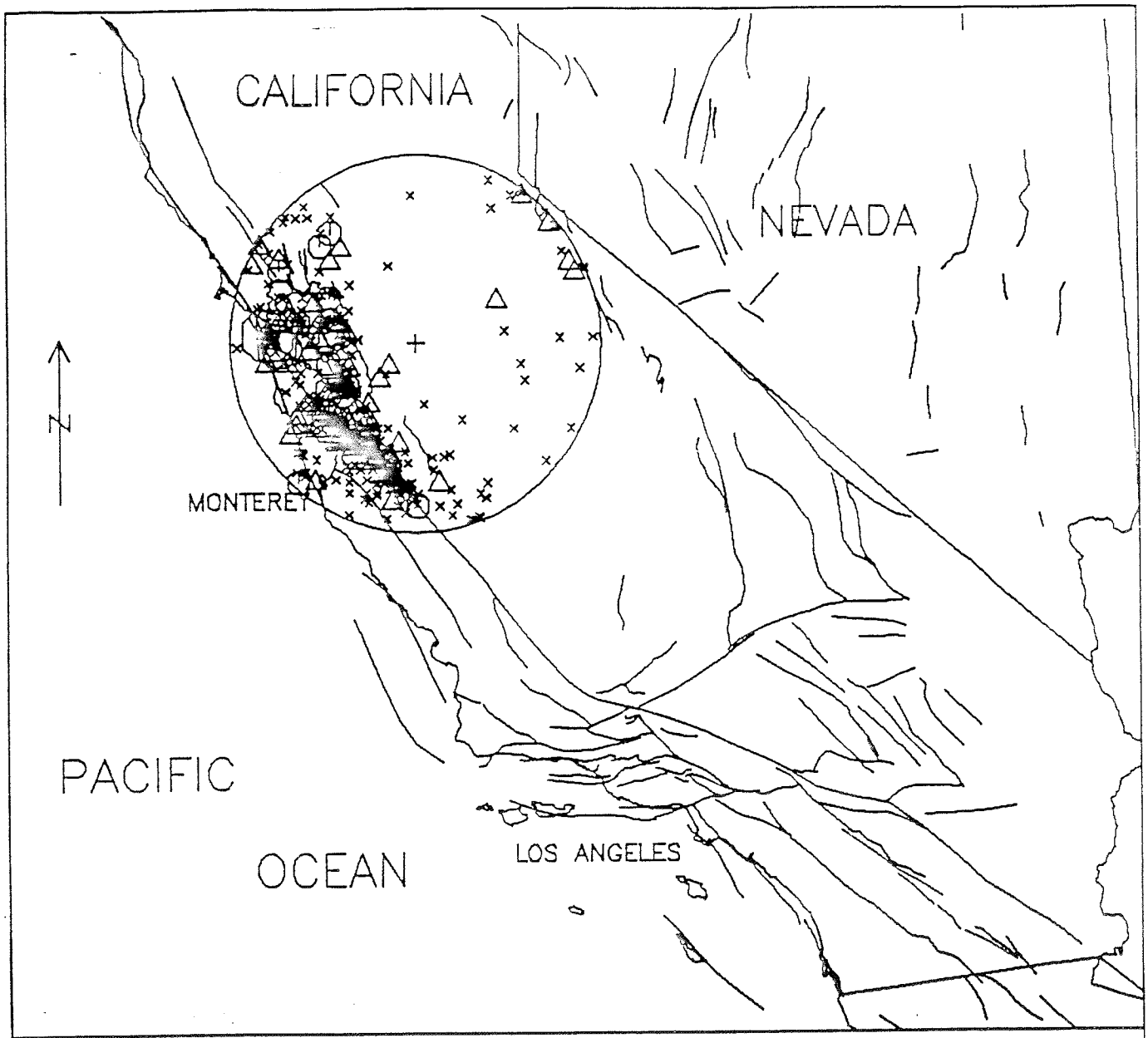

HISTORICAL EARTHQUAKES 1800 TO 1991

EXPLANATION

- M = 8.0 +
- M = 7.0–7.9
- M = 6.0–6.9
- M = 5.0–5.9
- M = 4.0–4.9

0 50 100

SCALE (Miles)

SITE LOCATION (+):

Latitude — 37° 34' 30" N.
Longitude — 120° 59' 15" W.

KLEINFELDER

PROJECT NO. 20-3693-02.001

PROPOSED COMBUSTION TURBINE PROJ.
TURLOCK IRRIGATION DISTRICT
CERES, CALIFORNIA

PLATE A-32

CONDOR EARTH TECHNOLOGIES INC.

RECEIVED
FEB 28 1994
Irrigation Admin.

21663 Brian Lane
P.O. Box 3905
Sonora, CA 95370
(209) 532-0361
FAX (209) 532-0773

TRANSMITTAL

TO Mr. Ted Glauser
Turlock Irrigation Dist.
P.O. Box 949
Turlock, CA 95381

DATE February 24, 1994
JOB # CET-783

SUBJECT Geotechnical Engineering Study & Foundation Design-Almond Power Plant Transmission Towers

WE ARE SENDING THE FOLLOWING:

Two copies of a Geotechnical Engineering Study and Foundation Design for the Almond Power Plant Transmission Towers project in Turlock, California.

VIA:

- ☐ FIRST CLASS MAIL
- ☐ FEDERAL EXPRESS
- ■ UNITED PARCEL
- ☐ MESSENGER
- ☐ _____

TRANSMITTED:

- ☐ AS REQUESTED
- ☐ FOR APPROVAL
- ■ FOR YOUR USE
- ☐ FOR REVIEW & COMMENT

REMARKS Ted: The structural sheet will not be into my office until Friday, February 25, 1994. I'm sending you the geotechnical report now so that you will have it by Friday. You will receive 8 sheets on Monday; 2 for the reports, 6 for your use.

BY for Ronald L. Skaggs

GEOTECHNICAL ENGINEERING STUDY

AND FOUNDATION DESIGN

ALMOND POWER PLANT TRANSMISSION TOWERS

CERES, CALIFORNIA

Prepared For

Turlock Irrigation District
Turlock, CA 95381

Prepared By

Condor Earth Technologies, Inc.
Sonora, California

CET #783

February 21, 1994

CONDOR

CONDOR EARTH TECHNOLOGIES INC.

1125 No. Golden State Blvd.
Suite H
P.O. Box 3448
Turlock, CA 95381
(209) 668-9234
FAX (209) 668-9248

21663 Brian Lane
P.O. Box 3905
Sonora, CA 95370
(209) 532-0361
FAX (209) 532-0773

February 25, 1994

Mr. Ted Glauser
Turlock Irrigation District
P.O. Box 949
Turlock, CA 95381

SUBJECT: Geotechnical Engineering Study and Foundation Design
Almond Power Plant Transmission Towers, Turlock, California
Project No. CET-783

Dear Mr. Glauser:

In accordance with our agreement, we have performed a Geotechnical Engineering Study and Foundation Design for the Almond Power Plant Transmission Towers, Ceres, California. The accompanying report presents the results of field testing as well as conclusions and recommendations intended to assist the Project Engineer in the formulation of procedures for site preparation and construction. Construction drawings of the tower foundation system are included in this report and additional copies are being transmitted to you under separate cover.

Based on the results of our field study and laboratory testing, the site is suitable to receive the proposed improvements provided the recommendations presented in this report are incorporated into the project plans and specifications, and are adhered to during construction. Special construction considerations are also discussed in the report.

If you have any questions regarding the information contained in this report, please contact us.

Respectfully submitted,
CONDOR EARTH TECHNOLOGIES, INC.

Brad L. Peterson
Senior Geologist
Manager, Geotechnical Services

Ronald L. Skaggs, P.E.
Senior Engineer

REGISTERED PROFESSIONAL ENGINEER
RONALD LEE SKAGGS
No. 44588
Exp. 3-31-94
STATE OF CALIFORNIA

Reviewed by:

John Minney, G.E.
Geotechnical Engineer

REGISTERED PROFESSIONAL ENGINEER
JOHN MINNEY
No. 602
Exp. 06/30/98
GEOTECHNICAL
STATE OF CALIFORNIA

TABLE OF CONTENTS

1.0 INTRODUCTION 1

2.0 PROPOSED CONSTRUCTION 1

3.0 FIELD EXPLORATIONS 2

4.0 REGIONAL GEOLOGY/SEISMICITY AND SUBSURFACE SOIL CONDITIONS 2
- 4.1 Regional Geology and Seismicity 2
- 4.2 Site Seismicity 3
- 4.3 Liquefaction Potential 3
- 4.4 General Soil Conditions 4
- 4.5 Local Groundwater Conditions 4

5.0 LATERAL BEARING CAPACITY AND FOUNDATION DESIGN 5

6.0 CONCLUSIONS AND RECOMMENDATIONS 5
- 6.1 Grading Recommendations 5
  - 6.1.1 General Grading Considerations 5
  - 6.1.2 Site Preparation and Grading 6
  - 6.1.3 Engineered Fill Materials 6
  - 6.1.4 Engineered Fill Placement 6
- 6.2 Foundations 7
- 6.3 Surface Drainage Control 7
- 6.4 Construction Considerations 7

7.0 ADDITIONAL SERVICES 7

8.0 LIMITATIONS 8

FIGURES

FIGURES 1 & 2 SITE PLAN
FIGURE 3 UNIFIED SOIL CLASSIFICATION CHART

APPENDICES

A BOREHOLE LOGS
B UNIT DRY WEIGHT TEST RESULTS
C SAFETY ORDERS FOR DRILLED SHAFTS

PLATE

SHEET S1 CONSTRUCTION DRAWING

CONDOR

GEOTECHNICAL ENGINEERING STUDY
AND FOUNDATION DESIGN
ALMOND POWER PLANT TRANSMISSION TOWERS
CERES, CALIFORNIA

1.0 INTRODUCTION

This report presents the results of a geotechnical engineering study and foundation design for the Almond Power Plant Transmission Towers, Ceres, California. The purpose of this study was to explore and evaluate surface and subsurface soil conditions, develop geotechnical engineering design parameters, and provide recommendations for geotechnical design and construction of the proposed steel power poles. Construction drawings were prepared by Condor Earth Technologies, Inc. (Condor) for the foundation system based on the results of this study and on information provided by Turlock Irrigation District (TID).

This report is based upon data obtained from ten soil borings, standard penetration tests in the boreholes, dry unit weights, review of published geologic reports and maps, and review of applicable portions of the Stanislaus County Safety Element. Additional groundwater and geotechnical data were obtained from TID and from review of the Report of Geotechnical Investigation, Proposed Combustion Turbine Project, Turlock Irrigation District, Ceres, California, prepared by Kleinfelder, Inc., dated February 8, 1993.

2.0 PROPOSED CONSTRUCTION

We understand that two steel power poles will be constructed as part of the transmission facilities for the Almond Power Plant, Ceres, California. The plant is currently under construction and is located south of Service Road between Crows Landing Road and Morgan Road, southwest of Ceres, California. A 65-foot high steel pole is to be located in the northeast quadrant of the intersection of Service Road and the Tidewater Southern Railroad (Union Pacific Corporation). A 60-foot high steel pole is to be located east of the power plant in the northeast quadrant of the intersection of the Tidewater Railroad and a TID irrigation canal.

We understand that the steel towers will be designed and constructed by Power Structures Inc., of New Orleans, Louisiana. Final design calculations, prepared by Power Systems Inc., were sent to Condor under transmittal dated January 24, 1994, from Ted Glauser of TID. Based on our review of these calculations, the maximum design loading for the 60-foot tower is a resultant moment of 3199.6 foot-kips (maximum loading - intact) and the maximum design loading for the 65-foot tower is a resultant moment of 2846.6 foot-kips (maximum loading - 3 broken wires @ 69 KV). The poles are to be bolted to the foundation as shown on the enclosed construction drawing at the end of this report.

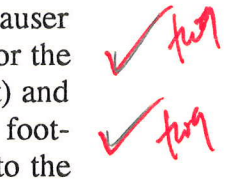

CONDOR

3.0 FIELD EXPLORATIONS

A geotechnical field investigation of the two tower sites was conducted on December 22, 1993. The investigation included the drilling and sampling of five boreholes at each site to depths of 10.0 feet to 40.0 feet. Standard penetration testing (SPT) was performed at regular intervals to determine the relative density of the soils underlying the proposed construction sites. Relatively undisturbed liner samples were collected between SPT samples for classification and testing in our laboratory. The boreholes were drilled with a Mobile B-61 drill rig (Pierson Drilling) using 6-inch O.D. hollow stem augers.

Drilling was performed under the direction and supervision of a Condor field geologist who maintained continuous logs of the subsurface soil conditions encountered in the boreholes. The contacts between soil horizons were approximated on the basis of the field geologist's observations. Samples of each strata were collected for visual classification and logging by the field geologist. The actual boundaries between different soil types may be gradual and soil conditions may vary between the boring locations. The logs of the borings are presented in Appendix A of this report. Borehole locations were staked in the field by TID's survey crew. A Site Plan showing the location of the boreholes drilled during the field investigation is presented on Figures 1 and 2 at the end of this report.

4.0 REGIONAL GEOLOGY/SEISMICITY AND SUBSURFACE SOIL CONDITIONS

4.1 Regional Geology and Seismicity

The proposed tower sites are located southwest of Ceres, California toward the central part of the Great Valley geomorphic province. The Great Valley (Central Valley) of California has been formed by the filling of a large structural trough or downwarp in the bedrock formations of the region. The Great Valley is situated between the Sierra Nevada mountains on the east and the Coast Ranges on the west. The Sierra Nevada and Coast Range mountains were initially formed by uplifts that occurred throughout the Jurassic and Cretaceous periods of geologic time. Renewed uplift occurred in the Sierra Nevadas during late Tertiary time. The structural trough between the ranges has been filled with alluvial, lacustrine (lake deposits), and some marine sediments. These deposits reach a maximum thickness of approximately 30,000 feet near the western margin of the valley. The underlying bedrock complex is composed of metamorphosed marine sediments similar to those found in the foothills of the western Sierra Nevada and the core of the Coast Ranges.

Toward the Sierra Nevada to the east, alluvial fans and river terraces are predominant. The portion of the Valley in the vicinity of Ceres is largely alluvial plain dissected by

the Merced River to the south and the Tuolumne River to the north. To the west, in the trough of the valley, natural levee, flood plain and basin and marsh deposits predominate. The unconsolidated sedimentary materials in the study area are derived largely from the Sierras rather than the Coast Ranges (*Geology of the Fresh Ground-Water Basin of the Central Valley,* California, USGS, 1985). They consist mainly of micaceous and quartz-rich fine sands, silts and minor clays.

In the Ceres area, no active or potentially active faults are known to extend through the valley alluvium. However, during the formation of the Sierra Nevada and Coast Ranges, numerous faults and shear zones developed in these mountain ranges. Although many of these fault zones are considered inactive, some are considered to be active or potentially active. The *Alquist-Priolo Special Studies Zone Act of 1972*, Special Publication 42 published by the California Division of Mines and Geology, indicates that the site is not located in any special study zones that have been delineated as critical earthquake or fault areas. The site is located within the Uniform Building Code Seismic Zone 3.

4.2 Site Seismicity

An analysis of the potential peak ground accelerations is contained in the *Report of Geotechnical Investigation, Proposed Combustion Turbine Project,* Turlock Irrigation District, Ceres, California, prepared by Kleinfelder, dated February 8, 1993. According to this report, the peak site acceleration from a maximum credible earthquake is 0.22g generated from the San Andreas fault approximately 60 miles from the site. The nearest active or potentially-active fault listed in the report is the Greenville fault approximately 33 miles from the site. The closest fault within an Alquist-Priolo Special Studies Zone is the Tesla-Ortigalita fault approximately 25 miles from the site (*Fault-Rupture Hazard Zones in California*, Special Publication 42, CDMG). The most recent movement along this fault was approximately five million years ago, although earthquake activity without surface fracturing or faulting is still common (Stanislaus County Safety Element, p. 245). On June 27, 1986, an earthquake with a magnitude of 3.7 on the Richter Scale occurred with an epicenter several miles west of Crows Landing. Future earthquakes of similar or greater magnitude can be expected (Stanislaus County Safety Element, p. 245).

4.3 Liquefaction Potential

A preliminary liquefaction evaluation was performed based on the results of the field investigation, review of historic high groundwater data provided by TID, the results of our site seismicity study (Section 4.2) and procedures described in the Naval Facilities Engineering Command Design Manual 7.02, Foundation and Earth Structures. Our evaluation indicates that liquefaction of the subsurface soils is possible during strong ground shaking from a regional earthquake of Richter Magnitude 7.5 or greater.

Liquefaction would likely occur only in the presence of shallow groundwater at a depth of 10 to 15 feet below existing grade or shallower. Based on the historic high groundwater data available, we believe that depth to groundwater of 10 to 15 feet is possible (see Section 4.5, Local Groundwater Conditions). The probability of shallow groundwater coinciding with a seismic event strong enough to cause liquefaction is beyond the scope of this report. Since it is possible, however, we have assumed that liquefaction could occur below a depth of 5 to 10 feet and have, therefore, incorporated this parameter into the design of the tower foundation.

4.4 General Soil Conditions

The materials encountered at the locations explored consist predominantly of loose to medium-dense sands overlying poorly sorted medium-dense to dense sands, silty sands and sandy silts. The loose sands were generally confined to a depth of approximately four to six feet. Below these depths, interbedded and alternating layers of very stiff to hard sandy silts and clayey silts, and uncemented to partially-cemented medium dense to dense silty and relatively clean sands were encountered. These materials extend to the maximum depths explored of approximately 40.0 feet.

The foregoing is a brief summary of the soil conditions encountered during our drilling operations for this study. More detailed descriptions of the subsurface soil conditions encountered are presented on the borehole logs contained in Appendix A of this report. All soils have been classified according to the Unified Soil Classification System (see Figure 3 and UBC Standards 29-1 and 29-2).

4.5 Local Groundwater Conditions

During our field investigation of the project site, groundwater was encountered in our deeper borings at depths of approximately 18 to 20.5 feet below the existing ground surface. The Kleinfelder report also documents similar groundwater conditions at the time of their investigation (January 1993). The groundwater level in their deeper borings after drilling was 21.5 feet.

The project site is located entirely within Section 21. Groundwater levels at the four corners of Section 21 have been monitored by TID since 1981. The highest groundwater levels measured by TID ranged from 6.9 feet below surface to 12.4 feet below surface. All TID groundwater measurements were recorded in the last half of 1983 or the first half of 1984, which was a relatively wet season. These wells, which are 15 feet in depth, were dry throughout the California drought (1987 to 1993) to the present. Assuming that the groundwater gradient and ground surface slope is relatively uniform, a high groundwater level of nine to ten feet would have been present at the power plant site during the 1983/1984 period. We anticipate that groundwater levels could rise to

their 1983/1984 levels or higher with several consecutive wet years. A detailed study of historical high groundwater prior to 1981 is beyond the scope of this study.

5.0 LATERAL BEARING CAPACITY AND FOUNDATION DESIGN

The lateral bearing capacity of the subsurface soils was evaluated by visual classification, ease of drilling, blow count data collected during Standard Penetration Testing, and results of laboratory testing. Blow count data was collected at 1.5- to 4.0-foot intervals in the upper ten feet, and at approximately five-foot intervals from ten to twenty feet. No standard penetrations tests were taken below twenty feet. The corresponding "N" values were corrected for effective overburden stress to determine the relative density of the subsurface soils. Based on the data collected at the locations of the exploratory borings, the foundation soils are loose to dense and are suitable for support of the proposed drilled pier/spread footing foundation if designed and constructed in accordance with Section 6.2 of this report.

eq fluid wt.

An allowable passive earth pressure of 400 pcf was used in the design of the proposed foundation. The pier depth and diameter and sizing of the pier cap was determined based on the assumption of a constrained condition for the top of the pier. To achieve this condition, recompaction of the upper five feet of the existing loose to medium dense site soils will be necessary. The zone of recompaction should extend a minimum of five feet beyond the edge of the pier cap. The recompacted zone is shown on the construction drawing at the end of this report.

6.0 CONCLUSIONS AND RECOMMENDATIONS

6.1 Grading Recommendations

6.1.1 General Grading Considerations

Grading requirements for the proposed improvements are anticipated to include recompaction of the upper five feet of the existing site soils. If conditions are encountered during construction that deviate from those encountered during our exploration activities, the grading and foundation recommendations should be reevaluated. All grading should be performed in accordance with applicable sections of UBC Chapter 70.

6.1.2 Site Preparation and Grading

The site preparation and grading operations for the proposed towers should commence with the removal of existing subsurface facilities that are in the area of the proposed improvements. The exposed subgrade should be observed in the field by a representative of Condor Earth Technologies, Inc., or other professionally qualified individuals (See Section 7.0 below).

Excavation of the site soils should be performed to the limits shown on the plans or as specified by the Engineer. After removal of the upper five feet of soils, the exposed soil surfaces should be scarified to a minimum depth of 8 inches, brought to a moisture content near optimum and no more than 2 percent above, and compacted. Any soft, wet, or loose pockets of native soil or fill encountered during the demolition and scarifying process should be fully excavated and recompacted.

The recommended minimum degree of compaction for engineered fills and recompaction of the existing native soils is 90 percent of the maximum dry density as determined by the ASTM D-1557-78 test procedure. Field density tests should be taken to verify compaction prior to pouring the foundation. Compaction tests should be taken at a minimum of every 12 inches of compacted fill depth.

6.1.3 Engineered Fill Materials

We recommend that any structural fill required to achieve finished grade consist of on-site "non-organic" native soils, or imported granular non-expansive soil having a maximum percentage passing the #200 Sieve of 20, a minimum R-Value (Resistance-Value) of 40, a maximum plasticity index of four, and a maximum particle size of four inches. We recommend that samples of any proposed imported fill material be submitted to our laboratory, or other qualified laboratories (See Section 8.0 below), for approval prior to being brought to the site.

6.1.4 Engineered Fill Placement

Engineered fill should be placed in horizontal layers (lifts), a maximum of eight inches in loose thickness, and compacted to a minimum of 90 percent of the maximum dry density as determined by the ASTM D-1557-78 test procedure at a moisture content near optimum.

We recommend that samples selected for compaction testing be collected when on-site earthwork operations have commenced. This will allow for collection of samples which are representative of the materials used for any fill construction.

6.2 Foundations

Foundations may be founded in recompacted native material when prepared in accordance with the Site Preparations and Grading section of this report. Foundations should be constructed in accordance with the construction drawing contained in this report. Further evaluation of the subsurface may be warranted based on any other specific foundation designs not considered in this report.

6.3 Surface Drainage Control

Final surface gradients around the pole foundations should provide positive drainage away from the foundations.

6.4 Construction Considerations

Construction of the drilled pier and spread footing cap should be performed in accordance with applicable portions of the Uniform Building Code, and the owner's specifications and good practice. Free fall placement of concrete into the drilled pier excavation shall not be permitted. Placement below groundwater shall not be permitted except at the direction of the Engineer. Slurry drilling methods should be used if the pier hole is caving or unstable.

Construction should, at a minimum, be performed in accordance with Title 8, Section 1542, Construction Safety Orders for Drilled Shafts (see Appendix C of this report).

7.0 ADDITIONAL SERVICES

Because subsurface conditions are variable, it is impossible to include all construction details in plans and specifications. Design recommendations used as a basis of construction contracting often need adjustment in the field. The adjustments are dependent on findings during construction that could previously only be assumed based on exploration activities. Since the intent of recommendations within this report are best understood by Condor representatives, we recommend that field observations and testing during earthwork construction and concrete placement be performed by Condor Earth Technologies, Inc.

We also recommend that a review of all plans and specifications with regard to the earthwork and concrete placement that are not contained in the enclosed construction drawing be completed by a Registered Engineer from our staff prior to construction bidding. If Condor is not given the opportunity to review all plans and specifications, the reviewing Registered Engineer should thoroughly review this report, and should

concur with its conclusions and recommendations, or provide additional recommendations. A qualified Inspector should be present at the site during site preparation, earthwork, and concrete placement. The Inspector's observations should be supplemented with periodic compaction tests where earthwork is performed, and inspection of the rebar cage placement coupled with observation and sampling of the concrete during its placement. We recommend that cylinders be cast and tested to establish substantial conformance with the recommendations contained in this report and enclosed construction drawing. The Inspector should also observe all foundation excavations after cleaning and prior to placement of concrete to assess the depth of the drilled pier, and footing and bearing conditions. The results of observations and footing should be reviewed by the Registered Engineer.

8.0 LIMITATIONS

The conclusions and recommendations contained in this report are for design and construction purposes for the proposed Almond Power Plant Transmission Towers, Ceres, California. The conclusions and recommendations contained in this report are invalid if:

a. The design loads change.

b. The report is used for adjacent or other property.

c. The recommendations contained in Section 7.0 of this report, ADDITIONAL SERVICES, are not followed.

d. If changes of grades, and/or groundwater occur between the issuance of this report and construction.

e. Any other change is implemented which materially alters the project from that proposed at the time this report was prepared.

The analyses and recommendations submitted in this report are based upon the data obtained from the ten boreholes drilled for this project. This report does not reflect variations which may occur between the boreholes. The nature and extent of such variations may not become evident until construction is initiated. If variations then appear, a re-evaluation of the recommendations of this report will be necessary after performing on-site observations during the excavation period and noting the characteristics of any variations.

The validity of the recommendations contained in this report are also dependent upon an adequate testing and observation program during the construction phase. Our firm

assumes no responsibility for construction compliance with the design concepts or recommendations unless we have been retained to perform on-site testing and review during construction.

This report was prepared in accordance with the generally accepted standards of soils engineering and civil engineering practice which exist in Stanislaus County at the time the report was written. No other warranty, expressed or implied, is made.

It is the CLIENT's responsibility to see that all parties to the project, including the designer, contractors, subcontractors, etc., are made aware of this report in its entirety.

We trust this report contains the information required. If you have any questions regarding this report, please contact us.

FIGURES 1 AND 2

SITE PLANS

CONDOR

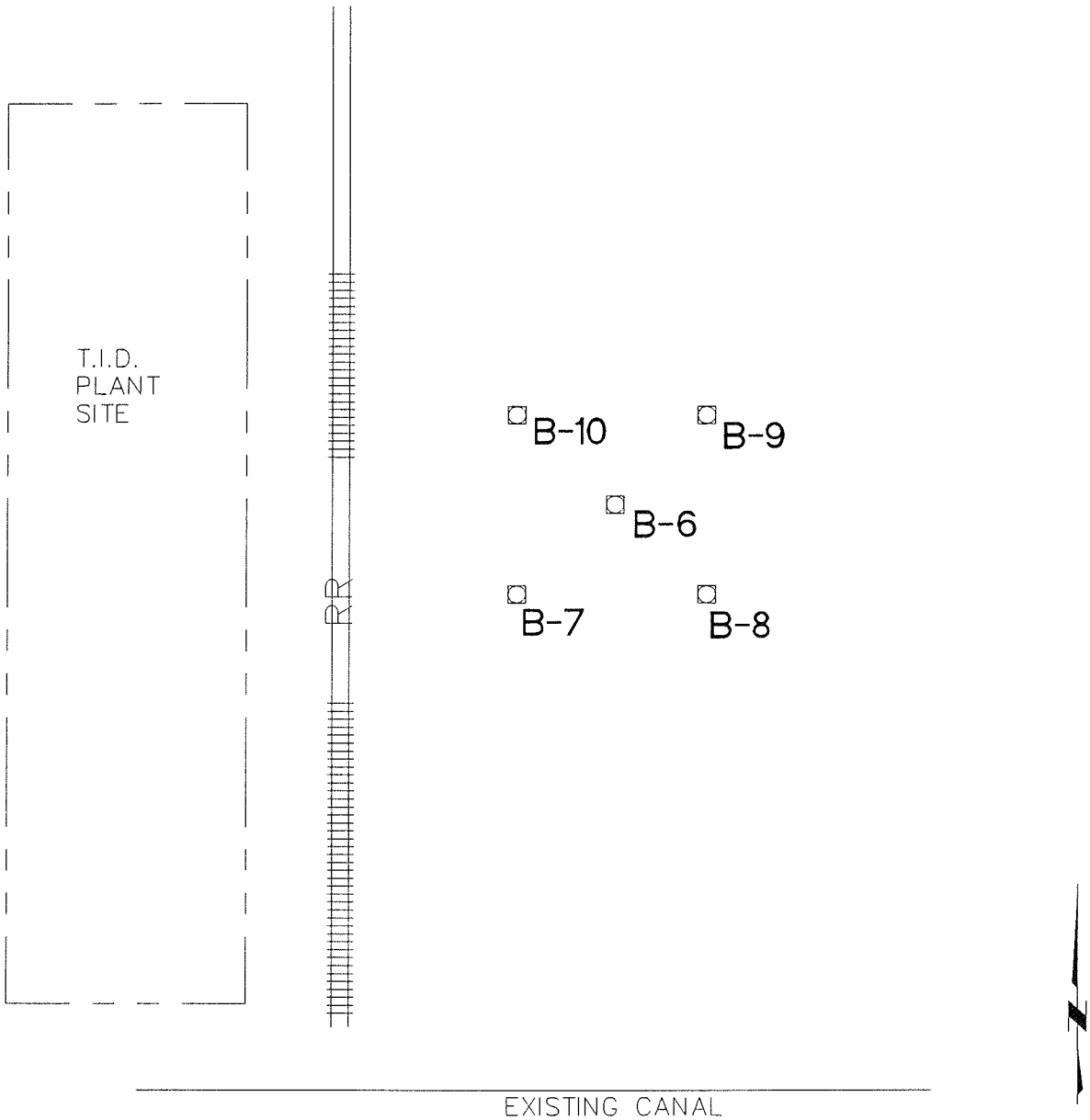

ENVIRONMENTAL · GEOLOGICAL · ENGINEERING · GEOTECHNICAL 21663 Brian Lane P.O. Box 3905 Sonora, CA. 95370 (209) 532-0361 fax 532-0773 CONDOR	Job No. 783 Date FEB 1994 Scale NONE Drawn GWK Chk'd MS	TURLOCK IRRIGATION DISTRICT ALMOND POWER PLANT TRANSMISSION TOWER SITE PLAN, 60 FOOT TOWER	FIGURE 1 File No. 78351

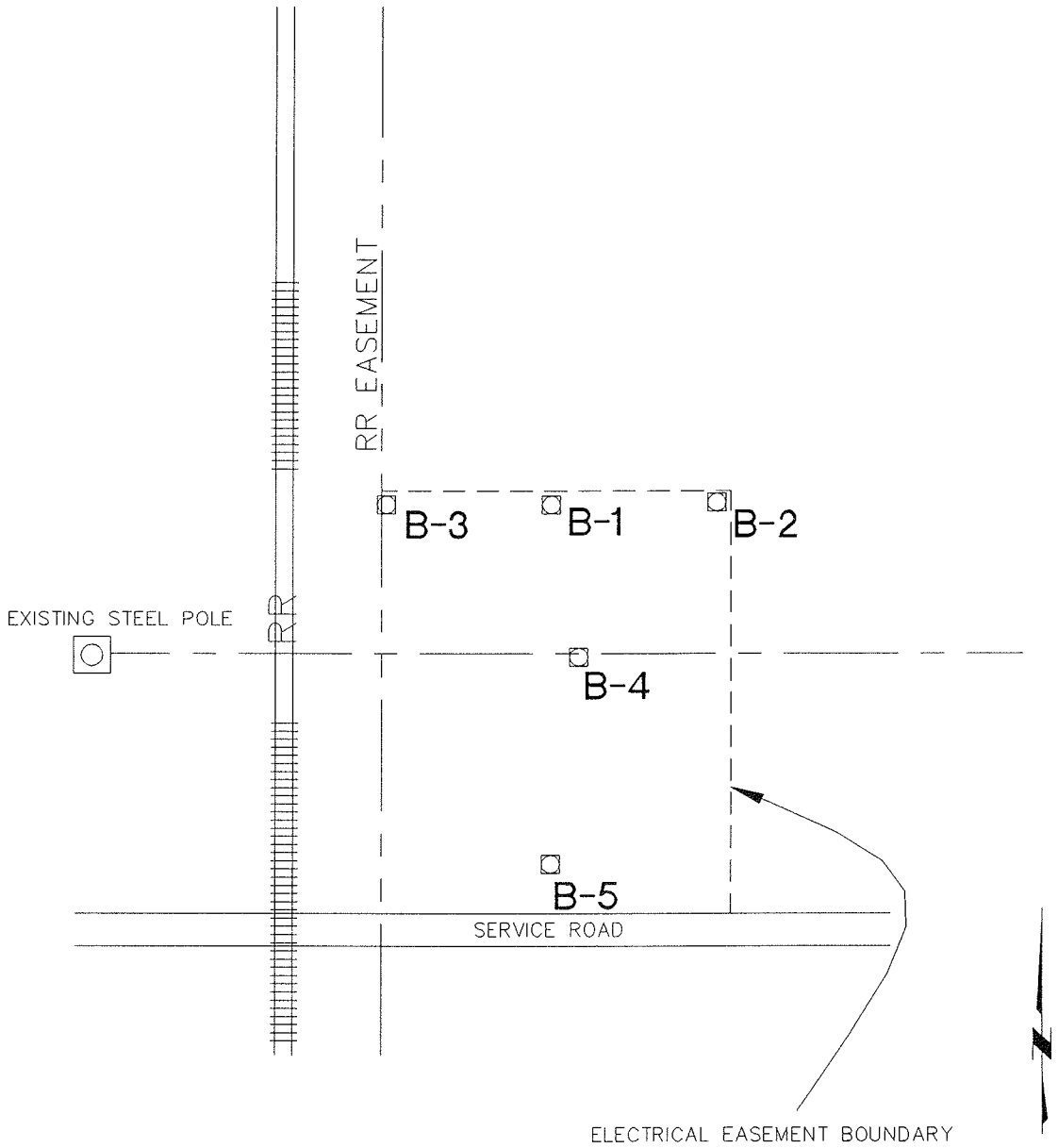

B-7 = BOREHOLE LOCATION

ENVIRONMENTAL · GEOLOGICAL · ENGINEERING · GEOTECHNICAL

21663 Brian Lane
P.O. Box 3805
Sonora, CA. 95370
(209) 532-0361 fax 532-0773

CONDOR

Job No.	783
Date	FEB 1994
Scale	NONE
Drawn / Chk'd	GWN / RLS

TURLOCK IRRIGATION DISTRICT
ALMOND POWER PLANT
TRANSMISSION TOWER
SITE PLAN. 65 FOOT TOWER

FIGURE 2

File No. 78352

FIGURE 3

UNIFIED SOIL CLASSIFICATION CHART

CONDOR

UNIFIED SOIL CLASSIFICATION SYSTEM

Major Divisions			Group Symbols	Typical Names	Laboratory Classification Criteria
Coarse-grained soils (More than half of material is larger than No. 200 sieve size)	Gravels (More than half of coarse fraction is larger than No. 4 sieve size)	Clean gravels (Little or no fines)	GW	Well-graded gravels, gravel-sand mixtures, little or no fines	$C_u = \frac{D_{60}}{D_{10}}$ greater than 4; $C_c = \frac{(D_{30})^2}{D_{10} \times D_{60}}$ between 1 and 3
			GP	Poorly graded gravels, gravel-sand mixtures, little or no fines	Not meeting all gradation requirements for GW
		Gravels with fines (Appreciable amount of fines)	GM[a] d / u	Silty gravels, gravel-sand-silt mixtures	Atterberg limits below "A" line or P.I. less than 4 / Above "A" line with P.I. between 4 and 7 are *borderline* cases requiring use of dual symbols
			GC	Clayey gravels, gravel-sand-clay mixtures	Atterberg limits below "A" line with P.I. greater than 7
	Sands (More than half of coarse fraction is smaller than No. 4 sieve size)	Clean sands (Little or no fines)	SW	Well-graded sands, gravelly sands, little or no fines	$C_u = \frac{D_{60}}{D_{10}}$ greater than 6; $C_c = \frac{(D_{30})^2}{D_{10} \times D_{60}}$ between 1 and 3
			SP	Poorly graded sands, gravelly sands, little or no fines	Not meeting all gradation requirements for SW
		Sands with fines (Appreciable amount of fines)	SM[a] d / u	Silty sands, sand-silt mixtures	Atterberg limits above "A" line or P.I. less than 4 / Limits plotting in hatched zone with P.I. between 4 and 7 are *borderline* cases requiring use of dual symbols
			SC	Clayey sands, sand-clay mixtures	Atterberg limits above "A" line with P.I. greater than 7
Fine-grained soils (More than half material is smaller than No. 200 sieve)	Silts and clays (Liquid limit less than 50)		ML	Inorganic silts and very fine sands, rock flour, silty or clayey fine sands, or clayey silts with slight plasticity	
			CL	Inorganic clays of low to medium plasticity, gravelly clays, sandy clays, silty clays, lean clays	
			OL	Organic silts and organic silty clays of low plasticity	
	Silts and clays (Liquid limit greater than 50)		MH	Inorganic silts, micaceous or diatomaceous fine sandy or silty soils, elastic silts	
			CH	Inorganic clays of high plasticity, fat clays	
			OH	Organic clays of medium to high plasticity, organic silts	
	Highly organic soils		Pt	Peat and other highly organic soils	

Determine percentages of sand and gravel from grain-size curve. Depending on percentage of fines (fraction smaller than No. 200 sieve size), coarse-grained soils are classified as follows:
- Less than 5 per cent: GW, GP, SW, SP
- More than 12 per cent: GM, GC, SM, SC
- 5 to 12 per cent: *Borderline* cases requiring dual symbols[b]

Plasticity Chart

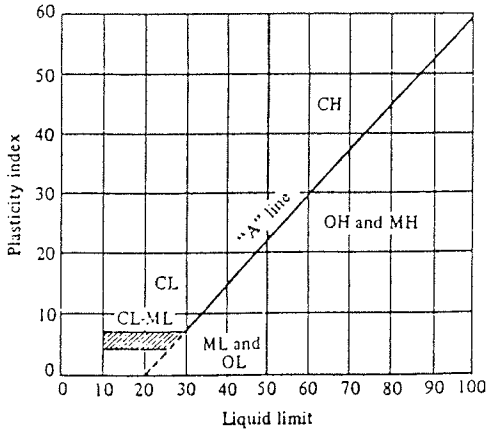

FIGURE 3

CONDOR

APPENDIX A

BOREHOLE LOGS

CET
CONDOR EARTH TECHNOLOGIES

21663 Brian Lane
P.O. Box 3905
Sonora, CA 95370
(209) 532-0361
FAX (209) 532-0773

Soil and Bedrock Log

Driller: Steve
Helper: Russell

PROJECT T.I.D. Almond Towers DATE DRILLED 12/22/93 HOLE NO. B-1
LOCATION North Tower - offset North 21.4' ℄ of Pad GROUND ELEV.
DRILLING CONTRACTOR Pierson LOGGED BY BLP DEPTH TO GROUND WATER 20.5 Wet cave at 17.0' 3 hrs ABC
TYPE OF RIG Mobile B-61 HOLE DIAMETER 6" HAMMER WEIGHT AND FALL 140 lb - 30"
SURFACE CONDITIONS Short lawn grass TOTAL DEPTH 29.0 NO. CORE BOXES —

DEPTH	CLASS.	FIELD DESCRIPTION	SAMPLE	SPT (6")	DRILL MODE	PIEZO.	CORE REC. %	REMARKS
0.0	SP	0.0 - 7.5 SAND: Dark Yellowish Brown (10YR 4/2) < 5% non plastic fines; ~95% fine to medium-grained sand; subrounded to subangular; loose; damp to moist.	S-1	3, 4, 3	DR, HS		100	Set-up and started drilling at 8:35 a.m. Drove standard penetrometer at surface. Recovery = 1.5/1.5
2.0		2.0 - grades moist - medium dense.	S-2	6, 5, 9	DR, HS		80	Drove 2" modified sampler at 2.0'. Recovery = 1.2/1.5
4.0	ML, SP	4.5-5.0 - lense of sandy silt. 5.0 - Sand grades to a Dark Yellowish Orange (10YR 6/6)	S-3	4, 5, 5	DR, HS		100	Drove standard penetrometer at 4.0'. Recovery = 1.5/1.5
6.0	ML, SP	6.2-6.5 lense of sandy silt. (laminated)	S-4	4, 7, 7	DR, HS		80	Drove 2" modified sampler at 6.0'. Recovery = 1.2/1.5
8.0	SM	7.5 - 12.0 SILTY SAND: Pale Yellowish Brown (10YR 6/2) ~20% non plastic fines; ~80% fine to v. fine-grained sand; micaceous; medium dense; damp.	S-5	6, 7, 8	DR, HS		100	Drove standard penetrometer at 9.0'. Recovery = 1.5/1.5
10.0								
12.0	ML, SP	12.0 - 12.5 - lense of slightly cemented clayey silt. 12.5 - 29.0 SAND: Light Olive Gray (5Y 6/1) < 5% non plastic fines; ~95% fine to coarse-grained sand; subangular to subrounded; micaceous; medium dense; moist						drills stiff at 12.0'
14.0			S-6	8, 11, 14	DR		66	Drove 2" modified sampler at 14.0'. Recovery = 1.0/1.5
16.0								
18.0								Drove standard penetrometer at 19.0'. Recovery = 1.5/1.5
20.0			S-7	12, 14			100	

SHEET 1 OF 2

PROJECT T.I.D. Almond Towers DATE DRILLED 12/21/93 HOLE NO. B-1

DEPTH	CLASS.	FIELD DESCRIPTION	SAMPLE	SPT (6")	DRILL MODE	PIEZO.	CORE REC. %	REMARKS
20.0	SP	12.5 - 29.0 SAND (cont.)	S-7	12	DR HS		100	▽ Sample at tip of sampler was saturated
22.0								
24.0								
26.0								
28.0								
		Terminated hole at 29.0'						Hollow stem augers have 4' of free flowing sand from 25' to 29' cannot get sampler to representative sample depth
30.0								
32.0								
34.0								
36.0								
38.0								
40.0								
42.0								

SHEET 2 OF 2

CONDOR EARTH TECHNOLOGIES
21663 Brian Lane
P.O. Box 3905
Sonora, CA 95370
(209) 532-0361
FAX (209) 532-0773

Soil and Bedrock Log

PROJECT T.I.D. Almond Towers DATE DRILLED 12/22/93 HOLE NO. B-2
LOCATION North Tower NW Corner GROUND ELEV. ____
DRILLING CONTRACTOR Pierson LOGGED BY BLP DEPTH TO GROUND WATER 19.0'
TYPE OF RIG Mobile B-61 HOLE DIAMETER 6" HAMMER WEIGHT AND FALL 140 lb - 30"
SURFACE CONDITIONS short lawn grass TOTAL DEPTH 40.0 NO. CORE BOXES —

DEPTH	CLASS.	FIELD DESCRIPTION	SAMPLE	SPT (6")	DRILL MODE	PIEZO.	CORE REC. %	REMARKS
0.0	SP	0.0-7.0 SAND: Dark Yellowish Brown (10YR4/2) < 5% non plastic fines; ~95% fine to medium-grained sand; subrounded to subangular; damp to moist.			HS			Set up and started drilling at 11:20
2.0								
4.0		4.0 - Sand is loose.		3	DR			Drove 2" modified sampler at 4.0'
			S-1	3			100	Recovery = 1.5/1.5
		5.5 - Sand grades to a Dark Yellowish Orange (10YR6/6)		4				
6.0					HS			
	SM	7.0-10.5 SILTY SAND: Pale Yellowish Brown (10YR6/2) ~20% non plastic fines; ~80% fine to v. fine-grained sand; micaceous; damp.						
8.0								
10.0					DR			Drove 2" modified sampler at 10.0'
	ML	10.5-11.5 lense of slightly cemented clayey silt (Very dense)		21				
			S-2	27			30	Recovery = 1.2/1.5
				29				
12.0	SP	11.5-40.0 SAND: Light Olive Gray (5Y6/1) < 5% non plastic fines; ~95% fine to coarse-grained sand; subangular to subrounded; micaceous; medium dense to dense; moist.			HS			
14.0								
16.0								
18.0								
20.0								

▽

PROJECT T.I.D. Almond Towers DATE DRILLED 12/22/93 HOLE NO. B-2

DEPTH	CLASS.	FIELD DESCRIPTION	SAMPLE	SPT (6")	DRILL MODE	PIEZO.	CORE REC. %	REMARKS
20.0	SP	11.5 - 40.0 SAND cont.			HS			
22.0								
24.0								
26.0								
28.0								
30.0								
32.0								
34.0								
36.0								
38.0								
40.0								

SHEET 2 OF 2

CONDOR EARTH TECHNOLOGIES
21563 Brian Lane
P.O. Box 3905
Sonora, CA 95370
(209) 532-0361
FAX (209) 532-0773

Soil and Bedrock Log

PROJECT T.I.D. Almond Towers DATE DRILLED 12/22/93 HOLE NO. B-3
LOCATION North Tower NE-Corner GROUND ELEV. —
DRILLING CONTRACTOR Pierson LOGGED BY BLP DEPTH TO GROUND WATER Dry
TYPE OF RIG Mobile-B-61 HOLE DIAMETER 6" HAMMER WEIGHT AND FALL 140lb - 30"
SURFACE CONDITIONS Sand TOTAL DEPTH 11.5' NO. CORE BOXES —

DEPTH	CLASS.	FIELD DESCRIPTION	SAMPLE	SPT (6")	DRILL MODE	PIEZO.	CORE REC. %	REMARKS
0.0	SP	0.0 - 8.0 SAND: Dark Yellowish Brown (10YR4/2) < 5% non plastic fines; ~95% fine to medium-grained sand; subrounded to subangular; damp to moist.			HS			set up and started drilling at 10:22
2.0								
4.0		4.0 - grades medium dense.		4	DR			Drove 2" modified Sampler at 4.0'
	ML	4.8 - 5.2 lenses of sandy silt	S-1	5			80	Recovery = 1.2/1.5
	SP			7				
6.0		6.0 - Sand grades to a Dark Yellowish Orange 10YR6/6			HS			
8.0	SM	8.0 - 11.0 SILTY SAND: Pale Yellowish Brown (10YR 4/2) ~20% non plastic fines; ~80% fine to v. fine-grained sand; micaceous; medium dense; damp						
10.0				7	DR			Drove standard penetrometer at 10.0'
	ML	11.0 - 11.5 - lense of slightly cemented clayey silt.	S-2	10			100	Recovery = 1.5/1.5
12.0				17				

SHEET 1 OF 1

CONDOR EARTH TECHNOLOGIES
21663 Brian Lane
P.O. Box 3905
Sonora, CA 95370
(209) 532-0361
FAX (209) 532-0773

Soil and Bedrock Log

PROJECT T.I.D Almond Towers DATE DRILLED 12/22/93 HOLE NO. B-4
LOCATION North Tower Center of Tower Pad GROUND ELEV. ____
DRILLING CONTRACTOR Pierson LOGGED BY BLP DEPTH TO GROUND WATER Dry
TYPE OF RIG Mobile B-61 HOLE DIAMETER 6" HAMMER WEIGHT AND FALL 140 lb - 30"
SURFACE CONDITIONS short lawn grass TOTAL DEPTH 10.0 NO. CORE BOXES —

DEPTH	CLASS.	FIELD DESCRIPTION	SAMPLE	SPT (6")	DRILL MODE	PIEZO.	CORE REC. %	REMARKS
0.0	SP	0.0 - 8.0 SAND: Dark Yellowish Brown (10YR 4/2) < 5% non plastic fines; ~95% fine to medium-grained sand; subrounded to subangular; damp to moist.			HS			Set-up and started drilling at 10:55
2.0								
4.0								
6.0		6.0 - Sand grades to a Dark Yellowish Orange (10YR 6/6)						
8.0	SM	7.5 - 10.0 SILTY SAND: Pale Yellowish Brown (10YR 4/2) ~20% non plastic fines; ~80% fine to v. fine-grained sand; micaceous; damp.						
10.0								

SHEET 1 OF 1

CONDOR EARTH TECHNOLOGIES
21663 Brian Lane
P.O. Box 3905
Sonora, CA 95370
(209) 532-0361
FAX (209) 532-0773

Soil and Bedrock Log

PROJECT T.I.D Almond Towers DATE DRILLED 12/22/93 HOLE NO. B-5
LOCATION North Tower South ℄ of Pad GROUND ELEV. ____
DRILLING CONTRACTOR Pierson LOGGED BY BLP DEPTH TO GROUND WATER Dry
TYPE OF RIG Mobile B61 HOLE DIAMETER 6" HAMMER WEIGHT AND FALL 140 lb - 30"
SURFACE CONDITIONS Sand TOTAL DEPTH 10.0 NO. CORE BOXES NA

DEPTH	CLASS.	FIELD DESCRIPTION	SAMPLE	SPT (6")	DRILL MODE	PIEZO.	CORE REC. %	REMARKS
0.0	SP	0.0 - 8.5 SAND: Dark Yellowish Brown (10YR4/2) <5% non plastic fines; ~95% fine to medium-grained sand; subrounded to subangular; damp to moist.			HS			Set-up and started Drilling at 11:10
2.0								
4.0		6.5 - Sand grades to a Dark Yellowish Orange (10YR6/6)						
6.0								
8.0								
8.5	SM	8.5-10.0 SILTY SAND: Pale Yellowish Brown (10YR4/2) ~20% non plastic fines; ~80% fine to V. fine-grained sand; micaceous; damp.						
10.0								

SHEET 1 OF 1

CONDOR EARTH TECHNOLOGIES
21663 Brian Lane
P.O. Box 3905
Sonora, CA 95370
(209) 532-0361
FAX (209) 532-0773

Soil and Bedrock Log

PROJECT T.I.D. Almond Towers DATE DRILLED 12/22/93 HOLE NO. B-6
LOCATION South Tower - Center of Pad GROUND ELEV. ____
DRILLING CONTRACTOR Pierson LOGGED BY BLP DEPTH TO GROUND WATER 19.0 W.S. 18.0 A.B.
TYPE OF RIG Mobile HOLE DIAMETER 6" HAMMER WEIGHT AND FALL 140 lb - 30"
SURFACE CONDITIONS Short Grass TOTAL DEPTH 40.0' NO. CORE BOXES —

DEPTH	CLASS.	FIELD DESCRIPTION	SAMPLE	SPT (6")	DRILL MODE	PIEZO.	CORE REC. %	REMARKS
0.0	SP	0.0 - 12.0 SAND: Dark Yellowish Brown (10YR 4/2) <10% non plastic fines; ~90% fine to medium-grained sand; subrounded to sub-angular; loose to medium dense; damp.	S-1	2 2 5	DR			Set-up and started drilling at 1:18
2.0					HS DR		100	Drove standard penetrometer at surface Recovery = 1.5/1.5
			S-2	4 5 6				Drove 2" modified Sampler at 2.0'
4.0		4.0 - Sand grades to a Pale Brown (5YR 5/2)			HS DR		80	Recovery = 1.2/1.5
			S-3	5 6 7				Drove standard penetrometer at 4.0'
	SM	5.0 - 5.5 - lense of sandy silt					100	Recovery = 1.5/1.5
	SP				HS			
6.0	SM	5.5 - 8.0 - Scattered inter-bedded zones of slightly cemented sandy silt	S-4	8 9 9	DR			Drove 2" modified sampler at 6.0'
	SP						80	Recovery = 1.2/1.5
	SM							
	SP				HS			
8.0		8.0 - Sand grades to a Light Olive Gray (5Y 5/2)			DR			Drove standard penetrometer at 9.0'
			S-5	5 7 9			100	Recovery = 1.5/1.5
10.0	ML	10.0 - lense of sandy silt						
	SP				HS			
12.0	SM	12.0 - 27.0 SILTY SAND: Light Olive Gray (5Y 5/2) ~20% non to slightly plastic fines; ~80% fine to v. fine grained sand; micaceous; medium dense; moist to wet.						
			S-6	13 7 9	DR		33	Drove 2" modified Sampler at 14.0' Recovery = .5/1.5
14.0								
16.0								
		17.0 - 27.0 - Scattered inter-bedded zones of sandy silts and clayey silts						Drove standard penetrometer at 19.0'
18.0								
		19.0 water saturated sample at 19.0'	S-7	7 9			100	Recovery = 1.5/1.5
20.0								

PROJECT T.I.D. Almond Towers DATE DRILLED 12/22/93 HOLE NO. B-6

DEPTH	CLASS.	FIELD DESCRIPTION	SAMPLE	SPT (6")	DRILL MODE	PIEZO.	CORE REC. %	REMARKS
20.0	ML SM	12.0 - 27.0 SILTY SAND: (Cont.) 20.0 - 20.5 - lense of clayey silt.	S-7	11	DR HS		100	
22.0								
24.0								
26.0								
	SP	27.0 - 40.0 SAND: Light olive Gray (5Y 5/2) <10% non plastic fines; +90% fine to coarse-grained sand; subangular to sub-rounded; micaceous; saturated						
28.0								
30.0								
32.0								
34.0								
36.0								
38.0								
40.0								
42.0								

SHEET 2 OF 2

CONDOR EARTH TECHNOLOGIES
21663 Brian Lane
P.O. Box 3905
Sonora, CA 95370
(209) 532-0361
FAX (209) 532-0773

Soil and Bedrock Log

PROJECT T.I.D. Almond Towers DATE DRILLED 12/22/93 HOLE NO. B-7
LOCATION South Tower SE corner of Pad GROUND ELEV. —
DRILLING CONTRACTOR Pierson LOGGED BY BLP DEPTH TO GROUND WATER Dry
TYPE OF RIG Mobile B-61 HOLE DIAMETER 6" HAMMER WEIGHT AND FALL 140lb - 30"
SURFACE CONDITIONS short grass TOTAL DEPTH 10.0' NO. CORE BOXES —

DEPTH	CLASS.	FIELD DESCRIPTION	SAMPLE	SPT (6")	DRILL MODE	PIEZO.	CORE REC. %	REMARKS
0.0	SP	0.0-4.5 SAND: Dark Yellowish Brown (10YR 4/2); <10% non plastic fines; ~90% fine to medium-grained sand; subangular to sub-rounded; damp			HS			Set up and started drilling at 3:20
2.0		2.0 - sand grades Moderate Yellowish Brown (10YR 5/4) medium dense.						
4.0				9	DR			Drove 2" modified sampler at 4.0'
	ML	4.5-10.0 SANDY SILT: Very Pale Orange (10YR 8/2) ~80% non plastic fines; ~20% fine to v.fine-grained sand; dense; dry to damp.	S-1	17			13	Recovery = 12/1.5
6.0				16	HS			
8.0								
10.0								

SHEET 1 OF 1

CONDOR EARTH TECHNOLOGIES
21663 Brian Lane
P.O. Box 3905
Sonora, CA 95370
(209) 532-0361
FAX (209) 532-0773

Soil and Bedrock Log

PROJECT T.I.D. Almond Towers DATE DRILLED 12/22/93 HOLE NO. B-8
LOCATION South Tower SW corner of Pad GROUND ELEV. ____
DRILLING CONTRACTOR Pierson LOGGED BY BLP DEPTH TO GROUND WATER Dry
TYPE OF RIG Mobile B-61 HOLE DIAMETER 6" HAMMER WEIGHT AND FALL 140 lb - 30"
SURFACE CONDITIONS Short grass TOTAL DEPTH 10.0' NO. CORE BOXES —

DEPTH	CLASS.	FIELD DESCRIPTION	SAMPLE	SPT (6")	DRILL MODE	PIEZO.	CORE REC. %	REMARKS
0.0	SP	0.0 - 10.0 SAND: Dark Yellowish Brown (10YR 4/2) < 10% non plastic fines; ~ 90% fine to medium - grained sand; subangular to subrounded; medium dense; damp			HS			Set up and started drilling at 3:40
2.0			S-1	6 5 5	DR		90	Drove 2" modified sampler at 2.0' Recovery = 1.2/1.5
4.0		4.5 - Sand grades Moderate Brown (5YR 4/4)			HS			
6.0			S-2	12 11 13	DR		80	Drove 2" modified sampler at 6.0' Recovery = 1.2/1.5
	ML	6.4 - 7.5 lense of sandy silt						
8.0	SP	8.0 - Sand grades Light olive Gray (5Y 5/2)			HS			
10.0								
12.0								

SHEET 1 OF 1

CONDOR EARTH TECHNOLOGIES
21663 Brian Lane
P.O. Box 3905
Sonora, CA 95370
(209) 532-0361
FAX (209) 532-0773

Soil and Bedrock Log

PROJECT T.I.D Almond Towers DATE DRILLED 12/22/93 HOLE NO. B-9
LOCATION South Tower NW Corner GROUND ELEV. ____
DRILLING CONTRACTOR Pierson LOGGED BY BLP DEPTH TO GROUND WATER Dry
TYPE OF RIG Mobile B-61 HOLE DIAMETER 6" HAMMER WEIGHT AND FALL 140 lb - 30"
SURFACE CONDITIONS Short Grass TOTAL DEPTH 10.5 NO. CORE BOXES —

DEPTH	CLASS.	FIELD DESCRIPTION	SAMPLE	SPT (6")	DRILL MODE	PIEZO.	CORE REC. %	REMARKS
0.0	SP	0.0 - 10.0 SAND: Dark Yellowish Brown (10YR 4/2) < 10% non plastic fines; ~90% fine to medium-grained sand; subangular to subrounded; loose; damp			HS			Set up and started drilling at 2:35
2.0			S-1	6 4 4	DR		100	Drove standard penetrometer at 2.0' Recovery = 1.5/1.5
4.0					HS			
6.0		5.0 - Sand grades to a Moderate Yellowish Brown (10YR 5/4)						
8.0	SM	8.0 - 10.5 - zones of slightly cemented sandy silt						Drills stiff
					DR			Drove 2" modified sampler at 9.0'
10.0	SP		S-2	10 9 13			80	Recovery = 1.2/1.5
12.0								

SHEET 1 OF 1

CONDOR EARTH TECHNOLOGIES
21663 Brian Lane
P.O. Box 3905
Sonora, CA 95370
(209) 532-0361
FAX (209) 532-0773

Soil and Bedrock Log

PROJECT T.I.D. Almond Towers DATE DRILLED 12/22/93 HOLE NO. B-10
LOCATION South Tower NE Corner GROUND ELEV. —
DRILLING CONTRACTOR Pierson LOGGED BY BLP DEPTH TO GROUND WATER — dry
TYPE OF RIG Mobile B-61 HOLE DIAMETER 6" HAMMER WEIGHT AND FALL 140 lb - 30"
SURFACE CONDITIONS Short Grass TOTAL DEPTH 10.0 NO. CORE BOXES —

DEPTH	CLASS.	FIELD DESCRIPTION	SAMPLE	SPT (6")	DRILL MODE	PIEZO.	CORE REC. %	REMARKS
0.0	SP	0.0 – 3.5 SAND: Dark Yellowish Brown (10YR 4/2); < 10% non plastic fines; ~90% fine to medium-grained sand; subrounded to subangular; damp.			HS			Set-up and started drilling at 3:00
2.0								
4.0	SM	3.5 – 10.0 SILTY SAND: Pale Yellowish Brown (10YR 6/2); ~20% non plastic fines; ~80% fine to v. fine-grained sand; micaceous; medium dense; dry to damp.						
6.0			S-1	6	DR		100	Drove standard penetrometer at 6.0'
				10				Recovery = 1.5/1.5
8.0				11	HS			
10.0								

SHEET 1 OF 1

APPENDIX B

UNIT DRY WEIGHT TEST RESULTS

CONDOR

CONDOR EARTH TECHNOLOGIES, INC.

Geotechnical Services
Engineering Services
Environmental Services
Waste Management

Air Quality Investigations
Ground Water Supply Assessments
Planning Services
Site Assessments

21663 Brian Lane, P.O. Box 3905 Sonora, CA 95370 (209) 532-0361 Fax. (209) 532-0773
1125 No. Golden State Blvd., P.O. 3448 Turlock, CA 95381 (209) 668-9234 Fax. (209) 668-9248

Test Designation: DRY DENSITY AND MOISTURE CONTENT

Project #: 783

Project: T.I.D. - ALMOND POWER PLANT TOWER

Date: December 27, 1993

Sample #	B-3 S-1	B-3 S-1	B-2	B-2	B-9 S-2	B-9 S-2	B-8 S-1	B-8 S-1
Date								
Depth (ft.)	4.5'-5.0'	5.0'-5.5'	10.5'-11.0'	11.0'-11.5'	9.5'-10.0'	10.0'-10.5'	2.5'-3.5'	3.0'-3.5'
By	BP	BP	BP	BP	BP	BP	BP	BP
Sample Location	N. Tower N/E Corner	N. Tower N/E Corner	N. Tower N/W Corner	N. Tower N/W Corner	South Tower	South Tower	South Tower	South Tower
Dia. Sleeve (in.)	1.94	1.94	1.94	1.94	1.94	1.940	1.940	1.940
Length Sleeve (in.)	6.00	6.00	6.00	6.00	6.00	6.00	6.00	6.00
Tare Length (in.)	0.65	1.50	0.00	0.00	0.20	0.02	1.00	0.00
Sample Length (in.)	5.35	4.50	6.00	6.00	5.80	5.98	5.00	6.00
Volume (cu. in.)	15.81	13.30	17.74	17.74	17.14	17.68	14.78	17.74
Volume (cu. ft.)	0.0092	0.0077	0.0103	0.0103	0.0099	0.0102	0.0086	0.0103
Gross wt. (gms.)	625.5	550.0	677.8	739.1	651.5	568.5	580.8	663.3
Tare wt. (gms.)	162.0	161.7	161.6	161.6	161.5	161.1	162.1	162.1
Soil wt. wet (gms.)	463.5	388.3	516.2	577.5	490.0	407.4	418.7	501.2
Soil wt. (lbs.)	1.02	0.86	1.14	1.27	1.08	0.90	0.92	1.11
Wet Density (pcf)	111.1	111.2	110.9	124.1	108.9	87.8	108.0	107.7
Dry Density (pcf)	97.3	97.4	95.5	105.7	101.8	74.3	102.2	102.4
Tare #	AK	AN	AG	AM	AH	AI	TE	DS
Wet wt. & Tare (gms.)	578.4	502.7	628.2	689.9	596.2	620.8	523.9	609.4
Dry wt. & Tare (gms.)	520.7	454.6	556.6	604.6	564.8	542.6	501.6	584.8
Wt. of Water (gms.)	57.7	48.1	71.6	85.3	31.4	78.2	22.3	24.6
Wt. of Tare (gms.)	115	114.4	114.1	115.2	112.8	113.5	105.4	108.3
Wt. dry Soil (gms.)	405.7	340.2	442.5	489.4	452	429.1	396.2	476.5
Moisture Content%	14.2	14.1	16.2	17.4	6.9	18.2	5.6	5.2

Remarks

File:783UW1

CONDOR

CONDOR EARTH TECHNOLOGIES, INC.

Geotechnical Services
Engineering Services
Environmental Services
Waste Management

Air Quality Investigations
Ground Water Supply Assessments
Planning Services
Site Assessments

21663 Brian Lane, P.O. Box 3905 Sonora, CA 95370 (209) 532-0361 Fax. (209) 532-0773
1125 No. Golden State Blvd., P.O. 3448 Turlock, CA 95381 (209) 668-9234 Fax. (209) 668-9248

Test Designation: DRY DENSITY AND MOISTURE CONTENT

Project: T.I.D. - ALMOND POWER PLANT TOWER

Date: December 27, 1993

Sample #	B-1 S-2	B-1 S-2	B-1 S-4	B-1 S-4	B-1 S-6	B-1 S-6	B-6 S-2	B-6 S-2
Date								
Depth (ft.)	2.5'-3.0'	3.0'-3.5'	6.5'-7.0'	7.0'-7.5'	14.5'-15.0'	15.0'-15.5'	2.5'-3.0'	3.0'-3.5'
By	BP	BP	BP	BP	BP	BP	BP	BP
Sample Location	North Tower	North Tower	North Tower	North Tower	North Tower	North Tower	South Tower	South Tower
Dia. Sleeve (in.)	1.94	1.94	1.94	1.94	1.94	1.940	1.940	1.940
Length Sleeve (in.)	6.00	6.00	6.00	6.00	6.00	6.00	6.00	6.00
Tare Length (in.)	0.40	0.12	0.00	2.30	0.00	0.00	0.90	1.75
Sample Length (in.)	5.60	5.88	6.00	3.70	6.00	6.00	5.10	4.25
Volume (cu. in.)	16.55	17.38	17.74	10.94	17.74	17.74	15.08	12.56
Volume (cu. ft.)	0.0096	0.0101	0.0103	0.0063	0.0103	0.0103	0.0087	0.0073
Gross wt. (gms.)	678.9	741.6	675.9	473.1	632.1	619.6	571.0	492.6
Tare wt. (gms.)	175.8	176.0	162.2	160.6	161.9	161.7	161.9	161.0
Soil wt. wet (gms.)	503.1	565.6	513.7	312.5	470.2	457.9	409.1	331.6
Soil wt. (lbs.)	1.11	1.25	1.13	0.69	1.04	1.01	0.90	0.73
Wet Density (pcf)	115.6	124.0	110.4	108.9	101.1	98.4	103.4	100.6
Dry Density (pcf)	107.4	112.8	102.3	103.8	97.7	95.1	98.3	96.1
Tare #	AF	AJ	AE	AL	AD	AP	AB	UP
Wet wt. & Tare (gms.)	611.2	677.9	626	426.5	584.6	570.9	521.3	436.8
Dry wt. & Tare (gms.)	575.5	626.7	588.5	411.9	569	555.5	501	421.9
Wt. of Water (gms.)	35.7	51.2	37.5	14.6	15.6	15.4	20.3	14.9
Wt. of Tare (gms.)	108.2	113	113.2	114.2	114	114	112.2	105.4
Wt. dry Soil (gms.)	467.3	513.7	475.3	297.7	455	441.5	388.8	316.5
Moisture Content%	7.6	10.0	7.9	4.9	3.4	3.5	5.2	4.7

Remarks

File:783UW2

CONDOR

CONDOR EARTH TECHNOLOGIES, INC.

Geotechnical Services
Engineering Services
Environmental Services
Waste Management

Air Quality Investigations
Ground Water Supply Assessments
Planning Services
Site Assessments

21663 Brian Lane, P.O. Box 3905 Sonora, CA 95370 (209) 532-0361 Fax. (209) 532-0773
1125 No. Golden State Blvd., P.O. 3448 Turlock, CA 95381 (209) 668-9234 Fax. (209) 668-9248

Test Designation: DRY DENSITY AND MOISTURE CONTENT

Project #: 783

Project: T.I.D. - ALMOND POWER PLANT TOWER

Date: December 27, 1993

Sample #	B-6 S-4	B-6 S-4	B-6 S-6	B-8 S-2	B-8 S-2			
Date								
Depth (ft.)	6.5'-7.0'	7.0'-7.5'	15.0'-15.5'	6.5'-7.0'	7.0'-7.5'			
By	BP	BP	BP	BP	BP			
Sample Location	South Tower	South Tower	South Tower	South Tower	South Tower			
Dia. Sleeve (in.)	1.94	1.94	1.94	1.94	1.94			
Length Sleeve (in.)	6.00	6.00	6.00	6.00	6.00			
Tare Length (in.)	0.00	0.70	0.30	0.04	0.04			
Sample Length (in.)	6.00	5.30	5.70	5.96	5.96			
Volume (cu. in.)	17.74	15.67	16.85	17.62	17.62			
Volume (cu. ft.)	0.0103	0.0091	0.0098	0.0102	0.0102			
Gross wt. (gms.)	648.3	585.6	709.4	653.8	620.7			
Tare wt. (gms.)	162.2	161.8	160.9	161.9	161.8			
Soil wt. wet (gms.)	486.1	423.8	548.5	491.9	458.9			
Soil wt. (lbs.)	1.07	0.93	1.21	1.08	1.01			
Wet Density (pcf)	104.1	103.0	124.0	106.3	99.2			
Dry Density (pcf)	95.5	98.7	111.0	99.5	93.0			
Tare #	JJ	BB	BC	BD	BA			
Wet wt. & Tare (gms.)	650.6	612.9	738.2	680.6	648			
Dry wt. & Tare (gms.)	610.4	595.4	680.6	649.2	619.5			
Wt. of Water (gms.)	40.2	17.5	57.6	31.4	28.5			
Wt. of Tare (gms.)	165.1	189.8	190.5	189.1	189.4			
Wt. dry Soil (gms.)	445.3	405.6	490.1	460.1	430.1			
Moisture Content%	9.0	4.3	11.8	6.8	6.6			

Remarks

File:783UW3

CONDOR

APPENDIX C

SAFETY ORDERS FOR DRILLED SHAFTS

§ 1542. Shafts.

(a) General.

(1) All wells or shafts over 5 feet in depth into which employees are permitted to enter shall be retained with lagging, spiling, or casing.

EXCEPTION: Exploration shafts; see Section 1542(d).

(2) The lagging, spiling or casing shall extend at least one foot above ground level and shall be provided the full depth of the shaft or at least five feet into solid rock if possible.

(3) All wells, pits, shafts, caissons, etc. shall be barricaded or securely covered.

(4) Upon completion of exploration and similar operations, temporary wells, pits, shafts, etc., shall be backfilled.

(b) Small Shafts in Hard Compact Soil.

Two–inch (nominal) cribbing may be used in square shafts not over 4 feet square in hard compact soil. Each member shall be cut 1/2 way through the width of the member and dovetailed into position so each member will act as a shore as well as lagging. Strips shall be nailed in each corner to prevent the boards from dropping down.

(c) Shafts in Other Than Hard Compact Soil.

(1) A system of lagging supported by braces and corner posts shall be used for square or rectangular shafts. Corner posts of 4–inch by 4–inch material are normally acceptable in shafts 4 feet square, or smaller, if they are braced in each direction with horizontal 4–inch by 4–inch members at intervals not exceeding 4 feet. Braces and corner posts in larger shafts shall be correspondingly larger as determined by a civil engineer.

(2) Round shafts shall be completely lagged with 2–inch material which is supported at intervals not greater than 4 feet by means of adjustable rings of metal or timber that are designed to resist the collapsing force, or cased in a manner that provides equivalent protection.

(d) Exploration Shafts. Only a geotechnical specialist shall be permitted to enter an exploration shaft without lagging, spiling or casing for the purpose of subsurface investigations under the following conditions:

(1) Initial Inspection. The type of materials and stability characteristics of the exploration shaft shall be personally observed and recorded by the geotechnical specialist during the drilling operation. Potentially unsafe exploration shafts shall not be entered.

(2) Surface Casing. The upper portion of the exploration shaft shall be equipped with a surface ring–collar to provide casing support of the material within the upper 4 feet of the exploration shaft. The ring–collar shall extend at least 1–foot above the ground surface.

(3) Gas Tests. Prior to entry into exploration shafts, tests and/or procedures shall be instituted to assure that the atmosphere within the shaft does not contain dangerous air contamination or oxygen deficiency. These tests and/or procedures shall be maintained while working within the shaft to assure that dangerous air contamination or oxygen deficiency will not occur. (See Section 5156 of the General Industry Safety Orders.)

(4) Unstable Local Conditions. The geotechnical specialist shall not descend below any portion of any exploration shaft where caving or groundwater seepage is noted or suspected.

(5) Ladder and Cable Descents. A ladder may be used to inspect exploration shafts 20 feet or less in depth. In deeper exploration shafts, properly maintained mechanical hoisting devices with a safety factor of at least 6 shall be provided and used. Such devices shall be under positive control of the operator being positive powered up and down with fail–safe brakes.

(6) Emergency Standby Employee. An emergency standby employee shall be positioned at the surface near the exploration shaft opening whenever a geotechnical specialist is inside the shaft.

(7) Communication. A two–way, electrically–operated communication system shall be in operation between the standby employee and the geotechnical specialist whenever boring inspections are being made in exploration shafts over 20 feet in depth or when ambient noise levels make communication difficult.

(8) Safety Equipment. The following safety equipment shall be used to protect the geotechnical specialist:

(A) An approved safety harness which will suspend a person upright and that is securely attached to the hoist cable.

(B) A 12–inch to 18–inch diameter steel coneshaped headguard/deflector that is attached to the hoist cable above the harness.

(C) A hoist cable having a minimum diameter of 5/16 inches.

(D) Approved head protection. (See Section 1515.)

(9) Electrical Devices. All electrical devices used within the exploration shaft by the geotechnical specialist shall be approved for hazardous locations.

(10) Surface Hazards. The storage and use of flammable or other dangerous materials shall be controlled at the surface to prevent them from entering the exploration shaft.

NOTE: Authority cited: Section 142.3, Labor Code. Reference: Section 142.3, Labor Code.

HISTORY

1. Amendment of subsection (e) filed 5–21–75; effective thirtieth day thereafter (Register 75, No. 21).
2. Amendment filed 8–23–82; effective thirtieth day thereafter (Register 82, No. 35).
3. Amendment of subsection (a) and new subsection (e) filed 11–12–82; effective thirtieth day thereafter (Register 82, No. 46).
4. Repealer of subsection (a) NOTE, adoption of subsections (a)(3) and (a)(4), repealer of subsection (d) text and relettering filed 8–26–91; operative 9–25–91 (Register 92, No. 13).
5. Change without regulatory effect amending subsection (a)(1) filed 8–19–92; operative 8–19–92 (Register 92, No. 34).
6. Editorial correction of printing error restoring designation of subsection (d) (Register 92, No. 34).
7. Change without regulatory effect amending subsection (a)(1) Exception filed 2–22–93; operative 3–24–93 pursuant to title 1, section 100, California Code of Regulations (Register 93, No. 9).

§ 1543. Cofferdams.

(a) If overtopping of the cofferdam by high waters is possible, means shall be provided for controlled flooding of the work area.

(b) Warning signs for evacuation of employees in case of emergency shall be developed and posted.

(c) Cofferdam walkways, bridges, or ramps with at least two means of rapid exit, shall be provided with guardrails as specified in Section 1620.

(d) Cofferdams located close to navigable shipping channels shall be protected from vessels in transit, where possible.

NOTE: Authority cited: Section 142.3, Labor Code. Reference: Section142.3, Labor Code.

HISTORY

1. New section filed 1–13–87; effective thirtieth day thereafter (Register 87, No. 3). For history of former section, see Registers 82, No. 35 and 70, No.48.
2. Adoption of NOTE filed 8–26–91; operative 9–25–91 (Register 92, No. 13).

§ 1544. Earthwork and Excavating.

NOTE: Authority cited: Section 142.3, Labor Code. Reference: Section 142.3, Labor Code.

HISTORY

1. Amendment of subsections (a), (d) and (e) filed 8–23–82; effective thirtieth day thereafter (Register 82, No. 35).
2. Repealer filed 8–26–91; operative 9–25–91 (Register 92, No. 13).

§ 1545. Overburden.

NOTE: Authority cited: Section 142.3, Labor Code. Reference: Section 142.3, Labor Code.

HISTORY

1. Amendment of subsection (a) filed 8–23–82; effective thirtieth day thereafter (Register 82, No. 35).
2. Repealer filed 8–26–91; operative 9–25–91 (Register 92, No. 13).

§ 1546. Face Inspection and Control.

NOTE: Authority cited: Section 142.3, Labor Code. Reference: Section 142.3, Labor Code.

HISTORY

1. Amendment of subsections (a), (d) and (e) filed 8–23–82; effective thirtieth day thereafter (Register 82, No. 35).
2. Repealer filed 8–26–91; operative 9–25–91 (Register 92, No. 13).

§ 1547. Protection of Workers at the Face.

NOTE: Authority cited: Section 142.3, Labor Code. Reference: Section 142.3, Labor Code.

HISTORY

1. Amendment filed 8–23–82; effective thirtieth day thereafter (Register 82, No. 35).

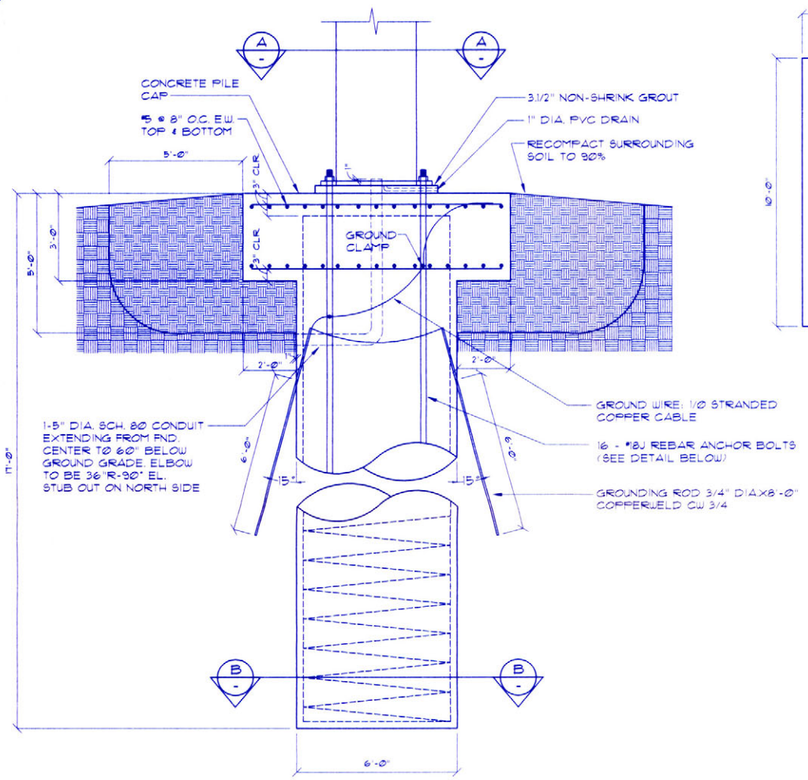

PIER FOUNDATION ELEVATION - 60'-0" POLE
SCALE: 3/8"=1'-0"

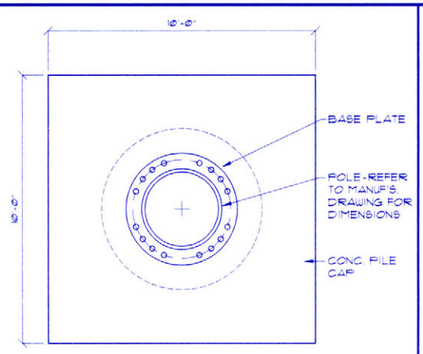

SECTION 'AA'
SCALE: 3/8"=1'-0"

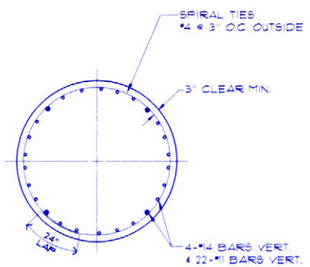

SECTION 'BB'
SCALE: 3/8"=1'-0"

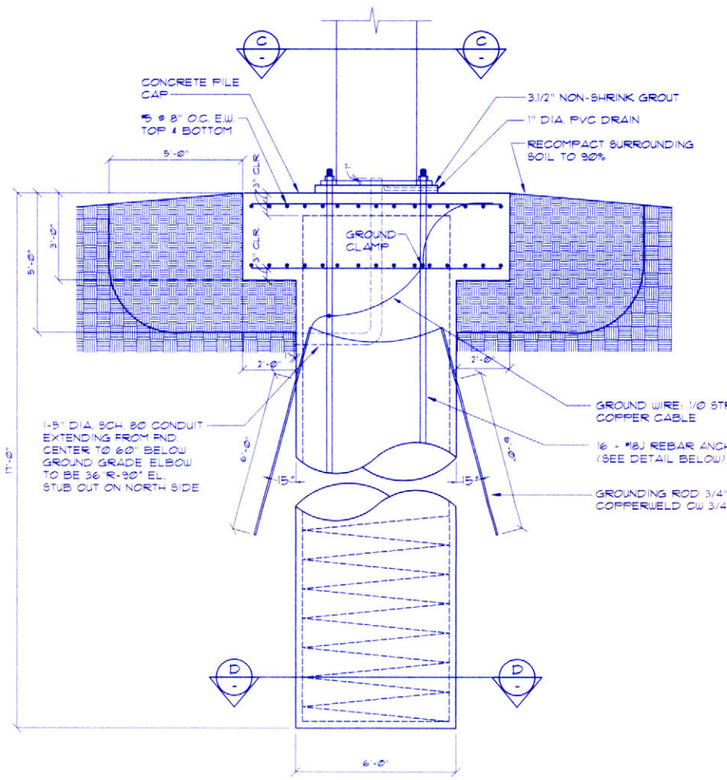

PIER FOUNDATION ELEVATION - 65'-0" POLE
SCALE: 3/8"=1'-0"

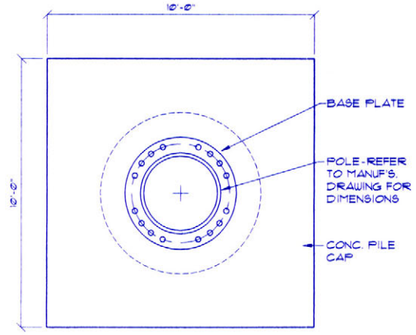

SECTION 'CC'
SCALE: 3/8"=1'-0"

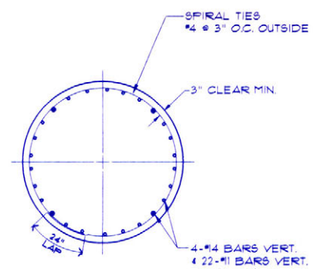

SECTION 'DD'
SCALE: 3/8"=1'-0"

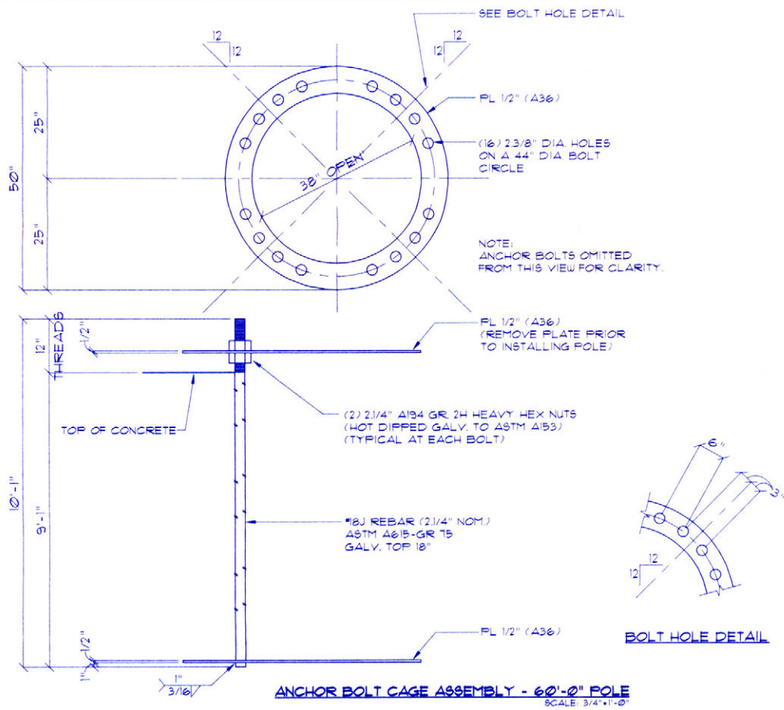

ANCHOR BOLT CAGE ASSEMBLY - 60'-0" POLE
SCALE: 3/4"=1'-0"

BOLT HOLE DETAIL

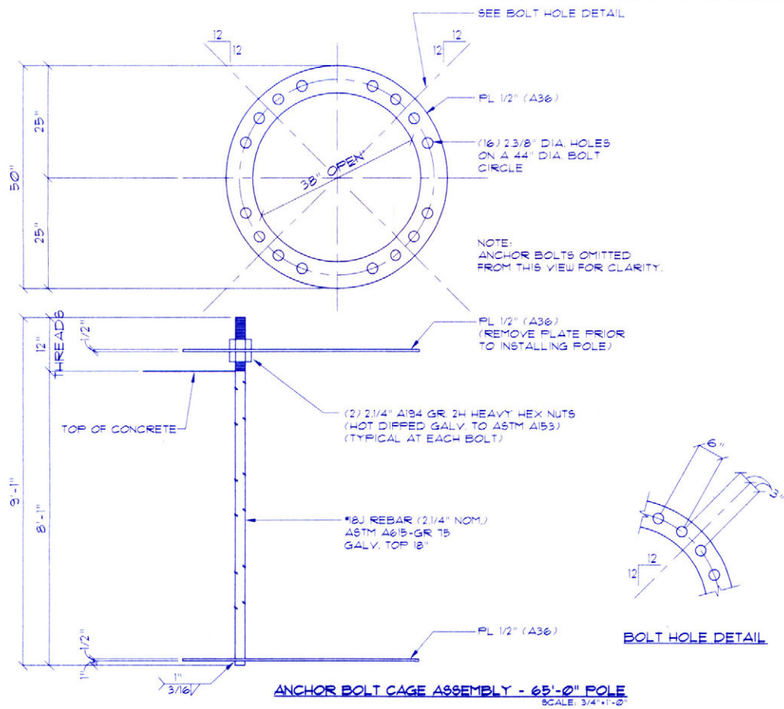

ANCHOR BOLT CAGE ASSEMBLY - 65'-0" POLE
SCALE: 3/4"=1'-0"

BOLT HOLE DETAIL

FOUNDATION NOTES:

CODES AND SPECIFICATIONS

1. CONCRETE: ALL CONCRETE WORK SHALL BE IN ACCORDANCE WITH BUILDING CODE REQUIREMENTS FOR REINFORCED CONCRETE (ACI-318-77), THE MANUAL FOR STANDARD PRACTICE FOR DETAILING REINFORCED CONCRETE STRUCTURES (ACI-315-74) AND THE PROJECT SPECIFICATIONS.
2. ANCHOR CAGE SETTING TOLERANCES SHALL BE IN ACCORDANCE WITH SPECIFICATIONS.
3. LOCATIONS OF STRUCTURES SHOULD BE VERIFIED WITH TURLOCK IRRIGATION DISTRICT.
4. WHENEVER HOLE IS OVEREXCAVATED FOR ANY REASON, THE VOLUME OF OVEREXCAVATION SHALL BE FILLED WITH CONCRETE.
5. FINISH SOILS GRADE AROUND COMPLETED PIER TO BE SLOPED AT 2% MIN. TO DRAIN AWAY FROM PIER.
6. THE 1/0 STRANDED COPPER GROUNDING WIRE SHALL BE CLAMPED TO TWO BOLTS OF THE ANCHOR ASSEMBLY, COILED ONE COMPLETE LOOP AROUND THE REINFORCING CAGE AND CADWELDED TO THE GROUND RODS. THE GROUNDING WIRE SHALL SHALL BE WIRE TIED TO EACH VERTICAL REINFORCING BAR.
7. THE MINIMUM INSIDE DIAMETER OF THE REBAR CAGE IS 60" TO ALLOW THE LARGEST ANCHOR BOLT CLUSTER TO FIT.

CONCRETE NOTES:

MATERIALS

1. CONCRETE: DRILLED PIER f'c = 3000 PSI
   VERTICAL REINFORCING: ASTM A615, GRADE 60
   TIE STEEL: ASTM A615, GRADE 60

CONCRETE PROTECTION OF REINFORCING

2. REINFORCING SHALL HAVE A MINIMUM 3-INCH CONCRETE COVER FROM SIDE OF PIER. VERTICAL REINFORCING STEEL SHALL HAVE A 5-INCH CLEARANCE FROM BOTTOM OF THE EXCAVATED SHAFT.

MINIMUM SPACING OF REINFORCING

3. THE CLEAR DISTANCE BETWEEN PARALLEL BARS SHALL NOT BE LESS THAN 1.1/2", WHICHEVER IS LARGER.

CE
CARLTON ENGINEERING INC.
CIVIL
STRUCTURAL
LAND SURVEYING
P.O. Box 1426
Shingle Springs
California 95682
(916) 677-5515

REGISTERED PROFESSIONAL ENGINEER
CHARLES E. CARLTON
No. 21663
CIVIL
STATE OF CALIFORNIA
EXP. 12/31/97
12/31/97

STRUCTURAL ONLY

REV	DATE	BY	DESCRIPTION

TURLOCK IRRIGATION DISTRICT
ALMOND POWER PLANT
FOUNDATION PLANS FOR 60' AND 65' POLES
CERES, CALIFORNIA

ENVIRONMENTAL - GEOLOGICAL - ENGINEERING - GEOTECHNICAL
CONDOR
21663 Brian Lane
P.O. Box 45370
Sonora, CA 95370
(209) 532-0361 fax 532-0773

JOB #:	CET 763
DATE:	2/22/94
SCALE:	SHOWN
DRAWN:	WKP
CHECKED:	CEC
APPROVED:	
FILE #:	TI763S01

SHEET S1

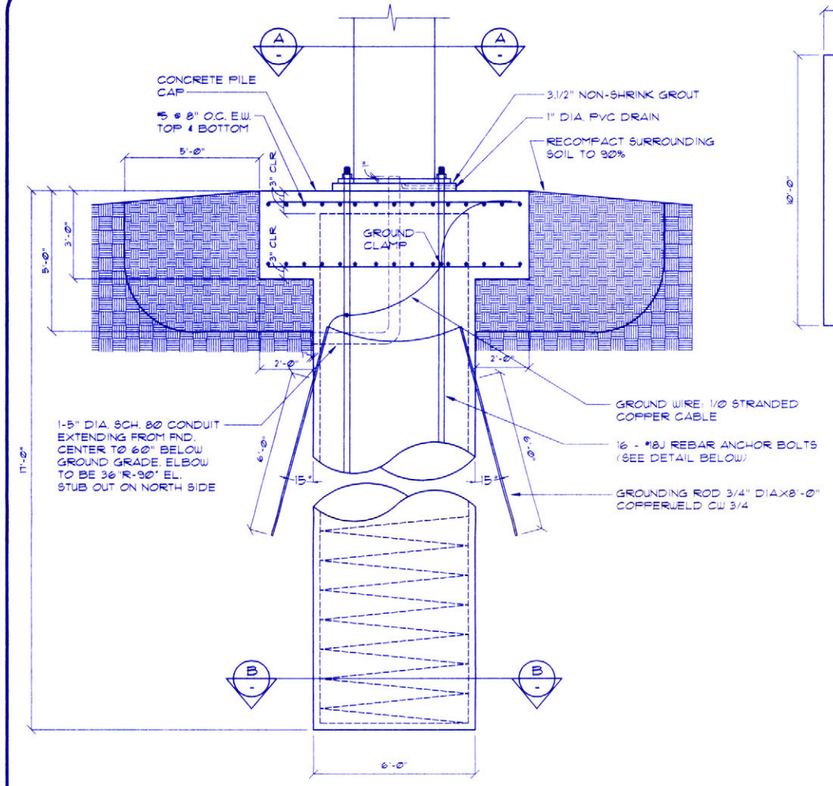

PIER FOUNDATION ELEVATION - 60'-0" POLE
SCALE: 3/8"=1'-0"

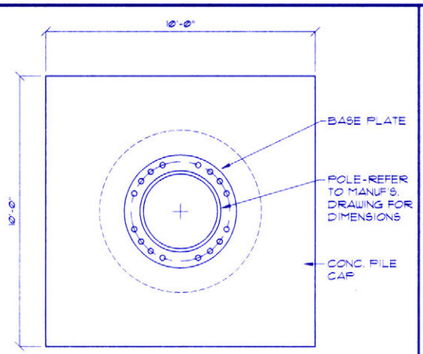

SECTION 'AA'
SCALE: 3/8"=1'-0"

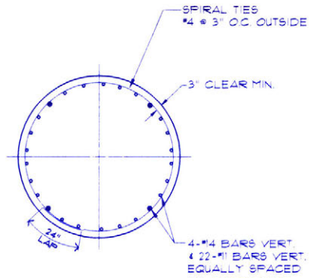

SECTION 'BB'
SCALE: 3/8"=1'-0"

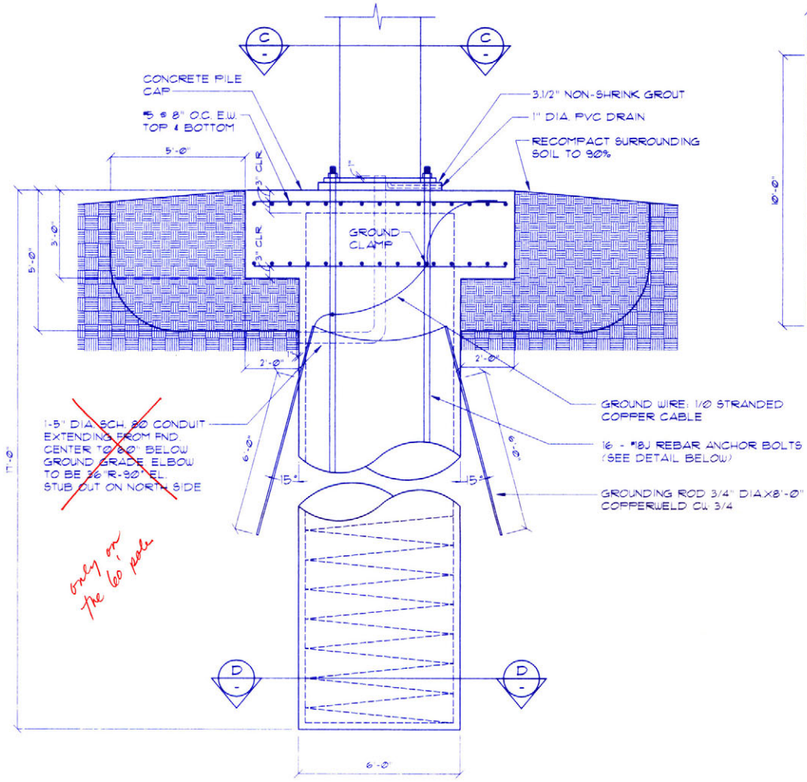

PIER FOUNDATION ELEVATION - 65'-0" POLE
SCALE: 3/8"=1'-0"

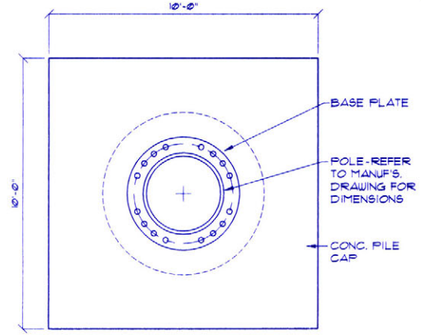

SECTION 'CC'
SCALE: 3/8"=1'-0"

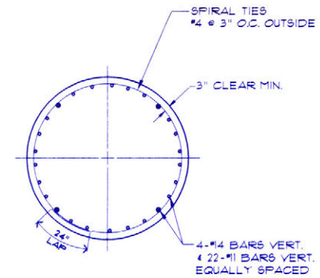

SECTION 'DD'
SCALE: 3/8"=1'-0"

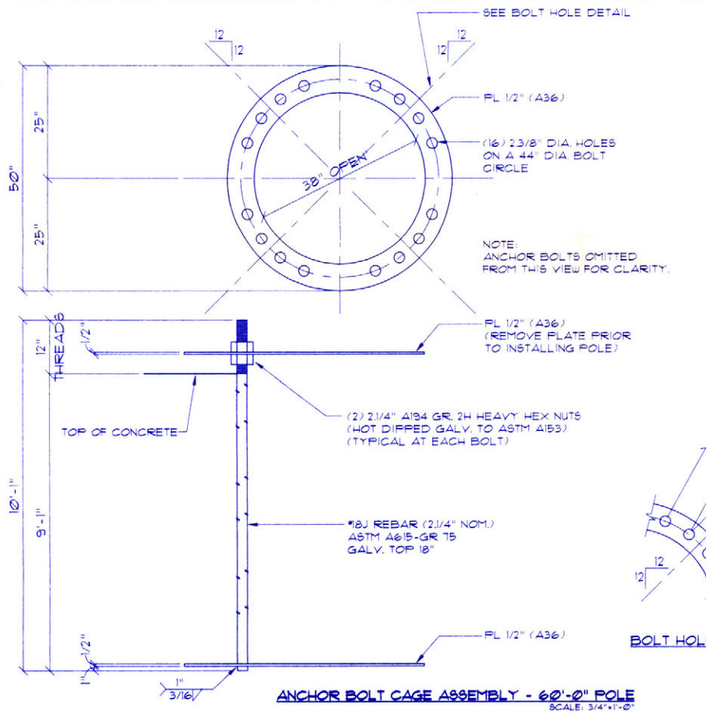

ANCHOR BOLT CAGE ASSEMBLY - 60'-0" POLE
SCALE: 3/4"=1'-0"

BOLT HOLE DETAIL

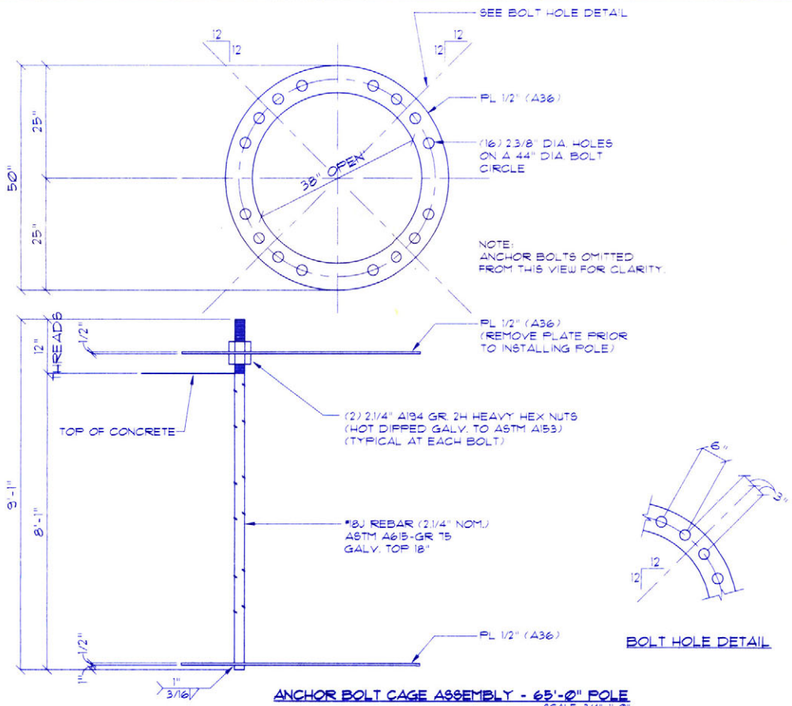

ANCHOR BOLT CAGE ASSEMBLY - 65'-0" POLE
SCALE: 3/4"=1'-0"

BOLT HOLE DETAIL

FOUNDATION NOTES:

CODES AND SPECIFICATIONS

1. CONCRETE: ALL CONCRETE WORK SHALL BE IN ACCORDANCE WITH BUILDING CODE REQUIREMENTS FOR REINFORCED CONCRETE (ACI-318-77), THE MANUAL FOR STANDARD PRACTICE FOR DETAILING REINFORCED CONCRETE STRUCTURES (ACI-315-74) AND THE PROJECT SPECIFICATIONS.
2. ANCHOR CAGE SETTING TOLERANCES SHALL BE IN ACCORDANCE WITH SPECIFICATIONS.
3. LOCATIONS OF STRUCTURES SHOULD BE VERIFIED WITH TURLOCK IRRIGATION DISTRICT.
4. WHENEVER HOLE IS OVEREXCAVATED FOR ANY REASON, THE VOLUME OF OVEREXCAVATION SHALL BE FILLED WITH CONCRETE.
5. FINISH SOILS GRADE AROUND COMPLETED PIER TO BE SLOPED AT 2% MIN. TO DRAIN AWAY FROM PIER.
6. THE 1/0 STRANDED COPPER GROUNDING WIRE SHALL BE CLAMPED TO TWO BOLTS OF THE ANCHOR ASSEMBLY, COILED ONE COMPLETE LOOP AROUND THE REINFORCING CAGE AND CADWELDED TO THE GROUND RODS. THE GROUNDING WIRE SHALL SHALL BE WIRE TIED TO EACH VERTICAL REINFORCING BAR.
7. THE MINIMUM INSIDE DIAMETER OF THE REBAR CAGE IS 60" TO ALLOW THE LARGEST ANCHOR BOLT CLUSTER TO FIT.

CONCRETE NOTES:

MATERIALS

1. CONCRETE: DRILLED PIER f'c = 3000 PSI
   VERTICAL REINFORCING: ASTM A615, GRADE 60
   TIE STEEL: ASTM A615, GRADE 60

CONCRETE PROTECTION OF REINFORCING

2. REINFORCING SHALL HAVE A MINIMUM 3-INCH CONCRETE COVER FROM SIDE OF PIER. VERTICAL REINFORCING STEEL SHALL HAVE A 5-INCH CLEARANCE FROM BOTTOM OF THE EXCAVATED SHAFT.

MINIMUM SPACING OF REINFORCING

3. THE CLEAR DISTANCE BETWEEN PARALLEL BARS SHALL NOT BE LESS THAN 1 1/2", WHICHEVER IS LARGER.

CE
CARLTON ENGINEERING INC.
CIVIL STRUCTURAL LAND SURVEYING
P.O. Box 1426
Shingle Springs
California 95682
(916) 677-5515

REGISTERED PROFESSIONAL ENGINEER — STATE OF CALIFORNIA — CIVIL — 12/31/17

structural only.

REVN	DATE	BY	DESCRIPTION

TURLOCK IRRIGATION DISTRICT
ALMOND POWER PLANT
FOUNDATION PLANS FOR 60' AND 65' POLES
CERES, CALIFORNIA

ENVIRONMENTAL · GEOLOGICAL · ENGINEERING · GEOTECHNICAL
CONDOR
21663 Brian Lane
Suite 200
Sonora, CA. 95370
(209) 532-0361 fax 532-0173

JOB #:	CET 783
DATE:	2/22/84
SCALE:	SHOWN
DRAWN:	WKP
CHECKED:	
APPROVED:	
FILE #:	7837DWG1

SHEET S1