Throughout this Application, all references to Federal Power, Federal Power Avenal, LLC, and Federal Power Avenal refer to Avenal Power Center, LLC.

Table of Contents Page No.

LIST OF TABLES/LIST OF FIGURES ii
6.15 HAZARDOUS MATERIALS HANDLING 6.15-1
6.15.1 EXISTING CONDITIONS 6.15-2
6.15.2 IMPACTS 6.15-4
6.15.2.1 Construction Impacts 6.15-8
6.15.2.2 Operations Impacts 6.15-9
6.15.2.2.1 Fire and Explosion Risks 6.15-9
6.15.2.2.2 Hazardous Materials Requiring Offsite Consequence Analysis 6.15-10
6.15.2.2.3 Offsite Consequence Analysis 6.15-11
6.15.2.2.4 Worst-Case Release Scenario 6.15-11
6.15.2.2.5 Alternative Release Scenario 6.15-13
6.15.2.2.6 Emission Rate and Meteorological Conditions 6.15-13
6.15.2.2.7 Modeling Methodology 6.15-15
6.15.2.2.8 Modeling Results 6.15-16
6.15.2.2.9 Impacts of Other Hazardous Materials 6.15-17
6.15.2.2.10 General Operating Practices 6.15-19
6.15.2.2.11 Spill Response Procedures 6.15-20
6.15.2.3 Cumulative Impacts 6.15-22
6.15.2.4 Project Design Features 6.15-22
6.15.3 MITIGATION MEASURES 6.15-23
6.15.4 SIGNIFICANT UNAVOIDABLE ADVERSE IMPACTS 6.15-23
6.15.5 LAWS, ORDINANCES, REGULATIONS AND STANDARDS (LORS) COMPLIANCE 6.15-23
6.15.6 REFERENCES 6.15-25

List of Tables Page No.

6.15-1 Operations Hazardous Materials 6.15-6
6.15-2 Accidental Release Scenario 6.15-14
6.15-3 Example Table of Contents Spill Prevention Control and Countermeasures Plan .. 6.15-21
6.15-4 Hazardous Materials Handling LORS and Compliance 6.15-24
6.15-5 Administrative Agency Contacts and Permitting/Approval Authorities for Hazardous Materials Handling 6.15-25

List of Figures

6.15-1 Aqueous Ammonia Storage Design Features ..... End of Section
6.15-2 Worst-Case Accidental Release Evaporation Rate of Ammonia ..... End of Section
6.15-3 Alternative Accidental Release: Ammonia Evaporation Rate ..... End of Section
6.15-4 Level of Concern Concentration Distances Worst-Case Scenario ..... End of Section
6.15-5 Level of Concern Concentration Distances Alternative Scenario ..... End of Section

List of Acronyms

8.0 AVENAL ACRONYMS 8-1

6.15 HAZARDOUS MATERIALS HANDLING

This section discusses hazardous materials handling for the Project. Design features have been incorporated into the Project regarding the storage and use of hazardous materials to assure that potential impacts are less than significant. Hazardous wastes are discussed in Section 6.14 - Waste Management. After a hazardous material arrives onsite and is used, it may turn into a hazardous waste, requiring disposal or treatment at an appropriately licensed facility.

Beneficial design features of the Project that keep potential impacts below a level of significance include the following:

- Choice of an aqueous, rather than anhydrous, form of ammonia to reduce consequences if there were an accidental release.
- Choice of 19.0 percent (by weight) aqueous ammonia concentration to further reduce potential hazard from the usual commercial concentration of 29.4 percent (by weight).
- Secondary containment for the aqueous ammonia storage and the associated tank truck unloading facility, limiting the area of potential spread of an accidental release.
- Underground containment (tertiary) vault that would collect an accidental release from a secondary containment basin, reducing the ability of the ammonia to vaporize into the atmosphere.
- Large, 24-inch (manhole-size) drain at the bottom center of the sloped secondary containment area and 10-inch drain at the bottom of the truck unloading ramp, combined with direct entry into the underground vault to reduce the time available for ammonia to volatilize from an exposed pool of liquid.
- Use of high-density polyethylene (HDPE) balls to reduce ammonia evaporation, either from an exposed liquid surface or from the underground containment vault.

Several programs will be established as a part of the Project to address hazardous materials storage locations, emergency response procedures, employee training requirements, hazard recognition, fire control procedures, hazard communications training, personal protection equipment training and release reporting requirements. The program of employee training for safe handling of hazardous materials will include both initial and refresher training to assure that appropriate personnel are kept up to date on coordination with response agencies, proper use of onsite emergency response equipment, and hazardous materials information contained in the Business Plan, Spill Prevention Control and Countermeasure Plan, and Stormwater Pollution Prevention Plan. The Business Plan will contain emergency response plans and procedures for

plant personnel to follow in the event of a hazardous material release, fire, flood, earthquake or explosion. Maps, diagrams, contacts, teams, first aid and a description of the Incident Command System will be included.

Aqueous ammonia is the only hazardous material associated with the Project that will be present in sufficient quantity to require offsite consequence analysis of a hypothetical accidental release. Specific engineering design features have been included in the Project to keep substances that could result in public health impacts from reaching the nearest residence, sensitive receptors, or other offsite receptors and, as a result, to keep impacts below a level of significance. Therefore, the Project qualifies for Program 1, the least hazardous designation under California Accidental Release Prevention (Cal-ARP).

A discussion of how facility closure would be accomplished in the event of premature or unexpected cessation of operations is provided in Section 4.0 – Premature or Unexpected Cessation of Operations.

6.15.1 EXISTING CONDITIONS

The Site is located on farmland approximately 2 miles east of Interstate 5, and approximately 6 miles northeast of the business and residential districts of the City of Avenal, Kings County. A variety of hazardous materials are used in the general area around the Site. The City of Avenal water treatment plant is located adjacent to the northeast corner of the Site. The water treatment plant uses hazardous materials, including chlorine. Agricultural uses that surround the Site utilize hazardous materials, including fuel and oil, fertilizers and pesticides. Major transportation corridors, including Interstate 5, carry truck traffic transporting hazardous materials. A regional natural gas pipeline corridor occurs adjacent to Interstate 5. The Kettleman compressor station, located approximately 7,000 feet southwest of the Site, compresses natural gas to facilitate its transport along this pipeline corridor.

Section 112(r) of the Clean Air Act established the federal program to manage the risks of hazardous materials and the potential offsite consequences of an accidental release. The California Office of Emergency Services established the Cal-ARP Program to carry out the federal requirements. The Cal-ARP Program specifies those hazardous materials and quantities that require preparation of a RMP and analysis of offsite consequences.

The Cal-ARP Program defines three program levels with different requirements, depending on the accident history and potential impact of releases of regulated substances. The Program

requires that the owner or operator coordinate closely with the administering agency to determine the appropriate level of documentation required for an RMP. At a minimum, the RMP includes one worst-case release scenario and offsite consequence analysis for each process utilizing a Regulated Substance, a 5-year accident history for the process, assurance that response actions have been coordinated with local emergency planning and response agencies, and certification that no additional measures are necessary to prevent offsite impacts from accidental releases.

Under Program 1, an RMP will be developed and approved prior to the arrival of aqueous ammonia at the Site. This RMP will include the following minimum requirements:

- Description of the worst-case and alternative release scenarios and offsite consequence analysis.
- Documentation that the nearest public receptor(1) is beyond the distance to the toxic endpoint for aqueous ammonia.
- Documentation that, during the past 5 years, the processes using aqueous ammonia have had no accidental release that caused offsite impacts.(2)
- Assurance that response actions have been coordinated with local emergency planning and response agencies.
- Certification that "no additional measures are necessary to prevent offsite impacts from accidental releases."

No sensitive receptors, such as schools, day-care facilities and long-term health care facilities, are located within 6 miles of the Site. The nearest hospital, Coalinga Regional Medical Center, is located approximately 15 miles from the Site. The nearest residence is located 1.1 miles to the northeast of the aqueous ammonia storage facility. The nearest public receptor is the Avenal water treatment plant located adjacent to the northeast corner of the Site at a distance of 950 feet from the aqueous ammonia facility. Because there are no potentially affected schools, hospitals, day-care facilities, emergency response facilities, or long-term health care facilities, this section does not provide a map of such facilities. Various maps of the Project vicinity demonstrating the absence of these types of facilities are provided in Section 6.9 - Land Use.

(1) A public receptor is defined as "...offsite residences, institutions (e.g., schools, hospitals), industrial, commercial, and office buildings, … parks, or recreational areas inhabited or occupied by the public at any time without restriction by the stationary source where members of the public could be exposed to toxic concentrations, radiant heat, or overpressure, as a result of an accidental release."

(2) Offsite impacts for the purpose of the 5-year accidental release history include death, injury, or response or restoration activities for an exposure of an environmental receptor (CCR Title 19, Division 2, Chapter 4.5, Section 2735.4).

6.15.2 IMPACTS

Significance criteria were determined on the basis of the CEQA Guidelines, Appendix G, Environmental Checklist Form, and on performance standards and thresholds adopted by responsible agencies. An impact may be considered significant if the Project:

- Creates a significant hazard to the public or the environment through the routine transport, use or disposal of a hazardous material.
- Creates a significant hazard to the public or the environment through reasonably foreseeable upset and accident conditions involving the release of a hazardous material into the environment.
- Emits hazardous emissions or involves handling a hazardous material, substance or waste within 1/4 mile of an existing or proposed school.
- Is located on a site which is included on a list of hazardous materials sites compiled pursuant to Government Code Section 65962.5 and, as a result, creates a significant hazard to the public or the environment.
- Impairs implementation of, or physically interferes with, an adopted emergency response plan or emergency evacuation plan.

Hazardous materials expected to be used for ongoing Project operations include aqueous ammonia, petroleum products, flammable and compressed gases, water treatment chemicals, and minor amounts of solvents and paints. An inventory of hazardous material types, quantities and locations onsite will be included and kept up-to-date in the Business Plan to be prepared for the Project in accordance with requirements of CCR Title 19, Division 2, Chapter 4, Article 4. Table 6.15-1 lists each expected type of hazardous material, along with its application, maximum quantity, phase, Chemical Abstracts Service (CAS) number, nature of its hazards and RMP thresholds.

The quantity of each hazardous material in Table 6.15-1 that is evaluated for possible risk management regulation is the maximum quantity associated with a specific process. A "process" can be the storage, handling or use in a specific piece of equipment (e.g., electrical generator, air pollution control device). In storage, containers that are spaced sufficiently to prevent interaction with each other are considered separate processes. The maximum process-related quantity of each hazardous material is listed in Table 6.15-1, along with the threshold quantities that determine if an RMP is needed under the Cal-ARP or federal programs. Except for aqueous ammonia, each hazardous material in Table 6.15-1 will have a process-related maximum quantity lower than Cal-ARP thresholds and, hence, will not require an RMP.

Aqueous ammonia and other hazardous materials will be transported to the Project by licensed vendors. Because these hazardous materials are transported in interstate commerce, they are not

the responsibility of an individual customer (e.g., Federal Power). The number and size of routine hazardous materials deliveries to the Site are provided in Tables 6.11-5 and 6.11-6 in Section 6.11 - Traffic and Transportation.

The remainder of this page is intentionally blank.

TABLE 6.15-1

OPERATIONS HAZARDOUS MATERIALS

MATERIAL	APPLICATION OR LOCATION	PROCESS-RELATED MAXIMUM QUANTITY	MATERIAL PHASE	CAS NUMBER	HAZARDS(1)	RMP THRESHOLD QUANTITY(2) (POUNDS)	
						Cal-ARP	Federal
Acetylene	Welding	25 lbs	Gas	74-86-2	Fire, pressure	None	10,000
Aqueous Ammonia, 19.0 wt percent	NO_X Emissions Control in SCR	122,500 lbs (24,000 gal)(3)	Liquid	7664-41-7	Acute and chronic toxicity	500	20,000(4)
Mineral Insulating Oil	Electrical Transformers	412,830 lbs (15,000 gal)(5,6)	Liquid	None	Fire	None	None
Lubricating Oil	Mechanical Equipment	97,000 lbs (6,200 gal)(5,7)	Liquid	None	Fire	None	None
Ethylene Glycol	Antifreeze for Closed Cooling Water System and in Inlet Air Chillers	12,550 lbs (1,458 gal)(5,8)	Liquid	107-21-1	Chronic toxicity, moderate fire and explosive	None	None
Sulfuric Acid, 29.5 wt percent	Station and Gas Turbine Batteries	17,640 lbs (1,500 gal)(9)	Liquid	7664-93-9	Acute and chronic toxicity, reactive and corrosive	(10)	None
Cyclohexylamine (11)	Boiler Feed Water Corrosion Control	450 lbs (55 gal)(12)	Liquid	108-91-8	Fire, skin irritant, corrosive, toxicity	None	None
Morpholine(11)	Boiler Feedwater pH Control	450 (55 gal)(12)	Liquid	110-91-8	Fire, acute toxicity, corrosive skin irritant	None	None
Carbonic Dihydrazide(11)	Boiler Feedwater Dissolved Oxygen Control	3,400 lbs (400 gal)	Liquid	497-18-7	Irritant	None	None
Sodium Sulfite(11)	Auxiliary boiler treatment, oxygen scavenging	570 lbs (55 gal)(13)	Liquid	7757-83-7	Acute and chronic toxicity, reactive irritant	None	None

MATERIAL	APPLICATION OR LOCATION	PROCESS-RELATED MAXIMUM QUANTITY	MATERIAL PHASE	CAS NUMBER	HAZARDS(1)	RMP THRESHOLD QUANTITY(2) (POUNDS)	
						Cal-ARP	Federal
Carbon Dioxide	Generator Purging Dissolved	2,920 lbs (25,200 scf)	Gas	124-38-9	Asphyxiant, pressure	None	None
Light Petroleum Distillates	Solvent for Cleaning	310 lbs	Liquid	8002-05-9	Fire	None	None
Propane	Forklift Fuel	50 lbs	Gas	74-98-6	Fire, pressure, explosive	None	10,000
Carbon Dioxide	Fire Suppression	24,000 lbs	Liquid	124-38-9	Asphyxiant, pressure	None	None
Carbon Dioxide	HRSG Cleaning	N/A(14)	Solid	124-38-9	Asphyxiant, pressure	None	None
Hydrogen	Generator Cooling, Steam Turbine	75 lbs (14,200 scf)	Gas	1333-74-0	Fire, pressure, explosive	None	10,000
Nitrogen	Blanketing	200 scf	Gas	7727-37-9	Pressure	None	None
Diesel Fuel	Firewater Pump Engine	1,060 (150 gal)(15)	Liquid	68476-34-6	Fire	None	None
Natural Gas	Gas Turbine Generator and Duct Burner Fuel	1,300 lbs(5)	Gas	None	Fire, pressure	None	None

(1) Hazards and hazard categories are defined in 40 CFR Ch. 1, Section 370.2. Health hazards include acute (immediate) and chronic (delayed). Physical categories include air, sudden release of pressure and reactive.
(2) Threshold above which a Risk Management Plan (RMP) is required.
(3) Assumes specific gravity of 0.893 based on average annual temperature of 17.8 ºC at Lemoore (Perry and Green, 1997).
(4) If concentration ≥ 20 percent.
(5) In the equipment and pipelines.
(6) Unit conversion based on specific gravity of mineral oil = 0.88.
(7) Unit conversion based on specific gravity of lubricating oil = 0.87.
(8) Density of ethylene glycol at 15ºC is approximately 64.4 pounds per cu. ft. (ASHRAE, page 20.5, Fundamentals Handbook, 1997).
(9) Specific gravity of 29.5% wt. sulfuric acid = 1.41, based on pure specific density of 1.834 (Sax and Irving,1968).
(10) Sulfuric acid is only a Regulated Substance with a Threshold Quantity if concentrated with more than 100 pounds of sulfur trioxide or meets the definition of oleum or is in a container with flammable hydrocarbons (OES, 1998).
(11) This hazardous material is one component of a solution, whose proportion is proprietary information to the commercial vendor. The quantity of the component is set equal to the quantity of total solutions as a conservative overestimate.
(12) Specific gravity of solution containing morpholine and cyclohexylamine is 0.991 at 70°F.
(13) Specific gravity of solution containing sodium sulfite in sodium hydroxide = 1.250.
(14) N/A = Not Applicable. Carbon dioxide for HRSG cleaning will not be routinely stored onsite; cleaning will be performed by a contractor.
(15) Density = 7.085 pounds per gallon.

6.15.2.1 Construction Impacts

During Project construction, hazardous materials stored onsite will include materials common to construction sites such as paints, coatings, sealers, adhesives, lubricants, compressed gasses and fuel. These materials will be transported to the construction site on an as-needed basis by contractors. Federal Power will require all hazardous materials transport and handling to be in accordance with applicable LORS.

Federal Power and contractor personnel constructing the Project will be trained in handling hazardous materials and will be alerted to dangers associated with these materials. An onsite safety engineer will be designated to implement health and safety guidelines. Material Safety Data Sheets (MSDS) for each hazardous material will be kept onsite, and construction employees will be aware of their location and content.

Construction contractors for the Project will be required to have or develop standard operating procedures for servicing and fueling construction equipment. These procedures will, at a minimum, include the following:

- No smoking, open flames or welding will be allowed in fueling/service areas.
- Fueling, service and maintenance will be conducted only by trained personnel.
- Refueling will be conducted only with properly designed and leak-free pumps, hoses and nozzles.
- Disconnected hoses will be handled in a manner to prevent residual fuel and liquids from being released into the environment.
- Bulk fuel tanks will be provided with secondary containment.
- Pans will be placed under equipment to catch potential spills during servicing.
- Service trucks will be provided with fire extinguishers and spill containment equipment, such as absorbents.
- Spills that occur during vehicle maintenance will be cleaned up immediately. Impacted soil will be containerized and transported offsite to a permitted facility.
- Emergency phone numbers will be available onsite.
- Containers used to store hazardous materials will be properly labeled and kept in good condition.

It is anticipated that these standard operating procedures will reduce the potential for incidents involving hazardous materials during construction to a level that is less than significant. No additional measures beyond those above are needed to reduce potential impacts below a level of significance.

6.15.2.2 Operations Impacts

Hazardous materials will be used and stored onsite to support the operation of the Project. The maximum quantity of each hazardous material that will be stored or used for either an existing or proposed process is listed in Table 6.15-1, along with related information.

6.15.2.2.1 Fire and Explosion Risks

Natural gas and hydrogen, which are flammable, will be used in the operation of Project. An analysis of natural gas pipeline safety was conducted as part of an AFC prepared for the Sacramento Municipal Utility District (SMUD, 1993) and for a certificate application to the Federal Energy Regulatory Commission for the Mojave Northward Expansion Project (Woodward-Clyde, 1994). Combined, these projects represent over 800 miles of new natural gas pipeline in California, ranging in diameter from 8 inches to 40 inches. The routes proposed in both of these projects passed through areas with numerous residential units and other structures within 100 feet of the pipeline. Conclusions in both of these studies indicated that the incremental individual fatality risk related to these pipelines was substantially lower than that for fires, earthquakes, electrocution and lightning strikes in California. These conclusions are also applicable to the Project's natural gas pipeline, which will be only about 2.8 miles long and will be located under farmland devoid of residences or other public receptors. The potential for a hazardous materials impact presented by the additional 2.8 miles of natural gas pipeline is less than significant.

The risk of an onsite fire or explosion will be less than significant because of adherence to applicable fire and safety LORS and the development and implementation of effective safety management practices. To preclude the presence of an explosive mixture, gas turbines and fireboxes will be purged with air, and generators will be purged with carbon dioxide prior to start-up.

Hydrogen will be used as a generator coolant. A maximum of 75 pounds (lbs) of hydrogen will be used in the steam turbine generator. The maximum stored in each tube of a 10-tube trailer

used to deliver and store the gas will be 74.4 lbs. The trailer will be stored outside near the combustion turbine generators and, as required by applicable building and fire codes, away from potential ignition sources and not adjacent to the combustion turbine blades. The tubes are designed so that a loss of one to physical damage or fire is not likely to cause the loss of other tubes.

Hydrogen will not require an RMP because the maximum quantity stored or used in an onsite process will be less than the threshold of 10,000 lbs that would define it as a federal regulated substance. The potential for impacts presented by the onsite hydrogen is less than significant because the maximum process-related amount of 75 lbs is only approximately 0.7 percent of the threshold requiring further action (i.e., preparation of an RMP).

Other gases stored and used at the facility include those typically used for maintenance activities such as shop welding and emissions monitoring (e.g., acetylene). The potential for impacts presented by the use of these gases at the facility is less than significant, based on the following:

- The gases will be stored in multiple standard-sized portable cylinders, in contrast to a single larger cylinder, generally limiting the quantity released from an individual cylinder failure to less than 200 standard cubic feet.
- The gases will be stored in U.S. DOT-approved safety cylinders, secured to prevent upset and physical damage.
- Incompatible gases (e.g., flammable gases and oxidizers) will be stored separately.
- Applicable LORS for storage and safety will be followed.

6.15.2.2.2 Hazardous Materials Requiring Offsite Consequence Analysis

Aqueous ammonia will be the only hazardous substance present in sufficient quantity to be a state regulated substance subject to requirements of the Cal-ARP program. Aqueous ammonia (19.0 percent solution) for the Project will be stored in two 27,000-gallon (24,000-gallon administrative limit) aboveground storage tanks.

6.15.2.2.3 Offsite Consequence Analysis

This section outlines the contents of an offsite consequence analysis, which is an evaluation of potential acute public health impacts from an accidental release of aqueous ammonia. Detailed calculations for this analysis are included in Appendix 6.15-1.

The offsite consequence analysis was performed for the following two hypothetical accidental release scenarios: "worst case" and "alternative." An alternative scenario is included because it is at least conceivable, even if improbable; in contrast, the worst-case scenario is so unlikely as to be almost impossible. For each scenario, distances to specified concentrations of ammonia were modeled. If specified "level of concern" concentrations at ground level reach offsite, then potential public health impacts would need to be evaluated.

The offsite consequence analysis includes four components. The first is to describe the scenario in enough detail to allow quantitative analysis. The description includes passive features designed to minimize emissions. The second component is to estimate emission rates associated with each scenario. The third component is to use atmospheric dispersion modeling to predict the distances to the levels of concern in each scenario. The fourth component assesses the potential degree and extent of offsite consequences of the concentrations computed by the dispersion modeling.

The following sections describe the worst-case release scenario, alternative release scenario, estimation of emission rates and selection of meteorological parameters to be used as inputs to the modeling, the atmospheric dispersion modeling methodology and results, including an exposure assessment if receptors outside the Site could be reached by level-of-concern concentrations.

6.15.2.2.4 Worst-Case Release Scenario

Potential accidental release scenarios due to aqueous ammonia handling and use include losses from a storage tank, losses during unloading of a tank truck to a storage tank, losses in the aqueous ammonia delivery system from the storage tank to the vaporizers, and losses of vaporized ammonia during delivery to the SCR catalyst beds. Because of safety shut-offs to these last two subsystems, potential ammonia release quantities from these delivery system components in the event of an upset condition are small compared to losses from a storage tank or from tank truck unloading.

The proposed location of the storage tanks and unloading facility are shown in Figure 2.3-3 in Section 2.0 - Project Description and Engineering. The worst case release is the hypothetical instantaneous release of a full storage tank induced by some improbable catastrophic event. Regardless of the near impossibility of this occurrence, the worst case release scenario is one of the storage tanks instantaneously releasing its full 24,000 gallons of aqueous ammonia into its containment area, formed by a wall around the perimeter of the maximum 52-foot by 24-foot area (see Figure 6.15-1). This individual tank containment design serves as a passive control system to limit to 1,248 square feet (ft^2) the potential maximum area of volatilization of any accidental release of aqueous ammonia.

Because the area available for volatilization directly affects the emission rate, another passive design feature has been included to further reduce the emission rate and potential offsite consequences of an accidental release. Two layers of industrial-grade HDPE balls will be placed in the bottom of each of the two 1,248 ft^2 containment structures (see Figure 6.15-1). The balls will be approximately 1.5 to 3 inches in diameter. If aqueous ammonia were accidentally released from a storage tank, the liquid would pass between the balls and spread out on the concrete base. The floating balls would reduce the area available for volatilization to approximately one-tenth of the total surface area of liquid. The balls would not be wetted by the solution because of their hydrophobic property. The balls would also block the wind, another parameter that affects the rate of volatilization, greatly reducing the wind speed at the surface of the liquid. The analysis presented herein overestimates impact distance by not taking into account this reduction in wind speed, which cannot be calculated in a straightforward way.

Another passive design feature is included to reduce the length of time ammonia could volatilize from the secondary surface containment area. The bottom of each containment is sloped toward its center, where a 24-inch-diameter manhole-sized drain drops directly into an underground tertiary containment vault (see Figure 6.15-1). The same vault is also connected by a 10-inch pipe to a drain in the center of the ramped containment of the tank truck unloading facility. The vault will be able to contain at least 28,750 gallons, which is the sum of the 24,000 gallons of aqueous ammonia in one storage tank plus the volume of rainwater potentially collected from the 24-hour, 25-year storm. A 1-inch square wire mesh screen is placed on top of each manhole drain to prevent the plastic balls from falling through.

6.15.2.2.5 Alternative Release Scenario

The alternative release scenario is loss of aqueous ammonia during unloading of a tank truck. A connector in the unloading piping is assumed to come apart, allowing the aqueous ammonia to flow out freely through 3-inch piping. In this scenario, the rate at which the aqueous ammonia escapes from the tank truck is determined by the 3-inch size of the piping used for unloading. The maximum volume of 8,000 gallons in the tank truck is assumed to flow out into an area 21 feet long (i.e., one-half the length of the truck's tank) by 16 feet wide, which is limited by the concrete sidewalls along the unloading ramp (see Figure 6.15-1). This assumption is an overestimate because the resulting time period to drain the total 8,000 gallons is 31 minutes. In reality, it is expected that the driver and facility person present during unloading, both of whom will be trained to respond to such a spill event, will be able to stop such a release within 30 seconds to a few minutes, at most. The released aqueous ammonia would flow down the sloping base of the concrete ramp to the centrally located 10-inch-diameter drain connected to the vault.

The liquid does not accumulate to cover more of the ramp area because the area of the drain is over 11 times larger than the cross-section of the leaking coupling. Also, administrative controls (e.g., written instructions such as standard operating procedures), physical indicators (e.g., truck position beepers), and physical constraints (e.g., unloading pipe length) will assure that the unloading connector is no further than 21 feet from the drain in the center of the ramp.

6.15.2.2.6 Emission Rate and Meteorological Conditions

This section provides an estimation of emission rates and selection of meteorological parameters to be used as inputs to the modeling. The fundamental equation for the emission rate of ammonia vapor from an aqueous solution is given by the following (USEPA, 1999):

$$E = \frac{0.284 U^{0.78} M^{2/3} A P}{82.05 T} \qquad \text{(Equation 1)}$$

where E = emission rate of ammonia [MT^{-1}] (lbs per)

U = wind speed [LT^{-1}] (meters per second)

M = molecular weight of ammonia [M $mole^{-1}$] (grams per gram-mole)

A = surface area of spilled liquid pool [L^2] (ft^2)

P = vapor pressure of ammonia above liquid [$ML^{-1}\ T^{-2}$] (millimeters Hg)

T = temperature of liquid [Ø] (°Kelvin)

Note: For the above, brackets [ ] give dimensions of the variable, in which M = mass, T = time, L = length and Ø = temperature. Parentheses ( ) give example units for the variable.

The wind speed used in the equation is taken from measurements made at the standard height of 10 meters (33 ft). This wind speed is greater than it would be closer to the surface of the liquid and, hence, results in a higher emission rate.

The temperature of the liquid is assumed to be the same as the air temperature. This assumption overestimates the temperature of the liquid because: (1) the air temperature used is a worst-case meteorological conditions (111 degrees Fahrenheit [ºF]); and (2) the thermal inertia of a tank of liquid prevents it from heating up as high as the transient maximum air temperature. The temperature and other meteorological conditions that are used in modeling the two release scenarios are shown in Table 6.15-2.

Atmospheric stability is another important meteorological parameter used in modeling the dispersion of the ammonia that vaporizes from the liquid. The worst-case stability (i.e., most stable) classification is F, for which the atmosphere has the least mixing and, hence, the ammonia concentration would remain highest as the vapor is carried downwind.

TABLE 6.15-2

ACCIDENTAL RELEASE SCENARIO

METEOROLOGICAL CASE	METEOROLOGICAL PARAMETER	UNITS	RELEASE SCENARIO	
			WORST-CASE STORAGE TANK LOSS	ALTERNATIVE CASE: TANK TRUCK UNLOADING SPILL
Worst-Case (Cal-ARP)	Stability(1)	None	F	NA
	Wind Speed(1)	Meters per second	1.5	NA
	Temperature	Degrees Fahrenheit	111(3)	NA
	Relative Humidity	Percent	55(4)	NA
Average (Federal and Cal-ARP)(2)	Stability	None	NA	D(5)
	Wind Speed	Meters per second	NA	2.5(5)
	Temperature	Degrees Fahrenheit	NA	64(5)
	Relative Humidity	Percent	NA	55(4)

(1) Specified by Cal-ARP.
(2) Alternative release scenario is run with average meteorological conditions.
(3) Temperature is the highest 1-hour observation in 1992-1997 data from Lemoore ISC3 dataset.
(4) Relative humidity is arithmetic mean of 1963 to 1993 data taken morning and afternoon at Fresno, and afternoon at Bakersfield, and 19 years of morning Bakersfield data.
(5) Arithmetic means calculated from 1992-1997 hourly data from Lemoore monitoring station in ISC3 format.

The requirement that the worst case use a combination of the maximum observed temperature and maximum stability is so severe that it actually would not occur. The maximum 1-hour average temperature occurs during the afternoon when the air is unstable. In contrast, F stability occurs during nighttime or early morning before sunrise, when temperature is lowest.

The low wind speed of 1.5 meters per second (m/sec) is a Cal-ARP requirement. Low wind speed results in a low volatilization rate, as can be seen in Equation 1, but also results in reduced dispersion of the vapor as it is carried downwind.

Evaporation rate for the worst-case scenario (see Figure 6.15-2) is calculated iteratively over 1- to 10-second steps. The evaporation rate is constant during the time the aqueous ammonia pool drops in height as it drains down into the tertiary vault for 140 seconds. The rate decreases as the top of the liquid moves down the sloping bottom surface, causing the surface area of the ammonia to decrease. The emission rate becomes negligible when the liquid drains out completely after 157 seconds. After that, the area of volatilization for the aqueous ammonia from the underground tertiary containment vault is only the area of the two 24-inch drains, as reduced by the balls and underlying grating, and one 10-inch drain.

A simplification of the time-dependent emission rate of ammonia for the alternative release scenario is shown in Figure 6.15-3. The initial emission rate of 179 grams per second (g/sec) is the maximum because that is when the height of the liquid, which produces the driving force, or head, is highest. The liquid spill rate is held constant at its maximum for the full time period (1,894 sec) it takes for the 8,000 gallons to leak out of the truck. In reality, as the aqueous ammonia flows out of the 3-inch disconnected coupling, the level in the tank truck will drop continuously. The resulting drop in pressure head decreases the liquid leak rate and the area of sloping surface covered by liquid and, hence, available for volatizing ammonia. The volatilization rate from the 10-inch-diameter drain at the top of the underground tertiary containment vault is negligible.

6.15.2.2.7 Modeling Methodology

This section describes the atmospheric dispersion modeling methodology. The DEGADIS model is used to simulate atmospheric dispersion of ammonia vapor. This EPA-approved model computes concentrations at various distances from inputs of time-dependent emission rates and

constant meteorological conditions (e.g., 111°F, 1.5 m/sec wind speed, and F stability). The model is adjusted for the neutrally-buoyant ammonia vapor.

DEGADIS is an iterative (time-stepping) model that can accept time-dependent emission rates such as calculated for the two accidental release scenarios (see Figures 6.15-2 and 6.15-3). The model assumes that the low wind speed blows in any one direction during the period of volatilization, so that the resulting distances to specified concentrations are represented as circles around the emission "point" (e.g., ammonia storage and unloading area). Distances are computed to the two "level of concern" concentrations used as public health thresholds. The detailed modeling is presented in Appendix 6.15-1. Results are summarized in the next section.

6.15.2.2.8 Modeling Results

The two following level-of-concern concentrations have been identified to characterize public health impacts associated with the hypothetical release of aqueous ammonia:

- ERPG-2: The ERPG-2 concentration for ammonia is 200 ppmv, averaged over 1 hour. It is defined as the maximum airborne concentration below which it is believed that nearly all individuals could be exposed for up to 1 hour without experiencing irreversible or other serious health effects or symptoms that could impair an individual's ability to take protective action.
- Short-Term Public Emergency Limit (STPEL): The STPEL is a concentration set by the National Research Council at 75 ppmv, averaged over 30 minutes. The Commission uses this concentration as a guideline to assess potential acute health impacts due to ammonia exposures. Concentrations below 75 ppmv for 30 minutes are believed to have no human health or environmental impacts and, therefore, are insignificant.

Figures 6.15-4 and 6.15-5 show the distances to the two level-of-concern concentrations for the worst-case and alternative scenarios, respectively. The ERPG-2 concentration of 200 ppmv remains onsite in both scenarios. The STPEL concentration of 75 ppmv does not reach a residence or other public receptor in either scenario, although it extends offsite about 200 feet to the east. Sensitive receptors and emergency response facilities are not known to occur in the Site vicinity and, hence, do not show in Figures 6.15-4 and 6.15-5.

The application of several passive design features incorporated into the Project successfully keeps the STPEL concentrations from reaching the closest residence or other public receptor.

Therefore, the potential impacts of these hypothesized accidental release scenarios are less than significant.

Federal Power will be eligible for Cal-ARP Program 1 because it meets the following requirements:

- "The distance to a toxic endpoint or flammable endpoint for a worst-case release is less than the distance to any public receptor." The toxic endpoint (i.e., ERPG-2 concentration) is 200 ppmv, or 0.14 milligrams of ammonia per liter of air (mg/L).
- "For the 5 years prior to the submission of an RMP, the process has not had an accidental release of a regulated substance where exposure to the substance, its reaction products, overpressure generated by an explosion involving the substance, or radiant heat generated by a fire involving the substance has led to any of the following offsite consequences:
  - Death,
  - Injury, or
  - Response or restoration activities for an exposure of an environmental receptor."
- Emergency response procedures will be coordinated between the stationary source and local emergency planning and response organizations.

In summary, no significant offsite consequences at receptors of public health concern will occur from the worst-case or alternative release scenarios because Project design features sufficiently reduce the likelihood and consequences of such releases. As discussed in Section 6.17 - Worker Safety, workers at the Project are trained to avoid and respond to accidental releases of hazardous materials, including ammonia. The Project design and worker training reduce the safety hazard from an accidental aqueous ammonia release to a level that is less than significant.

6.15.2.2.9 Impacts of Other Hazardous Materials

The potential for spillage of petroleum-containing hazardous materials will be less than significant with the Project's implementation of the following preventive measures:

- These materials will be delivered and stored in containers approved by the DOT, which are capable of resisting impacts that may potentially occur during transport and handling (e.g., steel 55-gallon drums).
- These materials will be stored within containment areas that have closed drainage to contain potential spills.

- Oil reservoir levels will be checked frequently. If a level changes significantly, corrective action will be triggered immediately.
- Oil reservoirs will have alarms and high- and low-level sensors, which annunciate in the continuously-manned main control room. The sensors, alarms and associated instrumentation are calibrated annually.
- Small pumps and engines will have pans to contain drips from leaking gaskets.

The comprehensive response plans for petroleum-containing hazardous materials will be described in the Spill Prevention, Control and Countermeasure (SPCC) Plan. The SPCC Plan will describe the specific location of the equipment that contains bulk petroleum materials (e.g., turbines and transformers).

Comprehensive containment measures will also be provided for other hazardous materials. Storage areas for bulk hazardous materials will be provided with appropriate containment against loss of the material in the event of a spill. Double-walled tanks, or secondary containment walls, dikes, berms, curbs and similar measures will used to accomplish effective containment. The worker safety programs described in Section 6.17 - Worker Safety will assure that onsite workers are protected from hazardous materials and that appropriate Site staff are trained to respond to spills to prevent affects on the environment. Briefly, these programs include the following elements:

- Safety Action Plan for contractors
- Hazard Control Program
- Plant safety committee
- Injury and Illness Prevention Program
- Code of Safe Work Practices
- Safety training and meetings
- Safety inspections
- Job safety analysis
- Safety incentive program
- Accident and "near miss" investigations
- Training in the handling of hazardous materials
- Step-by-step procedures required for fuel delivery and handling

These programs and elements are described in Section 6.17 - Worker Safety. They will be implemented by plant personnel, assuring both worker safety and the prevention of offsite loss of hazardous materials.

No environmental impacts are anticipated from use of other hazardous materials at the facility.

6.15.2.2.10 General Operating Practices

Each hazardous material will be stored in a manner that is appropriate for its individual characteristics. Bulk chemicals will be stored outdoors in aboveground storage tanks. Other chemicals will be stored in their original delivery containers. Hazardous chemical storage areas will be surrounded by curbs or dikes to contain the chemicals in the event of leaks or spills. Tanks containing hazardous chemicals will have secondary containment capable of holding at least the following:

- 110 percent of the tank volume if the containment is protected from precipitation, or
- Precipitation from a 24-hour, 25-year storm event plus the greater of 100 percent of the capacity of the largest tank within its boundary, or 10 percent of the aggregate capacity of all tanks within its boundary.

Hazardous materials will be handled in accordance with appropriate regulations and codes. Incompatible materials will be stored separately.

Personal protection equipment will be provided for personnel unloading chemicals. Personnel working with chemicals will be trained in proper handling techniques and emergency response procedures to chemical spills or accidental releases.

Several programs at the Project will address hazardous materials storage locations, emergency response procedures, employee training requirements, hazard recognition, fire control procedures, hazard communications training, personal protection equipment training, and release reporting requirements. These programs will address chemical risk management in accordance with Cal-ARP regulations, the Hazardous Materials Business Plan, Cal OSHA worker safety programs, fire response program, plant safety programs and facility standard operating procedures.

The SCR system will include instrumentation that controls the injection rate of ammonia for NO_x control. The aqueous ammonia storage and handling facilities will be equipped with protective equipment such as continuous tank level monitors, temperature and pressure monitors and alarms, excess flow and emergency isolation valves, and a concrete containment structure surrounding the tank and piping. System maintenance and repairs will be conducted only by trained technicians.

6.15.2.2.11 Spill Response Procedures

A comprehensive SPCC Plan will be prepared pursuant to 40 CFR 112 to provide spill response procedures and other information needed to plan for and carry out prompt response to unforeseen petroleum spill events. The Table of Contents of the SPCC Plan is provided in Table 6.15-3. An Emergency Response Plan will be included in the Business Plan prepared pursuant to 19 CCR Division 2, Chapter 4, Article 4, for preparedness and response to unforeseen spill events of any hazardous material.

In the event of a spill or release or threatened release involving a hazardous material, the event will be reported immediately to the facility emergency coordinator, who will immediately go to the scene of the emergency to assess the situation. The plant emergency response team and other key personnel on the emergency contact list in the Business Plan also will be notified. The emergency coordinator will determine if the spill, release or threatened release is reportable to regulatory agencies.

Any release or threatened release of hazardous material that may pose a significant or potentially significant hazard to human health and safety, the environment or property, will be immediately reported verbally to: Kings County Fire Department; Kings County Department of Health, Division of Environmental Health Services; and California Office of Emergency Services. Immediate reporting will occur as soon as possible following knowledge of such a release, without impeding necessary immediate controls or emergency measures. Immediate reporting will include at least the following information, in accordance with CCR Title 19, Section 2703 and CCR Title 22, Section 66256.56(b)(2):

- Name and telephone number of the reporter.
- Name and address of the facility.
- Time and type of incident (e.g., release, fire).
- Name and quantity of material(s) involved, to the extent known.
- Extent of injuries, if any.
- Possible hazards to human health or the environment outside of the facility.
- Whether or not agency assistance is required.

Certain types of releases in excess of reportable quantities specified in CFR Title 40, Sections 302.4 and 355 may require additional reporting to the National Response Center, the Regional Water Quality Control Board, or other agencies. The Project will comply with these reporting requirements. Immediate reporting will be performed by the emergency coordinator or designee. The emergency coordinator or designee will determine the need for outside assistance and

contact appropriate response organizations (e.g., medical providers, ambulance service, police), as necessary.

TABLE 6.15-3

EXAMPLE TABLE OF CONTENTS
SPILL PREVENTION CONTROL AND COUNTERMEASURES PLAN

SPCC Section	Requirement Title or Description	Regulatory Citation
i	Management approval	112.7
ii	Additional facilities, procedures, methods or equipment	112.7
1.1	Conformance with 40 CFR 112 requirements	112.7(a)(1)
1.2	Deviations	112.7(a)(2)
1.3	Facility description	112.7(a)(3)
1.4	Type of oil	112.7(a)(3)(i)
1.5	Discharge prevention measures for routine oil loading, unloading and transfers	112.7(a)(3)(ii)
1.6	Discharge or drainage controls, equipment and procedures for the control of a discharge	112.7(a)(3)(iii)
2.0	Countermeasures for discharge discovery, response and cleanup	112.7(a)(3)(iv)
2.1	Methods of disposal	112.7(a)(3)(v)
2.1	Contact lists and phone numbers	112.7(a)(3)(vi)
2.3	Procedures for spill information reporting	112.7(a)(4)
2.4	Procedures usable in an emergency	112.7(a)(5)
3.1	Prediction of potential spill flow direction, rates and quantities	112.7(b)
3.2	Containment and/or diversionary structures	112.7(c)
3.3	Impracticability	112.7(d)
4.1	Inspections, tests and records	112.7(e)
4.2	Training	112.7(f)(1)
4.3	Designated Accountable Person	112.7(f)(2)
4.4	Discharge prevention briefings	112.7(f)(3)
5.0	Security	112.7(g)(1) and (5)
5.1	Secure valves and pumps in closed/off positions	112.7(g)(2) and (3)
5.2	Cap out of service connections	112.7(g)(4)
6.0	Facility tank car/tank truck unloading	112.7(h)
7.0	Field-constructed container repair, alteration, reconstruction, or change in service	112.7(i)
8.0	Conformance with other requirements	112.7(j)
9.1	Conformance with 40 CFR 112.7 and 112.8	112.8(a)
9.2	Requirements for valves at dike areas and inspection of drainage before discharging	112.8(b)(1) and (2)
9.3	Catchment basins for drainage from undiked areas	112.8(b)(3)
9.4	Diversionary system for drainage from undiked areas	112.8(b)(4)
9.5	Drainage treatment in more than one treatment unit	112.8(b)(5)
9.6	Bulk storage container compatibility	112.8(c)(1)

SPCC Section	Requirement Title or Description	Regulatory Citation
9.7	Bulk storage container secondary containment	112.8(c)(2)
9.8	Control rainwater and inspect prior to release	112.8(c)(3)
9.9	Buried metallic tanks	112.8(c)(4) and (5)
9.10	Inspection and testing of above containers	112.8(c)(6)
9.11	Control leakage from internal heating coils.	112.8(c)(7)
9.12	Overfill prevention	112.8(c)(8)
9.13	Effluent treatment facilities	112.8(c)(9)
9.14	Promptly correct visible leakage	112.8(c)(10)
9.15	Mobile storage containers	112.8(c)(11)
9.16	Buried piping coating and corrosion protection; repair	112.8(d)(1)
9.17	Cap out of service connections	112.8(d)(2)
9.18	Piping supports	112.8(d)(3)
9.19	Inspect aboveground valves, piping, etc.	112.8(d)(4)
9.20	Protect aboveground piping from vehicles	112.8(d)(5)

6.15.2.3 Cumulative Impacts

The offsite consequence analysis described in Section 6.15.2.2 covers the Project. Other projects that have been evaluated for potential cumulative impacts are identified in Section 6.1.4. There are no other projects within a distance that could have a reasonably foreseeable cumulative impact related to hazardous materials. The City of Avenal water treatment plant adjacent to the Site does not use ammonia, and its hazardous materials management systems are independent of the Project. Hence, no cumulative hazardous material handling impact is expected.

6.15.2.4 Project Design Features

The following are design and operational features that have been incorporated into the Project to avoid potentially significant environmental impacts:

- Choice of aqueous, rather than anhydrous, form of ammonia to reduce consequences if there were an accidental release.
- Choice of 19.0 percent (by weight) aqueous ammonia concentration to further reduce potential hazard from the usual commercial concentration of 29.4 percent (by weight).
- Passive secondary containment structures that surround each aqueous ammonia storage tank and the tank truck unloading facility, limiting the area of potential spread of an accidental release.
- Underground containment (tertiary) vault that would collect an accidental release from the aqueous ammonia storage tanks and truck unloading ramp, reducing the ability of the ammonia to vaporize into the atmosphere.

- Large, 24-inch (manhole-size) drain at the bottom center of the sloped secondary containment beneath each storage tank, and 10-inch drain at the bottom center of the truck unloading ramp, combined with direct entry into the underground vault to reduce the time available for ammonia to volatilize from an exposed pool of liquid.
- Use of industrial quality HDPE balls to reduce ammonia evaporation, either from an exposed liquid surface or from the underground containment vault.

6.15.3 MITIGATION MEASURES

Based on the above analysis of impacts and the design and operational features that have been incorporated into the Project, no mitigation measures are required.

6.15.4 SIGNIFICANT UNAVOIDABLE ADVERSE IMPACTS

No significant unavoidable adverse impacts are anticipated from the Project.

6.15.5 LAWS, ORDINANCES, REGULATIONS AND STANDARDS (LORS) COMPLIANCE

A summary of LORS related to hazardous material handling is provided in Table 6.15-4. Concerning aqueous ammonia, the Project will be in compliance with applicable LORS during construction and operation because the following will be accomplished prior to storage or use of aqueous ammonia for the Project:

- Workers handling aqueous ammonia for the Project will be thoroughly trained.
- The RMP will be prepared and submitted to Kings County Department of Health, Division of Environmental Health Services.
- The RMP will be approved by the Kings County Department of Health, Division of Environmental Health Services.
- Emergency response procedures will be coordinated between facility personnel and local emergency planning and response organizations.

The RMP will be prepared and approved prior to arrival of aqueous ammonia onsite. Table 6.15-5 provides contact information for those agencies having permit approval or enforcement authority.

TABLE 6.15-4

HAZARDOUS MATERIALS HANDLING LORS AND COMPLIANCE

JURIS-DICTION	LORS/AUTHORITY	ADMINISTERING AGENCY(1)	REQUIREMENTS/ COMPLIANCE	APPROACH TO COMPLIANCE	AFC SECTION
Federal	CERCLA ("Superfund"), 42 USC §9601 et seq.; 40 CFR Part 302, as amended by SARA; 40 CFR Part 302, (SARA Title III); 42 USC §11001 et seq.; 40 CFR Parts 350, 355, 370.	EPA Region 9; Kings County Environmental Health Department.	SARA Title III – reporting requirements for storage, handling, or production of significant quantities of hazardous materials.	The Project will comply with release notification in accordance with existing LORS. Reporting requirements for storage and handling of hazardous materials will be satisfied through a Hazardous Materials Business Plan.	Sections 6.15.2.2.10 to 6.15.2.2.11 Pages 6.15-19 to 6.15-22
	29 USC 651; 29 CFR §1910 et seq., §1926 et seq.	Cal-OSHA.	Meet requirements for hazardous materials communications and emergency response.	Employees will be trained in hazardous materials communication and emergency response.	Sections 6.15.2.2.9 to 6.15.2.2.11 Pages 6.15-17 to 6.15-22
	CAA, Section 112(r).	EPA Region 9; California Office of Emergency Services.	General duty for hazardous materials management.	Project will meet or exceed general duty in handling hazardous materials.	Section 6.15.2 Pages 6.15-4 to 6.15-23
State	8 CCR 3200 et seq., 5139 et seq., 5160 et seq.	Cal OSHA	Address control of hazardous substances.	Project will meet or exceed these standards in handling hazardous materials.	Section 6.15.2 Pages 6.15-4 to 6.15-23
	California Health & Safety Code §25500-25543.3; 19 CCR §2720-2735.	Kings County Fire Department.	Prepare Hazardous Materials Business Plan.	Federal Power will prepare Hazardous Materials Business Plan in accordance with CCR, Title 19 and Kings County requirements prior to operations.	Sections 6.15.2.2.10 to 6.15.2.2.11 Pages 6.15-19 to 6.15-22
	California Accidental Release Program (CalARP), California Health & Safety Code §25531 et seq.; CCR, Title 19, Chapter 4.5.	Kings County Environmental Health Department.	Risk Management Plan.	Federal Power will prepare an RMP in accordance with CalARP requirements before aqueous ammonia is delivered to the Site.	Sections 6.15.2.2.2 to 6.15.2.2.8 Pages 6.15-10 to 6.15-17
Local	None Applicable	None Applicable	None Applicable	None Applicable	None Applicable
Industry	None Applicable	None Applicable	None Applicable	None Applicable	None Applicable

(1) Pursuant to CCR Title 20, Appendix B(i)(1)(B): Each agency with jurisdiction to issue applicable permits and approvals or to enforce identified laws, regulations, standards, and adopted local, regional, state, and federal land use plans, and agencies which would have permit approval or enforcement authority, but for the exclusive authority of the Commission to certify sites and related facilities.

TABLE 6.15-5

ADMINISTRATIVE AGENCY CONTACTS AND PERMITTING/APPROVAL AUTHORITIES FOR HAZARDOUS MATERIALS HANDLING

AGENCY AND CONTACT	PERMITTING/APPROVAL AUTHORITY
U.S. EPA Region 9 Debbie Jordan, Director Air Division 75 Hawthorne Street San Francisco, California 94105 (415) 947-8715	Enforcement of Accidental Release Program
Cal-OSHA Division of Occupational Safety & Health William Estakhri 2424 Arden Way, Suite 165 Sacramento, California 95825 (916) 263-2800	Compliance with Worker Safety Training Requirements
Kings County Department of Health Division of Environmental Health Services Tim Fillmore, Supervising Environmental Health Officer 330 Campus Drive Hanford, California 93230 (559) 584-1411	RMP Compliance
Kings County Fire Department Jim Kilner, Fire Chief 280 North Campus Drive Hanford, California 93230 (559) 582-3211	Hazardous Materials Business Plan/ Contingency Plan Compliance

6.15.6 REFERENCES

California Department of Food and Agriculture. Fertilizing Material Tonnage Report. 1996, 1997, 1998, 1999, 2000.

California Department of Water Resources (DWR). Rainfall Analysis for Drainage Design. Bulletin No. 195, Volume II: Long Duration Precipitation Frequency Data. October 1976.

California Energy Commission (CEC). Personal communication between R. Tyler, Energy Facilities Siting and Environmental Protection Division, and E. Walther, TRC. May 25, 2001.

California Office of Emergency Services (OES). Final California Accidental Release Prevention (Cal-ARP) Program Regulations. California Code of Regulations (CCR) Title 19, Division 2, Chapter 4.5. November 16, 1998.

General Electric Corporation (GE). Lubricating Oil Recommendations for Gas Turbines With Bearing Ambients Above 500°F (260°C), GE Power Systems, GEK32568E. May 1999.

National Institute of Occupational Safety and Health (NIOSH). *NIOSH Pocket Guide to Chemical Hazards.* DHHS (NIOSH) Publication No. 97-140. U.S. Government Printing Office. Washington, D.C. 1997.

Perry, R.H. and D.W. Green (eds). *Perry's Chemical Engineers' Handbook*. 7th Edition. McGraw Hill: New York. 1997.

Sacramento Municipal Utility District (SMUD). *Proposed SMUD Cogeneration Pipeline Project, Application for Certification Supplement*. Prepared for the California Energy Commission. Docket No. 92-AFC-2P. April 1993.

Sax, I. and N. Irving. Dangerous Properties of Industrial Materials. (3rd Edition). Van Nostrand Reinhold Company: New York. August 1968.

Shell Oil Company. Material Safety Data Sheet for Diala (R) Oil AX, Equilon MSDS 80030E-11. January 4, 1999.

U.S. Department of Transportation. <http://hazmat.dotgov/ohmforms.htm >. The 8 years of January 1993 to April 2001 are the portion of the overall database (1971 to 2001) placed on the website. July 17, 2001.

USEPA. *Risk Management Program Guidance in Offsite Consequence Analysis.* April 15, 1999.

Woodward-Clyde Consultants. *Safety and Reliability Analysis, Mojave Northward Expansion Project.* Application for Certificate of Public Convenience and Necessity. Response to data request, submitted to the Federal Energy Regulatory Commission in April 1994. 1994.

Wray, T.K. "HazMat Chemist: Ammonia." HazMat World, p. 86. November 1991.

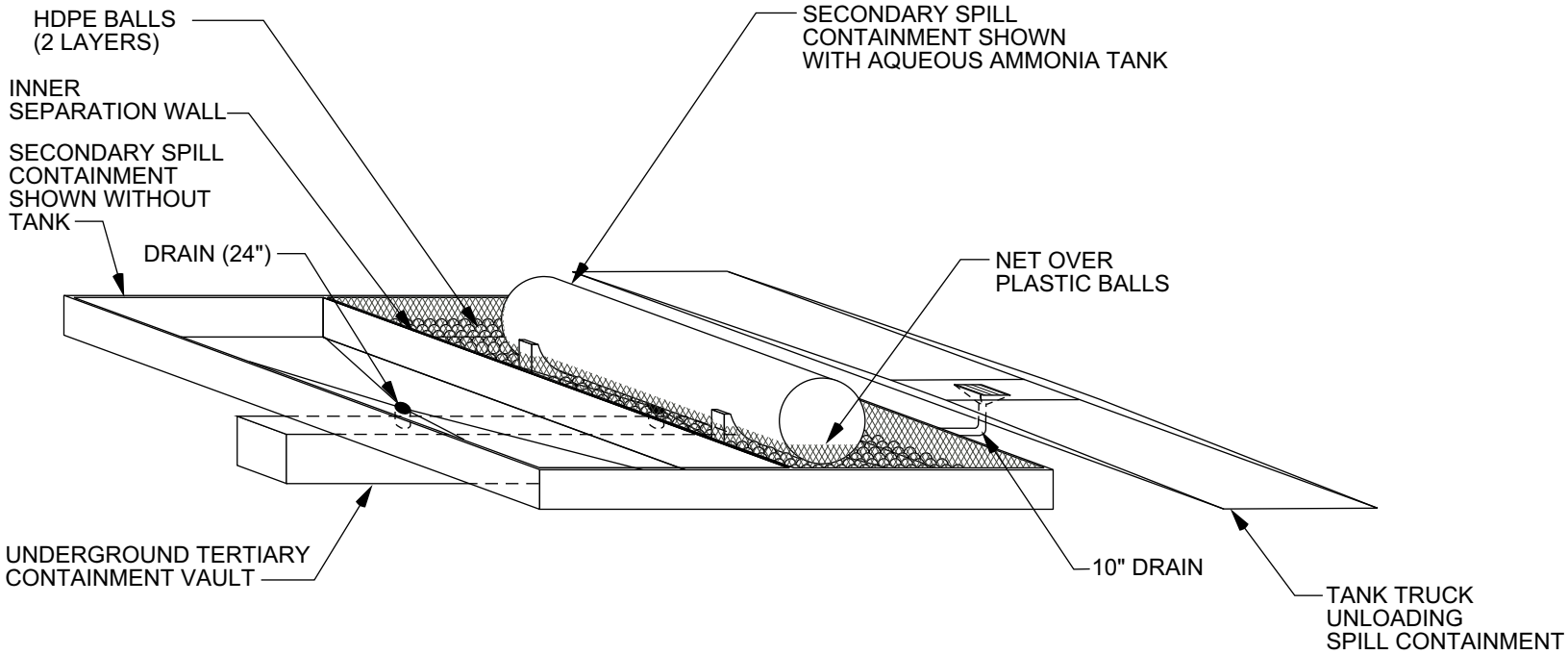

NOT TO SCALE

NOTES:
CURRENTLY ANTICIPATED DESIGN IS SHOWN. ANY DESIGN MODIFICATION MUST RESULT IN EQUAL OR LESS AQUEOUS AMMONIA VOLATILIZATION IN THE EVENT OF SPILL COMPARED TO THE CALCULATION AND MODELING DESCRIBED IN APPENDIX 6.15-1.

AQUEOUS AMMONIA STORAGE DESIGN FEATURES

FEDERAL POWER AVENAL, LLC

AVENAL ENERGY | **FIGURE 6.15-1**

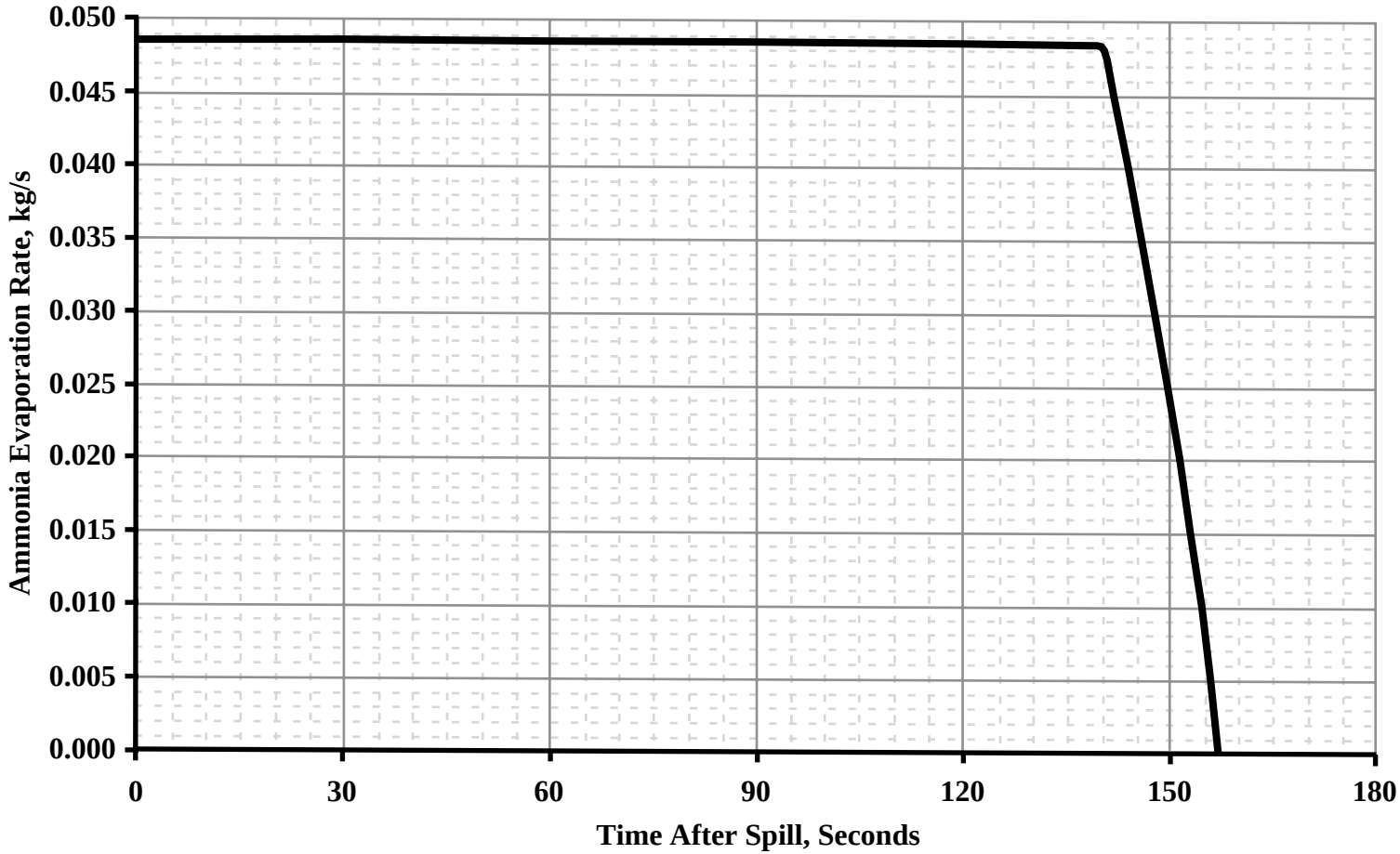

RELEASE CONDITIONS

INSTANTANEOUS SPILL OF 24,000 GALLONS 19.0% AQUEOUS AMMONIA INTO 1 SLOPING SUMP, 1 LAYER CLOSE-PACKED PLASTIC BALLS, 24" DRAIN WITH GRATING, 75% OPEN

WORST-CASE ACCIDENTAL RELEASE EVAPORATION RATE OF AMMONIA

FEDERAL POWER AVENAL, LLC

AVENAL ENERGY | **FIGURE 6.15-2**

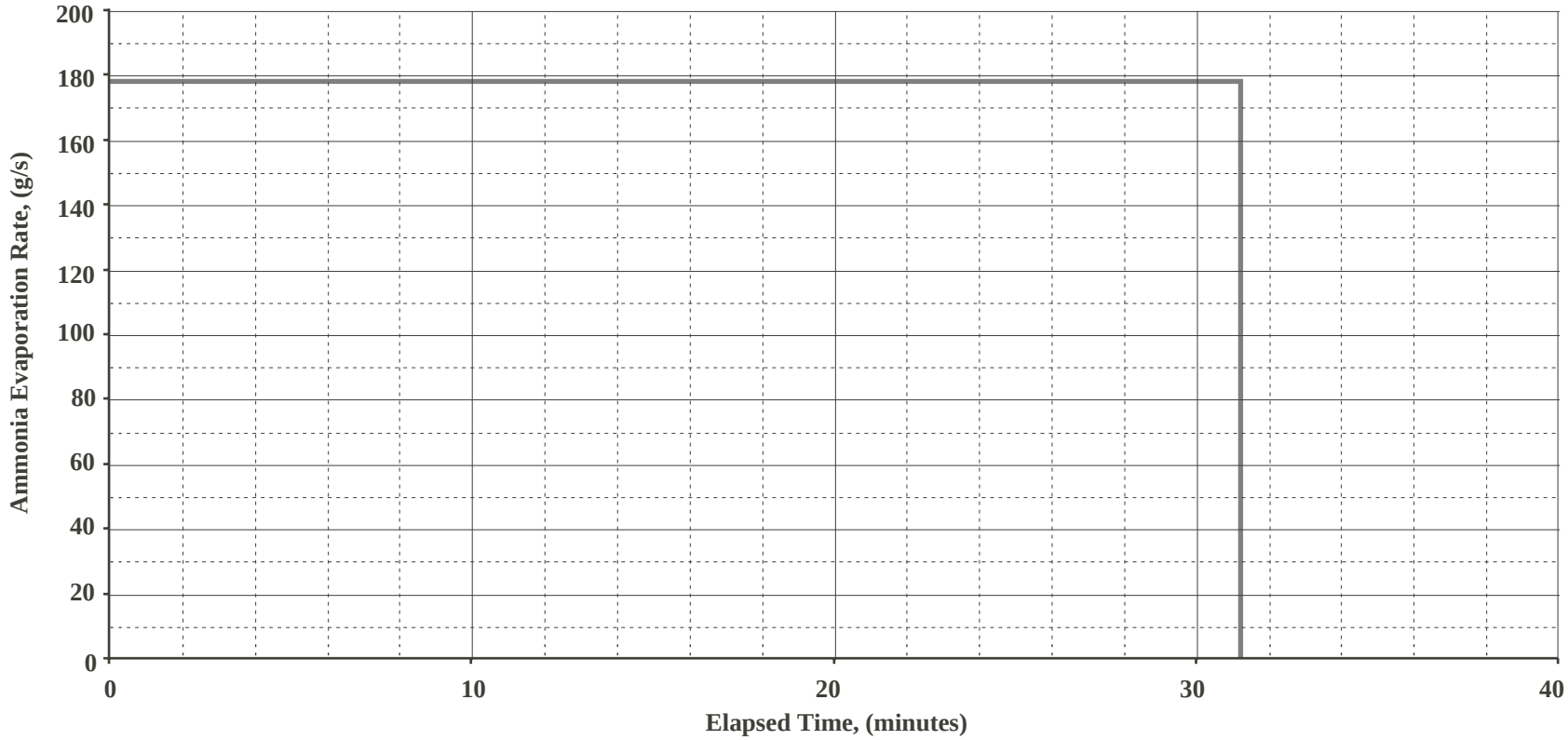

RELEASE CONDITIONS

LEAK OF 8,000 GALLONS FROM
TANK TRUCK THROUGH 3-INCH COUPLING
INTO CONCRETE CONTAINMENT HAVING
10-INCH DRAIN

ALTERNATIVE ACCIDENTAL RELEASE:
AMMONIA EVAPORATION RATE

FEDERAL POWER AVENAL, LLC

AVENAL ENERGY | **FIGURE 6.15-3**

125155-AFC-6.15-4.CNV REV.10/22/07

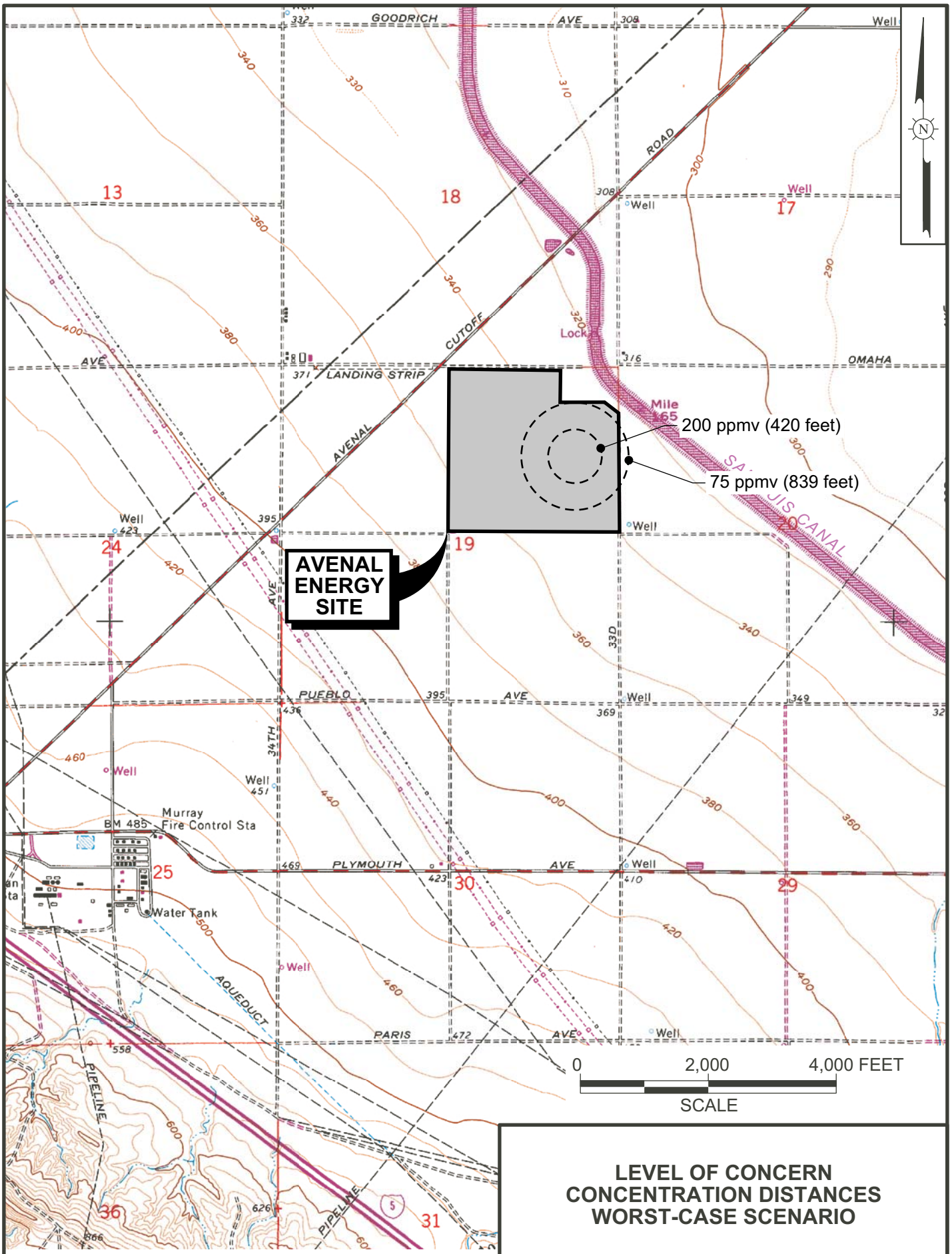

REFERENCE: U.S.G.S 7.5 MINUTE TOPOGRAPHIC SERIES MAP OF LA CIMA, CALIFORNIA, DATED 1978.

LEVEL OF CONCERN CONCENTRATION DISTANCES WORST-CASE SCENARIO

FEDERAL POWER **AVENAL, LLC**

AVENAL ENERGY | **FIGURE 6.15-4**

125155-AFC-6.15-5.CNV REV. 10/22/07

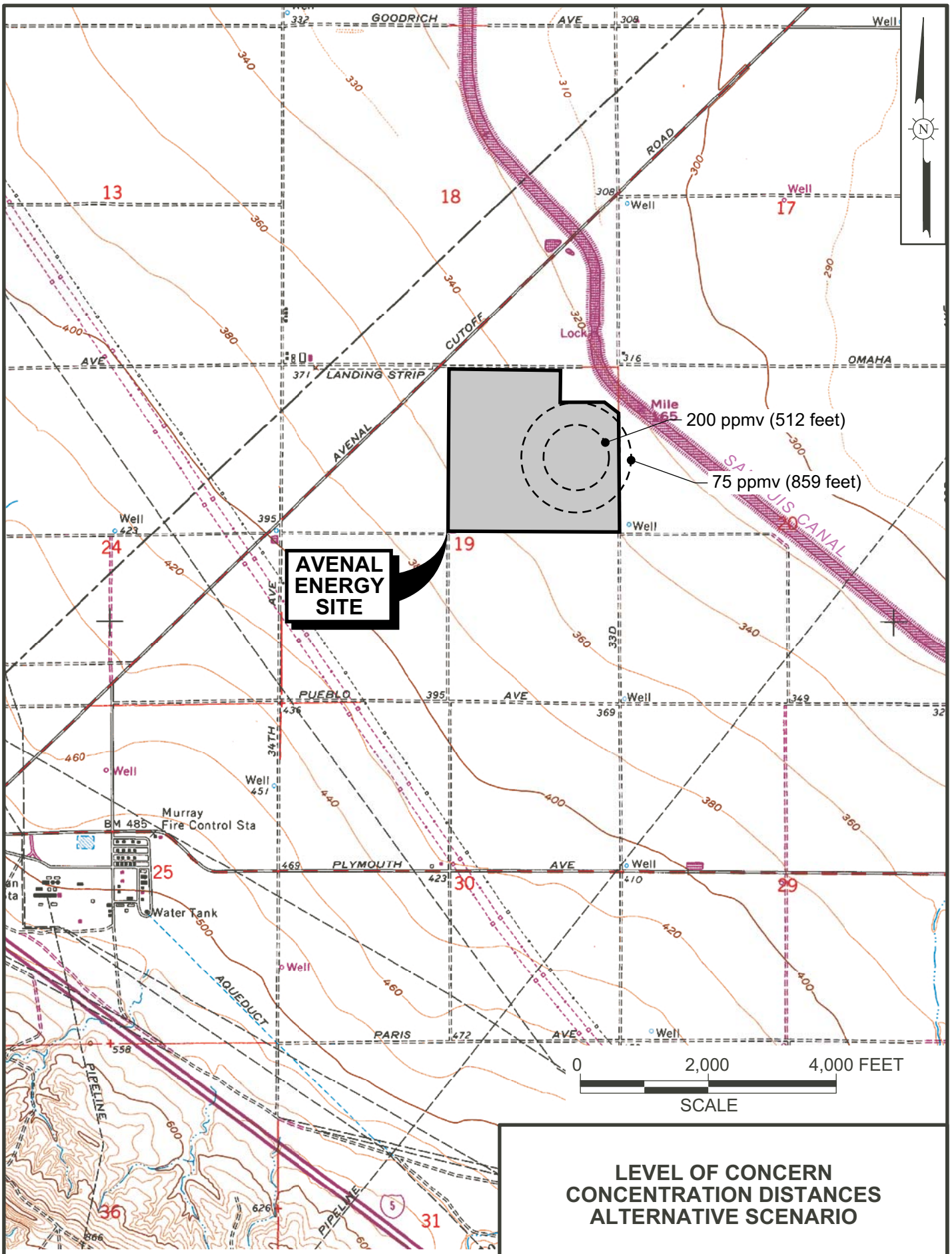

REFERENCE: U.S.G.S 7.5 MINUTE TOPOGRAPHIC SERIES MAP OF LA CIMA, CALIFORNIA, DATED 1978.

LEVEL OF CONCERN CONCENTRATION DISTANCES ALTERNATIVE SCENARIO

FEDERAL POWER **AVENAL, LLC**

AVENAL ENERGY	**FIGURE 6.15-5**