Blythe Energy Center Transmission Line Project
Request for Staff Approved Modification
(99-AFC-08T)
Response to Data Request – Revised 2/8/11

TECHNICAL AREA: Transmission System Engineering
AUTHOR: Ajoy Guha

RESPONSE

Blythe Energy is requesting approval to return to a previously approved configuration and does not believe that it is appropriate to require additional information at this stage. We find it unusual that additional requirements are being requested beyond what was needed for the previous approval of the same scope, but are complying in the interest of expediency. The requirement for written approval from the California ISO will result in a substantial delay, as this could take over a month for a response. We have provided our request for written approval as Attachment 1 to this response. We request that the technical information supplied in response to Data Requests 1-6 be reviewed and approved, that the Staff-approved re-approval of the GIS be approved, and that the CEC require that the receipt of the California ISO letter be a condition of approval to interconnect rather than re-approval of an existing approved action.

Figures supplied in response to this request are as follows:

Figure 1: Isometric view of the overall connection between the turbines of the Blythe Energy Plant and the proposed GIS (one sheet, file 21bjhu3_1).

Figure 2: Dimensioned plan view of GIS building and adjacent interconnection (one sheet, E 1-1).

Figure 3: Dimensioned section view of GIS building and adjacent interconnection (one sheet, E1-2)

Figure 4: Detail drawings for overhead installation, including dimensioned details of foundations, poles, insulators, and conductors (17 sheets, OH Files)

Figure 5: Detail drawings of underground installation, including dimensioned details of interconnection with each turbine and an interconnection for future expansion, duct bank details, and details of the motor operated switch terminal (9 sheets, UG Files)

Figure 6: Detail drawings of GSU tap installation, including dimensioned details per Mr. Guha's e-mail request of 1-31-11. (1 sheet, E1-3).

Attachment 1: Copy of letter from Blythe Energy to the California ISO requesting approval of changed interconnection.

Blythe Energy Center Transmission Line Project
Request for Staff Approved Modification
(99-AFC-08T)
Response to Data Request – Revised 2/8/11

DATA RESPONSES

DATA REQUEST 1: Provide respective lengths of the overhead and underground portions of the tie lines and a physical layout scaled drawing (legible) showing distinctly the routes of the proposed 230 kV lines from the BEP 230 kV switchyard to the new 230 kV GIS substation and relative spacing between the lines including Right of Way (ROW) widths, if any.

DATA RESPONSE 1: Figure 1 shows an isometric overall view of the overhead and underground portions of the line. Figure 4, sheets GO-1 and P1-1 and Figure 5, sheets P1-1 through P 1-6, are scaled drawings showing the routes of the proposed 230kV lines from each of the BEP turbines, including a future position, to the new 230kV GIS. Note that the interconnection with the substation will entirely bypass the existing Western (WAPA) substation. The interconnection between the turbines and the GIS will all be located entirely within the BEP property. No additional ROW will be needed.

Conductor lengths are as follows:

- From Turbine CT11 to the GIS Building: Conductors are underground for 105 feet and overhead for 285 feet.
- From Turbine CT12 to the GIS Building: Conductors are underground for 100 feet and overhead for 340 feet.
- From Turbine ST10 to the GIS Building: Conductors are underground the entire distance of 640 feet.
- From the GIS building to the Blythe-Julian Hinds Transmission Line Terminal, conductors are underground for 90 feet.

Dimensions indicating distance between proposed T-lines and Switchyard fence and Switchyard property lines have been added to Figure 5, P1-1 through P1-6. Dimensions from the GSUs to the Switchyard fence have also been added to these drawings.

DATA REQUEST 2: Submit Pole design diagrams for intermediate and dead-end structures of the generator overhead 230 kV tie lines showing configuration of insulators and conductors with their respective position measurements on the pole. Provide the sizes, types and ampere rating of the overhead line conductors.

DATA RESPONSE 2: Please see Figure 4, sheet L1-1 and sheets S1-1 through S1-4A for requested design diagrams. The overhead conductor being used for the generator to GIS tap is: 1033.5 kcmil ACSR 'Curlew' with an ampacity rating of 1047 amps.

Structure drawings in Figure 4, S1-1 through S1-4 have been updated to confirm phase-ground clearance and the transition from Overhead to Underground. The total height of the pole above ground and the ground clearance from the lowest phase conductor has also been added to these drawings.

DATA REQUEST 3: Submit a design diagram showing termination of an underground 230 kV cable line to an overhead 230 kV line with respective measurements on an H-frame (or any other) structure for all three phases.

DATA RESPONSE 3: Please see Figure 3 and Figure 4, Sheets S1-5 and S1-6 for requested design diagrams, showing respective measurements for all three phases.

Figure 4, S1-6 has been updated to more clearly identify Underground cable on the front view and side view.

DATA REQUEST 4: Submit a design diagram of Duct Bank construction (or any other type) for the proposed 230 kV underground cable lines (including grounding and communication cables, if applicable). Provide the type, size and ampere rating of the 230 kV underground cables for all transmission outlets including BEP 230 kV line to Julian Hinds.

DATA RESPONSE 4: Please see Figure 5, sheets U0-1 through U0-3, for requested design diagrams of the duct bank construction for the proposed 230kV underground cable lines. The type, size, and ampere ratings are as follows:

For the interconnections from each turbine to the GIS, 1750kcmil copper conductor, carrying 457 amps, will be used. For the interconnection from the GIS to the Blythe-Julian Hinds 230kV transmission line, 5000kcmil copper conductor carrying 2058 amps will be used.

DATA REQUEST 5: Please mention whether the GIS substation would be an indoor type or outdoor type. Accordingly provide a physical layout scaled drawing (legible) of the substation showing location of 230 kV GIS switchgear, any other major equipment and termination of all four underground cable lines.

DATA RESPONSE 5: Please see Figures 2 and 3, which show the physical layout on a scaled drawing in plan and section. The GIS will be an indoor type.

DATA REQUEST 6: Provide a scaled layout diagram showing how the existing BEP 230 kV transmission line to SCE Julian Hinds substation would be re-routed and connected to the new 230 kV GIS substation. Also provide a Pole design diagram with the overhead line conductor sizes and ampere rating.

DATA RESPONSE 6: Please see Figure 2, showing the scaled arrangement of the GIS, Figure 4, sheet P1-1, and Figure 5, Sheet P1-6.)Overhead conductor being used for the generator to GIS tap is 1033.5 kcmil ACSR 'Curlew' with an ampacity rating of 1047 amps. The Blythe to Julian Hinds line conductor is triple bundled 1033.5kcmil ACSR 'Curlew' with an ampacity rating of 2008 amps.

Figure 5, P1-6 has been updated to identify the reconfiguration of the existing Julian Hinds line showing the relocation of the existing T-line deadend structure and the tap to the new GIS deadend structure.

DATA REQUEST 7: Provide a letter from the California ISO with their approval of the current scheme for modified interconnection of BEP to the new 230 kV GIS substation.

DATA RESPONSE 7: Attached please find the request letter for written approval from the California ISO. We request that the letter for approval be required prior to energizing, not prior to initial CEC approval of this previously-approved modification.

DATA REQUEST 8: Provide detail of the GSU to A-frame taps to show the insulators with spacings on the cross arm and wire connections to the GSU transformers underneath and to the GSU tap structure/pole including ground clearances from the lowest conductor. Provide a side view and plan view of the same showing configuration of the phase wires and insulators with their spacings on the A-frame structure.

DATA RESPONSE 8: Attached please see Figure 6, drawing E1-3 which details the GSU tap configuration for STG-1, CTG-1 and CTG-2. Requested detail and dimensional information has been shown on this drawing.

Blythe Energy Center Transmission Line Project
Request for Staff Approved Modification
(99-AFC-08T)
Response to Data Request

Figure 1

Isometric view of the overall connection between the turbines of the Blythe Energy Plant and the proposed GIS (one sheet)

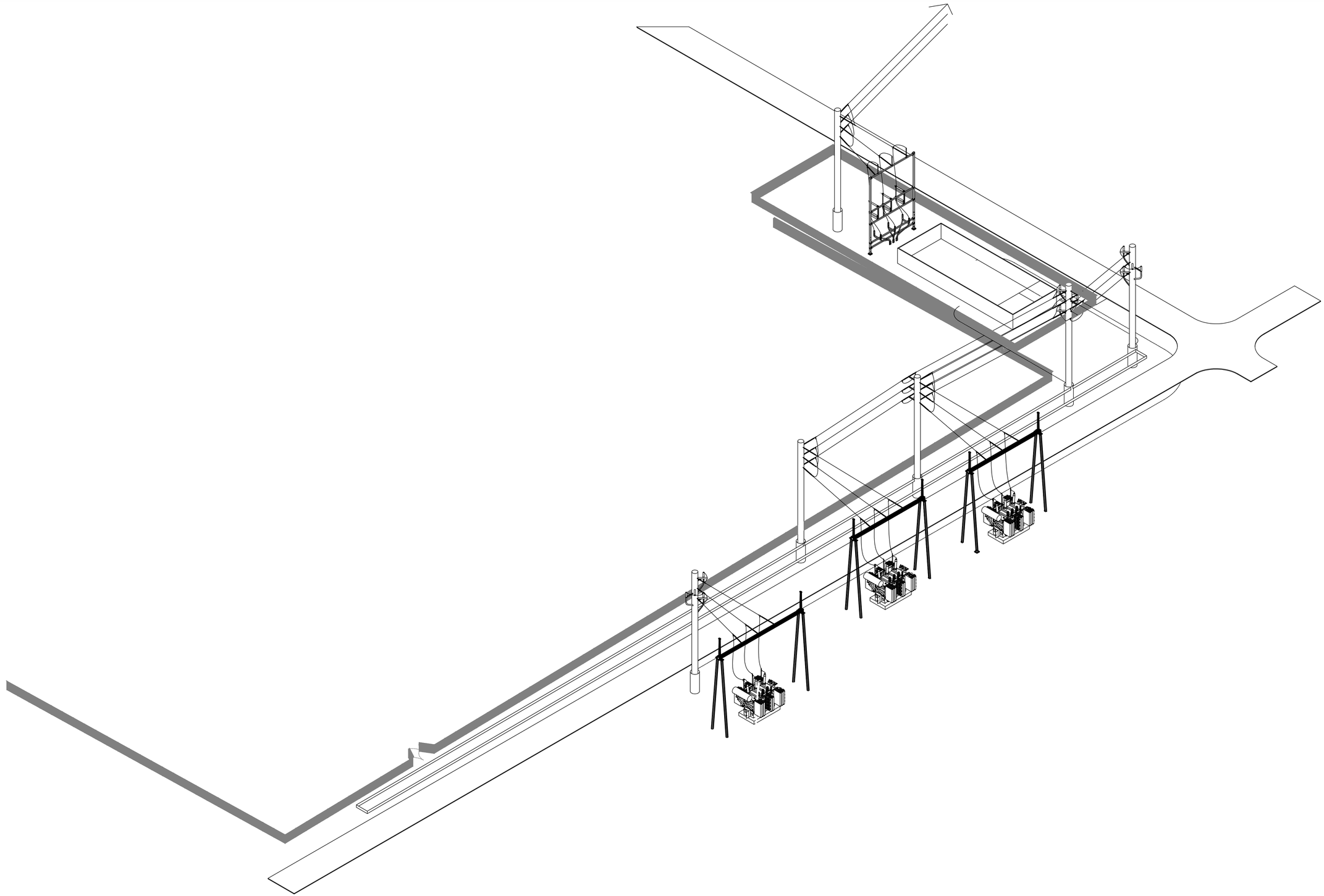

THIS DRAWING WAS PREPARED BY POWER ENGINEERS, INC. FOR A SPECIFIC PROJECT, TAKING INTO CONSIDERATION THE SPECIFIC AND UNIQUE REQUIREMENTS OF THE PROJECT. REUSE OF THIS DRAWING OR ANY INFORMATION CONTAINED IN THIS DRAWING FOR ANY PURPOSE IS PROHIBITED UNLESS WRITTEN PERMISSION FROM BOTH POWER AND POWER'S CLIENT IS GRANTED.

REV	REVISIONS	DATE	DRN	DSGN	CKD	APPD	REFERENCE DRAWINGS
A	ISSUED FOR REVIEW	**/**/**	*	*	*	*	

DSGN	*	*
DRN	*	*
CKD	*	*

SCALE: *

FOR 22x34 DWG ONLY

POWER ENGINEERS

BLYTHE ENERGY, LLC

BLYTHE – JULIAN HINDS
230kV TRANSMISSION LINE

ISOMETRIC VIEW

JOB NUMBER **

REV A

DRAWING NUMBER **

21BJHU3_1.DWG

Blythe Energy Center Transmission Line Project
Request for Staff Approved Modification
(99-AFC-08T)
Response to Data Request

Figure 2

Dimensioned plan view of GIS building and adjacent interconnection (one sheet)

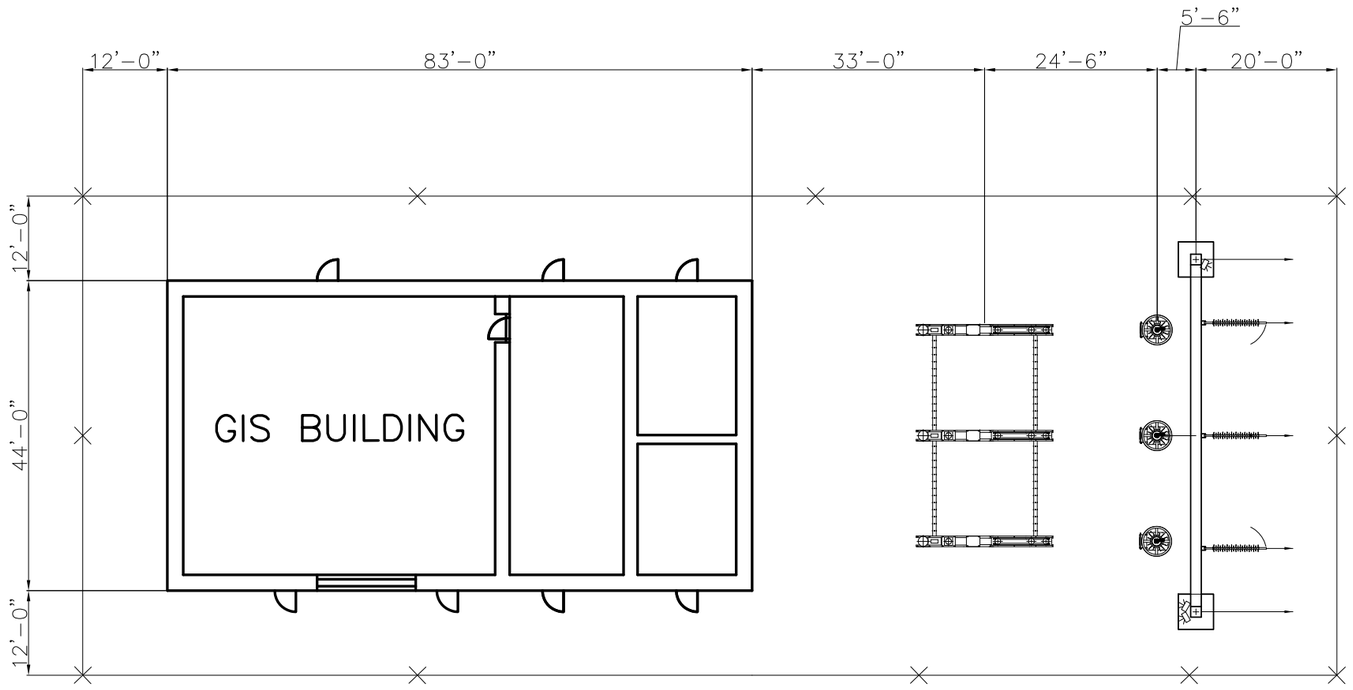

THIS DRAWING WAS PREPARED BY POWER ENGINEERS, INC. FOR A SPECIFIC PROJECT, TAKING INTO CONSIDERATION THE SPECIFIC AND UNIQUE REQUIREMENTS OF THE PROJECT. REUSE OF THIS DRAWING OR ANY INFORMATION CONTAINED IN THIS DRAWING FOR ANY PURPOSE IS PROHIBITED UNLESS WRITTEN PERMISSION FROM BOTH POWER AND POWER'S CLIENT IS GRANTED.

REV	REVISIONS	DATE	DRN	DSGN	CKD	APPD	REFERENCE DRAWINGS
A	ISSUED FOR INFORMATION	12/27/10	PEI	PEI	PEI		E1-2 SECTIONS A-A, B-B

DSGN	JDW	02/13/09
DRN	JDW	02/13/09
CKD	SLH	02/13/09

SCALE: $\frac{3}{32}$"=1'-0"

POWER ENGINEERS

BLYTHE ENERGY CENTER

230KV GIS SUBSTATION

PLAN

JOB NUMBER	REV
117573	A

DRAWING NUMBER

E1-1

Blythe Energy Center Transmission Line Project
Request for Staff Approved Modification
(99-AFC-08T)
Response to Data Request

Figure 3

Dimensioned section view of GIS building and adjacent interconnection (one sheet)

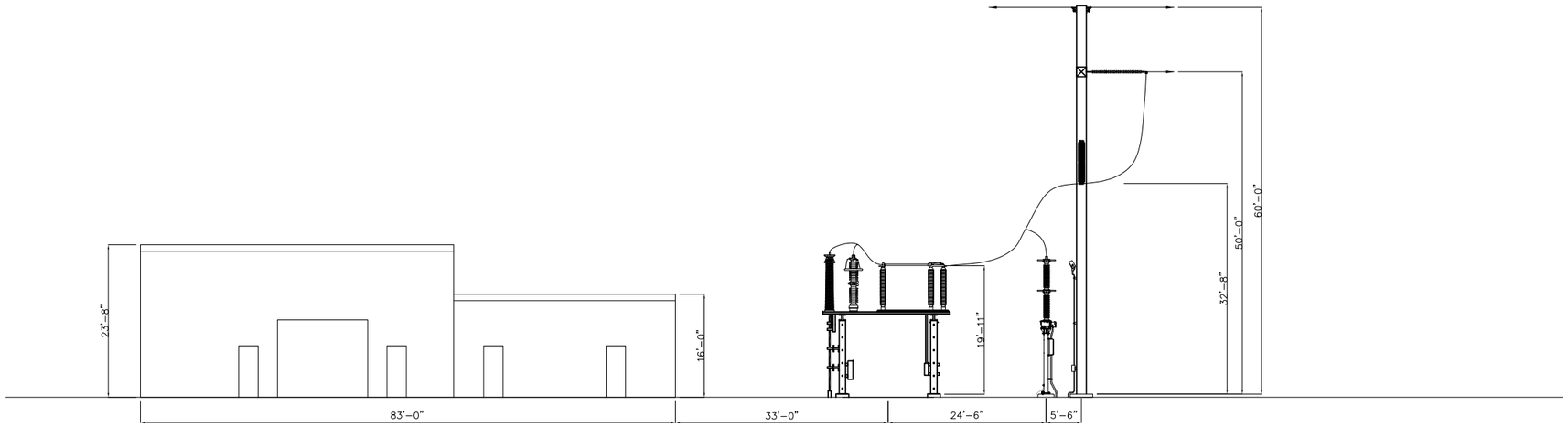

SECTION A
230KV GIS SS
ITEM #102

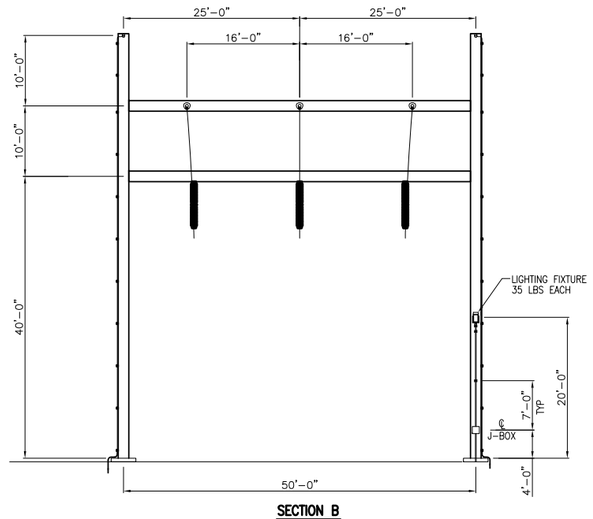

SECTION B
230KV GIS SS
ITEM #102

THIS DRAWING WAS PREPARED BY POWER ENGINEERS, INC. FOR A SPECIFIC PROJECT, TAKING INTO CONSIDERATION THE SPECIFIC AND UNIQUE REQUIREMENTS OF THE PROJECT. REUSE OF THIS DRAWING OR ANY INFORMATION CONTAINED IN THIS DRAWING FOR ANY PURPOSE IS PROHIBITED UNLESS WRITTEN PERMISSION FROM BOTH POWER AND POWER'S CLIENT IS GRANTED.

REV	REVISIONS	DATE	DRN	DSGN	CKD	APPD
A	ISSUED FOR INFORMATION	12/27/10	PEI	PEI	PEI	

REFERENCE DRAWINGS	
E1-1	CONCEPTUAL LAYOUT

DSGN	JDW	03/12/09
DRN	JDW	03/12/09
CKD	SLH	03/12/09

SCALE: 3/32"=1'

POWER ENGINEERS

BLYTHE ENERGY CENTER
230KV GIS SUBSTATION
SECTIONS A-A, B-B

JOB NUMBER	REV
117573	A

DRAWING NUMBER
E1-2

Blythe Energy Center Transmission Line Project
Request for Staff Approved Modification
(99-AFC-08T)
Response to Data Request

Figure 4

Detail drawings for overhead installation, including dimensioned details of foundations, poles, insulators, and conductors (17 sheets)

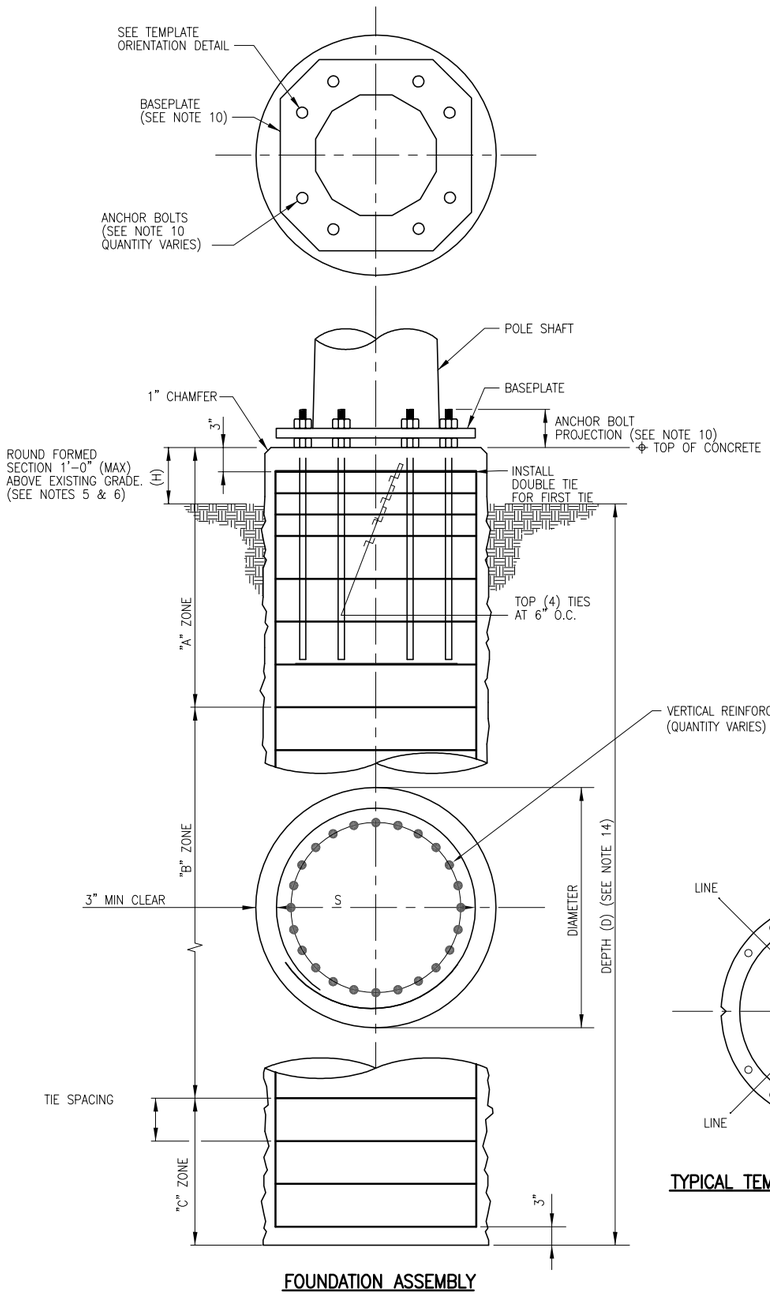

FOUNDATION ASSEMBLY

"ROUND" PIER

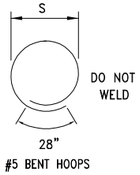

#5 BENT HOOPS

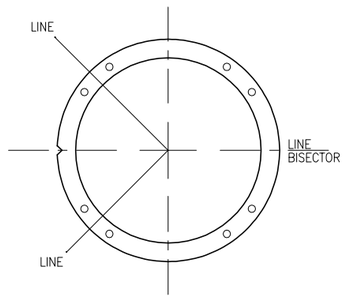

TYPICAL TEMPLATE ORIENTATION DETAIL

SEE NOTE 10

NOTES

1. CONTRACTOR TO ENSURE STABILITY AND LOCATION OF ANCHOR BOLT CAGE BEFORE PLACING ANY CONCRETE.
2. CONCRETE STRENGTH AT 28 DAYS = 4000 PSI CONTRACTOR SHALL NOT SET POLES PRIOR TO 21 DAYS AFTER POUR UNLESS AN ALTERNATE MIX DESIGN IS APPROVED BY THE ENGINEER.
3. VERTICAL REINFORCING STEEL SHALL CONFORM TO ASTM A615, GRADE 60.
4. CIRCULAR TIES SHALL CONFORM TO ASTM A615, GRADE 40 OR GRADE 60.
5. PIERS ARE DESIGNED FOR A FOUNDATION EXPOSURE OF ONE (1) FOOT ABOVE GRADE. ANY FOUNDATION REQUIRING EXTRA PROJECTION SHALL BE APPROVED BY ENGINEER PRIOR TO CONSTRUCTION.
6. TOP OF PIER SHALL BE DOMED A MAXIMUM OF 1" TO FACILITATE WATER DRAINAGE.
7. ALL REBAR AND CONCRETE QUANTITIES ARE BASED ON 1'-0" REVEAL ABOVE GRADE AT THE CENTER OF THE FOUNDATION.
8. ALL REBAR AND CONCRETE QUANTITIES ARE FOR ONE (1) FOUNDATION. H-FRAME STRUCTURES WILL HAVE TWO (2) FOUNDATIONS.
9. LONGITUDINAL BARS ARE CONTINUALLY RUN FROM 3" BELOW PIER TOP TO 3" ABOVE PIER BOTTOM.
10. SEE FABRICATOR DRAWINGS FOR ANCHOR BOLT, TEMPLATE, AND BASE PLATE DETAILS AND REQUIREMENTS.
11. UPPER TEMPLATE SHOULD BE USED AT BASE PLATE LOCATION UNTIL CONCRETE HAS SET.
12. SEE SPECIFICATIONS AND DOCUMENTATION FOR EXCAVATION AND CONCRETE REQUIREMENTS.
13. PIER DIAMETERS ARE MINIMUM. HOLE SIZES MAY BE INCREASED TO NEXT LARGEST AVAILABLE AUGER SIZE, WITH ENGINEER APPROVAL.
14. EMBEDMENT SHALL BE MEASURED FROM CENTER OF FOUNDATION AS STAKED IN THE FIELD.
15. CONTRACTOR TO VERIFY CONCRETE VOLUMES AND REBAR QUANTITIES/WEIGHTS.
16. INSPECTION BY OWNERS REPRESENTATIVE IS REQUIRED IF GROUND WATER IS ENCOUNTERED.
17. CONTRACTOR SHALL BE PREPARED TO USE TEMPORARY CASING FOR ALL HOLES IN WHICH SOIL CAVING OR GROUNDWATER IS ENCOUNTERED. ALL EXCAVATIONS SHALL BE PUMPED FREE OF WATER PRIOR TO PLACING CONCRETE UNLESS APPROVED BY THE OWNERS AUTHORIZED REPRESENTATIVE.
18. FOUNDATION DESIGNS ARE BASED ON JULY 23, 2008 AND SEPTEMBER 22, 2008 ESS GEOTECHNICAL REPORT. ANY DEVIATION FROM THE GENERAL DESCRIPTION FOUND IN THE BORING LOGS SHALL BE BROUGHT TO THE ATTENTION OF THE OWNERS AUTHORIZED REPRESENTATIVE PRIOR TO ANY CONCRETE ACTIVITY.
19. ALL ANCHOR BOLTS 2 1/4" DIA UNLESS NOTED OTHERWISE.
20. IT IS THE CONTRACTORS RESPONSIBILITY TO CONTACT "CALL BEFORE YOU DIG" PRIOR TO THE COMMENCEMENT OF EXCAVATING ACTIVITIES.
21. CONTRACTOR TO ENSURE STABILITY AND LOCATION EMBEDDED POLE SECTION BEFORE PLACING BACKFILL.

THIS DRAWING WAS PREPARED BY POWER ENGINEERS, INC. FOR A SPECIFIC PROJECT, TAKING INTO CONSIDERATION THE SPECIFIC AND UNIQUE REQUIREMENTS OF THE PROJECT. REUSE OF THIS DRAWING OR ANY INFORMATION CONTAINED IN THIS DRAWING FOR ANY PURPOSE IS PROHIBITED UNLESS WRITTEN PERMISSION FROM BOTH POWER AND POWER'S CLIENT IS GRANTED.

REV	REVISIONS	DATE	DRN	DSGN	CKD	APPD
B	ISSUED FOR APPROVAL	02/12/09	JLQ	DWN	EAR	
A	ISSUED FOR REVIEW	01/12/09	RH	AC	AT	EAR

REFERENCE DRAWINGS

DSGN	AC	12/22/08
DRN	RH	12/22/08
CKD	AT	12/22/08

SCALE: NTS

FOR 22x34 DWG ONLY

POWER ENGINEERS www.powereng.com

BLYTHE ENERGY

BLYTHE PLANT CSU-GIS OH 230kV TRANSMISSION LINE

FOUNDATION DETAILS

JOB NUMBER 115210

REV B

DRAWING NUMBER F0-1

jquintana R:\Hyprojects\115210\DD\DWG\02 Struct\19bh10_1.dwg F0-1 Feb 12, 2009 - 3:51pm

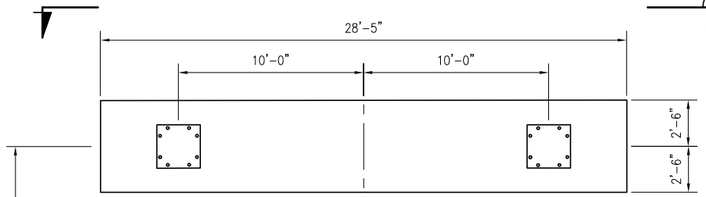

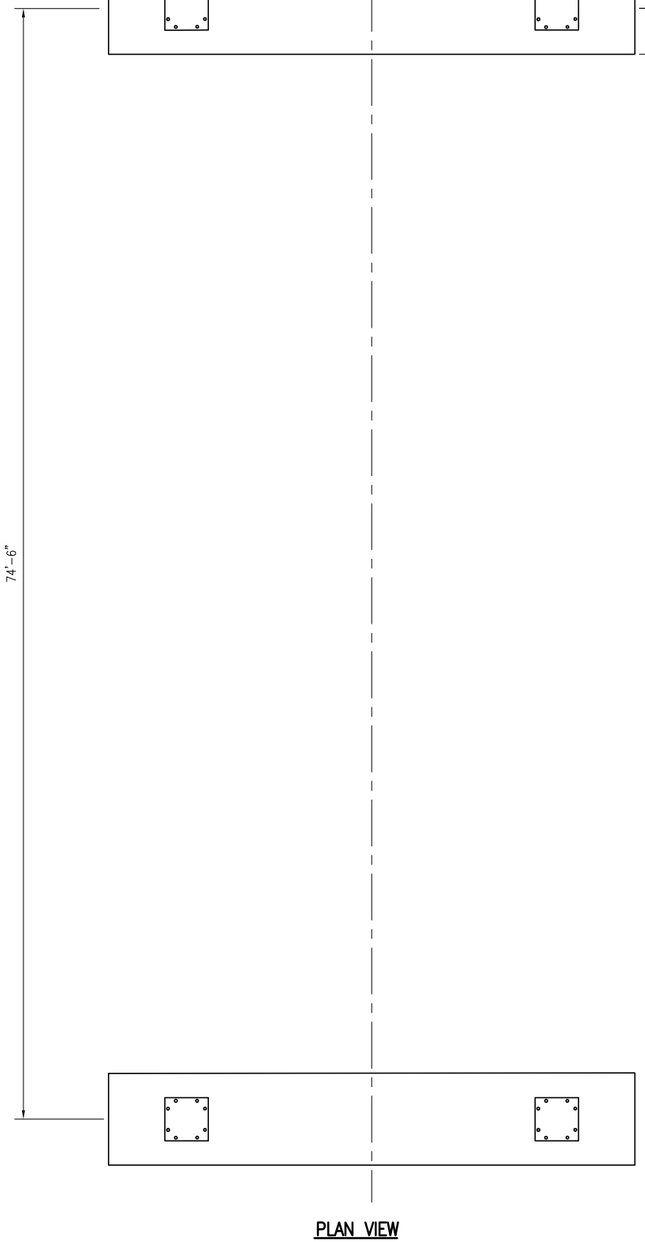

PLAN VIEW

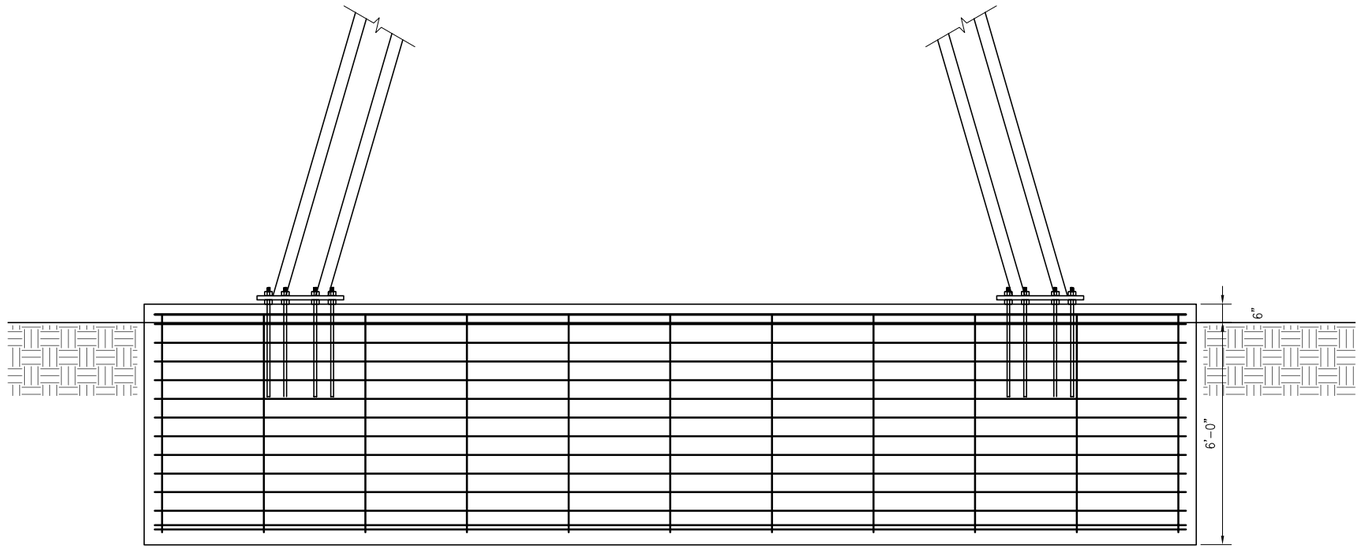

SECTION A

"NOTE-ALL FOUNDATIONS ON HOLD PENDING FINAL STRUCTURE FABRICATION DRAWINGS"

jquintana R:\Hlyprojects\115210\DD\DWG\02 Struct\19bjhf0_2.dwg F0-2 Feb 12, 2009 - 3:52pm

THIS DRAWING WAS PREPARED BY POWER ENGINEERS, INC. FOR A SPECIFIC PROJECT, TAKING INTO CONSIDERATION THE SPECIFIC AND UNIQUE REQUIREMENTS OF THE PROJECT. REUSE OF THIS DRAWING OR ANY INFORMATION CONTAINED IN THIS DRAWING FOR ANY PURPOSE IS PROHIBITED UNLESS WRITTEN PERMISSION FROM BOTH POWER AND POWER'S CLIENT IS GRANTED.

REV	REVISIONS	DATE	DRN	DSGN	CKD	APPD	REFERENCE DRAWINGS
A	ISSUED FOR APPROVAL	02/12/09	RH	DWN	BH	EAR	

DSGN	DWN	02/11/09
DRN	RH	02/11/09
CKD	BH	02/12/09

SCALE: NTS

FOR 22x34 DWG ONLY

POWER ENGINEERS
www.powereng.com

BLYTHE ENERGY

BLYTHE PLANT GSU-GIS OH 230kV TRANSMISSION LINE

FOUNDATION DETAILS FOR 230kV TAKE-OFF STRUCTURE-TYPE II

JOB NUMBER 115210

REV A

DRAWING NUMBER F0-2

FOUNDATION DATA

Soil Boring #	Structure Number	Structure Type	Structure Description	A.G. Structure Height (ft)	Embed Dia (ft)	Base Dia. (ft)	Embed Length (ft)	Pier Dia. (ft)	D (ft)	H (ft)	Anchor Bolts					Vertical Reinforcement				Circular Ties										– Vertical Reinforcement Length	– Shear Reinforcement Length	Concrete Volume (Cu Yds)	Rebar Weight (lbs)	Anchor Bolt Weight (lbs)	Steel Pole Weight (lbs)
											Bolt Mark	Bolt Circle (in)	Bolt Projection (in)	Qty	Bolt Length (in)	Size	Qty	Length (ft)	Weight (lbs)	Size	"A" Zone Length (ft)	"A" Zone Spacing (in)	"A" Zone Qty	"B" Zone Length (ft)	"B" Zone Spacing (in)	"B" Zone Qty	"C" Zone Length (ft)	"C" Zone Spacing (in)	"C" Zone Qty	Weight (lbs)						
B4	1	CTG2 TAP STRUCTURE	85' DE	85.0	–	–	–	5.0	16.0	1.0	–	–	–	–	–	#11	15	16.5	1156	#5	15	12	18	–	–	0	–	--	0	309	248	296.00	12.36	1465	–	–
B4	2	CTG1 TAP STRUCTURE	85' DE	85.0	–	–	–	5.0	16.0	1.0	–	–	–	–	–	#11	16	16.5	1318	#5	16	12	19	–	–	0	–	–	0	326	264	313.00	12.36	1644	–	–
B4	3	RISER POLE 1	80'-DE-RISER1	80.0	–	–	–	5.0	14.0	1.0	–	–	–	–	–	#11	14	14.5	1079	#5	14	12	17	–	–	0	–	–	0	292	203	280.00	10.91	1371	–	–
B4	4	RISER POLE 2	80'-DE-RISER2	80.0	–	–	–	5.0	14.0	1.0	–	–	–	–	–	#11	13	14.5	1002	#5	13	12	16	–	–	0	–	–	0	275	189	264.00	10.91	1276	–	e
B4	–	GSU STG TERM STRUCTURE	13'-TERM. STAND	13.0	–	–	–	–	–	–	–	–	–	–	–	–	–	–	–	–	–	–	–	–	–	–	–	–	–	–	–	–	–	–	–
B4	–	MOTOR OP.SW. STRUCTURE	13'-TERM./SW. STAND	13.0	–	–	–	–	–	–	–	–	–	–	–	–	–	–	–	–	–	–	–	–	–	–	–	–	–	–	–	–	–	–	–

"NOTE-ALL FOUNDATIONS ON HOLD PENDING FINAL STRUCTURE FABRICATION DRAWINGS"

jquintana R:\Hlyprojects\115210\DD\DWG\02 Struct\19b\hf1_1.dwg F1-1 Feb 12, 2009 - 3:51pm

THIS DRAWING WAS PREPARED BY POWER ENGINEERS, INC. FOR A SPECIFIC PROJECT, TAKING INTO CONSIDERATION THE SPECIFIC AND UNIQUE REQUIREMENTS OF THE PROJECT. REUSE OF THIS DRAWING OR ANY INFORMATION CONTAINED IN THIS DRAWING FOR ANY PURPOSE IS PROHIBITED UNLESS WRITTEN PERMISSION FROM BOTH POWER AND POWER'S CLIENT IS GRANTED.

REV	REVISIONS	DATE	DRN	DSGN	CKD	APPD
B	ISSUED FOR APPROVAL	02/12/09	JLQ	DWN	EAR	
A	ISSUED FOR REVIEW	01/12/09	RH	AC	AT	EAR

REFERENCE DRAWINGS

DSGN	AC	12/22/08
DRN	RH	12/22/08
CKD	AT	12/22/08

SCALE: NTS

FOR 22x34 DWG ONLY

POWER ENGINEERS
www.powereng.com

BLYTHE ENERGY
BLYTHE PLANT GSU-GIS OH 230kV TRANSMISSION LINE
FOUNDATION TABLES

JOB NUMBER 115210

REV B

DRAWING NUMBER F1-1

BLYTHE PLANT GSU–GIS OH 230kV TRANSMISSION LINE

VICINITY MAP

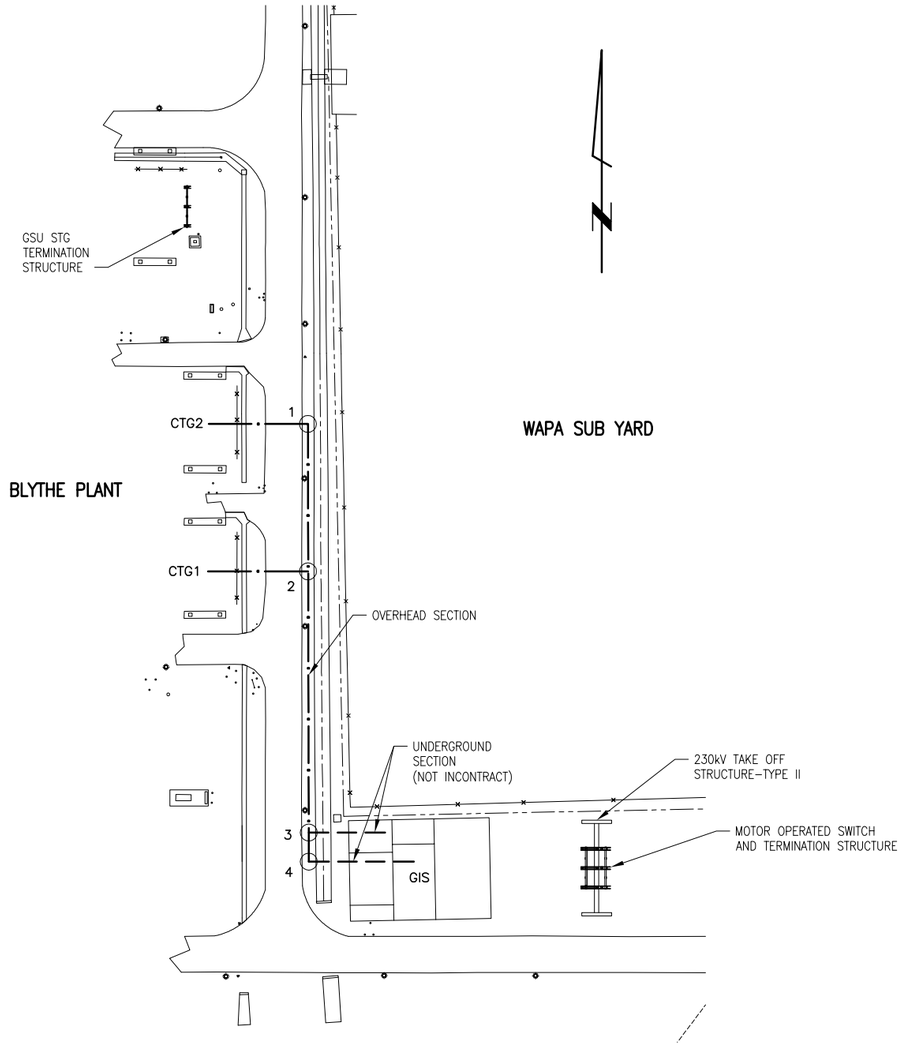

DRAWING INDEX

GENERAL DRAWINGS			
DWG NUMBER	DATE	REV	DESCRIPTION
G0–1	02/12/09	B	TITLE SHEET, VICINITY MAP, DRAWING INDEX AND LEGEND
L1–1	02/12/09	B	PHASING DIAGRAMS
PLAN AND PROFILES			
P1–1	02/12/09	B	PLAN AND PROFILE
STRUCTURE AND ASSEMBLY			
S1–1	02/12/09	B	CTG2 TAP STRUCTURE
S1–2	02/12/09	B	CTG1 TAP STRUCTURE
S1–3	02/12/09	B	RISER POLE 1
S1–3A	02/12/09	B	RISER POLE 1 DETAILS
S1–4	02/12/09	B	RISER POLE 2
S1–4A	02/12/09	B	RISER POLE 2 DETAILS
S1–5	02/12/09	A	GSU STG TERMINATION STRUCTURE
S1–6	02/12/09	A	MOTOR OPERATED SWITCH TERMINATION STRUCTURE
S1–7	02/12/09	A	TERMINATION STRUCTURE DETAILS
S1–8	02/12/09	A	230kV TAKE–OFF STRUCTURE–TYPE II
S2–1	02/12/09	B	GROUNDING DETAILS
FOUNDATION			
F0–1	02/12/09	B	FOUNDATION DETAILS
F0–2	02/12/09	A	FOUNDATION DETAILS FOR 230kV TAKE–OFF STRUCTURE–TYPE II
F1–1	02/12/09	B	FOUNDATION TABLES

LEGEND & ABBREVIATIONS

ABBREVIATIONS

DE	DEADEND
S	STEEL
OPGW	OPTICAL GROUND WIRE
SW	SHIELD WIRE
HS	HIGH STRENGTH
SWD	SHIELD WIRE DEADEND
GND	GROUND
DP (#'–#" X ##')	DRILLED PIER (DIAMETER X DEPTH)
V	VERTICAL CONFIGURATION
LS	LONG SPAN
XLS	EXTRA LONG SPAN
ACSR	ALUMINUM CONDUCTOR STEEL REINFORCED
D	DELTA CONFIGURATION
TAN	TANGENT
C	CONCRETE
E	EMBEDMENT
E##	EMBEDMENT DEPTH
EMB (#'–#")	DIAMETER OF EMBEDMENT
(#.#)	DIAMETER OF EMBEDMENT
RA	RUNNING ANGLE
SRA	SMALL RUNNING ANGLE
MRA	MEDIUM RUNNING ANGLE
LRA	LARGE RUNNING ANGLE
XLRA	EXTRA LARGE RUNNING ANGLE
G	GUYED
GE	GUYED EMBEDDED
SUSP	SUSPENSION
SNGL	SINGLE
ANCH	ANCHOR
LT	LEFT
RT	RIGHT
H	H–FRAME

LEGEND

- BTL STRUCTURE
- BTL GEOTECHNICAL BORING
- D–PV1 STRUCTURE (EXISTING)
- EAGLE MOUNTAIN STRUCTURE
- IID–WAPA STRUCTURE
- D–PV2 STRUCTURE (FUTURE)
- BUCK–JULIAN HINDS TRANSMISSION LINE
- SCE D–PV1 TRANSMISSION LINE
- SCE EAGLE MOUNTAIN TRANSMISSION LINE
- IID–WAPA TRANSMISSION LINE
- EXISTING ROADS
- APN LINES
- SCE D–PV2 TRANSMISSION LINE
- PROPOSED BTL STUB ROAD LOCATED WITH GPS SYSTEM
- PROPOSED BTL STUB ROAD LAID–OUT WITH AutoCAD SOFTWARE

THIS DRAWING WAS PREPARED BY POWER ENGINEERS, INC. FOR A SPECIFIC PROJECT, TAKING INTO CONSIDERATION THE SPECIFIC AND UNIQUE REQUIREMENTS OF THE PROJECT. REUSE OF THIS DRAWING OR ANY INFORMATION CONTAINED IN THIS DRAWING FOR ANY PURPOSE IS PROHIBITED UNLESS WRITTEN PERMISSION FROM BOTH POWER AND POWER'S CLIENT IS GRANTED.

REV	REVISIONS	DATE	DRN	DSGN	CKD	APPD	REFERENCE DRAWINGS
B	ISSUED FOR APPROVAL	02/12/09	JLQ	DWN	EAR		
A	ISSUED FOR REVIEW	01/12/09	RH	DWN	AT	EAR	* *

DSGN	DWN	12/22/08
DRN	RH	12/22/08
CKD	AT	12/22/08

SCALE: VERT:
HORIZ:
FOR 22x34 DWG ONLY

POWER ENGINEERS
www.powereng.com

BLYTHE ENERGY
BLYTHE PLANT GSU–GIS OH 230kV TRANSMISSION LINE
TITLE SHEET, VICINITY MAP, DRAWING INDEX, LEGEND

JOB NUMBER 115210
REV B
DRAWING NUMBER G0–1

jquintana C:\DOCUME~1\JQUINT~1\LOCALS~1\Temp\AcPublish_2488\19bjhg0_1.dwg LAYOUT Feb 12, 2009 – 3:51pm

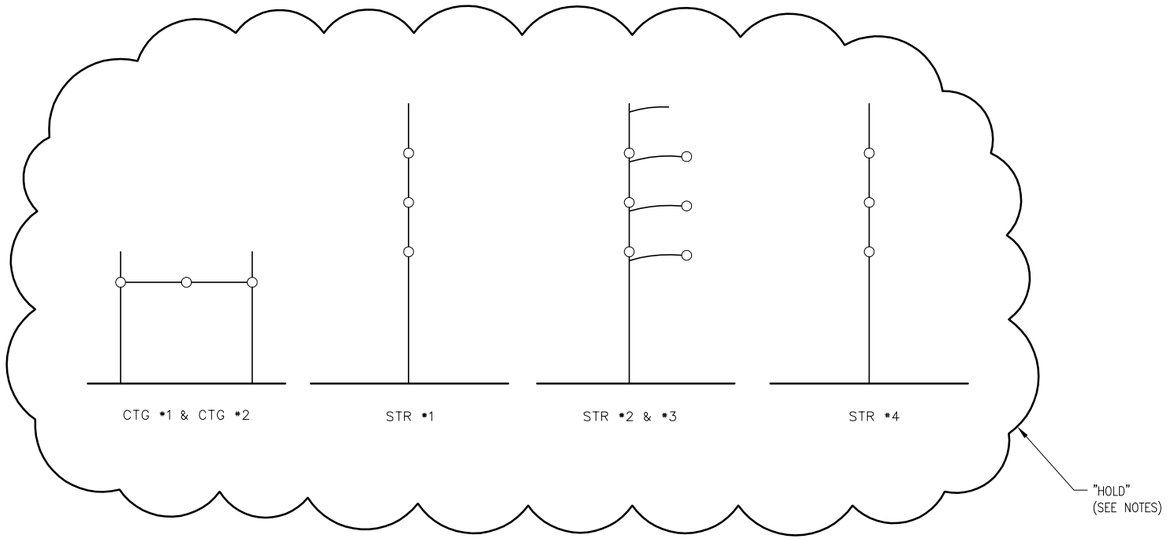

NOTES

1. HOLD PER FINAL GIS PHASING INFORMATION.

THIS DRAWING WAS PREPARED BY POWER ENGINEERS, INC. FOR A SPECIFIC PROJECT, TAKING INTO CONSIDERATION THE SPECIFIC AND UNIQUE REQUIREMENTS OF THE PROJECT. REUSE OF THIS DRAWING OR ANY INFORMATION CONTAINED IN THIS DRAWING FOR ANY PURPOSE IS PROHIBITED UNLESS WRITTEN PERMISSION FROM BOTH POWER AND POWER'S CLIENT IS GRANTED.

REV	REVISIONS	DATE	DRN	DSGN	CKD	APPD	REFERENCE DRAWINGS
B	ISSUED FOR APPROVAL	02/12/09	JLQ	DWN	EAR		
A	ISSUED FOR REVIEW	01/12/09	RH	DWN	EAR	AT	* *

DSGN	DWN	12/22/08
DRN	RH	12/22/08
CKD	AT	12/22/08

SCALE:

FOR 22x34 DWG ONLY

POWER ENGINEERS
www.powereng.com

BLYTHE ENERGY

BLYTHE PLANT GSU–GIS OH
230kV TRANSMISSION LINE

PHASING DIAGRAMS

JOB NUMBER 115210

REV B

DRAWING NUMBER L1–1

115210-L1-1

THIS DRAWING WAS PREPARED BY POWER ENGINEERS, INC. FOR A SPECIFIC PROJECT, TAKING INTO CONSIDERATION THE SPECIFIC AND UNIQUE REQUIREMENTS OF THE PROJECT. REUSE OF THIS DRAWING OR ANY INFORMATION CONTAINED IN THIS DRAWING FOR ANY PURPOSE IS PROHIBITED UNLESS WRITTEN PERMISSION FROM BOTH POWER AND POWER'S CLIENT IS GRANTED.

115210-P1-1

REV	REVISIONS	DATE	DRN	DSGN	CKD	APPD
B	ISSUED FOR APPROVAL	02/12/09	JLQ	DWN	EAR	
A	ISSUED FOR REVIEW	01/12/09	RH	DWN	EAR	AT

REFERENCE DRAWINGS

DSGN	DWN	12/22/08
DRN	RH	12/22/08
CKD	AT	12/22/08

SCALE: VERT: 1"=20' HORIZ: 1"=100'
FOR 22x34 DWG ONLY

POWER ENGINEERS
www.powereng.com

BLYTHE ENERGY

BLYTHE PLANT GSU-GIS OH
230kV TRANSMISSION LINE

PLAN AND PROFILE DRAWING

JOB NUMBER: 115210
REV: B
DRAWING NUMBER: P1-1

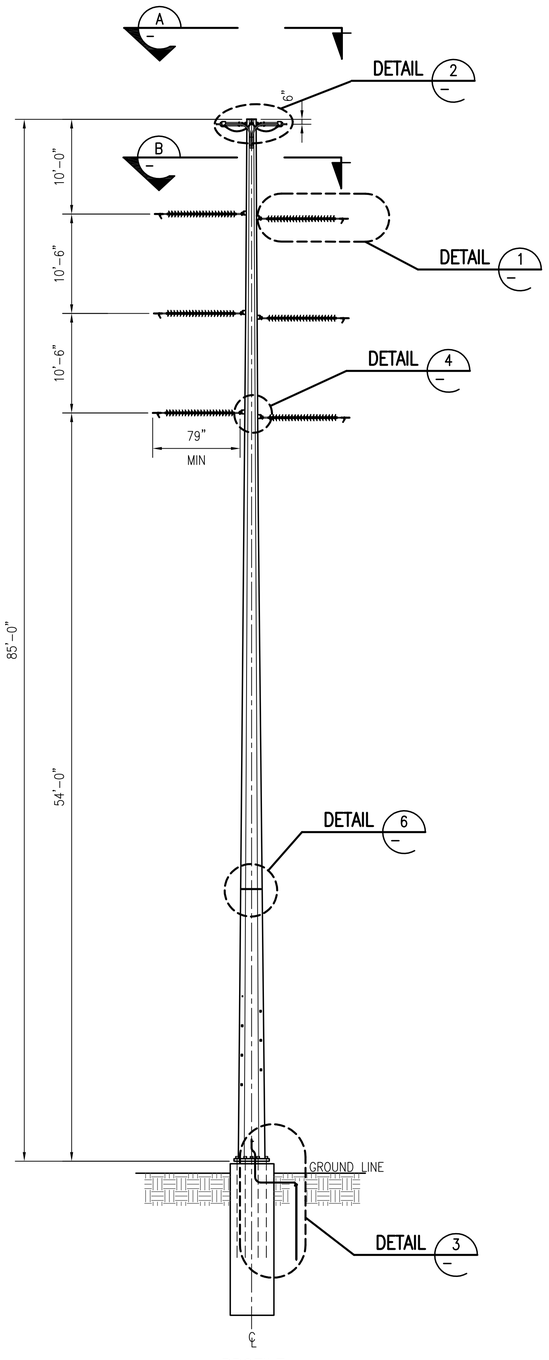

PROFILE
STEEL POLE

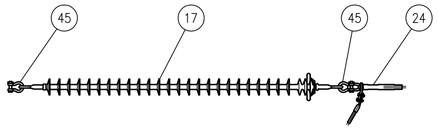

DEADEND ASSEMBLY

DETAIL 1

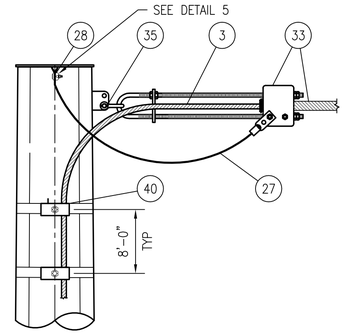

OPGW DEADEND ASSEMBLY

DETAIL 2

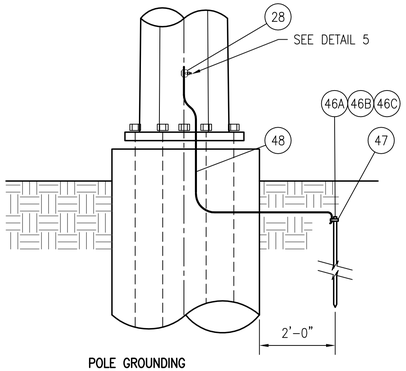

POLE GROUNDING

DETAIL 3

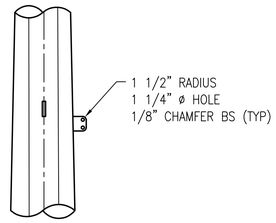

INSULATOR ATTACHMENT

DETAIL 4

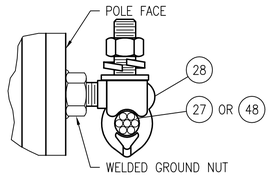

TANK GROUND

DETAIL 5

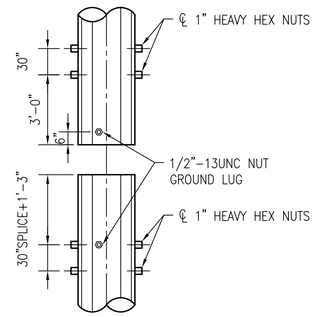

JACKING NUT (TYPICAL ALL JOINTS)

DETAIL 6

BILL OF MATERIAL

	ITEM NO	QTY	DESCRIPTION	MANUFACTURER	CATALOG NO
DEADEND DETAIL 1	17	1	INSULATOR, STRAIN, POLYMER, 230KV, EYE EYE, 8" CORONA RING, 36 KIP	MACLEAN	S699101VA02
	45	2	ANCHOR SHACKLE, 35 KIP	MACLEAN	ASH-56-BC
	24	1	DEADEND, COMPRESSION, ALUMINUM, W/ 15° TERMINAL CONNECTOR	ACA	VES-145
OPGW DEADEND DETAIL 2	3	–	OPGW, 24 FIBER COUNT	SFPOC	SFSJ-J-4517
	27	1	GROUNDING LEAD, #4 CU, 48" LONG, GROUND LUG ON ONE END	PLP	710010015
	28	1	TANK GROUND, BRONZE, 1/2"-13 UNC STUD, #10 SOL. – #1 SOL.	MACLEAN	TG-820
	33	1	CLAMP, DEADEND, OPGW, U-BOLT WEDGE TYPE, W/ RETAINING RODS	PLP	2801309
	35	1	ANCHOR SHACKLE, 25 KIP	PLP	AS-5L
	40	A/R	DOWNLEAD CLAMP, W/ BANDING ADAPTER	PLP	8003267B1
POLE GROUNDING DETAIL 3	28	1	TANK GROUND, BRONZE, 1/2"-13 UNC STUD, #10 SOL. – #1 SOL.	MACLEAN	TG-820
	46A	1	GROUND ROD, 3/4" X 10', COPPERBONDED, SECTIONAL	ERICO	633400
	46B	1	COUPLING, GROUND ROD, THREADED BRONZE, 3/4"	ERICO	CR34
	46C	1	DRIVING STUD, GROUNDING ROD, 3/4"	ERICO	DS34
	47	1	CLAMP, GROUND ROD, BRONZE, FOR 3/4" ROD	JOSLYN	J8493
	48	5 FT	GROUND WIRE, COPPERWELD, NO. 4 AWG, 7 STRAND	ACA	–

A/R = AS REQUIRED

STRUCTURE TABLE					
STR TYPE	STR NO	STR HEIGHT (FT)	LINE ANGLE (DEG)	A.G. HEIGHT H' (FT)	QUANTITY
CTG2 TAP STR	1	85	90.15	85.0	1

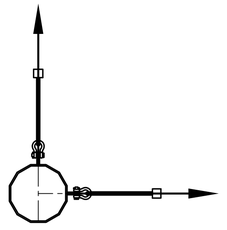

SECTION A

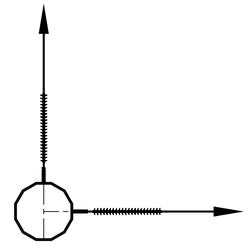

SECTION B

NOTES

1. SEE MATERIAL LIST FOR MATERIALS CALLED OUT IN BUBBLES. MATERIALS ARE SUBJECT TO SUBSTITUTION. SUBSTITUTIONS SHALL BE MADE WITH ENGINEER'S APPROVAL.
2. SEE FABRICATOR'S ASSEMBLY DRAWINGS FOR SPLIT JOINT CONNECTION REQUIREMENTS, HANDLING RECOMMENDATIONS AND POLE INSTALLATION INSTRUCTIONS.
3. JUMPER POST INSULATOR MOUNTING HARDWARE SHALL BE PROVIDED BY POLE MANUFACTURER.

bquaintance R:\Users\Bradley\Blythe\02 Struct\19bps1_1.dwg S1-1 Feb 07, 2011 – 3:12pm

19bps1_1.dwg

THIS DRAWING WAS PREPARED BY POWER ENGINEERS, INC. FOR A SPECIFIC PROJECT, TAKING INTO CONSIDERATION THE SPECIFIC AND UNIQUE REQUIREMENTS OF THE PROJECT. REUSE OF THIS DRAWING OR ANY INFORMATION CONTAINED IN THIS DRAWING FOR ANY PURPOSE IS PROHIBITED UNLESS WRITTEN PERMISSION FROM BOTH POWER AND POWER'S CLIENT IS GRANTED.

REV	REVISIONS	DATE	DRN	DSGN	CKD	APPD
C	ISSUED FOR CEC PERMITTING	02/08/11	BQQ	BJH	DTL	
B	ISSUED FOR APPROVAL	02/12/09	JLQ	DWN	EAR	
A	ISSUED FOR REVIEW	01/12/09	RH	DWN	AC	EAR

REFERENCE DRAWINGS

DSGN	DWN	12/31/08
DRN	RH	12/31/08
CKD	AC	12/31/08

SCALE: NTS

FOR 22x34 DWG ONLY

POWER ENGINEERS
www.powereng.com

BLYTHE ENERGY, LLC

BLYTHE ENERGY CENTER GSU-GIS OH 230kV TRANSMISSION LINE

CTG2 TAP STRUCTURE

JOB NUMBER 115210

REV C

DRAWING NUMBER S1-1

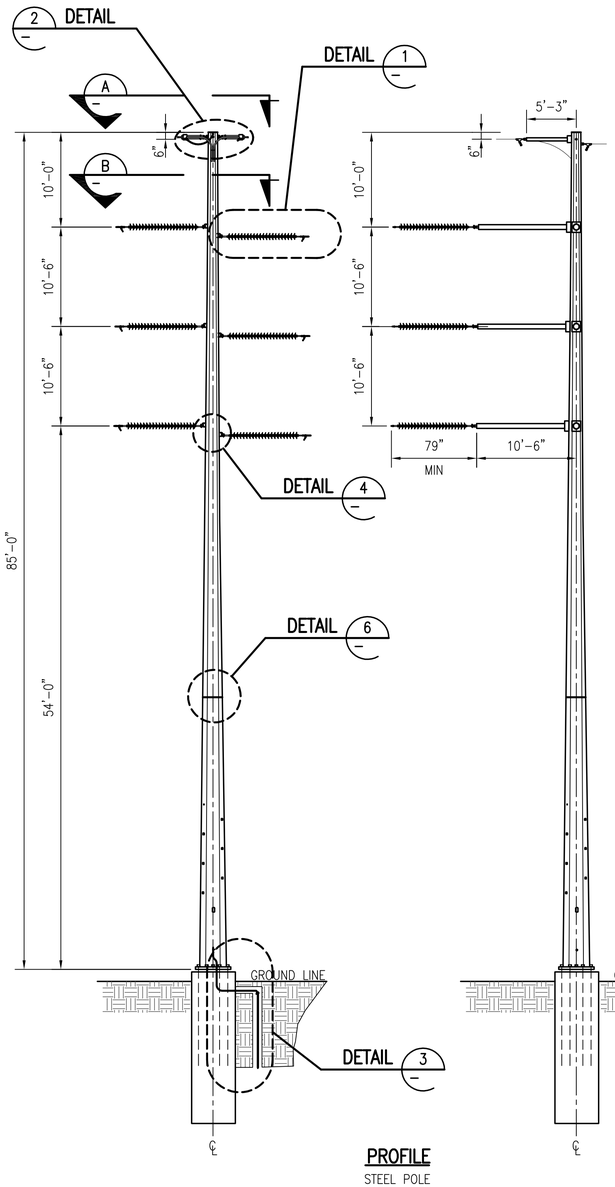

PROFILE
STEEL POLE

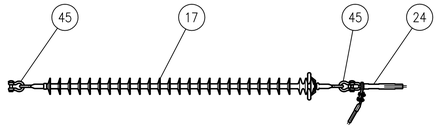

DEADEND ASSEMBLY

DETAIL 1

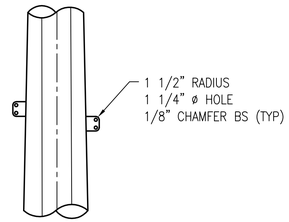

INSULATOR ATTACHMENT

DETAIL 4

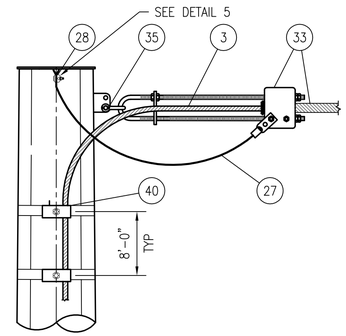

OPGW DEADEND ASSEMBLY

DETAIL 2

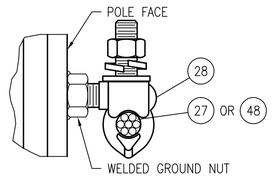

TANK GROUND

DETAIL 5

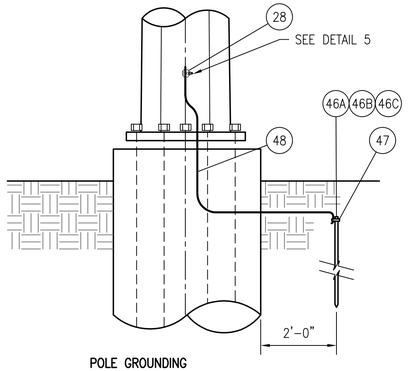

POLE GROUNDING

DETAIL 3

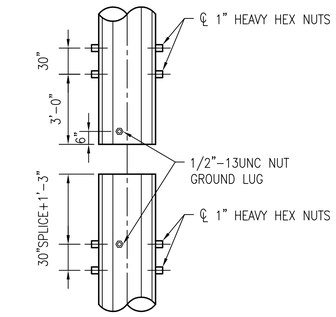

JACKING NUT (TYPICAL ALL JOINTS)

DETAIL 6

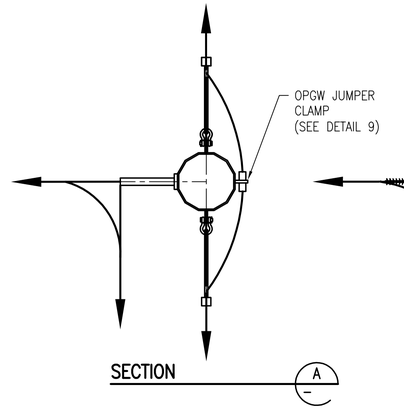

SECTION A

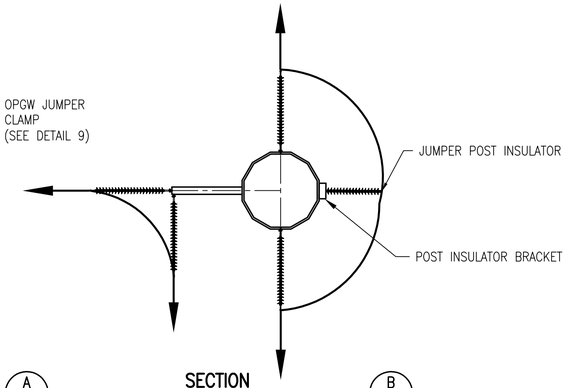

SECTION B

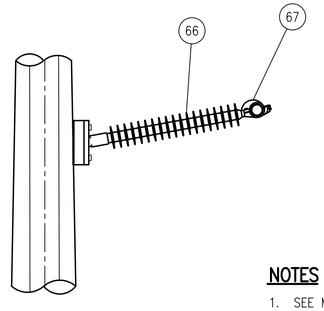

JUMPER POST ASSEMBLY

DETAIL 8

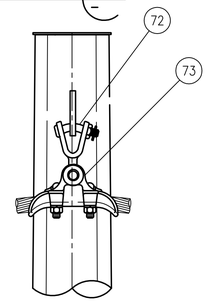

OPGW JUMPER CLAMP

DETAIL 9

BILL OF MATERIAL

	ITEM NO	QTY	DESCRIPTION	MANUFACTURER	CATALOG NO
DEADEND DETAIL 1	17	1	INSULATOR, STRAIN, POLYMER, 230KV, EYE EYE, 8" CORONA RING, 36 KIP	MACLEAN	S699101VA02
	45	2	ANCHOR SHACKLE, 35 KIP	MACLEAN	ASH-56-BC
	24	1	DEADEND, COMPRESSION, ALUMINUM, W/ 15° TERMINAL CONNECTOR	ACA	VES-145
OPGW DEADEND DETAIL 2	3	–	OPGW, 24 FIBER COUNT	SFPOC	SFSJ-J-4517
	27	1	GROUNDING LEAD, #4 CU, 48" LONG, GROUND LUG ON ONE END	PLP	710010015
	28	1	TANK GROUND, BRONZE, 1/2"-13 UNC STUD, #10 SOL. – #1 SOL.	MACLEAN	TG-820
	33	1	CLAMP, DEADEND, OPGW, U-BOLT WEDGE TYPE, W/ RETAINING RODS	PLP	2801309
	35	1	ANCHOR SHACKLE, 25 KIP	PLP	AS-5L
	40	A/R	DOWNLEAD CLAMP, W/ BANDING ADAPTER	PLP	8003267B1
POLE GROUNDING DETAIL 3	28	1	TANK GROUND, BRONZE, 1/2"-13 UNC STUD, #10 SOL. – #1 SOL.	MACLEAN	TG-820
	46A	1	GROUND ROD, 3/4" X 10', COPPERBONDED, SECTIONAL	ERICO	633400
	46B	1	COUPLING, GROUND ROD, THREADED BRONZE, 3/4"	ERICO	CR34
	46C	1	DRIVING STUD, GROUNDING ROD, 3/4"	ERICO	DS34
	47	1	CLAMP, GROUND ROD, BRONZE, FOR 3/4" ROD	JOSLYN	J8493
	48	5 FT	GROUND WIRE, COPPERWELD, NO. 4 AWG, 7 STRAND	ACA	–
JUMPER ASSEM. DETAIL 8	66	1	INSULATOR, POST, 230 KV, TRUNNION CLAMP, W/ FLAT BASE	MACLEAN	H212095VA03
	67	1	CLAMP, TRUNNION, FOR 1033 ACSR W/O ARMOR ROD	MACLEAN	ACTS-150
OPGW JUMPER CLAMP DETAIL 9	72	1	CLAMP, SUSPENSION, BOLTED, ALUMINUM, 19 KIP	MACLEAN	LS-0-N
	73	1	90 DEGREE Y-CLEVIS EYE, 17 KIP	MACLEAN	RYCE-65-625

A/R = AS REQUIRED

STRUCTURE TABLE					
STR TYPE	STR NO	STR HEIGHT (FT)	LINE ANGLE (DEG)	A.G. HEIGHT 'H' (FT)	QUANTITY
CTG1 TAP STR	2	85	0.19, 90	85.0	1

NOTES

1. SEE MATERIAL LIST FOR MATERIALS CALLED OUT IN BUBBLES. MATERIALS ARE SUBJECT TO SUBSTITUTION. SUBSTITUTIONS SHALL BE MADE WITH ENGINEER'S APPROVAL.
2. SEE FABRICATOR'S ASSEMBLY DRAWINGS FOR SPLIT JOINT CONNECTION REQUIREMENTS, HANDLING RECOMMENDATIONS AND POLE INSTALLATION INSTRUCTIONS.
3. JUMPER POST INSULATOR MOUNTING HARDWARE SHALL BE PROVIDED BY POLE MANUFACTURER.

bquaintance R:\Users\Bradley\Blythe\02 Struct\19bps1_2.dwg S1-2 Feb 09, 2011 - 9:10am

19bps1_2.dwg

THIS DRAWING WAS PREPARED BY POWER ENGINEERS, INC. FOR A SPECIFIC PROJECT, TAKING INTO CONSIDERATION THE SPECIFIC AND UNIQUE REQUIREMENTS OF THE PROJECT. REUSE OF THIS DRAWING OR ANY INFORMATION CONTAINED IN THIS DRAWING FOR ANY PURPOSE IS PROHIBITED UNLESS WRITTEN PERMISSION FROM BOTH POWER AND POWER'S CLIENT IS GRANTED.

REV	REVISIONS	DATE	DRN	DSGN	CKD	APPD	REFERENCE DRAWINGS
C	ISSUED FOR CEC PERMITTING	02/08/11	BOQ	BJH	DTL		
B	ISSUED FOR APPROVAL	02/12/09	JLQ	DWN	EAR		
A	ISSUED FOR REVIEW	01/12/09	RH	DWN	AC	EAR	

DSGN	DWN	12/31/08
DRN	RH	12/31/08
CKD	AC	12/31/08

SCALE: NTS

FOR 22x34 DWG ONLY

POWER ENGINEERS
www.powereng.com

BLYTHE ENERGY, LLC

BLYTHE ENERGY CENTER GSU-GIS OH 230kV TRANSMISSION LINE

CTG1 TAP STRUCTURE

JOB NUMBER 115210

REV C

DRAWING NUMBER S1-2

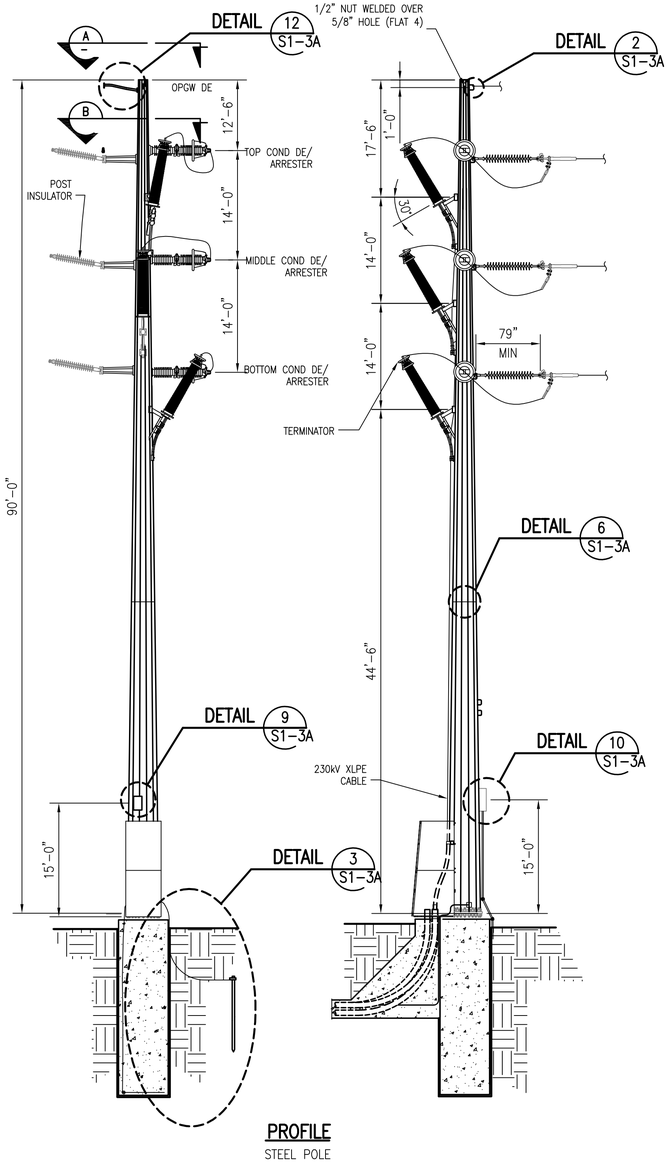

PROFILE
STEEL POLE

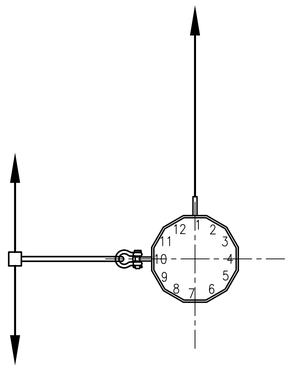

SECTION A

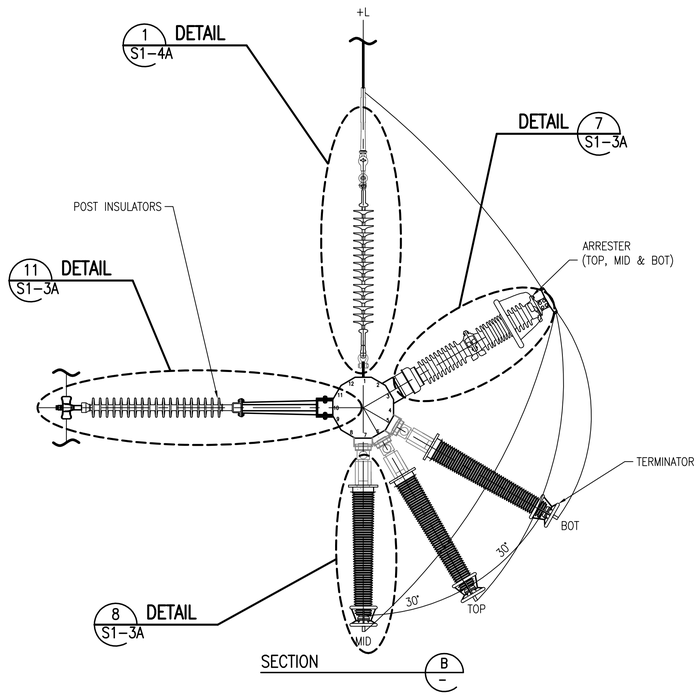

SECTION B

BILL OF MATERIAL

	ITEM NO	QTY	DESCRIPTION	MANUFACTURER	CATALOG NO
DEADEND DETAIL 1	17	1	INSULATOR, STRAIN, POLYMER, 230KV, EYE EYE, 8" CORONA RING, 36 KIP	MACLEAN	S699101VA02
	45	2	ANCHOR SHACKLE, 35 KIP	MACLEAN	ASH-56-BC
	24	1	DEADEND, COMPRESSION, ALUMINUM, W/ 15° TERMINAL CONNECTOR	ACA	VES-145
OPGW DEADEND DETAIL 2	3	–	OPGW, 24 FIBER COUNT	SFPOC	SFSJ-J-4517
	27	1	GROUNDING LEAD, #4 CU, 48" LONG, GROUND LUG ON ONE END	PLP	710010015
	28	1	TANK GROUND, BRONZE, 1/2"-13 UNC STUD, #10 SOL. – #1 SOL.	MACLEAN	TG-820
	33	1	CLAMP, DEADEND, OPGW, U-BOLT WEDGE TYPE, W/ RETAINING RODS	PLP	2801309
	35	1	ANCHOR SHACKLE, 25 KIP	PLP	AS-5L
	40	A/R	DOWNLEAD CLAMP, W/ BANDING ADAPTER	PLP	8003267B1
POLE GROUNDING DETAIL 3	28	1	TANK GROUND, BRONZE, 1/2"-13 UNC STUD, #10 SOL. – #1 SOL.	MACLEAN	TG-820
	46A	1	GROUND ROD, 3/4" X 10', COPPERBONDED, SECTIONAL	ERICO	633400
	46B	1	COUPLING, GROUND ROD, THREADED BRONZE, 3/4"	ERICO	CR34
	46C	1	DRIVING STUD, GROUNDING ROD, 3/4"	ERICO	DS34
	47	1	CLAMP, GROUND ROD, BRONZE, FOR 3/4" ROD	JOSLYN	J8493
	48	5 FT	GROUND WIRE, COPPERWELD, NO. 4 AWG, 7 STRAND	ACA	–
ARRESTER DETAIL 7	69A	3	BOLT HH, 3/4" x 3" LG., W/NUT	TBD	TBD
	69B	3	SPLIT LOCK WASHER, 3/4"	TBD	TBD
	69C	3	ROUND WASHER, FLAT, 3/4"	TBD	TBD
	69D	1	POLYMER STATION CLASS ARRESTER	TBD	TBD
	69E	1	TEE-TAP CONNECTOR, COMPRESSION TERM, 1033 ACSR CURLEW	TBD	TBD
	69F	1	BRONZE, 2 CABLE TO FLAT GROUND CLAMP, 4/0 COPPER TO 4/0 COPPER	TBD	TBD
	69G	1	GROUND CLAMP, 4/0 COPPER, 1/2" BOLT	TBD	TBD
TERMINATOR DETAIL 8	70A	1	COMPOSITE OUTDOOR TERMINATOR, 230 KV	TBD	TBD
	70B	100FT	CABLE, GROUND, 4/0 AWG COPPER RHW	TBD	TBD
	70C	A/R	UNDERGROUND CABLE CLAMP, 2-BOLT	TBD	TBD
	70D	1	CONNECTOR, COMPRESSION TERM, 1033 ACSR CURLEW	TBD	TBD
LINK BOX DETAIL 9	71A	1	EARTH LINK BOX, 3-PHASE	TBD	TBD
	71B	4	WASHER, FLAT, 1/2"	TBD	TBD
	71C	4	SPLIT LOCK WASHER, 1/2"	TBD	TBD
	71D	4	BOLT, 1/2" x 1" LG., W/ NUT	TBD	TBD
	71E	A/R	UNISTRUT, 1 5/8" x 1 5/8" W/ CHANNEL NUTS	TBD	TBD
OPGW SPLICE BOX DETAIL 10	36	1	SPLICE ENCLOSURE, W/1 SPLICE TRAY	PLP	800012147
	37	1	SPLICE TRAY, 12 FIBER	PLP	80806033
	38	1	BULLET RESISTANT CANISTER, W/ VERTICAL MOUNTING BRACKET	PLP	80012162
	39	1	CABLE STORAGE RACK, DOUBLE ARM	PLP	8003569
	40	A/R	DOWNLEAD CLAMP, W/ BANDING ADAPTER	PLP	8003267B1
TANGENT POST DETAIL 11	66	1	INSULATOR, POST, 230 KV, TRUNNION CLAMP, W/ FLAT BASE	MACLEAN	H212095VA03
	68	1	CLAMP, TRUNNION, FOR 1033 ACSR W/ ARMOR ROD	MACLEAN	ACTS-230
	12	1	ARMOR ROD, ALUMINUM	PLP	AR-0144
OPGW SUSP DETAIL 12	3	–	OPGW, 24 FIBER COUNT	SFPOC	SFSJ-J-4517
	25	1	CLAMP, SUSPENSION, OPGW, CUSHION, W/ REINFORCING RODS	PLP	4700105
	26	1	Y-CLEVIS EYE, 25 KIP	MACLEAN	YCE-66-750
	27	1	GROUNDING LEAD, #4 CU, 48" LONG, GROUND LUG ON ONE END	PLP	710010015
	28	1	TANK GROUND, BRONZE, 1/2"-13 UNC STUD, #10 SOL. – #1 SOL.	MACLEAN	TG-820

A/R = AS REQUIRED

STRUCTURE TABLE					
STR TYPE	STR NO	STR HEIGHT (FT)	LINE ANGLE (DEG)	A.G. HEIGHT "H" (FT)	QUANTITY
RISER POLE 1	3	90'-0"	0.0	90.0	1

NOTES

1. SEE PLAN AND PROFILE DRAWINGS FOR POLE HEIGHT SIZE AND LOCATION.
2. SEE DWG. L0-3 FOR STRUCTURE DESIGN LOADS.
3. SEE DWG. L1-1 FOR PHASING REQUIREMENTS.
4. 100 FT OF SPARE OPGW WILL BE COILED ON POLE.

19bps1_3.dwg

THIS DRAWING WAS PREPARED BY POWER ENGINEERS, INC. FOR A SPECIFIC PROJECT, TAKING INTO CONSIDERATION THE SPECIFIC AND UNIQUE REQUIREMENTS OF THE PROJECT. REUSE OF THIS DRAWING OR ANY INFORMATION CONTAINED IN THIS DRAWING FOR ANY PURPOSE IS PROHIBITED UNLESS WRITTEN PERMISSION FROM BOTH POWER AND POWER'S CLIENT IS GRANTED.

REV	REVISIONS	DATE	DRN	DSGN	CKD	APPD	REFERENCE DRAWINGS	
C	ISSUED FOR CEC PERMITTING	02/08/11	BOQ	BJH	DTL			
B	ISSUED FOR APPROVAL	02/12/09	JLQ	DWN	EAR		S1-4A	RISER POLE 2 DETAILS
A	ISSUED FOR REVIEW	01/12/09	RH	DWN	AC	EAR	S1-3A	RISER POLE 1 DETAILS

DSGN	DWN	12/31/08
DRN	RH	12/31/08
CKD	EAR	12/31/08
SCALE:	NTS	
FOR 22x34 DWG ONLY		

POWER ENGINEERS
www.powereng.com

BLYTHE ENERGY, LLC
BLYTHE ENERGY CENTER GSU-GIS OH 230kV TRANSMISSION LINE
RISER POLE 1

JOB NUMBER 115210
REV C
DRAWING NUMBER S1-3

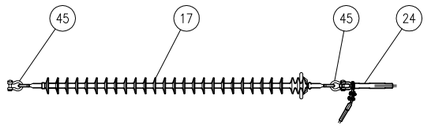

DEADEND ASSEMBLY

DETAIL 1

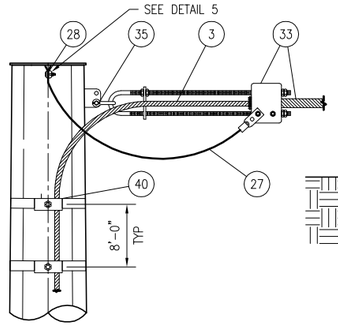

OPGW DEADEND ASSEMBLY

DETAIL 2

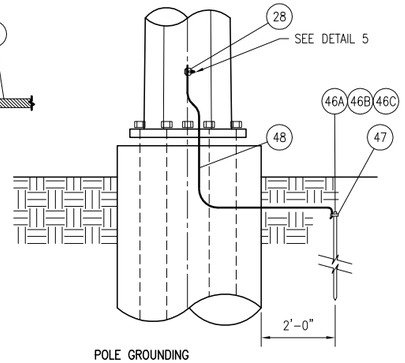

POLE GROUNDING

DETAIL 3

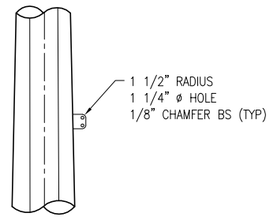

INSULATOR ATTACHMENT

DETAIL 4

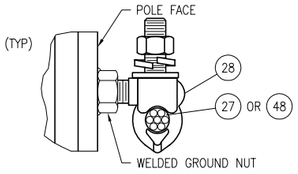

TANK GROUND

DETAIL 5

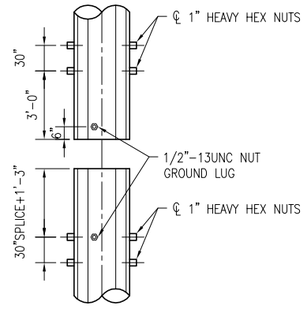

JACKING NUT (TYPICAL ALL JOINTS)

DETAIL 6

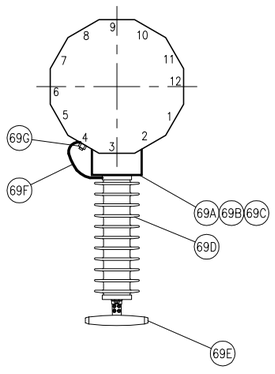

ARRESTER

DETAIL 7

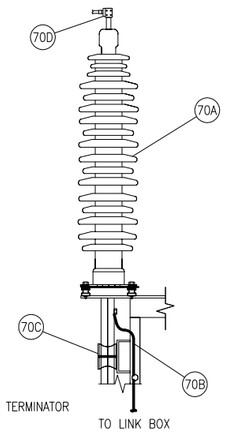

TERMINATOR

TO LINK BOX

DETAIL 8

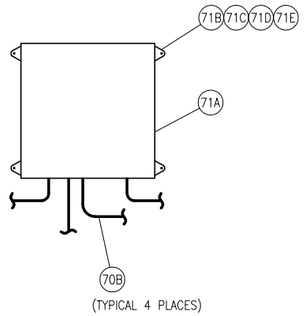

(TYPICAL 4 PLACES)

LINK BOX

DETAIL 9

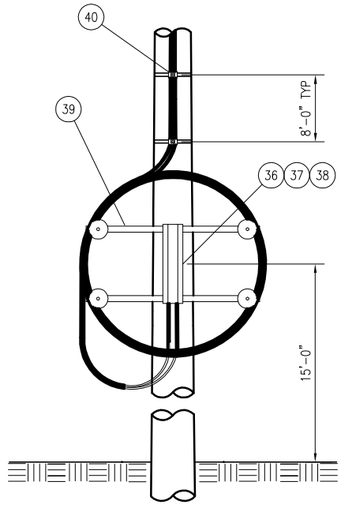

OPGW SPLICE BOX

DETAIL 10

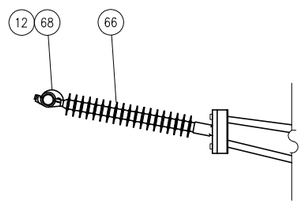

TANGENT POST ASSEMBLY

DETAIL 11

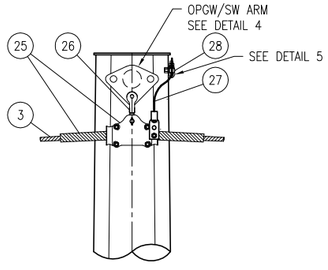

OPGW SUSPENSION ASSEMBLY

DETAIL 12

THIS DRAWING WAS PREPARED BY POWER ENGINEERS, INC. FOR A SPECIFIC PROJECT, TAKING INTO CONSIDERATION THE SPECIFIC AND UNIQUE REQUIREMENTS OF THE PROJECT. REUSE OF THIS DRAWING OR ANY INFORMATION CONTAINED IN THIS DRAWING FOR ANY PURPOSE IS PROHIBITED UNLESS WRITTEN PERMISSION FROM BOTH POWER AND POWER'S CLIENT IS GRANTED.

REV	REVISIONS	DATE	DRN	DSGN	CKD	APPD
B	ISSUED FOR APPROVAL	02/12/09	JLQ	DWN	EAR	
A	ISSUED FOR REVIEW	01/12/09	RH	DWN	AC	EAR

REFERENCE DRAWINGS

DSGN	DWN	12/31/08
DRN	RH	12/31/08
CKD	EAR	12/31/08

SCALE: NTS

FOR 22x34 DWG ONLY

POWER ENGINEERS
www.powereng.com

BLYTHE ENERGY

BLYTHE PLANT GSU-GIS OH 230kV TRANSMISSION LINE

RISER POLE 1 DETAILS

JOB NUMBER 115210

REV B

DRAWING NUMBER S1-3A

196L_S1-5

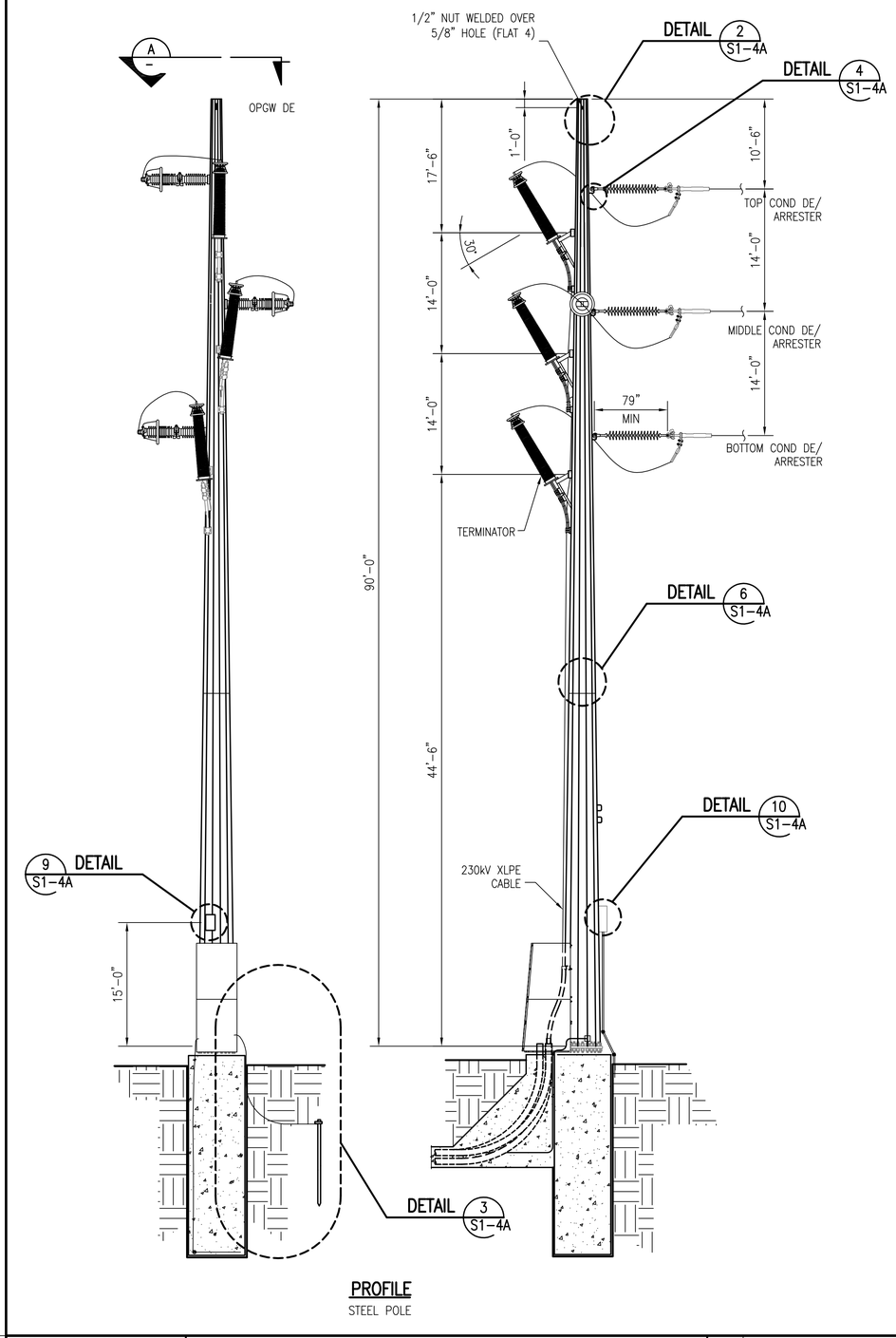

PROFILE
STEEL POLE

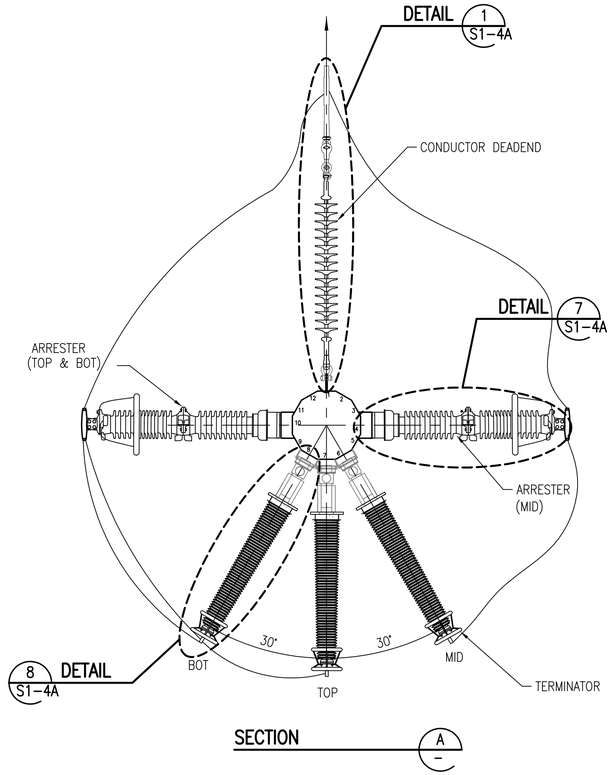

SECTION A

BILL OF MATERIAL

	ITEM NO	QTY	DESCRIPTION	MANUFACTURER	CATALOG NO
DEADEND DETAIL 1	17	1	INSULATOR, STRAIN, POLYMER, 230KV, EYE EYE, 8" CORONA RING, 36 KIP	MACLEAN	S699101VA02
	45	2	ANCHOR SHACKLE, 35 KIP	MACLEAN	ASH-56-BC
	24	1	DEADEND, COMPRESSION, ALUMINUM, W/ 15° TERMINAL CONNECTOR	ACA	VES-145
OPGW DEADEND DETAIL 2	3	–	OPGW, 24 FIBER COUNT	SFPOC	SFSJ-J-4517
	27	1	GROUNDING LEAD, #4 CU, 48" LONG, GROUND LUG ON ONE END	PLP	710010015
	28	1	TANK GROUND, BRONZE, 1/2"-13 UNC STUD, #10 SOL. – #1 SOL.	MACLEAN	TG-820
	33	1	CLAMP, DEADEND, OPGW, U-BOLT WEDGE TYPE, W/ RETAINING RODS	PLP	2801309
	35	1	ANCHOR SHACKLE, 25 KIP	PLP	AS-5L
	40	A/R	DOWNLEAD CLAMP, W/ BANDING ADAPTER	PLP	8003267B1
POLE GROUNDING DETAIL 3	28	1	TANK GROUND, BRONZE, 1/2"-13 UNC STUD, #10 SOL. – #1 SOL.	MACLEAN	TG-820
	46A	1	GROUND ROD, 3/4" X 10', COPPERBONDED, SECTIONAL	ERICO	633400
	46B	1	COUPLING, GROUND ROD, THREADED BRONZE, 3/4"	ERICO	CR34
	46C	1	DRIVING STUD, GROUNDING ROD, 3/4"	ERICO	DS34
	47	1	CLAMP, GROUND ROD, BRONZE, FOR 3/4" ROD	JOSLYN	J8493
	48	5 FT	GROUND WIRE, COPPERWELD, NO. 4 AWG, 7 STRAND	ACA	–
ARRESTER DETAIL 7	69A	3	BOLT HH, 3/4" x 3" LG., W/NUT	TBD	TBD
	69B	3	SPLIT LOCK WASHER, 3/4"	TBD	TBD
	69C	3	ROUND WASHER, FLAT, 3/4"	TBD	TBD
	69D	1	POLYMER STATION CLASS ARRESTER	TBD	TBD
	69E	1	TEE-TAP CONNECTOR, COMPRESSION TERM, 1033 ACSR CURLEW	TBD	TBD
	69F	1	BRONZE, 2 CABLE TO FLAT GROUND CLAMP, 4/0 COPPER TO 4/0 COPPER	TBD	TBD
	69G	1	GROUND CLAMP, 4/0 COPPER, 1/2" BOLT	TBD	TBD
TERMINATOR DETAIL 8	70A	1	COMPOSITE OUTDOOR TERMINATOR, 230 KV	TBD	TBD
	70B	100FT	CABLE, GROUND, 4/0 AWG COPPER RHW	TBD	TBD
	70C	A/R	UNDERGROUND CABLE CLAMP, 2-BOLT	TBD	TBD
	70D	1	CONNECTOR, COMPRESSION TERM, 1033 ACSR CURLEW	TBD	TBD
LINK BOX DETAIL 9	71A	1	EARTH LINK BOX, 3-PHASE	TBD	TBD
	71B	4	WASHER, FLAT, 1/2"	TBD	TBD
	71C	4	SPLIT LOCK WASHER, 1/2"	TBD	TBD
	71D	4	BOLT, 1/2" x 1" LG., W/ NUT	TBD	TBD
	71E	A/R	UNISTRUT, 1 5/8" x 1 5/8" W/ CHANNEL NUTS	TBD	TBD
OPGW SPLICE BOX DETAIL 10	36	1	SPLICE ENCLOSURE, W/1 SPLICE TRAY	PLP	800012147
	37	1	SPLICE TRAY, 12 FIBER	PLP	80806033
	38	1	BULLET RESISTANT CANISTER, W/ VERTICAL MOUNTING BRACKET	PLP	80012162
	39	1	CABLE STORAGE RACK, DOUBLE ARM	PLP	8003569
	40	A/R	DOWNLEAD CLAMP, W/ BANDING ADAPTER	PLP	8003267B1

A/R = AS REQUIRED

STRUCTURE TABLE					
STR TYPE	STR NO	STR HEIGHT (FT)	LINE ANGLE (DEG)	A.G. HEIGHT "H" (FT)	QUANTITY
RISER POLE 2	4	90'-0"	0.0	90.0	1

NOTES

1. SEE PLAN AND PROFILE DRAWINGS FOR POLE HEIGHT SIZE AND LOCATION.
2. SEE DWG. L0-4 FOR STRUCTURE DESIGN LOADS.
3. SEE DWG. L1-1 FOR PHASING REQUIREMENTS.
4. 100 FT OF SPARE OPGW WILL BE COILED ON POLE.

THIS DRAWING WAS PREPARED BY POWER ENGINEERS, INC. FOR A SPECIFIC PROJECT, TAKING INTO CONSIDERATION THE SPECIFIC AND UNIQUE REQUIREMENTS OF THE PROJECT. REUSE OF THIS DRAWING OR ANY INFORMATION CONTAINED IN THIS DRAWING FOR ANY PURPOSE IS PROHIBITED UNLESS WRITTEN PERMISSION FROM BOTH POWER AND POWER'S CLIENT IS GRANTED.

REV	REVISIONS	DATE	DRN	DSGN	CKD	APPD	REFERENCE DRAWINGS	
C	ISSUED FOR CEC PERMITTING	02/08/11	BOQ	BJH	DTL			
B	ISSUED FOR APPROVAL	02/12/09	JLQ	DWN	EAR			
A	ISSUED FOR REVIEW	01/12/09	RH	DWN	AC	EAR	S1-4A	RISER POLE 2 DETAILS

DSGN	DWN	12/31/08
DRN	RH	12/31/08
CKD	EAR	12/31/08
SCALE:	NTS	
FOR 22x34 DWG ONLY		

POWER ENGINEERS
www.powereng.com

BLYTHE ENERGY, LLC
BLYTHE ENERGY CENTER GSI-GIS OH 230kV TRANSMISSION LINE
RISER POLE 2

JOB NUMBER 115210
REV C
DRAWING NUMBER S1-4

19bps1_4.dwg

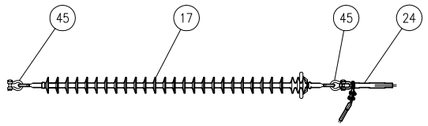

DEADEND ASSEMBLY

DETAIL 1

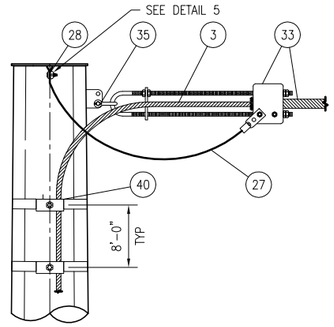

OPGW DEADEND ASSEMBLY

DETAIL 2

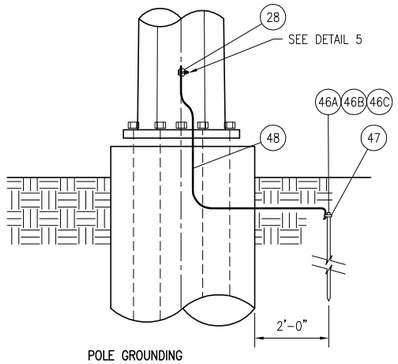

POLE GROUNDING

DETAIL 3

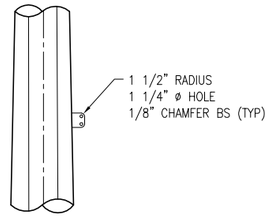

INSULATOR ATTACHMENT

DETAIL 4

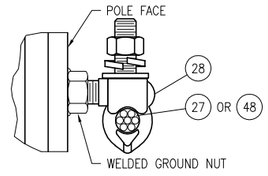

TANK GROUND

DETAIL 5

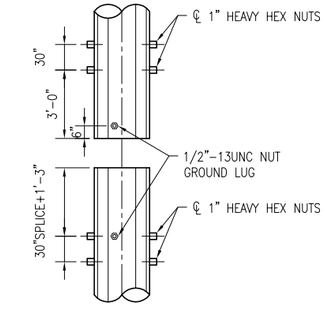

JACKING NUT (TYPICAL ALL JOINTS)

DETAIL 6

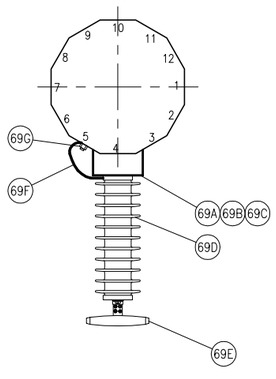

ARRESTER

DETAIL 7

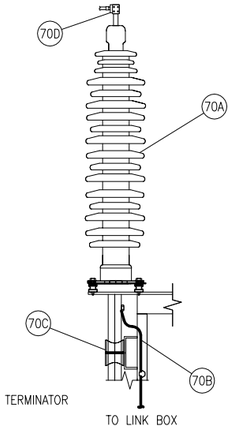

TERMINATOR

TO LINK BOX

DETAIL 8

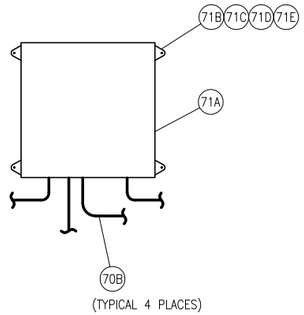

(TYPICAL 4 PLACES)

LINK BOX

DETAIL 9

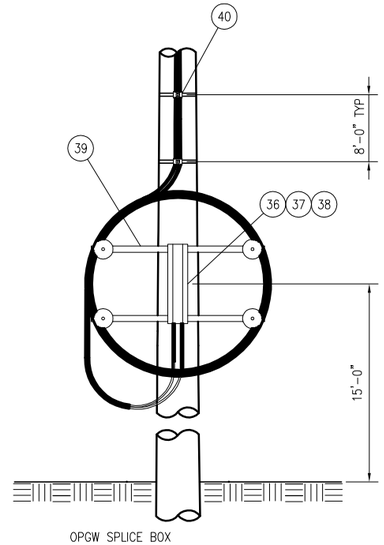

OPGW SPLICE BOX

DETAIL 10

19bL_S1-6

THIS DRAWING WAS PREPARED BY POWER ENGINEERS, INC. FOR A SPECIFIC PROJECT, TAKING INTO CONSIDERATION THE SPECIFIC AND UNIQUE REQUIREMENTS OF THE PROJECT. REUSE OF THIS DRAWING OR ANY INFORMATION CONTAINED IN THIS DRAWING FOR ANY PURPOSE IS PROHIBITED UNLESS WRITTEN PERMISSION FROM BOTH POWER AND POWER'S CLIENT IS GRANTED.

REV	REVISIONS	DATE	DRN	DSGN	CKD	APPD	REFERENCE DRAWINGS
B	ISSUED FOR APPROVAL	02/12/09	JLQ	DWN	EAR		
A	ISSUED FOR REVIEW	01/12/09	RH	DWN	AC	EAR	

DSGN	DWN	12/31/08
DRN	RH	12/31/08
CKD	EAR	12/31/08

SCALE: NTS

FOR 22x34 DWG ONLY

POWER ENGINEERS
www.powereng.com

BLYTHE ENERGY

BLYTHE PLANT GSU-GIS OH
230kV TRANSMISSION LINE

RISER POLE 2 DETAILS

JOB NUMBER 115210

REV B

DRAWING NUMBER
S1-4A

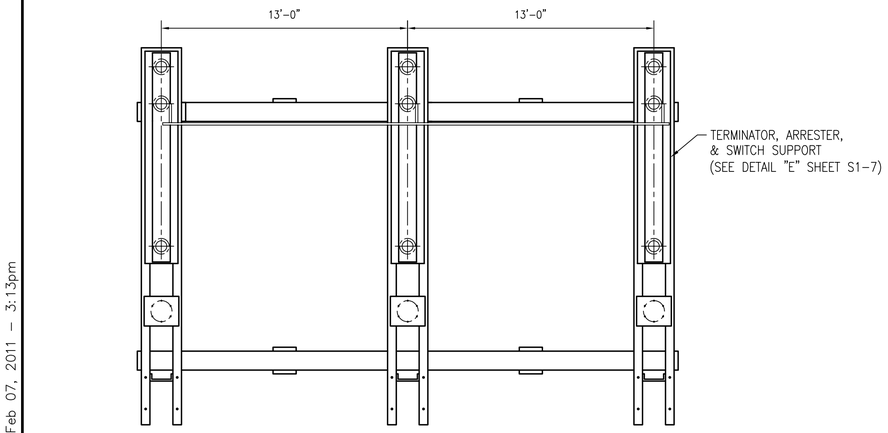

PLAN VIEW
SCALE: 1/4" = 1'

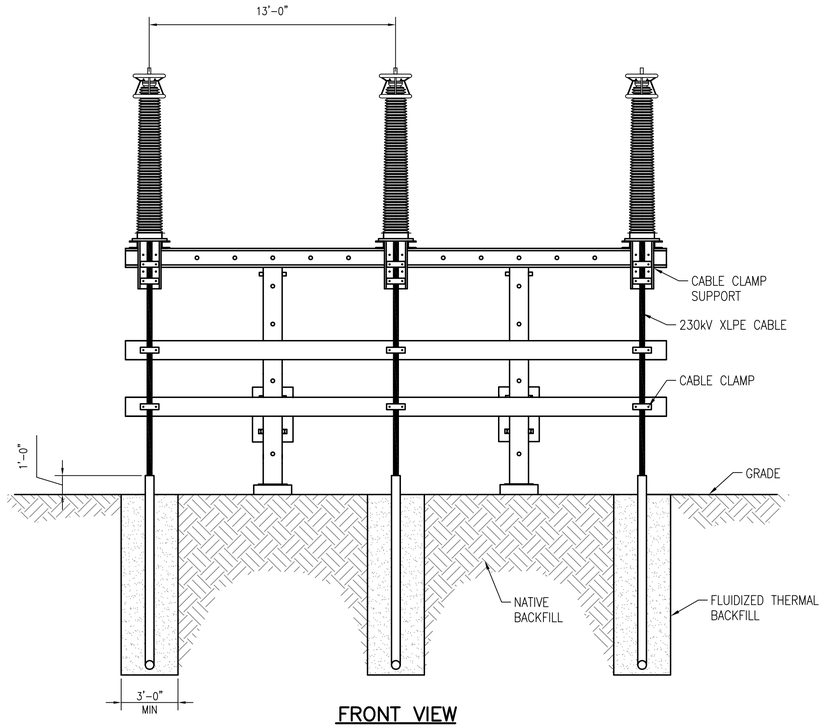

FRONT VIEW
SCALE: 1/4" = 1'

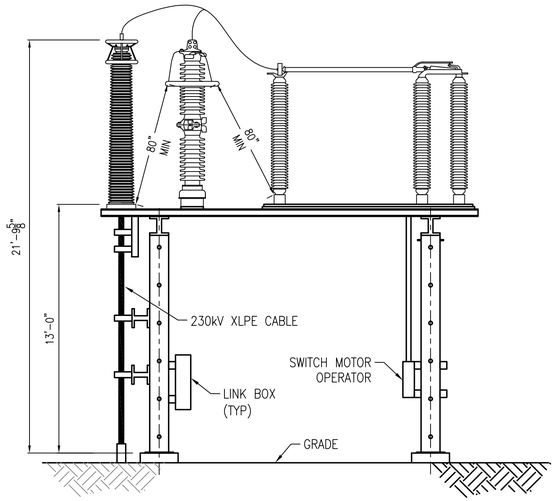

SIDE VIEW
SCALE: 1/4" = 1'

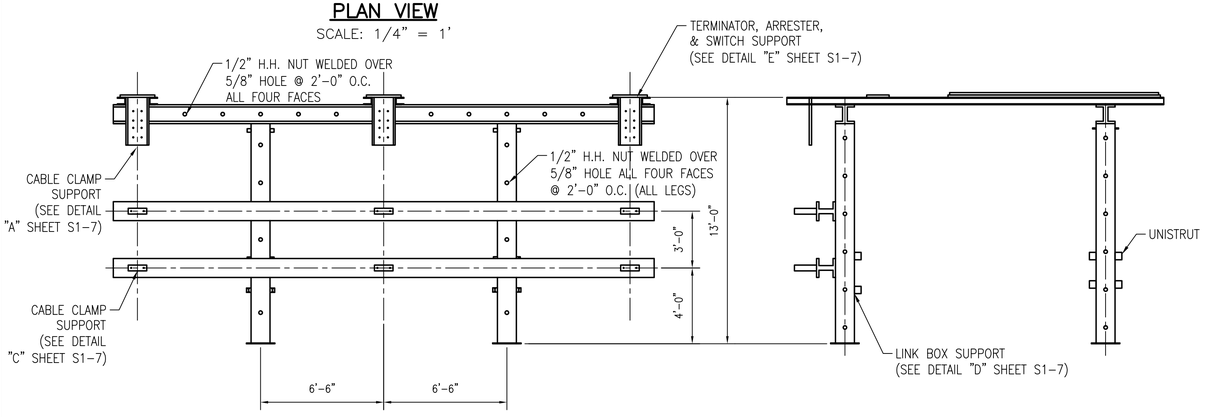

FRONT VIEW
SCALE: 1/4" = 1'

SIDE VIEW
SCALE: 1/4" = 1'

EQUIPMENT DATA		
EQUIPMENT	DESIGN WEIGHT (LBS)	SURFACE AREA (FT2)
TERMINATOR		
ARRESTOR		
SWITCH		

NOTES

1. MATERIAL SHALL MEET THE REQUIREMENTS OF THE FOLLOWING SPECIFICATIONS:

STRUCTURAL STEEL	ASTM A36
STRUCTURAL TUBING	ASTM A500 GRADE B
WELDED STEEL	AWS D1.1
ELECTRODES	E70XX
ANCHOR BOLTS	A307
HIGH STRENGTH BOLTS	A325

2. ALL STEEL TO BE HOT DIPPED GALVANIZED AFTER FABRICATION.
3. FABRICATOR TO SUPPLY ALL ANCHOR BOLTS, ERECTION BOLTS, NUTS AND LOCK NUTS. ALL SHALL BE FURNISHED AS A CAGED ASSEMBLY. ANCHOR BOLTS TO BE THREADED REBAR OR HEADED ANCHOR BOLTS.
4. STUCTURE SHALL REST ON LEVELING NUTS.
5. FABRICATOR TO FURNISH FOUNDATION LOADS WITHOUT OVERLOAD FACTORS AND COLUMN. DIMENSIONS WITH INTERNAL PROPOSAL.
6. DESIGN AND FABRICATION SHALL MEET THE REQUIREMENTS OF THE CALIFORNIA CODE AND AISC STEEL CONSTRUCTION MANUAL.
7. DETAILS WILL BE FINALIZED AT A LATER DATE.
8. Δ DIMENSIONS MAY CHANGE WHEN FINAL EQUIPMENT IS APPROVED.

DESIGN CONSIDERATIONS

1. APPLY DEAD LOAD FACTOR TO STRUCTUREWEIGHT.
2. APPLY WIND FORCE WITH LOAD FACTOR TO STRUCTURE IN THE DIRECTION THAT CREATES THE MOST CRITICAL LOAD ON THE STRUCTURE.
3. APPLY SHAPE FACTOR TO WIND FOR STRUCTURE LOAD.
   ROUND, 12 SIDED – 1.00
   8 SIDED – 1.40
   FLAT FACED – 1.60
4. INVESTIGATE EFFECT OF PARTIAL EQUIPMENT INSTALLATION ON STRUCTURAL ANALYSIS AND DESIGN FOR MOST CRITICAL EQUIPMENT ARRANGEMENT. USE VERTICAL LOADS AND DEAD LOADS.
5. STRUCTURE TO BE DESIGNED TO WITHSTAND ALL THE FOLLOWING CONDITIONS:
   EXTREME WIND LOAD – THE EXTREME WIND OF 130 MPH (50 PSF), SHALL BE APPLIED TO THE STRUCTURES, CONDUCTORS, AND EQUIPMENT MOUNTED TO THE STRUCTURE.
6. DETAILS WILL BE FINALIZED AT A LATER DATE.
7. STRUCTURE DEFLECTIONS SHALL MEET NEMA STANDARDS, PUBLICATION NO. SG6. CLASS "A" STRUCTURE:
   A. HORIZONTAL DEFLECTION OF VERTICAL MEMBER = L/100
   B. HORIZONTAL & VERTICAL DEFLECTION OF HORIZONTAL MEMBER = L/200

THIS DRAWING WAS PREPARED BY POWER ENGINEERS, INC. FOR A SPECIFIC PROJECT, TAKING INTO CONSIDERATION THE SPECIFIC AND UNIQUE REQUIREMENTS OF THE PROJECT. REUSE OF THIS DRAWING OR ANY INFORMATION CONTAINED IN THIS DRAWING FOR ANY PURPOSE IS PROHIBITED UNLESS WRITTEN PERMISSION FROM BOTH POWER AND POWER'S CLIENT IS GRANTED.

REV	REVISIONS	DATE	DRN	DSGN	CKD	APPD	REFERENCE DRAWINGS
B	ISSUED FOR CEC PERMITTING	02/08/11	BOQ	BJH	DTL		
A	ISSUED FOR APPROVAL	02/12/09	BOQ	BJH	LRH		* *

DSGN	BJH	11/10/08
DRN	BOQ	11/10/08
CKD	LRH	11/10/08

SCALE: AS SHOWN
FOR 22x34 DWG ONLY

POWER ENGINEERS
www.powereng.com

BLYTHE ENERGY, LLC
BLYTHE ENERGY CENTER GSU-GIS OH 230kV TRANSMISSION LINE
MOTOR OPERATED SWITCH TERMINATION STRUCTURE

JOB NUMBER 115210
REV B
DRAWING NUMBER S1-6

bquaintance R:\Users\Bradley\Blythe\02 Struct\21bjhs1_6.dwg S1-6 Feb 07, 2011 - 3:13pm
21bjhs1-6

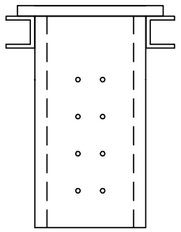

CABLE CLAMP SUPPORTS

DETAIL A
SCALE 1/2" = 1'-0"

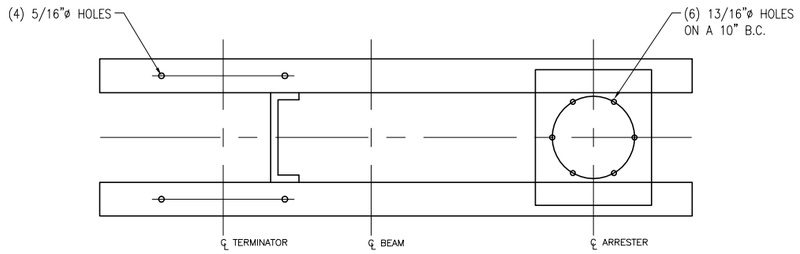

TERMINATOR AND ARRESTER

DETAIL B
SCALE 1" = 1'-0"

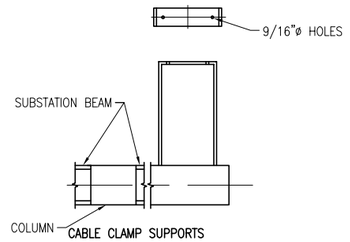

CABLE CLAMP SUPPORTS

DETAIL C
SCALE 1" = 1'-0"

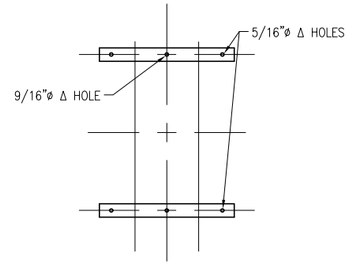

LINK BOX SUPPORTS

DETAIL D
SCALE 1" = 1'-0"

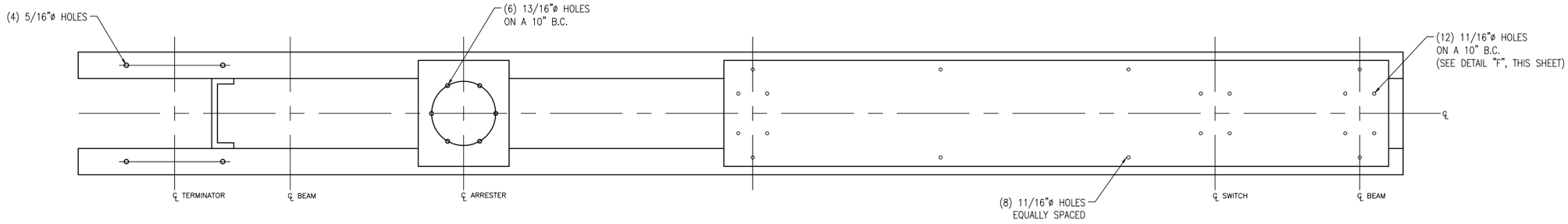

TERMINATOR AND ARRESTER

DETAIL E
SCALE 1" = 1'-0"

jquintana R:\Hlyprojects\115210\DD\DWG\02 Struct\21bjhs1_7.dwg S1-7 Feb 12, 2009 - 3:52pm

THIS DRAWING WAS PREPARED BY POWER ENGINEERS, INC. FOR A SPECIFIC PROJECT, TAKING INTO CONSIDERATION THE SPECIFIC AND UNIQUE REQUIREMENTS OF THE PROJECT. REUSE OF THIS DRAWING OR ANY INFORMATION CONTAINED IN THIS DRAWING FOR ANY PURPOSE IS PROHIBITED UNLESS WRITTEN PERMISSION FROM BOTH POWER AND POWER'S CLIENT IS GRANTED.

REV	REVISIONS	DATE	DRN	DSGN	CKD	APPD	REFERENCE DRAWINGS
A	ISSUED FOR APPROVAL	02/12/09	BOQ	BJH	LRH		* *

DSGN	BJH	12/08/08
DRN	BOQ	12/08/08
CKD	LRH	12/08/08

SCALE: AS SHOWN
FOR 22x34 DWG ONLY

POWER ENGINEERS
www.powereng.com

BLYTHE ENERGY, LLC
BLYTHE – JULIAN HINDS
230kV TRANSMISSION LINE
TERMINATION STRUCTURE DETAILS

JOB NUMBER 115210
REV A
DRAWING NUMBER S1-7

21bjhs1-4

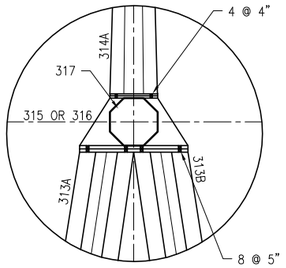

DETAIL A
TYPICAL 2 PLACES

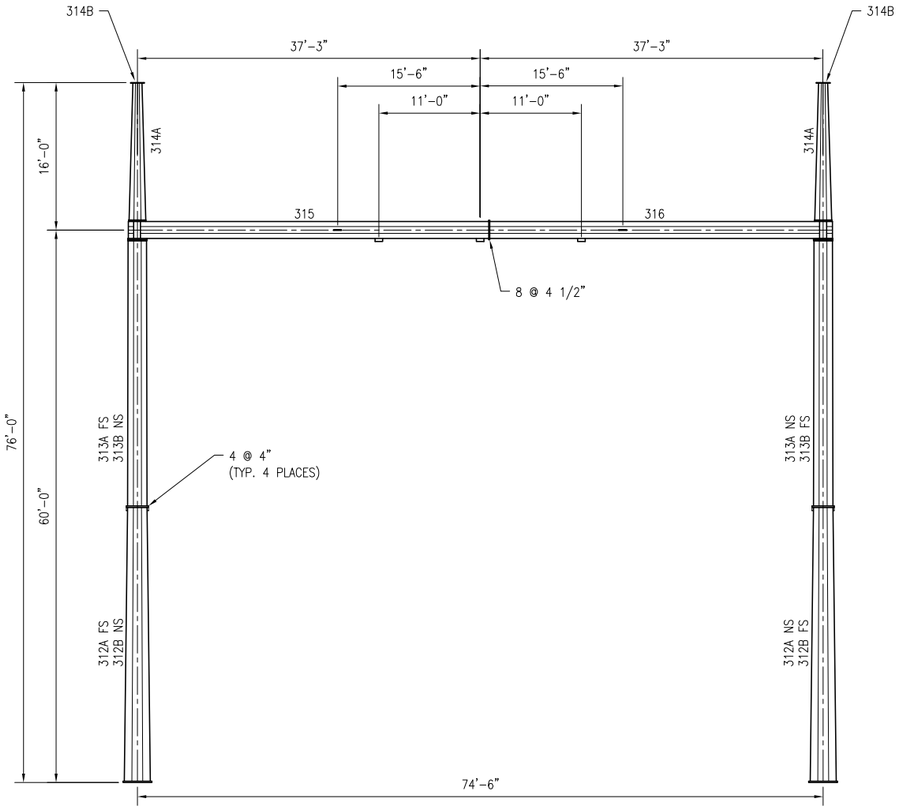

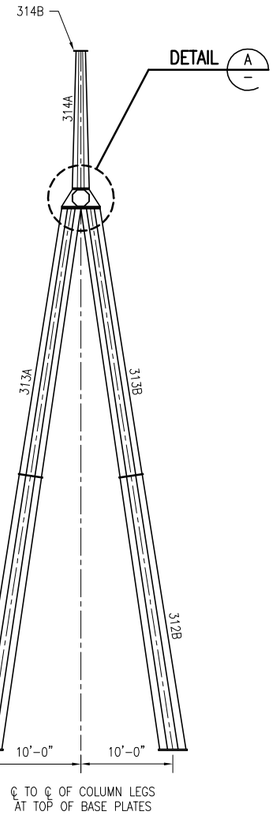

BILL OF MATERIAL

WELDMENTS 312A–(TYP. 2 PLACES)

STR. QTY	MATERIAL	LENGTH FT	LENGTH IN	MK	REMARK	TOTAL WT
4	BT PL 3/16 X 47 1/2 X 55 3/4	29	11 3/4	a	BENT & TPRD	3932.8
2	PL 1 1/2 X 37 1/4	3	1 1/4	b		1181.4
2	PL 1 X 30	2	6	c		510.0
12	BAR 1/2 X 2	0	2	k		7.2
2	BAR 3/16 X 1 1/2	9	3 1/2		BACKER BAR	17.8

WELDMENTS 312B–(TYP. 2 PLACES)

STR. QTY	MATERIAL	LENGTH FT	LENGTH IN	MK	REMARK	TOTAL WT
4	BT PL 3/16 X 47 1/2 X 55 3/4	29	11 3/4	a	BENT & TPRD	3932.8
2	PL 1 1/2 X 37 1/4	3	1 1/4	b		1181.4
2	PL 1 X 30	2	6	c		510.0
2	BAR 1/2 X 2	0	2	k		1.2
2	BAR 3/16 X 1 1/2	9	3 1/2		BACKER BAR	17.8

WELDMENTS 313A–(TYP. 2 PLACES)

STR. QTY	MATERIAL	LENGTH FT	LENGTH IN	MK	REMARK	TOTAL WT
4	BT PL 3/16 X 39 1/4 X 47 1/2	29	6 7/8	a	BENT & TPRD	3275.6
2	PL 1 1/2 X 25	2	1	b		532.2
2	PL 1 X 30	2	6	c		510.0
14	BAR 1/2 X 2	0	2	k		8.4

WELDMENTS 313B–(TYP. 2 PLACES)

STR. QTY	MATERIAL	LENGTH FT	LENGTH IN	MK	REMARK	TOTAL WT
4	BT PL 3/16 X 39 1/4 X 47 1/2	29	6 7/8	a	BENT & TPRD	3275.6
2	PL 1 1/2 X 25	2	1	b		532.2
2	PL 1 X 30	2	6	c		510.0

WELDMENTS 314A–(TYP. 2 PLACES)

STR. QTY	MATERIAL	LENGTH FT	LENGTH IN	MK	REMARK	TOTAL WT
4	BT PL 3/16 X 19 1/4 X 35 3/4	14	10 1/4	a	BENT & TPRD	1043.2
2	PL 1 X 23	1	11	b		299.8
2	PL 3/4 X 18	1	6	c		137.8
8	BAR 1/2 X 2	0	2	k		4.8
2	PL 3/16 X 7	0	10	314B	SHIP LOOSE	7.6
2	PL 3/16 X 22	1	10	317	SHIP LOOSE	51.6

WELDMENTS 315–(TYP. 1 PLACE)

STR. QTY	MATERIAL	LENGTH FT	LENGTH IN	MK	REMARK	TOTAL WT
2	BT PL 1/4 X 35 1/2	20	0	a	BENT	1207.0
2	BT PL 1/4 X 35 1/2	18	11 1/4	b	BENT	1143.0
1	PL 1 1/2 X 25	4	2 1/2	c		537.5
1	PL 1 X 23	1	11	d		149.9
2	PL 3/8 X 22	2	2 1/2	f	ONE MAKES TWO	114.6
2	BAR 3/16 X 2	0	2	g		0.6
1	PL 1 1/4 X 23 1/2	1	11 1/2	h		196.0
2	BAR 3/4 X 4	0	4 1/2	j		7.8
2	BT PL 1/2 X 8	1	1	m		29.6

WELDMENTS 316–(TYP. 1 PLACE)

STR. QTY	MATERIAL	LENGTH FT	LENGTH IN	MK	REMARK	TOTAL WT
2	BT PL 1/4 X 35 1/2	20	0	a	BENT	1207.0
2	BT PL 1/4 X 35 1/2	17	5 1/4	b	BENT	1052.4
1	PL 1 1/2 X 25	4	2 1/2	c		537.5
1	PL 1 X 23	1	11	d		149.9
2	PL 3/8 X 22	2	2 1/2	f	ONE MAKES TWO	114.6
2	BAR 3/16 X 2	0	2	g		0.6
1	PL 1 1/4 X 23 1/2	1	11 1/2	h		196.0
1	BAR 3/4 X 4	0	4 1/2	j		3.9
1	BT PL 1/2 X 8	1	1	m		14.8

HARDWARE (INCLUDES 2% EXTRA)

26	1" DIA BOLTS	0	4		A325	47.0
9	1" DIA BOLTS	0	4 1/2		A325	17.3
17	1" DIA BOLTS	0	5		A325	34.5
52	1" DIA NUTS				HEAVY HEX	
104	1" DIA WASHERS				HARDENED	
52	1" DIA PALNUTS					2.1
9	1/4" DIA SCREWS	0	3/4		SELF-TAPPING	
					SUBTOTAL	28244.8
					3 1/2% GALV.	988.6
					TOTAL WEIGHT PER UNIT	29233.4

THIS DRAWING WAS PREPARED BY POWER ENGINEERS, INC. FOR A SPECIFIC PROJECT, TAKING INTO CONSIDERATION THE SPECIFIC AND UNIQUE REQUIREMENTS OF THE PROJECT. REUSE OF THIS DRAWING OR ANY INFORMATION CONTAINED IN THIS DRAWING FOR ANY PURPOSE IS PROHIBITED UNLESS WRITTEN PERMISSION FROM BOTH POWER AND POWER'S CLIENT IS GRANTED.

REV	REVISIONS	DATE	DRN	DSGN	CKD	APPD	REFERENCE DRAWINGS
A	ISSUED FOR APPROVAL	02/12/09	RH	SJS	DWN	BH	

DSGN	SJS	02/02/09
DRN	RH	02/03/09
CKD	DWN	02/12/09

SCALE: NTS

FOR 22x34 DWG ONLY

POWER ENGINEERS
www.powereng.com

BLYTHE ENERGY
BLYTHE PLANT GSU–GIS OH
230kV TRANSMISSION LINE

230kV TAKE–OFF STRUCTURE
TYPE II

JOB NUMBER 115210 | REV A

DRAWING NUMBER S1–8

FILE jquintana R:\Hyprojects\115210\DD\DWG\02 Struct\21bjhs1_8.dwg S1–2 Feb 12, 2009 – 3:52pm

BILL OF MATERIAL

	ITEM NO	QTY	DESCRIPTION	MANUFACTURER	CATALOG NO
POLE COUNTERPOISE	46A	20	GROUND ROD, 3/4"X10', COPPERBONDED, SECTIONAL	ERICO	633400
	46B	10	COUPLING, GROUND ROD, THREADED BRONZE, 3/4"	ERICO	CR34
	46C	10	DRIVING STUD, GROUND ROD, 3/4"	ERICO	DS34
	47	10	CLAMP, GROUND ROD, BRONZE, FOR 3/4" ROD	JOSLYN	J8493
	48	450FT	GROUND WIRE, COPPERWELD, NO. 4 AWG, 7 STRAND	SOUTHWIRE	----

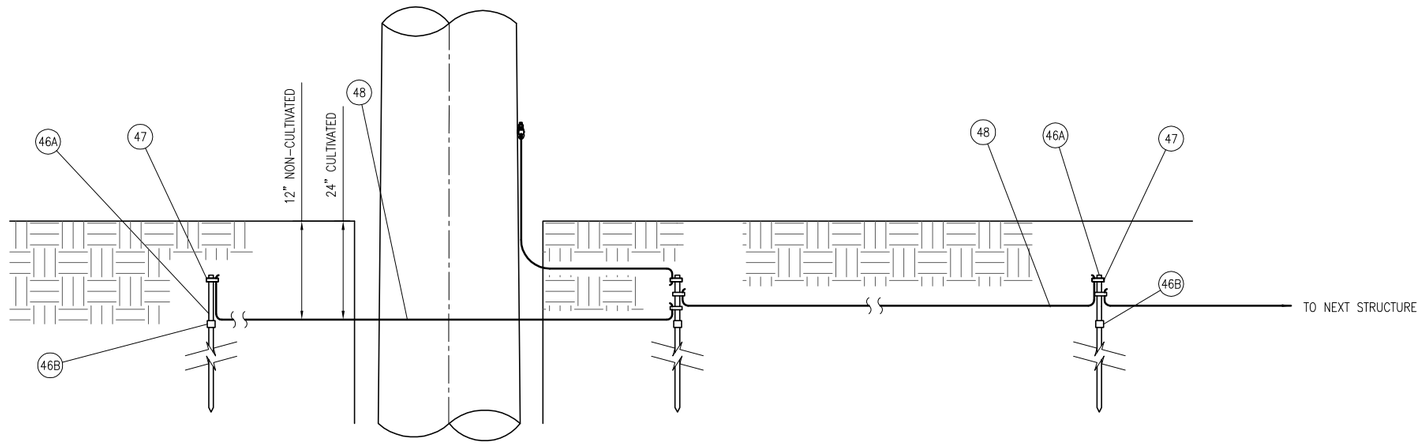

TYPICAL POLE GROUNDING CONNECTIONS

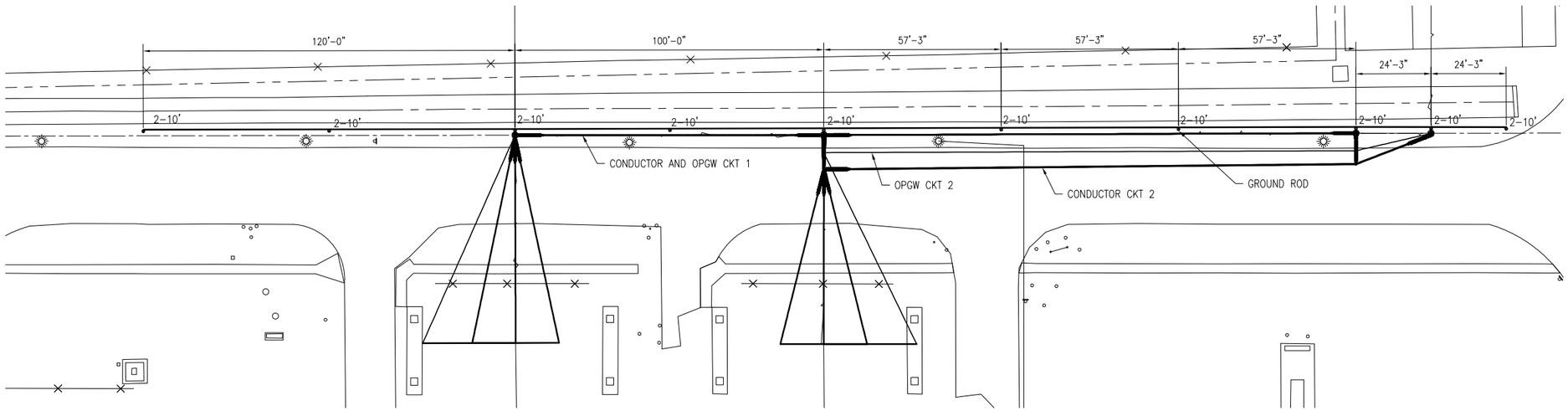

SINGLE POLE STRUCTURE
STANDARD GROUNDING AND COUNTERPOISE LAYOUT

NOTES

1. IF EXISTING GROUND GRID IS ENCOUNTERED, TIE INTO EXISTING GRID WITH TWO (2) 10'-0" GROUND RODS.

THIS DRAWING WAS PREPARED BY POWER ENGINEERS, INC. FOR A SPECIFIC PROJECT, TAKING INTO CONSIDERATION THE SPECIFIC AND UNIQUE REQUIREMENTS OF THE PROJECT. REUSE OF THIS DRAWING OR ANY INFORMATION CONTAINED IN THIS DRAWING FOR ANY PURPOSE IS PROHIBITED UNLESS WRITTEN PERMISSION FROM BOTH POWER AND POWER'S CLIENT IS GRANTED.

REV	REVISIONS	DATE	DRN	DSGN	CKD	APPD	REFERENCE DRAWINGS
B	ISSUED FOR APPROVAL	02/12/09	JLQ	DWN	EAR		
A	ISSUED FOR REVIEW	01/12/09	RH	DWN	AC	EAR	* *

DSGN	DWN	12/22/08
DRN	RH	12/22/08
CKD	AT	12/22/08

SCALE: NTS

FOR 22x34 DWG ONLY

POWER ENGINEERS
www.powereng.com

BLYTHE ENERGY
BLYTHE PLANT GSU-GIS OH 230kV TRANSMISSION LINE
GROUNDING DETAILS

JOB NUMBER 115210
REV B
DRAWING NUMBER S2-1

jquintana R:\Hyprojects\115210\DD\DWG\02 Struct\19bps2_1.dwg S2-1 Feb 12, 2009 - 3:52pm

Blythe Energy Center Transmission Line Project
Request for Staff Approved Modification
(99-AFC-08T)
Response to Data Request

Figure 5

Detail drawings of underground installation, including dimensioned details of interconnection with each turbine and an interconnection for future expansion, duct bank details, and details of the motor operated switch terminal (9 sheets)

WAPA SWITCHYARD

CURVE
R=20.0'
A=31.4'
T=20.0'
Δ=90.0°

CURVE
R=30.0'
A=47.7'
T=30.6'
Δ=91.2°

PROPOSED GIS LOCATION
POE STA 6+11.38
6+00
CTG-1
CTG-2
FUTURE
STG-1
PT STA 5+32.87
PT STA 0+51.76
TRANSITION FROM 1x4 DB AND 2x2 DB TO 2x4 DB
CTG-2 TAP STRUCTURE SEE DETAIL DRAWING S1-1
PROPOSED OVERHEAD LINE CTG-2
PROPERTY LINE
CTG-1 TAP STRUCTURE SEE DETAIL DRAWING S1-2
PROPOSED OVERHEAD LINE CTG-1
RISER POLE #1 SEE DETAIL DRAWING S1-3
TRANSITION FROM 2x4 DB TO 2-2x2 DB
PC STA 4+85.13
RISER POLE #2 SEE DETAIL DRAWING S1-4
STUB AND CAP CONDUITS FOR FUTURE USE
PC STA 0+20.34
STUB AND CAP SPARE CONDUIT FOR FUTURE USE
COMMUNICATION VAULT
POB STA 0+00.00
EXISTING FENCE EXTENSION
RISER POLE #3 SEE DETAIL DRAWING S1-4
STG-1
CTG-2
CTG-1
UGE
EDB
12" W
6" W
69'-7"
84'-7"
31'-4"
23'-2"
70'-8"
72'-7"
4'-6" TYP
25'-1"
1+00
2+00
3+00
4+00
5+00

D U0-2
C U0-2
A U0-1
B U0-1
COMMUNICATIONS VAULT
DRAINAGE DITCH C/L STA 0+06.14 INV ELEV 336.5 DEPTH NOT VERIFIED
12" WATER C/L STA 0+20.92 INV ELEV 335.2
GRADE
FUTURE CIRCUIT (2x2) CONTINUES STRAIGHT TO STUB OUT
STG-1 TRANSITIONS TO 1x4 DUCT BANK
200' RADIUS
400' RADIUS (TYP)
BLYTHE 230kV STG-1 & FUTURE
8' RADIUS
MATCH LINE 5+00 SEE DWG P1-2

342 340 338 336 334 332 330 328 326

0+00 0+50 1+00 1+50 2+00 2+50 3+00 3+50 4+00 4+50 5+00

NOTE:
THE UTILITIES SHOWN HEREON ARE BASED ON FIELD SURVEYS, AERIAL PHOTOGRAPHY AND RECORD DOCUMENTS. OTHER FACILITIES MAY EXIST NOT DISCOVERED THROUGH THE RECORD CHECK. THE CONTRACTOR SHALL VERIFY THE EXACT LOCATION, BOTH HORIZONTAL AND VERTICAL, OF ALL UTILITIES THROUGH THE APPROPRIATE UTILITY COMPANIES. CALL BEFORE YOU DIG ~ 1-800-422-4133.

TWO DAYS BEFORE YOU DIG
CALL UNDERGROUND SERVICE ALERT SOUTH TOLL FREE.
1-800-422-4133

THIS DRAWING WAS PREPARED BY POWER ENGINEERS, INC. FOR A SPECIFIC PROJECT, TAKING INTO CONSIDERATION THE SPECIFIC AND UNIQUE REQUIREMENTS OF THE PROJECT. REUSE OF THIS DRAWING OR ANY INFORMATION CONTAINED IN THIS DRAWING FOR ANY PURPOSE IS PROHIBITED UNLESS WRITTEN PERMISSION FROM BOTH POWER AND POWER'S CLIENT IS GRANTED.

REV	REVISIONS	DATE	DRN	DSGN	CKD	APPD
C	ISSUED FOR CEC PERMITTING	02/08/11	BOQ	BJH	DTL	
B	ISSUED FOR BID	03/11/09	BOQ	BJH	LRH	
A	ISSUED FOR APPROVAL	02/12/09	BOQ	BJH	LRH	

REFERENCE DRAWINGS: * *

DSGN	BJH	01/07/09
DRN	BOQ	01/07/09
CKD	LRH	01/07/09

SCALE: 1"=2' / 1"=20'
FOR 22x34 DWG ONLY

POWER ENGINEERS
www.powereng.com

BLYTHE ENERGY, LLC
BLYTHE - JULIAN HINDS 230kV TRANSMISSION LINE
STG-1 CIRCUIT - PLAN AND PROFILE DRAWING

JOB NUMBER 115210
REV C
DRAWING NUMBER P1-1

21bjhp1-1

bquaintance C:\DOCUME~1\BQUAIN~1\LOCALS~1\Temp\AcPublish_2832\21bjhp1_1.dwg template 22x34 Feb 07, 2011 - 3:11pm

WAPA SWITCHYARD

PROPOSED GIS LOCATION
POE STA 6+11.38
6+00
CTG-1
CTG-2
FUTURE
STG-1
PT STA 5+32.87

CURVE
R=20.0'
A=31.4'
T=20.0'
Δ=90.0°

EDB
69'-7"
PT STA 0+51.76
TRANSITION FROM 1x4 DB AND 2x2 DB TO 2x4 DB
31'-4"
23'-2"
CTG-2 TAP STRUCTURE SEE DETAIL DRAWING S1-1
PROPOSED OVERHEAD LINE CTG-2
PROPERTY LINE
4'-6" TYP
25'-1"
CTG-1 TAP STRUCTURE SEE DETAIL DRAWING S1-2
PROPOSED OVERHEAD LINE CTG-1
RISER POLE #1 SEE DETAIL DRAWING S1-3
UGE
STUB AND CAP CONDUITS FOR FUTURE USE
1+00
70'-8"
2+00
72'-7"
3+00
4+00
TRANSITION FROM 2x4 DB TO 2-2x2 DB
5+00
CURVE
R=30.0'
A=47.7'
T=30.6'
Δ=91.2°
6" W
PC STA 0+20.34
84'-7"
STUB AND CAP SPARE CONDUIT FOR FUTURE USE
COMMUNICATION VAULT
12" W
POB STA 0+00.00
EXISTING FENCE EXTENSION
RISER POLE #3 SEE DETAIL DRAWING S1-4
CTG-2
CTG-1
PC STA 4+85.13
RISER POLE #2 SEE DETAIL DRAWING S1-4
STG-1

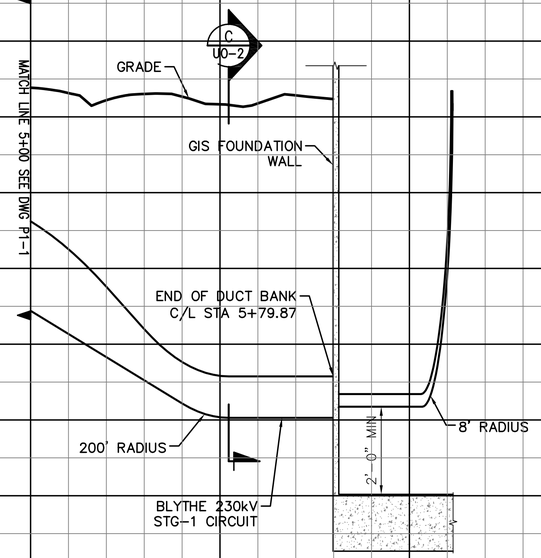

NOTE:
THE UTILITIES SHOWN HEREON ARE BASED ON FIELD SURVEYS, AERIAL PHOTOGRAPHY AND RECORD DOCUMENTS. OTHER FACILITIES MAY EXIST NOT DISCOVERED THROUGH THE RECORD CHECK. THE CONTRACTOR SHALL VERIFY THE EXACT LOCATION, BOTH HORIZONTAL AND VERTICAL, OF ALL UTILITIES THROUGH THE APPROPRIATE UTILITY COMPANIES. CALL BEFORE YOU DIG ~ 1-800-422-4133.

TWO DAYS BEFORE YOU DIG
CALL UNDERGROUND SERVICE
ALERT SOUTH TOLL FREE.
1-800-422-4133

REV	REVISIONS	DATE	DRN	DSGN	CKD	APPD	REFERENCE DRAWINGS
C	ISSUED FOR CEC PERMITTING	02/08/11	BOQ	BJH	DTL		
B	ISSUED FOR BID	03/11/09	BOQ	BJH	LRH		
A	ISSUED FOR APPROVAL	02/12/09	BOQ	BJH	LRH		* *

DSGN BJH 01/07/09
DRN BOQ 01/07/09
CKD LRH 01/07/09
SCALE: 1"=2' 1"=20'
FOR 22x34 DWG ONLY

POWER ENGINEERS
www.powereng.com

BLYTHE ENERGY, LLC
BLYTHE – JULIAN HINDS 230kV TRANSMISSION LINE
STG-1 CIRCUIT – PLAN AND PROFILE DRAWING

JOB NUMBER 115210
REV C
DRAWING NUMBER P1-2

THIS DRAWING WAS PREPARED BY POWER ENGINEERS, INC. FOR A SPECIFIC PROJECT, TAKING INTO CONSIDERATION THE SPECIFIC AND UNIQUE REQUIREMENTS OF THE PROJECT. REUSE OF THIS DRAWING OR ANY INFORMATION CONTAINED IN THIS DRAWING FOR ANY PURPOSE IS PROHIBITED UNLESS WRITTEN PERMISSION FROM BOTH POWER AND POWER'S CLIENT IS GRANTED.

bquaintance R:\Users\Bradley\Blythe\03 Line\21b\hp1_2.dwg template 22x34 Feb 07, 2011 - 3:12pm
21b\hp1-2

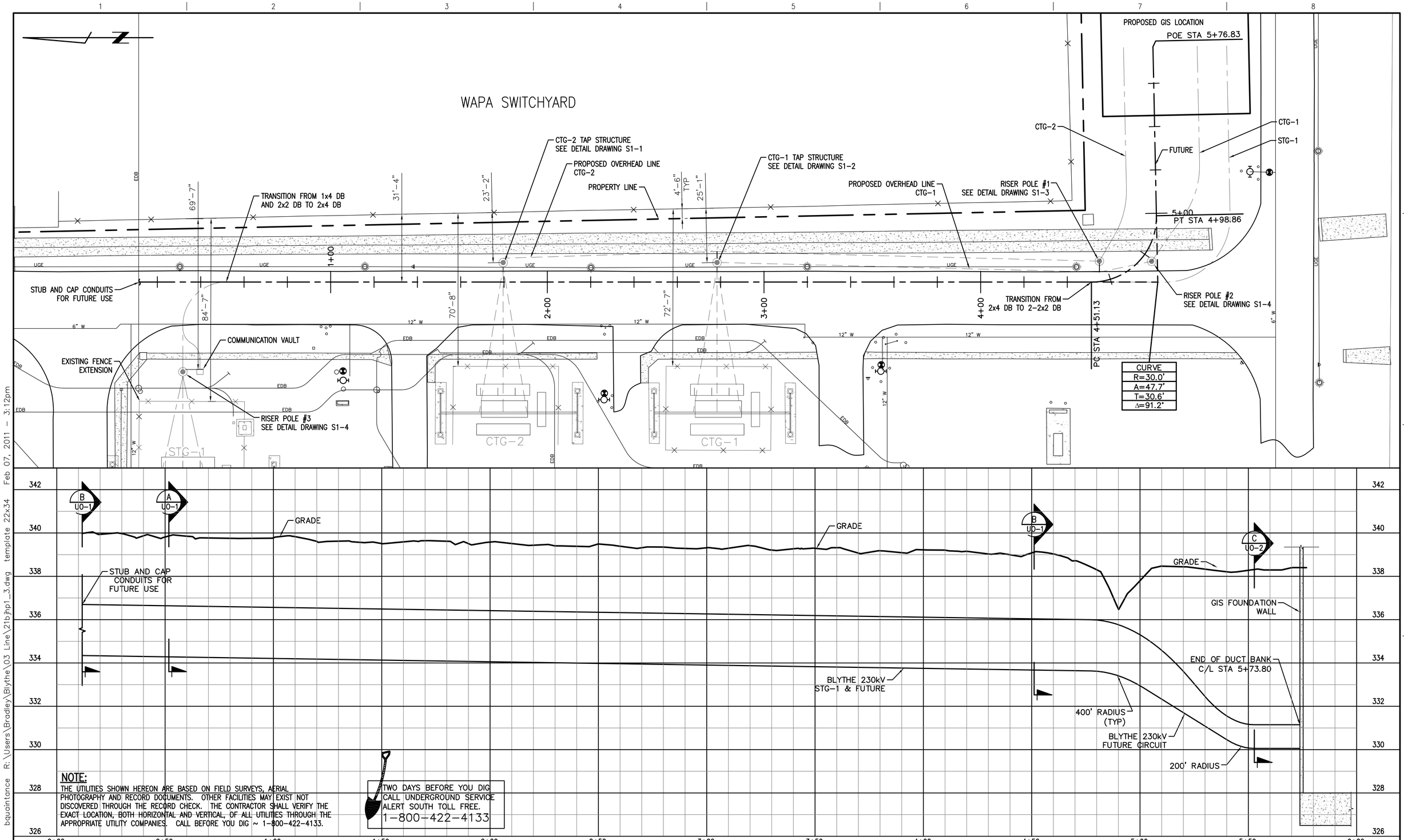

NOTE:
THE UTILITIES SHOWN HEREON ARE BASED ON FIELD SURVEYS, AERIAL PHOTOGRAPHY AND RECORD DOCUMENTS. OTHER FACILITIES MAY EXIST NOT DISCOVERED THROUGH THE RECORD CHECK. THE CONTRACTOR SHALL VERIFY THE EXACT LOCATION, BOTH HORIZONTAL AND VERTICAL, OF ALL UTILITIES THROUGH THE APPROPRIATE UTILITY COMPANIES. CALL BEFORE YOU DIG ~ 1-800-422-4133.

TWO DAYS BEFORE YOU DIG
CALL UNDERGROUND SERVICE
ALERT SOUTH TOLL FREE.
1-800-422-4133

bquaintance R:\Users\Bradley\Blythe\03 Line\21bjhp1_3.dwg template 22x34 Feb 07, 2011 - 3:12pm

21bjhp1-3

THIS DRAWING WAS PREPARED BY POWER ENGINEERS, INC. FOR A SPECIFIC PROJECT, TAKING INTO CONSIDERATION THE SPECIFIC AND UNIQUE REQUIREMENTS OF THE PROJECT. REUSE OF THIS DRAWING OR ANY INFORMATION CONTAINED IN THIS DRAWING FOR ANY PURPOSE IS PROHIBITED UNLESS WRITTEN PERMISSION FROM BOTH POWER AND POWER'S CLIENT IS GRANTED.

REV	REVISIONS	DATE	DRN	DSGN	CKD	APPD
C	ISSUED FOR CEC PERMITTING	02/08/11	BOQ	BJH	DTL	
B	ISSUED FOR BID	03/11/09	BOQ	BJH	LRH	
A	ISSUED FOR APPROVAL	02/12/09	BOQ	BJH	LRH	

REFERENCE DRAWINGS

DSGN	BJH	01/07/09
DRN	BOQ	01/07/09
CKD	LRH	01/07/09
SCALE:		1"=2'
		1"=20'

FOR 22x34 DWG ONLY

POWER ENGINEERS
www.powereng.com

BLYTHE ENERGY, LLC

BLYTHE - JULIAN HINDS
230kV TRANSMISSION LINE

FUTURE CIRCUIT - PLAN
AND PROFILE DRAWING

JOB NUMBER 115210

REV C

DRAWING NUMBER P1-3

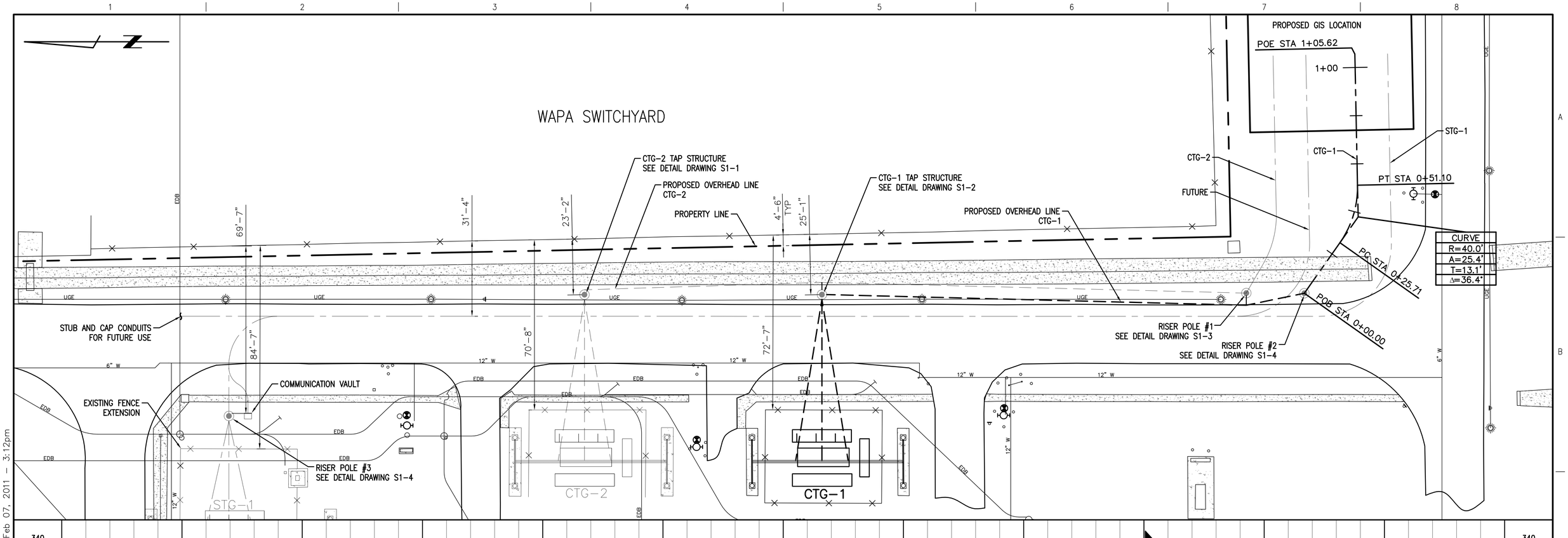

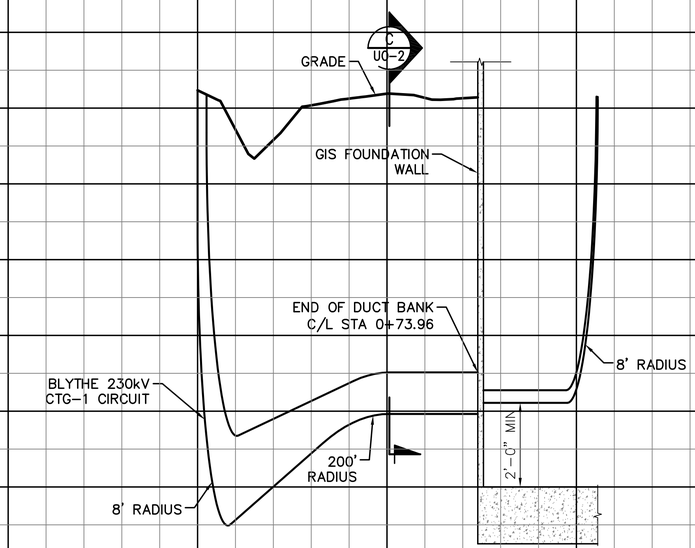

NOTE:
THE UTILITIES SHOWN HEREON ARE BASED ON FIELD SURVEYS, AERIAL PHOTOGRAPHY AND RECORD DOCUMENTS. OTHER FACILITIES MAY EXIST NOT DISCOVERED THROUGH THE RECORD CHECK. THE CONTRACTOR SHALL VERIFY THE EXACT LOCATION, BOTH HORIZONTAL AND VERTICAL, OF ALL UTILITIES THROUGH THE APPROPRIATE UTILITY COMPANIES. CALL BEFORE YOU DIG ~ 1-800-422-4133.

TWO DAYS BEFORE YOU DIG
CALL UNDERGROUND SERVICE
ALERT SOUTH TOLL FREE.
1-800-422-4133

THIS DRAWING WAS PREPARED BY POWER ENGINEERS, INC. FOR A SPECIFIC PROJECT, TAKING INTO CONSIDERATION THE SPECIFIC AND UNIQUE REQUIREMENTS OF THE PROJECT. REUSE OF THIS DRAWING OR ANY INFORMATION CONTAINED IN THIS DRAWING FOR ANY PURPOSE IS PROHIBITED UNLESS WRITTEN PERMISSION FROM BOTH POWER AND POWER'S CLIENT IS GRANTED.

REV	REVISIONS	DATE	DRN	DSGN	CKD	APPD	REFERENCE DRAWINGS
C	ISSUED FOR CEC PERMITTING	02/08/11	BOQ	BJH	DTL		
B	ISSUED FOR BID	03/11/09	BOQ	BJH	LRH		
A	ISSUED FOR APPROVAL	02/12/09	BOQ	BJH	LRH		* *

DSGN	BJH	01/07/09
DRN	BOQ	01/07/09
CKD	LRH	01/07/09

SCALE: 1"=2'
1"=20'
FOR 22x34 DWG ONLY

POWER ENGINEERS
www.powereng.com

BLYTHE ENERGY, LLC
BLYTHE – JULIAN HINDS
230kV TRANSMISSION LINE
CTG-1 CIRCUIT – PLAN
AND PROFILE DRAWING

JOB NUMBER 115210
REV C
DRAWING NUMBER P1-4

21bjhp1-4
bquaintance R:\Users\Bradley\Blythe\03 Line\21bjhp1_4.dwg template 22x34 Feb 07, 2011 - 3:12pm

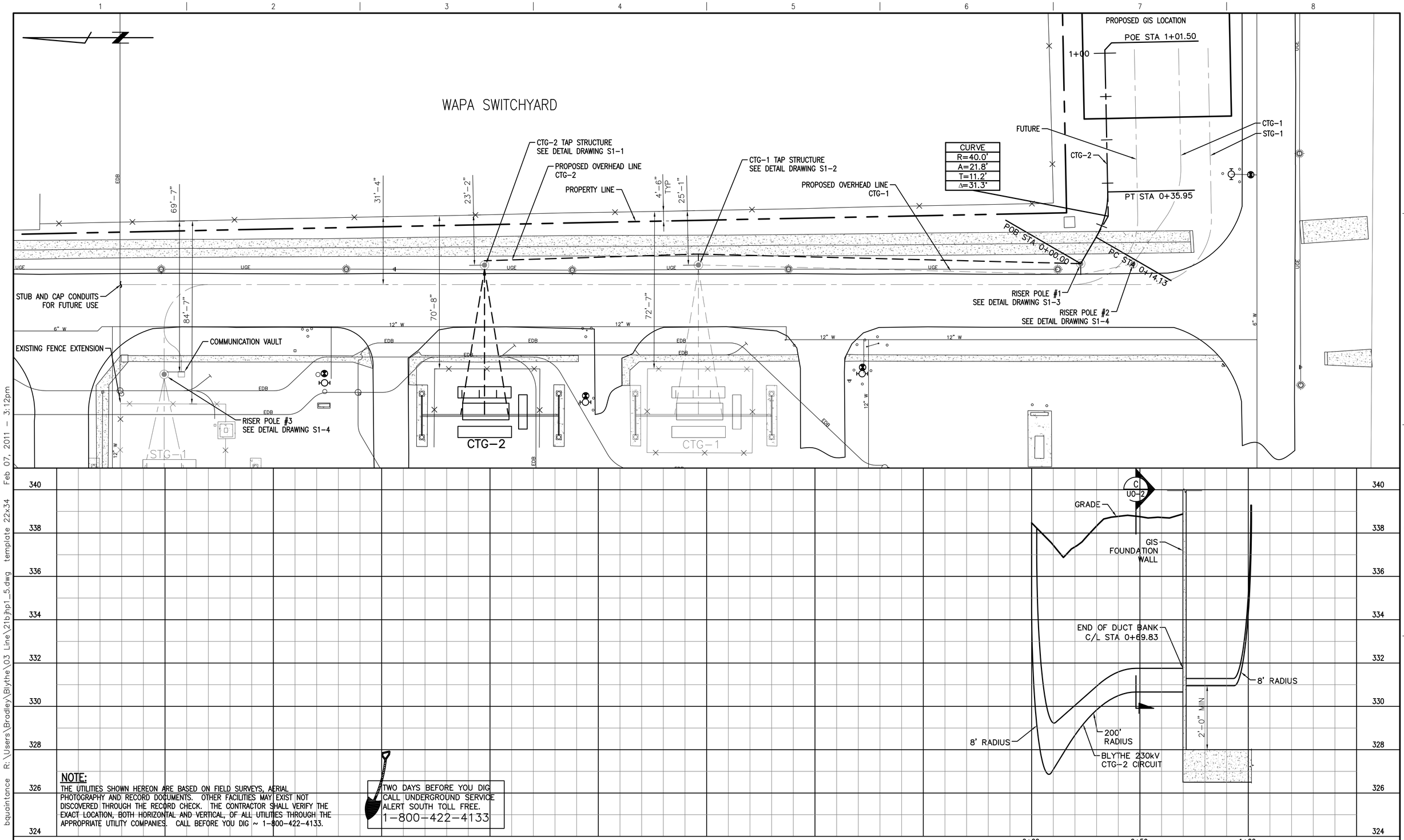

NOTE:
THE UTILITIES SHOWN HEREON ARE BASED ON FIELD SURVEYS, AERIAL PHOTOGRAPHY AND RECORD DOCUMENTS. OTHER FACILITIES MAY EXIST NOT DISCOVERED THROUGH THE RECORD CHECK. THE CONTRACTOR SHALL VERIFY THE EXACT LOCATION, BOTH HORIZONTAL AND VERTICAL, OF ALL UTILITIES THROUGH THE APPROPRIATE UTILITY COMPANIES. CALL BEFORE YOU DIG ~ 1-800-422-4133.

TWO DAYS BEFORE YOU DIG
CALL UNDERGROUND SERVICE
ALERT SOUTH TOLL FREE.
1-800-422-4133

bquaintance R:\Users\Bradley\Blythe\03 Line\21bjhp1_5.dwg template 22x34 Feb 07, 2011 - 3:12pm

21bjhp1-5

THIS DRAWING WAS PREPARED BY POWER ENGINEERS, INC. FOR A SPECIFIC PROJECT, TAKING INTO CONSIDERATION THE SPECIFIC AND UNIQUE REQUIREMENTS OF THE PROJECT. REUSE OF THIS DRAWING OR ANY INFORMATION CONTAINED IN THIS DRAWING FOR ANY PURPOSE IS PROHIBITED UNLESS WRITTEN PERMISSION FROM BOTH POWER AND POWER'S CLIENT IS GRANTED.

REV	REVISIONS	DATE	DRN	DSGN	CKD	APPD
C	ISSUED FOR CEC PERMITTING	02/08/11	BOQ	BJH	DTL	
B	ISSUED FOR BID	03/11/09	BOQ	BJH	LRH	
A	ISSUED FOR APPROVAL	02/12/09	BOQ	BJH	LRH	

REFERENCE DRAWINGS: * *

DSGN	BJH	01/06/09
DRN	BOQ	01/06/09
CKD	LRH	01/06/09
SCALE:		1"=2' 1"=20'

FOR 22x34 DWG ONLY

POWER ENGINEERS
www.powereng.com

BLYTHE ENERGY, LLC
BLYTHE - JULIAN HINDS
230kV TRANSMISSION LINE
CTG-2 CIRCUIT - PLAN
AND PROFILE DRAWING

JOB NUMBER 115210
REV C
DRAWING NUMBER P1-5

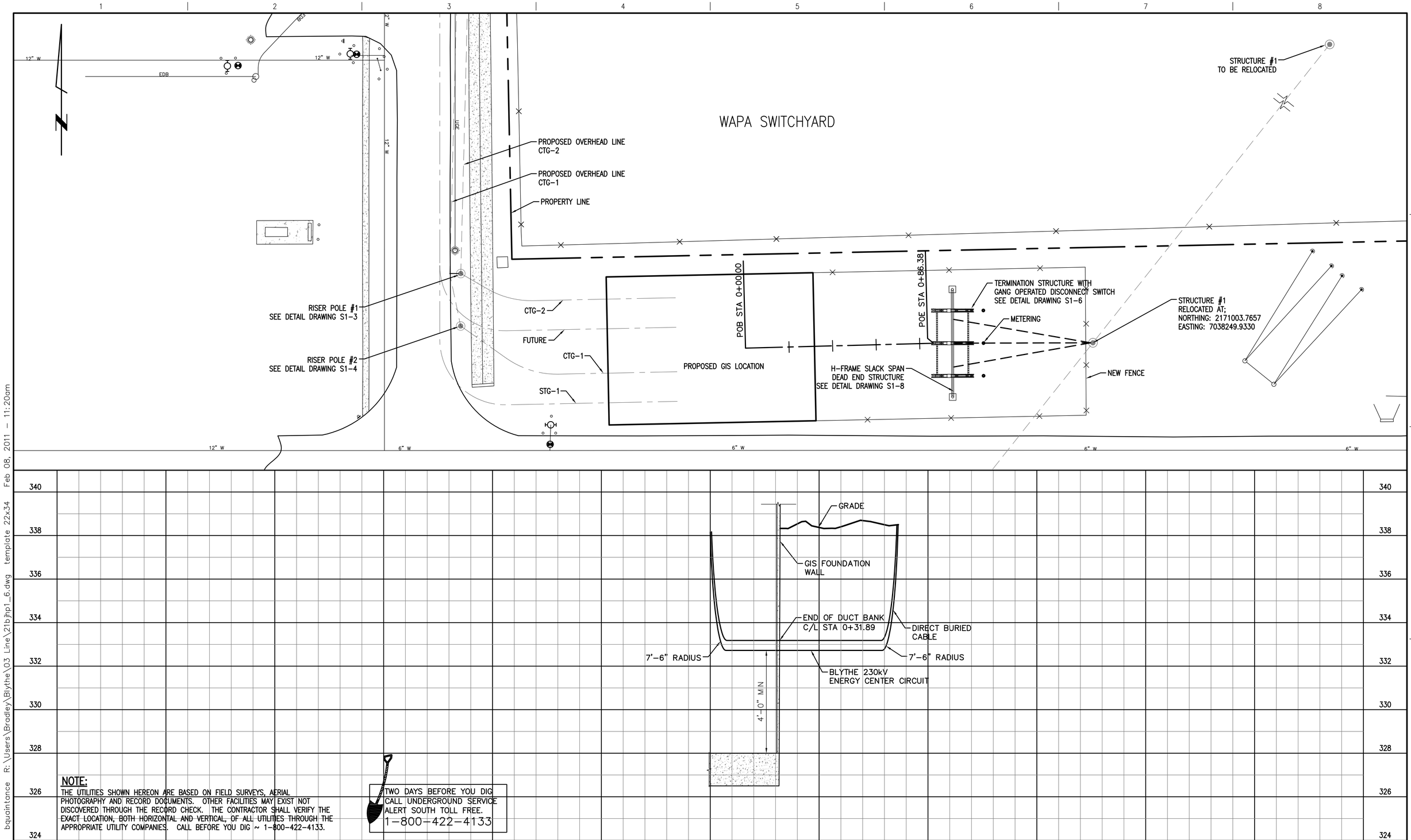

NOTE:
THE UTILITIES SHOWN HEREON ARE BASED ON FIELD SURVEYS, AERIAL PHOTOGRAPHY AND RECORD DOCUMENTS. OTHER FACILITIES MAY EXIST NOT DISCOVERED THROUGH THE RECORD CHECK. THE CONTRACTOR SHALL VERIFY THE EXACT LOCATION, BOTH HORIZONTAL AND VERTICAL, OF ALL UTILITIES THROUGH THE APPROPRIATE UTILITY COMPANIES. CALL BEFORE YOU DIG ~ 1-800-422-4133.

TWO DAYS BEFORE YOU DIG
CALL UNDERGROUND SERVICE
ALERT SOUTH TOLL FREE.
1-800-422-4133

bquaintance R:\Users\Bradley\Blythe\03 Line\21bjhp1_6.dwg template 22x34 Feb 08, 2011 - 11:20am

21bjhp1-6

THIS DRAWING WAS PREPARED BY POWER ENGINEERS, INC. FOR A SPECIFIC PROJECT, TAKING INTO CONSIDERATION THE SPECIFIC AND UNIQUE REQUIREMENTS OF THE PROJECT. REUSE OF THIS DRAWING OR ANY INFORMATION CONTAINED IN THIS DRAWING FOR ANY PURPOSE IS PROHIBITED UNLESS WRITTEN PERMISSION FROM BOTH POWER AND POWER'S CLIENT IS GRANTED.

REV	REVISIONS	DATE	DRN	DSGN	CKD	APPD
C	ISSUED FOR CEC PERMITTING	02/08/11	BOQ	BJH	DTL	
B	ISSUED FOR BID	03/11/09	BOQ	BJH	LRH	
A	ISSUED FOR APPROVAL	02/12/09	BOQ	BJH	LRH	

REFERENCE DRAWINGS

DSGN	BJH	01/07/09
DRN	BOQ	01/07/09
CKD	LRH	01/07/09
SCALE:	1"=2' 1"=20'	

FOR 22x34 DWG ONLY

POWER ENGINEERS
www.powereng.com

BLYTHE ENERGY, LLC
BLYTHE - JULIAN HINDS
230kV TRANSMISSION LINE
MOTOR OPERATED SWITCH TERMINATION
PLAN AND PROFILE DRAWING

JOB NUMBER 115210
REV C
DRAWING NUMBER P1-6

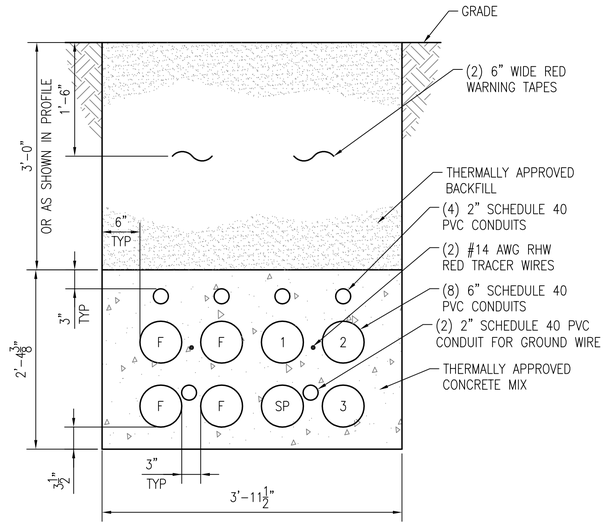

SECTION
SCALE 1" = 1'-0"
A P&P's

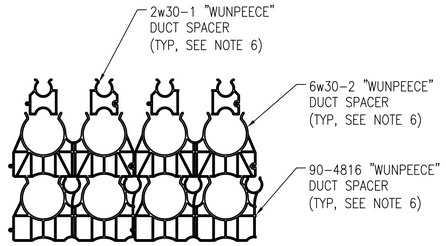

SECTION 'A' DUCT SPACER ARRANGEMENT
SCALE 1" = 1'-0"

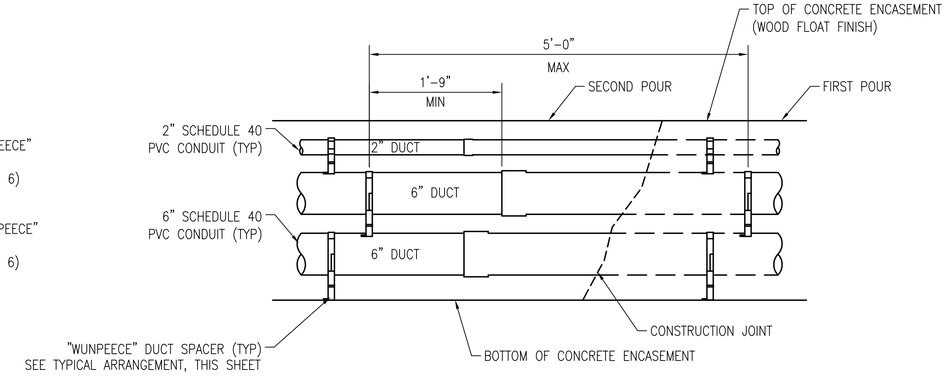

SECTION 'A' DUCT SPACER ELEVATION
SCALE 1" = 1'-0"

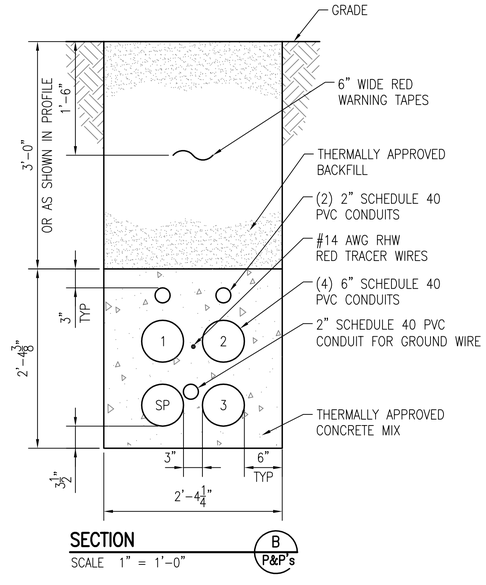

SECTION
SCALE 1" = 1'-0"
B P&P's

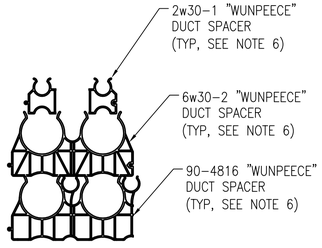

SECTION 'B' DUCT SPACER ARRANGEMENT
SCALE 1" = 1'-0"

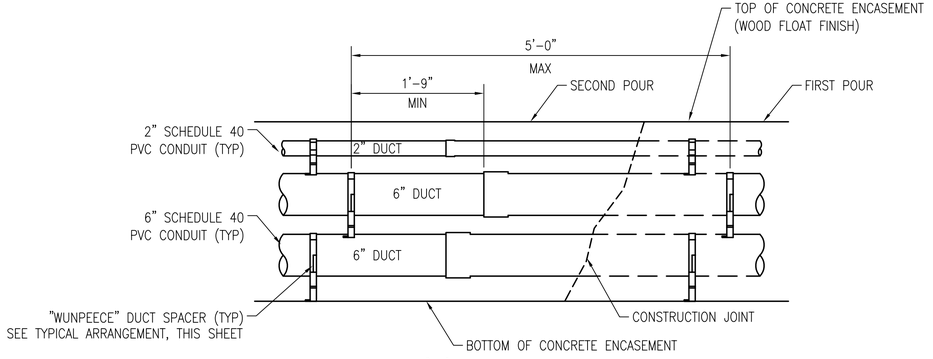

SECTION 'B' DUCT SPACER ELEVATION
SCALE 1" = 1'-0"

NOTES:

1. STAGGER BELL ENDS.
2. ANCHOR SPACERS WITH #14 STEEL TIE WIRE AND #4 REINFORCING BARS.
3. CEMENT ALL JOINTS IN ACCORDANCE WITH CONDUIT MANUFACTURER'S SPECIFICATIONS.
4. AVOID STANDING ON CONDUIT.
5. BELL ENDS SHALL BE INSTALLED ALL IN THE SAME DIRECTION.
6. ALL DUCT SPACERS ARE UNDERGROUND DEVICES "WUNPEECE" SPACERS, OR APPROVED EQUIVALENT.

THIS DRAWING WAS PREPARED BY POWER ENGINEERS, INC. FOR A SPECIFIC PROJECT, TAKING INTO CONSIDERATION THE SPECIFIC AND UNIQUE REQUIREMENTS OF THE PROJECT. REUSE OF THIS DRAWING OR ANY INFORMATION CONTAINED IN THIS DRAWING FOR ANY PURPOSE IS PROHIBITED UNLESS WRITTEN PERMISSION FROM BOTH POWER AND POWER'S CLIENT IS GRANTED.

REV	REVISIONS	DATE	DRN	DSGN	CKD	APPD	REFERENCE DRAWINGS
B	ISSUED FOR BID	03/11/09	BOQ	BJH	LRH		
A	ISSUED FOR APPROVAL	02/12/09	BOQ	BJH	LRH	*	*

DSGN	BH	10/28/08
DRN	BOQ	10/28/08
CKD	LH	10/28/08

SCALE: AS SHOWN
FOR 22x34 DWG ONLY

POWER ENGINEERS
www.powereng.com

BLYTHE ENERGY, LLC
BLYTHE – JULIAN HINDS 230kV TRANSMISSION LINE
DUCT BANK DETAILS

JOB NUMBER 115210
REV B
DRAWING NUMBER U0-1

21bjhu0-1

bquaintance R:\Hyprojects\115210\DD\DWG\03 Line\21bjhu0-1.dwg template 22x34 Mar 11, 2009 - 4:52pm

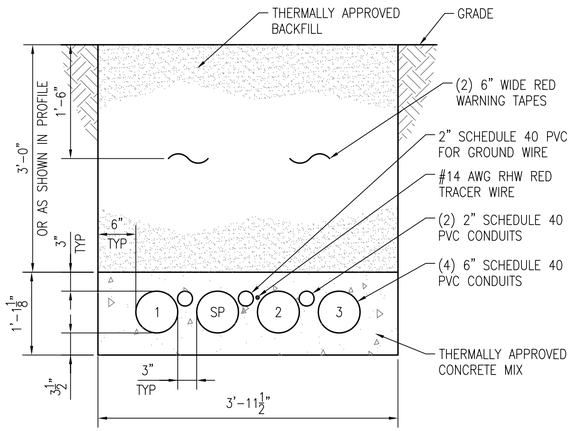

SECTION
SCALE 1" = 1'-0"
C P&P's

SECTION 'C' DUCT SPACER ARRANGEMENT
SCALE 1" = 1'-0"

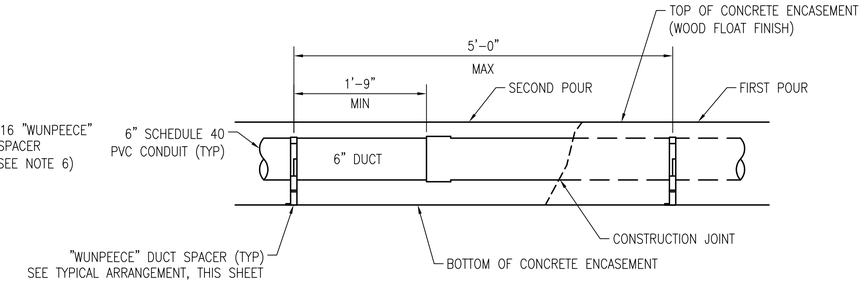

SECTION 'C' DUCT SPACER ELEVATION
SCALE 1" = 1'-0"

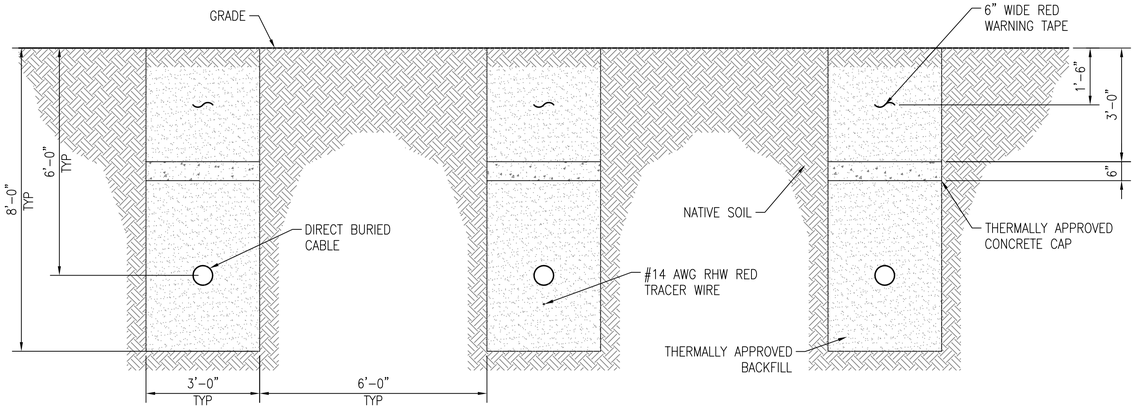

DIRECT BURY SECTION
SCALE 1" = 1'-0"

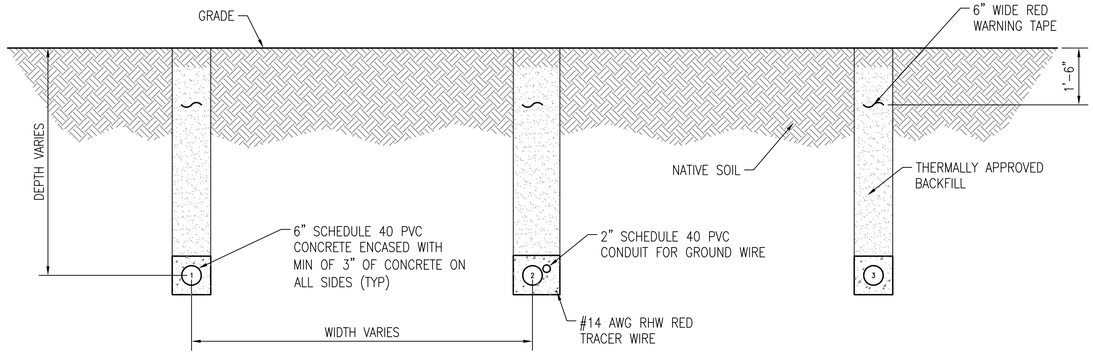

SECTION
SCALE 1" = 1'-0"
D P&P's

NOTES:

1. STAGGER BELL ENDS.
2. ANCHOR SPACERS WITH #14 STEEL TIE WIRE AND #4 REINFORCING BARS.
3. CEMENT ALL JOINTS IN ACCORDANCE WITH CONDUIT MANUFACTURER'S SPECIFICATIONS.
4. AVOID STANDING ON CONDUIT.
5. BELL ENDS SHALL BE INSTALLED ALL IN THE SAME DIRECTION.
6. ALL DUCT SPACERS ARE UNDERGROUND DEVICES "WUNPEECE" SPACERS, OR APPROVED EQUIVALENT.

THIS DRAWING WAS PREPARED BY POWER ENGINEERS, INC. FOR A SPECIFIC PROJECT, TAKING INTO CONSIDERATION THE SPECIFIC AND UNIQUE REQUIREMENTS OF THE PROJECT. REUSE OF THIS DRAWING OR ANY INFORMATION CONTAINED IN THIS DRAWING FOR ANY PURPOSE IS PROHIBITED UNLESS WRITTEN PERMISSION FROM BOTH POWER AND POWER'S CLIENT IS GRANTED.

REV	REVISIONS	DATE	DRN	DSGN	CKD	APPD	REFERENCE DRAWINGS
B	ISSUED FOR BID	03/11/09	BOQ	BJH	LRH		
A	ISSUED FOR APPROVAL	02/12/09	BOQ	BJH	LRH	*	*

DSGN	BJH	01/07/09
DRN	BOQ	01/07/09
CKD	LRH	01/07/09

SCALE: AS SHOWN
FOR 22x34 DWG ONLY

POWER ENGINEERS
www.powereng.com

BLYTHE ENERGY, LLC
BLYTHE – JULIAN HINDS 230kV TRANSMISSION LINE
DUCT BANK DETAILS

JOB NUMBER 115210
REV B
DRAWING NUMBER U0-2

21bjhu0-2

bquaintance R:\Hlyprojects\115210\DD\DWG\03 Line\21bjhu0-2.dwg template 22x34 Mar 11, 2009 - 4:52pm

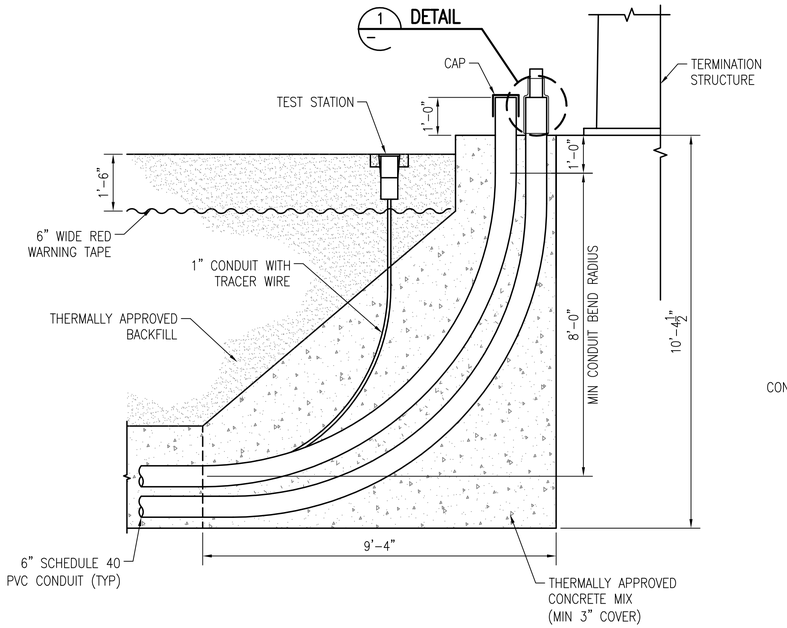

TYPICAL PVC DUCT SWEEP AT RISERS

SCALE 1" = 1'-0"

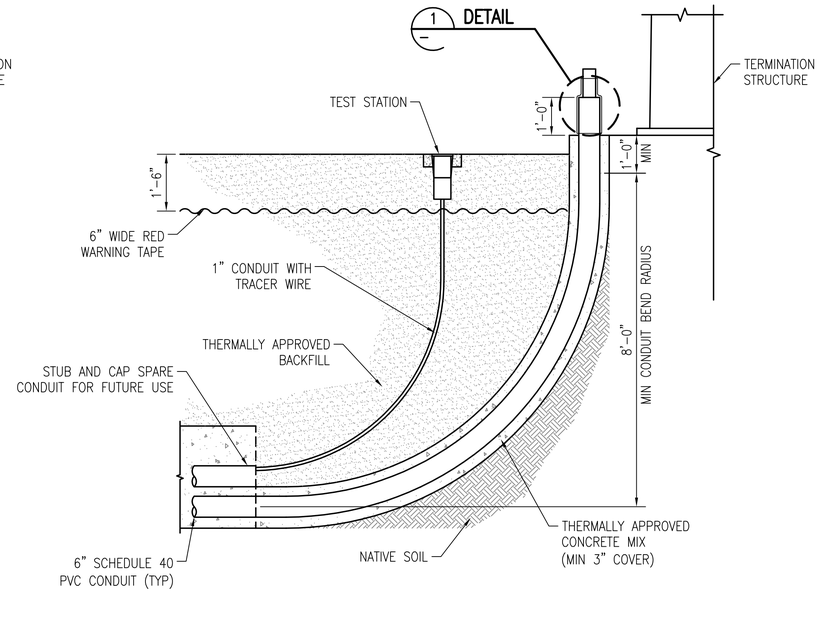

TYPICAL PVC DUCT SWEEP AT GSU TERMINATION

SCALE 1" = 1'-0"

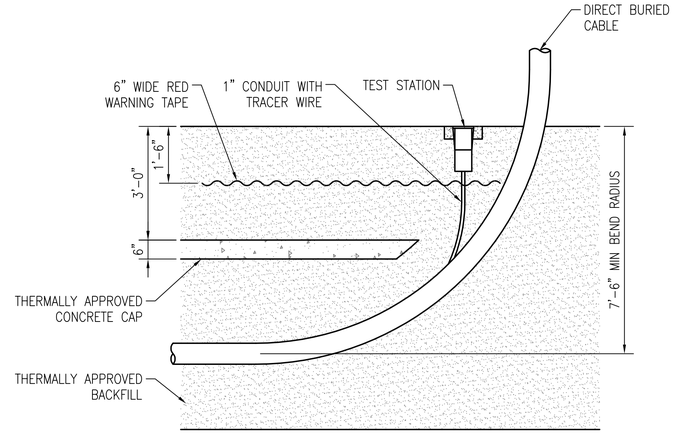

TYPICAL DIRECT BURY SWEEP AT H-FRAME

SCALE 1" = 1'-0"

NOTES:

1. STAGGER BELL ENDS.
2. ANCHOR SPACERS WITH #14 STEEL TIE WIRE AND #4 REINFORCING BARS.
3. CEMENT ALL JOINTS IN ACCORDANCE WITH CONDUIT MANUFACTURER'S SPECIFICATIONS.
4. AVOID STANDING ON CONDUIT.
5. BELL ENDS SHALL BE INSTALLED ALL IN THE SAME DIRECTION BETWEEN.

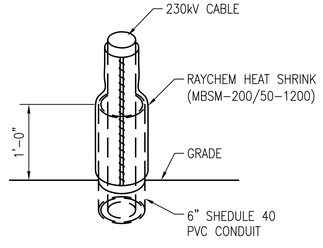

DETAIL 1

NTS

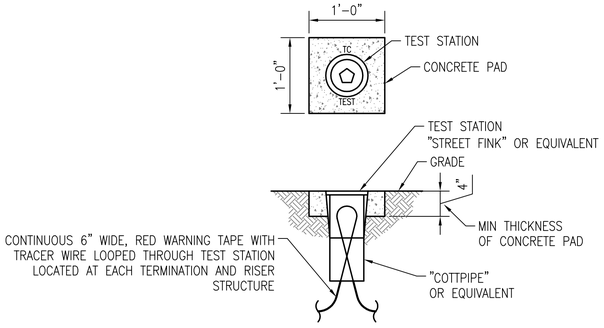

TEST STATION

NTS

REV	REVISIONS	DATE	DRN	DSGN	CKD	APPD	REFERENCE DRAWINGS
B	ISSUED FOR BID	03/11/09	BQQ	BJH	LRH		
A	ISSUED FOR APPROVAL	02/12/09	BQQ	BJH	LRH		* *

DSGN	BJH	01/07/09
DRN	BQQ	01/07/09
CKD	LRH	01/07/09
SCALE:	AS SHOWN	

FOR 22x34 DWG ONLY

THIS DRAWING WAS PREPARED BY POWER ENGINEERS, INC. FOR A SPECIFIC PROJECT, TAKING INTO CONSIDERATION THE SPECIFIC AND UNIQUE REQUIREMENTS OF THE PROJECT. REUSE OF THIS DRAWING OR ANY INFORMATION CONTAINED IN THIS DRAWING FOR ANY PURPOSE IS PROHIBITED UNLESS WRITTEN PERMISSION FROM BOTH POWER AND POWER'S CLIENT IS GRANTED.

POWER ENGINEERS
www.powereng.com

BLYTHE ENERGY, LLC

BLYTHE – JULIAN HINDS 230kV TRANSMISSION LINE

DUCT BANK DETAILS

JOB NUMBER 115210

REV B

DRAWING NUMBER U0-3

bquaintance R:\Hlyprojects\115210\DD\DWG\03 Line\21bjhu0-3.dwg template 22x34 Mar 11, 2009 - 4:52pm

21bjhu0-3

Blythe Energy Center Transmission Line Project
Request for Staff Approved Modification
(99-AFC-08T)
Response to Data Request

Attachment 1

Letter from Blythe Energy to California ISO requesting written approval of GIS interconnection

Blythe Energy, LLC
700 Universe Blvd.
Juno Beach, FL 33408

December 27, 2010

Ms. Linda Wright (via UPS overnight and LWright@CAISO.com)
California Independent System Operator
151 Blue Ravine Road
Folsom, CA 95630

Southern California Edison Company
Manager, Grid Contracts Administration and Billing (via UPS overnight)
P. O. Box 800
Rosemead, California 91770

Re: Blythe Energy, LLC
Notice pursuant to LGIA Section 5.19

Dear Ms. Wright and SCE Manager:

Blythe Energy, LLC ("Blythe") is pursuing modifications to its facilities which could impact either SCE facilities, CAISO facilities, or both. Pursuant to LGIA Section 5.19.1, Blythe is providing you with relevant data so that you may evaluate the potential impact to your respective systems.

As shown in the one-line diagram in LGIA Appendix A, Section 7, the Blythe Energy Project is connected to the CAISO at SCE's Julian Hinds substation using a 67-mile, 230kV generation tie line. The eastern terminus of the 67-mile tie line is the Buck Blvd 230kV Switchyard located adjacent to the Blythe Energy Project. This switchyard is owned by Western Area Power Administration but is currently used by Blythe pursuant to a license agreement which expires on May 31, 2013.

The proposed modification is to replace the Buck Blvd 230kV Switchyard with a 230kV gas insulated substation ("GIS") to be located immediately adjacent to the existing Buck Blvd Switchyard. Please note that the Blythe transmission line was previously studied and approved by SCE and CAISO with the GIS configuration as currently contemplated.

I have enclosed herewith two diagrams which depict the proposed modification. Please contact me at your earliest convenience to identify the specific people who will review this information, and please advise as soon as possible what additional information is needed by SCE and CAISO to effectuate a timely review of the proposed modifications. I can be reached at 561-304-5126.

Sincerely,

John Goodwin

John Goodwin
Business Director
Blythe Energy, LLC

cc: Gary Hickey, NextEra Energy (gary.hickey@nexteraenergy.com)
John Tucker, SCE (john.tucker@sce.com)
Michael Boas, CAISO (mBoas@caiso.com)

Blythe Energy Center Transmission Line Project
Request for Staff Approved Modification
(99-AFC-08T)
Response to Data Request – Revised 2/8/11

Figure 6

Dimensioned plan and section views of GSU tap interconnection

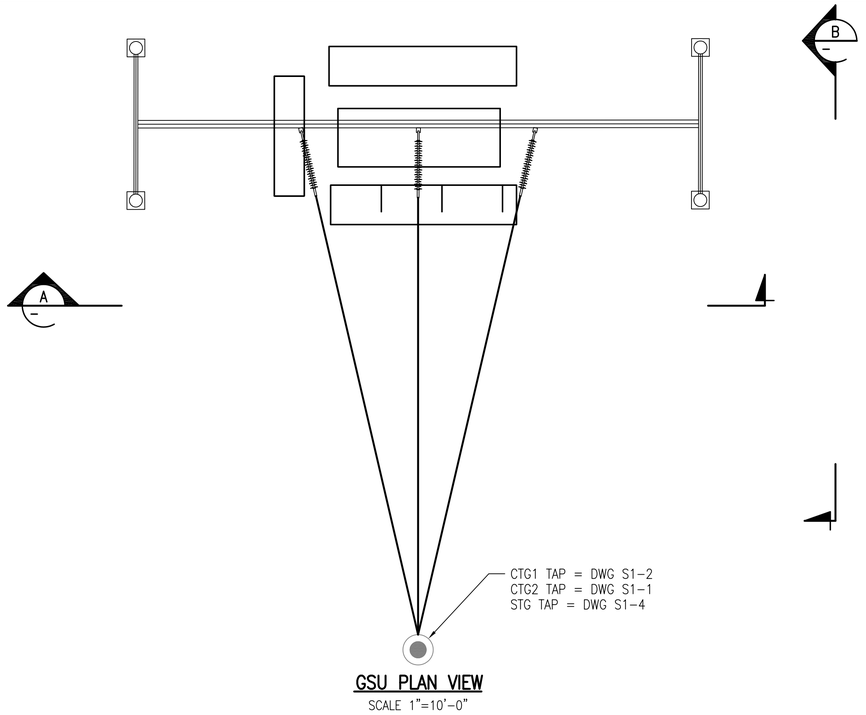

GSU PLAN VIEW

SCALE 1"=10'-0"

NOTE

1. THIS ARRANGEMENT APPLIES TO CTG1, CTG2 & STG INSTALLATIONS.

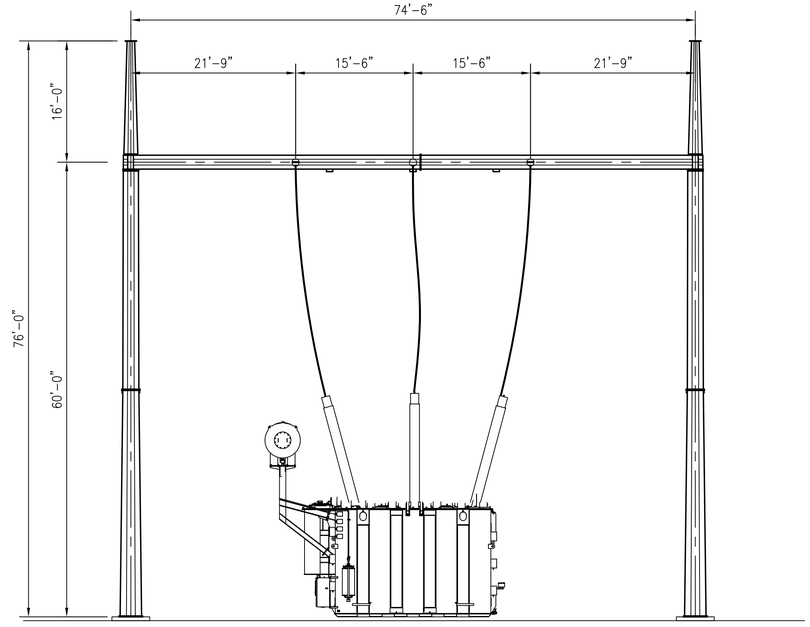

SECTION A

SCALE 1/4" = 1'-0"

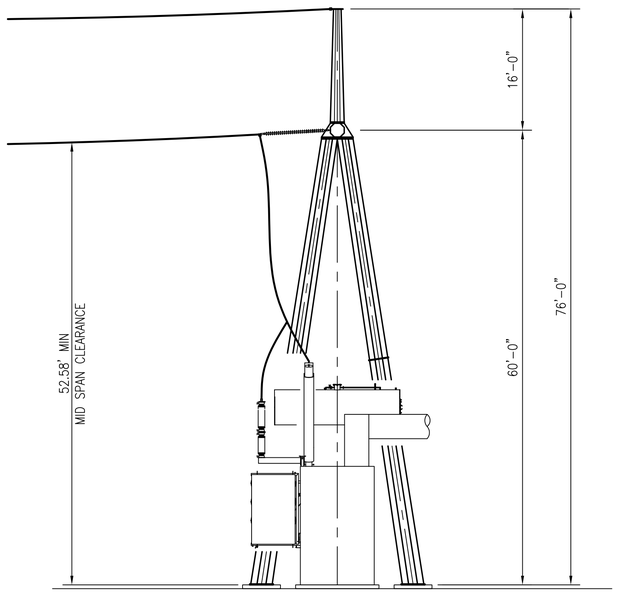

SECTION B

SCALE 1/4" = 1'-0"

0 5 10 20 30 FEET

1" = 10'

THIS DRAWING WAS PREPARED BY POWER ENGINEERS, INC. FOR A SPECIFIC PROJECT, TAKING INTO CONSIDERATION THE SPECIFIC AND UNIQUE REQUIREMENTS OF THE PROJECT. REUSE OF THIS DRAWING OR ANY INFORMATION CONTAINED IN THIS DRAWING FOR ANY PURPOSE IS PROHIBITED UNLESS WRITTEN PERMISSION FROM BOTH POWER AND POWER'S CLIENT IS GRANTED.

REV	REVISIONS	DATE	DRN	DSGN	CKD	APPD	REFERENCE DRAWINGS
A	ISSUED FOR CEC PERMITTING	02/08/11	CA	DL			

DSGN	DL	2-8-11
DRN	CA	2-8-11
CKD		
SCALE:	1"=10'-0"	
FOR 22x34 DWG ONLY		

POWER ENGINEERS

BLYTHE ENERGY, LLC

BLYTHE PLANT GSU-GIS OH 230kV TRANSMISSION LINE

GSU PLAN & SECTIONS

JOB NUMBER 117573

REV A

DRAWING NUMBER E1-3

E1-3.DWG