BLYTHE ENERGY PROJECT

Request for Approval of Third Insignificant Project Change (99-AFC-8C)

Blythe Energy Project Transmission Line

Minor Structural Changes, Additional Communications Systems, and Expanded Work Areas

Submitted to:

California Energy Commission
Sacramento, California

Prepared by:

Blythe Energy, LLC

and

TETRA TECH EC, INC.

November 2008

Contents

1 Introduction 1
2 Description, Necessity, and New Information for the Proposed Project Changes 2
2.1 Structure Support Changes 5
2.1.1 Description 5
2.1.2 Necessity 5
2.1.3 New Information 9
2.2 Desert Center Laydown Area Expansion 9
2.2.1 Description 9
2.2.2 Necessity 9
2.2.3 New Information 9
2.3 Changes in Communication System—BEP Plant to Dunes Substation 11
2.3.1 Description 11
2.3.2 Necessity 13
2.3.3 New Information 13
2.4 Changes in Communication System—California Capacitor Station 13
2.4.1 Description 13
2.4.2 Necessity 16
2.4.3 New Information 17
2.5 Changes in Communication System—Julian Hinds Substation 17
2.5.1 Description 17
2.5.2 Necessity 19
2.5.3 New Information 19
2.6 Additional Expansion of Julian Hinds Substation 19
2.6.1 Description 19
2.6.2 Necessity 19
2.6.3 New Information 19
3 Environmental Analysis of Proposed Project Changes 21
3.1 Air Quality 21
3.2 Biological Resources 21
3.3 Cultural Resources 23
3.4 Geology and Paleontology 24
3.5 Hazardous Materials Management 24
3.6 Land Use 24
3.7 Noise and Vibration 25
3.8 Public Health 25
3.9 Socioeconomics 25
3.10 Soil and Water Resources 25
3.11 Traffic and Transportation 25
3.12 Visual Resources 26
3.13 Waste Management 27
3.14 Worker Safety and Fire Protection 27
4 Ability to Comply With LORS 27
5 Potential Effects on the Public 27
6 List of Property Owners 27
7 Potential Effects on Property Owners 27
8 References Cited 28

Appendices

A. List of Property Owners within 1,000 Feet Affected by Project Change
B. Details on Guyed Structures
C. Biological Resources Letter Report for Laydown Yard
D. Cultural Resources Report (Confidential, under separate cover)

Table of Figures

Figure 2-1. Overview of Insignificant Project Change Locations 3
Figure 2-2.1. Guyed Structure Locations 27, 153, 155, 193, 222 & 223 6
Figure 2-2.2. Guyed Structure Locations 308, 406, 411, 415, 416 & 417 7
Figure 2-2.3. Guyed Structure Locations 418, 419, 420, 421 & 431 8
Figure 2-3. Desert Center Laydown 10
Figure 2-4. BEP Plant to Dunes Substation 12
Figure 2-5. Edison, California Capacitor Station 14
Figure 2-6. Edison Proposed 120-Foot Communication Tower 15
Figure 2-7. Julian Hinds Substation Expansion 18
Figure 2-8. Julian Hinds Proposed 100-Foot Communication Tower 20

Table of Tables

Table 2-1. Summary of Additional Disturbance Due to Proposed Changes (acres) 4
Table 2-2. Summary of Ownership Differences 4
Table 2-3. Construction Personnel and Equipment Summary (Blythe Fiber Optic Cable Installation) 13
Table 2-4. Construction Personnel and Equipment Summary (Microwave System, California Capacitor Station) 16
Table 2-5. Construction Personnel and Equipment Summary (Microwave System, Julian Hinds Substation Installation) 19
Table 7-1. Changes in BLM ¼-¼ Sections 28

Acronyms and Abbreviations

AFC	Application for Certification
APE	Area of Potential Effects
BEP	Blythe Energy Project
BEPTL	Blythe Energy Project Transmission Line
BLM	Bureau of Land Management
Buck Substation	Buck Boulevard Substation
CAISO	California Independent System Operator
CalCap	California Capacitor Station
CCR	California Code of Regulations
CEC	California Energy Commission
CRA	Colorado River Aqueduct
Edison	Edison Services Network Engineering
FONSI	Finding of No Significant Impact
FSA	Final Revised Staff Assessment
I-10	Interstate 10
LGIA	Large Generator Interconnection Agreement
LORS	laws, ordinances, regulations and standards
MEER	Mechanical Electrical Equipment Room
MW	megawatt
MWD	Municipal Water District
NEPA	National Environmental Policy Act
ROW	right-of-way
SCE	Southern California Edison Company
Western	Western Area Power Administration

1 Introduction

Blythe Energy, LLC (Blythe Energy as the petitioner) hereby requests approval of insignificant project changes to the approved Blythe Energy Project Transmission Line (Project or BEPTL). In accordance with Section 1769(a)(2) of the California Energy Commission (CEC) Siting Regulations, the proposed changes do not have the potential to have a significant effect on the environment and will not result in the change or deletion of a condition adopted by the CEC or cause the Project to not comply with applicable laws, ordinances, regulations and standards (LORS).

Blythe Energy is the owner of the Blythe Energy Project (BEP), which is a 520-megawatt (MW) combined cycle natural gas-fired electric-generating facility, approved by the CEC under docket 99-AFC-8 (CEC 2001). The BEP is located in the City of Blythe, California, just north of Interstate 10 (I-10), approximately 7 miles west of the California and Arizona border. The Project is presently connected to the Buck Boulevard Substation (Buck Substation) owned by the Western Area Power Administration (Western), which, in turn, is connected to the Blythe Substation and the Southern California Edison Company (SCE) transmission system.

In a CEC Notice of Decision dated October 11, 2006, CEC approved an amendment to the BEP license (99-AFC-8C) for the construction and operation of a 230-kV transmission line (BEPTL) to allow for delivery of the full BEP electrical output to the California Independent System Operator (CAISO)-controlled electrical transmission system (CEC 2006b). Western and the Bureau of Land Management (BLM) served as co-lead federal agencies for review of the Blythe Energy petition pursuant to the National Environmental Policy Act (NEPA) and have issued a Finding of No Significant Impact (FONSI) for the license amendment (Western and BLM 2007).

Blythe Energy requested approval of an insignificant project change in 2007. The change consisted of a modified interconnection from Buck Substation to the new BEP switchyard, route realignment from milepost 0.0 to 3.0, and minor route realignment from milepost 6.5 to 62.1. The CEC approved these changes on July 17, 2007, and Western notified the BLM of Western's withdrawal from the project in a letter dated February 4, 2008. BLM is now the lead federal agency for the purposes of NEPA and for all consultations.

In July 2008, Blythe Energy requested a second insignificant project change that included a request for minor realignment of several structures, the adjustment of the eastern and western laydown yards, the addition of a laydown area near the Ford Dry Lake exit, and conductor reconfiguration. The CEC approved the second insignificant change on September 25, 2008.

Blythe Energy hereby requests approval of the following additional insignificant project changes to the Blythe Transmission Line:

1. Change in structure support for 17 structures, adding guy wires to safely support the conductor load.
2. Expansion of the proposed Desert Center laydown area to 10 acres.

3. Communication system changes in the SCE system at the BEP, at the California Capacitor Station near the Red Cloud Road exit, and at the Julian Hinds Substation to monitor and control the Blythe Energy power load.
4. Minor additional expansion of the Julian Hinds Substation to accommodate communication system and electrical changes SCE needs to make in the substation to accept Blythe Energy power load.

In accordance with Section 1769 of the CEC Siting Regulations (California Code of Regulations [CCR] Title 20, Section 1769, Post Certification Amendments and Changes), this request for approval of insignificant project change presents a description of the proposed modifications, the necessity for the proposed modifications, and an analysis of potential impacts on the environment, nearby property owners, and the general public. This petition also outlines the Project's continued ability to comply with applicable LORS during construction and upon placing the modifications in service, and demonstrates that the proposed modifications will not result in significant environmental impacts. No changes to, or deletions of, any of the Conditions of Certification are necessary as a result of the proposed modifications.

The information necessary to fulfill the requirements of Section 1769 is provided in the sections that follow this introduction:

2. Description, Necessity, and New Information for the Proposed Project Changes
3. Environmental Analysis of Proposed Project Changes
4. Ability to Comply with LORS
5. Potential Effects on the Public
6. List of Property Owners
7. Potential Effects on Property Owners
8. References Cited

2 Description, Necessity, and New Information for the Proposed Project Changes

Figure 2-1 illustrates the overall route and the location of the site-specific changes in structure or laydown area location. Table 2-1 summarizes the change in disturbance footprint by proposed insignificant change component. Table 2-2 details the change in underlying land ownership for the various project components between present conditions and proposed changes.

The Siting Regulations require a discussion of the necessity for the proposed revision to the BEP and whether the modification is based on information known by the petitioner during the certification proceeding (Title 20, CCR, Sections 1769 [a][1][B], and [C]). There was no information regarding the necessity for these changes known by the petitioner during the certification proceeding. Details by change component follow.

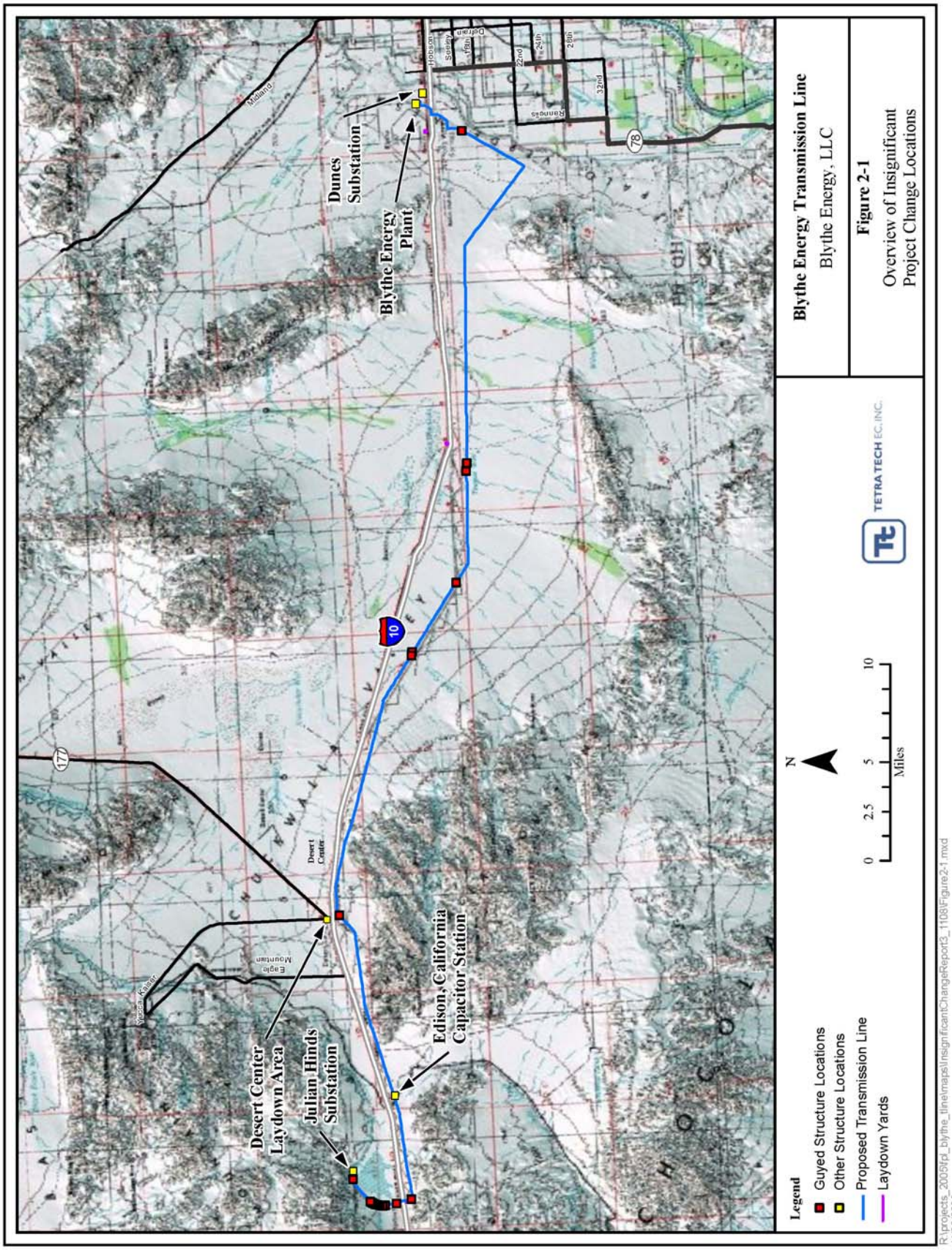
Dunes Substation
Blythe Energy Plant
Desert Center Laydown Area
Julian Hinds Substation
Edison, California Capacitor Station
Desert Center
Eagle Mountain
Midland
Hobson
Seeley
Ranches
Legend
Guyed Structure Locations
Other Structure Locations
Proposed Transmission Line
Laydown Yards
N
0 2.5 5 10
Miles
TETRA TECH EC, INC.
Blythe Energy Transmission Line
Blythe Energy, LLC
Figure 2-1
Overview of Insignificant Project Change Locations
R:\projects_2003\pl_blythe_line\maps\InsignificantChangeReport3_1108\Figure2-1.mxd

Table 2-1. Summary of Additional Disturbance Due to Proposed Changes (acres)

IPC	Location Detail	Changed Disturbance (acres)
Change in structure support	(17 structures, see Appendix B)	0.19 acres
Expansion of Desert Center laydown area	Adjacent to approved laydown area	5 acres
Communication system changes—BEP plant	Underground fiber optic run to Dunes Substation	
Communication system changes—CalCap	Temporary laydown area	0.07 acres
Communication system changes—Julian Hinds	Within requested substation area change	0 acres
Julian Hinds Substation changes		0.3 acres
TOTAL CHANGE IN DISTURBANCE		**5.56 acres**

Table 2-2. Summary of Ownership Differences

Structure Number	2005 Parcel	2005 Ownership	2008 Parcel	2008 Ownership
Change Structure Support				
27	863-080-002	USA	No change	No change
153	860-140-016	USA	No change	No change
155	860-140-016	USA	No change	No change
158	860-230-002	David J VanBebber	No change	No change
193	810-391-002	USA	No change	No change
221	810-262-004	Western Oil Fields Supply Co.	No change	No change
222	810-241-003	USA	No change	No change
223	810-241-002	USA	No change	No change
232	810-232-012	Adapta Satya	No change	No change
233	810-232-011	Veronica C. Evans	No change	No change
234	810-232-011	Veronica C. Evans	No change	No change
308	808-092-004	USA	No change	No change
337	811-052-019	State of California	No change	No change
406	709-370-013	USA	No change	No change
411	709-340-001	Metropolitan Water District	No change	No change
415	709-340-001	Metropolitan Water District	No change	No change
416	709-340-001	Metropolitan Water District	No change	No change
417	705-230-040	Metropolitan Water District	No change	No change
418	705-230-040	Metropolitan Water District	No change	No change
419	705-230-040	Metropolitan Water District	No change	No change
420	705-230-040	Metropolitan Water District	No change	No change
421	705-230-040	Metropolitan Water District	No change	No change
431	705-230-031	Metropolitan Water District	No change	No change
Expand Desert Center Laydown Area				
NA	808-061-001	Ragsdale Trust	No change	No change
Communication System Changes				
Communication System Changes—Blythe Energy Plant and the Dunes Substation				
				Riverside county ROW
				Riverside County ROW
Communication System Changes—California Capacitor Station				
NA	811-062-016	USA, with ROW CA4163	No change	No change
Communication System Changes—Julian Hinds Substation				
	705-230-002	Metropolitan Water District	No change	No change
Additional Julian Hinds Substation Changes				
	705-230-002	Metropolitan Water District	No change	No change

2.1 Structure Support Changes

2.1.1 Description

Figure 2-2 is a map of the location of 17 structures that final engineering has determined will require guys to stabilize the structures and to provide for the safety of the public and the reliability of the transmission line. The guy wires, with a diameter of 9/16 inches, extra-high-strength steel, will extend out of the requested 95-foot-wide right-of-way (ROW) by up to 40 feet and averaging around 23 feet. Appendix B contains detailed plan and profile drawings of each of the proposed guyed structures and shows the relationship of the guy wires to the ROW. Note that in no case do the requested guy wires extend beyond the original parcel in which the ROW is located.

The guys are installed by first installing a guy anchor. These anchors are multi-helix shafts that are 10 feet and 7 feet in length. Appendix B also contains specifications from the anchor manufacturing company. The anchors are screwed into the ground with a truck-mounted power auger. They typically reach depths below grade of 8.3 feet and 5.8 feet, respectively. When installed, the anchors will extend horizontally below grade 5.5 feet and 3.9 feet, respectively. If the prescribed torque values cannot be met, then a 20-inch-diameter hole is drilled to match the depth and angle of the anchor. The hole is filled with concrete, and the anchors are screwed into the concrete before it sets.

The extra workspace required to install the anchor will include a one-time track for the drill rig to back up to the guy anchor location and install the anchor, with an assumed width of 12 feet. No new roads or additional clearing will be required, as the trucks can drive over the vegetation if needed. Table B-1 summarizes the requested structures, provides details regarding structure height and angles, and specifies the landowner for each. Table B-2 details the disturbance calculations and their assumptions and includes a summary of the number of guys and guy "runs" along with assumed width and length of disturbance outside the ROW. Appendix B also includes detail plan and profile drawings for each of the guyed structures. The 17 structures and 132 total guy wire "runs" will require a total of less than 0.24 acre of additional disturbance.

Blythe Energy understands that changes in the easement language may be needed from each landowner to accommodate the additional guy wires, and is pursuing easement changes now.

2.1.2 Necessity

The BEPTL consists of both steel and concrete poles. Concrete poles were selected for the tangent (inline poles) with some locations requiring steel pole tangent structures because of access requirements. Most of the angle and dead end locations were specified with guy wires to support the single pole structures. Most of these angle structures are concrete poles. The selection of guyed structures for the BEPTL project was based on economics and schedule concerns. Self-supporting poles that do not require guys cost three to eight times the cost of guyed poles. The line angle and spans dictate the loading and usually the steeper the angle the

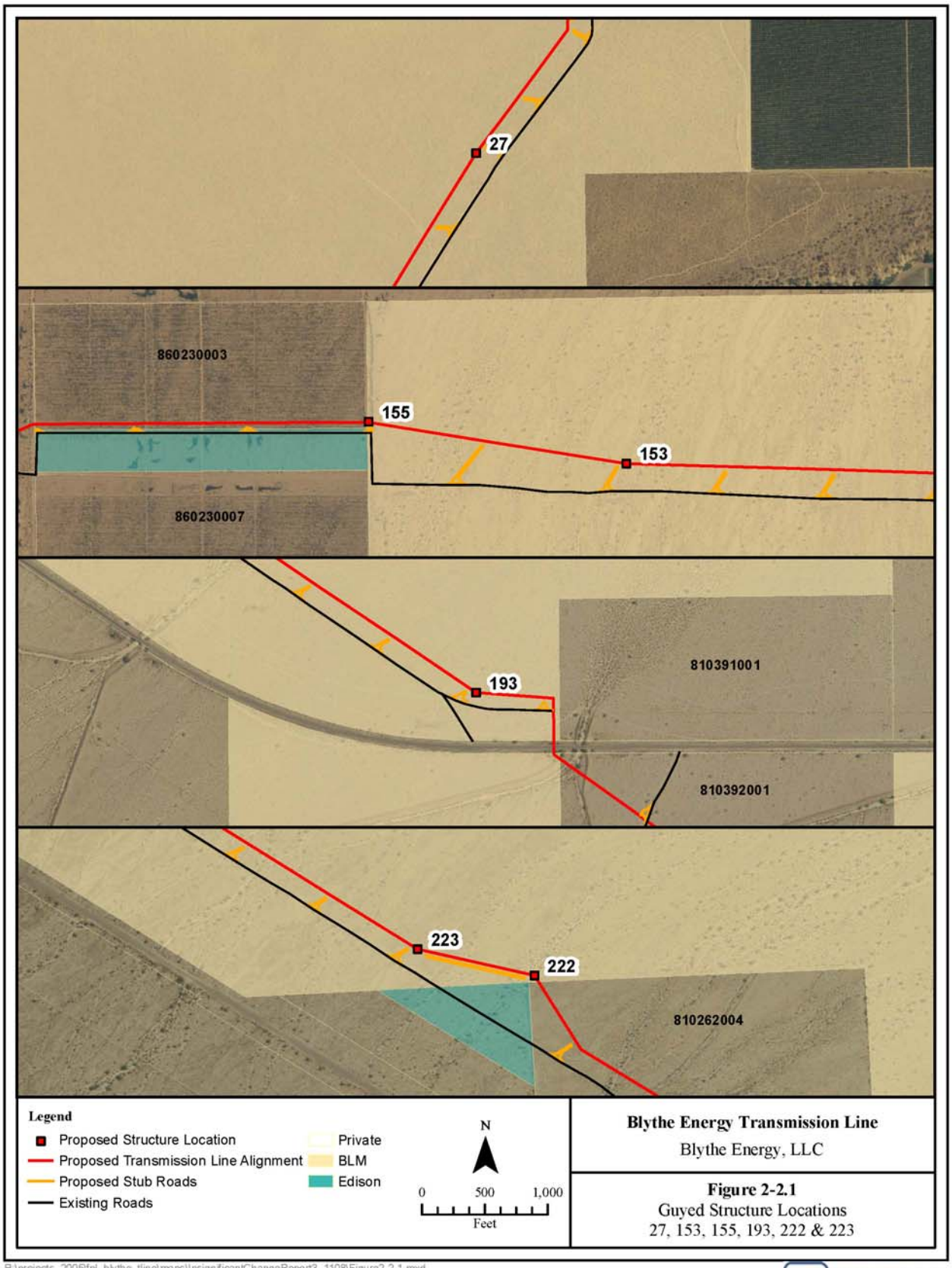

R:\projects_2005\fpl_blythe_tline\maps\InsignificantChangeReport3_1108\Figure2-2-1.mxd
11/20/2008

TETRA TECH EC, INC.

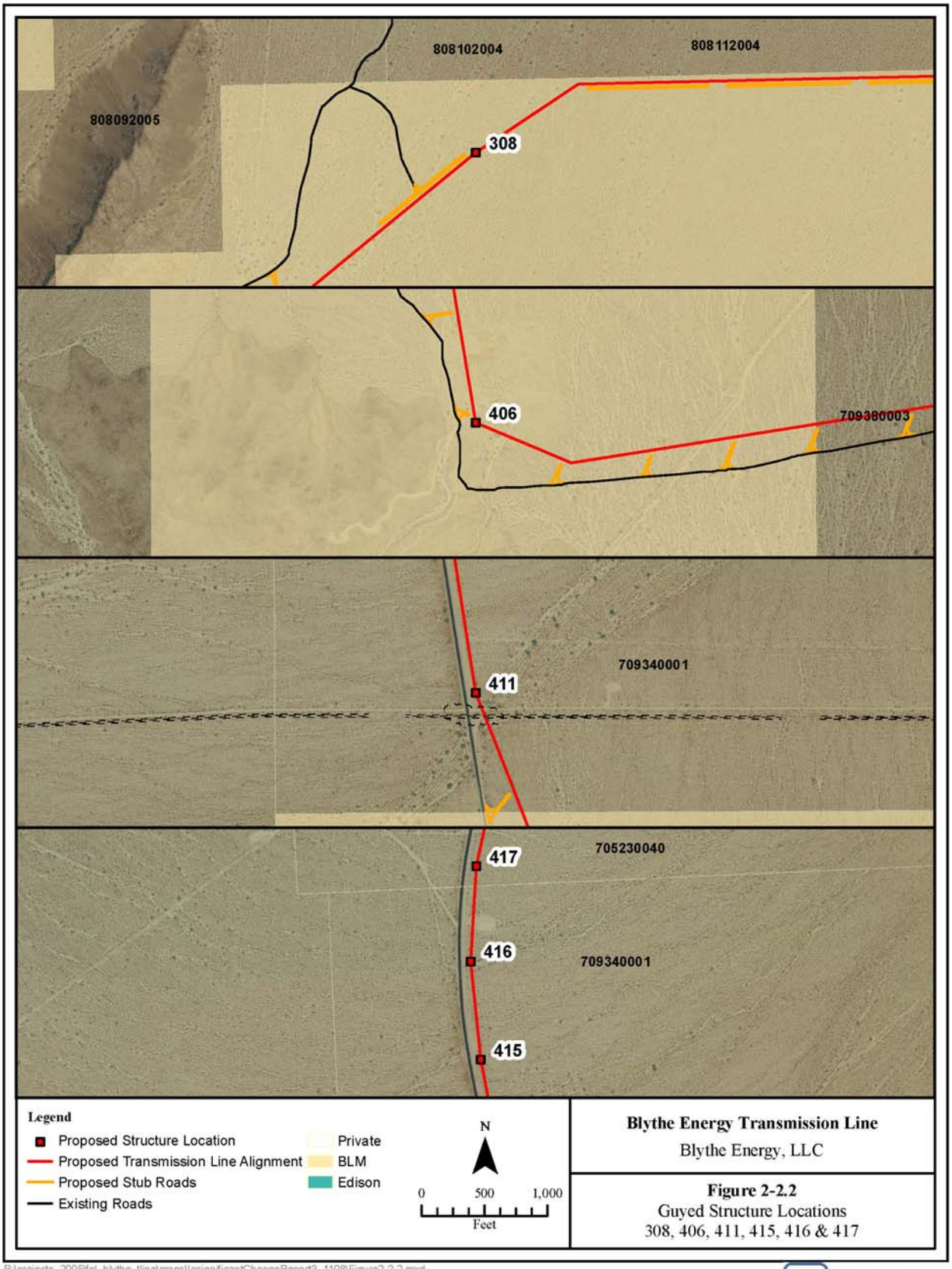

R:\projects_2005\fpl_blythe_tline\maps\InsignificantChangeReport3_1108\Figure2-2-2.mxd
11/20/2008

TETRA TECH EC, INC.

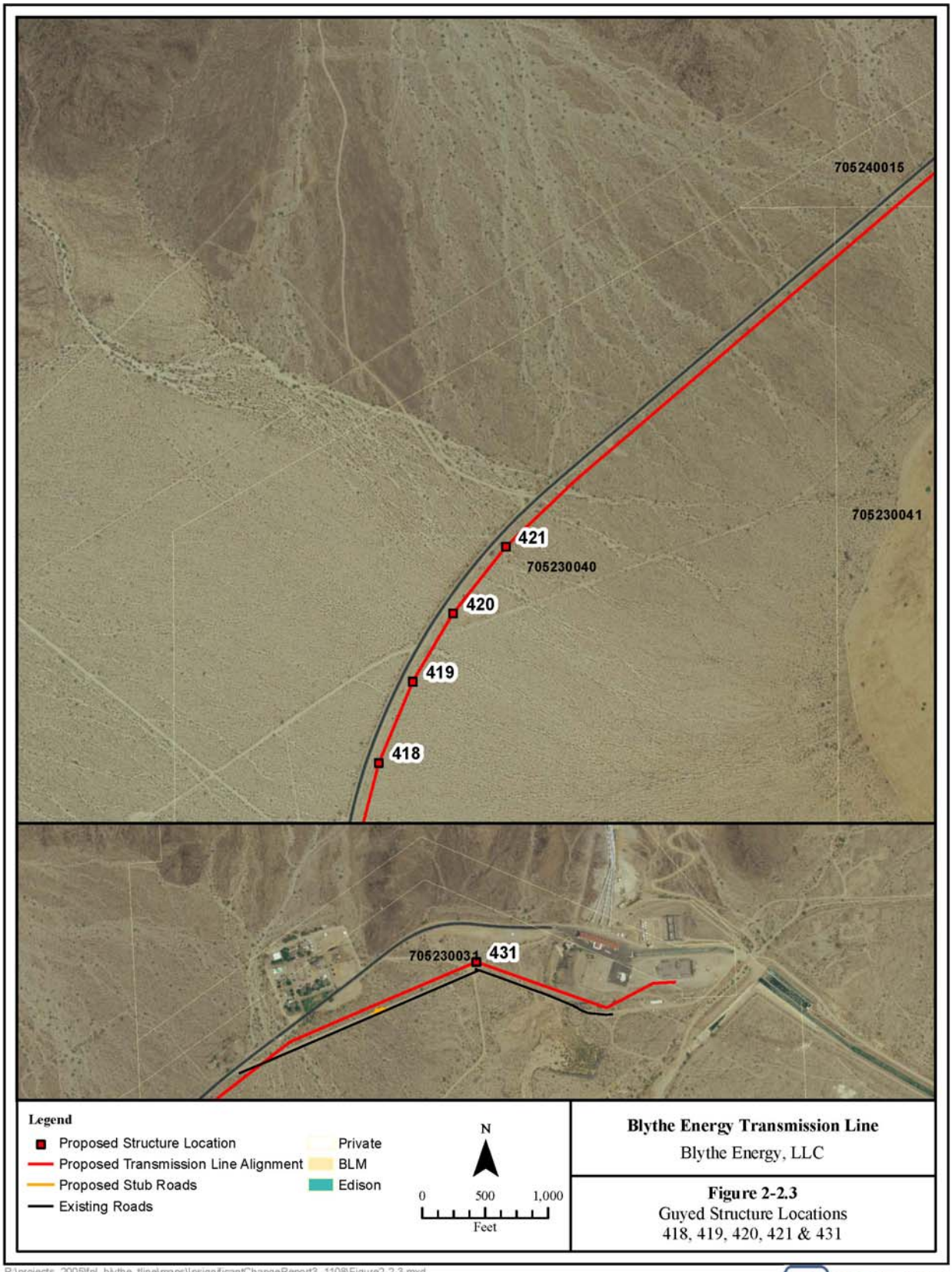

R:\projects_2005\fpl_blythe_tline\maps\InsignificantChangeReport3_1108\Figure2-2-3.mxd
11/20/2008

TETRA TECH EC, INC.

more loads resulting in higher costs. In addition, the project schedule was considered in the selection of guyed poles. Steel for guyed poles has a lead time of 16 to 18 weeks, while steel for self-supporting poles has a lead time of 30 to 32 weeks. Self-supporting poles require thicker plate steel for carrying all the loads, whereas guy structures distribute the loads on the guy wire. The installation of the guys and anchors is designed to minimize the impacts to the area of disturbance. For this Project, the design is for screw anchors, which will be installed by a special installation truck, backing up to the anchor location and screwing the anchors into the designed point of resistance. Screw anchor installation has less impact (no trenching or backfilling) than having to excavate either a hole or trench to install a plate anchor and then backfill.

2.1.3 New Information

At the time of certification, the final design for each of the structures had not been completed. Neither the Application for Certification (AFC) nor the Final Revised Staff Assessment (FSA) specified the support structures for the transmission lines. It is common engineering practice to use guy wires to support transmission structures, especially where turns in the line put substantial lateral stress on the structures. The guyed structures are included in this Insignificant Project Change Request because the final design for the guy wires shows that some of the guys must be installed outside of the previously calculated area for disturbance, adding a very minor amount of disturbance to the overall calculations. While the vast majority of the structures are self-supporting, these 17 structures, representing less than 5 percent of the overall set of structures for the Project, will need to be guyed as determined by final engineering design.

2.2 Desert Center Laydown Area Expansion

2.2.1 Description

Figure 2-3 illustrates the proposed Desert Center laydown area expansion. The landowners (the Ragsdale family) have given permission for the expansion. The laydown yard will be expanded to approximately 10 acres and will be fenced with both chain link fence and desert tortoise fencing. A biologist will be on-site during fence installation to conduct a pre-construction sweep of the area and to ensure that no tortoises are trapped inside the fence. The area will be cleaned up as specified by the landowner after construction is complete.

2.2.2 Necessity

Valmont, the manufacturer of the concrete poles, with a factory located in Barstow, has now indicated that its trucks are unable to travel the unsurfaced roads in the desert and separate, high-clearance tractors will be needed to transport the poles. Therefore, additional area is needed at Desert Center to transfer the poles from highway vehicles to the high-clearance tractors.

2.2.3 New Information

At the time of certification, Blythe Energy assumed that Valmont Industries, the manufacturer of the concrete poles, would be able to transport each pole to its assigned location using the same highway trucks that transport the pole from the factory in Barstow, California. Blythe Energy

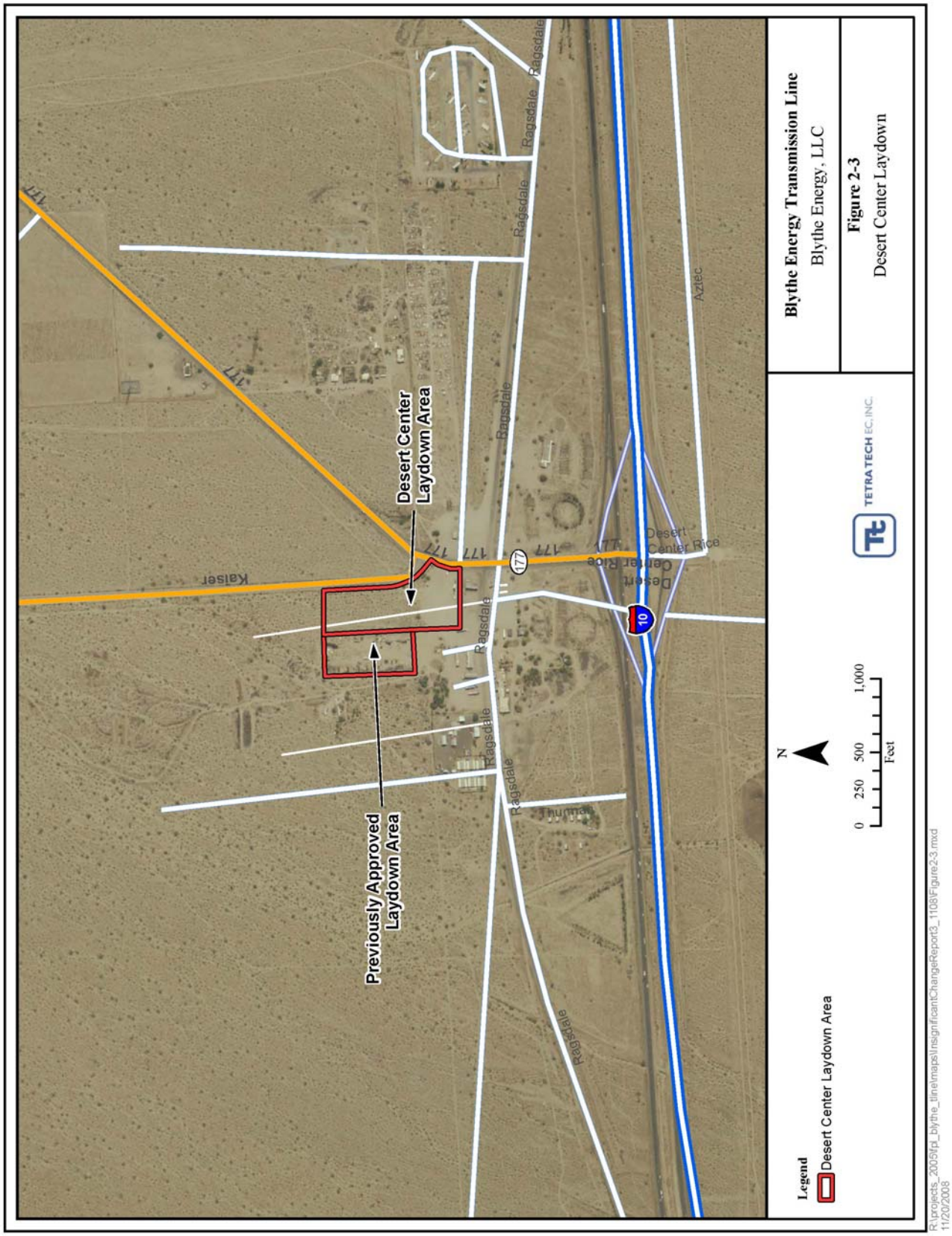
Desert Center Laydown Area
Previously Approved Laydown Area
Kaiser
Ragsdale
Aztec
Desert Center Rice
177
10
Legend
Desert Center Laydown Area
N
0 250 500 1,000
Feet
TETRA TECH EC, INC.
Blythe Energy Transmission Line
Blythe Energy, LLC
Figure 2-3
Desert Center Laydown
R:\projects_2005\fpl_blythe_tline\maps\InsignificantChangeReport3_1108\Figure2-3.mxd
11/20/2008

further assumed that Valmont could store those poles at the factory site until delivery was required. Valmont has now indicated that it must deliver the poles as they are manufactured and that their trucks cannot negotiate the desert unsurfaced road.

2.3 Changes in Communication System—BEP Plant to Dunes Substation

2.3.1 Description

Figure 2-4 illustrates the proposed fiber optic cable routes from the BEP to the Dunes Substation. In addition to the dual fiber optic cable installation, Edison Network Services Engineering (Edison) will require space within a building that will be constructed as part of the improvements within the BEP to accommodate the changed routing of the power. The westernmost cable (FO-2) will travel in an underground conduit installed adjacent to the existing BEP paved entryway, then turn south at the edge of the Buck Boulevard ROW to the Hobson Way ROW. This cable in conduit will be installed with a directional drill underneath Hobson Way, will emerge within the Hobson Way ROW on the south side of the road, and will then turn east and proceed along Hobson Way within and at the edge of the road ROW. It will turn north again under Hobson Way through the use of a directional drill and emerge immediately adjacent to the southeastern corner of the Edison Dunes Substation.

SCE Telecom will construct the easternmost cable (FO-1), overhead for about 5,300 feet on new and existing poles, and for approximately 900 feet in underground conduit. The cable will leave Dunes Substation overhead heading due south to Hobson Way. It will continue west along Hobson Way, along the north side of the road, to Buck Boulevard. It will head north along the east side of Buck Boulevard. At Riverside Avenue it will turn west and cross Buck Boulevard and run along the south side of Riverside Avenue to the west side of the Blythe Energy Plant. It will then come down on a riser pole to continue underground to the south, into the Blythe Energy Plant.

Installation of the telecommunications and associated equipment would be performed by SCE personnel and/or by contractors under the supervision of SCE personnel. Anticipated construction personnel and equipment are summarized in Table 2-3 Construction Personnel and Equipment Summary (Blythe Fiber Optic Cable Installation).

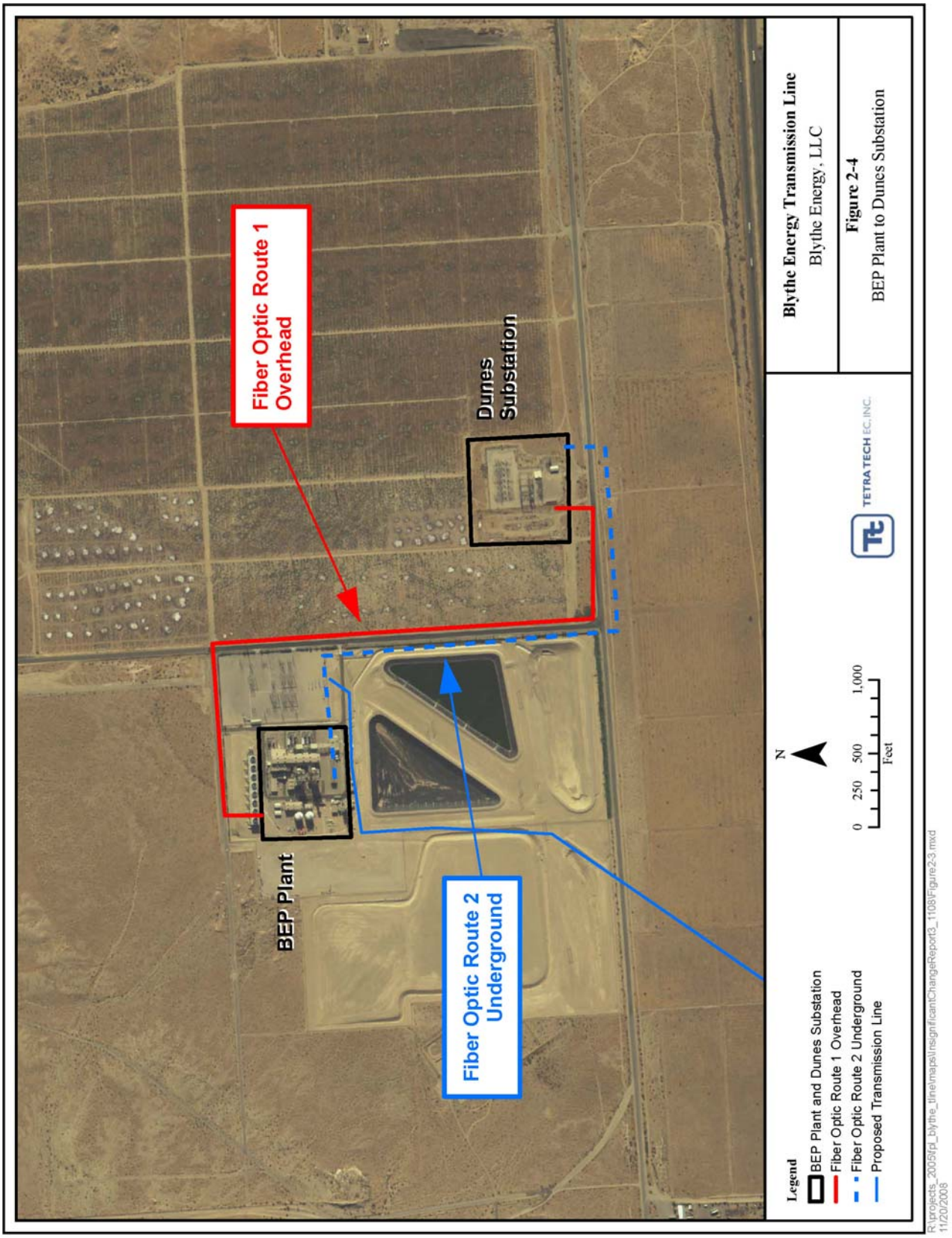
Fiber Optic Route 1
Overhead
Dunes
Substation
BEP Plant
Fiber Optic Route 2
Underground
Legend
BEP Plant and Dunes Substation
Fiber Optic Route 1 Overhead
Fiber Optic Route 2 Underground
Proposed Transmission Line
N
0 250 500 1,000
Feet
TETRA TECH EC, INC.
Blythe Energy Transmission Line
Blythe Energy, LLC
Figure 2-4
BEP Plant to Dunes Substation
R:\projects_2005\fpl_blythe_tline\maps\InsignificantChangeReport3_1108\Figure2-3.mxd
11/20/2008

Table 2-3. Construction Personnel and Equipment Summary (Blythe Fiber Optic Cable Installation)

Construction Element	Number of Personnel	Number of Days	Equipment Requirements
Pole installation	4	6	2-crew trucks (gas/diesel) 1-line truck (diesel)
Overhead Fiber Cable Installation	4	4	2-crew trucks (gas/diesel) 1-line truck (diesel)
Trench Construction	3	9	2-crew trucks (gas/diesel) 1-backhoe (diesel) 1-stakebed truck (diesel) 1-concrete mixer (diesel)
Underground Fiber Cable Installation	4	8	2-crew trucks (gas/diesel) 1-line truck (diesel)
Telecommunications Installation Crew	2	10	1-2 ton truck (gas/diesel) 1-crew truck (gas)

2.3.2 Necessity

Edison stated that the BEP-Dunes Fiber Optic Path is needed to provide a link to the existing SCE Telecommunications network to meet SCE's protective relaying requirements. Edison has therefore concluded that a new optical information system station is required at the BEP to provide needed communications and control, and that a fiber optic path is needed to existing communication equipment found in Edison's Dunes Substation. The fiber optic path needs a redundant component to provide for the unlikely event that one of the fiber optic paths is interrupted and to guarantee communication between the BEP and the Edison portion of the Southern California grid.

2.3.3 New Information

At the time of certification, Edison had not conducted a detailed study of communication needs to accommodate the BEP energy into the Edison system. Now that Edison has completed that study, they have requested that Blythe Energy include their proposed changes, which are within the project area for the BEPTL, as part of this Insignificant Change request.

2.4 Changes in Communication System—California Capacitor Station

2.4.1 Description

Figure 2-5 and 2-6 illustrate the location of the requested change of microwave tower at the Edison-owned California Capacitor Station (CalCap). The CalCap is located just south of I-10 at the Red Cloud Road exit. The nearest BEPTL structures are 369 and 370. There is an existing unsurfaced road that accesses the CalCap, which is located on public land administered by the BLM in Township 6S, R14E, SW ¼ of the SE ¼ of Section 6, San Bernardino Base & Meridian. The CalCap is a permitted use of public lands under case file #CA4163. Edison will request an amendment to their ROW Grant to accommodate the proposed tower change.

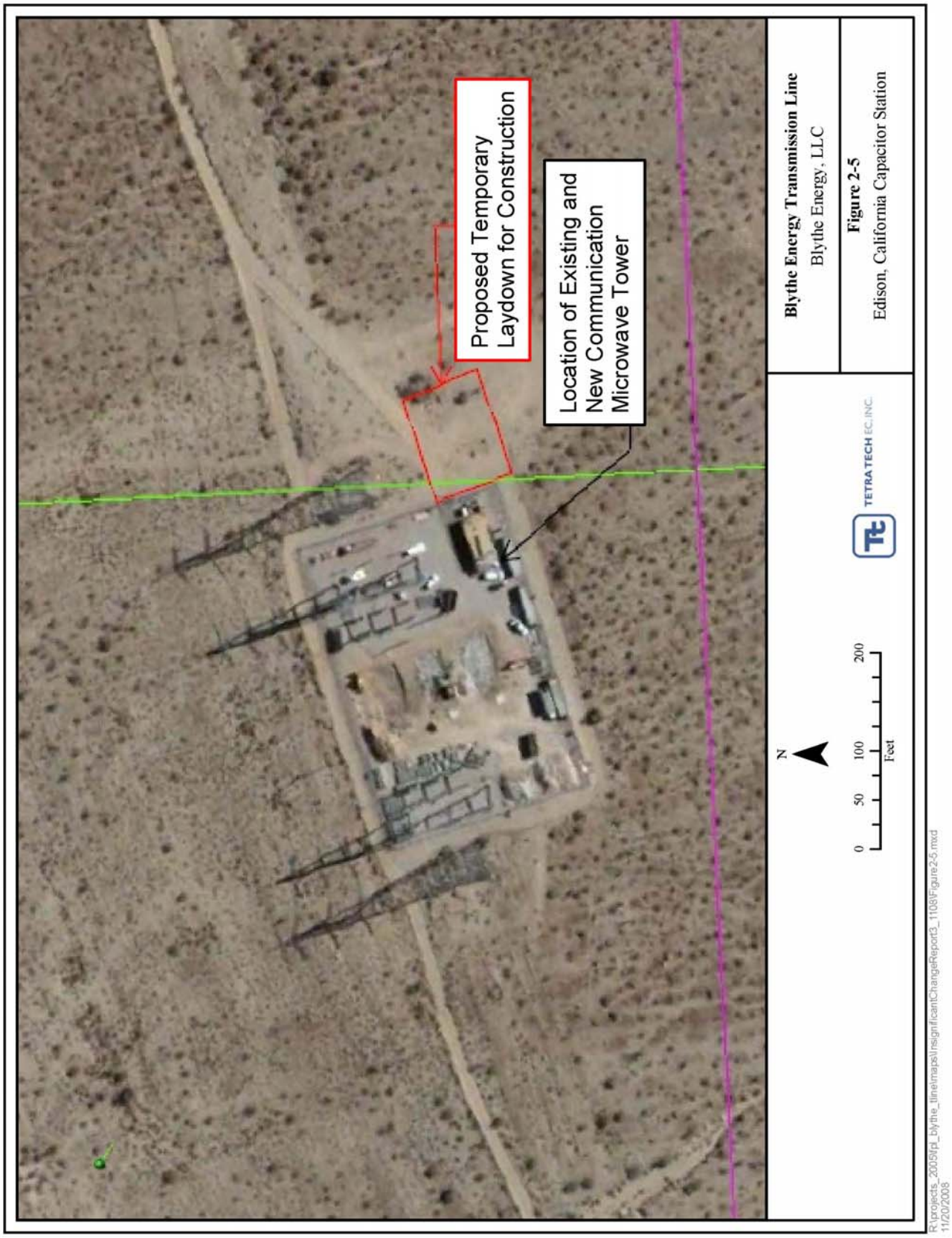
Proposed Temporary Laydown for Construction
Location of Existing and New Communication Microwave Tower
N
0 50 100 200
Feet
TETRA TECH EC, INC.
Blythe Energy Transmission Line
Blythe Energy, LLC
Figure 2-5
Edison, California Capacitor Station
R:\projects_2005\pl_blythe_tline\maps\InsignificantChangeReport3_1108\Figure2-5.mxd
11/20/2008

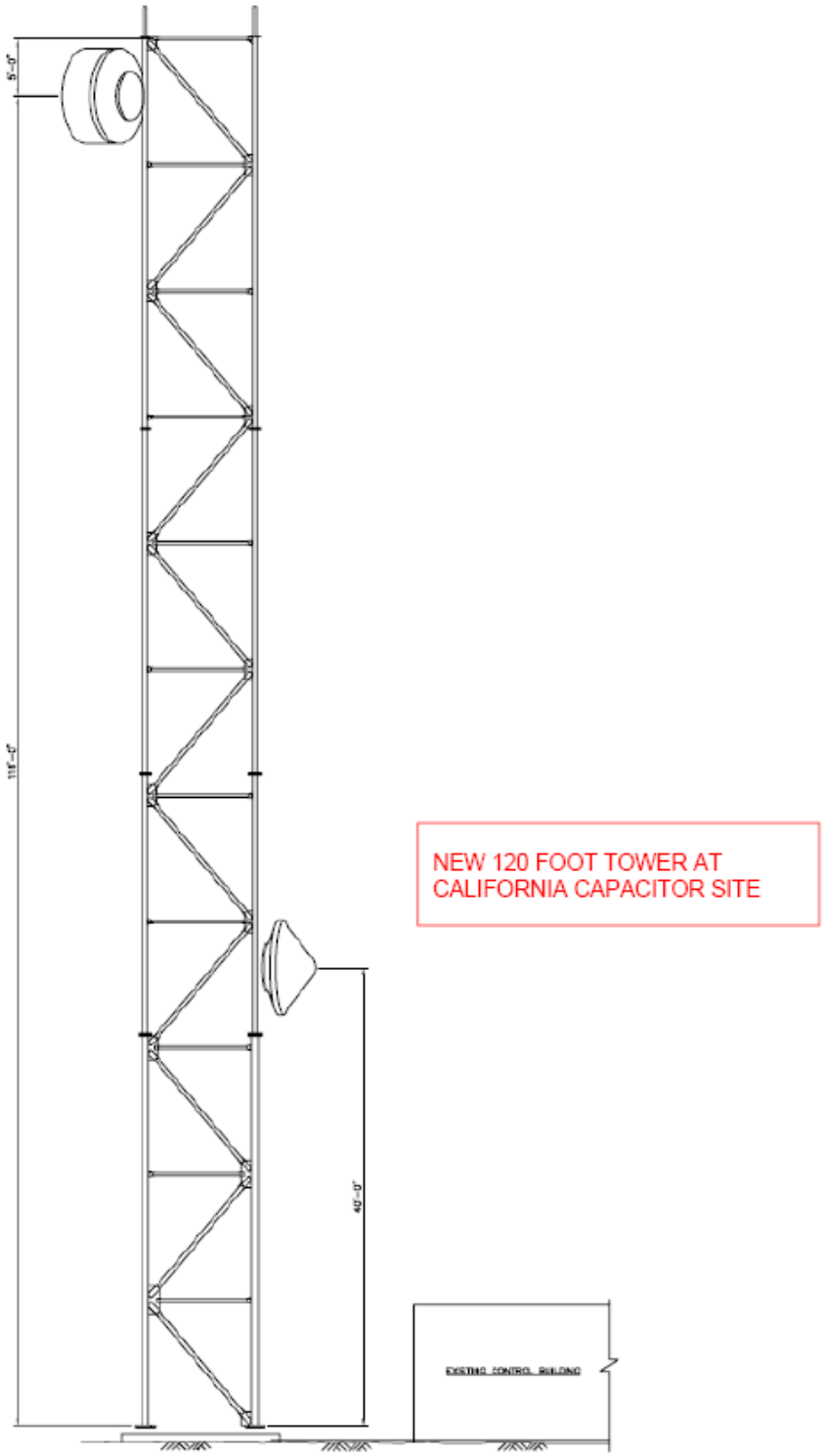

Figure 2-6. Edison Proposed 120-Foot Communication Tower

Edison will replace an existing 20-foot microwave tower with a new 120-foot tower (Figure 2-6) just west of the Mechanical Electrical Equipment Room (MEER) inside the existing fence line of the CalCap.

The existing 20-foot tower will be removed. The top of the existing foundation will be removed to 2 feet below grade and covered with gravel to match the surrounding area. All tower material will be removed from the site and sold for scrap steel, recycled, or reused. The existing 6-foot-diameter microwave antenna will be relocated from the existing tower to the new tower.

The foundation of the new tower will consist of a rectangular concrete block 13.1 feet wide by 14.6 feet long by 3.6 feet high, supported by a round column 5.6 feet in diameter by 23 feet high. The tower will be a triangular steel lattice tower 121 feet high with 11 feet between the centers of the legs.

All tower material will be delivered by truck to a 0.07-acre (50 feet by 60 feet) temporary staging area just outside the existing gate at the CalCap. The construction crew will restore the temporary staging area to pre-construction conditions at completion of tower installation. Tower construction and installation of the antennas and associated equipment will be performed by SCE personnel and/or by contractors under the supervision of SCE personnel. Anticipated construction personnel and equipment are summarized in Table 2-4, Construction Personnel and Equipment Summary (Microwave System). One new 10-foot diameter microwave antenna will be installed on the new tower in addition to the antenna transferred from the old tower.

Table 2-4. Construction Personnel and Equipment Summary (Microwave System, California Capacitor Station)

Construction Element	# Personnel	# Days	Equipment Requirements
Antenna Tower Construction Crew	4	15	Two crew trucks (gas/diesel) One 120-foot crane (diesel) One 120-foot bucket truck (diesel)
Telecommunications Installation Crew	4	10	One 2-ton truck (gas/diesel) One crew truck (gas)

The microwave waveguides will be supported by a cable tray on the tower. The waveguides and the tray will bend from vertical to horizontal and run approximately 10 feet off the ground into the building, which will be adjacent to the tower.

2.4.2 Necessity

Edison stated that the new tower is needed to provide a diverse communications link from the SCE Telecommunication network to Julian Hinds, to meet SCE's protective relaying requirements. The tower is planned at 120 feet in height to clear the 500-kV switch rack at California Capacitor.

2.4.3 New Information

At the time of certification, Edison had not conducted a detailed study of communication needs to accommodate the BEP energy into the Edison system. Now that Edison has completed that study, they have requested that Blythe Energy include their proposed changes, which are within the project area for the BEPTL, as part of this Insignificant Change request.

2.5 Changes in Communication System—Julian Hinds Substation

2.5.1 Description

Figure 2-7 illustrates the proposed changes in the communication system at the Julian Hinds Substation. Edison Telecom will build a tower just north of the new MEER inside the proposed expanded fence line. The foundation of the tower will consist of a rectangular concrete block 13.1 feet wide by 14.6 feet long by 3.6 feet high, supported by a round column 5.6 feet in diameter by 23 feet high. The tower will be a triangular steel lattice tower 100 feet high with 11 feet between the centers of the legs.

A temporary construction laydown area, approximately 60 by 60 feet, will be established for vehicle parking and material storage prior to construction. All tower material will be delivered by truck and will be staged in the lay down area. The construction crew will be responsible for cleaning up this area prior to permanently vacating the job site.

Tower construction and installation of the antennas and associated equipment will be performed by Edison personnel and/or by contractors under the supervision of Edison personnel. Anticipated construction personnel and equipment are summarized in Table 2-5, Construction Personnel and Equipment Summary (Microwave System). Each tower section at Julian Hinds Substation will be erected using a 100-foot crane and a 100-foot bucket truck. One 10-foot-diameter microwave antenna will be installed on the new tower. The microwave waveguide will be supported by a cable tray on the tower. The waveguide and the tray will bend from vertical to horizontal and run approximately 10 feet off the ground into the building, which will be adjacent to the tower.

Legend
Julian Hinds Substation
Previously Approved and Proposed Julian Hinds Expansion for IPCA 3
Previously Approved Julian Hinds Laydown Area
N
0 50 100 200
Feet
TETRA TECH EC, INC.
Blythe Energy Transmission Line
Blythe Energy, LLC
Figure 2-7
Julian Hines Substation Expansion

Table 2-5. Construction Personnel and Equipment Summary (Microwave System, Julian Hinds Substation Installation)

Construction Element	# Personnel	# Days	Equipment Requirements
Antenna Tower Construction Crew	4	15	Two crew trucks (gas/diesel) One 100-foot crane (diesel) One 100-foot bucket truck (diesel)
Telecommunications Installation Crew	4	10	One 2-ton truck (gas/diesel) One crew truck (gas)

2.5.2 Necessity

Edison stated that the new tower is needed to provide a diverse communications link from the SCE Telecommunication network to Julian Hinds, to meet SCE's protective relaying requirements. The tower is planned at 100 feet in height to allow for line-of-sight communications with other components of the Edison telecommunications system.

2.5.3 New Information

At the time of certification, Edison had not conducted a detailed study of communication needs to accommodate the BEP energy into the Edison system. Now that Edison has completed that study, they have requested that Blythe Energy include their proposed changes, which are within the project area for the BEPTL, as part of this Insignificant Change request.

2.6 Additional Expansion of Julian Hinds Substation

2.6.1 Description

Figure 2-7 illustrates the needed additional area at the Julian Hinds substation to accommodate the addition of a MEER and the communications microwave tower (Figure 2-8) referenced in Section 2.5.1, above. In addition to the expansion already permitted, Edison has stated that an additional 0.3 acre is needed, in addition to the 0.5-acre laydown area previously permitted for Blythe Energy and then relinquished when Municipal Water District (MWD) informed Blythe that the laydown would not be permissible. Edison stated that MWD will make this laydown available.

2.6.2 Necessity

Edison stated that the previously permitted and then relinquished 0.5-acre Julian Hinds laydown area and an additional 0.3-acre expansion is needed to install additional communications equipment that will provide communications security between Julian Hinds and Blythe and to provide control over the BEP production as needed.

2.6.3 New Information

At the time of certification, the BEP power was expected to interconnect at the Western substation and also at Julian Hinds, but did not have a specific Large Generator Interconnection Agreement (LGIA) with Edison. The LGIA with Edison includes the need to provide additional communications and controls between various components of the Edison system and the BEP.

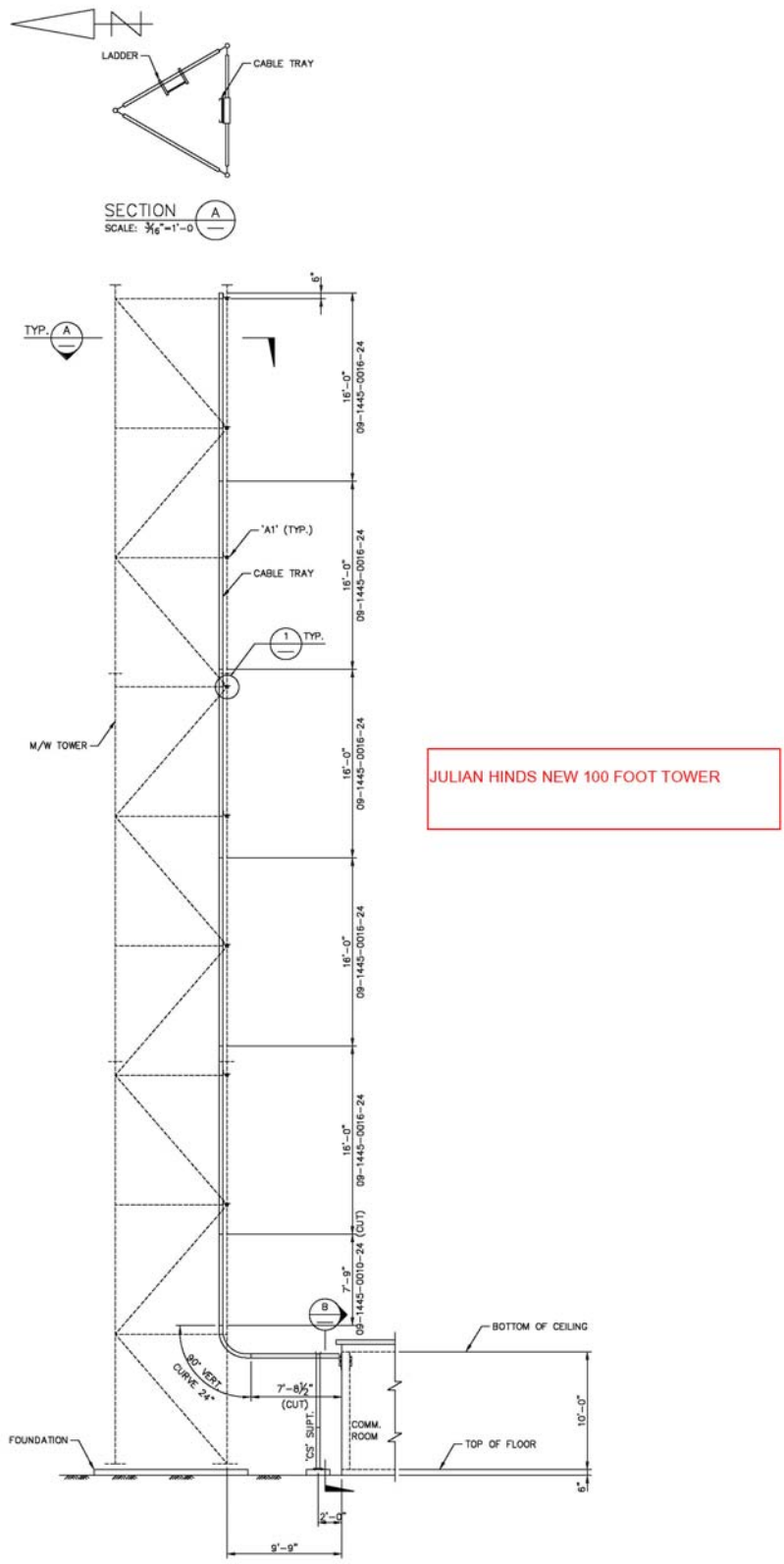

Figure 2-8. Julian Hinds Proposed 100-Foot Communication Tower

3 Environmental Analysis of Proposed Project Changes

This section details, by resource, the potential impacts of the proposed project changes on the environment of the BEPTL. All references to the Conditions of Certification are to the CEC's FSA (CEC 2006a).

3.1 Air Quality

Impacts to air quality from the Project as modified with the proposed changes will be essentially the same as the impacts associated with the Project as currently approved, because there are no proposed changes in construction methods, including dust control and management of construction vehicle emissions. There will be no changes in operations or maintenance activities due to the proposed changes. An estimated additional 6.06 acres of disturbance will be added to the Project:

- 0.24 acre due to revised calculations for structural guy installation
- 5 acres with the expanded Desert Center laydown area
- 0.02 acre of additional laydown at the CalCap
- 0.8 acre at Julian Hinds (0.5 acre of laydown and 0.3 acre of additional expansion)

The areas where guys will be installed will be in native desert habitat as well as in disturbed areas. Because the guy anchor installation truck does not require an access road or grading prior to being able to back up to the installation area, additional dust generation due to guy anchor installation is not anticipated. The additional laydown areas at Desert Center, the CalCap, and Julian Hinds are all previously disturbed and devoid of vegetation; however, there is the potential for additional dust emissions from these areas. Dust that could be generated as a result of the additional laydown areas will be minimized and controlled through existing Conditions of Certification. Therefore, the proposed changes will not cause any substantial additional adverse air quality impacts above and beyond those already identified. No changes to, or deletions of, any air quality Conditions of Certification are required.

3.2 Biological Resources

Project impacts to biological resources will be essentially the same as currently approved project impacts. Therefore, the proposed changes will not substantially change the impacts to biological resources above and beyond those already identified and mitigated for in the existing CEC Decision and Conditions of Certification. No changes to, or deletions of, any biological resources Conditions of Certification are required. All structure modifications and the modifications needed to accommodate the Edison communication system upgrades were covered in the various biological surveys conducted for the original transmission line project.

Desert tortoise, Mojave fringe-toed lizard, and burrowing owl are the sensitive wildlife species most likely to occur in the areas of structure revision and laydown areas. As required in the FSA (CEC 2006a, pages 4.2, 15-20), Blythe Energy will implement mitigation measures to decrease the likelihood of direct or indirect impacts to desert tortoise, Mojave fringe-toed lizard, and

burrowing owl. Harwood's milk vetch is also likely to occur in areas of dune or disturbed habitat; however, there are no changes in overall impact due to minor realignment of structures in sandy areas.

Pedestrian transects were completed for the entire length of BEPTL during several survey events. The initially proposed ROW was surveyed in meandering transects covering a total width of 1,000 feet. The proposed changes, with the exception of the expanded laydown area at Desert Center, are within the originally surveyed area. This area was reviewed in 2008 (Appendix C) and found to be actively disturbed areas devoid of vegetation and without habitat for any sensitive species. In addition, consistent with the U.S. Fish and Wildlife Service protocol, desert tortoise transects were conducted concurrently for the DPV-2 project, BEPTL, and the Desert Southwest Transmission Line, from May 2 to 17, 2005. One-hundred percent of the BEPTL 95-foot ROW was surveyed using parallel, 30-foot-wide belt transects, as were the ROWs for the other two projects. Zones of influence surveys extended out from the 100 percent survey swath to 2,400 feet on either side of the combined projects, providing a very wide survey corridor (Tetra Tech 2005). The insignificant project changes are proposed within the originally surveyed area with the exception of the expanded Desert Center laydown area, which was reviewed in 2008 (Appendix B). The biological surveys documented the location and types of habitats and all occurrences of sensitive species.

The changes needed in structure configuration will increase ground disturbance by a very minor amount—about 0.24 acre. This disturbance will occur within the Chuckwalla Desert Wildlife Management Area and will be compensated at a 5:1 ratio. The proposed addition to the Desert Center laydown area will expand the area into highly disturbed areas, including areas devoid of vegetation (Figure 2-3). The quality of habitat for desert tortoise is very poor. This area is located north of the buildings in Desert Center and north of I-10 and is not in critical desert tortoise habitat. The additional 5 acres of disturbance will be compensated at a 1:1 ratio as specified in the text of the FSA and in BIO-17. This will add approximately 5 acres of compensatory mitigation land purchases to the overall mitigation package. The final mitigation cost will be determined by comparison of aerial photography taken just before and immediately after the construction, and may be larger or smaller than that estimated for the purposes of initial mitigation calculations. It will be enclosed with temporary fencing with desert tortoise exclusion fencing included as required by the Condition of Certification BIO-1.

The changes needed in the Edison communication system at the BEP and along the road between the BEP and the Dunes Substation will occur either in graveled or paved areas and in road shoulder. The fiber optic cable that will be buried will not disturb any new area. The fiber optic cable that will be carried overhead on existing poles will also not disturb any new area.

The changes needed at the CalCap, though occurring within the Chuckwalla Desert Wildlife Management Area, do not include any new disturbance. As shown on the aerial photograph in Figure 2-5, all construction will occur within a graveled fenced area and the temporary laydown area has been previously used, is used presently for parking by personnel servicing the CalCap, and is devoid of vegetation.

Overall disturbance footprint for the BEPTL will increase by 6.06 acres. However, because some changes were expected between the proposed project and final engineering, and because there was a difference of opinion regarding potential total disturbance, Condition BIO-17 was provided to allow for determination of the final disturbance caused by the Project using a "Protocol for Disturbance Calculation and Compensation" (CEC 2006a, page 4.2-25).

3.3 Cultural Resources

Impacts to cultural resources from the Project as modified with the proposed changes will be essentially the same as the impacts associated with the Project as currently approved. Cultural resources surveys conducted for the additional disturbance areas (Appendix D) revealed no additional cultural resources. Therefore, the proposed changes will not cause new cultural resource impacts above and beyond those already identified and mitigated for in the existing CEC Certification and will not alter any existing or call for any new Conditions of Certification. No changes to or deletions of any cultural resources Conditions of Certification are required.

Previous reports, inventories, and evaluations of cultural resources in the project area were reviewed, and additional record searches and intensive surveys were conducted for an Area of Potential Effects (APE) that include the proposed guyed structures, communication system changes, and the proposed expansion of the Desert Center and Julian Hinds laydown areas.

Blythe Energy conducted a record search and intensive surveys for 100 percent of this alignment in January and February 2005. A final inventory report was provided in March 2006 (Mooney, Jones & Stokes 2006). The survey areas were defined as a 300-foot-wide corridor for the transmission line, a 100-foot-wide corridor for all access and spur roads, and the footprint and a 200-foot buffer in all directions from the perimeter of the footprint of substations, staging areas, and other project components. In addition, any sensitive resources within 0.25 mile, for which setting is an important aspect of the integrity of the resource, are also considered to be within the APE. The combined efforts of previous surveys and records search and this current study (record search/pedestrian survey) of the guyed structure, communication systems, and additional laydown areas did not result in the identification of previously unidentified cultural resources within the APE; therefore, the guyed structures, communication systems, and additional laydown areas will not impact any new cultural resources.

One previously recorded cultural resource, the Colorado River Aqueduct (CRA), was determined eligible for listing to the National Register Historic Places and California Register of Historic Resources. The Julian Hind Pumping plant is part of the CRA. The proposed additional expansion of the Julian Hinds Substation area will occur along the south and east side of the existing Julian Hinds Substation, on the south side of the aqueduct. This proposed change adds an additional 0.3 acre and is consistent with the originally approved Julian Hinds Substation expansion and new transmission line and will not alter any of the historic fabric of the CRA. As summarized in the CEC Staff Assessment/Environmental Assessment (CEC 2006a; page 4.3-24), although the new power line and substation will change the setting, those new elements will be consistent with the industrial nature of the CRA. The mitigation measures (CEC 2006a, page

4.3-24) for the CRA are still appropriate for the proposed Julian Hinds expansion and communication tower.

In addition, the cultural resources (excluding isolates) observed or recorded within the survey area were summarized in the CEC Staff Assessment/Environmental Assessment (CEC 2006a; Table 2 on page 4.3-14). These measures are still appropriate for all proposed guyed structures, communication changes, and additional laydown areas, and, when implemented, the proposed modifications will not change the impact of the proposed project or have a significant adverse impact on cultural resources.

3.4 Geology and Paleontology

Literature and archival reviews conducted for the approved project did not provide evidence of any paleontological resources that will be impacted by the Project. All areas affected by the proposed guyed structures and communication modifications were included in the original literature and archival reviews, including the proposed laydown area at Desert Center and Julian Hinds expansion. Because the proposed changes involve minor guyed structure adjustments and only 5.3 additional acres of disturbance for laydown areas, they will not cause any new geological or paleontological impacts above and beyond those already identified and mitigated for in the existing CEC Decision and Conditions of Certification. No changes to, or additions of, any geological or paleontological resource Conditions of Certification are required.

3.5 Hazardous Materials Management

The proposed modifications will not change the impact that the Project will have on hazardous materials management. The one new and two relocated laydown areas will be used to store minor quantities of hazardous materials such as fuels and lubricants, and standard Storm Water Pollution and Prevention Plan measures will be applied. No changes to or additions of any hazardous materials management Conditions of Certification are required.

3.6 Land Use

Impacts to land use from the Project as modified with the proposed changes will be essentially the same as the impacts associated with the Project as currently approved. The 8 guyed structures on public lands increases the amount of public land disturbance by 0.10 acre. The proposed Julian Hinds expansion laydown yards increases non-federal temporary disturbance by 0.3 acre. The addition of the Desert Center expansion laydown area adds 5 acres to private land utilization and temporary disturbance. Table 2-1 summarizes the disturbance footprint changes for all proposed minor project changes. The calculations show a 77.5 percent increase in disturbance for these project features, and that overall, the proposed changes vary the initial estimate of total project disturbance by about 2 percent. The proposed laydown areas on private land have been agreed to by landowners. No changes proposed will impact current or future land use. Therefore, the proposed changes will not cause any new land use impacts above and beyond those already identified and mitigated for in the existing CEC Decision and Conditions of Certification. No changes to or additional Conditions of Certification are required.

3.7 Noise and Vibration

The proposed modifications will not change the noise impact of the Project. The proposed modifications are located in areas that have no permanent residents and there are no additional activities that will generate substantial sustained noise events. No changes to or additional Conditions of Certification are required.

3.8 Public Health

The transmission line will not be substantially closer to any residence or other sensitive receptor. The proposed modifications will not change the impact the Project will have on public health. No changes to or additional Conditions of Certification are required.

3.9 Socioeconomics

The proposed modifications will not change the impact the Project will have on socioeconomics or on schools, housing, law enforcement, emergency services, hospitals, or utilities. No changes to or additional Conditions of Certification are required.

3.10 Soil and Water Resources

The proposed guyed structure and communication modifications and additional laydown areas will not substantially change the impacts the Project will have on soil and water resources or be different from those already identified and mitigated for in the existing CEC Decision and Conditions of Certification.

Table 2-1 summarizes the overall change in estimated disturbance footprint. The additional temporary 5-acre laydown area at Desert Center is within a disturbed level area with very little vegetation. The temporary 0.01-acre laydown area at the CalCap station is on a disturbed, level surface devoid of vegetation. The western most laydown area at the Julian Hinds expansion is previously disturbed and graded land with no vegetation, and its use will not cause a different impact from the temporary use of the originally proposed Julian Hinds laydown area. Total additional soil disturbance will be approximately 5.56 acres, although the laydown areas are in previously disturbed areas.

The proposed Desert Center laydown area is located within a highly disturbed area adjacent to the originally approved fenced Desert Center laydown area. The Julian Hinds expansion laydown area is within a graded and leveled surface. The laydown areas will be cleared of trash and fenced. After their temporary use as laydown areas, the fencing and all materials will be removed. All laydown areas will be free of trash at the end of their temporary use. Mitigation measures found in the Drainage, Erosion and Sedimentation Plan/Storm Water Pollution Prevention Plan will be implemented for all areas included in the proposed modifications. No changes to or additional Conditions of Certification are required.

3.11 Traffic and Transportation

The proposed modifications will not change the impact the Project will have on traffic and transportation. Access from state and county roads will be similar to the approved project and

the proposed modifications will not cause substantial changes to construction or operation traffic. The proposed modifications will not require the reconfiguration of any access or stub roads. All proposed modifications are accessible via I-10, existing interchanges, and the existing SCE maintenance routes. Therefore, no traffic or circulation impacts will occur from the proposed modifications. No changes will occur in type of vehicles or equipment traveling on these routes, or their structural or cargo specifications. The guyed structures, communication modifications, and additional or repositioned laydown areas will not cause substantial changes to traffic or circulation in the area over that evaluated in the initial application.

The expansion of the Desert Center and Julian Hinds laydown areas will not result in substantial impacts to traffic or circulation at these locations beyond those already approved. Both the previous and proposed laydown areas are in isolated areas with little to no traffic, and no significant impacts to local traffic or circulation are expected at the proposed Desert Center and Julian Hinds locations.

The addition of the laydown area at the CalCap station is in an isolated area with very little traffic and is accessible via an established freeway interchange. There will be no changed impacts to local traffic or circulation at the proposed modification and/or laydown areas. No changes to or additional Conditions of Certification are required.

3.12 Visual Resources

The proposed modifications will not substantially change the impact of the Project on visual resources nor alter any Condition of Certification of the originally approved project.

The guyed structures within the approved alignment and will not change the appearance of the overall project from key observation points. Therefore, there will be no change in visual impacts resulting from these guyed structures as compared to the originally proposed project.

The addition of the 100-foot Julian Hinds communication tower to provide communication security between Julian Hinds and Blythe and to provide control over BEP production is consistent and blends in with the height and industrial setting of the surrounding transmission line structures and substation facility. The tower will not change the appearance of the overall project from the key observation points. Therefore, there will be no change in visual impacts resulting from these modifications as compared to the approved the transmission alignment and substation expansion.

The addition of the 120-foot CalCap communication tower to provide communication security between Julian Hinds and Blythe and to provide control over BEP production will replace the existing smaller tower to clear the 500-kV switch rack at the CalCap station. The proposed modification will blend in with the surrounding 500-kV transmission towers at the CalCap station and will not be detectable from observer distances. Therefore, visual impacts resulting from these changes will be insignificant.

The additional CalCap laydown area and laydown expansion areas at Desert Center and Julian Hinds Substation are temporary and will not introduce any high-profile visual structures to the

existing landscape. In addition, the removal of existing trash and garbage from each of these areas, and the restoration of the areas after use as temporary laydown areas, will improve the visual context of each of these areas. Therefore, visual impacts resulting from these changes will be insignificant.

The proposed 17 guyed structures will result in changes that will not be readily apparent to the casual observer from the freeway, especially at freeway speeds. The additional guyed wires are thin and will not be detectable from observer distances. The guyed structures change is minor given the distance and speed of the observers. No changes to or additional Conditions of Certification are required.

3.13 Waste Management

Waste management during the construction and operation will not change as a result of the proposed modifications. No changes to or additional Conditions of Certification are required.

3.14 Worker Safety and Fire Protection

Construction and operation of the proposed modifications will not change the impact the Project will have to worker safety or cause a change in fire hazard. No changes to or additional Conditions of Certification are required.

4 Ability to Comply With LORS

The proposed project modifications are minor and are consistent with all applicable LORS. The findings and conclusions contained in the Commission Decision for BEP (CEC 2001) and the Blythe Transmission Line (CEC 2006b) are still applicable to the Project as modified. The proposed modifications will not require any changes to the Conditions of Certification.

5 Potential Effects on the Public

Construction and operation of the proposed modifications will not change the impact of the proposed project or have a significant adverse impact to the public. The temporary use of the Desert Center laydown area will reduce the area previously used for informal truck layovers, reducing the tendency to deposit trash and garbage into the desert environment.

6 List of Property Owners

Appendix A provides a list of all property owners whose property is located within 1,000 feet of the proposed project modifications in accordance with the CEC Siting Regulations (Title 20, CCR, Section 1769[a][1][H]).

7 Potential Effects on Property Owners

The laydown expansion areas as proposed have already received easements from affected property owners. Structures with guyed wires located outside the project ROW are not located on private land and will have no affect on private landowners. There are 8 guyed structures located

on BLM land and 9 guyed structures located on MWD land. The changed ¼-¼ sections are found in Table 7-1 below.

Table 7-1. Changes in BLM ¼-¼ Sections

Proposed Change	Additional BLM aliquots
CalCap Station Laydown	SESC Sec 6 T6S R14E

All proposed modifications on private property for the BEPTL are subject to voluntary agreements negotiated with the landowner. Changes in laydown areas on private lands have resulted in additional or different negotiations with landowners. However, no change in overall impact to property owners has resulted from the proposed modifications.

8 References Cited

CEC (California Energy Commission). 2000. Final Staff Assessment/Environmental Assessment for the Blythe Energy Power Plant Project (99-AFC-8).

CEC. 2001. Commission Decision for the Blythe Energy Project (99-AFC-8).

CEC. 2006a. Revised Staff Assessment/ Draft Environmental Assessment.

CEC. 2006b. Commission Decision on Amendment Petition for the Blythe Energy Project (99-AFC-8).

Mooney, Jones & Stokes. 2006. Draft Final Cultural Resource Inventory of the Proposed Blythe Energy Transmission Project. Submitted to the Docket on June 14, 2006.

Tetra Tech. 2005. Combined Desert Tortoise Survey Report, conducted for Southern California Edison, Inc., Desert Southwest Energy, LLC, and Blythe Energy, LLC. Submitted to the Docket on October 6, 2005.

Western and BLM. 2007. Finding of No Significant Impact and Floodplain Statement of Findings – Blythe Energy Project Transmission Line Modifications Project, Riverside County, California. Western/DOE EA-1522.

Appendix A

List of Property Owners within 1,000 Feet Affected by Project Change

The Holt Group

201 E. Hobsonway, Blythe, CA 92225

Phone (760) 922-4658 • Fax (760) 922-4660

THG Project No.:	632.030E
Project Title:	Blythe Transmission Line (BTL)
Sheet Content:	List of Property Owners within 1000 feet affected by Project Change
	"Guying Infringement"
Date:	November 25, 2008
Crew:	

GuyedStr #	Assessor Parcel Number	Parcel Owner	Address	Phone #
27	863-080-002	USA	US DEPT OF INTERIOR, WASHINGTON DC 20401	
27	863-100-007	USA	US DEPT OF INTERIOR, WASHINGTON DC 20401	
27	863-100-006	COCOPAH NURSERIES INC.	81880 ARUS AVE, INDIO CA 92201-7732 C039	
153	860-140-016	USA	US DEPT OF INTERIOR, WASHINGTON DC 20401	
155	810-381-002	USA	US DEPT OF INTERIOR, WASHINGTON DC 20401	
155	860-230-003	SURENDER VUTHOORI	42800 BOB HOPE DR #204, RANCHO MIRAGE CA 92270-7141 C022	
155	860-230-004	SOUTHERN CALIFORNIA EDISON CO	PO BOX 800, ROSEMEAD CA 91770-0800 B900 C/O TAX DEPT	
155	860-230-007	SURENDER VUTHOORI	42800 BOB HOPE DR #204, RANCHO MIRAGE CA 92270-7141 C022	
155	810-392-002	USA	US DEPT OF INTERIOR, WASHINGTON DC 20401	
158	860-230-003	SURENDER VUTHOORI	42800 BOB HOPE DR #204, RANCHO MIRAGE CA 92270-7141 C022	
158	860-230-004	SOUTHERN CALIFORNIA EDISON CO	PO BOX 800, ROSEMEAD CA 91770-0800 B900 C/O TAX DEPT	
158	860-230-007	SURENDER VUTHOORI	42800 BOB HOPE DR #204, RANCHO MIRAGE CA 92270-7141 C022	

The Holt Group

201 E. Hobsonway, Blythe, CA 92225

Phone (760) 922-4658 • Fax (760) 922-4660

THG Project No.:	632.030E
Project Title:	Blythe Transmission Line (BTL)
Sheet Content:	List of Property Owners within 1000 feet affected by Project Change
	"Guying Infringement"
Date:	November 25, 2008
Crew:	

GuyedStr #	Assessor Parcel Number	Parcel Owner	Address	Phone #
158	860-230-006	& CHARLES WATKINS	9108 NORTHRIDGE AVE NE, ALBUQUERQUE NM 87111-2436 C037	
158	860-230-002	DAVID J VANBEBBER & LILIA M VANBEBBER	2723 GLENVIEW WAY, ESCONDIDO CA 92025-7768 C041	
158	810-381-002	USA	US DEPT OF INTERIOR, WASHINGTON DC 20401	
193	810-391-002	USA	US DEPT OF INTERIOR, WASHINGTON DC 20401	
193	810-391-001	RUTH CASPER & JEAN MARIE WILSON	211 FRANCISCAN DR, VALLEJO CA 94589-2740 C052	
193	810-392-001	CASPER FAMILY TRUST	211 FRANCISCAN DR, VALLEJO CA 94589-2740 C052	
193	810-392-002	USA	US DEPT OF INTERIOR, WASHINGTON DC 20401	
221	810-262-004	WESTERN OILFIELDS SUPPLY CO (FORMERLY: RAIN	3404 STATE RD, BAKERSFIELD CA 93308-4538 C008	(661) 399-9124
221	810-262-007	SOUTHERN CALIFORNIA EDISON COMPANY	PO BOX 800, ROSEMEAD CA 91770-0800 B900 C/O TAX DEPT	
221	810-262-006	LINDA DANIELS & GARRY DANIELS	620 W PLEASANT ST, IDAHO FALLS ID 83401-5682 R014	
221	810-241-003	USA	US DEPT OF INTERIOR, WASHINGTON DC 20401	
221	810-241-002	USA	US DEPT OF INTERIOR, WASHINGTON DC 20401	

The Holt Group

201 E. Hobsonway, Blythe, CA 92225

Phone (760) 922-4658 • Fax (760) 922-4660

THG Project No.:	632.030E
Project Title:	Blythe Transmission Line (BTL)
Sheet Content:	List of Property Owners within 1000 feet affected by Project Change
	"Guying Infringement"
Date:	November 25, 2008
Crew:	

GuyedStr #	Assessor Parcel Number	Parcel Owner	Address	Phone #
222	810-262-004	WESTERN OILFIELDS SUPPLY CO (FORMERLY: RAIN	3404 STATE RD, BAKERSFIELD CA 93308-4538 C008	(661) 399-9124
222	810-262-007	SOUTHERN CALIFORNIA EDISON COMPANY	PO BOX 800, ROSEMEAD CA 91770-0800 B900 C/O TAX DEPT	
222	810-262-006	LINDA DANIELS & GARRY DANIELS	620 W PLEASANT ST, IDAHO FALLS ID 83401-5682 R014	
222	810-241-003	USA	US DEPT OF INTERIOR, WASHINGTON DC 20401	
222	810-241-002	USA	US DEPT OF INTERIOR, WASHINGTON DC 20401	
223	810-262-004	WESTERN OILFIELDS SUPPLY CO (FORMERLY: RAIN	3404 STATE RD, BAKERSFIELD CA 93308-4538 C008	(661) 399-9124
223	810-262-007	SOUTHERN CALIFORNIA EDISON COMPANY	PO BOX 800, ROSEMEAD CA 91770-0800 B900 C/O TAX DEPT	
223	810-262-006	LINDA DANIELS & GARRY DANIELS	620 W PLEASANT ST, IDAHO FALLS ID 83401-5682 R014	
223	810-241-003	USA	US DEPT OF INTERIOR, WASHINGTON DC 20401	
223	810-241-002	USA	US DEPT OF INTERIOR, WASHINGTON DC 20401	
232	810-232-023	ESTELLE AMOU ASENSI	9070 WOODED HILL DR, CORONA CA 92883-9343 R055	
232	810-232-008	VERONICA C EVANS	43661 TAMARISK DR, DESERT CENTER CA 92239	

The Holt Group

201 E. Hobsonway, Blythe, CA 92225

Phone (760) 922-4658 • Fax (760) 922-4660

THG Project No.:	632.030E
Project Title:	Blythe Transmission Line (BTL)
Sheet Content:	List of Property Owners within 1000 feet affected by Project Change
	"Guying Infringement"
Date:	November 25, 2008
Crew:	

GuyedStr #	Assessor Parcel Number	Parcel Owner	Address	Phone #
232	810-232-007	VERONICA C EVANS	43661 TAMARISK DR, DESERT CENTER CA 92239	
232	810-232-005	WILLIAM R HARRIS	PO BOX 439016, SAN YSIDRO CA 92143-9016 B900	
232	810-232-017	ROBERT B HELMAND	170 S MAIN ST #750, SALT LAKE CITY UT 84101-1635 C003	
232	810-232-015	ROBERT B HELMAND	170 S MAIN ST #750, SALT LAKE CITY UT 84101-1635 C003	
232	810-232-019	SOUTHERN CALIFORNIA EDISON COMPANY	PO BOX 800, ROSEMEAD CA 91770-0800 B900 C/O TAX DEPT	
232	810-232-003	KATHLEEN T HOGAN	1500 ANTOINETTE DR, LA HABRA CA 90631-2625 C029	
232	810-232-011	VERONICA C EVANS	43661 TAMARISK DR, DESERT CENTER CA 92239	
232	810-232-012	ADAPA SATYA	216 SHADYBROOK CT, PITTSBURG CA 94565-7370 C045	
232	810-232-013	RODERICK T WARING	79405 HIGHWAY 111 #9, LA QUINTA CA 92253-8300 C045	
233	810-232-023	ESTELLE AMOU ASENSI	9070 WOODED HILL DR, CORONA CA 92883-9343 R055	
233	810-232-002	SHARON F SUNN & STEVEN E SUNN	2746 S ARCADIAN SHORES RD, ONTARIO CA 91761-7510 C036	
233	810-232-007	VERONICA C EVANS	43661 TAMARISK DR, DESERT CENTER CA 92239	

The Holt Group

201 E. Hobsonway, Blythe, CA 92225

Phone (760) 922-4658 • Fax (760) 922-4660

THG Project No.:	632.030E
Project Title:	Blythe Transmission Line (BTL)
Sheet Content:	List of Property Owners within 1000 feet affected by Project Change
	"Guying Infringement"
Date:	November 25, 2008
Crew:	

GuyedStr #	Assessor Parcel Number	Parcel Owner	Address	Phone #
233	810-232-005	WILLIAM R HARRIS	PO BOX 439016, SAN YSIDRO CA 92143-9016 B900	
233	810-232-017	ROBERT B HELMAND	170 S MAIN ST #750, SALT LAKE CITY UT 84101-1635 C003	
233	810-232-015	ROBERT B HELMAND	170 S MAIN ST #750, SALT LAKE CITY UT 84101-1635 C003	
233	810-232-019	SOUTHERN CALIFORNIA EDISON COMPANY	PO BOX 800, ROSEMEAD CA 91770-0800 B900 C/O TAX DEPT	
233	810-232-003	KATHLEEN T HOGAN	1500 ANTOINETTE DR, LA HABRA CA 90631-2625 C029	
233	810-232-011	VERONICA C EVANS	43661 TAMARISK DR, DESERT CENTER CA 92239	
233	810-232-012	ADAPA SATYA	216 SHADYBROOK CT, PITTSBURG CA 94565-7370 C045	
233	810-232-013	RODERICK T WARING	79405 HIGHWAY 111 #9, LA QUINTA CA 92253-8300 C045	
233	810-211-002	USA	US DEPT OF INTERIOR, WASHINGTON DC 20401	
234	810-232-002	SHARON F SUNN & STEVEN E SUNN	2746 S ARCADIAN SHORES RD, ONTARIO CA 91761-7510 C036	
234	810-232-005	WILLIAM R HARRIS	PO BOX 439016, SAN YSIDRO CA 92143-9016 B900	
234	810-232-019	SOUTHERN CALIFORNIA EDISON COMPANY	PO BOX 800, ROSEMEAD CA 91770-0800 B900 C/O TAX DEPT	

The Holt Group

201 E. Hobsonway, Blythe, CA 92225

Phone (760) 922-4658 • Fax (760) 922-4660

THG Project No.:	632.030E
Project Title:	Blythe Transmission Line (BTL)
Sheet Content:	List of Property Owners within 1000 feet affected by Project Change
	"Guying Infringement"
Date:	November 25, 2008
Crew:	

GuyedStr #	Assessor Parcel Number	Parcel Owner	Address	Phone #
234	810-232-003	KATHLEEN T HOGAN	1500 ANTOINETTE DR, LA HABRA CA 90631-2625 C029	
234	810-232-011	VERONICA C EVANS	43661 TAMARISK DR, DESERT CENTER CA 92239	
234	810-232-012	ADAPA SATYA	216 SHADYBROOK CT, PITTSBURG CA 94565-7370 C045	
234	810-232-014	USA	US DEPT OF INTERIOR, WASHINGTON DC 20401	
234	810-231-023	SHARON F SUNN & STEVEN E SUNN	2746 S ARCADIAN SHORES RD, ONTARIO CA 91761-7510 C036	
234	810-211-002	USA	US DEPT OF INTERIOR, WASHINGTON DC 20401	
308	808-092-005	STANLEY E RAGSDALE	PO BOX 257, DESERT CENTER CA 92239-0257 B003 C/O SIDNEY DAVID	
308	808-102-004	STANLEY E RAGSDALE	PO BOX 257, DESERT CENTER CA 92239-0257 B003 C/O SIDNEY DAVID	
308	808-112-004	STANLEY E RAGSDALE	PO BOX 257, DESERT CENTER CA 92239-0257 B003 C/O SIDNEY DAVID	
308	808-092-004	USA	US DEPT OF INTERIOR, WASHINGTON DC 20401	
308	808-122-003	USA	US DEPT OF INTERIOR, WASHINGTON DC 20401	
337	811-052-019	STATE OF CALIFORNIA	PO BOX 1799, SACRAMENTO CA 95812-1799 B016	

The Holt Group

201 E. Hobsonway, Blythe, CA 92225

Phone (760) 922-4658 • Fax (760) 922-4660

THG Project No.:	632.030E
Project Title:	Blythe Transmission Line (BTL)
Sheet Content:	List of Property Owners within 1000 feet affected by Project Change
	"Guying Infringement"
Date:	November 25, 2008
Crew:	

GuyedStr #	Assessor Parcel Number	Parcel Owner	Address	Phone #
337	811-052-021	GOLDEN MONKEY INC.	PO BOX 1468, MONTEREY PARK CA 91754-8468 B014	
406	709-370-013	USA	US DEPT OF INTERIOR, WASHINGTON DC 20401	
411	709-340-001	METROPOLITAN WATER DISTRICT	PO BOX 54153, LOS ANGELES CA 90054-0153 B900	
411	709-370-012	USA	US DEPT OF INTERIOR, WASHINGTON DC 20401	
415	709-340-001	METROPOLITAN WATER DISTRICT	PO BOX 54153, LOS ANGELES CA 90054-0153 B900	
416	705-230-040	METROPOLITAN WATER DISTRICT	PO BOX 54153, LOS ANGELES CA 90054-0153 B900	
416	709-340-001	METROPOLITAN WATER DISTRICT	PO BOX 54153, LOS ANGELES CA 90054-0153 B900	
417	705-230-040	METROPOLITAN WATER DISTRICT	PO BOX 54153, LOS ANGELES CA 90054-0153 B900	
417	709-340-001	METROPOLITAN WATER DISTRICT	PO BOX 54153, LOS ANGELES CA 90054-0153 B900	
418	705-230-040	METROPOLITAN WATER DISTRICT	PO BOX 54153, LOS ANGELES CA 90054-0153 B900	
418	709-340-001	METROPOLITAN WATER DISTRICT	PO BOX 54153, LOS ANGELES CA 90054-0153 B900	
419	705-230-040	METROPOLITAN WATER DISTRICT	PO BOX 54153, LOS ANGELES CA 90054-0153 B900	

The Holt Group

201 E. Hobsonway, Blythe, CA 92225

Phone (760) 922-4658 • Fax (760) 922-4660

THG Project No.:	632.030E
Project Title:	Blythe Transmission Line (BTL)
Sheet Content:	List of Property Owners within 1000 feet affected by Project Change
	"Guying Infringement"
Date:	November 25, 2008
Crew:	

GuyedStr #	Assessor Parcel Number	Parcel Owner	Address	Phone #
420	705-230-040	METROPOLITAN WATER DISTRICT	PO BOX 54153, LOS ANGELES CA 90054-0153 B900	
421	705-230-040	METROPOLITAN WATER DISTRICT	PO BOX 54153, LOS ANGELES CA 90054-0153 B900	
431	705-230-031	METROPOLITAN WATER DISTRICT	PO BOX 54153, LOS ANGELES CA 90054-0153 B900	
431	705-230-032	METROPOLITAN WATER DISTRICT	PO BOX 54153, LOS ANGELES CA 90054-0153 B900	

The Holt Group

201 E. Hobsonway, Blythe, CA 92225

Phone (760) 922-4658 • Fax (760) 922-4660

THG Project No.:	632.030E
Project Title:	Blythe Transmission Line (BTL)
Sheet Content:	List of Property Owners within 1000 feet affected by Project Change
	"Expansion of the Proposed Desert Center Laydown Area to 10 Acres"
Date:	November 25, 2008
Crew:	

Project Site Area	Assessor Parcel Number	Parcel Owner	Address	Phone #
Desert Center Laydown	808-061-001	STANLEY E RAGSDALE	PO BOX 257, DESERT CENTER CA 92239-0257 B003 C/O SIDNEY DAVID RODGER RAGSDALE	
Desert Center Laydown	808-061-004	COUNTY OF RIVERSIDE	3133 7TH ST, RIVERSIDE CA 92501	
Desert Center Laydown	808-061-005	USA	US DEPT OF INTERIOR, WASHINGTON DC 20401	
Desert Center Laydown	808-061-006	USA	US DEPT OF INTERIOR, WASHINGTON DC 20401	
Desert Center Laydown	808-062-001	STANLEY E RAGSDALE	PO BOX 257, DESERT CENTER CA 92239-0257 B003 C/O SIDNEY DAVID RODGER RAGSDALE	
Desert Center Laydown	808-062-002	USA	US DEPT OF INTERIOR, WASHINGTON DC 20401	
Desert Center Laydown	808-101-003	STANLEY E RAGSDALE	PO BOX 257, DESERT CENTER CA 92239-0257 B003 C/O SIDNEY DAVID RODGER RAGSDALE	
Desert Center Laydown	808-101-006	RUPERT E & MERON B YESSAYIAN	PO BOX 1511, LA QUINTA CA 92247-1511 B016	
Desert Center Laydown	808-101-005	STATE OF CALIFORNIA	PO BOX 1799, SACRAMENTO CA 95812-1799 B016	
Desert Center Laydown	808-101-007	STATE OF CALIFORNIA	464 W 4TH ST #6TH, SAN BERNARDINO CA. 92401-1407 C009	

The Holt Group

201 E. Hobsonway, Blythe, CA 92225

Phone (760) 922-4658 • Fax (760) 922-4660

THG Project No.:	632.030E
Project Title:	Blythe Transmission Line (BTL)
Sheet Content:	List of Property Owners within 1000 feet affected by Project Change
	"Comminication system changes in the SCE system at the BEP"
Date:	November 25, 2008
Crew:	

Project Site Area	Assessor Parcel Number	Parcel Owner	Address	Phone #
Blythe Energy Plant	824-101-021	BLYTHE ENERGY, LLC	700 UNIVERSE BLVD, JUNO BEACH FL 33408-2657 C040 C/O ACCT PAYABLE	
Blythe Energy Plant	824-101-022	USA	PO BOX 281213, LAKEWOOD CO 80228-8213 B900	
Blythe Energy Plant	824-101-013	CAITHNESS BLYTHE II	565 5TH AVE #29TH, NEW YORK NY 10017-2413 C043	
Blythe Energy Plant	821-120-044	SUN WORLD INTERNATIONAL	16350 DRIVER RD, BAKERSFIELD CA 93308-9733 R001	
Blythe Energy Plant	821-120-040	SUN WORLD INTERNATIONAL	16350 DRIVER RD, BAKERSFIELD CA 93308-9733 R001	
Blythe Energy Plant	821-120-038	SUN WORLD INTERNATIONAL	16350 DRIVER RD, BAKERSFIELD CA 93308-9733 R001	
Blythe Energy Plant	821-120-028	SUN WORLD INTERNATIONAL	16351 DRIVER RD, BAKERSFIELD CA 93308-9733 R001	

The Holt Group

201 E. Hobsonway, Blythe, CA 92225

Phone (760) 922-4658 • Fax (760) 922-4660

THG Project No.:	632.030E
Project Title:	Blythe Transmission Line (BTL)
Sheet Content:	List of Property Owners within 1000 feet affected by Project Change
	"Communication System Changes at the California Capacitor Station Near the Red Cloud Mine Road Exit"
Date:	November 25, 2008
Crew:	

Project Site Area	Assessor Parcel Number	Parcel Owner	Address	Phone #
California Capacitor System	811-062-016	USA	US DEPT OF THE INTERIOR, WASHINGTON DC 20401	
California Capacitor System	811-080-003	KAISER-EAGLE MOUNTAIN INC / MINE RECLAMATION CORP.	3633 INLAND EMPIRE BLVD #850, ONTARIO CA 91764-4922 R082 C/O KAISER VENTURES INC.	
California Capacitor System	811-080-001	USA	US DEPT OF THE INTERIOR, WASHINGTON DC 20401	

The Holt Group

201 E. Hobsonway, Blythe, CA 92225

Phone (760) 922-4658 • Fax (760) 922-4660

THG Project No.:	632.030E
Project Title:	Blythe Transmission Line (BTL)
Sheet Content:	List of Property Owners within 1000 feet affected by Project Change
	"Communication System Changes at the Julian Hinds Substation"
Date:	November 25, 2008
Crew:	

Project Site Area	Assessor Parcel Number	Parcel Owner	Address	Phone #
Julian Hinds Substation	705-230-031	Metropolitan Water District	PO BOX 54153, LOS ANGELES CA 90054-0153 B900	
Julian Hinds Substation	705-230-032	Metropolitan Water District	PO BOX 54153, LOS ANGELES CA 90054-0153 B900	
Julian Hinds Substation	705-230-033	Metropolitan Water District	PO BOX 54153, LOS ANGELES CA 90054-0153 B900	

The Holt Group

201 E. Hobsonway, Blythe, CA 92225

Phone (760) 922-4658 • Fax (760) 922-4660

THG Project No.:	632.030E
Project Title:	Blythe Transmission Line (BTL)
Sheet Content:	List of Property Owners within 1000 feet affected by Project Change
	"Minor Additional Expansion of the Julian Hinds Substation"
Date:	November 25, 2008
Crew:	

Project Site Area	Assessor Parcel Number	Parcel Owner	Address	Phone #
Julian Hinds Substation	705-230-031	Metropolitan Water District	PO BOX 54153, LOS ANGELES CA 90054-0153 B900	
Julian Hinds Substation	705-230-032	Metropolitan Water District	PO BOX 54153, LOS ANGELES CA 90054-0153 B900	
Julian Hinds Substation	705-230-033	Metropolitan Water District	PO BOX 54153, LOS ANGELES CA 90054-0153 B900	

Appendix B

Details on Guyed Structure

BLYTHE ENERGY/BUCK BLVD - JULIAN HINDS GUYED STR'S						
Str. No.	**Line Angle (deg)**	**Structure Name**	**Structure Description**	**A.G. Struct. Height (ft)**	**Parcel No.**	**Parcel Owner**
27	-5.3853	v-sra-c-ge.110	110' Concrete Angle Pole (5°-15°)	93	863-080-002	USA
153	7.4127	v-sra-s-ls-g.130	130' Steel Running Angle (5°-15°)	111	860-140-016	USA
155	-9.5069	v-sra-c-ls-ge.120	120' Concrete Angle Pole (5°-15°)	102	860-140-016	USA
193	29.982	v-mra-s-g.130	130' Steel Running Angle (15°-30°)	111	810-391-002	USA
222	-45.3051	v-xlra-s-g.130	130' Steel Running Angle (45°-52°)	111	810-241-003	USA
223	19.2042	v-mra-s-g.130	130' Steel Running Angle (15°-30°)	111	810-241-002	USA
308	-5.5945	v-sra-c-ls-ge.120	120' Concrete Angle Pole (5°-15°)	102	808-092-004	USA
406	57.5977	de-45-60-c-ge.110	110' Concrete Single Pole DE (45°-60°)	93	709-370-013	USA
411	12.4605	v-sra-c-ge.110	110' Concrete Angle Pole (5°-15°)	93	709-340-001	Metropolitan Water District
415	5.4058	v-sra-c-ge.115	115' Concrete Angle Pole (5°-15°)	97.5	709-340-001	Metropolitan Water District
416	9.162	v-sra-c-ge.120	120' Concrete Angle Pole (5°-15°)	102	709-340-001	Metropolitan Water District
417	8.7605	v-sra-c-ge.115	115' Concrete Angle Pole (5°-15°)	97.5	705-230-040	Metropolitan Water District
418	8.368	v-sra-c-ge.115	115' Concrete Running Angle (5°-15°)	97.5	705-230-040	Metropolitan Water District
419	7.7445	v-sra-c-ge.110	110' Concrete Angle Pole (5°-15°)	93	705-230-040	Metropolitan Water District
420	7.4662	v-sra-c-ge.110	110' Concrete Angle Pole (5°-15°)	93	705-230-040	Metropolitan Water District
421	8.2773	v-sra-c-ge.115	115' Concrete Running Angle (5°-15°)	97.5	705-230-040	Metropolitan Water District
431	42.7238	v-lra-c-ge.110	110' Concrete Running Angle (30°-45°)	93	705-230-031	Metropolitan Water District

THIS DRAWING WAS PREPARED BY POWER ENGINEERS, INC. FOR A SPECIFIC PROJECT, TAKING INTO CONSIDERATION THE SPECIFIC AND UNIQUE REQUIREMENTS OF THE PROJECT. REUSE OF THIS DRAWING OR ANY INFORMATION CONTAINED IN THIS DRAWING FOR ANY PURPOSE IS PROHIBITED UNLESS WRITTEN PERMISSION FROM BOTH POWER AND POWER'S CLIENT IS GRANTED.

REV	REVISIONS	DATE	DRN	DSGN	CKD	APPD
A	ISSUED FOR REVIEW	11/14/08	JLQ	DWN	AT	EAR

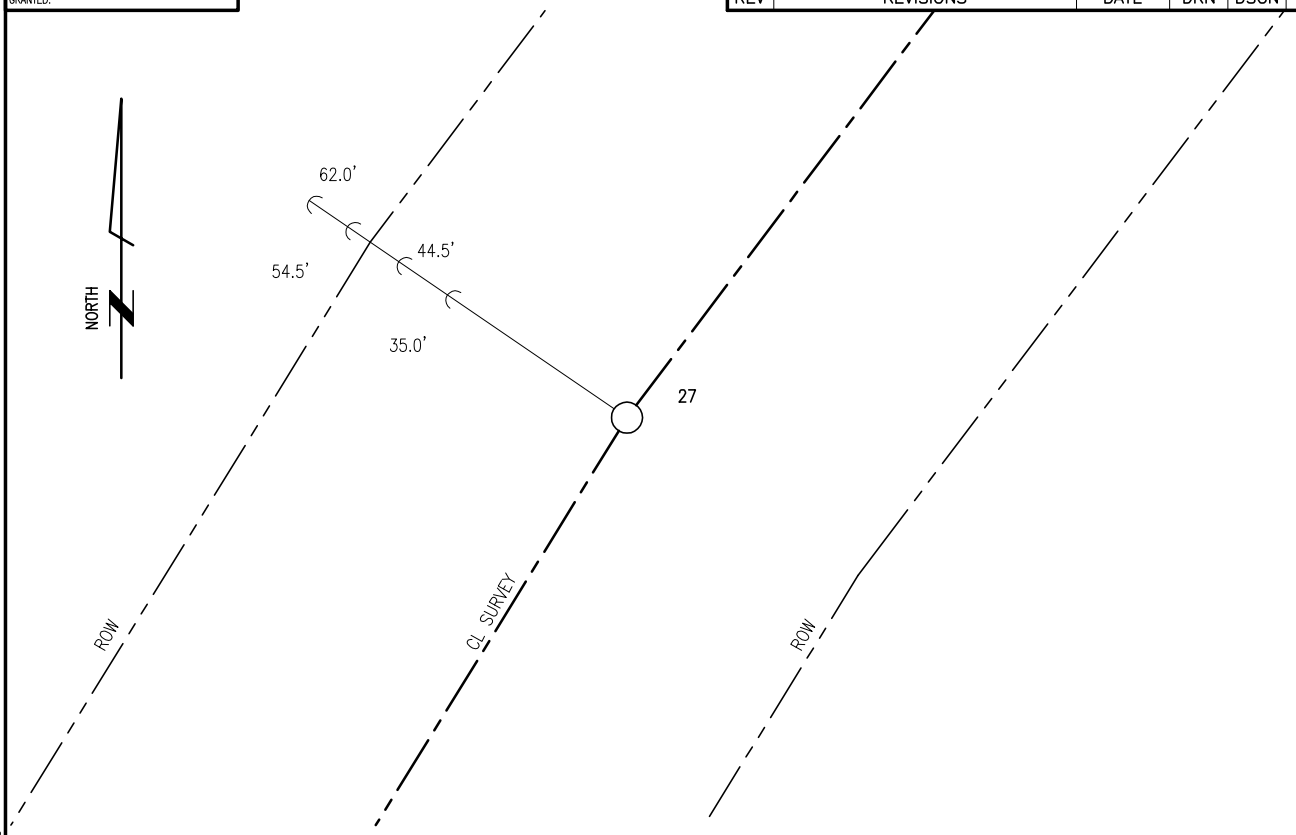

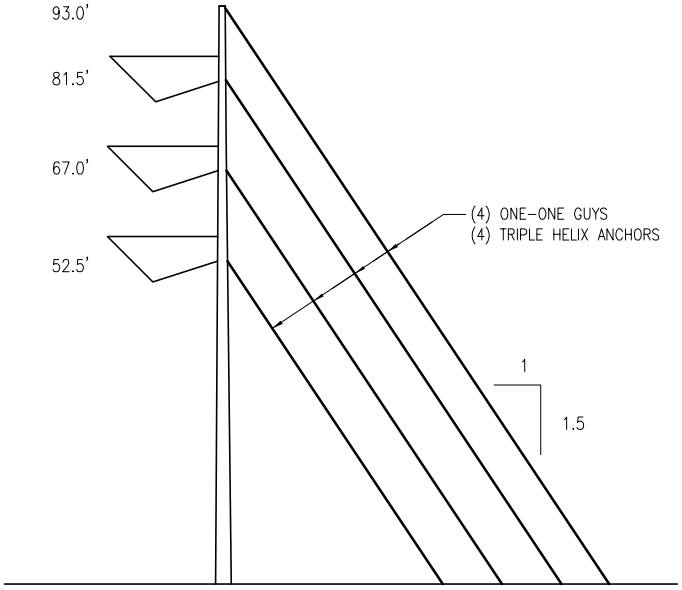

STR #27

STA=171+61.69
5°23'07" LT
V-SRA-C-GE.110

DSGN	DWN	11/13/08		
DRN	JLQ	11/13/08		
CKD	EAR	11/14/08		
SCALE:	NTS			
FOR 8.5x11 DWG ONLY				

* *

REFERENCE DRAWINGS

POWER ENGINEERS
www.powereng.com

BLYTHE ENERGY

BUCK – JULIAN HINDS
230kV TRANSMISSION LINE

STAKING DIAGRAM

JOB NUMBER 114313

REV A

DRAWING NUMBER BLM-27

jquintana C:\DOCUME~1\JQUINT~1\LOCALS~1\Temp\AcPublish_4076\blm_staking.dwg BLM-27 Nov 14, 2008 – 9:55am

THIS DRAWING WAS PREPARED BY POWER ENGINEERS, INC. FOR A SPECIFIC PROJECT, TAKING INTO CONSIDERATION THE SPECIFIC AND UNIQUE REQUIREMENTS OF THE PROJECT. REUSE OF THIS DRAWING OR ANY INFORMATION CONTAINED IN THIS DRAWING FOR ANY PURPOSE IS PROHIBITED UNLESS WRITTEN PERMISSION FROM BOTH POWER AND POWER'S CLIENT IS GRANTED.

REV	REVISIONS	DATE	DRN	DSGN	CKD	APPD
A	ISSUED FOR REVIEW	11/14/08	JLQ	DWN	AT	EAR

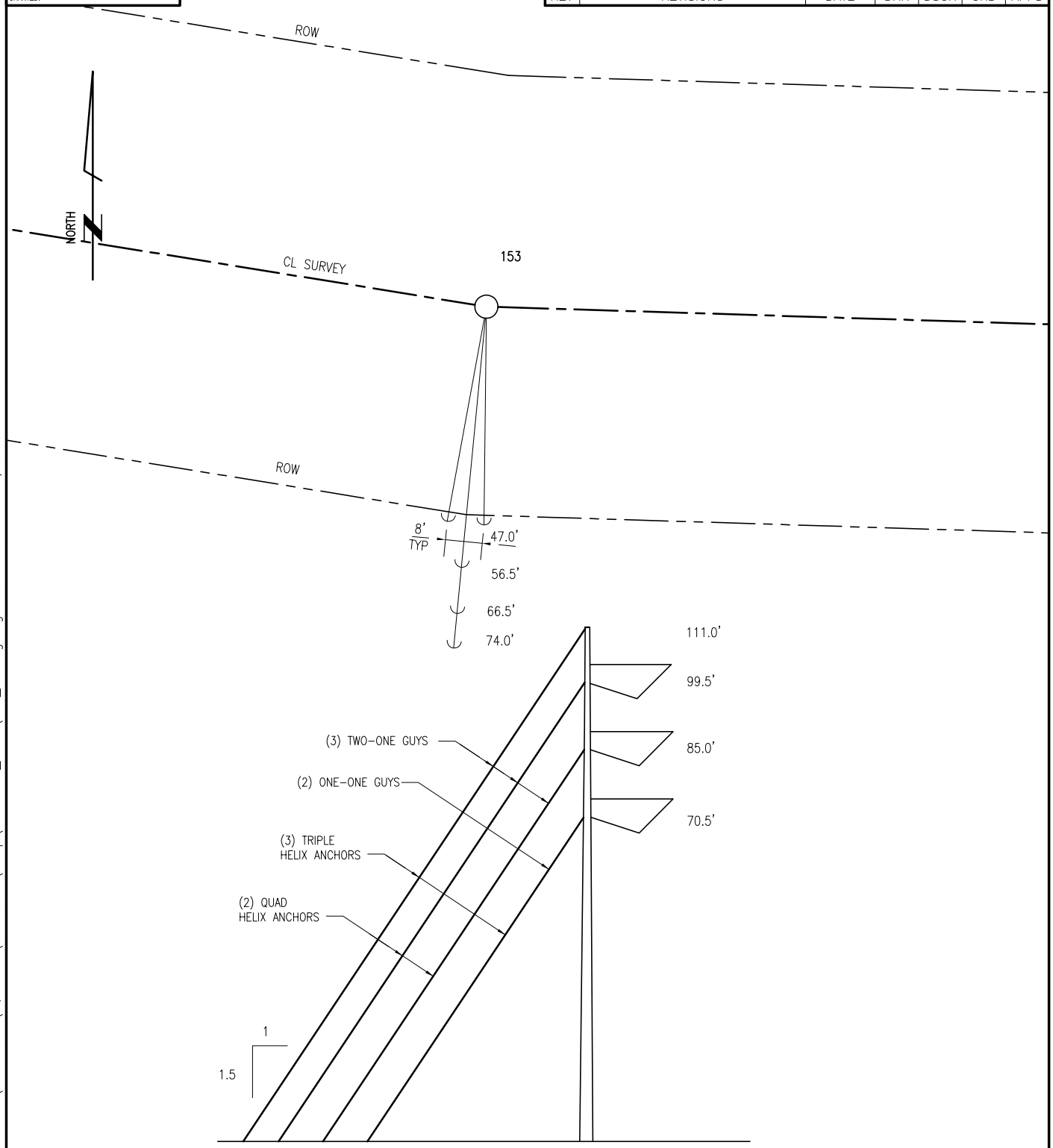

STR #153

STA=1214+51.23
7°24'46" RT
V-SRA-S-LS-GE.130

DSGN	DWN	11/13/08		
DRN	JLQ	11/13/08		
CKD	EAR	11/14/08		
SCALE:	NTS			
FOR 8.5x11 DWG ONLY				

* *
REFERENCE DRAWINGS

POWER ENGINEERS
www.powereng.com

BLYTHE ENERGY
BUCK – JULIAN HINDS
230kV TRANSMISSION LINE
STAKING DIAGRAM

JOB NUMBER 114313
REV A
DRAWING NUMBER BLM-153

jquintana C:\DOCUME~1\JQUINT~1\LOCALS~1\Temp\AcPublish_4076\blm_staking.dwg BLM-153 Nov 14, 2008 - 9:55am

THIS DRAWING WAS PREPARED BY POWER ENGINEERS, INC. FOR A SPECIFIC PROJECT, TAKING INTO CONSIDERATION THE SPECIFIC AND UNIQUE REQUIREMENTS OF THE PROJECT. REUSE OF THIS DRAWING OR ANY INFORMATION CONTAINED IN THIS DRAWING FOR ANY PURPOSE IS PROHIBITED UNLESS WRITTEN PERMISSION FROM BOTH POWER AND POWER'S CLIENT IS GRANTED.

REV	REVISIONS	DATE	DRN	DSGN	CKD	APPD
A	ISSUED FOR REVIEW	11/14/08	JLQ	DWN	AT	EAR

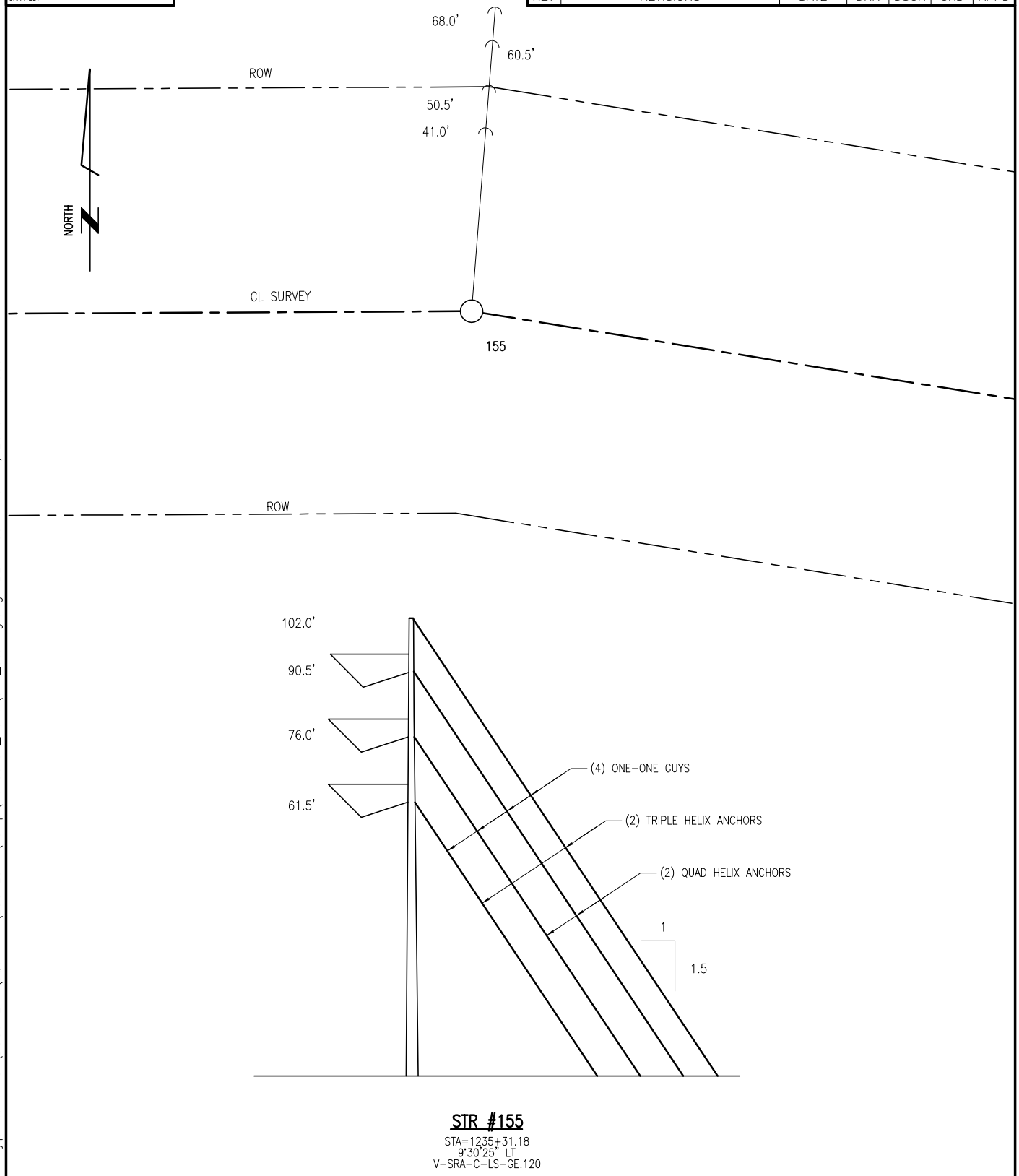

STR #155

STA=1235+31.18
9°30'25" LT
V-SRA-C-LS-GE.120

DSGN	DWN	11/13/08		
DRN	JLQ	11/13/08		
CKD	EAR	11/14/08		
SCALE:	NTS			
FOR 8.5x11 DWG ONLY				

* *
REFERENCE DRAWINGS

POWER ENGINEERS
www.powereng.com

BLYTHE ENERGY
BUCK – JULIAN HINDS
230kV TRANSMISSION LINE
STAKING DIAGRAM

JOB NUMBER 114313
REV A
DRAWING NUMBER BLM-155

jquintana C:\DOCUME~1\JQUINT~1\LOCALS~1\Temp\AcPublish_4076\blm_staking.dwg BLM-155 Nov 14, 2008 - 9:55am

THIS DRAWING WAS PREPARED BY POWER ENGINEERS, INC. FOR A SPECIFIC PROJECT, TAKING INTO CONSIDERATION THE SPECIFIC AND UNIQUE REQUIREMENTS OF THE PROJECT. REUSE OF THIS DRAWING OR ANY INFORMATION CONTAINED IN THIS DRAWING FOR ANY PURPOSE IS PROHIBITED UNLESS WRITTEN PERMISSION FROM BOTH POWER AND POWER'S CLIENT IS GRANTED.

REV	REVISIONS	DATE	DRN	DSGN	CKD	APPD
A	ISSUED FOR REVIEW	11/14/08	JLQ	DWN	AT	EAR

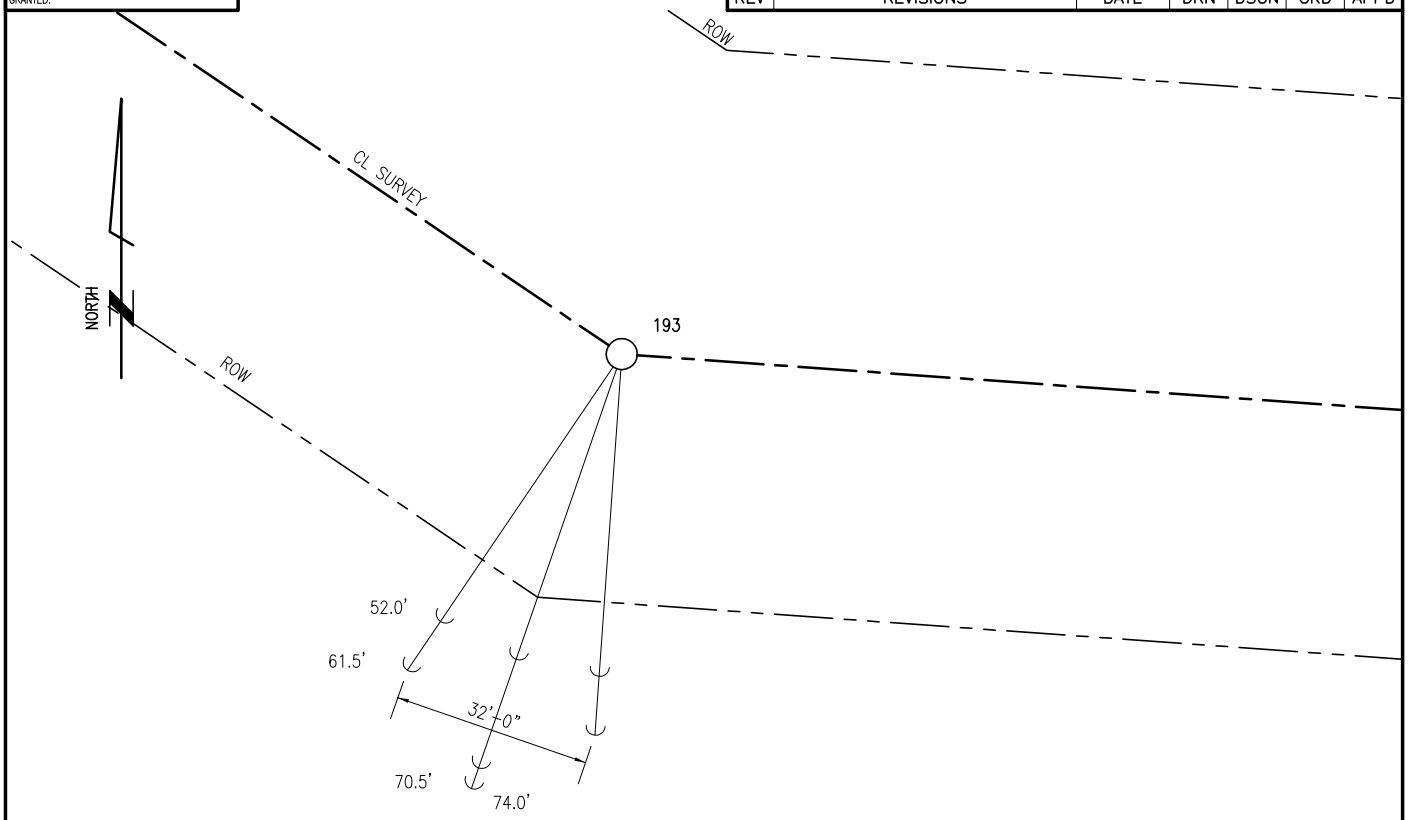

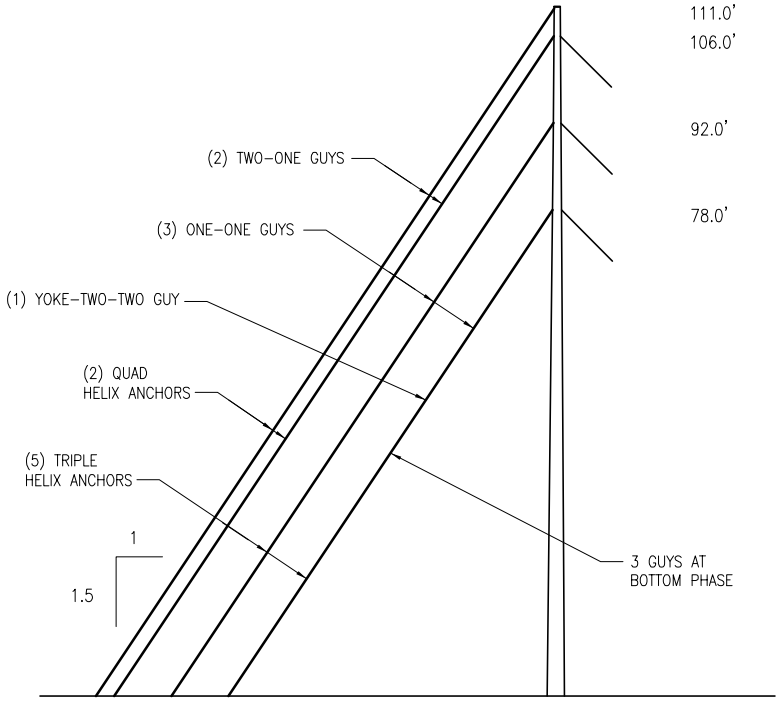

STR #193

STA=1548+39.07
29°58'55" RT
V-MRA-S-GE.130

DSGN	DWN	11/13/08		
DRN	JLQ	11/13/08		
CKD	EAR	11/14/08		
SCALE:	NTS			
FOR 8.5x11 DWG ONLY				

* *
REFERENCE DRAWINGS

POWER ENGINEERS
www.powereng.com

BLYTHE ENERGY
BUCK – JULIAN HINDS
230kV TRANSMISSION LINE
STAKING DIAGRAM

JOB NUMBER 114313
REV A
DRAWING NUMBER BLM-193

jquintana C:\DOCUME~1\JQUINT~1\LOCALS~1\Temp\AcPublish_4076\blm_staking.dwg BLM-193 Nov 14, 2008 – 9:55am

THIS DRAWING WAS PREPARED BY POWER ENGINEERS, INC. FOR A SPECIFIC PROJECT, TAKING INTO CONSIDERATION THE SPECIFIC AND UNIQUE REQUIREMENTS OF THE PROJECT. REUSE OF THIS DRAWING OR ANY INFORMATION CONTAINED IN THIS DRAWING FOR ANY PURPOSE IS PROHIBITED UNLESS WRITTEN PERMISSION FROM BOTH POWER AND POWER'S CLIENT IS GRANTED.

REV	REVISIONS	DATE	DRN	DSGN	CKD	APPD
A	ISSUED FOR REVIEW	11/14/08	JLQ	DWN	AT	EAR

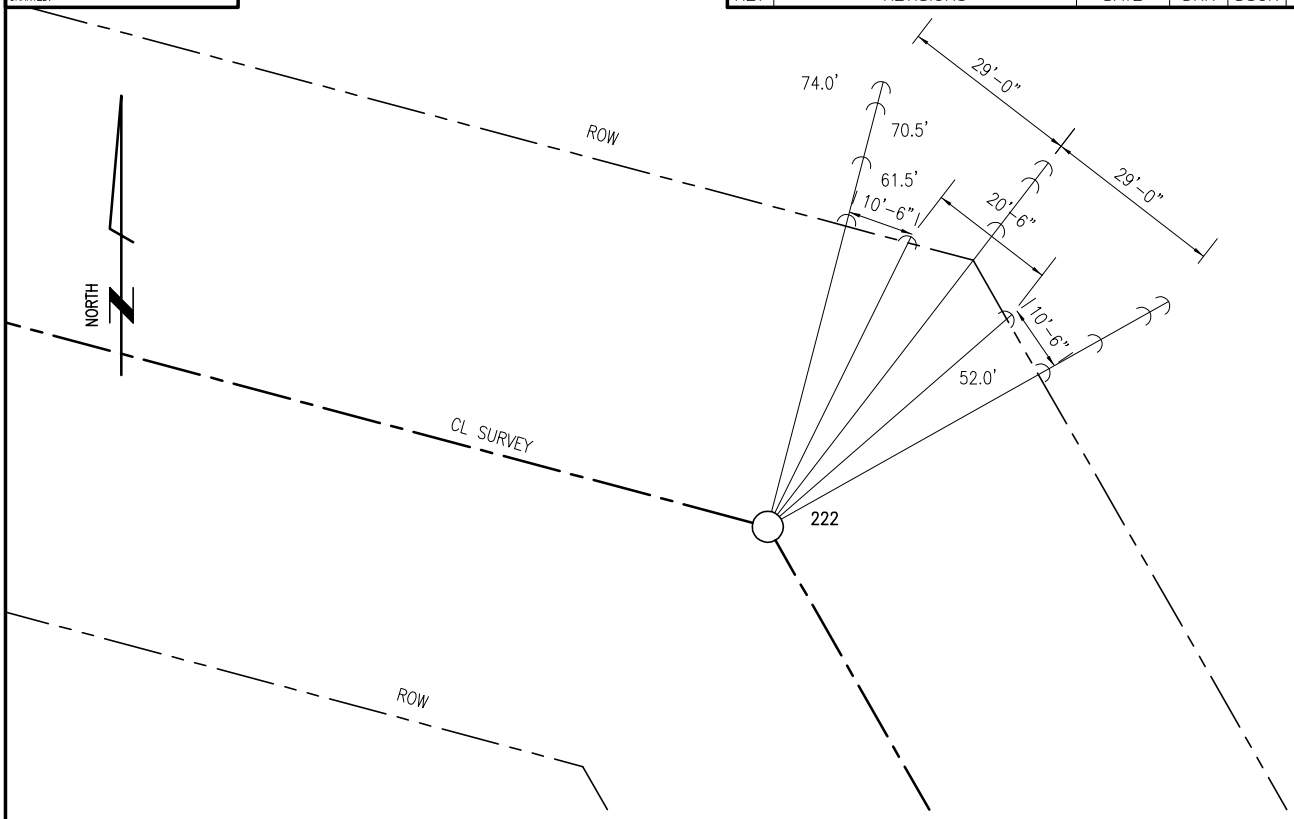

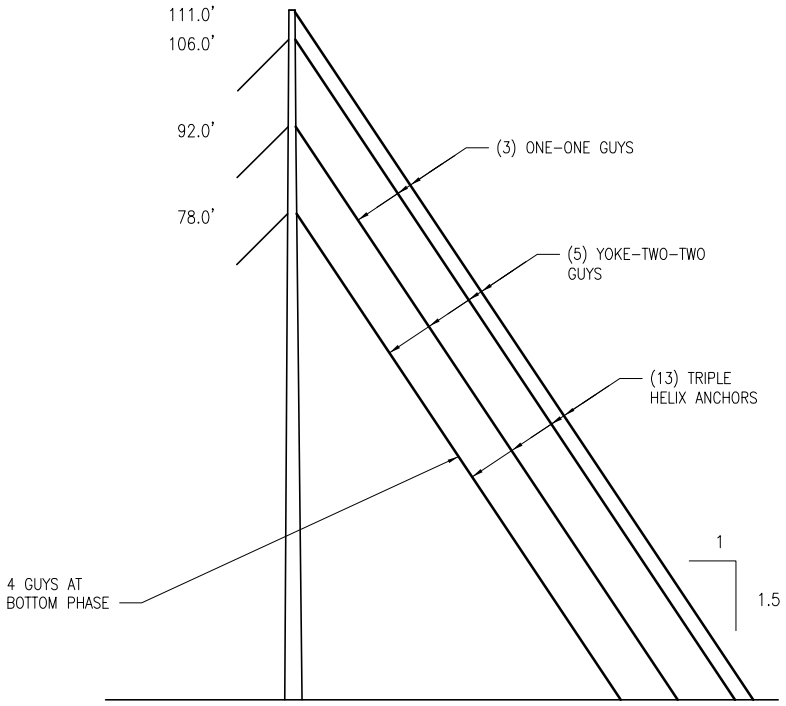

STR #222

STA=1768+74.43
45°18'18" LT
V-XLRA-S-GE.130

DSGN	DWN	11/13/08		
DRN	JLQ	11/13/08		
CKD	EAR	11/14/08		
SCALE:	NTS			
FOR 8.5x11 DWG ONLY				

*	*
REFERENCE DRAWINGS	

POWER ENGINEERS
www.powereng.com

BLYTHE ENERGY

BUCK – JULIAN HINDS
230kV TRANSMISSION LINE

STAKING DIAGRAM

JOB NUMBER 114313

REV A

DRAWING NUMBER
BLM-222

jquintana C:\DOCUME~1\JQUINT~1\LOCALS~1\Temp\AcPublish_4076\blm_staking.dwg BLM-222 Nov 14, 2008 - 9:55am

THIS DRAWING WAS PREPARED BY POWER ENGINEERS, INC. FOR A SPECIFIC PROJECT, TAKING INTO CONSIDERATION THE SPECIFIC AND UNIQUE REQUIREMENTS OF THE PROJECT. REUSE OF THIS DRAWING OR ANY INFORMATION CONTAINED IN THIS DRAWING FOR ANY PURPOSE IS PROHIBITED UNLESS WRITTEN PERMISSION FROM BOTH POWER AND POWER'S CLIENT IS GRANTED.

REV	REVISIONS	DATE	DRN	DSGN	CKD	APPD
A	ISSUED FOR REVIEW	11/14/08	JLQ	DWN	AT	EAR

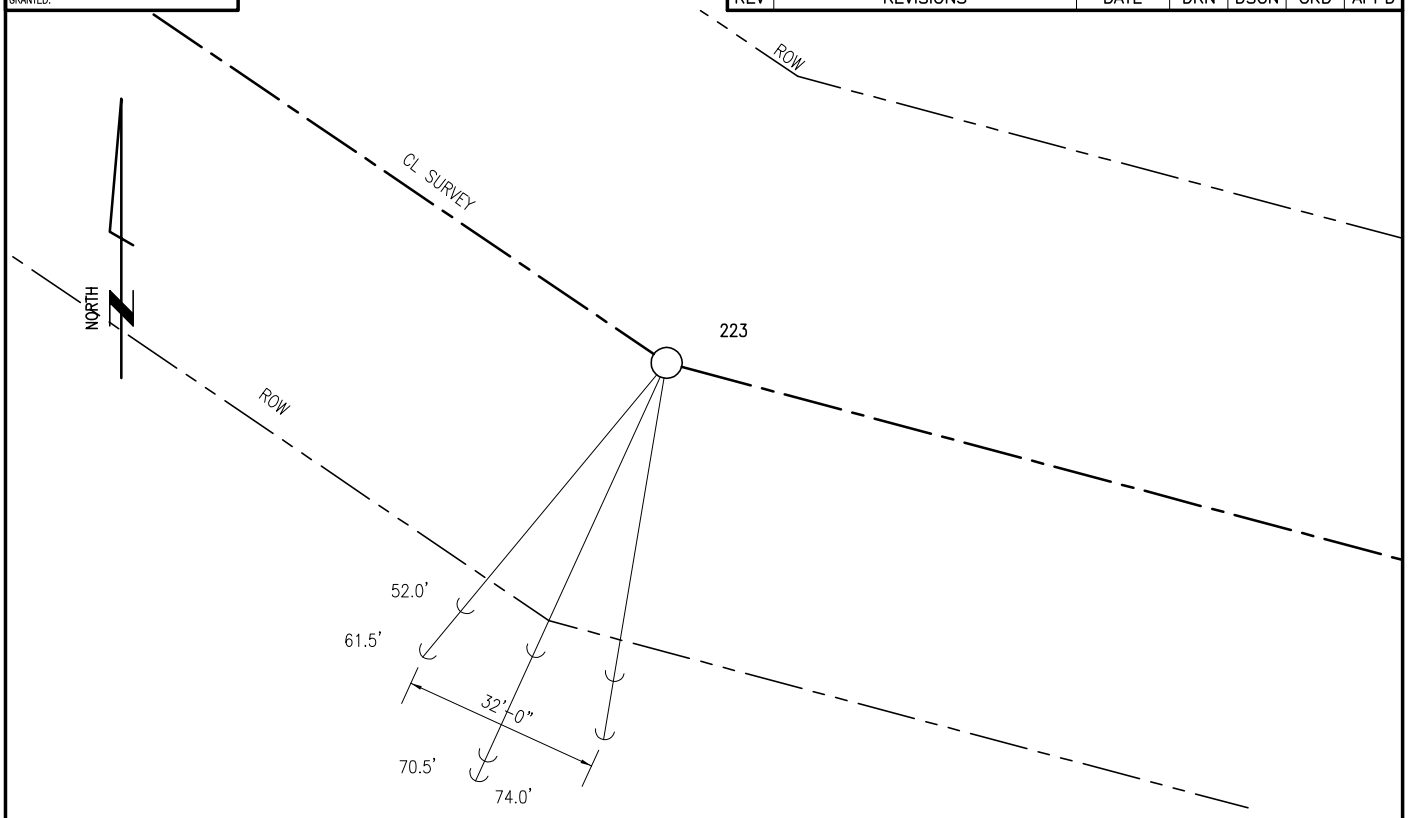

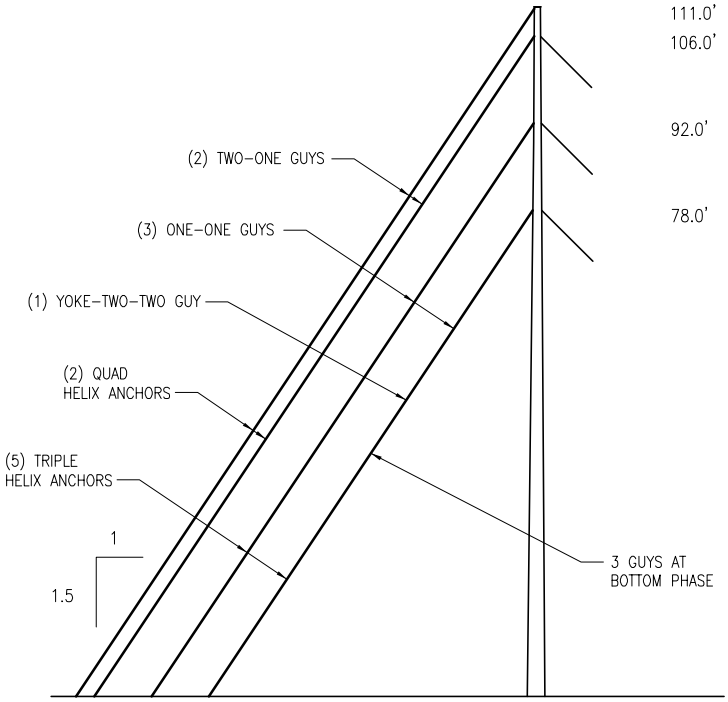

STR #223

STA=1778+23.20
19°12'15" RT
V-MRA-S-GE.130

DSGN	DWN	11/13/08		
DRN	JLQ	11/13/08		
CKD	EAR	11/14/08		
SCALE:	NTS			
FOR 8.5x11 DWG ONLY				

* *
REFERENCE DRAWINGS

POWER ENGINEERS
www.powereng.com

BLYTHE ENERGY
BUCK – JULIAN HINDS
230kV TRANSMISSION LINE
STAKING DIAGRAM

JOB NUMBER 114313
REV A
DRAWING NUMBER BLM-223

jquintana C:\DOCUME~1\JQUINT~1\LOCALS~1\Temp\AcPublish_4076\blm_staking.dwg BLM-223 Nov 14, 2008 – 9:55am

THIS DRAWING WAS PREPARED BY POWER ENGINEERS, INC. FOR A SPECIFIC PROJECT, TAKING INTO CONSIDERATION THE SPECIFIC AND UNIQUE REQUIREMENTS OF THE PROJECT. REUSE OF THIS DRAWING OR ANY INFORMATION CONTAINED IN THIS DRAWING FOR ANY PURPOSE IS PROHIBITED UNLESS WRITTEN PERMISSION FROM BOTH POWER AND POWER'S CLIENT IS GRANTED.

REV	REVISIONS	DATE	DRN	DSGN	CKD	APPD
A	ISSUED FOR REVIEW	11/14/08	JLQ	DWN	AT	EAR

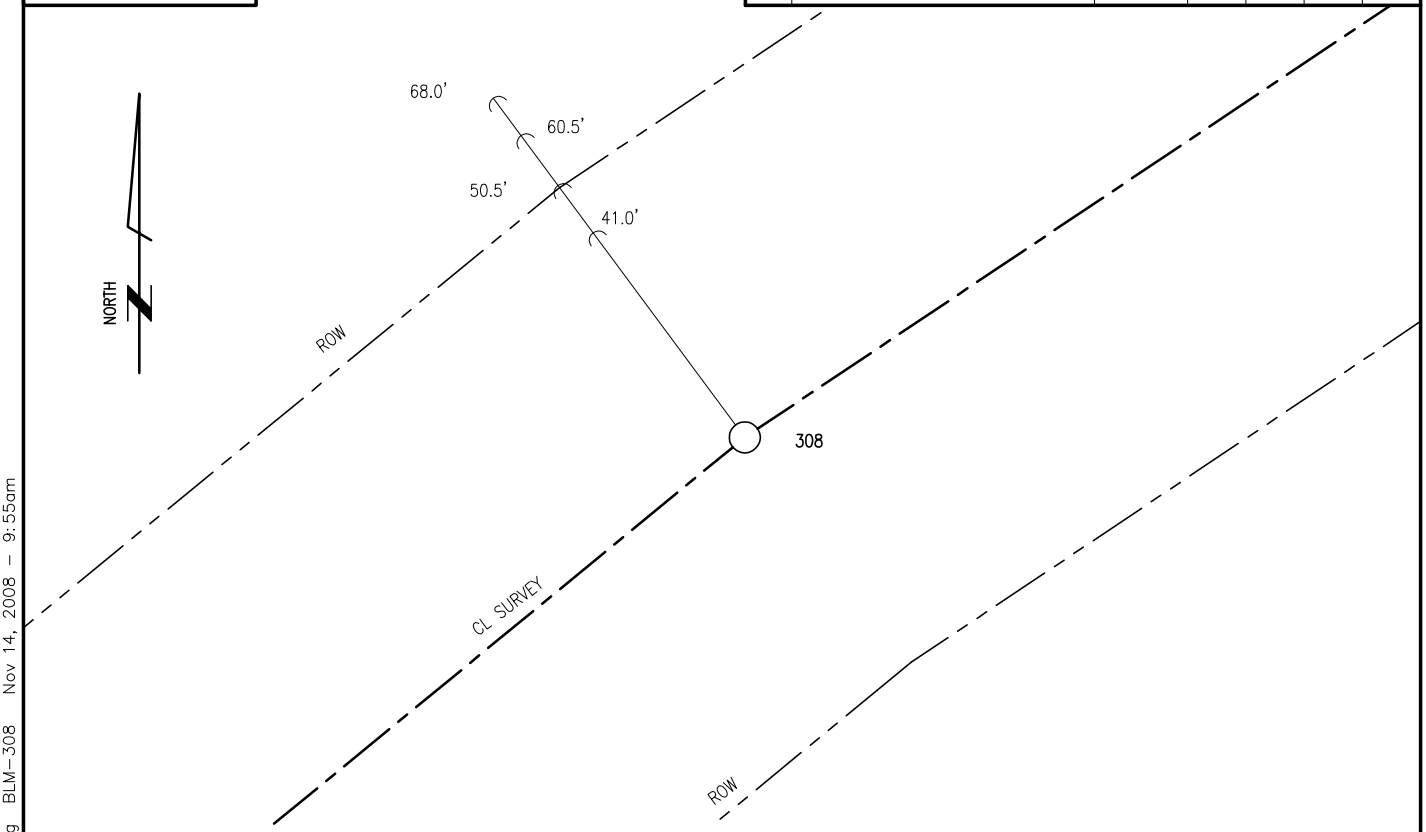

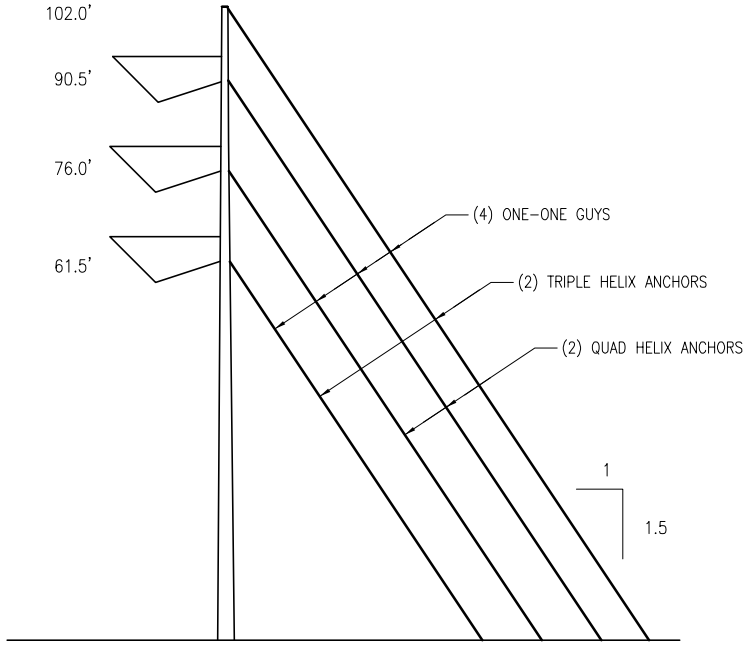

STR #308

STA=2517+80.86
5°35'40" LT
V-SRA-C-LS-GE.120

DSGN	DWN	11/13/08		
DRN	JLQ	11/13/08		
CKD	EAR	11/14/08		
SCALE:	NTS			
FOR 8.5x11 DWG ONLY				

* *
REFERENCE DRAWINGS

POWER ENGINEERS
www.powereng.com

BLYTHE ENERGY
BUCK – JULIAN HINDS
230kV TRANSMISSION LINE
STAKING DIAGRAM

JOB NUMBER 114313
REV A
DRAWING NUMBER BLM-308

jquintana C:\DOCUME~1\JQUINT~1\LOCALS~1\Temp\AcPublish_4076\blm_staking.dwg BLM-308 Nov 14, 2008 - 9:55am

THIS DRAWING WAS PREPARED BY POWER ENGINEERS, INC. FOR A SPECIFIC PROJECT, TAKING INTO CONSIDERATION THE SPECIFIC AND UNIQUE REQUIREMENTS OF THE PROJECT. REUSE OF THIS DRAWING OR ANY INFORMATION CONTAINED IN THIS DRAWING FOR ANY PURPOSE IS PROHIBITED UNLESS WRITTEN PERMISSION FROM BOTH POWER AND POWER'S CLIENT IS GRANTED.

REV	REVISIONS	DATE	DRN	DSGN	CKD	APPD
A	ISSUED FOR REVIEW	11/14/08	JLQ	DWN	AT	EAR

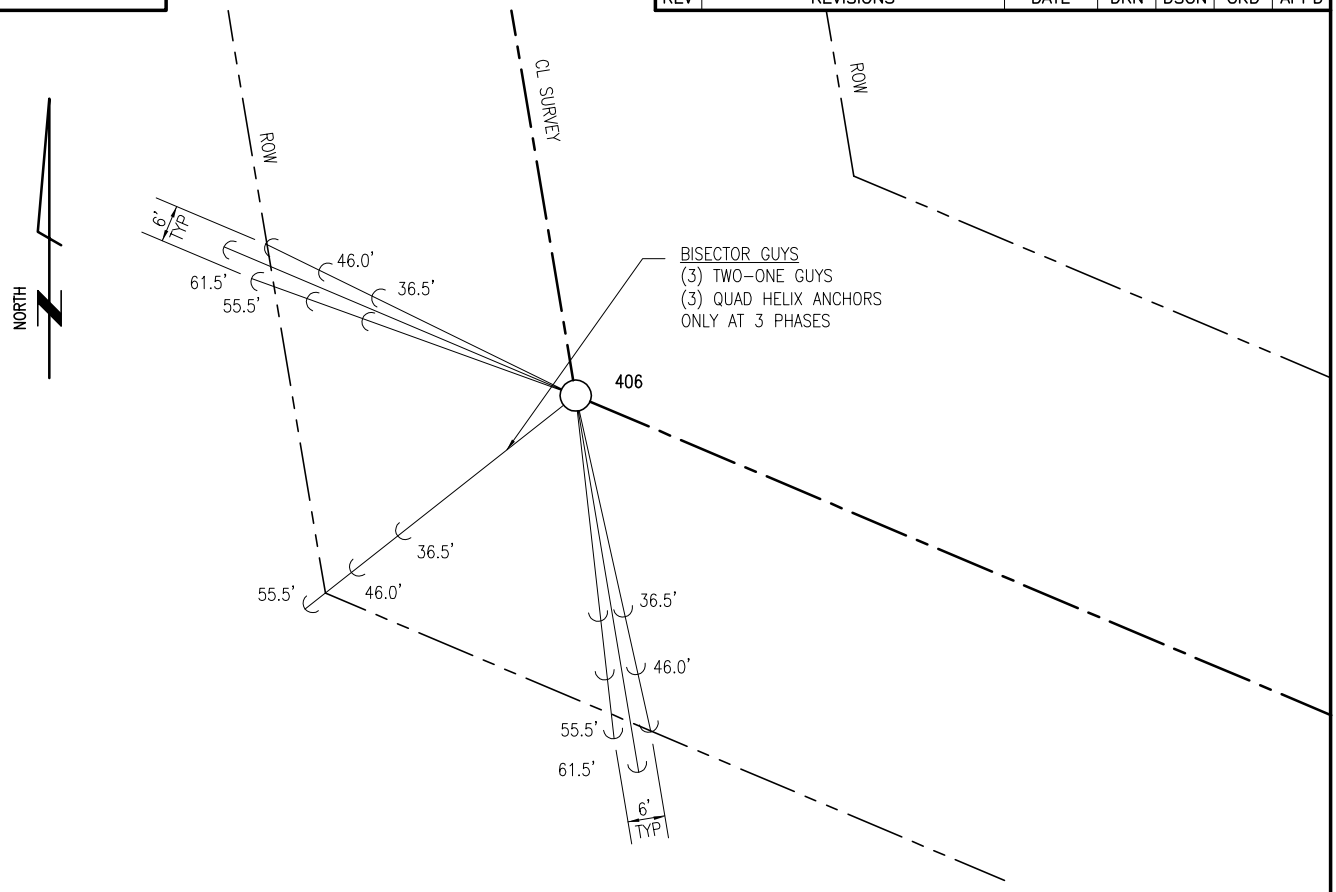

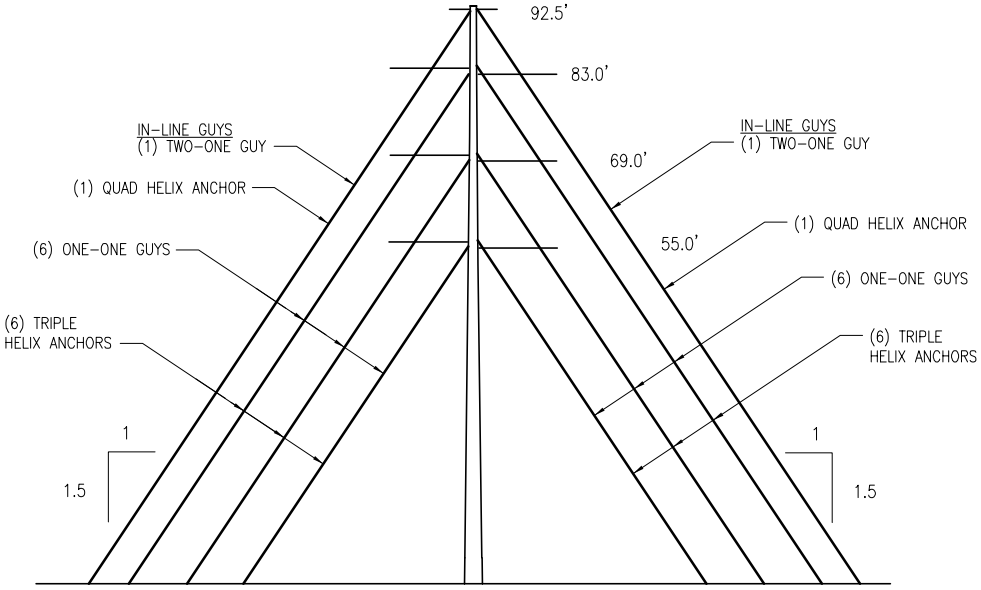

STR #406

STA=3316+52.00
57°35'52" RT
DE-45-60-C-GE.110

NOTE:

BISECTOR GUYS ARE ONLY SHOWN IN PLAN VIEW.

DSGN	DWN	11/13/08		
DRN	JLQ	11/13/08		
CKD	EAR	11/14/08		
SCALE:	NTS			
FOR 8.5x11 DWG ONLY				

* *
REFERENCE DRAWINGS

POWER ENGINEERS
www.powereng.com

BLYTHE ENERGY
BUCK – JULIAN HINDS
230kV TRANSMISSION LINE
STAKING DIAGRAM

JOB NUMBER 114313
REV A
DRAWING NUMBER BLM-406

jquintana C:\DOCUME~1\JQUINT~1\LOCALS~1\Temp\AcPublish_4076\blm_staking.dwg BLM-406 Nov 14, 2008 - 9:55am

THIS DRAWING WAS PREPARED BY POWER ENGINEERS, INC. FOR A SPECIFIC PROJECT, TAKING INTO CONSIDERATION THE SPECIFIC AND UNIQUE REQUIREMENTS OF THE PROJECT. REUSE OF THIS DRAWING OR ANY INFORMATION CONTAINED IN THIS DRAWING FOR ANY PURPOSE IS PROHIBITED UNLESS WRITTEN PERMISSION FROM BOTH POWER AND POWER'S CLIENT IS GRANTED.

REV	REVISIONS	DATE	DRN	DSGN	CKD	APPD
A	ISSUED FOR REVIEW	11/17/08	JLQ	DWN	AT	EAR

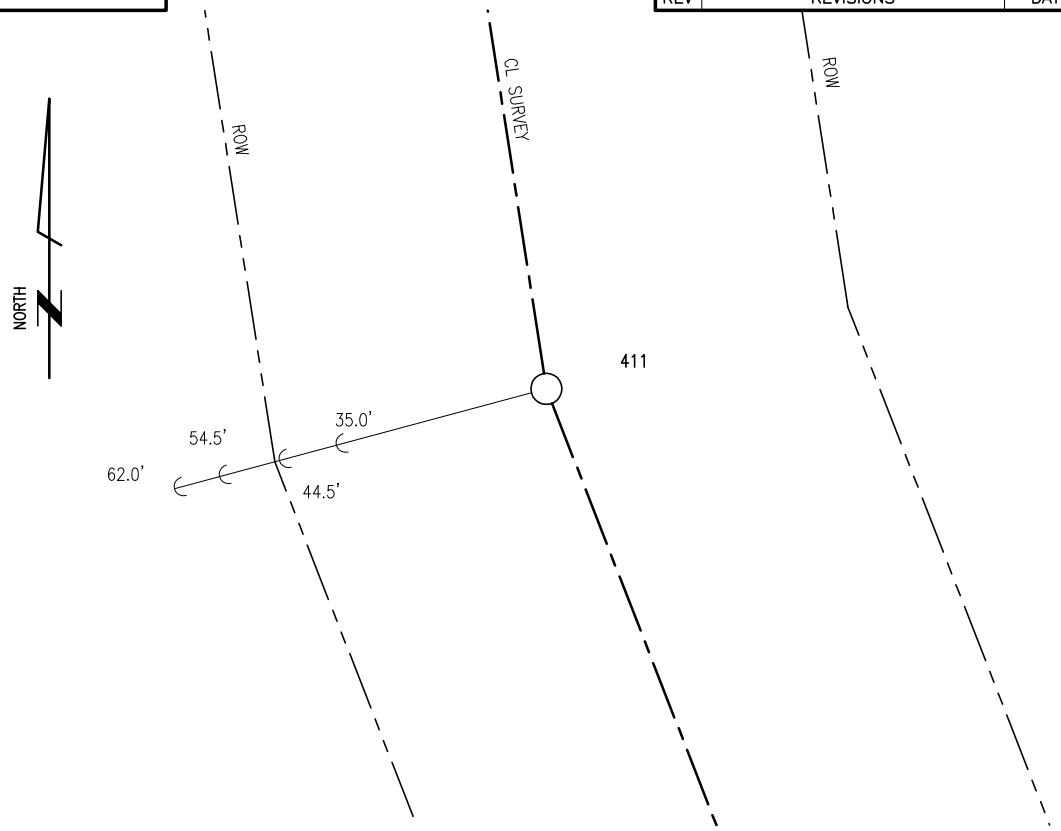

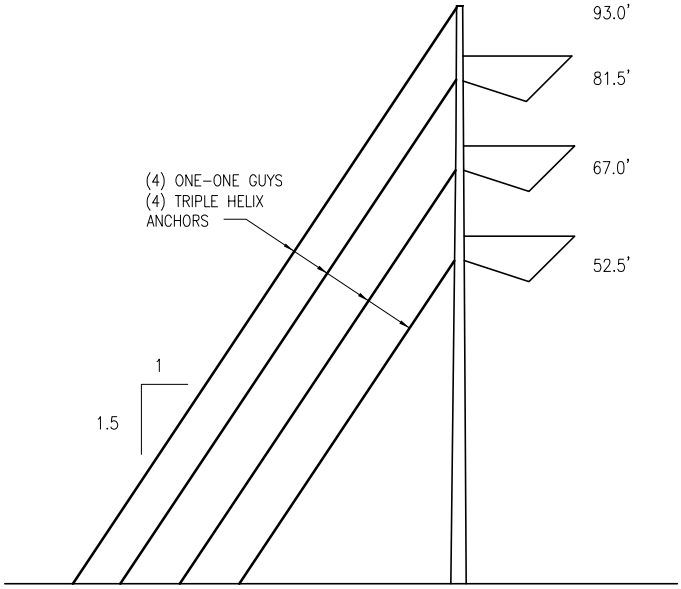

STR #411

STA=3358+53.23
12°27'38" RT
V-SRA-C-GE.110

DSGN	DWN	11/13/08		
DRN	JLQ	11/13/08		
CKD	EAR	11/14/08		
SCALE:	NTS			
FOR 8.5x11 DWG ONLY				

* *
REFERENCE DRAWINGS

POWER ENGINEERS
www.powereng.com

BLYTHE ENERGY
BUCK – JULIAN HINDS
230kV TRANSMISSION LINE
STAKING DIAGRAM

JOB NUMBER 114313
REV A
DRAWING NUMBER MWD-411

jquintana R:\Hlyprojects\114313\DD\DWG\02 Struct\staking.dwg MWD-411 Nov 17, 2008 – 10:35am

THIS DRAWING WAS PREPARED BY POWER ENGINEERS, INC. FOR A SPECIFIC PROJECT, TAKING INTO CONSIDERATION THE SPECIFIC AND UNIQUE REQUIREMENTS OF THE PROJECT. REUSE OF THIS DRAWING OR ANY INFORMATION CONTAINED IN THIS DRAWING FOR ANY PURPOSE IS PROHIBITED UNLESS WRITTEN PERMISSION FROM BOTH POWER AND POWER'S CLIENT IS GRANTED.

REV	REVISIONS	DATE	DRN	DSGN	CKD	APPD
A	ISSUED FOR REVIEW	11/17/08	JLQ	DWN	AT	EAR

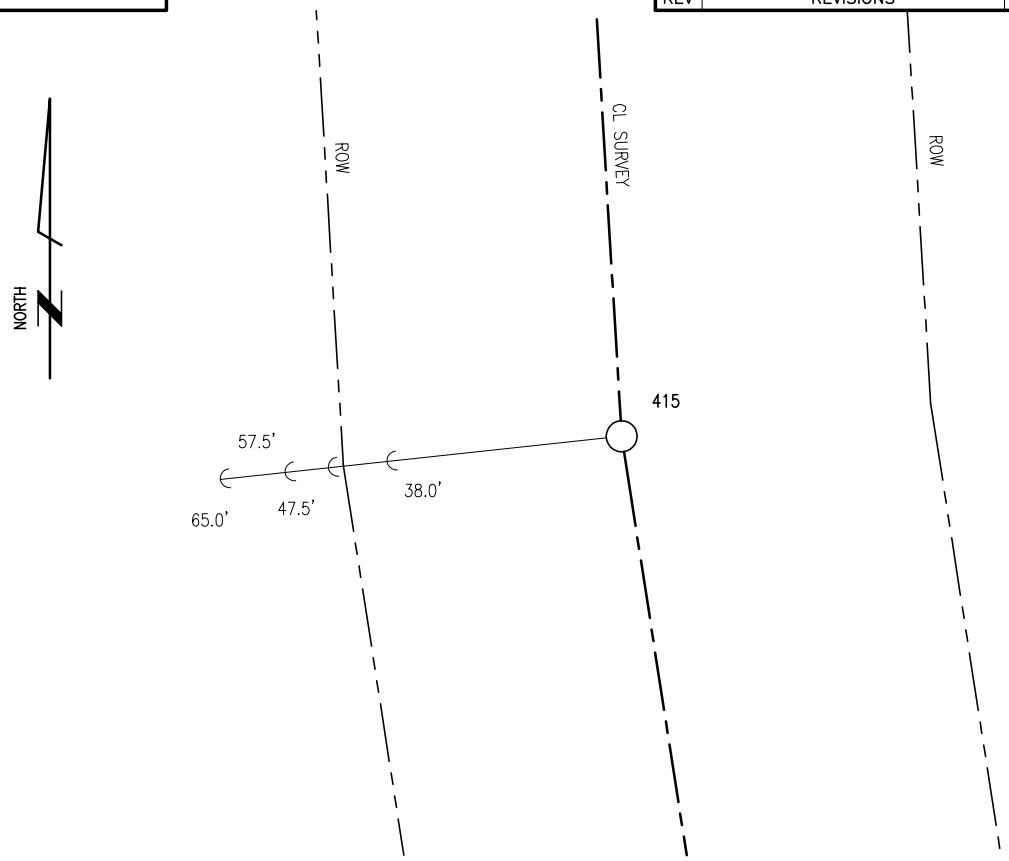

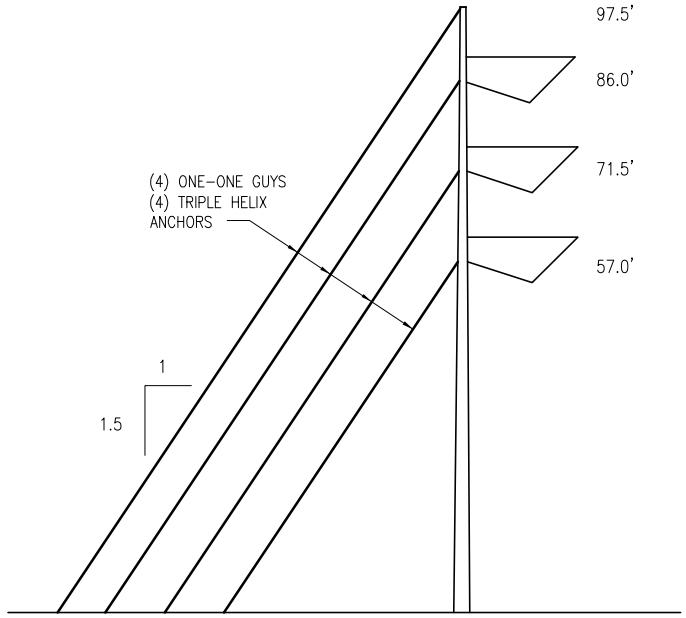

STR #415

STA=3388+57.92
5°24'21" RT
V-SRA-C-GE.115

jquintana R:\Hlyprojects\114313\DD\DWG\02 Struct\staking.dwg MWD-415 Nov 17, 2008 - 10:35am

DSGN	DWN	11/13/08		
DRN	JLQ	11/13/08		
CKD	EAR	11/14/08		
SCALE:	NTS			
FOR 8.5x11 DWG ONLY				

* *

REFERENCE DRAWINGS

POWER ENGINEERS
www.powereng.com

BLYTHE ENERGY

BUCK – JULIAN HINDS
230kV TRANSMISSION LINE

STAKING DIAGRAM

JOB NUMBER 114313

REV A

DRAWING NUMBER MWD-415

THIS DRAWING WAS PREPARED BY POWER ENGINEERS, INC. FOR A SPECIFIC PROJECT, TAKING INTO CONSIDERATION THE SPECIFIC AND UNIQUE REQUIREMENTS OF THE PROJECT. REUSE OF THIS DRAWING OR ANY INFORMATION CONTAINED IN THIS DRAWING FOR ANY PURPOSE IS PROHIBITED UNLESS WRITTEN PERMISSION FROM BOTH POWER AND POWER'S CLIENT IS GRANTED.

REV	REVISIONS	DATE	DRN	DSGN	CKD	APPD
A	ISSUED FOR REVIEW	11/17/08	JLQ	DWN	AT	EAR

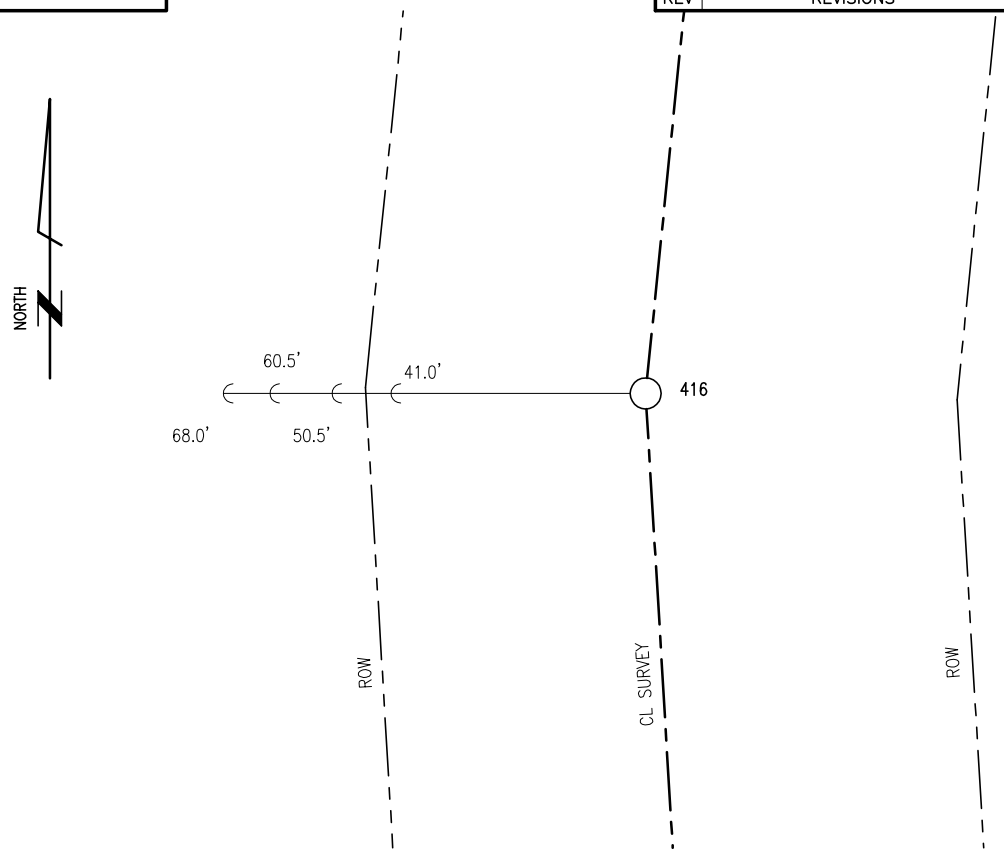

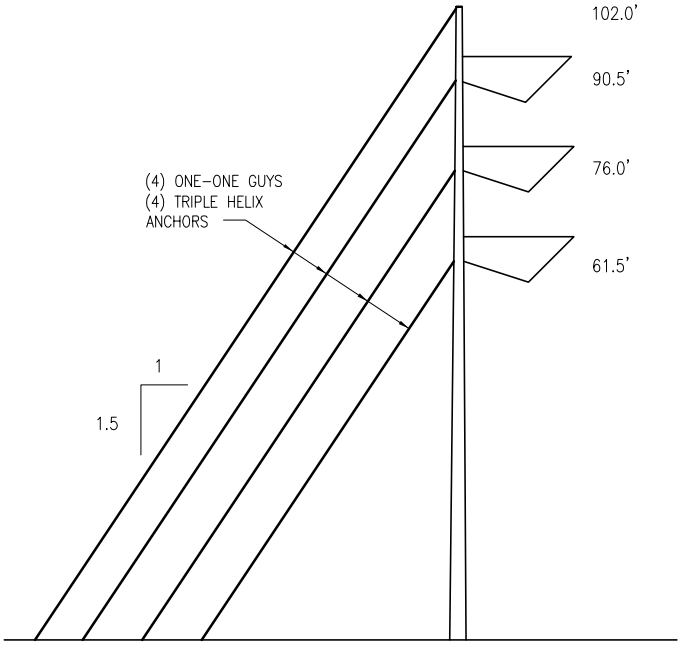

STR #416

STA=3396+43.19
9°09'43" RT
V-SRA-C-GE.120

jquintana R:\Hlyprojects\114313\DD\DWG\02 Struct\staking.dwg MWD-416 Nov 17, 2008 - 10:35am

DSGN	DWN	11/13/08		
DRN	JLQ	11/13/08		
CKD	EAR	11/14/08		
SCALE:	NTS			
FOR 8.5x11 DWG ONLY				

* *

REFERENCE DRAWINGS

POWER ENGINEERS
www.powereng.com

BLYTHE ENERGY

BUCK – JULIAN HINDS
230kV TRANSMISSION LINE

STAKING DIAGRAM

JOB NUMBER 114313

REV A

DRAWING NUMBER MWD-416

THIS DRAWING WAS PREPARED BY POWER ENGINEERS, INC. FOR A SPECIFIC PROJECT, TAKING INTO CONSIDERATION THE SPECIFIC AND UNIQUE REQUIREMENTS OF THE PROJECT. REUSE OF THIS DRAWING OR ANY INFORMATION CONTAINED IN THIS DRAWING FOR ANY PURPOSE IS PROHIBITED UNLESS WRITTEN PERMISSION FROM BOTH POWER AND POWER'S CLIENT IS GRANTED.

REV	REVISIONS	DATE	DRN	DSGN	CKD	APPD
A	ISSUED FOR REVIEW	11/17/08	JLQ	DWN	AT	EAR

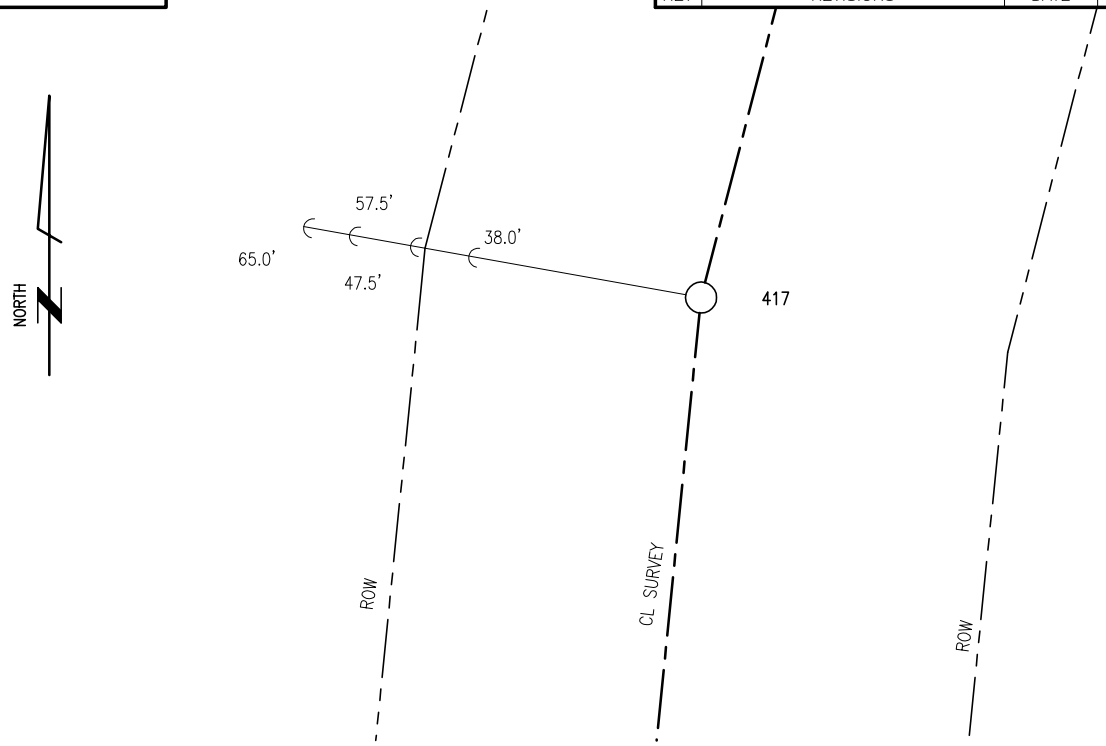

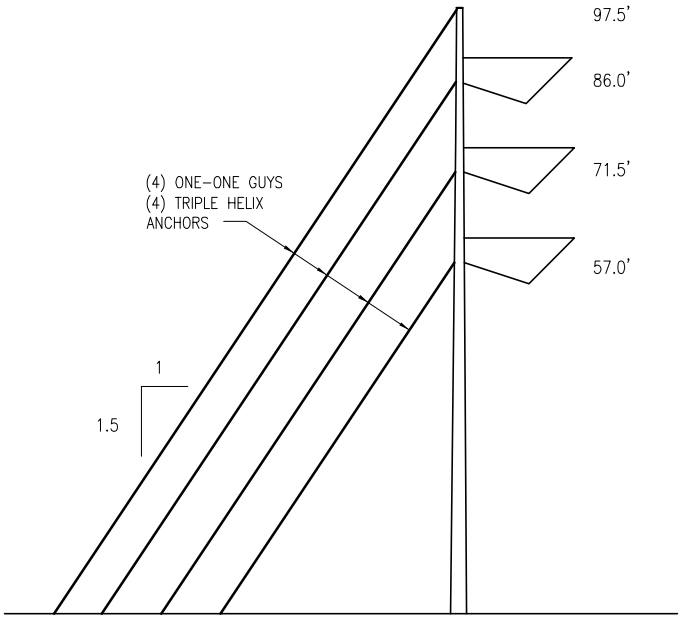

STR #417

STA=3404+03.08
8°45'38" RT
V-SRA-C-GE.115

jquintana R:\Hlyprojects\114313\DD\DWG\02 Struct\staking.dwg MWD-417 Nov 17, 2008 - 10:35am

DSGN	DWN	11/13/08		
DRN	JLQ	11/13/08		
CKD	EAR	11/14/08		
SCALE:	NTS			
FOR 8.5x11 DWG ONLY				

* *
REFERENCE DRAWINGS

POWER ENGINEERS
www.powereng.com

BLYTHE ENERGY
BUCK - JULIAN HINDS
230kV TRANSMISSION LINE
STAKING DIAGRAM

JOB NUMBER 114313
REV A
DRAWING NUMBER MWD-417

THIS DRAWING WAS PREPARED BY POWER ENGINEERS, INC. FOR A SPECIFIC PROJECT, TAKING INTO CONSIDERATION THE SPECIFIC AND UNIQUE REQUIREMENTS OF THE PROJECT. REUSE OF THIS DRAWING OR ANY INFORMATION CONTAINED IN THIS DRAWING FOR ANY PURPOSE IS PROHIBITED UNLESS WRITTEN PERMISSION FROM BOTH POWER AND POWER'S CLIENT IS GRANTED.

REV	REVISIONS	DATE	DRN	DSGN	CKD	APPD
A	ISSUED FOR REVIEW	11/17/08	JLQ	DWN	AT	EAR

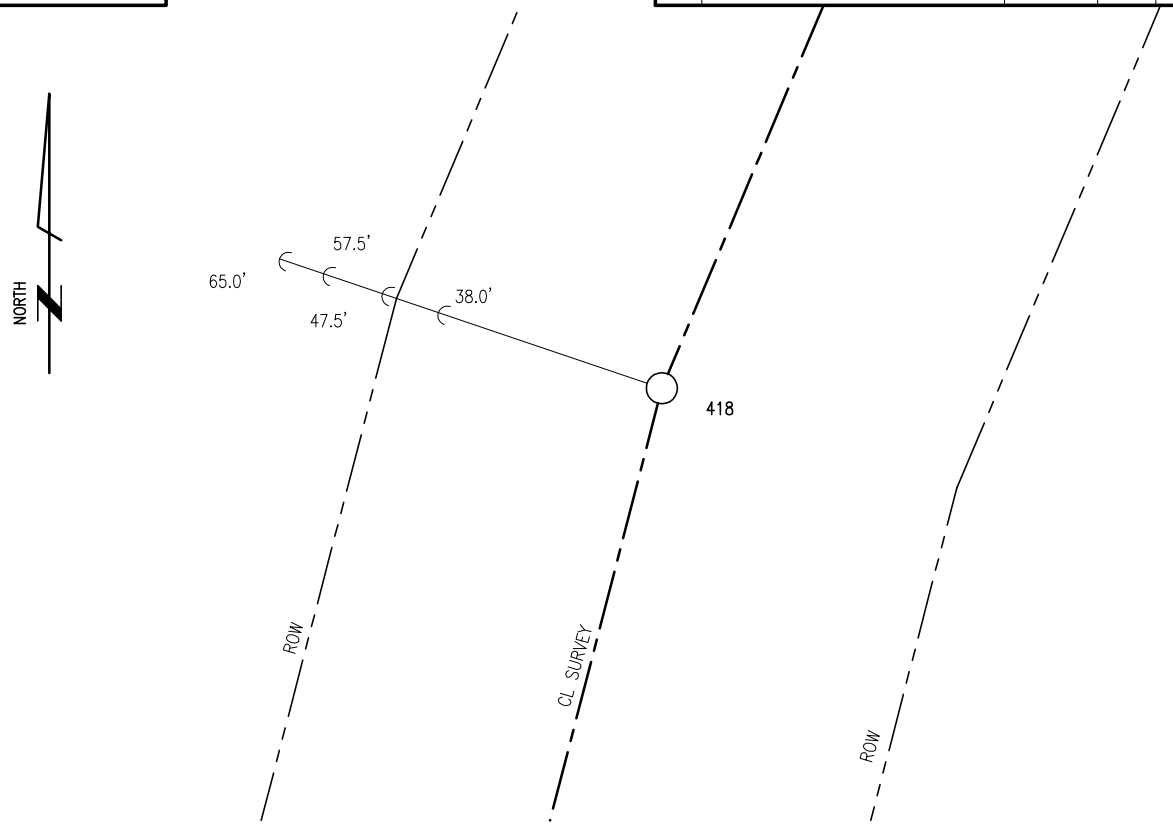

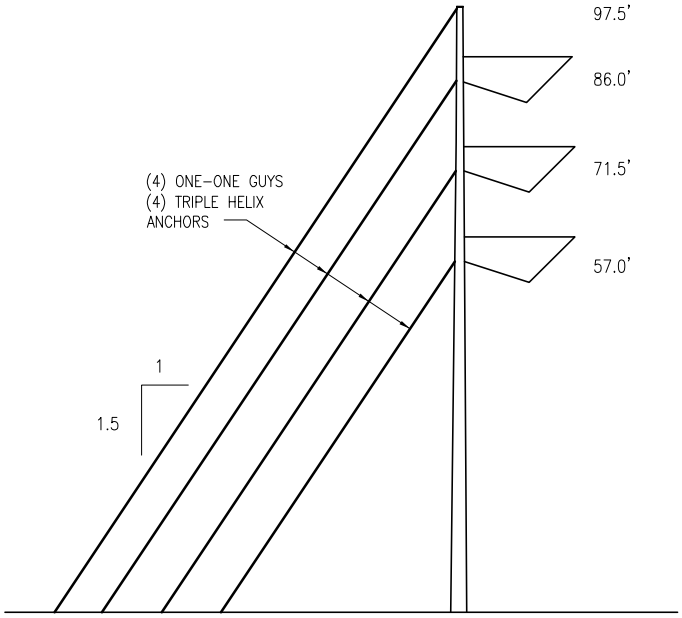

STR #418

STA=3411+63.52
8°22'05" RT
V-SRA-C-GE.115

jquintana R:\Hlyprojects\114313\DD\DWG\02 Struct\staking.dwg MWD-418 Nov 17, 2008 - 10:35am

DSGN	DWN	11/13/08		
DRN	JLQ	11/13/08		
CKD	EAR	11/14/08		
SCALE:	NTS			
FOR 8.5x11 DWG ONLY				

* *

REFERENCE DRAWINGS

POWER ENGINEERS
www.powereng.com

BLYTHE ENERGY

BUCK - JULIAN HINDS
230kV TRANSMISSION LINE

STAKING DIAGRAM

JOB NUMBER 114313

REV A

DRAWING NUMBER MWD-418

THIS DRAWING WAS PREPARED BY POWER ENGINEERS, INC. FOR A SPECIFIC PROJECT, TAKING INTO CONSIDERATION THE SPECIFIC AND UNIQUE REQUIREMENTS OF THE PROJECT. REUSE OF THIS DRAWING OR ANY INFORMATION CONTAINED IN THIS DRAWING FOR ANY PURPOSE IS PROHIBITED UNLESS WRITTEN PERMISSION FROM BOTH POWER AND POWER'S CLIENT IS GRANTED.

REV	REVISIONS	DATE	DRN	DSGN	CKD	APPD
A	ISSUED FOR REVIEW	11/17/08	JLQ	DWN	AT	EAR

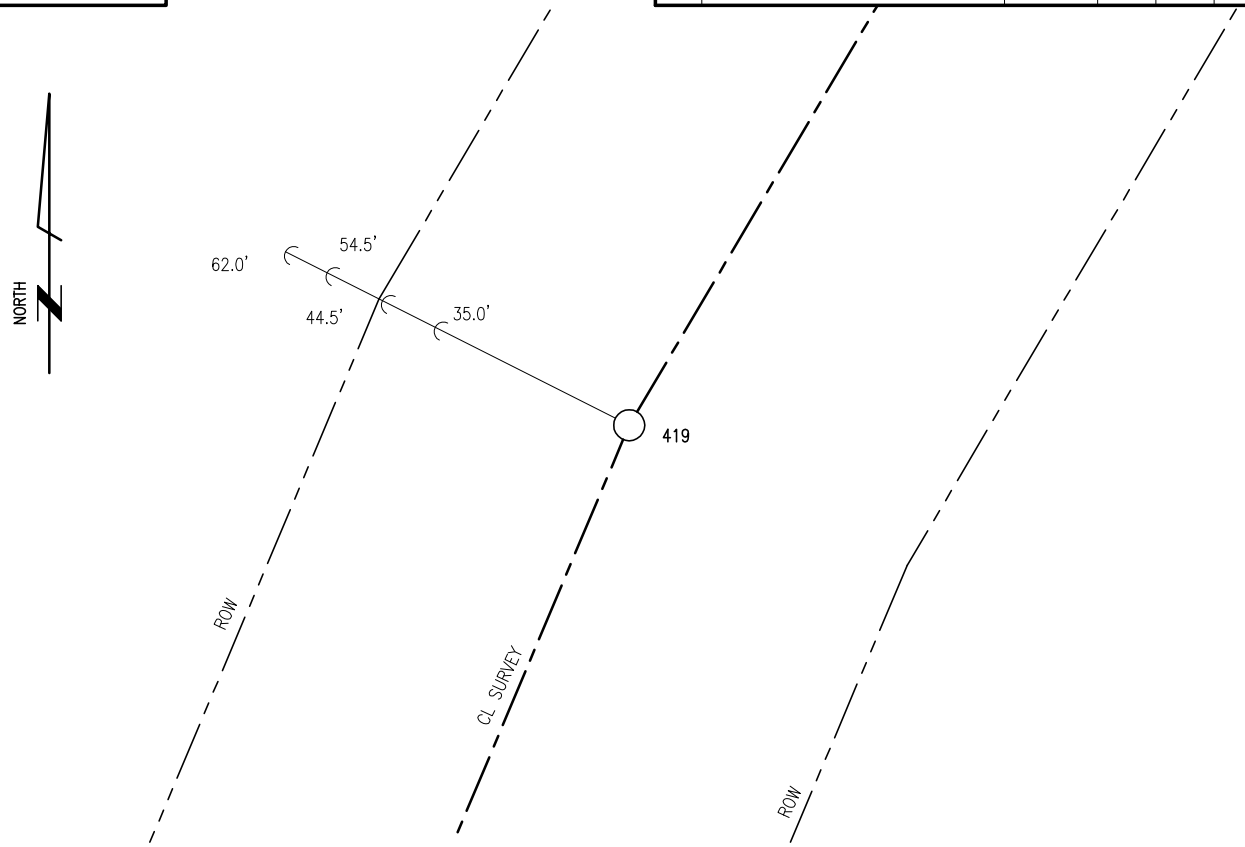

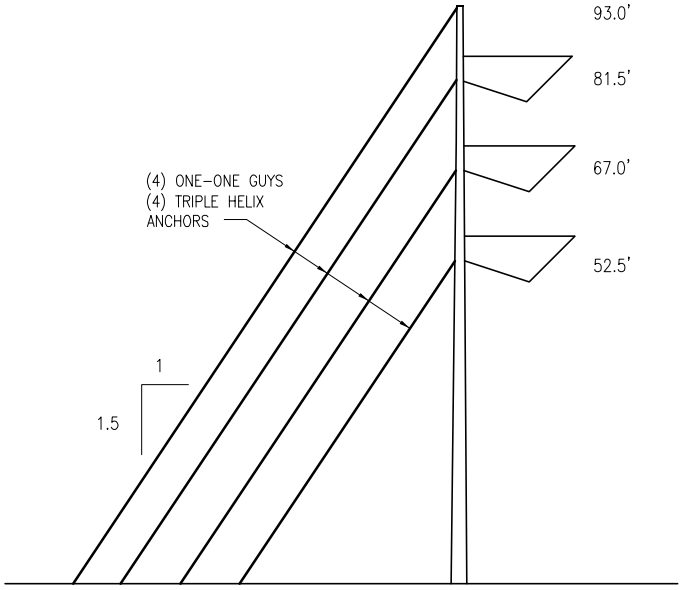

STR #419

STA=3418+58.87
7°44'40" RT
V-SRA-C-GE.110

DSGN	DWN	11/13/08		
DRN	JLQ	11/13/08		
CKD	EAR	11/14/08		
SCALE:	NTS			
FOR 8.5x11 DWG ONLY				

* *

REFERENCE DRAWINGS

POWER ENGINEERS
www.powereng.com

BLYTHE ENERGY

BUCK – JULIAN HINDS
230kV TRANSMISSION LINE

STAKING DIAGRAM

JOB NUMBER 114313

REV A

DRAWING NUMBER MWD-419

jquintana R:\Hlyprojects\114313\DD\DWG\02 Struct\staking.dwg MWD-419 Nov 17, 2008 – 10:35am

THIS DRAWING WAS PREPARED BY POWER ENGINEERS, INC. FOR A SPECIFIC PROJECT, TAKING INTO CONSIDERATION THE SPECIFIC AND UNIQUE REQUIREMENTS OF THE PROJECT. REUSE OF THIS DRAWING OR ANY INFORMATION CONTAINED IN THIS DRAWING FOR ANY PURPOSE IS PROHIBITED UNLESS WRITTEN PERMISSION FROM BOTH POWER AND POWER'S CLIENT IS GRANTED.

REV	REVISIONS	DATE	DRN	DSGN	CKD	APPD
A	ISSUED FOR REVIEW	11/17/08	JLQ	DWN	AT	EAR

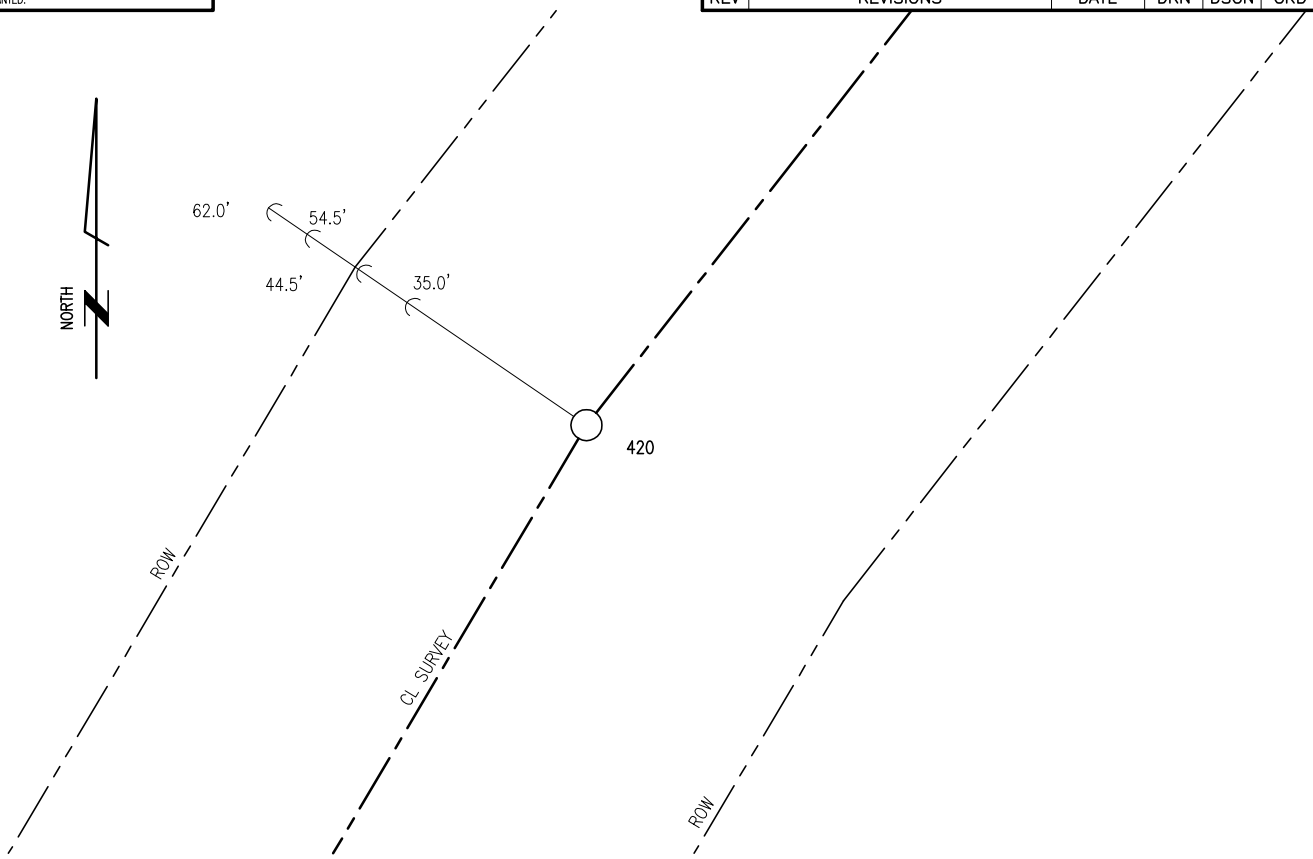

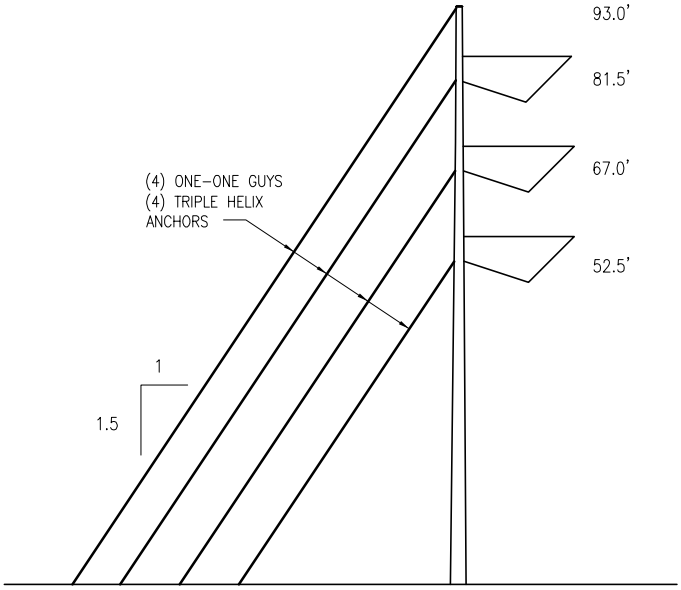

STR #420

STA=3424+87.85
7°27'58" RT
V-SRA-C-GE.110

DSGN	DWN	11/13/08		
DRN	JLQ	11/13/08		
CKD	EAR	11/14/08		
SCALE:	NTS			
FOR 8.5x11 DWG ONLY				

* *
REFERENCE DRAWINGS

POWER ENGINEERS
www.powereng.com

BLYTHE ENERGY
BUCK – JULIAN HINDS
230kV TRANSMISSION LINE
STAKING DIAGRAM

JOB NUMBER 114313
REV A
DRAWING NUMBER MWD-420

jquintana R:\Hlyprojects\114313\DD\DWG\02 Struct\staking.dwg MWD-420 Nov 17, 2008 – 10:35am

THIS DRAWING WAS PREPARED BY POWER ENGINEERS, INC. FOR A SPECIFIC PROJECT, TAKING INTO CONSIDERATION THE SPECIFIC AND UNIQUE REQUIREMENTS OF THE PROJECT. REUSE OF THIS DRAWING OR ANY INFORMATION CONTAINED IN THIS DRAWING FOR ANY PURPOSE IS PROHIBITED UNLESS WRITTEN PERMISSION FROM BOTH POWER AND POWER'S CLIENT IS GRANTED.

REV	REVISIONS	DATE	DRN	DSGN	CKD	APPD
A	ISSUED FOR REVIEW	11/17/08	JLQ	DWN	AT	EAR

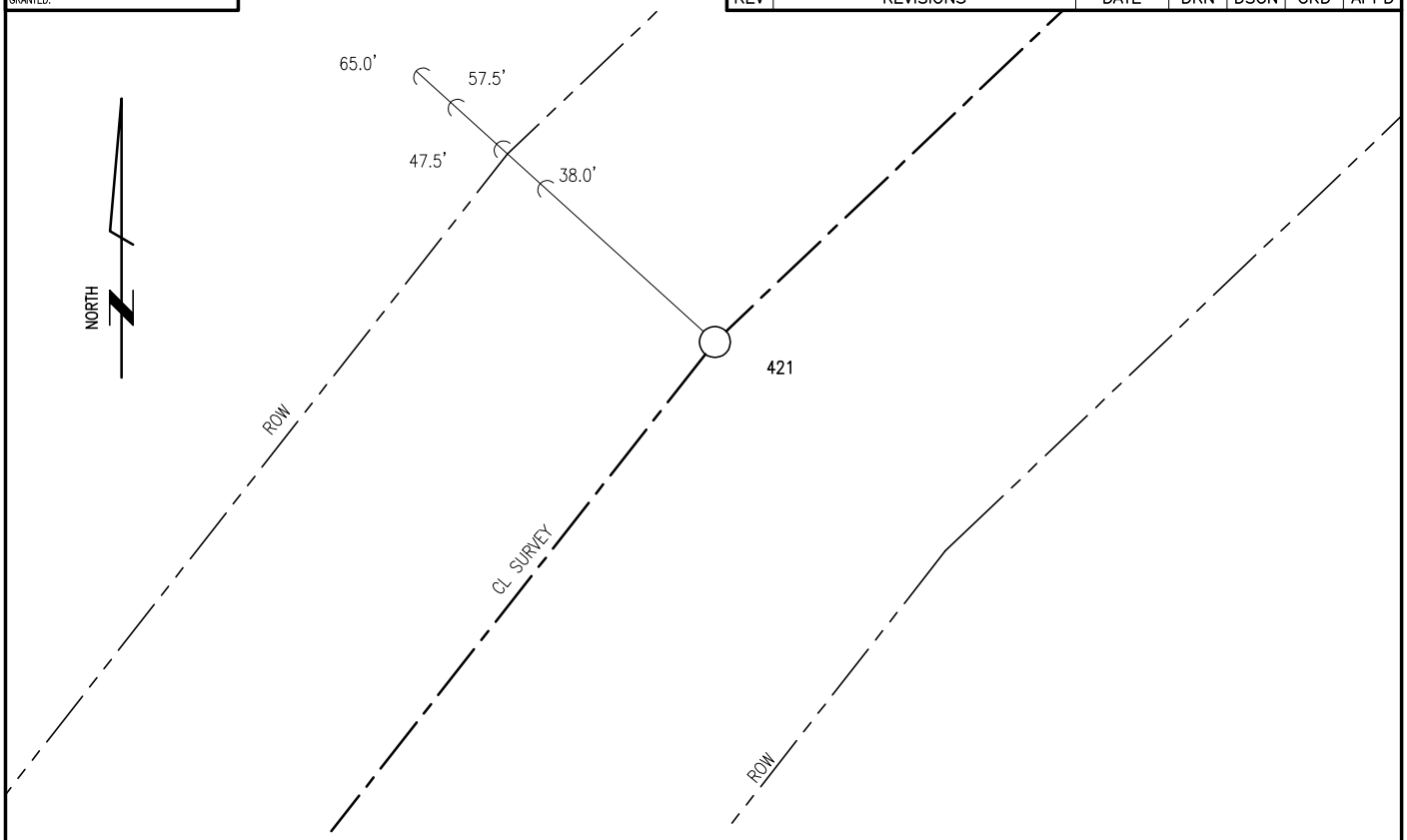

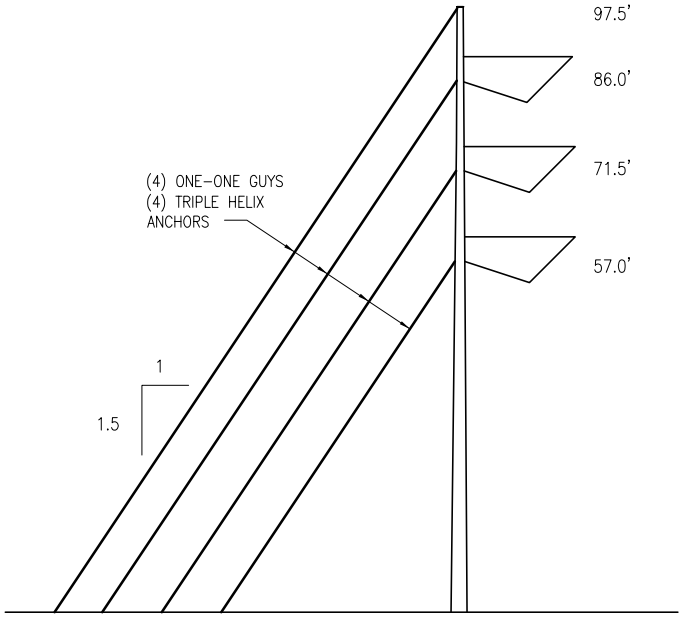

STR #421

STA=3431+63.22
8°16'38" RT
V-SRA-C-GE.115

DSGN	DWN	11/13/08		
DRN	JLQ	11/13/08		
CKD	EAR	11/14/08		
SCALE:	NTS			
FOR 8.5x11 DWG ONLY				

* *

REFERENCE DRAWINGS

POWER ENGINEERS
www.powereng.com

BLYTHE ENERGY

BUCK – JULIAN HINDS
230kV TRANSMISSION LINE

STAKING DIAGRAM

JOB NUMBER 114313

REV A

DRAWING NUMBER MWD-421

jquintana R:\Hlyprojects\114313\DD\DWG\02 Struct\staking.dwg MWD-421 Nov 17, 2008 – 10:35am

THIS DRAWING WAS PREPARED BY POWER ENGINEERS, INC. FOR A SPECIFIC PROJECT, TAKING INTO CONSIDERATION THE SPECIFIC AND UNIQUE REQUIREMENTS OF THE PROJECT. REUSE OF THIS DRAWING OR ANY INFORMATION CONTAINED IN THIS DRAWING FOR ANY PURPOSE IS PROHIBITED UNLESS WRITTEN PERMISSION FROM BOTH POWER AND POWER'S CLIENT IS GRANTED.

REV	REVISIONS	DATE	DRN	DSGN	CKD	APPD
A	ISSUED FOR REVIEW	11/17/08	JLQ	DWN	AT	EAR

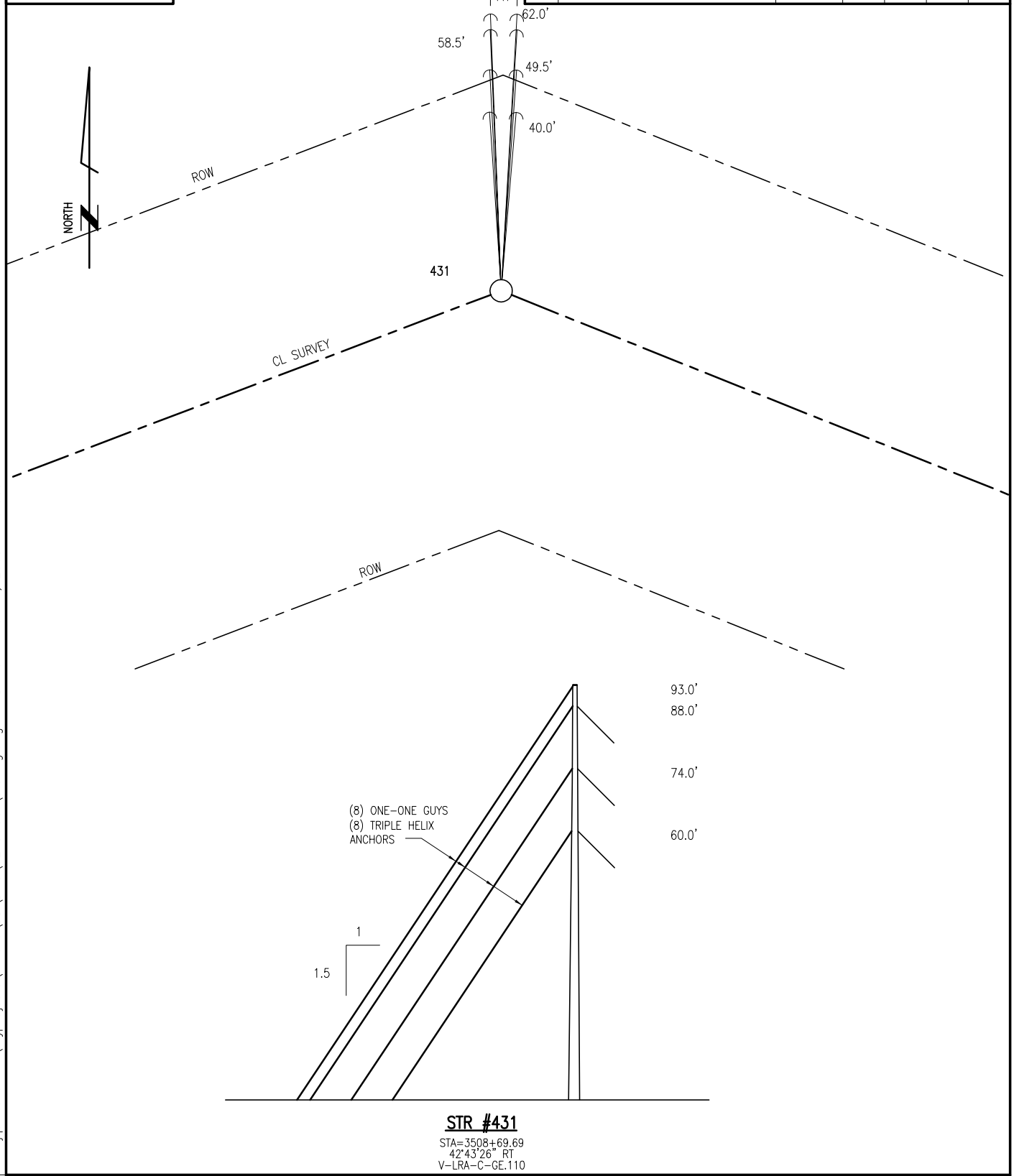

STR #431

STA=3508+69.69
42°43'26" RT
V-LRA-C-GE.110

jquintana R:\Hlyprojects\114313\DD\DWG\02 Struct\staking.dwg MWD-431 Nov 17, 2008 - 10:35am

DSGN	DWN	11/13/08		
DRN	JLQ	11/13/08		
CKD	EAR	11/14/08		
SCALE:	NTS			
FOR 8.5x11 DWG ONLY				

* *
REFERENCE DRAWINGS

POWER ENGINEERS
www.powereng.com

BLYTHE ENERGY
BUCK - JULIAN HINDS
230kV TRANSMISSION LINE
STAKING DIAGRAM

JOB NUMBER 114313
REV A
DRAWING NUMBER MWD-431

Appendix C
Biological Resources Letter Report for Laydown Yard

Applied Biological Consulting
4012 South Rainbow Boulevard #K192
Las Vegas, Nevada 89103
(702) 596-4346

To: Penny Eckert, Jenna Farrell, Alice Karl
TetraTech ECI

From: Rick Goette

Blythe Energy Desert Center Laydown area Biological survey report.

On 7-12-08 and 7-13-08 biological and archaeological surveys were done on a proposed site near Desert Center CA for use as a lay-down yard for the upcoming Blythe Energy Transmission Line project. The biological survey was intended to look for signs of desert tortoise or other sensitive species, and to generally evaluate the area. The intent, methods, and results of the archaeological surveys will be covered in a separate report. The site was approximately 40 acres in size and was surveyed using meandering transects of 8 meters width to cover the entire sites, as well as a meandering transect at 1000' distance from the site to generally evaluate the area. Other Zone of Influence transects would be performed out to 2400' distance if necessary (if no tortoise sign had been seen closer in).

Site Boundaries as surveyed

All coordinates are in UTM format, datum NAD 83

NE	11 S 647822 3731990
NW	11 S 648177 3732034
SE	11 S 647824 3731624
SW	11 S 648195 3731630

This proposed site borders Kaiser Rd to its east, a fenced construction materials storage area to its west, and a large dirt lot to its south. To the north of it is an aboveground irrigation feature which may be of archaeological interest. The can scatters which cover most of the area to the north and west of this area are nearly absent in this area, with only a sparse assortment of cans noted. No desert tortoise or other sensitive species sign were noted within this area. One ¼" square chip of probable tortoise bone was found within 30' of the edge of this area. A 1" square piece of tortoise bone was also located approximately 760' north of the NE corner of this site. Both bone fragments were extremely dried and were 10+ years old.

This area is approximately 6.5 acres. With the addition of the fenced construction yard to the west (2.5 acres), and use of a small portion of the dirt lot adjoining the southern edge of this area, a 10+ acre lay-down yard can be had with few concerns over disturbance to archaeological or biological resources.

Biological Findings

Two chips of tortoise bone were located during this survey. Both are considered Class-5 carcasses (dried, bleached and disarticulated). Exact aging is difficult, but both specimens could have been well over 10 years old. No other tortoise sign was noted.

No burrowing owl, fringed-toed lizard, or other sensitive species or their sign was noted.

Overall environmental observations.

This area is fair to poor desert tortoise habitat, based on the gravel and sand substrates, the relatively sparse vegetation and the high degree of human-caused disturbance, particularly in terms of off-road use and dumping. The dominant vegetative community is creosote/white bursage fading into a palo verde and ironwood woodland toward the north. A full species list is presented in Appendix A.

Coordinates of corners of proposed lay-down yard (6.5 acre portion within survey area).

NE Corner	11 S 648186 3731932
NW Corner	11 S 648088 3731914
SE Corner	11 S 648195 3731630
SW Corner	11 S 648096 3731628

Appendix A : Observed Species List

Plants

Acacia greggi	Cat's Claw
Ambrosia dumosa	White Bur-sage
Atriplex hymenelytra	Desert Holly
Bebbia juncea	Sweetbush
Brassica tournefortii	Spanish Mustard
Cercidium floridum	Blue Palo Verde
Chorizanthe brevicornu	Brittle Spineflower
Chorizanthe rigida	Spiny Herb
Encelia farinosa	Green Encelia
Eriogonum fasciculatum	California Buckwheat
Eriogonum inflatum	Desert Trumpet
Hymenoclea salsola	Cheesebush
Simmonefia chinensis	Jojoba
Larrea tridentata	Creosote bush
Opuntia basilaris	Beavertail Cactus
Opuntia echinocarpa	Silver Cholla
Opuntia ramosissima	Pencil Cholla
Fouquieria splendenf	Ocotillo
Phoradendron californicum	Desert Mistletoe
Prosopis glandulosa	Mesquite

Psorothamnus arborescens	Mojave Indigo bush
Psorothamnus spinosa	Smoke Tree
Salsola tragus	Russian Thistle
Schismus	Cheat grass
Tamarix ramosissima	Tamarisk
Washingtonia filifera	Desert Palm

Avian

Callipepla gambelii	Gambel's Quail
Chordeiles minor	Common Nighthawk
Corvus corax	Common Raven
Geococcyx californianus	Lesser Roadrunner
Zenaida macroura	Mourning Dove

Reptiles

Callisaurus draconoides	Zebratail Lizard
Cnemidophorus tigris	Western Whiptail
Crotalus cerastes	Sidewinder
Dipsosaurus dorsalis	Desert Iguana
Uta stansburiana	Side-blotch Lizard

Mammals

Ammospermophilus leucurus	White-tailed Antelope Ground Squirrel
Lepus californicus	Black-tailed Jack Rabbit
Spermophilus tereticaudus	Round-tailed Ground Squirrel
Sylvilagus audubonii	Desert Cottontail

Appendix D
Cultural Resources Report
(Confidential, under separate cover)

The Cultural Resources Report is confidential and is being provided separately.