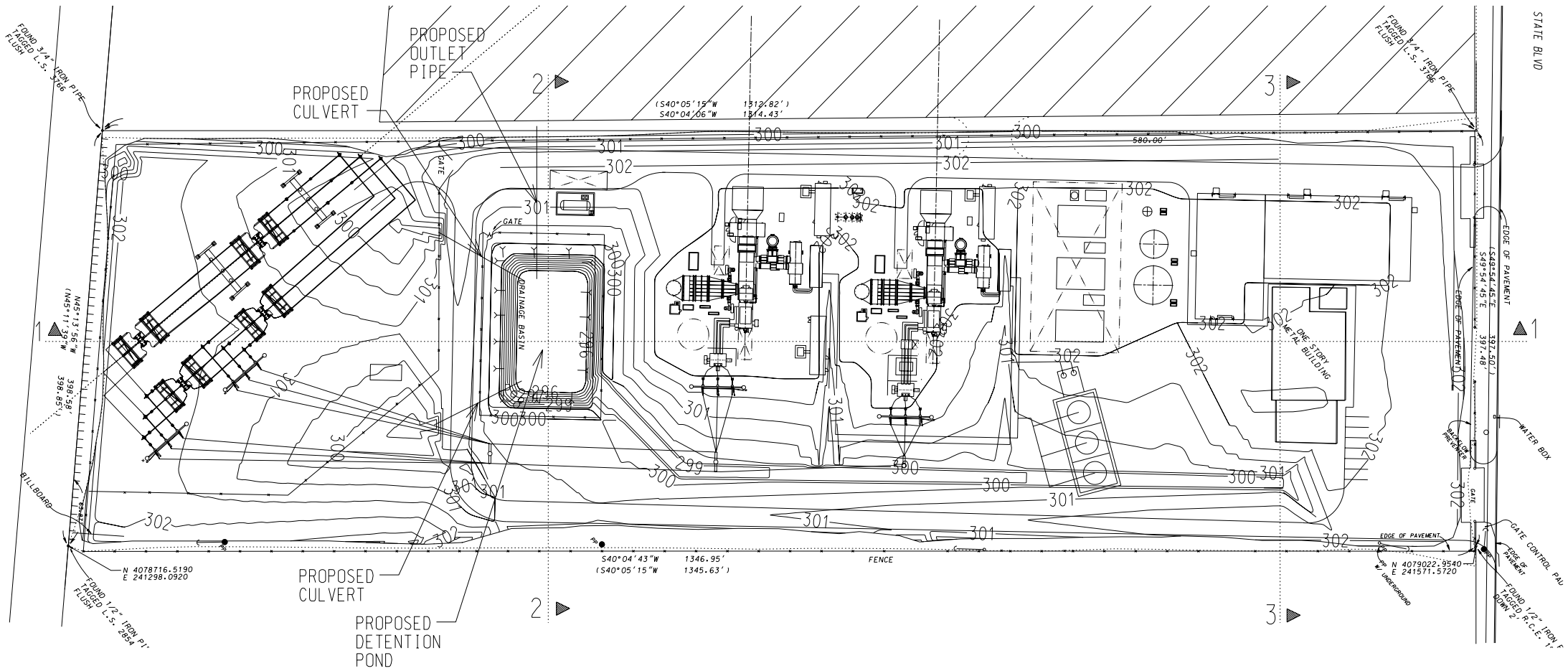

EARTHWORK ANALYSIS FOR PROPOSAL USE ONLY	
MATERIAL REMOVED: (EXCAVATION/CONCRETE DEMOLITION) 11 ACRES X 12" =	17,800 CY
MATERIAL AVAILABLE: CALCULATED CUT =	2,600 CY
MATERIAL REQUIRED: CALCULATED FILL =	20,800 CY
NET FILL TO BE IMPORTED: (REMOVED + FILL - CUT) =	36,000 CY
DEVELOPED AREA = 11.79 ACRES	

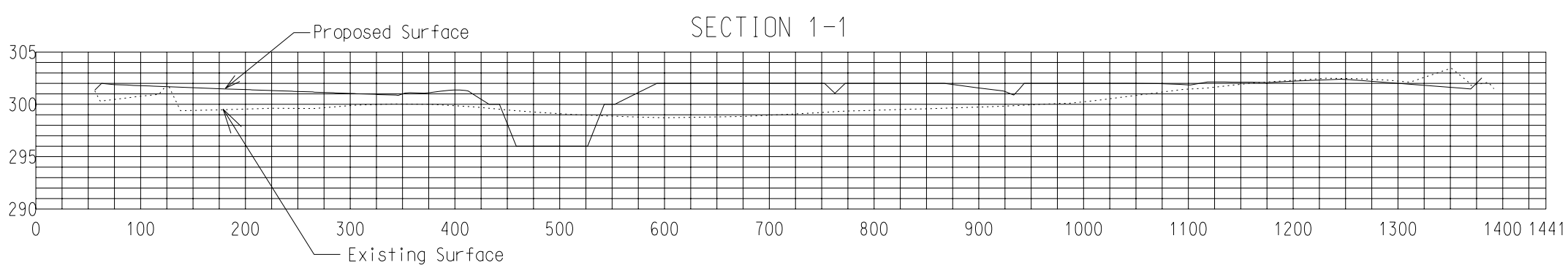

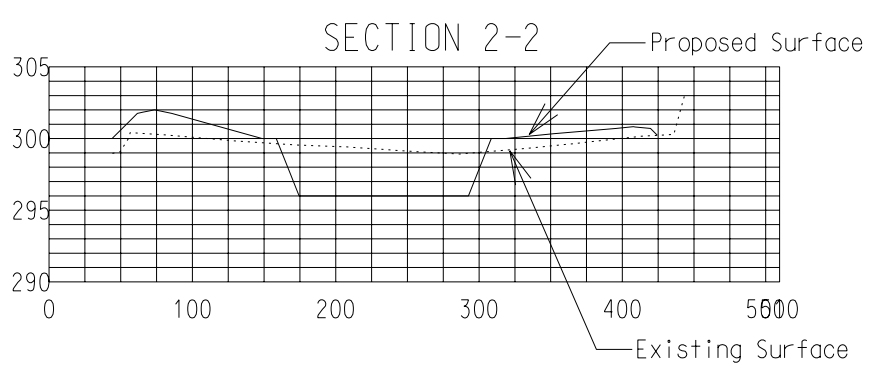

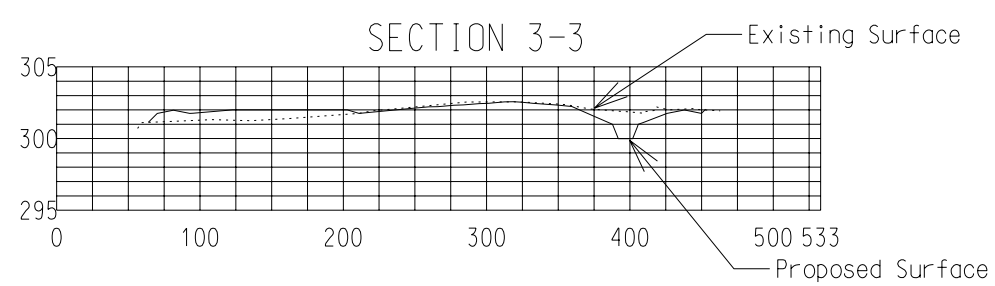

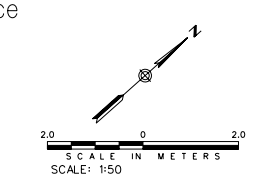

– PRELIMINARY –
NOT FOR CONSTRUCTION

REV	DESCRIPTION	DWN	CHK	APP	DATE
C	UPDATED WITH FINAL AFC TITLE	DES	ROO	ROO	10-24-06
B	REVISED TO INCLUDE 12" OF MATERIAL REMOVAL	DES	ROO	ROO	10-09-06
A	ISSUED FOR AFC PERMIT	DES	ROO	ROO	10-02-06

KIEWIT INDUSTRIAL CO.
A Kiewit Company

BULLARD ENERGY CENTER LLC

Bibb and associates
8455 Lenexa Drive
Lenexa, Kansas 66214

FIGURE 3.3-1

PRELIMINARY GRADING AND DRAINAGE

	by	date
DESIGNED	DES	09-29-06
DRAWN	DES	09-29-06
CHECKED	ROO	09-29-06
APPROVED		

DRAWING NUMBER
SKC-06026-CP-092906-1