California Independent
System Operator

Gary DeShazo
Director, Regional Transmission - North
(916) 608-5880
151 Blue Ravine Road
Folsom, CA 95630

February 8, 2006

Mr. Christopher Gillis
Generator Interconnection Services
Pacific Gas & Electric Company
245 Market Street, N7L
San Francisco, CA 94105

Subject: Bullard Energy Center FS – Interconnection Approval

Dear Mr. Gillis:

The California ISO (CAISO) has reviewed the Facilities Study (FS) dated February 7, 2006 for the Bullard Energy Center Project ("the Project"). Based on the information provided in the FS study report, the CAISO is granting interconnection approval for the Project to interconnect to the CAISO Controlled Grid.

Should you have any questions about the CAISO review of this study, please contact Xiaobo Wang at (916) 608-1264 or me at (916) 608-5880.

Sincerely,

Original signed by Gary L. DeShazo

cc:

Michael King	(Cinergy via e-mail, Michael.King2@cinergy.com)
Milton Howard	(Cinergy via e-mail, Milton.Howard@cinergy.com)
Karen R. Grosse	(PG&E via e-mail, KRG6@pge.com)
Christopher Gillis	(PG&E via e-mail, CXGL@pge.com)
Albert Y. Wong	(PG&E via e-mail, AYW1@pge.com)
Armando J. Perez	(CAISO via e-mail, APerez@caiso.com)
Tom French	(CAISO via e-mail, TFrench@caiso.com)
Gary L. Brown	(CAISO via e-mail, GLBrown@caiso.com)
Judy Nickel	(CAISO via e-mail, JNickel@caiso.com)
Regional Transmission North	(CAISO via e-mail)

Attachment
Summary Information About the Bullard Energy Center Project

1. General Background

Cinergy Solutions, Inc. (Cinergy) applied to the California ISO (CAISO) for interconnection of the **Bullard Energy Center Project** ("the Project") pursuant to the CAISO tariff *Amendment 39* for new generator interconnection. For the proposed power plant, the maximum net output to the grid will be **200 MW**, and the Commercial Operation Date (COD) will be **June 1, 2008**.

The Project, located in Fresno County, is proposed to loop into the Herndon-Kearney 230 kV line owned by Pacific Gas and Electric Company (PG&E). Figure 1 shows the location of the Project.

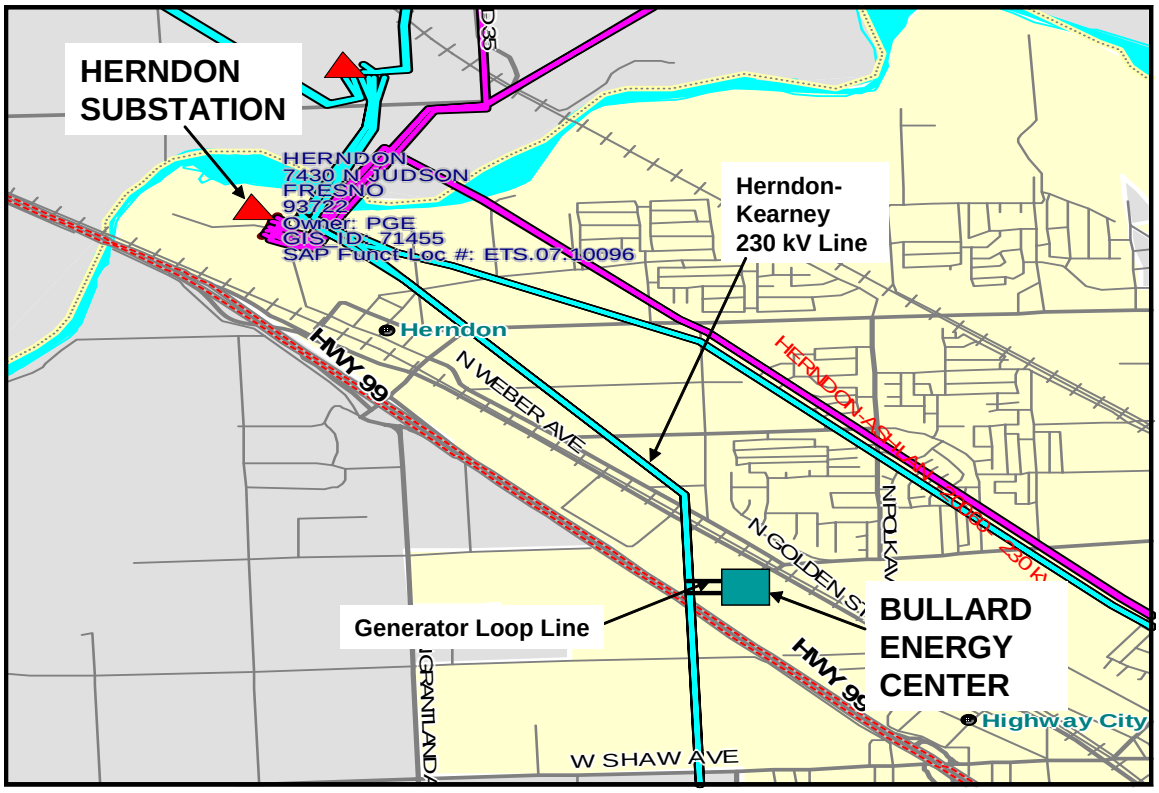

Figure 1. Location of the Bullard Energy Center Project

The proposed Project is a natural gas fired power plant consisting of two gas turbine generators rated at 102.6 MW each. With a total gross capacity of 205.2 MW and a total auxiliary load of 5.2 MW, the plant's maximum net output to the grid will be **200 MW**. The Project is proposed to **loop into the Herndon-Kearney 230 kV Line** via a new Bullard Switching Station. Figure 2 shows the system configuration for the Project.

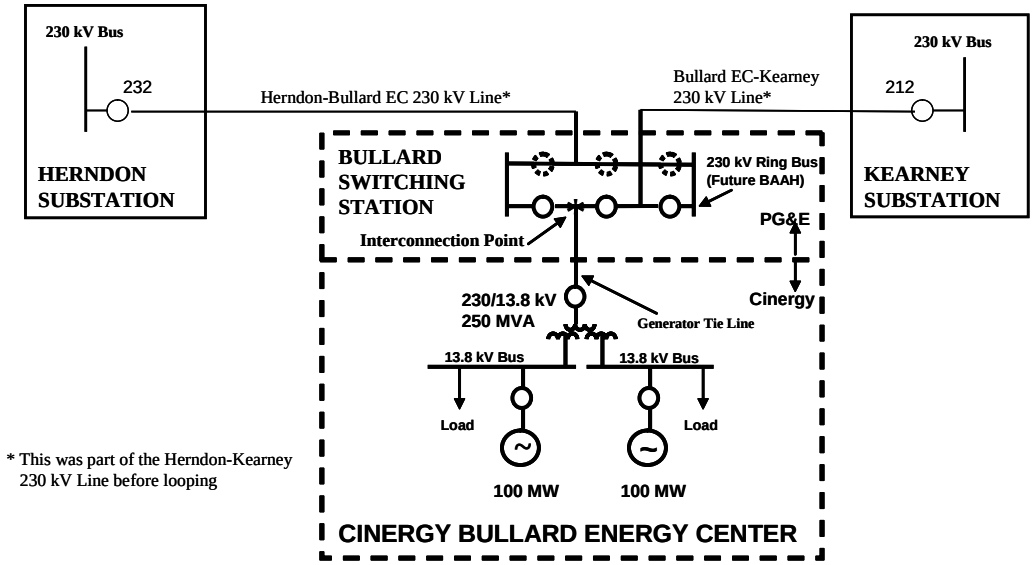

Figure 2. System Configuration of the Bullard Energy Center Project

2. Project History

Pursuant to the CAISO tariff *Amendment 39*, Cinergy Solutions, Inc. (Cinergy) applied for interconnection of the Bullard Energy Center Project ("the Project") to the CAISO Controlled Grid. The Interconnection Application (IA) of the Project entered the CAISO generator interconnection queue on December 1, 2004.

The Pacific Gas and Electric Company (PG&E), a Participating Transmission Owner (PTO) of the CAISO, conducted the System Impact Study (SIS) dated May 17, 2005. In a letter dated May 25, 2005, the CAISO approved the SIS and granted the project preliminary interconnection approval. On February 7, 2006 PG&E conducted the Facilities Study (FS). In this letter the CAISO approves the FS and grants the project final interconnection approval.

3. Study Conclusions

The SIS and FS determined the following reliability upgrades for the transmission system.

- Construct a new Bullard Switching Station to loop the Project into the Herndon-Kearney 230 kV Line.

- Re-conductor the Herndon-Bullard 230 kV Line to mitigation Category A (normal power flow) and Category B ("N-1" contingency) overloads.

- Develop two Special Protection Schemes (SPS) to mitigate Category C ("N-2" contingency) overloads.

For detailed study results, please refer to the SIS report of May 17, 2005 and the FS report of February 7, 2006.