Appendix D

Steady State Power Flow Plots

Bullard Energy Center SIS Power Flow Plots

Plot	Description
Plot #1	2008 Summer Peak Normal Conditions – Before Project 230-kV (MW/MVAr)
Plot #2	2008 Summer Peak Normal Conditions – Before Project 230-kV (Amps/% Rate)
Plot #3	2008 Summer Peak Normal Conditions – After Project 230-kV (MW/MVAr)
Plot #4	2008 Summer Peak Normal Conditions – After Project 230-kV (Amps/% Rate)
Plot #5	2008 Summer Peak Normal Conditions – Before Project 115-kV (MW/MVAr)
Plot #6	2008 Summer Peak Normal Conditions – Before Project 115-kV (Amps/% Rate)
Plot #7	2008 Summer Peak Normal Conditions – After Project 115-kV (MW/MVAr)
Plot #8	2008 Summer Peak Normal Conditions – After Project 115-kV (Amps/% Rate)
Plot #9	2008 Summer Peak Normal Conditions – Before Project 70-kV (MW/MVAr)
Plot #10	2008 Summer Peak Normal Conditions – Before Project 70-kV (Amps/% Rate)
Plot #11	2008 Summer Peak Normal Conditions – After Project 70-kV (MW/MVAr)
Plot #12	2008 Summer Peak Normal Conditions – After Project 70-kV (Amps/% Rate)
Plot #13	2008 Summer Off-Peak Normal Conditions – Before Project 230-kV (MW/MVAr)
Plot #14	2008 Summer Off-Peak Normal Conditions – Before Project 230-kV (Amps/% Rate)
Plot #15	2008 Summer Off-Peak Normal Conditions – After Project 230-kV (MW/MVAr)
Plot #16	2008 Summer Off-Peak Normal Conditions – After Project 230-kV (Amps/% Rate)
Plot #17	2008 Summer Off-Peak Normal Conditions – Before Project 115-kV (MW/MVAr)
Plot #18	2008 Summer Off-Peak Normal Conditions – Before Project 115-kV (Amps/% Rate)
Plot #19	2008 Summer Off-Peak Normal Conditions – After Project 115-kV (MW/MVAr)
Plot #20	2008 Summer Off-Peak Normal Conditions – After Project 115-kV (Amps/% Rate)
Plot #21	2008 Summer Off-Peak Normal Conditions – Before Project 70-kV (MW/MVAr)
Plot #22	2008 Summer Off-Peak Normal Conditions – Before Project 70-kV (Amps/% Rate)
Plot #23	2008 Summer Off-Peak Normal Conditions – After Project 70-kV (MW/MVAr)
Plot #24	2008 Summer Off-Peak Normal Conditions – After Project 70-kV (Amps/% Rate)
Plot #25	2009 Spring Peak Normal Conditions – Before Project 230-kV (MW/MVAr)
Plot #26	2009 Spring Peak Normal Conditions – Before Project 230-kV (Amps/% Rate)
Plot #27	2009 Spring Peak Normal Conditions – After Project 230-kV (MW/MVAr)
Plot #28	2009 Spring Peak Normal Conditions – After Project 230-kV (Amps/% Rate)
Plot #29	2009 Spring Peak Normal Conditions – Before Project 115-kV (MW/MVAr)
Plot #30	2009 Spring Peak Normal Conditions – Before Project 115-kV (Amps/% Rate)
Plot #31	2009 Spring Peak Normal Conditions – After Project 115-kV (MW/MVAr)

Plot #32	2009 Spring Peak Normal Conditions – After Project 115-kV (Amps/% Rate)
Plot #33	2009 Spring Peak Before Project 115-kV: Kingsburg-Corcoran #1 115-kV Line Outage (MW/MVAr)
Plot #34	2009 Spring Peak Before Project 115-kV: Kingsburg-Corcoran #1 115-kV Line Outage (Amps/% Rate)
Plot #35	2009 Spring Peak After Project 115-kV: Kingsburg-Corcoran #1 115-kV Line Outage (MW/MVAr)
Plot #36	2009 Spring Peak After Project 115-kV: Kingsburg-Corcoran #1 115-kV Line Outage (Amps/% Rate)
Plot #37	2009 Spring Peak Normal Conditions – Before Project 70-kV (MW/MVAr)
Plot #38	2009 Spring Peak Normal Conditions – Before Project 70-kV (Amps/% Rate)
Plot #39	2009 Spring Peak Normal Conditions – After Project 70-kV (MW/MVAr)
Plot #40	2009 Spring Peak Normal Conditions – After Project 70-kV (Amps/% Rate)
Plot #41	2009 Spring Peak Before Project 70-kV: Kearney 230/70-kV Transformer Outage (MW/MVAr)
Plot #42	2009 Spring Peak Before Project 70-kV: Kearney 230/70-kV Transformer Outage (Amps/% Rate)
Plot #43	2009 Spring Peak After Project 70-kV: Kearney 230/70-kV Transformer Outage (MW/MVAr)
Plot #44	2009 Spring Peak After Project 70-kV: Kearney 230/70-kV Transformer Outage (Amps/% Rate)
Plot #45	2009 Spring Peak Before Project 70-kV: Kearney-Herndon 230-kV Line Outage (MW/MVAr)
Plot #46	2009 Spring Peak Before Project 70-kV: Kearney-Herndon 230-kV Line Outage (Amps/% Rate)
Plot #47	2009 Spring Peak After Project 70-kV: Kearney-Bullard Energy Center 230-kV Line Outage (MW/MVAr)
Plot #48	2009 Spring Peak After Project 70-kV: Kearney-Bullard Energy Center 230-kV Line Outage (Amps/% Rate)
	Alternative 1 – Reduce project generation to 98.0 MW
Plot #49	2008 Summer Peak Normal Conditions – Alternative 1 – After Project 230-kV (MW/MVAr)
Plot #50	2008 Summer Peak Normal Conditions – Alternative 1 – After Project 230-kV (Amps/% Rate)
Plot #51	2008 Summer Peak Normal Conditions – Alternative 1 – After Project 115-kV (MW/MVAr)
Plot #52	2008 Summer Peak Normal Conditions – Alternative 1 – After Project 115-kV (Amps/% Rate)
Plot #53	2008 Summer Peak Normal Conditions – Alternative 1 – After Project 70-kV (MW/MVAr)
Plot #54	2008 Summer Peak Normal Conditions – Alternative 1 – After Project 70-kV (Amps/% Rate)
Plot #55	2008 Summer Off-Peak Normal Conditions – Alternative 1 – After Project 230-kV (MW/MVAr)
Plot #56	2008 Summer Off-Peak Normal Conditions – Alternative 1 – After Project 230-kV (Amps/% Rate)
Plot #57	2008 Summer Off-Peak Normal Conditions – Alternative 1 – After Project 115-kV (MW/MVAr)
Plot #58	2008 Summer Off-Peak Normal Conditions – Alternative 1 – After Project 115-kV (Amps/% Rate)
Plot #59	2008 Summer Off-Peak Normal Conditions – Alternative 1 – After Project 70-kV (MW/MVAr)
Plot #60	2008 Summer Off-Peak Normal Conditions – Alternative 1 – After Project 70-kV (Amps/% Rate)
Plot #61	2009 Spring Peak Normal Conditions – Alternative 1 – After Project 230-kV (MW/MVAr)
Plot #62	2009 Spring Peak Normal Conditions – Alternative 1 – After Project 230-kV (Amps/% Rate)

Plot #63	2009 Spring Peak Normal Conditions – Alternative 1 – After Project 115-kV (MW/MVAr)
Plot #64	2009 Spring Peak Normal Conditions – Alternative 1 – After Project 115-kV (Amps/% Rate)
Plot #65	2009 Spring Peak After Project 115-kV – Alternative 1: Kingsburg-Corcoran #1 115-kV Line Outage (MW/MVAr)
Plot #66	2009 Spring Peak After Project 115-kV – Alternative 1: Kingsburg-Corcoran #1 115-kV Line Outage (Amps/% Rate)
Plot #67	2009 Spring Peak Normal Conditions – Alternative 1 – After Project 70-kV (MW/MVAr)
Plot #68	2009 Spring Peak Normal Conditions – Alternative 1 – After Project 70-kV (Amps/% Rate)
Plot #69	2009 Spring Peak After Project 70-kV – Alternative 1: Kearney 230/70-kV Transformer Outage (MW/MVAr)
Plot #70	2009 Spring Peak After Project 70-kV – Alternative 1: Kearney 230/70-kV Transformer Outage (Amps/% Rate)
Plot #71	2009 Spring Peak After Project 70-kV – Alternative 1: Kearney-Bullard Energy Center 230-kV Line Outage (MW/MVAr)
Plot #72	2009 Spring Peak After Project 70-kV – Alternative 1: Kearney-Bullard Energy Center 230-kV Line Outage (Amps/% Rate)
	Alternative 2 – Reconductor Option
Plot #73	2008 Summer Peak Normal Conditions – Alternative 2 – After Project 230-kV (MW/MVAr)
Plot #74	2008 Summer Peak Normal Conditions – Alternative 2 – After Project 230-kV (Amps/% Rate)
Plot #75	2008 Summer Peak Normal Conditions – Alternative 2 – After Project 115-kV (MW/MVAr)
Plot #76	2008 Summer Peak Normal Conditions – Alternative 2 – After Project 115-kV (Amps/% Rate)
Plot #77	2008 Summer Peak Normal Conditions – Alternative 2 – After Project 70-kV (MW/MVAr)
Plot #78	2008 Summer Peak Normal Conditions – Alternative 2 – After Project 70-kV (Amps/% Rate)
Plot #79	2008 Summer Off-Peak Normal Conditions – Alternative 2 – After Project 230-kV (MW/MVAr)
Plot #80	2008 Summer Off-Peak Normal Conditions – Alternative 2 – After Project 230-kV (Amps/% Rate)
Plot #81	2008 Summer Off-Peak Normal Conditions – Alternative 2 – After Project 115-kV (MW/MVAr)
Plot #82	2008 Summer Off-Peak Normal Conditions – Alternative 2 – After Project 115-kV (Amps/% Rate)
Plot #83	2008 Summer Off-Peak Normal Conditions – Alternative 2 – After Project 70-kV (MW/MVAr)
Plot #84	2008 Summer Off-Peak Normal Conditions – Alternative 2 – After Project 70-kV (Amps/% Rate)
Plot #85	2009 Spring Peak Normal Conditions – Alternative 2 – After Project 230-kV (MW/MVAr)
Plot #86	2009 Spring Peak Normal Conditions – Alternative 2 – After Project 230-kV (Amps/% Rate)
Plot #87	2009 Spring Peak Normal Conditions – Alternative 2 – After Project 115-kV (MW/MVAr)
Plot #88	2009 Spring Peak Normal Conditions – Alternative 2 – After Project 115-kV (Amps/% Rate)
Plot #89	2009 Spring Peak After Project 115-kV – Alternative 2: Kingsburg-Corcoran #1 115-kV Line Outage (MW/MVAr)
Plot #90	2009 Spring Peak After Project 115-kV - Alternative 2: Kingsburg-Corcoran #1 115-kV Line Outage (Amps/% Rate)
Plot #91	2009 Spring Peak Normal Conditions – Alternative 2 – After Project 70-kV (MW/MVAr)
Plot #92	2009 Spring Peak Normal Conditions – Alternative 2 – After Project 70-kV (Amps/% Rate)

Plot #93	2009 Spring Peak After Project 70-kV – Alternative 2: Kearney 230/70-kV Transformer Outage (MW/MVAr)
Plot #94	2009 Spring Peak After Project 70-kV – Alternative 2: Kearney 230/70-kV Transformer Outage (Amps/% Rate)
Plot #95	2009 Spring Peak After Project 70-kV – Alternative 2: Kearney-Bullard Energy Center 230-kV Line Outage (MW/MVAr)
Plot #96	2009 Spring Peak After Project 70-kV – Alternative 2: Kearney-Bullard Energy Center 230-kV Line Outage (Amps/% Rate)
	Alternative 3 – Operations Option (Spring Only)
Plot #97	2009 Spring Peak Normal Conditions – Alternative 3 – After Project 230-kV (MW/MVAr)
Plot #98	2009 Spring Peak Normal Conditions – Alternative 3 – After Project 230-kV (Amps/% Rate)
Plot #99	2009 Spring Peak Normal Conditions – Alternative 3 – After Project 115-kV (MW/MVAr)
Plot #100	2009 Spring Peak Normal Conditions – Alternative 3 – After Project 115-kV (Amps/% Rate)
Plot #101	2009 Spring Peak After Project 115-kV – Alternative 3: Kingsburg-Corcoran #1 115-kV Line Outage (MW/MVAr)
Plot #102	2009 Spring Peak After Project 115-kV - Alternative 3: Kingsburg-Corcoran #1 115-kV Line Outage (Amps/% Rate)
Plot #103	2009 Spring Peak Normal Conditions – Alternative 3 – After Project 70-kV (MW/MVAr)
Plot #104	2009 Spring Peak Normal Conditions – Alternative 3 – After Project 70-kV (Amps/% Rate)
Plot #105	2009 Spring Peak After Project 70-kV – Alternative 3: Kearney 230/70-kV Transformer Outage (MW/MVAr)
Plot #106	2009 Spring Peak After Project 70-kV – Alternative 3: Kearney 230/70-kV Transformer Outage (Amps/% Rate)
Plot #107	2009 Spring Peak After Project 70-kV – Alternative 3: Kearney-Bullard Energy Center 230-kV Line Outage (MW/MVAr)
Plot #108	2009 Spring Peak After Project 70-kV – Alternative 3: Kearney-Bullard Energy Center 230-kV Line Outage (Amps/% Rate)

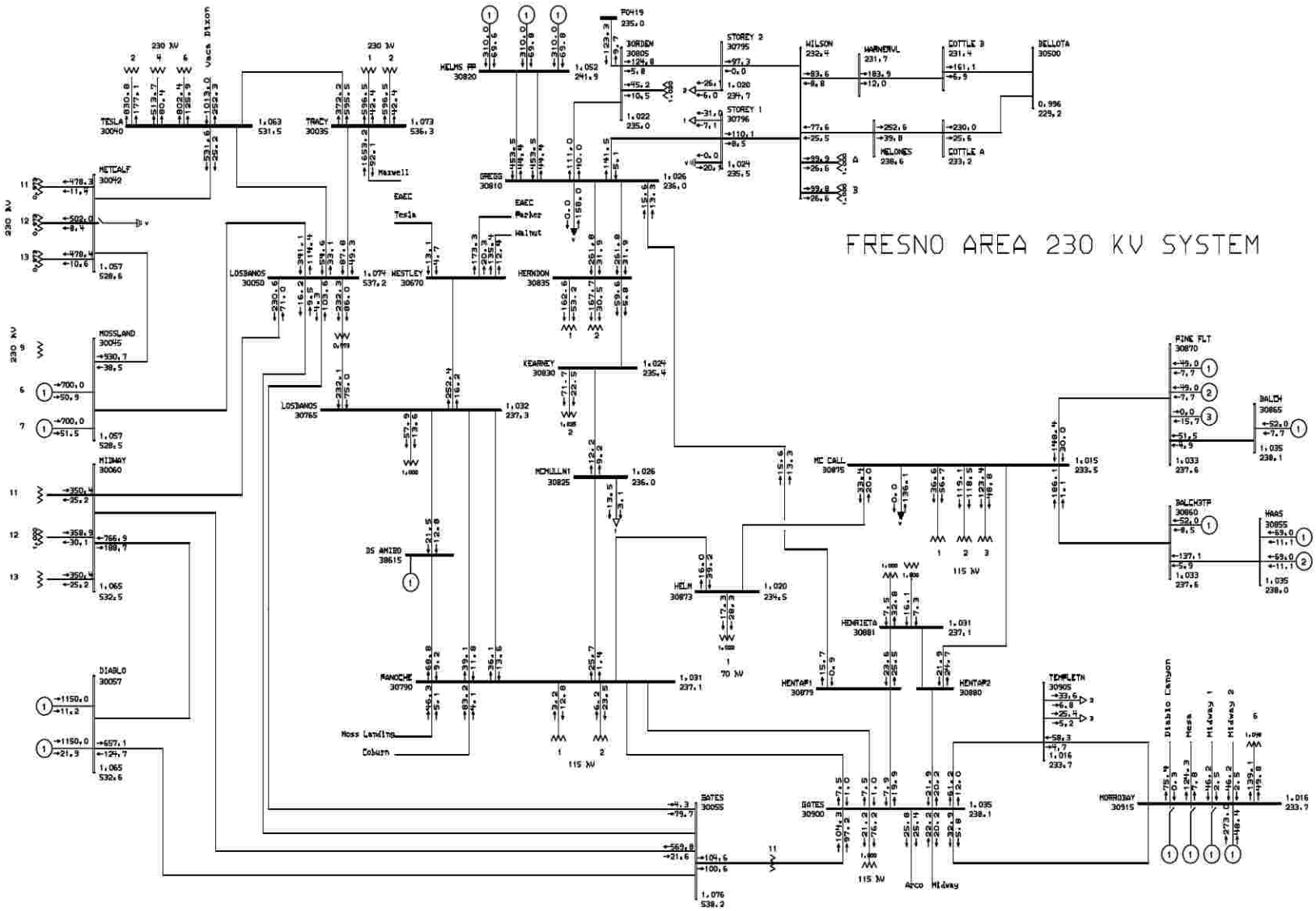

General Electric International, Inc. PSLF Program MW/MVAR Thu Apr 28 21:20:51 2005

PG&E Tranmission Planning	PG&E 2004 BASE CASE SERIES - 2008 South Valley Summer Peak Case PATH15=-266 MW(S-N) PATH26=3388 MW(N-S) PDCI=3104 MW(N-S) COI=4789 MW(N-S) Bullard Energy Center- 2008 Summer Peak - before	Plot 1 - 2008 Summer Peak Normal Conditions - Before Project 230 kV	C:\PSLF_Work\34\PGE\Bullard-En C:\PSLF_Work\34\PGE\Bullard-En Rating = 1

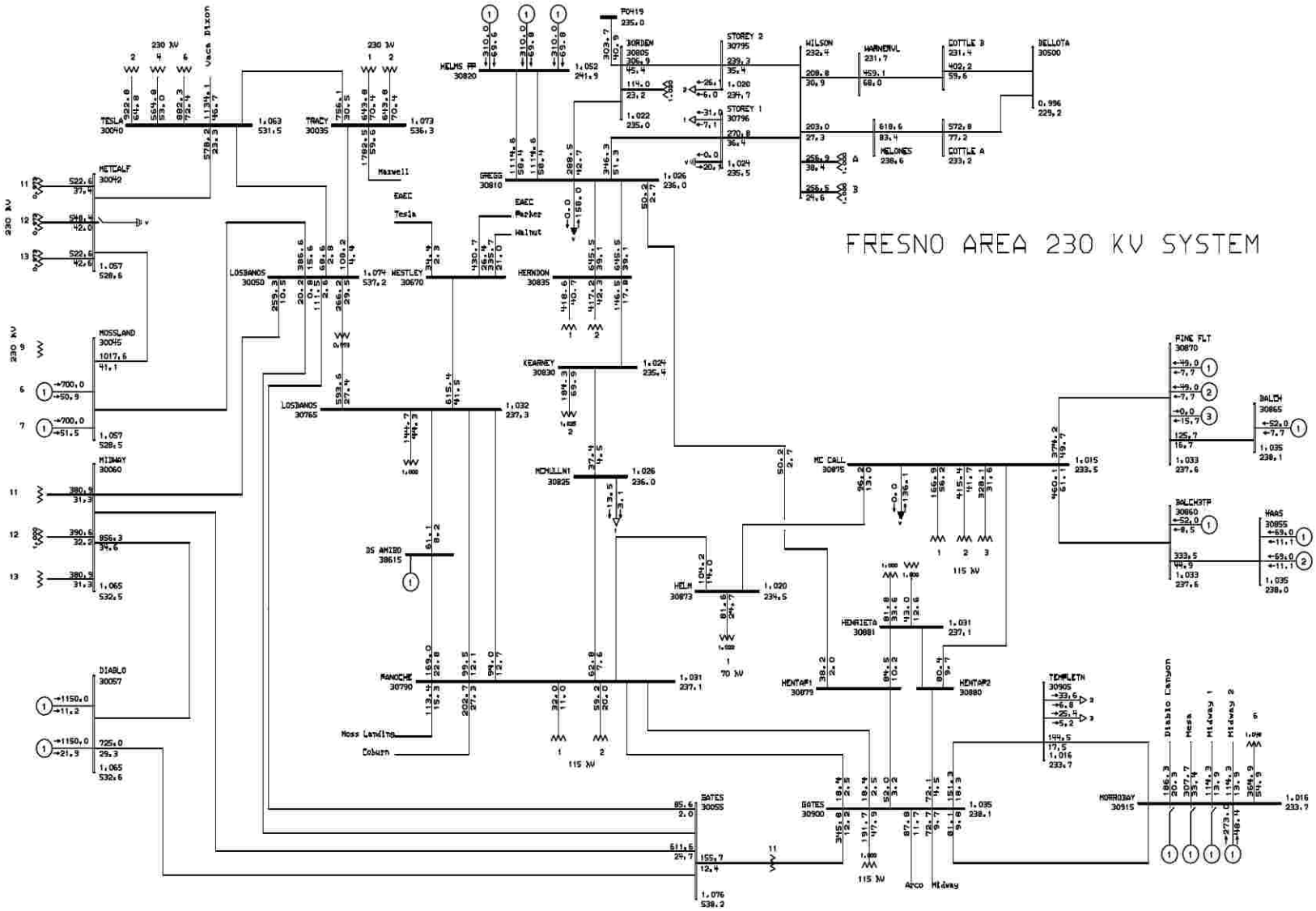

General Electric International, Inc. PSLF Program AMPS/Pct Thu Apr 28 21:20:51 2005

PG&E Tranmission Planning	PG&E 2004 BASE CASE SERIES - 2008 South Valley Summer Peak Case PATH15=-266 MW(S-N) PATH26=3388 MW(N-S) PDCI=3104 MW(N-S) COI=4789 MW(N-S) Bullard Energy Center- 2008 Summer Peak - before	Plot 2 - 2008 Summer Peak Normal Conditions - Before Project 230 kV	C:\PSLF_Work\34\PGE\Bullard-En C:\PSLF_Work\34\PGE\Bullard-En Rating = 1

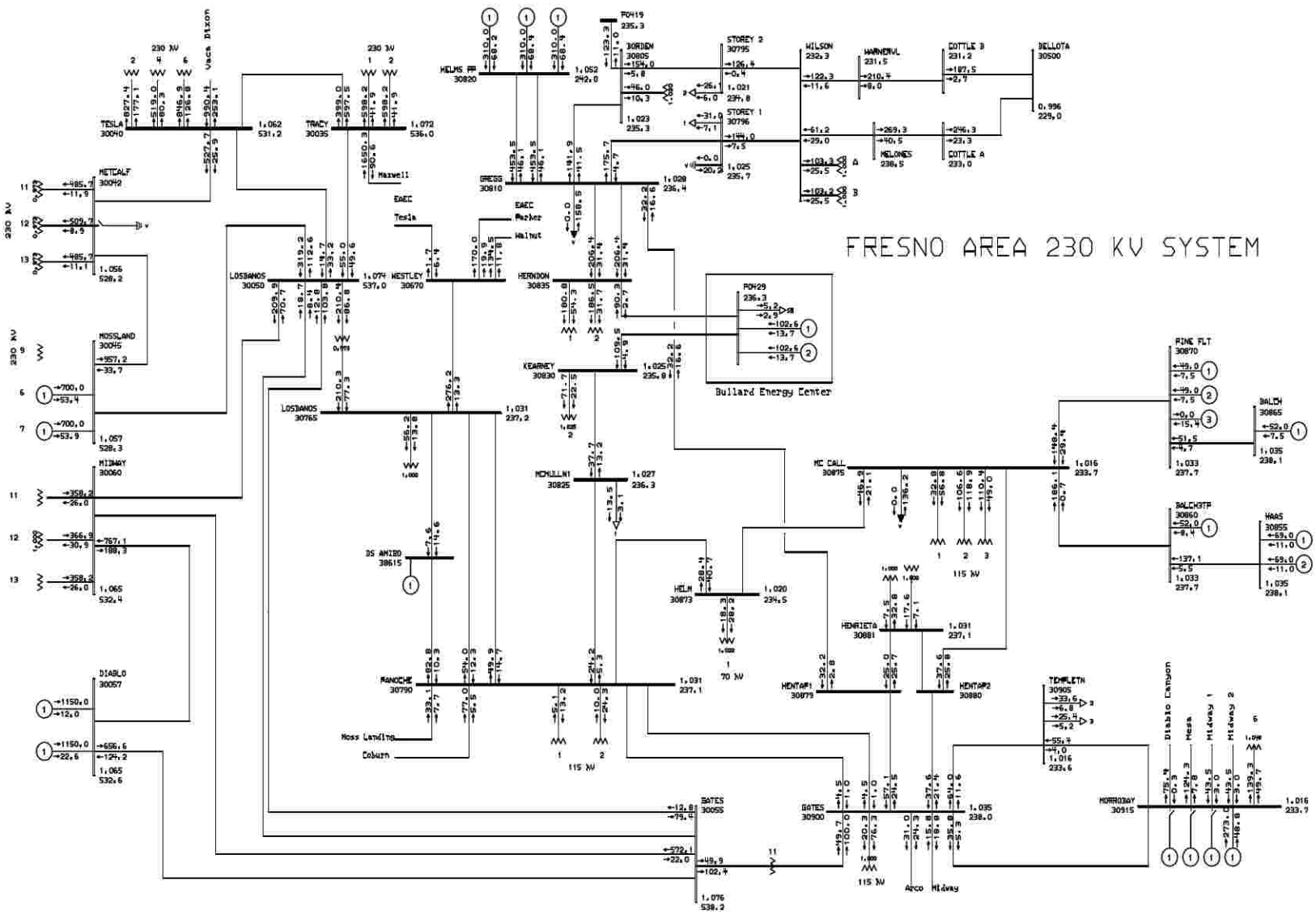

General Electric International, Inc. PSLF Program MW/MVAR Thu Apr 28 21:20:53 2005

PG&E Tranmission Planning	PG&E 2004 BASE CASE SERIES - 2008 South Valley Summer Peak Case PATH15=-264 MW(S-N) PATH26=3393 MW(N-S) PDCI=3104 MW(N-S) COI=4794 MW(N-S) Bullard Energy Center- 2008 Summer Peak - after	Plot 3 - 2008 Summer Peak Normal Conditions - After Project 230 kV	C:\PSLF_Work\34\PGE\Bullard-En C:\PSLF_Work\34\PGE\Bullard-En Rating = 1

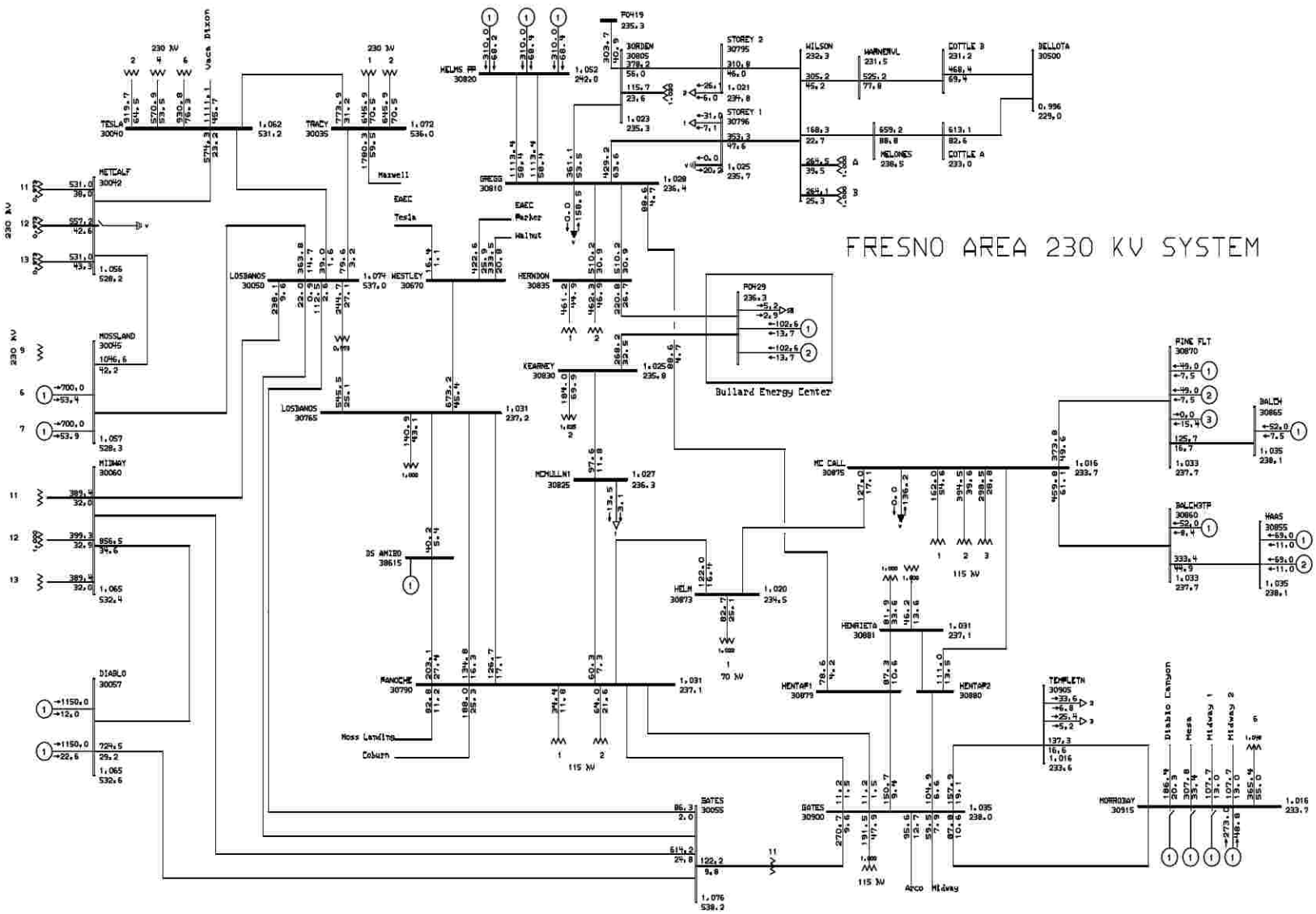

General Electric International, Inc. PSLF Program AMPS/Pct Thu Apr 28 21:20:54 2005

PG&E Tranmission Planning	PG&E 2004 BASE CASE SERIES - 2008 South Valley Summer Peak Case PATH15=-264 MW(S-N) PATH26=3393 MW(N-S) PDCI=3104 MW(N-S) COI=4794 MW(N-S) Bullard Energy Center- 2008 Summer Peak - after	Plot 4 - 2008 Summer Peak Normal Conditions - After Project 230 kV	C:\PSLF_Work\34\PGE\Bullard-En C:\PSLF_Work\34\PGE\Bullard-En Rating = 1

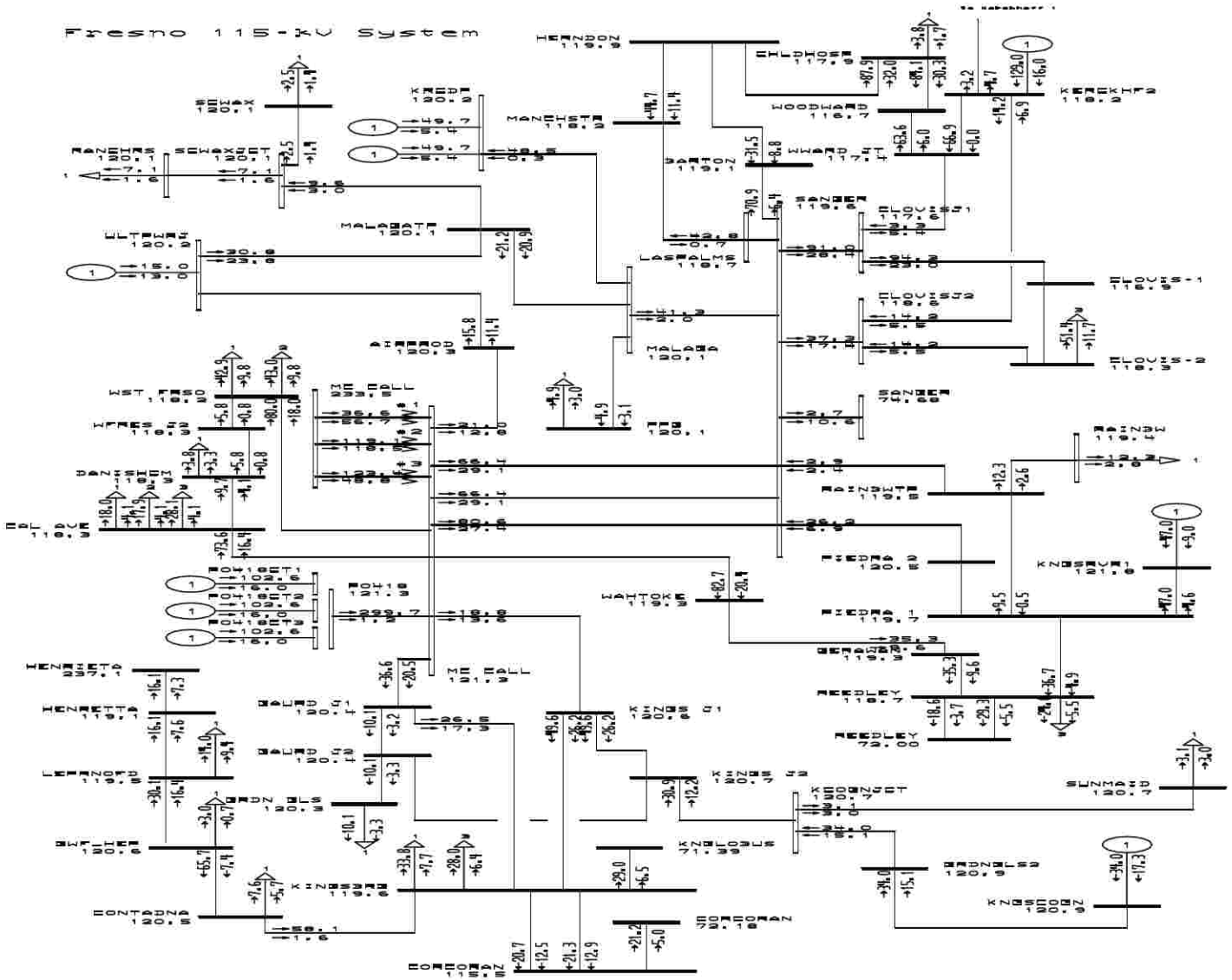

General Electric International, Inc. PSLF Program MW/MVAR Thu Apr 28 21:20:51 2005

PG&E Tranmission Planning	PG&E 2004 BASE CASE SERIES - 2008 South Valley Summer Peak Case PATH15=-266 MW(S-N) PATH26=3388 MW(N-S) PDCI=3104 MW(N-S) COI=4789 MW(N-S) Bullard Energy Center- 2008 Summer Peak - before	Plot 5 - 2008 Summer Peak Normal Conditions - Before Project 115 kV	C:\PSLF_Work\34\PGE\Bullard-En C:\PSLF_Work\34\PGE\Bullard-En Rating = 1

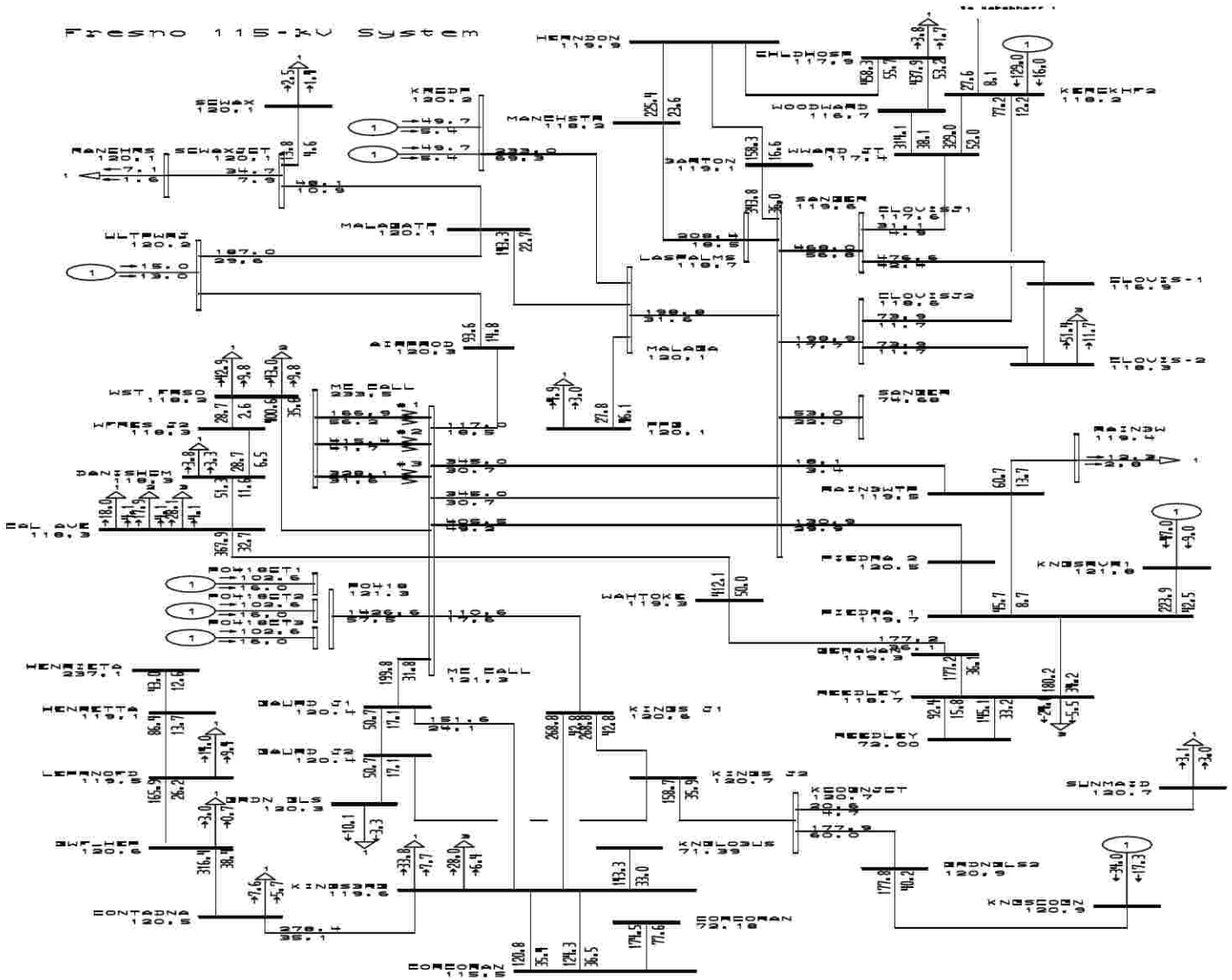

General Electric International, Inc. PSLF Program AMPS/Pct Thu Apr 28 21:20:51 2005

PG&E Tranmission Planning	PG&E 2004 BASE CASE SERIES - 2008 South Valley Summer Peak Case PATH15=-266 MW(S-N) PATH26=3388 MW(N-S) PDCI=3104 MW(N-S) COI=4789 MW(N-S) Bullard Energy Center- 2008 Summer Peak - before	Plot 6 - 2008 Summer Peak Normal Conditions - Before Project 115 kV	C:\PSLF_Work\34\PGE\Bullard-En C:\PSLF_Work\34\PGE\Bullard-En Rating = 1

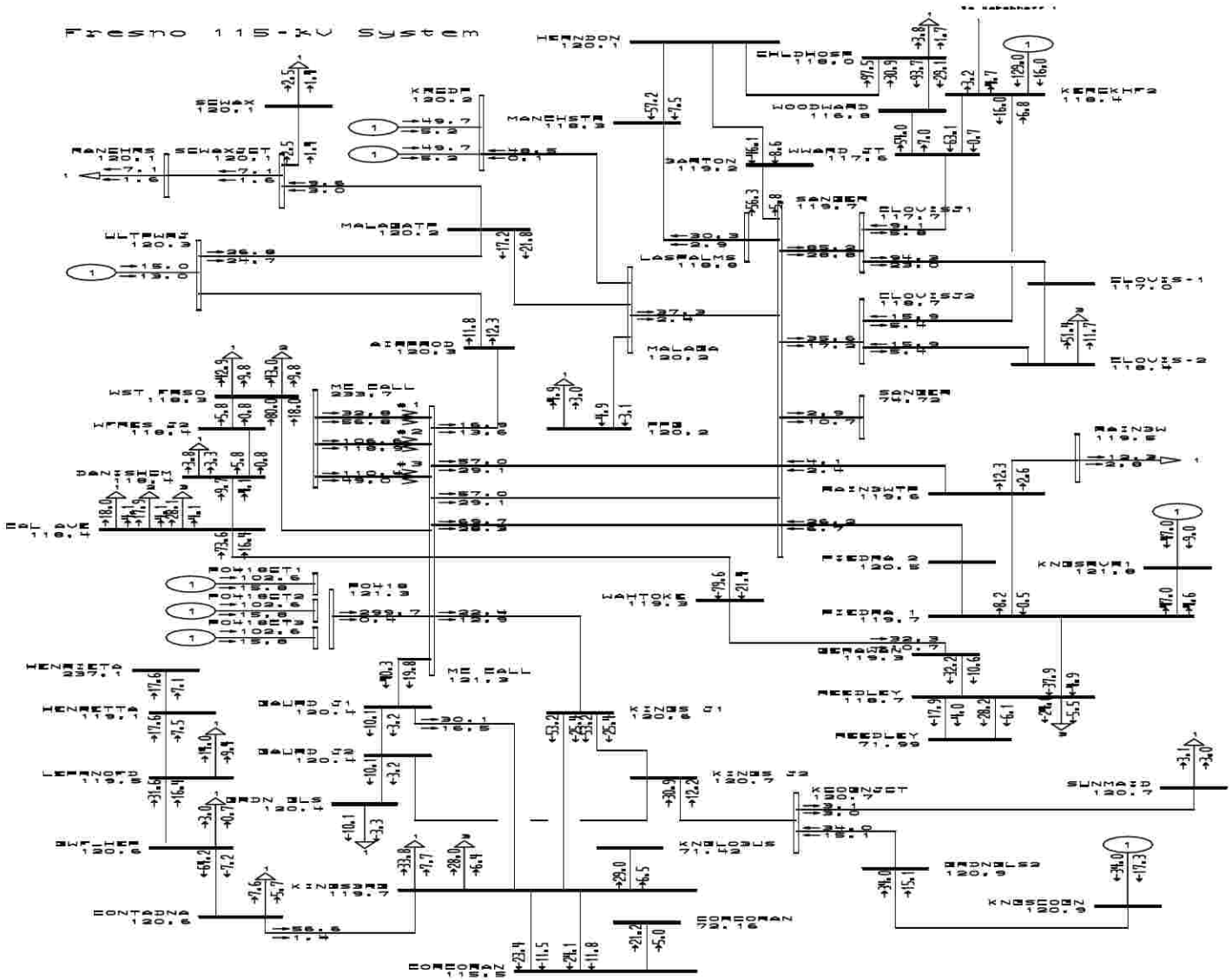

General Electric International, Inc. PSLF Program MW/MVAR Thu Apr 28 21:20:54 2005

PG&E Tranmission Planning	PG&E 2004 BASE CASE SERIES - 2008 South Valley Summer Peak Case PATH15=-264 MW(S-N) PATH26=3393 MW(N-S) PDCI=3104 MW(N-S) COI=4794 MW(N-S) Bullard Energy Center- 2008 Summer Peak - after	Plot 7 - 2008 Summer Peak Normal Conditions - After Project 115 kV	C:\PSLF_Work\34\PGE\Bullard-En C:\PSLF_Work\34\PGE\Bullard-En Rating = 1

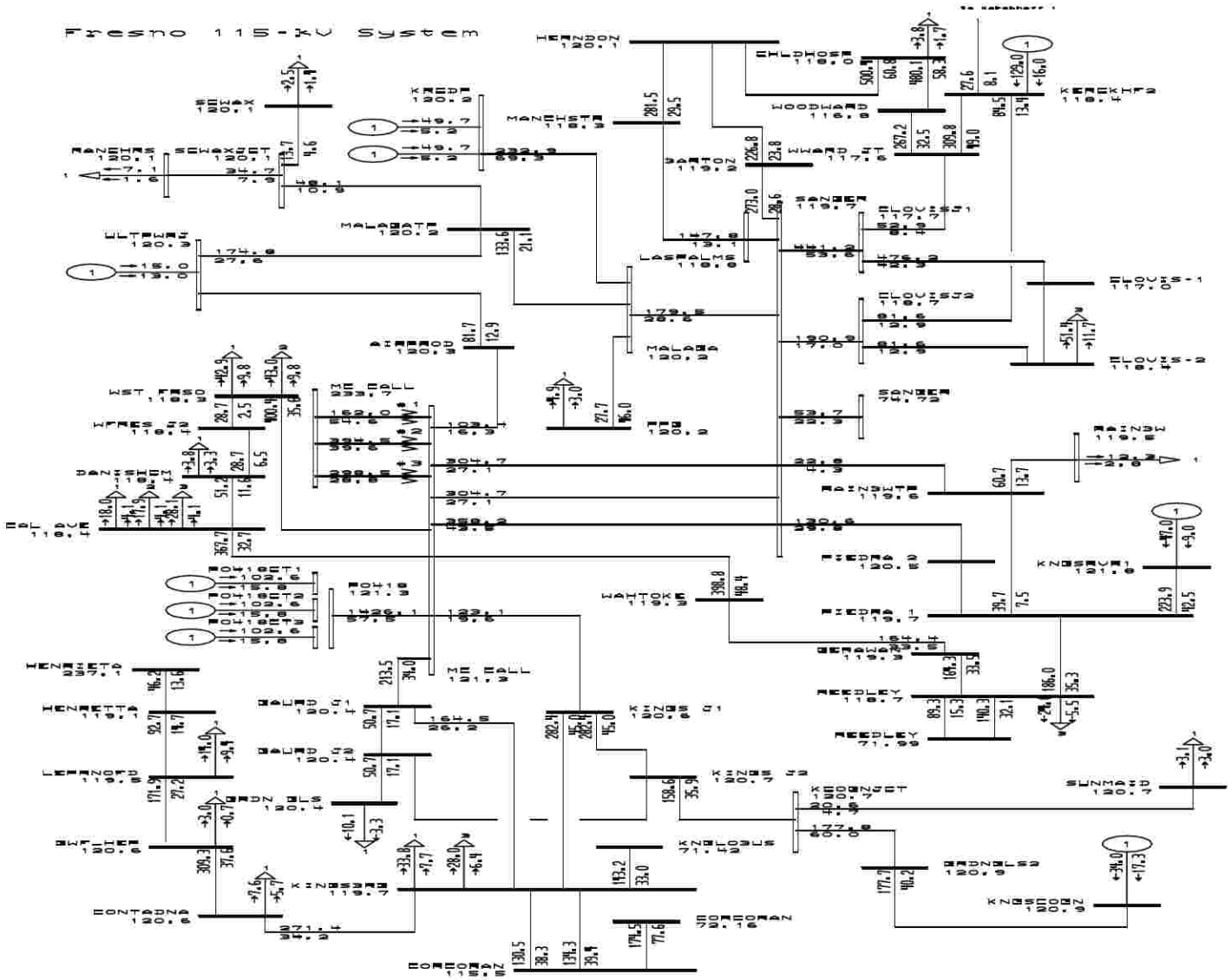

General Electric International, Inc. PSLF Program AMPS/Pct Thu Apr 28 21:20:54 2005

PG&E Tranmission Planning	PG&E 2004 BASE CASE SERIES - 2008 South Valley Summer Peak Case PATH15=-264 MW(S-N) PATH26=3393 MW(N-S) PDCI=3104 MW(N-S) COI=4794 MW(N-S) Bullard Energy Center- 2008 Summer Peak - after	Plot 8 - 2008 Summer Peak Normal Conditions - After Project 115 kV	C:\PSLF_Work\34\PGE\Bullard-En C:\PSLF_Work\34\PGE\Bullard-En Rating = 1

FRESNO AREA 70 KV SYSTEM

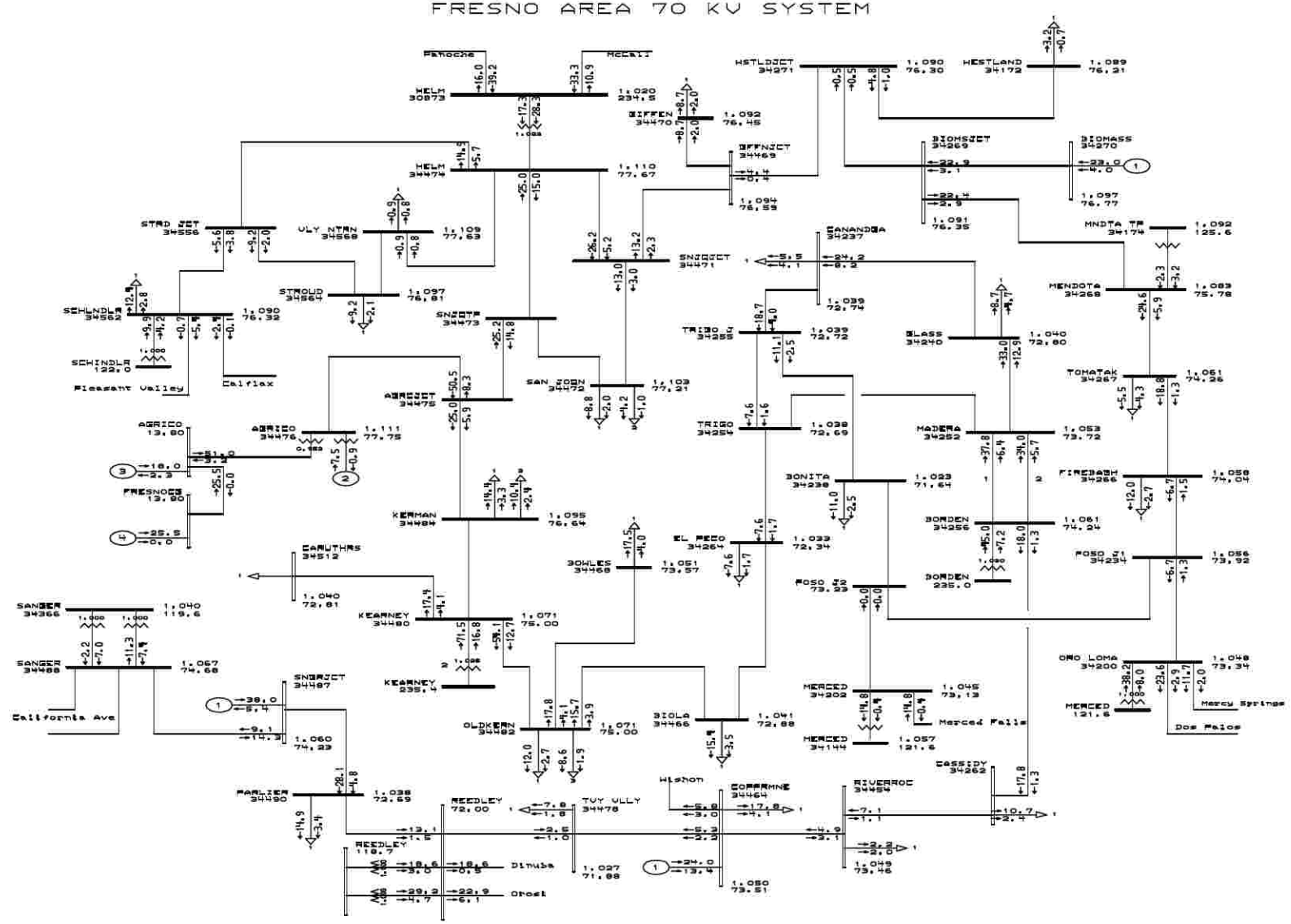

General Electric International, Inc. PSLF Program MW/MVAR Thu Apr 28 21:20:51 2005

PG&E Tranmission Planning	PG&E 2004 BASE CASE SERIES - 2008 South Valley Summer Peak Case PATH15=-266 MW(S-N) PATH26=3388 MW(N-S) PDCI=3104 MW(N-S) COI=4789 MW(N-S) Bullard Energy Center- 2008 Summer Peak - before	Plot 9 - 2008 Summer Peak Normal Conditions - Before Project 70 kV	C:\PSLF_Work\34\PGE\Bullard-En C:\PSLF_Work\34\PGE\Bullard-En Rating = 1

FRESNO AREA 70 KV SYSTEM

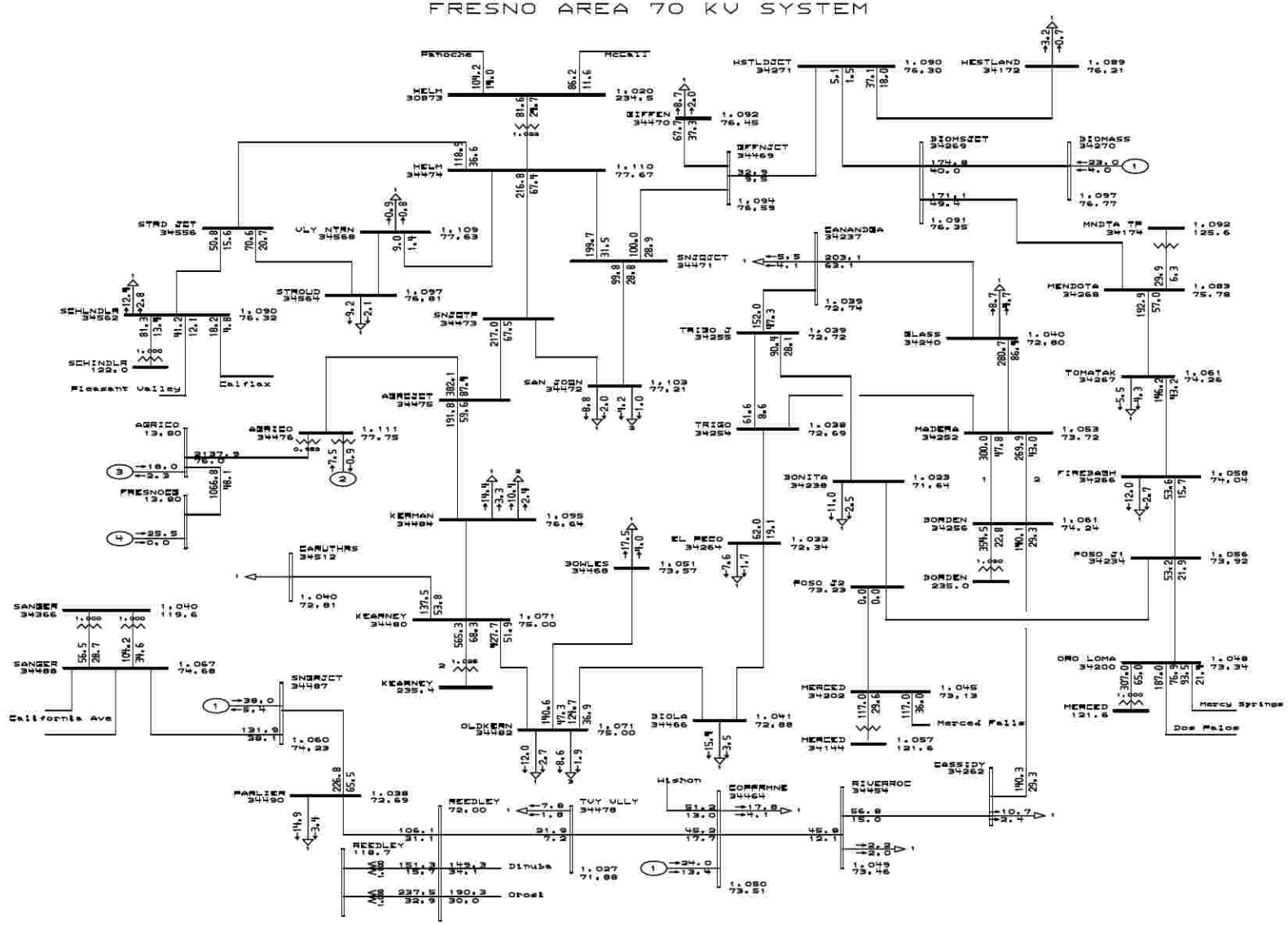

General Electric International, Inc. PSLF Program AMPS/Pct Thu Apr 28 21:20:52 2005

PG&E Tranmission Planning	PG&E 2004 BASE CASE SERIES - 2008 South Valley Summer Peak Case PATH15=-266 MW(S-N) PATH26=3388 MW(N-S) PDCI=3104 MW(N-S) COI=4789 MW(N-S) Bullard Energy Center- 2008 Summer Peak - before	Plot 10 - 2008 Summer Peak Normal Conditions - Before Project 70 kV	C:\PSLF_Work\34\PGE\Bullard-En C:\PSLF_Work\34\PGE\Bullard-En Rating = 1

FRESNO AREA 70 KV SYSTEM

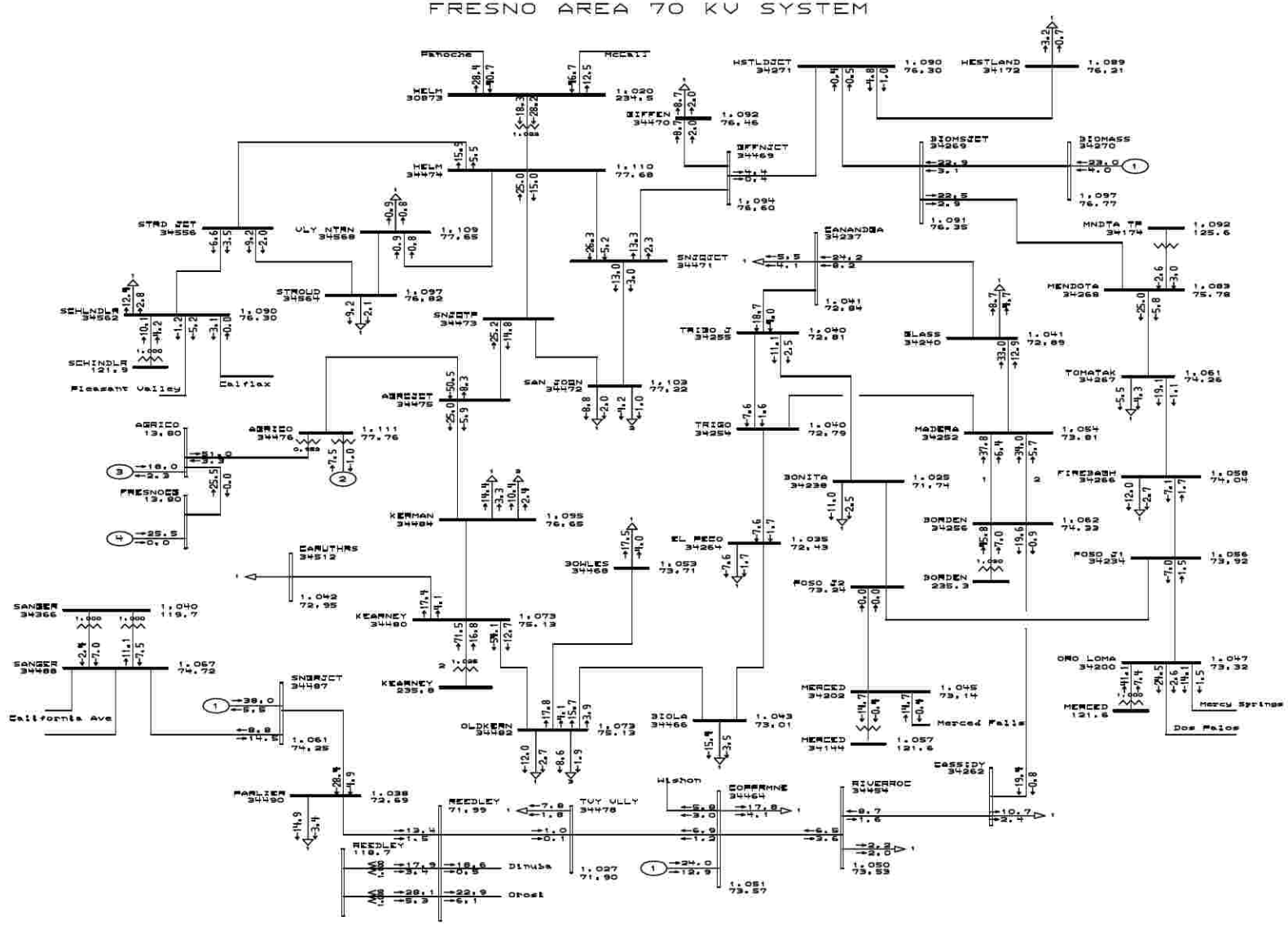

General Electric International, Inc. PSLF Program MW/MVAR Thu Apr 28 21:20:54 2005

PG&E Tranmission Planning	PG&E 2004 BASE CASE SERIES - 2008 South Valley Summer Peak Case PATH15=-264 MW(S-N) PATH26=3393 MW(N-S) PDCI=3104 MW(N-S) COI=4794 MW(N-S) Bullard Energy Center- 2008 Summer Peak - after	Plot 11 - 2008 Summer Peak Normal Conditions - After Project 70 kV	C:\PSLF_Work\34\PGE\Bullard-En C:\PSLF_Work\34\PGE\Bullard-En Rating = 1

FRESNO AREA 70 KV SYSTEM

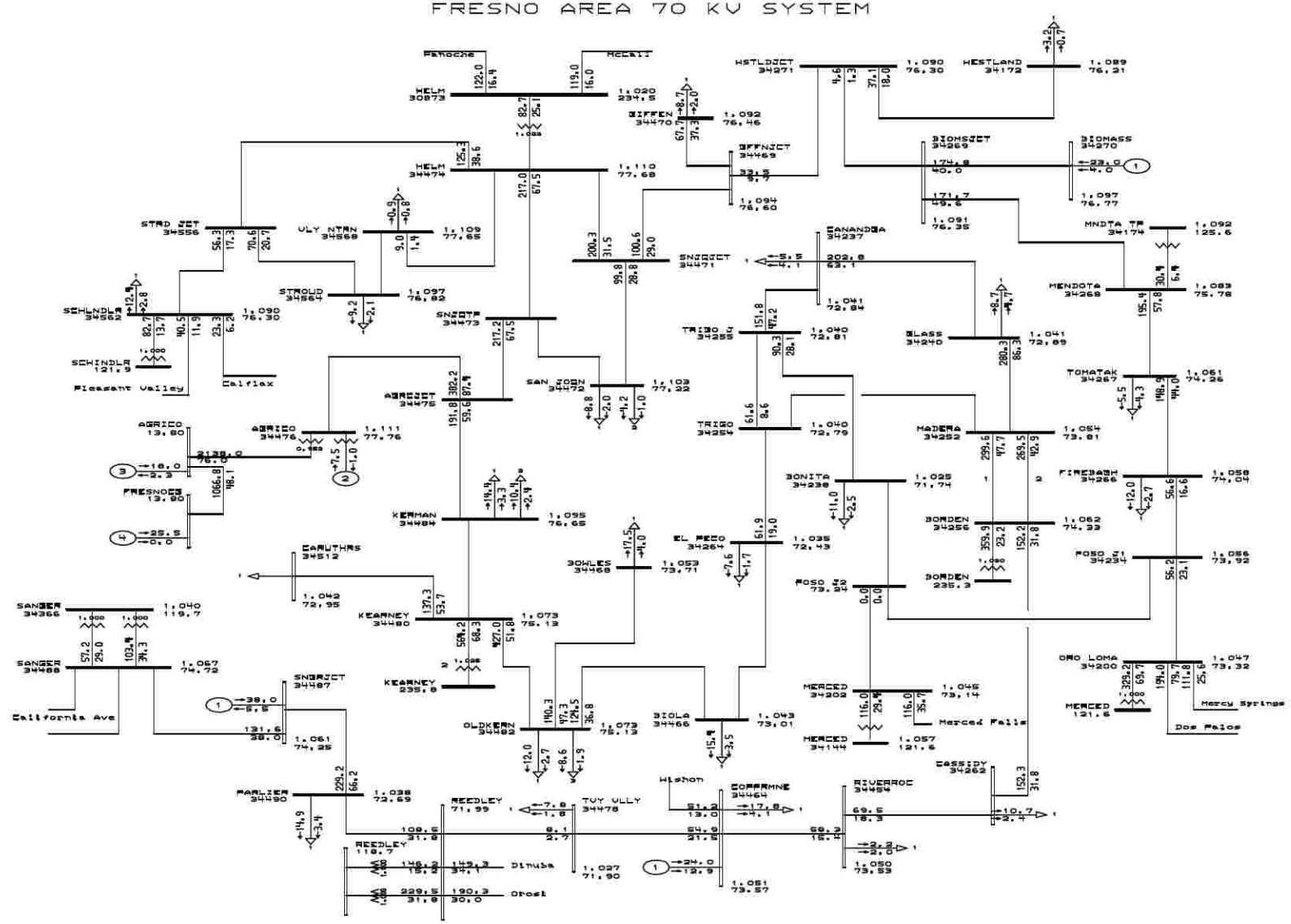

General Electric International, Inc. PSLF Program AMPS/Pct Thu Apr 28 21:20:54 2005

PG&E Tranmission Planning	PG&E 2004 BASE CASE SERIES - 2008 South Valley Summer Peak Case PATH15=-264 MW(S-N) PATH26=3393 MW(N-S) PDCI=3104 MW(N-S) COI=4794 MW(N-S) Bullard Energy Center- 2008 Summer Peak - after	Plot 12 - 2008 Summer Peak Normal Conditions - After Project 70 kV	C:\PSLF_Work\34\PGE\Bullard-En C:\PSLF_Work\34\PGE\Bullard-En Rating = 1

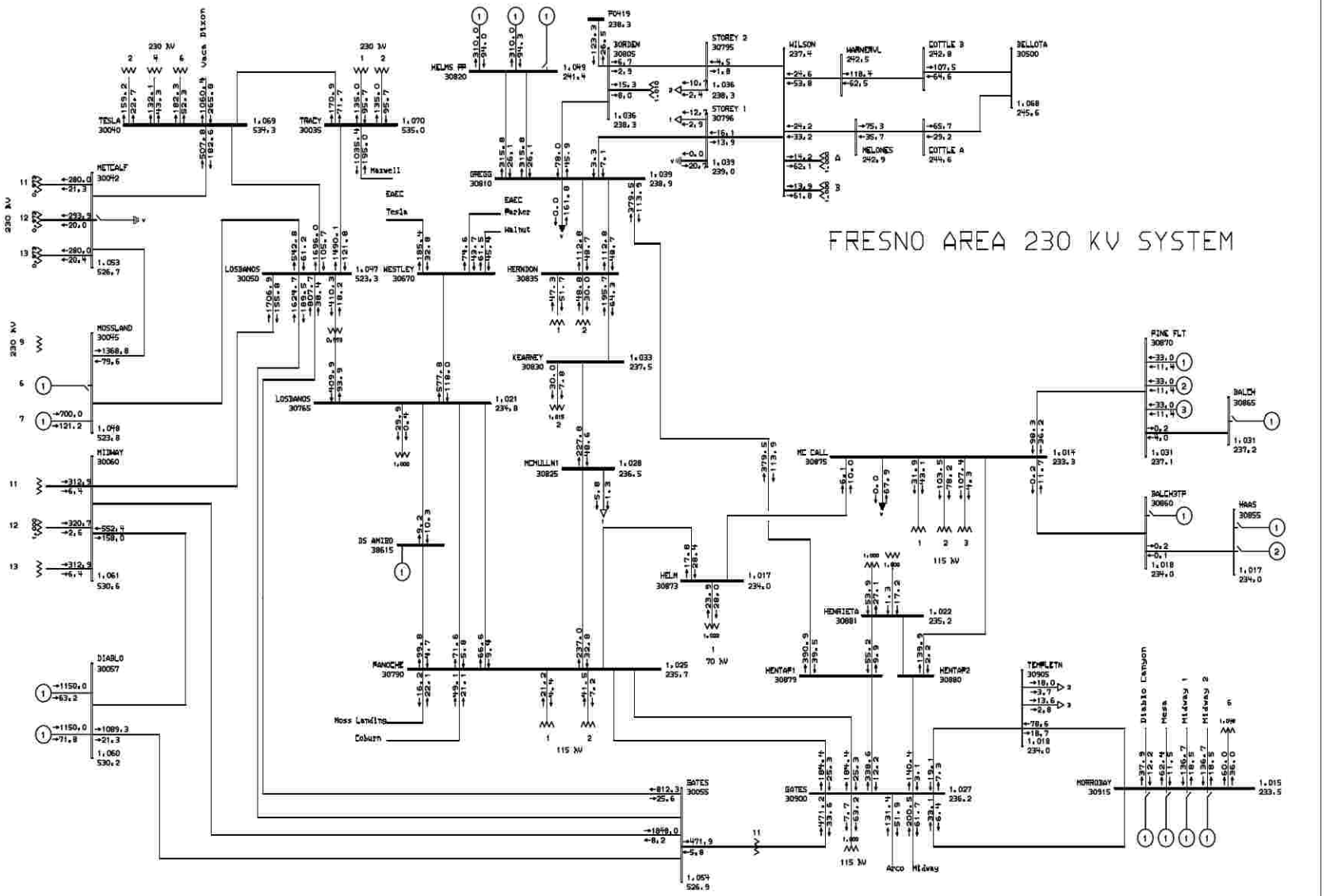

General Electric International, Inc. PSLF Program MW/MVAR Thu Apr 28 21:20:54 2005

PG&E Tranmission Planning	PG&E 2004 BASE CASE SERIES - 2008 Summer Off Peak Case PATH15=4987 MW(S-N) PATH26=-1569 MW(N-S) PDCI=-1848 MW(N-S) COI=-3636 MW(N-S) Bullard Energy Center - 2008 Summer Off Peak - before	Plot 13 - 2008 Summer Off-Peak Normal Conditions - Before Project 23	C:\PSLF_Work\34\PGE\Bullard-En C:\PSLF_Work\34\PGE\Bullard-En Rating = 1

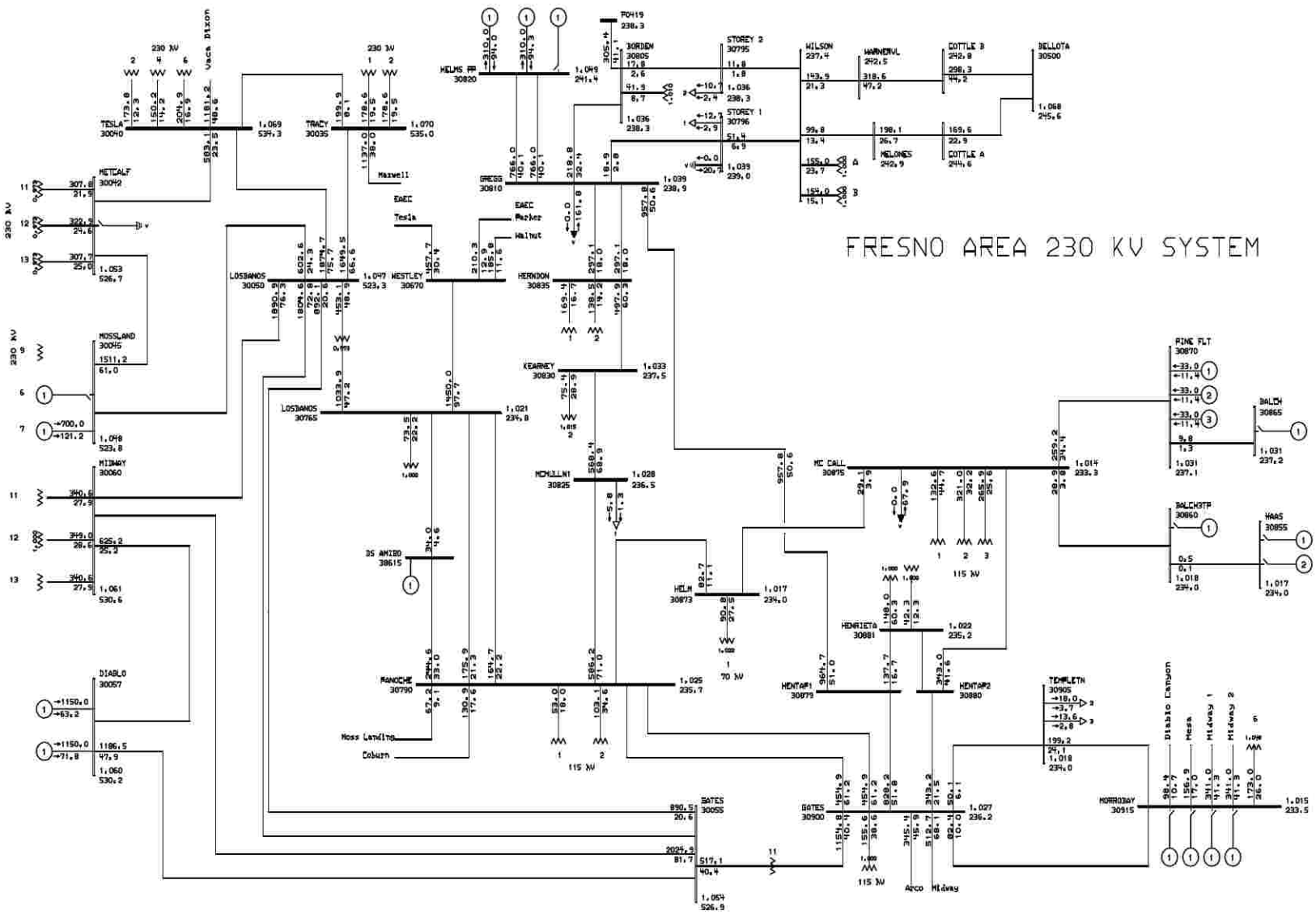

General Electric International, Inc. PSLF Program AMPS/Pct Thu Apr 28 21:20:55 2005

PG&E Tranmission Planning	PG&E 2004 BASE CASE SERIES - 2008 Summer Off Peak Case PATH15=4987 MW(S-N) PATH26=-1569 MW(N-S) PDCI=-1848 MW(N-S) COI=-3636 MW(N-S) Bullard Energy Center - 2008 Summer Off Peak - before	Plot 14 - 2008 Summer Off-Peak Normal Conditions - Before Project 23	C:\PSLF_Work\34\PGE\Bullard-En C:\PSLF_Work\34\PGE\Bullard-En Rating = 1

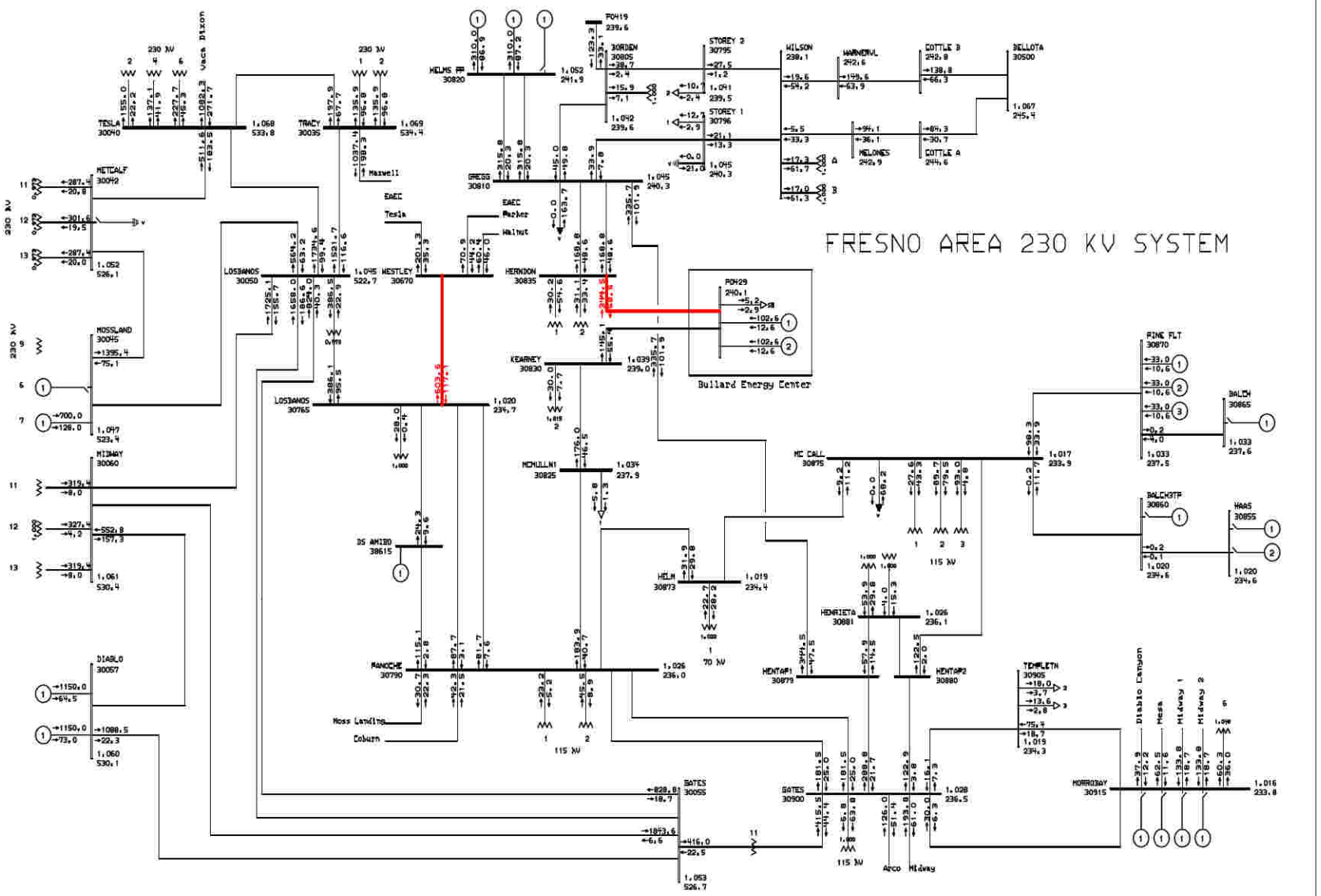
FRESNO AREA 230 KV SYSTEM
Bullard Energy Center
TESLA 30040
TRACY 30035
WELMS PP 30820
GREGG 30810
STOREY 2 30795
STOREY 1 30796
BORDEN 30805
WILSON 230.1
WARNERVL 242.6
COTTLE B 242.8
BELLOTA 30500
COTTLE A 244.6
MELONES 242.9
METCALF 30042
MOSSLAND 30045
MIDWAY 30060
DIABLO 30057
LOSBANOS 30050
LOSBANOS 30765
WESTLEY 30670
HERNDON 30835
KEARNEY 30830
MCMULLN1 30825
DS AMIRO 30615
MANOCHE 30790
Moss Landing
Coburn
Maxwell
EAEC
Tesla
Marker
Walnut
HELM 30873
70 kV
115 kV
MC CALL 30875
HENRIETA 30881
HENTAP1 30879
HENTAP2 30880
GATES 30055
GATES 30500
Arco
Midway
TEMPLETN 30905
MORROBAY 30915
Diablo Canyon
Mesa
Midway 1
Midway 2
PINE FLT 30870
BALCH 30865
BALCH3TP 30860
HAAS 30855
FOH19 239.6
FOH29 240.1
General Electric International, Inc.
PSLF Program
MW/MVAR
Thu Apr 28 21:20:56 2005
PG&E
Tranmission Planning
PG&E 2004 BASE CASE SERIES - 2008 Summer Off Peak Case
PATH15=4982 MW(S-N) PATH26=-1563 MW(N-S) PDCI=-1848 MW(N-S) COI=-3630 MW(N-S)
Bullard Energy Center - 2008 Summer Off Peak - after
Plot 15 - 2008 Summer Off-Peak Normal Conditions - After Project 230
C:\PSLF_Work\34\PGE\Bullard-En
C:\PSLF_Work\34\PGE\Bullard-En
Rating = 1

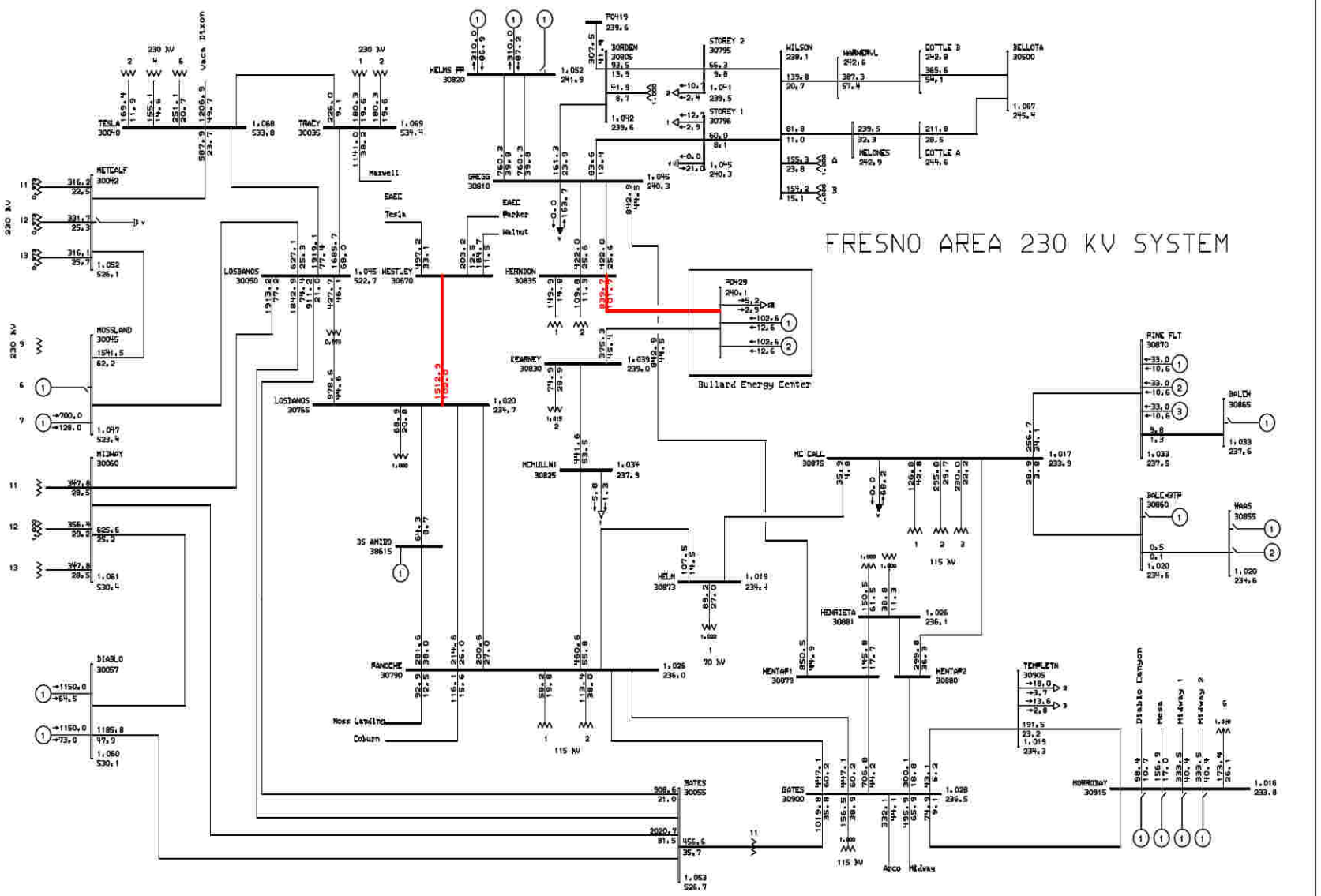

General Electric International, Inc. PSLF Program AMPS/Pct Thu Apr 28 21:20:56 2005

PG&E Tranmission Planning	PG&E 2004 BASE CASE SERIES - 2008 Summer Off Peak Case PATH15=4982 MW(S-N) PATH26=-1563 MW(N-S) PDCI=-1848 MW(N-S) COI=-3630 MW(N-S) Bullard Energy Center - 2008 Summer Off Peak - after	Plot 16 - 2008 Summer Off-Peak Normal Conditions - After Project 230	C:\PSLF_Work\34\PGE\Bullard-En C:\PSLF_Work\34\PGE\Bullard-En Rating = 1

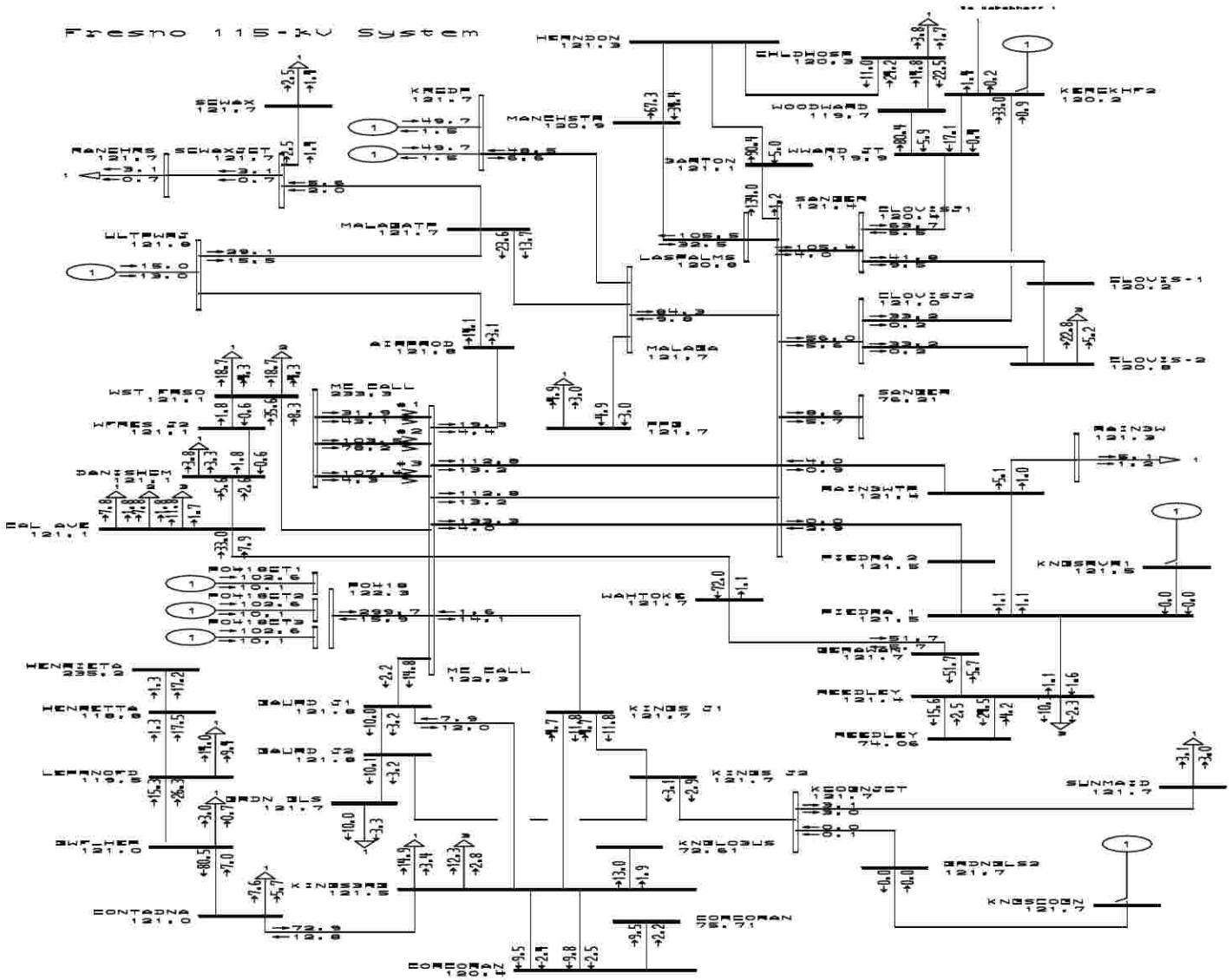

General Electric International, Inc. PSLF Program MW/MVAR Thu Apr 28 21:20:55 2005

PG&E Tranmission Planning	PG&E 2004 BASE CASE SERIES - 2008 Summer Off Peak Case PATH15=4987 MW(S-N) PATH26=-1569 MW(N-S) FDCI=-1848 MW(N-S) COI=-3636 MW(N-S) Bullard Energy Center - 2008 Summer Off Peak - before	Plot 17 - 2008 Summer Off-Peak Normal Conditions - Before Project 11	C:\PSLF_Work\34\PGE\Bullard-En C:\PSLF_Work\34\PGE\Bullard-En Rating = 1

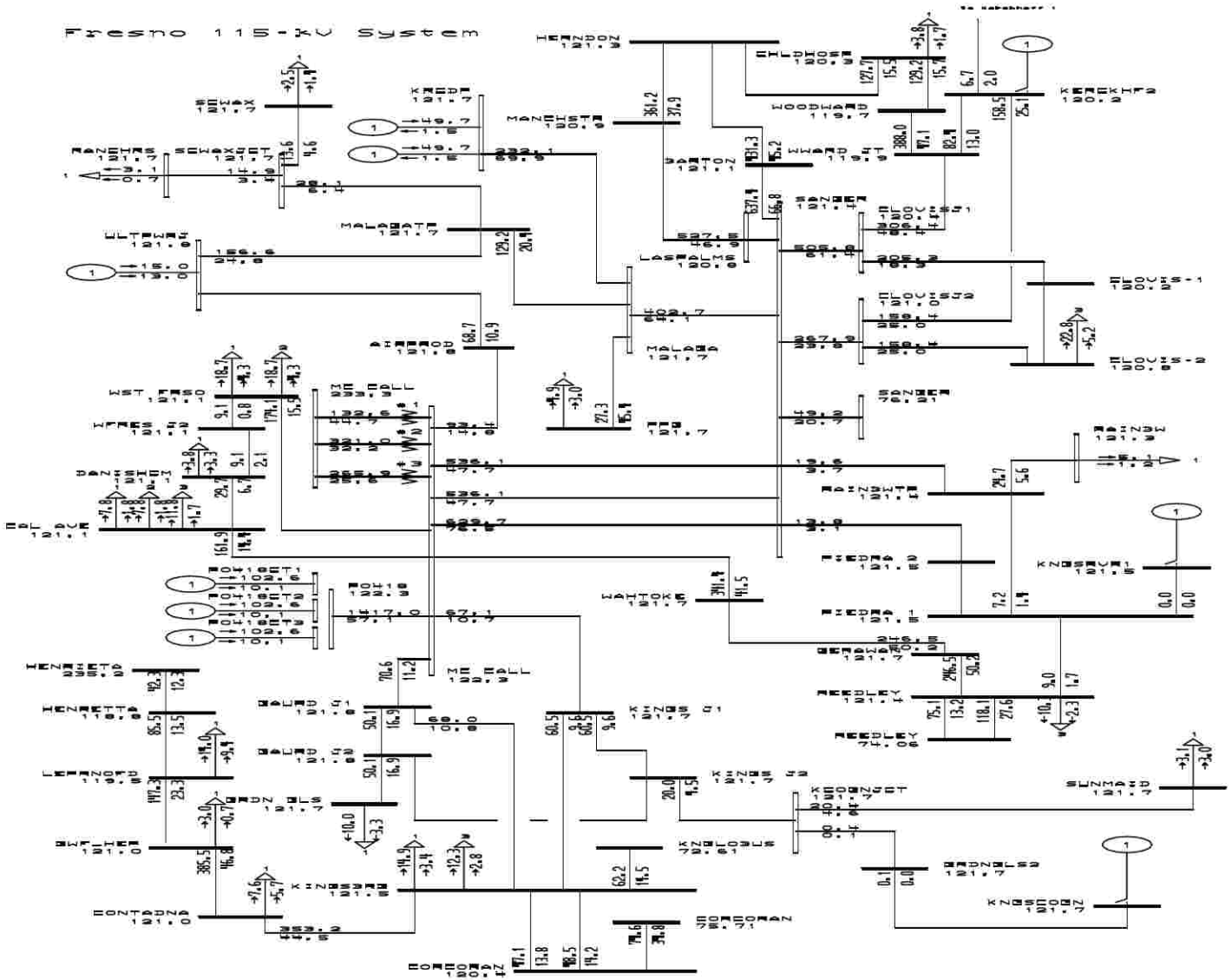

General Electric International, Inc. PSLF Program AMPS/Pct Thu Apr 28 21:20:55 2005

PG&E Tranmission Planning	PG&E 2004 BASE CASE SERIES - 2008 Summer Off Peak Case PATH15=4987 MW(S-N) PATH26=-1569 MW(N-S) FDCI=-1848 MW(N-S) COI=-3636 MW(N-S) Bullard Energy Center - 2008 Summer Off Peak - before	Plot 18 - 2008 Summer Off-Peak Normal Conditions - Before Project 11	C:\PSLF_Work134\PGE\Bullard-En C:\PSLF_Work134\PGE\Bullard-En Rating = 1

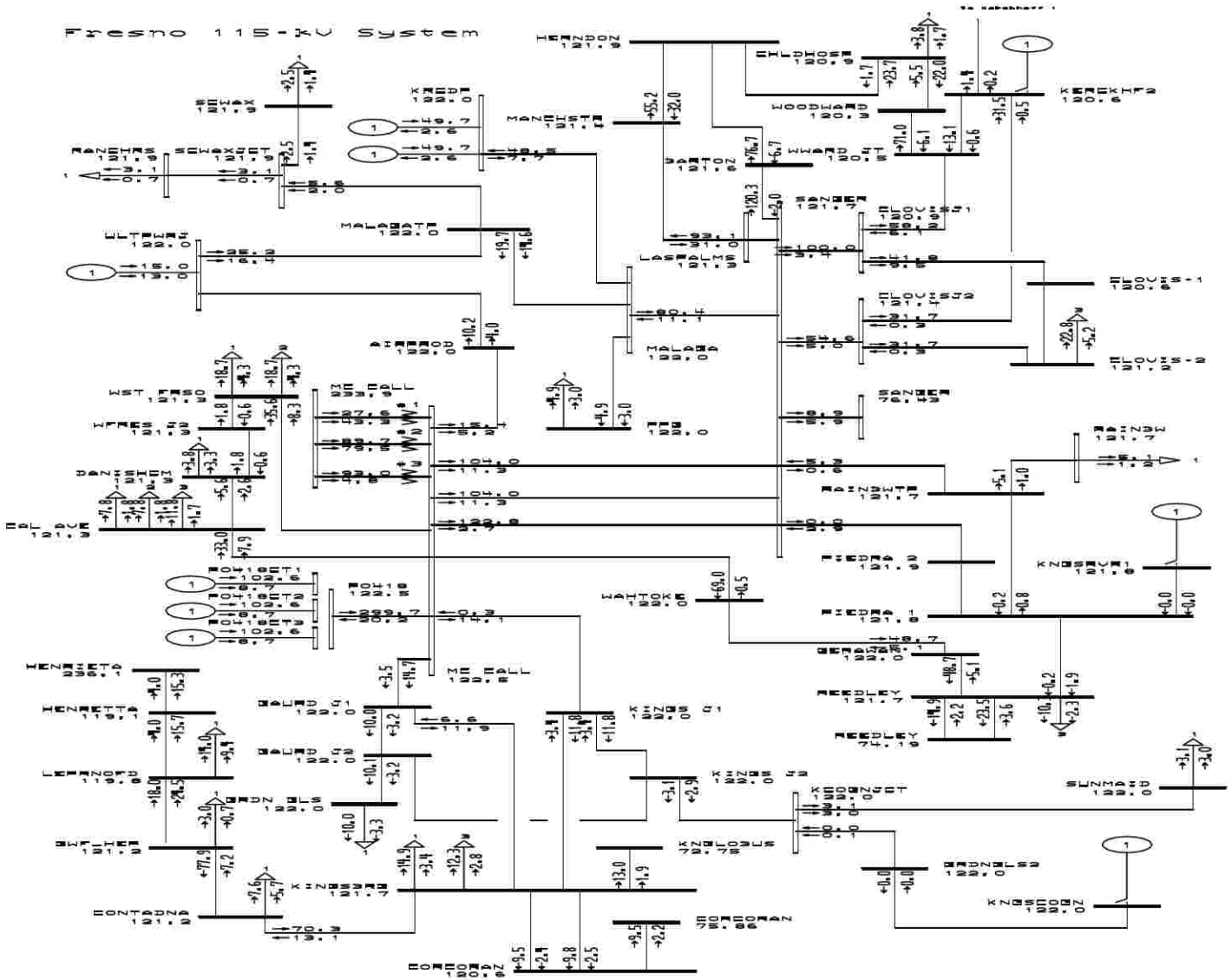

General Electric International, Inc. PSLF Program MW/MVAR Thu Apr 28 21:20:56 2005

PG&E Tranmission Planning	PG&E 2004 BASE CASE SERIES - 2008 Summer Off Peak Case PATH15=4982 MW(S-N) PATH26=-1563 MW(N-S) FDCI=-1848 MW(N-S) COI=-3630 MW(N-S) Bullard Energy Center - 2008 Summer Off Peak - after	Plot 19 - 2008 Summer Off-Peak Normal Conditions - After Project 115	C:\PSLF_Work\34\PGE\Bullard-En C:\PSLF_Work\34\PGE\Bullard-En Rating = 1

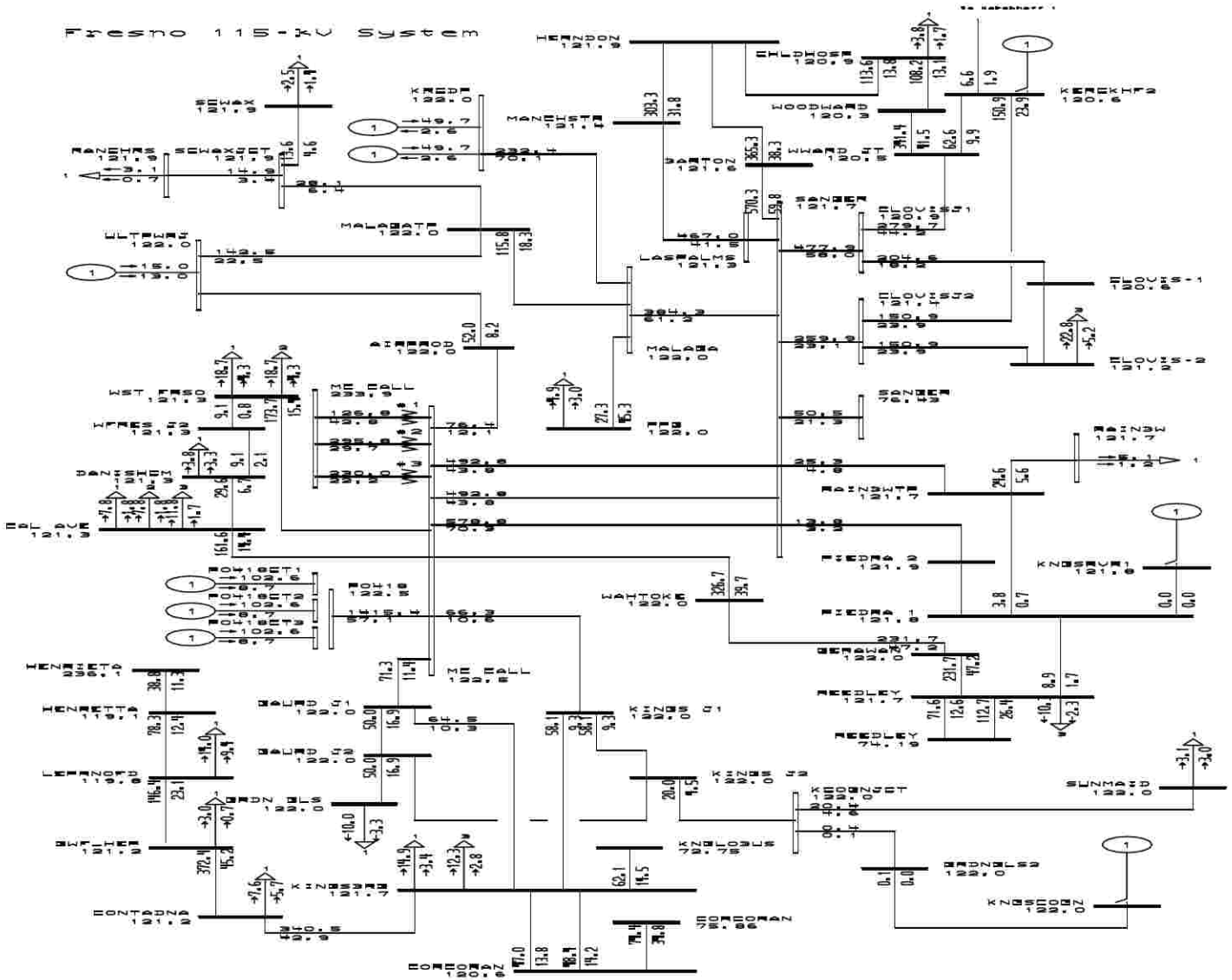

General Electric International, Inc. PSLF Program AMPS/Pct Thu Apr 28 21:20:56 2005

PG&E Tranmission Planning	PG&E 2004 BASE CASE SERIES - 2008 Summer Off Peak Case PATH15=4982 MW(S-N) PATH26=-1563 MW(N-S) FDCI=-1848 MW(N-S) COI=-3630 MW(N-S) Bullard Energy Center - 2008 Summer Off Peak - after	Plot 20 - 2008 Summer Off-Peak Normal Conditions - After Project 115	C:\PSLF_Work\34\PGE\Bullard-En C:\PSLF_Work\34\PGE\Bullard-En Rating = 1

FRESNO AREA 70 KV SYSTEM

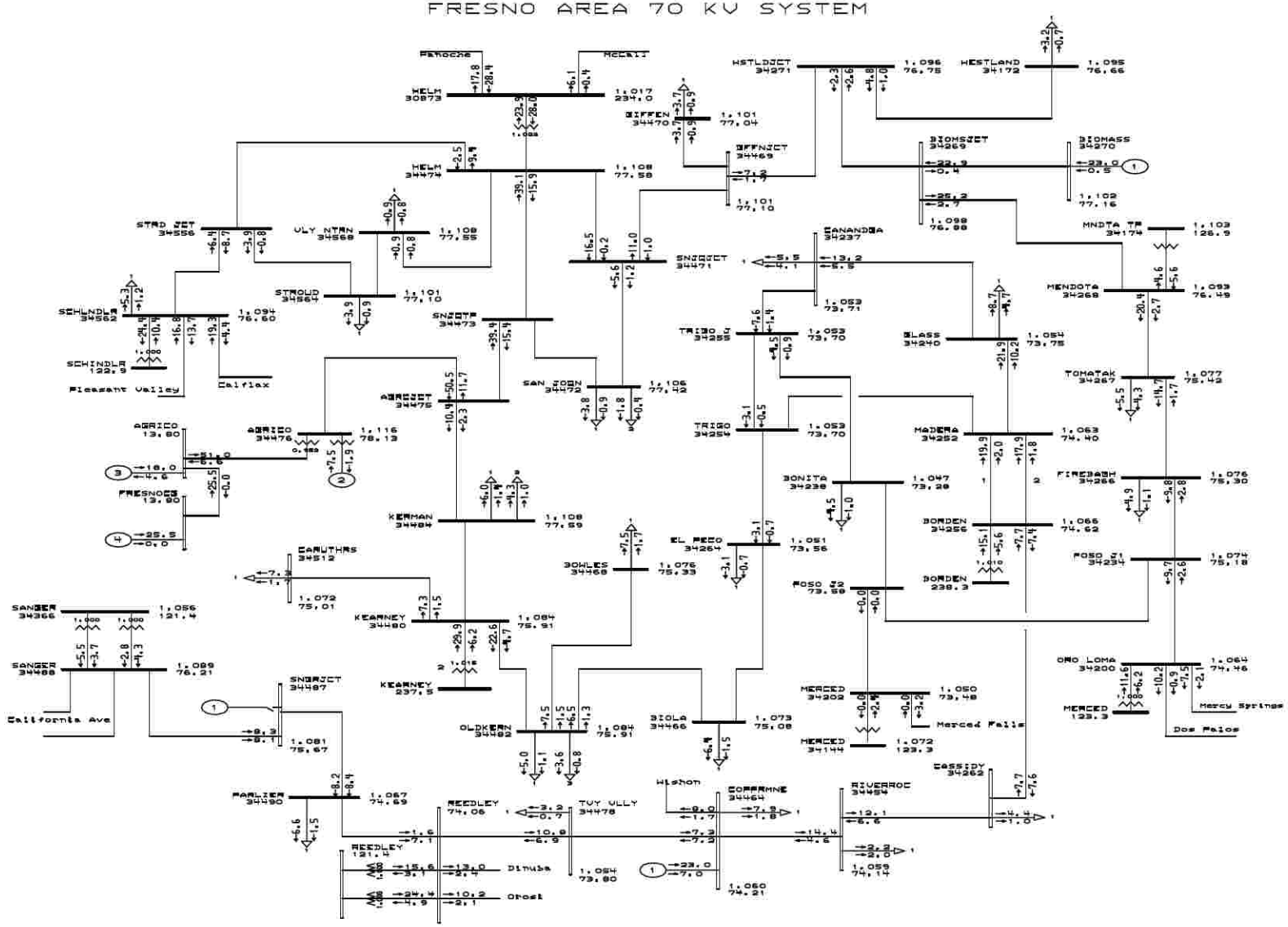

General Electric International, Inc. PSLF Program MW/MVAR Thu Apr 28 21:20:55 2005

PG&E Tranmission Planning	PG&E 2004 BASE CASE SERIES - 2008 Summer Off Peak Case PATH15=4987 MW(S-N) PATH26=-1569 MW(N-S) PDCI=-1848 MW(N-S) COI=-3636 MW(N-S) Bullard Energy Center - 2008 Summer Off Peak - before	Plot 21 - 2008 Summer Off-Peak Normal Conditions - Before Project 70	C:\PSLF_Work\34\PGE\Bullard-En C:\PSLF_Work\34\PGE\Bullard-En Rating = 1

FRESNO AREA 70 KV SYSTEM

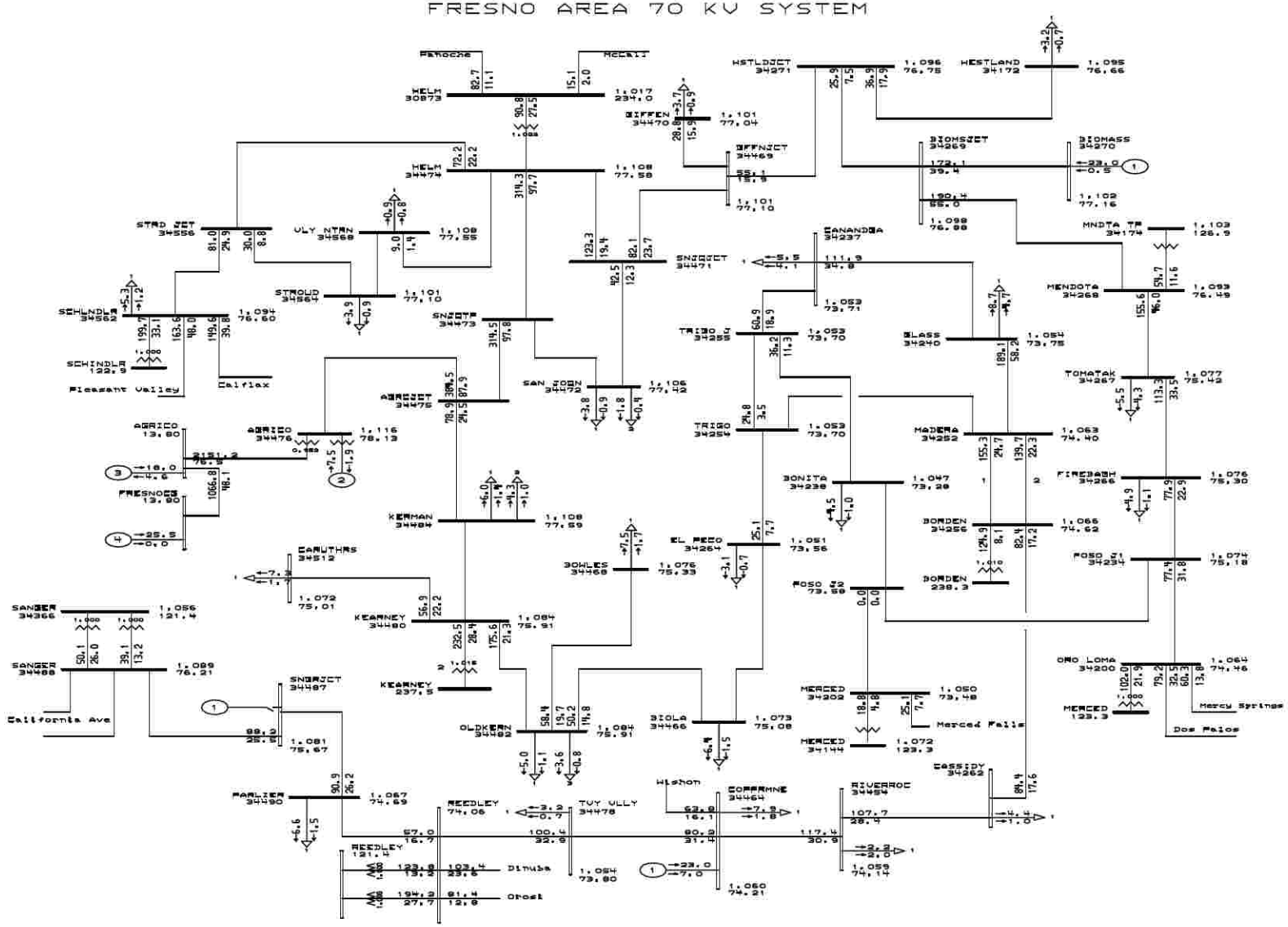

General Electric International, Inc. PSLF Program AMPS/Pct Thu Apr 28 21:20:55 2005

PG&E Tranmission Planning	PG&E 2004 BASE CASE SERIES - 2008 Summer Off Peak Case PATH15=4987 MW(S-N) PATH26=-1569 MW(N-S) PDCI=-1848 MW(N-S) COI=-3636 MW(N-S) Bullard Energy Center - 2008 Summer Off Peak - before	Plot 22 - 2008 Summer Off-Peak Normal Conditions - Before Project 70	C:\PSLF_Work\34\PGE\Bullard-En C:\PSLF_Work\34\PGE\Bullard-En Rating = 1

FRESNO AREA 70 KV SYSTEM

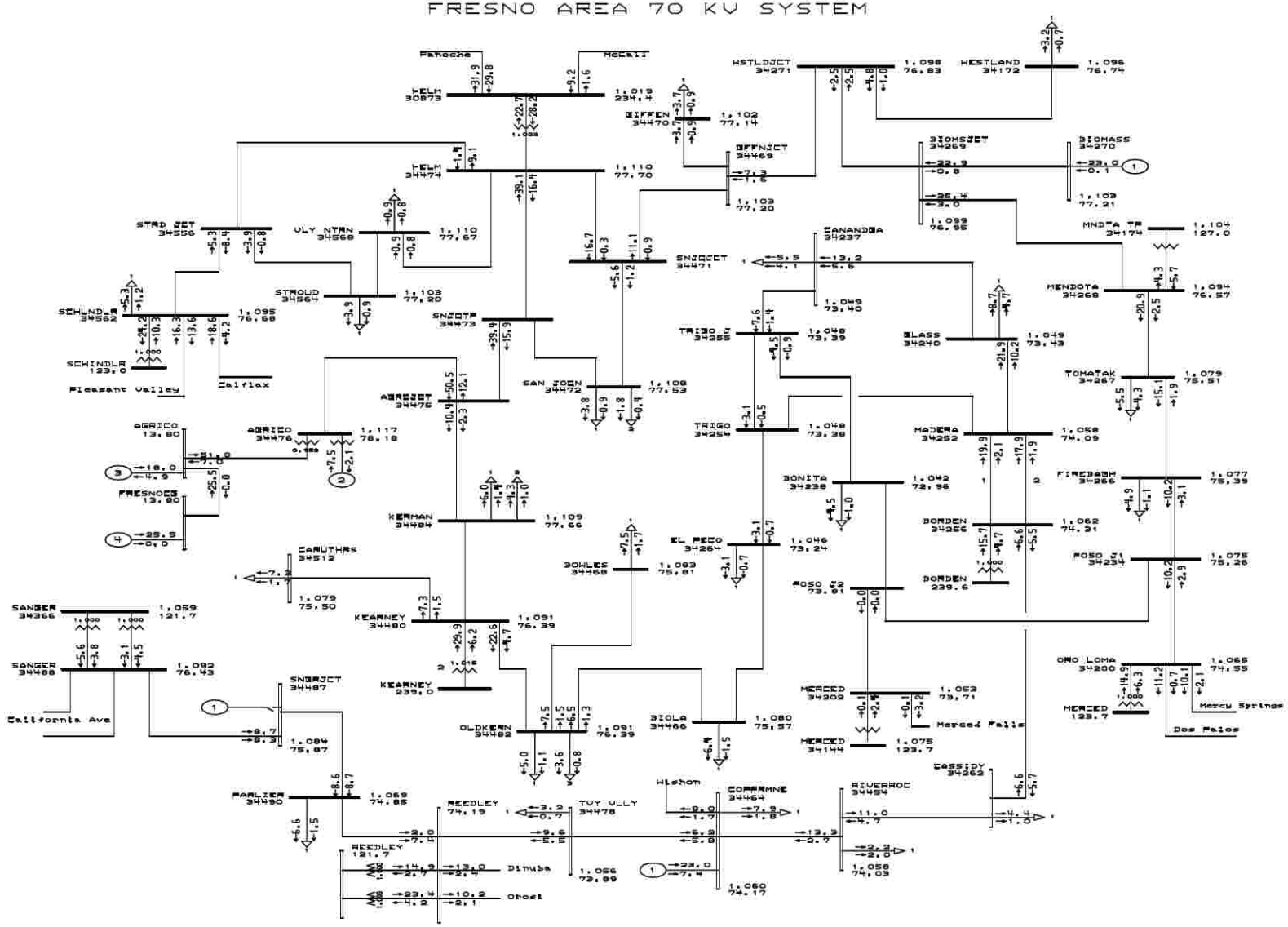

General Electric International, Inc. PSLF Program MW/MVAR Thu Apr 28 21:20:57 2005

PG&E Tranmission Planning	PG&E 2004 BASE CASE SERIES - 2008 Summer Off Peak Case PATH15=4982 MW(S-N) PATH26=-1563 MW(N-S) PDCI=-1848 MW(N-S) COI=-3630 MW(N-S) Bullard Energy Center - 2008 Summer Off Peak - after	Plot 23 - 2008 Summer Off-Peak Normal Conditions - After Project 70	C:\PSLF_Work\34\PGE\Bullard-En C:\PSLF_Work\34\PGE\Bullard-En Rating = 1

FRESNO AREA 70 KV SYSTEM

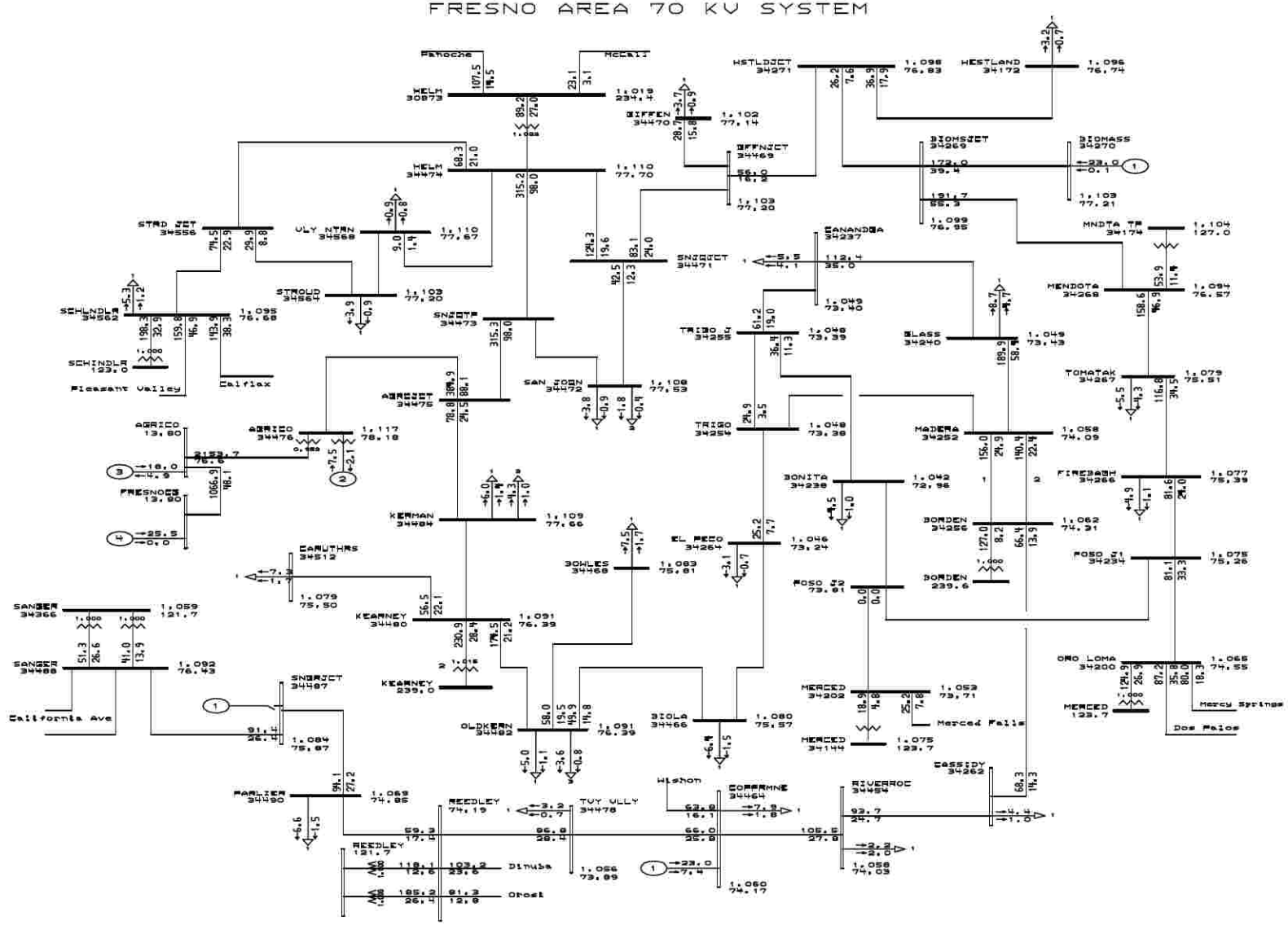

General Electric International, Inc. PSLF Program AMPS/Pct Thu Apr 28 21:20:57 2005

PG&E Tranmission Planning	PG&E 2004 BASE CASE SERIES - 2008 Summer Off Peak Case PATH15=4982 MW(S-N) PATH26=-1563 MW(N-S) PDCI=-1848 MW(N-S) COI=-3630 MW(N-S) Bullard Energy Center - 2008 Summer Off Peak - after	Plot 24 - 2008 Summer Off-Peak Normal Conditions - After Project 70	C:\PSLF_Work\34\PGE\Bullard-En C:\PSLF_Work\34\PGE\Bullard-En Rating = 1

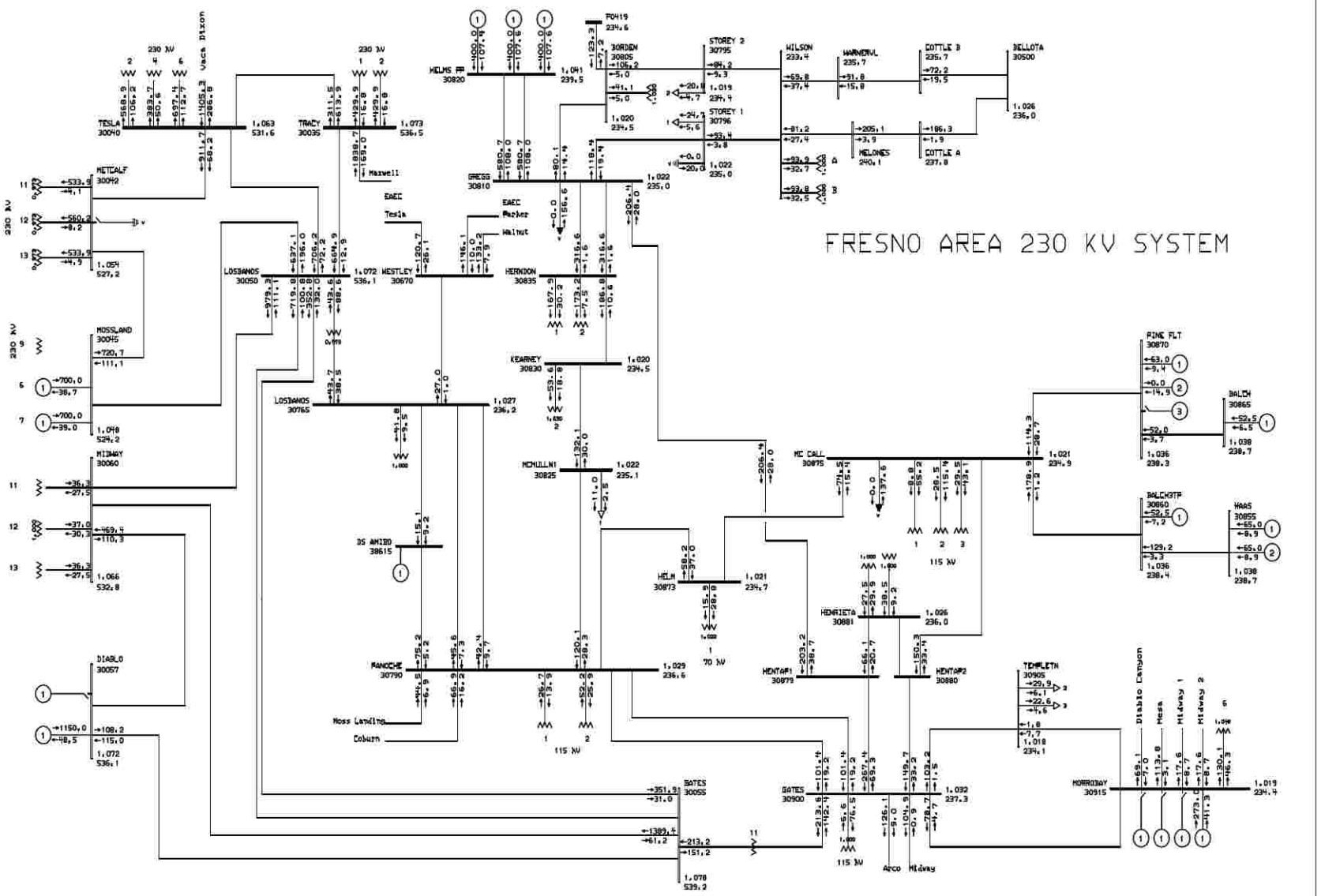

General Electric International, Inc. PSLF Program MW/MVAR Thu Apr 28 21:20:59 2005

PG&E Tranmission Planning	PG&E 2004 BASE CASE SERIES - 2008 Spring Peak Case PATH15=-2672 MW(S-N) PATH26=3391 MW(N-S) PDCI=3105 MW(N-S) COI=4489 MW(N-S) Bullard Energy Center - 2009 Spring Peak - before	Plot 25 - 2008 Spring Peak Normal Conditions - Before Project 230 kV	C:\PSLF_Work\34\PGE\Bullard-En C:\PSLF_Work\34\PGE\Bullard-En Rating = 1

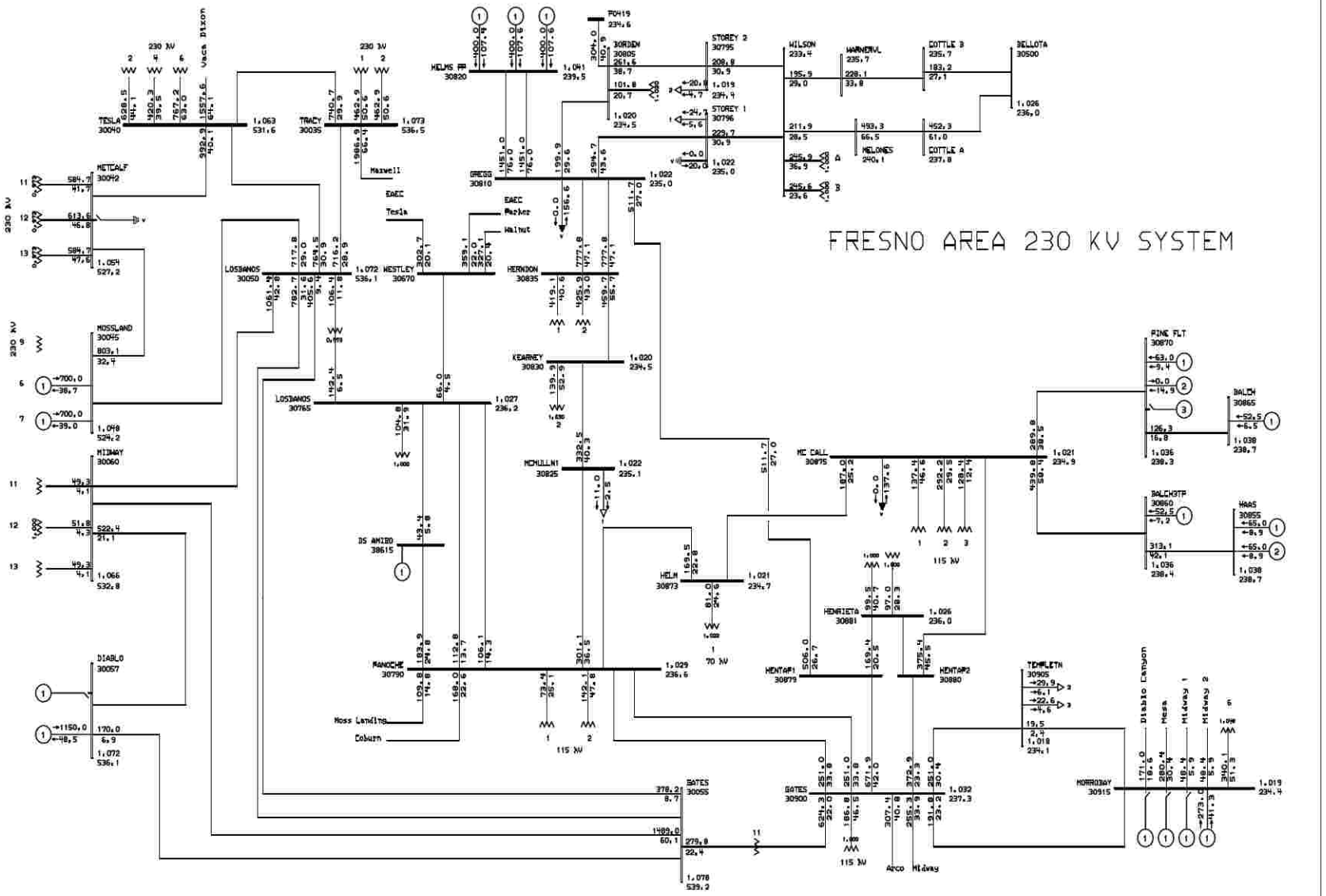

General Electric International, Inc. PSLF Program AMPS/Pct Thu Apr 28 21:20:59 2005

PG&E Tranmission Planning	PG&E 2004 BASE CASE SERIES - 2008 Spring Peak Case PATH15=-2672 MW(S-N) PATH26=3391 MW(N-S) PDCI=3105 MW(N-S) EOI=4489 MW(N-S) Bullard Energy Center - 2009 Spring Peak - before	Plot 26 - 2008 Spring Peak Normal Conditions - Before Project 230 kV	C:\PSLF_Work\34\PGE\Bullard-En C:\PSLF_Work\34\PGE\Bullard-En Rating = 1

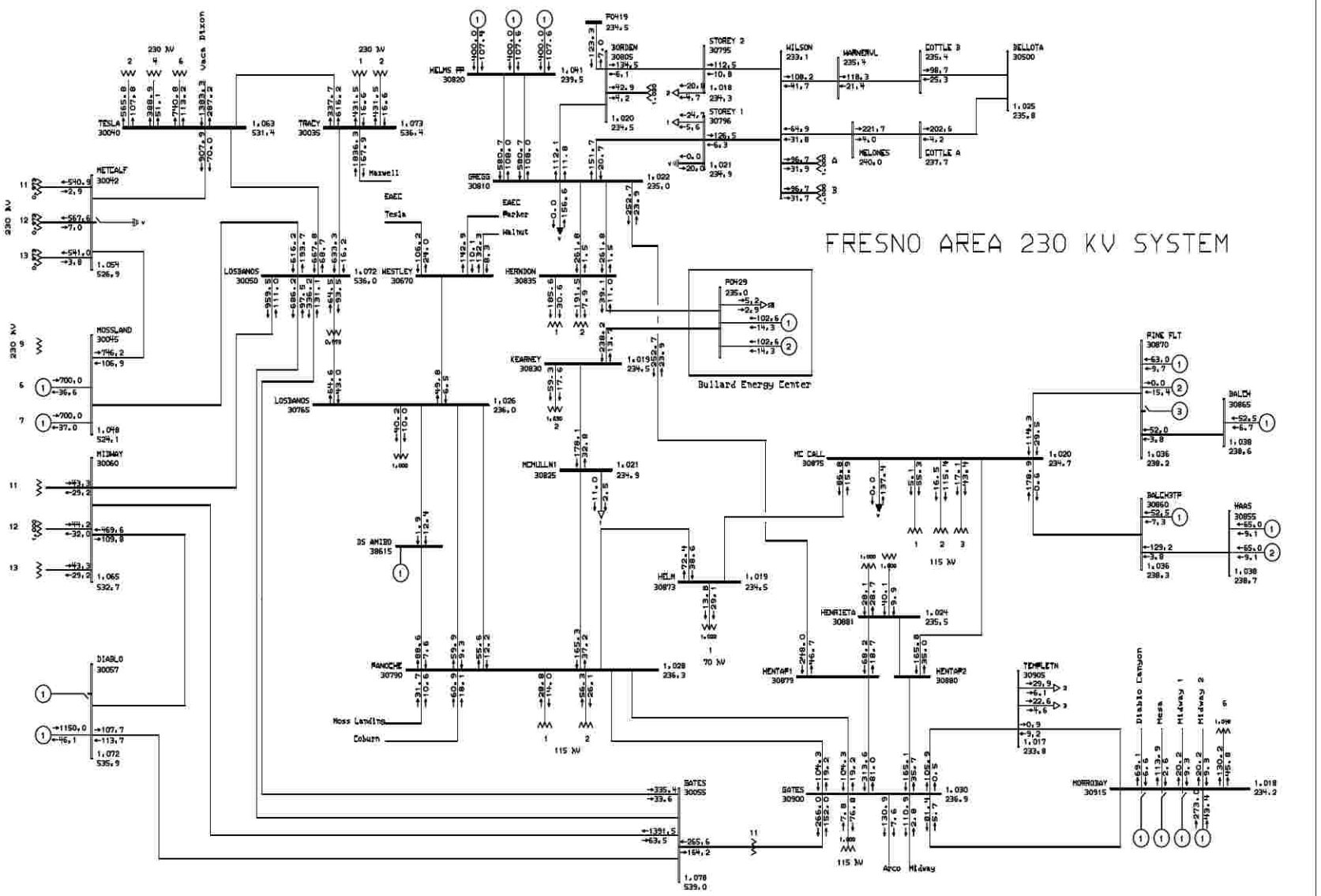

General Electric International, Inc. PSLF Program MW/MVAR Thu Apr 28 21:21:01 2005

PG&E Tranmission Planning	PG&E 2004 BASE CASE SERIES - 2009 Spring Peak Case PATH15=-2669 MW(S-N) PATH26=3395 MW(N-S) PDCI=3105 MW(N-S) COI=4494 MW(N-S) Bullard Energy Center - 2009 Spring Peak - after	Plot 27 - 2008 Spring Peak Normal Conditions - After Project 230 kV	C:\PSLF_Work\34\PGE\Bullard-En C:\PSLF_Work\34\PGE\Bullard-En Rating = 1

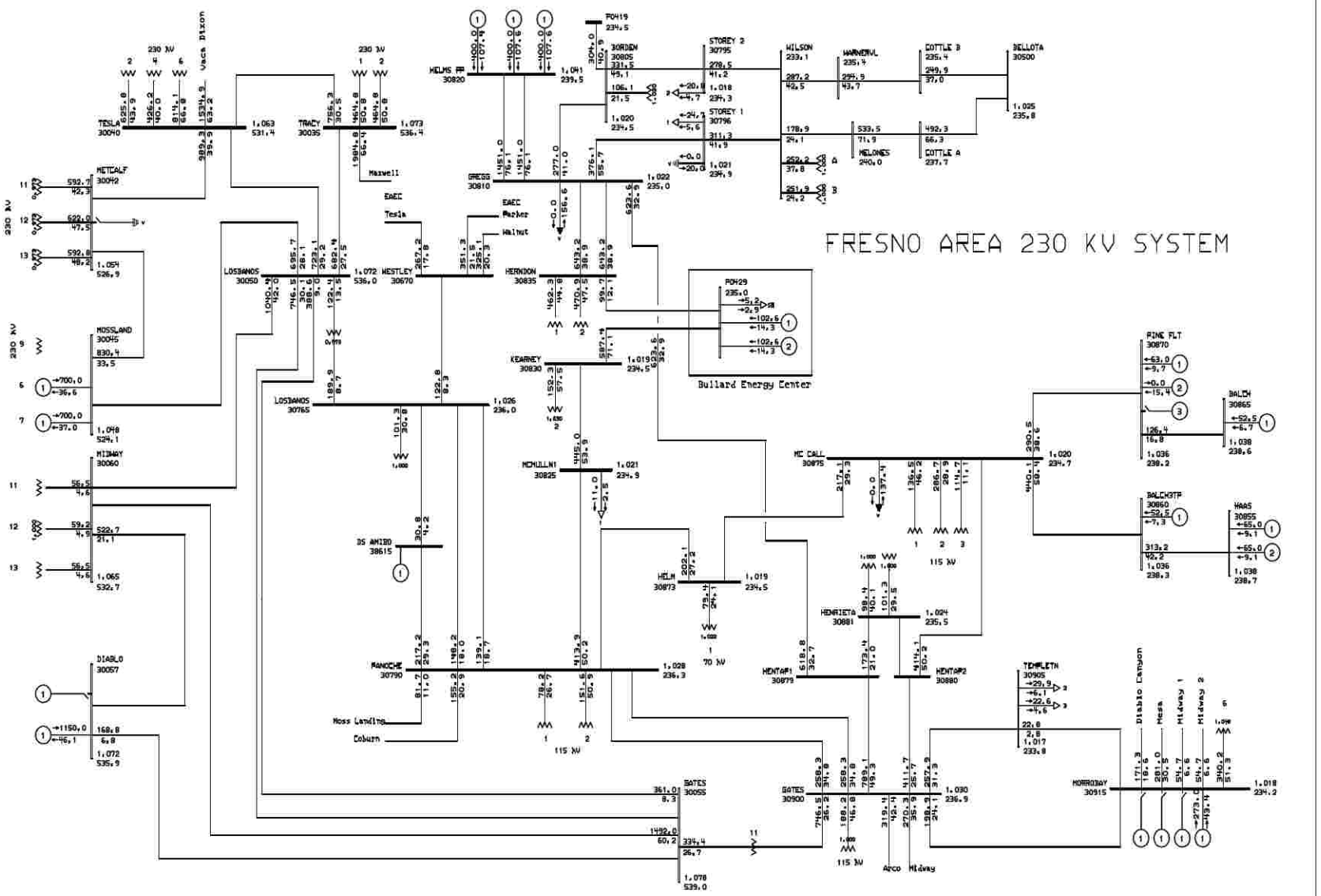

General Electric International, Inc. PSLF Program AMPS/Pct Thu Apr 28 21:21:01 2005

PG&E Tranmission Planning	PG&E 2004 BASE CASE SERIES - 2009 Spring Peak Case PATH15=-2669 MW(S-N) PATH26=3395 MW(N-S) PDCI=3105 MW(N-S) COI=4494 MW(N-S) Bullard Energy Center - 2009 Spring Peak - after	Plot 28 - 2008 Spring Peak Normal Conditions - After Project 230 kV	C:\PSLF_Work\34\PGE\Bullard-En C:\PSLF_Work\34\PGE\Bullard-En Rating = 1

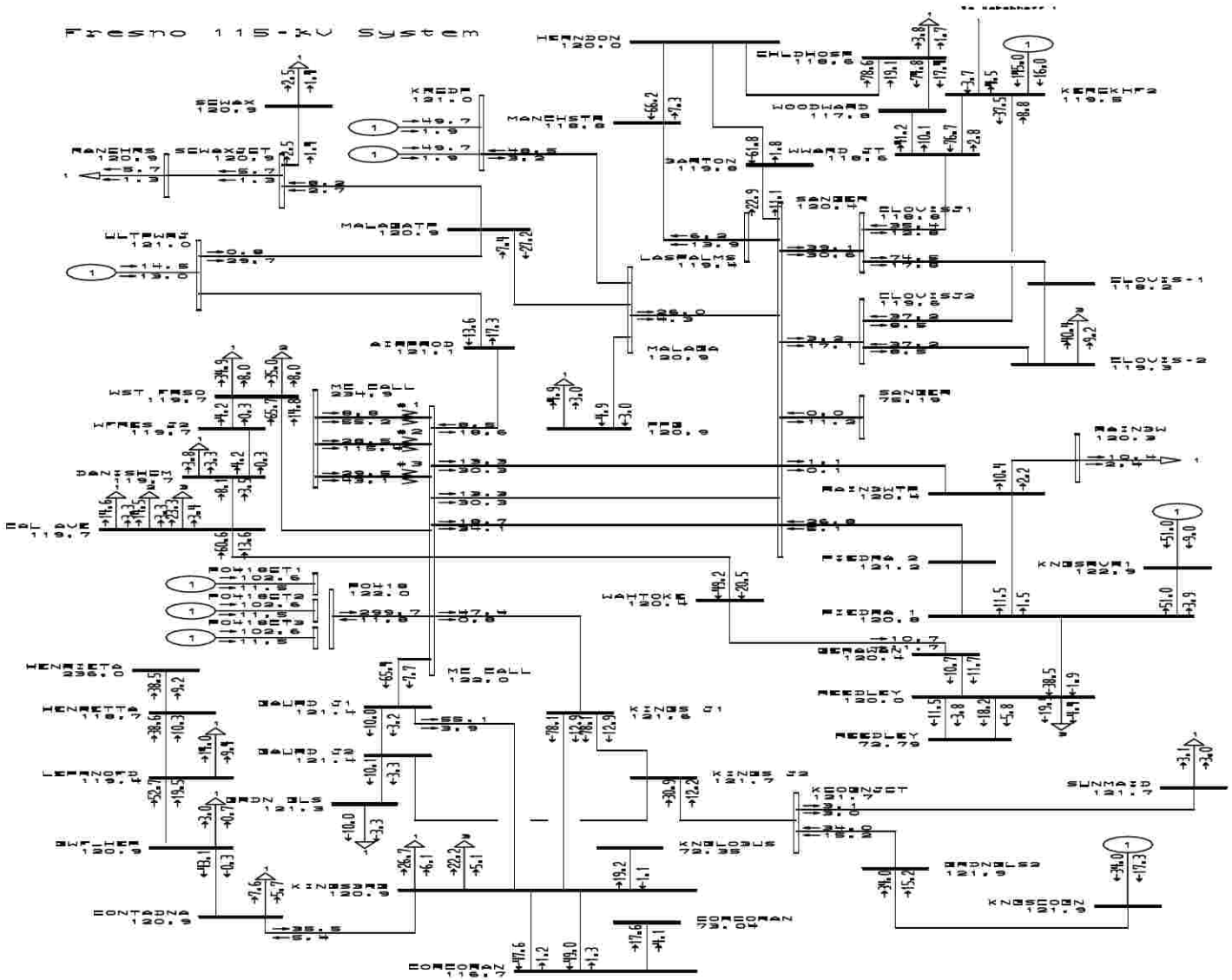

General Electric International, Inc. PSLF Program MW/MVAR Thu Apr 28 21:20:59 2005

PG&E Tranmission Planning	PG&E 2004 BASE CASE SERIES - 2008 Spring Peak Case PATH15=-2672 MW(S-N) PATH26=3391 MW(N-S) FDCI=3105 MW(N-S) EOI=4489 MW(N-S) Bullard Energy Center - 2009 Spring Peak - before	Plot 29 - 2008 Spring Peak Normal Conditions - Before Project 115 kV	C:\PSLF_Work\34\PGE\Bullard-En C:\PSLF_Work\34\PGE\Bullard-En Rating = 1

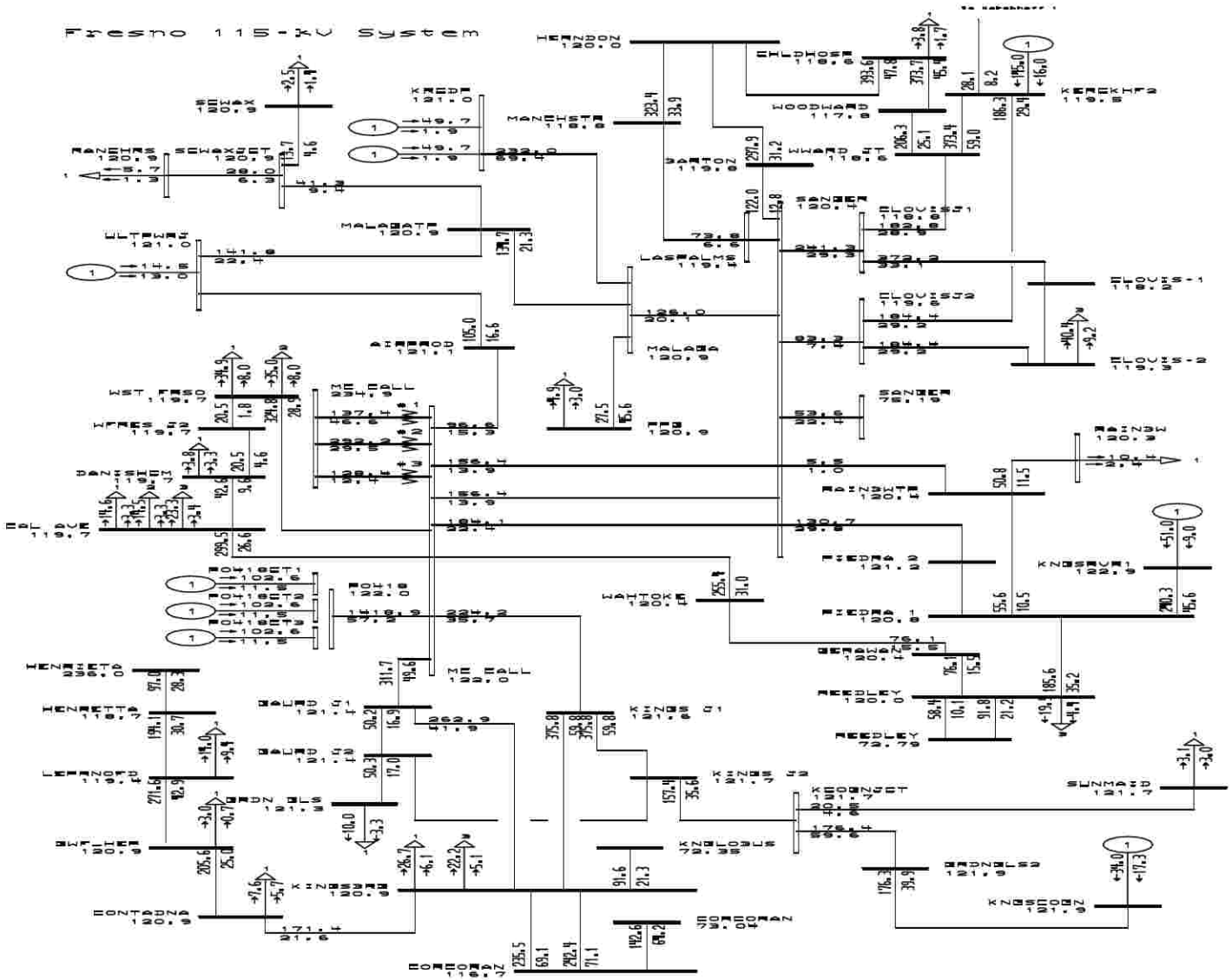

General Electric International, Inc. PSLF Program AMPS/Pct Thu Apr 28 21:20:59 2005

PG&E Tranmission Planning	PG&E 2004 BASE CASE SERIES - 2008 Spring Peak Case PATH15=-2672 MW(S-N) PATH26=3391 MW(N-S) FDCI=3105 MW(N-S) EOI=4489 MW(N-S) Bullard Energy Center - 2009 Spring Peak - before	Plot 30 - 2008 Spring Peak Normal Conditions - Before Project 115 kV	C:\PSLF_Work\34\PGE\Bullard-En C:\PSLF_Work\34\PGE\Bullard-En Rating = 1

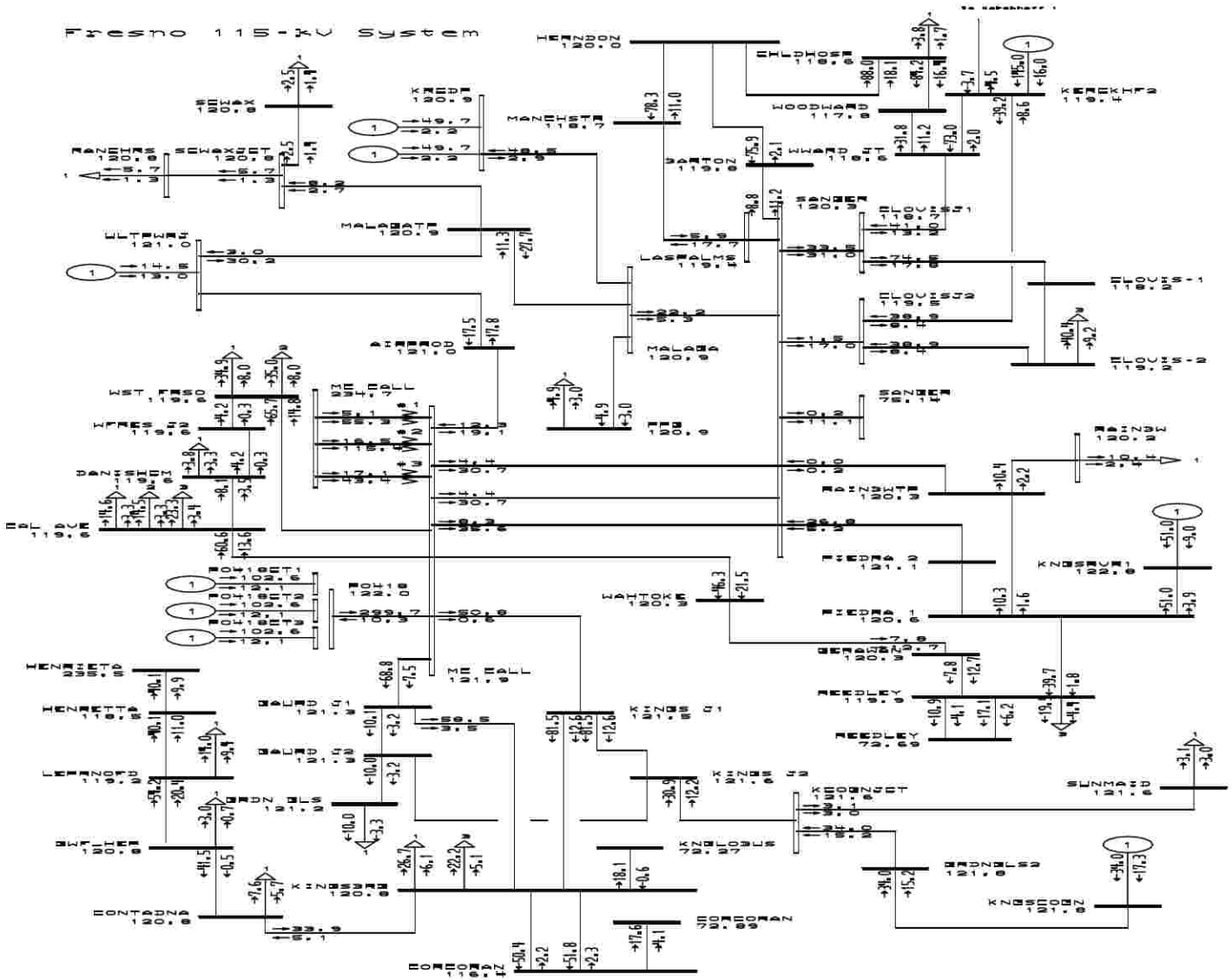

General Electric International, Inc. PSLF Program MW/MVAR Thu Apr 28 21:21:01 2005

PG&E Tranmission Planning	PG&E 2004 BASE CASE SERIES - 2009 Spring Peak Case PATH15=-2669 MW(S-N) PATH26=3395 MW(N-S) FDCI=3105 MW(N-S) EOI=4494 MW(N-S) Bullard Energy Center - 2009 Spring Peak - after	Plot 31 - 2008 Spring Peak Normal Conditions - After Project 115 kV	C:\PSLF_Work\34\PGE\Bullard-En C:\PSLF_Work\34\PGE\Bullard-En Rating = 1

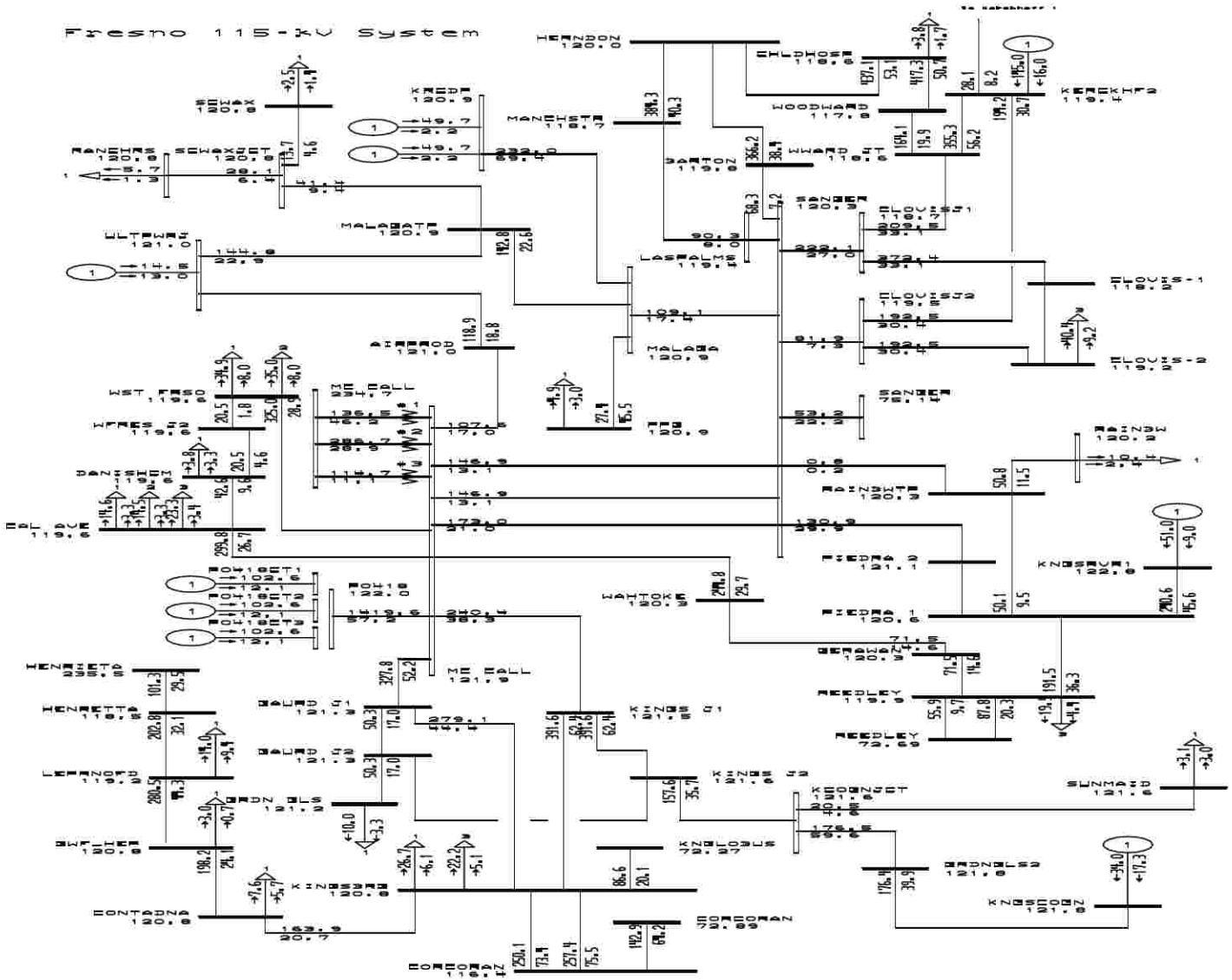

General Electric International, Inc. PSLF Program AMPS/Pct Thu Apr 28 21:21:02 2005

PG&E Tranmission Planning	PG&E 2004 BASE CASE SERIES - 2009 Spring Peak Case PATH15=-2669 MW(S-N) PATH26=3395 MW(N-S) FDCI=3105 MW(N-S) EOI=4494 MW(N-S) Bullard Energy Center - 2009 Spring Peak - after	Plot 32 - 2008 Spring Peak Normal Conditions - After Project 115 kV	C:\PSLF_Work\34\PGE\Bullard-En C:\PSLF_Work\34\PGE\Bullard-En Rating = 1

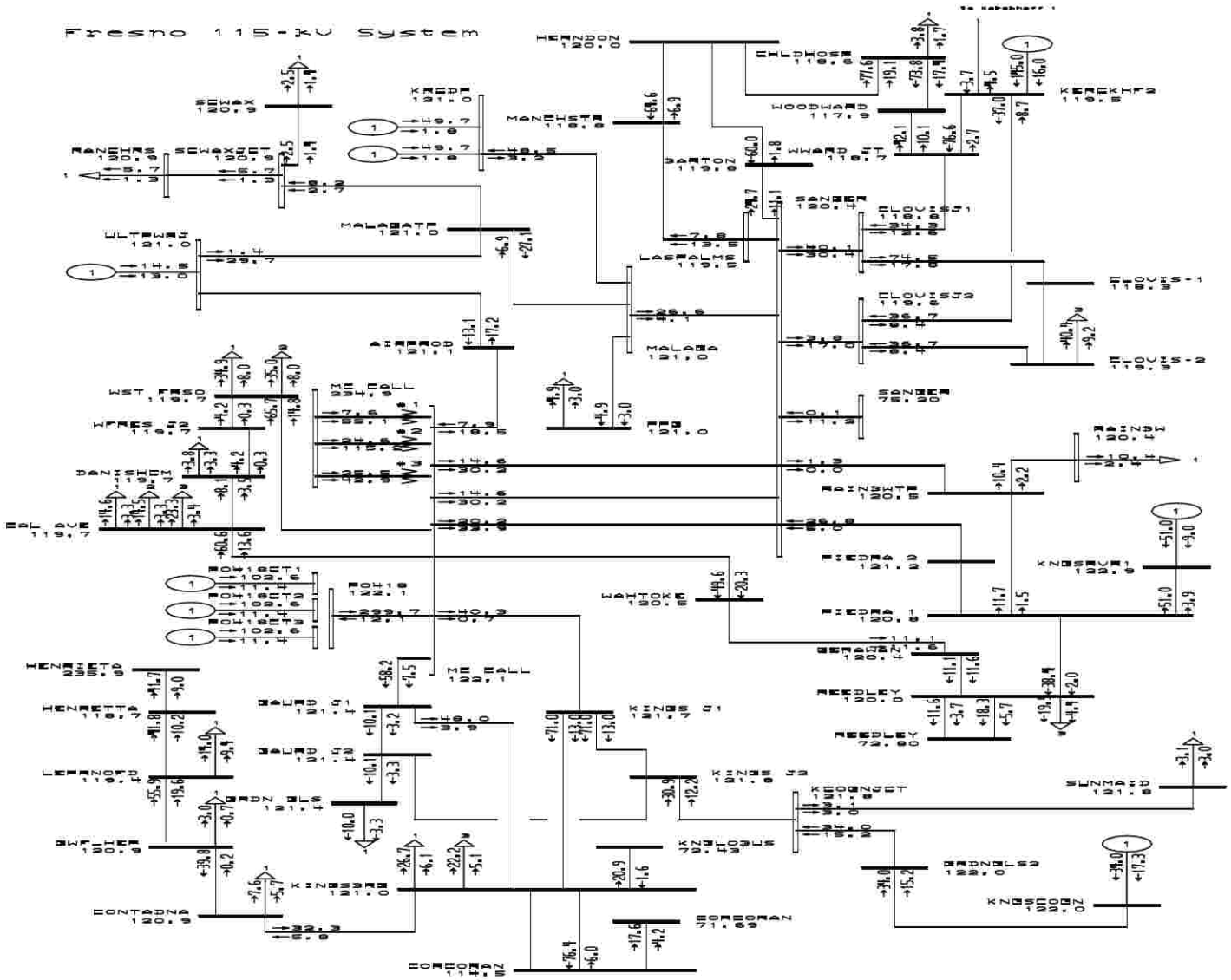

General Electric International, Inc. PSLF Program MW/MVAR Thu Apr 28 21:21:04 2005

PG&E Tranmission Planning	PG&E 2004 BASE CASE SERIES - 2008 Spring Peak Case PATH15=-2672 MW(S-N) PATH26=3391 MW(N-S) FDCI=3105 MW(N-S) EOI=4489 MW(N-S) Bullard Energy Center - 2009 Spring Peak - before	Plot 33 - 2009 Spring Peak - Before Project 115 kV Outage: Kingsburg - Corcoran 115 kV Line	C:\PSLF_Work\34\PGE\Bullard-En C:\PSLF_Work\34\PGE\Bullard-En Rating = 2

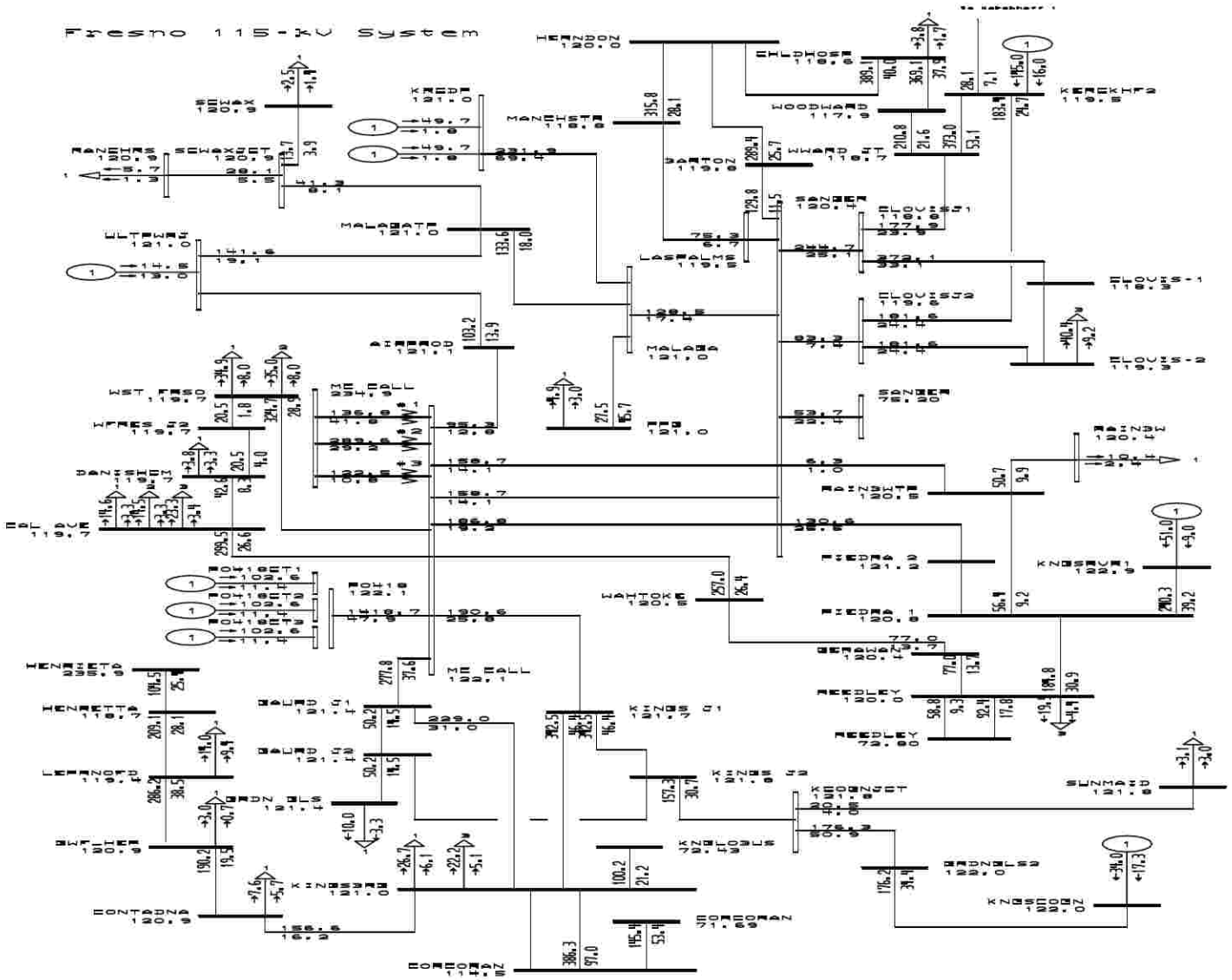

General Electric International, Inc. PSLF Program AMPS/Pct Thu Apr 28 21:21:04 2005

PG&E Tranmission Planning	PG&E 2004 BASE CASE SERIES - 2008 Spring Peak Case PATH15=-2672 MW(S-N) PATH26=3391 MW(N-S) FDCI=3105 MW(N-S) EOI=4489 MW(N-S) Bullard Energy Center - 2009 Spring Peak - before	Plot 34 - 2009 Spring Peak - Before Project 115 kV Outage: Kingsburg - Corcoran 115 kV Line	C:\PSLF_Work\34\PGE\Bullard-En C:\PSLF_Work\34\PGE\Bullard-En Rating = 2

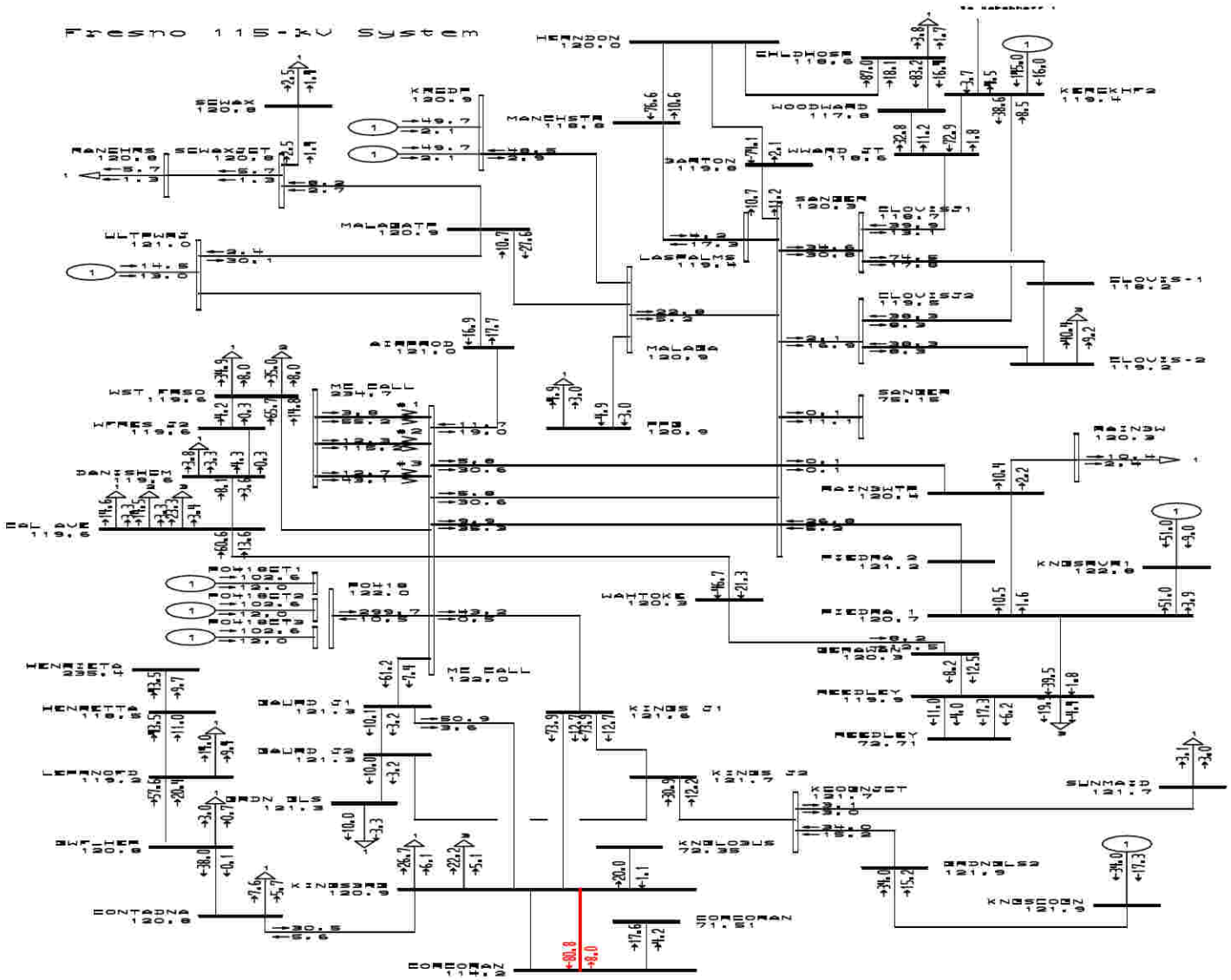

General Electric International, Inc. PSLF Program MW/MVAR Thu Apr 28 21:21:06 2005

PG&E Tranmission Planning	PG&E 2004 BASE CASE SERIES - 2009 Spring Peak Case PATH15=-2669 MW(S-N) PATH26=3395 MW(N-S) FDCI=3105 MW(N-S) EOI=4494 MW(N-S) Bullard Energy Center - 2009 Spring Peak - after	Plot 35 - 2009 Spring Peak - After Project 115 kV Outage: Kingsburg - Corcoran 115 kV Line	C:\PSLF_Work\34\PGE\Bullard-En C:\PSLF_Work\34\PGE\Bullard-En Rating = 2

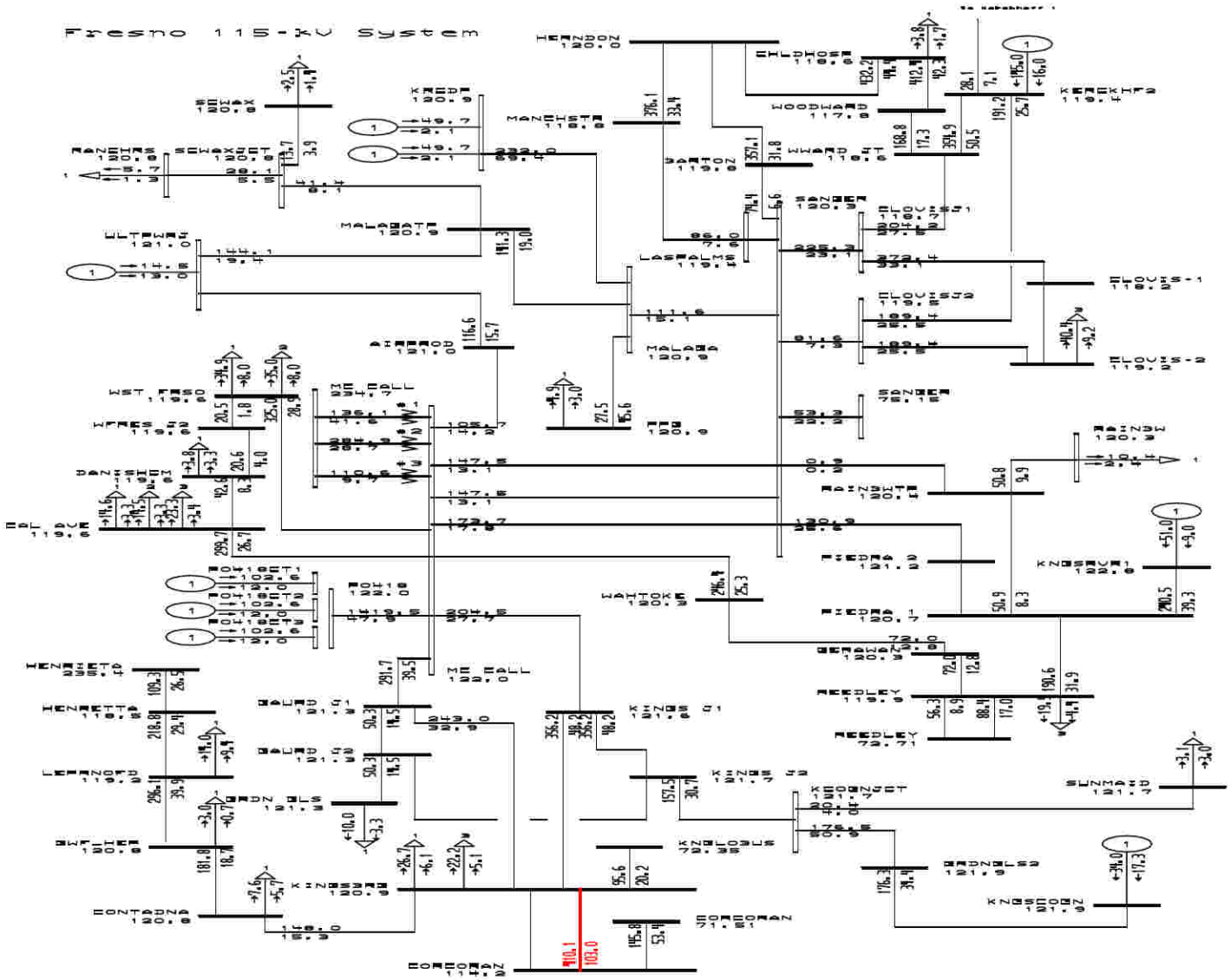

General Electric International, Inc. PSLF Program AMPS/Pct Thu Apr 28 21:21:06 2005

PG&E Tranmission Planning	PG&E 2004 BASE CASE SERIES - 2009 Spring Peak Case PATH15=-2669 MW(S-N) PATH26=3395 MW(N-S) FDCI=3105 MW(N-S) EOI=4494 MW(N-S) Bullard Energy Center - 2009 Spring Peak - after	Plot 36 - 2009 Spring Peak - After Project 115 kV Outage: Kingsburg - Corcoran 115 kV Line	C:\PSLF_Work\34\PGE\Bullard-En C:\PSLF_Work\34\PGE\Bullard-En Rating = 2

FRESNO AREA 70 KV SYSTEM

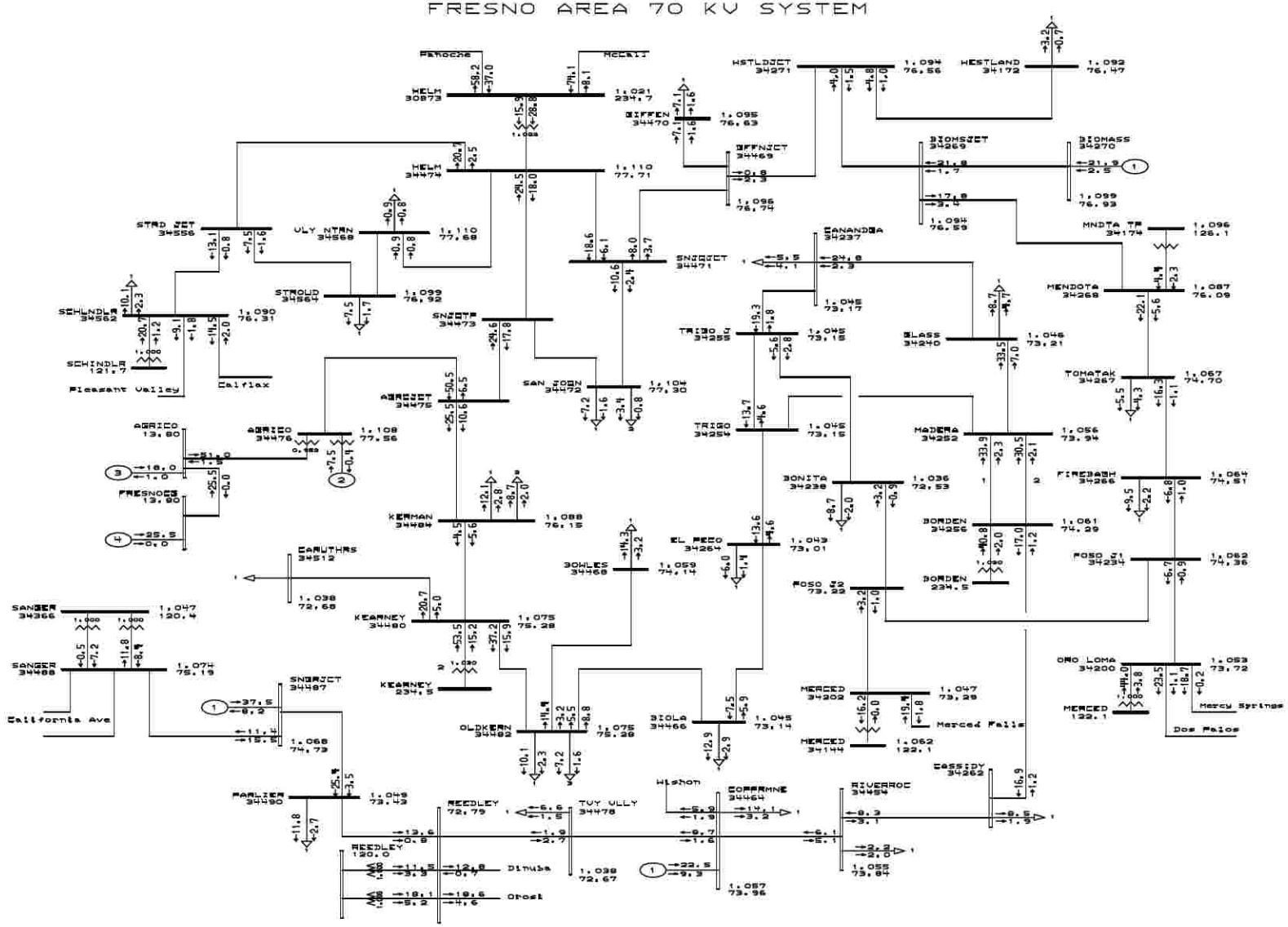

General Electric International, Inc. PSLF Program MW/MVAR Thu Apr 28 21:21:00 2005

PG&E Tranmission Planning	PG&E 2004 BASE CASE SERIES - 2008 Spring Peak Case PATH15=-2672 MW(S-N) PATH26=3391 MW(N-S) PDCI=3105 MW(N-S) COI=4489 MW(N-S) Bullard Energy Center - 2009 Spring Peak - before	Plot 37 - 2008 Spring Peak Normal Conditions - Before Project 70 kV	C:\PSLF_Work\34\PGE\Bullard-En C:\PSLF_Work\34\PGE\Bullard-En Rating = 1

FRESNO AREA 70 KV SYSTEM

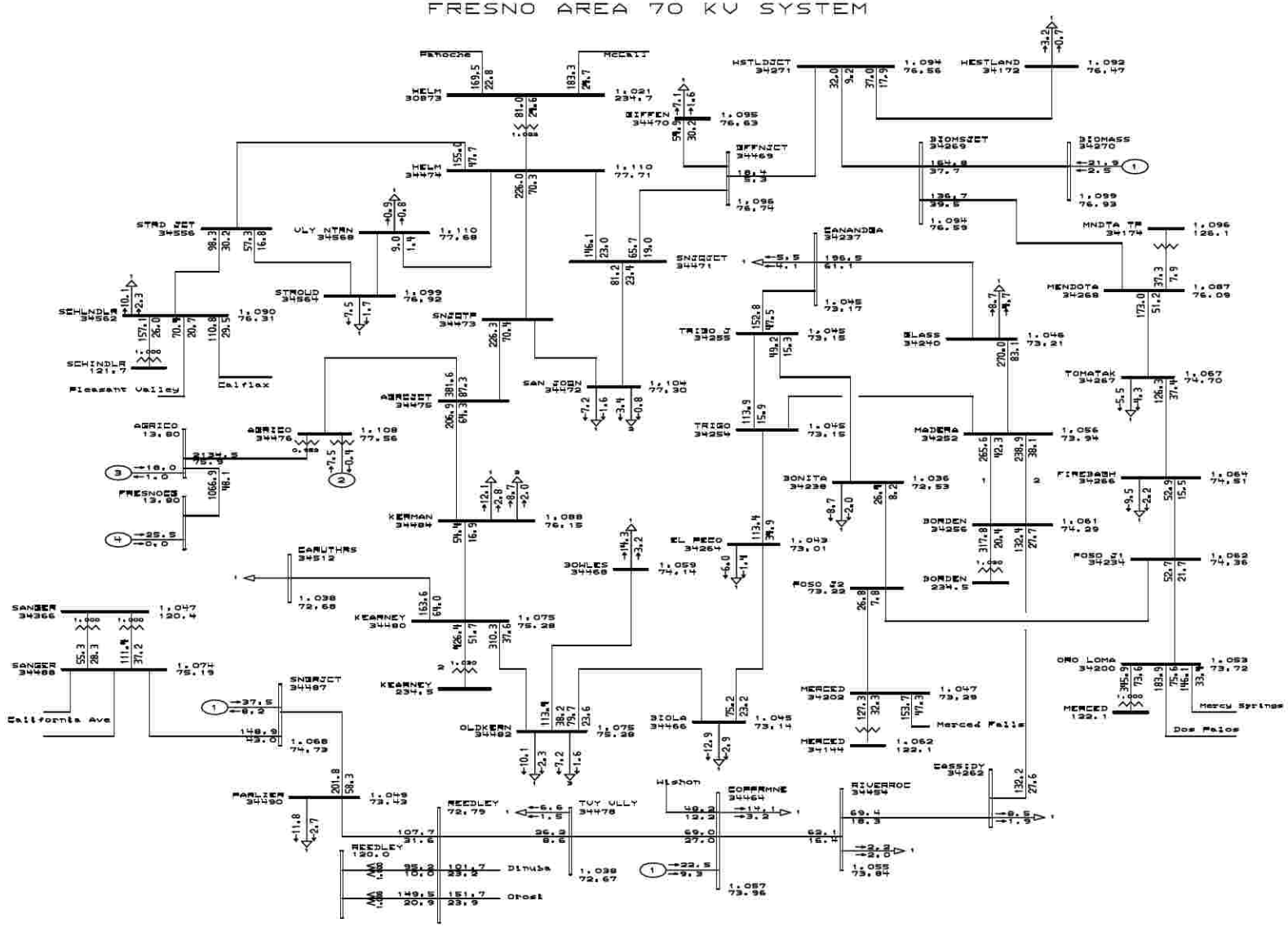

General Electric International, Inc. PSLF Program AMPS/Pct Thu Apr 28 21:21:00 2005

PG&E Tranmission Planning	PG&E 2004 BASE CASE SERIES - 2008 Spring Peak Case PATH15=-2672 MW(S-N) PATH26=3391 MW(N-S) PDCI=3105 MW(N-S) COI=4489 MW(N-S) Bullard Energy Center - 2009 Spring Peak - before	Plot 38 - 2008 Spring Peak Normal Conditions - Before Project 70 kV	C:\PSLF_Work\34\PGE\Bullard-En C:\PSLF_Work\34\PGE\Bullard-En Rating = 1

FRESNO AREA 70 KV SYSTEM

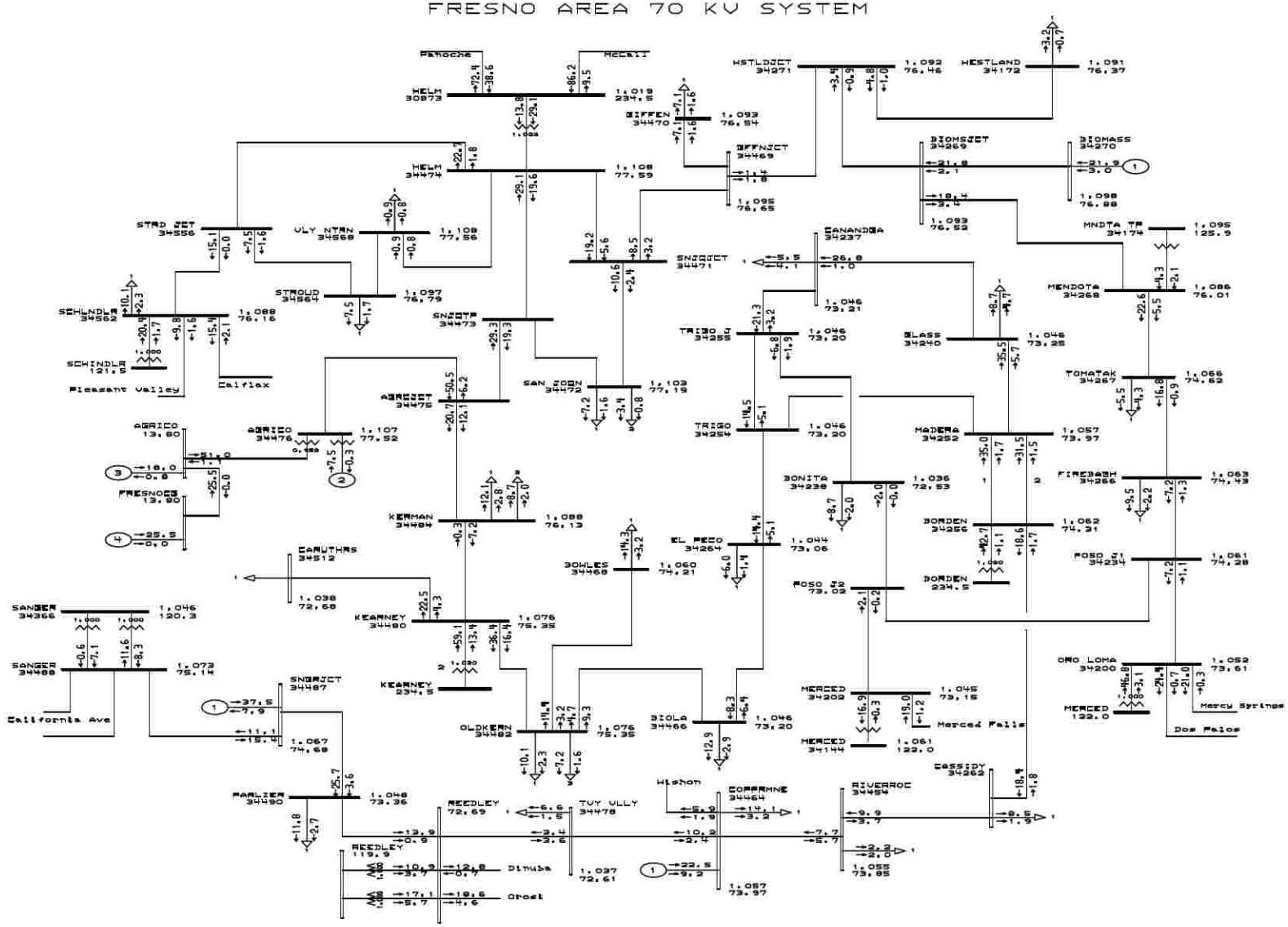

General Electric International, Inc. PSLF Program MW/MVAR Thu Apr 28 21:21:02 2005

PG&E Tranmission Planning	PG&E 2004 BASE CASE SERIES - 2009 Spring Peak Case PATH15=-2669 MW(S-N) PATH26=3395 MW(N-S) PDCI=3105 MW(N-S) COI=4494 MW(N-S) Bullard Energy Center - 2009 Spring Peak - after	Plot 39 - 2008 Spring Peak Normal Conditions - After Project 70 kV	C:\PSLF_Work\34\PGE\Bullard-En C:\PSLF_Work\34\PGE\Bullard-En Rating = 1

FRESNO AREA 70 KV SYSTEM

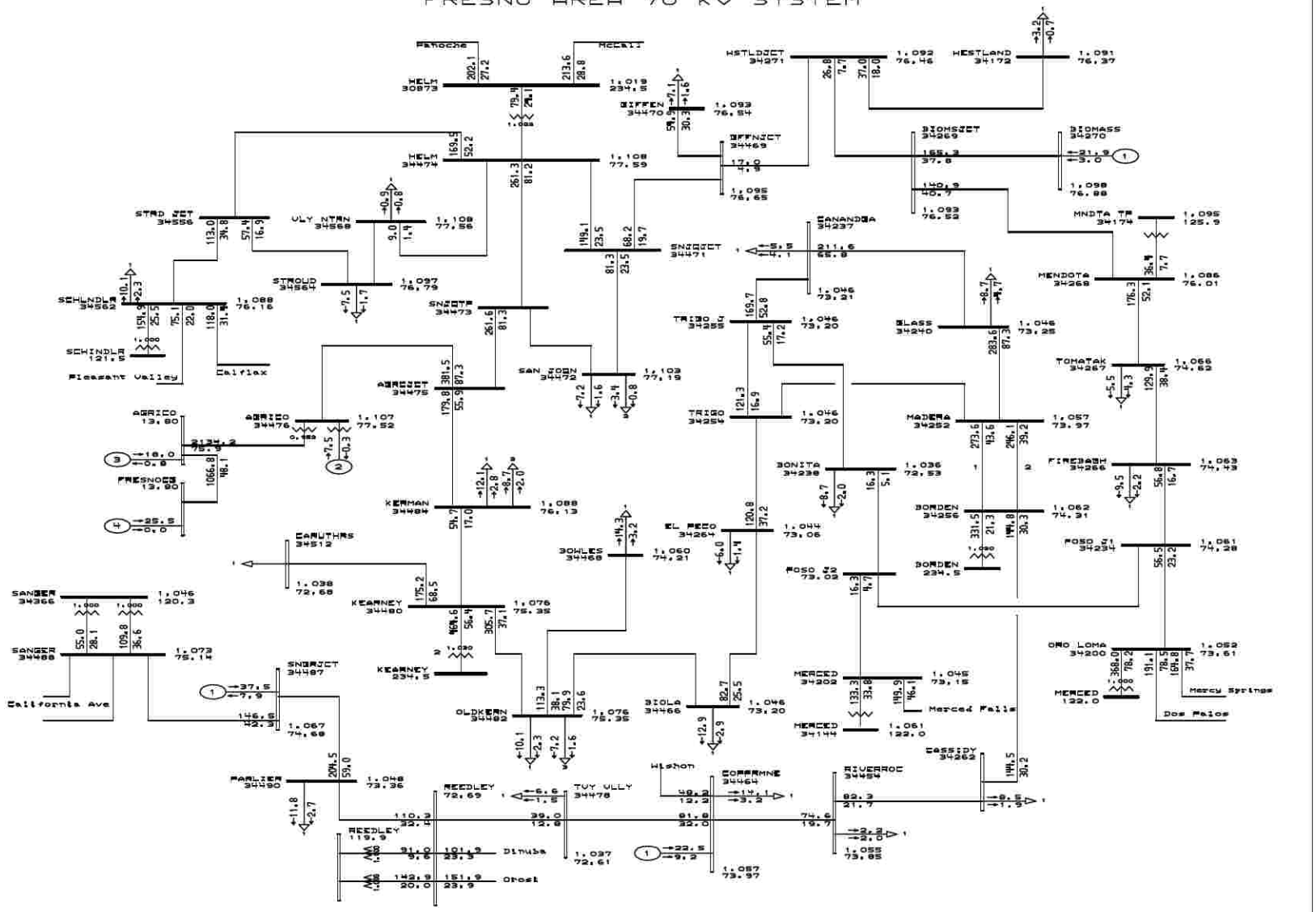

General Electric International, Inc. PSLF Program AMPS/Pct Thu Apr 28 21:21:02 2005

PG&E Tranmission Planning	PG&E 2004 BASE CASE SERIES - 2009 Spring Peak Case PATH15=-2669 MW(S-N) PATH26=3395 MW(N-S) PDCI=3105 MW(N-S) COI=4494 MW(N-S) Bullard Energy Center - 2009 Spring Peak - after	Plot 40 - 2008 Spring Peak Normal Conditions - After Project 70 kV	C:\PSLF_Work\34\PGE\Bullard-En C:\PSLF_Work\34\PGE\Bullard-En Rating = 1

FRESNO AREA 70 KV SYSTEM

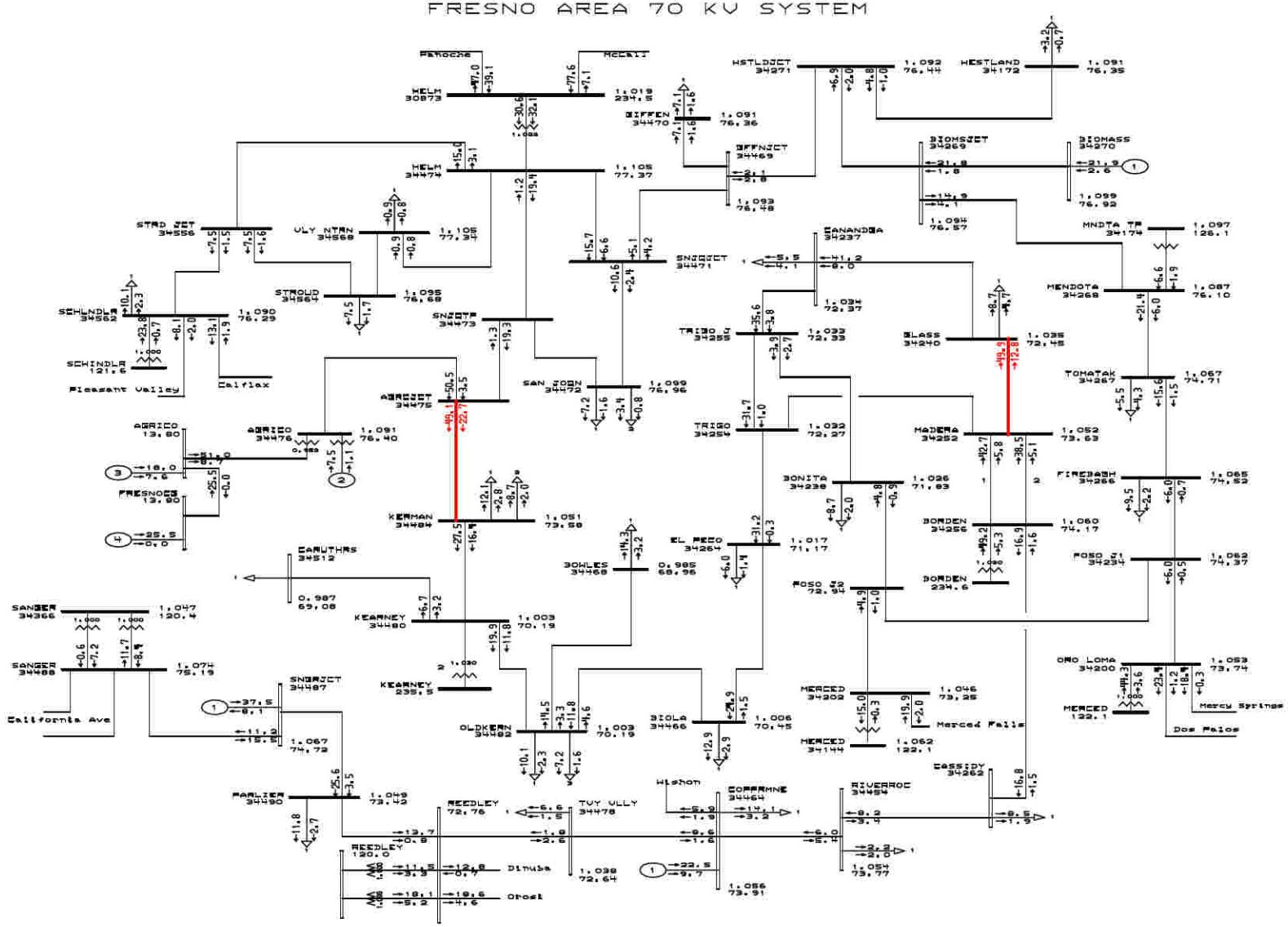

General Electric International, Inc. PSLF Program MW/MVAR Thu Apr 28 21:21:07 2005

PG&E Tranmission Planning	PG&E 2004 BASE CASE SERIES - 2008 Spring Peak Case PATH15=-2672 MW(S-N) PATH26=3391 MW(N-S) PDCI=3105 MW(N-S) COI=4489 MW(N-S) Bullard Energy Center - 2009 Spring Peak - before	Plot 41 - 2009 Spring Peak - Before Project 70 kV Outage: Kearney 230/70 kV Transformer	C:\PSLF_Work\34\PGE\Bullard-En C:\PSLF_Work\34\PGE\Bullard-En Rating = 2

FRESNO AREA 70 KV SYSTEM

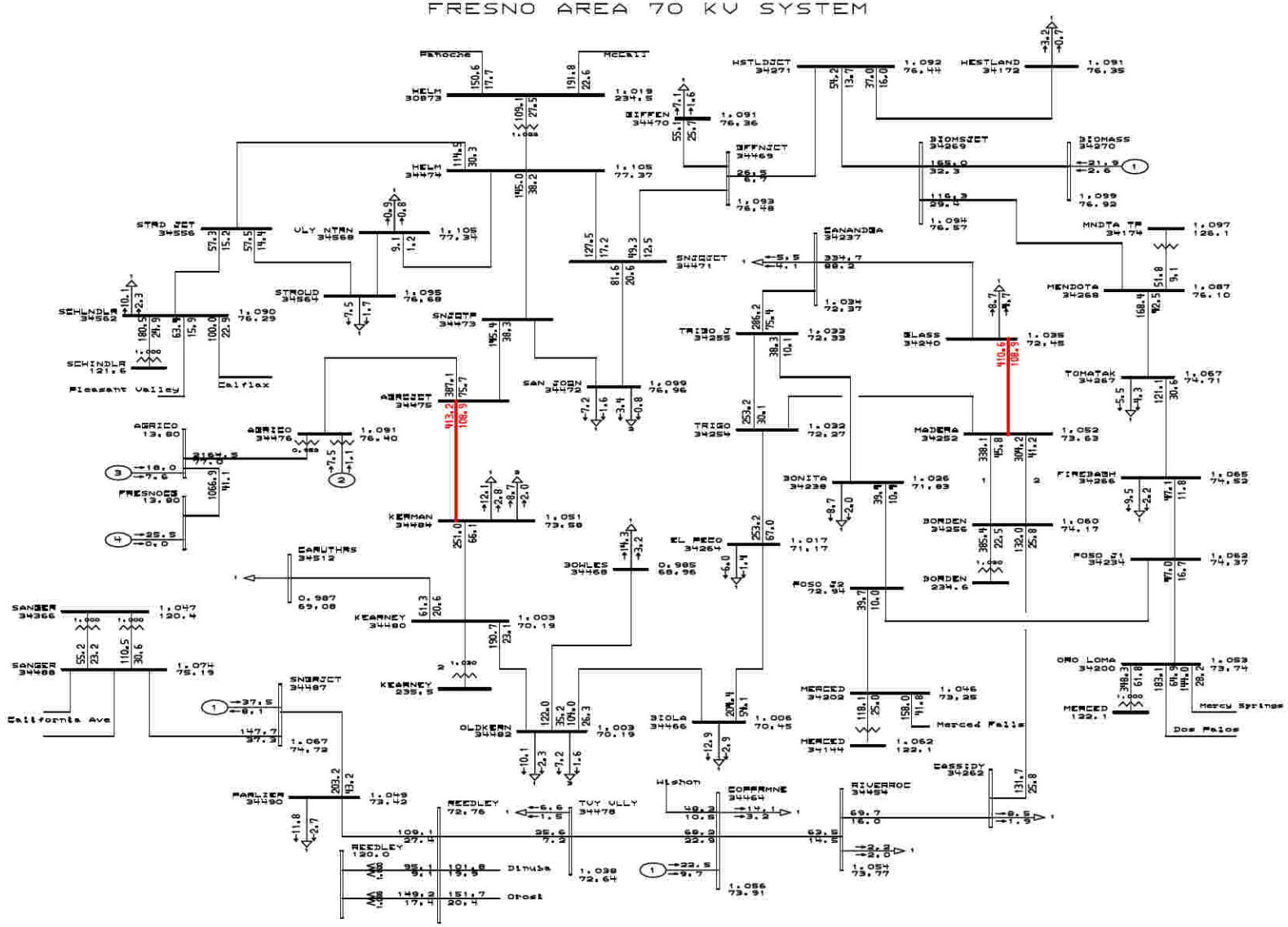

General Electric International, Inc. PSLF Program AMPS/Pct Thu Apr 28 21:21:08 2005

PG&E Tranmission Planning	PG&E 2004 BASE CASE SERIES - 2008 Spring Peak Case PATH15=-2672 MW(S-N) PATH26=3391 MW(N-S) PDCI=3105 MW(N-S) COI=4489 MW(N-S) Bullard Energy Center - 2009 Spring Peak - before	Plot 42 - 2009 Spring Peak - Before Project 70 kV Outage: Kearney 230/70 kV Transformer	C:\PSLF_Work\34\PGE\Bullard-En C:\PSLF_Work\34\PGE\Bullard-En Rating = 2

FRESNO AREA 70 KV SYSTEM

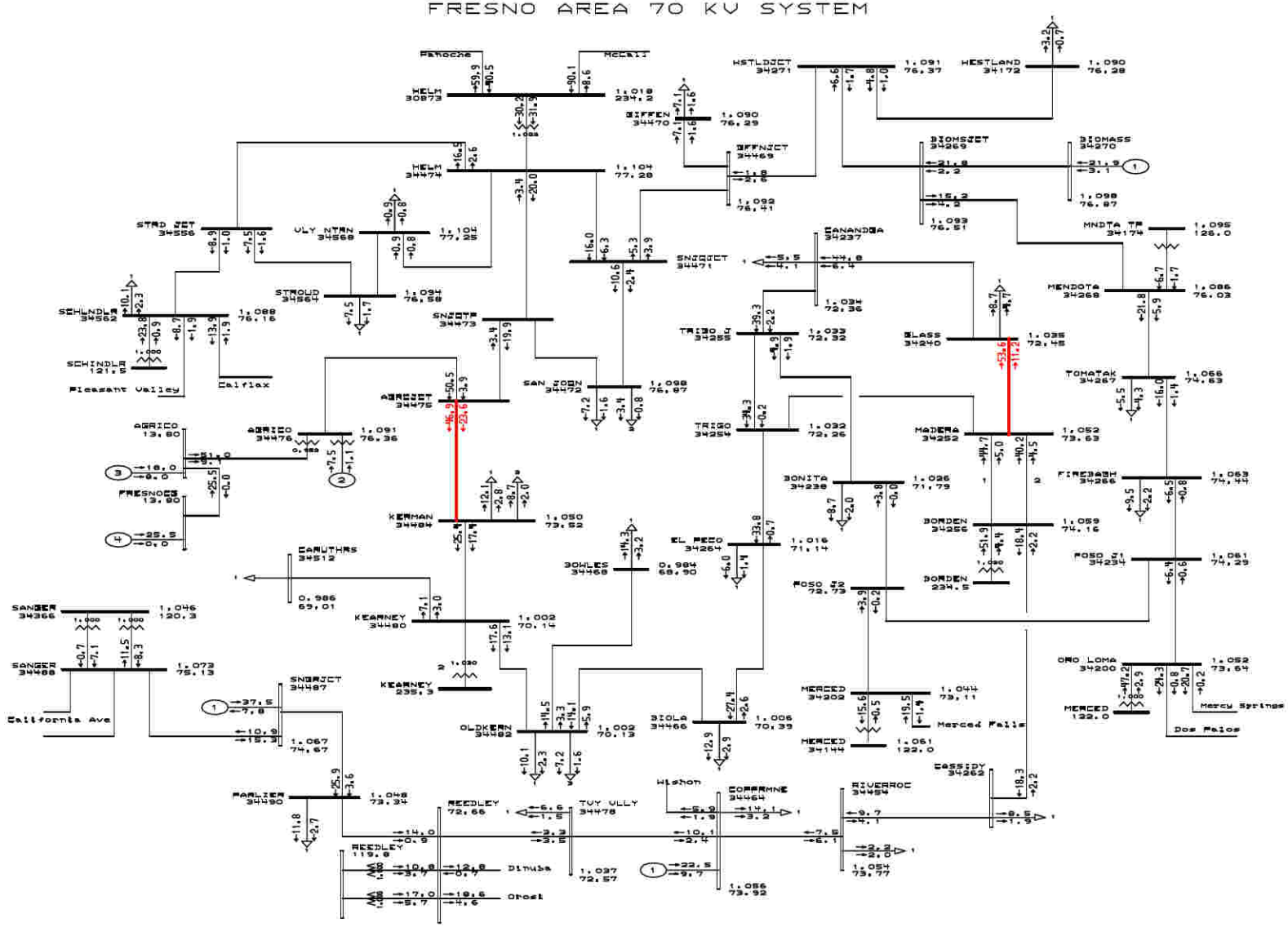

General Electric International, Inc. PSLF Program MW/MVAR Thu Apr 28 21:21:10 2005

PG&E Tranmission Planning	PG&E 2004 BASE CASE SERIES - 2009 Spring Peak Case PATH15=-2669 MW(S-N) PATH26=3395 MW(N-S) PDCI=3105 MW(N-S) COI=4494 MW(N-S) Bullard Energy Center - 2009 Spring Peak - after	Plot 43 - 2009 Spring Peak - After Project 70 kV Outage: Kearney 230/70 kV Transformer	C:\PSLF_Work\34\PGE\Bullard-En C:\PSLF_Work\34\PGE\Bullard-En Rating = 2

FRESNO AREA 70 KV SYSTEM

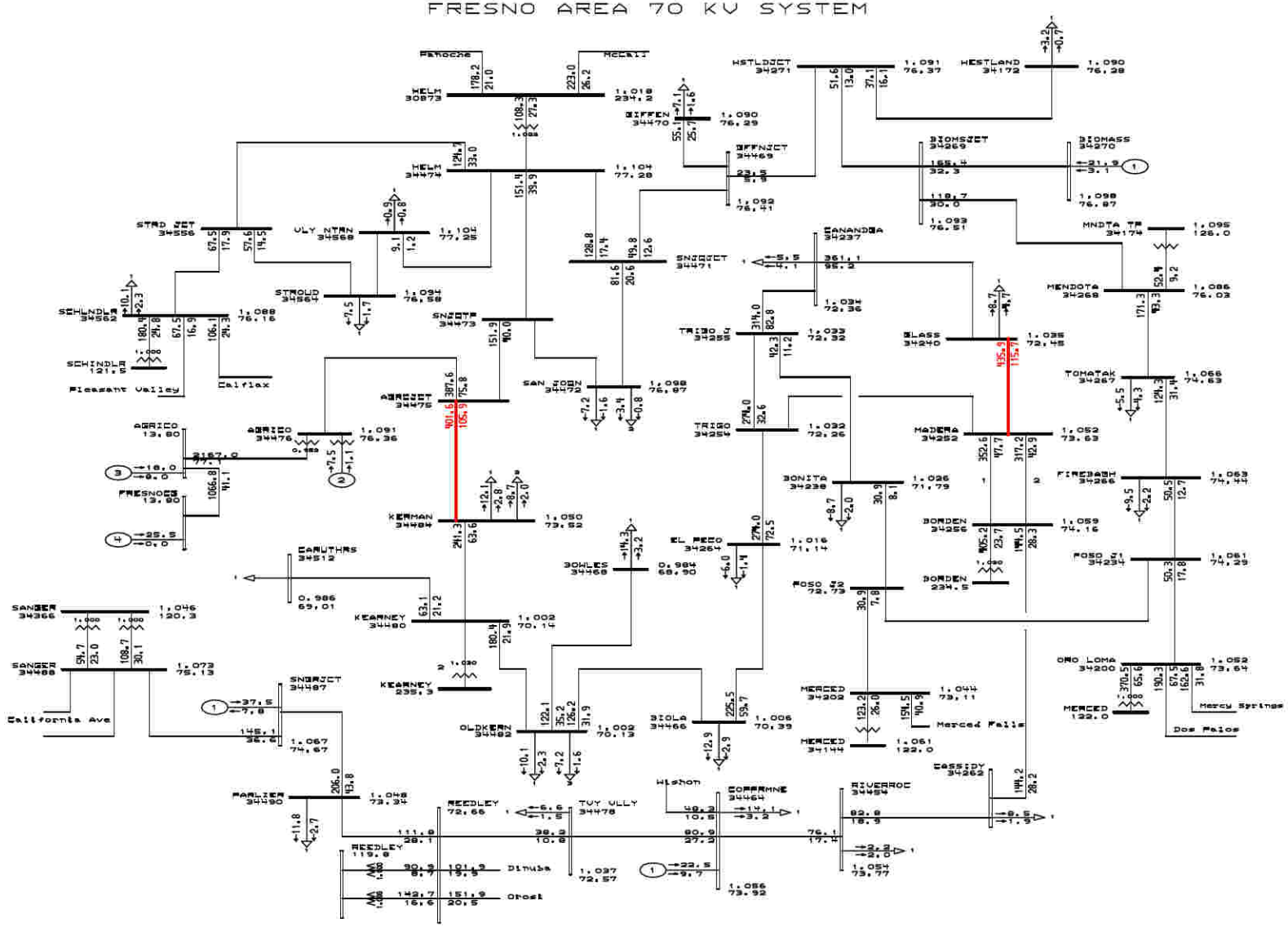

General Electric International, Inc. PSLF Program AMPS/Pct Thu Apr 28 21:21:10 2005

PG&E Tranmission Planning	PG&E 2004 BASE CASE SERIES - 2009 Spring Peak Case PATH15=-2669 MW(S-N) PATH26=3395 MW(N-S) PDCI=3105 MW(N-S) EOI=4494 MW(N-S) Bullard Energy Center - 2009 Spring Peak - after	Plot 44 - 2009 Spring Peak - After Project 70 kV Outage: Kearney 230/70 kV Transformer	C:\PSLF_Work\34\PGE\Bullard-En C:\PSLF_Work\34\PGE\Bullard-En Rating = 2

FRESNO AREA 70 KV SYSTEM

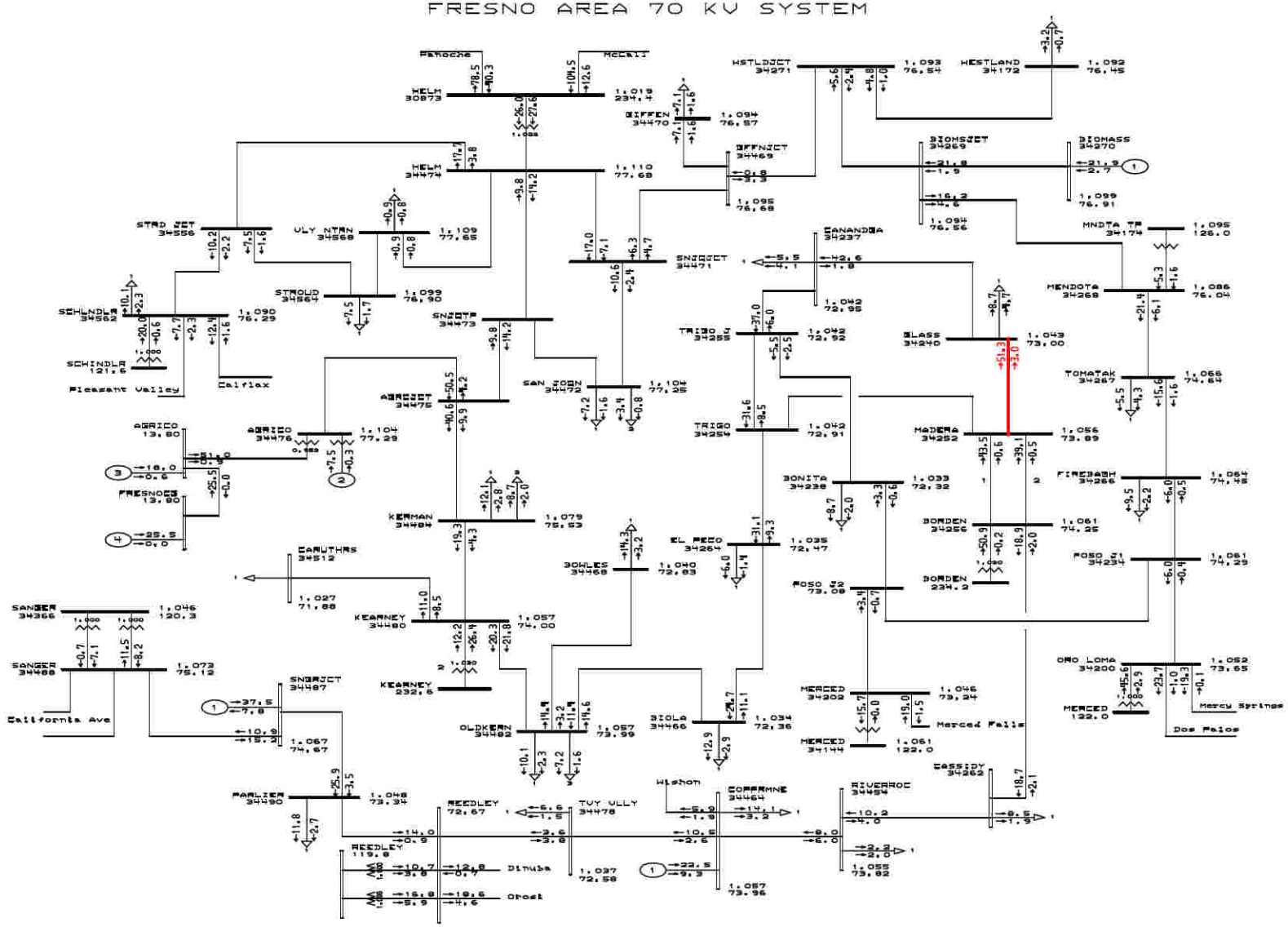

General Electric International, Inc. PSLF Program MW/MVAR Thu Apr 28 21:21:11 2005

PG&E Tranmission Planning	PG&E 2004 BASE CASE SERIES - 2008 Spring Peak Case PATH15=-2672 MW(S-N) PATH26=3391 MW(N-S) PDCI=3105 MW(N-S) COI=4489 MW(N-S) Bullard Energy Center - 2009 Spring Peak - before	Plot 45 - 2009 Spring Peak - Before Project 70 kV Outage: Kearney-Herndon 230 kV Line	C:\PSLF_Work\34\PGE\Bullard-En C:\PSLF_Work\34\PGE\Bullard-En Rating = 2

FRESNO AREA 70 KV SYSTEM

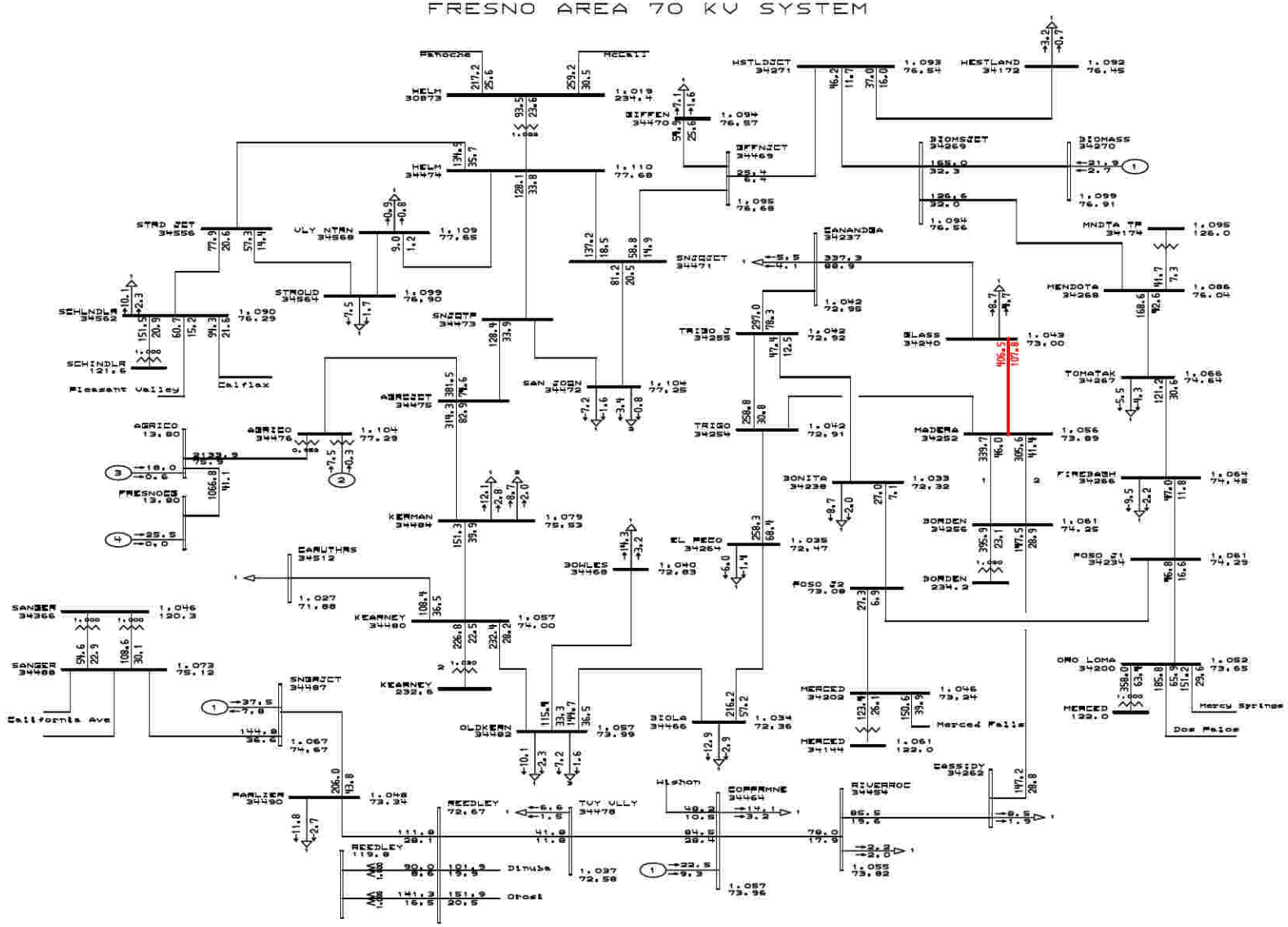

General Electric International, Inc. PSLF Program AMPS/Pct Thu Apr 28 21:21:12 2005

PG&E Tranmission Planning	PG&E 2004 BASE CASE SERIES - 2008 Spring Peak Case PATH15=-2672 MW(S-N) PATH26=3391 MW(N-S) PDCI=3105 MW(N-S) COI=4489 MW(N-S) Bullard Energy Center - 2009 Spring Peak - before	Plot 46 - 2009 Spring Peak - Before Project 70 kV Outage: Kearney-Herndon 230 kV Line	C:\PSLF_Work\34\PGE\Bullard-En C:\PSLF_Work\34\PGE\Bullard-En Rating = 2

FRESNO AREA 70 KV SYSTEM

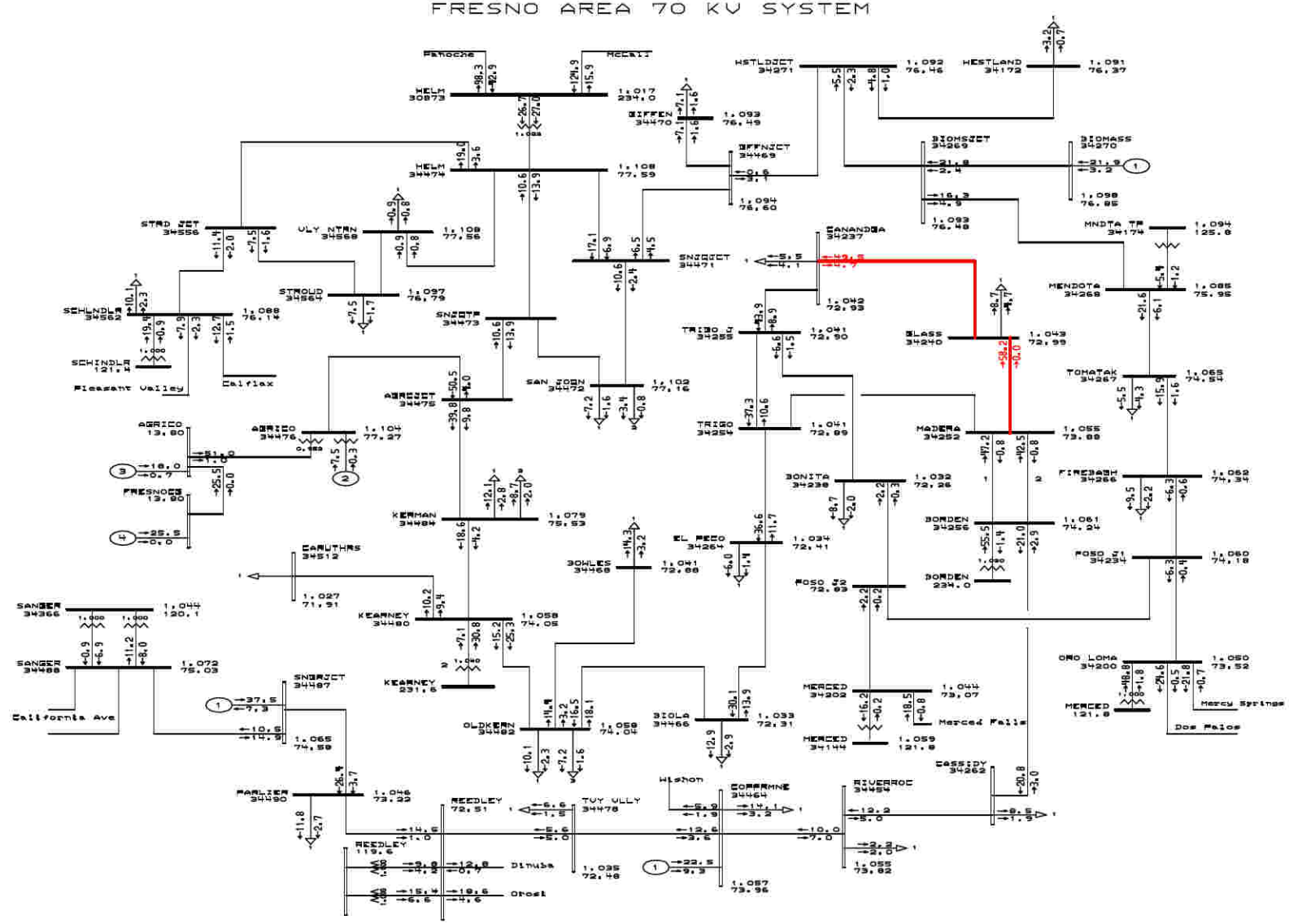

General Electric International, Inc. PSLF Program MW/MVAR Thu Apr 28 21:21:14 2005

PG&E Tranmission Planning	PG&E 2004 BASE CASE SERIES - 2009 Spring Peak Case PATH15=-2669 MW(S-N) PATH26=3395 MW(N-S) PDCI=3105 MW(N-S) COI=4494 MW(N-S) Bullard Energy Center - 2009 Spring Peak - after	Plot 47 - 2009 Spring Peak - After Project 70 kV Outage: Kearney-Bullard Energy Center 230 kV Line	C:\PSLF_Work\34\PGE\Bullard-En C:\PSLF_Work\34\PGE\Bullard-En Rating = 2

FRESNO AREA 70 KV SYSTEM

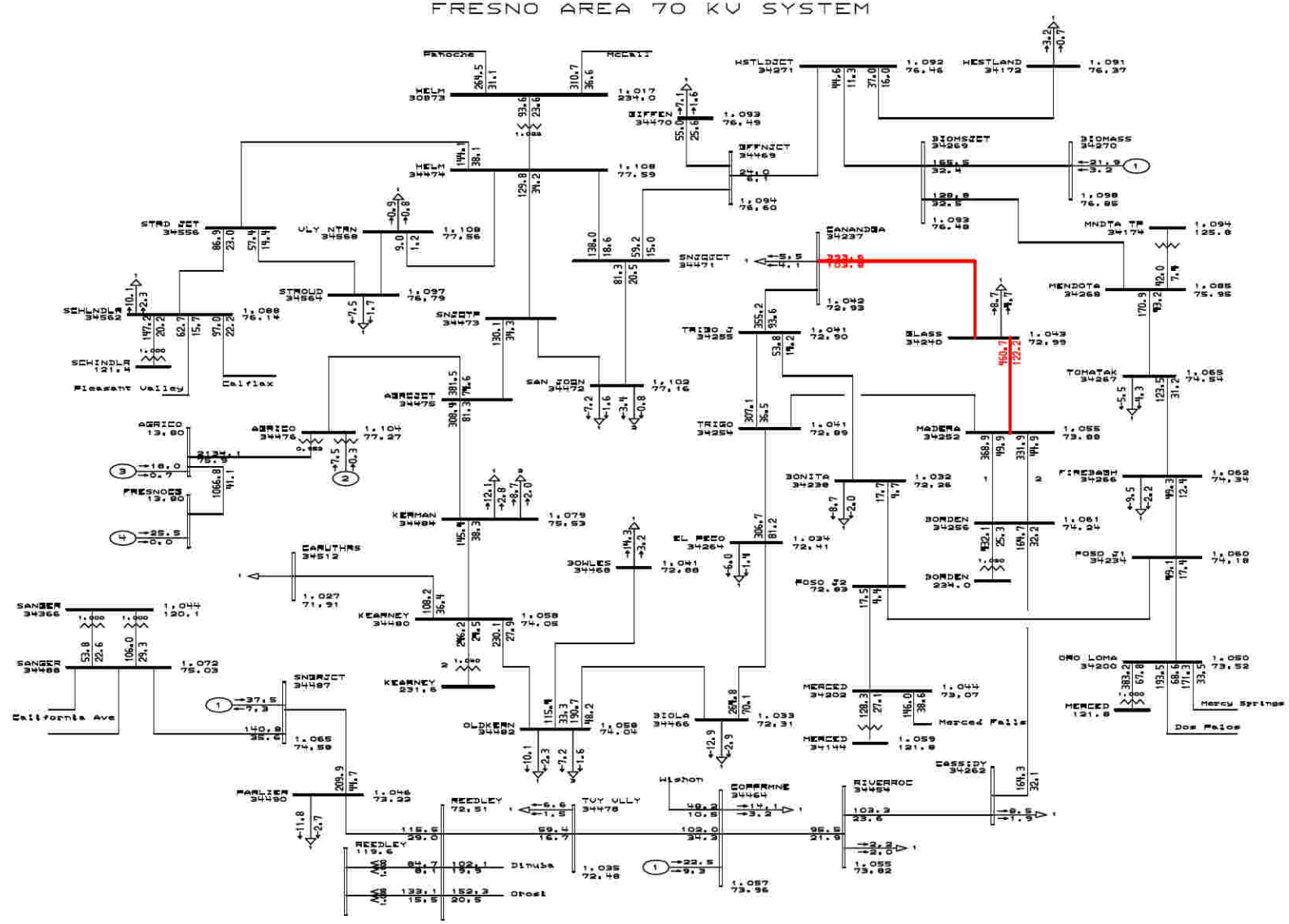

General Electric International, Inc. PSLF Program AMPS/Pct Thu Apr 28 21:21:14 2005

PG&E Tranmission Planning	PG&E 2004 BASE CASE SERIES - 2009 Spring Peak Case PATH15=-2669 MW(S-N) PATH26=3395 MW(N-S) PDCI=3105 MW(N-S) EOI=4494 MW(N-S) Bullard Energy Center - 2009 Spring Peak - after	Plot 48 - 2009 Spring Peak - After Project 70 kV Outage: Kearney-Bullard Energy Center 230 kV Line	C:\PSLF_Work\34\PGE\Bullard-En C:\PSLF_Work\34\PGE\Bullard-En Rating = 2

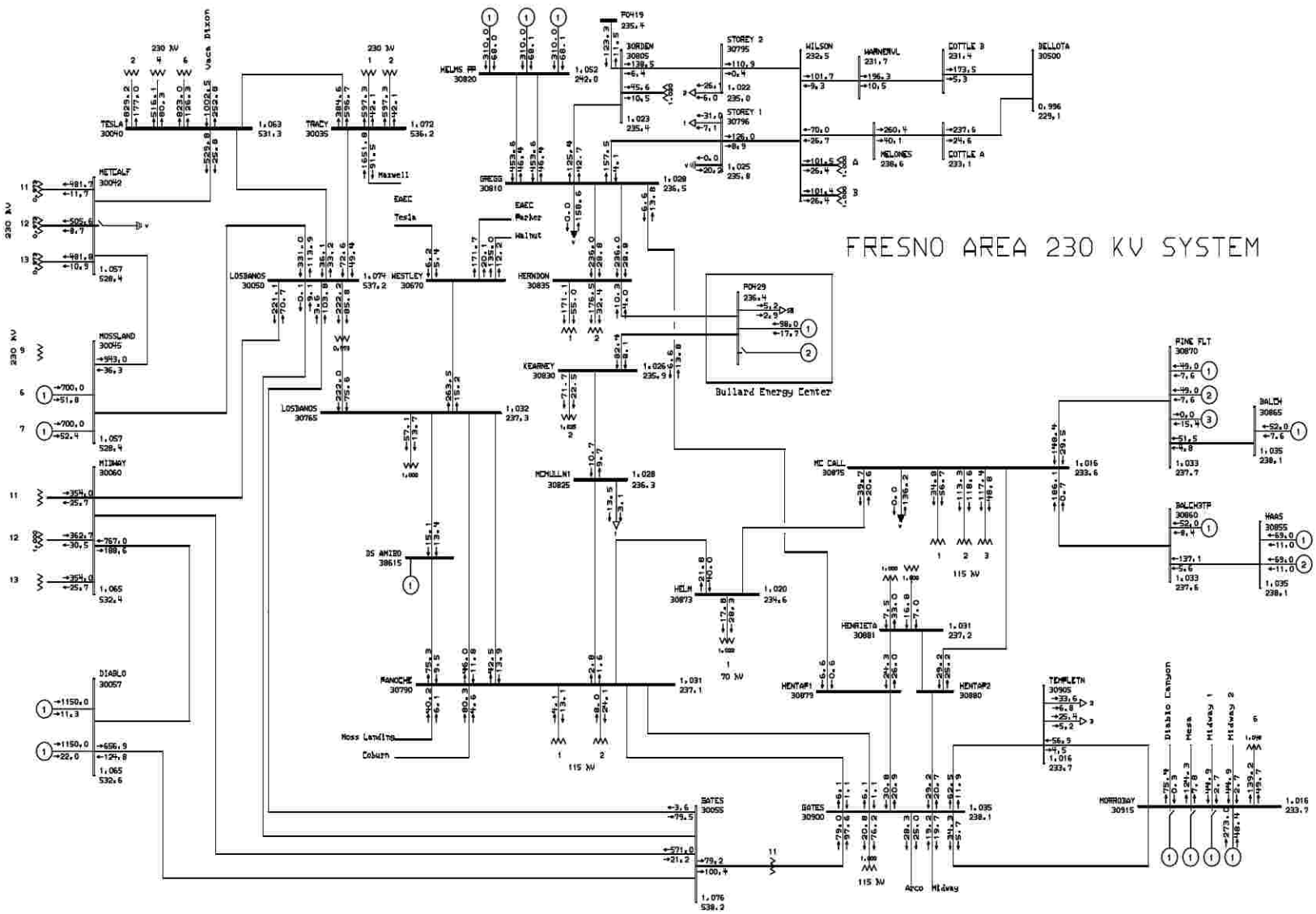

General Electric International, Inc. PSLF Program MW/MVAR Tue May 17 15:46:13 2005

PG&E Transmission Planning	PG&E 2004 BASE CASE SERIES - 2008 South Valley Summer Peak Case PATH15=-264 MW(S-N) PATH26=3393 MW(N-S) PDCI=3104 MW(N-S) COI=4794 MW(N-S) Bullard Energy Center- 2008 Summer Peak - after	Plot 49 - 2008 Summer Peak - Alternative 1, After Project 230 kV	C:\PSLF_Work\34\PGE\Bullard-En C:\PSLF_Work\34\PGE\Bullard-En Rating = 1

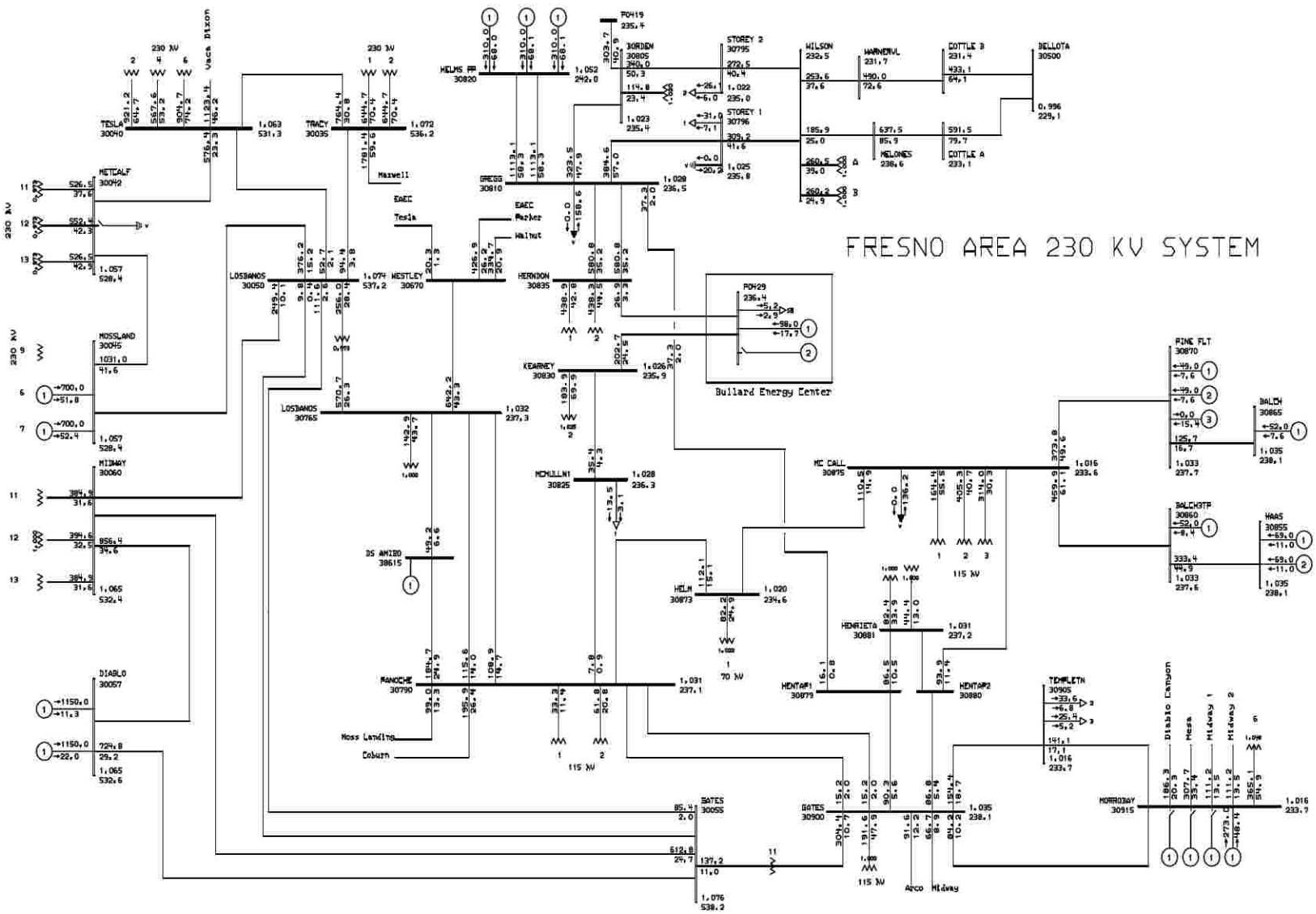

General Electric International, Inc. PSLF Program AMPS/Pct Tue May 17 15:46:13 2005

PG&E Tranmission Planning	PG&E 2004 BASE CASE SERIES - 2008 South Valley Summer Peak Case PATH15=-264 MW(S-N) PATH26=3393 MW(N-S) PDCI=3104 MW(N-S) COI=4794 MW(N-S) Bullard Energy Center- 2008 Summer Peak - after	Plot 50 - 2008 Summer Peak - Alternative 1, After Project 230 kV	C:\PSLF_Work134\PGE\Bullard-En C:\PSLF_Work134\PGE\Bullard-En Rating = 1

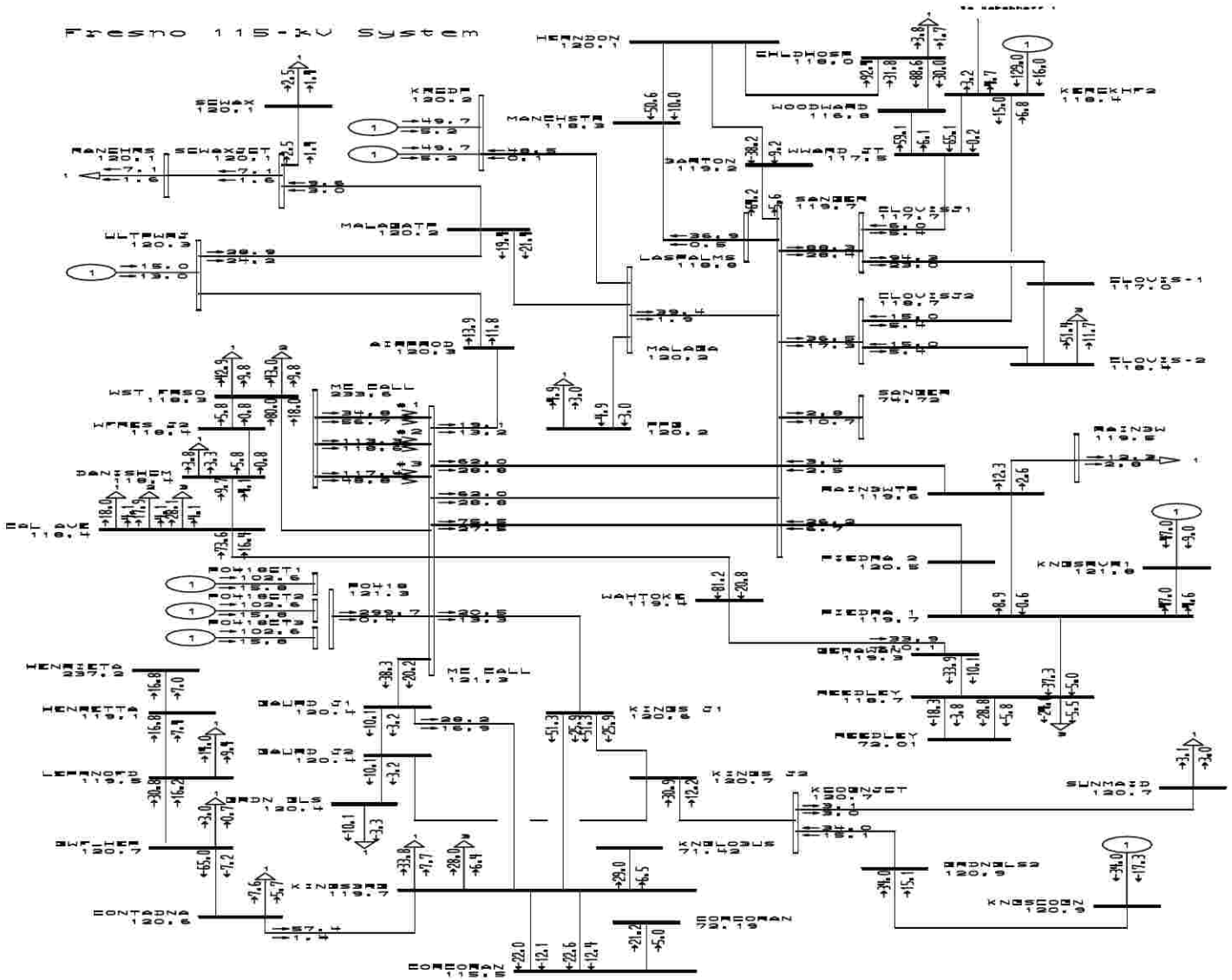

General Electric International, Inc. PSLF Program MW/MVAR Tue May 17 15:46:13 2005

PG&E Tranmission Planning	PG&E 2004 BASE CASE SERIES - 2008 South Valley Summer Peak Case PATH15=-264 MW(S-N) PATH26=3393 MW(N-S) PDCI=3104 MW(N-S) COI=4794 MW(N-S) Bullard Energy Center- 2008 Summer Peak - after	Plot 51 - 2008 Summer Peak - Alternative 1, After Project 115 kV	C:\PSLF_Work134\PGE\Bullard-En C:\PSLF_Work134\PGE\Bullard-En Rating = 1

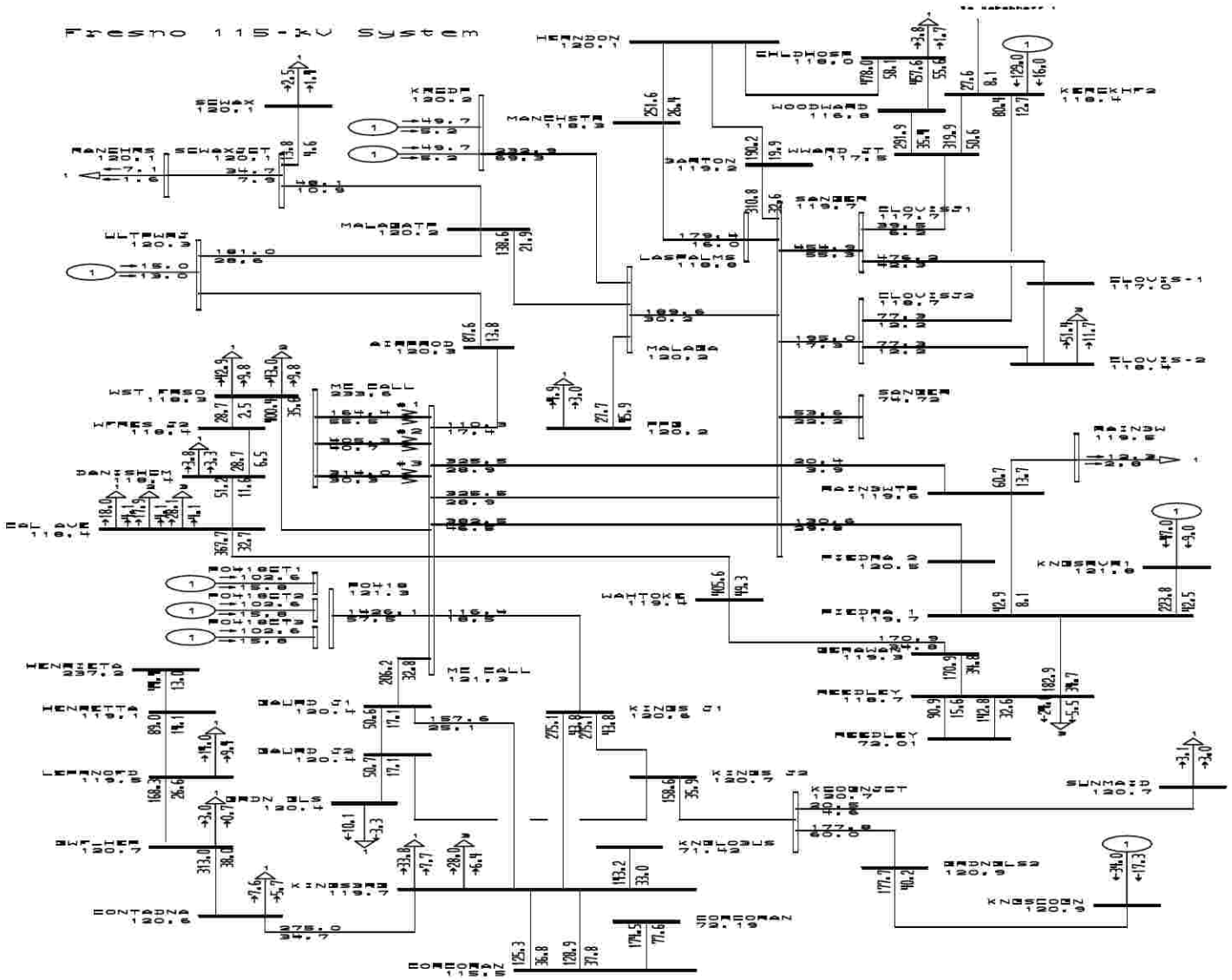

General Electric International, Inc. PSLF Program AMPS/Pct Tue May 17 15:46:14 2005

PG&E Tranmission Planning	PG&E 2004 BASE CASE SERIES - 2008 South Valley Summer Peak Case PATH15=-264 MW(S-N) PATH26=3393 MW(N-S) PDCI=3104 MW(N-S) COI=4794 MW(N-S) Bullard Energy Center- 2008 Summer Peak - after	Plot 52 - 2008 Summer Peak - Alternative 1, After Project 115 kV	C:\PSLF_Work\34\PGE\Bullard-En C:\PSLF_Work\34\PGE\Bullard-En Rating = 1

FRESNO AREA 70 KV SYSTEM

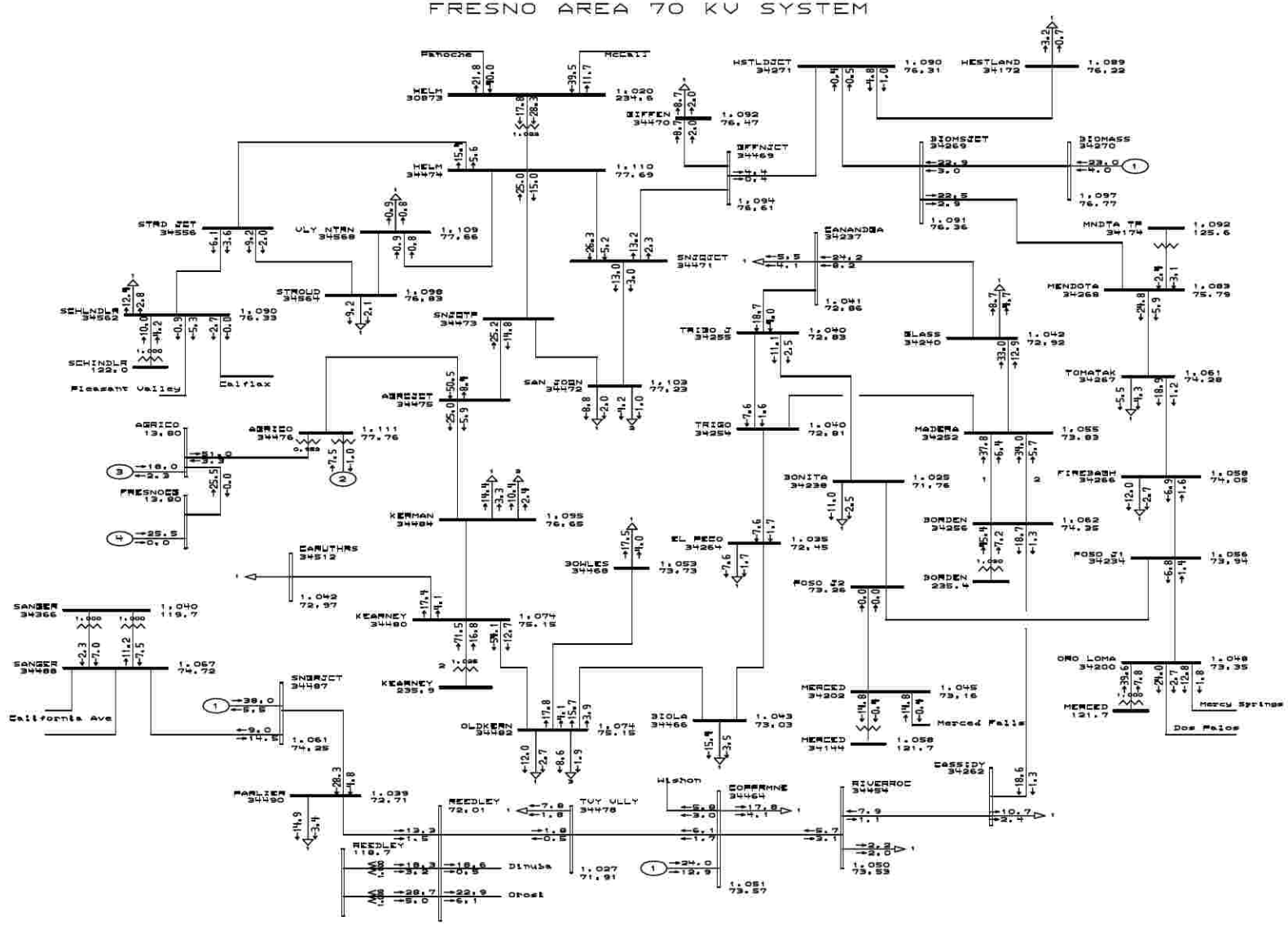

General Electric International, Inc. PSLF Program MW/MVAR Tue May 17 15:46:14 2005

PG&E Tranmission Planning	PG&E 2004 BASE CASE SERIES - 2008 South Valley Summer Peak Case PATH15=-264 MW(S-N) PATH26=3393 MW(N-S) PDCI=3104 MW(N-S) COI=4794 MW(N-S) Bullard Energy Center- 2008 Summer Peak - after	Plot 53 - 2008 Summer Peak - Alternative 1, After Project 70 kV	C:\PSLF_Work\34\PGE\Bullard-En C:\PSLF_Work\34\PGE\Bullard-En Rating = 1

FRESNO AREA 70 KV SYSTEM

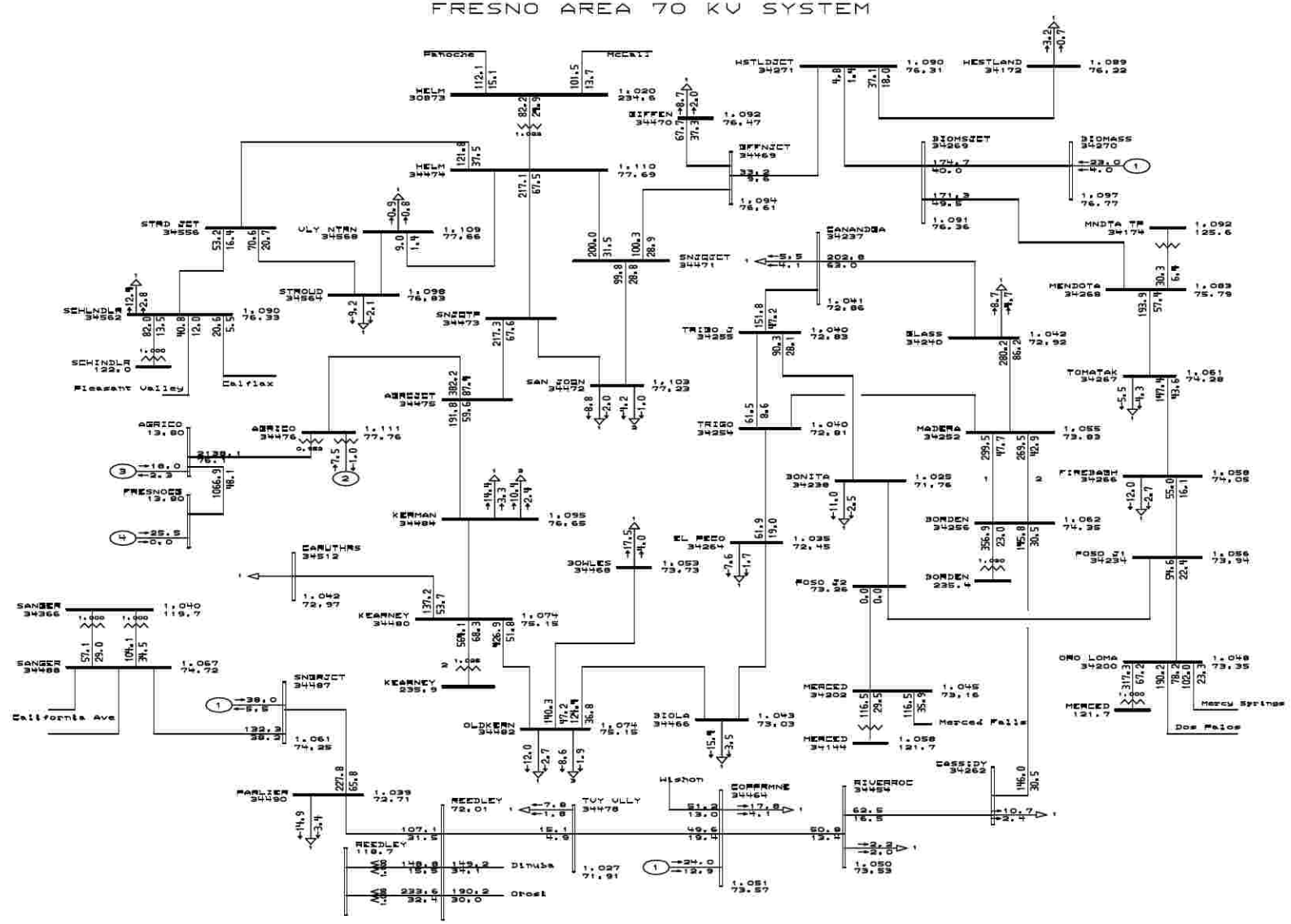

General Electric International, Inc. PSLF Program AMPS/Pct Tue May 17 15:46:14 2005

PG&E Tranmission Planning	PG&E 2004 BASE CASE SERIES - 2008 South Valley Summer Peak Case PATH15=-264 MW(S-N) PATH26=3393 MW(N-S) PDCI=3104 MW(N-S) COI=4794 MW(N-S) Bullard Energy Center- 2008 Summer Peak - after	Plot 54 - 2008 Summer Peak - Alternative 1, After Project 70 kV	C:\PSLF_Work\34\PGE\Bullard-En C:\PSLF_Work\34\PGE\Bullard-En Rating = 1

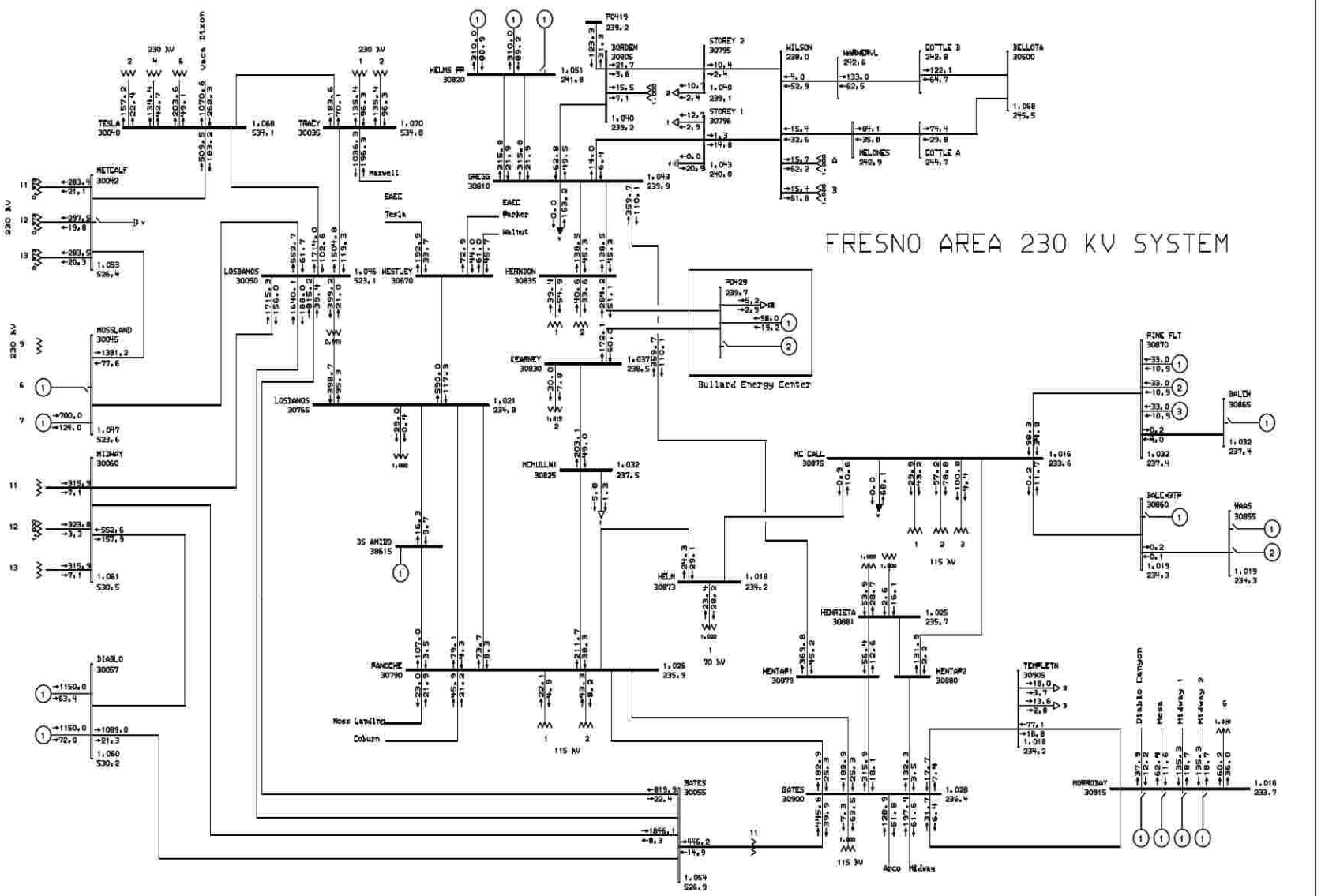

General Electric International, Inc. PSLF Program MW/MVAR Tue May 17 15:46:14 2005

PG&E Tranmission Planning	PG&E 2004 BASE CASE SERIES - 2008 Summer Off Peak Case PATH15=4982 MW(S-N) PATH26=-1563 MW(N-S) PDCI=-1848 MW(N-S) COI=-3630 MW(N-S) Bullard Energy Center - 2008 Summer Off Peak - after	Plot 55 - 2008 Summer Off-Peak - Alternative 1, After Project 230 k	C:\PSLF_Work\34\PGE\Bullard-En C:\PSLF_Work\34\PGE\Bullard-En Rating = 1

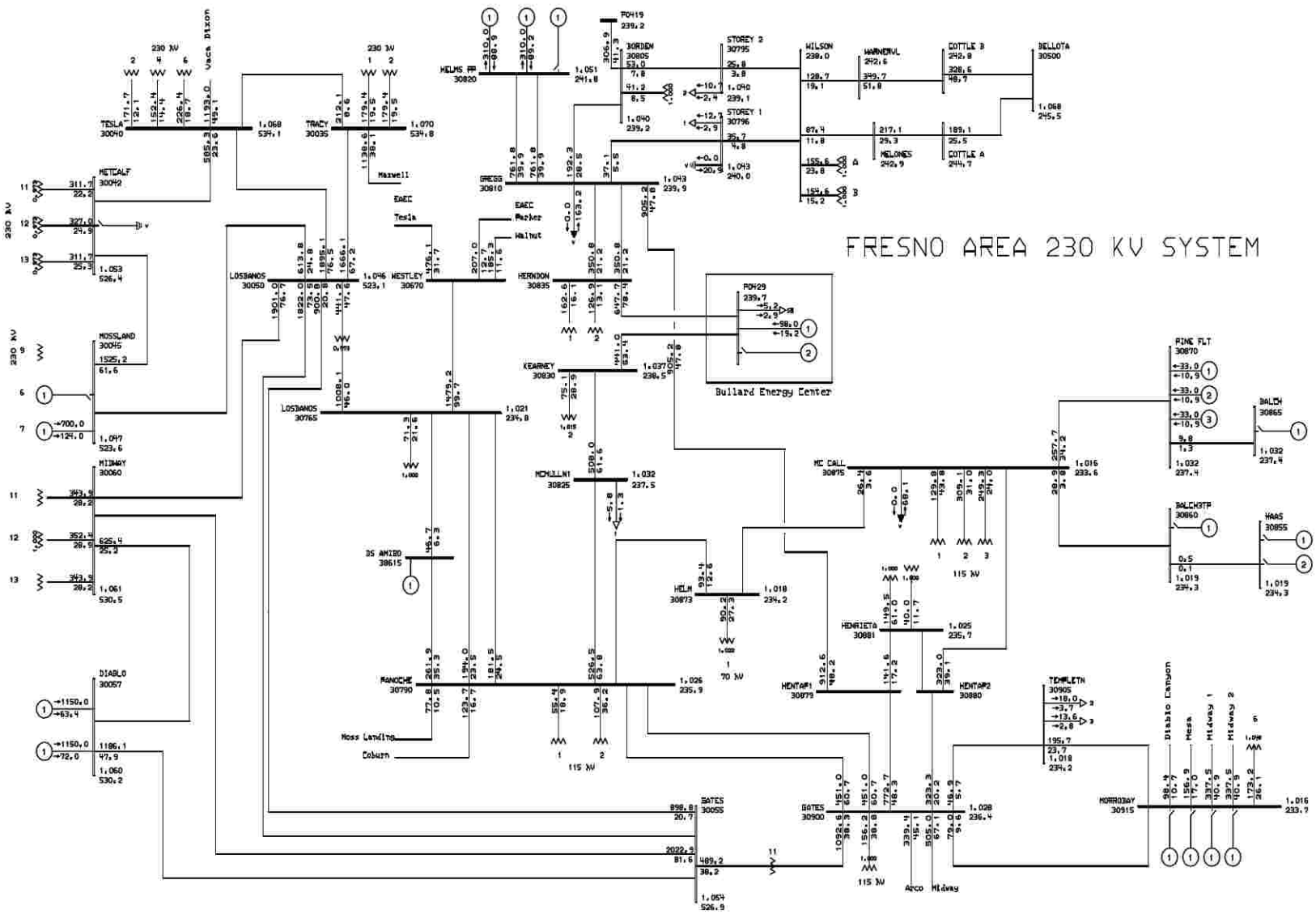

General Electric International, Inc. PSLF Program AMPS/Pct Tue May 17 15:46:14 2005

PG&E Tranmission Planning	PG&E 2004 BASE CASE SERIES - 2008 Summer Off Peak Case PATH15=4982 MW(S-N) PATH26=-1563 MW(N-S) PDCI=-1848 MW(N-S) COI=-3630 MW(N-S) Bullard Energy Center - 2008 Summer Off Peak - after	Plot 56 - 2008 Summer Off-Peak - Alternative 1, After Project 230 k	C:\PSLF_Work\34\PGE\Bullard-En C:\PSLF_Work\34\PGE\Bullard-En Rating = 1

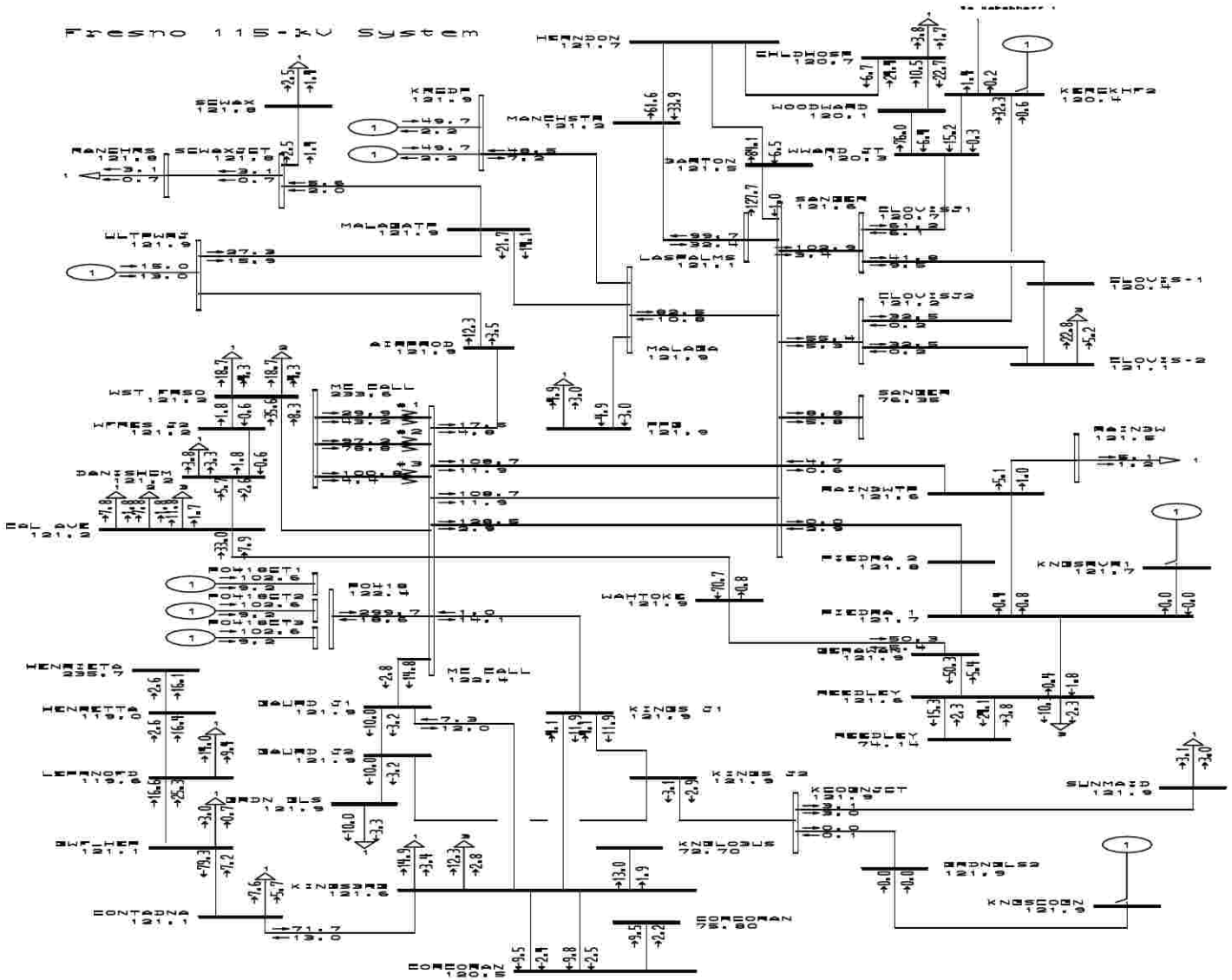

General Electric International, Inc. PSLF Program MW/MVAR Tue May 17 15:46:14 2005

PG&E Tranmission Planning	PG&E 2004 BASE CASE SERIES - 2008 Summer Off Peak Case PATH15=4982 MW(S-N) PATH26=-1563 MW(N-S) PDCI=-1848 MW(N-S) COI=-3630 MW(N-S) Bullard Energy Center - 2008 Summer Off Peak - after	Plot 57 - 2008 Summer Off-Peak - Alternative 1, After Project 115 k	C:\PSLF_Work134\PGE\Bullard-En C:\PSLF_Work134\PGE\Bullard-En Rating = 1

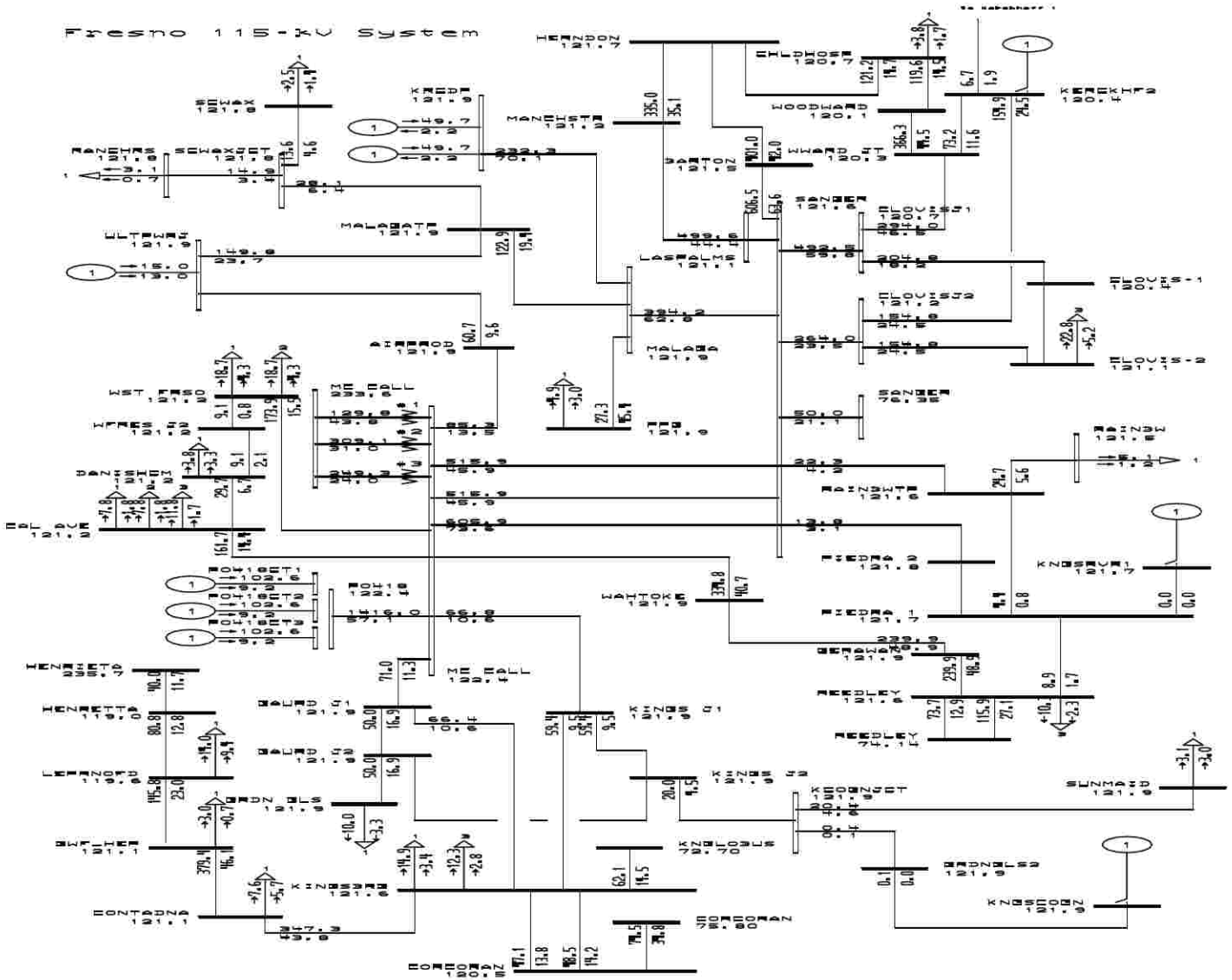

General Electric International, Inc. PSLF Program AMPS/Pct Tue May 17 15:46:15 2005

PG&E Tranmission Planning	PG&E 2004 BASE CASE SERIES - 2008 Summer Off Peak Case PATH15=4982 MW(S-N) PATH26=-1563 MW(N-S) PDCI=-1848 MW(N-S) COI=-3630 MW(N-S) Bullard Energy Center - 2008 Summer Off Peak - after	Plot 58 - 2008 Summer Off-Peak - Alternative 1, After Project 115 k	C:\PSLF_Work\34\PGE\Bullard-En C:\PSLF_Work\34\PGE\Bullard-En Rating = 1

FRESNO AREA 70 KV SYSTEM

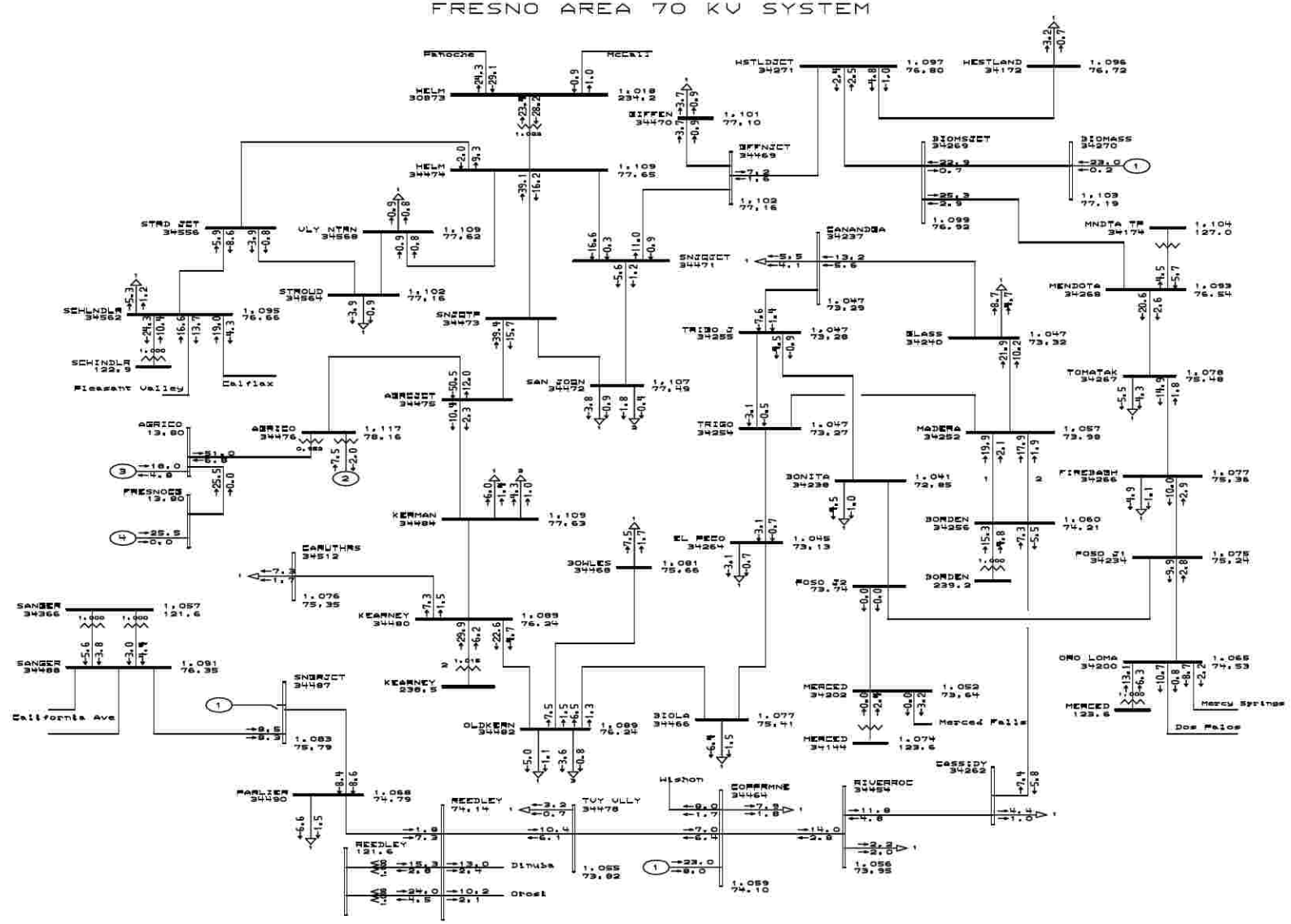

General Electric International, Inc. PSLF Program MW/MVAR Tue May 17 15:46:15 2005

PG&E Tranmission Planning	PG&E 2004 BASE CASE SERIES - 2008 Summer Off Peak Case PATH15=4982 MW(S-N) PATH26=-1563 MW(N-S) PDCI=-1848 MW(N-S) COI=-3630 MW(N-S) Bullard Energy Center - 2008 Summer Off Peak - after	Plot 59 - 2008 Summer Off-Peak - Alternative 1, After Project 70 kV	C:\PSLF_Work\34\PGE\Bullard-En C:\PSLF_Work\34\PGE\Bullard-En Rating = 1

FRESNO AREA 70 KV SYSTEM

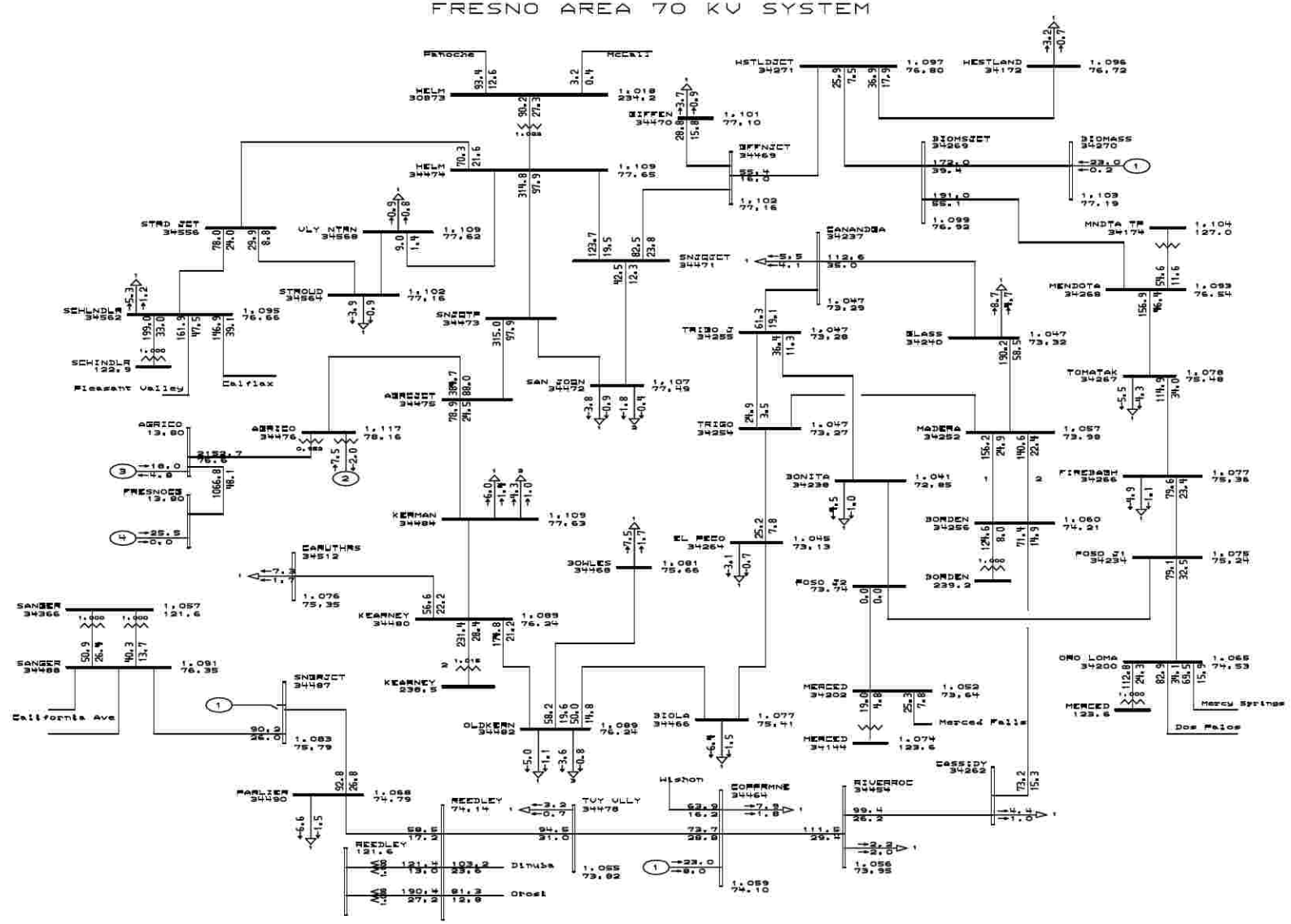

General Electric International, Inc. PSLF Program AMPS/Pct Tue May 17 15:46:15 2005

PG&E Tranmission Planning	PG&E 2004 BASE CASE SERIES - 2008 Summer Off Peak Case PATH15=4982 MW(S-N) PATH26=-1563 MW(N-S) PDCI=-1848 MW(N-S) COI=-3630 MW(N-S) Bullard Energy Center - 2008 Summer Off Peak - after	Plot 60 - 2008 Summer Off-Peak - Alternative 1, After Project 70 kV	C:\PSLF_Work\34\PGE\Bullard-En C:\PSLF_Work\34\PGE\Bullard-En Rating = 1

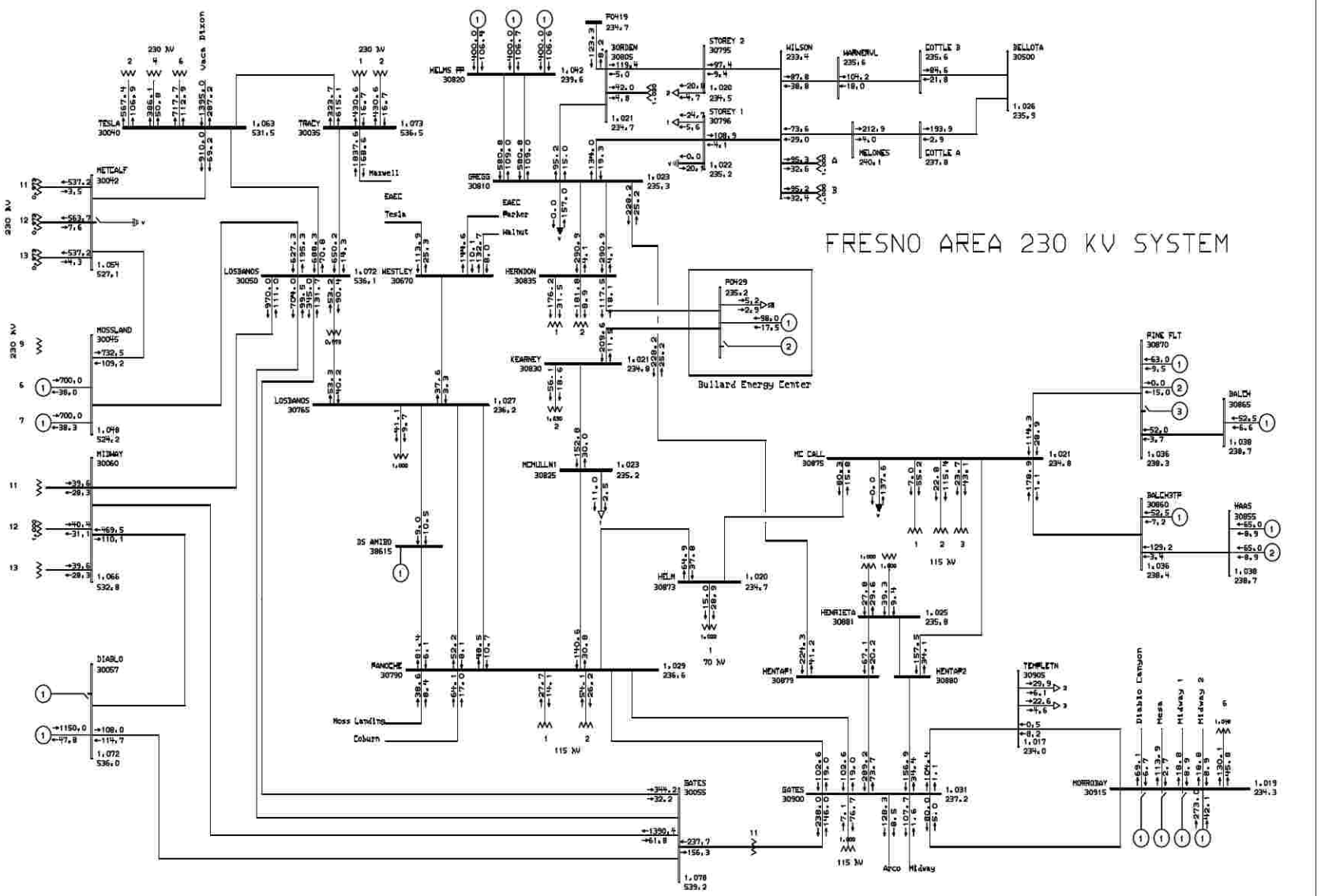

General Electric International, Inc. PSLF Program MW/MVAR Tue May 17 15:46:15 2005

PG&E Tranmission Planning	PG&E 2004 BASE CASE SERIES - 2009 Spring Peak Case PATH15=-2669 MW(S-N) PATH26=3395 MW(N-S) PDCI=3105 MW(N-S) COI=4494 MW(N-S) Bullard Energy Center - 2009 Spring Peak - after	Plot 61 - 2008 Spring Peak - Alternative 1, After Project 230 kV	C:\PSLF_Work\34\PGE\Bullard-En C:\PSLF_Work\34\PGE\Bullard-En Rating = 1

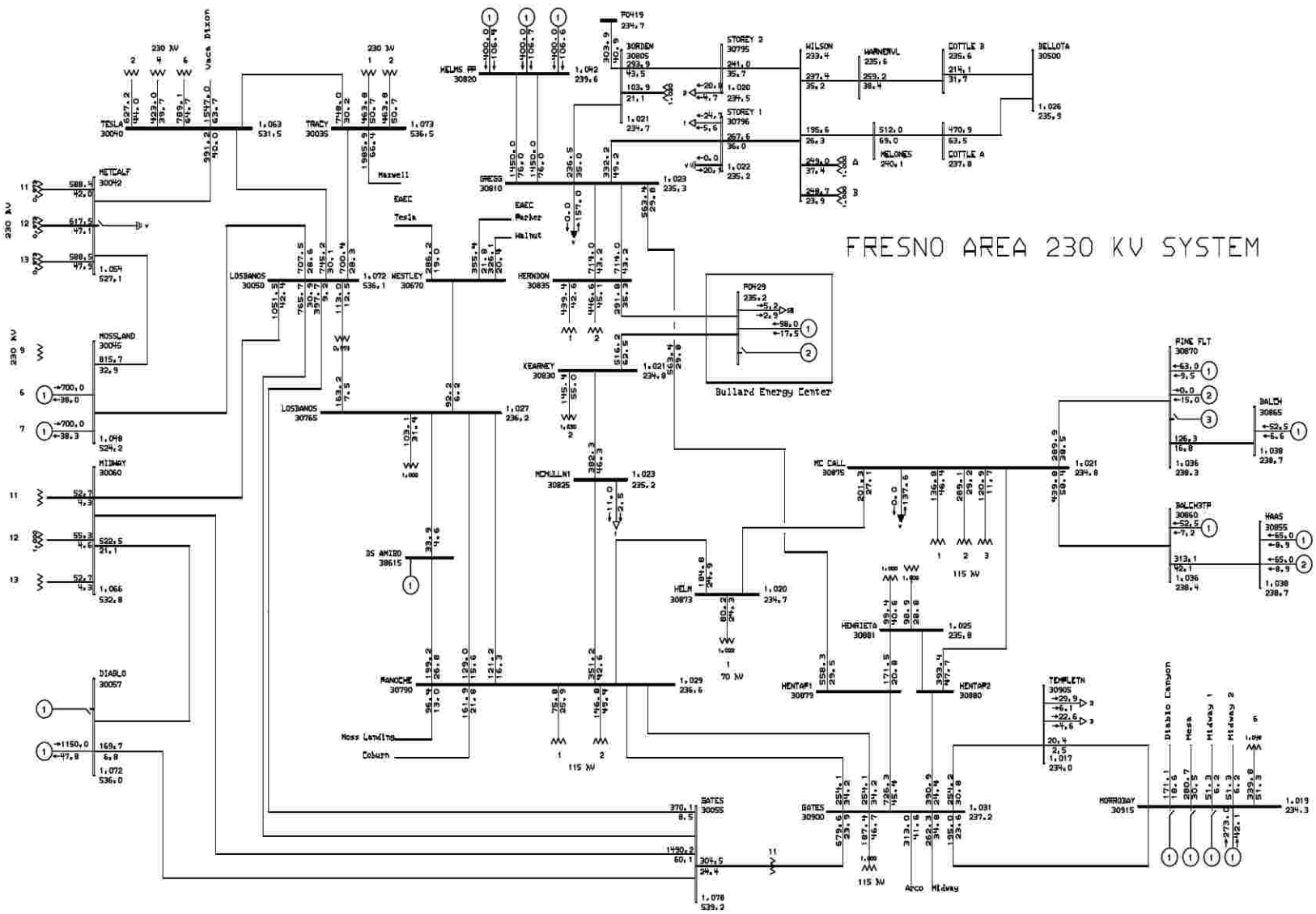

General Electric International, Inc. PSLF Program AMPS/Pct Tue May 17 15:46:15 2005

PG&E Tranmission Planning	PG&E 2004 BASE CASE SERIES - 2009 Spring Peak Case PATH15=-2669 MW(S-N) PATH26=3395 MW(N-S) PDCI=3105 MW(N-S) COI=4494 MW(N-S) Bullard Energy Center - 2009 Spring Peak - after	Plot 62 - 2008 Spring Peak - Alternative 1, After Project 230 kV	C:\PSLF_Work\34\PGE\Bullard-En C:\PSLF_Work\34\PGE\Bullard-En Rating = 1

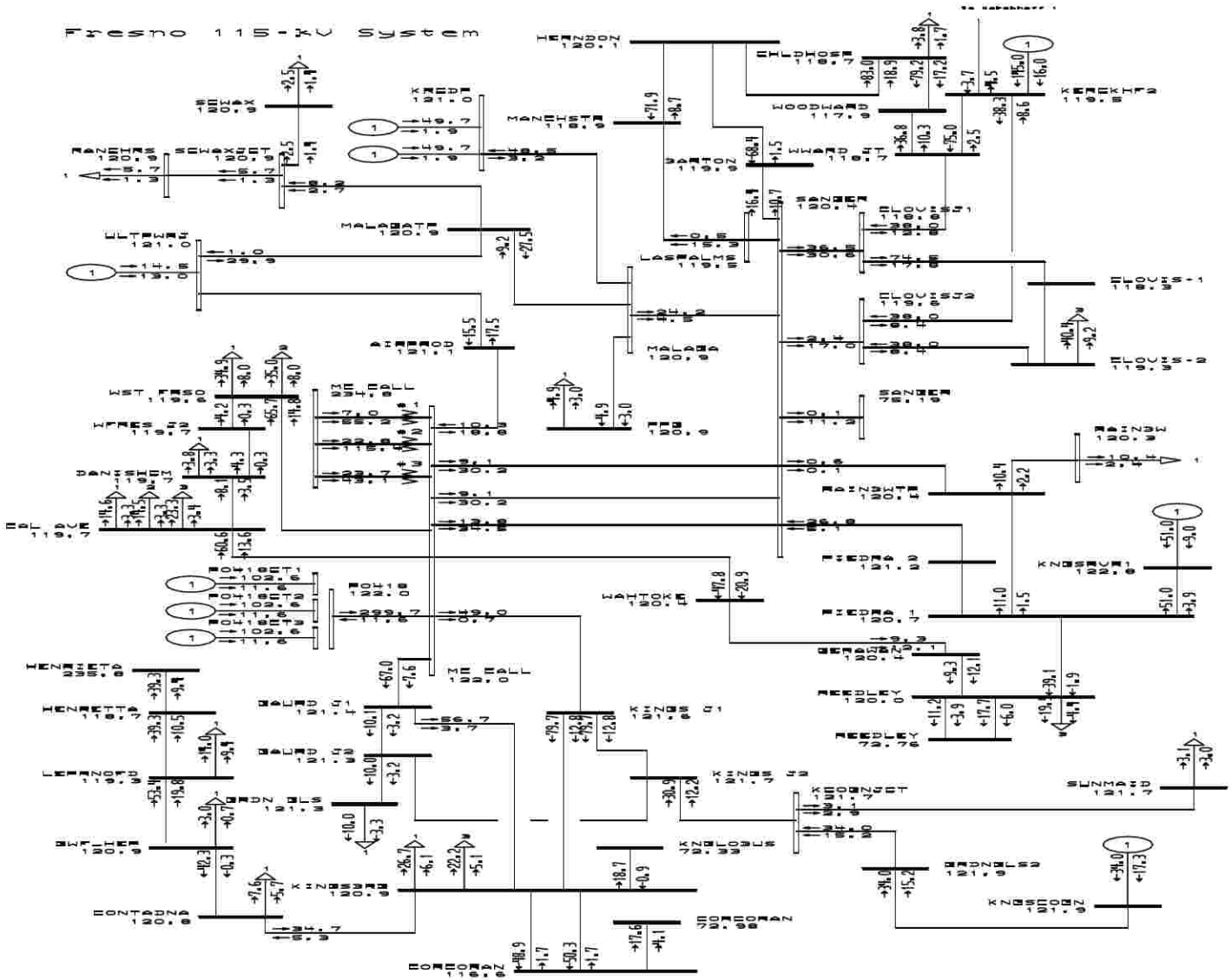

General Electric International, Inc. PSLF Program MW/MVAR Tue May 17 15:46:15 2005

PG&E Tranmission Planning	PG&E 2004 BASE CASE SERIES - 2009 Spring Peak Case PATH15=-2669 MW(S-N) PATH26=3395 MW(N-S) FDCI=3105 MW(N-S) EOI=4494 MW(N-S) Bullard Energy Center - 2009 Spring Peak - after	Plot 63 - 2008 Spring Peak - Alternative 1, After Project 115 kV	C:\PSLF_Work\34\PGE\Bullard-En C:\PSLF_Work\34\PGE\Bullard-En Rating = 1

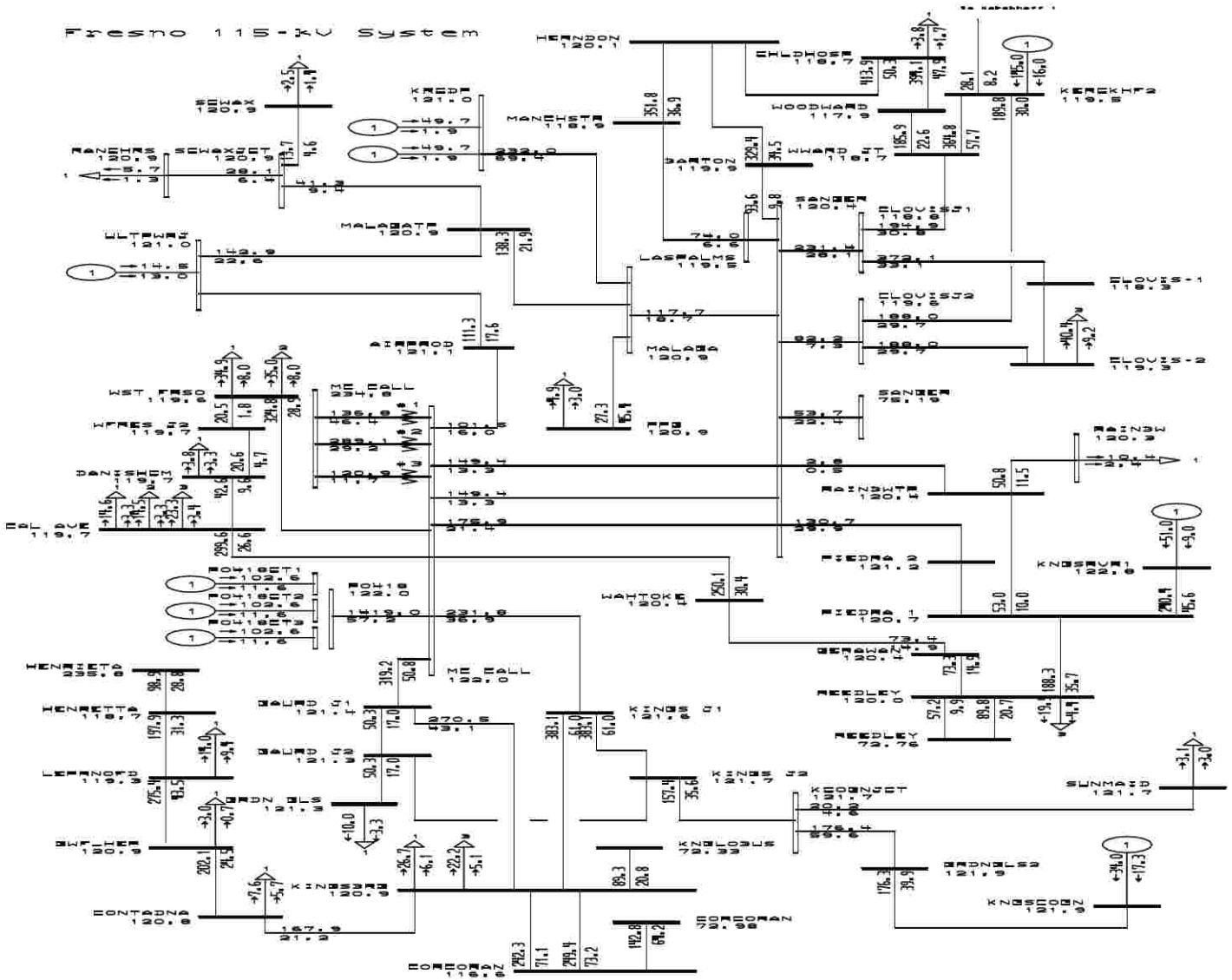

General Electric International, Inc. PSLF Program AMPS/Pct Tue May 17 15:46:16 2005

PG&E Tranmission Planning	PG&E 2004 BASE CASE SERIES - 2009 Spring Peak Case PATH15=-2669 MW(S-N) PATH26=3395 MW(N-S) FDCI=3105 MW(N-S) EOI=4494 MW(N-S) Bullard Energy Center - 2009 Spring Peak - after	Plot 64 - 2008 Spring Peak - Alternative 1, After Project 115 kV	C:\PSLF_Work\34\PGE\Bullard-En C:\PSLF_Work\34\PGE\Bullard-En Rating = 1

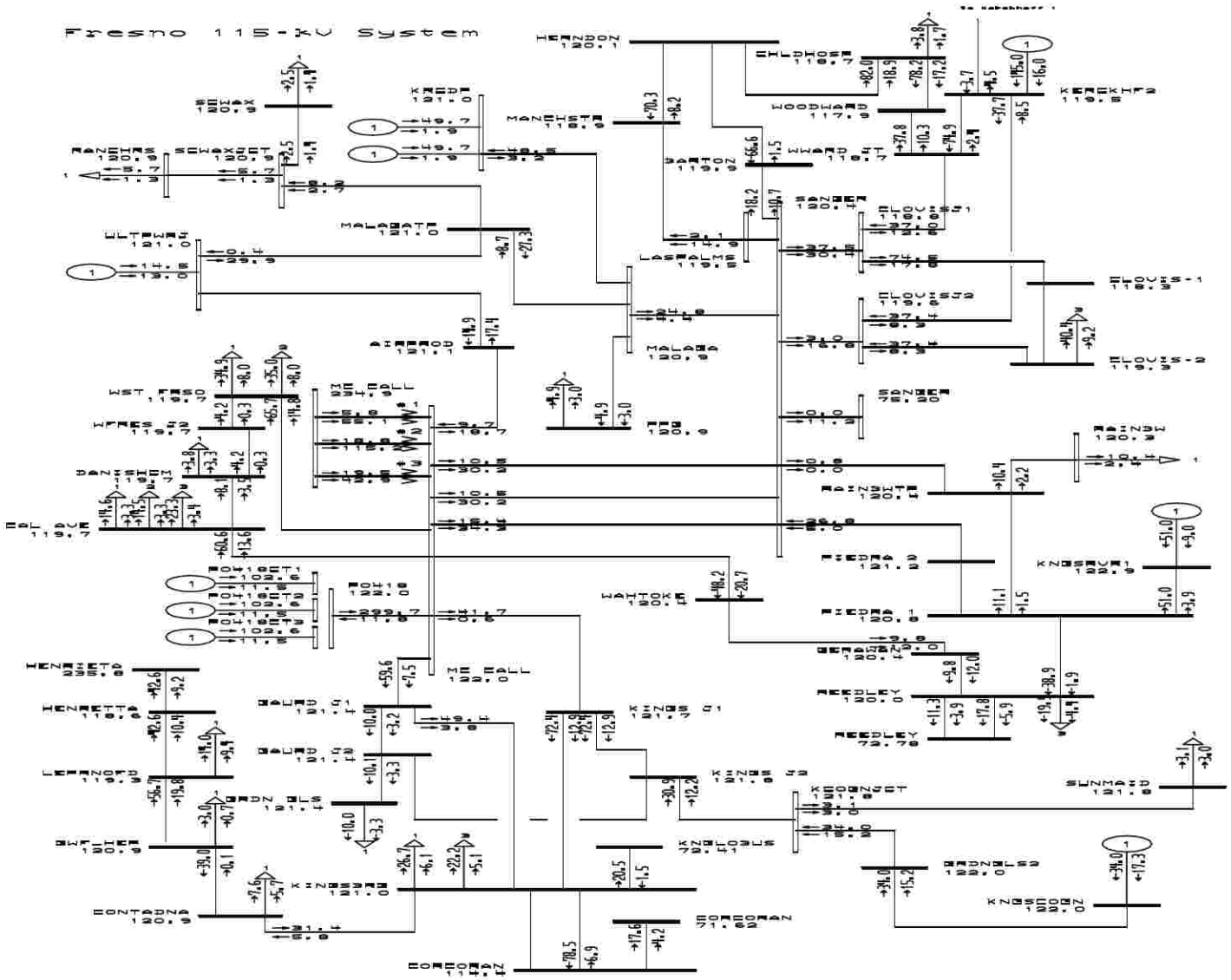

General Electric International, Inc. PSLF Program MW/MVAR Tue May 17 15:46:18 2005

PG&E Tranmission Planning	PG&E 2004 BASE CASE SERIES - 2009 Spring Peak Case PATH15=-2669 MW(S-N) PATH26=3395 MW(N-S) FDCI=3105 MW(N-S) EOI=4494 MW(N-S) Bullard Energy Center - 2009 Spring Peak - after	Plot 65 - 2009 Spring Peak - Alternative 1, After Project 115 kV Outage: Kingsburg - Corcoran #1 115 kV Outage	C:\PSLF_Work134\PGE\Bullard-En C:\PSLF_Work134\PGE\Bullard-En Rating = 2

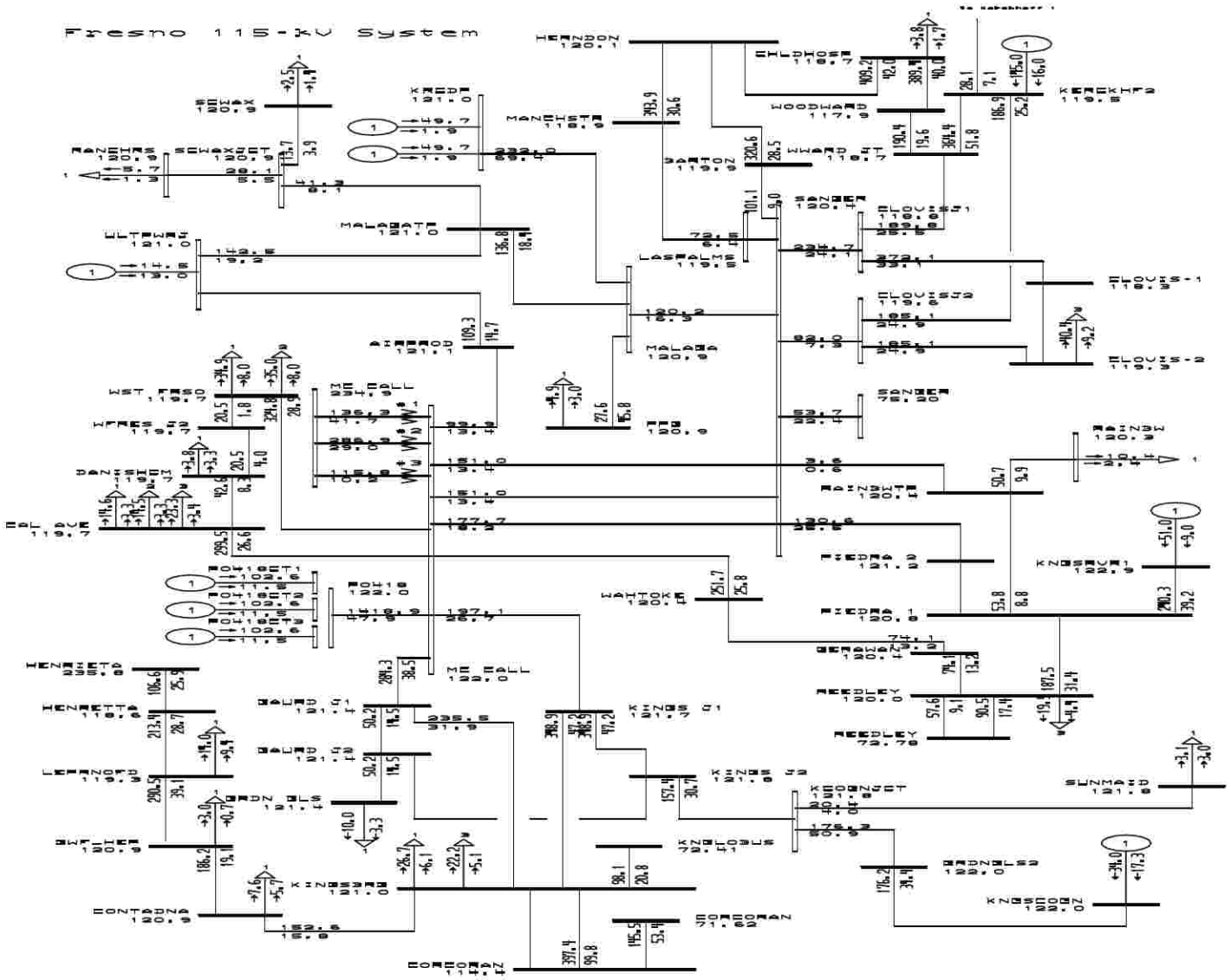

General Electric International, Inc. PSLF Program AMPS/Pct Tue May 17 15:46:18 2005

PG&E Tranmission Planning	PG&E 2004 BASE CASE SERIES - 2009 Spring Peak Case PATH15=-2669 MW(S-N) PATH26=3395 MW(N-S) FDCI=3105 MW(N-S) EOI=4494 MW(N-S) Bullard Energy Center - 2009 Spring Peak - after	Plot 66 - 2009 Spring Peak - Alternative 1, After Project 115 kV Outage: Kingsburg - Corcoran #1 115 kV Outage	C:\PSLF_Work\34\PGE\Bullard-En C:\PSLF_Work\34\PGE\Bullard-En Rating = 2

FRESNO AREA 70 KV SYSTEM

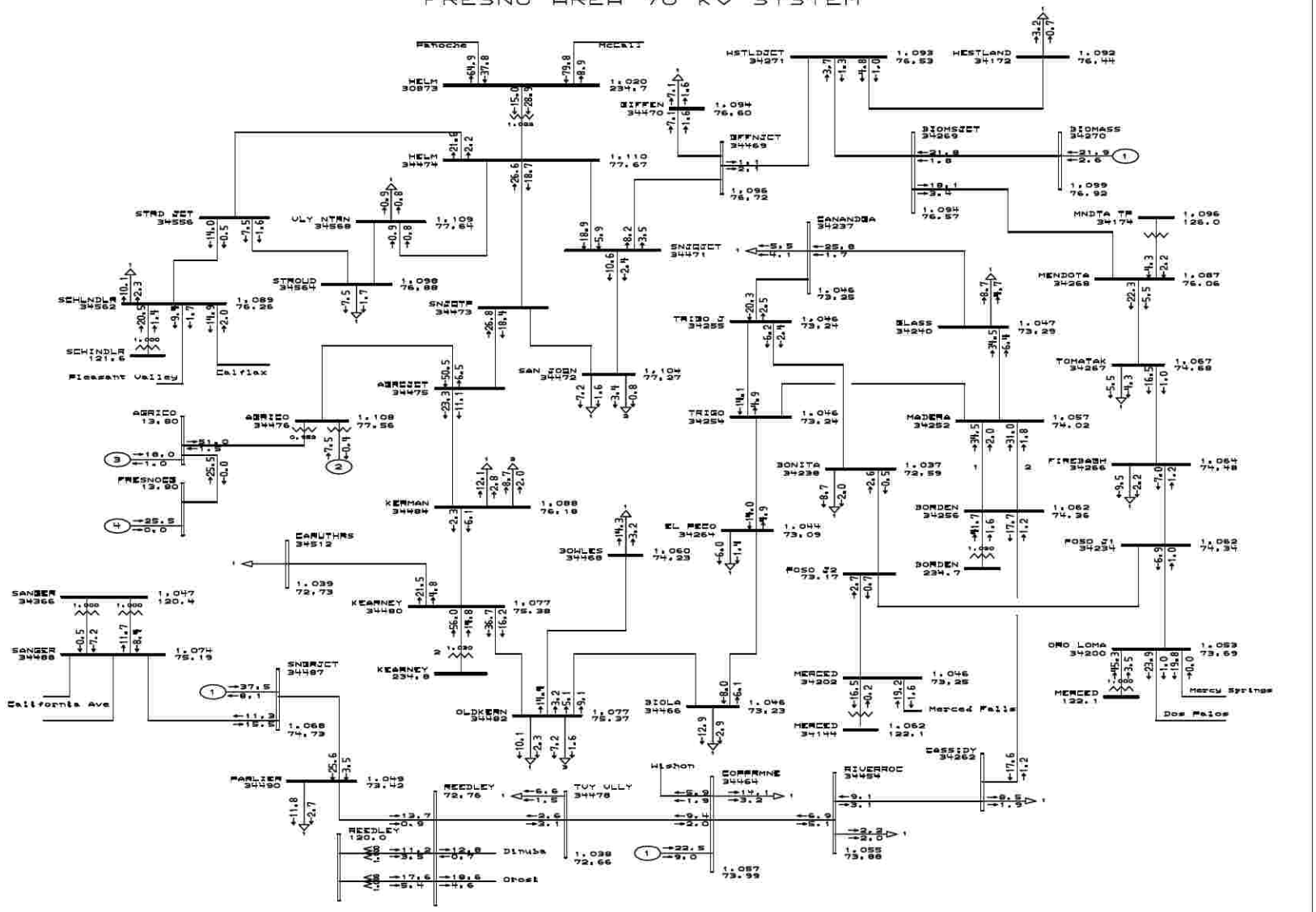

General Electric International, Inc. PSLF Program MW/MVAR Tue May 17 15:46:16 2005

PG&E Tranmission Planning	PG&E 2004 BASE CASE SERIES - 2009 Spring Peak Case PATH15=-2669 MW(S-N) PATH26=3395 MW(N-S) PDCI=3105 MW(N-S) COI=4494 MW(N-S) Bullard Energy Center - 2009 Spring Peak - after	Plot 67 - 2008 Spring Peak - Alternative 1, After Project 70 kV	C:\PSLF_Work\34\PGE\Bullard-En C:\PSLF_Work\34\PGE\Bullard-En Rating = 1

FRESNO AREA 70 KV SYSTEM

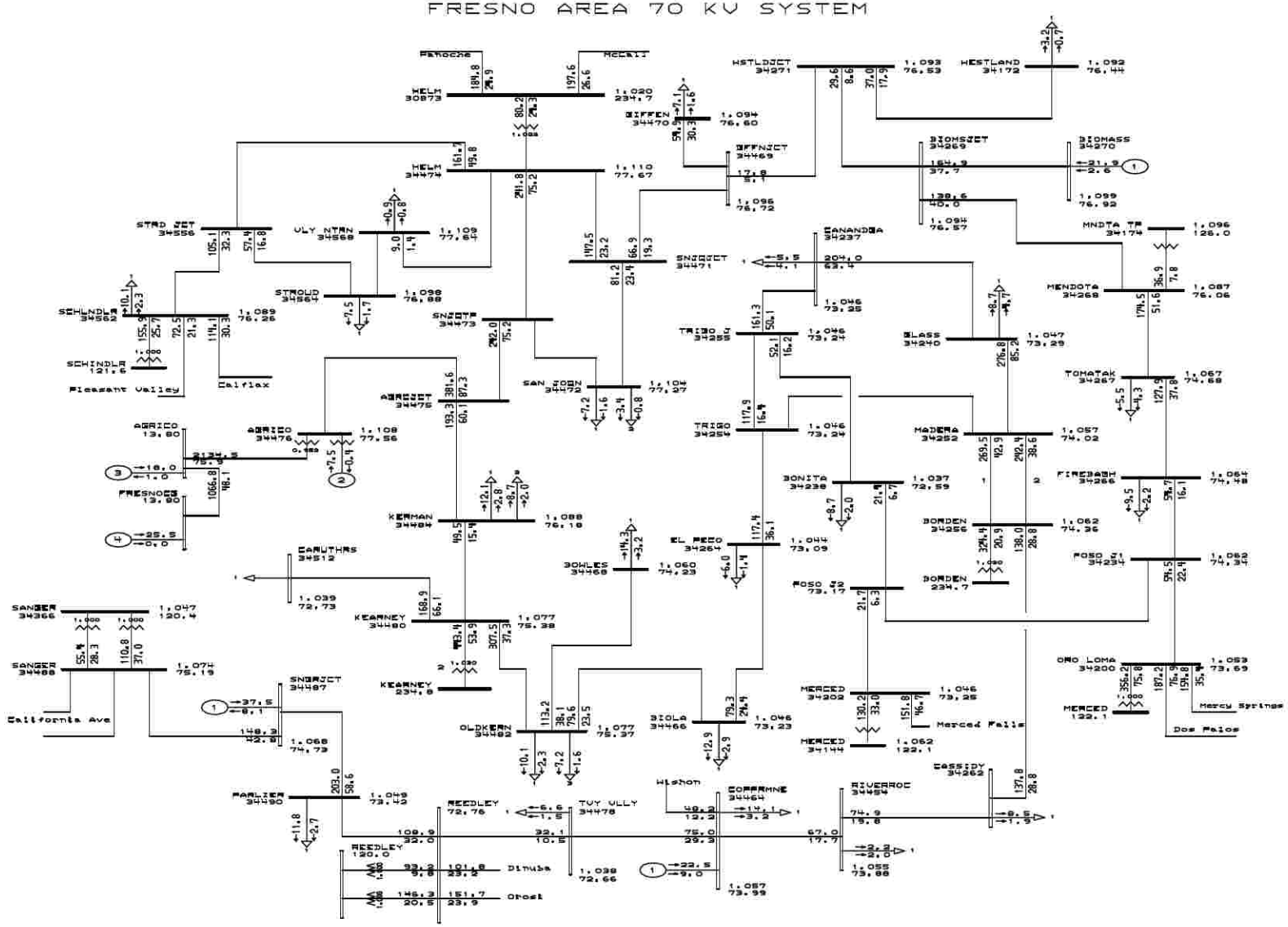

General Electric International, Inc. PSLF Program AMPS/Pct Tue May 17 15:46:16 2005

PG&E Tranmission Planning	PG&E 2004 BASE CASE SERIES - 2009 Spring Peak Case PATH15=-2669 MW(S-N) PATH26=3395 MW(N-S) PDCI=3105 MW(N-S) COI=4494 MW(N-S) Bullard Energy Center - 2009 Spring Peak - after	Plot 68 - 2008 Spring Peak - Alternative 1, After Project 70 kV	C:\PSLF_Work\34\PGE\Bullard-En C:\PSLF_Work\34\PGE\Bullard-En Rating = 1

FRESNO AREA 70 KV SYSTEM

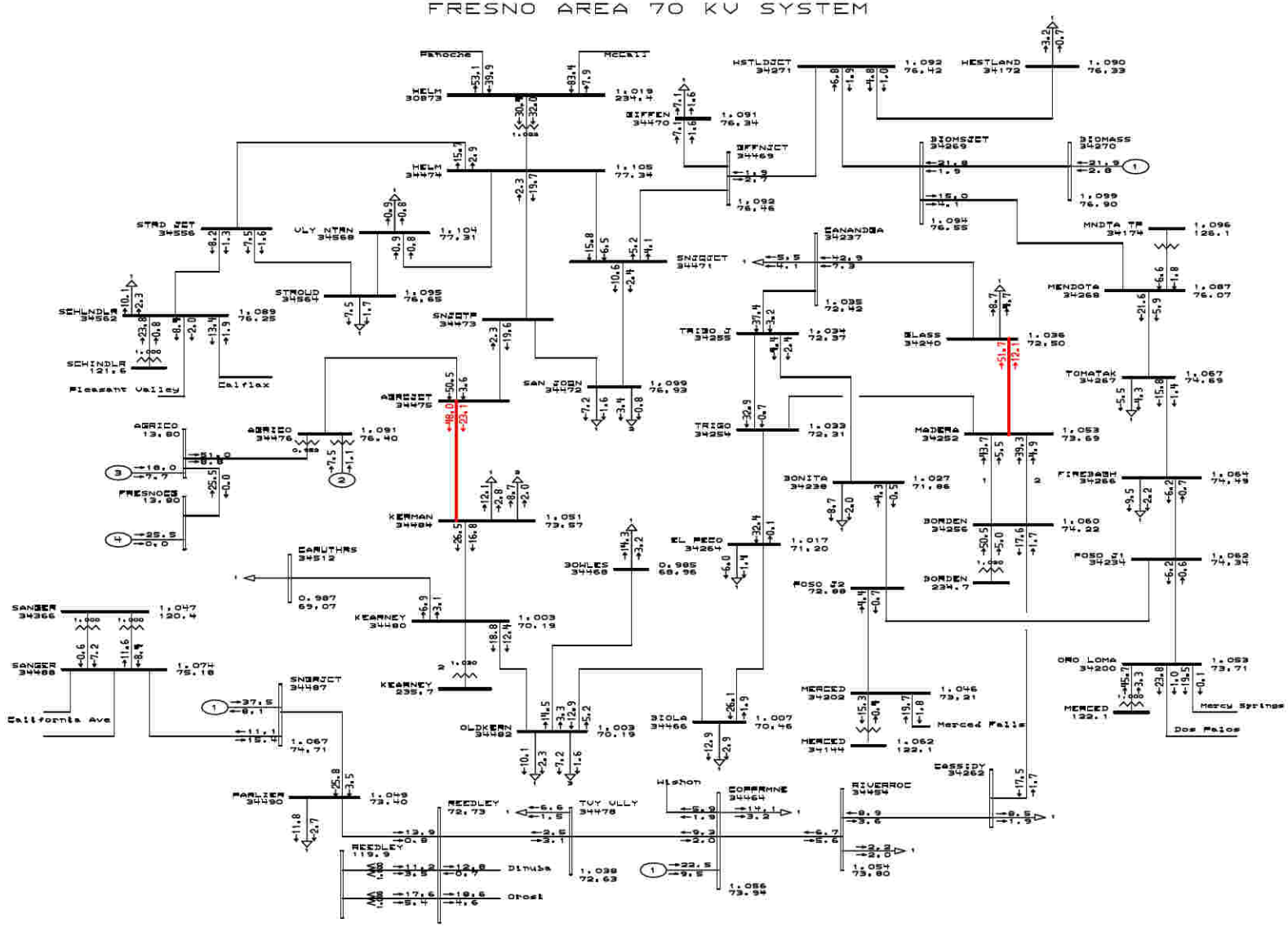

General Electric International, Inc. PSLF Program MW/MVAR Tue May 17 15:46:20 2005

PG&E Tranmission Planning	PG&E 2004 BASE CASE SERIES - 2009 Spring Peak Case PATH15=-2669 MW(S-N) PATH26=3395 MW(N-S) PDCI=3105 MW(N-S) COI=4494 MW(N-S) Bullard Energy Center - 2009 Spring Peak - after	Plot 69 - 2009 Spring Peak - Alternative 1, After Project 70 kV Outage: Kearney 230/70 kV Transformer	C:\PSLF_Work\34\PGE\Bullard-En C:\PSLF_Work\34\PGE\Bullard-En Rating = 2

FRESNO AREA 70 KV SYSTEM

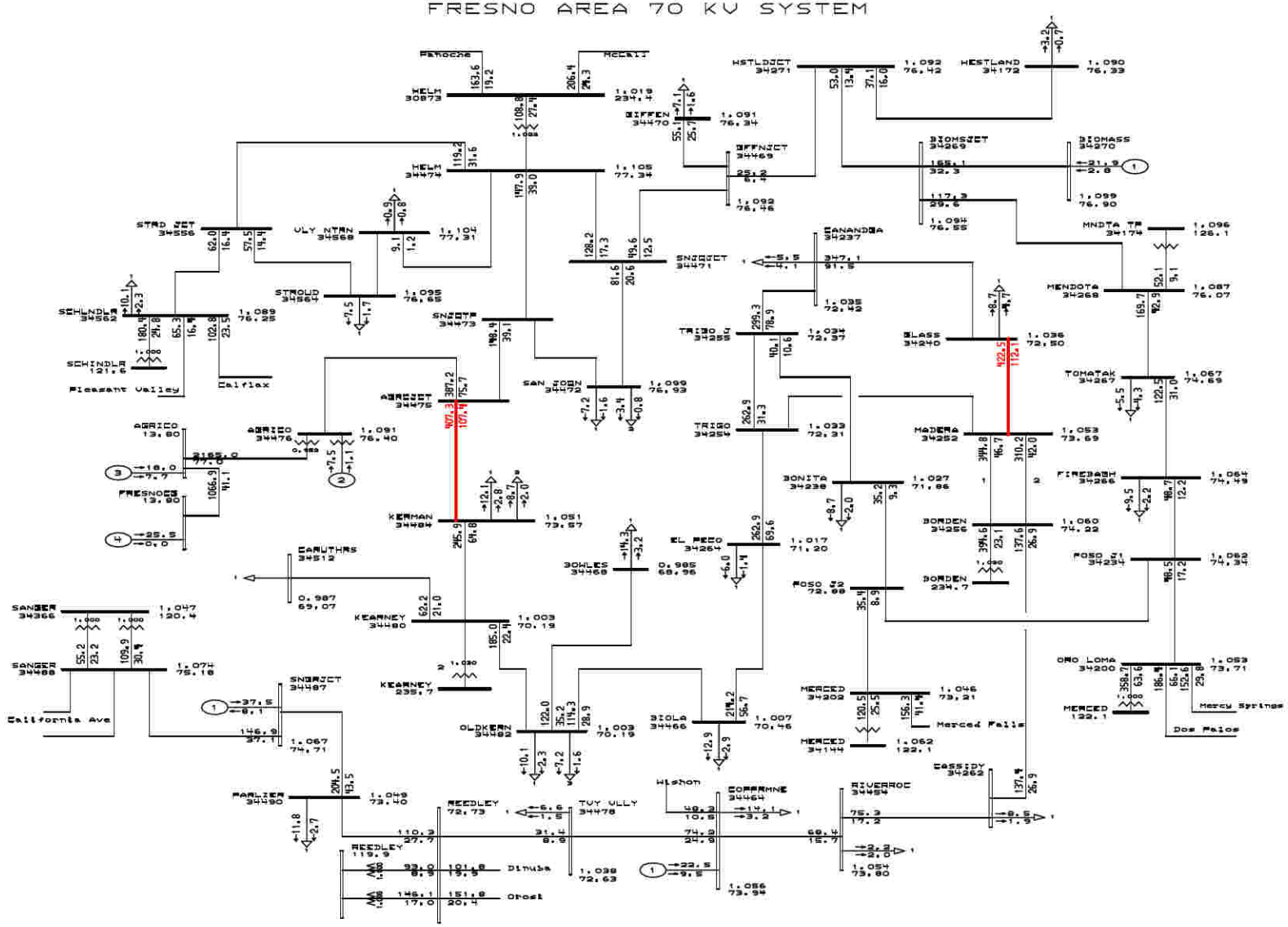

General Electric International, Inc. PSLF Program AMPS/Pct Tue May 17 15:46:20 2005

PG&E Tranmission Planning	PG&E 2004 BASE CASE SERIES - 2009 Spring Peak Case PATH15=-2669 MW(S-N) PATH26=3395 MW(N-S) PDCI=3105 MW(N-S) COI=4494 MW(N-S) Bullard Energy Center - 2009 Spring Peak - after	Plot 70 - 2009 Spring Peak - Alternative 1, After Project 70 kV Outage: Kearney 230/70 kV Transformer	C:\PSLF_Work\34\PGE\Bullard-En C:\PSLF_Work\34\PGE\Bullard-En Rating = 2

FRESNO AREA 70 KV SYSTEM

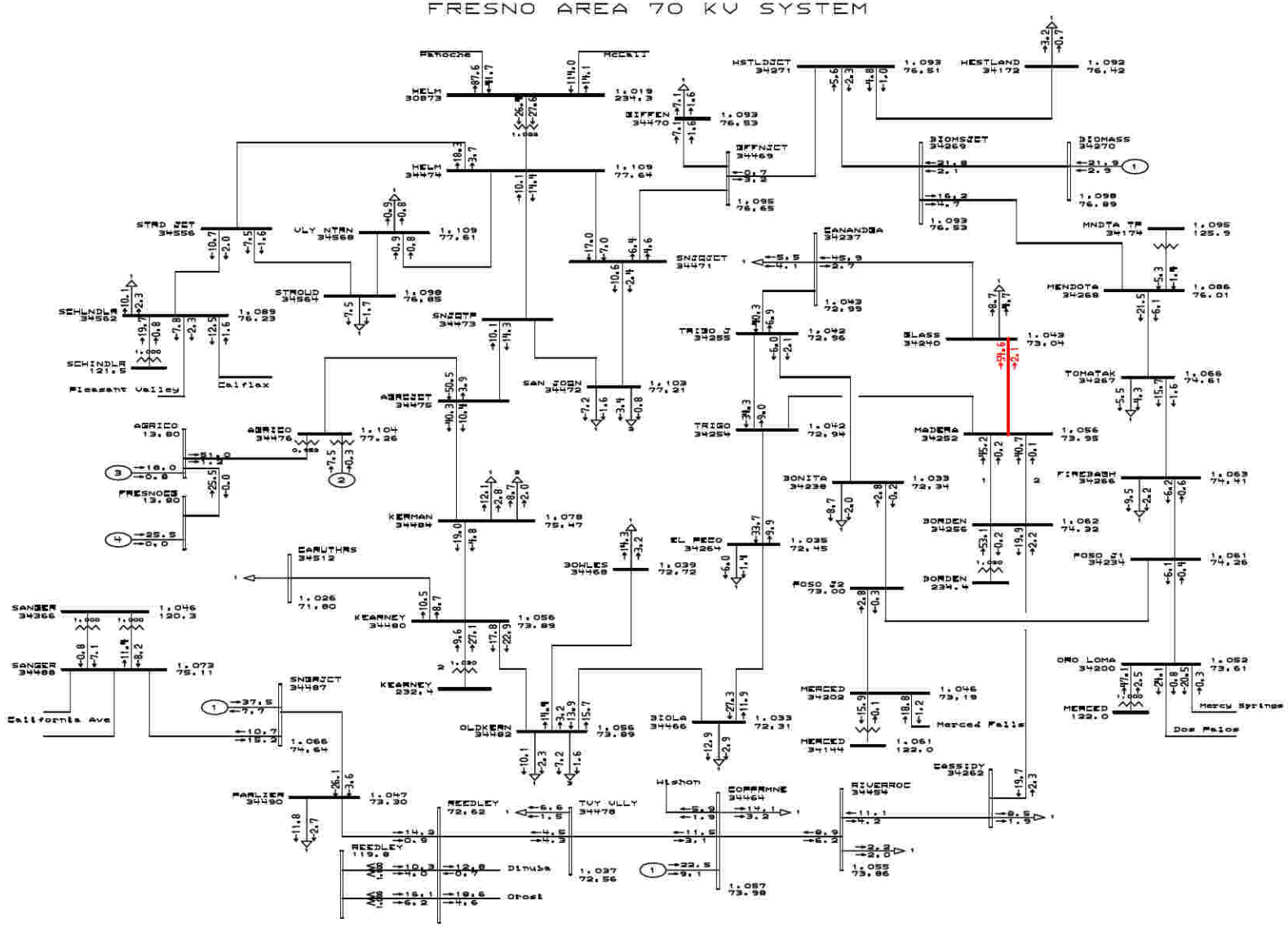

General Electric International, Inc. PSLF Program MW/MVAR Tue May 17 15:46:22 2005

PG&E Tranmission Planning	PG&E 2004 BASE CASE SERIES - 2009 Spring Peak Case PATH15=-2669 MW(S-N) PATH26=3395 MW(N-S) PDCI=3105 MW(N-S) COI=4494 MW(N-S) Bullard Energy Center - 2009 Spring Peak - after	Plot 71 - 2009 Spring Peak - Alternative 1, After Project 70 kV Outage: Kearney-Bullard Energy Center 230 kV Line	C:\PSLF_Work\34\PGE\Bullard-En C:\PSLF_Work\34\PGE\Bullard-En Rating = 2

FRESNO AREA 70 KV SYSTEM

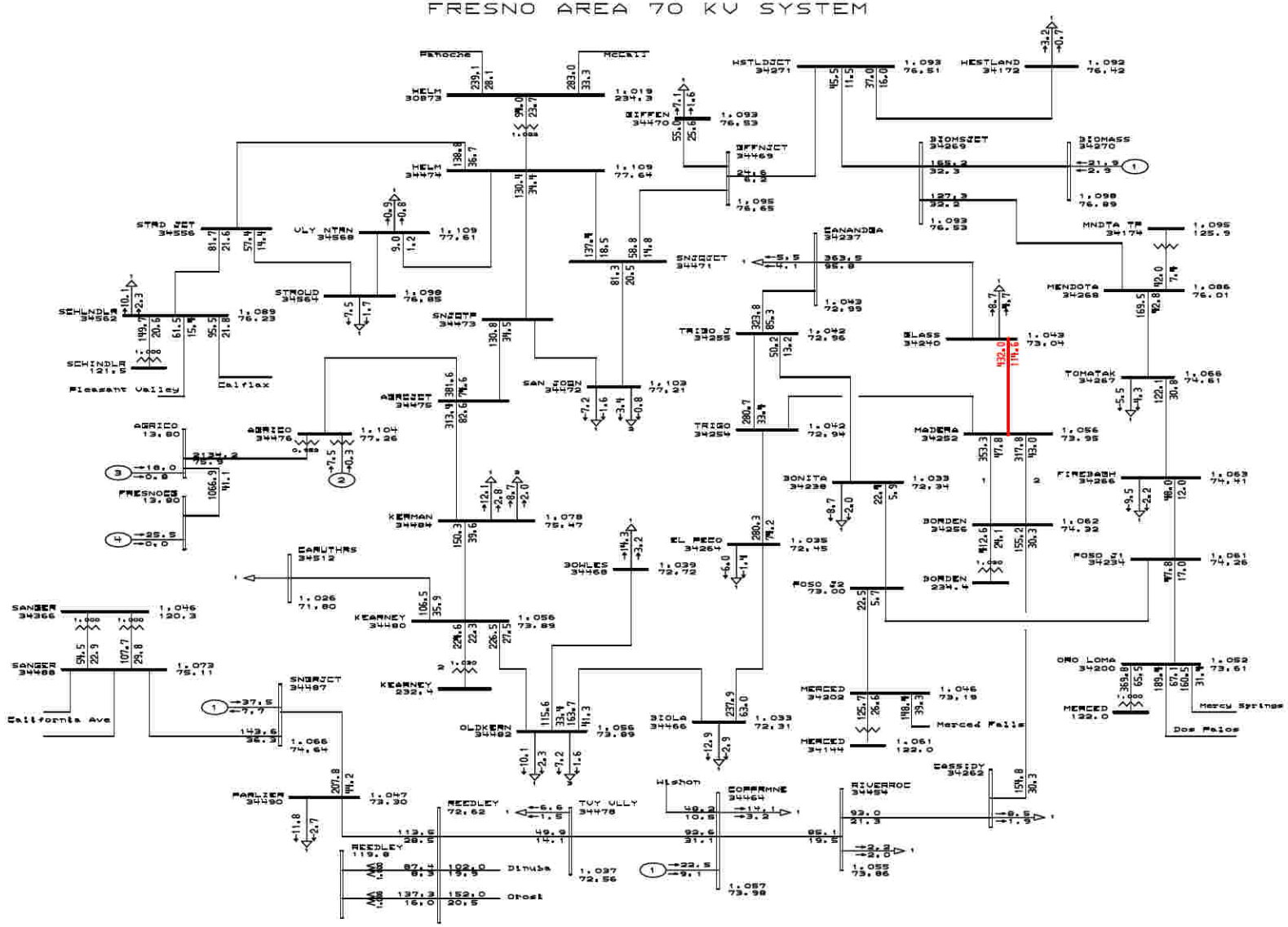

General Electric International, Inc. PSLF Program AMPS/Pct Tue May 17 15:46:22 2005

PG&E Tranmission Planning	PG&E 2004 BASE CASE SERIES - 2009 Spring Peak Case PATH15=-2669 MW(S-N) PATH26=3395 MW(N-S) PDCI=3105 MW(N-S) EOI=4494 MW(N-S) Bullard Energy Center - 2009 Spring Peak - after	Plot 72 - 2009 Spring Peak - Alternative 1, After Project 70 kV Outage: Kearney-Bullard Energy Center 230 kV Line	C:\PSLF_Work\34\PGE\Bullard-En C:\PSLF_Work\34\PGE\Bullard-En Rating = 2

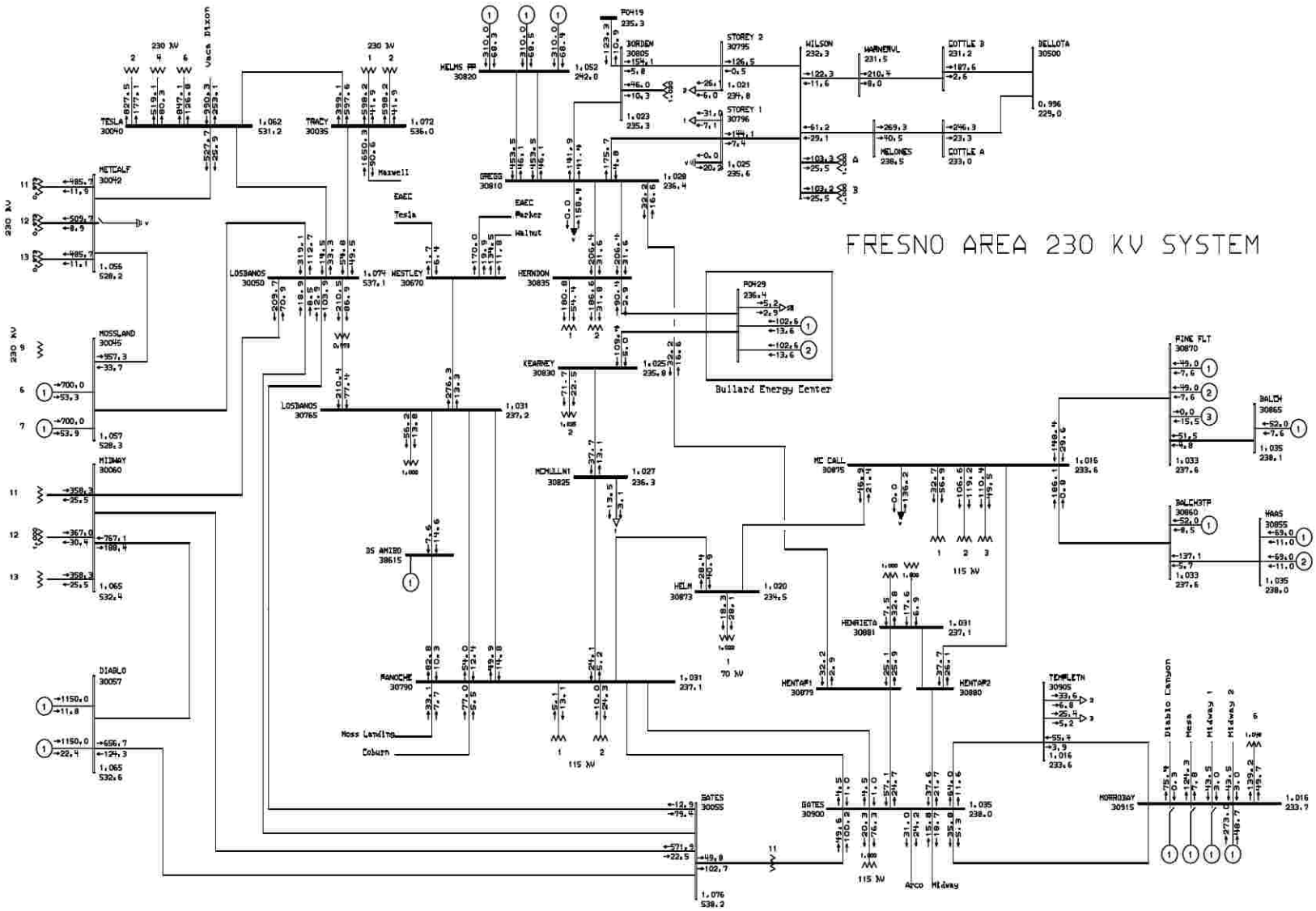

General Electric International, Inc. PSLF Program MW/MVAR Thu Apr 28 21:21:28 2005

PG&E Tranmission Planning	PG&E 2004 BASE CASE SERIES - 2008 South Valley Summer Peak Case PATH15=-264 MW(S-N) PATH26=3393 MW(N-S) PDCI=3104 MW(N-S) COI=4794 MW(N-S) Bullard Energy Center- 2008 Summer Peak - after	Plot 73 - 2008 Summer Peak - Alternative 2, After Project 230 kV	C:\PSLF_Work\34\PGE\Bullard-En C:\PSLF_Work\34\PGE\Bullard-En Rating = 1

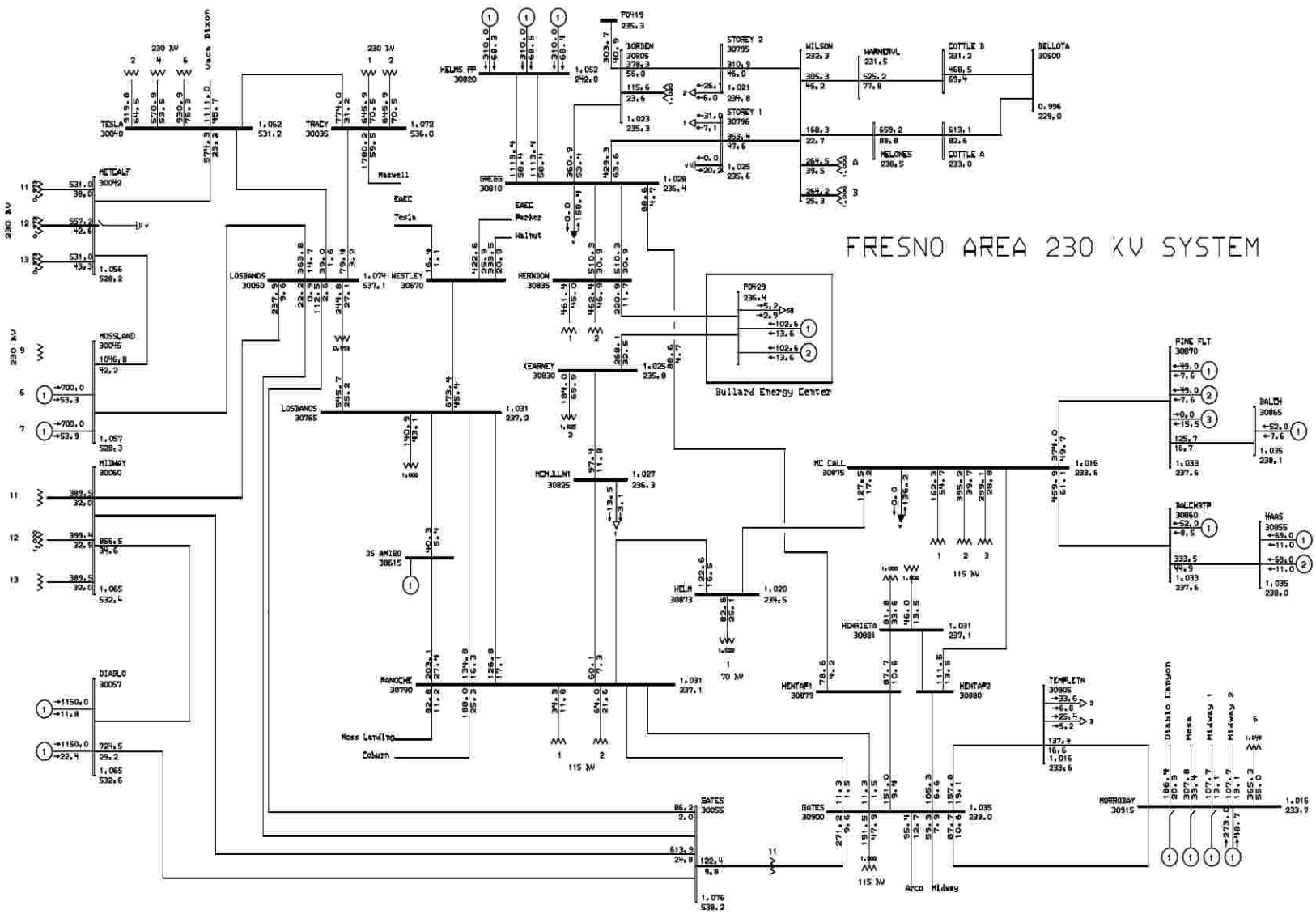

General Electric International, Inc. PSLF Program AMPS/Pct Thu Apr 28 21:21:28 2005

PG&E Tranmission Planning	PG&E 2004 BASE CASE SERIES - 2008 South Valley Summer Peak Case PATH15=-264 MW(S-N) PATH26=3393 MW(N-S) PDCI=3104 MW(N-S) COI=4794 MW(N-S) Bullard Energy Center- 2008 Summer Peak - after	Plot 74 - 2008 Summer Peak - Alternative 2, After Project 230 kV	C:\PSLF_Work\34\PGE\Bullard-En C:\PSLF_Work\34\PGE\Bullard-En Rating = 1

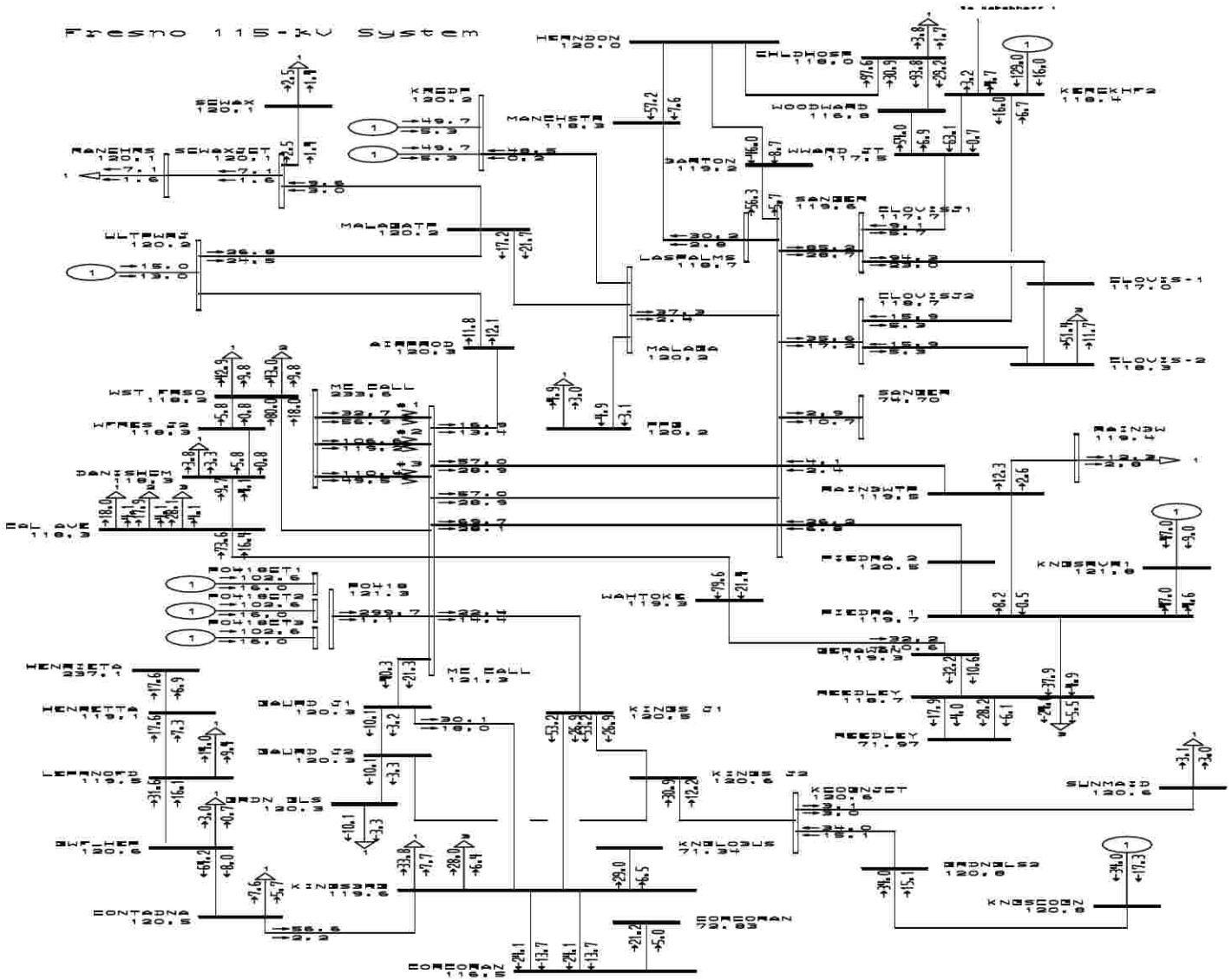

General Electric International, Inc. PSLF Program MW/MVAR Thu Apr 28 21:21:28 2005

PG&E Tranmission Planning	PG&E 2004 BASE CASE SERIES - 2008 South Valley Summer Peak Case PATH15=-264 MW(S-N) PATH26=3393 MW(N-S) PDCI=3104 MW(N-S) COI=4794 MW(N-S) Bullard Energy Center- 2008 Summer Peak - after	Plot 75 - 2008 Summer Peak - Alternative 2, After Project 115 kV	C:\PSLF_Work\34\PGE\Bullard-En C:\PSLF_Work\34\PGE\Bullard-En Rating = 1

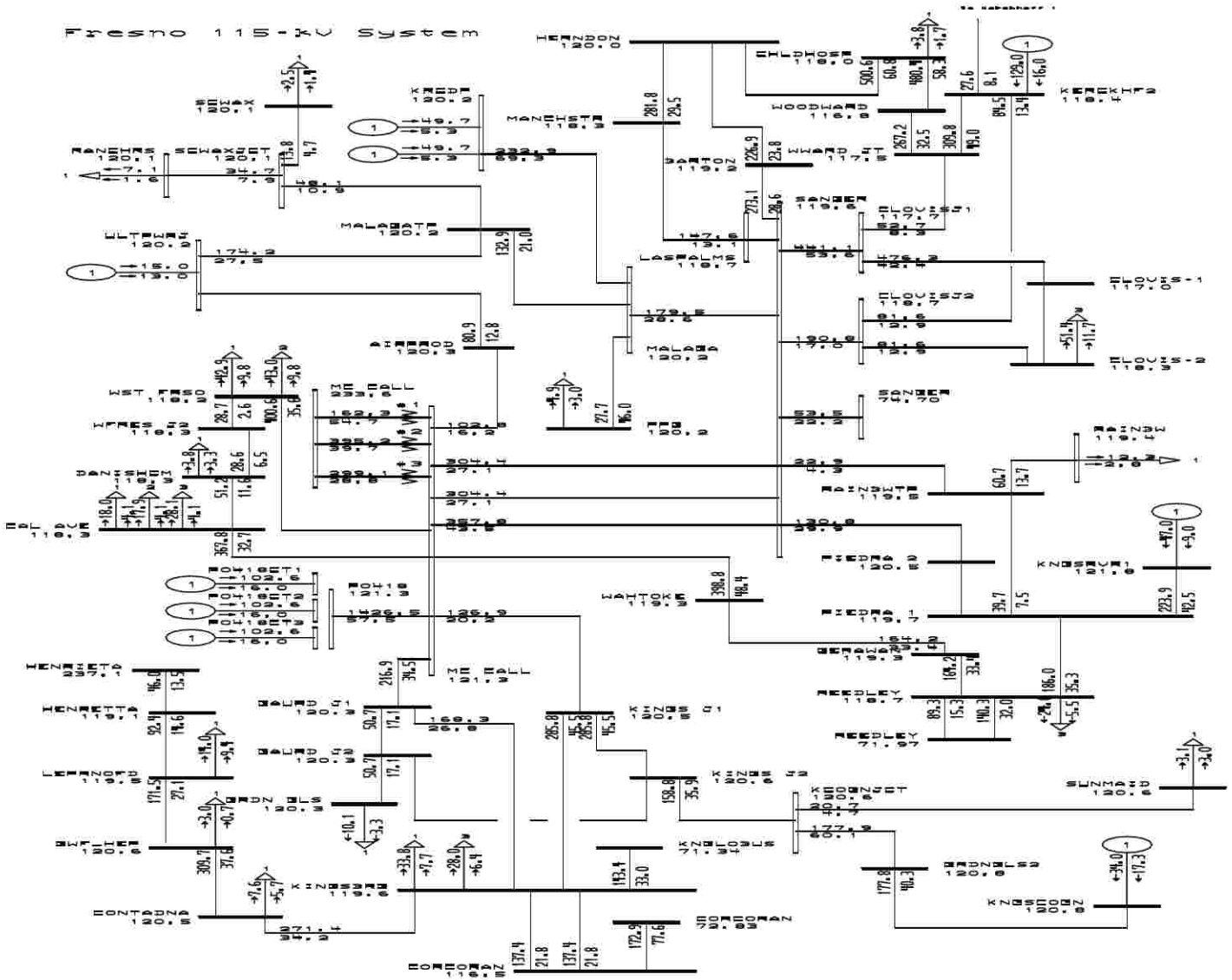

General Electric International, Inc. PSLF Program AMPS/Pct Thu Apr 28 21:21:28 2005

PG&E Tranmission Planning	PG&E 2004 BASE CASE SERIES - 2008 South Valley Summer Peak Case PATH15=-264 MW(S-N) PATH26=3393 MW(N-S) PDCI=3104 MW(N-S) COI=4794 MW(N-S) Bullard Energy Center- 2008 Summer Peak - after	Plot 76 - 2008 Summer Peak - Alternative 2, After Project 115 kV	C:\PSLF_Work\34\PGE\Bullard-En C:\PSLF_Work\34\PGE\Bullard-En Rating = 1

FRESNO AREA 70 KV SYSTEM

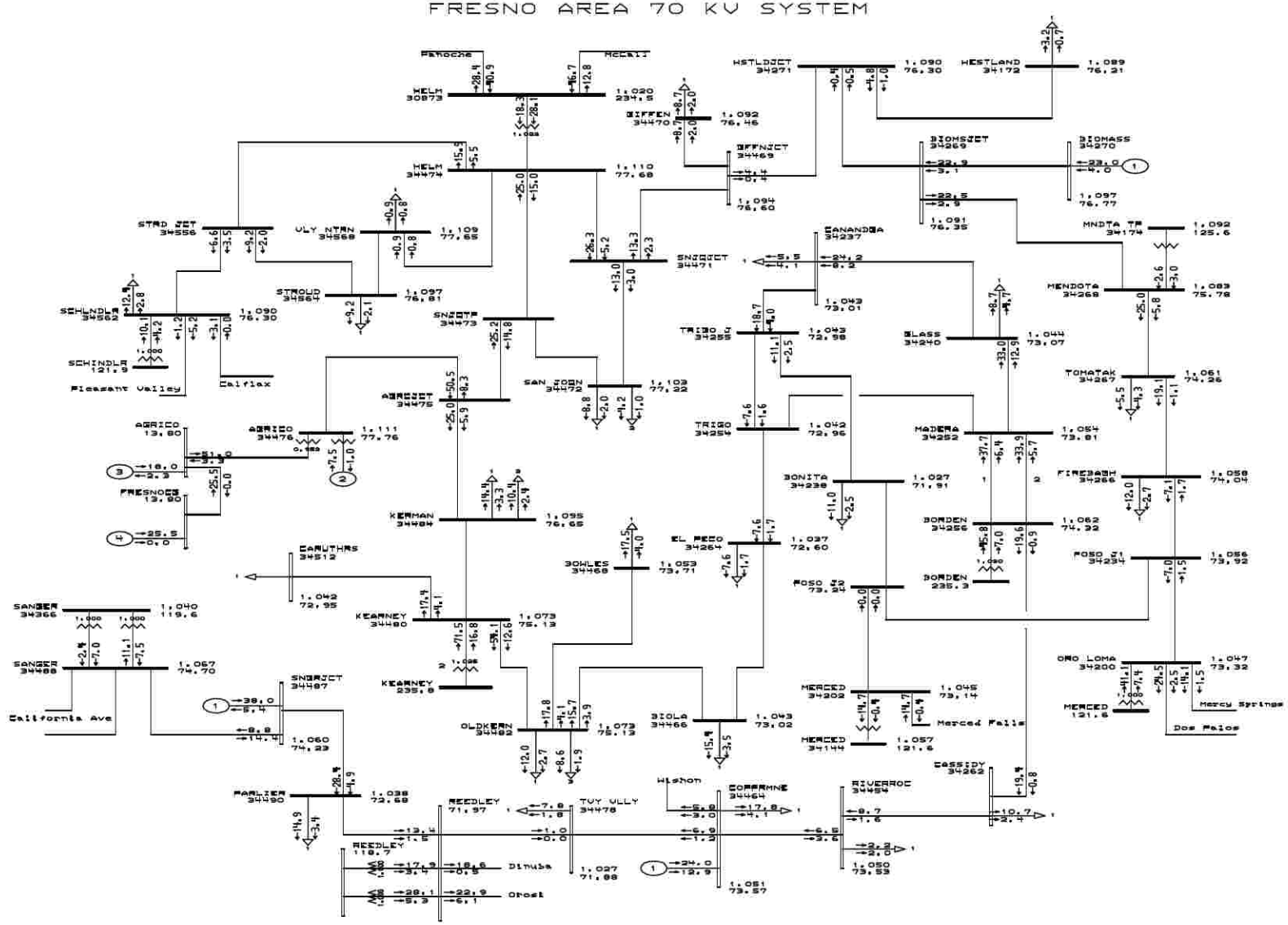

General Electric International, Inc. PSLF Program MW/MVAR Thu Apr 28 21:21:29 2005

PG&E Tranmission Planning	PG&E 2004 BASE CASE SERIES - 2008 South Valley Summer Peak Case PATH15*-264 MW(S-N) PATH26*3393 MW(N-S) PDCI*3104 MW(N-S) COI*4794 MW(N-S) Bullard Energy Center- 2008 Summer Peak - after	Plot 77 - 2008 Summer Peak - Alternative 2, After Project 70 kV	C:\PSLF_Work\34\PGE\Bullard-En C:\PSLF_Work\34\PGE\Bullard-En Rating = 1

FRESNO AREA 70 KV SYSTEM

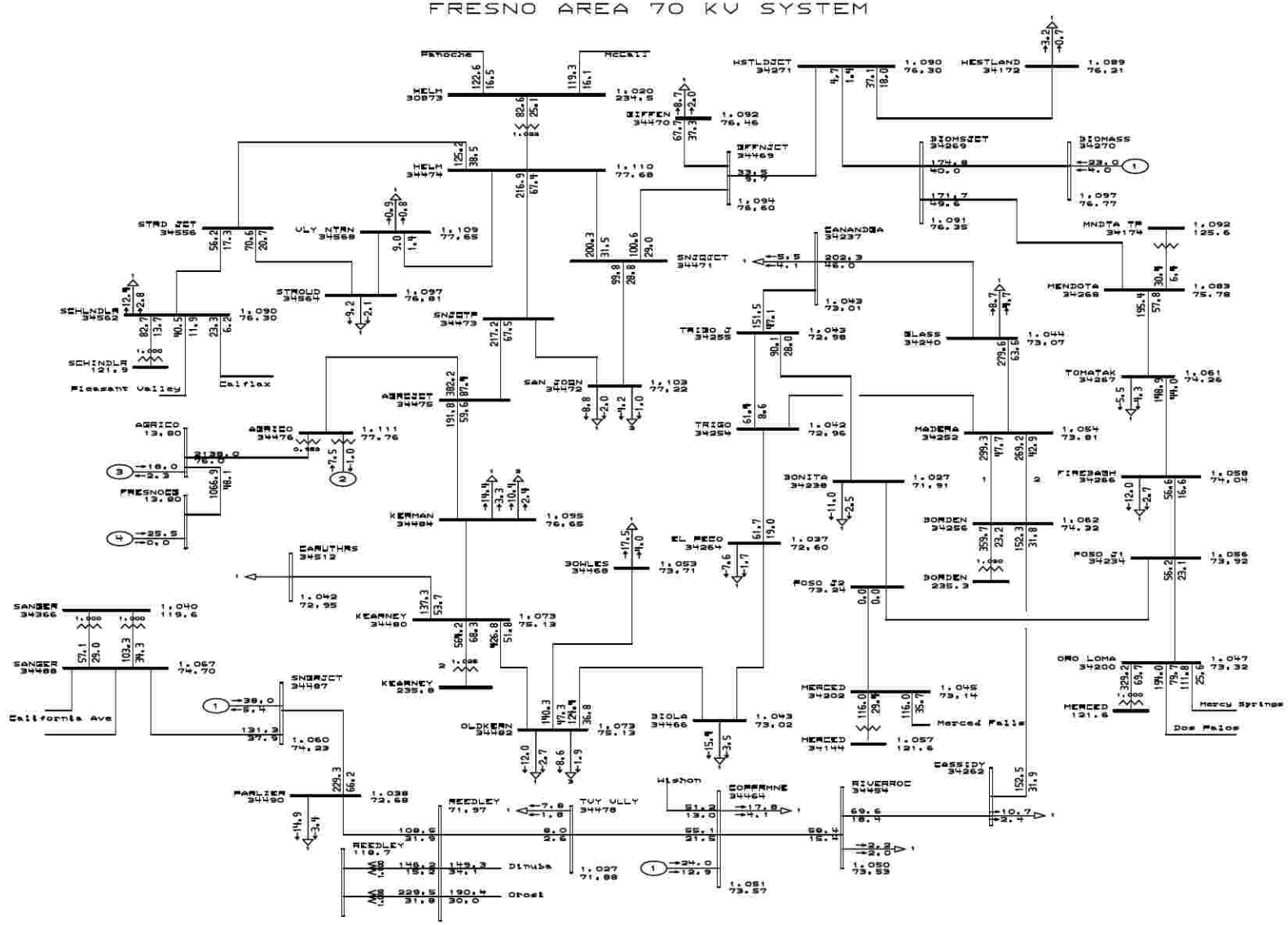

General Electric International, Inc. PSLF Program AMPS/Pct Thu Apr 28 21:21:29 2005

PG&E Tranmission Planning	PG&E 2004 BASE CASE SERIES - 2008 South Valley Summer Peak Case PATH15=-264 MW(S-N) PATH26=3393 MW(N-S) PDCI=3104 MW(N-S) COI=4794 MW(N-S) Bullard Energy Center- 2008 Summer Peak - after	Plot 78 - 2008 Summer Peak - Alternative 2, After Project 70 kV	C:\PSLF_Work\34\PGE\Bullard-En C:\PSLF_Work\34\PGE\Bullard-En Rating = 1

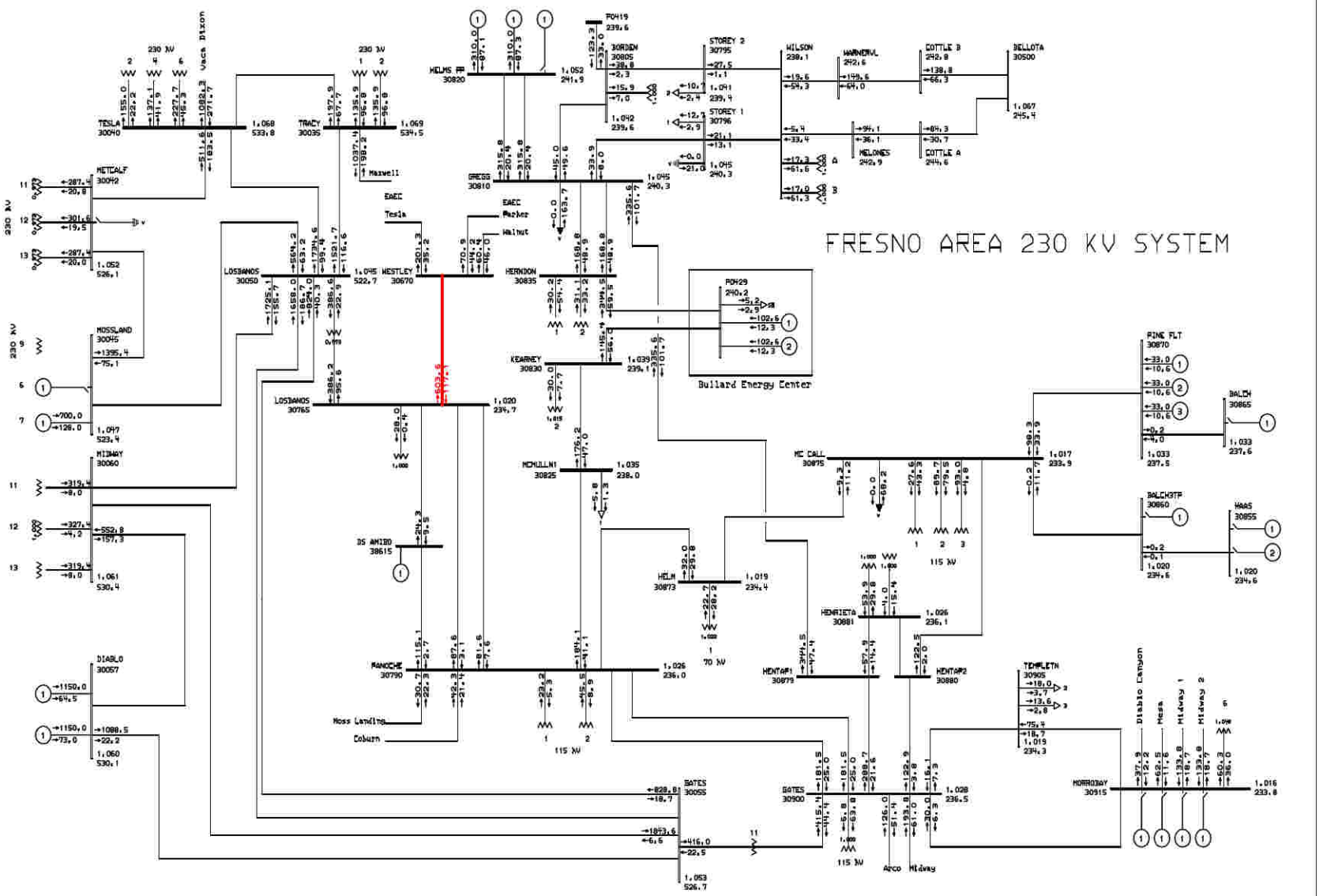

General Electric International, Inc. PSLF Program MW/MVAR Thu Apr 28 21:21:30 2005

PG&E Tranmission Planning	PG&E 2004 BASE CASE SERIES - 2008 Summer Off Peak Case PATH15=4982 MW(S-N) PATH26=-1563 MW(N-S) PDCI=-1848 MW(N-S) COI=-3630 MW(N-S) Bullard Energy Center - 2008 Summer Off Peak - after	Plot 79 - 2008 Summer Off-Peak - Alternative 2, After Project 230 kV	C:\PSLF_Work\34\PGE\Bullard-En C:\PSLF_Work\34\PGE\Bullard-En Rating = 1

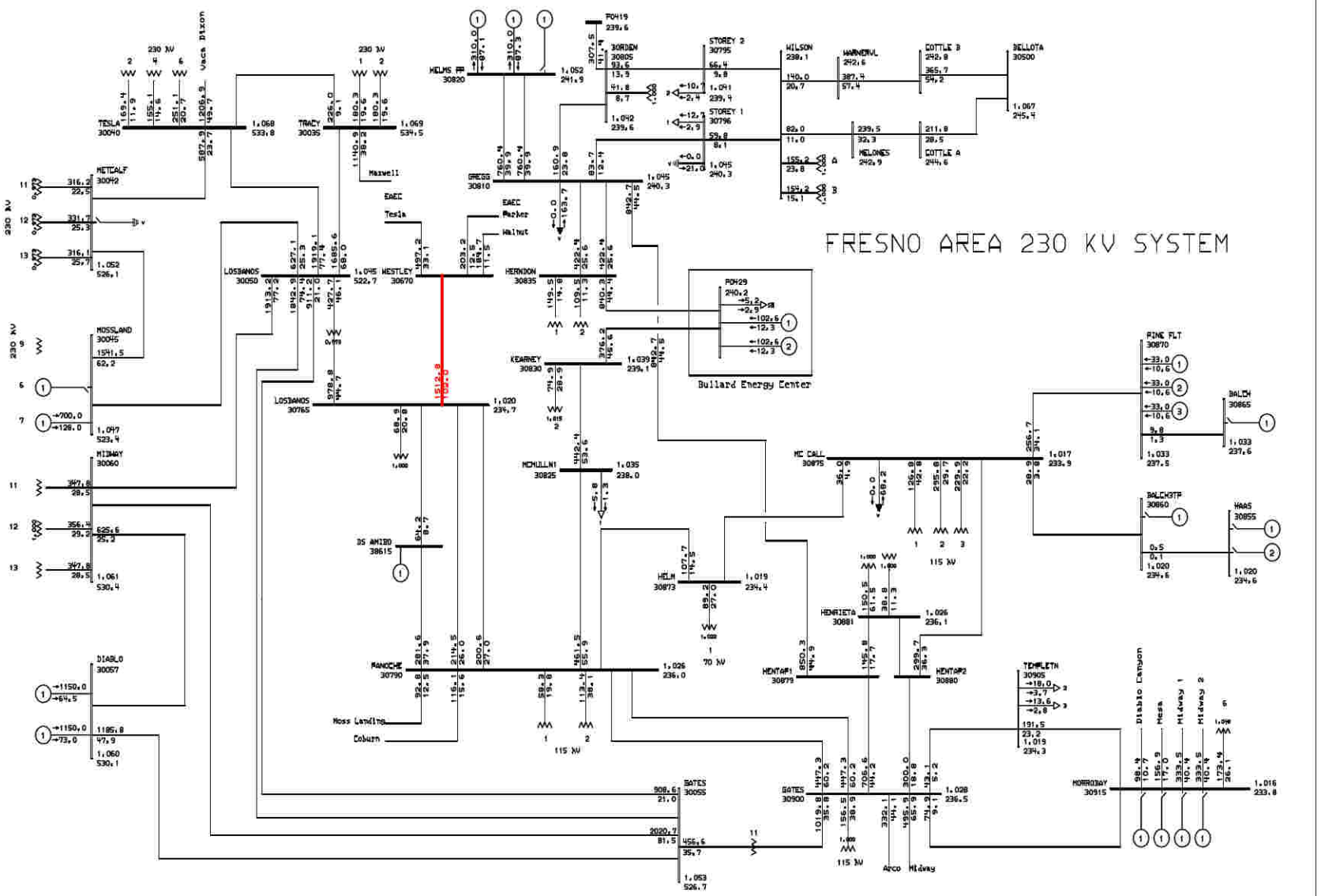

General Electric International, Inc. PSLF Program AMPS/Pct Thu Apr 28 21:21:30 2005

PG&E Transmission Planning	PG&E 2004 BASE CASE SERIES - 2008 Summer Off Peak Case PATH15=4982 MW(S-N) PATH26=-1563 MW(N-S) PDCI=-1848 MW(N-S) COI=-3630 MW(N-S) Bullard Energy Center - 2008 Summer Off Peak - after	Plot 80 - 2008 Summer Off-Peak - Alternative 2, After Project 230 kV	C:\PSLF_Work\34\PGE\Bullard-En C:\PSLF_Work\34\PGE\Bullard-En Rating = 1

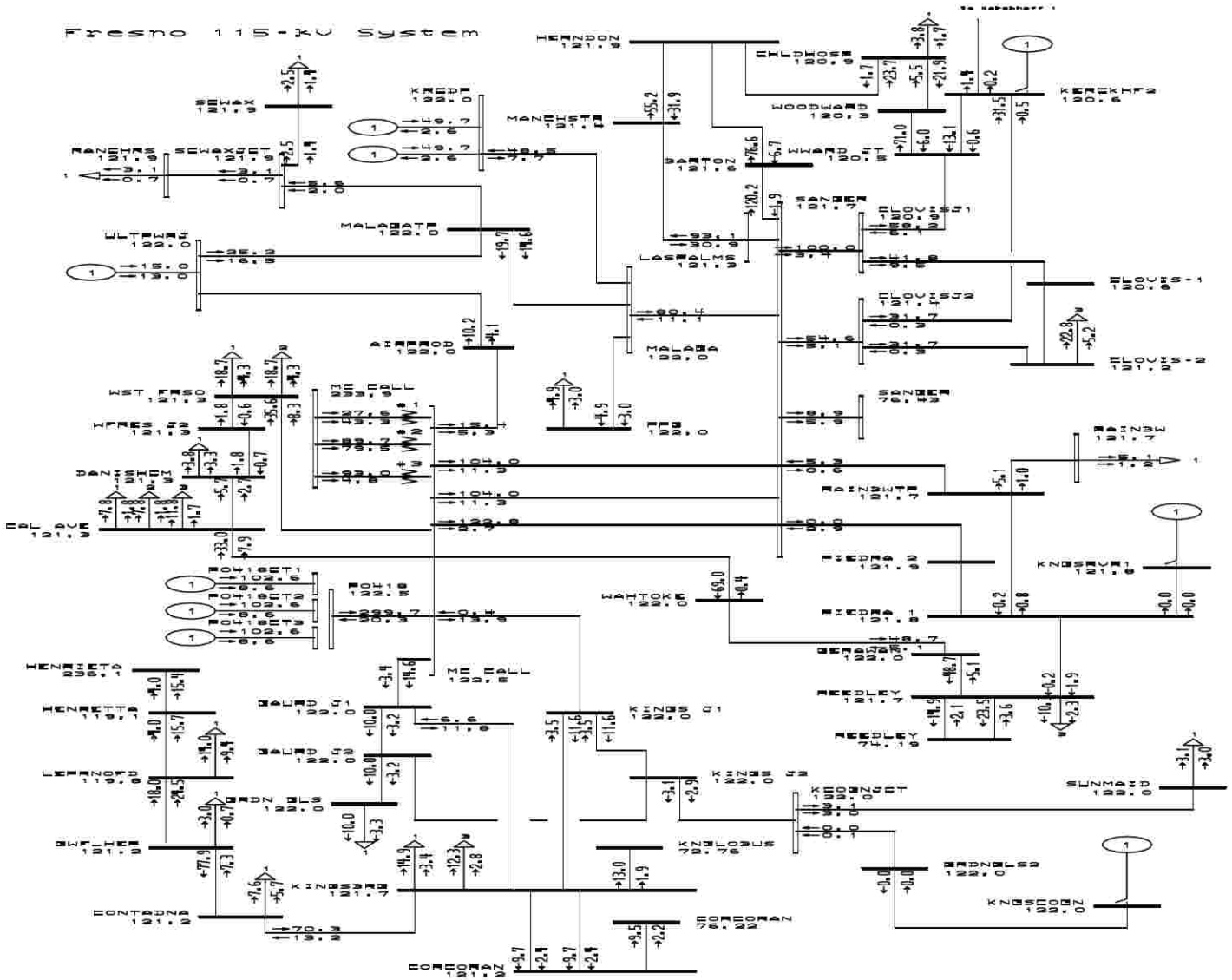

General Electric International, Inc. PSLF Program MW/MVAR Thu Apr 28 21:21:30 2005

PG&E Tranmission Planning	PG&E 2004 BASE CASE SERIES - 2008 Summer Off Peak Case PATH15=4982 MW(S-N) PATH26=-1563 MW(N-S) FDCI=-1848 MW(N-S) COI=-3630 MW(N-S) Bullard Energy Center - 2008 Summer Off Peak - after	Plot 81 - 2008 Summer Off-Peak - Alternative 2, After Project 115 kV	C:\PSLF_Work\34\PGE\Bullard-En C:\PSLF_Work\34\PGE\Bullard-En Rating = 1

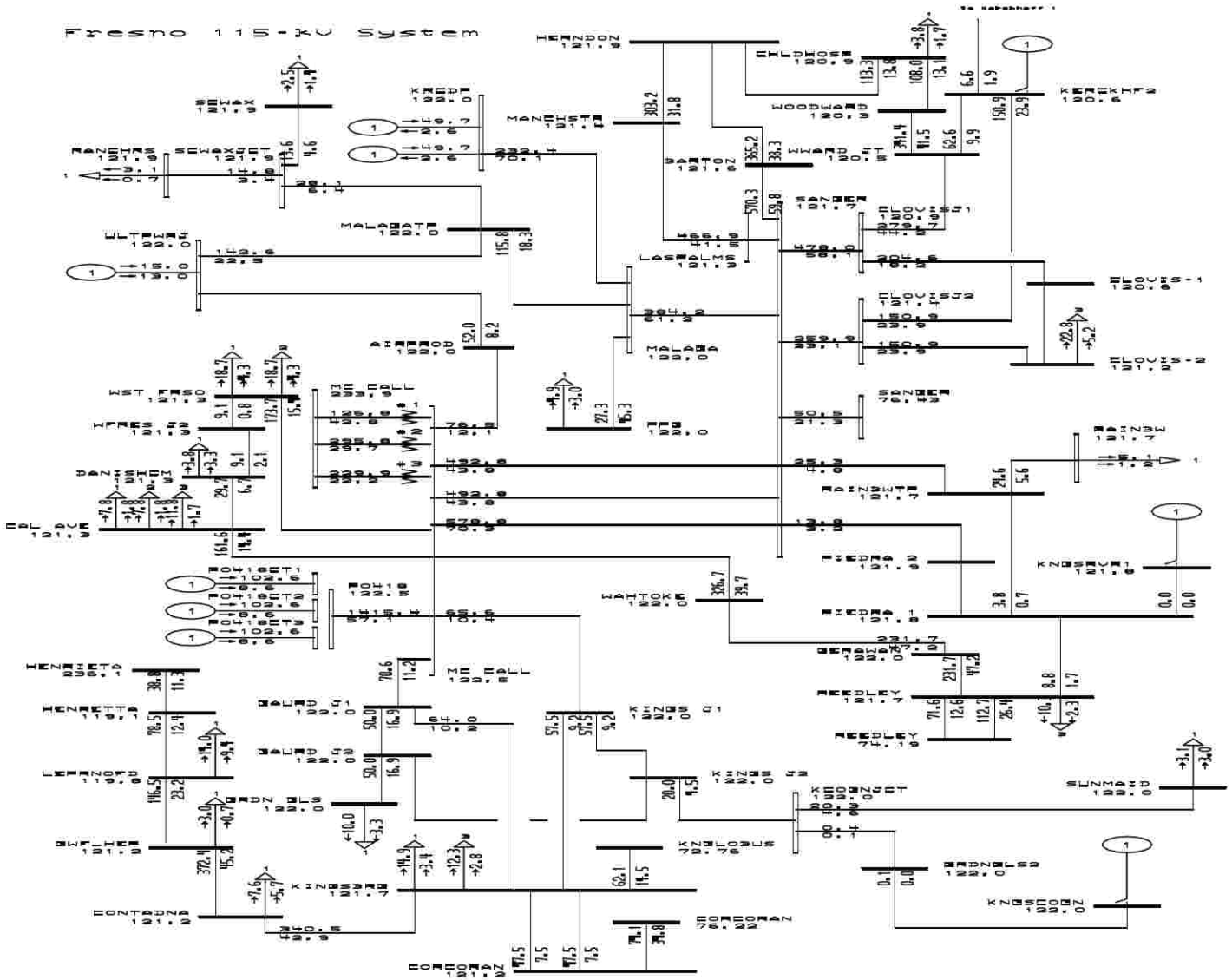

General Electric International, Inc. PSLF Program AMPS/Pct Thu Apr 28 21:21:30 2005

PG&E Tranmission Planning	PG&E 2004 BASE CASE SERIES - 2008 Summer Off Peak Case PATH15=4982 MW(S-N) PATH26=-1563 MW(N-S) PDCI=-1848 MW(N-S) COI=-3630 MW(N-S) Bullard Energy Center - 2008 Summer Off Peak - after	Plot 82 - 2008 Summer Off-Peak - Alternative 2, After Project 115 kV	C:\PSLF_Work\34\PGE\Bullard-En C:\PSLF_Work\34\PGE\Bullard-En Rating = 1

FRESNO AREA 70 KV SYSTEM

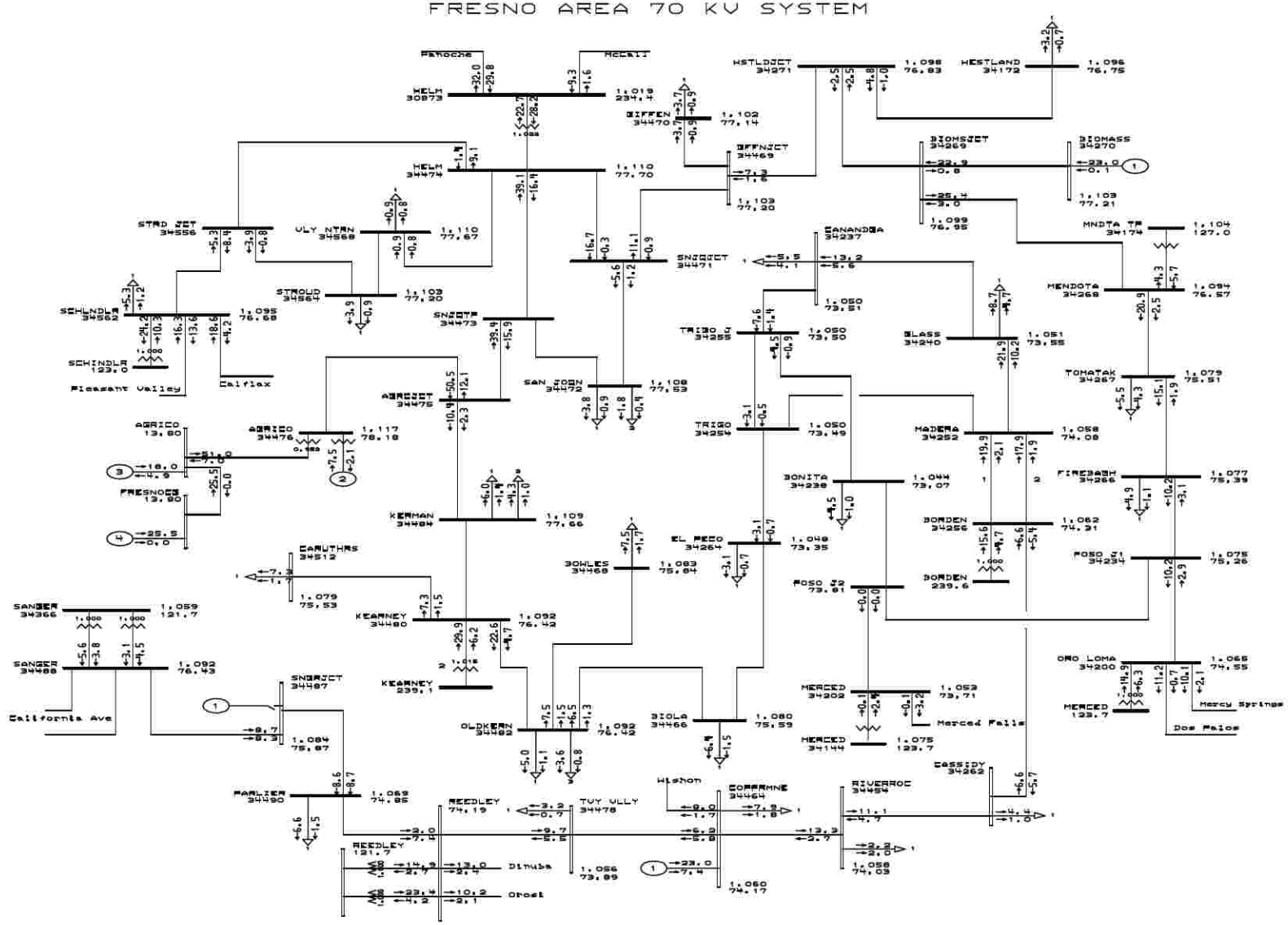

General Electric International, Inc. PSLF Program MW/MVAR Thu Apr 28 21:21:31 2005

PG&E Tranmission Planning	PG&E 2004 BASE CASE SERIES - 2008 Summer Off Peak Case PATH15=4982 MW(S-N) PATH26=-1563 MW(N-S) PDCI=-1848 MW(N-S) COI=-3630 MW(N-S) Bullard Energy Center - 2008 Summer Off Peak - after	Plot 83 - 2008 Summer Off-Peak - Alternative 2, After Project 70 kV	C:\PSLF_Work\34\PGE\Bullard-En C:\PSLF_Work\34\PGE\Bullard-En Rating = 1

FRESNO AREA 70 KV SYSTEM

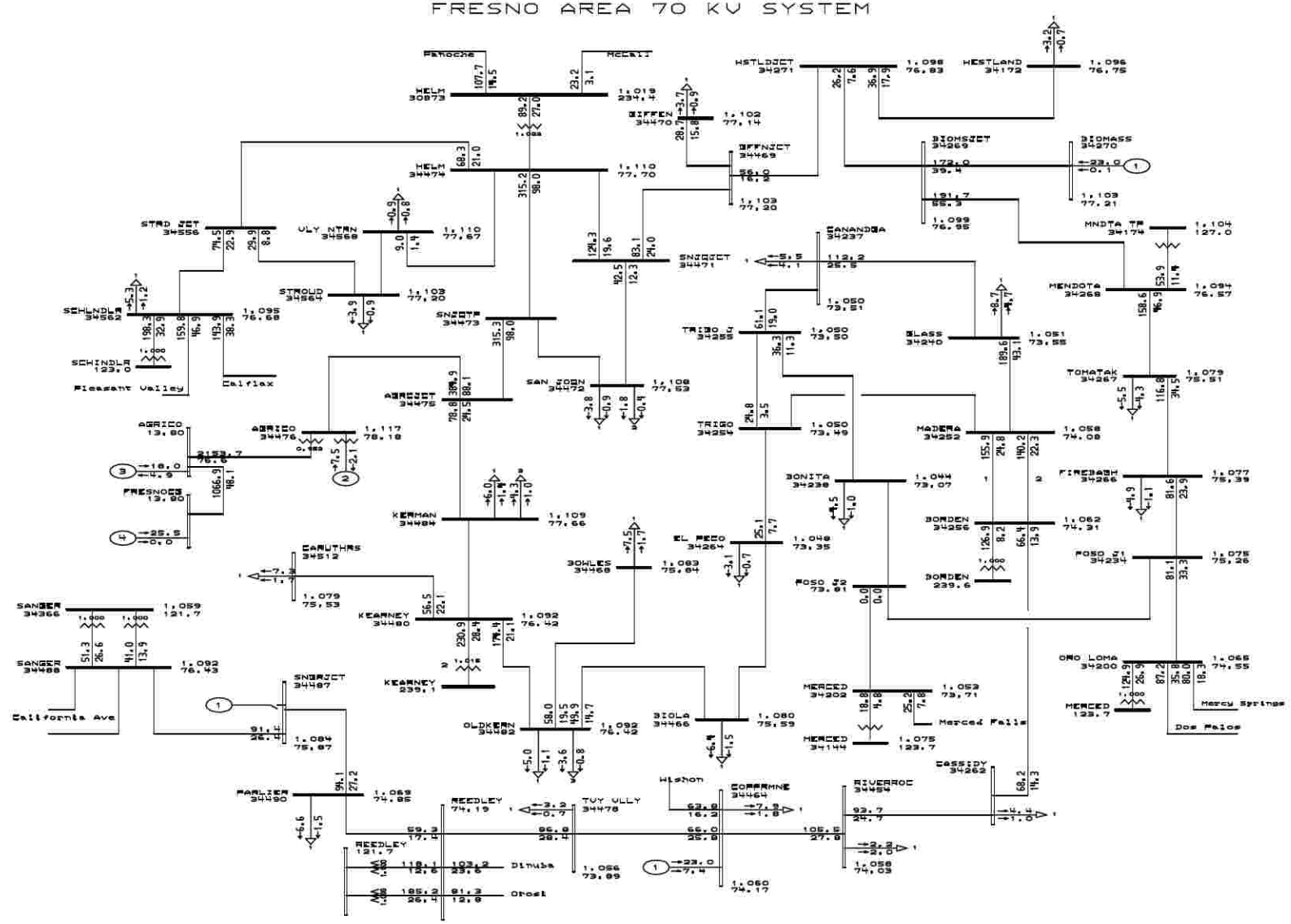

General Electric International, Inc. PSLF Program AMPS/Pct Thu Apr 28 21:21:31 2005

PG&E Tranmission Planning	PG&E 2004 BASE CASE SERIES - 2008 Summer Off Peak Case PATH15=4982 MW(S-N) PATH26=-1563 MW(N-S) PDCI=-1848 MW(N-S) COI=-3630 MW(N-S) Bullard Energy Center - 2008 Summer Off Peak - after	Plot 84 - 2008 Summer Off-Peak - Alternative 2, After Project 70 kV	C:\PSLF_Work\34\PGE\Bullard-En C:\PSLF_Work\34\PGE\Bullard-En Rating = 1

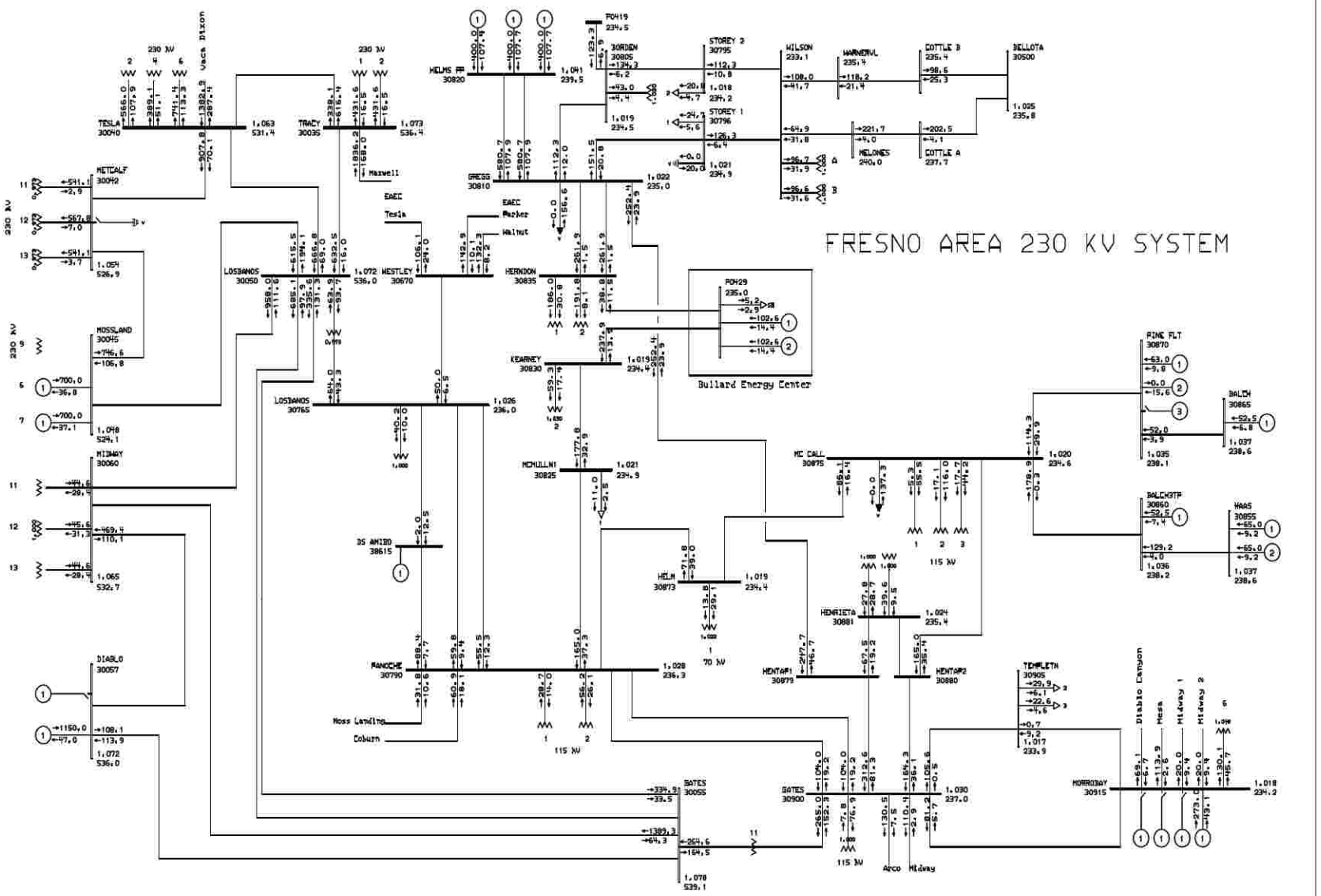

General Electric International, Inc. PSLF Program MW/MVAR Thu Apr 28 21:21:32 2005

PG&E Tranmission Planning	PG&E 2004 BASE CASE SERIES - 2009 Spring Peak Case PATH15=-2669 MW(S-N) PATH26=3395 MW(N-S) PDCI=3105 MW(N-S) COI=4494 MW(N-S) Bullard Energy Center - 2009 Spring Peak - after	Plot 85 - 2008 Spring Peak - Alternative 2, After Project 230 kV	C:\PSLF_Work\34\PGE\Bullard-En C:\PSLF_Work\34\PGE\Bullard-En Rating = 1

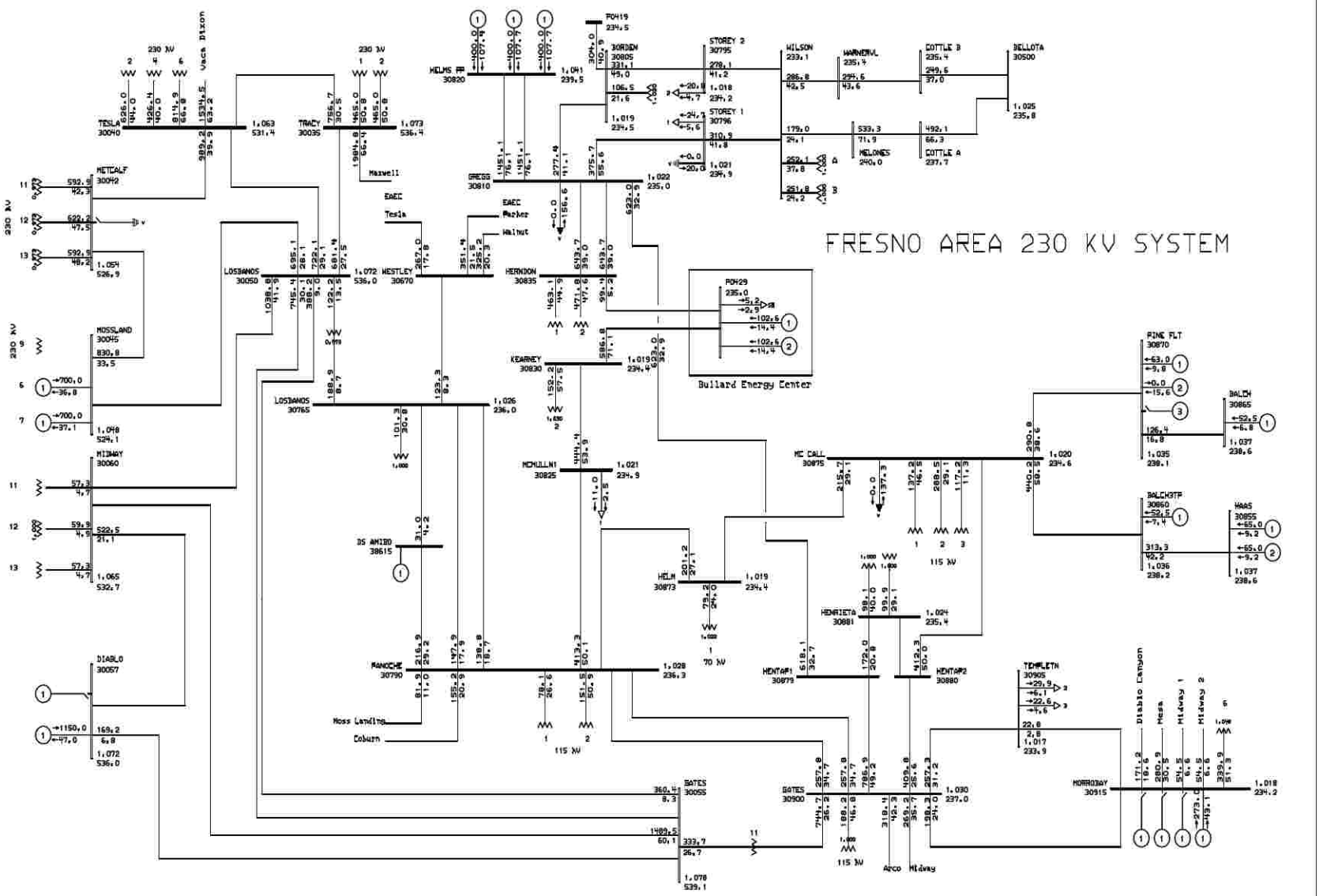

General Electric International, Inc. PSLF Program AMPS/Pct Thu Apr 28 21:21:32 2005

PG&E Tranmission Planning	PG&E 2004 BASE CASE SERIES - 2009 Spring Peak Case PATH15=-2669 MW(S-N) PATH26=3395 MW(N-S) PDCI=3105 MW(N-S) COI=4494 MW(N-S) Bullard Energy Center - 2009 Spring Peak - after	Plot 86 - 2008 Spring Peak - Alternative 2, After Project 230 kV	C:\PSLF_Work\34\PGE\Bullard-En C:\PSLF_Work\34\PGE\Bullard-En Rating = 1

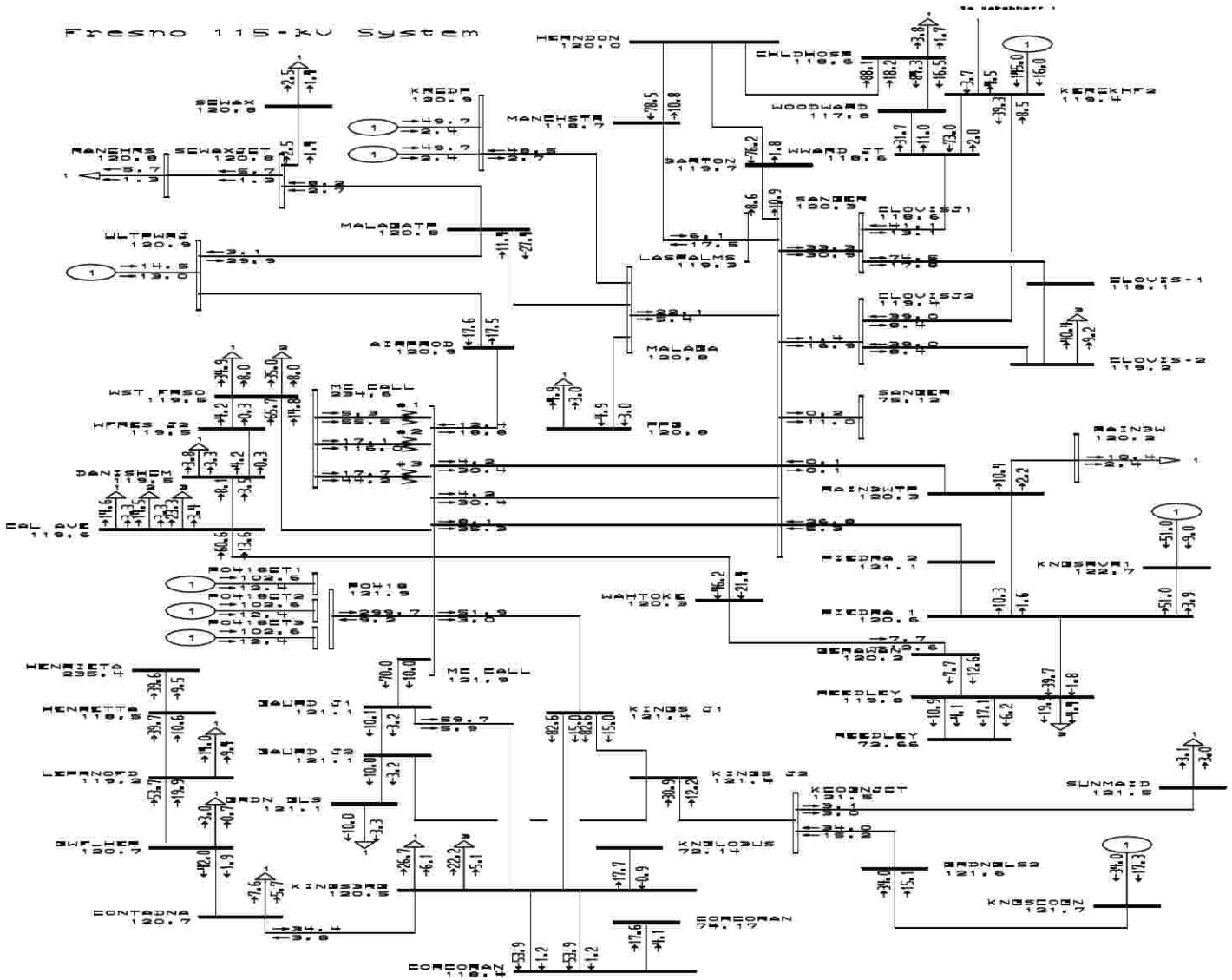

General Electric International, Inc. PSLF Program MW/MVAR Thu Apr 28 21:21:32 2005

PG&E Tranmission Planning	PG&E 2004 BASE CASE SERIES - 2009 Spring Peak Case PATH15=-2669 MW(S-N) PATH26=3395 MW(N-S) FDCI=3105 MW(N-S) EOI=4494 MW(N-S) Bullard Energy Center - 2009 Spring Peak - after	Plot 87 - 2008 Spring Peak - Alternative 2, After Project 115 kV	C:\PSLF_Work\34\PGE\Bullard-En C:\PSLF_Work\34\PGE\Bullard-En Rating = 1

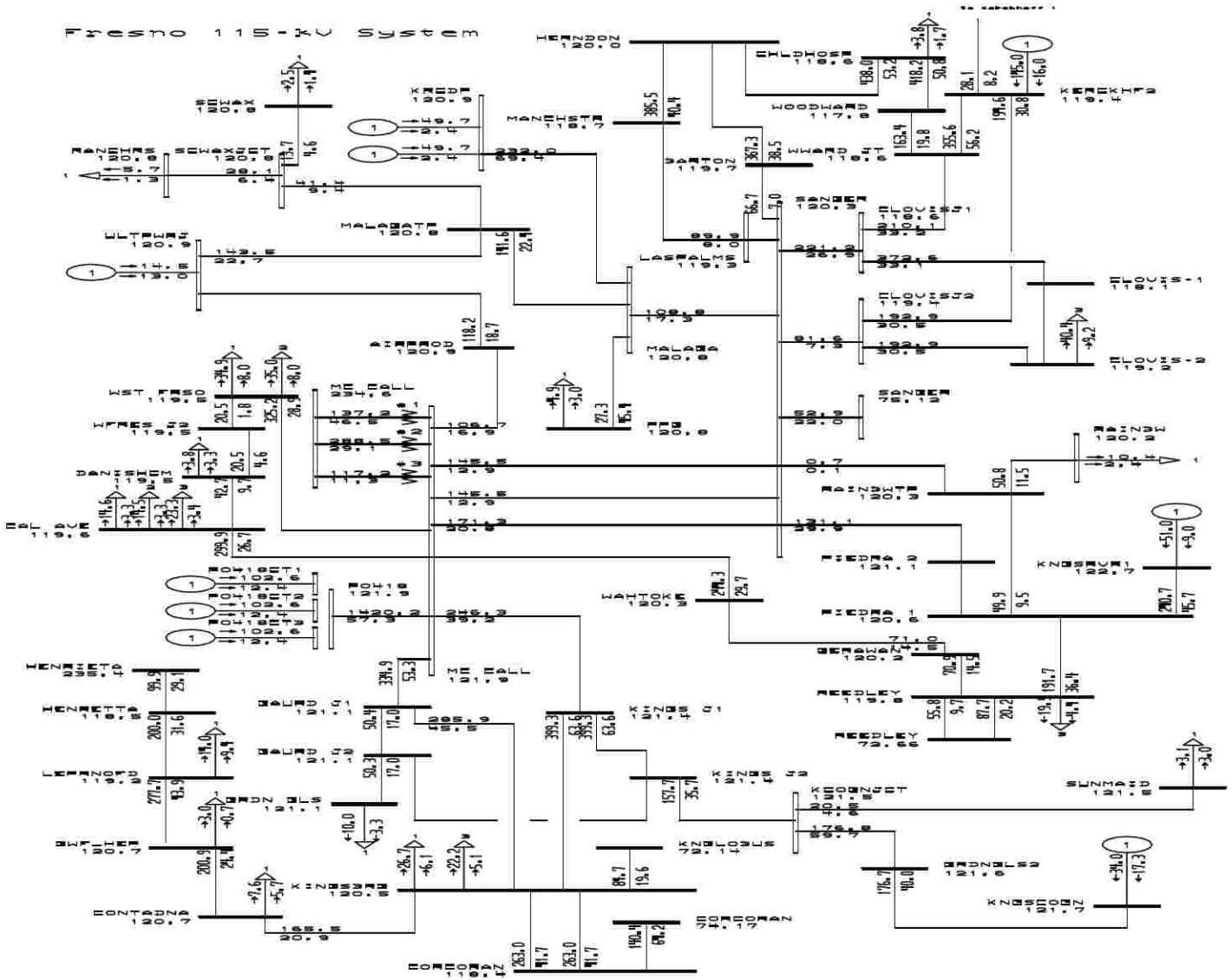

General Electric International, Inc. PSLF Program AMPS/Pct Thu Apr 28 21:21:32 2005

PG&E Tranmission Planning	PG&E 2004 BASE CASE SERIES - 2009 Spring Peak Case PATH15=-2669 MW(S-N) PATH26=3395 MW(N-S) FDCI=3105 MW(N-S) EOI=4494 MW(N-S) Bullard Energy Center - 2009 Spring Peak - after	Plot 88 - 2008 Spring Peak - Alternative 2, After Project 115 kV	C:\PSLF_Work\34\PGE\Bullard-En C:\PSLF_Work\34\PGE\Bullard-En Rating = 1

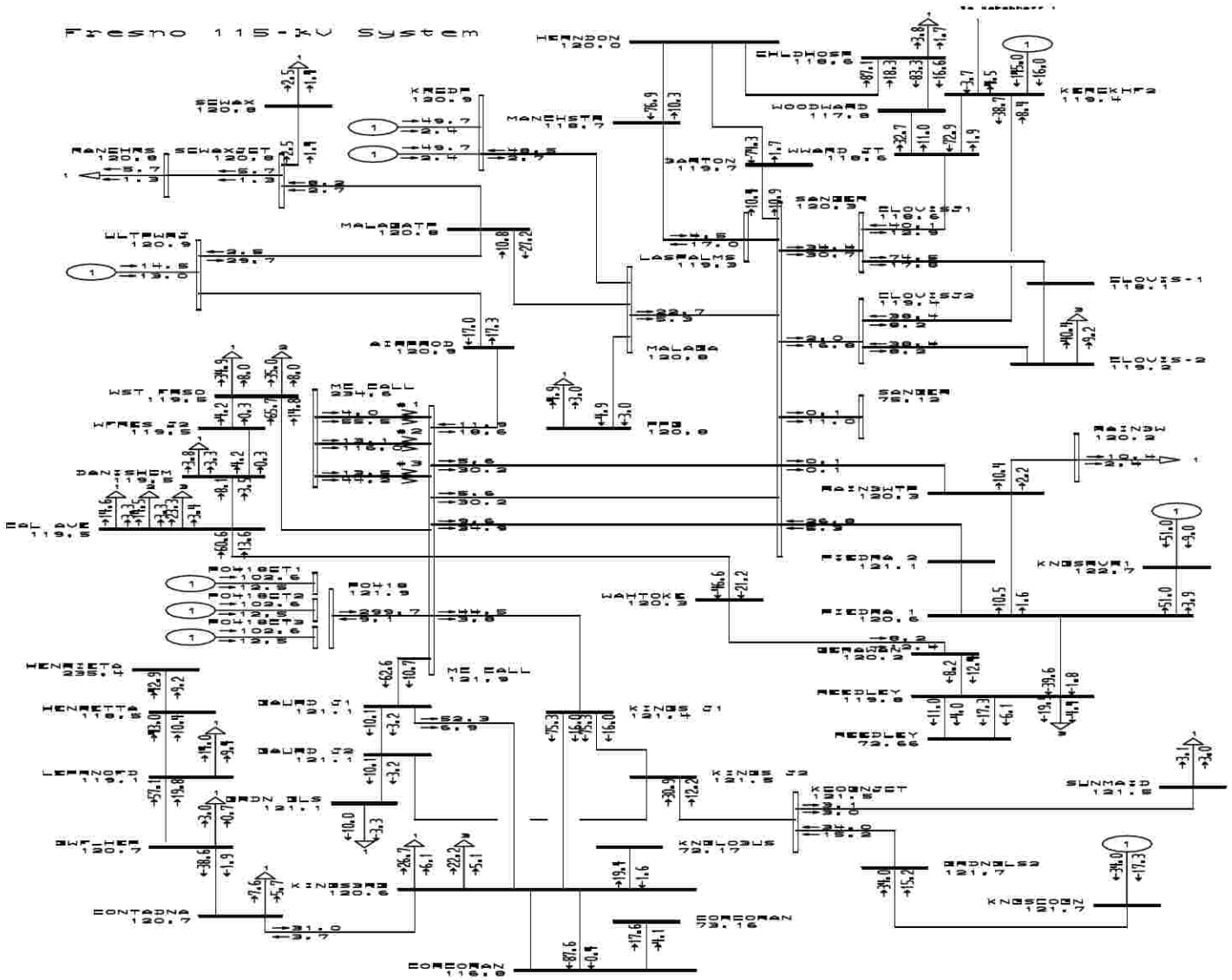

General Electric International, Inc. PSLF Program MW/MVAR Thu Apr 28 21:21:34 2005

PG&E Tranmission Planning	PG&E 2004 BASE CASE SERIES - 2009 Spring Peak Case PATH15=-2669 MW(S-N) PATH26=3395 MW(N-S) FDCI=3105 MW(N-S) EOI=4494 MW(N-S) Bullard Energy Center - 2009 Spring Peak - after	Plot 89 - 2009 Spring Peak - Alternative 2, After Project 115 kV Outage: Kingsburg - Corcoran #1 115 kV Outage	C:\PSLF_Work\34\PGE\Bullard-En C:\PSLF_Work\34\PGE\Bullard-En Rating = 2

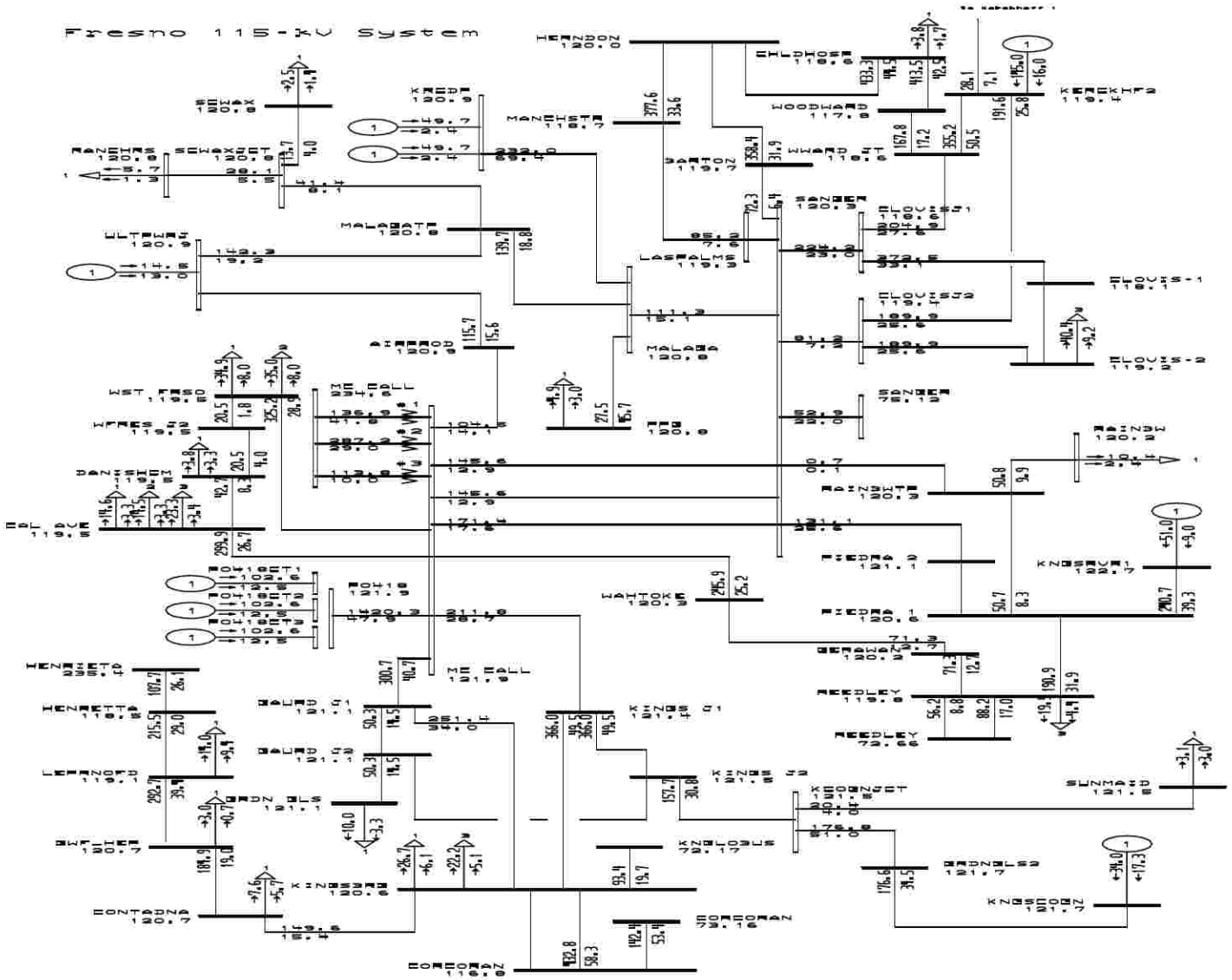

General Electric International, Inc. PSLF Program AMPS/Pct Thu Apr 28 21:21:35 2005

PG&E Tranmission Planning	PG&E 2004 BASE CASE SERIES - 2009 Spring Peak Case PATH15=-2669 MW(S-N) PATH26=3395 MW(N-S) FDCI=3105 MW(N-S) EOI=4494 MW(N-S) Bullard Energy Center - 2009 Spring Peak - after	Plot 90 - 2009 Spring Peak - Alternative 2, After Project 115 kV Outage: Kingsburg - Corcoran #1 115 kV Outage	C:\PSLF_Work\34\PGE\Bullard-En C:\PSLF_Work\34\PGE\Bullard-En Rating = 2

FRESNO AREA 70 KV SYSTEM

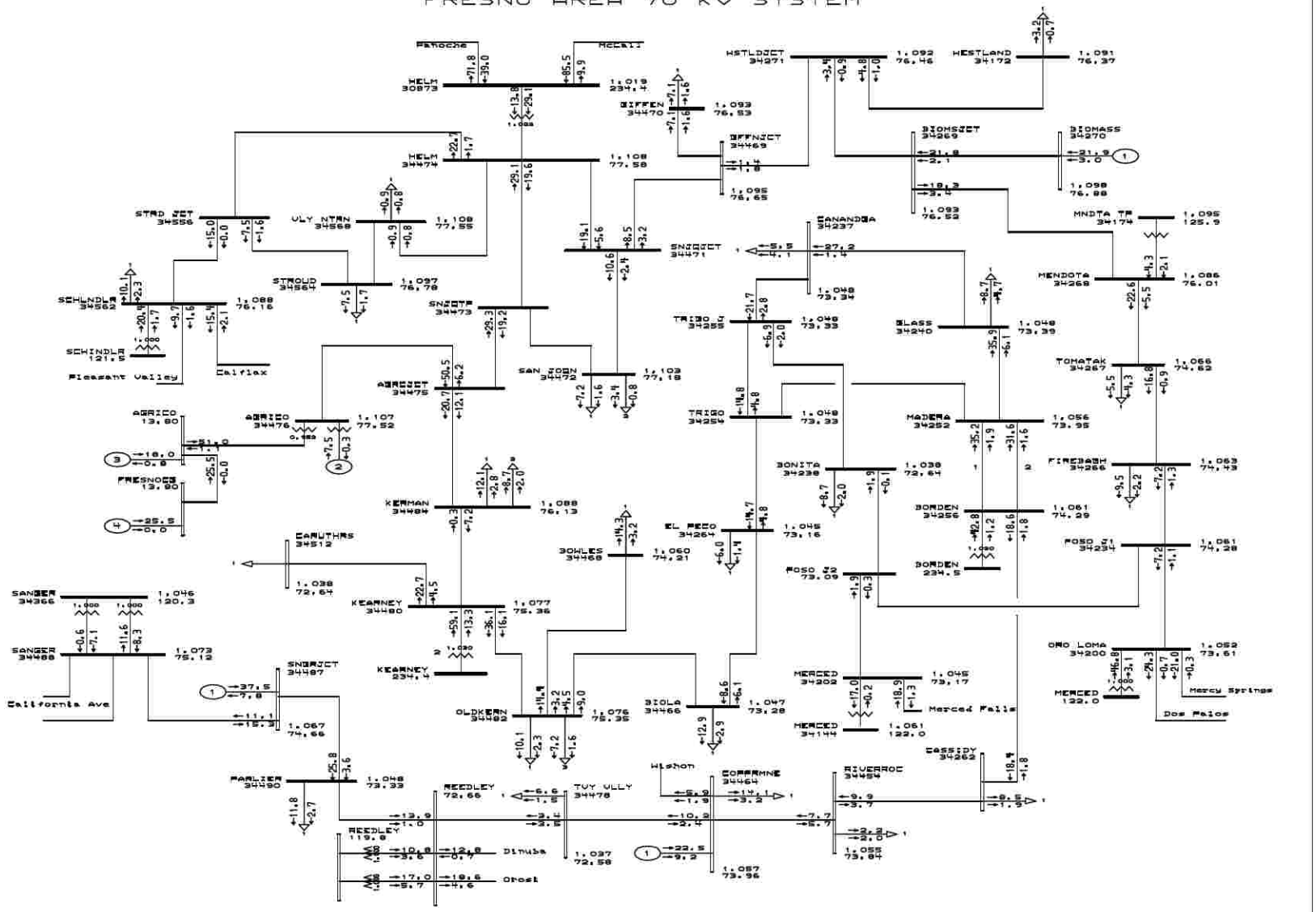

General Electric International, Inc. PSLF Program MW/MVAR Thu Apr 28 21:21:33 2005

PG&E Tranmission Planning	PG&E 2004 BASE CASE SERIES - 2009 Spring Peak Case PATH15=-2669 MW(S-N) PATH26=3395 MW(N-S) PDCI=3105 MW(N-S) COI=4494 MW(N-S) Bullard Energy Center - 2009 Spring Peak - after	Plot 91 - 2008 Spring Peak - Alternative 2, After Project 70 kV	C:\PSLF_Work\34\PGE\Bullard-En C:\PSLF_Work\34\PGE\Bullard-En Rating = 1

FRESNO AREA 70 KV SYSTEM

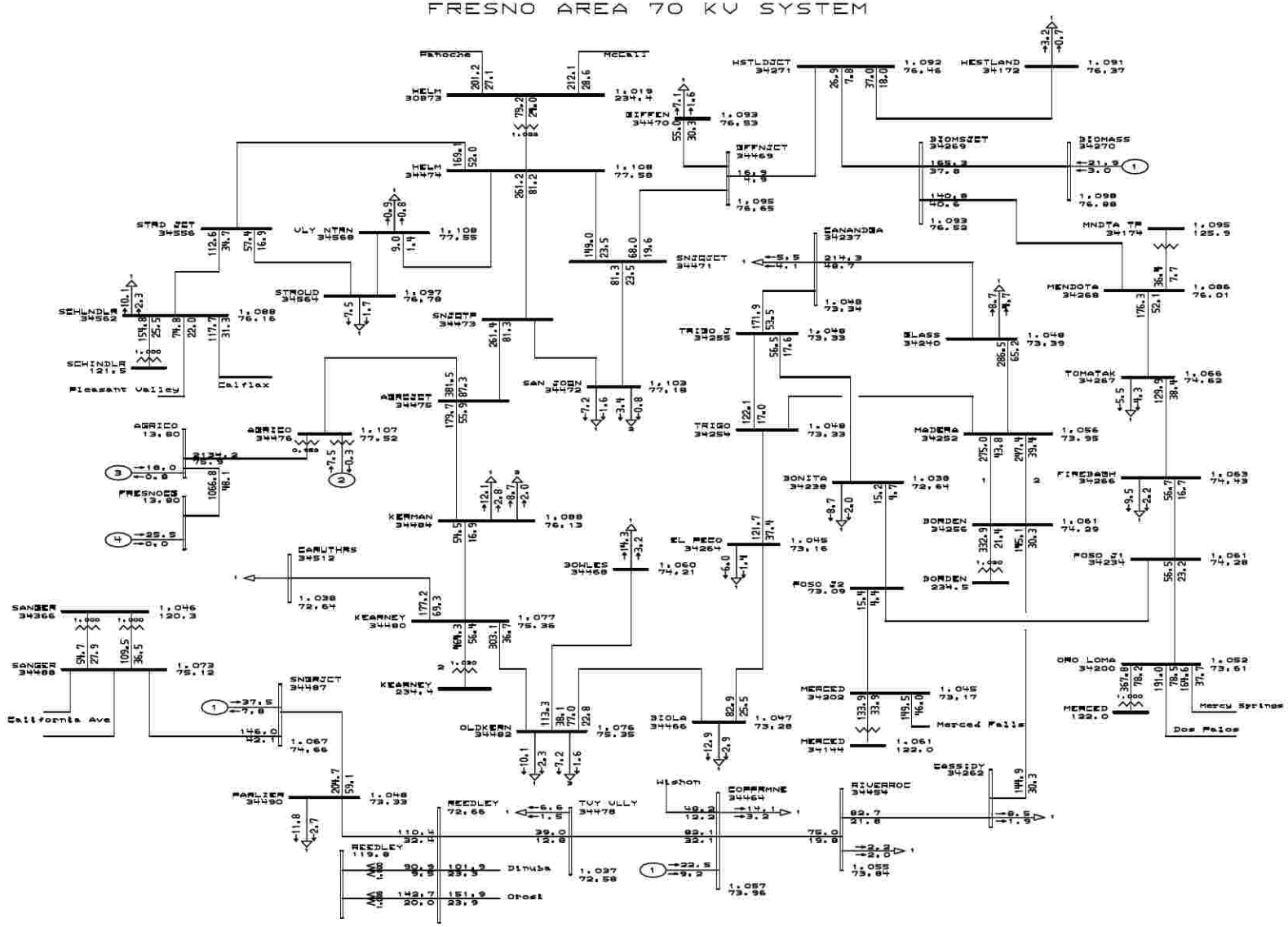

General Electric International, Inc. PSLF Program AMPS/Pct Thu Apr 28 21:21:33 2005

PG&E Tranmission Planning	PG&E 2004 BASE CASE SERIES - 2009 Spring Peak Case PATH15=-2669 MW(S-N) PATH26=3395 MW(N-S) PDCI=3105 MW(N-S) COI=4494 MW(N-S) Bullard Energy Center - 2009 Spring Peak - after	Plot 92 - 2008 Spring Peak - Alternative 2, After Project 70 kV	C:\PSLF_Work\34\PGE\Bullard-En C:\PSLF_Work\34\PGE\Bullard-En Rating = 1

FRESNO AREA 70 KV SYSTEM

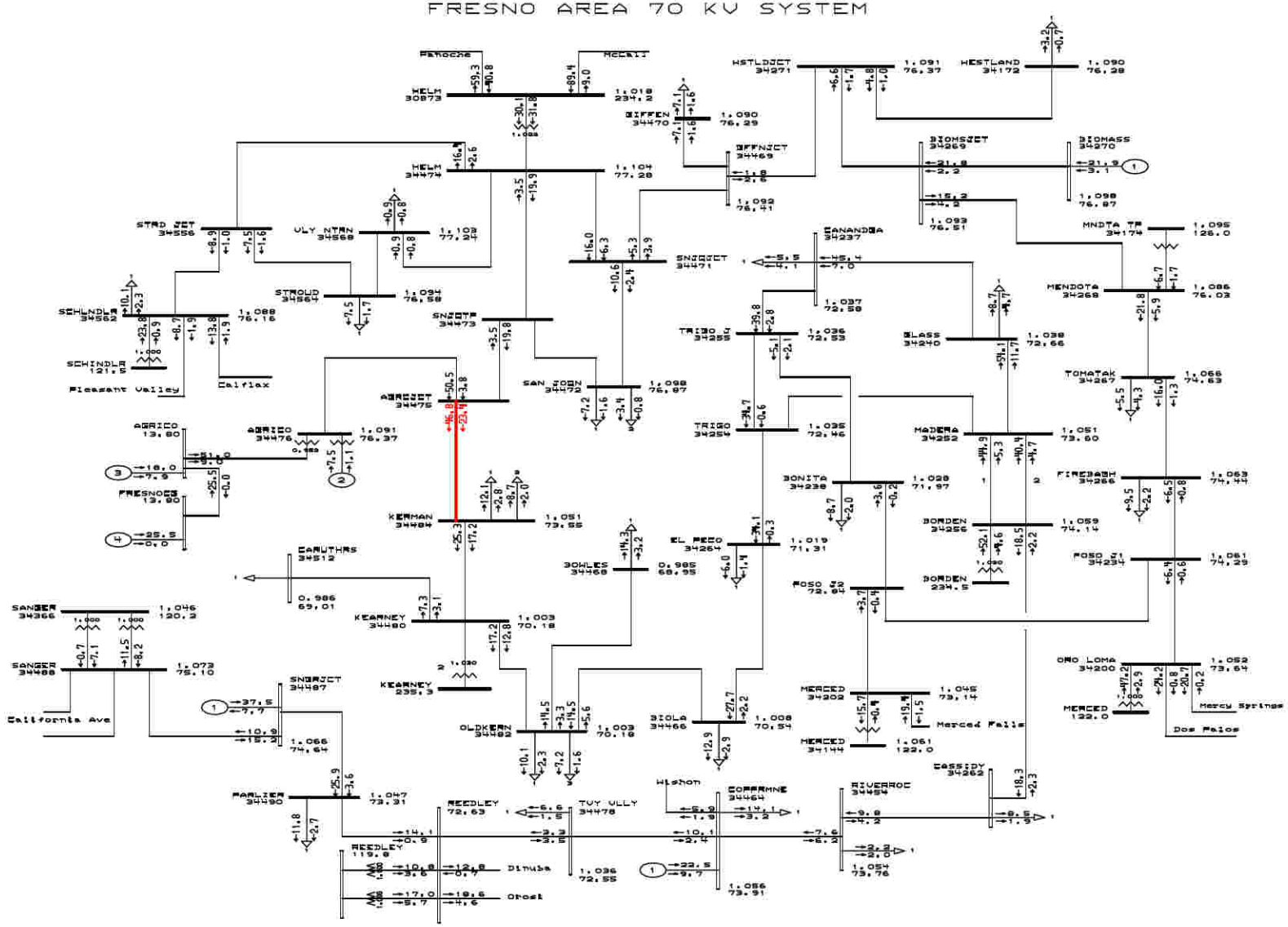

General Electric International, Inc. PSLF Program MW/MVAR Thu Apr 28 21:21:36 2005

PG&E Tranmission Planning	PG&E 2004 BASE CASE SERIES - 2009 Spring Peak Case PATH15=-2669 MW(S-N) PATH26=3395 MW(N-S) PDCI=3105 MW(N-S) COI=4494 MW(N-S) Bullard Energy Center - 2009 Spring Peak - after	Plot 93 - 2009 Spring Peak - Alternative 2, After Project 70 kV Outage: Kearney 230/70 kV Transformer	C:\PSLF_Work\34\PGE\Bullard-En C:\PSLF_Work\34\PGE\Bullard-En Rating = 2

FRESNO AREA 70 KV SYSTEM

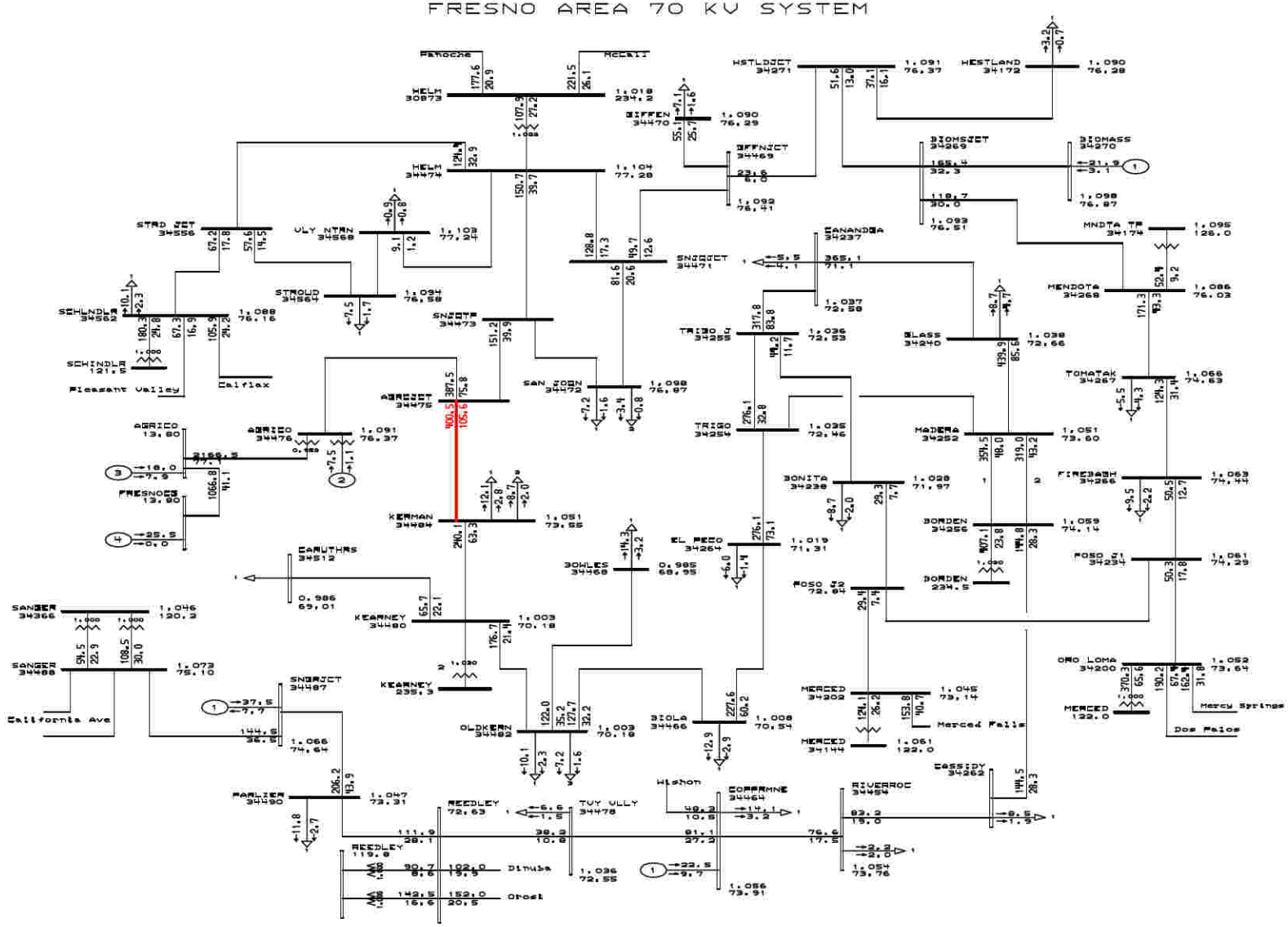

General Electric International, Inc. PSLF Program AMPS/Pct Thu Apr 28 21:21:37 2005

PG&E Tranmission Planning	PG&E 2004 BASE CASE SERIES - 2009 Spring Peak Case PATH15=-2669 MW(S-N) PATH26=3395 MW(N-S) PDCI=3105 MW(N-S) COI=4494 MW(N-S) Bullard Energy Center - 2009 Spring Peak - after	Plot 94 - 2009 Spring Peak - Alternative 2, After Project 70 kV Outage: Kearney 230/70 kV Transformer	C:\PSLF_Work\34\PGE\Bullard-En C:\PSLF_Work\34\PGE\Bullard-En Rating = 2

FRESNO AREA 70 KV SYSTEM

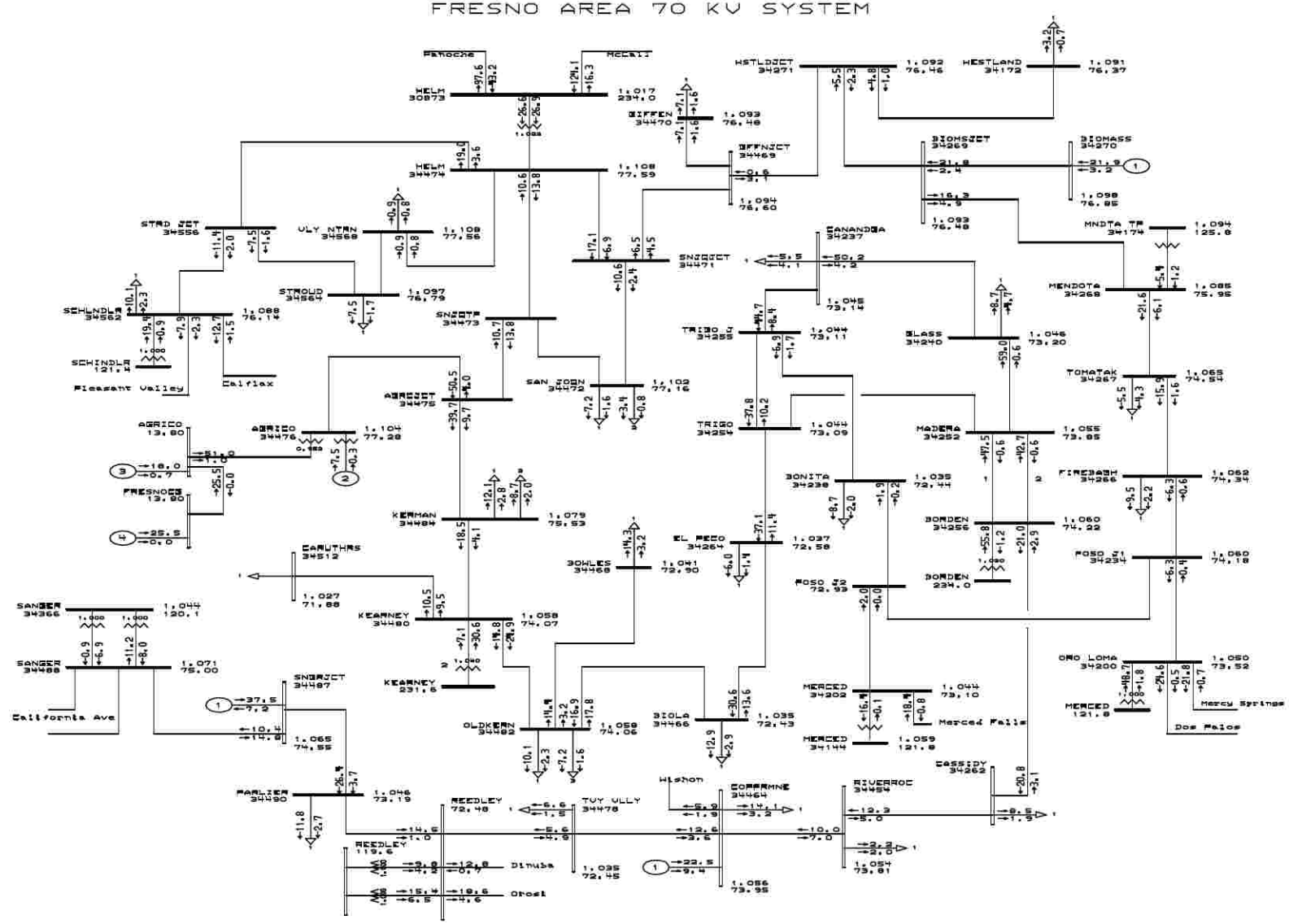

General Electric International, Inc. PSLF Program MW/MVAR Thu Apr 28 21:21:39 2005

PG&E Tranmission Planning	PG&E 2004 BASE CASE SERIES - 2009 Spring Peak Case PATH15=-2669 MW(S-N) PATH26=3395 MW(N-S) PDCI=3105 MW(N-S) COI=4494 MW(N-S) Bullard Energy Center - 2009 Spring Peak - after	Plot 95 - 2009 Spring Peak - Alternative 2, After Project 70 kV Outage: Kearney-Bullard Energy Center 230 kV Line	C:\PSLF_Work\34\PGE\Bullard-En C:\PSLF_Work\34\PGE\Bullard-En Rating = 2

FRESNO AREA 70 KV SYSTEM

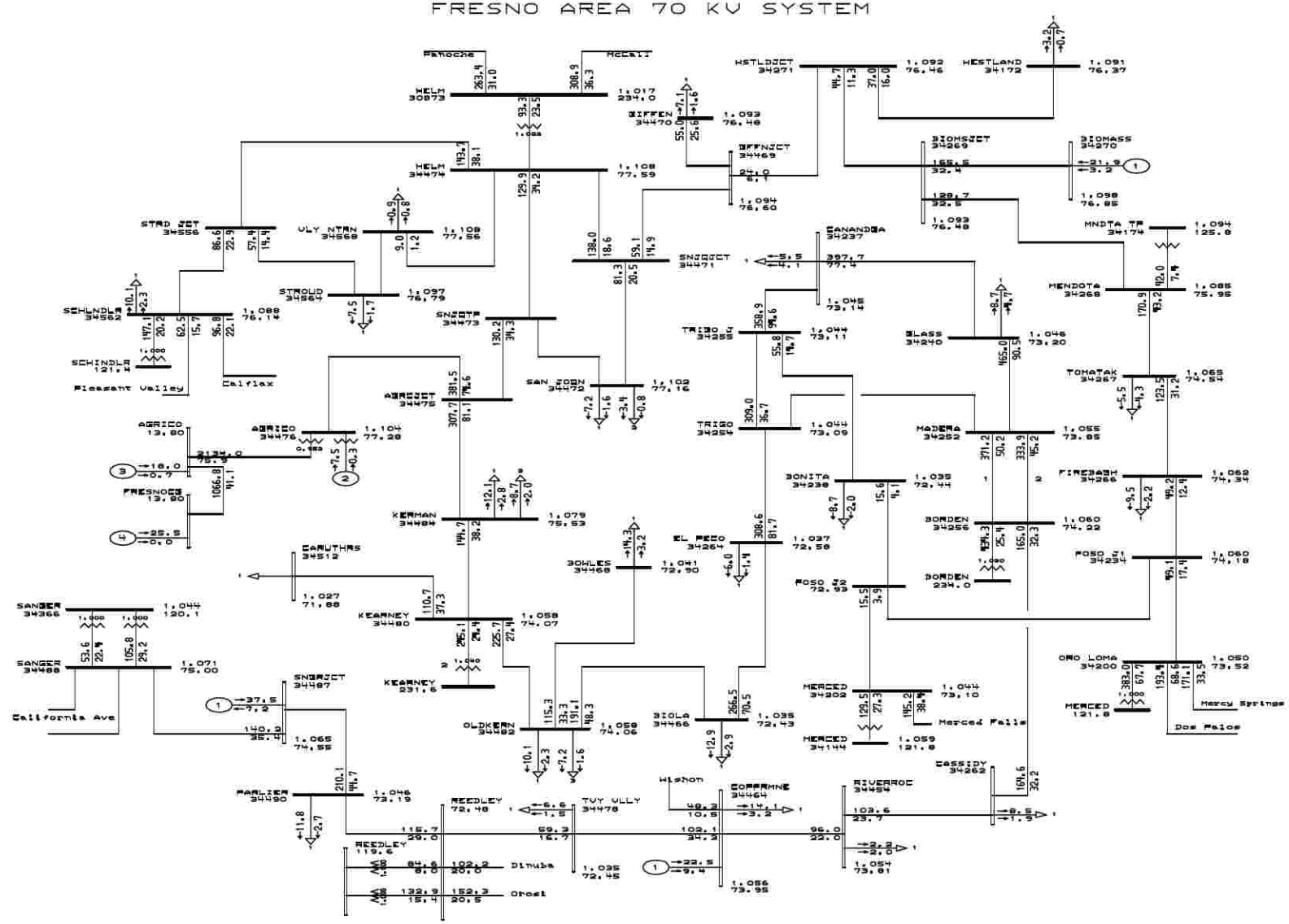

General Electric International, Inc. PSLF Program AMPS/Pct Thu Apr 28 21:21:39 2005

PG&E Tranmission Planning	PG&E 2004 BASE CASE SERIES - 2009 Spring Peak Case PATH15=-2669 MW(S-N) PATH26=3395 MW(N-S) PDCI=3105 MW(N-S) COI=4494 MW(N-S) Bullard Energy Center - 2009 Spring Peak - after	Plot 96 - 2009 Spring Peak - Alternative 2, After Project 70 kV Outage: Kearney-Bullard Energy Center 230 kV Line	C:\PSLF_Work\34\PGE\Bullard-En C:\PSLF_Work\34\PGE\Bullard-En Rating = 2

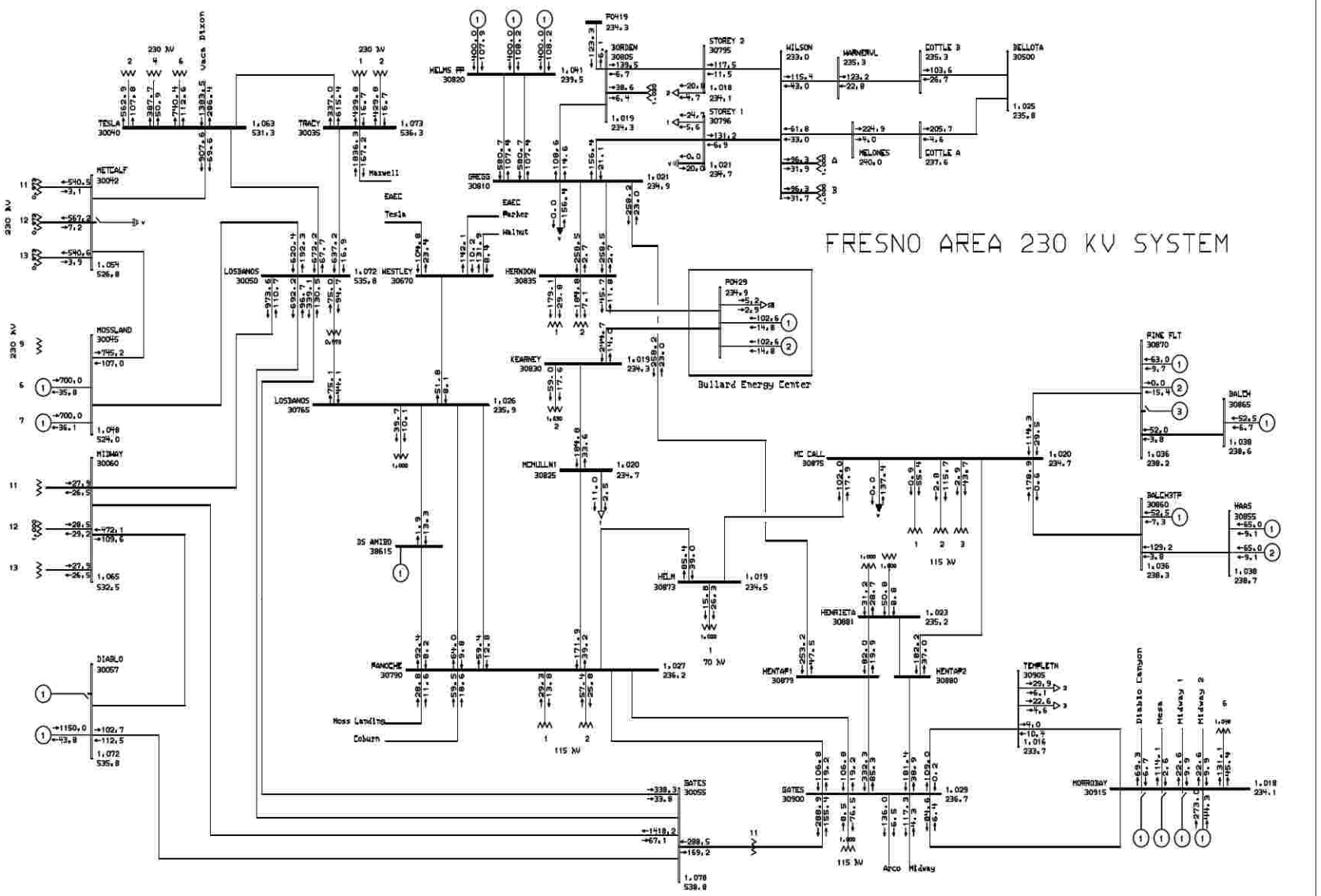

General Electric International, Inc. PSLF Program MW/MVAR Mon May 16 22:29:24 2005

PG&E Tranmission Planning	PG&E 2004 BASE CASE SERIES - 2009 Spring Peak Case PATH15=-2669 MW(S-N) PATH26=3395 MW(N-S) PDCI=3105 MW(N-S) COI=4494 MW(N-S) Bullard Energy Center - 2009 Spring Peak - after	Plot 97 - 2008 Spring Peak - Alternative 3, After Project 230 kV	C:\PSLF_Work\34\PGE\Bullard-En C:\PSLF_Work\34\PGE\Bullard-En Rating = 1

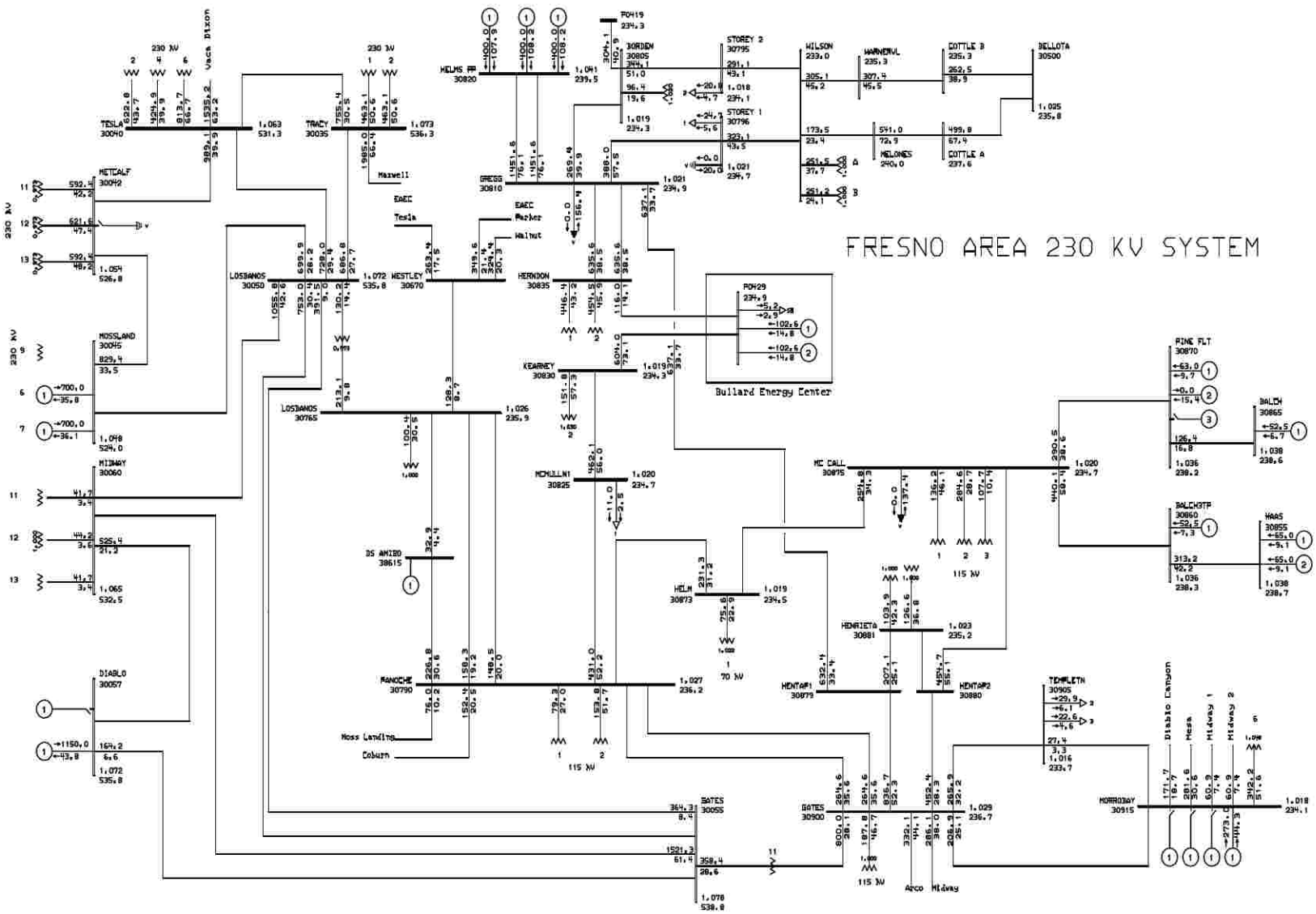

General Electric International, Inc. PSLF Program AMPS/Pct Mon May 16 22:29:24 2005

PG&E Tranmission Planning	PG&E 2004 BASE CASE SERIES - 2009 Spring Peak Case PATH15=-2669 MW(S-N) PATH26=3395 MW(N-S) PDCI=3105 MW(N-S) EOI=4494 MW(N-S) Bullard Energy Center - 2009 Spring Peak - after	Plot 98 - 2008 Spring Peak - Alternative 3, After Project 230 kV	C:\PSLF_Work\34\PGE\Bullard-En C:\PSLF_Work\34\PGE\Bullard-En Rating = 1

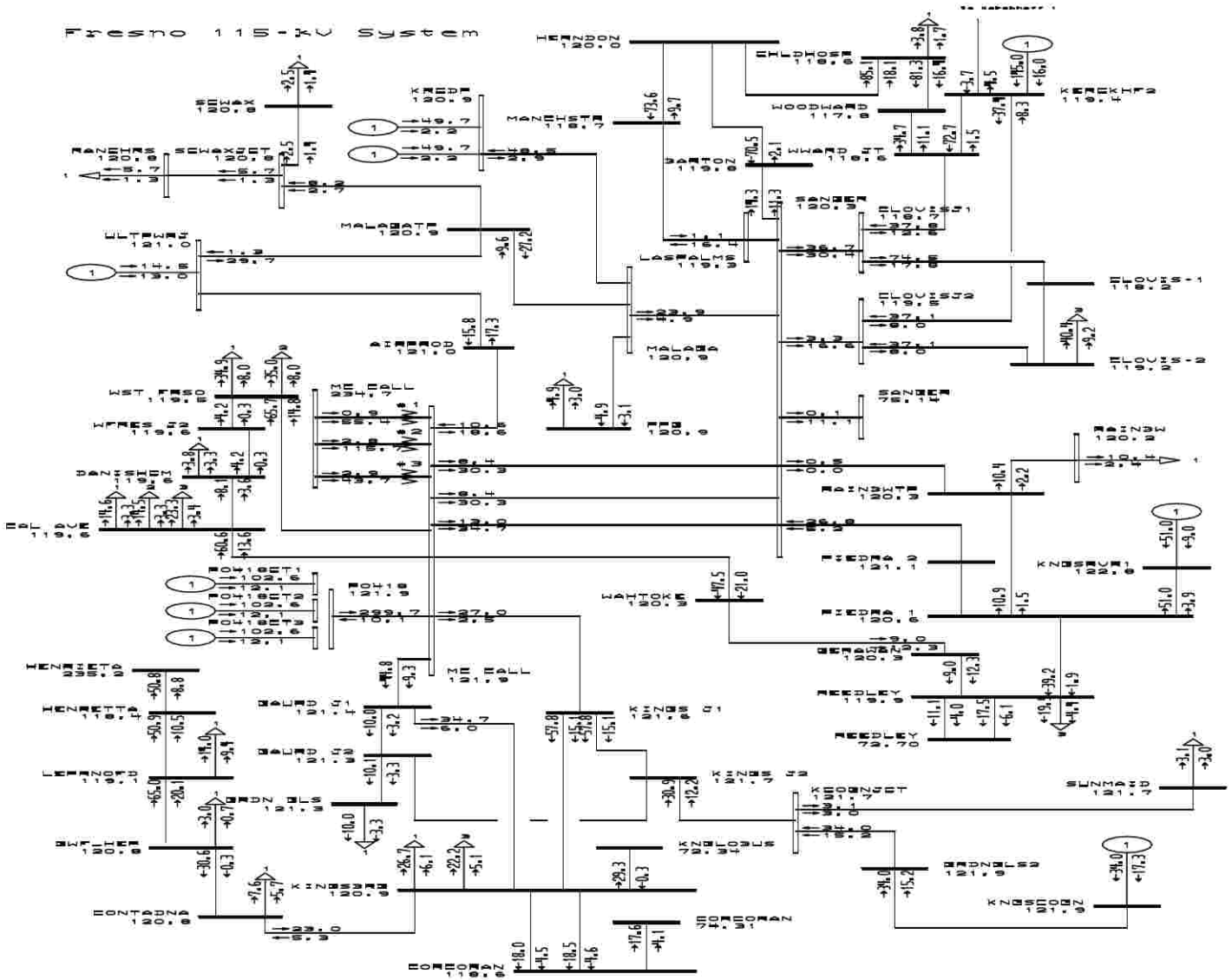

General Electric International, Inc. PSLF Program MW/MVAR Mon May 16 22:29:24 2005

PG&E Tranmission Planning	PG&E 2004 BASE CASE SERIES - 2009 Spring Peak Case PATH15=-2669 MW(S-N) PATH26=3395 MW(N-S) FDCI=3105 MW(N-S) EOI=4494 MW(N-S) Bullard Energy Center - 2009 Spring Peak - after	Plot 99 - 2008 Spring Peak - Alternative 3, After Project 115 kV	C:\PSLF_Work\34\PGE\Bullard-En C:\PSLF_Work\34\PGE\Bullard-En Rating = 1

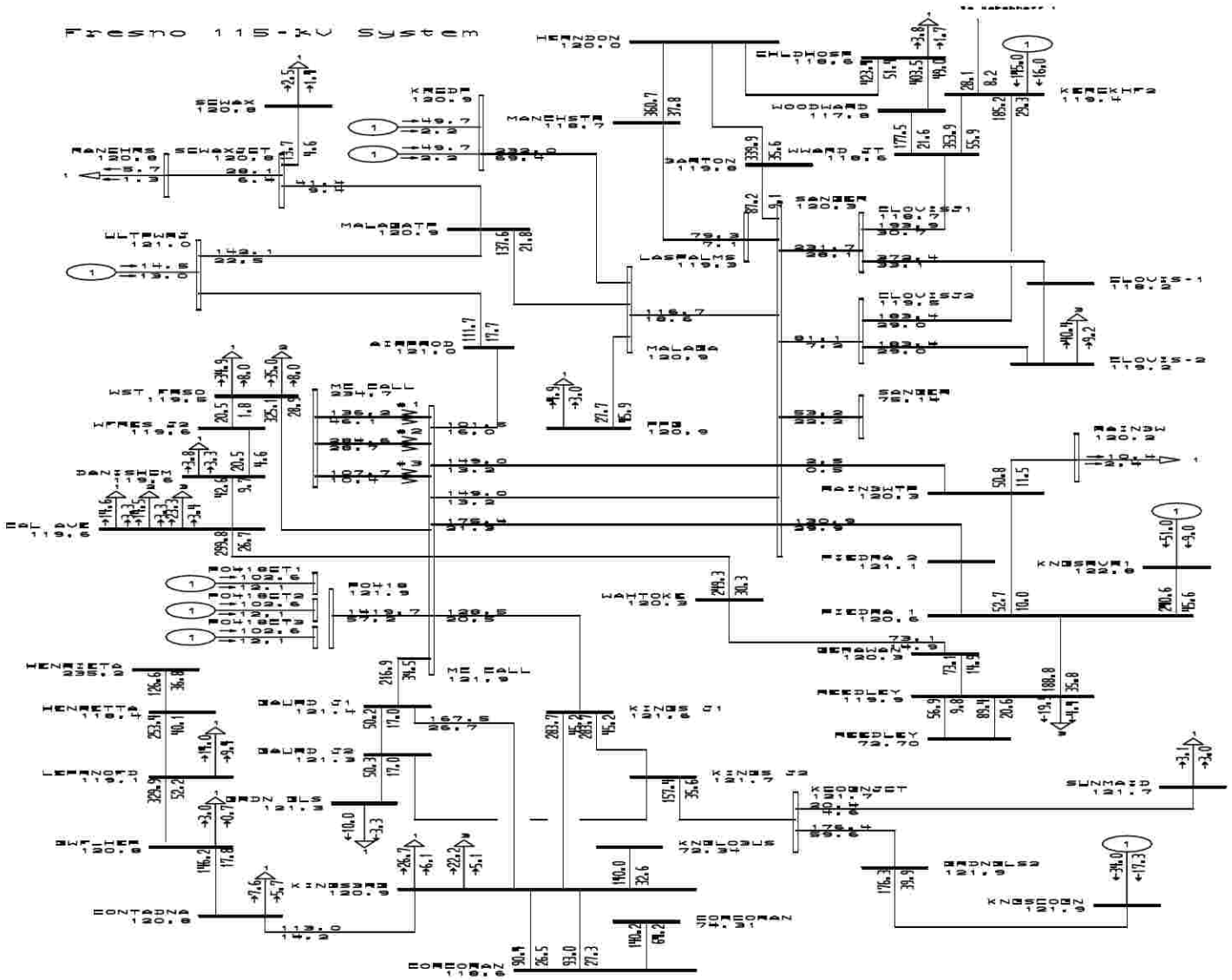

General Electric International, Inc. PSLF Program AMPS/Pct Mon May 16 22:29:24 2005

PG&E Tranmission Planning	PG&E 2004 BASE CASE SERIES - 2009 Spring Peak Case PATH15=-2669 MW(S-N) PATH26=3395 MW(N-S) FDCI=3105 MW(N-S) EOI=4494 MW(N-S) Bullard Energy Center - 2009 Spring Peak - after	Plot 100 - 2008 Spring Peak - Alternative 3, After Project 115 kV	C:\PSLF_Work\34\PGE\Bullard-En C:\PSLF_Work\34\PGE\Bullard-En Rating = 1

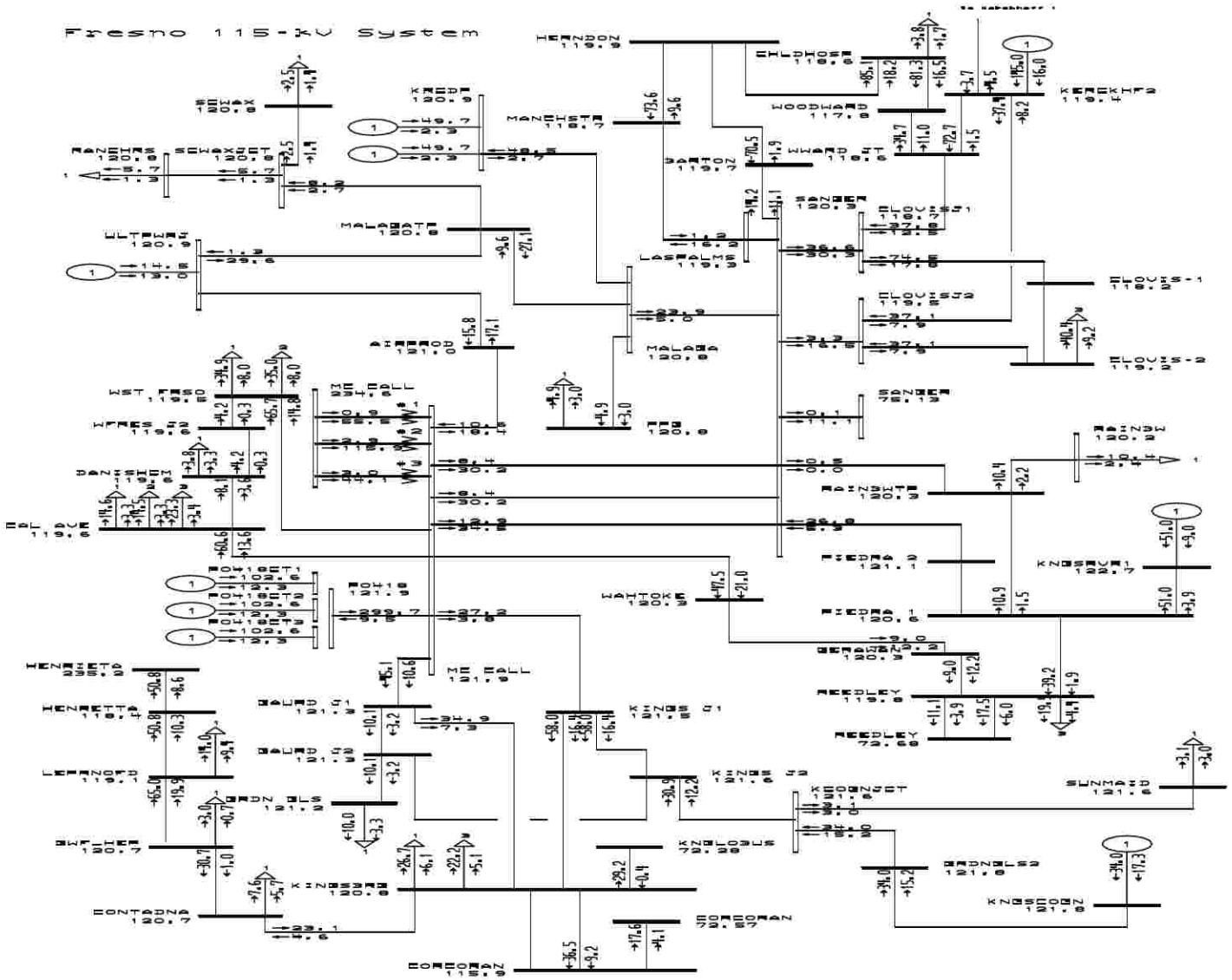

General Electric International, Inc. PSLF Program MW/MVAR Mon May 16 22:29:26 2005

PG&E Tranmission Planning	PG&E 2004 BASE CASE SERIES - 2009 Spring Peak Case PATH15=-2669 MW(S-N) PATH26=3395 MW(N-S) FDCI=3105 MW(N-S) EOI=4494 MW(N-S) Bullard Energy Center - 2009 Spring Peak - after	Plot 101 - 2009 Spring Peak - Alternative 3, After Project 115 kV Outage: Kingsburg - Corcoran #1 115 kV Outage	C:\PSLF_Work\34\PGE\Bullard-En C:\PSLF_Work\34\PGE\Bullard-En Rating = 2

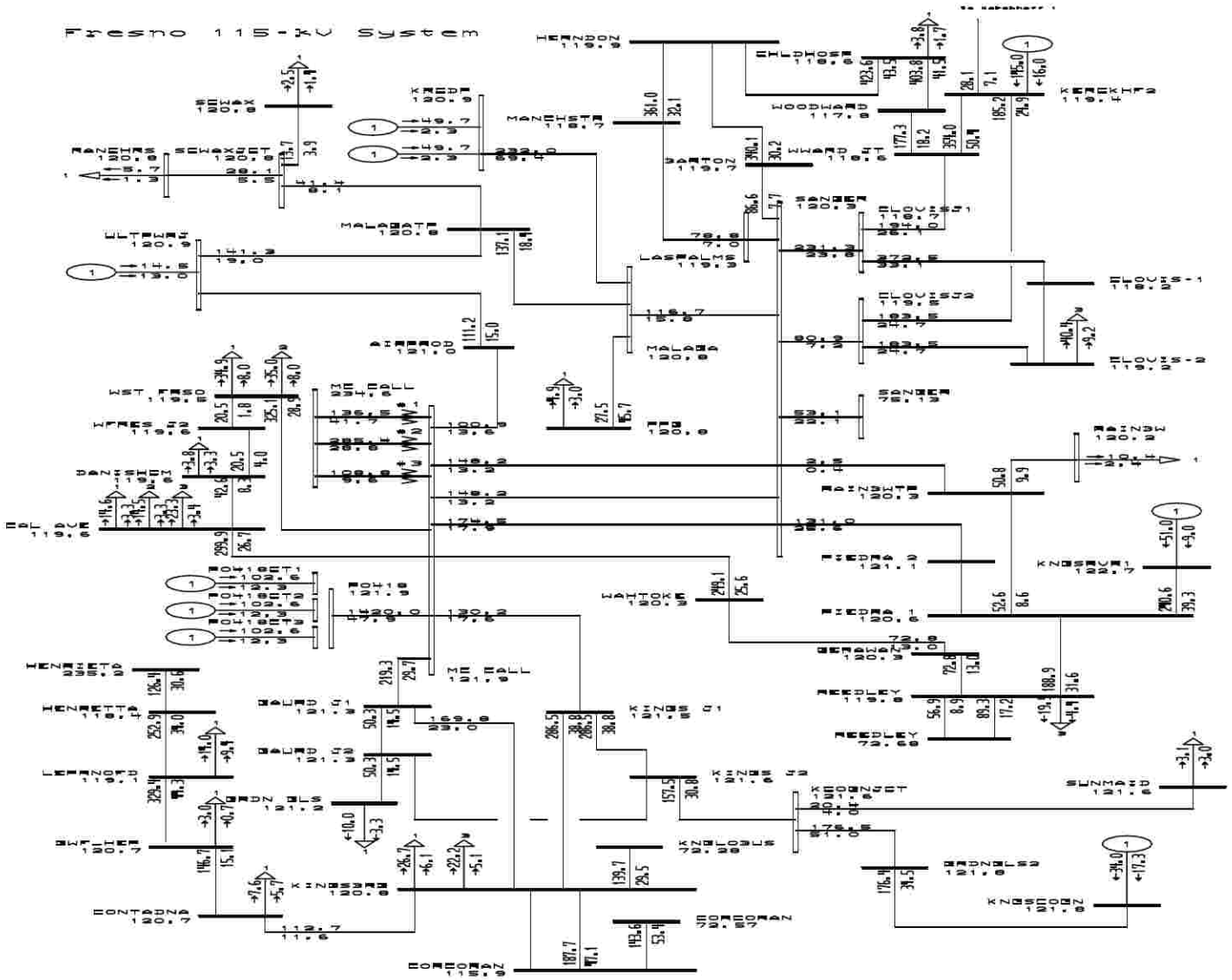

General Electric International, Inc. PSLF Program AMPS/Pct Mon May 16 22:29:26 2005

PG&E Tranmission Planning	PG&E 2004 BASE CASE SERIES - 2009 Spring Peak Case PATH15=-2669 MW(S-N) PATH26=3395 MW(N-S) FDCI=3105 MW(N-S) EOI=4494 MW(N-S) Bullard Energy Center - 2009 Spring Peak - after	Plot 102 - 2009 Spring Peak - Alternative 3, After Project 115 kV Outage: Kingsburg - Corcoran #1 115 kV Outage	C:\PSLF_Work\34\PGE\Bullard-En C:\PSLF_Work\34\PGE\Bullard-En Rating = 2

FRESNO AREA 70 KV SYSTEM

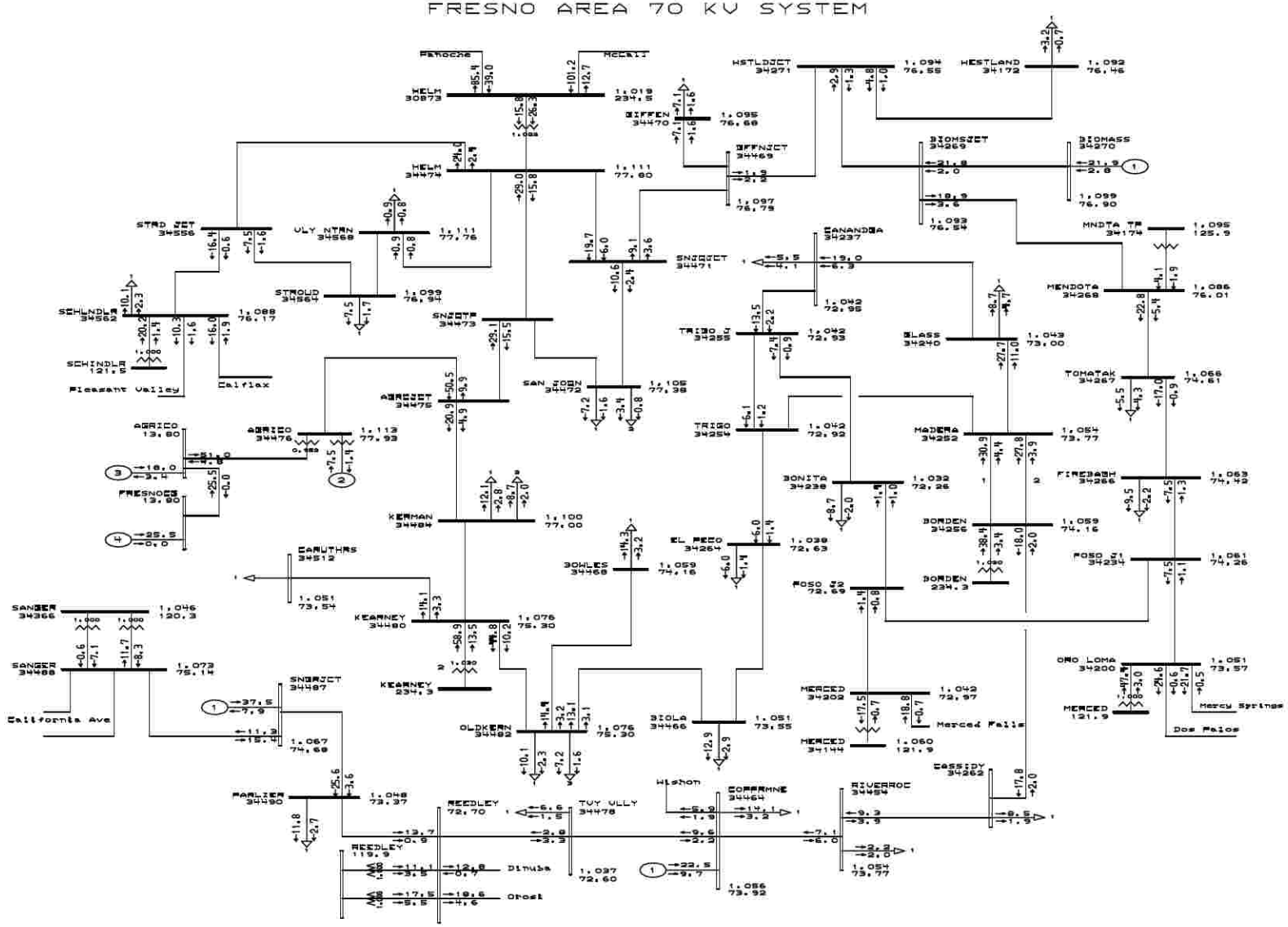

General Electric International, Inc. PSLF Program MW/MVAR Mon May 16 22:29:24 2005

PG&E Tranmission Planning	PG&E 2004 BASE CASE SERIES - 2009 Spring Peak Case PATH15=-2669 MW(S-N) PATH26=3395 MW(N-S) PDCI=3105 MW(N-S) COI=4494 MW(N-S) Bullard Energy Center - 2009 Spring Peak - after	Plot 103 - 2008 Spring Peak - Alternative 3, After Project 70 kV	C:\PSLF_Work\34\PGE\Bullard-En C:\PSLF_Work\34\PGE\Bullard-En Rating = 1

FRESNO AREA 70 KV SYSTEM

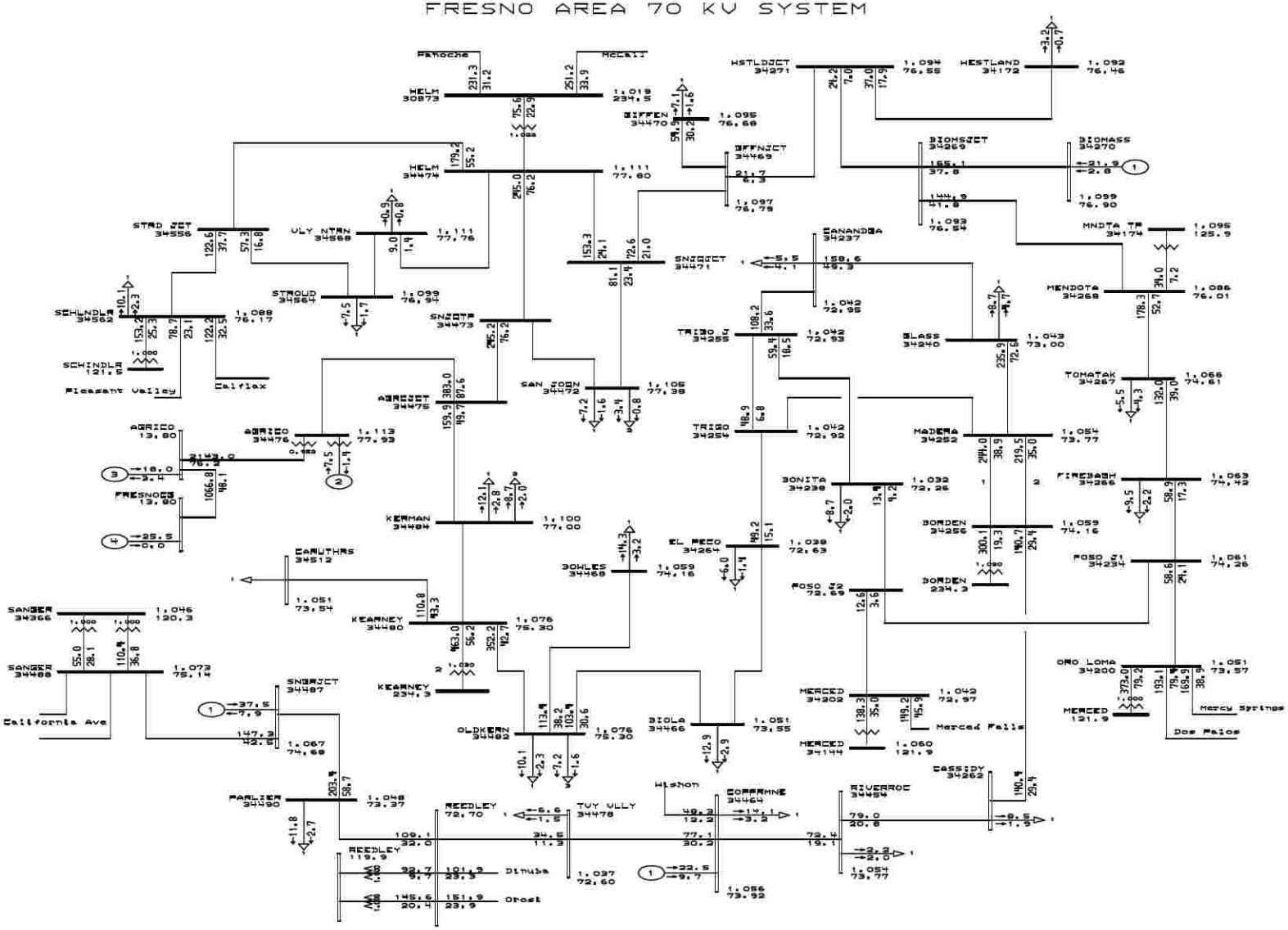

General Electric International, Inc. PSLF Program AMPS/Pct Mon May 16 22:29:24 2005

PG&E Tranmission Planning	PG&E 2004 BASE CASE SERIES - 2009 Spring Peak Case PATH15=-2669 MW(S-N) PATH26=3395 MW(N-S) PDCI=3105 MW(N-S) COI=4494 MW(N-S) Bullard Energy Center - 2009 Spring Peak - after	Plot 104 - 2008 Spring Peak - Alternative 3, After Project 70 kV	C:\PSLF_Work\34\PGE\Bullard-En C:\PSLF_Work\34\PGE\Bullard-En Rating = 1

FRESNO AREA 70 KV SYSTEM

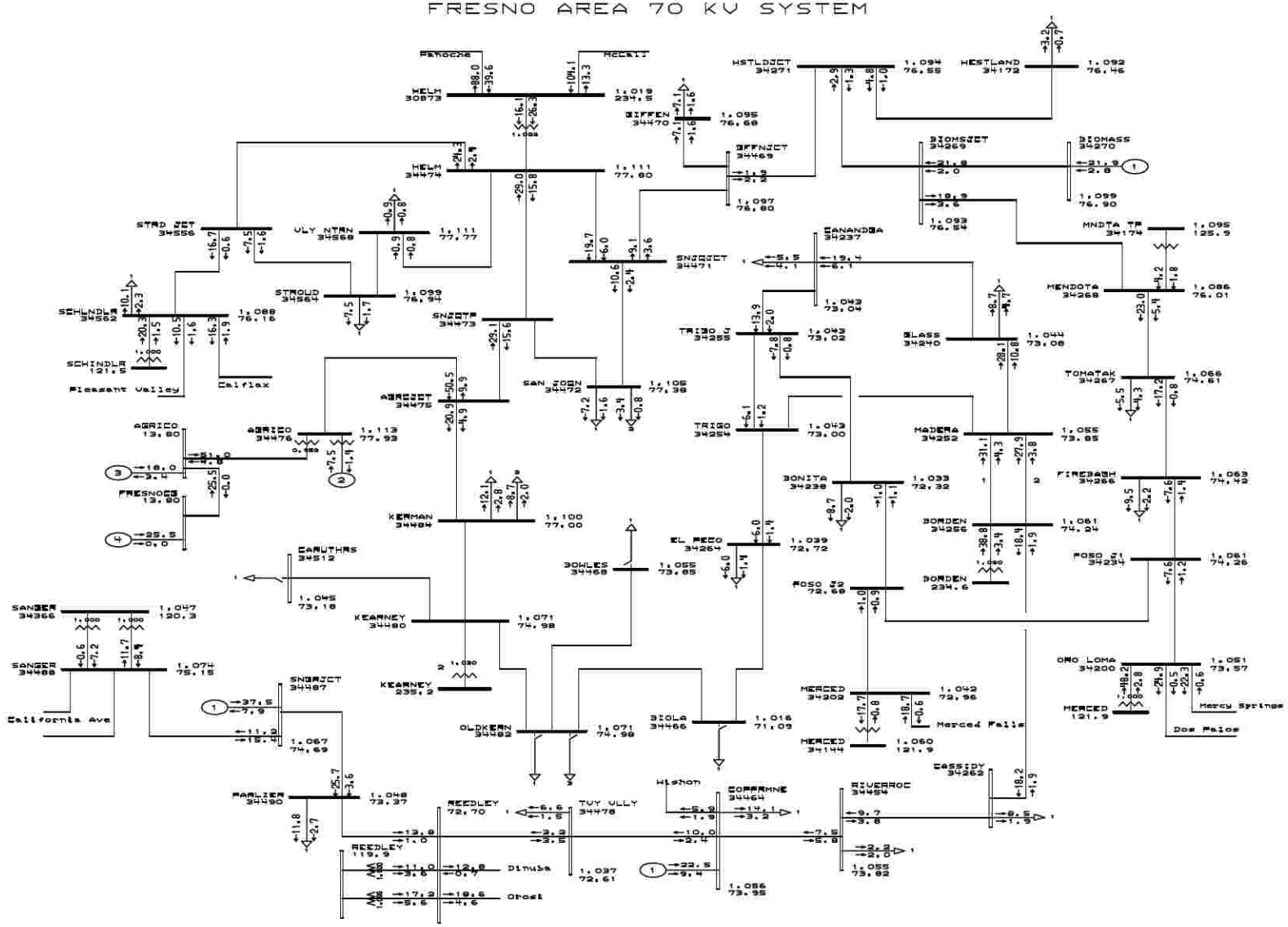

General Electric International, Inc. PSLF Program MW/MVAR Mon May 16 22:29:31 2005

PG&E Tranmission Planning	PG&E 2004 BASE CASE SERIES - 2009 Spring Peak Case PATH15=-2669 MW(S-N) PATH26=3395 MW(N-S) PDCI=3105 MW(N-S) COI=4494 MW(N-S) Bullard Energy Center - 2009 Spring Peak - after	Plot 105 - 2009 Spring Peak - Alternative 3, After Project 70 kV Outage: Kearney 230/70 kV Transformer	C:\PSLF_Work\34\PGE\Bullard-En C:\PSLF_Work\34\PGE\Bullard-En Rating = 2

FRESNO AREA 70 KV SYSTEM

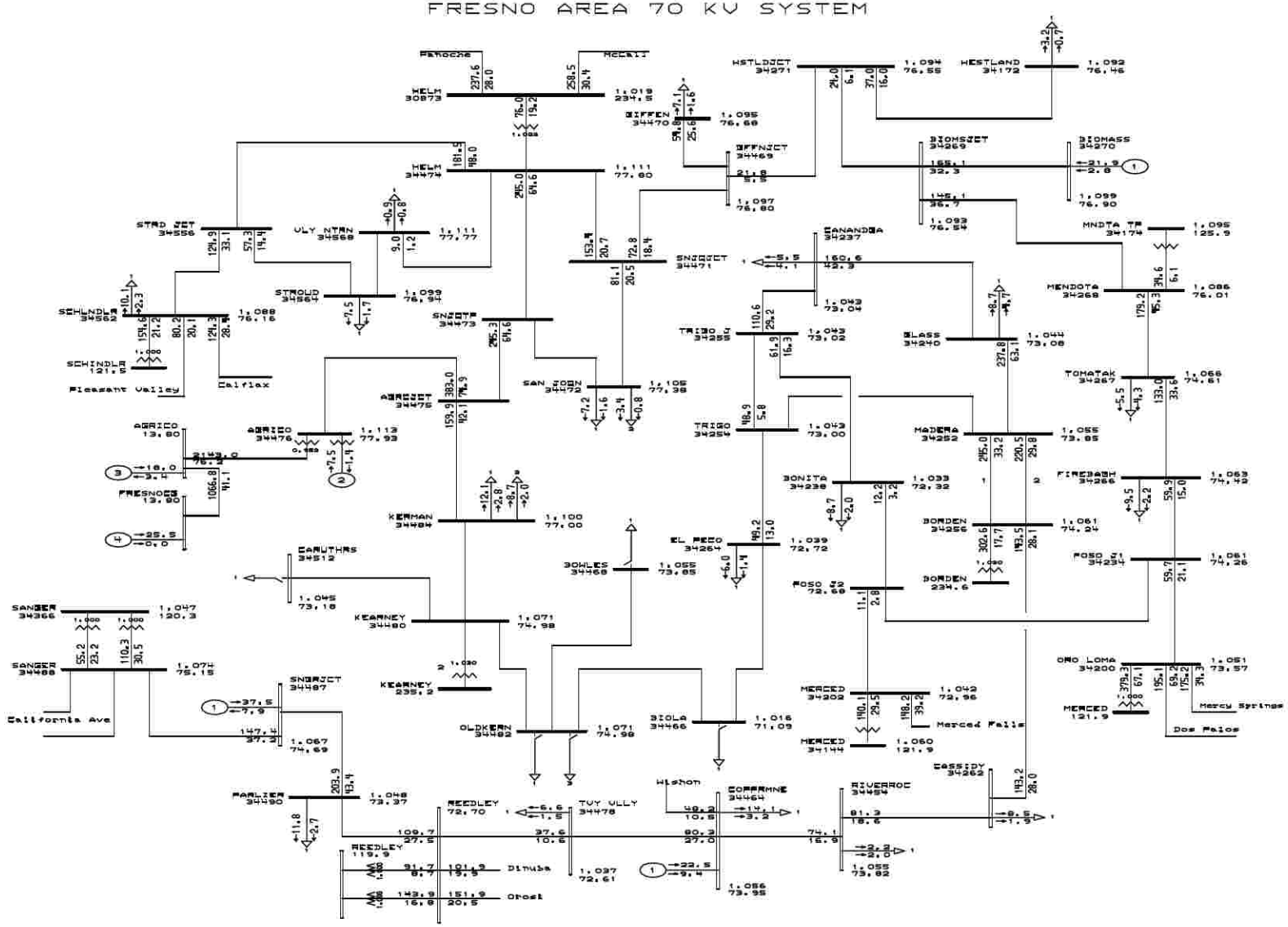

General Electric International, Inc. PSLF Program AMPS/Pct Mon May 16 22:29:31 2005

PG&E Tranmission Planning	PG&E 2004 BASE CASE SERIES - 2009 Spring Peak Case PATH15=-2669 MW(S-N) PATH26=3395 MW(N-S) PDCI=3105 MW(N-S) COI=4494 MW(N-S) Bullard Energy Center - 2009 Spring Peak - after	Plot 106 - 2009 Spring Peak - Alternative 3, After Project 70 kV Outage: Kearney 230/70 kV Transformer	C:\PSLF_Work\34\PGE\Bullard-En C:\PSLF_Work\34\PGE\Bullard-En Rating = 2

FRESNO AREA 70 KV SYSTEM

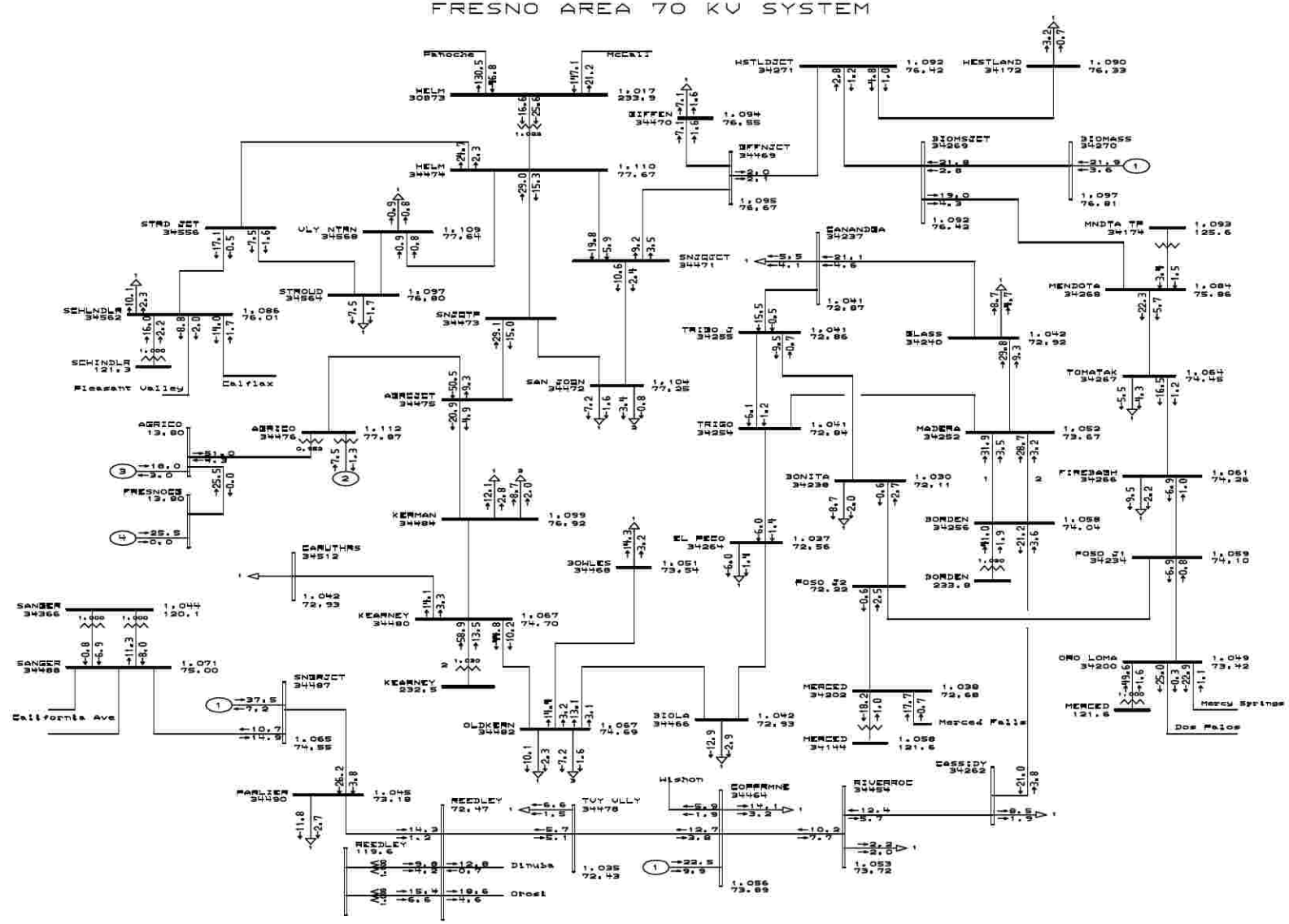

General Electric International, Inc. PSLF Program MW/MVAR Mon May 16 22:29:33 2005

PG&E Tranmission Planning	PG&E 2004 BASE CASE SERIES - 2009 Spring Peak Case PATH15=-2669 MW(S-N) PATH26=3395 MW(N-S) PDCI=3105 MW(N-S) COI=4494 MW(N-S) Bullard Energy Center - 2009 Spring Peak - after	Plot 107 - 2009 Spring Peak - Alternative 3, After Project 70 kV Outage: Kearney-Bullard Energy Center 230 kV Line	C:\PSLF_Work\34\PGE\Bullard-En C:\PSLF_Work\34\PGE\Bullard-En Rating = 2

FRESNO AREA 70 KV SYSTEM

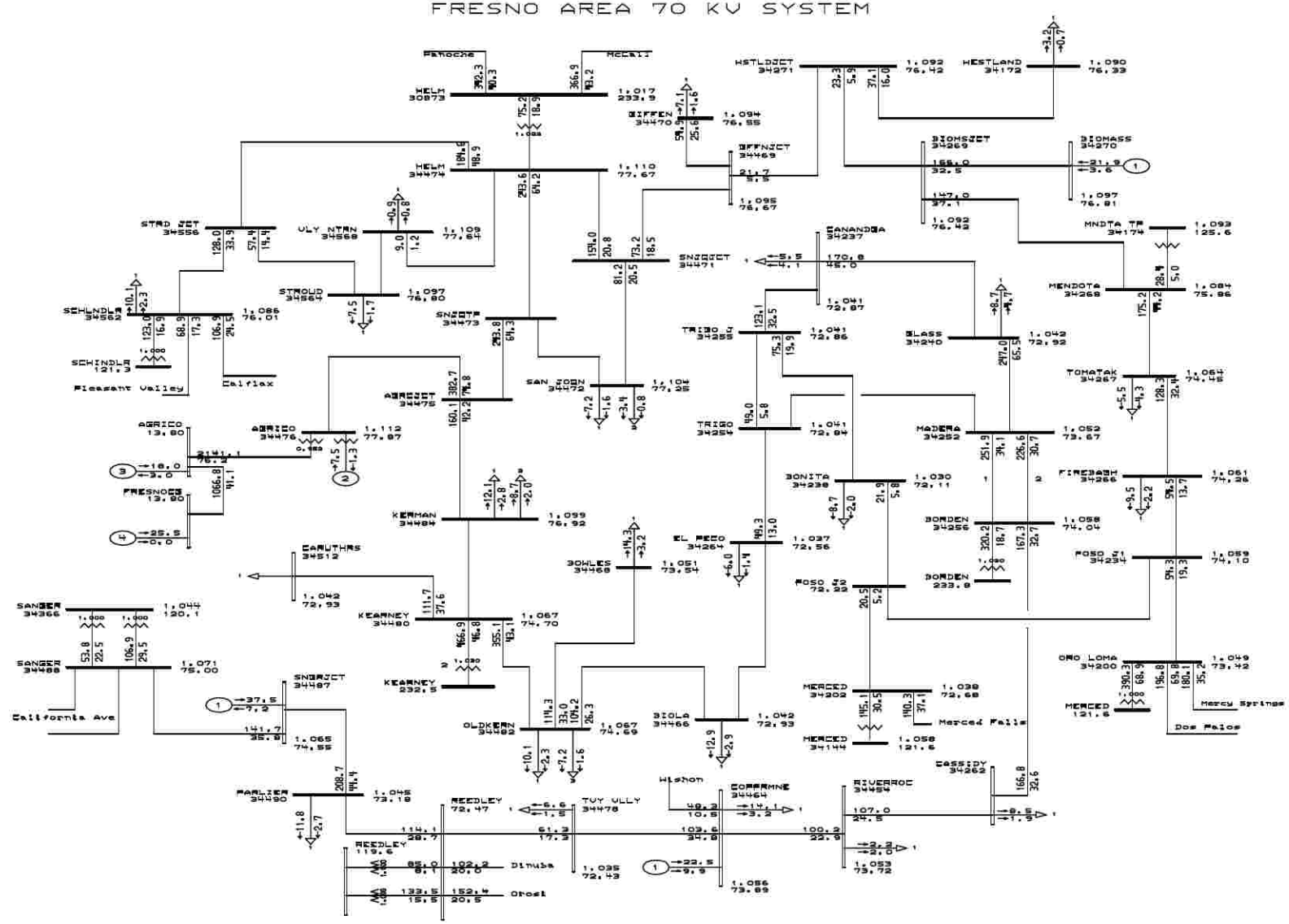

General Electric International, Inc. PSLF Program AMPS/Pct Mon May 16 22:29:33 2005

PG&E Tranmission Planning	PG&E 2004 BASE CASE SERIES - 2009 Spring Peak Case PATH15=-2669 MW(S-N) PATH26=3395 MW(N-S) PDCI=3105 MW(N-S) COI=4494 MW(N-S) Bullard Energy Center - 2009 Spring Peak - after	Plot 108 - 2009 Spring Peak - Alternative 3, After Project 70 kV Outage: Kearney-Bullard Energy Center 230 kV Line	C:\PSLF_Work\34\PGE\Bullard-En C:\PSLF_Work\34\PGE\Bullard-En Rating = 2