WATER BALANCES

Bullard Water Balance Summary

Flow Stream	Maximum Daily 1000 gal/day	Average Daily 1000 gal/day	Average Annual acre-ft/yr
Fresno City Water			
Cooling Tower Makeup	598	342	219
Demineralizer System	288	314	201
Evap Cooler Supply	389	389	249
Facilities (Sanitary, etc.)	5	5	3
Total	1,279	1,049	671
Waste Water			
Cooling Tower Blowdown	402	301	192
RO System Rejects	115	126	80
Facilities (Sanitary, etc.)	5	5	3
Total	521	431	276

Note: Annual values based on 5000 hrs/year
Evenly divided to each month
This corresponds to a 57% capacity factor

Bullard Water Balance
(Average Full Load Flows)

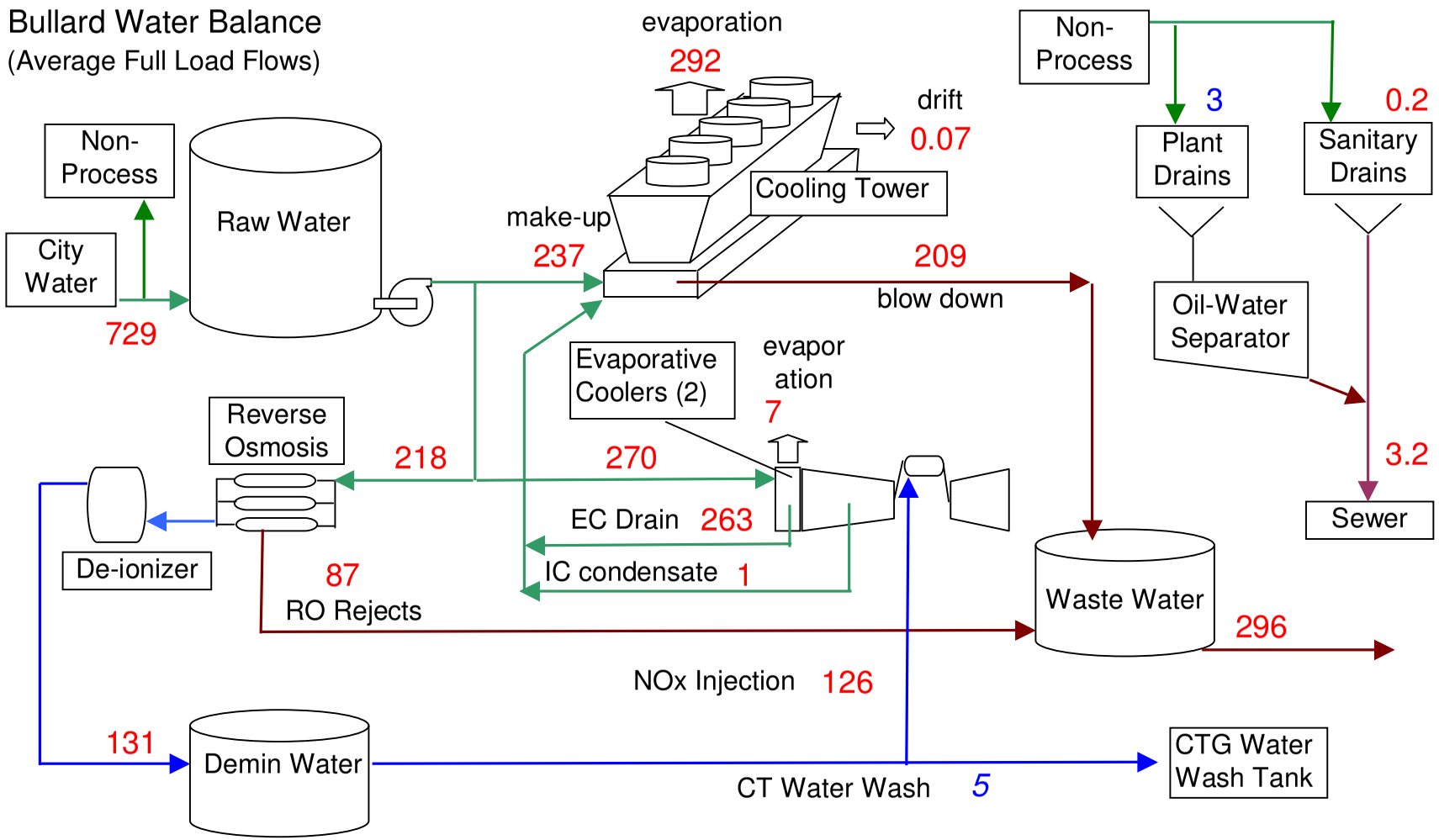

NOTES:

1) All Flows are displayed in GPM
2) NOx Injection and cooling tower heat loads are from an average of GE performance estimates at the monthly average temperature for every month (equally weighted)
3) Cooling Tower cycles of concentration 2.4
4) Evaporative Coolers are once-through with a flow rate (each) of 135 gpm
5) Reverse Osmosis water recovery rate is 60%
7) Potable water flows are based on a use rate (gal/day/person) of 25 & 10 people on site

Bullard Water Balance

(Average Flows for Hottest Day)

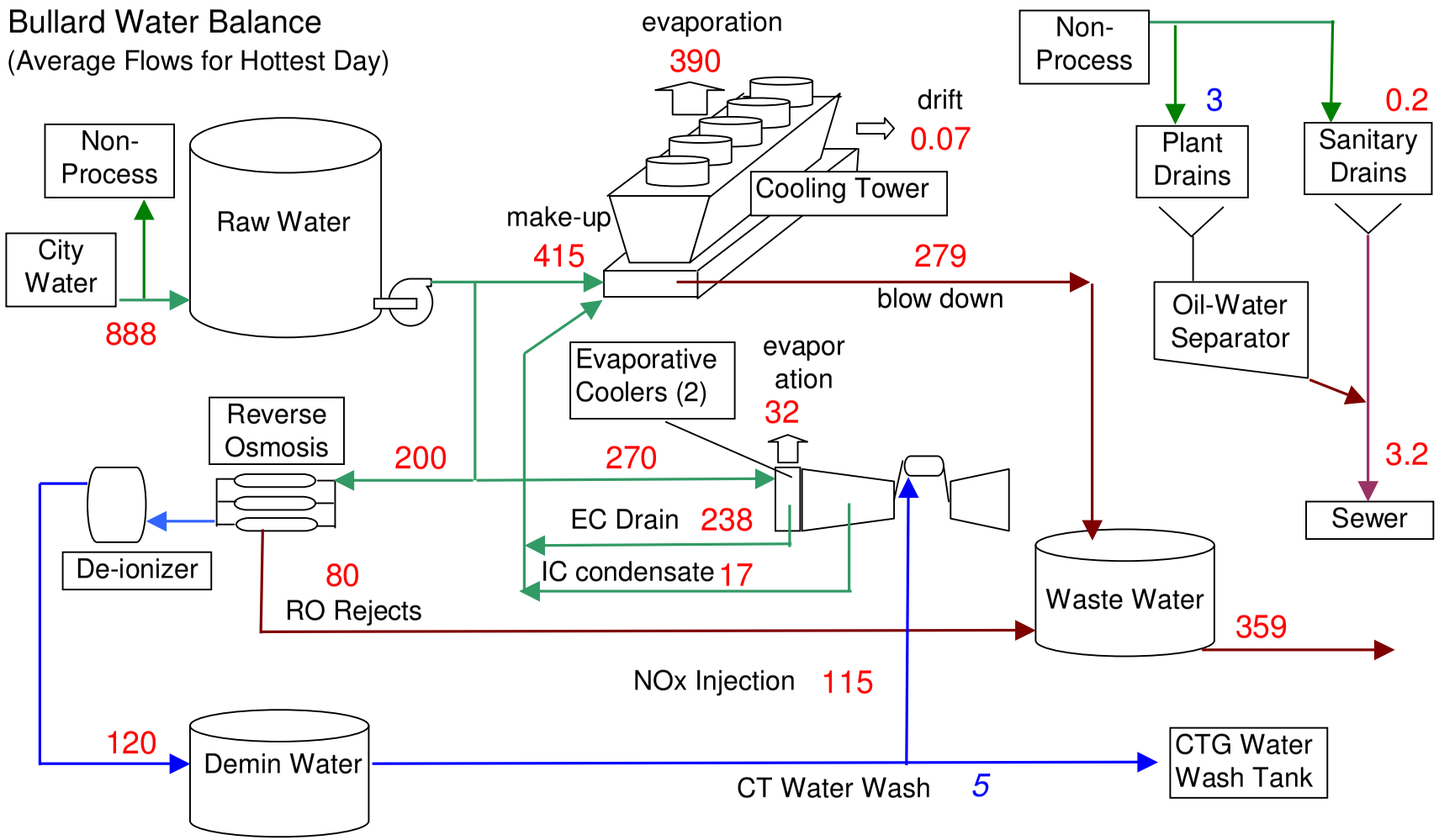

NOTES:

1) All Flows are displayed in GPM
2) NOx Injection and cooling tower heat loads are from an average of GE performance estimates at the monthly average temperature for every month (equally weighted)
3) Cooling Tower cycles of concentration 2.4
4) Evaporative Coolers are once-through with a flow rate (each) of 135 gpm
5) Reverse Osmosis water recovery rate is 60%
7) Potable water flows are based on a use rate (gal/day/person) of 25 & 10 people on site