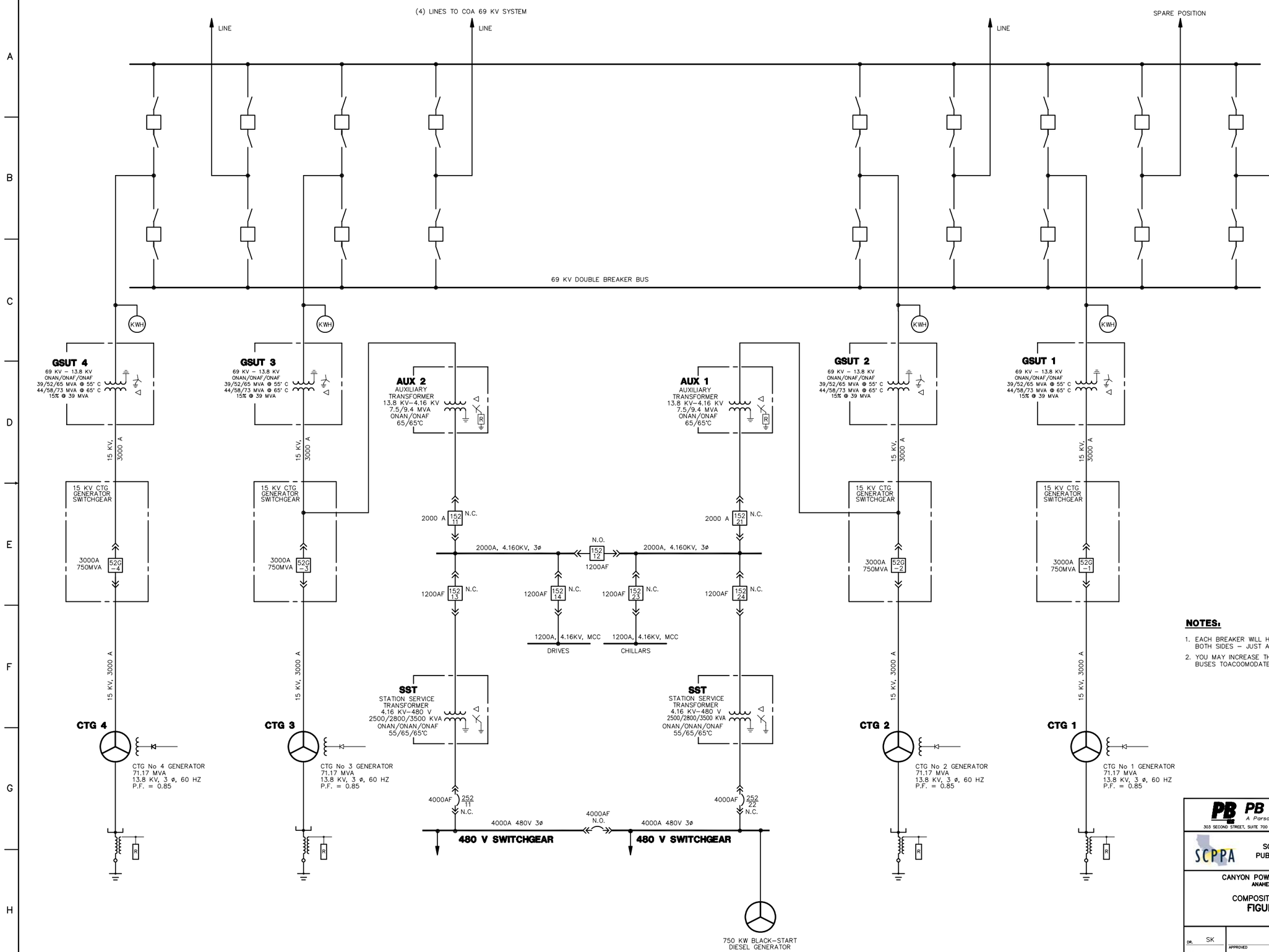

NOTES:

1. EACH BREAKER WILL HAVE DISCONNECT SWITCH ON BOTH SIDES – JUST AS THOSE DELETED.
2. YOU MAY INCREASE THE SPACE BETWEEN THE TWO BUSES TOACOOMODATE GRAPHICS.

PB Power, Inc.
A Parsons Brinckerhoff Company
303 SECOND STREET, SUITE 700 NORTH, SAN FRANCISCO, CALIFORNIA 94107

SCPPA
SOUTHERN CALIFORNIA PUBLIC POWER AUTHORITY

CANYON POWER PLANT PROJECT
ANAHEIM, CALIFORNIA

COMPOSITE SINGLE–LINE
FIGURE 3–10

DR. SK	APPROVED DATE	DECEMBER 2007
DES.		
CHK.	PRINCIPAL IN CHARGE DATE	SHEET 8 OF

NONE

N:\Anaheim\JAFC FIGURES\FIGURE_3-10.dwg
Date 12-11-07 04:19pm Tuesday Plotted by: wongj