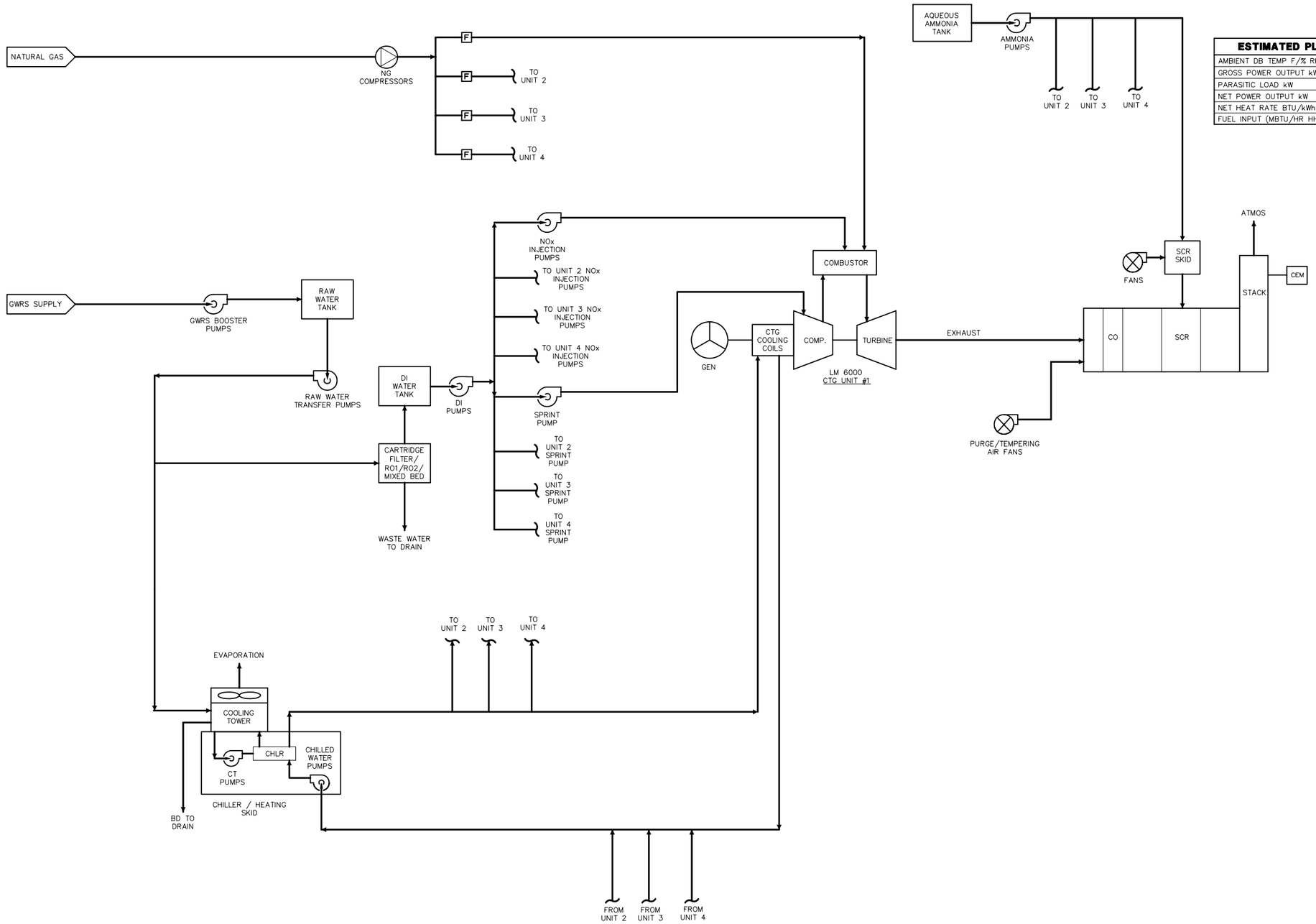

ESTIMATED PLANT PERFORMANCE

AMBIENT DB TEMP F/% RH	89 / 36
GROSS POWER OUTPUT kW	203,800
PARASITIC LOAD kW	9,700
NET POWER OUTPUT kW	194,100
NET HEAT RATE BTU/kWhr (HHV)	9,907
FUEL INPUT (MBTU/HR HHV)	1,924

PB Power, Inc.
A Parsons Brinckerhoff Company
303 SECOND STREET, SUITE 700 NORTH, SAN FRANCISCO, CALIFORNIA 94107

SCPPA
SOUTHERN CALIFORNIA PUBLIC POWER AUTHORITY

CANYON POWER PLANT PROJECT
ANAHEIM, CALIFORNIA

PLANT FLOW DIAGRAM
FIGURE 3–2

DR. JJB
DES. JJB
CHK. SB
APPROVED DATE
PRINCIPAL IN CHARGE DATE
DECEMBER 2007
SHEET 8 OF

NONE

N:\Anaheim\AFC FIGURES\FIGURE 3-2.dwg
Date 12-11-07 04:19pm Tuesday Plotted by: wongj