Storm Water Pollution Prevention Plan

For:

Carlsbad Energy Center Project
Carlsbad, California

Prepared for:
Carlsbad Energy Center Project, LLC
Encina Power Station
4600 Carlsbad Boulevard
Carlsbad, CA 92008

Contractor:
To Be Determined

Project Site Location/Address:
4600 Carlsbad Boulevard
Carlsbad, CA 92008

Contractor's Storm Water Pollution Prevention Manager
To Be Determined

SWPPP Prepared by:
Shaw Environmental, Inc.
3347 Michelson Drive, Suite 200
Irvine, CA 92612
818-888-9062
Carol Zeyn/Project Scientist

SWPPP Preparation Date:
August 20, 2007

Estimated Project Dates:
Start of Construction: 1st Qrt 2009 Completion of Construction: 2nd Qrt 2010

WDID No.: _____

Contents

Section 100 SWPPP Certifications and Approval 100-1
100.1 SWPPP Certification by Preparer 100-1
100.2 Owner Approval and Certification of SWPPP 100-2
100.3 Annual Compliance Certification 100-3
Section 200 SWPPP Amendments 200-1
200.1 SWPPP Amendment Certification and Approval 200-1
200.2 Amendment Log 200-3
Section 300 Introduction and Project Description 300-1
300.1 Introduction and Project Description 300-1
300.2 Unique Site Features 300-1
300.3 Construction Site Estimates 300-2
300.4 Project Schedule/Water Pollution Control Schedule 300-2
300.5 Contact Information/List of Responsible Parties 300-3
Section 400 References 400-1
Section 500 Body of SWPPP 500-1
500.1 Objectives 500-1
500.2 Vicinity Map 500-2
500.3 Pollutant Source Identification and BMP Selection 500-2
500.3.1 Inventory of Materials and Activities that May Pollute Storm Water 500-2
500.3.2 Existing (pre-construction) Control Measures 500-3
500.3.3 Nature of Fill Material and Existing Data Describing the Soil 500-3
500.3.4 Erosion Control 500-3
500.3.5 Sediment Control 500-4
500.3.6 Tracking Control 500-5
500.3.7 Wind Erosion Control 500-5
500.3.8 Non-Storm Water Control 500-6
500.3.9 Waste Management and Materials Pollution Control 500-6
500.4 Construction BMP Maintenance, Inspection, and Repair 500-7
500.5 Post-Construction Storm Water Management 500-7
500.5.1 Post-Construction Control Practices 500-7
500.5.2 Operation/Maintenance after Project Completion 500-8
500.6 Training 500-8
500.7 List of Subcontractors 500-8

Contents Continued

500.8 Other Plans/Permits 500-8

Section 600 Monitoring Program and Report 600-1

600.1 Site Inspections 600-1

600.2 Record Keeping and Reports 600-1

600.3 Sampling and Analysis Plan for Sediment 600-1

SWPPP Attachments

Attachment A ..... Vicinity Map

Attachment B .....Water Pollution Control Drawings

Attachment C .....Computation Sheets for Determining Runoff Coefficients and Run-on Discharges

Attachment D .....Notice of Intent (NOI)

Attachment E .....Program for Maintenance, Inspection, and Repair of Construction Site BMPs

Attachment F ..... Storm Water Quality Construction Site Inspection Checklist

Attachment G .....Trained Contractor Personnel Log

Attachment H .....Subcontractor Notification Letter and Log

Attachment I .....Forms and Logs

Attachment J .....BMPs Selected for the Project

Section 100
SWPPP Certifications and Approval

100.1 SWPPP Certification by Preparer

Project Name: **Carlsbad Energy Center Project**
Carlsbad, California

Project Number: 1009715000.1324A131

" I certify under a penalty of law that this document and all attachments were prepared under my direction or supervision in accordance with a system designed to ensure that qualified personnel properly gather and evaluate the information submitted. Based on my inquiry of the person or persons who manage the system or those persons directly responsible for gathering the information, to the best of my knowledge and belief, the information submitted is true, accurate, and complete. I am aware that there are significant penalties for submitting false information, including the possibility of fine and imprisonment for knowing violations."

Preparer's Signature	Date
Carol Zeyn/Project Scientist	818-888-9062
Preparer's Name and Title	Telephone

100.2 Owner Approval and Certification of SWPPP

Owner's (or Authorized Representative)
Approval and Certification of the
Storm Water Pollution Prevention Plan

Project Name: **Carlsbad Energy Center Project**
Carlsbad, California

Project Number: 1009715000.1324A131

" I certify under a penalty of law that this document and all attachments were prepared under my direction or supervision in accordance with a system design to ensure that qualified personnel properly gather and evaluate the information submitted. Based on my inquiry of the person or persons who manage the system or those persons directly responsible for gathering the information, to the best of my knowledge and belief, the penalties for submitting false information, including the possibility of fine and imprisonment for knowing violations."

Owner (or Authorized Representative) Signature	Date
Tim Hemig/Project Manager	760-710-2144
Name and Title	Telephone Number

100.3 Annual Compliance Certification

By July 1 of each year, the Owner shall submit an Annual Certification of Compliance to the appropriate Regional Water Quality Control Board (RWQCB), stating compliance with the terms and conditions of the Permit and the SWPPP. The Annual Certification of Compliance Form is included in Attachment M. Completed Annual Certifications of Compliance and Approvals can be found in the following pages.

Section 200
SWPPP Amendments

200.1 SWPPP Amendment Certification and Approval

This SWPPP shall be amended:

- Whenever there is a change in construction or operations which may affect the discharge of pollutants to surface waters, groundwater(s), or a municipal separate storm sewer system (MS4); or
- If any condition of the Permits is violated or the general objective of reducing or eliminating pollutants in storm water discharges has not been achieved. If the RWQCB determines that a Permit violation has occurred, the SWPPP shall be amended and implemented within 14-calendar days after notification by the RWQCB;
- Annually, prior to the defined rainy season; and
- When deemed necessary by the Owner.

The following items will be included in each amendment:

- Who requested the amendment.
- The location of proposed change.
- The reason for change.
- The original BMP proposed, if any
- Newly proposed BMP.

The amendments for this SWPPP, along with the Owner's Certification and the Owner approval, can be found in the following pages. Amendments are listed in the Amendment Log in section 200.2

SWPPP Amendment No._____

Project Name: **Carlsbad Energy Center Project**
Carlsbad, California

Project Number: _____

Preparer Certification of the
Storm Water Pollution Prevention Plan Amendment

"I certify under a penalty of law that this document and all attachments were prepared under my direction or supervision in accordance with a system designed to ensure that qualified personnel properly gather and evaluate the information submitted. Based on my inquiry of the person or persons who manage the system or those persons directly responsible for gathering the information, to the best of my knowledge and belief, the information submitted is true, accurate, and complete. I am aware that there are significant penalties for submitting false information, including the possibility of fine and imprisonment for knowing violations."

Preparer's Signature	Date
Carol Zeyn/Project Scientist	818-888-9062
Preparer's Name and Title	Telephone

Owner (or Owner's Authorized Representative) Approval of the Storm Water Pollution Prevention Plan

"I certify under a penalty of law that this document and all attachments were prepared under my direction or supervision in accordance with a system designed to ensure that qualified personnel properly gather and evaluate the information submitted. Based on my inquiry of the person or persons who manage the system or those persons directly responsible for gathering the information, to the best of my knowledge and belief, the information submitted is true, accurate, and complete. I am aware that there are significant penalties for submitting false information, including the possibility of fine and imprisonment for knowing violations."

Owner (or Authorized Representative) Signature	Date
Tim Hemig/Project Manager	760-710-2144
Name and Title	Telephone Number

200.2 Amendment Log

Project Name: **Carlsbad Energy Center Project**
Carlsbad, California

Amendment No.	Date	Brief Description of Amendment	Prepared By

Section 300
Introduction and Project Description

300.1 Introduction and Project Description

The construction project is located in San Diego County within the city of Carlsbad, California (Figure 1, Site Vicinity Map). The site is located in an industrial area in the City of Carlsbad, in San Diego County adjacent to the existing Encina Power Station Plant Site. The two new units (designated Units 6 and 7) will be on the northeast area of the existing site, between the existing rail line and Interstate 5 highway, occupying approximately 23 acres. The project includes construction of a Dual R2Cs Combined Cycle Energy Power Plant to meet the needs of local load and contribute to the electricity reserves that will ensure a reliable energy supply in southern California.

CECP will be a 525.2-megawatt (MW) net (at 73.6 degrees Fahrenheit [°F] with steam power augmentation and evaporative cooling) 560 MW gross combined-cycle generating facility configured using two trains with one natural-gas-fired combustion turbine and one steam turbine per train (or unit). The CEC units will connect to the electrical transmission system via 138 kV and 230 kV lines that connect to the respective, nearby existing switchyards at the existing Encina plant. Natural gas for the facility will be delivered via Southern California Gas Company's (SoCalGas) existing 20-inch gas transmission line ("Rainbow line"). The project will include an on-site fuel gas compressor station.

Parking areas for construction workers and lay down areas for construction materials will be prepared within the Generating Station Property, north, south and west of the construction area. An additional lay down area will be located south of the construction along the rail spur line and at fuel oil tanks 1 and 2. These areas are currently vacant areas and/or developed with gunite and asphalt surfaces. The total available area for construction laydown will be approximately 7 acres. If more than 7 acres is required for construction lay down purposes, an amendment to the SWPPP will be completed for all additional areas. A total of 3 acres will be a designated parking area on the western portion of the overall site. This area is currently used as asphalt parking overflow for employees.

300.2 Unique Site Features

The Carlsbad Energy Center Project Site is located along the shore of the Pacific Ocean and on the south margin of the Aqua Hedionda Lagoon in Carlsbad, California. The site is located within the Peninsular Ranges Geomorphic Province,

on the Pacific Coastal Plain. Surficial geologic materials along this portion of the Pacific Coastal Plain consist of marine and non-marine terrace deposits comprised of predominantly yellowish-brown to dark reddish-brown sand, silty sand, clayey sand, and gravel. Bedrock underlying the terrace deposits is Eocene-aged sandstone of the Santiago Formation (Geomatrix, 2006).

Groundwater beneath the site occurs within the Santiago Formation and has been encountered at depths between 36 and 60 feet bgs during previous site specific investigations/ assessments. Groundwater flow direction is not presently known, but it is anticipated to be westward from the Carlsbad Energy Center Project site toward the Aqua Hedionda Lagoon (Geomatrix, 2006).

300.3 Construction Site Estimates

The following are estimates of the construction site:

Construction site Area	23 acres
Percentage impervious area before construction	40%
Runoff coefficient before construction	0.49
Percentage impervious area after construction	45 %
Runoff coefficient after construction	0.51
Anticipated storm water flow on to the construction site	7.66 cfs

Calculations are shown in Attachment C

300.4 Project Schedule Water Pollution Control Schedule

Schedule:
Submit Notice of Intent - 30 Days Prior to Construction
Start of construction mobilization - 1st Quarter 2009
Rainy Season Begins - October 1,2009
Annual Report - July I, 2009
Complete - 2nd Quarter 2010
Rainy Season Ends -April 30, 2010

300.5 Contact Information/List of Responsible Parties

Contractor is required to show the Name, Address and Telephone number(s) of the person(s) responsible for SWPPP management/ implementation, water pollution control and Permit compliance during construction. This person shall be called the Storm Water Pollution Prevention Manager (SWPPM).

The Storm Water Pollution Prevention Manager (SWPPM) assigned to this project is:

Site Storm Water Contact:
Sheila Henika
Environmental Specialist NRG
760-268-4018

The SWPPM shall have primary responsibility and significant authority for the implementation, maintenance, inspection and amendments to the approved SWPPP. The SWPPM will be available at all times throughout the duration of the project. Duties of the SWPPM include but are not limited to:

- Ensuring full compliance with the SWPPP and the Permit
- Implementing all elements of the SWPPP, including but not limited to:
  - Implementation of prompt and effective erosion and sediment control measures
  - Implementing all non-storm water management, and materials and waste management activities such as: monitoring discharges (dewatering, diversion devices); general site clean-up; vehicle and equipment cleaning, fueling and maintenance; spill control; ensuring that no materials other than storm water are discharged in quantities which will have an adverse effect on receiving waters or storm drain systems; etc.
- Pre-storm inspections
- Storm event inspections
- Post-storm inspections
- Routine inspections as specified in the project's specifications or described in the SWPPP
- Updates/Amendments to the SWPPP, as needed
- Preparing annual compliance certification for owner's, or owner's authorized representative signature

- Ensuring elimination of all unauthorized discharges
- The SWPPM shall be assigned authority by the Contractor to mobilize crews in order to make immediate repairs to the control measures
- Coordinate with the Contractor to assure all of the necessary corrections/ repairs are made immediately, and that the project complies with the SWPPP, the Permit and approved plans at all times
- Submitting Notices of Discharge and reports of Illicit Connections or Illegal Discharges

Section 400
References

The following documents are made a part of this SWPPP by reference:

- State Water Resources Control Board (SWRCB) Order No. 99-08-DWQ, National Pollutant Discharge Elimination System (NPDES) General Permit No. CAS000002, Waste Discharge Requirements (WDRs) for Discharges of Storm Water Runoff Associated with Construction Activity.
- California Storm Water BMP Handbook - Construction, January 2003
- Storm Water Pollution Prevention Plan and Best Management Practices Plan, Cabrillo Power I LLC, Encina Power Station, June 2004.
- Phase II Environmental Soil and Groundwater Assessment Report, Encina Seawater Desalination Project, Carlsbad, California, Geomatrix, May, 2006.
- San Diego County Hydrology Manual, June 2003

Section 500
Body of SWPPP

500.1 Objectives

This Storm Water Pollution Prevention Plan (SWPPP) has six main objectives:

- Identify all pollutant sources, including sources of sediment that may affect the quality of storm water discharges associated with construction activity (storm water discharges) from the construction site, and
- Identify non-storm water discharges, and
- Identify, construct, implement in accordance with a time schedule, and maintain Best Management Practices (BMPs) to reduce or eliminate pollutants in storm water discharges and authorized non-storm water discharges from the construction site during construction, and
- Develop a maintenance schedule for BMPs installed during construction designed to reduce or eliminate pollutants after construction is completed (post-construction BMPs).
- Identify a sampling and analysis strategy and sampling schedule for discharges from construction activity which discharge directly into water bodies pursuant to the Clean Water Act Section 303(d) [303(d)] Water Bodies listed for Sedimentation, and
- For all construction activity, identify a sampling and analysis strategy and sampling schedule for discharges that have been discovered through visual monitoring to be potentially contaminated by pollutants not visually detectable in the runoff.

This SWPPP conforms with the required elements of the General Permit No. CAS000002 issued by the State of California, State Water Resources Control Board (SWRCB) and the City of Carlsbad Standard Urban Storm Water Mitigation Plan (SUSMP). This SWPPP will be modified and amended to reflect any amendments to the Permit or any changes in construction or operations that may affect the discharge of pollutants from the construction site to surface waters, groundwaters, or the municipal separate storm sewer system (MS4). The SWPPP will also be amended if it is in violation of any condition of the Permit or has not achieved the general objective of reducing pollutants in storm water discharges. The SWPPP shall be readily available on-site for the duration of the project.

500.2 Vicinity Map

The construction project vicinity map showing the project location, surface water boundaries, geographic features, construction site perimeter, and general topography, is located in Attachment A.

500.3 Pollutant Source Identification and BMP Selection

The Best Management Practices (BMPs) that have been selected for this project and the location of these BMPs are shown on the WPCD in Attachment B. Narrative descriptions of BMPs to be used during the project are listed by category in each of the following SWPPP sections. Attachment J includes a list, and/ or copies of the fact sheets of all the BMPs selected for this project.

500.3.1 Inventory of Materials and Activities that May Pollute Storm Water

The following is a list of construction materials that will be used and activities that will be performed that will have the potential to contribute pollutants, other than sediment, to storm water runoff (control practices for each activity are identified in the Water Pollution Control Drawings (WPCDs) and/ or in Sections 500.3.4 through 500.3.9:

- Portable Toilets
- Vehicle Fluids, including oil, grease, petroleum, coolants from fueling
- Concrete stabilizers/ additives
- Solid Waste
- Hazardous wastes generated in small quantities during construction to include paints, detergents, fuels, lubricants, lumber, solvents, asphalt products and adhesives.

Construction activities that have the potential to contribute sediment to storm water discharges include:

- Excavation of soil, gunite and asphalt from Interior Berm Removal
- On-Site placement of berm material.

500.3.2 Existing (pre-construction) Control Measures

The following are existing (pre-construction) control measures encountered within the project site:

- Paved internal roadway system
- Site is fenced with 24 hours a day security
- The Carlsbad Energy Center Power Plant Site contains storm water sump drainage structures. All valves are locked in the closed position when not in use. Only on-site trained operators or supervisors have the authority to open drain valves and operate sump pumps.
- Wet weather sampling and monitoring plan for former East Tank Farm Drainage area per the existing Operational SWPPP for the Encina Power Station and on-site trained personnel.
- Spill Kits and an active Operations Spill Pollution Prevention Response Plan.
- Existing vegetation at the site will be preserved and maintained to ensure continued stabilization in these areas.

500.3.3 Nature of Fill Material and Existing Data Describing the Soil

Existing site features that, as a result of past usage, may contribute pollutants to storm water (e.g., toxic materials that are known to have been treated, stored, disposed, spilled, or leaked onto the construction site) include:

- The project site was previously used for agriculture and a petroleum tank farm. The tank farm was demolished and a soil sampling and remediation plan was implemented during the tank removal process to address any potential environmental concerns from the fuel oil tanks removed from the construction site project area (conducted by previous site Operator). No residual contamination was present at the site prior to the construction of the Carlsbad Energy Center Power Plant.

500.3.4 Erosion Control

Erosion control, also referred to as soil stabilization, consists of source control measures that are designed to prevent soil particles from detaching and becoming transported in storm water runoff. Erosion control BMPs protect the soil surface by covering and/ or binding soil particles. This project will incorporate erosion control measures required by the contract documents, and other measures selected by the Contractor, SWPPP Manager, or Owner. This project will implement the following practices for effective temporary and final erosion control during construction:

1. Preserve existing vegetation where required and when feasible.
2. Apply temporary erosion control to remaining active and non-active areas as required by the California Storm Water BMPs Handbook - Construction, and the contract documents. Reapply as necessary to maintain effectiveness.
3. Implement temporary erosion control measures at regular intervals throughout the defined rainy season to achieve and maintain the contract's disturbed soil area requirements. Implement erosion control prior to the defined rainy season.
4. Stabilize non-active areas as soon as feasible after the cessation of construction activities.
5. Control erosion in concentrated flow paths by applying erosion control blankets, erosion control seeding, and lining swales as required in the contract documents.
6. Apply seed to areas deemed substantially complete by the Owner during the defined rainy season.
7. At completion of construction, apply permanent erosion control to all remaining disturbed soil areas.

Sufficient erosion control materials will be maintained on-site to allow implementation in conformance with Permit requirements and described in this SWPPP. This includes implementation requirements for active areas and non-active areas that require deployment before the onset of rain. The following erosion control BMP's will be utilized:

EC-l, Scheduling

EC-2, Preservation of Existing Vegetation

EC-5, Soil Binders will be applied to areas of exposed soil after spreading of berm soil on-site.

EC-7, Geotextile and Mats will be utilized, as necessary, to stabilize the areas of exposed soil after spreading of berm soil on-site.

500.3.5 Sediment Control

Sediment controls are structural measures that are intended to complement and enhance the selected erosion control measures and reduce sediment discharges from active construction areas. Sediment controls are designed to intercept and settle out soil particles that have been detached and transported by the force of water. This project will incorporate sediment control measures required by the contract documents, and other measures selected by the Contractor, SWPPP

Manager, or Owner.

Sufficient quantities of temporary sediment control materials will be maintained on-site throughout the duration of the project, to allow implementation of temporary sediment controls in the event of predicted rain, and for rapid response to failures or emergencies, in conformance with other Permit requirements and as described in this SWPPP. This includes implementation requirements for active areas and non-active areas before the onset of rain.

The following sediment control BMP's will be implemented:

- SE-I, Silt fencing will be installed along the perimeter of the soil relocation areas from the excavated berms along the north and west side of the construction areas .
- SE-10 Storm Drain inlet Protection will be used at the three operational Sump Pumps within the Project Pit and at the existing storm drain inlet in the construction lay down area north of the project pit.

500.3.6 Tracking Control

The following BMPs have been selected to reduce sediment tracking from the construction site onto private or public roads:

- Use of existing asphalt paved roadways for stabilized entrances and to traverse throughout the site.
- SE-7, Streetsweeping will be utilized along the existing paved roads during soil excavation and transport as necessary to keep street surfaces clear of soil and debris. Washing of sediments off the street will not occur.

500.3.7 Wind Erosion Control

The following BMPs have been selected to control dust from the construction site:

- WE-I, Wind Erosion Control

Water trucks will be utilized, as necessary, to minimize development of dust in the area during soil excavation and re-placement. Water used for dust control will be applied in such a manner to minimize run-off from the site.

500.3.8 Non-Storm Water Control

An inventory of construction activities and potential non-storm water discharges is

provided in Section 5.3.1. The following list indicates the BMPs that have been selected to control non-storm water pollution on the construction site. NS-8, Vehicle and Equipment cleaning will be conducted in a protected defined area with secondary containment.

- NS-8, Vehicle and equipment cleaning will be conducted in a protected designated area with secondary containment. The residual wash water will be collected and discarded in a manner as to not enter the storm drainage system.

- NS- 9, Equipment fueling will be conducted in a protected designated paved area with secondary containment. Spill kits will be maintained for all vehicle and equipment fueling activities.

- NS-I0, Vehicle and Equipment Maintenance will be conducted in a protected defined area with secondary containment. Drip pans and absorbant pads, and spill kits will be maintained for all vehicle and equipment maintenance that involves greases, oils, solvents or other vehicle fluids.

- WM-8 Concrete Waste Management will be implemented to contain and dispose of saw-cutting slurries. Equipment used for concrete mixing and transport will not be allowed to wash out or discharge surplus concrete or drum wash water on the site. A concrete washout site will be designated or will occur offsite at the concrete contractor's facility. Dumping of excess concrete and washing out of delivery vehicles will be prohibited onsite. Notices will be posted to inform all drivers. Wash water will be contained in a temporary pit where waste concrete can harden for later removal. Fresh concrete washing will be avoided unless runoff can be drained to a bermed or level area, away from waterways and storm drain inlet structures.

500.3.9 Waste Management and Materials Pollution Control

An inventory of construction activities, materials, and wastes is provided in Section 5.3.1. The following list indicates the BMPs that have been selected to handle materials and control construction site wastes.

- WM-1, Material Delivery and Storage areas will be in designated areas with protective covers or containment to prevent discharges during delivery and storage of construction materials. Very large items will be elevated unless they are too large, then the items will be elevated to minimize contact with run-on.

- WM-2, Material Use will be implemented to prevent discharges during use of materials during construction.

- WM-3, Stockpile Management implementation to prevent erosion or soil during excavation and re-grading on-site. Also management of the concrete

rubble, asphalt rubble from the construction activities prior to off-site disposal will be implemented to prevent exposure to storm water run on.

- WM-4, Spill Prevention and Control plan will be implemented to prevent material discharges to the storm water system in the event of a spill or release of hazardous or construction materials.
- WM-5, Solid Waste Management, covered water tight dumpsters will be utilized to control waste from construction activities.
- WM-9, Sanitary Septic Waste Management will be implemented and portable toilets will be utilized, located away from drainage areas.

500.4 Construction BMP Maintenance, Inspection, and Repair

Inspections will be conducted as follows:

- Prior to a forecast storm
- after a rain event that causes runoff from the construction site
- at 24-hour intervals during extended rain events
- at any other time(s) or intervals of time specified in the contract documents

Completed inspection checklists will be kept with the SWPPP.

A tracking or follow-up procedure shall follow any inspection that identifies deficiencies in BMPs. A program for Maintenance, Inspection and Repair of BMPs is shown in Attachment F.

500.5 Post-Construction Storm Water Management

500.5.1 Post-Construction Control Practices

The following are the post-construction BMPs that are to be used at this construction site after all construction is complete:

- Permanent Erosion Control-Sodding, seeding, mulch at all soil sloped areas.
- Outlet Protection at the three Drainage Sump Pumps-Continued Locked with Operator Training for release of storm water from site.
- Solid Waste Management (Dumpsters)

500.5.2 Operation/Maintenance after Project Completion

The post-construction BMPs that are described above will be funded and maintained by Carlsbad Energy Center. The existing operational SWPPP will be updated to include the additional facility and operations.

500.6 Training

Section 300.5 shows the name of the Contractor's Storm Water Pollution Prevention Manager (SWPPM). This person has received the following training:

- A pre-project storm water training workshop video training session will be conducted for all designated onsite representatives at the beginning of the project by staff familiar with the storm water training topics. The workshop will cover basic storm water information, the requirements of the general permit, and the SWPPP. Specifically, the workshop will focus on implementation, inspection, and maintenance of storm water controls.

- Additional training will be conducted at the beginning of each storm season or as new employees are employed for construction.

- Monitoring and inspection activities will only be conducted by individuals who have had additional training specific for this purpose.

- All contractors are responsible for familiarizing subcontractors with information contained in the SWPPP.

The training log showing formal and informal training of various Contractor personnel is shown in Attachment G.

500.7 List of Subcontractors

All contractors and subcontractors will be notified of the requirement for storm water management measures during the project. A list of contractors will be maintained and included in the SWPPP. If subcontractors change during the project, the list will be updated accordingly. The subcontractor notification letter and log is included in the SWPPP as Attachment H.

500.8 Other Plans/Permits

The following is a list of local, state, and federal plans and permits associated with this SWPPP:

- State Water Resources Control Board (SWRCB) Order No. 99-08-DWQ, National Pollutant Discharge Elimination System (NPDES) General Permit No. CAS000002, Waste Discharge Requirements (WDRs) for Discharges of Storm Water Runoff Associated with Construction Activity.

- City of Carlsbad Storm Water Requirements Applicable check list

Section 600
Monitoring Program and Report

600.1 Site Inspections

The SWPPM will inspect the site prior to a forecast storm, after a rain event that causes runoff from the construction site, at 24-hour intervals during extended rain events, and as specified in the contract documents. The results of all inspections and assessments will be documented. Copies of the completed inspection checklists will be maintained with the SWPPP. Site inspections conducted for monitoring purposes will be performed using the inspection checklist shown in Attachment F.

The name(s) and contact number(s) of the assigned inspection personnel are listed below:

Assigned inspector: Project Contractor

Contact phone: To Be Determined

600.2 Record Keeping and Reports

- Records shall be retained for a minimum of three years for the following items:
- Site inspections
- Compliance certifications
- Discharge reports
- Approved SWPPP document and amendments

600.3 Sampling and Analysis Plan for Sediment

This project does not have the potential to discharge directly to a water body listed as impaired due to Sedimentation/Siltation and/ or Turbidity pursuant to Clean Water Act, Section 303(d). All on-site pollutants have petroleum characteristics for visual monitoring.

Attachment A
Vicinity Map

IMAGE	X-REF	OFFICE	DRAWN BY		CHECKED BY	APPROVED BY	DRAWING NUMBER
CABRILLO	---	Concord	SCHAEFFER	8/8/07			1009715000-A1

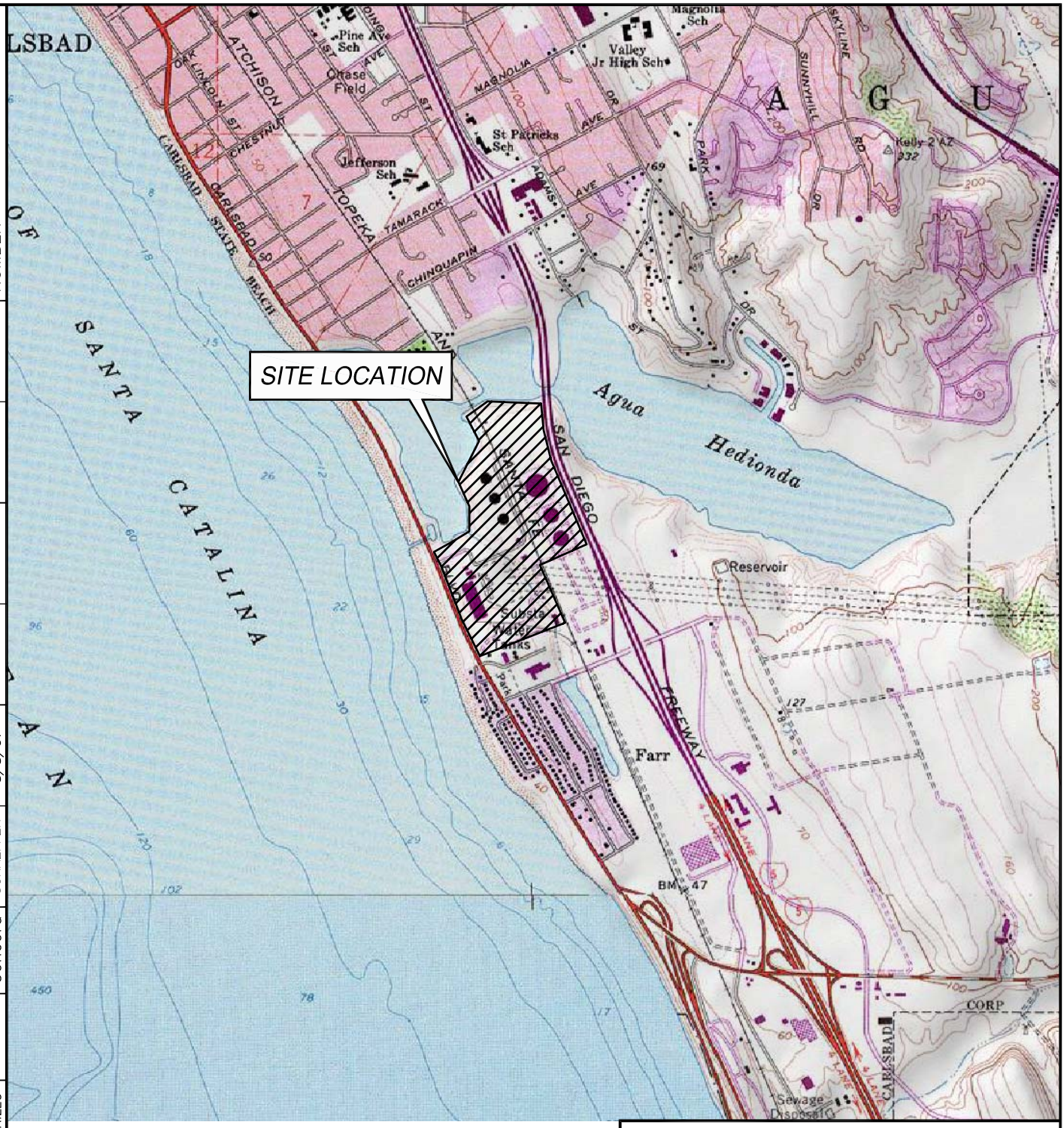

REFERENCE:
7.5' USGS TOPOGRAPHIC QUADRANGLE OF "SAN LUIS REY, CALIFORNIA"; DATED 1975; SCALE=1:24000.

SCALE

0 2000 4000 FEET

Shaw® Shaw Environmental, Inc.

CARLSBAD ENERGY CENTER PROJECT
CARLSBAD, CA

FIGURE 1

SITE VICINITY MAP

Attachment B

Water Pollution Control Drawings (WPCDs)

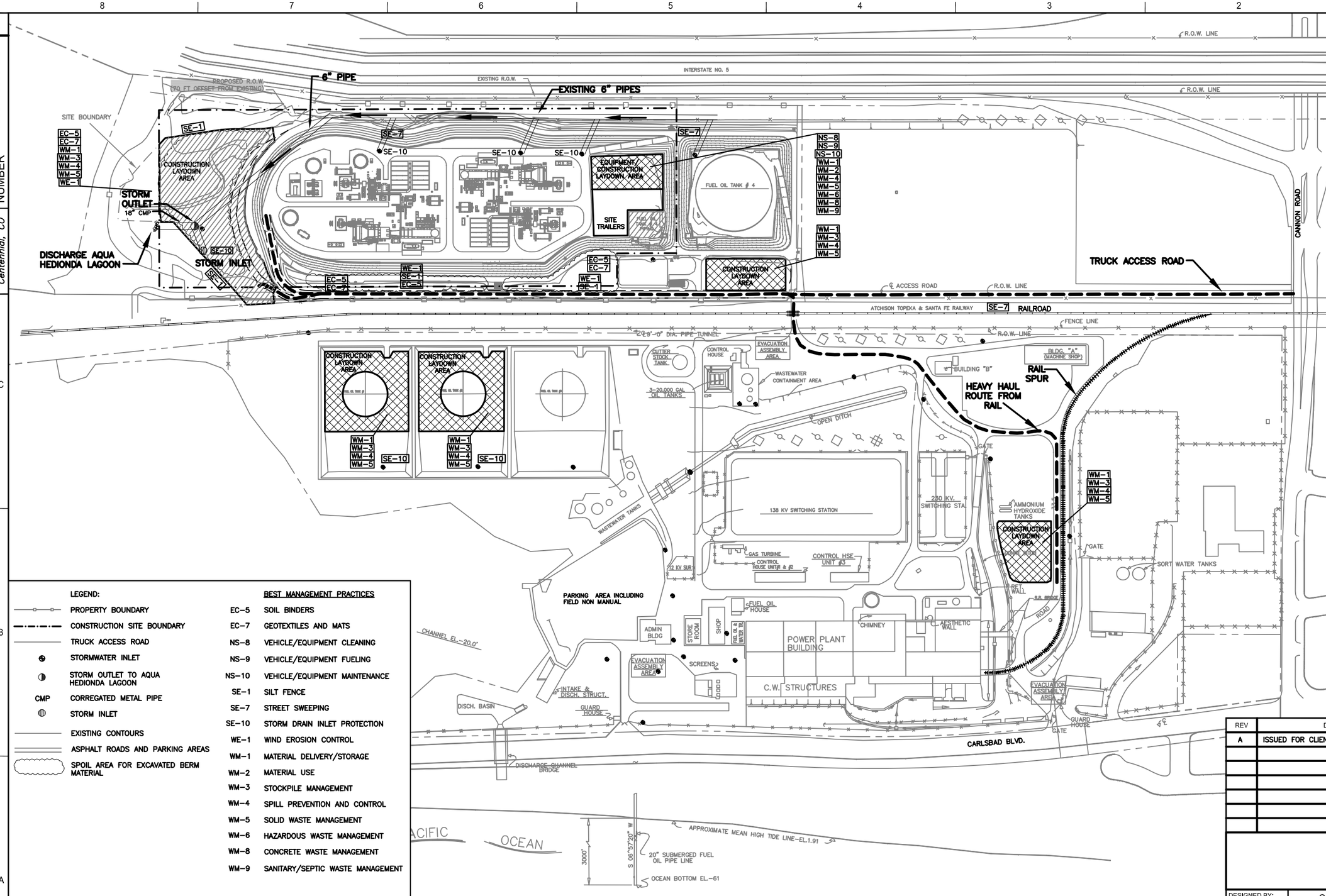

LEGEND:

- PROPERTY BOUNDARY
- CONSTRUCTION SITE BOUNDARY
- TRUCK ACCESS ROAD
- STORMWATER INLET
- STORM OUTLET TO AQUA HEDIONDA LAGOON
- CMP — CORREGATED METAL PIPE
- STORM INLET
- EXISTING CONTOURS
- ASPHALT ROADS AND PARKING AREAS
- SPOIL AREA FOR EXCAVATED BERM MATERIAL

	BEST MANAGEMENT PRACTICES
EC-5	SOIL BINDERS
EC-7	GEOTEXTILES AND MATS
NS-8	VEHICLE/EQUIPMENT CLEANING
NS-9	VEHICLE/EQUIPMENT FUELING
NS-10	VEHICLE/EQUIPMENT MAINTENANCE
SE-1	SILT FENCE
SE-7	STREET SWEEPING
SE-10	STORM DRAIN INLET PROTECTION
WE-1	WIND EROSION CONTROL
WM-1	MATERIAL DELIVERY/STORAGE
WM-2	MATERIAL USE
WM-3	STOCKPILE MANAGEMENT
WM-4	SPILL PREVENTION AND CONTROL
WM-5	SOLID WASTE MANAGEMENT
WM-6	HAZARDOUS WASTE MANAGEMENT
WM-8	CONCRETE WASTE MANAGEMENT
WM-9	SANITARY/SEPTIC WASTE MANAGEMENT

REV.	DESCRIPTION / ISSUE	DATE	APPROVED
A	ISSUED FOR CLIENT REVIEW	08/08/07	EH

Shaw® Stone & Webster, Inc.

DESIGNED BY: MEC
DRAWN BY: MEC
CHECKED BY: EH
APPROVED BY: --

CARLSBAD ENERGY CENTER PROJECT
CARLSBAD, CA

FIGURE 2
ENCINA POWER STATION
WATER POLLUTION CONTROL DRAWING
DUAL R2C2 COMBINED CYCLE PLANT

DATE:	SCALE:	DRAWING NO.	REV. NO.
08-16-07	1"-150'	1009715000-D2	A

OFFICE Centennial, CO
DRAWING NUMBER 1009715000-D2

Attachment C

Computation Sheet for Determining Runoff Coefficients

Total Site Area	=	23 Acres	(A)

Existing Site Conditions

Impervious Site Area [1]	=	9 Acres	(B)
Impervious Site Area Runoff Coefficient [2, 4]	=	0.87	(C)
Pervious Site Area [3]	=	14 Acres	(D)
Pervious Site Area Runoff Coefficient [4]	=	0.25	(E)
Existing Site Area Runoff Coefficient $\frac{(B \times C) + (D \times E)}{(A)}$	=	0.49	(F)

Proposed Site Conditions (after construction)

Impervious Site Area [1]	=	10 Acres	(G)
Impervious Site Area Runoff Coefficient [2, 4]	=	0.87	(H)
Pervious Site Area [3]	=	13 Acres	(I)
Pervious Site Area Runoff Coefficient [4]	=	.25	(J)
Proposed Site Area Runoff Coefficient $\frac{(G \times H) + (I \times J)}{(A)}$	=	0.51	(K)

1. Includes paved areas, areas covered by buildings, and other impervious surfaces.
2. Use 0.95 unless lower or higher runoff coefficient can be verified.
3. Includes areas of vegetation, most unpaved or uncovered soil surfaces, and other pervious areas.
4. Refer to local Hydrology Manual for typical C values.

Attachment C

Computational Sheet for Determining Run-on Discharges

Existing Site Conditions

Area Runoff Coefficient		=	0.49	(A)
Area Rainfall Intensity		=	0.68 in/h	(B)
Drainage Area		=	23 Acres	(C)
Site Area Run-on Discharge	(A) x (B) x (C)	=	7.66 ft^3/sec	(D)

Attachment D

Notice of Intent (NOI)

State Water Resources Control Board

NOTICE OF INTENT

TO COMPLY WITH THE TERMS OF THE
GENERAL PERMIT TO DISCHARGE STORM WATER
ASSOCIATED WITH CONSTRUCTION ACTIVITY (WQ ORDER No. 99-08-DWQ)

I. NOI STATUS (SEE INSTRUCTIONS)

MARK ONLY ONE ITEM 1. ☒ New Construction 2. ☐ Change of Information for WDID#

II. PROPERTY OWNER

Name Carlsbad Energy Center Project – Encina Power Plant	Contact Person Sheila Henika		
Mailing Address 4600 Carlsbad Blvd	Title Environmental Scientist		
City Carlsbad	State **CA**	Zip 92008	Phone (760) 268 - 4018

III. DEVELOPER/CONTRACTOR INFORMATION

Developer/Contractor NRG Energy	Contact Person Tim Hemig		
Mailing Address 1819 Aston Avenue. Suite 105	Title Director of Environmental Business		
City Carlbad	State CA	Zip 92008	Phone 760-710-2144

IV. CONSTRUCTION PROJECT INFORMATION

Site/Project Name Carlsbad Energy Center Project – Encina Power Plant	Site Contact Person Tim Hemig		
Physical Address/Location 4600 Carlsbad Blvd	Latitude 33 08 22.96°	Longitude 117 20 01.97	County **San Diego**
City (or nearest City) Carlsbad	Zip 92008	Site Phone Number (760) 535-2119	Emergency Phone Number (760) 535-3259

A. Total size of construction site area: 23 Acres

B. Total area to be disturbed: 14 Acres (% of total 60)

C. Percent of site imperviousness (including rooftops):
Before Construction: 60 %
After Construction: 45 %

D. Tract Number(s): _____, _____

E. Mile Post Marker: _____

F. Is the construction site part of a larger common plan of development or sale?
☐ YES ☒ NO

G. Name of plan or development:

H. Construction commencement date: 01/30/2009

I. % of site to be mass graded: 60

J. Projected construction dates:
Complete grading: 2009 Complete project: 01/30/2010

K. Type of Construction (Check all that apply):

1. ☐ Residential 2. ☐ Commercial 3. ☐ Industrial 4. ☐ Reconstruction 5. ☐ Transportation

6. ☒ Utility Description: Power Plant Construction 7. ☐ Other (Please List): _____

V. BILLING INFORMATION

SEND BILL TO: ☒ OWNER (as in II. above)	Name	Contact Person	
☐ DEVELOPER (as in III. above)	Mailing Address	Phone/Fax	
☐ OTHER (enter information at right)	City	State	Zip

VI. REGULATORY STATUS

A. Has a local agency approved a required erosion/sediment control plan? ☐ YES ☒ NO

Does the erosion/sediment control plan address construction activities such as infrastructure and structures? ☐ YES ☐ NO

Name of local agency: _____ Phone: ( ) --

B. Is this project or any part thereof, subject to conditions imposed under a CWA Section 404 permit of 401 Water Quality Certification? ☐ YES ☒ NO

If yes, provide details: _____

VII. RECEIVING WATER INFORMATION

A. Does the storm water runoff from the construction site discharge to (Check all that apply):

1. ☒ **Indirectly to waters of the U.S.**
2. ☐ **Storm drain system - Enter owner's name:** _____
3. ☐ **Directly to waters of U.S. (e.g., river, lake, creek, stream, bay, ocean, etc.)**

B. Name of receiving water: (river, lake, creek, stream, bay, ocean): Agua Hedionda Lagoon

VIII. IMPLEMENTATION OF NPDES PERMIT REQUIREMENTS

A. STORM WATER POLLUTION PREVENTION PLAN (SWPPP) (check one)

☒ A SWPPP has been prepared for this facility and is available for review: Date Prepared: 08/15/2007 Date Amended: ____/____/____

☐ A SWPPP will be prepared and ready for review by (enter date): ____/____/____

☐ A tentative schedule has been included in the SWPPP for activities such as grading, street construction, home construction, etc.

B. MONITORING PROGRAM

☒ A monitoring and maintenance schedule has been developed that includes inspection of the construction BMPs before anticipated storm events and after actual storm events and is available for review.

If checked above: A qualified person has been assigned responsibility for pre-storm and post-storm BMP inspections to identify effectiveness and necessary repairs or design changes. ☐ YES ☐ NO

Name: To Be Determined Phone: ( )

C. PERMIT COMPLIANCE RESPONSIBILITY

A qualified person has been assigned responsibility to ensure full compliance with the Permit, and to implement all elements of the Storm Water Pollution Prevention Plan including:

1. Preparing an annual compliance evaluation. ☒ YES ☐ NO

Name: Sheila Henika Phone: (760) 268 - 4018

2. Eliminating all unauthorized discharges. ☒ YES ☐ NO

IX. VICINITY MAP AND FEE (must show site location in relation to nearest named streets, intersections, etc.)

Have you included a vicinity map with this submittal? ☒ YES ☐ NO

Have you included payment of the annual fee with this submittal? ☒ YES ☐ NO

X. CERTIFICATIONS

"I certify under penalty of law that this document and all attachments were prepared under my direction and supervision in accordance with a system designed to assure that qualified personnel properly gather and evaluate the information submitted. Based on my inquiry of the person or persons who manage the system, or those persons directly responsible for gathering the information, the information submitted is, to the best of my knowledge and belief, true, accurate, and complete. I am aware that there are significant penalties for submitting false information, including the possibility of fine or imprisonment. In addition, I certify that the provisions of the permit, including the development and implementation of a Storm Water Pollution Prevention Plan and a Monitoring Program Plan will be complied with."

Printed Name: Jerry Carter

Signature: _____ **Date:** _____

Title: Plant Manager

Attachment E

Program for Maintenance, Inspection, and Repair of Construction Site BMPs

The contractor shall use the following guidelines for maintenance, inspection, and repair of BMPs identified in the SWPPP		
BEST MANAGEMENT PRACTICES (BMPs)	**INSPECTION FREQUENCY (all controls)**	**MAINTENANCE/REPAIR PROGRAM**
TEMPORARY EROSION CONTROL BMPs		
EC-1 - Scheduling	Daily	■ Ensure construction is not ahead of BMP installation ■ Avoid clearing when rainfall is predicted ■ Verify work is progressing on schedule
		■ ■ ■
TEMPORARY SEDIMENT CONTROL BMPs		
SE-10 – Storm Inlet Protection	Weekly and before and after each storm event.	■ Replace as necessary ■ Realign as necessary ■ ■ ■ ■
		■ ■
		■ ■ ■ ■ ■ ■
WIND EROSION CONTROL BMPs		
WE-1	Ensure adequate water on site	■
TRACKING CONTROL BMPs		
SE-7 – Streetsweeping	Every other day.	■ Sweep paved roads along contruction paths to keep street surfaces clear of soil and debris as necessary.

The contractor shall use the following guidelines for maintenance, inspection, and repair of BMPs identified in the SWPPP		
BEST MANAGEMENT PRACTICES (BMPs)	**INSPECTION FREQUENCY (all controls)**	**MAINTENANCE/REPAIR PROGRAM**
NON-STORM WATER MANAGEMENT BMPs		
		■ ■ ■ ■ ■ ■ ■
WASTE MANAGEMENT AND MATERIALS POLLUTION CONTROL BMPs		
WM-5 – Solid Waste Management WM-3 - Stockpile Management WM-9 – Sanitary	Ensure proper containers are Available. Remove green waste from site daily. Remove garbage from site weekly Daily Weekly	■ Provide adequate containers ■ Replace bags as necessary ■ ■ Cover if necessary. ■ ■ Clean, refill weekly ■ ■ ■
		■

Attachment F

Storm Water Quality Construction Site Inspection Checklist

INSTRUCTIONS

- Use this form for inspecting BMPs as described in SWPPP Section 500.5.
- This inspection form shall be completed and signed by the Contractor's Storm Water Pollution Prevention Manager (SWPPM).
- The local agency may require the Contractor to use a different inspection form
- The weather information shall be the best estimate of beginning of the storm event, duration of the event, time elapsed since the last storm, and approximate amount of rainfall.
- List observations of all BMPs: temporary erosion controls, temporary sediment controls, wind erosion controls, tracking controls, non-storm water controls and waste management and materials pollution controls.
- Evaluate BMPs for adequacy and proper implementation and whether additional BMPs are required in accordance with the terms of the Permits.
- Verify implementation of non-storm water discharge BMPs and evaluate their effectiveness.
- One-time discharges of non-storm water shall be inspected when such discharges occur.
- Describe any inadequate BMPs.
- Note the corrective actions required, including any changes to the SWPPP, and implementation dates.
- If you answer "No" to any of the questions, describe the corrective action(s) to be taken and when the corrective action(s) are to be completed. Should you need more space to describe corrective actions, identify your response numerically and use additional sheets as necessary.

GENERAL INFORMATION	
Project Name	Carlsbad Energy Center Project
Project No	
Contractor	To Be Determined
Inspector's Name	Sheila Henika

GENERAL INFORMATION				
Inspector's Title	Environmental Scientist			
Signature				
Date of Inspection				
Inspection Type (Check Applicable)	❒ Prior to forecast rain ❒ 24-hr intervals during extended rain		❒ After a rain event ❒ Other _____	
Season (Check Applicable)	❒ Rainy		❒ Non-Rainy	
Storm Data	Storm Start Date & Time:		Storm Duration (hrs):	
	Time elapsed since last storm (Circle Applicable Units)	Min. Hr. Days	Approximate Rainfall Amount (inches)	

PROJECT AREA SUMMARY AND DISTURBED SOIL AREA (DSA) SIZE		
Total Project Area	23	Acres
Field Estimate of Active DSAs		Acres
Field Estimate of Non-Active DSAs	0	Acres

INSPECTION OF BMPs				
BMP	**Yes**	**No**	**N/A**	**Corrective Action**
Preservation of Existing Vegetation				
Is temporary fencing provided to preserve vegetation in areas where no construction activity is planned?				
Location:				
Location:				
Location:				
Location:				
Erosion Control				
Does the applied temporary erosion control provide 100% coverage for the affected areas?				
Are any non-vegetated areas that may require temporary erosion control?				
Is the area where erosion controls are used required free from visible erosion?				

INSPECTION OF BMPs				
BMP	**Yes**	**No**	**N/A**	**Corrective Action**
Location:				
Location:				
Location:				
Location:				
Temporary Linear Sediment Barriers (Silt Fence, Fiber Rolls, Sandbag Barriers, etc.)				
Are temporary linear sediment barriers properly installed, functional and maintained?				
Are temporary linear sediment barriers free of accumulated litter?				
Is the built-up sediment less than 1/3 the height of the barrier?				
Are cross barriers installed where necessary and properly spaced?				
Location:				
Location:				
Location:				
Location:				
Location:				
Storm Drain Inlet Protection				
Are storm drain inlets internal to the project properly protected?				
Are storm drain inlet protection devices in working order and being properly maintained?				
Location:				
Location:				
Location:				
Location:				
Location:				
Sediment Basins				
Are basins designed in accordance with the requirements of the General Permit?				
Are basins maintained to provide the required retention/detention?				
Are basin controls (inlets, outlets, diversions, weirs, spillways, and racks) in working order?				
Location:				
Location:				
Location:				
Location:				
Stockpiles				
Are all locations of temporary stockpiles, including soil, hazardous waste, and construction materials in approved areas?				
Are stockpiles protected from run-on, run-off from adjacent areas and from winds?				

INSPECTION OF BMPs				
BMP	**Yes**	**No**	**N/A**	**Corrective Action**
Are stockpiles located at least 15 m from concentrated flows, downstream drainage courses and storm drain inlets?				
Are required covers and/or perimeter controls in place?				
Location:				
Location:				
Location:				
Location:				
Concentrated Flows				
Are concentrated flow paths free of visible erosion?				
Location:				
Location:				
Location:				
Location:				
Tracking Control				
Is the entrance stabilized to prevent tracking				
Is the stabilized entrance inspected daily to ensure that it is working properly				
Are points of ingress/egress to public/private roads inspected and swept and vacuumed as needed?				
Are all paved areas free of visible sediment tracking or other particulate matter?				
Location:				
Location:				
Location:				
Location:				
Wind Erosion Control				
Is dust control implemented?				
Location:				
Location:				
Location:				
Location:				
Dewatering Operations				
Are all one-time dewatering operations covered by the General Permit inspected before and as they occur and BMPs implemented as necessary during discharge?				
Is ground water dewatering handled in conformance with the dewatering permit issued by the RWQCB?				
Is required treatment provided for dewatering effluent?				
Location:				

INSPECTION OF BMPs				
BMP	**Yes**	**No**	**N/A**	**Corrective Action**
Location:				
Location:				
Location:				
Vehicle & Equipment Fueling, Cleaning, and Maintenance				
Are vehicle and equipment fueling, cleaning and maintenance areas reasonably clean and free of spills, leaks, or any other deleterious material?				
Are vehicle and equipment fueling, cleaning and maintenance activities performed on an impermeable surface in dedicated areas?				
If no, are drip pans used?				
Are dedicated fueling, cleaning, and maintenance areas located at least 15 m away from downstream drainage facilities and watercourses and protected from run-on and runoff?				
Is wash water contained for infiltration/ evaporation and disposed of appropriately?				
Is on-site cleaning limited to washing with water (no soap, soaps substitutes, solvents, or steam)?				
On each day of use, are vehicles and equipment inspected for leaks and if necessary, repaired?				
Location:				
Location:				
Location:				
Location:				
Waste Management & Materials Pollution Control				
Are material storage areas and washout areas protected from run-on and runoff, and located at least 15 m from concentrated flows and downstream drainage facilities?				
Are all material handling and storage areas clean; organized; free of spills, leaks, or any other deleterious material; and stocked with appropriate clean-up supplies?				
Are liquid materials, hazardous materials, and hazardous wastes stored in temporary containment facilities?				
Are bagged and boxed materials stored on pallets?				
Are hazardous materials and wastes stored in appropriate, labeled containers?				
Are proper storage, clean-up, and spill-reporting procedures for hazardous materials and wastes posted in open, conspicuous and accessible locations adjacent to storage areas?				
Are temporary containment facilities free of spills and rainwater?				
Are temporary containment facilities and bagged/boxed materials covered?				
Are temporary concrete washout facilities designated and being used?				
Are temporary concrete washout facilities functional for receiving and containing concrete waste and are concrete residues prevented from entering the drainage system?				
Do temporary concrete washout facilities provide sufficient volume and freeboard for planned concrete operations?				

INSPECTION OF BMPs				
BMP	**Yes**	**No**	**N/A**	**Corrective Action**
Are concrete wastes, including residues from cutting and grinding, contained and disposed of off-site or in concrete washout facilities?				
Are spills from mobile equipment fueling and maintenance properly contained and cleaned up?				
Is the site free of litter?				
Are trash receptacles provided in the yard, field trailer areas, and at locations where workers congregate for lunch and break periods?				
Is litter from work areas collected and placed in watertight dumpsters?				
Are waste management receptacles free of leaks?				
Are the contents of waste management receptacles properly protected from contact with storm water or from being dislodged by winds?				
Are waste management receptacles filled at or beyond capacity?				
Location:				
Location:				
Location:				
Location:				
Temporary Water Body Crossing or Encroachment				
Are temporary water body crossings and encroachments constructed appropriately?				
Does the project conform to the requirements of the 404 permit and/or 1601agreement?				
Location:				
Location:				
Location:				
Location:				
Illicit Connection/ Discharge				
Is there any evidence of illicit discharges or illegal dumping on the project site?				
If yes, has the Owner/Operator been notified?				
Location:				
Location:				
Location:				
Location:				
Discharge Points				
Are discharge points and discharge flows free from visible pollutants?				
Are discharge points free of any significant sediment transport?				
Location:				
Location:				

INSPECTION OF BMPs				
BMP	**Yes**	**No**	**N/A**	**Corrective Action**
Location:				
Location:				
SWPPP Update				
Does the SWPPP and Project Schedule adequately reflect the current site conditions and contractor operations?				
Are all BMPs shown on the water pollution control drawings installed in the proper location(s) and according to the details in the SWPPP?				
Location:				
Location:				
Location:				
Location:				
General				
Are there any other potential concerns at the site?				
Location:				
Location:				
Location:				
Location:				
Storm Water Monitoring				
Does storm water discharge directly to a water body listed in the General Permit as impaired for sediment/sedimentation or turbidity?				
If yes, were samples for sediment/sedimentation or turbidity collected pursuant to the sampling and analysis plan in the SWPPP?				
Did the sampling results indicate that the discharges are causing or contributing to further impairment?				
If yes, were the erosion/sediment control BMPs improved or maintained to reduce the discharge of sediment to the water body?				
Were there any BMPs not properly implemented or breaches, malfunctions, leakages or spills observed which could result in the discharge of pollutants to surface waters that would not be visually detectable in storm water?				
If yes, were samples for non-visually detectable pollutants collected pursuant to the sampling and analysis plan during rain events?				
If sampling indicated pollution of the storm water, were the leaks, breaches, spills, etc. cleaned up and the contaminated soil properly disposed of?				
Were the BMPs maintained or replaced?				
Were soil amendments (e.g., gypsum, lime) used on the project?				

INSPECTION OF BMPs				
BMP	**Yes**	**No**	**N/A**	**Corrective Action**
If yes, were samples for non-visually detectable pollutants collected pursuant to the sampling and analysis plan in the SWPPP?				
If sampling indicated pollution of the storm water by the use of the soil amendments, is there a contingency plan for retention onsite of the polluted storm water?				
Did storm water contact stored materials or waste and run off the construction site? (Materials not in watertight containers, etc.)				
If yes, were samples for non-visually detectable pollutants collected pursuant to the sampling and analysis plan in the SWPPP?				

Attachment G

Trained Contractor Personnel Log

INSTRUCTIONS

- Use this sheet to record individuals attending formal training programs specified in section 500.7 of the SWPPP. This form may also be used to record informal tailgate on-site meetings on storm water management.

Storm Water Management Training Log

Project Name: Carlsbad Energy Center Project

Project Number/Location: Carlsbad, California

Storm Water Management Topic: (check as appropriate)

- ❑ Erosion Control
- ❑ Sediment Control
- ❑ Wind Erosion Control
- ❑ Tracking Control
- ❑ Non-storm water management
- ❑ Waste Management and Materials Pollution Control
- ❑ Storm Water Sampling

Specific Training Objective: _____

Location: _____ Date: _____

Instructor: _____ Telephone: _____

Course Length (hours): _____

Attendee Roster (attach additional forms if necessary)

Name	Company	Phone

Name	Company	Phone

COMMENTS:

_____

_____

_____

_____

_____

Attachment H

Subcontractor Notification Letter and Notification Log

INSTRUCTIONS

- Use this sample to prepare the subcontractor letter and log required in Section 500.8 of the SWPPP.

SWPPP Notification

Company
Address
City, State, ZIP

Dear Sir/Madam,

Please be advised that the California State Water Resources Control Board has adopted the General Permit (General Permit) for Storm Water Discharges Associated with Construction Activity (CAS000002). The goal of these permits is prevent the discharge of pollutants associated with construction activity from entering the storm drain system, ground and surface waters.

[Owner/Developer/Contractor] has developed a Storm Water Pollution Prevention Plan (SWPPP) in order to implement the requirements of the Permits.

As a subcontractor, you are required to comply with the SWPPP and the Permits for any work that you perform on site. Any person or group who violates any condition of the Permits may be subject to substantial penalties in accordance with state and federal law. You are encouraged to advise each of your employees working on this project of the requirements of the SWPPP and the Permits. A copy of the Permits and the SWPPP are available for your review at the construction office. Please contact me if you have further questions.

Sincerely,

Name
Title

SUBCONTRACTOR NOTIFICATION LOG

Project Name: Carlsbad Energy Center Project

Project Number/Location: Carlsbad, CA

SUBCONTRACTOR COMPANY NAME	CONTACT NAME	ADDRESS	PHONE NUMBER	PAGER/ FIELD PHONE	DATE NOTIFICATION LETTER SENT	TYPE OF WORK

USE ADDITIONAL PAGES AS NECESSARY

Attachment I

Forms and Logs

Attachment I - Forms and Logs

Storm Water Pollution Prevention Plan (SWPPP) and Monitoring Program Checklist

CONSTRUCTION PROJECT: Carlsbad Energy Center Project

CONTRACTOR: _____

CONTRACT NO: _____

SECTION A: STORM WATER POLLUTION PREVENTION PLAN (SWPPP)				
CHECK IF ADDRESSED N/A IF NOT APPLICABLE	**SWPPP Section**	**ITEM**	**GENERAL PERMIT REF.**	**COMMENTS**
	100	***SWPPP Certification and Approval***	C.10	
√	100.1	SWPPP Certification	C.10	
√	100.2	SWPPP Approval	C.10	
√	200	***SWPPP Amendments***	A.4.a, A.16	
	200.1	Amendment number and date entered into SWPPP – Amendment Log	A.4.a, A.16	
√	200.2	Amendment Certification and Approval	A.4.a, A.16	
	300	***Introduction/Project Description***		
√	300.1	Project Description and Location (narrative)	A.5.a.1	
√	300.2	Unique Site Features (narrative)	A.5.a.1	
	300.4	***Project Schedule (narrative and graphical)***	A.5.c.5	
√	400	***References***	A.14	
	500.2	***Vicinity Map (narrative or graphic)***	A.5.a.1	
√	500.2	Site perimeter	A.5.a.1	
√	500.2	Geographic Features	A.5.a.1	
√	500.2	General topography	A.5.a.1	
	500.4	***Water Pollution Control Drawings (WPCDs) (graphic or narrative)***	A.5.a.2	
√	500.4	Site perimeter	A.5.a.2	
√	500.4	Existing and proposed buildings, lots, and roadways	A.5.a.2	

SECTION A: STORM WATER POLLUTION PREVENTION PLAN (SWPPP)				
CHECK IF ADDRESSED N/A IF NOT APPLICABLE	**SWPPP Section**	**ITEM**	**GENERAL PERMIT REF.**	**COMMENTS**
√	500.4	Storm water collection and discharge points	A.5.a.2	
√	500.4	General topography before and after construction	A.5.a.2	
√	500.4	Anticipated discharge location(s)	A.5.a.2	
√	500.4	Drainage patterns including the entire relevant drainage areas	A.5.a.2	
√	500.4	Temporary on-site drainage(s)	A.5.a.2	
	500.3	***Pollutant Source and BMP Identification (narrate/ or indicate on site map)***	A.5.b	
		Drainage	A.5.b.1	
√	500.4	Drainage patterns after major grading	A.5.b.1	
√	500.4	Slopes after major grading	A.5.b.1	
√	Attach. E	Calculations for storm water run-on	A.5.b.1	
√	500.4	BMPs that divert off-site drainage from passing through site	A.5.b.1	
	500.4	***Storm Water Inlets***	A.5.b.2	
√	500.4	Drainage patterns to storm water inlets or receiving water	A.5.b.2	
√	500.4	BMPs that protect storm water inlets or receiving water	A.5.b.2	
		Site History (narrative; if possible, indicate location(s) on the Water Pollution Control Drawings)	A.5.b	
√	500.3.3	Nature of fill material and data describing the soil. Description of toxic materials treated, stored, disposed, spilled or leaked on site	A.5.b.3	
√	500.3.8 & 500.3.9	BMPs that minimize contact of contaminants with storm water	A.5.b.3	
		Location of Areas Designated for:	A.5.b.4	
√	500.3.8 & 500.4	Vehicle storage & service	A.5.b.4	
√	500.3.8 & 500.4	Equipment storage, cleaning, maintenance	A.5.b.4	
√	500.3.9 & 500.4	Soil or waste storage	A.5.b.4	
√	500.3.9 & 500.4	Construction material loading, unloading, storage and access	A.5.b.4	
√	500.3.8 & 500.3.9	Areas outside of physical site (yards, borrow areas, etc.)		
		BMP Locations or Descriptions for:	A.5.b.5	
√	500.3.9 & 500.4	Waste handling and disposal areas	A.5.b.5	
√	500.3.9 & 500.4	On-site storage and disposal of construction materials and waste	A.5.b.5	

SECTION A: STORM WATER POLLUTION PREVENTION PLAN (SWPPP)				
CHECK IF ADDRESSED N/A IF NOT APPLICABLE	**SWPPP Section**	**ITEM**	**GENERAL PERMIT REF.**	**COMMENTS**
√	500.3.8, 500.3.9 & 500.4	Minimum exposure of storm water to construction materials, equipment, vehicles, waste	A.5.b.5	
√	500.6	***Post Construction BMPs***	A.5.b.6	
√	500.6.1	Listing or Description of Post-construction BMPs	A.5.b.6	
√	500.4	Location of post-construction BMPs	A.5.b.6	
√	500.6.2	Parties responsible for long-term maintenance	A.5.b.6	
		Additional Information	A.5.c	
√	500.3.1	Description of other pollutant sources and BMPs	A.5.c.1	
√	500.3.2	Pre-construction control practices	A.5.c.1	
√	500.3.1	Inventory of materials and activities that may pollute storm water	A.5.c.2	
√	500.3.8 & 500.3.9	BMPs to reduce/eliminate potential pollutants listed in the inventory	A.5.c.2	
√	300.4	Runoff coefficient (before & after)	A.5.c.3	
√	300.4	Percent impervious (before & after)	A.5.c.3	
√	Attach. F	Copy of the NOI	A.5.c.4	
√	300.3	Construction activity schedule	A.5.c.5	
√	300.5	Contact information	A.5.c.6	
	500.4.1	**SOIL STABILIZATION (EROSION CONTROL)**	A.6	
		The SWPPP shall include:	A.6.a-c	
√	500.4	Areas of vegetation on site	A.6.a.1	
√	500.4	Areas of soil disturbance that will be stabilized during rainy season	A.6.a.2	
√	500.4	Areas of soil disturbance which will be exposed during any part of the rainy season	A.6.a.3	
√	300.4	Implementation schedule for erosion control measures	A.6.a.4	
√	500.3.4	BMPs for erosion control	A.6.b	
√	500.3.7	BMPs to control wind erosion	A.6.c	
	500.3.5	**SEDIMENT CONTROL**	A.8	
√	500.3.5 & 500.4	Description/Illustration of BMPs to prevent increase of sediment load in discharge	A.8	
√	300.4, 500.3.5	Implementation schedule for sediment control measures	A.8	

SECTION A: STORM WATER POLLUTION PREVENTION PLAN (SWPPP)				
CHECK IF ADDRESSED N/A IF NOT APPLICABLE	**SWPPP Section**	**ITEM**	**GENERAL PERMIT REF.**	**COMMENTS**
√	500.3.6	BMPs to control sediment tracking	A.8	
	500.3.8 & 500.3.9	**NON-STORM WATER MANAGEMENT**	A.9	
√	500.3.8 & 500.3.9	Description of non-storm water discharges to receiving waters	A.9	
√	500.3.8 & 500.3.9	Locations of discharges	A.9	
√	500.3.8 & 500.3.9	Description of BMPs	A.9	
√	300.5	Name and phone number of person responsible for non-storm water management	A.9	
	500.6	**POST-CONSTRUCTION**	A.10	
√	500.6.1	Description of post-construction BMPs	A.10	
√	500.6.2	Operation/Maintenance of BMPs after project completion (including short-term funding, long-term funding and responsible party)	A.10	
	500.5	**MAINTENANCE, INSPECTIONS, AND REPAIR**	A.11	
√	300.5, 600.1	Name and phone number of person(s) responsible for inspections	A.11	
√	600.1, Attach. H	Complete inspection checklist: date, weather, inadequate BMPs, visual observations of BMPs, corrective action, inspector's name, title, signature	A.11.a-f	
		OTHER REQUIREMENTS	A.12-16	

√

SECTION C: STANDARD PROVISIONS FOR CONSTRUCTION ACTIVITIES				
CHECK IF ADDRESSED N/A IF NOT APPLICABLE	**SWPPP Section**	**ITEM**	**GENERAL PERMIT REF.**	**COMMENTS**
	100.1	Signed SWPPP Certification	C.9,10	

Attachment I - Forms and Logs

Annual Certification of Compliance Form

INSTRUCTIONS

- By July 1 of each year, the Owner/Developer/Contractor shall complete and submit this form to the RWQCB, together with the annual fee, as required in Section 100.3 of the SWPPP. Annual certification of compliance is based on the site inspections required in the SWPPP.
- Completed and signed Annual Certifications and Approvals shall be included in Section 100.3 of the SWPPP following the required text of the section.
- This Annual Certification of Compliance form does not need to be completed at the initial approval, but it shall be submitted during the first year of the initial SWPPP approval.

Project Name: Carlsbad Energy Center Project

Project Number: _____

Contractor Company Name: _____

Contractor Address: _____

Construction Start Date: _____ **Completion Date:** _____

Description of Work:

description of work

Work Now in Progress:

work in progress

Work Planned for Next 12 Months:

work planned

"I certify under penalty of law that this document and all attachments were prepared under my direction or supervision in accordance with a system designed to assure that qualified personnel properly gather and evaluate the information submitted. Based on my inquiry of the person or persons who manage the system or those persons directly responsible for gathering the information, to the best of my knowledge and belief, the information submitted is, true, accurate, and complete. I am aware that there are significant penalties for submitting false information, including the possibility of fine and imprisonment for knowing violations."

Owner/Developer/Contractor Signature	Date

Attachment I - Forms and Logs

Sampling Activity Log

RAIN EVENT GENERAL INFORMATION				
Project Name	Carlsbad Energy Center Project			
Project Number				
Contractor				
Sampler's Name				
Signature				
Date of Sampling				
Season (Check Applicable)	❒ Rainy		❒ Non-Rainy	
Storm Data	Storm Start Date & Time:		Storm Duration (hrs):	
	Time elapsed since last storm (Circle Applicable Units)	Min. Hr. Days	Approximate Rainfall Amount (inches)	

For rainfall information: http://cdec.water.ca.gov/weather.html or http://www.wrh.noaa.gov/wrhq/nwspage.html

SAMPLE LOG		
Sample Identification	**Sample Location**	**Sample Collection Date and Time**

Specific sample locations descriptions may include: 100 ft upstream from discharge at eastern boundary, runoff from northern waste storage area, downgradient of inlet located near the intersection of A Street and B avenue, etc.

FIELD ANALYSIS		
❑Yes	❑ No	
Sample Identification	**Test**	**Result**

Attachment I - Forms and Logs

Discharge Reporting Log

Project Name: Carlsbad Energy Center Project

Project Number: _____

Date	Material(s) Discharged	Estimated Quantity	Observed By

Attachment J

BMPs Selected for the Project

INSTRUCTIONS

- Insert a list or copies of BMPs, from the *California Stormwater BMP Handbook, Construction*, selected for this project, after this page. If only a list is inserted, a copy of the handbook must be kept at the project site with the SWPPP at all times.

Scheduling EC-1

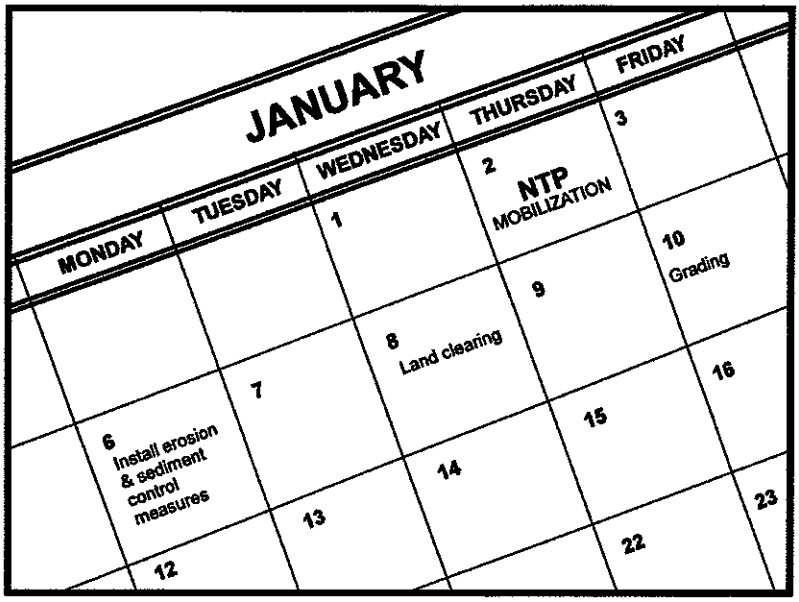

Objectives

EC	Erosion Control	☑
SE	Sediment Control	☒
TR	Tracking Control	☒
WE	Wind Erosion Control	☒
NS	Non-Stormwater Management Control	
WM	Waste Management and Materials Pollution Control	

Legend:

☑ **Primary Objective**

☒ **Secondary Objective**

Targeted Constituents

Sediment	☑
Nutrients	
Trash	
Metals	
Bacteria	
Oil and Grease	
Organics	

Potential Alternatives

None

Description and Purpose

Scheduling is the development of a written plan that includes sequencing of construction activities and the implementation of BMPs such as erosion control and sediment control while taking local climate (rainfall, wind, etc.) into consideration. The purpose is to reduce the amount and duration of soil exposed to erosion by wind, rain, runoff, and vehicle tracking, and to perform the construction activities and control practices in accordance with the planned schedule.

Suitable Applications

Proper sequencing of construction activities to reduce erosion potential should be incorporated into the schedule of every construction project especially during rainy season. Use of other, more costly yet less effective, erosion and sediment control BMPs may often be reduced through proper construction sequencing.

Limitations

- Environmental constraints such as nesting season prohibitions reduce the full capabilities of this BMP.

Implementation

- Avoid rainy periods. Schedule major grading operations during dry months when practical. Allow enough time before rainfall begins to stabilize the soil with vegetation or physical means or to install sediment trapping devices.
- Plan the project and develop a schedule showing each phase of construction. Clearly show how the rainy season relates to soil

CASQA
CALIFORNIA STORMWATER QUALITY ASSOCIATION

disturbing and re-stabilization activities. Incorporate the construction schedule into the SWPPP.

- Include on the schedule, details on the rainy season implementation and deployment of:
  - Erosion control BMPs
  - Sediment control BMPs
  - Tracking control BMPs
  - Wind erosion control BMPs
  - Non-stormwater BMPs
  - Waste management and materials pollution control BMPs
- Include dates for activities that may require non-stormwater discharges such as dewatering, sawcutting, grinding, drilling, boring, crushing, blasting, painting, hydro-demolition, mortar mixing, pavement cleaning, etc.
- Work out the sequencing and timetable for the start and completion of each item such as site clearing and grubbing, grading, excavation, paving, foundation pouring utilities installation, etc., to minimize the active construction area during the rainy season.
  - Sequence trenching activities so that most open portions are closed before new trenching begins.
  - Incorporate staged seeding and re-vegetation of graded slopes as work progresses.
  - Schedule establishment of permanent vegetation during appropriate planting time for specified vegetation.
- Non-active areas should be stabilized as soon as practical after the cessation of soil disturbing activities or one day prior to the onset of precipitation.
- Monitor the weather forecast for rainfall.
- When rainfall is predicted, adjust the construction schedule to allow the implementation of soil stabilization and sediment treatment controls on all disturbed areas prior to the onset of rain.
- Be prepared year round to deploy erosion control and sediment control BMPs. Erosion may be caused during dry seasons by un-seasonal rainfall, wind, and vehicle tracking. Keep the site stabilized year round, and retain and maintain rainy season sediment trapping devices in operational condition.
- Apply permanent erosion control to areas deemed substantially complete during the project's defined seeding window.

Costs

Construction scheduling to reduce erosion may increase other construction costs due to reduced economies of scale in performing site grading. The cost effectiveness of scheduling techniques should be compared with the other less effective erosion and sedimentation controls to achieve a cost effective balance.

Inspection and Maintenance

- Verify that work is progressing in accordance with the schedule. If progress deviates, take corrective actions.
- Amend the schedule when changes are warranted.
- Amend the schedule prior to the rainy season to show updated information on the deployment and implementation of construction site BMPs.

References

Stormwater Quality Handbooks Construction Site Best Management Practices (BMPs) Manual, State of California Department of Transportation (Caltrans), November 2000.

Stormwater Management for Construction Activities Developing Pollution Prevention Plans and Best Management Practices (EPA 832-R-92-005), U.S. Environmental Protection Agency, Office of Water, September 1992.

Preservation Of Existing Vegetation EC-2

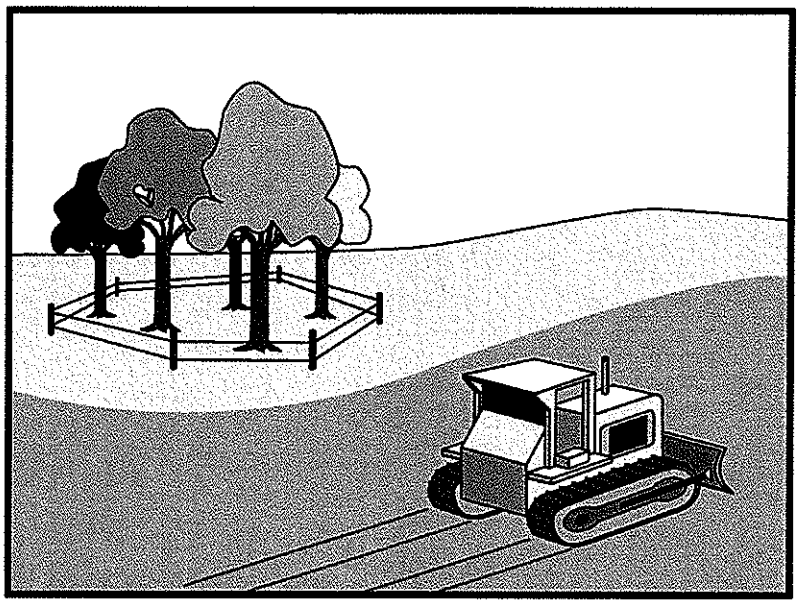

Objectives

EC	Erosion Control	☑
SE	Sediment Control	
TR	Tracking Control	
WE	Wind Erosion Control	
NS	Non-Stormwater Management Control	
WM	Waste Management and Materials Pollution Control	

Legend:

☑ **Primary Objective**

☒ **Secondary Objective**

Targeted Constituents

Sediment	☑
Nutrients	
Trash	
Metals	
Bacteria	
Oil and Grease	
Organics	

Potential Alternatives

None

Description and Purpose

Carefully planned preservation of existing vegetation minimizes the potential of removing or injuring existing trees, vines, shrubs, and grasses that protect soil from erosion.

Suitable Applications

Preservation of existing vegetation is suitable for use on most projects. Large project sites often provide the greatest opportunity for use of this BMP. Suitable applications include the following:

- Areas within the site where no construction activity occurs, or occurs at a later date. This BMP is especially suitable to multi year projects where grading can be phased.
- Areas where natural vegetation exists and is designated for preservation. Such areas often include steep slopes, watercourse, and building sites in wooded areas.
- Areas where local, state, and federal government require preservation, such as vernal pools, wetlands, marshes, certain oak trees, etc. These areas are usually designated on the plans, or in the specifications, permits, or environmental documents.
- Where vegetation designated for ultimate removal can be temporarily preserved and be utilized for erosion control and sediment control.

CASQA
CALIFORNIA STORMWATER QUALITY ASSOCIATION

EC-2 Preservation Of Existing Vegetation

Limitations

- Requires forward planning by the owner/developer, contractor, and design staff.
- Limited opportunities for use when project plans do not incorporate existing vegetation into the site design.
- For sites with diverse topography, it is often difficult and expensive to save existing trees while grading the site satisfactory for the planned development.

Implementation

The best way to prevent erosion is to not disturb the land. In order to reduce the impacts of new development and redevelopment, projects may be designed to avoid disturbing land in sensitive areas of the site (e.g., natural watercourses, steep slopes), and to incorporate unique or desirable existing vegetation into the site's landscaping plan. Clearly marking and leaving a buffer area around these unique areas during construction will help to preserve these areas as well as take advantage of natural erosion prevention and sediment trapping.

Existing vegetation to be preserved on the site must be protected from mechanical and other injury while the land is being developed. The purpose of protecting existing vegetation is to ensure the survival of desirable vegetation for shade, beautification, and erosion control. Mature vegetation has extensive root systems that help to hold soil in place, thus reducing erosion. In addition, vegetation helps keep soil from drying rapidly and becoming susceptible to erosion. To effectively save existing vegetation, no disturbances of any kind should be allowed within a defined area around the vegetation. For trees, no construction activity should occur within the drip line of the tree.

Timing

- Provide for preservation of existing vegetation prior to the commencement of clearing and grubbing operations or other soil disturbing activities in areas where no construction activity is planned or will occur at a later date.

Design and Layout

- Mark areas to be preserved with temporary fencing. Include sufficient setback to protect roots.
  - Orange colored plastic mesh fencing works well.
  - Use appropriate fence posts and adequate post spacing and depth to completely support the fence in an upright position.
- Locate temporary roadways, stockpiles, and layout areas to avoid stands of trees, shrubs, and grass.
- Consider the impact of grade changes to existing vegetation and the root zone.
- Maintain existing irrigation systems where feasible. Temporary irrigation may be required.
- Instruct employees and subcontractors to honor protective devices. Prohibit heavy equipment, vehicular traffic, or storage of construction materials within the protected area.

Costs

There is little cost associated with preserving existing vegetation if properly planned during the project design, and these costs may be offset by aesthetic benefits that enhance property values. During construction, the cost for preserving existing vegetation will likely be less than the cost of applying erosion and sediment controls to the disturbed area. Replacing vegetation inadvertently destroyed during construction can be extremely expensive, sometimes in excess of $10,000 per tree.

Inspection and Maintenance

During construction, the limits of disturbance should remain clearly marked at all times. Irrigation or maintenance of existing vegetation should be described in the landscaping plan. If damage to protected trees still occurs, maintenance guidelines described below should be followed:

- Verify that protective measures remain in place. Restore damaged protection measures immediately.
- Serious tree injuries shall be attended to by an arborist.
- Damage to the crown, trunk, or root system of a retained tree shall be repaired immediately.
- Trench as far from tree trunks as possible, usually outside of the tree drip line or canopy. Curve trenches around trees to avoid large roots or root concentrations. If roots are encountered, consider tunneling under them. When trenching or tunneling near or under trees to be retained, place tunnels at least 18 in. below the ground surface, and not below the tree center to minimize impact on the roots.
- Do not leave tree roots exposed to air. Cover exposed roots with soil as soon as possible. If soil covering is not practical, protect exposed roots with wet burlap or peat moss until the tunnel or trench is ready for backfill.
- Cleanly remove the ends of damaged roots with a smooth cut.
- Fill trenches and tunnels as soon as possible. Careful filling and tamping will eliminate air spaces in the soil, which can damage roots.
- If bark damage occurs, cut back all loosened bark into the undamaged area, with the cut tapered at the top and bottom and drainage provided at the base of the wood. Limit cutting the undamaged area as much as possible.
- Aerate soil that has been compacted over a trees root zone by punching holes 12 in. deep with an iron bar, and moving the bar back and forth until the soil is loosened. Place holes 18 in. apart throughout the area of compacted soil under the tree crown.
- Fertilization
  - Fertilize stressed or damaged broadleaf trees to aid recovery.
  - Fertilize trees in the late fall or early spring.

- Apply fertilizer to the soil over the feeder roots and in accordance with label instructions, but never closer than 3 ft to the trunk. Increase the fertilized area by one-fourth of the crown area for conifers that have extended root systems.

- Retain protective measures until all other construction activity is complete to avoid damage during site cleanup and stabilization.

References

County of Sacramento Tree Preservation Ordinance, September 1981.

Stormwater Quality Handbooks Construction Site Best Management Practices (BMPs) Manual, State of California Department of Transportation (Caltrans), November 2000.

Stormwater Management of the Puget Sound Basin, Technical Manual, Publication #91-75, Washington State Department of Ecology, February 1992.

Water Quality Management Plan for The Lake Tahoe Region, Volume II, Handbook of Management Practices, Tahoe Regional Planning Agency, November 1988.

Soil Binders

EC-5

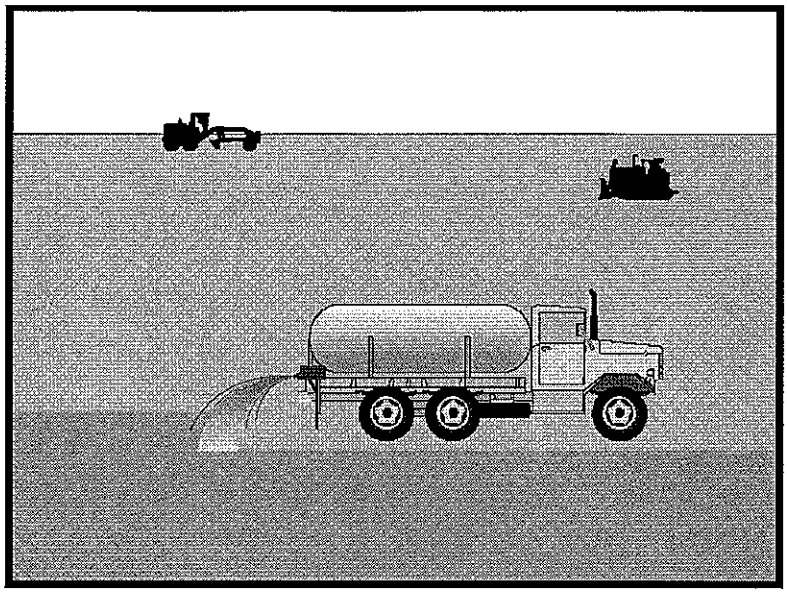

Objectives

EC	Erosion Control	☑
SE	Sediment Control	
TR	Tracking Control	
WE	Wind Erosion Control	☒
NS	Non-Stormwater Management Control	
WM	Waste Management and Materials Pollution Control	

Legend:

☑ Primary Objective

☒ Secondary Objective

Targeted Constituents

Sediment	☑
Nutrients	
Trash	
Metals	
Bacteria	
Oil and Grease	
Organics	

Potential Alternatives

EC-3 Hydraulic Mulch

EC-4 Hydroseeding

EC-6 Straw Mulch

EC-7 Geotextiles and Mats

EC-8 Wood Mulching

Description and Purpose

Soil binders consist of applying and maintaining a soil stabilizer to exposed soil surfaces. Soil binders are materials applied to the soil surface to temporarily prevent water induced erosion of exposed soils on construction sites. Soil binders also prevent wind erosion.

Suitable Applications

Soil binders are typically applied to disturbed areas requiring short term temporary protection. Because soil binders can often be incorporated into the work, they are a good alternative to mulches in areas where grading activities will soon resume. Soil binders are also suitable for use on stockpiles.

Limitations

- Soil binders are temporary in nature and may need reapplication.
- Soil binders require a minimum curing time until fully effective, as prescribed by the manufacturer. Curing time may be 24 hours or longer. Soil binders may need reapplication after a storm event.
- Soil binders will generally experience spot failures during heavy rainfall events. If runoff penetrates the soil at the top of a slope treated with a soil binder, it is likely that the runoff will undercut the stabilized soil layer and discharge at a point further down slope.

CASQA
CALIFORNIA STORMWATER QUALITY ASSOCIATION

- Soil binders do not hold up to pedestrian or vehicular traffic across treated areas.
- Soil binders may not penetrate soil surfaces made up primarily of silt and clay, particularly when compacted.
- Some soil binders may not perform well with low relative humidity. Under rainy conditions, some agents may become slippery or leach out of the soil.
- Soil binders may not cure if low temperatures occur within 24 hours of application.
- The water quality impacts of soil binders are relatively unknown and some may have water quality impacts due to their chemical makeup.
- A sampling and analysis plan must be incorporated into the SWPPP as soil binders could be a source of non-visible pollutants.

Implementation

General Considerations

- Regional soil types will dictate appropriate soil binders to be used.
- A soil binder must be environmentally benign (non-toxic to plant and animal life), easy to apply, easy to maintain, economical, and should not stain paved or painted surfaces. Soil binders should not pollute stormwater.
- Some soil binders may not be compatible with existing vegetation.
- Performance of soil binders depends on temperature, humidity, and traffic across treated areas.
- Avoid over spray onto roads, sidewalks, drainage channels, existing vegetation, etc.

Selecting a Soil Binder

Properties of common soil binders used for erosion control are provided on Table 1 at the end of this BMP. Use Table 1 to select an appropriate soil binder. Refer to WE-1, Wind Erosion Control, for dust control soil binders.

Factors to consider when selecting a soil binder include the following:

- Suitability to situation - Consider where the soil binder will be applied, if it needs a high resistance to leaching or abrasion, and whether it needs to be compatible with any existing vegetation. Determine the length of time soil stabilization will be needed, and if the soil binder will be placed in an area where it will degrade rapidly. In general, slope steepness is not a discriminating factor for the listed soil binders.
- Soil types and surface materials - Fines and moisture content are key properties of surface materials. Consider a soil binder's ability to penetrate, likelihood of leaching, and ability to form a surface crust on the surface materials.
- Frequency of application - The frequency of application can be affected by subgrade conditions, surface type, climate, and maintenance schedule. Frequent applications could

lead to high costs. Application frequency may be minimized if the soil binder has good penetration, low evaporation, and good longevity. Consider also that frequent application will require frequent equipment clean up.

Plant-Material Based (Short Lived) Binders

Guar: Guar is a non-toxic, biodegradable, natural galactomannan based hydrocolloid treated with dispersant agents for easy field mixing. It should be mixed with water at the rate of 11 to 15 lb per 1,000 gallons. Recommended minimum application rates are as follows:

Application Rates for Guar Soil Stabilizer

Slope (H:V):	Flat	4:1	3:1	2:1	1:1
lb/acre:	40	45	50	60	70

Psyllium: Psyllium is composed of the finely ground muciloid coating of plantago seeds that is applied as a dry powder or in a wet slurry to the surface of the soil. It dries to form a firm but rewettable membrane that binds soil particles together but permits germination and growth of seed. Psyllium requires 12 to 18 hours drying time. Application rates should be from 80 to 200 lb/acre, with enough water in solution to allow for a uniform slurry flow.

Starch: Starch is non-ionic, cold water soluble (pre-gelatinized) granular cornstarch. The material is mixed with water and applied at the rate of 150 lb/acre. Approximate drying time is 9 to 12 hours.

Plant-Material Based (Long Lived) Binders

Pitch and Rosin Emulsion: Generally, a non-ionic pitch and rosin emulsion has a minimum solids content of 48%. The rosin should be a minimum of 26% of the total solids content. The soil stabilizer should be non-corrosive, water dilutable emulsion that upon application cures to a water insoluble binding and cementing agent. For soil erosion control applications, the emulsion is diluted and should be applied as follows:

- For clayey soil: 5 parts water to 1 part emulsion
- For sandy soil: 10 parts water to 1 part emulsion

Application can be by water truck or hydraulic seeder with the emulsion and product mixture applied at the rate specified by the manufacturer.

Polymeric Emulsion Blend Binders

Acrylic Copolymers and Polymers: Polymeric soil stabilizers should consist of a liquid or solid polymer or copolymer with an acrylic base that contains a minimum of 55% solids. The polymeric compound should be handled and mixed in a manner that will not cause foaming or should contain an anti-foaming agent. The polymeric emulsion should not exceed its shelf life or expiration date; manufacturers should provide the expiration date. Polymeric soil stabilizer should be readily miscible in water, non-injurious to seed or animal life, non-flammable, should provide surface soil stabilization for various soil types without totally inhibiting water infiltration, and should not re-emulsify when cured. The applied compound should air cure within a maximum of 36 to 48 hours. Liquid copolymer should be diluted at a rate of 10 parts water to 1 part polymer and the mixture applied to soil at a rate of 1,175 gallons/acre.

Liquid Polymers of Methacrylates and Acrylates: This material consists of a tackifier/sealer that is a liquid polymer of methacrylates and acrylates. It is an aqueous 100% acrylic emulsion blend of 40% solids by volume that is free from styrene, acetate, vinyl, ethoxylated surfactants or silicates. For soil stabilization applications, it is diluted with water in accordance with manufacturer's recommendations, and applied with a hydraulic seeder at the rate of 20 gallons/acre. Drying time is 12 to 18 hours after application.

Copolymers of Sodium Acrylates and Acrylamides: These materials are non-toxic, dry powders that are copolymers of sodium acrylate and acrylamide. They are mixed with water and applied to the soil surface for erosion control at rates that are determined by slope gradient:

Slope Gradient (H:V)	lb/acre
Flat to 5:1	3.0 – 5.0
5:1 to 3:1	5.0 – 10.0
2:2 to 1:1	10.0 – 20.0

Poly-Acrylamide and Copolymer of Acrylamide: Linear copolymer polyacrylamide is packaged as a dry flowable solid. When used as a stand alone stabilizer, it is diluted at a rate of 11lb/1,000 gal of water and applied at the rate of 5.0 lb/acre.

Hydro-Colloid Polymers: Hydro-Colloid Polymers are various combinations of dry flowable poly-acrylamides, copolymers and hydro-colloid polymers that are mixed with water and applied to the soil surface at rates of 55 to 60 lb/acre. Drying times are 0 to 4 hours.

Cementitious-Based Binders

Gypsum: This is a formulated gypsum based product that readily mixes with water and mulch to form a thin protective crust on the soil surface. It is composed of high purity gypsum that is ground, calcined and processed into calcium sulfate hemihydrate with a minimum purity of 86%. It is mixed in a hydraulic seeder and applied at rates 4,000 to 12,000 lb/acre. Drying time is 4 to 8 hours.

Applying Soil Binders

After selecting an appropriate soil binder, the untreated soil surface must be prepared before applying the soil binder. The untreated soil surface must contain sufficient moisture to assist the agent in achieving uniform distribution. In general, the following steps should be followed:

- Follow manufacturer's written recommendations for application rates, pre-wetting of application area, and cleaning of equipment after use.
- Prior to application, roughen embankment and fill areas.
- Consider the drying time for the selected soil binder and apply with sufficient time before anticipated rainfall. Soil binders should not be applied during or immediately before rainfall.
- Avoid over spray onto roads, sidewalks, drainage channels, sound walls, existing vegetation, etc.

- Soil binders should not be applied to frozen soil, areas with standing water, under freezing or rainy conditions, or when the temperature is below 40°F during the curing period.
- More than one treatment is often necessary, although the second treatment may be diluted or have a lower application rate.
- Generally, soil binders require a minimum curing time of 24 hours before they are fully effective. Refer to manufacturer's instructions for specific cure time.
- For liquid agents:
  - Crown or slope ground to avoid ponding.
  - Uniformly pre-wet ground at 0.03 to 0.3 gal/yd^2 or according to manufacturer's recommendations.
  - Apply solution under pressure. Overlap solution 6 to 12 in.
  - Allow treated area to cure for the time recommended by the manufacturer; typically at least 24 hours.
  - Apply second treatment before first treatment becomes ineffective, using 50% application rate.
  - In low humidities, reactivate chemicals by re-wetting with water at 0.1 to 0.2 gal/yd^2.

Costs

Costs vary according to the soil stabilizer selected for implementation. The following are approximate costs:

Soil Binder	Cost per Acre
Plant-Material Based (Short Lived) Binders	$400
Plant-Material Based (Long Lived) Binders	$1,200
Polymeric Emulsion Blend Binders	$400 (1)
Cementitious-Based Binders	$800

(1) $1,200 for Acrylic polymers and copolymers

Source: Caltrans Guidance for Soil Stabilization for Temporary Slopes, Nov. 1999

Inspection and Maintenance

- Inspect BMPs prior to forecast rain, daily during extended rain events, after rain events, weekly during the rainy season, and at two-week intervals during the non-rainy season.
- Areas where erosion is evident shall be repaired and BMPs re-applied as soon as possible. Care should be exercised to minimize the damage to protected areas while making repairs, as any area damaged will require re-application of BMPs.
- Reapply the selected soil binder as needed to maintain effectiveness.

References

Manual of Standards of Erosion and Sediment Control Measures, Association of Bay Area Governments, May 1995.

Sedimentation and Erosion Control, An Inventory of Current Practices Draft, US EPA, April 1990.

Stormwater Quality Handbooks Construction Site Best Management Practices (BMPs) Manual, State of California Department of Transportation (Caltrans), November 2000.

Guidance Document: Soil Stabilization for Temporary Slopes, State of California Department of Transportation (Caltrans), November 1999.

Stormwater Management for Construction Activities, Developing Pollution Prevention Plans and Best Management Practices, EPA 832-R-92005; USEPA, April 1992.

Table 1 Properties of Soil Binders for Erosion Control

Evaluation Criteria	Binder Type			
	Plant Material Based (Short Lived)	Plant Material Based (Long Lived)	Polymeric Emulsion Blends	Cementitious-Based Binders
Relative Cost	Low	Low	Low	Low
Resistance to Leaching	High	High	Low to Moderate	Moderate
Resistance to Abrasion	Moderate	Low	Moderate to High	Moderate to High
Longevity	Short to Medium	Medium	Medium to Long	Medium
Minimum Curing Time before Rain	9 to 18 hours	19 to 24 hours	0 to 24 hours	4 to 8 hours
Compatibility with Existing Vegetation	Good	Poor	Poor	Poor
Mode of Degradation	Biodegradable	Biodegradable	Photodegradable/ Chemically Degradable	Photodegradable/ Chemically Degradable
Labor Intensive	No	No	No	No
Specialized Application Equipment	Water Truck or Hydraulic Mulcher	Water Truck or Hydraulic Mulcher	Water Truck or Hydraulic Mulcher	Water Truck or Hydraulic Mulcher
Liquid/Powder	Powder	Liquid	Liquid/Powder	Powder
Surface Crusting	Yes, but dissolves on rewetting	Yes	Yes, but dissolves on rewetting	Yes
Clean Up	Water	Water	Water	Water
Erosion Control Application Rate	Varies (1)	Varies (1)	Varies (1)	4,000 to 12,000 lbs/acre

(1) See Implementation for specific rates.

Geotextiles and Mats EC-7

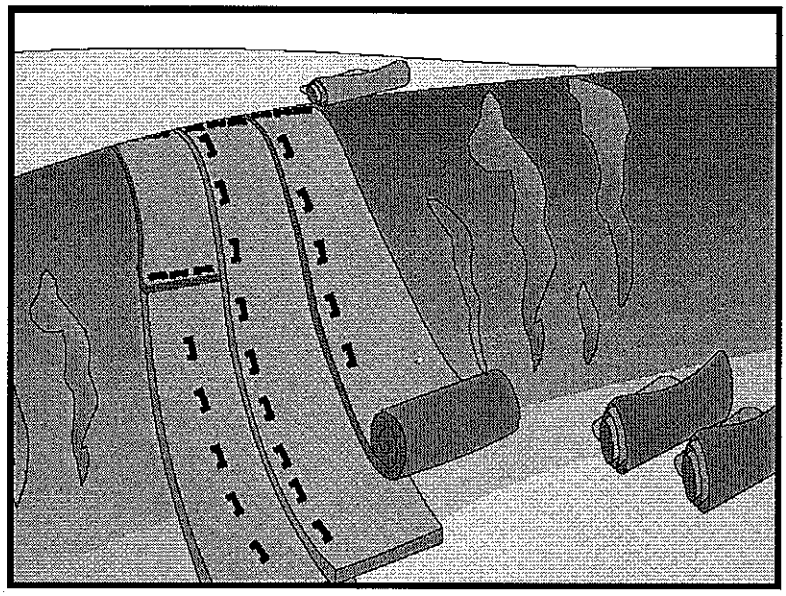

Objectives

EC	Erosion Control	☑
SE	Sediment Control	
TR	Tracking Control	
WE	Wind Erosion Control	3
NS	Non-Stormwater Management Control	
WM	Waste Management and Materials Pollution Control	

Legend:

☑ Primary Objective

☒ Secondary Objective

Targeted Constituents

Sediment	☑
Nutrients	
Trash	
Metals	
Bacteria	
Oil and Grease	
Organics	

Potential Alternatives

EC-3 Hydraulic Mulch

EC-4 Hydroseeding

EC-5 Soil Binders

EC-6 Straw Mulch

EC-8 Wood Mulching

Description and Purpose

Mattings of natural materials are used to cover the soil surface to reduce erosion from rainfall impact, hold soil in place, and absorb and hold moisture near the soil surface. Additionally, matting may be used to stabilize soils until vegetation is established.

Suitable Applications

Mattings are commonly applied on short, steep slopes where erosion hazard is high and vegetation will be slow to establish. Mattings are also used on stream banks where moving water at velocities between 3 ft/s and 6 ft/s are likely to wash out new vegetation, and in areas where the soil surface is disturbed and where existing vegetation has been removed. Matting may also be used when seeding cannot occur (e.g., late season construction and/or the arrival of an early rain season). Erosion control matting should be considered when the soils are fine grained and potentially erosive. These measures should be considered in the following situations.

- Steep slopes, generally steeper than 3:1 (H:V)
- Slopes where the erosion potential is high
- Slopes and disturbed soils where mulch must be anchored
- Disturbed areas where plants are slow to develop
- Channels with flows exceeding 3.3 ft/s

CASQA
CALIFORNIA STORMWATER QUALITY ASSOCIATION

- Channels to be vegetated
- Stockpiles
- Slopes adjacent to water bodies of Environmentally Sensitive Areas (ESAs)

Limitations

- Properly installed mattings provide excellent erosion control but do so at relatively high cost. This high cost typically limits the use of mattings to areas of concentrated channel flow and steep slopes.
- Mattings are more costly than other BMP practices, limiting their use to areas where other BMPs are ineffective (e.g. channels, steep slopes).
- Installation is critical and requires experienced contractors. The contractor should install the matting material in such a manner that continuous contact between the material and the soil occurs.
- Geotextiles and Mats may delay seed germination, due to reduction in soil temperature.
- Blankets and mats are generally not suitable for excessively rocky sites or areas where the final vegetation will be mowed (since staples and netting can catch in mowers).
- Blankets and mats must be removed and disposed of prior to application of permanent soil stabilization measures.
- Plastic sheeting is easily vandalized, easily torn, photodegradable, and must be disposed of at a landfill.
- Plastic results in 100% runoff, which may cause serious erosion problems in the areas receiving the increased flow.
- The use of plastic should be limited to covering stockpiles or very small graded areas for short periods of time (such as through one imminent storm event) until alternative measures, such as seeding and mulching, may be installed.
- Geotextiles, mats, plastic covers, and erosion control covers have maximum flow rate limitations; consult the manufacturer for proper selection.
- Not suitable for areas that have heavy foot traffic (tripping hazard) – e.g., pad areas around buildings under construction.

Implementation

Material Selection

Organic matting materials have been found to be effective where re-vegetation will be provided by re-seeding. The choice of matting should be based on the size of area, side slopes, surface conditions such as hardness, moisture, weed growth, and availability of materials.

The following natural and synthetic mattings are commonly used:

Geotextiles

- Material should be a woven polypropylene fabric with minimum thickness of 0.06 in., minimum width of 12 ft and should have minimum tensile strength of 150 lbs (warp), 80 lbs (fill) in conformance with the requirements in ASTM Designation: D 4632. The permittivity of the fabric should be approximately 0.07 sec^{-1} in conformance with the requirements in ASTM Designation: D4491. The fabric should have an ultraviolet (UV) stability of 70 percent in conformance with the requirements in ASTM designation: D4355. Geotextile blankets must be secured in place with wire staples or sandbags and by keying into tops of slopes to prevent infiltration of surface waters under geotextile. Staples should be made of minimum 11 gauge steel wire and should be U-shaped with 8 in. legs and 2 in. crown.

- Geotextiles may be reused if they are suitable for the use intended.

Plastic Covers

- Plastic sheeting should have a minimum thickness of 6 mils, and must be keyed in at the top of slope and firmly held in place with sandbags or other weights placed no more than 10 ft apart. Seams are typically taped or weighted down their entire length, and there should be at least a 12 in. to 24 in. overlap of all seams. Edges should be embedded a minimum of 6 in. in soil.

- All sheeting must be inspected periodically after installation and after significant rainstorms to check for erosion, undermining, and anchorage failure. Any failures must be repaired immediately. If washout or breakages occur, the material should be re-installed after repairing the damage to the slope.

Erosion Control Blankets/Mats

- Biodegradable rolled erosion control products (RECPs) are typically composed of jute fibers, curled wood fibers, straw, coconut fiber, or a combination of these materials. In order for an RECP to be considered 100% biodegradable, the netting, sewing or adhesive system that holds the biodegradable mulch fibers together must also be biodegradable.

  - **Jute** is a natural fiber that is made into a yarn that is loosely woven into a biodegradable mesh. It is designed to be used in conjunction with vegetation and has longevity of approximately one year. The material is supplied in rolled strips, which should be secured to the soil with U-shaped staples or stakes in accordance with manufacturers' recommendations.

  - **Excelsior** (curled wood fiber) blanket material should consist of machine produced mats of curled wood excelsior with 80 percent of the fiber 6 in. or longer. The excelsior blanket should be of consistent thickness. The wood fiber must be evenly distributed over the entire area of the blanket. The top surface of the blanket should be covered with a photodegradable extruded plastic mesh. The blanket should be smolder resistant without the use of chemical additives and should be non-toxic and non-injurious to plant and animal life. Excelsior blankets should be furnished in rolled strips, a minimum of 48 in. wide, and should have an average weight of 0.8 lb/yd^2, ±10 percent, at the time of manufacture. Excelsior blankets must be secured in place with wire staples. Staples

should be made of minimum 11 gauge steel wire and should be U-shaped with 8 in. legs and 2 in. crown.

- **Straw blanket** should be machine produced mats of straw with a lightweight biodegradable netting top layer. The straw should be attached to the netting with biodegradable thread or glue strips. The straw blanket should be of consistent thickness. The straw should be evenly distributed over the entire area of the blanket. Straw blanket should be furnished in rolled strips a minimum of 6.5 ft wide, a minimum of 80 ft long and a minimum of 0.5 lb/yd^2. Straw blankets must be secured in place with wire staples. Staples should be made of minimum 11 gauge steel wire and should be U-shaped with 8 in. legs and 2 in. crown.

- **Wood fiber blanket** is composed of biodegradable fiber mulch with extruded plastic netting held together with adhesives. The material is designed to enhance re-vegetation. The material is furnished in rolled strips, which must be secured to the ground with U-shaped staples or stakes in accordance with manufacturers' recommendations.

- **Coconut fiber blanket** should be a machine produced mat of 100 percent coconut fiber with biodegradable netting on the top and bottom. The coconut fiber should be attached to the netting with biodegradable thread or glue strips. The coconut fiber blanket should be of consistent thickness. The coconut fiber should be evenly distributed over the entire area of the blanket. Coconut fiber blanket should be furnished in rolled strips with a minimum of 6.5 ft wide, a minimum of 80 ft. long and a minimum of 0.5 lb/yd^2. Coconut fiber blankets must be secured in place with wire staples. Staples should be made of minimum 11 gauge steel wire and should be U-shaped with 8 in. legs and 2 in. crown.

- **Coconut fiber mesh** is a thin permeable membrane made from coconut or corn fiber that is spun into a yarn and woven into a biodegradable mat. It is designed to be used in conjunction with vegetation and typically has longevity of several years. The material is supplied in rolled strips, which must be secured to the soil with U-shaped staples or stakes in accordance with manufacturers' recommendations.

- **Straw coconut fiber blanket** should be machine produced mats of 70 percent straw and 30 percent coconut fiber with a biodegradable netting top layer and a biodegradable bottom net. The straw and coconut fiber should be attached to the netting with biodegradable thread or glue strips. The straw coconut fiber blanket should be of consistent thickness. The straw and coconut fiber should be evenly distributed over the entire area of the blanket. Straw coconut fiber blanket should be furnished in rolled strips a minimum of 6.5 ft wide, a minimum of 80 ft long and a minimum of 0.5 lb/yd^2. Straw coconut fiber blankets must be secured in place with wire staples. Staples should be made of minimum 11 gauge steel wire and should be U-shaped with 8 in. legs and 2 in. crown.

- Non-biodegradable RECPs are typically composed of polypropylene, polyethylene, nylon or other synthetic fibers. In some cases, a combination of biodegradable and synthetic fibers is used to construct the RECP. Netting used to hold these fibers together is typically non-biodegradable as well.

- **Plastic netting** is a lightweight biaxially oriented netting designed for securing loose mulches like straw or paper to soil surfaces to establish vegetation. The netting is photodegradable. The netting is supplied in rolled strips, which must be secured with U-shaped staples or stakes in accordance with manufacturers' recommendations.

- **Plastic mesh** is an open weave geotextile that is composed of an extruded synthetic fiber woven into a mesh with an opening size of less than ¼ in. It is used with re-vegetation or may be used to secure loose fiber such as straw to the ground. The material is supplied in rolled strips, which must be secured to the soil with U-shaped staples or stakes in accordance with manufacturers' recommendations.

- **Synthetic fiber with netting** is a mat that is composed of durable synthetic fibers treated to resist chemicals and ultraviolet light. The mat is a dense, three dimensional mesh of synthetic (typically polyolefin) fibers stitched between two polypropylene nets. The mats are designed to be re-vegetated and provide a permanent composite system of soil, roots, and geomatrix. The material is furnished in rolled strips, which must be secured with U-shaped staples or stakes in accordance with manufacturers' recommendations.

- **Bonded synthetic fibers** consist of a three dimensional geomatrix nylon (or other synthetic) matting. Typically it has more than 90 percent open area, which facilitates root growth. It's tough root reinforcing system anchors vegetation and protects against hydraulic lift and shear forces created by high volume discharges. It can be installed over prepared soil, followed by seeding into the mat. Once vegetated, it becomes an invisible composite system of soil, roots, and geomatrix. The material is furnished in rolled strips that must be secured with U-shaped staples or stakes in accordance with manufacturers' recommendations.

- **Combination synthetic and biodegradable RECPs** consist of biodegradable fibers, such as wood fiber or coconut fiber, with a heavy polypropylene net stitched to the top and a high strength continuous filament geomatrix or net stitched to the bottom. The material is designed to enhance re-vegetation. The material is furnished in rolled strips, which must be secured with U-shaped staples or stakes in accordance with manufacturers' recommendations.

Site Preparation

- Proper site preparation is essential to ensure complete contact of the blanket or matting with the soil.
- Grade and shape the area of installation.
- Remove all rocks, clods, vegetation or other obstructions so that the installed blankets or mats will have complete, direct contact with the soil.
- Prepare seedbed by loosening 2 to 3 in. of topsoil.

Seeding

Seed the area before blanket installation for erosion control and revegetation. Seeding after mat installation is often specified for turf reinforcement application. When seeding prior to blanket

installation, all check slots and other areas disturbed during installation must be re-seeded. Where soil filling is specified, seed the matting and the entire disturbed area after installation and prior to filling the mat with soil.

Fertilize and seed in accordance with seeding specifications or other types of landscaping plans. When using jute matting on a seeded area, apply approximately half the seed before laying the mat and the remainder after laying the mat. The protective matting can be laid over areas where grass has been planted and the seedlings have emerged. Where vines or other ground covers are to be planted, lay the protective matting first and then plant through matting according to design of planting.

Check Slots

Check slots are made of glass fiber strips, excelsior matting strips or tight folded jute matting blanket or strips for use on steep, highly erodible watercourses. The check slots are placed in narrow trenches 6 to 12 in. deep across the channel and left flush with the soil surface. They are to cover the full cross section of designed flow.

Laying and Securing Matting

- Before laying the matting, all check slots should be installed and the friable seedbed made free from clods, rocks, and roots. The surface should be compacted and finished according to the requirements of the manufacturer's recommendations.
- Mechanical or manual lay down equipment should be capable of handling full rolls of fabric and laying the fabric smoothly without wrinkles or folds. The equipment should meet the fabric manufacturer's recommendations or equivalent standards.

Anchoring

- U-shaped wire staples, metal geotextile stake pins, or triangular wooden stakes can be used to anchor mats and blankets to the ground surface.
- Wire staples should be made of minimum 11 gauge steel wire and should be U-shaped with 8 in. legs and 2 in. crown.
- Metal stake pins should be 0.188 in. diameter steel with a 1.5 in. steel washer at the head of the pin, and 8 in. in length.
- Wire staples and metal stakes should be driven flush to the soil surface.

Installation on Slopes

Installation should be in accordance with the manufacturer's recommendations. In general, these will be as follows:

- Begin at the top of the slope and anchor the blanket in a 6 in. deep by 6 in. wide trench. Backfill trench and tamp earth firmly.
- Unroll blanket down slope in the direction of water flow.
- Overlap the edges of adjacent parallel rolls 2 to 3 in. and staple every 3 ft.

- When blankets must be spliced, place blankets end over end (shingle style) with 6 in. overlap. Staple through overlapped area, approximately 12 in. apart.
- Lay blankets loosely and maintain direct contact with the soil. Do not stretch.
- Staple blankets sufficiently to anchor blanket and maintain contact with the soil. Staples should be placed down the center and staggered with the staples placed along the edges. Steep slopes, 1:1 (H:V) to 2:1 (H:V), require a minimum of 2 staples/yd^2. Moderate slopes, 2:1 (H:V) to 3:1 (H:V), require a minimum of 1 ½ staples/yd^2.

Installation in Channels

Installation should be in accordance with the manufacturer's recommendations. In general, these will be as follows:

- Dig initial anchor trench 12 in. deep and 6 in. wide across the channel at the lower end of the project area.
- Excavate intermittent check slots, 6 in. deep and 6 in. wide across the channel at 25 to 30 ft intervals along the channels.
- Cut longitudinal channel anchor trenches 4 in. deep and 4 in. wide along each side of the installation to bury edges of matting, whenever possible extend matting 2 to 3 in. above the crest of the channel side slopes.
- Beginning at the downstream end and in the center of the channel, place the initial end of the first roll in the anchor trench and secure with fastening devices at 12 in. intervals. Note: matting will initially be upside down in anchor trench.
- In the same manner, position adjacent rolls in anchor trench, overlapping the preceding roll a minimum of 3 in.
- Secure these initial ends of mats with anchors at 12 in. intervals, backfill and compact soil.
- Unroll center strip of matting upstream. Stop at next check slot or terminal anchor trench. Unroll adjacent mats upstream in similar fashion, maintaining a 3 in. overlap.
- Fold and secure all rolls of matting snugly into all transverse check slots. Lay mat in the bottom of the slot then fold back against itself. Anchor through both layers of mat at 12 in. intervals, then backfill and compact soil. Continue rolling all mat widths upstream to the next check slot or terminal anchor trench.
- Alternate method for non-critical installations: Place two rows of anchors on 6 in. centers at 25 to 30 ft. intervals in lieu of excavated check slots.
- Staple shingled lap spliced ends a minimum of 12 in. apart on 12 in. intervals.
- Place edges of outside mats in previously excavated longitudinal slots; anchor using prescribed staple pattern, backfill, and compact soil.
- Anchor, fill, and compact upstream end of mat in a 12 in. by 6 in. terminal trench.

- Secure mat to ground surface using U-shaped wire staples, geotextile pins, or wooden stakes.
- Seed and fill turf reinforcement matting with soil, if specified.

Soil Filling (if specified for turf reinforcement)

- Always consult the manufacturer's recommendations for installation.
- Do not drive tracked or heavy equipment over mat.
- Avoid any traffic over matting if loose or wet soil conditions exist.
- Use shovels, rakes, or brooms for fine grading and touch up.
- Smooth out soil filling just exposing top netting of mat.

Temporary Soil Stabilization Removal

- Temporary soil stabilization removed from the site of the work must be disposed of if necessary.

Costs

Relatively high compared to other BMPs. Biodegradable materials: $0.50 - $0.57/yd^2. Permanent materials: $3.00 - $4.50/yd^2. Staples: $0.04 - $0.05/staple. Approximate costs for installed materials are shown below:

Rolled Erosion Control Products		Installed Cost per Acre
Biodegradable	Jute Mesh	$6,500
	Curled Wood Fiber	$10,500
	Straw	$8,900
	Wood Fiber	$8,900
	Coconut Fiber	$13,000
	Coconut Fiber Mesh	$31,200
	Straw Coconut Fiber	$10,900
Non-Biodegradable	Plastic Netting	$2,000
	Plastic Mesh	$3,200
	Synthetic Fiber with Netting	$34,800
	Bonded Synthetic Fibers	$50,000
	Combination with Biodegradable	$32,000

Source: Caltrans Guidance for Soil Stabilization for Temporary Slopes, Nov. 1999

Inspection and Maintenance

- Inspect BMPs prior to forecast rain, daily during extended rain events, after rain events, weekly during the rainy season, and at two-week intervals during the non-rainy season, and at two-week intervals during the non-rainy season.
- Inspect BMPs subject to non-stormwater discharges daily while non-stormwater discharges occur.

- Areas where erosion is evident shall be repaired and BMPs reapplied as soon as possible. Care should be exercised to minimize the damage to protected areas while making repairs, as any area damaged will require reapplication of BMPs.
- If washout or breakage occurs, re-install the material after repairing the damage to the slope or channel.
- Make sure matting is uniformly in contact with the soil.
- Check that all the lap joints are secure.
- Check that staples are flush with the ground.
- Check that disturbed areas are seeded.

References

Guides for Erosion and Sediment Controls in California, USDA Soils Conservation Service, January 1991.

National Management Measures to Control Nonpoint Source Pollution from Urban Areas, United States Environmental Protection Agency, 2002.

Stormwater Quality Handbooks Construction Site Best Management Practices (BMPs) Manual, State of California Department of Transportation (Caltrans), November 2000.

Guidance Document: Soil Stabilization for Temporary Slopes, State of California Department of Transportation (Caltrans), November 1999

Stormwater Management of the Puget Sound Basin, Technical Manual, Publication #91-75, Washington State Department of Ecology, February 1992.

Water Quality Management Plan for The Lake Tahoe Region, Volume II, Handbook of Management Practices, Tahoe Regional Planning Agency, November 1988.

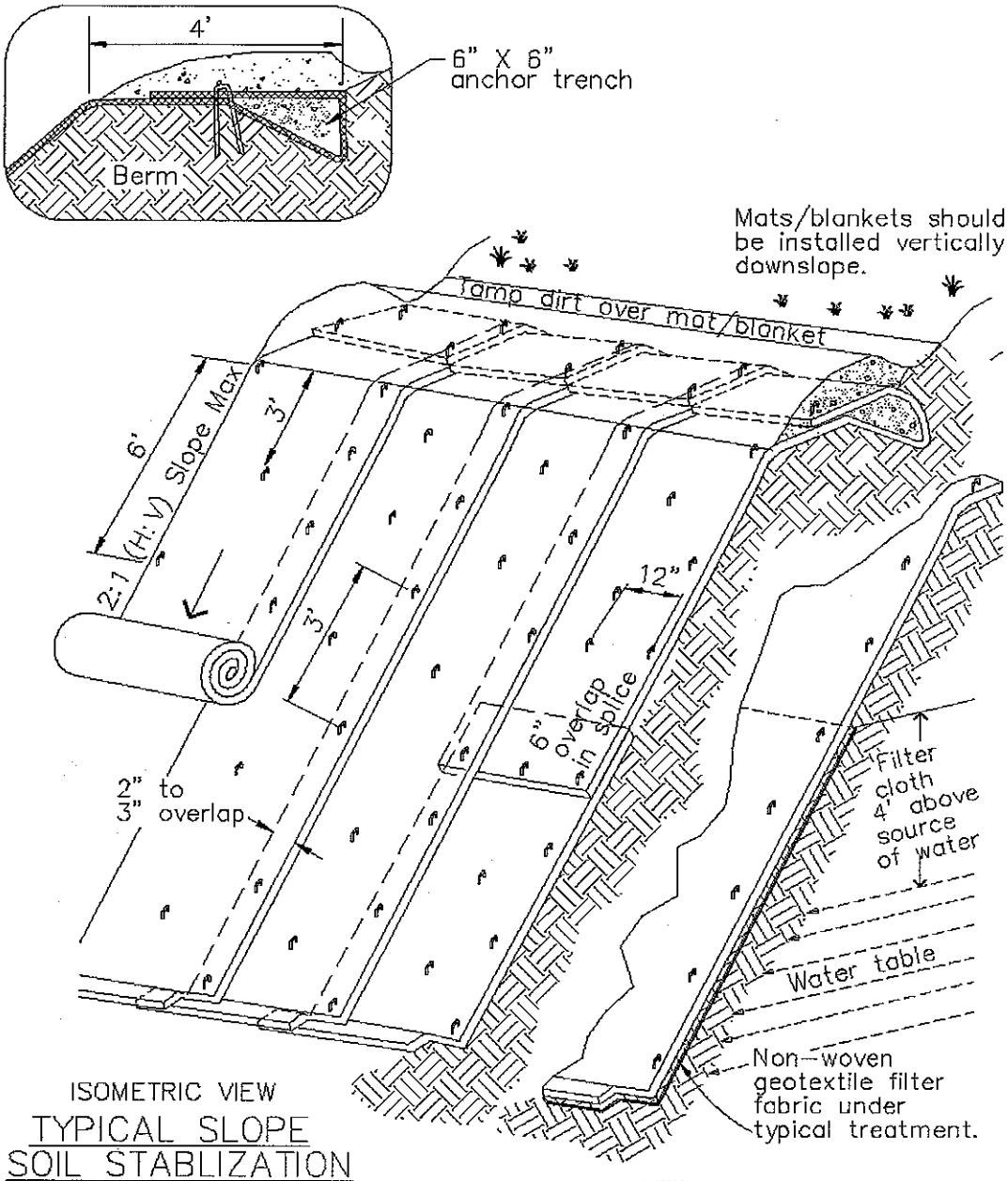

ISOMETRIC VIEW
TYPICAL SLOPE SOIL STABLIZATION
NTS

WET SLOPE LINING
NTS

NOTES:

1. Slope surface shall be free of rocks, clods, sticks and grass. Mats/blankets shall have good soil contact.
2. Lay blankets loosely and stake or staple to maintain direct contact with the soil. Do not stretch.
3. Install per manufacturer's recommendations

TYPICAL INSTALLATION DETAIL

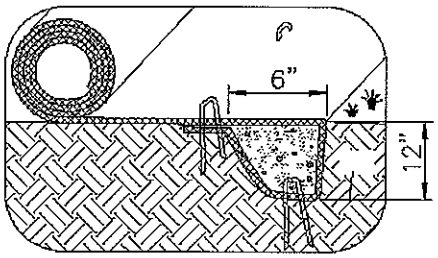

INITIAL CHANNEL ANCHOR TRENCH
NTS

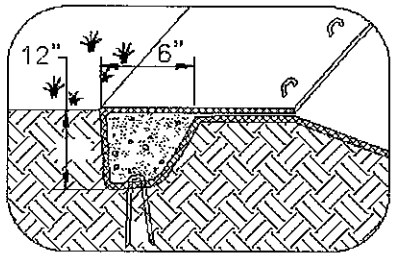

TERMINAL SLOPE AND CHANNEL ANCHOR TRENCH
NTS

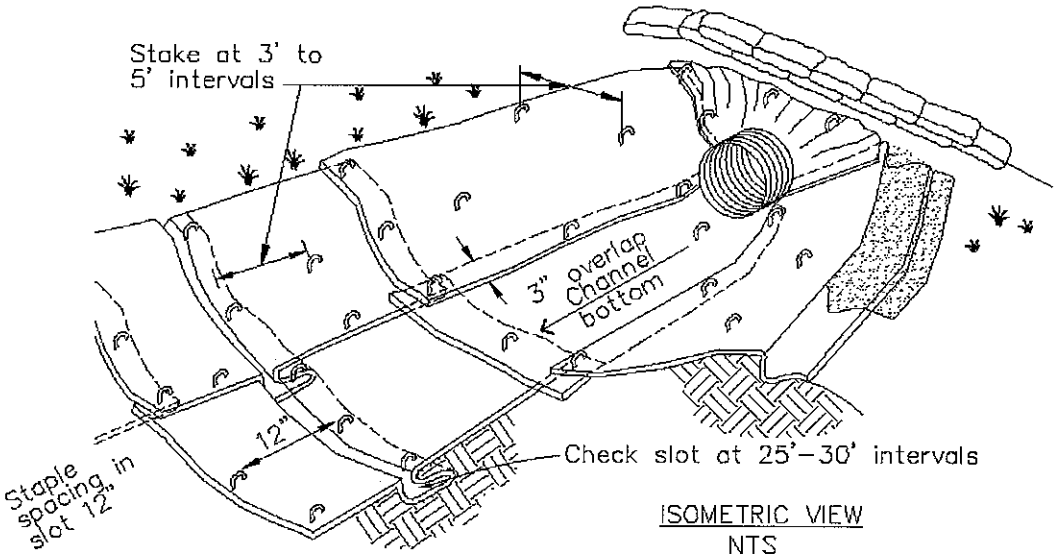

ISOMETRIC VIEW
NTS

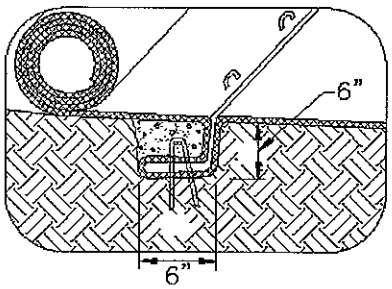

INTERMITTENT CHECK SLOT
NTS

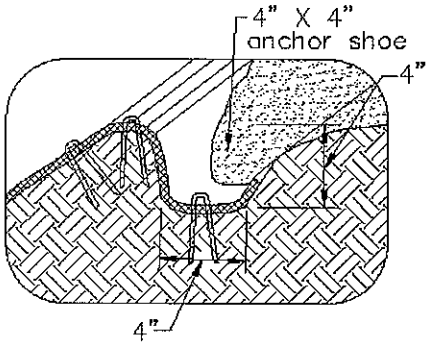

LONGITUDINAL ANCHOR TRENCH
NTS

NOTES:
1. Check slots to be constructed per manufacturers specifications.
2. Staking or stapling layout per manufacturers specifications.
3. Install per manufacturer's recommendations

TYPICAL INSTALLATION DETAIL

Vehicle and Equipment Cleaning NS-8

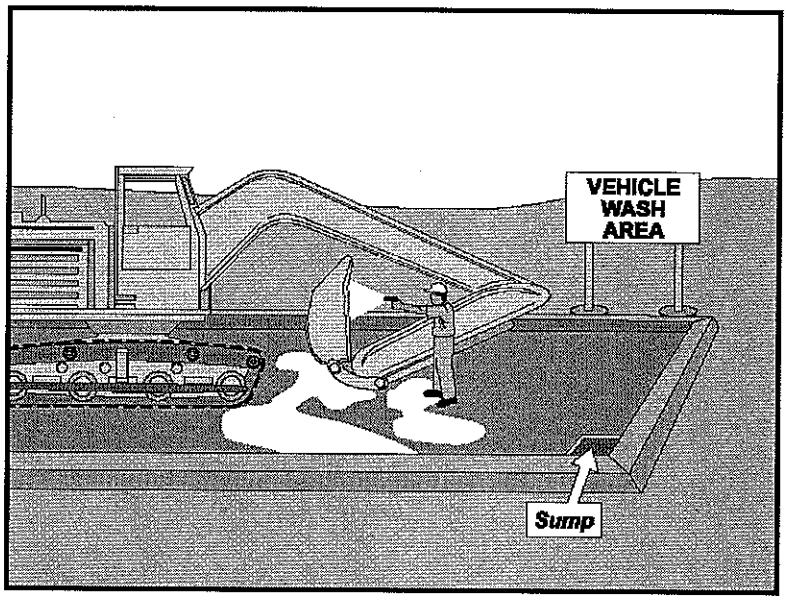

Objectives

EC	Erosion Control	
SE	Sediment Control	
TR	Tracking Control	
WE	Wind Erosion Control	
NS	Non-Stormwater Management Control	☑
WM	Waste Management and Materials Pollution Control	

Legend:
☑ Primary Objective
☒ Secondary Objective

Targeted Constituents

Sediment	☑
Nutrients	☑
Trash	
Metals	
Bacteria	
Oil and Grease	☑
Organics	☑

Potential Alternatives

None

Description and Purpose

Vehicle and equipment cleaning procedures and practices eliminate or reduce the discharge of pollutants to stormwater from vehicle and equipment cleaning operations. Procedures and practices include but are not limited to: using offsite facilities; washing in designated, contained areas only; eliminating discharges to the storm drain by infiltrating the wash water; and training employees and subcontractors in proper cleaning procedures.

Suitable Applications

These procedures are suitable on all construction sites where vehicle and equipment cleaning is performed.

Limitations

Even phosphate-free, biodegradable soaps have been shown to be toxic to fish before the soap degrades. Sending vehicles/equipment offsite should be done in conjunction with TR-1, Stabilized Construction Entrance/Exit.

Implementation

Other options to washing equipment onsite include contracting with either an offsite or mobile commercial washing business. These businesses may be better equipped to handle and dispose of the wash waters properly. Performing this work offsite can also be economical by eliminating the need for a separate washing operation onsite.

If washing operations are to take place onsite, then:

- Use phosphate-free, biodegradable soaps.
- Educate employees and subcontractors on pollution prevention measures.
- Do not permit steam cleaning onsite. Steam cleaning can generate significant pollutant concentrates.
- Cleaning of vehicles and equipment with soap, solvents or steam should not occur on the project site unless resulting wastes are fully contained and disposed of. Resulting wastes should not be discharged or buried, and must be captured and recycled or disposed according to the requirements of WM-10, Liquid Waste Management or WM-6, Hazardous Waste Management, depending on the waste characteristics. Minimize use of solvents. Use of diesel for vehicle and equipment cleaning is prohibited.
- All vehicles and equipment that regularly enter and leave the construction site must be cleaned offsite.
- When vehicle and equipment washing and cleaning must occur onsite, and the operation cannot be located within a structure or building equipped with appropriate disposal facilities, the outside cleaning area should have the following characteristics:
  - Located away from storm drain inlets, drainage facilities, or watercourses
  - Paved with concrete or asphalt and bermed to contain wash waters and to prevent runon and runoff
  - Configured with a sump to allow collection and disposal of wash water
  - No discharge of wash waters to storm drains or watercourses
  - Used only when necessary
- When cleaning vehicles and equipment with water:
  - Use as little water as possible. High-pressure sprayers may use less water than a hose and should be considered
  - Use positive shutoff valve to minimize water usage
  - Facility wash racks should discharge to a sanitary sewer, recycle system or other approved discharge system and must not discharge to the storm drainage system, watercourses, or to groundwater

Costs

Cleaning vehicles and equipment at an offsite facility may reduce overall costs for vehicle and equipment cleaning by eliminating the need to provide similar services onsite. When onsite cleaning is needed, the cost to establish appropriate facilities is relatively low on larger, long-duration projects, and moderate to high on small, short-duration projects.

Inspection and Maintenance

- Inspect and verify that activity-based BMPs are in place prior to the commencement of associated activities. While activities associated with the BMP are under way, inspect weekly during the rainy season and at two-week intervals in the non-rainy season to verify continued BMP implementation.
- Inspect BMPs subject to non-stormwater discharges daily while non-stormwater discharges occur.
- Inspection and maintenance is minimal, although some berm repair may be necessary.
- Monitor employees and subcontractors throughout the duration of the construction project to ensure appropriate practices are being implemented.
- Inspect sump regularly and remove liquids and sediment as needed.
- Prohibit employees and subcontractors from washing personal vehicles and equipment on the construction site.

References

Stormwater Quality Handbooks - Construction Site Best Management Practices (BMPs) Manual, State of California Department of Transportation (Caltrans), November 2000.

Swisher, R.D. Surfactant Biodegradation, Marcel Decker Corporation, 1987.

Vehicle and Equipment Fueling NS-9

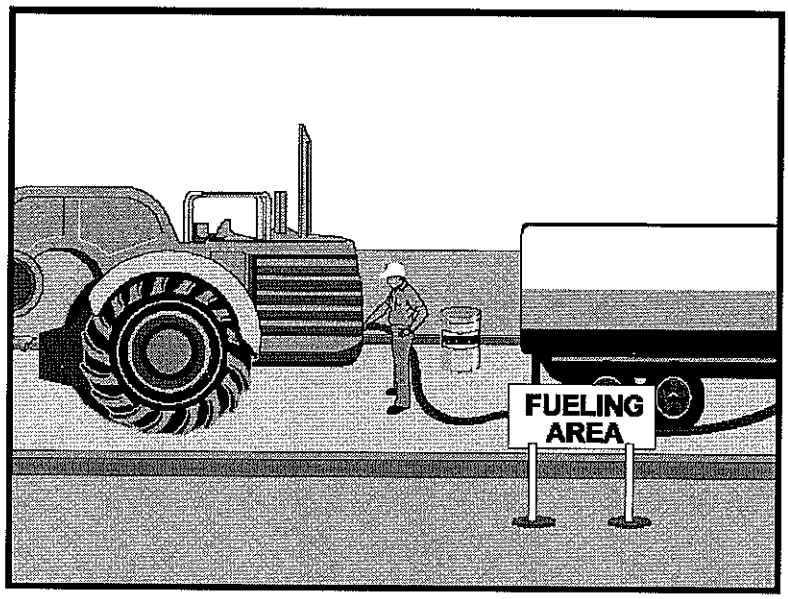

Objectives

EC	Erosion Control	
SE	Sediment Control	
TR	Tracking Control	
WE	Wind Erosion Control	
NS	Non-Stormwater Management Control	☑
WM	Waste Management and Materials Pollution Control	

Legend:
☑ Primary Objective
☒ Secondary Objective

Targeted Constituents

Sediment	
Nutrients	
Trash	
Metals	
Bacteria	
Oil and Grease	☑
Organics	

Potential Alternatives

None

Description and Purpose

Vehicle equipment fueling procedures and practices are designed to prevent fuel spills and leaks, and reduce or eliminate contamination of stormwater. This can be accomplished by using offsite facilities, fueling in designated areas only, enclosing or covering stored fuel, implementing spill controls, and training employees and subcontractors in proper fueling procedures.

Suitable Applications

These procedures are suitable on all construction sites where vehicle and equipment fueling takes place.

Limitations

Onsite vehicle and equipment fueling should only be used where it is impractical to send vehicles and equipment offsite for fueling. Sending vehicles and equipment offsite should be done in conjunction with TR-1, Stabilized Construction Entrance/ Exit.

Implementation

- Use offsite fueling stations as much as possible. These businesses are better equipped to handle fuel and spills properly. Performing this work offsite can also be economical by eliminating the need for a separate fueling area at a site.
- Discourage "topping-off" of fuel tanks.

- Absorbent spill cleanup materials and spill kits should be available in fueling areas and on fueling trucks, and should be disposed of properly after use.
- Drip pans or absorbent pads should be used during vehicle and equipment fueling, unless the fueling is performed over an impermeable surface in a dedicated fueling area.
- Use absorbent materials on small spills. Do not hose down or bury the spill. Remove the adsorbent materials promptly and dispose of properly.
- Avoid mobile fueling of mobile construction equipment around the site; rather, transport the equipment to designated fueling areas. With the exception of tracked equipment such as bulldozers and large excavators, most vehicles should be able to travel to a designated area with little lost time.
- Train employees and subcontractors in proper fueling and cleanup procedures.
- When fueling must take place onsite, designate an area away from drainage courses to be used. Fueling areas should be identified in the SWPPP.
- Dedicated fueling areas should be protected from stormwater runon and runoff, and should be located at least 50 ft away from downstream drainage facilities and watercourses. Fueling must be performed on level-grade areas.
- Protect fueling areas with berms and dikes to prevent runon, runoff, and to contain spills.
- Nozzles used in vehicle and equipment fueling should be equipped with an automatic shutoff to control drips. Fueling operations should not be left unattended.
- Use vapor recovery nozzles to help control drips as well as air pollution where required by Air Quality Management Districts (AQMD).
- Federal, state, and local requirements should be observed for any stationary above ground storage tanks.

Costs

- All of the above measures are low cost except for the capital costs of above ground tanks that meet all local environmental, zoning, and fire codes.

Inspection and Maintenance

- Vehicles and equipment should be inspected each day of use for leaks. Leaks should be repaired immediately or problem vehicles or equipment should be removed from the project site.
- Keep ample supplies of spill cleanup materials onsite.
- Immediately clean up spills and properly dispose of contaminated soil and cleanup materials.

References

Blueprint for a Clean Bay: Best Management Practices to Prevent Stormwater Pollution from Construction Related Activities; Santa Clara Valley Nonpoint Source Pollution Control Program, 1995.

Coastal Nonpoint Pollution Control Program: Program Development and Approval Guidance, Working Group Working Paper; USEPA, April 1992.

Stormwater Quality Handbooks - Construction Site Best Management Practices (BMPs) Manual, State of California Department of Transportation (Caltrans), November 2000.

Stormwater Management for Construction Activities, Developing Pollution Prevention Plans and Best Management Practices, EPA 832-R-92005; USEPA, April 1992.

Vehicle & Equipment Maintenance NS-10

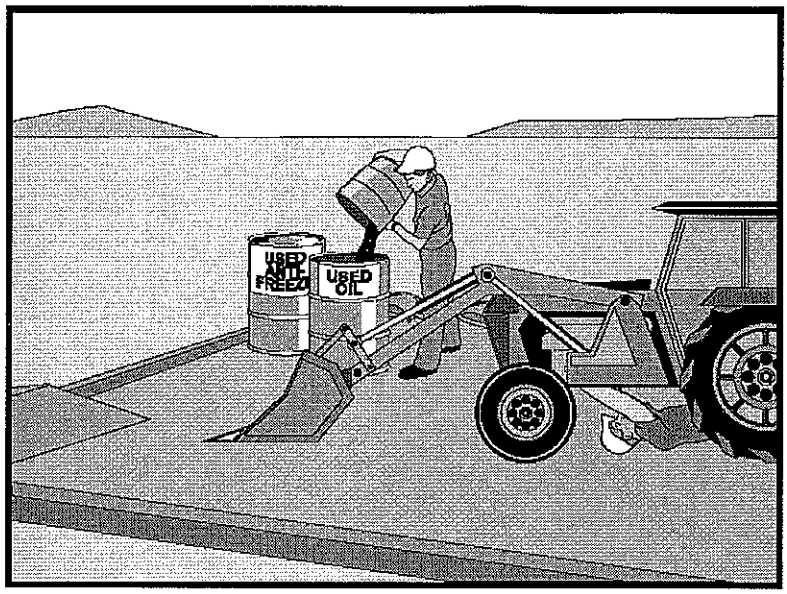

Objectives		
EC	Erosion Control	
SE	Sediment Control	
TR	Tracking Control	
WE	Wind Erosion Control	
NS	Non-Stormwater Management Control	☑
WM	Waste Management and Materials Pollution Control	

Legend:
☑ Primary Objective
☒ Secondary Objective

Targeted Constituents	
Sediment	
Nutrients	☑
Trash	☑
Metals	
Bacteria	
Oil and Grease	☑
Organics	☑

Potential Alternatives

None

Description and Purpose

Prevent or reduce the contamination of stormwater resulting from vehicle and equipment maintenance by running a "dry and clean site". The best option would be to perform maintenance activities at an offsite facility. If this option is not available then work should be performed in designated areas only, while providing cover for materials stored outside, checking for leaks and spills, and containing and cleaning up spills immediately. Employees and subcontractors must be trained in proper procedures.

Suitable Applications

These procedures are suitable on all construction projects where an onsite yard area is necessary for storage and maintenance of heavy equipment and vehicles.

Limitations

Onsite vehicle and equipment maintenance should only be used where it is impractical to send vehicles and equipment offsite for maintenance and repair. Sending vehicles/equipment offsite should be done in conjunction with TR-1, Stabilized Construction Entrance/Exit.

Outdoor vehicle or equipment maintenance is a potentially significant source of stormwater pollution. Activities that can contaminate stormwater include engine repair and service, changing or replacement of fluids, and outdoor equipment storage and parking (engine fluid leaks). For further information on vehicle or equipment servicing, see NS-8, Vehicle and Equipment Cleaning, and NS-9, Vehicle and Equipment Fueling.

CASQA
CALIFORNIA STORMWATER QUALITY ASSOCIATION

NS-10 Vehicle & Equipment Maintenance

Implementation

- Use offsite repair shops as much as possible. These businesses are better equipped to handle vehicle fluids and spills properly. Performing this work offsite can also be economical by eliminating the need for a separate maintenance area.
- If maintenance must occur onsite, use designated areas, located away from drainage courses. Dedicated maintenance areas should be protected from stormwater runon and runoff, and should be located at least 50 ft from downstream drainage facilities and watercourses.
- Drip pans or absorbent pads should be used during vehicle and equipment maintenance work that involves fluids, unless the maintenance work is performed over an impermeable surface in a dedicated maintenance area.
- Place a stockpile of spill cleanup materials where it will be readily accessible.
- All fueling trucks and fueling areas are required to have spill kits and/or use other spill protection devices.
- Use adsorbent materials on small spills. Remove the absorbent materials promptly and dispose of properly.
- Inspect onsite vehicles and equipment daily at startup for leaks, and repair immediately.
- Keep vehicles and equipment clean; do not allow excessive build-up of oil and grease.
- Segregate and recycle wastes, such as greases, used oil or oil filters, antifreeze, cleaning solutions, automotive batteries, hydraulic and transmission fluids. Provide secondary containment and covers for these materials if stored onsite.
- Train employees and subcontractors in proper maintenance and spill cleanup procedures.
- Drip pans or plastic sheeting should be placed under all vehicles and equipment placed on docks, barges, or other structures over water bodies when the vehicle or equipment is planned to be idle for more than 1 hour.
- For long-term projects, consider using portable tents or covers over maintenance areas if maintenance cannot be performed offsite.
- Consider use of new, alternative greases and lubricants, such as adhesive greases, for chassis lubrication and fifth-wheel lubrication.
- Properly dispose of used oils, fluids, lubricants, and spill cleanup materials.
- Do not place used oil in a dumpster or pour into a storm drain or watercourse.
- Properly dispose of or recycle used batteries.
- Do not bury used tires.
- Repair leaks of fluids and oil immediately.

Listed below is further information if you must perform vehicle or equipment maintenance onsite.

Safer Alternative Products

- Consider products that are less toxic or hazardous than regular products. These products are often sold under an "environmentally friendly" label.
- Consider use of grease substitutes for lubrication of truck fifth-wheels. Follow manufacturers label for details on specific uses.
- Consider use of plastic friction plates on truck fifth-wheels in lieu of grease. Follow manufacturers label for details on specific uses.

Waste Reduction

Parts are often cleaned using solvents such as trichloroethylene, trichloroethane, or methylene chloride. Many of these cleaners are listed in California Toxic Rule as priority pollutants. These materials are harmful and must not contaminate stormwater. They must be disposed of as a hazardous waste. Reducing the number of solvents makes recycling easier and reduces hazardous waste management costs. Often, one solvent can perform a job as well as two different solvents. Also, if possible, eliminate or reduce the amount of hazardous materials and waste by substituting non-hazardous or less hazardous materials. For example, replace chlorinated organic solvents with non-chlorinated solvents. Non-chlorinated solvents like kerosene or mineral spirits are less toxic and less expensive to dispose of properly. Check the list of active ingredients to see whether it contains chlorinated solvents. The "chlor" term indicates that the solvent is chlorinated. Also, try substituting a wire brush for solvents to clean parts.

Recycling and Disposal

Separating wastes allows for easier recycling and may reduce disposal costs. Keep hazardous wastes separate, do not mix used oil solvents, and keep chlorinated solvents (like,-trichloroethane) separate from non-chlorinated solvents (like kerosene and mineral spirits). Promptly transfer used fluids to the proper waste or recycling drums. Don't leave full drip pans or other open containers lying around. Provide cover and secondary containment until these materials can be removed from the site.

Oil filters can be recycled. Ask your oil supplier or recycler about recycling oil filters.

Do not dispose of extra paints and coatings by dumping liquid onto the ground or throwing it into dumpsters. Allow coatings to dry or harden before disposal into covered dumpsters.

Store cracked batteries in a non-leaking secondary container. Do this with all cracked batteries, even if you think all the acid has drained out. If you drop a battery, treat it as if it is cracked. Put it into the containment area until you are sure it is not leaking.

Costs

All of the above are low cost measures. Higher costs are incurred to setup and maintain onsite maintenance areas.

NS-10 Vehicle & Equipment Maintenance

Inspection and Maintenance

- Inspect and verify that activity-based BMPs are in place prior to the commencement of associated activities. While activities associated with the BMP are under way, inspect weekly during the rainy season and at two-week intervals in the non-rainy season to verify continued BMP implementation.
- Inspect BMPs subject to non-stormwater discharges daily while non-stormwater discharges occur.
- Keep ample supplies of spill cleanup materials onsite.
- Maintain waste fluid containers in leak proof condition.
- Vehicles and equipment should be inspected on each day of use. Leaks should be repaired immediately or the problem vehicle(s) or equipment should be removed from the project site.
- Inspect equipment for damaged hoses and leaky gaskets routinely. Repair or replace as needed.

References

Blueprint for a Clean Bay: Best Management Practices to Prevent Stormwater Pollution from Construction Related Activities; Santa Clara Valley Nonpoint Source Pollution Control Program, 1995.

Coastal Nonpoint Pollution Control Program; Program Development and Approval Guidance, Working Group, Working Paper; USEPA, April 1992.

Stormwater Quality Handbooks - Construction Site Best Management Practices (BMPs) Manual, State of California Department of Transportation (Caltrans), November 2000.

Silt Fence

SE-1

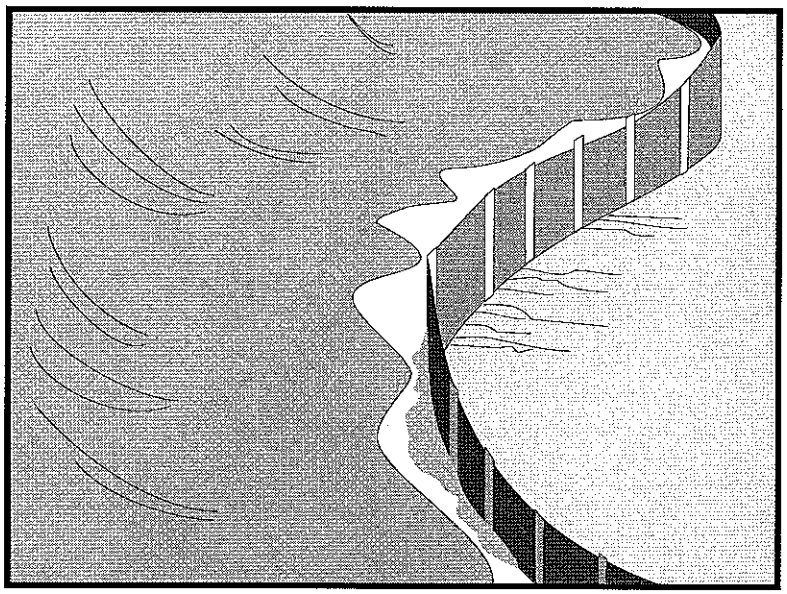

Objectives

EC	Erosion Control	
SE	Sediment Control	☑
TR	Tracking Control	
WE	Wind Erosion Control	
NS	Non-Stormwater Management Control	
WM	Waste Management and Materials Pollution Control	

Legend:

☑ **Primary Objective**

☒ **Secondary Objective**

Targeted Constituents

Sediment	☑
Nutrients	
Trash	
Metals	
Bacteria	
Oil and Grease	
Organics	

Potential Alternatives

SE-5 Fiber Rolls

SE-6 Gravel Bag Berm

SE-8 Sandbag Barrier

SE-9 Straw Bale Barrier

Description and Purpose

A silt fence is made of a filter fabric that has been entrenched, attached to supporting poles, and sometimes backed by a plastic or wire mesh for support. The silt fence detains sediment-laden water, promoting sedimentation behind the fence.

Suitable Applications

Silt fences are suitable for perimeter control, placed below areas where sheet flows discharge from the site. They should also be used as interior controls below disturbed areas where runoff may occur in the form of sheet and rill erosion. Silt fences are generally ineffective in locations where the flow is concentrated and are only applicable for sheet or overland flows. Silt fences are most effective when used in combination with erosion controls. Suitable applications include:

- Along the perimeter of a project.
- Below the toe or down slope of exposed and erodible slopes.
- Along streams and channels.
- Around temporary spoil areas and stockpiles.
- Below other small cleared areas.

Limitations

- Do not use in streams, channels, drain inlets, or anywhere flow is concentrated.

CASQA
CALIFORNIA STORMWATER QUALITY ASSOCIATION

- Do not use in locations where ponded water may cause flooding.
- Do not place fence on a slope, or across any contour line. If not installed at the same elevation throughout, silt fences will create erosion.
- Filter fences will create a temporary sedimentation pond on the upstream side of the fence and may cause temporary flooding. Fences not constructed on a level contour will be overtopped by concentrated flow resulting in failure of the filter fence.
- Improperly installed fences are subject to failure from undercutting, overlapping, or collapsing.
  - Not effective unless trenched and keyed in.
  - Not intended for use as mid-slope protection on slopes greater than 4:1 (H:V).
  - Do not allow water depth to exceed 1.5 ft at any point.

Implementation

General

A silt fence is a temporary sediment barrier consisting of filter fabric stretched across and attached to supporting posts, entrenched, and, depending upon the strength of fabric used, supported with plastic or wire mesh fence. Silt fences trap sediment by intercepting and detaining small amounts of sediment-laden runoff from disturbed areas in order to promote sedimentation behind the fence.

Silt fences are preferable to straw bale barriers in many cases. Laboratory work at the Virginia Highway and Transportation Research Council has shown that silt fences can trap a much higher percentage of suspended sediments than can straw bales. While the failure rate of silt fences is lower than that of straw bale barriers, there are many instances where silt fences have been improperly installed. The following layout and installation guidance can improve performance and should be followed:

- Use principally in areas where sheet flow occurs.
- Don't use in streams, channels, or anywhere flow is concentrated. Don't use silt fences to divert flow.
- Don't use below slopes subject to creep, slumping, or landslides.
- Select filter fabric that retains 85% of soil by weight, based on sieve analysis, but that is not finer than an equivalent opening size of 70.
- Install along a level contour, so water does not pond more than 1.5 ft at any point along the silt fence.
- The maximum length of slope draining to any point along the silt fence should be 200 ft or less.
- The maximum slope perpendicular to the fence line should be 1:1.

- Provide sufficient room for runoff to pond behind the fence and to allow sediment removal equipment to pass between the silt fence and toes of slopes or other obstructions. About 1200 ft^2 of ponding area should be provided for every acre draining to the fence.
- Turn the ends of the filter fence uphill to prevent stormwater from flowing around the fence.
- Leave an undisturbed or stabilized area immediately down slope from the fence where feasible.
- Silt fences should remain in place until the disturbed area is permanently stabilized.

Design and Layout

Selection of a filter fabric is based on soil conditions at the construction site (which affect the equivalent opening size (EOS) fabric specification) and characteristics of the support fence (which affect the choice of tensile strength). The designer should specify a filter fabric that retains the soil found on the construction site yet that it has openings large enough to permit drainage and prevent clogging. The following criteria is recommended for selection of the equivalent opening size:

1. If 50 percent or less of the soil, by weight, will pass the U.S. Standard Sieve No. 200, select the EOS to retain 85 % of the soil. The EOS should not be finer than EOS 70.
2. For all other soil types, the EOS should be no larger than the openings in the U.S. Standard Sieve No. 70 except where direct discharge to a stream, lake, or wetland will occur, then the EOS should be no larger than Standard Sieve No. 100.

To reduce the chance of clogging, it is preferable to specify a fabric with openings as large as allowed by the criteria. No fabric should be specified with an EOS smaller than U.S. Standard Sieve No. 100. If 85% or more of a soil, by weight, passes through the openings in a No. 200 sieve, filter fabric should not be used. Most of the particles in such a soil would not be retained if the EOS was too large and they would clog the fabric quickly if the EOS were small enough to capture the soil.

The fence should be supported by a plastic or wire mesh if the fabric selected does not have sufficient strength and bursting strength characteristics for the planned application (as recommended by the fabric manufacturer). Filter fabric material should contain ultraviolet inhibitors and stabilizers to provide a minimum of six months of expected usable construction life at a temperature range of 0 °F to 120 °F.

- Layout in accordance with attached figures.
- For slopes steeper than 2:1 (H:V) and that contain a high number of rocks or large dirt clods that tend to dislodge, it may be necessary to install additional protection immediately adjacent to the bottom of the slope, prior to installing silt fence. Additional protection may be a chain link fence or a cable fence.
- For slopes adjacent to sensitive receiving waters or Environmentally Sensitive Areas (ESAs), silt fence should be used in conjunction with erosion control BMPs.

Materials

- Silt fence fabric should be woven polypropylene with a minimum width of 36 in. and a minimum tensile strength of 100 lb force. The fabric should conform to the requirements in ASTM designation D4632 and should have an integral reinforcement layer. The reinforcement layer should be a polypropylene, or equivalent, net provided by the manufacturer. The permittivity of the fabric should be between 0.1 sec^{-1} and 0.15 sec^{-1} in conformance with the requirements in ASTM designation D4491.

- Wood stakes should be commercial quality lumber of the size and shape shown on the plans. Each stake should be free from decay, splits or cracks longer than the thickness of the stake or other defects that would weaken the stakes and cause the stakes to be structurally unsuitable.

- Staples used to fasten the fence fabric to the stakes should be not less than 1.75 in. long and should be fabricated from 15 gauge or heavier wire. The wire used to fasten the tops of the stakes together when joining two sections of fence should be 9 gauge or heavier wire. Galvanizing of the fastening wire will not be required.

- There are new products that may use prefabricated plastic holders for the silt fence and use bar reinforcement instead of wood stakes. If bar reinforcement is used in lieu of wood stakes, use number four or greater bar. Provide end protection for any exposed bar reinforcement.

Installation Guidelines

Silt fences are to be constructed on a level contour. Sufficient area should exist behind the fence for ponding to occur without flooding or overtopping the fence.

- A trench should be excavated approximately 6 in. wide and 6 in. deep along the line the proposed silt fence.

- Bottom of the silt fence should be keyed-in a minimum of 12 in.

- Posts should be spaced a maximum of 6 ft apart and driven securely into the ground a minimum of 18 in. or 12 in. below the bottom of the trench.

- When standard strength filter fabric is used, a plastic or wire mesh support fence should be fastened securely to the upslope side of posts using heavy–duty wire staples at least 1 in. long. The mesh should extend into the trench. When extra-strength filter fabric and closer post spacing are used, the mesh support fence may be eliminated. Filter fabric should be purchased in a long roll, and then cut to the length of the barrier. When joints are necessary, filter cloth should be spliced together only at a support post, with a minimum 6 in. overlap and both ends securely fastened to the post.

- The trench should be backfilled with compacted native material.

- Construct silt fences with a setback of at least 3 ft from the toe of a slope. Where a silt fence is determined to be not practicable due to specific site conditions, the silt fence may be constructed at the toe of the slope, but should be constructed as far from the toe of the slope as practicable. Silt fences close to the toe of the slope will be less effective and difficult to maintain.

- Construct the length of each reach so that the change in base elevation along the reach does not exceed 1/3 the height of the barrier; in no case should the reach exceed 500 ft.

Costs

- Average annual cost for installation and maintenance (assumes 6 month useful life): $7 per lineal foot ($850 per drainage acre). Range of cost is $3.50 - $9.10 per lineal foot.

Inspection and Maintenance

- Inspect BMPs prior to forecast rain, daily during extended rain events, after rain events, weekly during the rainy season, and at two-week intervals during the non-rainy season.
- Repair undercut silt fences.
- Repair or replace split, torn, slumping, or weathered fabric. The lifespan of silt fence fabric is generally 5 to 8 months.
- Silt fences that are damaged and become unsuitable for the intended purpose should be removed from the site of work, disposed of, and replaced with new silt fence barriers.
- Sediment that accumulates in the BMP must be periodically removed in order to maintain BMP effectiveness. Sediment should be removed when the sediment accumulation reaches one-third of the barrier height. Sediment removed during maintenance may be incorporated into earthwork on the site or disposed at an appropriate location.
- Silt fences should be left in place until the upstream area is permanently stabilized. Until then, the silt fence must be inspected and maintained.
- Holes, depressions, or other ground disturbance caused by the removal of the silt fences should be backfilled and repaired.

References

Manual of Standards of Erosion and Sediment Control Measures, Association of Bay Area Governments, May 1995.

National Management Measures to Control Nonpoint Source Pollution from Urban Areas, United States Environmental Protection Agency, 2002.

Proposed Guidance Specifying Management Measures for Sources of Nonpoint Pollution in Coastal Waters, Work Group-Working Paper, USEPA, April 1992.

Sedimentation and Erosion Control Practices, and Inventory of Current Practices (Draft), UESPA, 1990.

Southeastern Wisconsin Regional Planning Commission (SWRPC). Costs of Urban Nonpoint Source Water Pollution Control Measures. Technical Report No. 31. Southeastern Wisconsin Regional Planning Commission, Waukesha, WI. 1991

Stormwater Quality Handbooks - Construction Site Best Management Practices (BMPs) Manual, State of California Department of Transportation (Caltrans), November 2000.

Stormwater Management Manual for The Puget Sound Basin, Washington State Department of Ecology, Public Review Draft, 1991.

U.S. Environmental Protection Agency (USEPA). Stormwater Management for Industrial Activities: Developing Pollution Prevention Plans and Best Management Practices. U.S. Environmental Protection Agency, Office of Water, Washington, DC, 1992.

Water Quality Management Plan for the Lake Tahoe Region, Volume II, Handbook of Management Practices, Tahoe Regional Planning Agency, November 1988.

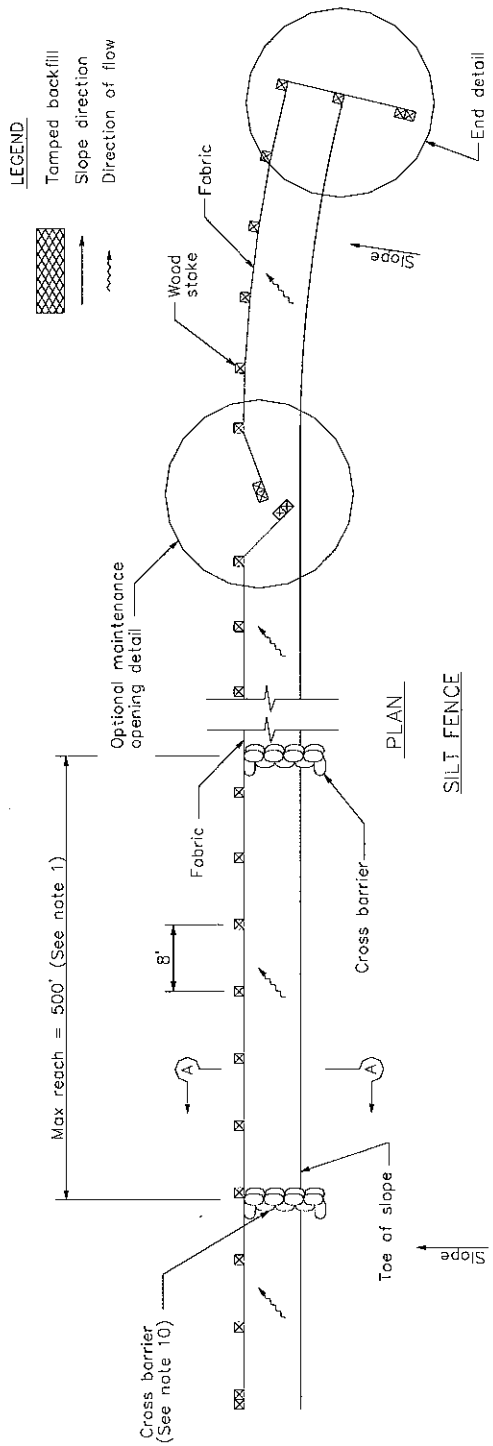

PLAN

SILT FENCE

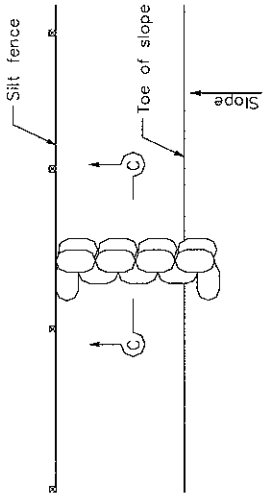

CROSS BARRIER DETAIL

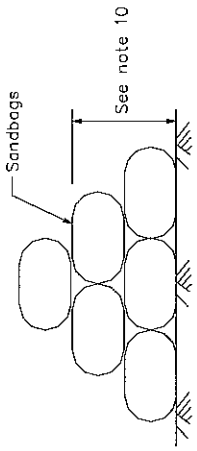

SECTION C–C

NOTES

1. Construct the length of each reach so that the change in base elevation along the reach does not exceed 1/3 the height of the linear barrier, in no case shall the reach length exceed 500'.
2. The last 8'–0" of fence shall be turned up slope.
3. Stake dimensions are nominal.
4. Dimension may vary to fit field condition.
5. Stakes shall be spaced at 8'–0" maximum and shall be positioned on downstream side of fence.
6. Stakes to overlap and fence fabric to fold around each stake one full turn. Secure fabric to stake with 4 staples.
7. Stakes shall be driven tightly together to prevent potential flow–through of sediment at joint. The tops of the stakes shall be secured with wire.
8. For end stake, fence fabric shall be folded around two stakes one full turn and secured with 4 staples.
9. Minimum 4 staples per stake. Dimensions shown are typical.
10. Cross barriers shall be a minimum of 1/3 and a maximum of 1/2 the height of the linear barrier.
11. Maintenance openings shall be constructed in a manner to ensure sediment remains behind silt fence.
12. Joining sections shall not be placed at sump locations.
13. Sandbag rows and layers shall be offset to eliminate gaps.

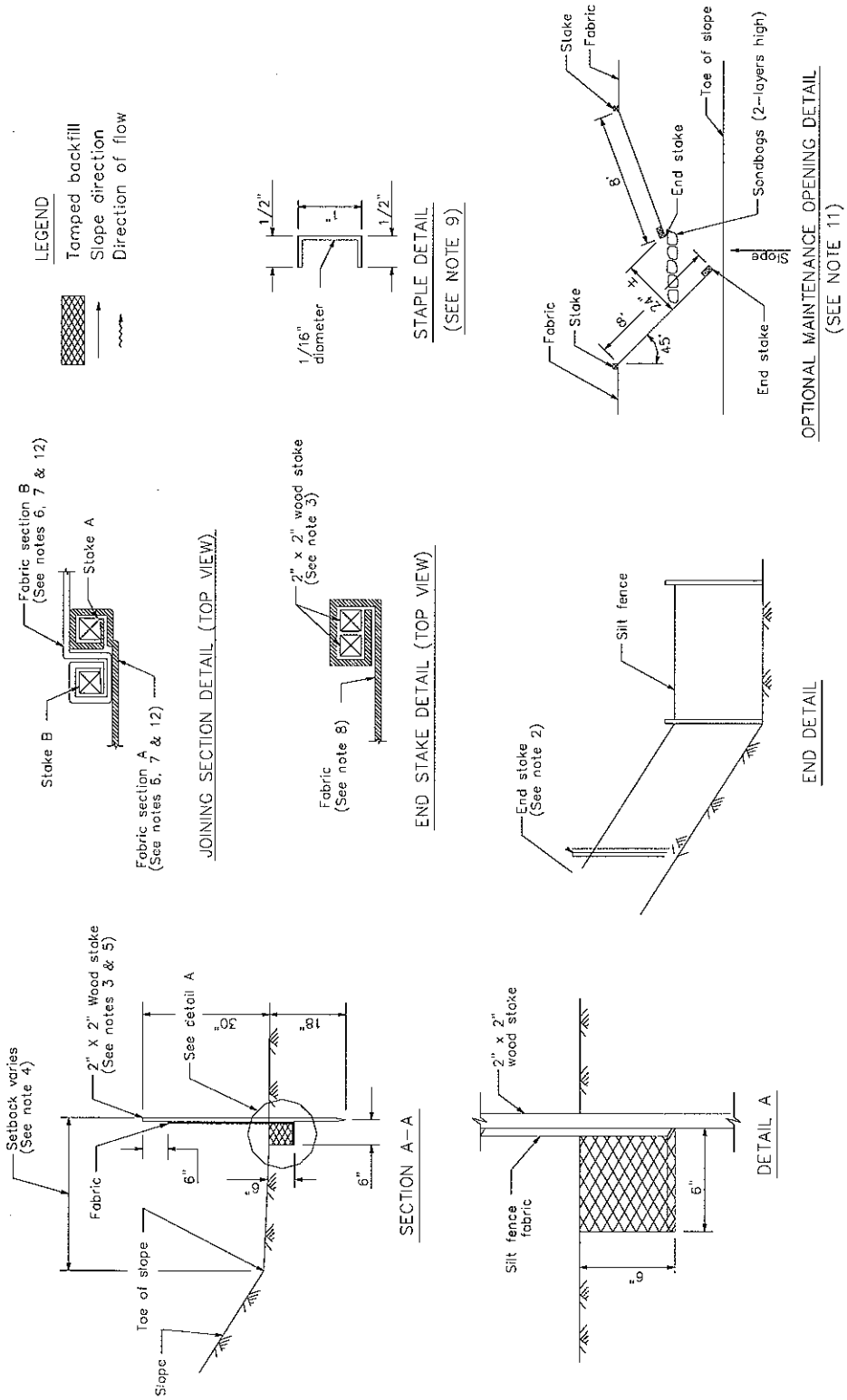
LEGEND
Tamped backfill
Slope direction
Direction of flow
1/2"
1"
1/2"
1/16" diameter
STAPLE DETAIL
(SEE NOTE 9)
Stake
Fabric
Toe of slope
Sandbags (2-layers high)
End stake
8"
24"
8"
45°
Slope
Fabric
Stake
End stake
OPTIONAL MAINTENANCE OPENING DETAIL
(SEE NOTE 11)
Fabric section B
(See notes 6, 7 & 12)
Stake A
Stake B
Fabric section A
(See notes 6, 7 & 12)
JOINING SECTION DETAIL (TOP VIEW)
2" x 2" wood stake
(See note 3)
Fabric
(See note 8)
END STAKE DETAIL (TOP VIEW)
Silt fence
End stake
(See note 2)
END DETAIL
Setback varies
(See note 4)
2" X 2" Wood stake
(See notes 3 & 5)
See detail A
30"
18"
Fabric
6"
6"
6"
Toe of slope
Slope
SECTION A-A
2" x 2"
wood stake
Silt fence
fabric
6"
6"
DETAIL A

Street Sweeping and Vacuuming SE-7

Objectives

EC	Erosion Control	
SE	Sediment Control	☒
TR	Tracking Control	☑
WE	Wind Erosion Control	
NS	Non-Stormwater Management Control	
WM	Waste Management and Materials Pollution Control	

Legend:

☑ Primary Objective

☒ Secondary Objective

Targeted Constituents

Sediment	☑
Nutrients	
Trash	☑
Metals	
Bacteria	
Oil and Grease	☑
Organics	

Potential Alternatives

None

Description and Purpose

Street sweeping and vacuuming includes use of self-propelled and walk-behind equipment to remove sediment from streets and roadways, and to clean paved surfaces in preparation for final paving. Sweeping and vacuuming prevents sediment from the project site from entering storm drains or receiving waters.

Suitable Applications

Sweeping and vacuuming are suitable anywhere sediment is tracked from the project site onto public or private paved streets and roads, typically at points of egress. Sweeping and vacuuming are also applicable during preparation of paved surfaces for final paving.

Limitations

Sweeping and vacuuming may not be effective when sediment is wet or when tracked soil is caked (caked soil may need to be scraped loose).

Implementation

- Controlling the number of points where vehicles can leave the site will allow sweeping and vacuuming efforts to be focused, and perhaps save money.
- Inspect potential sediment tracking locations daily.
- Visible sediment tracking should be swept or vacuumed on a daily basis.

- Do not use kick brooms or sweeper attachments. These tend to spread the dirt rather than remove it.
- If not mixed with debris or trash, consider incorporating the removed sediment back into the project

Costs

Rental rates for self-propelled sweepers vary depending on hopper size and duration of rental. Expect rental rates from $58/hour (3 yd^3 hopper) to $88/hour (9 yd^3 hopper), plus operator costs. Hourly production rates vary with the amount of area to be swept and amount of sediment. Match the hopper size to the area and expect sediment load to minimize time spent dumping.

Inspection and Maintenance

- Inspect BMPs prior to forecast rain, daily during extended rain events, after rain events, weekly during the rainy season, and at two-week intervals during the non-rainy season.
- When actively in use, points of ingress and egress must be inspected daily.
- When tracked or spilled sediment is observed outside the construction limits, it must be removed at least daily. More frequent removal, even continuous removal, may be required in some jurisdictions.
- Be careful not to sweep up any unknown substance or any object that may be potentially hazardous.
- Adjust brooms frequently; maximize efficiency of sweeping operations.
- After sweeping is finished, properly dispose of sweeper wastes at an approved dumpsite.

References

Stormwater Quality Handbooks - Construction Site Best Management Practices (BMPs) Manual, State of California Department of Transportation (Caltrans), November 2000.

Labor Surcharge and Equipment Rental Rates, State of California Department of Transportation (Caltrans), April 1, 2002 – March 31, 2003.

Storm Drain Inlet Protection SE-10

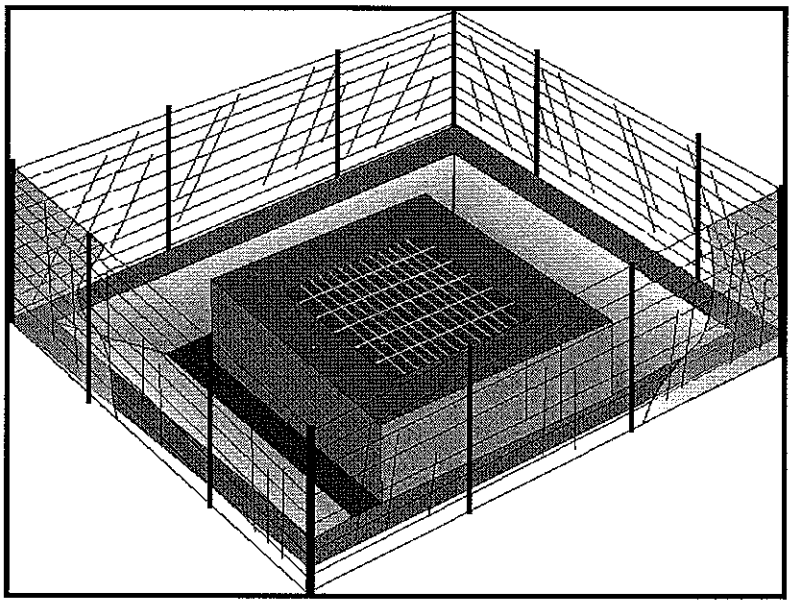

Objectives

EC	Erosion Control	
SE	Sediment Control	☑
TR	Tracking Control	
WE	Wind Erosion Control	
NS	Non-Stormwater Management Control	
WM	Waste Management and Materials Pollution Control	

Legend:

☑ Primary Objective

☒ Secondary Objective

Targeted Constituents

Sediment	☑
Nutrients	
Trash	☑
Metals	
Bacteria	
Oil and Grease	
Organics	

Potential Alternatives

SE-1 Silt Fence

SE-5 Fiber Rolls

SE-6 Gravel Bag Berm

SE-8 Sandbag Barrier

SE-9 Straw Bale Barrier

Description and Purpose

Storm drain inlet protection consists of a sediment filter or an impounding area around or upstream of a storm drain, drop inlet, or curb inlet. Storm drain inlet protection measures temporarily pond runoff before it enters the storm drain, allowing sediment to settle. Some filter configurations also remove sediment by filtering, but usually the ponding action results in the greatest sediment reduction.

Suitable Applications

Every storm drain inlet receiving sediment-laden runoff should be protected.

Limitations

- Drainage area should not exceed 1 acre.
- Straw bales, while potentially effective, have not produced in practice satisfactory results, primarily due to improper installation.
- Requires an adequate area for water to pond without encroaching into portions of the roadway subject to traffic.
- Inlet protection usually requires other methods of temporary protection to prevent sediment-laden stormwater and non-stormwater discharges from entering the storm drain system.
- Sediment removal may be difficult in high flow conditions or if runoff is heavily sediment laden. If high flow conditions are

CASQA
CALIFORNIA STORMWATER QUALITY ASSOCIATION

expected, use other onsite sediment trapping techniques in conjunction with inlet protection.

- Frequent maintenance is required.
- For drainage areas larger than 1 acre, runoff should be routed to a sediment-trapping device designed for larger flows. See BMPs SE-2, Sediment Basin, and SE-3, Sediment Traps.
- Excavated drop inlet sediment traps are appropriate where relatively heavy flows are expected, and overflow capability is needed.

Implementation

General

Large amounts of sediment may enter the storm drain system when storm drains are installed before the upslope drainage area is stabilized, or where construction is adjacent to an existing storm drain. In cases of extreme sediment loading, the storm drain itself may clog and lose a major portion of its capacity. To avoid these problems, it is necessary to prevent sediment from entering the system at the inlets.

Inlet control measures presented in this handbook should not be used for inlets draining more than one acre. Runoff from larger disturbed areas should be first routed through SE-2, Sediment Basin or SE-3, Sediment Trap. Different types of inlet protection are appropriate for different applications depending on site conditions and the type of inlet. Inlet protection methods not presented in this handbook should be approved by the local stormwater management agency.

Design and Layout

Identify existing and planned storm drain inlets that have the potential to receive sediment-laden surface runoff. Determine if storm drain inlet protection is needed and which method to use.

- Limit upstream drainage area to 1 acre maximum. For larger drainage areas, use SE-2, Sediment Basin, or SE-3, Sediment Trap, upstream of the inlet protection device.
- The key to successful and safe use of storm drain inlet protection devices is to know where runoff will pond or be diverted.
  - Determine the acceptable location and extent of ponding in the vicinity of the drain inlet. The acceptable location and extent of ponding will influence the type and design of the storm drain inlet protection device.
  - Determine the extent of potential runoff diversion caused by the storm drain inlet protection device. Runoff ponded by inlet protection devices may flow around the device and towards the next downstream inlet. In some cases, this is acceptable; in other cases, serious erosion or downstream property damage can be caused by these diversions. The possibility of runoff diversions will influence whether or not storm drain inlet protection is suitable; and, if suitable, the type and design of the device.
- The location and extent of ponding, and the extent of diversion, can usually be controlled through appropriate placement of the inlet protection device. In some cases, moving the

inlet protection device a short distance upstream of the actual inlet can provide more efficient sediment control, limit ponding to desired areas, and prevent or control diversions.

- Four types of inlet protection are presented below. However, it is recognized that other effective methods and proprietary devices exist and may be selected.
  - Filter Fabric Fence: Appropriate for drainage basins with less than a 5% slope, sheet flows, and flows under 0.5 cfs.
  - Excavated Drop Inlet Sediment Trap: An excavated area around the inlet to trap sediment (SE-3).
  - Gravel bag barrier: Used to create a small sediment trap upstream of inlets on sloped, paved streets. Appropriate for sheet flow or when concentrated flow may exceed 0.5 cfs, and where overtopping is required to prevent flooding.
  - Block and Gravel Filter: Appropriate for flows greater than 0.5 cfs.
- Select the appropriate type of inlet protection and design as referred to or as described in this fact sheet.
- Provide area around the inlet for water to pond without flooding structures and property.
- Grates and spaces around all inlets should be sealed to prevent seepage of sediment-laden water.
- Excavate sediment sumps (where needed) 1 to 2 ft with 2:1 side slopes around the inlet.

Installation

- ***DI Protection Type 1 - Filter Fabric Fence*** - The filter fabric fence (Type 1) protection is shown in the attached figure. Similar to constructing a silt fence; see BMP SE-1, Silt Fence. Do not place filter fabric underneath the inlet grate since the collected sediment may fall into the drain inlet when the fabric is removed or replaced.
  1. Excavate a trench approximately 6 in. wide and 6 in. deep along the line of the silt fence inlet protection device.
  2. Place 2 in. by 2 in. wooden stakes around the perimeter of the inlet a maximum of 3 ft apart and drive them at least 18 in. into the ground or 12 in. below the bottom of the trench. The stakes must be at least 48 in.
  3. Lay fabric along bottom of trench, up side of trench, and then up stakes. See SE-1, Silt Fence, for details. The maximum silt fence height around the inlet is 24 in.
  4. Staple the filter fabric (for materials and specifications, see SE-1, Silt Fence) to wooden stakes. Use heavy-duty wire staples at least 1 in. in length.
  5. Backfill the trench with gravel or compacted earth all the way around.
- ***DI Protection Type 2 - Excavated Drop Inlet Sediment Trap*** - The excavated drop inlet sediment trap (Type 2) is shown in the attached figures. Install filter fabric fence in

accordance with DI Protection Type 1. Size excavated trap to provide a minimum storage capacity calculated at the rate 67 yd^3/acre of drainage area.

- ***DI Protection Type 3 - Gravel bag*** - The gravel bag barrier (Type 3) is shown in the figures. Flow from a severe storm should not overtop the curb. In areas of high clay and silts, use filter fabric and gravel as additional filter media. Construct gravel bags in accordance with SE-6, Gravel Bag Berm. Gravel bags should be used due to their high permeability.

  1. Use sand bag made of geotextile fabric (not burlap) and fill with 0.75 in. rock or 0.25 in. pea gravel.
  2. Construct on gently sloping street.
  3. Leave room upstream of barrier for water to pond and sediment to settle.
  4. Place several layers of sand bags – overlapping the bags and packing them tightly together.
  5. Leave gap of one bag on the top row to serve as a spillway. Flow from a severe storm (e.g., 10 year storm) should not overtop the curb.

- ***DI Protection Type 4 – Block and Gravel Filter*** - The block and gravel filter (Type 4) is shown in the figures. Block and gravel filters are suitable for curb inlets commonly used in residential, commercial, and industrial construction.

  1. Place hardware cloth or comparable wire mesh with 0.5 in. openings over the drop inlet so that the wire extends a minimum of 1 ft beyond each side of the inlet structure. If more than one strip is necessary, overlap the strips. Place filter fabric over the wire mesh.
  2. Place concrete blocks lengthwise on their sides in a single row around the perimeter of the inlet, so that the open ends face outward, not upward. The ends of adjacent blocks should abut. The height of the barrier can be varied, depending on design needs, by stacking combinations of blocks that are 4 in., 8 in., and 12 in. wide. The row of blocks should be at least 12 in. but no greater than 24 in. high.
  3. Place wire mesh over the outside vertical face (open end) of the concrete blocks to prevent stone from being washed through the blocks. Use hardware cloth or comparable wire mesh with 0.5 in. opening.
  4. Pile washed stone against the wire mesh to the top of the blocks. Use 0.75 to 3 in.

Costs

- Average annual cost for installation and maintenance (one year useful life) is $200 per inlet.

Inspection and Maintenance

- Inspect BMPs prior to forecast rain, daily during extended rain events, after rain events, weekly during the rainy season, and at two-week intervals during the non-rainy season.

- Filter Fabric Fences. If the fabric becomes clogged, torn, or degrades, it should be replaced. Make sure the stakes are securely driven in the ground and are in good shape (i.e., not bent, cracked, or splintered, and are reasonably perpendicular to the ground). Replace damaged stakes.

- Gravel Filters. If the gravel becomes clogged with sediment, it must be carefully removed from the inlet and either cleaned or replaced. Since cleaning gravel at a construction site may be difficult, consider using the sediment-laden stone as fill material and put fresh stone around the inlet. Inspect bags for holes, gashes, and snags, and replace bags as needed. Check gravel bags for proper arrangement and displacement.

- Sediment that accumulates in the BMP must be periodically removed in order to maintain BMP effectiveness. Sediment should be removed when the sediment accumulation reaches one-third of the barrier height. Sediment removed during maintenance may be incorporated into earthwork on the site ore disposed at an appropriate location.

- Remove storm drain inlet protection once the drainage area is stabilized.

  - Clean and regrade area around the inlet and clean the inside of the storm drain inlet as it must be free of sediment and debris at the time of final inspection.

References

Stormwater Quality Handbooks - Construction Site Best Management Practices (BMPs) Manual, State of California Department of Transportation (Caltrans), November 2000.

Stormwater Management Manual for The Puget Sound Basin, Washington State Department of Ecology, Public Review Draft, 1991.

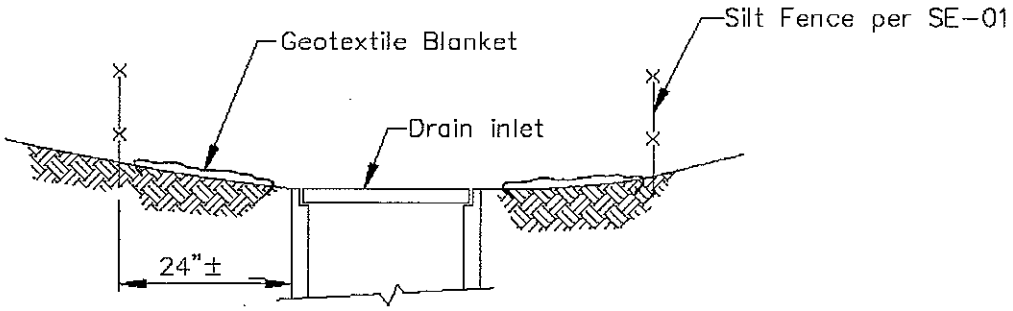

SECTION A–A

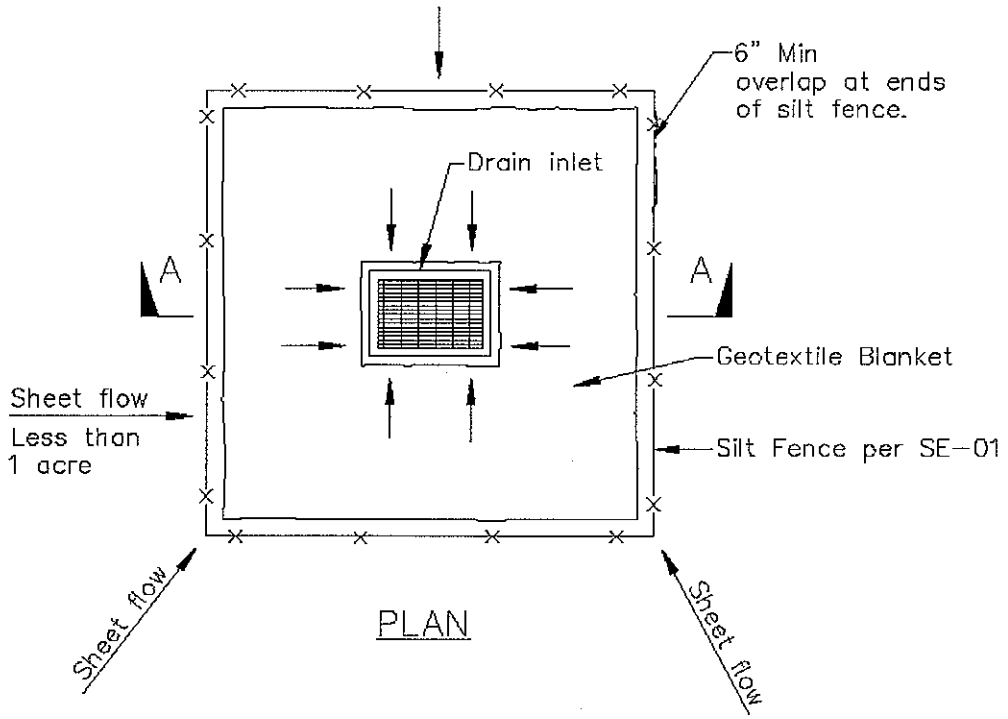

PLAN

DI PROTECTION TYPE 1
NOT TO SCALE

NOTES:

1. For use in areas where grading has been completed and final soil stabilization and seeding are pending.
2. Not applicable in paved areas.
3. Not applicable with concentrated flows.

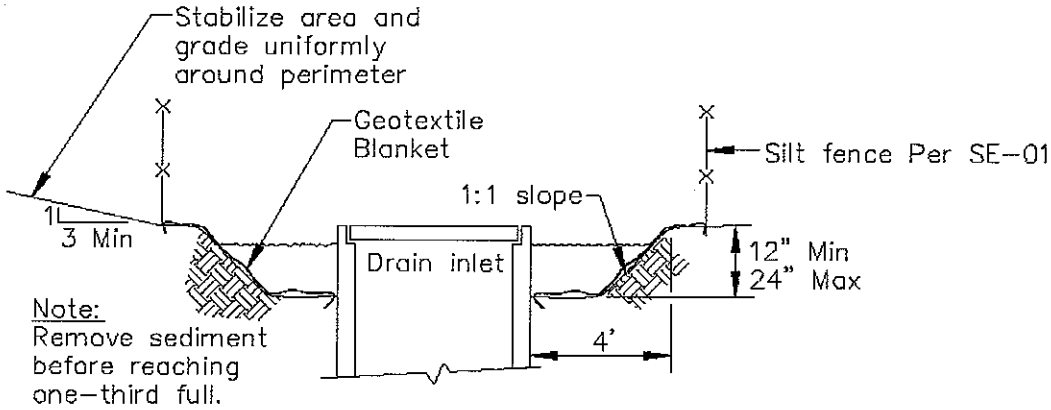

Section A–A

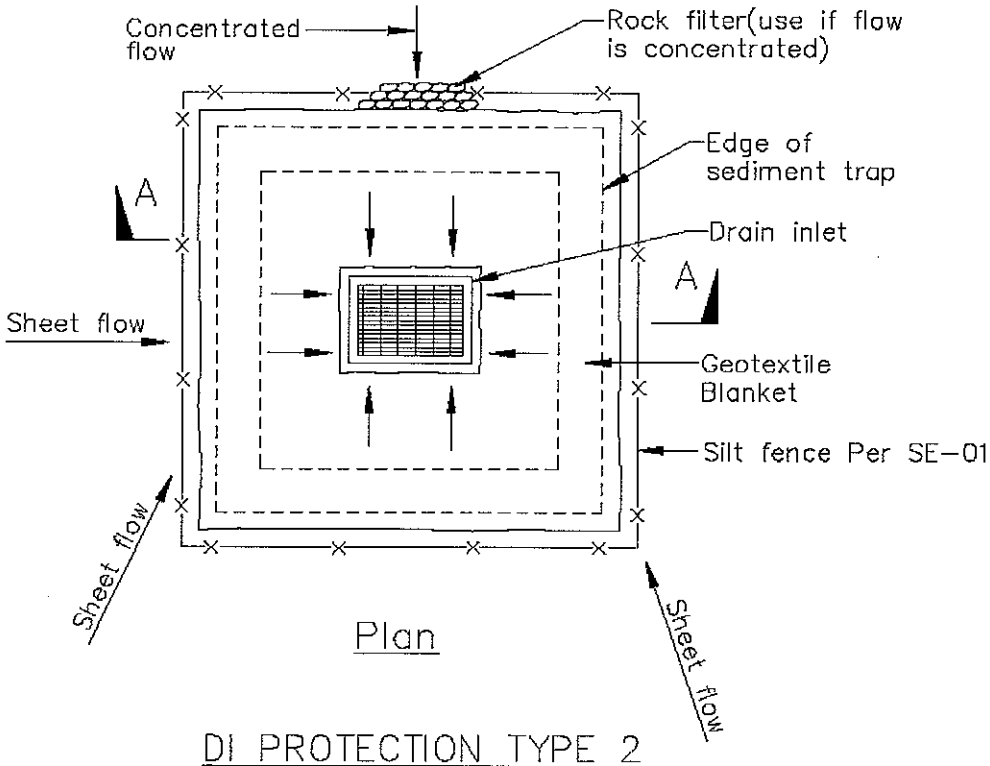

Plan

DI PROTECTION TYPE 2
NOT TO SCALE

Notes
1. For use in cleared and grubbed and in graded areas.
2. Shape basin so that longest inflow area faces longest length of trap.
3. For concentrated flows, shape basin in 2:1 ratio with length oriented towards direction of flow.

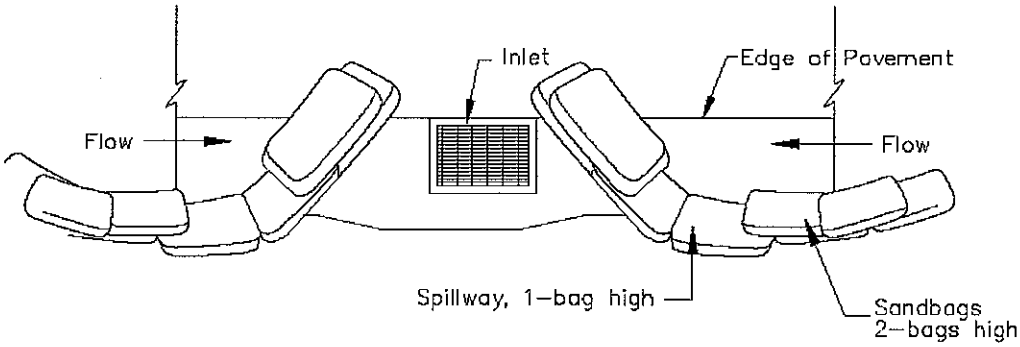

TYPICAL PROTECTION FOR INLET ON SUMP

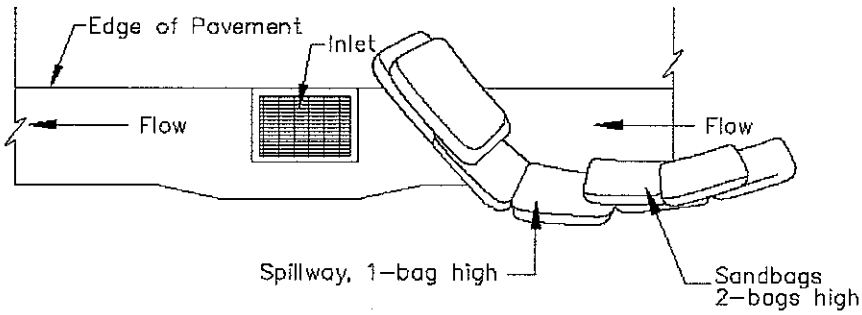

TYPICAL PROTECTION FOR INLET ON GRADE

NOTES:
1. Intended for short-term use.
2. Use to inhibit non-storm water flow.
3. Allow for proper maintenance and cleanup.
4. Bags must be removed after adjacent operation is completed
5. Not applicable in areas with high silts and clays without filter fabric.

DI PROTECTION TYPE 3
NOT TO SCALE

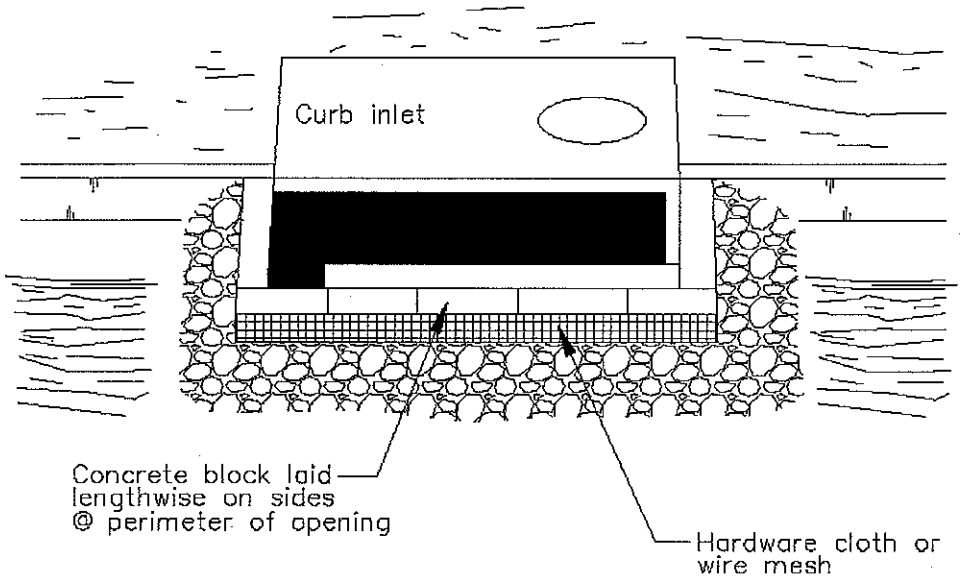

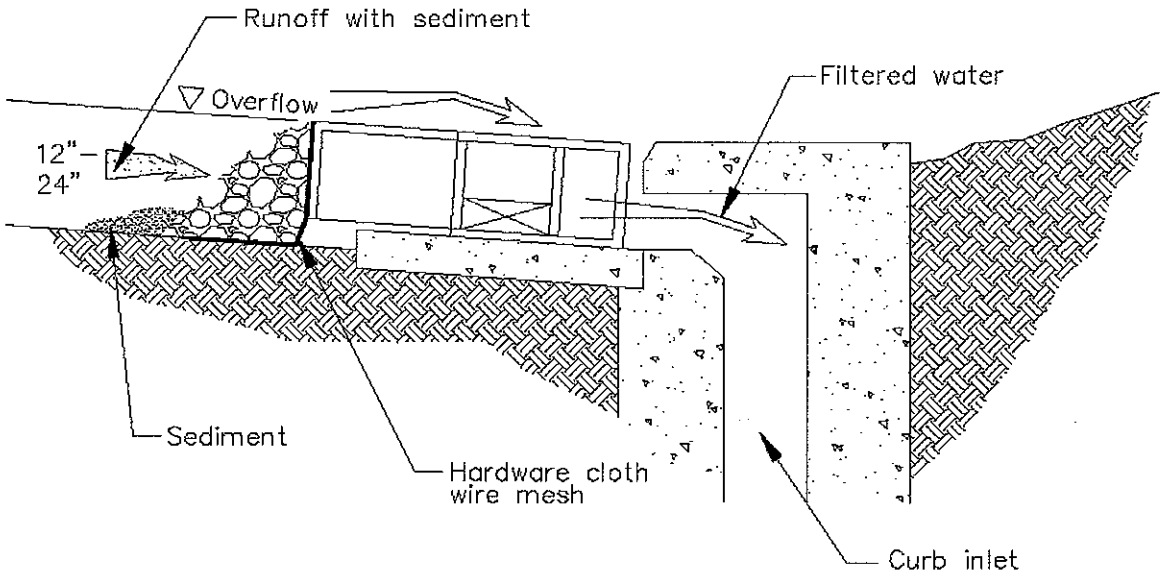

DI PROTECTION – TYPE 4

NOT TO SCALE

Wind Erosion Control WE-1

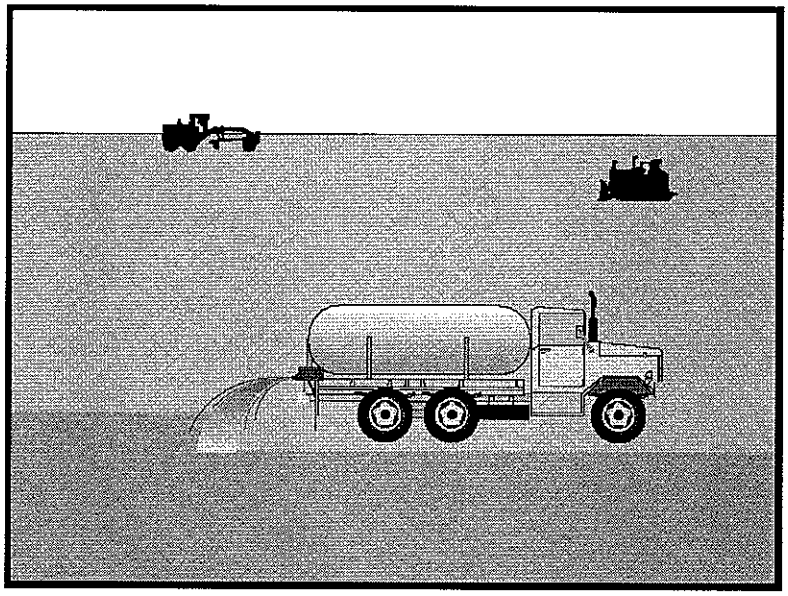

Objectives

EC	Erosion Control	
SE	Sediment Control	☒
TC	Tracking Control	
WE	Wind Erosion Control	☑
NS	Non-Stormwater Management Control	
WM	Waste Management and Materials Pollution Control	

Legend:
☑ Primary Objective
☒ Secondary Objective

Targeted Constituents

Sediment	☑
Nutrients	
Trash	
Metals	
Bacteria	
Oil and Grease	
Organics	

Potential Alternatives

None

Description and Purpose

Wind erosion or dust control consists of applying water or other dust palliatives as necessary to prevent or alleviate dust nuisance generated by construction activities. Covering small stockpiles or areas is an alternative to applying water or other dust palliatives.

Suitable Applications

Wind erosion control BMPs are suitable during the following construction activities:

- Construction vehicle traffic on unpaved roads
- Drilling and blasting activities
- Sediment tracking onto paved roads
- Soils and debris storage piles
- Batch drop from front-end loaders
- Areas with unstabilized soil
- Final grading/site stabilization

Limitations

- Watering prevents dust only for a short period and should be applied daily (or more often) to be effective.
- Over watering may cause erosion.

- Oil or oil-treated subgrade should not be used for dust control because the oil may migrate into drainageways and/or seep into the soil.
- Effectiveness depends on soil, temperature, humidity, and wind velocity.
- Chemically treated sub grades may make the soil water repellant, interfering with long-term infiltration and the vegetation/re-vegetation of the site. Some chemical dust suppressants may be subject to freezing and may contain solvents and should be handled properly.
- Asphalt, as a mulch tack or chemical mulch, requires a 24-hour curing time to avoid adherence to equipment, worker shoes, etc. Application should be limited because asphalt surfacing may eventually migrate into the drainage system.
- In compacted areas, watering and other liquid dust control measures may wash sediment or other constituents into the drainage system.

Implementation

General

California's Mediterranean climate, with short wet seasons and long hot dry seasons, allows the soils to thoroughly dry out. During these dry seasons, construction activities are at their peak, and disturbed and exposed areas are increasingly subject to wind erosion, sediment tracking and dust generated by construction equipment.

Dust control, as a BMP, is a practice that is already in place for many construction activities. Los Angeles, the North Coast, and Sacramento, among others, have enacted dust control ordinances for construction activities that cause dust to be transported beyond the construction project property line.

Recently, the State Air Resources Control Board has, under the authority of the Clean Air Act, started to address air quality in relation to inhalable particulate matter less than 10 microns (PM-10). Approximately 90 percent of these small particles are considered to be dust. Existing dust control regulations by local agencies, municipal departments, public works department, and public health departments are in place in some regions within California.

Many local agencies require dust control in order to comply with local nuisance laws, opacity laws (visibility impairment) and the requirements of the Clean Air Act. The following are measures that local agencies may have already implemented as requirements for dust control from contractors:

- Construction and Grading Permits: Require provisions for dust control plans.
- Opacity Emission Limits: Enforce compliance with California air pollution control laws.
- Increase Overall Enforcement Activities: Priority given to cases involving citizen complaints.
- Maintain Field Application Records: Require records of dust control measures from contractor;
- Stormwater Pollution Prevention Plan: (SWPPP): Integrate dust control measures into SWPPP.

Dust Control Practices

Dust control BMPs generally stabilize exposed surfaces and minimize activities that suspend or track dust particles. The following table shows dust control practices that can be applied to site conditions that cause dust. For heavily traveled and disturbed areas, wet suppression (watering), chemical dust suppression, gravel asphalt surfacing, temporary gravel construction entrances, equipment wash-out areas, and haul truck covers can be employed as dust control applications. Permanent or temporary vegetation and mulching can be employed for areas of occasional or no construction traffic. Preventive measures would include minimizing surface areas to be disturbed, limiting onsite vehicle traffic to 15 mph, and controlling the number and activity of vehicles on a site at any given time.

SITE CONDITION	DUST CONTROL PRACTICES								
	Permanent Vegetation	Mulching	Wet Suppression (Watering)	Chemical Dust Suppression	Gravel or Asphalt	Silt Fences	Temporary Gravel Construction Entrances/Equipment Wash Down	Haul Truck Covers	Minimize Extent of Disturbed Area
Disturbed Areas not Subject to Traffic	X	X	X	X	X				X
Disturbed Areas Subject to Traffic			X	X	X		X		X
Material Stock Pile Stabilization			X	X		X			X
Demolition			X				X	X	
Clearing/ Excavation			X	X		X			X
Truck Traffic on Unpaved Roads			X	X	X		X	X	
Mud/Dirt Carry Out					X		X		

Additional preventive measures include:

- Schedule construction activities to minimize exposed area (EC-1, Scheduling).
- Quickly stabilize exposed soils using vegetation, mulching, spray-on adhesives, calcium chloride, sprinkling, and stone/gravel layering.
- Identify and stabilize key access points prior to commencement of construction.
- Minimize the impact of dust by anticipating the direction of prevailing winds.
- Direct most construction traffic to stabilized roadways within the project site.
- Water should be applied by means of pressure-type distributors or pipelines equipped with a spray system or hoses and nozzles that will ensure even distribution.
- All distribution equipment should be equipped with a positive means of shutoff.
- Unless water is applied by means of pipelines, at least one mobile unit should be available at all times to apply water or dust palliative to the project.

- If reclaimed waste water is used, the sources and discharge must meet California Department of Health Services water reclamation criteria and the Regional Water Quality Control Board requirements. Non-potable water should not be conveyed in tanks or drain pipes that will be used to convey potable water and there should be no connection between potable and non-potable supplies. Non-potable tanks, pipes, and other conveyances should be marked, "NON-POTABLE WATER - DO NOT DRINK."
- Materials applied as temporary soil stabilizers and soil binders also generally provide wind erosion control benefits.
- Pave or chemically stabilize access points where unpaved traffic surfaces adjoin paved roads.
- Provide covers for haul trucks transporting materials that contribute to dust.
- Provide for wet suppression or chemical stabilization of exposed soils.
- Provide for rapid clean up of sediments deposited on paved roads. Furnish stabilized construction road entrances and vehicle wash down areas.
- Stabilize inactive construction sites using vegetation or chemical stabilization methods.
- Limit the amount of areas disturbed by clearing and earth moving operations by scheduling these activities in phases.

For chemical stabilization, there are many products available for chemically stabilizing gravel roadways and stockpiles. If chemical stabilization is used, the chemicals should not create any adverse effects on stormwater, plant life, or groundwater.

Costs

Installation costs for water and chemical dust suppression are low, but annual costs may be quite high since these measures are effective for only a few hours to a few days.

Inspection and Maintenance

- Inspect and verify that activity-based BMPs are in place prior to the commencement of associated activities. While activities associated with the BMP are under way, inspect weekly during the rainy season and at two-week intervals in the non-rainy season to verify continued BMP implementation.
- Check areas protected to ensure coverage.
- Most dust control measures require frequent, often daily, or multiple times per day attention.

References

Best Management Practices and Erosion Control Manual for Construction Sites, Flood Control District of Maricopa County, Arizona, September 1992.

California Air Pollution Control Laws, California Air Resources Board, 1992.

Caltrans, Standard Specifications, Sections 10, "Dust Control"; Section 17, "Watering"; and Section 18, "Dust Palliative".

Prospects for Attaining the State Ambient Air Quality Standards for Suspended Particulate Matter (PM10), Visibility Reducing Particles, Sulfates, Lead, and Hydrogen Sulfide, California Air Resources Board, April 1991.

Stormwater Quality Handbooks Construction Site Best Management Practices (BMPs) Manual, State of California Department of Transportation (Caltrans), November 2000.

Material Delivery and Storage WM-1

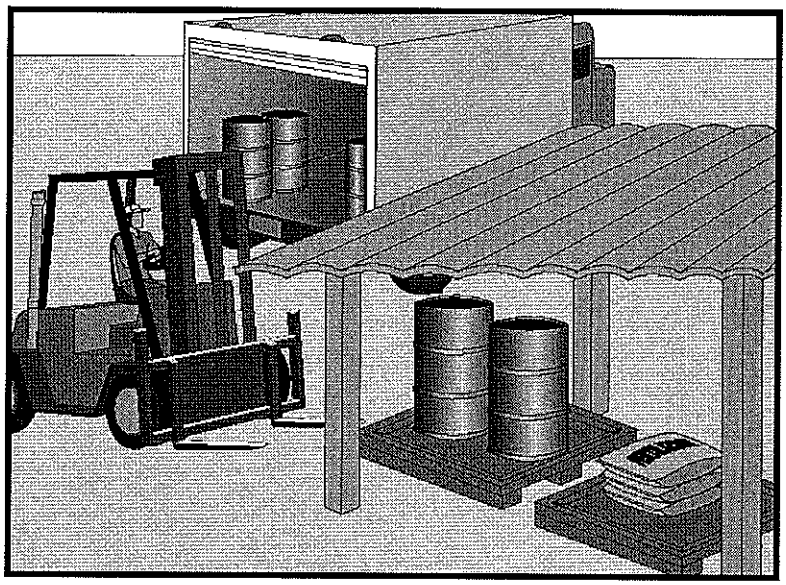

Objectives		
EC	Erosion Control	
SE	Sediment Control	
TC	Tracking Control	
WE	Wind Erosion Control	
NS	Non-Stormwater Management Control	
WM	Waste Management and Materials Pollution Control	☑

Legend:
☑ Primary Objective
☒ Secondary Objective

Targeted Constituents	
Sediment	☑
Nutrients	☑
Trash	☑
Metals	☑
Bacteria	
Oil and Grease	☑
Organics	☑

Potential Alternatives

None

Description and Purpose

Prevent, reduce, or eliminate the discharge of pollutants from material delivery and storage to the stormwater system or watercourses by minimizing the storage of hazardous materials onsite, storing materials in a designated area, installing secondary containment, conducting regular inspections, and training employees and subcontractors.

This best management practice covers only material delivery and storage. For other information on materials, see WM-2, Material Use, or WM-4, Spill Prevention and Control. For information on wastes, see the waste management BMPs in this section.

Suitable Applications

These procedures are suitable for use at all construction sites with delivery and storage of the following materials:

- Soil stabilizers and binders
- Pesticides and herbicides
- Fertilizers
- Detergents
- Plaster
- Petroleum products such as fuel, oil, and grease
- Asphalt and concrete components

CASQA
CALIFORNIA STORMWATER QUALITY ASSOCIATION

- Hazardous chemicals such as acids, lime, glues, adhesives, paints, solvents, and curing compounds
- Concrete compounds
- Other materials that may be detrimental if released to the environment

Limitations

- Space limitation may preclude indoor storage.
- Storage sheds often must meet building and fire code requirements.

Implementation

The following steps should be taken to minimize risk:

- Temporary storage area should be located away from vehicular traffic.
- Material Safety Data Sheets (MSDS) should be supplied for all materials stored.
- Construction site areas should be designated for material delivery and storage.
- Material delivery and storage areas should be located near the construction entrances, away from waterways, if possible.
  - Avoid transport near drainage paths or waterways.
  - Surround with earth berms. See EC-9, Earth Dikes and Drainage Swales.
  - Place in an area which will be paved.
- Storage of reactive, ignitable, or flammable liquids must comply with the fire codes of your area. Contact the local Fire Marshal to review site materials, quantities, and proposed storage area to determine specific requirements. See the Flammable and Combustible Liquid Code, NFPA30.
- An up to date inventory of materials delivered and stored onsite should be kept.
- Hazardous materials storage onsite should be minimized.
- Hazardous materials should be handled as infrequently as possible.
- During the rainy season, consider storing materials in a covered area. Store materials in secondary containments such as earthen dike, horse trough, or even a children's wading pool for non-reactive materials such as detergents, oil, grease, and paints. Small amounts of material may be secondarily contained in "bus boy" trays or concrete mixing trays.
- Do not store chemicals, drums, or bagged materials directly on the ground. Place these items on a pallet and, when possible, in secondary containment.

- If drums must be kept uncovered, store them at a slight angle to reduce ponding of rainwater on the lids to reduce corrosion. Domed plastic covers are inexpensive and snap to the top of drums, preventing water from collecting.
- Chemicals should be kept in their original labeled containers.
- Employees and subcontractors should be trained on the proper material delivery and storage practices.
- Employees trained in emergency spill cleanup procedures must be present when dangerous materials or liquid chemicals are unloaded.
- If significant residual materials remain on the ground after construction is complete, properly remove materials and any contaminated soil. See WM-7, Contaminated Soil Management. If the area is to be paved, pave as soon as materials are removed to stabilize the soil.

Material Storage Areas and Practices

- Liquids, petroleum products, and substances listed in 40 CFR Parts 110, 117, or 302 should be stored in approved containers and drums and should not be overfilled. Containers and drums should be placed in temporary containment facilities for storage.
- A temporary containment facility should provide for a spill containment volume able to contain precipitation from a 25 year storm event, plus the greater of 10% of the aggregate volume of all containers or 100% of the capacity of the largest container within its boundary, whichever is greater.
- A temporary containment facility should be impervious to the materials stored therein for a minimum contact time of 72 hours.
- A temporary containment facility should be maintained free of accumulated rainwater and spills. In the event of spills or leaks, accumulated rainwater and spills should be collected and placed into drums. These liquids should be handled as a hazardous waste unless testing determines them to be non-hazardous. All collected liquids or non-hazardous liquids should be sent to an approved disposal site.
- Sufficient separation should be provided between stored containers to allow for spill cleanup and emergency response access.
- Incompatible materials, such as chlorine and ammonia, should not be stored in the same temporary containment facility.
- Throughout the rainy season, each temporary containment facility should be covered during non-working days, prior to, and during rain events.
- Materials should be stored in their original containers and the original product labels should be maintained in place in a legible condition. Damaged or otherwise illegible labels should be replaced immediately.

- Bagged and boxed materials should be stored on pallets and should not be allowed to accumulate on the ground. To provide protection from wind and rain throughout the rainy season, bagged and boxed materials should be covered during non-working days and prior to and during rain events.
- Stockpiles should be protected in accordance with WM-3, Stockpile Management.
- Materials should be stored indoors within existing structures or sheds when available.
- Proper storage instructions should be posted at all times in an open and conspicuous location.
- An ample supply of appropriate spill clean up material should be kept near storage areas.
- Also see WM-6, Hazardous Waste Management, for storing of hazardous materials.

Material Delivery Practices

- Keep an accurate, up-to-date inventory of material delivered and stored onsite.
- Arrange for employees trained in emergency spill cleanup procedures to be present when dangerous materials or liquid chemicals are unloaded.

Spill Cleanup

- Contain and clean up any spill immediately.
- Properly remove and dispose of any hazardous materials or contaminated soil if significant residual materials remain on the ground after construction is complete. See WM-7, Contaminated Soil Management.
- See WM-4, Spill Prevention and Control, for spills of chemicals and/or hazardous materials.

Cost

- The largest cost of implementation may be in the construction of a materials storage area that is covered and provides secondary containment.

Inspection and Maintenance

- Inspect and verify that activity–based BMPs are in place prior to the commencement of associated activities. While activities associated with the BMP are under way, inspect weekly during the rainy season and of two-week intervals in the non-rainy season to verify continued BMP implementation.
- Keep an ample supply of spill cleanup materials near the storage area.
- Keep storage areas clean, well organized, and equipped with ample cleanup supplies as appropriate for the materials being stored.
- Repair or replace perimeter controls, containment structures, covers, and liners as needed to maintain proper function.

References

Blueprint for a Clean Bay: Best Management Practices to Prevent Stormwater Pollution from Construction Related Activities; Santa Clara Valley Nonpoint Source Pollution Control Program, 1995.

Coastal Nonpoint Pollution Control Program: Program Development and Approval Guidance, Working Group Working Paper; USEPA, April 1992.

Stormwater Quality Handbooks - Construction Site Best Management Practices (BMPs) Manual, State of California Department of Transportation (Caltrans), November 2000.

Stormwater Management for Construction Activities; Developing Pollution Prevention Plans and Best Management Practice, EPA 832-R-92005; USEPA, April 1992.

Material Use

WM-2

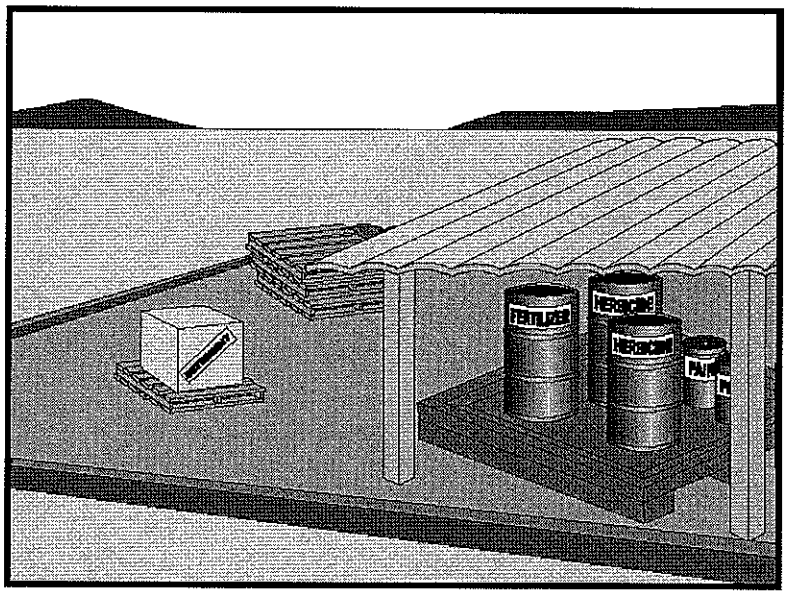

Objectives		
EC	Erosion Control	
SE	Sediment Control	
TC	Tracking Control	
WE	Wind Erosion Control	
NS	Non-Stormwater Management Control	
WM	Waste Management and Materials Pollution Control	☑

Legend:

☑ Primary Objective

☒ Secondary Objective

Targeted Constituents	
Sediment	☑
Nutrients	☑
Trash	☑
Metals	☑
Bacteria	
Oil and Grease	☑
Organics	☑

Potential Alternatives

None

Description and Purpose

Prevent or reduce the discharge of pollutants to the storm drain system or watercourses from material use by using alternative products, minimizing hazardous material use onsite, and training employees and subcontractors.

Suitable Applications

This BMP is suitable for use at all construction projects. These procedures apply when the following materials are used or prepared onsite:

- Pesticides and herbicides
- Fertilizers
- Detergents
- Plaster
- Petroleum products such as fuel, oil, and grease
- Asphalt and other concrete components
- Other hazardous chemicals such as acids, lime, glues, adhesives, paints, solvents, and curing compounds
- Concrete compounds
- Other materials that may be detrimental if released to the environment

Limitations

Safer alternative building and construction products may not be available or suitable in every instance.

Implementation

The following steps should be taken to minimize risk:

- Minimize use of hazardous materials onsite.
- Follow manufacturer instructions regarding uses, protective equipment, ventilation, flammability, and mixing of chemicals.
- Train personnel who use pesticides. The California Department of Pesticide Regulation and county agricultural commissioners license pesticide dealers, certify pesticide applicators, and conduct onsite inspections.
- Do not over-apply fertilizers, herbicides, and pesticides. Prepare only the amount needed. Follow the recommended usage instructions. Over-application is expensive and environmentally harmful. Unless on steep slopes, till fertilizers into the soil rather than hydro seeding. Apply surface dressings in several smaller applications, as opposed to one large application, to allow time for infiltration and to avoid excess material being carried offsite by runoff. Do not apply these chemicals just before it rains.
- Train employees and subcontractors in proper material use.
- Supply Material Safety Data Sheets (MSDS) for all materials.
- Dispose of latex paint and paint cans, used brushes, rags, absorbent materials, and drop cloths, when thoroughly dry and are no longer hazardous, with other construction debris.
- Do not remove the original product label; it contains important safety and disposal information. Use the entire product before disposing of the container.
- Mix paint indoors or in a containment area. Never clean paintbrushes or rinse paint containers into a street, gutter, storm drain, or watercourse. Dispose of any paint thinners, residue, and sludge(s) that cannot be recycled, as hazardous waste.
- For water-based paint, clean brushes to the extent practicable, and rinse to a drain leading to a sanitary sewer where permitted, or into a concrete washout pit or temporary sediment trap. For oil-based paints, clean brushes to the extent practicable, and filter and reuse thinners and solvents.
- Use recycled and less hazardous products when practical. Recycle residual paints, solvents, non-treated lumber, and other materials.
- Use materials only where and when needed to complete the construction activity. Use safer alternative materials as much as possible. Reduce or eliminate use of hazardous materials onsite when practical.

- Require contractors to complete the "Report of Chemical Spray Forms" when spraying herbicides and pesticides.
- Keep an ample supply of spill clean up material near use areas. Train employees in spill clean up procedures.
- Avoid exposing applied materials to rainfall and runoff unless sufficient time has been allowed for them to dry.

Costs

All of the above are low cost measures.

Inspection and Maintenance

- Inspect and verify that activity–based BMPs are in place prior to the commencement of associated activities. While activities associated with the BMP are under way, inspect weekly during the rainy season and at two–week intervals in the non-rainy season to verify continued BMP implementation.
- Maintenance of this best management practice is minimal.
- Spot check employees and subcontractors throughout the job to ensure appropriate practices are being employed.

References

Blueprint for a Clean Bay: Best Management Practices to Prevent Stormwater Pollution from Construction Related Activities; Santa Clara Valley Nonpoint Source Pollution Control Program, 1995.

Coastal Nonpoint Pollution Control Program: Program Development and Approval Guidance, Working Group Working Paper; USEPA, April 1992.

Stormwater Quality Handbooks - Construction Site Best Management Practices (BMPs) Manual, State of California Department of Transportation (Caltrans), November 2000.

Stormwater Management for Construction Activities; Developing Pollution Prevention Plans and Best Management Practice, EPA 832-R-92005; USEPA, April 1992.

Stockpile Management WM-3

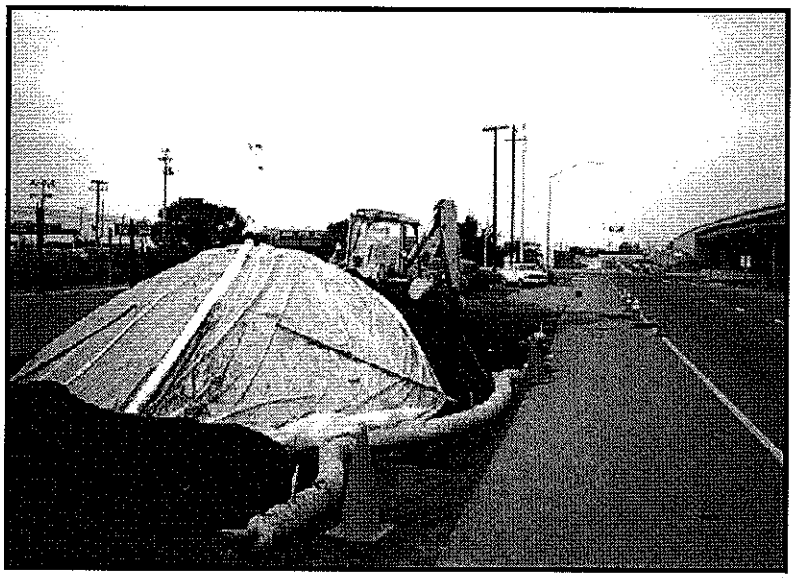

Objectives		
EC	Erosion Control	
SE	Sediment Control	
TC	Tracking Control	
WE	Wind Erosion Control	
NS	Non-Stormwater Management Control	
WM	Waste Management and Materials Pollution Control	☑

Legend:
☑ Primary Objective
☒ Secondary Objective

Targeted Constituents	
Sediment	☑
Nutrients	☑
Trash	☑
Metals	☑
Bacteria	
Oil and Grease	☑
Organics	☑

Potential Alternatives

None

Description and Purpose

Stockpile Management procedures and practices are designed to reduce or eliminate air and stormwater pollution from stockpiles of soil, paving materials such as portland cement concrete (PCC) rubble, asphalt concrete (AC), asphalt concrete rubble, aggregate base, aggregate sub base or pre-mixed aggregate, asphalt minder (so called "cold mix" asphalt), and pressure treated wood.

Suitable Applications

Implement in all projects that stockpile soil and other materials.

Limitations

None identified.

Implementation

Protection of stockpiles is a year-round requirement. To properly manage stockpiles:

- Locate stockpiles a minimum of 50 ft away from concentrated flows of stormwater, drainage courses, and inlets.
- Protect all stockpiles from stormwater runon using a temporary perimeter sediment barrier such as berms, dikes, fiber rolls, silt fences, sandbag, gravel bags, or straw bale barriers.

- Implement wind erosion control practices as appropriate on all stockpiled material. For specific information, see WE-1, Wind Erosion Control.
- Manage stockpiles of contaminated soil in accordance with WM-7, Contaminated Soil Management.
- Place bagged materials on pallets and under cover.

Protection of Non-Active Stockpiles

Non-active stockpiles of the identified materials should be protected further as follows:

Soil stockpiles

- During the rainy season, soil stockpiles should be covered or protected with soil stabilization measures and a temporary perimeter sediment barrier at all times.
- During the non-rainy season, soil stockpiles should be covered or protected with a temporary perimeter sediment barrier prior to the onset of precipitation.

Stockpiles of Portland cement concrete rubble, asphalt concrete, asphalt concrete rubble, aggregate base, or aggregate sub base

- During the rainy season, the stockpiles should be covered or protected with a temporary perimeter sediment barrier at all times.
- During the non-rainy season, the stockpiles should be covered or protected with a temporary perimeter sediment barrier prior to the onset of precipitation.

Stockpiles of "cold mix"

- During the rainy season, cold mix stockpiles should be placed on and covered with plastic or comparable material at all times.
- During the non-rainy season, cold mix stockpiles should be placed on and covered with plastic or comparable material prior to the onset of precipitation.

Stockpiles/Storage of pressure treated wood with copper, chromium, and arsenic or ammonical, copper, zinc, and arsenate

- During the rainy season, treated wood should be covered with plastic or comparable material at all times.
- During the non-rainy season, treated wood should be covered with plastic or comparable material at all times and cold mix stockpiles should be placed on and covered with plastic or comparable material prior to the onset of precipitation.

Protection of Active Stockpiles

Active stockpiles of the identified materials should be protected further as follows:

- All stockpiles should be protected with a temporary linear sediment barrier prior to the onset of precipitation.
- Stockpiles of "cold mix" should be placed on and covered with plastic or comparable material prior to the onset of precipitation.

Costs

All of the above are low cost measures.

Inspection and Maintenance

- Inspect and verify that activity–based BMPs are in place prior to the commencement of associated activities. While activities associated with the BMP are under way, inspect weekly during the rainy season and of two-week intervals in the non-rainy season to verify continued BMP implementation

- Repair and/or replace perimeter controls and covers as needed to keep them functioning properly.

References

Stormwater Quality Handbooks - Construction Site Best Management Practices (BMPs) Manual, State of California Department of Transportation (Caltrans), November 2000.

Spill Prevention and Control WM-4

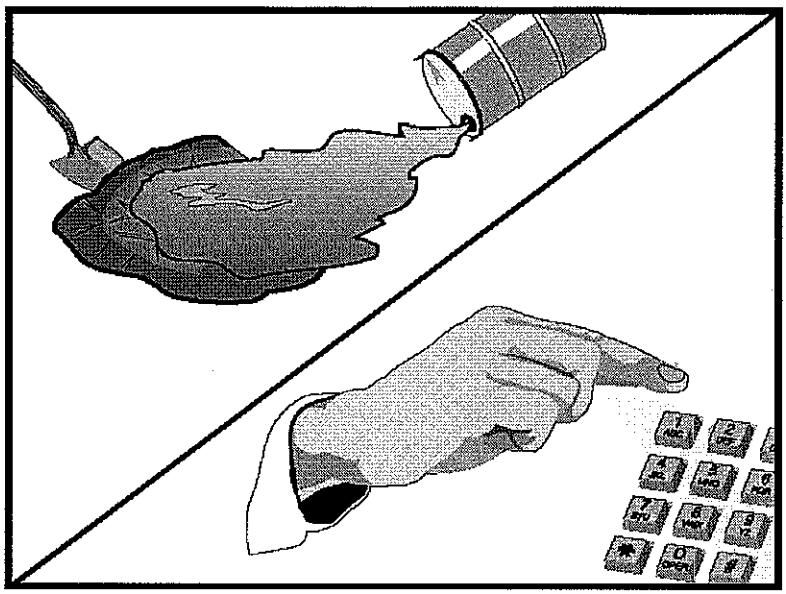

Objectives		
EC	Erosion Control	
SE	Sediment Control	
TC	Tracking Control	
WE	Wind Erosion Control	
NS	Non-Stormwater Management Control	
WM	Waste Management and Materials Pollution Control	☑

Legend:
☑ Primary Objective
☒ Secondary Objective

Targeted Constituents	
Sediment	☑
Nutrients	☑
Trash	☑
Metals	☑
Bacteria	
Oil and Grease	☑
Organics	☑

Potential Alternatives

None

Description and Purpose

Prevent or reduce the discharge of pollutants to drainage systems or watercourses from leaks and spills by reducing the chance for spills, stopping the source of spills, containing and cleaning up spills, properly disposing of spill materials, and training employees.

This best management practice covers only spill prevention and control. However, WM-1, Materials Delivery and Storage, and WM-2, Material Use, also contain useful information, particularly on spill prevention. For information on wastes, see the waste management BMPs in this section.

Suitable Applications

This BMP is suitable for all construction projects. Spill control procedures are implemented anytime chemicals or hazardous substances are stored on the construction site, including the following materials:

- Soil stabilizers/binders
- Dust palliatives
- Herbicides
- Growth inhibitors
- Fertilizers
- Deicing/anti-icing chemicals

CASQA
CALIFORNIA STORMWATER QUALITY ASSOCIATION

- Fuels
- Lubricants
- Other petroleum distillates

Limitations

- In some cases it may be necessary to use a private spill cleanup company.
- This BMP applies to spills caused by the contractor and subcontractors.
- Procedures and practices presented in this BMP are general. Contractor should identify appropriate practices for the specific materials used or stored onsite

Implementation

The following steps will help reduce the stormwater impacts of leaks and spills:

Education

- Be aware that different materials pollute in different amounts. Make sure that each employee knows what a "significant spill" is for each material they use, and what is the appropriate response for "significant" and "insignificant" spills.
- Educate employees and subcontractors on potential dangers to humans and the environment from spills and leaks.
- Hold regular meetings to discuss and reinforce appropriate disposal procedures (incorporate into regular safety meetings).
- Establish a continuing education program to indoctrinate new employees.
- Have contractor's superintendent or representative oversee and enforce proper spill prevention and control measures.

General Measures

- To the extent that the work can be accomplished safely, spills of oil, petroleum products, substances listed under 40 CFR parts 110,117, and 302, and sanitary and septic wastes should be contained and cleaned up immediately.
- Store hazardous materials and wastes in covered containers and protect from vandalism.
- Place a stockpile of spill cleanup materials where it will be readily accessible.
- Train employees in spill prevention and cleanup.
- Designate responsible individuals to oversee and enforce control measures.
- Spills should be covered and protected from stormwater runon during rainfall to the extent that it doesn't compromise clean up activities.
- Do not bury or wash spills with water.

- Store and dispose of used clean up materials, contaminated materials, and recovered spill material that is no longer suitable for the intended purpose in conformance with the provisions in applicable BMPs.
- Do not allow water used for cleaning and decontamination to enter storm drains or watercourses. Collect and dispose of contaminated water in accordance with WM-10, Liquid Waste Management.
- Contain water overflow or minor water spillage and do not allow it to discharge into drainage facilities or watercourses.
- Place proper storage, cleanup, and spill reporting instructions for hazardous materials stored or used on the project site in an open, conspicuous, and accessible location.
- Keep waste storage areas clean, well organized, and equipped with ample cleanup supplies as appropriate for the materials being stored. Perimeter controls, containment structures, covers, and liners should be repaired or replaced as needed to maintain proper function.

Cleanup

- Clean up leaks and spills immediately.
- Use a rag for small spills on paved surfaces, a damp mop for general cleanup, and absorbent material for larger spills. If the spilled material is hazardous, then the used cleanup materials are also hazardous and must be sent to either a certified laundry (rags) or disposed of as hazardous waste.
- Never hose down or bury dry material spills. Clean up as much of the material as possible and dispose of properly. See the waste management BMPs in this section for specific information.

Minor Spills

- Minor spills typically involve small quantities of oil, gasoline, paint, etc. which can be controlled by the first responder at the discovery of the spill.
- Use absorbent materials on small spills rather than hosing down or burying the spill.
- Absorbent materials should be promptly removed and disposed of properly.
- Follow the practice below for a minor spill:
  - Contain the spread of the spill.
  - Recover spilled materials.
  - Clean the contaminated area and properly dispose of contaminated materials.

Semi-Significant Spills

- Semi-significant spills still can be controlled by the first responder along with the aid of other personnel such as laborers and the foreman, etc. This response may require the cessation of all other activities.

- Spills should be cleaned up immediately:
  - Contain spread of the spill.
  - Notify the project foreman immediately.
  - If the spill occurs on paved or impermeable surfaces, clean up using "dry" methods (absorbent materials, cat litter and/or rags). Contain the spill by encircling with absorbent materials and do not let the spill spread widely.
  - If the spill occurs in dirt areas, immediately contain the spill by constructing an earthen dike. Dig up and properly dispose of contaminated soil.
  - If the spill occurs during rain, cover spill with tarps or other material to prevent contaminating runoff.

Significant/Hazardous Spills

- For significant or hazardous spills that cannot be controlled by personnel in the immediate vicinity, the following steps should be taken:
  - Notify the local emergency response by dialing 911. In addition to 911, the contractor will notify the proper county officials. It is the contractor's responsibility to have all emergency phone numbers at the construction site.
  - Notify the Governor's Office of Emergency Services Warning Center, (916) 845-8911.
  - For spills of federal reportable quantities, in conformance with the requirements in 40 CFR parts 110,119, and 302, the contractor should notify the National Response Center at (800) 424-8802.
  - Notification should first be made by telephone and followed up with a written report.
  - The services of a spills contractor or a Haz-Mat team should be obtained immediately. Construction personnel should not attempt to clean up until the appropriate and qualified staffs have arrived at the job site.
  - Other agencies which may need to be consulted include, but are not limited to, the Fire Department, the Public Works Department, the Coast Guard, the Highway Patrol, the City/County Police Department, Department of Toxic Substances, California Division of Oil and Gas, Cal/OSHA, etc.

Reporting

- Report significant spills to local agencies, such as the Fire Department; they can assist in cleanup.
- Federal regulations require that any significant oil spill into a water body or onto an adjoining shoreline be reported to the National Response Center (NRC) at 800-424-8802 (24 hours).

Use the following measures related to specific activities:

Vehicle and Equipment Maintenance

- If maintenance must occur onsite, use a designated area and a secondary containment, located away from drainage courses, to prevent the runon of stormwater and the runoff of spills.
- Regularly inspect onsite vehicles and equipment for leaks and repair immediately
- Check incoming vehicles and equipment (including delivery trucks, and employee and subcontractor vehicles) for leaking oil and fluids. Do not allow leaking vehicles or equipment onsite.
- Always use secondary containment, such as a drain pan or drop cloth, to catch spills or leaks when removing or changing fluids.
- Place drip pans or absorbent materials under paving equipment when not in use.
- Use absorbent materials on small spills rather than hosing down or burying the spill. Remove the absorbent materials promptly and dispose of properly.
- Promptly transfer used fluids to the proper waste or recycling drums. Don't leave full drip pans or other open containers lying around
- Oil filters disposed of in trashcans or dumpsters can leak oil and pollute stormwater. Place the oil filter in a funnel over a waste oil-recycling drum to drain excess oil before disposal. Oil filters can also be recycled. Ask the oil supplier or recycler about recycling oil filters.
- Store cracked batteries in a non-leaking secondary container. Do this with all cracked batteries even if you think all the acid has drained out. If you drop a battery, treat it as if it is cracked. Put it into the containment area until you are sure it is not leaking.

Vehicle and Equipment Fueling

- If fueling must occur onsite, use designate areas, located away from drainage courses, to prevent the runon of stormwater and the runoff of spills.
- Discourage "topping off" of fuel tanks.
- Always use secondary containment, such as a drain pan, when fueling to catch spills/ leaks.

Costs

Prevention of leaks and spills is inexpensive. Treatment and/ or disposal of contaminated soil or water can be quite expensive.

Inspection and Maintenance

- Inspect and verify that activity–based BMPs are in place prior to the commencement of associated activities. While activities associated with the BMP are under way, inspect weekly during the rainy season and of two-week intervals in the non-rainy season to verify continued BMP implementation.
- Inspect BMPs subject to non-stormwater discharge daily while non-stormwater discharges occur.

- Keep ample supplies of spill control and cleanup materials onsite, near storage, unloading, and maintenance areas.
- Update your spill prevention and control plan and stock cleanup materials as changes occur in the types of chemicals onsite.

References

Blueprint for a Clean Bay: Best Management Practices to Prevent Stormwater Pollution from Construction Related Activities; Santa Clara Valley Nonpoint Source Pollution Control Program, 1995.

Stormwater Quality Handbooks - Construction Site Best Management Practices (BMPs) Manual, State of California Department of Transportation (Caltrans), November 2000.

Stormwater Management for Construction Activities; Developing Pollution Prevention Plans and Best Management Practice, EPA 832-R-92005; USEPA, April 1992.

Solid Waste Management WM-5

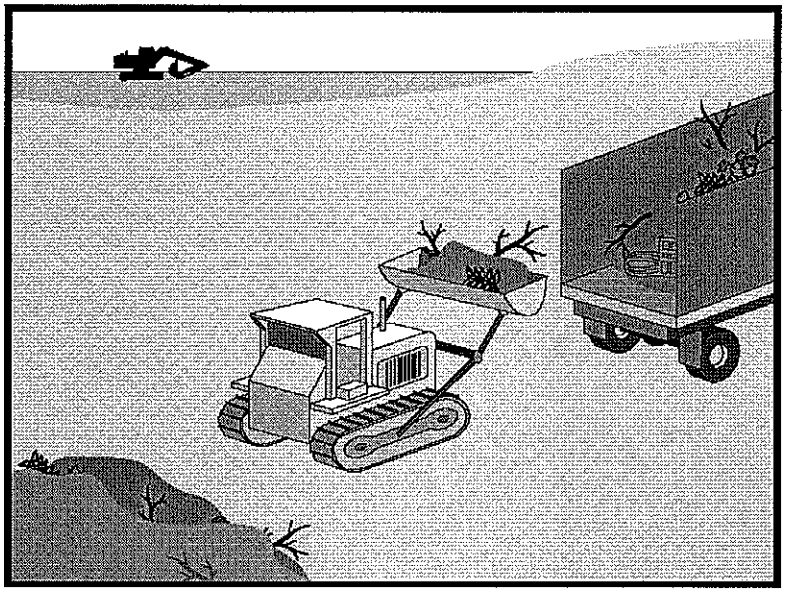

Objectives

EC	Erosion Control	
SE	Sediment Control	
TC	Tracking Control	
WE	Wind Erosion Control	
NS	Non-Stormwater Management Control	
WM	Waste Management and Materials Pollution Control	☑

Legend:
☑ Primary Objective
☒ Secondary Objective

Targeted Constituents

Sediment	☑
Nutrients	☑
Trash	☑
Metals	☑
Bacteria	
Oil and Grease	☑
Organics	☑

Potential Alternatives

None

Description and Purpose

Solid waste management procedures and practices are designed to prevent or reduce the discharge of pollutants to stormwater from solid or construction waste by providing designated waste collection areas and containers, arranging for regular disposal, and training employees and subcontractors.

Suitable Applications

This BMP is suitable for construction sites where the following wastes are generated or stored:

- Solid waste generated from trees and shrubs removed during land clearing, demolition of existing structures (rubble), and building construction
- Packaging materials including wood, paper, and plastic
- Scrap or surplus building materials including scrap metals, rubber, plastic, glass pieces and masonry products
- Domestic wastes including food containers such as beverage cans, coffee cups, paper bags, plastic wrappers, and cigarettes
- Construction wastes including brick, mortar, timber, steel and metal scraps, pipe and electrical cuttings, non-hazardous equipment parts, styrofoam and other materials used to transport and package construction materials

CASQA
CALIFORNIA STORMWATER QUALITY ASSOCIATION

- Highway planting wastes, including vegetative material, plant containers, and packaging materials

Limitations

Temporary stockpiling of certain construction wastes may not necessitate stringent drainage related controls during the non-rainy season or in desert areas with low rainfall.

Implementation

The following steps will help keep a clean site and reduce stormwater pollution:

- Select designated waste collection areas onsite.
- Inform trash-hauling contractors that you will accept only watertight dumpsters for onsite use. Inspect dumpsters for leaks and repair any dumpster that is not watertight.
- Locate containers in a covered area or in a secondary containment.
- Provide an adequate number of containers with lids or covers that can be placed over the container to keep rain out or to prevent loss of wastes when it is windy.
- Plan for additional containers and more frequent pickup during the demolition phase of construction.
- Collect site trash daily, especially during rainy and windy conditions.
- Remove this solid waste promptly since erosion and sediment control devices tend to collect litter.
- Make sure that toxic liquid wastes (used oils, solvents, and paints) and chemicals (acids, pesticides, additives, curing compounds) are not disposed of in dumpsters designated for construction debris.
- Do not hose out dumpsters on the construction site. Leave dumpster cleaning to the trash hauling contractor.
- Arrange for regular waste collection before containers overflow.
- Clean up immediately if a container does spill.
- Make sure that construction waste is collected, removed, and disposed of only at authorized disposal areas.

Education

- Have the contractor's superintendent or representative oversee and enforce proper solid waste management procedures and practices.
- Instruct employees and subcontractors on identification of solid waste and hazardous waste.
- Educate employees and subcontractors on solid waste storage and disposal procedures.

- Hold regular meetings to discuss and reinforce disposal procedures (incorporate into regular safety meetings).
- Require that employees and subcontractors follow solid waste handling and storage procedures.
- Prohibit littering by employees, subcontractors, and visitors.
- Minimize production of solid waste materials wherever possible.

Collection, Storage, and Disposal

- Littering on the project site should be prohibited.
- To prevent clogging of the storm drainage system, litter and debris removal from drainage grates, trash racks, and ditch lines should be a priority.
- Trash receptacles should be provided in the contractor's yard, field trailer areas, and at locations where workers congregate for lunch and break periods.
- Litter from work areas within the construction limits of the project site should be collected and placed in watertight dumpsters at least weekly, regardless of whether the litter was generated by the contractor, the public, or others. Collected litter and debris should not be placed in or next to drain inlets, stormwater drainage systems, or watercourses.
- Dumpsters of sufficient size and number should be provided to contain the solid waste generated by the project.
- Full dumpsters should be removed from the project site and the contents should be disposed of by the trash hauling contractor.
- Construction debris and waste should be removed from the site biweekly or more frequently as needed.
- Construction material visible to the public should be stored or stacked in an orderly manner.
- Stormwater runon should be prevented from contacting stored solid waste through the use of berms, dikes, or other temporary diversion structures or through the use of measures to elevate waste from site surfaces.
- Solid waste storage areas should be located at least 50 ft from drainage facilities and watercourses and should not be located in areas prone to flooding or ponding.
- Except during fair weather, construction and highway planting waste not stored in watertight dumpsters should be securely covered from wind and rain by covering the waste with tarps or plastic.
- Segregate potentially hazardous waste from non-hazardous construction site waste.
- Make sure that toxic liquid wastes (used oils, solvents, and paints) and chemicals (acids, pesticides, additives, curing compounds) are not disposed of in dumpsters designated for construction debris.

- For disposal of hazardous waste, see WM-6, Hazardous Waste Management. Have hazardous waste hauled to an appropriate disposal and/or recycling facility.
- Salvage or recycle useful vegetation debris, packaging and surplus building materials when practical. For example, trees and shrubs from land clearing can be used as a brush barrier, or converted into wood chips, then used as mulch on graded areas. Wood pallets, cardboard boxes, and construction scraps can also be recycled.

Costs

All of the above are low cost measures.

Inspection and Maintenance

- Inspect and verify that activity–based BMPs are in place prior to the commencement of associated activities. While activities associated with the BMP are under way, inspect weekly during the rainy season and of two-week intervals in the non-rainy season to verify continued BMP implementation.
- Inspect BMPs subject to non-stormwater discharge daily while non-stormwater discharges occur
- Inspect construction waste area regularly.
- Arrange for regular waste collection.

References

Processes, Procedures and Methods to Control Pollution Resulting from All Construction Activity, 430/9-73-007, USEPA, 1973.

Stormwater Quality Handbooks - Construction Site Best Management Practices (BMPs) Manual, State of California Department of Transportation (Caltrans), November 2000.

Stormwater Management for Construction Activities; Developing Pollution Prevention Plans and Best Management Practice, EPA 832-R-92005; USEPA, April 1992.

Sanitary/Septic Waste Management WM-9

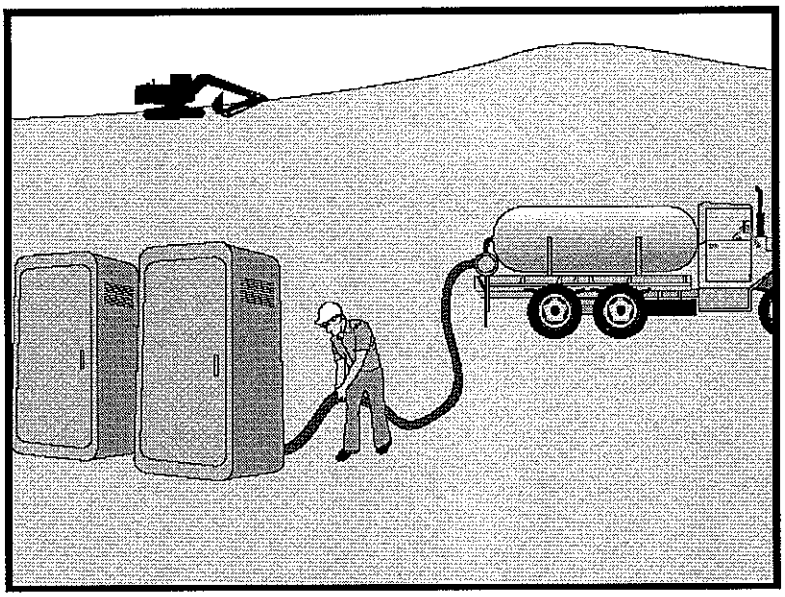

Objectives

EC	Erosion Control	
SE	Sediment Control	
TC	Tracking Control	
WE	Wind Erosion Control	
NS	Non-Stormwater Management Control	
WM	Waste Management and Materials Pollution Control	☑

Legend:

☑ Primary Objective

☒ Secondary Objective

Targeted Constituents

Sediment	
Nutrients	☑
Trash	☑
Metals	
Bacteria	☑
Oil and Grease	
Organics	☑

Potential Alternatives

None

Description and Purpose

Proper sanitary and septic waste management prevent the discharge of pollutants to stormwater from sanitary and septic waste by providing convenient, well-maintained facilities, and arranging for regular service and disposal.

Suitable Applications

Sanitary septic waste management practices are suitable for use at all construction sites that use temporary or portable sanitary and septic waste systems.

Limitations

None identified.

Implementation

Sanitary or septic wastes should be treated or disposed of in accordance with state and local requirements. In many cases, one contract with a local facility supplier will be all that it takes to make sure sanitary wastes are properly disposed.

Storage and Disposal Procedures

- Temporary sanitary facilities should be located away from drainage facilities, watercourses, and from traffic circulation. When subjected to high winds or risk of high winds, temporary sanitary facilities should be secured to prevent overturning.
- Wastewater should not be discharged or buried within the project site.

- Sanitary and septic systems that discharge directly into sanitary sewer systems, where permissible, should comply with the local health agency, city, county, and sewer district requirements.
- Only reputable, licensed sanitary and septic waste haulers should be used.
- Sanitary facilities should be located in a convenient location.
- Untreated raw wastewater should never be discharged or buried.
- Temporary septic systems should treat wastes to appropriate levels before discharging.
- If using an onsite disposal system (OSDS), such as a septic system, local health agency requirements must be followed.
- Temporary sanitary facilities that discharge to the sanitary sewer system should be properly connected to avoid illicit discharges.
- Sanitary and septic facilities should be maintained in good working order by a licensed service.
- Regular waste collection by a licensed hauler should be arranged before facilities overflow.

Education

- Educate employees, subcontractors, and suppliers on sanitary and septic waste storage and disposal procedures.
- Educate employees, subcontractors, and suppliers of potential dangers to humans and the environment from sanitary and septic wastes.
- Instruct employees, subcontractors, and suppliers in identification of sanitary and septic waste.
- Hold regular meetings to discuss and reinforce disposal procedures (incorporate into regular safety meetings).
- Establish a continuing education program to indoctrinate new employees.

Costs

All of the above are low cost measures.

Inspection and Maintenance

- Inspect and verify that activity–based BMPs are in place prior to the commencement of associated activities. While activities associated with the BMP are under way, inspect weekly during the rainy season and of two-week intervals in the non-rainy season to verify continued BMP implementation.
- Arrange for regular waste collection.
- If high winds are expected, portable sanitary facilities must be secured with spikes or weighed down to prevent over turning.

References

Stormwater Quality Handbooks - Construction Site Best Management Practices (BMPs) Manual, State of California Department of Transportation (Caltrans), November 2000.

Stormwater Management for Construction Activities; Developing Pollution Prevention Plans and Best Management Practice, EPA 832-R-92005; USEPA, April 1992.