SOLAR FARM (195 LINES)

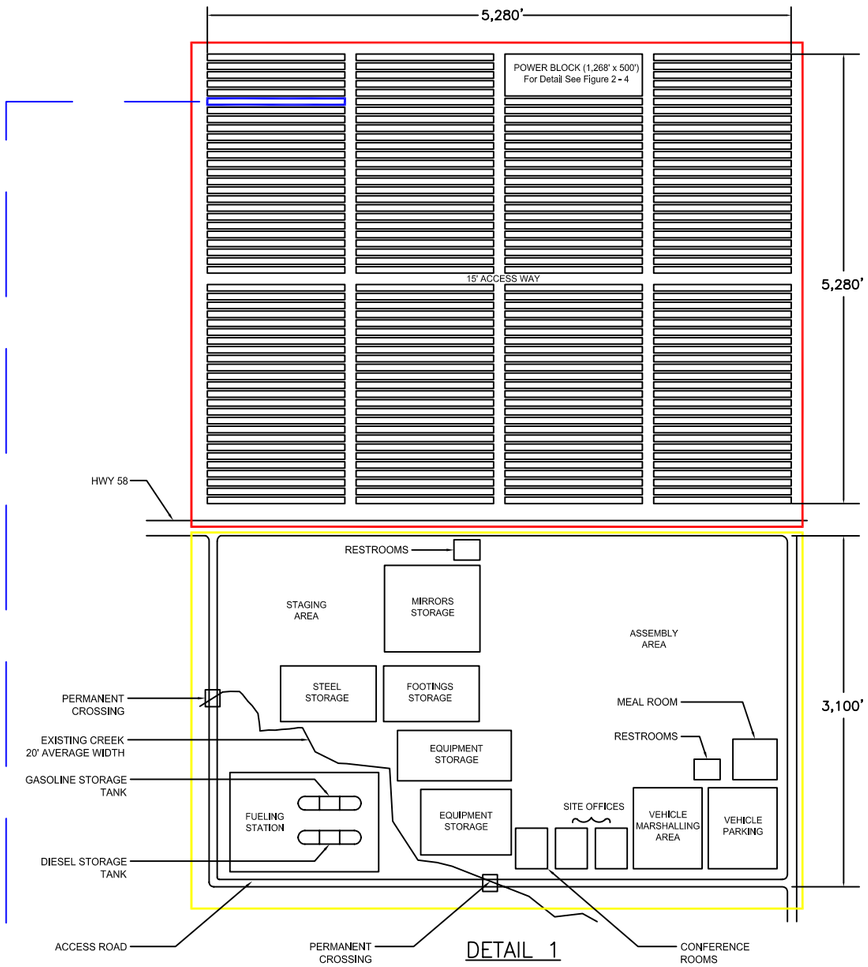

DETAIL 1

BAY

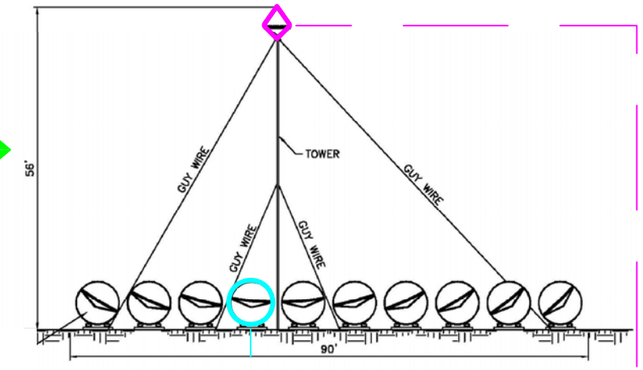

DETAIL 3

REFLECTOR PROFILE

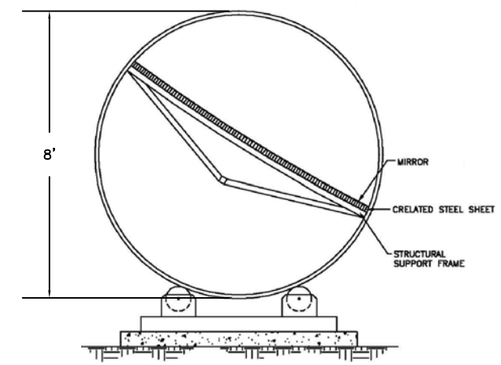

RECEIVER

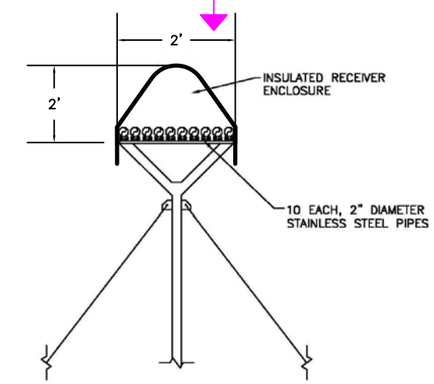

REFLECTOR PERSPECTIVE (APPROX. 46,800 REFLECTORS IN SOLAR FARM)

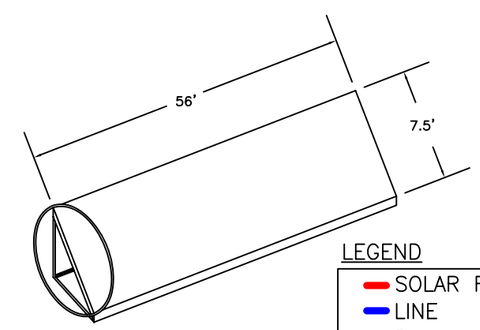

LINE (240 REFLECTORS)

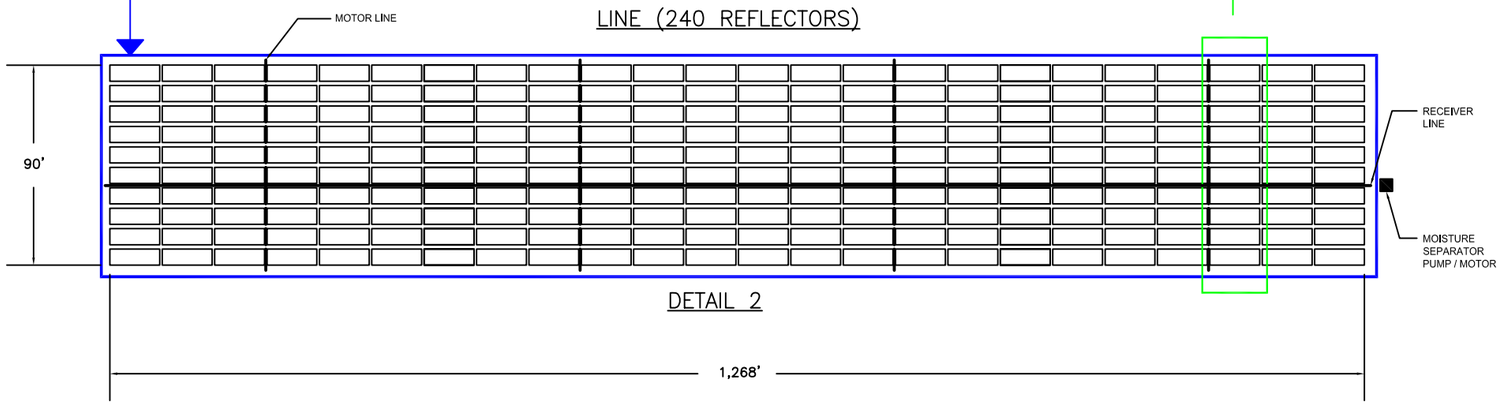

DETAIL 2

LEGEND

SOLAR FARM	=Array + Power Block
LINE	=1,268' x 90'
BAY	=56' x 90'
REFLECTOR	=56' x 7.5'
RECEIVER	=2' x 2'
CONSTRUCTION LAYDOWN AREA	=5,280' x 3,100'

PROJECT LAYOUT
CARRIZO ENERGY SOLAR FARM (CESF)

URS

CREATED BY: JM	DATE: 09-06-07	FIG. NO: 1.1 - 4
PM: AL	PROJ. NO: 22239472	

J:\22239472 New Ausra AFC Prep & Tech Studies\024 Project Description\Draft PD Versions\URS Project Description Figures\figure 2.dwg Sep 07, 2007 - 10:10am