NOTE:

1. PIPING SHOWN REFLECTS PRELIMINARY ARRANGEMENT SCHEME. ALLOWANCE FOR ACCOMODATING SLIP TYPE PIPE EXPANSION JOINTS IS SHOWN.

REFERENCE DRAWING

1. PATCH SERVICES D-1507-2501

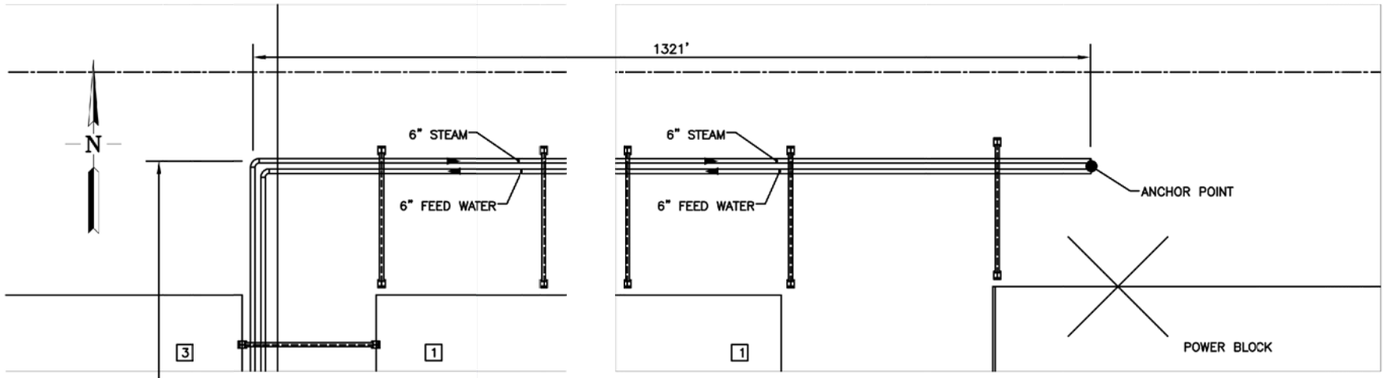


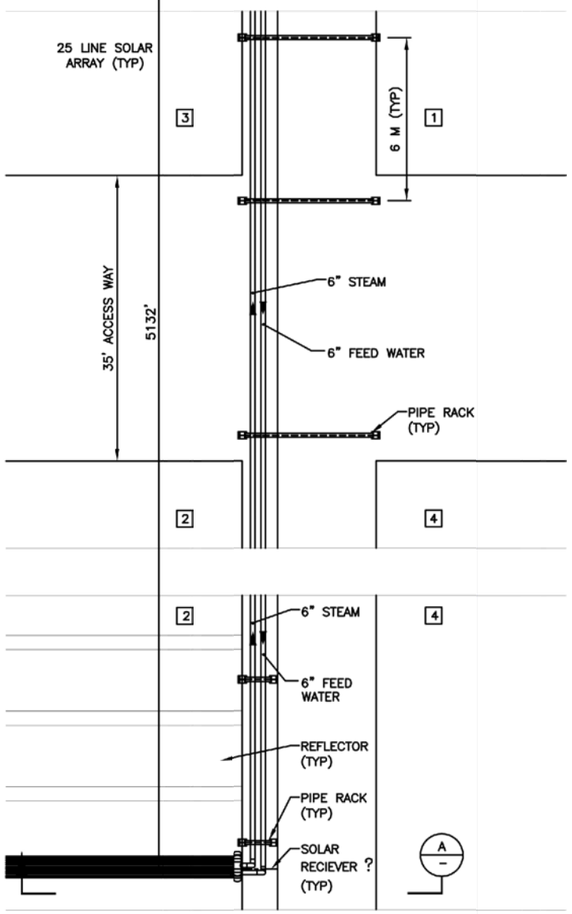


FEEDWATER AND STEAM PIPING RUNS

PLAN

1/8" = 1'-0"

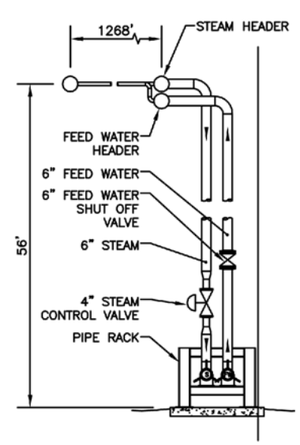


TYPICAL PIPE TO SOLAR RECIEVER

SECTION A

1/4" = 1'-0"

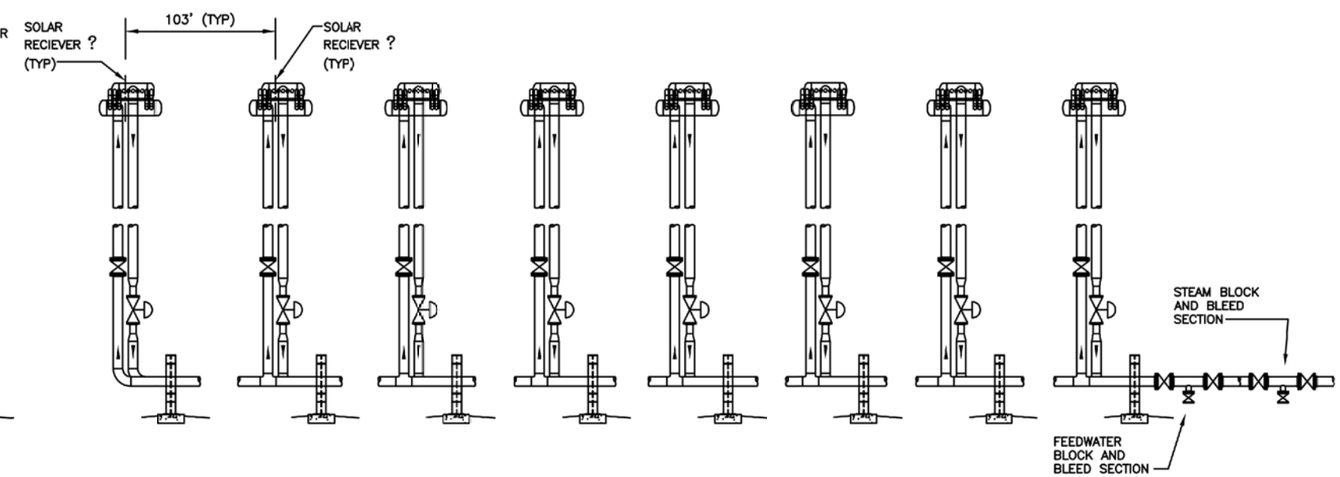


TYPICAL PIPE TO SOLAR RECIEVER ARRANGEMENT

LOOKING WEST

1/4" = 1'-0"

| REV | DATE | DESCRIPTION | DRAW'N BY | CHK'D BY | SNR'R | PROJECT ENG'R | APPR'D BY |
|---|---|---|---|---|---|---|---|
| A | 7/25/07 | PRELIMINARY -AFC- FOR CLIENT REVIEW | RB | JP | JP | JP | JP |

THIS DRAWING WAS PREPARED BY PATCH SERVICES FOR A SPECIFIC PROJECT, TAKING INTO CONSIDERATION THE SPECIFIC AND UNIQUE REQUIREMENTS OF THE PROJECT. REUSE OF THIS DRAWING OR ANY INFORMATION CONTAINED IN THIS DRAWING FOR ANY PURPOSE IS PROHIBITED UNLESS WRITTEN PERMISSION FROM BOTH PATCH SERVICES AND PATCH'S CLIENT IS GRANTED.


PATCH SERVICES

CALIFORNIA • ENGINEERING • TEXAS

424 EXECUTIVE COURT NORTH
SUITE: 424D
FAIRFIELD, CA 94534
PHONE: 707-864-5969
FAX: 707-864-8079

1701 NORTH GREENVILLE AVE.
SUITE: 800
RICHARDSON, TX 75081
PHONE: 972-231-4060
FAX: 972-231-4059


PROJECT AREA PIPING -
TYPICAL PIPE TO SOLAR RECEIVER
CARRIZO ENERGY SOLAR FARM (CESF)

URS

| CREATED BY: PATCH | DATE: 09-12-07 | FIG. NO: |
|---|---|---|
| PM: AL | PROJ. NO: 22239472 | 3.4-13 |


G:\gis\projects\1577\22239320\mxd\patch_d1507_3011.mxd
06/12/07 ACAD FILE: D-1507-3011_A USER: RB Dwg: PPG