SECTION 5.0

Electric Transmission

5.1 Introduction

This section describes the electric transmission facilities associated with the Chevron Power Plant Replacement Project (PPRP) located in the City of Richmond (City), California. Section 5.2 discusses the laws, ordinances, regulations, and standards (LORS) associated with the PPRP facility. Section 5.3 provides a description of the transmission facilities. Section 5.4 addresses the transmission interconnection engineering. Section 5.5 addresses transmission line safety and nuisance.

5.2 Applicable Laws, Ordinances, Regulations, and Standards

This section provides a list of LORS that apply to the proposed subtransmission line engineering as well as subtransmission line safety and nuisance.

5.2.1 Federal

There are no federal LORS related to transmission system engineering or transmission line safety and nuisance.

5.2.2 State

5.2.2.1 Design and Construction

Table 5.2-1 lists the LORS applicable to the design and construction of the proposed transmission line.

TABLE 5.2-1
Design and Construction LORS

LORS	Applicability
Title 8 CCR, Section 2700 et seq. "High Voltage Electrical Safety Orders"	Establishes essential requirements and minimum standards for installation, operation, and maintenance of electrical installation and equipment to provide practical safety and freedom from danger.
ANSI/IEEE 693 "IEEE Recommended Practices for Seismic Design of Substations"	Provides recommended design and construction practices.
IEEE 1119 "IEEE Guide for Fence Safety Clearances in Electric-Supply Stations"	Provides recommended clearance practices to protect persons outside the facility from electric shock.
IEEE 998 "Direct Lightning Strike Shielding of Substations"	Provides recommendations to protect electrical system from direct lightning strikes.
IEEE 980 "Containment of Oil Spills for Substations"	Provides recommendations to prevent release of fluids into the environment.

Notes:
ANSI = American National Standards Institute
CCR = California Code of Regulations
IEEE = Institute of Electrical and Electronics Engineers

5.2.2.2 Electric and Magnetic Fields

The LORS pertaining to electric and magnetic field (EMF) interference are shown in Table 5.2-2.

TABLE 5.2-2
Electric and Magnetic Field LORS

LORS	Applicability
ANSI/IEEE 644-1994 "Standard Procedures for Measurement of Power Frequency Electric and Magnetic Fields from AC Power Lines."	Standard procedure for measuring EMF from an electric line that is in service.

5.2.2.3 Hazardous Shock

Table 5.2-3 lists the LORS regarding hazardous shock protection for the PPRP.

TABLE 5.2-3
Hazardous Shock LORS

LORS	Applicability
Title 8 CCR Section 2700 et seq., "High Voltage Electrical Safety Orders."	Establishes essential requirements and minimum standards for installation, operation, and maintenance of electrical equipment to provide practical safety and freedom from danger.
ANSI/IEEE 80 "IEEE Guide for Safety in AC Substation Grounding."	Presents guidelines for assuring safety through proper grounding of AC outdoor substations.
NESC, ANSI C2, Section 9, Article 92, Paragraph E; Article 93, Paragraph C.	Covers grounding methods for electrical supply and communications facilities.

Note:
NESC = National Electric Safety Code

5.2.2.4 Communication Interference

The LORS pertaining to communication interference are shown in Table 5.2-4.

TABLE 5.2-4
Communications Interference LORS

LORS	Applicability
Title 47 Code of Federal Regulations (CFR) Section 15.25, "Operating Requirements, Incidental Radiation."	Prohibits operation of any device emitting incidental radiation that causes interference to communications. The regulation also requires mitigation for any device that causes interference.
California Energy Commission (CEC) staff, Radio Interference and Television Interference (RI-TVI) Criteria (Kern River Cogeneration Project 82-AFC-2, Final Decision, Compliance Plan 13-7).	Prescribes the CEC's RI-TVI mitigation requirements, developed and adopted by the CEC in past siting cases.

5.2.2.5 Aviation Safety

Table 5.2-5 lists the aviation safety LORS that may apply to the proposed construction and operation of the PPRP.

TABLE 5.2-5
Aviation Safety LORS

LORS	Applicability
Title 14 CFR Part 77 "Objects Affecting Navigable Air Space."	Describes the criteria used to determine whether a "Notice of Proposed Construction or Alteration" (NPCA, FAA Form 7460-1) is required for potential obstruction hazards.
Federal Aviation Administration (FAA) Advisory Circular No. 70/7460-1G, "Obstruction Marking and Lighting."	Describes the FAA standards for marking and lighting of obstructions as identified by Federal Aviation Regulations Part 77.

5.2.2.6 Fire Hazards

Table 5.2-6 shows the LORS governing fire hazard protection for the PPRP.

TABLE 5.2-6
Fire Hazard LORS

LORS	Applicability
Title 14 CCR Sections 1250-1258, "Fire Prevention Standards for Electric Utilities."	Provides specific exemptions from electric pole and tower firebreak and electric conductor clearance standards, and specifies when and where standards apply.
ANSI/IEEE 80 "IEEE Guide for Safety in AC Substation Grounding."	Presents guidelines for assuring safety through proper grounding of AC outdoor substations.
General Order 95 (GO-95), CPUC, "Rules for Overhead Electric Line Construction" Section 35.	CPUC rule covers all aspects of design, construction, operation, and maintenance of electrical transmission line and fire safety (hazards).

Notes:
CPUC = California Public Utilities Commission
IEEE = Institute of Electrical and Electronics Engineers

In addition to the above LORS, Chevron voluntarily adopts portions of CPUC general orders and decisions listed in Table 5.2-7 for incorporation into Chevron standards.

TABLE 5.2-7
CPUC General Orders and Decisions

LORS	Applicability
General Order 95 (GO-95), CPUC, "Rules for Overhead Electric Line Construction."	CPUC rule covers required clearances, grounding techniques, maintenance, and inspection requirements.
General Order 128 (GO-128), CPUC, "Rules for Construction of Underground Electric Supply and Communications Systems."	Establishes requirements and minimum standards to be used for the station AC power and communications circuits.
General Order 52 (GO-52), CPUC, "Construction and Operation of Power and Communication Lines."	Applies to the design of facilities to provide or mitigate inductive interference. Covers all aspects of the construction, operation, and maintenance of power and communication lines and specifically applies to the prevention or mitigation of inductive interference.
CPUC Decision 93-11-013.	CPUC position on EMF reduction.
General Order 131-D (GO-131), CPUC, Rules for Planning and Construction of Electric Generation, Line, and Substation Facilities in California.	CPUC construction-application requirements, including requirements related to EMF reduction.
Public Utilities Code (PUC), Sections 21656-21660.	Discusses the permit requirements for construction of possible obstructions in the vicinity of aircraft landing areas, in navigable air space, and near the boundary of airports.

5.2.3 Local

There are no local LORS related to transmission system engineering or transmission line safety and nuisance.

5.3 Transmission Facilities

The PPRP cogeneration plant (Cogen 3000) will require reconductoring of approximately 4,000 feet of existing, Refinery-owned double-circuit 115-kV transmission lines (Cogen Lines 1 & 2) located entirely within the Refinery property. The reconductored line will extend from the existing Chevron Substation 5 adjacent to the PPRP site (Figure 5.3-1) to the Standard Oil Switching Station (SOSS). The SOSS is the point of common coupling with PG&E and interties to existing PG&E 115-kV El Sobrante 1 and 2 transmission lines. Substation 5 and SOSS, like Cogen Lines 1 & 2, are located completely within the boundaries of the Refinery. The physical layout of the lines, including the towers and poles, is shown schematically in Figure 5.3-2. A single-line diagram of the 115-kV interconnection including both Cogen 3000 and the proposed hydrogen plant steam turbine generator (STG) is shown in Figure 5.3-3. The proposed new hydrogen plant STG switchgear will inter-tie to the existing 12.47-kV switchgear at Substation 4 via new and existing dual 12.47-kV power cables within the Refinery. The new approximately 1,500-foot section of 12.47-kV power cables will be routed in conduit along the new piperack to be installed in the hydrogen plant

to the existing piperack where it will tie-in to existing power cables that are routed on poles to Substation 4.

Given the short distance of the transmission line route, alternative interconnections were not considered.

5.4 Transmission Interconnection Engineering

Load flow studies are expected to indicate that there is adequate system performance of the existing SOSS, El Sobrante 1 and 2 transmission lines and beyond to facilitate the interconnection without significant impacts. An interconnect application for the proposed additional generation and modified interconnection to SOSS was submitted to PG&E on May 21, 2007. As a result of this application, PG&E will perform a facility study and make a determination of whether a System Impact Study (SIS) is required. If they determine that an SIS is required, they will proceed with it following the facility study. The SIS will document PG&E's findings, including an evaluation of "N-1" contingencies, transients and short-circuit analysis. The SIS is expected to be completed by early October 2007 and will be submitted to the CEC as soon as it is available.

5.5 Transmission Line Safety and Nuisance

5.5.1 Electrical Clearances

Typical high-voltage overhead transmission lines are composed of bare conductors connected to supporting structures by means of porcelain, glass, or plastic insulators. The air surrounding the energized conductor acts as the insulating medium. Maintaining sufficient clearances, or air space, around the conductors to protect the public and utility workers is paramount to safe operation of the line. The safety clearance required around the conductors is determined by normal operating voltages, conductor temperature, short-term abnormal voltages, wind-blown swinging conductors, contamination of the insulators, clearances for workers, and clearances for public safety. Minimum clearances are specified in the CPUC General Order 95 (GO-95). Utilities, regulators, and local ordinances may specify additional clearances. Clearances are specified for:

- Distance between each energized conductor
- Distance between the energized conductors and the supporting structure
- Distance between the energized conductors and other power or communication wires on the same supporting structure, or between other power or communication wires above or below the conductors
- Distance from the energized conductors to the ground and features such as roadways, railroads, driveways, parking lots, navigable waterways, etc.
- Distance from the energized conductors to buildings and signs
- Distance from the energized conductors to other parallel power lines

The proposed reconductoring of the 115-kV transmission interconnection will be designed to meet all applicable code clearance requirements. The dimensions of the existing transmission structures will not be substantively modified to accommodate the higher ampacity conductors. The minimum ground clearance for 115-kV conductors per GO-95 is 30 feet, based on the road-crossing minimum. This is the design clearance for the 60° F operating temperature of the line. The new conductors will be composite core type ACCC (aluminum compact conductor, composite core) with very low sag values at high temperature. The higher tensile strength of the composite core and its corresponding lower sag allows the same sized ACCC conductors as the existing AAC (aluminum conductor aluminum core) to carry substantially higher values of current. The final design value will be consistent with GO-95.

5.5.2 Electrical Effects

The electrical effects of high-voltage transmission lines fall into two broad categories: corona effects and field effects. Corona is the ionization of the air that occurs at the surface of the energized conductor and suspension hardware due to very high electric field strength at the surface of the metal during certain conditions. Corona may result in radio and television reception interference, audible noise, light, and production of ozone. Field effects are the voltages and currents that may be induced in nearby conducting objects. A transmission line's 60 Hertz (Hz) electric and magnetic fields cause these effects.

5.5.2.1 Electric and Magnetic Field Evaluation

Power lines, electrical wiring, and electrical machinery and appliances all produce electric and magnetic fields, commonly referred to as EMF. The EMF produced by the power system of the United States has a frequency of 60 Hz, meaning that the intensity and orientation of the field changes 60 times per second.

The 60-Hz power line fields are considered extremely low frequency as compared to AM radio, which operates at up to 1,600,000 Hz (1,600 kHz); television at 890,000,000 Hz (890 MHz); cellular telephones at 900 MHz; microwave ovens at 2,450,000,000 Hz (2.4 GHz); and X-rays at about 1 billion Hz. Higher frequency fields have shorter wavelengths (the wavelength is the physical distance between repeating units of a wave pattern) and greater energy in the field. Microwave wavelengths are several inches and have enough energy to cause heating in conducting objects. Higher frequencies such as X-rays have enough energy to cause ionization (breaking of molecular bonds.) At the frequency associated with electric power transmission (60 Hz), the electric and magnetic fields have a wavelength of 3,100 miles and have very low energy that does not cause heating or ionization.

Transmission line electric fields are produced by electrical charges (voltage) on the energized conductor. The electric field strength is directly proportional to the line's voltage and inversely proportional to the square of the distance from the conductors. Therefore, the electric field strength at 2 feet from a transmission line would be only one quarter of the electric field strength at 1 foot from the line. The electric field strength at 30 feet from the line would be 1/900th of the electrical field strength at 1 foot from the line. The strength of the electric fields is measured in units of kilovolts per meter (kV/m).

Magnetic fields around transmission lines are produced by the current that flows through the line conductors. The magnetic field strength is directly proportional to the line's current and inversely proportional to the square of the distance from the conductors. Therefore, the

magnetic field strength at 2 feet from a transmission line would be only one quarter of the magnetic field strength at 1 foot from the line. The magnetic field strength at 30 feet from the line would be 1/900th of the magnetic field strength at 1 foot from the line. Magnetic fields are expressed in units of milligauss (mG).

Power transmission line design also affects the strength of the EMF generated. Load or phase balancing for overhead transmission lines and distance between electrical conductor wires can make a very significant difference in the measurable EMF. The magnetic fields created by balanced current flow between the three conductors of a transmission line will tend to cancel each other so that very little EMF would be measurable at ground level.

Considerable research has been conducted over the last 30 years on the biological effects of the power frequency electric and magnetic fields. The majority of scientific and governmental reviews of the entire body of research and opinion on this subject have concluded that adverse effects are unlikely. Certain biological effects are well known and documented. However, additional research is ongoing with regard to human health effects. Because the health-effect studies have had contradictory results, and offer no conclusion about whether the fields are harmful or not, some states, California in particular, choose not to specify maximum levels of EMF. Instead, the State mandates a program of managing EMF exposure to the public, encouraging electric utilities to use low-cost techniques on new projects to reduce the levels of EMF when possible. This EMF reduction approach is integral to the design of the project.

EMF calculations were not performed for the 115-kV line because the existing line is not located on public property. There is considerable evidence that typical 115-kV EMF impacts have a limited geographic reach. Because the transmission line is approximately 1 mile from the nearest public access, no significant EMF exposure or impact to the public is expected.

5.5.2.2 Radio and Television Interference Evaluation

Electric corona occurs when the potential of a conductor in air is raised to a value that exceeds the dielectric strength of the surrounding air. Radio and television interference (RI-TVI) can occur when corona is present on a transmission line, though this phenomenon is usually limited to extra-high voltage lines (345 kV and above).

RI-TVI rarely occurs on 115-kV transmission lines because of their relatively low potential and the smooth surfaces of the conductors and hardware. In addition the transmission line will be located entirely within Refinery property. Nonetheless, any RI-TVI complaints will be investigated, and if the transmission lines are found to be at fault, appropriate remedies will be implemented. Therefore, RI-TVI is not expected to be an issue for the reconductored PPRP transmission line.

5.5.3 Aviation Safety

The proposed PPRP is located approximately 14 miles northwest of the nearest airport.

Federal Aviation Regulations, Part 77, establishes standards for determining obstructions in navigable air space and sets forth requirements for notification of proposed construction. These regulations require notification for any construction over 200 feet above ground level. In addition, notification is required if the obstruction is less than specified heights and falls

within restricted air space in the approach to airports. No facility components structures are required at the site that would require notification. All transmission structures are existing and will not be modified in height. Therefore, no significant aviation hazard is expected.

5.5.4 Fire Hazards

The 115-kV transmission system is designed and constructed in accordance with applicable provisions of GO-95, which establish clearances and tree trimming to mitigate fire hazards. The transmission line route is kept clear of brush and other combustible material. Chevron provides trained and qualified maintenance personnel to maintain the interconnection and immediate area in accordance with accepted industry practices.

N

0 350 700
Feet

Existing 115 kV Transmission Lines
COGEN 1 & 2, to be reconductored

New 12.47 kV cable run to existing
12.47 kV Transmission Lines to
tie-in hydrogen plant STG to Sub 4

FIGURE 5.3-1
LOCATION OF POWER PLANT REPLACEMENT PROJECT TRANSMISSION LINES
CHEVRON POWER PLANT REPLACEMENT PROJECT
RICHMOND, CA

CH2MHILL

ES042007007SAC figure_5_3_1.ai 06/15/07 tdaus

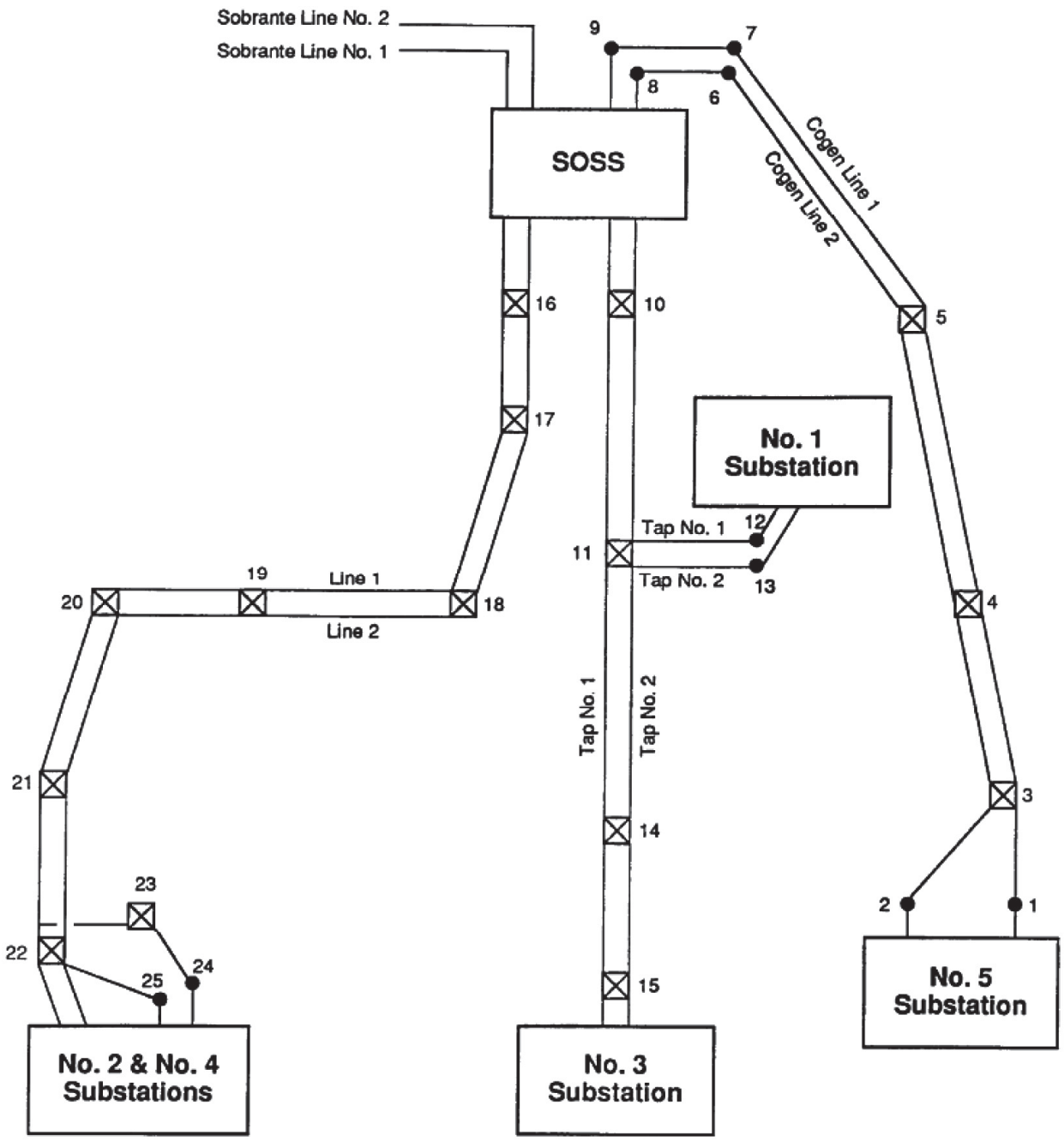

FIGURE 5.3-2
SCHEMATIC DIAGRAM OF RICHMOND REFINERY 115 KV TOWERS AND TRANSMISSION LINES
CHEVRON POWER PLANT REPLACEMENT PROJECT
RICHMOND, CA

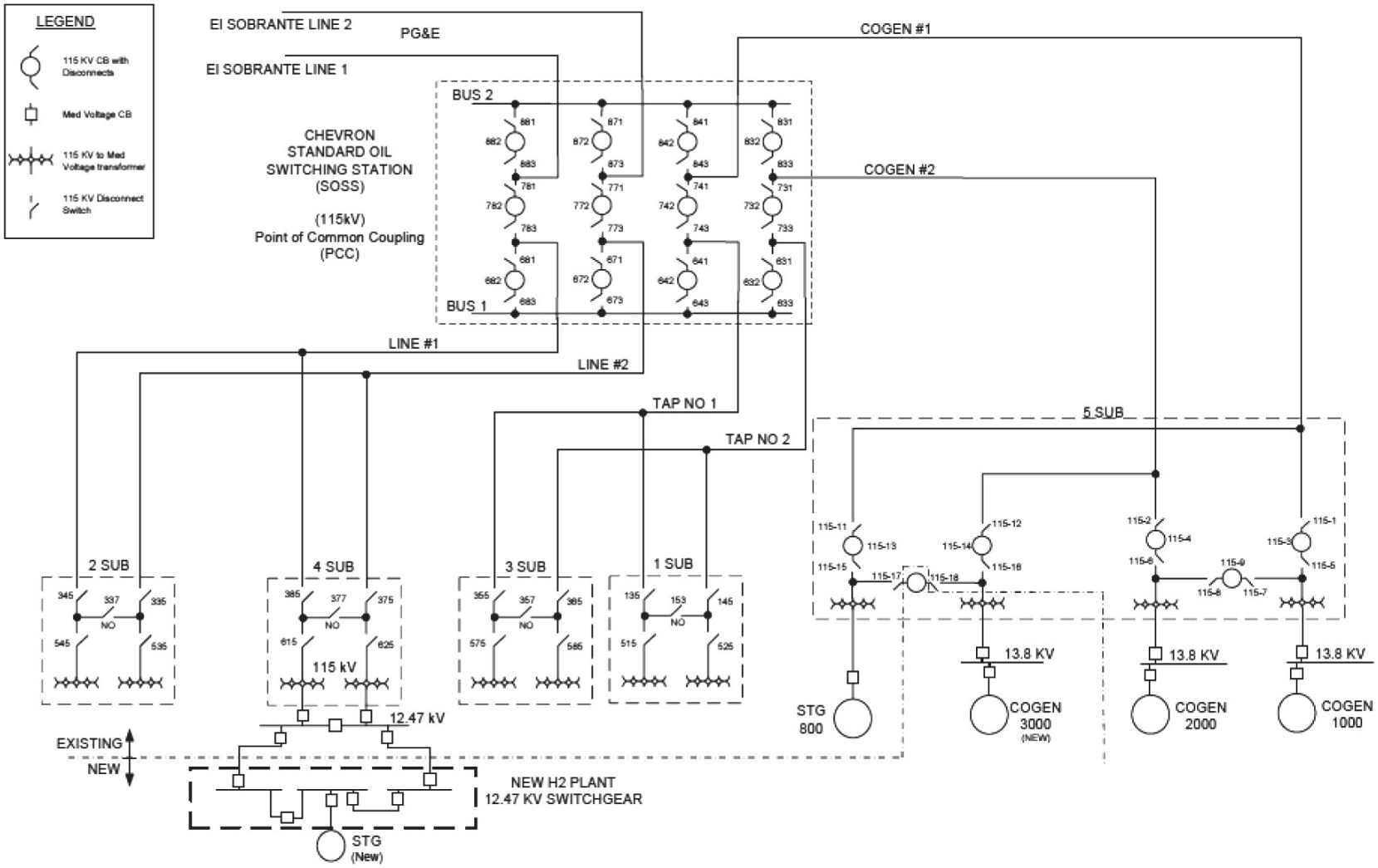

FIGURE 5.3-3
ONE-LINE DIAGRAM - 115 KV SYSTEM INCLUDING POWER PLANT REPLACEMENT PROJECT
CHEVRON POWER PLANT REPLACEMENT PROJECT
RICHMOND, CA

CH2MHILL

ES042007007SAC figure_5_3_3.ai 06/15/07 tdaus