E&L Westcoast, LLC

ANDREW C. WELCH, P.E.
PROJECT MANAGER
T/ 240 723-2304
F/ 240 723-2339

December 12, 2006

DOCKET
06-AFC-9
DATE DEC 12 2006
RECD. DEC 12 2006

Mr. Jack Caswell
Project Manager
California Energy Commission
1516 Ninth Street, MS-15
Sacramento, CA 95814

Re: Colusa Generating Station (CGS) - CEC Docket No. 06-AFC-9
Supplement in Response to CEC Data Adequacy Review of the
Application for Certification

Dear Mr. Caswell:

E&L Westcoast, LLC, (E&L) a limited liability company and the applicant for the above-referenced Colusa Generating Station, is pleased to submit the enclosed information in response to the California Energy Commission's (CEC) Data Adequacy Review of the Application for Certification (AFC). E&L is no longer seeking the 6-month review track for this project. Therefore, the enclosed is a response to 12-month review track Data Inadequacies identified by the CEC.

Andrew C. Welch

Enclosures

COMPETITIVE POWER VENTURES, INC.
8403 COLESVILLE ROAD
SUITE 915
SILVER SPRING MD 20910

# SUPPLEMENT

*In Response to CEC Data Adequacy Review*

# Application for Certification (06-AFC-9)

for

# COLUSA GENERATING STATION

## Colusa County, California

December 2006

Prepared for:

E&L Westcoast, LLC

Prepared by:

URS

E&L Westcoast, LLC

ANDREW C. WELCH, P.E.
PROJECT MANAGER
T/ 240 723-2304
F/ 240 723-2339

| | | |
|---|---|---|
| IN THE MATTER OF THE SUPPLEMENT IN RESPONSE TO CEC DATA ADEQUACY REVIEW OF THE APPLICATION FOR THE CERTIFICATION OF COLUSA GENERATING STATION DOCKET NO. 06-AFC-9 | ) ) ) ) ) ) | VERIFICATION IN SUPPORT OF THE SUPPLEMENT IN RESPONSE TO CEC DATA ADEQUACY REVIEW OF THE APPLICATION FOR THE CERTIFICATION OF COLUSA GENERATING STATION |

I, Andrew Welch, Project Manager, E&L Westcoast, LLC, Applicant in the above-referenced matter, am authorized to make this verification on behalf of E&L Westcoast, LLC.

I have read and know of the contents of the Supplement in Response to CEC Data Adequacy Review of the Application for Certification for the Colusa Generating Station. ("Supplement").

I am informed and believe that the matters stated in the Supplement are true and on that ground I allege that the matters stated therein are true.

I declare under penalty of perjury that the foregoing is true and correct. Executed on December 12, 2006, at 8403 Colesville Road, Suite 915, Silver Spring, MD 20910.

_____
Andrew Welch

| Adequacy Issue: | Adequate | Inadequate | X | DATA ADEQUACY RESPONSE | Revision No. | 0 | Date | December 4, 2006 |
|---|---|---|---|---|---|---|---|---|
| Technical Area: | **Air Quality** | | | Project: | Colusa Generating Station | | Technical Staff: | William Walters |
| Project Manager: | Jack W. Caswell | | | Docket: | 06-AFC-09 | | Technical Senior: | Keith Golden |

| ID | SITING REGULATIONS | INFORMATION | INFORMATION REQUIRED TO MAKE AFC CONFORM WITH REGULATIONS | RESPONSE |
|---|---|---|---|---|
| **1** | Appendix B (g) (1) | ...provide a discussion of the existing site conditions, the expected direct, indirect and cumulative impacts due to the construction, operation and maintenance of the project, the measures proposed to mitigate adverse environmental impacts of the project, the effectiveness of the proposed measures, and any monitoring plans proposed to verify the effectiveness of the mitigation. | Need to identify specific locations and quantity of emission reduction credits that are earmarked for this project. Also, need to include a discussion of the effectiveness of the identified emission reduction credits (offsets) in mitigating the project impacts. | **The Emission Reduction Credit package is attached as Appendix A.** |
| **2** | Appendix B (g) (8) (B) | The heating value and chemical characteristics of the proposed fuels, the stack height and diameter, the exhaust velocity and temperature, the heat rate and the expected capacity factor of the proposed facility. | Please provide the stack heights and diameters and exhaust velocities and temperatures of the auxiliary boiler, emergency engine and fire pump engine. | **The requested modeling files were docketed with the CEC on November 10, 2006.** |
| **3** | Appendix B (g) (8) (H) | One year of meteorological data collected from either the Federal Aviation Administration Class 1 station nearest to the project or from the project site, or meteorological data approved by the California Air Resources Board or the local air pollution control district. | Please provide an electronic copy of the meteorological data used in the air dispersion analysis. The meteorological data files were not provided with the AFC. | **The requested modeling files were docketed with the CEC on November 10, 2006.** |
| **4** | Appendix B (g) (8) (H) (ii) | The data shall include quarterly wind tables and wind roses, ambient temperatures, relative humidity, stability and mixing heights, upper atmospheric air data, and an analysis of whether this data is representative of conditions at the project site. | Please provide an electronic copy of the meteorological data that includes the necessary information required herein. | **The requested modeling files were docketed with the CEC on November 10, 2006.** |

| ID | SITING REGULATIONS | INFORMATION | INFORMATION REQUIRED TO MAKE AFC CONFORM WITH REGULATIONS | RESPONSE |
|---|---|---|---|---|
| **5** | Appendix B (g) (8) (I) (i) | A screening level air quality modeling analysis, or a more detailed modeling analysis if so desired by the applicant, of the direct inert pollutant impacts of project construction activities on ambient air quality conditions, including fugitive dust ($PM_{10}$) emissions from grading, excavation and site disturbance, as well as the combustion emissions [nitrogen oxides ($NO_x$), sulfur dioxide ($SO_2$), carbon monoxide (CO), and particulate matter less than 10 microns in diameter ($PM_{10}$)] from construction-related equipment; | Please provide the air dispersion analysis modeling input/output files. The modeling files were not provided with the AFC. | **The requested modeling files were docketed with the CEC on November 10, 2006.** |
| **6** | Appendix B (g) (8) (I) (ii) | A screening level air quality modeling analysis, or a more detailed modeling analysis if so desired by the applicant, of the direct inert criteria pollutant ($NO_x$, $SO_2$, CO and $PM_{10}$) impacts on ambient air quality conditions of the project during typical (normal) operation, and during shutdown and startup modes of operation. Identify and include in the modeling of each operating mode the estimated maximum emissions rates and the assumed meteorological conditions; and | Please provide the air dispersion analysis modeling input/output files. The modeling files were not provided with the AFC. | **The requested modeling files were docketed with the CEC on November 10, 2006.** |
| **7** | Appendix B (g) (8) (J) (i) | The quantity of offsets needed; | Please provide the tabulated quantities of offsets needed. The confidential ERC source information submittal noted on page 8.1-15 was not received with the AFC. | **The Emission Reduction Credit package is attached as Appendix A.** |

| Adequacy Issue: | Adequate | Inadequate | X | DATA ADEQUACY RESPONSE | Revision No. | 0 | Date | December 4, 2006 |
|---|---|---|---|---|---|---|---|---|
| Technical Area: | **Air Quality** | | | Project: | Colusa Generating Station | | Technical Staff: | William Walters |
| Project Manager: | Jack W. Caswell | | | Docket: | 06-AFC-09 | | Technical Senior: | Keith Golden |

| ID | SITING REGULATIONS | INFORMATION | INFORMATION REQUIRED TO MAKE AFC CONFORM WITH REGULATIONS | RESPONSE |
|---|---|---|---|---|
| **8** | Appendix B<br>(g) (8) (J) (ii) | Potential offset sources, including location, and quantity of emission reductions; and | Please provide a list of offset sources including locations, quantities, and methods of emission reductions. The confidential ERC source information submittal noted on page 8.1-15 was not received with the AFC. | **The Emission Reduction Credit package is attached as Appendix A.** |
| **9** | Appendix B<br>(g) (8) (J) (iii) | Method of emission reduction. | Please provide a list of offset sources including locations, quantities, and methods of emission reductions. The confidential ERC source information submittal noted on page 8.1-15 was not received with the AFC. | **The Emission Reduction Credit package is attached as Appendix A.** |
| **10** | Appendix B<br>(h) (1) (A) | Tables which identify laws, regulations, ordinances, standards, adopted local, regional, state, and federal land use plans, and permits applicable to the proposed project, and a discussion of the applicability of each. The table or matrix shall explicitly reference pages in the application wherein conformance, with each law or standard during both construction and operation of the facility is discussed; | The identified table does not reference correctly the appropriate sections, tables and pages that discuss conformance with laws, regulations and standards. Please correct this table to the appropriate sections, tables and pages of the AFC. | **A corrected table 8.1-29 is attached as Appendix B.** |

| ID | SITING REGULATIONS | INFORMATION | INFORMATION REQUIRED TO MAKE AFC CONFORM WITH REGULATIONS | RESPONSE |
|---|---|---|---|---|
| **11** | Appendix B<br>(h) (4) | A schedule indicating when permits outside the authority of the commission will be obtained and the steps the applicant has taken or plans to take to obtain such permits. | Please provide a schedule as to when a PSD application will be filed and the anticipated date of receiving the PSD permit. Also describe the steps the applicant will take to secure a Title V operating permit from the Colusa County APCD. | **The Applicant met with U.S. EPA Region IX staff on June 12, 2006 to discuss the PSD permitting process.**<br><br>**A modeling protocol in support of the PSD permit application was submitted to U.S. EPA Region IX on July 12, 2006. Comments on the monitoring protocol were received from U.S. EPA on October 23, 2006, and have been incorporated into the protocol. The Applicant expects to submit the PSD permit application this month. The Applicant expects a timely review of the PSD application and an expeditious permit issuance because none of the applicable PSD significant impact levels were exceeded.**<br><br>**An Application for Authority to Construct and Permit to Operate was submitted to the Colusa County APCO on November 21, 2006. The application was deemed complete on November 28, 2006. A copy of the completeness determination is attached as Appendix C.**<br><br>**Pursuant to Colusa County APCD Rule 3.17 an application for a Title V operating permit must be submitted within twelve months of the source commencing operation. The Applicant will file its Title V application consistent with this requirement.** |

| Adequacy Issue: | Adequate | Inadequate | X | DATA ADEQUACY RESPONSE | Revision No. | 0 | Date | December 4, 2006 |
|---|---|---|---|---|---|---|---|---|
| Technical Area: | **Noise and Vibration** | | | Project: | Colusa Generating Station | | Technical Staff: | Steve Baker |
| Project Manager: | Jack W. Caswell | | | Docket: | 06-AFC-9 | | Technical Senior: | Steve Baker |

| ID | SITING REGULATIONS | INFORMATION | INFORMATION REQUIRED TO MAKE AFC CONFORM WITH REGULATIONS | RESPONSE |
|---|---|---|---|---|
| **12** | Appendix B<br>(g) (4) (B) | A description of the ambient noise levels at those sites identified under subsection (g)(4)(A) which the applicant believes provide a representative characterization of the ambient noise levels in the project vicinity, and a discussion of the general atmospheric conditions, including temperature, humidity, and the presence of wind and rain at the time of the measurements. The existing noise levels shall be determined by taking noise measurements for a minimum of 25 consecutive hours at a minimum of one site. Other sites may be monitored for duration at the applicant's discretion during the same 25-hour period. The results of the noise level measurements shall be reported in $L_{eq}$ (equivalent sound or noise level), $L_{dn}$ (day-night sound or noise level) or CNEL (Community Noise Equivalent Level) in units of dB(A). The $L_{10}$, $L_{50}$, and $L_{90}$ values (noise levels exceeded 10 percent, 50 percent, and 90 percent of the time, respectively) shall also be reported. | Provide a discussion of the general atmospheric condition, including temperature, humidity, and the presence of wind and rain at the time of the ambient noise level measurements. | **The general atmospheric conditions at the time of ambient noise level measurements are listed in Table 8.5-4 of the AFC (page 8.5-16). As shown, temperature ranged from 45 to 75 degrees F; humidity was 52 percent during the day and 90 percent at night; and the wind speed was 5 miles per hour.** |

| ID | SITING REGULATIONS | INFORMATION | INFORMATION REQUIRED TO MAKE AFC CONFORM WITH REGULATIONS | RESPONSE |
|---|---|---|---|---|
| **13** | Appendix B (g) (4) (E) | An estimate of the project noise levels within the project site boundary during both construction and operation and the impact to the workers at the site due to the estimated noise levels. | § 8.5.2.3 addresses worker noise impacts only during plant operation. Please address worker noise impacts and protection plans during the construction phase. | **Chapter 8.7 Worker Safety and Health addresses worker noise impacts and protection plans during the construction phase. Section 8.7.2 of the AFC identifies and discusses safety procedures that will be implemented to ensure that the project does not result in employee overexposure to noise. As shown on Table 8.7-1 (page 8.7-14), a hearing conservation program will be established when workers are working with or near noisy equipment. This program will include identifying high noise activities and sources, sound level monitoring, and appropriate personal protective equipment. In addition, as indicated in Section 8.7.3.1 (page 8.7-3), a construction exposure monitoring program will be developed for the project. This program will also include performing sound-level monitoring as necessary during the construction phase to evaluate potential employee noise exposures.** |

| Adequacy Issue: | Adequate | Inadequate X | DATA ADEQUACY RESPONSE | Revision No. 0 | Date December 4, 2006 |
|---|---|---|---|---|---|
| Technical Area: | **Transmission System Eng.** | Project: | Colusa Generating Station | Technical Staff: | Ajoy Guha, P.E., Sudath Arachchige |
| Project Manager: | Jack W. Caswell | Docket: | 06-AFC-9 | Technical Senior: | Mark Hesters |

| ID | SITING REGULATIONS | INFORMATION | INFORMATION REQUIRED TO MAKE AFC CONFORM WITH REGULATIONS | RESPONSE |
|---|---|---|---|---|
| **14** | Appendix B<br>(b) (2) (C) | A detailed description of the design, construction, and operation of any electric transmission facilities, such as power lines, substations, switchyards, or other transmission equipment, which will be constructed or modified to transmit electrical power from the proposed power plant to the load centers to be served by the facility. Such description shall include the width of rights of way and the physical and electrical characteristics of electrical transmission facilities such as towers, conductors, and insulators. This description shall include power load flow diagrams which demonstrate conformance or nonconformance with utility reliability and planning criteria at the time the facility is expected to be placed in operation and five years thereafter; and | In respect of the submitted System impact Study (SIS) dated September 19, 2005, provide the following information:<br>1. List all major study assumptions in the base cases performed with 2010 summer peak, summer off-peak and spring off-peak system conditions including imports and exports to the system, major Path flows (such as Path 15 & 26, COI, EOR, SCIT etc.), major generations in the system including hydro, loads in the area systems<br>2. For identified N-2 overloads, provide power flow diagrams with and without the CGS for N-2 contingencies under 2010 summer peak & spring off-peak system conditions.<br>The SIS identifies the following mitigation measures for identified overloads on some transmission lines:<br>1. Reconductoring the Palermo-Bogue and Palermo-East Nicolaus 115 kV lines (PG&E Project # T686)<br>2. Reconductoring the Shasta-Flanagen-Keswick 8.75 -mile 230 kV line by WAPA.<br>3. Building a new 26-mile O"Banion-Elevrta and Natomas double circuit 230 kV line jointly by WAPA, SMUD and the City of Roseville.<br>4. Expanding WAPA's Folsom 230 kV substation and looping in SMUD's existing Orangeville-Lake 230 kV line via two short lines.<br>For each Project stated above, provide a full description with one line diagrams showing pre-project and post-project facilities. For their environmental settings and impacts, provide routes and environmental analysis and any recommended mitigation measures. | **For the System Impact Study, all the major assumptions referenced are provided in Appendix D.**<br><br>**For the identified N-2 overloads, all the requirements referenced are provided in Appendix E.**<br><br>**A detailed description of the four referenced overload mitigations is provided in Section 5.5 of the AFC.**<br><br>**PG&E and WAPA are in the process of conducting environmental evaluations of the reconductoring of the Palermo-Bogue-Nicolaus lines and the construction of the O'Banion-Elverta/Natomas project, respectively, and WAPA will undertake the environmental evaluations required for the Folsom Loop-In project. As noted in the SIS (Section 12), these three projects would have to be completed regardless of whether the Colusa Generating Station were to be built and placed into operation.**<br><br>**WAPA has not yet conducted the technical evaluation to determine the detailed scope of work for the reconductoring of the Shasta-Flanagan-Keswick line project. WAPA will conduct its own environmental review of this project as part of its approval process.**<br><br>**(cont'd on next page)** |

| ID | SITING REGULATIONS | INFORMATION | INFORMATION REQUIRED TO MAKE AFC CONFORM WITH REGULATIONS | RESPONSE |
|---|---|---|---|---|
| | | | | **A one line diagram for the Shasta-Flanagan-Keswick line is not available. However, a one line diagram is not considered pertinent since this will be a reconductoring project.**<br><br>**Providing an environmental analysis of the four overload mitigations projects is not required to be in conformance with Siting Regulations Appendix B (b)(2)(C).** |
| **15** | Appendix B (h) (4) | A schedule indicating when permits outside the authority of the commission will be obtained and the steps the applicant has taken or plans to take to obtain such permits. | Information when the CA ISO System Impact Study preliminary and final concurrence letters are expected to be obtained. | **The information relative to the ISO's concurrence of the SIS were not included in the AFC because the LGIA, which has been prepared by the ISO and is proof that the ISO approves the interconnection, was included as Appendix F of the AFC.** |

# Appendix A

## Emission Reduction Credit Package

This section contains a summary of the emissions reduction credits (ERC) obtained by the applicant that satisfy the emission offset requirements of the Colusa County Air Pollution Control District (CCAPCD). It also contains accounts of the locations, quantities and source type of each offset. All emissions reductions were generated by the reduction of combustion emissions. All emission reduction credits provided are fully compliant with the applicable CCAPCD offset rules. Therefore, they will effectively mitigate the project's emissions. Over half of the ERCs will come from stationary sources. The ERCs from the two stationary sources were generated by source shutdown.

The remaining ERCs will come from reductions in agricultural burning. The applicant has undergone consultation with the CCAPCD relating to the use of ag-burn ERCs as mitigation for this project. They have concurred that they are appropriate mitigation. The CEC documents available for the Calpine Sutter Power Plant show that agricultural burn credits were used to offset air quality emissions. The ag-burn credits are discussed in the Final Decision and in a transcript for an evidentiary hearing on March 10, 1999, a month before the Final Decision was issued.

An emission credit summary is provided in Table 1 showing that sufficient ERCs can be provided by the applicant. Table 2 provides emission reduction credit details for $NO_X$ and VOC using an interpollutant equivalency ratio approved by CCAPCD. The ratio of 1.4 ton of VOC equal to 1.0 ton of $NO_X$ contained in the ERC Package was used in the PDOC issued by CCAPCD in 2001 for the Reliant Energy Colusa Power Plant. A recent email from air district staff stating that the ratio remains the same for this application is attached. The basis for this ratio has been provided to the CEC in response to Data Request No. 125 for Reliant Colusa (01-AFC-10).

Table 3 identifies the actual ERCs in pounds as indicated on the respective ERC certificates followed by pounds corrected for the distance factor specified by regulation. Table 3 concludes with an analysis based on corrected ERC amounts in units of tons and a comparison of ERCs to the offset requirements of the CGS.

Copies of all of the executed ERC will be provided via a separate confidential submittal. Copies of the applicable ERC certificates in that submittal follow each option agreement. Where the ERC certificate has not been issued, an excel spreadsheet is attached showing the ERC amounts that the APCD has confirmed. In most cases the growers have applied for their certificates and the APCD is processing the application.

----- Forwarded by Mark Strehlow/Oakland/URSCorp on 12/11/2006 07:05 AM -----

**Fifefe@cs.com**
09/07/2006 10:32 AM

To Mark_Strehlow@urscorp.com
cc
Subject Re: Colusa Interpollutant Offset Ratios

Mark,

The NOx:VOC ratio established in the previous PDOC is still acceptable. The Colusa Air District does not have a SOx to PM10 ratio set but can be determined if needed.

Les

----- Forwarded by Mark Strehlow/Oakland/URSCorp on 12/11/2006 05:54 PM -----

**Fifefe@cs.com**
12/11/2006 05:44 PM

To mark_strehlow@urscorp.com
cc hak@countyofcolusa.org, cprice@countyofcolusa.org, tgomez@countyofcolusa.org
Subject Emission mitigation from agricultural burning ERCs

Mark,

The Colusa County Air Pollution Control District recognizes the validity of the emission reduction credits (ERC) granted for eliminating open agricultural burning. Pursuant to the Air District Rules and Regulations, specifically RULE 3.6: STANDARDS FOR AUTHORITY TO CONSTRUCT (NEW SOURCE REVIEW) (adopted 09/14/93) and RULE 3.16: EMISSION REDUCTION CREDIT AND BANKING (amended 6/6/95, 6/4/96, 1/26/99) emission offsets are required for major sources and agricultural burning emission reductions may be banked and used as offsets for major stationary sources.

The Colusa County Air District uses California Air Resources Board (ARB) developed and approved emission and fuel loading factors for various agricultural residues to calculate emission reduction credits (see attachment). The calculation methods and factors and the agricultural credits are subject to a 30 day public comment period and review before an ERC certificate is issued.

Criteria pollutant emission tonnages from agricultural burning are in the ARB CEIDARS emission inventory database. I have included a table of the Colusa County data for 1990 and 2002 from the emissions inventory (see attachment).

The Colusa County Air Pollution Control District has accepted emission reduction credits from agricultural burning as emission offsets for stationary sources in the County. The pollutant emissions of volatile organics, oxides of nitrogen and ten micron and smaller sized particulate matter from agricultural residue burning are comparable to emissions from stationary sources in health impacts and local and regional air quality degradation.

If you need any more information or have further questions please do not hesitate to contact me (530) 668-1559.

Les Fife ARB agricultural burning factors.ZIP

| Table 1<br>Emission Reduction Credit Summary<br>(all units = tons) | | | | |
|---|---|---|---|---|
| **Pollutant** | **1st Quarter** | **2nd Quarter** | **3rd Quarter** | **4th Quarter** |
| **$NO_X$** | | | | |
| Project Emissions [a] | 45.77 | 43.77 | 51.57 | 44.47 |
| Stationary Source ERCs [b, c] | 23.70 | 24.30 | 24.14 | 24.16 |
| Open Biomass Burning ERCs with Certificates [c, d] | 24.99 | 20.66 | 10.83 | 27.44 |
| Open Biomass Burning ERCs w/o Certificates [c, e] | 1.88 | 1.92 | 1.50 | 2.07 |
| Balance | **0.00** | **0.00** | **15.10** | **0.00** |
| **VOC** | | | | |
| Project Emissions [a] | 12.51 | 11.81 | 12.01 | 11.91 |
| Stationary Source ERCs [b, c] | 12.51 | 11.81 | 12.01 | 11.91 |
| Balance | **0** | **0** | **0** | **0** |
| **$PM_{10}$** | | | | |
| Project Emissions [a] | 35.36 | 35.46 | 35.66 | 35.76 |
| Stationary Source ERCs [b] | 12.68 | 13.71 | 13.47 | 12.97 |
| Open Biomass Burning ERCs with Certificates [d] | 18.40 | 15.46 | 9.19 | 20.20 |
| Open Biomass Burning ERCs w/o Certificates [e] | 1.38 | 1.56 | 1.44 | 1.53 |
| Balance | **2.90** | **4.74** | **11.56** | **1.07** |
| **$SO_2$** | | | | |
| Project Emissions [a] | 3.03 | 2.83 | 2.63 | 2.83 |
| Stationary Source ERCs [b] | 0.04 | 0.07 | 0.06 | 0.05 |
| Open Biomass Burning ERCs with Certificates [d] | 3.21 | 2.63 | 1.17 | 3.53 |
| Open Biomass Burning ERCs w/o Certificates [e] | 0.24 | 0.23 | 0.15 | 0.27 |
| Balance | **0.00** | **0.00** | **1.24** | **0.00** |

Notes:

a Combined total emissions of this pollutant from all sources. See 06-AFC-9, Table 8.1-21.

b Combined ERCs from all BCAPCD and FRAQMD certificates adjusted for distance from CGS.

c See Table 2 for details on $NO_X$ to VOC interpollutant conversion.

d Combined ERCs from all growers holding Ag Burn certificates adjusted for distance from CGS.

e Combined ERCs from all growers with pending Ag Burn certificates adjusted for distance from CGS.

| **Table 2**<br>**Emission Reduction Credit Details for $NO_X$ and VOC**<br>(all units = tons) | | | | |
|---|---|---|---|---|
| **Pollutant** | **1st Quarter** | **2nd Quarter** | **3rd Quarter** | **4th Quarter** |
| **$NO_X$** | | | | |
| BCAPCD Actual Certificate Values | 17.50 | 17.50 | 17.50 | 17.50 |
| BCAPCD Adjusted by 1.5 | 11.67 | 11.67 | 11.67 | 11.67 |
| FRAQMD Actual Certificate Value | 0.21 | 0.35 | 0.32 | 0.25 |
| FRAQMD Adjusted by 2.0 | 0.11 | 0.18 | 0.16 | 0.13 |
| Total Adjusted $NO_X$ | 11.77 | 11.84 | 11.83 | 11.79 |
| **VOC** | | | | |
| BCAPCD Actual Certificate Values | 43.75 | 43.75 | 43.75 | 43.75 |
| BCAPCD Adjusted by 1.5 | 29.17 | 29.17 | 29.17 | 29.17 |
| FRAQMD Actual Certificate Value | 0.10 | 0.17 | 0.15 | 0.12 |
| FRAQMD Adjusted by 2.0 | 0.05 | 0.08 | 0.08 | 0.06 |
| Total Adjusted VOC | 29.22 | 29.25 | 29.24 | 29.23 |
| **VOC TO $NO_X$ INTERPOLLUTANT CONVERSION** | | | | |
| Project Emissions of VOC (ERCs Required) | 12.51 | 11.81 | 12.01 | 11.91 |
| Total Adjusted VOC (from above) | 29.22 | 29.25 | 29.24 | 29.23 |
| Excess VOC ERC by difference | 16.71 | 17.44 | 17.23 | 17.32 |
| Excess VOC as $NO_X$ [a] | 11.93 | 12.46 | 12.31 | 12.37 |
| Total Adjusted $NO_X$ (from above) | 11.77 | 11.84 | 11.83 | 11.79 |
| Total $NO_X$ | **23.70** | **24.30** | **24.14** | **24.16** |

Notes

[a] Used CCAPCD-approved interpollutant ratio of 1.4 tons of VOC equal to 1.0 ton of $NO_X$.

## Table 3 Colusa Generating Station (CGS)
## Actual ERCs Summary (lbs)

| Highway 70 Industrial Park, LP // Oroville, CA // Butte County | | | | | | |
|---|---|---|---|---|---|---|
| Certificate(s) and Location | Pollutant | 1st Quarter (lbs) | 2nd Quarter (lbs) | 3rd Quarter (lbs) | 4th Quarter (lbs) | Annual (lbs) |
| (Cert. 08-05-36, 08-05-37) | $NO_X$ | 35,000.0 | 35,000.0 | 35,000.0 | 35,000.0 | 140,000.0 |
| (Cert.08-05-39) | VOC | 87,500.0 | 87,500.0 | 87,500.0 | 87,500.0 | 350,000.0 |
| Stationary ERCs | $PM_{10}$ | 33,500.0 | 33,500.0 | 33,500.0 | 33,500.0 | 134,000.0 |
| > 20 miles, < 50 miles | $SO_2$ | 0.0 | 0.0 | 0.0 | 0.0 | 0.0 |
| Northeast of CGS | | | | | **Sum (lbs)** | **624,000.0** |

*Note: Actual ERC Certificates may contain higher amounts than shown.*

| Jack W. Baber // Camptonville, CA // Yuba County | | | | | | |
|---|---|---|---|---|---|---|
| Certificate(s) and Location | Pollutant | 1st Quarter (lbs) | 2nd Quarter (lbs) | 3rd Quarter (lbs) | 4th Quarter (lbs) | Annual (lbs) |
| (Cert. ERC-9937006-00T) | $NO_X$ | 420.0 | 707.0 | 641.0 | 501.0 | 2,269.0 |
| Stationary ERCs | VOC | 199.0 | 335.0 | 304.0 | 238.0 | 1,076.0 |
| > 50 miles | $PM_{10}$ | 6,034.0 | 10,156.0 | 9,218.0 | 7,201.0 | 32,609.0 |
| Northeast CGS | $SO_2$ | 166.0 | 279.0 | 254.0 | 198.0 | 897.0 |
| | | | | | **Sum (lbs)** | **36,851.0** |

| Baber Family Trust // Colusa, CA // Colusa County | | | | | | |
|---|---|---|---|---|---|---|
| Certificate(s) and Location | Pollutant | 1st Quarter (lbs) | 2nd Quarter (lbs) | 3rd Quarter (lbs) | 4th Quarter (lbs) | Annual (lbs) |
| (Cert. 06-01-02-03) | $NO_X$ | 1,004.8 | 810.3 | 324.1 | 1,102.0 | 3,241.2 |
| | VOC | 908.1 | 732.4 | 292.9 | 996.0 | 2,929.4 |
| < 20 miles | $PM_{10}$ | 1,217.3 | 981.7 | 392.7 | 1,335.1 | 3,926.8 |
| East of CGS | $SO_2$ | 212.5 | 171.4 | 68.6 | 233.1 | 685.6 |
| | | | | | **Sum (lbs)** | **10,783.0** |

| Jack W. Baber and Judith S. Baber // Colusa, CA // Colusa County | | | | | | |
|---|---|---|---|---|---|---|
| Certificate(s) and Location | Pollutant | 1st Quarter (lbs) | 2nd Quarter (lbs) | 3rd Quarter (lbs) | 4th Quarter (lbs) | Annual (lbs) |
| (Cert. 06-01-02-04) | $NO_X$ | 2,401.8 | 1,936.9 | 774.8 | 2,634.2 | 7,747.7 |
| | VOC | 2,170.8 | 1,750.7 | 700.3 | 2,380.9 | 7,002.7 |
| < 20 miles | $PM_{10}$ | 2,909.8 | 2,346.6 | 938.7 | 3,191.4 | 9,386.5 |
| East of CGS | $SO_2$ | 508.1 | 409.7 | 163.9 | 557.2 | 1,638.9 |
| | | | | | **Sum (lbs)** | **25,775.8** |

## Table 3 Colusa Generating Station (CGS)
## Actual ERCs Summary (lbs)

| Estate of Jack W. Baber Jr. // Colusa, CA // Colusa County | | | | | | |
|---|---|---|---|---|---|---|
| Certificate(s) and Location | Pollutant | 1st Quarter (lbs) | 2nd Quarter (lbs) | 3rd Quarter (lbs) | 4th Quarter (lbs) | Annual (lbs) |
| (Cert. 06-01-02-05) | $NO_X$ | 848.5 | 684.3 | 273.7 | 930.7 | 2,737.2 |
| | VOC | 767.0 | 618.5 | 247.4 | 841.2 | 2,474.1 |
| < 20 miles | $PM_{10}$ | 1,028.0 | 829.1 | 331.6 | 1,127.5 | 3,316.2 |
| East of CGS | $SO_2$ | 179.5 | 144.8 | 57.9 | 196.9 | 579.1 |
| | | | | | **Sum (lbs)** | **9,106.6** |

| Pixie E. Baber // Colusa, CA // Colusa County | | | | | | |
|---|---|---|---|---|---|---|
| Certificate(s) and Location | Pollutant | 1st Quarter (lbs) | 2nd Quarter (lbs) | 3rd Quarter (lbs) | 4th Quarter (lbs) | Annual (lbs) |
| (Cert. 06-01-02-05.2) | $NO_X$ | 809.0 | 625.5 | 261.0 | 887.3 | 2,582.8 |
| | VOC | 731.2 | 589.7 | 235.9 | 802.0 | 2,358.8 |
| < 20 miles | $PM_{10}$ | 980.2 | 790.5 | 316.2 | 1,075.0 | 3,161.9 |
| East of CGS | $SO_2$ | 171.1 | 138.0 | 55.2 | 187.7 | 552.0 |
| | | | | | **Sum (lbs)** | **8,655.5** |

| Jack W. Baber and Judith S. Baber // Colusa, CA // Colusa County | | | | | | |
|---|---|---|---|---|---|---|
| Certificate(s) and Location | Pollutant | 1st Quarter (lbs) | 2nd Quarter (lbs) | 3rd Quarter (lbs) | 4th Quarter (lbs) | Annual (lbs) |
| (Cert. 06-01-02-06) | $NO_X$ | 587.8 | 474.1 | 189.6 | 644.7 | 1,896.2 |
| | VOC | 531.3 | 428.5 | 171.4 | 582.7 | 1,713.9 |
| < 20 miles | $PM_{10}$ | 712.2 | 574.3 | 229.7 | 781.1 | 2,297.3 |
| East of CGS | $SO_2$ | 124.3 | 100.3 | 40.1 | 136.4 | 401.1 |
| | | | | | **Sum (lbs)** | **6,308.5** |

| Inez Garrette // Colusa, CA // Colusa County | | | | | | |
|---|---|---|---|---|---|---|
| Certificate(s) and Location | Pollutant | 1st Quarter (lbs) | 2nd Quarter (lbs) | 3rd Quarter (lbs) | 4th Quarter (lbs) | Annual (lbs) |
| (Cert. 06-01-02-07) | $NO_X$ | 195.9 | 158.0 | 63.2 | 214.9 | 632.0 |
| | VOC | 177.1 | 142.8 | 57.1 | 194.2 | 571.2 |
| < 20 miles | $PM_{10}$ | 237.4 | 191.4 | 76.6 | 260.4 | 765.8 |
| East of CGS | $SO_2$ | 41.4 | 33.4 | 13.4 | 45.5 | 133.7 |
| | | | | | **Sum (lbs)** | **2,102.7** |

## Table 3 Colusa Generating Station (CGS)
## Actual ERCs Summary (lbs)

| Jack W. Baber and Judith S. Baber // Colusa, CA // Colusa County | | | | | | |
|---|---|---|---|---|---|---|
| Certificate(s) and Location | Pollutant | 1st Quarter (lbs) | 2nd Quarter (lbs) | 3rd Quarter (lbs) | 4th Quarter (lbs) | Annual (lbs) |
| (Cert. 06-01-02-08) | $NO_X$ | 2,083.5 | 1,680.2 | 672.1 | 2,285.1 | 6,720.9 |
| | VOC | 1,883.1 | 1,518.7 | 607.5 | 2,065.4 | 6,074.7 |
| < 20 miles | $PM_{10}$ | 2,524.2 | 2,035.6 | 814.3 | 2,768.5 | 8,142.6 |
| East of CGS | $SO_2$ | 440.7 | 355.4 | 142.2 | 483.4 | 1,421.7 |
| | | | | | **Sum (lbs)** | **22,359.9** |

| Jack W. Baber Jr. // Colusa, CA // Colusa County | | | | | | |
|---|---|---|---|---|---|---|
| Certificate(s) and Location | Pollutant | 1st Quarter (lbs) | 2nd Quarter (lbs) | 3rd Quarter (lbs) | 4th Quarter (lbs) | Annual (lbs) |
| (Cert. 06-01-02-09) | $NO_X$ | 1,577.2 | 1,271.9 | 508.8 | 1,729.8 | 5,087.7 |
| | VOC | 1,425.5 | 1,149.6 | 459.9 | 1,563.5 | 4,598.5 |
| < 20 miles | $PM_{10}$ | 1,910.8 | 1,541.0 | 616.4 | 2,095.7 | 6,163.9 |
| East of CGS | $SO_2$ | 333.6 | 269.1 | 107.6 | 365.9 | 1,076.2 |
| | | | | | **Sum (lbs)** | **16,926.3** |

| Davis Ranches // Colusa, CA // Colusa County | | | | | | |
|---|---|---|---|---|---|---|
| Certificate(s) and Location | Pollutant | 1st Quarter (lbs) | 2nd Quarter (lbs) | 3rd Quarter (lbs) | 4th Quarter (lbs) | Annual (lbs) |
| (Cert. 06-7-2001-1) | $NO_X$ | 13,034.2 | 10,511.5 | 4,204.6 | 14,295.6 | 42,045.9 |
| | VOC | 11,780.9 | 9,500.7 | 3,800.3 | 12,921.0 | 38,002.9 |
| > 20 miles, < 50 miles | $PM_{10}$ | 15,791.4 | 12,735.0 | 5,094.0 | 17,319.6 | 50,940.0 |
| South East of CGS | $SO_2$ | 2,752.2 | 2,223.6 | 889.4 | 3,024.1 | 8,889.3 |
| | | | | | **Sum (lbs)** | **139,878.1** |

| Gunnersfield Ent., Inc. // Maxwell, CA // Colusa County | | | | | | |
|---|---|---|---|---|---|---|
| Certificate(s) and Location | Pollutant | 1st Quarter (lbs) | 2nd Quarter (lbs) | 3rd Quarter (lbs) | 4th Quarter (lbs) | Annual (lbs) |
| (Cert. 06-01-02-02) | $NO_X$ | 5,616.0 | 4,529.0 | 1,811.6 | 6,159.4 | 18,116.0 |
| | VOC | 5,076.0 | 4,093.5 | 1,637.4 | 5,567.2 | 16,374.1 |
| < 20 miles | $PM_{10}$ | 6,803.9 | 5,487.0 | 2,194.8 | 7,462.4 | 21,948.1 |
| Southeast of CGS | $SO_2$ | 1,188.0 | 958.1 | 383.2 | 1,303.0 | 3,832.3 |
| | | | | | **Sum (lbs)** | **60,270.5** |

## Table 3 Colusa Generating Station (CGS)
## Actual ERCs Summary (lbs)

| Jon B. Chaney // Maxwell, CA // Colusa County | | | | | | |
|---|---|---|---|---|---|---|
| Certificate(s) and Location | Pollutant | 1st Quarter (lbs) | 2nd Quarter (lbs) | 3rd Quarter (lbs) | 4th Quarter (lbs) | Annual (lbs) |
| (Cert. 06-01-02-01) | $NO_X$ | 2,104.1 | 1,696.9 | 678.5 | 2,307.8 | 6,787.3 |
| | VOC | 1,901.8 | 1,533.7 | 613.5 | 2,085.9 | 6,134.9 |
| < 20 miles | $PM_{10}$ | 2,549.3 | 2,055.8 | 822.3 | 2,796.0 | 8,223.4 |
| Southeast of CGS | $SO_2$ | 445.1 | 359.0 | 143.6 | 488.2 | 1,435.9 |
| | | | | | **Sum (lbs)** | **22,581.5** |

| Jack DeWit // Maxwell, CA // Colusa County | | | | | | |
|---|---|---|---|---|---|---|
| Certificate(s) and Location | Pollutant | 1st Quarter (lbs) | 2nd Quarter (lbs) | 3rd Quarter (lbs) | 4th Quarter (lbs) | Annual (lbs) |
| (Cert. Applied for) | $NO_X$ | 1,143.0 | 921.8 | 368.7 | 1,253.7 | 3,687.2 |
| | VOC | 1,033.1 | 833.2 | 333.3 | 1,133.1 | 3,332.7 |
| < 20 miles | $PM_{10}$ | 1,384.8 | 1,116.8 | 446.7 | 1,518.8 | 4,467.1 |
| East of CGS | $SO_2$ | 241.8 | 195.0 | 78.0 | 265.2 | 780.0 |
| | | | | | **Sum (lbs)** | **12,267.0** |

| Jerry Maltby et. al. // Williams, CA // Colusa County | | | | | | |
|---|---|---|---|---|---|---|
| Certificate(s) and Location | Pollutant | 1st Quarter (lbs) | 2nd Quarter (lbs) | 3rd Quarter (lbs) | 4th Quarter (lbs) | Annual (lbs) |
| (Cert. 06-06-11-01) | $NO_X$ | 4,522.5 | 3,647.2 | 1,458.9 | 4,960.2 | 14,588.8 |
| | VOC | 4,087.7 | 3,296.5 | 1,318.6 | 4,483.3 | 13,186.1 |
| < 20 miles | $PM_{10}$ | 5,479.2 | 4,418.7 | 1,767.5 | 6,009.5 | 17,674.9 |
| South of CGS | $SO_2$ | 956.7 | 771.5 | 308.6 | 1,049.3 | 3,086.1 |
| | | | | | **Sum (lbs)** | **48,535.9** |

| A & R Farms // Colusa, CA // Colusa County | | | | | | |
|---|---|---|---|---|---|---|
| Certificate(s) and Location | Pollutant | 1st Quarter (lbs) | 2nd Quarter (lbs) | 3rd Quarter (lbs) | 4th Quarter (lbs) | Annual (lbs) |
| (Cert. 06-05-02-01) | $NO_X$ | 1,594.2 | 1,295.4 | 530.7 | 1,748.8 | 5,169.1 |
| | VOC | 1,440.9 | 1,179.3 | 493.7 | 1,580.8 | 4,694.7 |
| < 20 miles | $PM_{10}$ | 1,931.2 | 1,581.7 | 663.3 | 2,119.0 | 6,295.2 |
| East of CGS | $SO_2$ | 337.2 | 274.0 | 112.2 | 370.0 | 1,093.4 |
| | | | | | **Sum (lbs)** | **17,252.4** |

## Table 3 Colusa Generating Station (CGS)
## Actual ERCs Summary (lbs)

| Jim Lagrande // Colusa, CA // Colusa County | | | | | | |
|---|---|---|---|---|---|---|
| Certificate(s) and Location | Pollutant | 1st Quarter (lbs) | 2nd Quarter (lbs) | 3rd Quarter (lbs) | 4th Quarter (lbs) | Annual (lbs) |
| (Cert. 06-01-03-01) | $NO_X$ | 1,315.0 | 1,118.2 | 567.0 | 1,448.9 | 4,449.1 |
| | VOC | 1,192.2 | 1,110.7 | 634.7 | 1,312.5 | 4,250.1 |
| < 20 miles | $PM_{10}$ | 1,598.0 | 1,496.9 | 864.4 | 1,758.3 | 5,717.6 |
| South of CGS | $SO_2$ | 279.0 | 242.7 | 119.6 | 305.5 | 946.8 |
| | | | | | **Sum (lbs)** | **15,363.6** |

| Charles Tuttle, Gordon Ranch // Maxwell, CA // Colusa County | | | | | | |
|---|---|---|---|---|---|---|
| Certificate(s) and Location | Pollutant | 1st Quarter (lbs) | 2nd Quarter (lbs) | 3rd Quarter (lbs) | 4th Quarter (lbs) | Annual (lbs) |
| (Cert. Applied for) | $NO_X$ | 1,592.3 | 1,448.5 | 789.1 | 1,750.8 | 5,580.7 |
| | VOC | 1,439.2 | 1,451.0 | 951.0 | 1,586.3 | 5,427.5 |
| < 20 miles | $PM_{10}$ | 1,929.2 | 1,960.9 | 1,301.1 | 2,126.8 | 7,318.0 |
| Southeast of CGS | $SO_2$ | 336.8 | 306.0 | 166.3 | 370.3 | 1,179.5 |
| | | | | | **Sum (lbs)** | **19,505.7** |

| Charles Tuttle, Tenant Ranch // Maxwell, CA // Colusa County | | | | | | |
|---|---|---|---|---|---|---|
| Certificate(s) and Location | Pollutant | 1st Quarter (lbs) | 2nd Quarter (lbs) | 3rd Quarter (lbs) | 4th Quarter (lbs) | Annual (lbs) |
| (Cert. Applied for) | $NO_X$ | 1.6 | 118.8 | 352.8 | 3.2 | 476.4 |
| | VOC | 5.1 | 210.0 | 857.5 | 5.7 | 1,078.3 |
| < 20 miles | $PM_{10}$ | 5.1 | 292.9 | 1,095.4 | 7.9 | 1,401.3 |
| Southeast of CGS | $SO_2$ | 0.2 | 24.9 | 62.2 | 0.7 | 88.0 |
| | | | | | **Sum (lbs)** | **3,044.0** |

| Charles Tuttle, Helphenstine Ranch // Maxwell, CA // Colusa County | | | | | | |
|---|---|---|---|---|---|---|
| Certificate(s) and Location | Pollutant | 1st Quarter (lbs) | 2nd Quarter (lbs) | 3rd Quarter (lbs) | 4th Quarter (lbs) | Annual (lbs) |
| (Cert. Applied for) | $NO_X$ | 0.0 | 85.8 | 143.8 | 2.3 | 232.0 |
| | VOC | 0.0 | 151.7 | 254.2 | 4.1 | 410.0 |
| < 20 miles | $PM_{10}$ | 0.0 | 211.6 | 354.5 | 5.7 | 571.8 |
| Southeast of CGS | $SO_2$ | 0.0 | 18.0 | 30.1 | 0.5 | 48.5 |
| | | | | | **Sum (lbs)** | **1,262.3** |

## Table 3 Colusa Generating Station (CGS)
## Actual ERCs Summary (lbs)

| Charles Tuttle, Williams Ranch // Maxwell, CA // Colusa County | | | | | | |
|---|---|---|---|---|---|---|
| Certificate(s) and Location | Pollutant | 1st Quarter (lbs) | 2nd Quarter (lbs) | 3rd Quarter (lbs) | 4th Quarter (lbs) | Annual (lbs) |
| (Cert. Applied for) | $NO_X$ | 0.0 | 60.9 | 102.1 | 1.6 | 164.7 |
| | VOC | 0.0 | 107.7 | 180.4 | 2.9 | 291.0 |
| < 20 miles | $PM_{10}$ | 0.0 | 150.2 | 251.7 | 4.1 | 405.9 |
| Southeast of CGS | $SO_2$ | 0.0 | 12.8 | 21.4 | 0.3 | 34.5 |
| | | | | | **Sum (lbs)** | **896.1** |

| William Payne // Woodland, CA // Sutter County | | | | | | |
|---|---|---|---|---|---|---|
| Certificate(s) and Location | Pollutant | 1st Quarter (lbs) | 2nd Quarter (lbs) | 3rd Quarter (lbs) | 4th Quarter (lbs) | Annual (lbs) |
| (Cert. ERC 2001-26) | $NO_X$ | 1,701.0 | 1,874.0 | 3,033.0 | 1,901.0 | 8,509.0 |
| | VOC | 1,538.0 | 2,362.0 | 8,034.0 | 1,718.0 | 13,652.0 |
| > 20 miles, < 50 miles | $PM_{10}$ | 2,061.0 | 3,240.0 | 9,931.0 | 2,303.0 | 17,535.0 |
| Southeast of CGS | $SO_2$ | 360.0 | 395.0 | 489.0 | 402.0 | 1,646.0 |
| | | | | | **Sum (lbs)** | **41,342.0** |

# Table 3 Colusa Generating Station (CGS)
## Corrected ERCs Summary (lbs)

| Highway 70 Industrial Park, LP // Oroville, CA // Butte County | | | | | | |
|---|---|---|---|---|---|---|
| Certificate(s) and Location | Pollutant | 1st Quarter (lbs) | 2nd Quarter (lbs) | 3rd Quarter (lbs) | 4th Quarter (lbs) | Annual (lbs) |
| (Cert. 08-05-36, 08-05-37) | $NO_X$ | 23,333.3 | 23,333.3 | 23,333.3 | 23,333.3 | 93,333.3 |
| (Cert.08-05-39) | VOC | 58,333.3 | 58,333.3 | 58,333.3 | 58,333.3 | 233,333.3 |
| Stationary ERCs | $PM_{10}$ | 22,333.3 | 22,333.3 | 22,333.3 | 22,333.3 | 89,333.3 |
| > 20 miles, < 50 miles | $SO_2$ | 0.0 | 0.0 | 0.0 | 0.0 | 0.0 |
| Northeast of CGS | | | | | **Sum (lbs)** | **416,000.0** |

*Note: Actual ERC Certificates may contain higher amounts than shown.*

*Distance Correction Factor: 1.5*

| Jack W. Baber // Camptonville, CA // Yuba County | | | | | | |
|---|---|---|---|---|---|---|
| Certificate(s) and Location | Pollutant | 1st Quarter (lbs) | 2nd Quarter (lbs) | 3rd Quarter (lbs) | 4th Quarter (lbs) | Annual (lbs) |
| (Cert. ERC-9937006-00T) | $NO_X$ | 210.0 | 353.5 | 320.5 | 250.5 | 1,134.5 |
| Stationary ERCs | VOC | 99.5 | 167.5 | 152.0 | 119.0 | 538.0 |
| > 50 miles | $PM_{10}$ | 3,017.0 | 5,078.0 | 4,609.0 | 3,600.5 | 16,304.5 |
| Northeast CGS | $SO_2$ | 83.0 | 139.5 | 127.0 | 99.0 | 448.5 |
| | | | | | **Sum (lbs)** | **18,425.5** |

*Distance Correction Factor: 2.0*

| Baber Family Trust // Colusa, CA // Colusa County | | | | | | |
|---|---|---|---|---|---|---|
| Certificate(s) and Location | Pollutant | 1st Quarter (lbs) | 2nd Quarter (lbs) | 3rd Quarter (lbs) | 4th Quarter (lbs) | Annual (lbs) |
| (Cert. 06-01-02-03) | $NO_X$ | 837.3 | 675.3 | 270.1 | 918.3 | 2,701.0 |
| | VOC | 756.8 | 610.3 | 244.1 | 830.0 | 2,441.2 |
| < 20 miles | $PM_{10}$ | 1,014.4 | 818.1 | 327.3 | 1,112.6 | 3,272.3 |
| East of CGS | $SO_2$ | 177.1 | 142.8 | 57.2 | 194.3 | 571.3 |
| | | | | | **Sum (lbs)** | **8,985.8** |

*Distance Correction Factor: 1.2*

| Jack W. Baber and Judith S. Baber // Colusa, CA // Colusa County | | | | | | |
|---|---|---|---|---|---|---|
| Certificate(s) and Location | Pollutant | 1st Quarter (lbs) | 2nd Quarter (lbs) | 3rd Quarter (lbs) | 4th Quarter (lbs) | Annual (lbs) |
| (Cert. 06-01-02-04) | $NO_X$ | 2,001.5 | 1,614.1 | 645.7 | 2,195.2 | 6,456.4 |
| | VOC | 1,809.0 | 1,458.9 | 583.6 | 1,984.1 | 5,835.6 |
| < 20 miles | $PM_{10}$ | 2,424.8 | 1,955.5 | 782.3 | 2,659.5 | 7,822.1 |
| East of CGS | $SO_2$ | 423.4 | 341.4 | 136.6 | 464.3 | 1,365.8 |
| | | | | | **Sum (lbs)** | **21,479.8** |

*Distance Correction Factor: 1.2*

## Table 3 Colusa Generating Station (CGS)
## Corrected ERCs Summary (lbs)

| Estate of Jack W. Baber Jr. // Colusa, CA // Colusa County | | | | | | |
|---|---|---|---|---|---|---|
| Certificate(s) and Location | Pollutant | 1st Quarter (lbs) | 2nd Quarter (lbs) | 3rd Quarter (lbs) | 4th Quarter (lbs) | Annual (lbs) |
| (Cert. 06-01-02-05) | $NO_X$ | 707.1 | 570.3 | 228.1 | 775.6 | 2,281.0 |
| | VOC | 639.2 | 515.4 | 206.2 | 701.0 | 2,061.8 |
| < 20 miles | $PM_{10}$ | 856.7 | 690.9 | 276.3 | 939.6 | 2,763.5 |
| East of CGS | $SO_2$ | 149.6 | 120.7 | 48.3 | 164.1 | 482.6 |
| *Distance Correction Factor: 1.2* | | | | | **Sum (lbs)** | **7,588.8** |

| Pixie E. Baber // Colusa, CA // Colusa County | | | | | | |
|---|---|---|---|---|---|---|
| Certificate(s) and Location | Pollutant | 1st Quarter (lbs) | 2nd Quarter (lbs) | 3rd Quarter (lbs) | 4th Quarter (lbs) | Annual (lbs) |
| (Cert. 06-01-02-05.2) | $NO_X$ | 674.2 | 521.3 | 217.5 | 739.4 | 2,152.3 |
| | VOC | 609.3 | 491.4 | 196.6 | 668.3 | 1,965.7 |
| < 20 miles | $PM_{10}$ | 816.8 | 658.8 | 263.5 | 895.8 | 2,634.9 |
| East of CGS | $SO_2$ | 142.6 | 115.0 | 46.0 | 156.4 | 460.0 |
| *Distance Correction Factor: 1.2* | | | | | **Sum (lbs)** | **7,212.9** |

| Jack W. Baber and Judith S. Baber // Colusa, CA // Colusa County | | | | | | |
|---|---|---|---|---|---|---|
| Certificate(s) and Location | Pollutant | 1st Quarter (lbs) | 2nd Quarter (lbs) | 3rd Quarter (lbs) | 4th Quarter (lbs) | Annual (lbs) |
| (Cert. 06-01-02-06) | $NO_X$ | 489.8 | 395.1 | 158.0 | 537.3 | 1,580.2 |
| | VOC | 442.8 | 357.1 | 142.8 | 485.6 | 1,428.3 |
| < 20 miles | $PM_{10}$ | 593.5 | 478.6 | 191.4 | 650.9 | 1,914.4 |
| East of CGS | $SO_2$ | 103.6 | 83.6 | 33.4 | 113.7 | 334.3 |
| *Distance Correction Factor: 1.2* | | | | | **Sum (lbs)** | **5,257.1** |

| Inez Garrette // Colusa, CA // Colusa County | | | | | | |
|---|---|---|---|---|---|---|
| Certificate(s) and Location | Pollutant | 1st Quarter (lbs) | 2nd Quarter (lbs) | 3rd Quarter (lbs) | 4th Quarter (lbs) | Annual (lbs) |
| (Cert. 06-01-02-07) | $NO_X$ | 163.3 | 131.7 | 52.7 | 179.1 | 526.7 |
| | VOC | 147.6 | 119.0 | 47.6 | 161.8 | 476.0 |
| < 20 miles | $PM_{10}$ | 197.8 | 159.5 | 63.8 | 217.0 | 638.2 |
| East of CGS | $SO_2$ | 34.5 | 27.8 | 11.2 | 37.9 | 111.4 |
| *Distance Correction Factor: 1.2* | | | | | **Sum (lbs)** | **1,752.3** |

## Table 3 Colusa Generating Station (CGS)
## Corrected ERCs Summary (lbs)

| Jack W. Baber and Judith S. Baber // Colusa, CA // Colusa County | | | | | | |
|---|---|---|---|---|---|---|
| Certificate(s) and Location | Pollutant | 1st Quarter (lbs) | 2nd Quarter (lbs) | 3rd Quarter (lbs) | 4th Quarter (lbs) | Annual (lbs) |
| (Cert. 06-01-02-08) | $NO_X$ | 1,736.3 | 1,400.2 | 560.1 | 1,904.3 | 5,600.8 |
| | VOC | 1,569.3 | 1,265.6 | 506.3 | 1,721.2 | 5,062.3 |
| < 20 miles | $PM_{10}$ | 2,103.5 | 1,696.3 | 678.6 | 2,307.1 | 6,785.5 |
| East of CGS | $SO_2$ | 367.3 | 296.2 | 118.5 | 402.8 | 1,184.8 |
| *Distance Correction Factor: 1.2* | | | | | **Sum (lbs)** | **18,633.3** |

| Jack W. Baber Jr. // Colusa, CA // Colusa County | | | | | | |
|---|---|---|---|---|---|---|
| Certificate(s) and Location | Pollutant | 1st Quarter (lbs) | 2nd Quarter (lbs) | 3rd Quarter (lbs) | 4th Quarter (lbs) | Annual (lbs) |
| (Cert. 06-01-02-09) | $NO_X$ | 1,314.3 | 1,059.9 | 424.0 | 1,441.5 | 4,239.8 |
| | VOC | 1,187.9 | 958.0 | 383.3 | 1,302.9 | 3,832.1 |
| < 20 miles | $PM_{10}$ | 1,592.3 | 1,284.2 | 513.7 | 1,746.4 | 5,136.6 |
| East of CGS | $SO_2$ | 278.0 | 224.3 | 89.7 | 304.9 | 896.8 |
| *Distance Correction Factor: 1.2* | | | | | **Sum (lbs)** | **14,105.3** |

| Davis Ranches // Colusa, CA // Colusa County | | | | | | |
|---|---|---|---|---|---|---|
| Certificate(s) and Location | Pollutant | 1st Quarter (lbs) | 2nd Quarter (lbs) | 3rd Quarter (lbs) | 4th Quarter (lbs) | Annual (lbs) |
| (Cert. 06-7-2001-1) | $NO_X$ | 8,689.5 | 7,007.7 | 2,803.1 | 9,530.4 | 28,030.6 |
| | VOC | 7,853.9 | 6,333.8 | 2,533.5 | 8,614.0 | 25,335.3 |
| > 20 miles, < 50 miles | $PM_{10}$ | 10,527.6 | 8,490.0 | 3,396.0 | 11,546.4 | 33,960.0 |
| Southeast of CGS | $SO_2$ | 1,834.8 | 1,482.4 | 592.9 | 2,016.1 | 5,926.2 |
| *Distance Correction Factor: 1.5* | | | | | **Sum (lbs)** | **93,252.1** |

| Gunnersfield Ent., Inc. // Maxwell, CA // Colusa County | | | | | | |
|---|---|---|---|---|---|---|
| Certificate(s) and Location | Pollutant | 1st Quarter (lbs) | 2nd Quarter (lbs) | 3rd Quarter (lbs) | 4th Quarter (lbs) | Annual (lbs) |
| (Cert. 06-01-02-02) | $NO_X$ | 4,680.0 | 3,774.2 | 1,509.7 | 5,132.8 | 15,096.7 |
| | VOC | 4,230.0 | 3,411.3 | 1,364.5 | 4,639.3 | 13,645.1 |
| < 20 miles | $PM_{10}$ | 5,669.9 | 4,572.5 | 1,829.0 | 6,218.7 | 18,290.1 |
| Southeast of CGS | $SO_2$ | 990.0 | 798.4 | 319.3 | 1,085.8 | 3,193.6 |
| *Distance Correction Factor: 1.2* | | | | | **Sum (lbs)** | **50,225.4** |

## Table 3 Colusa Generating Station (CGS)
## Corrected ERCs Summary (lbs)

| Jon B. Chaney // Maxwell, CA // Colusa County | | | | | | |
|---|---|---|---|---|---|---|
| Certificate(s) and Location | Pollutant | 1st Quarter (lbs) | 2nd Quarter (lbs) | 3rd Quarter (lbs) | 4th Quarter (lbs) | Annual (lbs) |
| (Cert. 06-01-02-01) | $NO_X$ | 1,753.4 | 1,414.1 | 565.4 | 1,923.2 | 5,656.1 |
| | VOC | 1,584.8 | 1,278.1 | 511.3 | 1,738.3 | 5,112.4 |
| < 20 miles | $PM_{10}$ | 2,124.4 | 1,713.2 | 685.3 | 2,330.0 | 6,852.8 |
| Southeast of CGS | $SO_2$ | 370.9 | 299.2 | 119.7 | 406.8 | 1,196.6 |
| *Distance Correction Factor: 1.2* | | | | | **Sum (lbs)** | **18,817.9** |

| Jack DeWit // Maxwell, CA // Colusa County | | | | | | |
|---|---|---|---|---|---|---|
| Certificate(s) and Location | Pollutant | 1st Quarter (lbs) | 2nd Quarter (lbs) | 3rd Quarter (lbs) | 4th Quarter (lbs) | Annual (lbs) |
| (Cert. Applied for) | $NO_X$ | 952.5 | 768.2 | 307.3 | 1,044.8 | 3,072.7 |
| | VOC | 860.9 | 694.3 | 277.8 | 944.3 | 2,777.3 |
| < 20 miles | $PM_{10}$ | 1,154.0 | 930.7 | 372.3 | 1,265.7 | 3,722.6 |
| East of CGS | $SO_2$ | 201.5 | 162.5 | 65.0 | 221.0 | 650.0 |
| *Distance Correction Factor: 1.2* | | | | | **Sum (lbs)** | **10,222.5** |

| Jerry Maltby et. al. // Williams, CA // Colusa County | | | | | | |
|---|---|---|---|---|---|---|
| Certificate(s) and Location | Pollutant | 1st Quarter (lbs) | 2nd Quarter (lbs) | 3rd Quarter (lbs) | 4th Quarter (lbs) | Annual (lbs) |
| (Cert. 06-06-11-01) | $NO_X$ | 3,768.8 | 3,039.3 | 1,215.8 | 4,133.5 | 12,157.3 |
| | VOC | 3,406.4 | 2,747.1 | 1,098.8 | 3,736.1 | 10,988.4 |
| < 20 miles | $PM_{10}$ | 4,566.0 | 3,682.3 | 1,472.9 | 5,007.9 | 14,729.1 |
| South of CGS | $SO_2$ | 797.3 | 642.9 | 257.2 | 874.4 | 2,571.8 |
| *Distance Correction Factor: 1.2* | | | | | **Sum (lbs)** | **40,446.6** |

| A & R Farms // Colusa, CA // Colusa County | | | | | | |
|---|---|---|---|---|---|---|
| Certificate(s) and Location | Pollutant | 1st Quarter (lbs) | 2nd Quarter (lbs) | 3rd Quarter (lbs) | 4th Quarter (lbs) | Annual (lbs) |
| (Cert. 06-05-02-01) | $NO_X$ | 1,328.5 | 1,079.5 | 442.3 | 1,457.3 | 4,307.6 |
| | VOC | 1,200.8 | 982.8 | 411.4 | 1,317.3 | 3,912.3 |
| < 20 miles | $PM_{10}$ | 1,609.3 | 1,318.1 | 552.8 | 1,765.8 | 5,246.0 |
| East of CGS | $SO_2$ | 281.0 | 228.3 | 93.5 | 308.3 | 911.2 |
| *Distance Correction Factor: 1.2* | | | | | **Sum (lbs)** | **14,377.0** |

## Table 3 Colusa Generating Station (CGS)
## Corrected ERCs Summary (lbs)

| Jim Lagrande // Colusa, CA // Colusa County | | | | | | |
|---|---|---|---|---|---|---|
| Certificate(s) and Location | Pollutant | 1st Quarter (lbs) | 2nd Quarter (lbs) | 3rd Quarter (lbs) | 4th Quarter (lbs) | Annual (lbs) |
| (Cert. 06-01-03-01) | $NO_X$ | 1,095.8 | 931.8 | 472.5 | 1,207.4 | 3,707.6 |
| | VOC | 993.5 | 925.6 | 528.9 | 1,093.8 | 3,541.8 |
| < 20 miles | $PM_{10}$ | 1,331.7 | 1,247.4 | 720.3 | 1,465.3 | 4,764.7 |
| South of CGS | $SO_2$ | 232.5 | 202.3 | 99.7 | 254.6 | 789.0 |
| *Distance Correction Factor: 1.2* | | | | | **Sum (lbs)** | **12,803.0** |

| Charles Tuttle, Gordon Ranch // Maxwell, CA // Colusa County | | | | | | |
|---|---|---|---|---|---|---|
| Certificate(s) and Location | Pollutant | 1st Quarter (lbs) | 2nd Quarter (lbs) | 3rd Quarter (lbs) | 4th Quarter (lbs) | Annual (lbs) |
| (Cert. Applied for) | $NO_X$ | 1,327.0 | 1,207.0 | 657.6 | 1,459.0 | 4,650.6 |
| | VOC | 1,199.4 | 1,209.2 | 792.5 | 1,321.9 | 4,522.9 |
| < 20 miles | $PM_{10}$ | 1,607.7 | 1,634.1 | 1,084.3 | 1,772.3 | 6,098.3 |
| Southeast of CGS | $SO_2$ | 280.7 | 255.0 | 138.5 | 308.6 | 982.9 |
| *Distance Correction Factor: 1.2* | | | | | **Sum (lbs)** | **16,254.8** |

| Charles Tuttle, Tenant Ranch // Maxwell, CA // Colusa County | | | | | | |
|---|---|---|---|---|---|---|
| Certificate(s) and Location | Pollutant | 1st Quarter (lbs) | 2nd Quarter (lbs) | 3rd Quarter (lbs) | 4th Quarter (lbs) | Annual (lbs) |
| (Cert. Applied for) | $NO_X$ | 1.3 | 99.0 | 294.0 | 2.7 | 397.0 |
| | VOC | 4.3 | 175.0 | 714.6 | 4.8 | 898.6 |
| < 20 miles | $PM_{10}$ | 4.3 | 244.1 | 912.9 | 6.6 | 1,167.8 |
| Southeast of CGS | $SO_2$ | 0.2 | 20.8 | 51.8 | 0.6 | 73.3 |
| *Distance Correction Factor: 1.2* | | | | | **Sum (lbs)** | **2,536.7** |

| Charles Tuttle, Helphenstine Ranch // Maxwell, CA // Colusa County | | | | | | |
|---|---|---|---|---|---|---|
| Certificate(s) and Location | Pollutant | 1st Quarter (lbs) | 2nd Quarter (lbs) | 3rd Quarter (lbs) | 4th Quarter (lbs) | Annual (lbs) |
| (Cert. Applied for) | $NO_X$ | 0.0 | 71.5 | 119.8 | 1.9 | 193.3 |
| | VOC | 0.0 | 126.4 | 211.8 | 3.4 | 341.6 |
| < 20 miles | $PM_{10}$ | 0.0 | 176.3 | 295.4 | 4.8 | 476.5 |
| Southeast of CGS | $SO_2$ | 0.0 | 15.0 | 25.1 | 0.4 | 40.5 |
| *Distance Correction Factor: 1.2* | | | | | **Sum (lbs)** | **1,051.9** |

## Table 3 Colusa Generating Station (CGS)
## Corrected ERCs Summary (lbs)

| Charles Tuttle, Williams Ranch // Maxwell, CA // Colusa County | | | | | | |
|---|---|---|---|---|---|---|
| Certificate(s) and Location | Pollutant | 1st Quarter (lbs) | 2nd Quarter (lbs) | 3rd Quarter (lbs) | 4th Quarter (lbs) | Annual (lbs) |
| (Cert. Applied for) | $NO_X$ | 0.0 | 50.8 | 85.1 | 1.4 | 137.2 |
| | VOC | 0.0 | 89.7 | 150.4 | 2.4 | 242.5 |
| < 20 miles | $PM_{10}$ | 0.0 | 125.2 | 209.7 | 3.4 | 338.3 |
| Southeast of CGS | $SO_2$ | 0.0 | 10.6 | 17.8 | 0.3 | 28.7 |
| *Distance Correction Factor: 1.2* | | | | | **Sum (lbs)** | **746.8** |

| William Payne // Woodland, CA // Sutter County | | | | | | |
|---|---|---|---|---|---|---|
| Certificate(s) and Location | Pollutant | 1st Quarter (lbs) | 2nd Quarter (lbs) | 3rd Quarter (lbs) | 4th Quarter (lbs) | Annual (lbs) |
| (Cert. ERC 2001-26) | $NO_X$ | 1,134.0 | 1,249.3 | 2,022.0 | 1,267.3 | 5,672.7 |
| | VOC | 1,025.3 | 1,574.7 | 5,356.0 | 1,145.3 | 9,101.3 |
| > 20 miles, < 50 miles | $PM_{10}$ | 1,374.0 | 2,160.0 | 6,620.7 | 1,535.3 | 11,690.0 |
| Southeast of CGS | $SO_2$ | 240.0 | 263.3 | 326.0 | 268.0 | 1,097.3 |
| *Distance Correction Factor: 1.5* | | | | | **Sum (lbs)** | **27,561.3** |

## Table 3 Colusa Generating Station (CGS)
## Corrected ERCs Summary (tons)

| CGS Annual Controlled Project Emissions | | | | | | |
|---|---|---|---|---|---|---|
| Notes | Pollutant | 1st Quarter (tons) | 2nd Quarter (tons) | 3rd Quarter (tons) | 4th Quarter (tons) | Annual (tons) |
| CGS total emissions | $NO_X$ | 45.77 | 43.77 | 51.57 | 44.47 | 185.58 |
| from all sources | VOC | 12.51 | 11.81 | 12.01 | 11.91 | 48.24 |
| Ref. Table 8.1-21 of AFC | $PM_{10}$ | 35.36 | 35.46 | 35.66 | 35.76 | 142.24 |
| | $SO_2$ | 3.03 | 2.83 | 2.63 | 2.83 | 11.32 |
| | | | | | **Sum (tons)** | **387.38** |
| | | | | | **% of Total** | **100%** |

| Highway 70 Industrial Park, LP // Oroville, CA // Butte County | | | | | | |
|---|---|---|---|---|---|---|
| Certificate(s) and Location | Pollutant | 1st Quarter (tons) | 2nd Quarter (tons) | 3rd Quarter (tons) | 4th Quarter (tons) | Annual (tons) |
| (Cert. 08-05-36, 08-05-37) | $NO_X$ | 11.67 | 11.67 | 11.67 | 11.67 | 46.67 |
| (Cert.08-05-39) | VOC | 29.17 | 29.17 | 29.17 | 29.17 | 116.67 |
| Stationary ERCs | $PM_{10}$ | 11.17 | 11.17 | 11.17 | 11.17 | 44.67 |
| > 20 miles, < 50 miles | $SO_2$ | 0.00 | 0.00 | 0.00 | 0.00 | 0.00 |
| Northeast of CGS | | | | | **Sum (tons)** | **208.00** |
| | | | | | **% of Total** | **54%** |

*Note: Actual ERC Certificates may contain higher amounts than shown.*

*Distance Correction Factor: 1.5*

| Jack W. Baber // Camptonville, CA // Yuba County | | | | | | |
|---|---|---|---|---|---|---|
| Certificate(s) and Location | Pollutant | 1st Quarter (tons) | 2nd Quarter (tons) | 3rd Quarter (tons) | 4th Quarter (tons) | Annual (tons) |
| (Cert. ERC-9937006-00T) | $NO_X$ | 0.11 | 0.18 | 0.16 | 0.13 | 0.57 |
| Stationary ERCs | VOC | 0.05 | 0.08 | 0.08 | 0.06 | 0.27 |
| > 50 miles | $PM_{10}$ | 1.51 | 2.54 | 2.30 | 1.80 | 8.15 |
| Northeast CGS | $SO_2$ | 0.04 | 0.07 | 0.06 | 0.05 | 0.22 |
| | | | | | **Sum (tons)** | **9.21** |
| | | | | | **% of Total** | **2%** |

*Distance Correction Factor: 2.0*

| Baber Family Trust // Colusa, CA // Colusa County | | | | | | |
|---|---|---|---|---|---|---|
| Certificate(s) and Location | Pollutant | 1st Quarter (tons) | 2nd Quarter (tons) | 3rd Quarter (tons) | 4th Quarter (tons) | Annual (tons) |
| (Cert. 06-01-02-03) | $NO_X$ | 0.42 | 0.34 | 0.14 | 0.46 | 1.35 |
| | VOC | 0.38 | 0.31 | 0.12 | 0.42 | 1.22 |
| < 20 miles | $PM_{10}$ | 0.51 | 0.41 | 0.16 | 0.56 | 1.64 |
| East of CGS | $SO_2$ | 0.09 | 0.07 | 0.03 | 0.10 | 0.29 |
| | | | | | **Sum (tons)** | **4.49** |
| | | | | | **% of Total** | **1%** |

*Distance Correction Factor: 1.2*

## Table 3 Colusa Generating Station (CGS)
## Corrected ERCs Summary (tons)

| Jack W. Baber and Judith S. Baber // Colusa, CA // Colusa County | | | | | | |
|---|---|---|---|---|---|---|
| Certificate(s) and Location | Pollutant | 1st Quarter (tons) | 2nd Quarter (tons) | 3rd Quarter (tons) | 4th Quarter (tons) | Annual (tons) |
| (Cert. 06-01-02-04) | $NO_X$ | 1.00 | 0.81 | 0.32 | 1.10 | 3.23 |
| | VOC | 0.90 | 0.73 | 0.29 | 0.99 | 2.92 |
| < 20 miles | $PM_{10}$ | 1.21 | 0.98 | 0.39 | 1.33 | 3.91 |
| East of CGS | $SO_2$ | 0.21 | 0.17 | 0.07 | 0.23 | 0.68 |
| *Distance Correction Factor: 1.2* | | | | | **Sum (tons)** | **10.74** |
| | | | | | **% of Total** | **3%** |

| Estate of Jack W. Baber Jr. // Colusa, CA // Colusa County | | | | | | |
|---|---|---|---|---|---|---|
| Certificate(s) and Location | Pollutant | 1st Quarter (tons) | 2nd Quarter (tons) | 3rd Quarter (tons) | 4th Quarter (tons) | Annual (tons) |
| (Cert. 06-01-02-05) | $NO_X$ | 0.35 | 0.29 | 0.11 | 0.39 | 1.14 |
| | VOC | 0.32 | 0.26 | 0.10 | 0.35 | 1.03 |
| < 20 miles | $PM_{10}$ | 0.43 | 0.35 | 0.14 | 0.47 | 1.38 |
| East of CGS | $SO_2$ | 0.07 | 0.06 | 0.02 | 0.08 | 0.24 |
| *Distance Correction Factor: 1.2* | | | | | **Sum (tons)** | **3.79** |
| | | | | | **% of Total** | **1%** |

| Pixie E. Baber // Colusa, CA // Colusa County | | | | | | |
|---|---|---|---|---|---|---|
| Certificate(s) and Location | Pollutant | 1st Quarter (tons) | 2nd Quarter (tons) | 3rd Quarter (tons) | 4th Quarter (tons) | Annual (tons) |
| (Cert. 06-01-02-05.2) | $NO_X$ | 0.34 | 0.26 | 0.11 | 0.37 | 1.08 |
| | VOC | 0.30 | 0.25 | 0.10 | 0.33 | 0.98 |
| < 20 miles | $PM_{10}$ | 0.41 | 0.33 | 0.13 | 0.45 | 1.32 |
| East of CGS | $SO_2$ | 0.07 | 0.06 | 0.02 | 0.08 | 0.23 |
| *Distance Correction Factor: 1.2* | | | | | **Sum (tons)** | **3.61** |
| | | | | | **% of Total** | **1%** |

| Jack W. Baber and Judith S. Baber // Colusa, CA // Colusa County | | | | | | |
|---|---|---|---|---|---|---|
| Certificate(s) and Location | Pollutant | 1st Quarter (tons) | 2nd Quarter (tons) | 3rd Quarter (tons) | 4th Quarter (tons) | Annual (tons) |
| (Cert. 06-01-02-06) | $NO_X$ | 0.24 | 0.20 | 0.08 | 0.27 | 0.79 |
| | VOC | 0.22 | 0.18 | 0.07 | 0.24 | 0.71 |
| < 20 miles | $PM_{10}$ | 0.30 | 0.24 | 0.10 | 0.33 | 0.96 |
| East of CGS | $SO_2$ | 0.05 | 0.04 | 0.02 | 0.06 | 0.17 |
| *Distance Correction Factor: 1.2* | | | | | **Sum (tons)** | **2.63** |
| | | | | | **% of Total** | **1%** |

## Table 3 Colusa Generating Station (CGS)
## Corrected ERCs Summary (tons)

| Inez Garrette // Colusa, CA // Colusa County | | | | | | |
|---|---|---|---|---|---|---|
| Certificate(s) and Location | Pollutant | 1st Quarter (tons) | 2nd Quarter (tons) | 3rd Quarter (tons) | 4th Quarter (tons) | Annual (tons) |
| (Cert. 06-01-02-07) | $NO_X$ | 0.08 | 0.07 | 0.03 | 0.09 | 0.26 |
| | VOC | 0.07 | 0.06 | 0.02 | 0.08 | 0.24 |
| < 20 miles | $PM_{10}$ | 0.10 | 0.08 | 0.03 | 0.11 | 0.32 |
| East of CGS | $SO_2$ | 0.02 | 0.01 | 0.01 | 0.02 | 0.06 |
| *Distance Correction Factor: 1.2* | | | | | **Sum (tons)** | **0.88** |
| | | | | | **% of Total** | **0%** |

| Jack W. Baber and Judith S. Baber // Colusa, CA // Colusa County | | | | | | |
|---|---|---|---|---|---|---|
| Certificate(s) and Location | Pollutant | 1st Quarter (tons) | 2nd Quarter (tons) | 3rd Quarter (tons) | 4th Quarter (tons) | Annual (tons) |
| (Cert. 06-01-02-08) | $NO_X$ | 0.87 | 0.70 | 0.28 | 0.95 | 2.80 |
| | VOC | 0.78 | 0.63 | 0.25 | 0.86 | 2.53 |
| < 20 miles | $PM_{10}$ | 1.05 | 0.85 | 0.34 | 1.15 | 3.39 |
| East of CGS | $SO_2$ | 0.18 | 0.15 | 0.06 | 0.20 | 0.59 |
| *Distance Correction Factor: 1.2* | | | | | **Sum (tons)** | **9.32** |
| | | | | | **% of Total** | **2%** |

| Jack W. Baber Jr. // Colusa, CA // Colusa County | | | | | | |
|---|---|---|---|---|---|---|
| Certificate(s) and Location | Pollutant | 1st Quarter (tons) | 2nd Quarter (tons) | 3rd Quarter (tons) | 4th Quarter (tons) | Annual (tons) |
| (Cert. 06-01-02-09) | $NO_X$ | 0.66 | 0.53 | 0.21 | 0.72 | 2.12 |
| | VOC | 0.59 | 0.48 | 0.19 | 0.65 | 1.92 |
| < 20 miles | $PM_{10}$ | 0.80 | 0.64 | 0.26 | 0.87 | 2.57 |
| East of CGS | $SO_2$ | 0.14 | 0.11 | 0.04 | 0.15 | 0.45 |
| *Distance Correction Factor: 1.2* | | | | | **Sum (tons)** | **7.05** |
| | | | | | **% of Total** | **2%** |

| Davis Ranches // Colusa, CA // Colusa County | | | | | | |
|---|---|---|---|---|---|---|
| Certificate(s) and Location | Pollutant | 1st Quarter (tons) | 2nd Quarter (tons) | 3rd Quarter (tons) | 4th Quarter (tons) | Annual (tons) |
| (Cert. 06-7-2001-1) | $NO_X$ | 4.34 | 3.50 | 1.40 | 4.77 | 14.02 |
| | VOC | 3.93 | 3.17 | 1.27 | 4.31 | 12.67 |
| > 20 miles, < 50 miles | $PM_{10}$ | 5.26 | 4.25 | 1.70 | 5.77 | 16.98 |
| Southeast of CGS | $SO_2$ | 0.92 | 0.74 | 0.30 | 1.01 | 2.96 |
| *Distance Correction Factor: 1.5* | | | | | **Sum (tons)** | **46.63** |
| | | | | | **% of Total** | **12%** |

## Table 3 Colusa Generating Station (CGS)
## Corrected ERCs Summary (tons)

| Gunnersfield Ent., Inc. // Maxwell, CA // Colusa County | | | | | | |
|---|---|---|---|---|---|---|
| Certificate(s) and Location | Pollutant | 1st Quarter (tons) | 2nd Quarter (tons) | 3rd Quarter (tons) | 4th Quarter (tons) | Annual (tons) |
| (Cert. 06-01-02-02) | $NO_X$ | 2.34 | 1.89 | 0.75 | 2.57 | 7.55 |
| | VOC | 2.12 | 1.71 | 0.68 | 2.32 | 6.82 |
| < 20 miles | $PM_{10}$ | 2.83 | 2.29 | 0.91 | 3.11 | 9.15 |
| Southeast of CGS | $SO_2$ | 0.50 | 0.40 | 0.16 | 0.54 | 1.60 |
| *Distance Correction Factor: 1.2* | | | | | **Sum (tons)** | **25.11** |
| | | | | | **% of Total** | **6%** |

| Jon B. Chaney // Maxwell, CA // Colusa County | | | | | | |
|---|---|---|---|---|---|---|
| Certificate(s) and Location | Pollutant | 1st Quarter (tons) | 2nd Quarter (tons) | 3rd Quarter (tons) | 4th Quarter (tons) | Annual (tons) |
| (Cert. 06-01-02-01) | $NO_X$ | 0.88 | 0.71 | 0.28 | 0.96 | 2.83 |
| | VOC | 0.79 | 0.64 | 0.26 | 0.87 | 2.56 |
| < 20 miles | $PM_{10}$ | 1.06 | 0.86 | 0.34 | 1.17 | 3.43 |
| Southeast of CGS | $SO_2$ | 0.19 | 0.15 | 0.06 | 0.20 | 0.60 |
| *Distance Correction Factor: 1.2* | | | | | **Sum (tons)** | **9.41** |
| | | | | | **% of Total** | **2%** |

| Jack DeWit // Maxwell, CA // Colusa County | | | | | | |
|---|---|---|---|---|---|---|
| Certificate(s) and Location | Pollutant | 1st Quarter (tons) | 2nd Quarter (tons) | 3rd Quarter (tons) | 4th Quarter (tons) | Annual (tons) |
| (Cert. Applied for) | $NO_X$ | 0.48 | 0.38 | 0.15 | 0.52 | 1.54 |
| | VOC | 0.43 | 0.35 | 0.14 | 0.47 | 1.39 |
| < 20 miles | $PM_{10}$ | 0.58 | 0.47 | 0.19 | 0.63 | 1.86 |
| East of CGS | $SO_2$ | 0.10 | 0.08 | 0.03 | 0.11 | 0.33 |
| *Distance Correction Factor: 1.2* | | | | | **Sum (tons)** | **5.11** |
| | | | | | **% of Total** | **1%** |

| Jerry Maltby et. al. // Williams, CA // Colusa County | | | | | | |
|---|---|---|---|---|---|---|
| Certificate(s) and Location | Pollutant | 1st Quarter (tons) | 2nd Quarter (tons) | 3rd Quarter (tons) | 4th Quarter (tons) | Annual (tons) |
| (Cert. 06-06-11-01) | $NO_X$ | 1.88 | 1.52 | 0.61 | 2.07 | 6.08 |
| | VOC | 1.70 | 1.37 | 0.55 | 1.87 | 5.49 |
| < 20 miles | $PM_{10}$ | 2.28 | 1.84 | 0.74 | 2.50 | 7.36 |
| South of CGS | $SO_2$ | 0.40 | 0.32 | 0.13 | 0.44 | 1.29 |
| *Distance Correction Factor: 1.2* | | | | | **Sum (tons)** | **20.22** |
| | | | | | **% of Total** | **5%** |

## Table 3 Colusa Generating Station (CGS)
## Corrected ERCs Summary (tons)

| A & R Farms // Colusa, CA // Colusa County | | | | | | |
|---|---|---|---|---|---|---|
| Certificate(s) and Location | Pollutant | 1st Quarter (tons) | 2nd Quarter (tons) | 3rd Quarter (tons) | 4th Quarter (tons) | Annual (tons) |
| (Cert. 06-05-02-01) | $NO_X$ | 0.66 | 0.54 | 0.22 | 0.73 | 2.15 |
| | VOC | 0.60 | 0.49 | 0.21 | 0.66 | 1.96 |
| < 20 miles | $PM_{10}$ | 0.80 | 0.66 | 0.28 | 0.88 | 2.62 |
| East of CGS | $SO_2$ | 0.14 | 0.11 | 0.05 | 0.15 | 0.46 |
| *Distance Correction Factor: 1.2* | | | | | **Sum (tons)** | **7.19** |
| | | | | | **% of Total** | **2%** |

| Jim Lagrande // Colusa, CA // Colusa County | | | | | | |
|---|---|---|---|---|---|---|
| Certificate(s) and Location | Pollutant | 1st Quarter (tons) | 2nd Quarter (tons) | 3rd Quarter (tons) | 4th Quarter (tons) | Annual (tons) |
| (Cert. 06-01-03-01) | $NO_X$ | 0.55 | 0.47 | 0.24 | 0.60 | 1.85 |
| | VOC | 0.50 | 0.46 | 0.26 | 0.55 | 1.77 |
| < 20 miles | $PM_{10}$ | 0.67 | 0.62 | 0.36 | 0.73 | 2.38 |
| South of CGS | $SO_2$ | 0.12 | 0.10 | 0.05 | 0.13 | 0.39 |
| *Distance Correction Factor: 1.2* | | | | | **Sum (tons)** | **6.40** |
| | | | | | **% of Total** | **2%** |

| Charles Tuttle, Gordon Ranch // Maxwell, CA // Colusa County | | | | | | |
|---|---|---|---|---|---|---|
| Certificate(s) and Location | Pollutant | 1st Quarter (tons) | 2nd Quarter (tons) | 3rd Quarter (tons) | 4th Quarter (tons) | Annual (tons) |
| (Cert. Applied for) | $NO_X$ | 0.66 | 0.60 | 0.33 | 0.73 | 2.33 |
| | VOC | 0.60 | 0.60 | 0.40 | 0.66 | 2.26 |
| < 20 miles | $PM_{10}$ | 0.80 | 0.82 | 0.54 | 0.89 | 3.05 |
| Southeast of CGS | $SO_2$ | 0.14 | 0.13 | 0.07 | 0.15 | 0.49 |
| *Distance Correction Factor: 1.2* | | | | | **Sum (tons)** | **8.13** |
| | | | | | **% of Total** | **2%** |

| Charles Tuttle, Tenant Ranch // Maxwell, CA // Colusa County | | | | | | |
|---|---|---|---|---|---|---|
| Certificate(s) and Location | Pollutant | 1st Quarter (tons) | 2nd Quarter (tons) | 3rd Quarter (tons) | 4th Quarter (tons) | Annual (tons) |
| (Cert. Applied for) | $NO_X$ | 0.00 | 0.05 | 0.15 | 0.00 | 0.20 |
| | VOC | 0.00 | 0.09 | 0.36 | 0.00 | 0.45 |
| < 20 miles | $PM_{10}$ | 0.00 | 0.12 | 0.46 | 0.00 | 0.58 |
| Southeast of CGS | $SO_2$ | 0.00 | 0.01 | 0.03 | 0.00 | 0.04 |
| *Distance Correction Factor: 1.2* | | | | | **Sum (tons)** | **1.27** |
| | | | | | **% of Total** | **0%** |

## Table 3 Colusa Generating Station (CGS)
## Corrected ERCs Summary (tons)

| Charles Tuttle, Helphenstine Ranch // Maxwell, CA // Colusa County | | | | | | |
|---|---|---|---|---|---|---|
| Certificate(s) and Location | Pollutant | 1st Quarter (tons) | 2nd Quarter (tons) | 3rd Quarter (tons) | 4th Quarter (tons) | Annual (tons) |
| (Cert. Applied for) | $NO_X$ | 0.00 | 0.04 | 0.06 | 0.00 | 0.10 |
| | VOC | 0.00 | 0.06 | 0.11 | 0.00 | 0.17 |
| < 20 miles | $PM_{10}$ | 0.00 | 0.09 | 0.15 | 0.00 | 0.24 |
| Southeast of CGS | $SO_2$ | 0.00 | 0.01 | 0.01 | 0.00 | 0.02 |
| *Distance Correction Factor: 1.2* | | | | | **Sum (tons)** | **0.53** |
| | | | | | **% of Total** | **0%** |

| Charles Tuttle, Williams Ranch // Maxwell, CA // Colusa County | | | | | | |
|---|---|---|---|---|---|---|
| Certificate(s) and Location | Pollutant | 1st Quarter (tons) | 2nd Quarter (tons) | 3rd Quarter (tons) | 4th Quarter (tons) | Annual (tons) |
| (Cert. Applied for) | $NO_X$ | 0.00 | 0.03 | 0.04 | 0.00 | 0.07 |
| | VOC | 0.00 | 0.04 | 0.08 | 0.00 | 0.12 |
| < 20 miles | $PM_{10}$ | 0.00 | 0.06 | 0.10 | 0.00 | 0.17 |
| Southeast of CGS | $SO_2$ | 0.00 | 0.01 | 0.01 | 0.00 | 0.01 |
| *Distance Correction Factor: 1.2* | | | | | **Sum (tons)** | **0.37** |
| | | | | | **% of Total** | **0%** |

| William Payne // Woodland, CA // Sutter County | | | | | | |
|---|---|---|---|---|---|---|
| Certificate(s) and Location | Pollutant | 1st Quarter (tons) | 2nd Quarter (tons) | 3rd Quarter (tons) | 4th Quarter (tons) | Annual (tons) |
| (Cert. ERC 2001-26) | $NO_X$ | 0.57 | 0.62 | 1.01 | 0.63 | 2.84 |
| | VOC | 0.51 | 0.79 | 2.68 | 0.57 | 4.55 |
| > 20 miles, < 50 miles | $PM_{10}$ | 0.69 | 1.08 | 3.31 | 0.77 | 5.85 |
| Southeast of CGS | $SO_2$ | 0.12 | 0.13 | 0.16 | 0.13 | 0.55 |
| *Distance Correction Factor: 1.5* | | | | | **Sum (tons)** | **13.78** |
| | | | | | **% of Total** | **4%** |

## Table 3 Colusa Generating Station (CGS)
## Corrected ERCs Summary (tons)

**Summary for Mitigation Measures (Section 8.1.4) of AFC**

| Mitigation Measure Notes | Pollutant | 1st Quarter (tons) | 2nd Quarter (tons) | 3rd Quarter (tons) | 4th Quarter (tons) | Annual (tons) |
|---|---|---|---|---|---|---|
| CGS annual controlled project emissions | $NO_X$ | 45.77 | 43.77 | 51.57 | 44.47 | 185.58 |
| | VOC | 12.51 | 11.81 | 12.01 | 11.91 | 48.24 |
| | $PM_{10}$ | 35.36 | 35.46 | 35.66 | 35.76 | 142.24 |
| | $SO_2$ | 3.03 | 2.83 | 2.63 | 2.83 | 11.32 |

| Mitigation Measure Notes | Pollutant | 1st Quarter (tons) | 2nd Quarter (tons) | 3rd Quarter (tons) | 4th Quarter (tons) | Annual (tons) |
|---|---|---|---|---|---|---|
| Actual Hwy 70 ERC in BCAPCD | $NO_X$ | 17.50 | 17.50 | 17.50 | 17.50 | 70.00 |
| | VOC | 43.75 | 43.75 | 43.75 | 43.75 | 175.00 |
| | $PM_{10}$ | 16.75 | 16.75 | 16.75 | 16.75 | 67.00 |
| | $SO_2$ | 0.00 | 0.00 | 0.00 | 0.00 | 0.00 |

| Mitigation Measure Notes | Pollutant | 1st Quarter (tons) | 2nd Quarter (tons) | 3rd Quarter (tons) | 4th Quarter (tons) | Annual (tons) |
|---|---|---|---|---|---|---|
| Adjusted Hwy 70 ERC corrected with 1.5 distance ratio | $NO_X$ | 11.67 | 11.67 | 11.67 | 11.67 | 46.67 |
| | VOC | 29.17 | 29.17 | 29.17 | 29.17 | 116.67 |
| | $PM_{10}$ | 11.17 | 11.17 | 11.17 | 11.17 | 44.67 |
| | $SO_2$ | 0.00 | 0.00 | 0.00 | 0.00 | 0.00 |

| Mitigation Measure Notes | Pollutant | 1st Quarter (tons) | 2nd Quarter (tons) | 3rd Quarter (tons) | 4th Quarter (tons) | Annual (tons) |
|---|---|---|---|---|---|---|
| Actual FRAQMD ERC (Baber) | $NO_X$ | 0.21 | 0.35 | 0.32 | 0.25 | 1.13 |
| | VOC | 0.10 | 0.17 | 0.15 | 0.12 | 0.54 |
| | $PM_{10}$ | 3.02 | 5.08 | 4.61 | 3.60 | 16.30 |
| | $SO_2$ | 0.08 | 0.14 | 0.13 | 0.10 | 0.45 |

| Mitigation Measure Notes | Pollutant | 1st Quarter (tons) | 2nd Quarter (tons) | 3rd Quarter (tons) | 4th Quarter (tons) | Annual (tons) |
|---|---|---|---|---|---|---|
| Adjusted FRAQMD corrected with 2.0 distance ratio | $NO_X$ | 0.11 | 0.18 | 0.16 | 0.13 | 0.57 |
| | VOC | 0.05 | 0.08 | 0.08 | 0.06 | 0.27 |
| | $PM_{10}$ | 1.51 | 2.54 | 2.30 | 1.80 | 8.15 |
| | $SO_2$ | 0.04 | 0.07 | 0.06 | 0.05 | 0.22 |

## Table 3 Colusa Generating Station (CGS)
## Corrected ERCs Summary (tons)

**Summary for Mitigation Measures (Section 8.1.4) of AFC (continued)**

| Mitigation Measure Notes | Pollutant | 1st Quarter (tons) | 2nd Quarter (tons) | 3rd Quarter (tons) | 4th Quarter (tons) | Annual (tons) |
|---|---|---|---|---|---|---|
| Total adjusted stationary | $NO_X$ | 11.77 | 11.84 | 11.83 | 11.79 | 47.23 |
| ERC (BCAPCD + FRAQMD) | VOC | 29.22 | 29.25 | 29.24 | 29.23 | 116.94 |
| | $PM_{10}$ | 12.68 | 13.71 | 13.47 | 12.97 | 52.82 |
| | $SO_2$ | 0.04 | 0.07 | 0.06 | 0.05 | 0.22 |

| Mitigation Measure Notes | Pollutant | 1st Quarter (tons) | 2nd Quarter (tons) | 3rd Quarter (tons) | 4th Quarter (tons) | Annual (tons) |
|---|---|---|---|---|---|---|
| VOC to NOx conversion | VOC Adj | 29.22 | 29.25 | 29.24 | 29.23 | 116.94 |
| using 1.4 ton of | VOC Req'd | 12.51 | 11.81 | 12.01 | 11.91 | 48.24 |
| VOC = 1 ton NOx | Excess VOC | 16.71 | 17.44 | 17.23 | 17.32 | 68.70 |
| | As NOx | 11.93 | 12.46 | 12.31 | 12.37 | 49.07 |
| | **Total NOx** | **23.70** | **24.30** | **24.14** | **24.16** | **96.30** |

| Mitigation Measure Notes | Pollutant | 1st Quarter (tons) | 2nd Quarter (tons) | 3rd Quarter (tons) | 4th Quarter (tons) | Annual (tons) |
|---|---|---|---|---|---|---|
| Stationary source ERCs | $NO_X$ | 23.70 | 24.30 | 24.14 | 24.16 | 96.30 |
| distance adjusted with | VOC | 12.51 | 11.81 | 12.01 | 11.91 | 48.24 |
| VOC to NOx conversion | $PM_{10}$ | 12.68 | 13.71 | 13.47 | 12.97 | 52.82 |
| | $SO_2$ | 0.04 | 0.07 | 0.06 | 0.05 | 0.22 |

| Mitigation Measure Notes | Pollutant | 1st Quarter (tons) | 2nd Quarter (tons) | 3rd Quarter (tons) | 4th Quarter (tons) | Annual (tons) |
|---|---|---|---|---|---|---|
| Balance required after | $NO_X$ | 22.07 | 19.47 | 27.43 | 20.31 | 89.28 |
| stationary source ERCs | VOC | 0.00 | 0.00 | 0.00 | 0.00 | 0.00 |
| have been applied | $PM_{10}$ | 22.68 | 21.75 | 22.19 | 22.79 | 89.42 |
| | $SO_2$ | 2.99 | 2.76 | 2.57 | 2.78 | 11.10 |

| Mitigation Measure Notes | Pollutant | 1st Quarter (tons) | 2nd Quarter (tons) | 3rd Quarter (tons) | 4th Quarter (tons) | Annual (tons) |
|---|---|---|---|---|---|---|
| Agricultural burn ERC | $NO_X$ | 24.99 | 20.66 | 10.83 | 27.44 | 83.92 |
| certificate holders with | VOC | 0.00 | 0.00 | 0.00 | 0.00 | 0.00 |
| VOC to NOx conversion | $PM_{10}$ | 18.40 | 15.46 | 9.19 | 20.20 | 63.25 |
| | $SO_2$ | 3.21 | 2.63 | 1.17 | 3.53 | 10.55 |

## Table 3 Colusa Generating Station (CGS)
## Corrected ERCs Summary (tons)

**Summary for Mitigation Measures (Section 8.1.4) of AFC (continued)**

| Mitigation Measure Notes | Pollutant | 1st Quarter (tons) | 2nd Quarter (tons) | 3rd Quarter (tons) | 4th Quarter (tons) | Annual (tons) |
|---|---|---|---|---|---|---|
| Balance after stationary source ERCs and agricultural burn ERCs with certificates have been applied | $NO_X$ | -2.93 | -1.19 | 16.60 | -7.13 | 5.36 |
| | VOC | 0.00 | 0.00 | 0.00 | 0.00 | 0.00 |
| | $PM_{10}$ | 4.28 | 6.29 | 13.00 | 2.59 | 26.17 |
| | $SO_2$ | -0.22 | 0.13 | 1.39 | -0.75 | 0.55 |

| Mitigation Measure Notes | Pollutant | 1st Quarter (tons) | 2nd Quarter (tons) | 3rd Quarter (tons) | 4th Quarter (tons) | Annual (tons) |
|---|---|---|---|---|---|---|
| Agricultural burn ERC's with out certificates | $NO_X$ | 1.88 | 1.92 | 1.50 | 2.07 | 7.36 |
| | VOC | 0.00 | 0.00 | 0.00 | 0.00 | 0.00 |
| | $PM_{10}$ | 1.38 | 1.56 | 1.44 | 1.53 | 5.90 |
| | $SO_2$ | 0.24 | 0.23 | 0.15 | 0.27 | 0.89 |

| Mitigation Measure Notes | Pollutant | 1st Quarter (tons) | 2nd Quarter (tons) | 3rd Quarter (tons) | 4th Quarter (tons) | Annual (tons) |
|---|---|---|---|---|---|---|
| Balance after stationary source ERCs and agricultural burn ERCs with and without certificates have been applied | $NO_X$ | 0.00 | 0.00 | 15.10 | 0.00 | 15.10 |
| | VOC | 0.00 | 0.00 | 0.00 | 0.00 | 0.00 |
| | $PM_{10}$ | 2.90 | 4.74 | 11.56 | 1.07 | 20.27 |
| | $SO_2$ | 0.00 | 0.00 | 1.24 | 0.00 | 1.24 |

# Appendix B

| Table 8.1-29<br>Applicable Air Quality Laws, Ordinances, Regulations, and Standards<br>(Page 1 of 3) | | | |
|---|---|---|---|
| **Laws, Ordinances, Regulations, and Standards** | **Administering Agency** | **Applicability** | **AFC Section and Page** |
| **Federal** | | | |
| Federal CAAA of 1990; 40 CFR 50 | U.S. EPA Region IX, CARB, CCAPCD | National Ambient Air Quality Standards | 8.1.5.1<br>Page 8.1-16 |
| 40 CFR 52.21 | U.S. EPA Region IX, CARB | PSD Requirements | 8.1.5.2<br>Page 8.1-16 |
| 40 CFR 72, 73, 75 | U.S. EPA Region IX | Acid rain requirements, $SO_2$ allowances | 8.1.5.3<br>Page 8.1-17 |
| 40 CFR 60, Subpart KKKK | CCAPCD | New Source Performance Standards (NSPS); 0.0015 by volume (15 ppmv) for $NO_X$ and 0.015% by volume (150 ppmv) for $SO_2$ | 8.1.5.4<br>Page 8.1-17 |
| 40 CFR 70 | CCAPCD | Federally Mandated Operating Permit (Title V) for major sources | 8.1.5.5<br>Page 8.1-17 |
| **State** | | | |
| California Administrative Code, Title 14, §15002(a)(3), CEQA Guideline | CEC | Power plant sitting requirements | 8.1.5.6<br>Page 8.1-17 |
| H&S Code § 44300 | CCAPCD | Air toxics “Hot Spots” emission inventory | 8.1.5.7<br>Page 8.1-18 |
| **Local** | | | |
| Regulation 1, Rule 1.8 | CCAPCD | Requires to install, use and maintain monitoring equipment | 8.1.5.10.1<br>Page 8.1-19 |
| Regulation 1, Rule 1.9 | CCAPCD | Submittal of records and reports to the Air Pollution Control Officer | 8.1.5.10.1<br>Page 8.1-19 |
| Regulation 1, Rule 1.10 | CCAPCD | Tests procedures | 8.1.5.10.1<br>Page 8.1-19 |
| Regulation 1, Rule 1.11 | CCAPCD | Field inspection | 8.1.5.10.1<br>Page 8.1-19 |
| Regulation 1, Rule 1.12 | CCAPCD | Air pollution equipment, scheduled maintenance | 8.1.5.10.1<br>Page 8.1-19 |

| Table 8.1-29<br>Applicable Air Quality Laws, Ordinances, Regulations, and Standards<br>(Page 2 of 3) | | | |
|---|---|---|---|
| **Laws, Ordinances, Regulations, and Standards** | **Administering Agency** | **Applicability** | **AFC Section and Page** |
| Regulation 1, Rule 1.13 | CCAPCD | Notification of equipment breakdown | 8.1.5.10.1<br>Page 8.1-20 |
| Regulation 2, Rule 2.10 | CCAPCD | Nuisance; prohibits discharge of emissions which cause injury, illness, detriment, nuisance, etc., to any considerable number of persons or to the public | 8.1.5.10.1<br>Page 8.1-20 |
| Regulation 2, Rule 2.13 | CCAPCD | Visibility; prohibits visible emissions as dark or darker than No. 2 on the Ringelmann chart | 8.1.5.10.1<br>Page 8.1-20 |
| Regulation 2, Rule 2.15 | CCAPCD | Particulate matter emission limit of 0.3 grain per cubic foot of gas at dry standard conditions | 8.1.5.10.1<br>Page 8.1-20 |
| Regulation 2, Rule 2.16 | CCAPCD | Fugitive dust; prohibits the emission of fugitive dust from being airborne beyond the project's property line during construction activities | 8.1.5.10.1<br>Page 8.1-20 |
| Regulation 2, Rule 2.17 | CCAPCD | Separation of emissions; air contaminants from a single source operation emitted through two or more emission points cannot exceed the allowable emission through a single emission point | 8.1.5.10.1<br>Page 8.1-21 |
| Regulation 2, Rule 2.18 | CCAPCD | Combination of emissions; air contaminants from two or more source operations that are combined prior to emission shall be separated if possible, the prohibitions applying to each source separately | 8.1.5.10.1<br>Page 8.1-21 |
| Regulation 2, Rule 2.22 | CCAPCD | Sulfur oxides; prohibits discharging from any single source more than 2,000 ppm of sulfur oxides | 8.1.5.10.1<br>Page 8.1-22 |
| Regulation 2, Rule 2.23 | CCAPCD | Reduced sulfur compounds; prohibits emissions which would result in more than 0.03 ppm of ground-level concentration of total reduced sulfur compounds (as $H_2S$) for a period of 60 minutes | 8.1.5.10.1<br>Page 8.1-22 |

| Table 8.1-29<br>Applicable Air Quality Laws, Ordinances, Regulations, and Standards<br>(Page 3 of 3) | | | |
|---|---|---|---|
| **Laws, Ordinances, Regulations, and Standards** | **Administering Agency** | **Applicability** | **AFC Section and Page** |
| Regulation 2, Rule 2.39 | CCAPCD | Steam generators $NO_x$ control measure; RACT limit of 0.084 lbs/MMBTU or 70 ppmv for $NO_x$ | 8.1.5.10.1<br>Page 8.1-22 |
| Regulation 3, Rule 3.1 | CCAPCD | Authority to Construct and Permit to Operate. | 8.1.5.10.1<br>Page 8.1-22 |
| Regulation 3, Rule 3.6 | CCAPCD | New Source Review. | 8.1.5.10.1<br>Page 8.1-22 |

# Appendix C

COLUSA COUNTY
DEPARTMENT OF AGRICULTURE - AIR POLLUTION CONTROL DISTRICT
**HARRY A. KRUG**
AGRICULTURAL COMMISSIONER & SEALER OF WEIGHTS & MEASURES - (530) 458-0580
DIRECTOR OF AIR QUALITY STANDARDS - (530) 458-0590
100 SUNRISE BLVD., SUITE F, COLUSA, CALIFORNIA 95932

TO: MARK STREHLOW URS 2 PAGES

November 28, 2006

Mr. Andrew Welch, P.E.
Project Manager
E&L Westcoast, LLC
8403 Colesville, Suite 915
Silver Spring, Maryland 20910

Subject: Completeness of Application for Authority to Construct

Dear Mr. Welch:

We received the E&L Westcoast application for the Colusa Generating Station (CGS) on November 22, 2006 and began our review of the application for a completeness determination.

Under Colusa County Air Pollution Control District Regulation III, Rule 3.6 STANDARDS FOR AUTHORITY TO CONSTRUCT (NEW SOURCE REVIEW) Section f(1) Complete Application, "The Air Pollution Control Officer (APCO) shall determine whether the application is complete no later than thirty (30) days after receipt of the application ....". Furthermore, "Upon determination that the application is complete, the APCO may, during the processing of the application, request an applicant to clarify, amplify, correct, or otherwise supplement the information submitted in the application.".

District staff discussed various air quality issues related to the proposed project with URS personnel in recent weeks including the modeling protocol and application content. During a telephone conversation on November 27, 2006, between URS and the District's consultant, the application material was covered in more detail. At that time our consultant asked several questions regarding the application and requested further clarifications. Since that conversation we received additional information and after review anticipate that the new information submitted will answer those questions.

Based upon the initial and updated information received we have determined that your application for an Authority to Construct is complete. The Air District will begin an evaluation of the proposed project to verify that it complies with local, state and federal rules, regulations, and standards regarding air quality.

If you have questions please contact the District or our consultant, Les Fife at (530) 668-1559.

Sincerely,

Harry A. Krug
Director of Air Quality Standards

cc: Mark Strehlow, URS

# Appendix D

## Major Study Assumptions

### Table 4-1: PG&E Area Generation and Load Summary

| Area 30 PG&E Area | Heavy Summer | | Summer Off-peak | | Spring Off-peak | |
|---|---|---|---|---|---|---|
| | Pre-Project | Post-Project | Pre-Project | Post-Project | Pre-Project | Post-Project |
| | Generation Output | | Generation Output | | Generation Output | |
| | MW | MW | MW | MW | MW | MW |
| Generation | 26,099 | 26,102 | 15,680 | 15,589 | 21,276 | 21,305 |
| Load | 26,527 | 26,542 | 12,929 | 12,944 | 21,524 | 21,539 |

### Table 4-2: Major Generation within PG&E Area

| Bus # | Bus Name | kV | ID | Heavy Summer | | Summer Off-peak | | Spring Off-peak | |
|---|---|---|---|---|---|---|---|---|---|
| | | | | Pre-Project | Post-Project | Pre-Project | Post-Project | Pre-Project | Post-Project |
| | | | | Generation Output | | Generation Output | | Generation Output | |
| | | | | MW | MW | MW | MW | MW | MW |
| 30000 | PTSB 7 | 20 | 1 | 650 | 650 | 425 | 425 | 375 | 375 |
| 33105 | PTSB 5 | 18 | 1 | 310 | 310 | 0 | 0 | 0 | 0 |
| 33106 | PTSB 6 | 18 | 1 | 310 | 310 | 0 | 0 | 0 | 0 |
| 33107 | DEC STG1 | 24 | 1 | 280 | 280 | 280 | 280 | 280 | 280 |
| 33108 | DEC CTG1 | 18 | 1 | 200 | 200 | 200 | 200 | 200 | 200 |
| 33109 | DEC CTG2 | 18 | 1 | 200 | 200 | 200 | 200 | 200 | 200 |
| 33110 | DEC CTG3 | 18 | 1 | 200 | 200 | 200 | 200 | 200 | 200 |
| 35854 | LECEFGT1 | 13.8 | 1 | 50 | 50 | 0 | 0 | 0 | 0 |
| 35855 | LECEFGT2 | 13.8 | 1 | 50 | 50 | 0 | 0 | 0 | 0 |
| 35856 | LECEFGT3 | 13.8 | 1 | 50 | 50 | 0 | 0 | 0 | 0 |
| 35857 | LECEFGT4 | 13.8 | 1 | 50 | 50 | 0 | 0 | 0 | 0 |
| 35664 | LECEFST1 | 13.8 | 1 | 0 | 0 | 0 | 0 | 0 | 0 |
| 33111 | LMECCT2 | 18 | 1 | 150 | 150 | 150 | 150 | 150 | 150 |
| 33112 | LMECCT1 | 18 | 1 | 150 | 150 | 150 | 150 | 150 | 150 |
| 33113 | LMECST1 | 18 | 1 | 200 | 200 | 200 | 200 | 200 | 200 |
| 35881 | MEC CTG1 | 18 | 1 | 200 | 200 | 0 | 0 | 200 | 200 |
| 35882 | MEC CTG2 | 18 | 1 | 200 | 200 | 0 | 0 | 0 | 0 |
| 35883 | MEC STG1 | 18 | 1 | 200 | 200 | 0 | 0 | 0 | 0 |
| 33116 | C.COS 6 | 18 | 1 | 330 | 330 | 0 | 0 | 330 | 330 |
| 33117 | C.COS 7 | 18 | 1 | 330 | 330 | 0 | 0 | 330 | 330 |
| 33252 | POTRERO3 | 20 | 1 | 210 | 210 | 0 | 0 | 0 | 0 |
| 37521 | SUTTER1 | 18 | 1 | 170 | 170 | 160 | 160 | 160 | 160 |
| 37522 | SUTTER2 | 18 | 2 | 165 | 165 | 160 | 160 | 160 | 160 |
| 37523 | SUTTER3 | 18 | 3 | 165 | 165 | 160 | 160 | 160 | 160 |
| 37575 | SHASTA1 | 13.8 | 1 | 125 | 125 | 36 | 36 | 100 | 100 |
| 37576 | SHASTA2 | 13.8 | 2 | 125 | 125 | 35 | 35 | 100 | 100 |
| 37577 | SHASTA3 | 13.8 | 3 | 125 | 125 | 33 | 33 | 100 | 100 |
| 37578 | SHASTA4 | 13.8 | 4 | 125 | 125 | 36 | 36 | 100 | 100 |
| 37579 | SHASTA5 | 13.8 | 5 | 125 | 125 | 30 | 30 | 70 | 70 |
| 37321 | COSUMNE1 | 18 | 1 | 165 | 165 | 165 | 165 | 165 | 165 |

| | | | | | | | | | |
|---|---|---|---|---|---|---|---|---|---|
| 37322 | COSUMNE2 | 18 | 1 | 165 | 165 | 165 | 165 | 165 | 165 |
| 37323 | COSUMNE3 | 16.5 | 1 | 170 | 170 | 170 | 170 | 170 | 170 |
| 37324 | COSUMNE4 | 18 | 1 | 0 | 0 | 0 | 0 | 0 | 0 |
| 37325 | COSUMNE5 | 18 | 1 | 0 | 0 | 0 | 0 | 0 | 0 |
| 37326 | COSUMNE6 | 16.5 | 1 | 0 | 0 | 0 | 0 | 0 | 0 |
| 32450 | COLGATE1 | 13.8 | 1 | 147 | 147 | 86 | 86 | 155 | 155 |
| 32452 | COLGATE2 | 13.8 | 1 | 147 | 147 | 86 | 86 | 155 | 155 |
| 32900 | CRCKTCOG | 18 | 1 | 240 | 240 | 240 | 240 | 240 | 240 |
| 36221 | DUKMOSS1 | 18 | 1 | 166 | 166 | 166 | 166 | 166 | 166 |
| 36222 | DUKMOSS2 | 18 | 1 | 166 | 166 | 0 | 0 | 166 | 166 |
| 36223 | DUKMOSS3 | 18 | 1 | 188 | 188 | 188 | 188 | 188 | 188 |
| 36224 | DUKMOSS4 | 18 | 1 | 0 | 0 | 166 | 166 | 166 | 166 |
| 36225 | DUKMOSS5 | 18 | 1 | 166 | 166 | 0 | 0 | 166 | 166 |
| 36226 | DUKMOSS6 | 18 | 1 | 188 | 188 | 188 | 188 | 188 | 188 |
| 36405 | MOSSLND6 | 22 | 1 | 700 | 700 | 0 | 0 | 705 | 705 |
| 36406 | MOSSLND7 | 22 | 1 | 700 | 700 | 700 | 700 | 705 | 705 |
| 36411 | DIABLO 1 | 25 | 1 | 1,150 | 1,150 | 1,150 | 1,150 | 0 | 0 |
| 36412 | DIABLO 2 | 25 | 1 | 1,150 | 1,150 | 1,150 | 1,150 | 1,150 | 1,150 |
| 37561 | MELONE1 | 13.8 | 1 | 166 | 166 | 100 | 100 | 144 | 144 |
| 37562 | MELONE2 | 13.8 | 2 | 166 | 166 | 0 | 0 | 144 | 144 |
| 38102 | COLLRVL1 | 13.8 | 1 | 89 | 89 | 89 | 89 | 89 | 89 |
| 38104 | COLLRVL2 | 13.8 | 1 | 89 | 89 | 89 | 89 | 89 | 89 |
| 38825 | HYATT 1 | 12.5 | 1 | 125 | 125 | 0 | 0 | 125 | 125 |
| 38830 | HYATT 2 | 12.5 | 1 | 115 | 115 | 0 | 0 | 125 | 125 |
| 38835 | HYATT 3 | 12.5 | 1 | 125 | 125 | 0 | 0 | 125 | 125 |
| 38840 | HYATT 4 | 12.5 | 1 | 115 | 115 | 0 | 0 | 125 | 125 |
| 38845 | HYATT 5 | 12.5 | 1 | 125 | 125 | 0 | 0 | 125 | 125 |
| 38850 | HYATT 6 | 12.5 | 1 | 115 | 115 | 0 | 0 | 125 | 125 |
| 38700 | THERMLT1 | 13.8 | 1 | 32 | 32 | 0 | 0 | 10 | 10 |
| 38705 | THERMLT2 | 13.8 | 1 | 27 | 27 | 0 | 0 | 10 | 10 |
| 38710 | THERMLT3 | 13.8 | 1 | 27 | 27 | 0 | 0 | 10 | 10 |
| 38715 | THERMLT4 | 13.8 | 1 | 27 | 27 | 0 | 0 | 10 | 10 |
| 36407 | MORRO 1 | 18 | 1 | 317 | 0 | 317 | 317 | 317 | 317 |
| 36408 | MORRO 2 | 18 | 1 | 0 | 0 | 199 | 0 | 0 | 0 |
| 36409 | MORRO 3 | 18 | 1 | 199 | 199 | 199 | 0 | 199 | 199 |
| 36410 | MORRO 4 | 18 | 1 | 317 | 317 | 317 | 317 | 317 | 317 |
| 36415 | MORRO 5 | 18 | 1 | 0 | 0 | 0 | 0 | 0 | 0 |
| 36417 | MORRO 6 | 18 | 1 | 0 | 0 | 0 | 0 | 0 | 0 |
| 35070 | LAPLM_G1 | 21 | 1 | 234 | 234 | 234 | 234 | 234 | 234 |
| 35071 | LAPLM_G2 | 21 | 1 | 231 | 0 | 231 | 0 | 231 | 0 |
| 35072 | LAPLM_G3 | 21 | 1 | 229 | 0 | 229 | 0 | 229 | 0 |
| 35073 | LAPLM_G4 | 21 | 1 | 0 | 0 | 0 | 0 | 232 | 232 |
| 35074 | TEXSUN1G | 18 | 1 | 169 | 169 | 169 | 169 | 0 | 0 |
| 35075 | TEXSUN2G | 18 | 1 | 169 | 169 | 169 | 169 | 0 | 0 |
| 35079 | SUNRSE3S | 18 | 1 | 239 | 239 | 0 | 0 | 0 | 0 |
| 35076 | ELKHIL1G | 18 | 1 | 199 | 199 | 199 | 199 | 0 | 0 |
| 35077 | ELKHIL2G | 18 | 1 | 199 | 199 | 199 | 199 | 0 | 0 |
| 35078 | ELKHIL3G | 18 | 1 | 226 | 226 | 226 | 226 | 0 | 0 |

**Table 4-3: Northern California Hydro Generation**

| Northern California Hydro | Heavy Summer | | Summer Off-peak | | Spring Off-peak | |
|---|---|---|---|---|---|---|
| | Pre-Project | Post-Project | Pre-Project | Post-Project | Pre-Project | Post-Project |
| | Generation Output | | Generation Output | | Generation Output | |
| | MW | MW | MW | MW | MW | MW |
| Northern CVP | 1,188 | 1,188 | 527 | 527 | 970 | 970 |
| Pit River | 729 | 729 | 127 | 127 | 690 | 690 |
| Feather River | 687 | 687 | 179 | 179 | 671 | 671 |
| Lake Oroville | 833 | 833 | 0 | 0 | 790 | 790 |
| North Yuba | 455 | 455 | 259 | 259 | 451 | 451 |
| | | | | | | |
| **Total** | 3,892 | 3,892 | 1,092 | 1,092 | 3,572 | 3,572 |
| | | | | | | |
| **Total Capability** | 4,096 | 4,096 | 4,096 | 4,096 | 4,096 | 4,096 |
| | | | | | | |
| **Total %** | 95% | 95% | 27% | 27% | 87% | 87% |

**Table 4-4: Northern California Hydro Generation**

| Path # | Path Name | Heavy Summer | | Summer Off-peak | | Spring Off-peak | |
|---|---|---|---|---|---|---|---|
| | | Pre-Project | Post-Project | Pre-Project | Post-Project | Pre-Project | Post-Project |
| | | Flow (MW) | | Flow (MW) | | Flow (MW) | |
| 15 | Path 15 (S-N) | -207 | -851 | 5,075 | 4,367 | -1,804 | -2,438 |
| 24 | PG&E - SPP | 46 | 48 | 11 | 9 | 25 | 21 |
| 25 | PACIFICORP/PG&E 115 KV INTERCON. | 80 | 80 | 67 | 65 | 78 | 79 |
| 26 | Northern CA to Southern CA (N-S) | 3,381 | 3,329 | -1,412 | -1,467 | 3,397 | 3,355 |
| 65 | PACIFIC DC INTERTIE (PDCI) | 3,105 | 3,105 | -1,848 | -1,848 | 3,105 | 3,105 |
| 66 | COI (N-S) | 4,753 | 4,752 | -3,632 | -3,636 | 4,460 | 4,458 |

# Appendix E

## Worst Steady-state Power Flow Category C Contingency

| Plot | Description |
|---|---|
| Plot #49 | 2010 Heavy Summer - Before Project : Cottonwood-Vaca Diixon & Glenn-Vaca Dixon 230 kV DLO (MW/MVAr) |
| Plot #50 | 2010 Heavy Summer - Before Project : Cottonwood-Vaca Diixon & Glenn-Vaca Dixon 230 kV DLO (Amps/Pct) |
| Plot #51 | 2011 Heavy Summer - After Project : CVP-Vaca Diixon #2 & #4 230 kV DLO (MW/MVAr) |
| Plot #52 | 2011 Heavy Summer - After Project : CVP-Vaca Diixon #2 & #4 230 kV DLO (Amps/Pct) |
| Plot #53 | 2010 Heavy Summer - Before Project : Table Mt.-Rio Oso & Colgate-Rio Oso 230 kV DLO (MW/MVAr) |
| Plot #54 | 2010 Heavy Summer - Before Project : Table Mt.-Rio Oso & Colgate-Rio Oso 230 kV DLO (Amps/Pct) |
| Plot #55 | 2010 Heavy Summer - After Project : Table Mt.-Rio Oso & Colgate-Rio Oso 230 kV DLO (MW/MVAr) |
| Plot #56 | 2010 Heavy Summer - After Project : Table Mt.-Rio Oso & Colgate-Rio Oso 230 kV DLO (Amps/Pct) |
| Plot #57 | 2010 Heavy Summer - Before Project : Table Mt.-Rio Oso & Palermo-Colgate 230 kV DLO (MW/MVAr) |
| Plot #58 | 2010 Heavy Summer - Before Project : Table Mt.-Rio Oso & Palermo-Colgate 230 kV DLO (Amps/Pct) |
| Plot #59 | 2010 Heavy Summer - After Project : Table Mt.-Rio Oso & Palermo-Colgate 230 kV DLO (MW/MVAr) |
| Plot #60 | 2010 Heavy Summer - After Project : Table Mt.-Rio Oso & Palermo-Colgate 230 kV DLO (Amps/Pct) |
| Plot #61 | 2010 Heavy Summer - Before Project : Tracy-Hurley #1 & #2 230 kV DLO (MW/MVAr) |
| Plot #62 | 2010 Heavy Summer - Before Project : Tracy-Hurley #1 & #2 230 kV DLO (Amps/Pct) |
| Plot #63 | 2010 Heavy Summer - After Project : Tracy-Hurley #1 & #2 230 kV DLO (MW/MVAr) |
| Plot #64 | 2010 Heavy Summer - After Project : Tracy-Hurley #1 & #2 230 kV DLO (Amps/Pct) |
| Plot #65 | 2010 Heavy Summer - Before Project : Olinda-Cottonwood #1 & #2 230 kV DLO (MW/MVAr) |
| Plot #66 | 2010 Heavy Summer - Before Project : Olinda-Cottonwood #1 & #2 230 kV DLO (Amps/Pct) |
| Plot #67 | 2010 Heavy Summer - After Project : Olinda-Cottonwood #1 & #2 230 kV DLO (MW/MVAr) |
| Plot #68 | 2010 Heavy Summer - After Project : Olinda-Cottonwood #1 & #2 230 kV DLO (Amps/Pct) |
| Plot #69 | 2010 Heavy Summer - Before Project : Keswick-J.F. Carr #1 & #2 230 kV DLO (MW/MVAr) |
| Plot #70 | 2010 Heavy Summer - Before Project : Keswick-J.F. Carr #1 & #2 230 kV DLO (Amps/Pct) |
| Plot #71 | 2010 Heavy Summer - After Project : Keswick-J.F. Carr #1 & #2 230 kV DLO (MW/MVAr) |
| Plot #72 | 2010 Heavy Summer - After Project : Keswick-J.F. Carr #1 & #2 230 kV DLO (Amps/Pct) |
| Plot #73 | 2010 Heavy Summer - Before Project : Elverta-Foothill & Elverta-Orangeville 230 kV DLO (MW/MVAr) |
| Plot #74 | 2010 Heavy Summer - Before Project : Elverta-Foothill & Elverta-Orangeville 230 kV DLO (Amps/Pct) |
| Plot #75 | 2010 Heavy Summer - After Project : Elverta-Foothill & Elverta-Orangeville 230 kV DLO (MW/MVAr) |
| Plot #76 | 2010 Heavy Summer - After Project : Elverta-Foothill & Elverta-Orangeville 230 kV DLO (Amps/Pct) |
| Plot #77 | 2010 Heavy Summer - Before Project : Elverta-Hurley #1 & #2 230 kV DLO (MW/MVAr) |
| Plot #78 | 2010 Heavy Summer - Before Project : Elverta-Hurley #1 & #2 230 kV DLO (Amps/Pct) |
| Plot #79 | 2010 Heavy Summer - After Project : Elverta-Hurley #1 & #2 230 kV DLO (MW/MVAr) |
| Plot #80 | 2010 Heavy Summer - After Project : Elverta-Hurley #1 & #2 230 kV DLO (Amps/Pct) |
| Plot #81 | 2010 Spring Off-peak - Before Project : Cottonwood-Vaca Diixon & Glenn-Vaca Dixon 230 kV DLO (MW/MVAr) |
| Plot #82 | 2010 Spring Off-peak - Before Project : Cottonwood-Vaca Diixon & Glenn-Vaca Dixon 230 kV DLO (Amps/Pct) |
| Plot #83 | 2010 Spring Off-peak - After Project : CVP-Vaca Diixon #2 & #4 230 kV DLO (MW/MVAr) |
| Plot #84 | 2010 Spring Off-peak - After Project : CVP-Vaca Diixon #2 & #4 230 kV DLO (Amps/Pct) |
| Plot #85 | 2010 Spring Off-peak - Before Project : Table Mt.-Rio Oso & Colgate-Rio Oso 230 kV DLO (MW/MVAr) |
| Plot #86 | 2010 Spring Off-peak - Before Project : Table Mt.-Rio Oso & Colgate-Rio Oso 230 kV DLO (Amps/Pct) |
| Plot #87 | 2010 Spring Off-peak - After Project : Table Mt.-Rio Oso & Colgate-Rio Oso 230 kV DLO (MW/MVAr) |
| Plot #88 | 2010 Spring Off-peak - After Project : Table Mt.-Rio Oso & Colgate-Rio Oso 230 kV DLO (Amps/Pct) |
| Plot #89 | 2010 Spring Off-peak - Before Project : Olinda-Cottonwood #1 & #2 230 kV DLO (MW/MVAr) |
| Plot #90 | 2010 Spring Off-peak - Before Project : Olinda-Cottonwood #1 & #2 230 kV DLO (Amps/Pct) |
| Plot #91 | 2010 Spring Off-peak - After Project : Olinda-Cottonwood #1 & #2 230 kV DLO (MW/MVAr) |
| Plot #92 | 2010 Spring Off-peak - After Project : Olinda-Cottonwood #1 & #2 230 kV DLO (Amps/Pct) |

## Worst Governor Power Flow Category C Contingency

| Plot | Description |
|---|---|
| Plot #93 | 2010 Heavy Summer - Before Project : Table Mt.-Tesla & Table Mt.-Vaca Dixon 500 kV DLO (MW/MVAr) |
| Plot #94 | 2010 Heavy Summer - Before Project : Table Mt.-Tesla & Table Mt.-Vaca Dixon 500 kV DLO (Amps/Pct) |
| Plot #95 | 2010 Heavy Summer - After Project : Table Mt.-Tesla & Table Mt.-Vaca Dixon 500 kV DLO (MW/MVAr) |
| Plot #96 | 2010 Heavy Summer - After Project : Table Mt.-Tesla & Table Mt.-Vaca Dixon 500 kV DLO (Amps/Pct) |
| Plot #97 | 2010 Heavy Summer - Before Project : Round Mt.-Table Mt.#1 & #2 500 kV DLO (MW/MVAr) |
| Plot #98 | 2010 Heavy Summer - Before Project : Round Mt.-Table Mt.#1 & #2 500 kV DLO (Amps/Pct) |
| Plot #99 | 2010 Heavy Summer - After Project : Round Mt.-Table Mt.#1 & #2 500 kV DLO (MW/MVAr) |
| Plot #100 | 2010 Heavy Summer - After Project : Round Mt.-Table Mt.#1 & #2 500 kV DLO (Amps/Pct) |
| Plot #101 | 2010 Summer Off-peak - Before Project : Malin-Round Mt. #1 & #2 500 kV DLO (MW/MVAr) |
| Plot #102 | 2010 Summer Off-peak - Before Project : Malin-Round Mt. #1 & #2 500 kV DLO (Amps/Pct) |
| Plot #103 | 2010 Summer Off-peak - After Project : Malin-Round Mt. #1 & #2 500 kV DLO (MW/MVAr) |
| Plot #104 | 2010 Summer Off-peak - After Project : Malin-Round Mt. #1 & #2 500 kV DLO (Amps/Pct) |

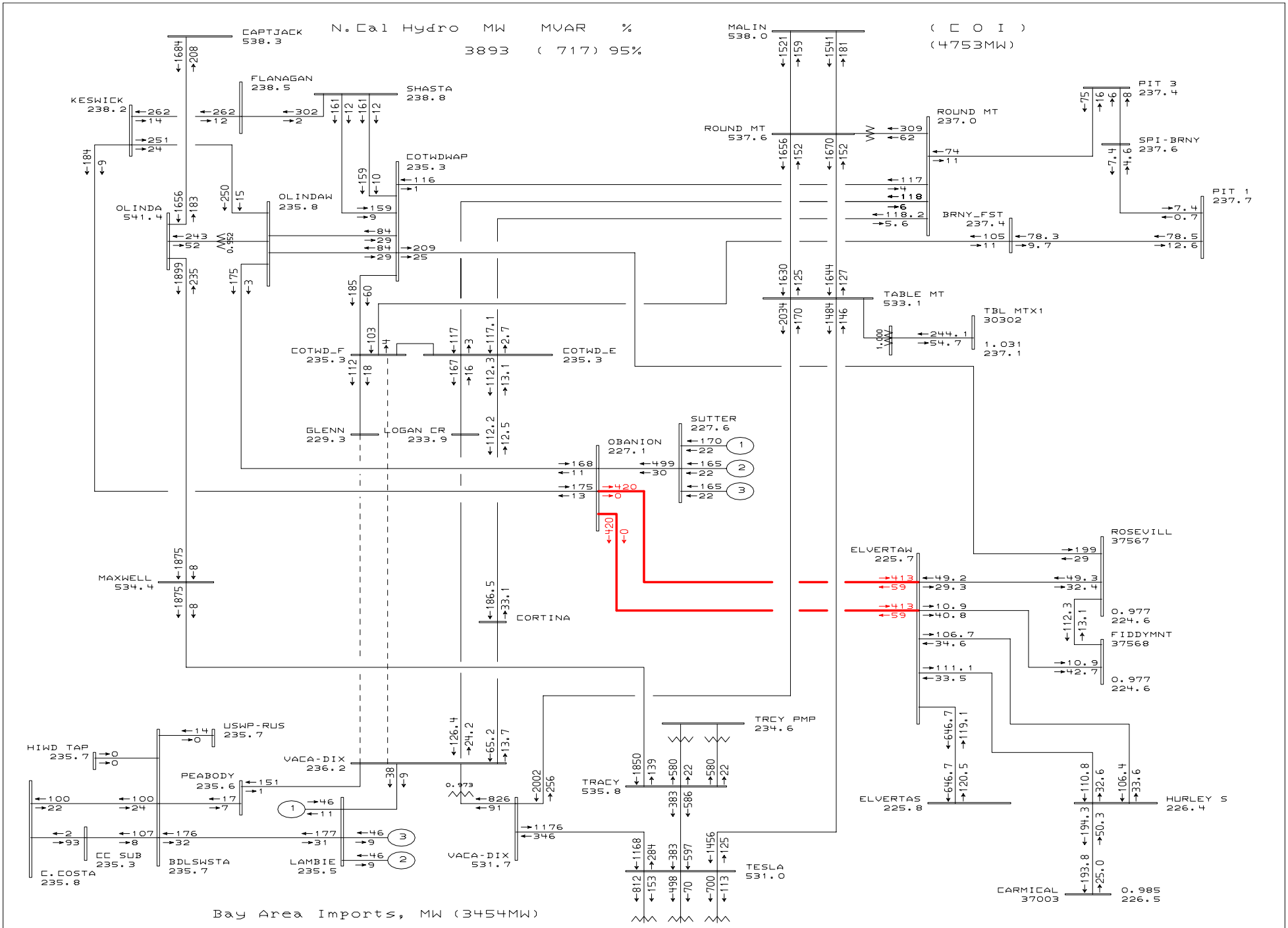


General Electric International, Inc. PSLF Program MW/MVAR Thu Dec 07 09:44:41 2006

PG&E 2004 BASE CASE SERIES - 2010 North Valley Summer Peak Case
PATH15=-518 MW(S-N) PATH26=3352 MW(N-S) PDCI=3105 MW(N-S) COI=4754 MW(N-S)
CPV Colusa - 2010 Summer Peak - before (TMPP & PO441 removed)

Plot 49 - Heavy Summer - Before Project
Outage: Vaca Dixon-Cottwd & Glenn 230kV Lines

C:\PSLF_Work\Projects\EL_Colus
C:\PSLF_Work\Projects\EL_Colus
Rating = 2

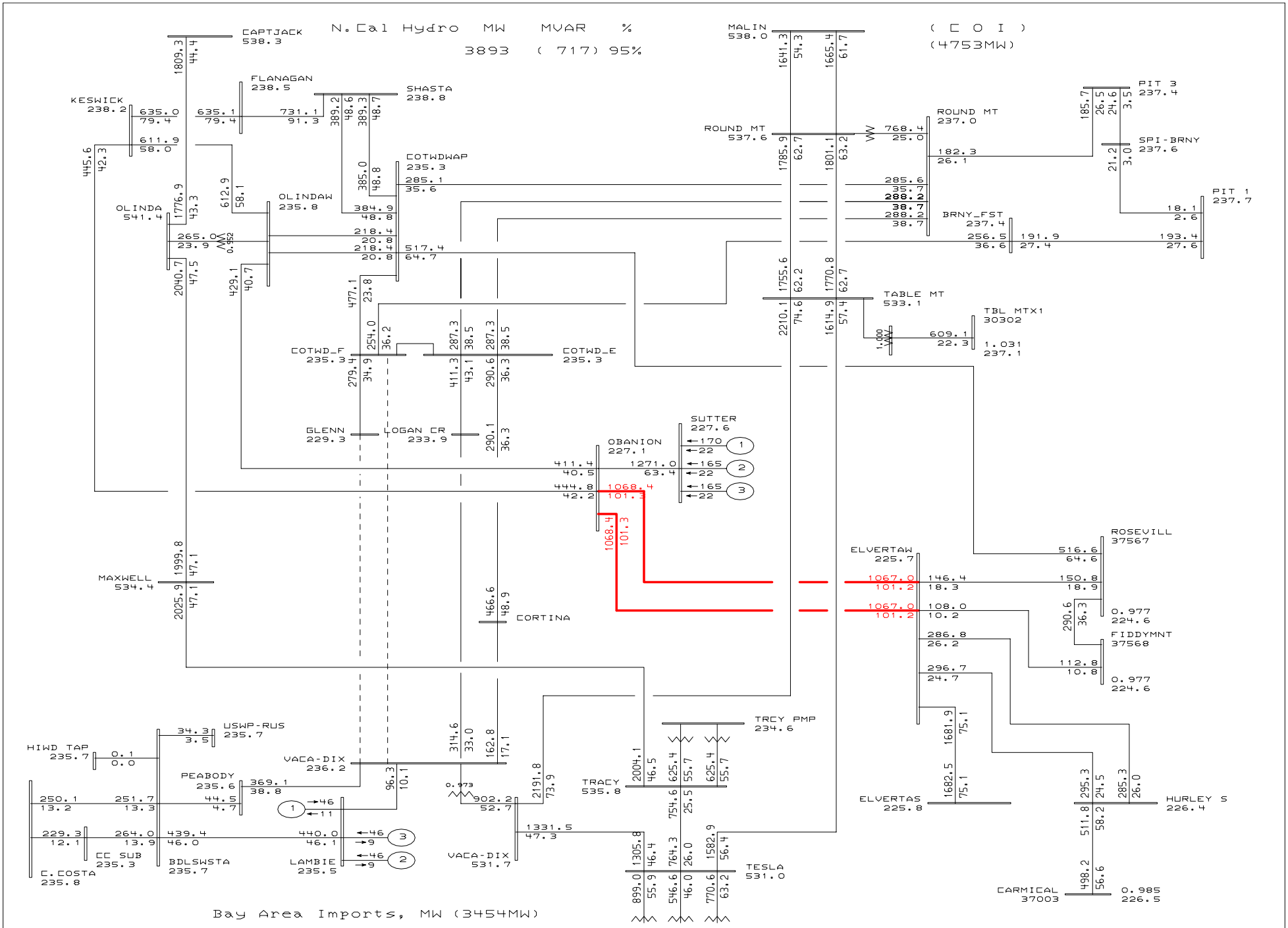


General Electric International, Inc. PSLF Program AMPS/Pct Thu Dec 07 09:44:43 2006

PG&E 2004 BASE CASE SERIES - 2010 North Valley Summer Peak Case
PATH15=-518 MW(S-N) PATH26=3352 MW(N-S) PDCI=3105 MW(N-S) COI=4754 MW(N-S)
CPV Colusa - 2010 Summer Peak - before (TMPP & P0441 removed)

Plot 50 - Heavy Summer - Before Project
Outage: Vaca Dixon-Cottwd & Glenn 230kV Lines

C:\PSLF_Work\Projects\EL_Colus
C:\PSLF_Work\Projects\EL_Colus
Rating = 2

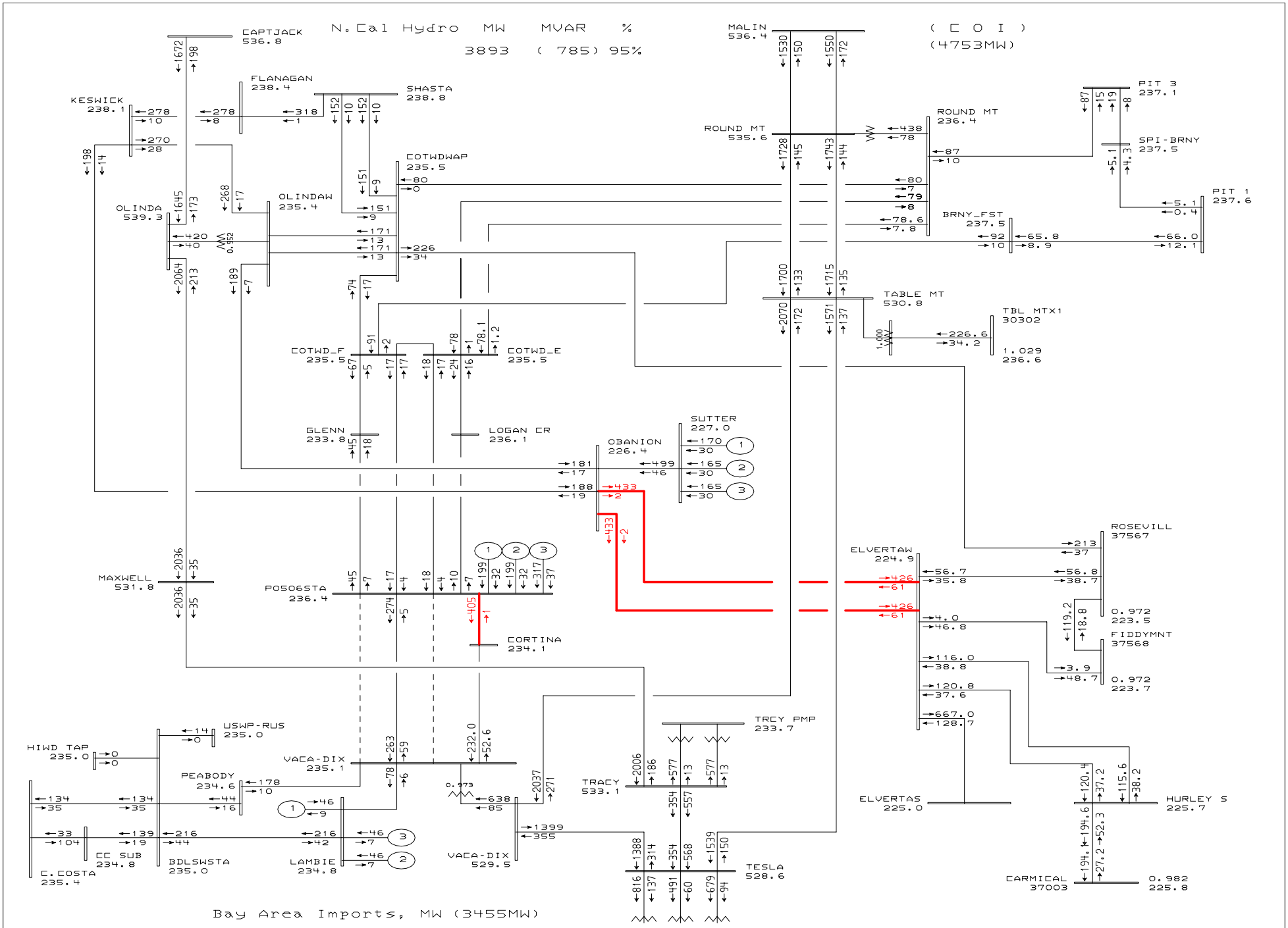


General Electric International, Inc. PSLF Program MW/MVAR Thu Dec 07 09:44:45 2006

PG&E 2004 BASE CASE SERIES - 2010 North Valley Summer Peak Case
PATH15=-1127 MW(S-N) PATH26=3313 MW(N-S) PDCI=3105 MW(N-S) COI=4753 MW(N-S)
CPV Colusa - 2010 Summer Peak - after (TMPP & P0441 removed)

Plot 51 - Heavy Summer - After Project
Outage: CPV-Vaca Dixon #2 & #4 230kV Lines

C:\PSLF_Work\Projects\EL_Colus
C:\PSLF_Work\Projects\EL_Colus
Rating = 2

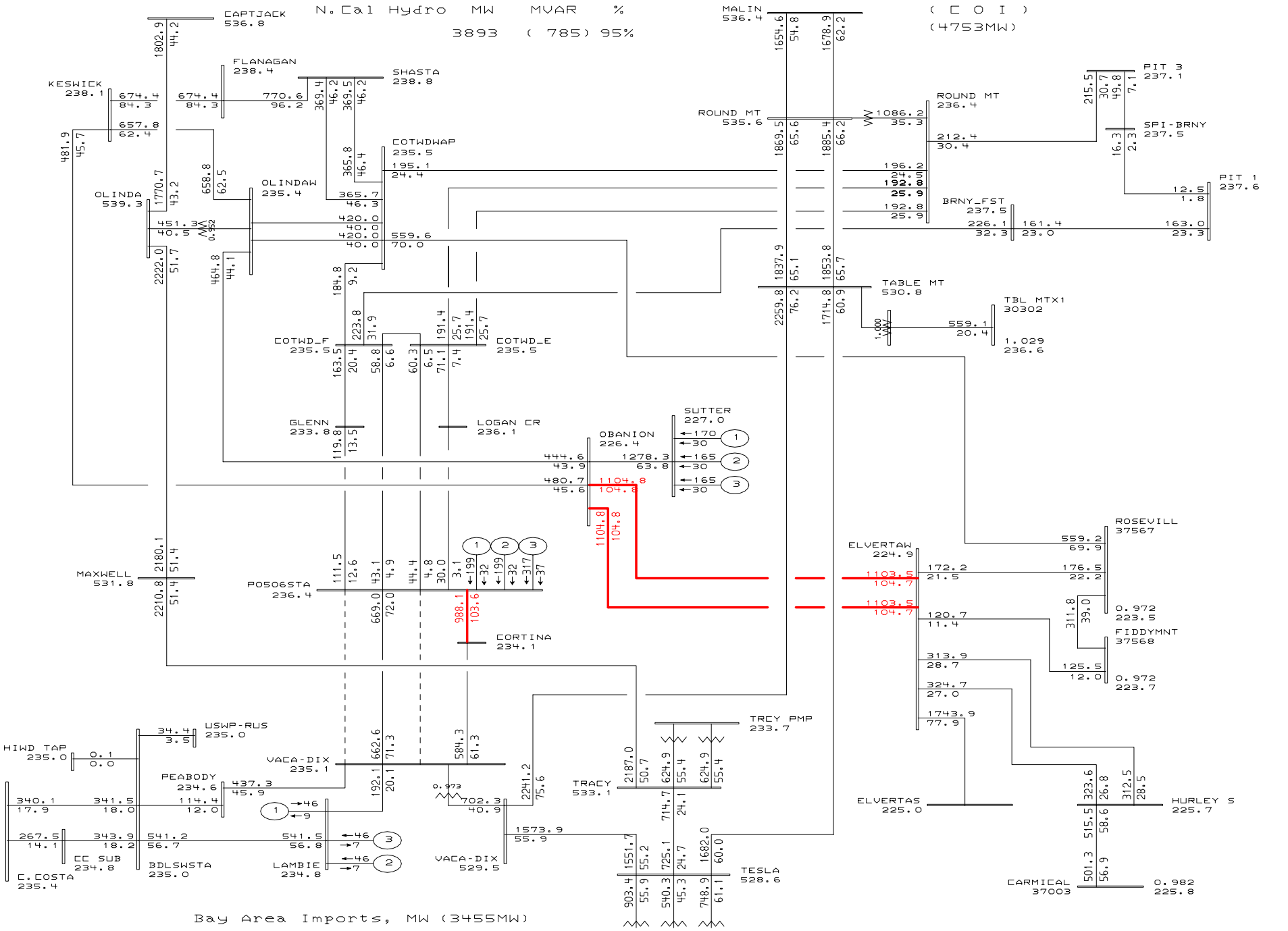


General Electric International, Inc. PSLF Program AMPS/Pct Thu Dec 07 09:44:48 2006

PG&E 2004 BASE CASE SERIES - 2010 North Valley Summer Peak Case
PATH15=-1127 MW(S-N) PATH26=3313 MW(N-S) PDCI=3105 MW(N-S) COI=4753 MW(N-S)
CPV Colusa - 2010 Summer Peak - after (TMPP & P0441 removed)

Plot 52 - Heavy Summer - After Project
Outage: CPV-Vaca Dixon #2 & #4 230kV Lines

C:\PSLF_Work\Projects\EL_Colus
C:\PSLF_Work\Projects\EL_Colus
Rating = 2

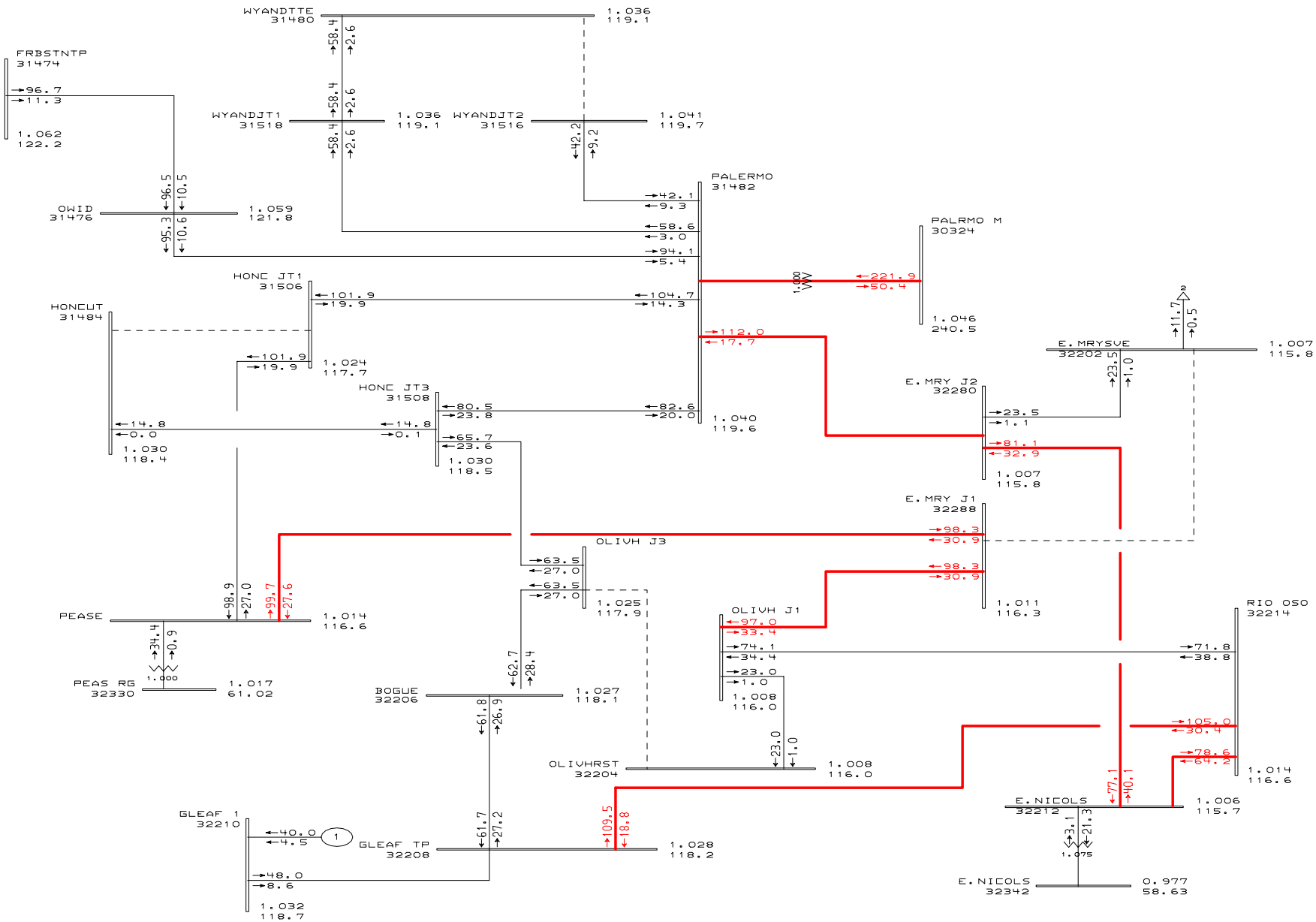


General Electric International, Inc. PSLF Program MW/MVAR Thu Dec 07 09:44:49 2006

PG&E 2004 BASE CASE SERIES - 2010 North Valley Summer Peak Case
PATH15=-518 MW(S-N) PATH26=3352 MW(N-S) PDCI=3105 MW(N-S) COI=4754 MW(N-S)
CPV Colusa - 2010 Summer Peak - before (TMPP & PQ441 removed)

Plot 53 - Heavy Summer - Before Project
Outage: Rio Oso-Tbl & Colgate 230kV Lines & Coltage Unit 2

C:\PSLF_Work\Projects\EL_Colus
C:\PSLF_Work\Projects\EL_Colus
Rating = 2

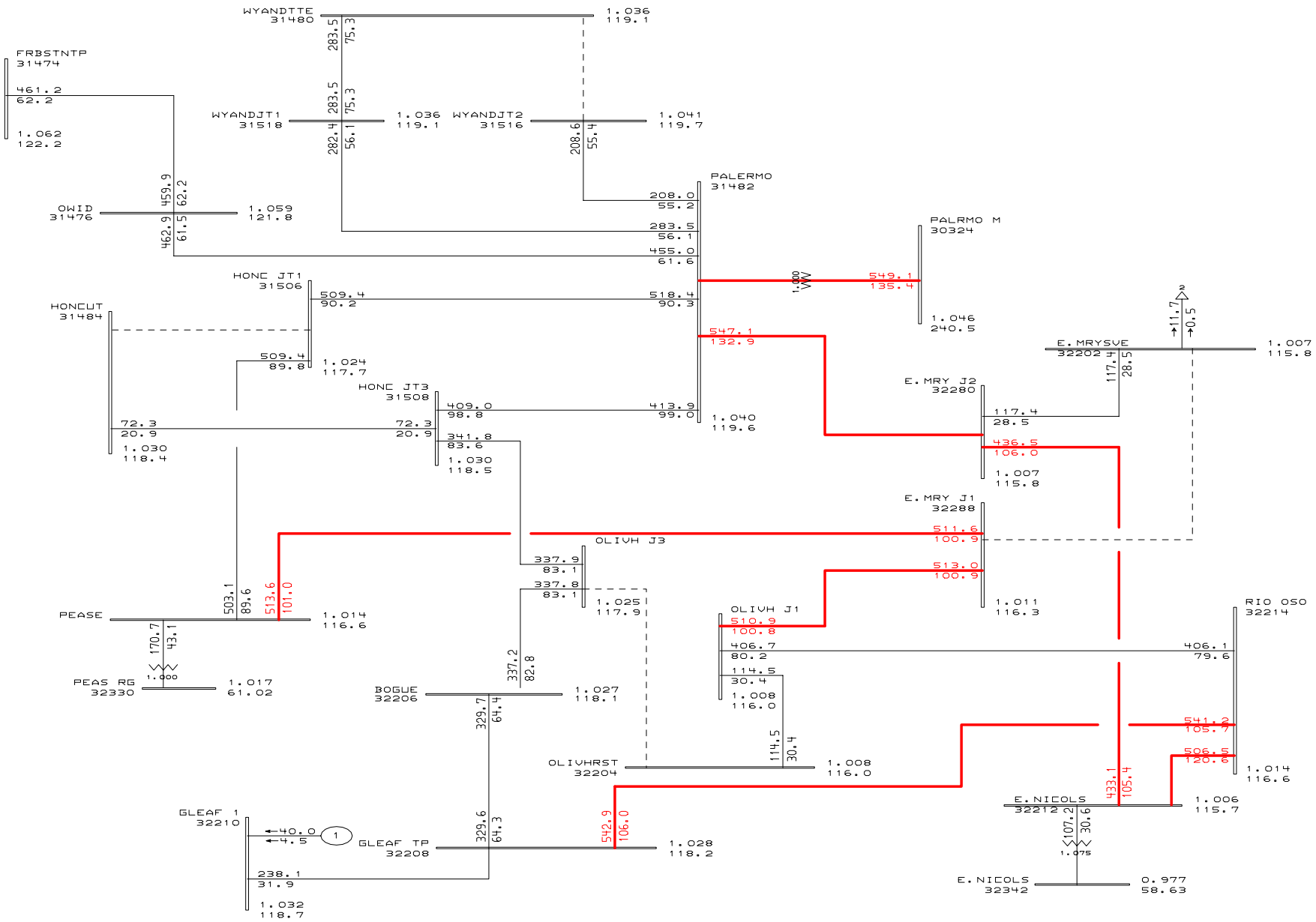


General Electric International, Inc. PSLF Program AMPS/Pct Thu Dec 07 09:44:50 2006

PG&E 2004 BASE CASE SERIES - 2010 North Valley Summer Peak Case
PATH15=-518 MW(S-N) PATH26=3352 MW(N-S) PDCI=3105 MW(N-S) COI=4754 MW(N-S)
CPV Colusa - 2010 Summer Peak - before (TMPP & PQ441 removed)

Plot 54 - Heavy Summer - Before Project
Outage: Rio Oso-Tbl & Colgate 230kV Lines & Coltage Unit 2

C:\PSLF_Work\Projects\EL_Colus
C:\PSLF_Work\Projects\EL_Colus
Rating = 2

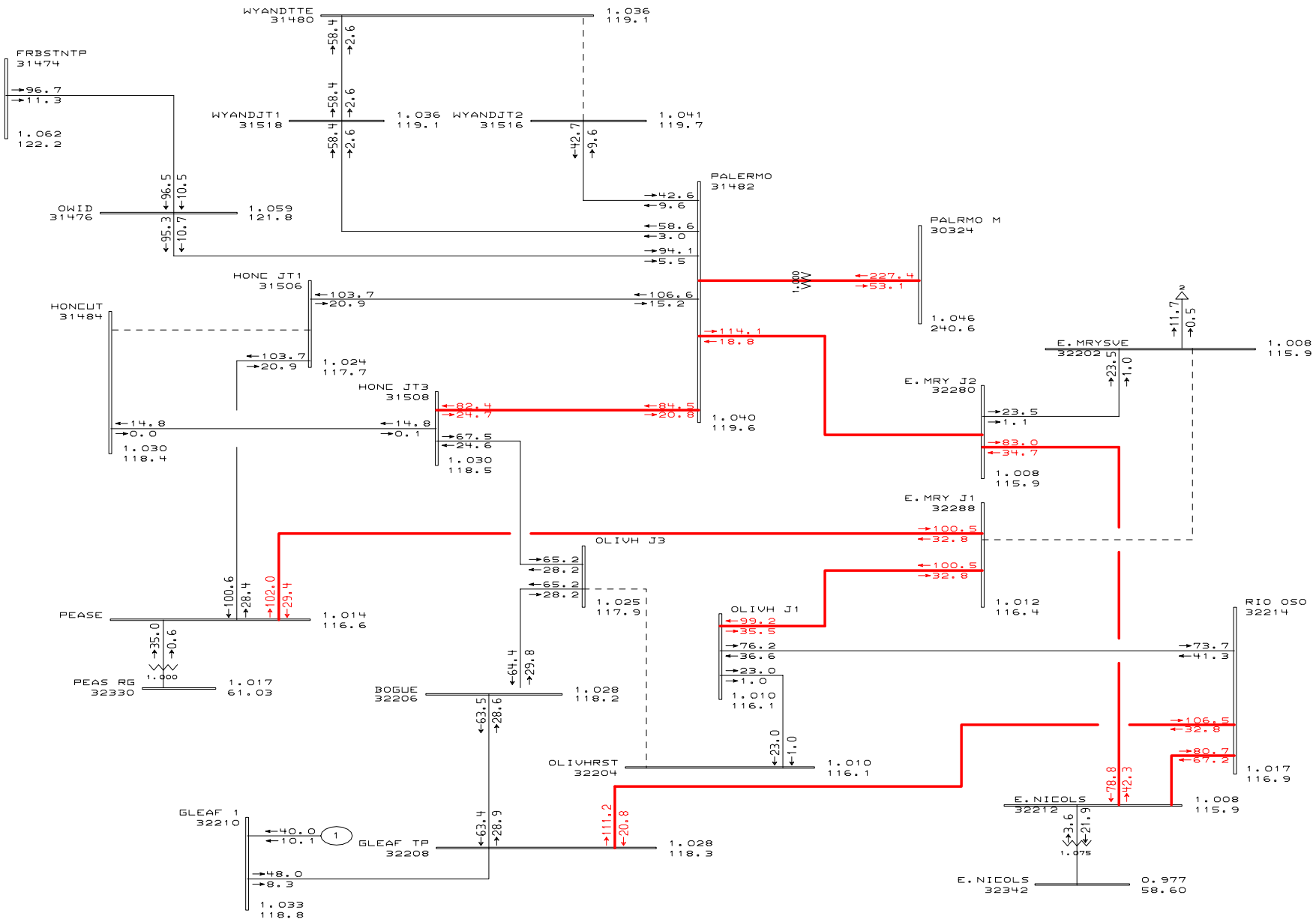


General Electric International, Inc. PSLF Program MW/MVAR Thu Dec 07 09:44:53 2006

PG&E 2004 BASE CASE SERIES - 2010 North Valley Summer Peak Case
PATH15=-1127 MW(S-N) PATH26=3313 MW(N-S) PDCI=3105 MW(N-S) COI=4753 MW(N-S)
CPV Colusa - 2010 Summer Peak - after (TMPP & PO441 removed)

Plot 55 - Heavy Summer - After Project
Outage: Rio Oso-Tbl & Colgate 230kV Lines & Coltage Unit 2

C:\PSLF_Work\Projects\EL_Colus
C:\PSLF_Work\Projects\EL_Colus
Rating = 2

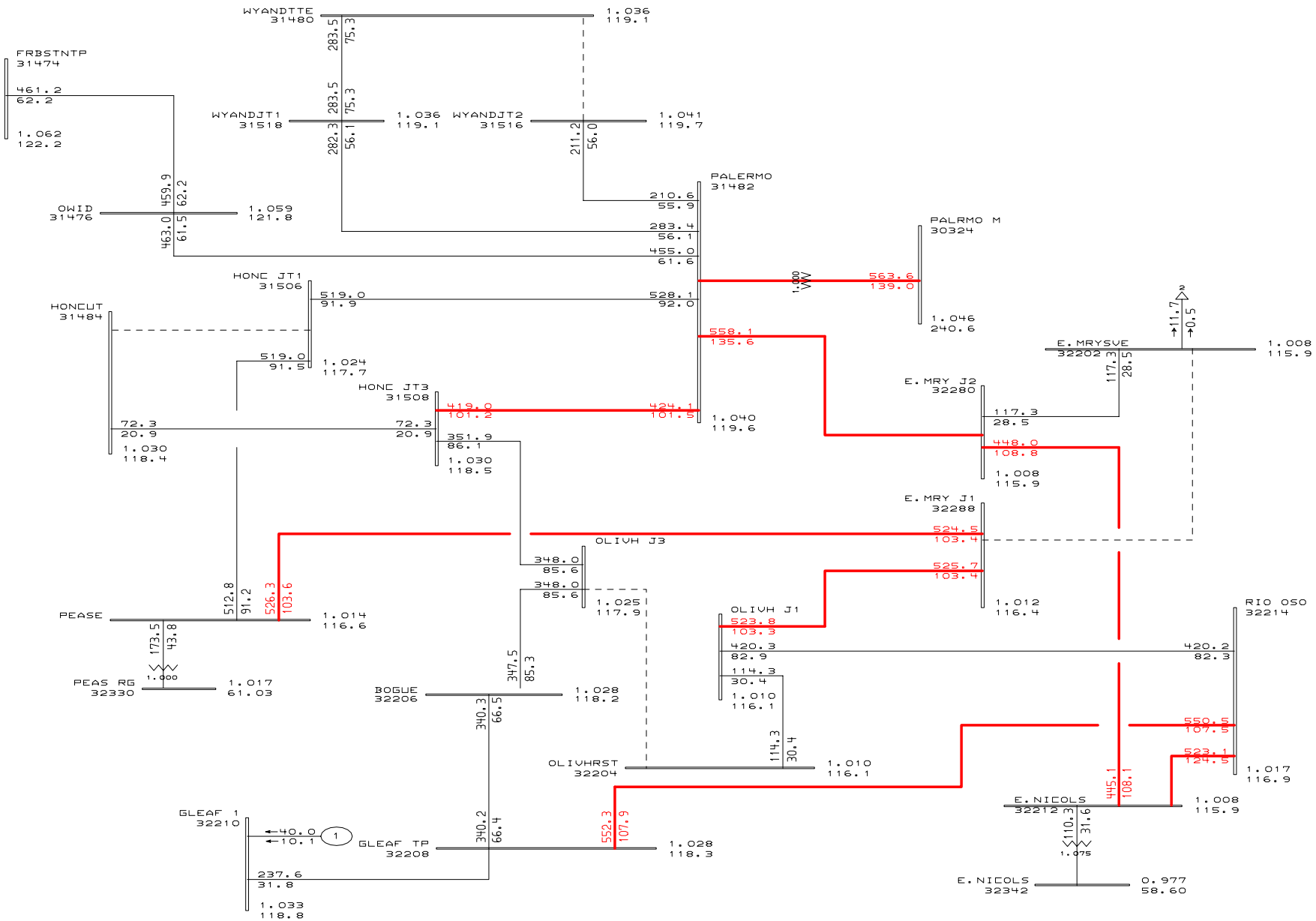


General Electric International, Inc. PSLF Program AMPS/Pct Thu Dec 07 09:44:56 2006

PG&E 2004 BASE CASE SERIES - 2010 North Valley Summer Peak Case
PATH15=-1127 MW(S-N) PATH26=3313 MW(N-S) PDCI=3105 MW(N-S) COI=4753 MW(N-S)
CPV Colusa - 2010 Summer Peak - after (TMPP & PO441 removed)

Plot 56 - Heavy Summer - After Project
Outage: Rio Oso-Tbl & Colgate 230kV Lines & Colfax Unit 2

C:\PSLF_Work\Projects\EL_Colus
C:\PSLF_Work\Projects\EL_Colus
Rating = 2

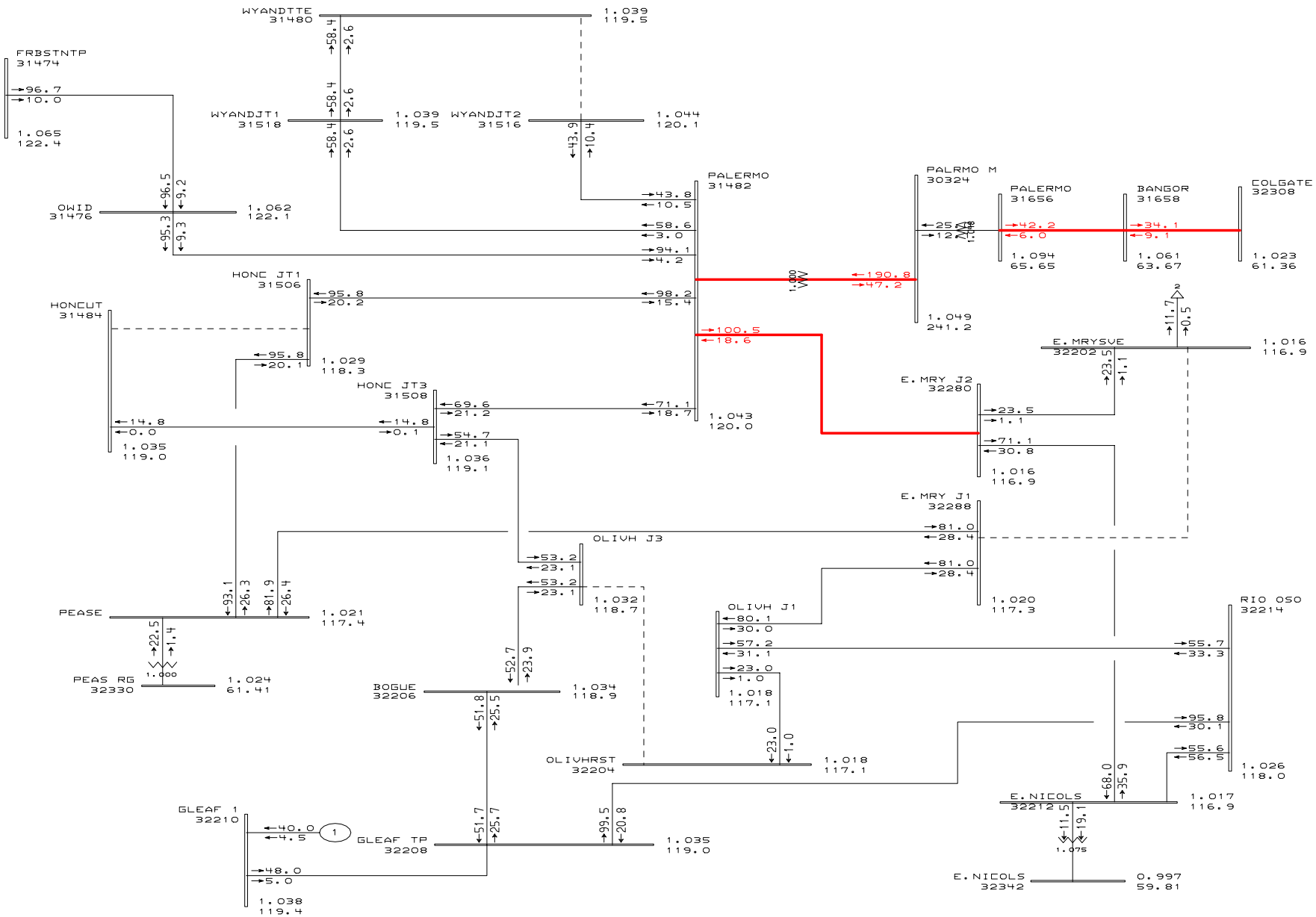


General Electric International, Inc. PSLF Program MW/MVAR Thu Dec 07 09:44:57 2006

PG&E 2004 BASE CASE SERIES - 2010 North Valley Summer Peak Case
PATH15=-518 MW(S-N) PATH26=3352 MW(N-S) PDCI=3105 MW(N-S) COI=4754 MW(N-S)
CPV Colusa - 2010 Summer Peak - before (TMPP & P0441 removed)

Plot 57 - Heavy Summer - Before Project
Outage:Rio Oso-Table Mt & Palermo-Colgate 230 kV

C:\PSLF_Work\Projects\EL_Colus
C:\PSLF_Work\Projects\EL_Colus
Rating = 2

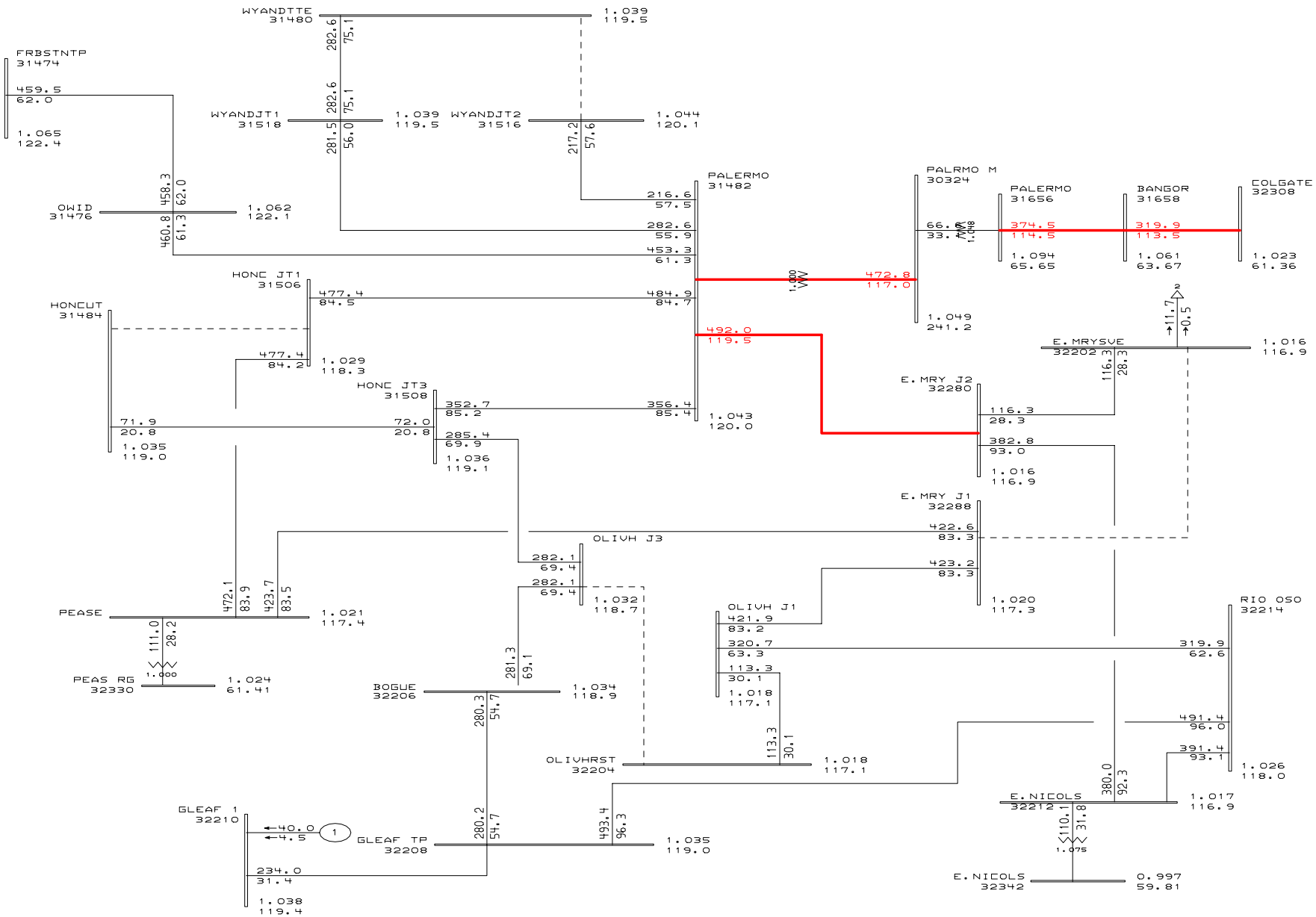


General Electric International, Inc. PSLF Program AMPS/Pct Thu Dec 07 09:44:58 2006

PG&E 2004 BASE CASE SERIES - 2010 North Valley Summer Peak Case
PATH15=-518 MW(S-N) PATH26=3352 MW(N-S) PDCI=3105 MW(N-S) COI=4754 MW(N-S)
CPV Colusa - 2010 Summer Peak - before (TMPP & P0441 removed)

Plot 58 - Heavy Summer - Before Project
Outage:Rio Oso-Table Mt & Palermo-Colgate 230 kV

C:\PSLF_Work\Projects\EL_Colus
C:\PSLF_Work\Projects\EL_Colus
Rating = 2

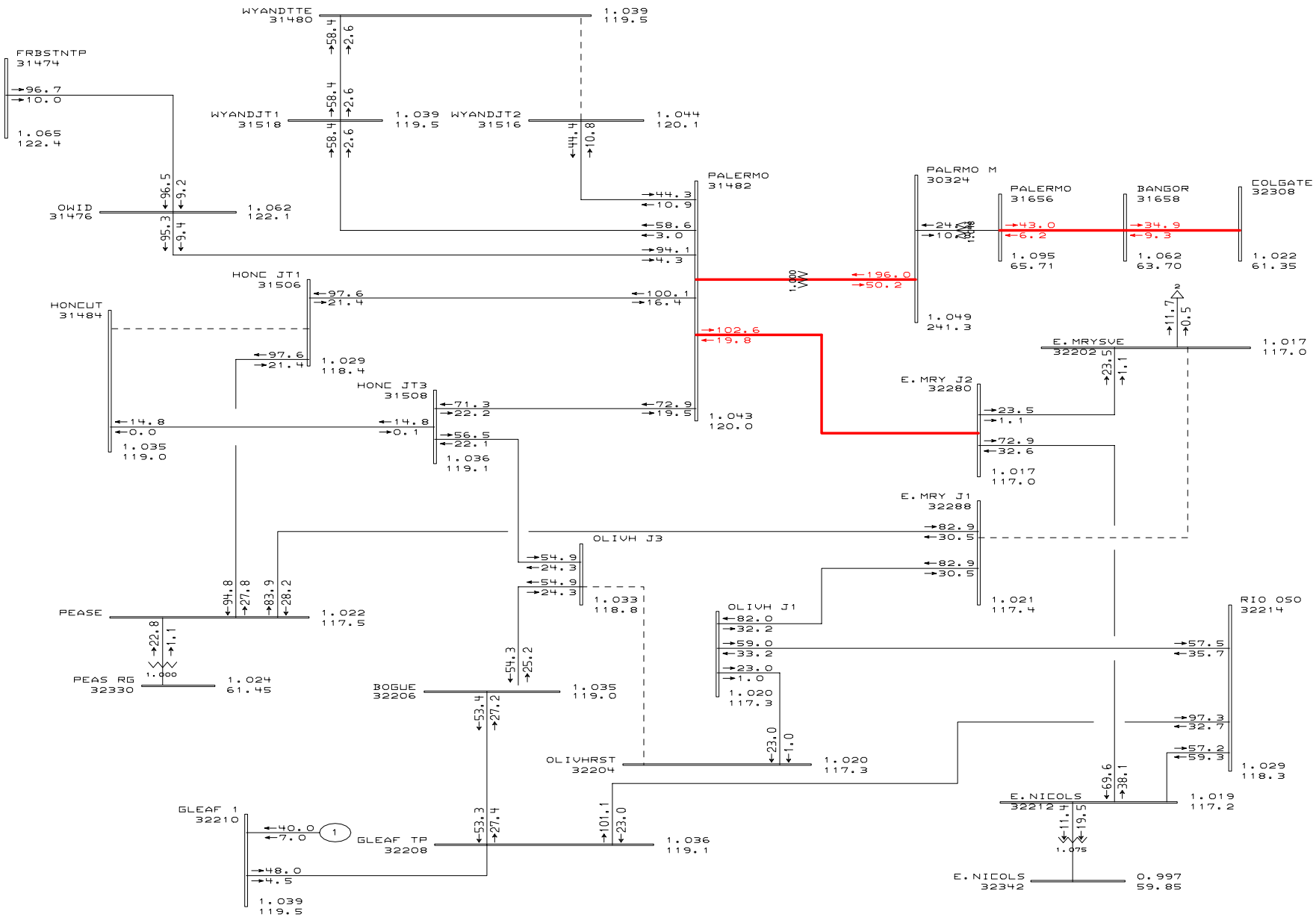


General Electric International, Inc. PSLF Program MW/MVAR Thu Dec 07 09:45:01 2006

PG&E 2004 BASE CASE SERIES - 2010 North Valley Summer Peak Case
PATH15=-1127 MW(S-N) PATH26=3313 MW(N-S) PDCI=3105 MW(N-S) COI=4753 MW(N-S)
CPV Colusa - 2010 Summer Peak - after (TMPP & P0441 removed)

Plot 59 - Heavy Summer - After Project
Outage:Rio Oso-Table Mt & Palermo-Colgate 230 kV

C:\PSLF_Work\Projects\EL_Colus
C:\PSLF_Work\Projects\EL_Colus
Rating = 2

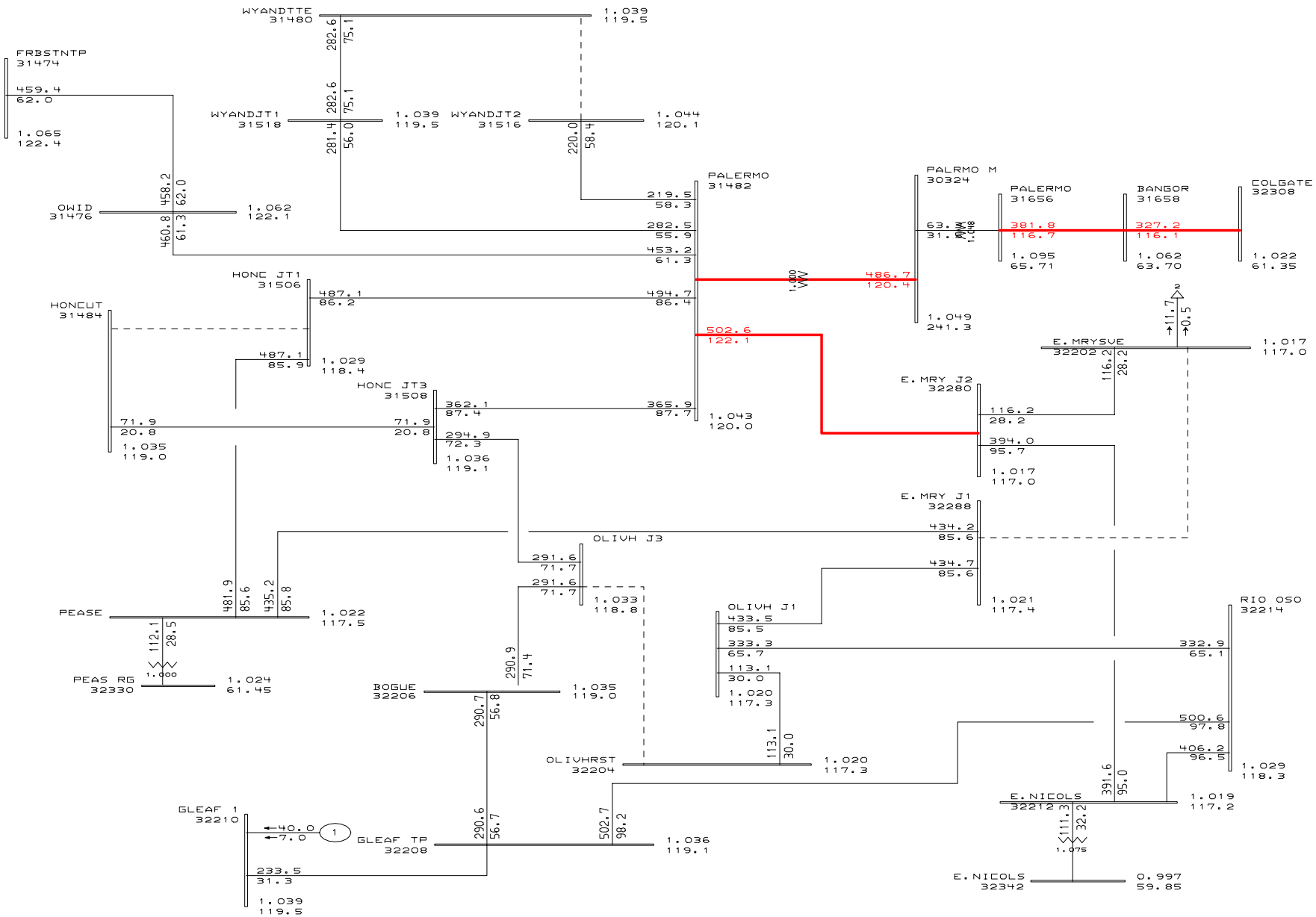


General Electric International, Inc. PSLF Program AMPS/Pct Thu Dec 07 09:45:05 2006

PG&E 2004 BASE CASE SERIES - 2010 North Valley Summer Peak Case
PATH15=-1127 MW(S-N) PATH26=3313 MW(N-S) PDCI=3105 MW(N-S) COI=4753 MW(N-S)
CPV Colusa - 2010 Summer Peak - after (TMPP & P0441 removed)

Plot 60 - Heavy Summer - After Project
Outage:Rio Oso-Table Mt & Palermo-Colgate 230 kV

C:\PSLF_Work\Projects\EL_Colus
C:\PSLF_Work\Projects\EL_Colus
Rating = 2

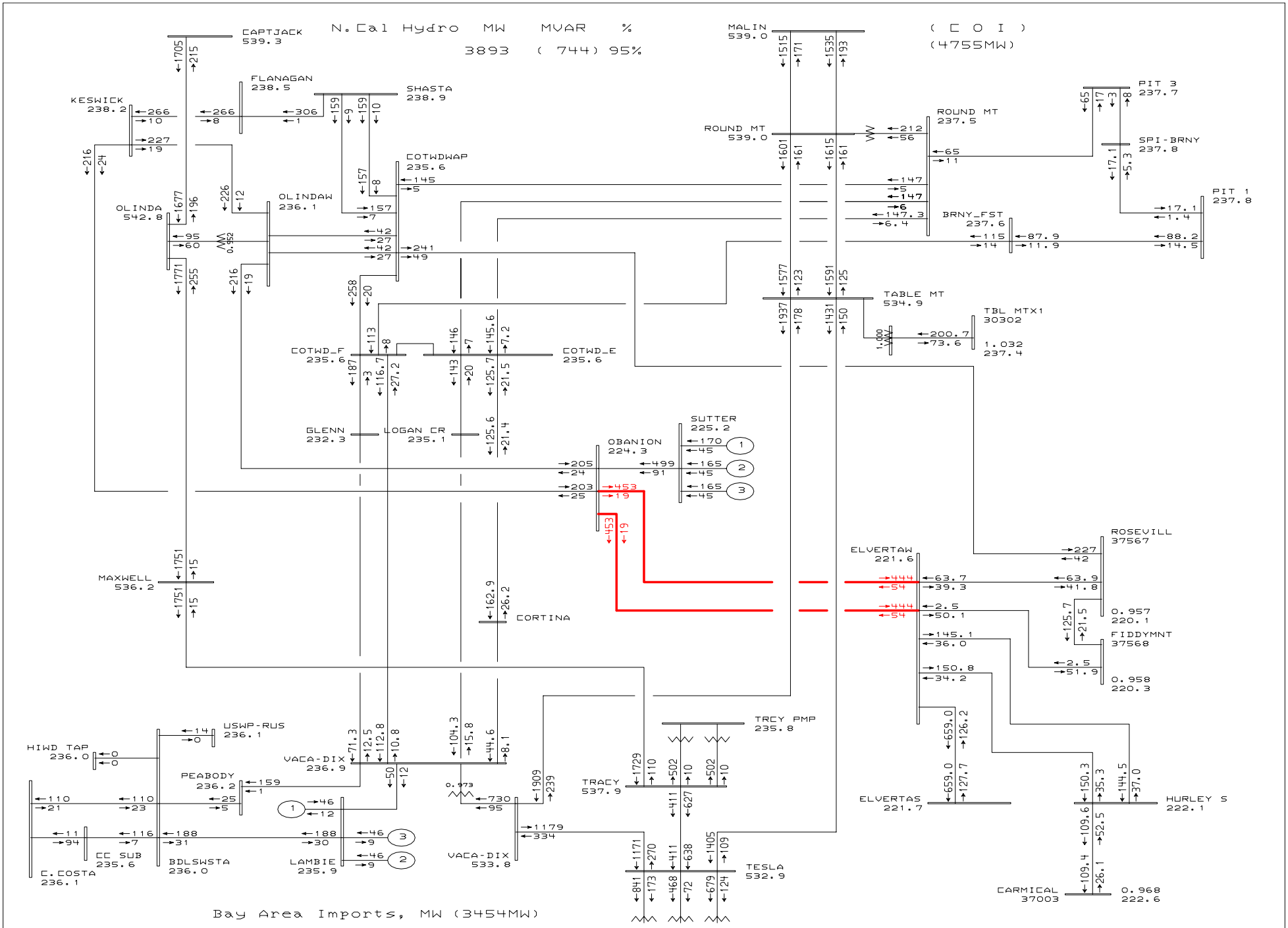


General Electric International, Inc. PSLF Program MW/MVAR Thu Dec 07 09:45:08 2006

PG&E 2004 BASE CASE SERIES - 2010 North Valley Summer Peak Case
PATH15=-518 MW(S-N) PATH26=3352 MW(N-S) PDCI=3105 MW(N-S) COI=4754 MW(N-S)
CPV Colusa - 2010 Summer Peak - before (TMPP & P0441 removed)

Plot 61 - Heavy Summer - Before Project
Outage: Tracy - Hurley #1 & #2 230 kV Lines

C:\PSLF_Work\Projects\EL_Colus
C:\PSLF_Work\Projects\EL_Colus
Rating = 2

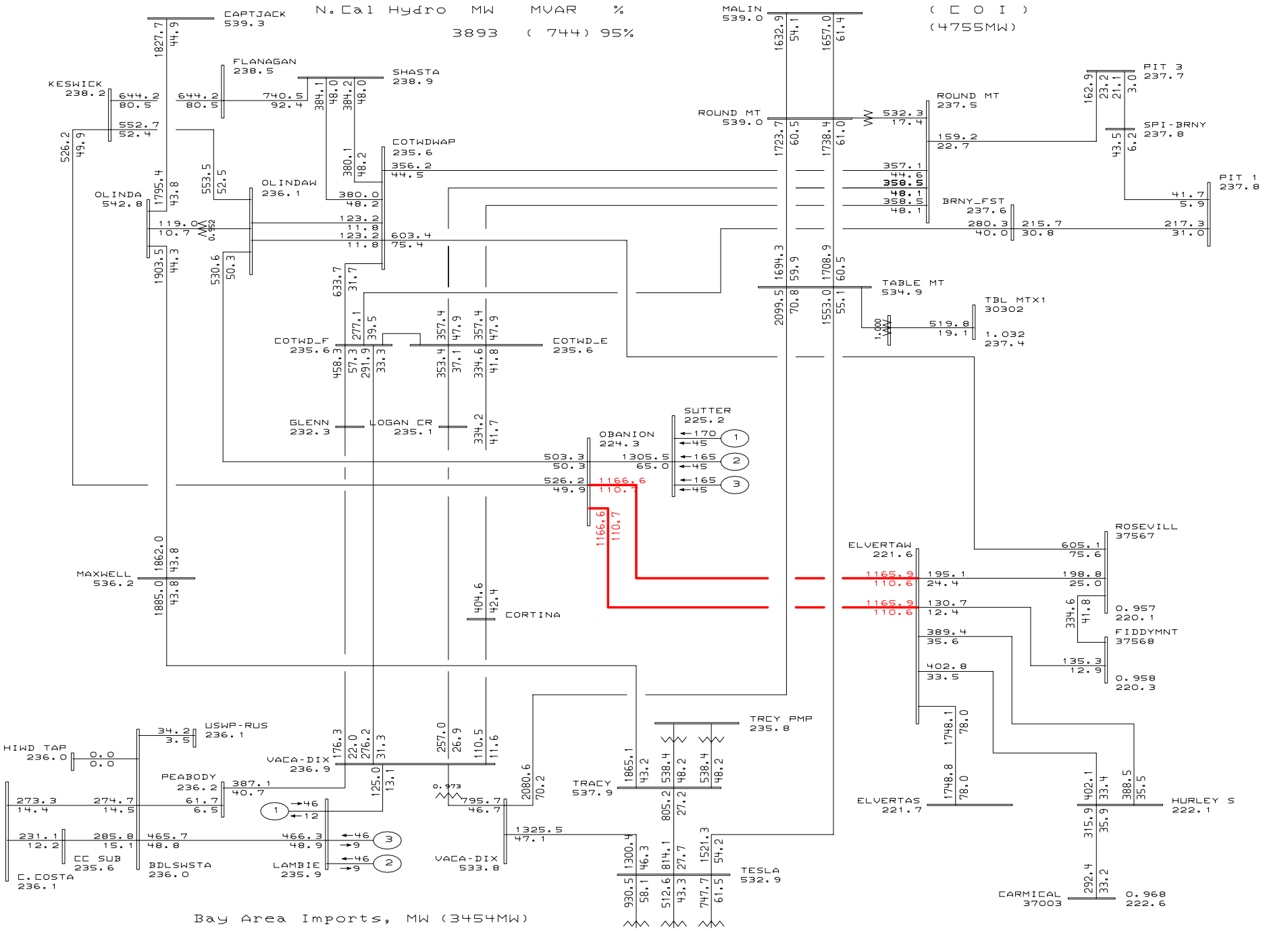


General Electric International, Inc. PSLF Program AMPS/Pct Thu Dec 07 09:45:11 2006

PG&E 2004 BASE CASE SERIES - 2010 North Valley Summer Peak Case
PATH15=-518 MW(S-N) PATH26=3352 MW(N-S) PDCI=3105 MW(N-S) COI=4754 MW(N-S)
CPV Colusa - 2010 Summer Peak - before (TMPP & PO441 removed)

Plot 62 - Heavy Summer - Before Project
Outage: Tracy - Hurley #1 & #2 230 kV Lines

C:\PSLF_Work\Projects\EL_Colus
C:\PSLF_Work\Projects\EL_Colus
Rating = 2

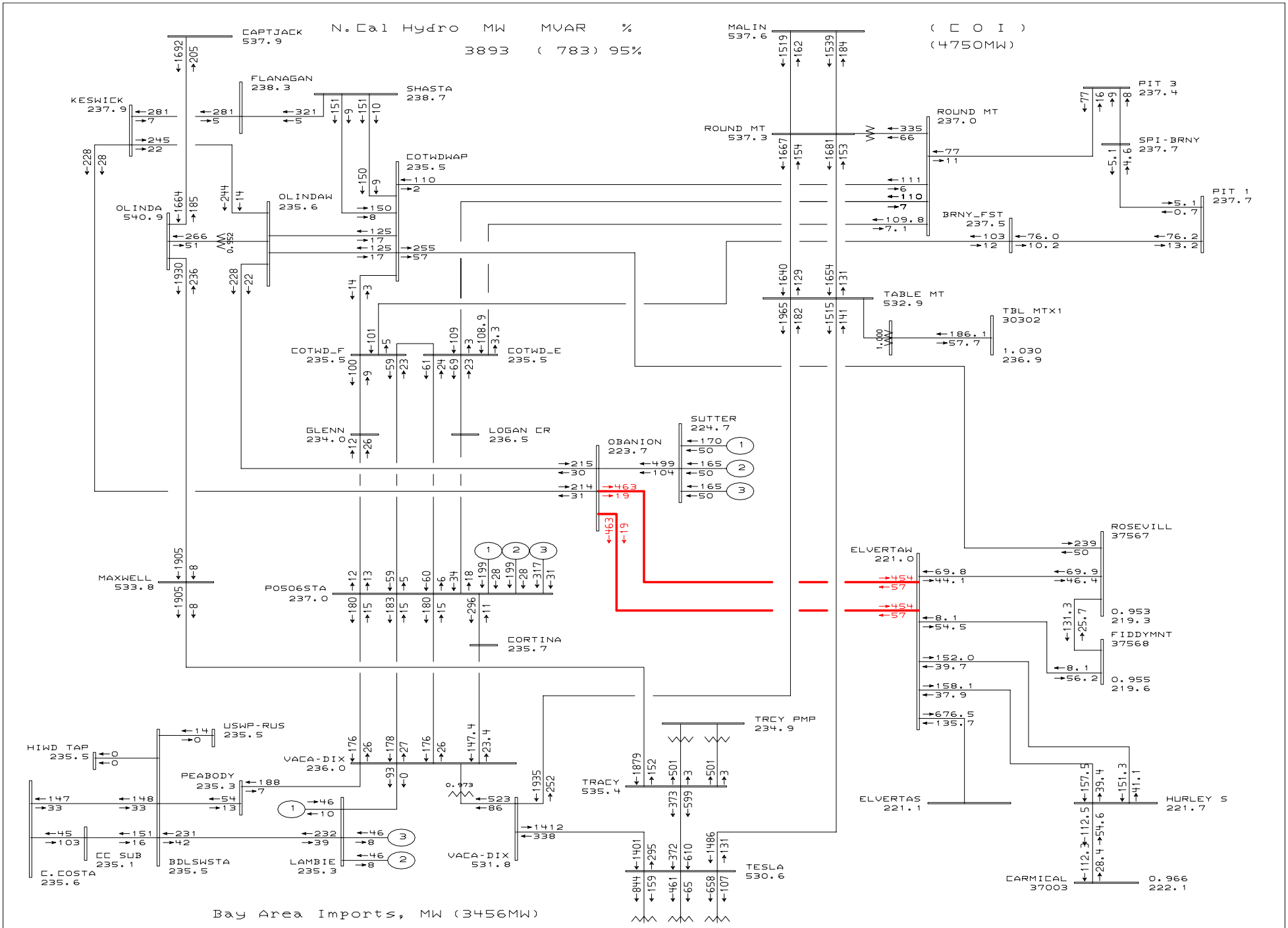


General Electric International, Inc. PSLF Program MW/MVAR Thu Dec 07 09:45:14 2006

PG&E 2004 BASE CASE SERIES - 2010 North Valley Summer Peak Case
PATH15=-1127 MW(S-N) PATH26=3313 MW(N-S) PDCI=3105 MW(N-S) COI=4753 MW(N-S)
CPV Colusa - 2010 Summer Peak - after (TMPP & PO441 removed)

Plot 63 - Heavy Summer - After Project
Outage: Tracy - Hurley #1 & #2 230 kV Lines

C:\PSLF_Work\Projects\EL_Colus
C:\PSLF_Work\Projects\EL_Colus
Rating = 2

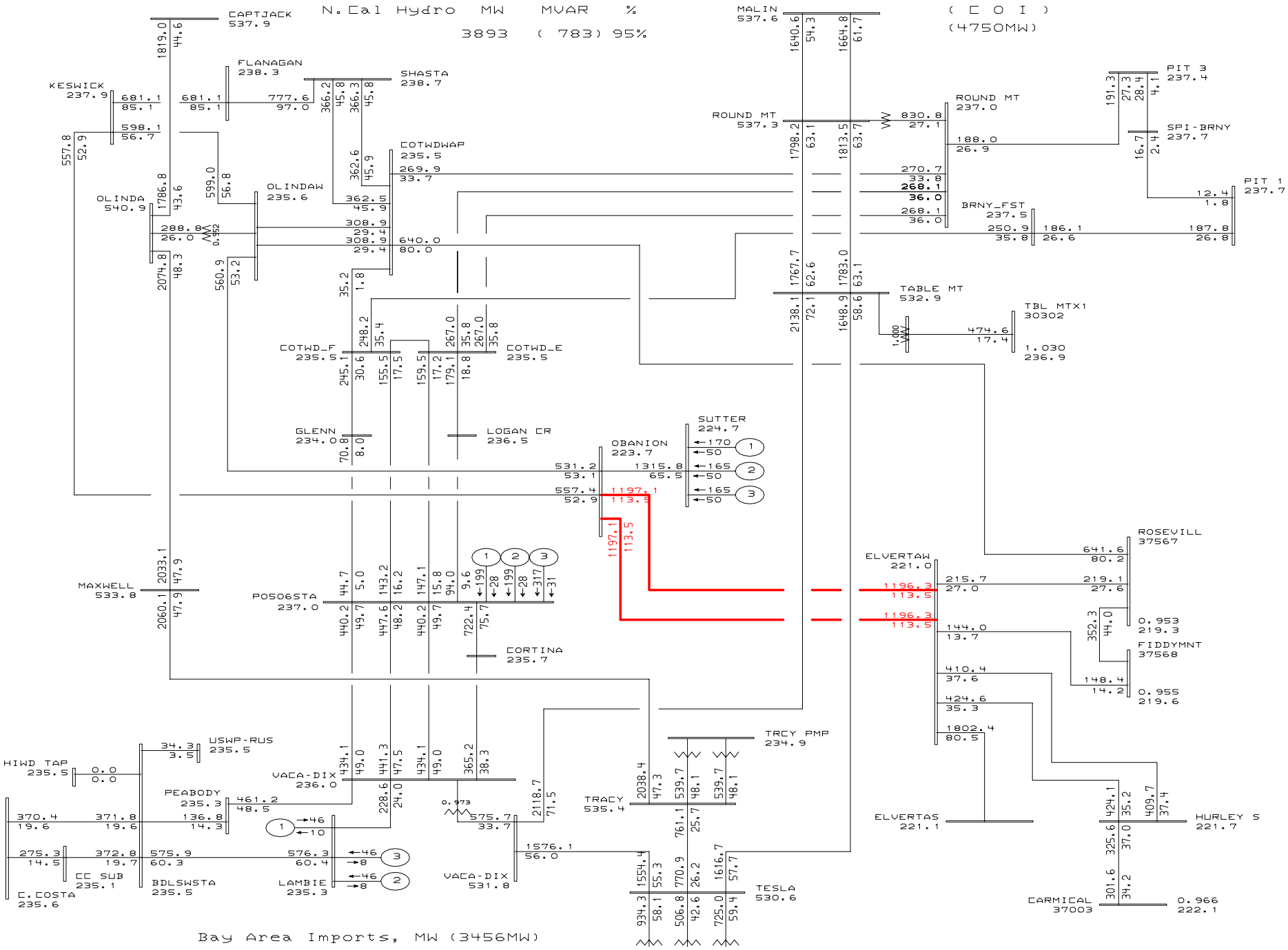


General Electric International, Inc. PSLF Program AMPS/Pct Thu Dec 07 09:45:16 2006

PG&E 2004 BASE CASE SERIES - 2010 North Valley Summer Peak Case
PATH15=-1127 MW(S-N) PATH26=3313 MW(N-S) PDCI=3105 MW(N-S) COI=4753 MW(N-S)
CPV Colusa - 2010 Summer Peak - after (TMPP & PO441 removed)

Plot 64 - Heavy Summer - After Project
Outage: Tracy - Hurley #1 & #2 230 kV Lines

C:\PSLF_Work\Projects\EL_Colus
C:\PSLF_Work\Projects\EL_Colus
Rating = 2

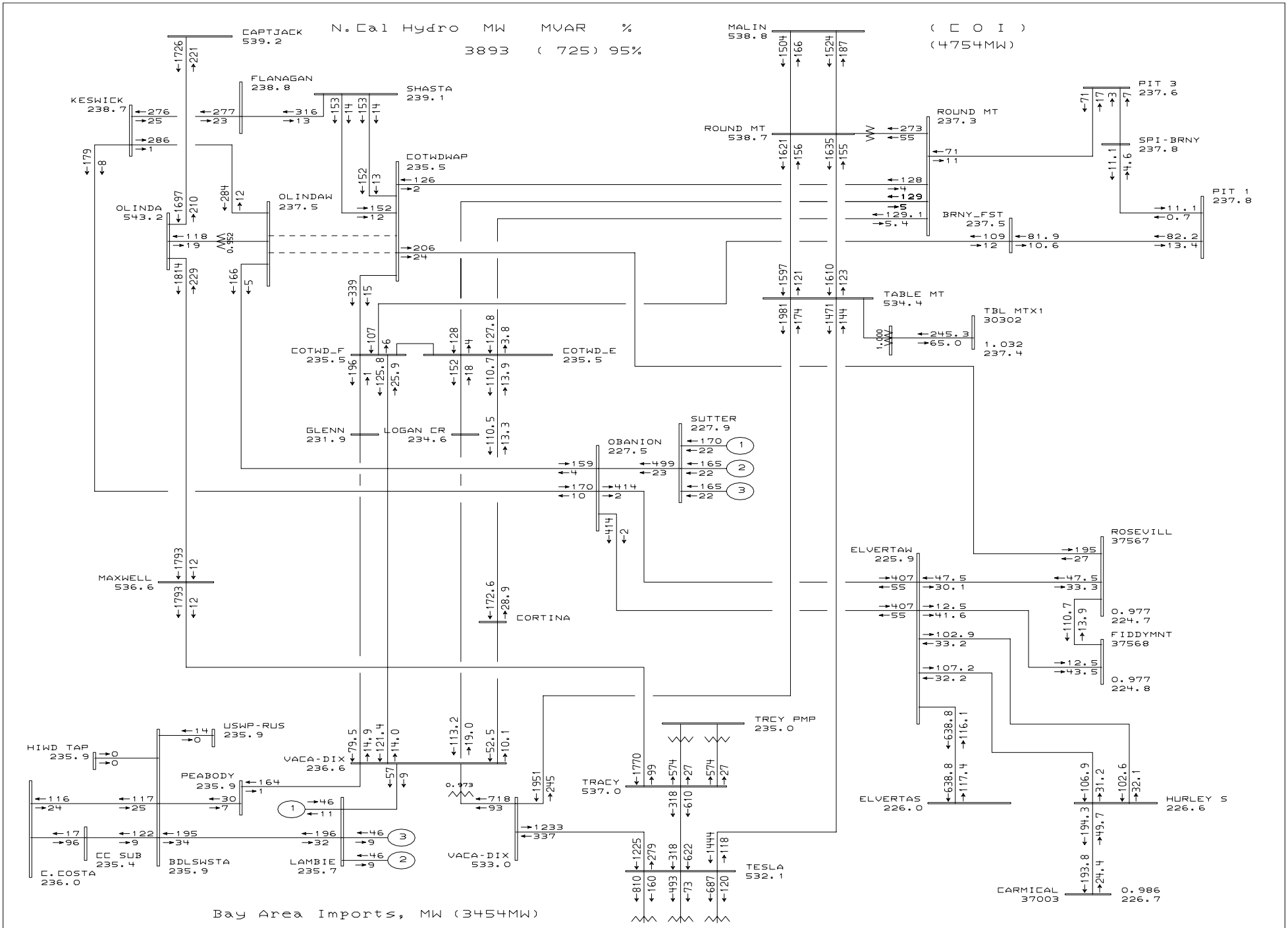


General Electric International, Inc. PSLF Program MW/MVAR Thu Dec 07 09:45:19 2006

PG&E 2004 BASE CASE SERIES - 2010 North Valley Summer Peak Case
PATH15=-518 MW(S-N) PATH26=3352 MW(N-S) PDCI=3105 MW(N-S) COI=4754 MW(N-S)
CPV Colusa - 2010 Summer Peak - before (TMPP & P0441 removed)

Plot 65 - Heavy Summer - Before Project
Outage: Olinda-Cottonwood #1 & #2 230 kV Lines

C:\PSLF_Work\Projects\EL_Colus
C:\PSLF_Work\Projects\EL_Colus
Rating = 2

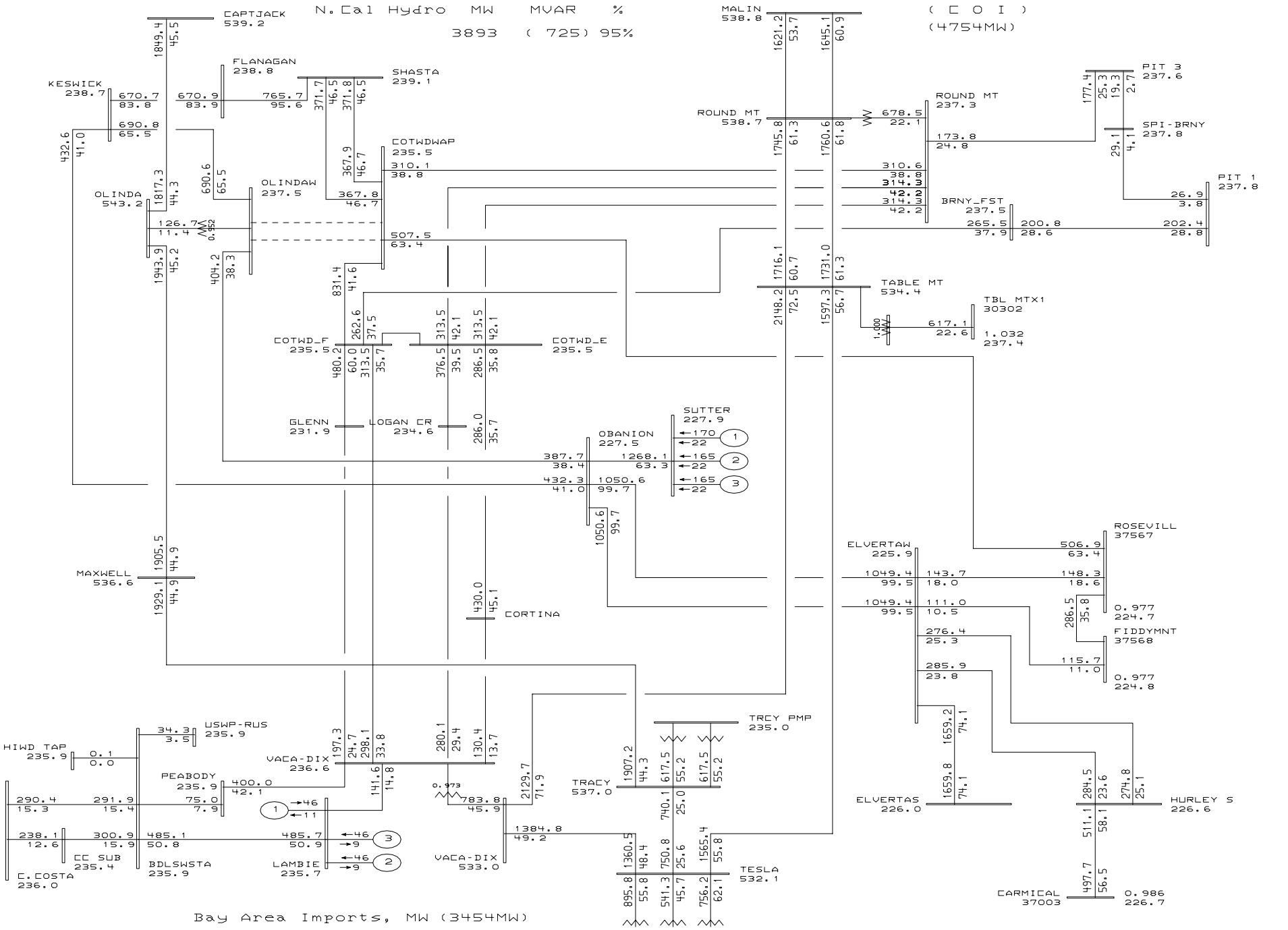


General Electric International, Inc. PSLF Program AMPS/Pct Thu Dec 07 09:45:22 2006

PG&E 2004 BASE CASE SERIES - 2010 North Valley Summer Peak Case
PATH15=-518 MW(S-N) PATH26=3352 MW(N-S) PDCI=3105 MW(N-S) COI=4754 MW(N-S)
CPV Colusa - 2010 Summer Peak - before (TMPP & P0441 removed)

Plot 66 - Heavy Summer - Before Project
Outage: Olinda-Cottonwood #1 & #2 230 kV Lines

C:\PSLF_Work\Projects\EL_Colus
C:\PSLF_Work\Projects\EL_Colus
Rating = 2

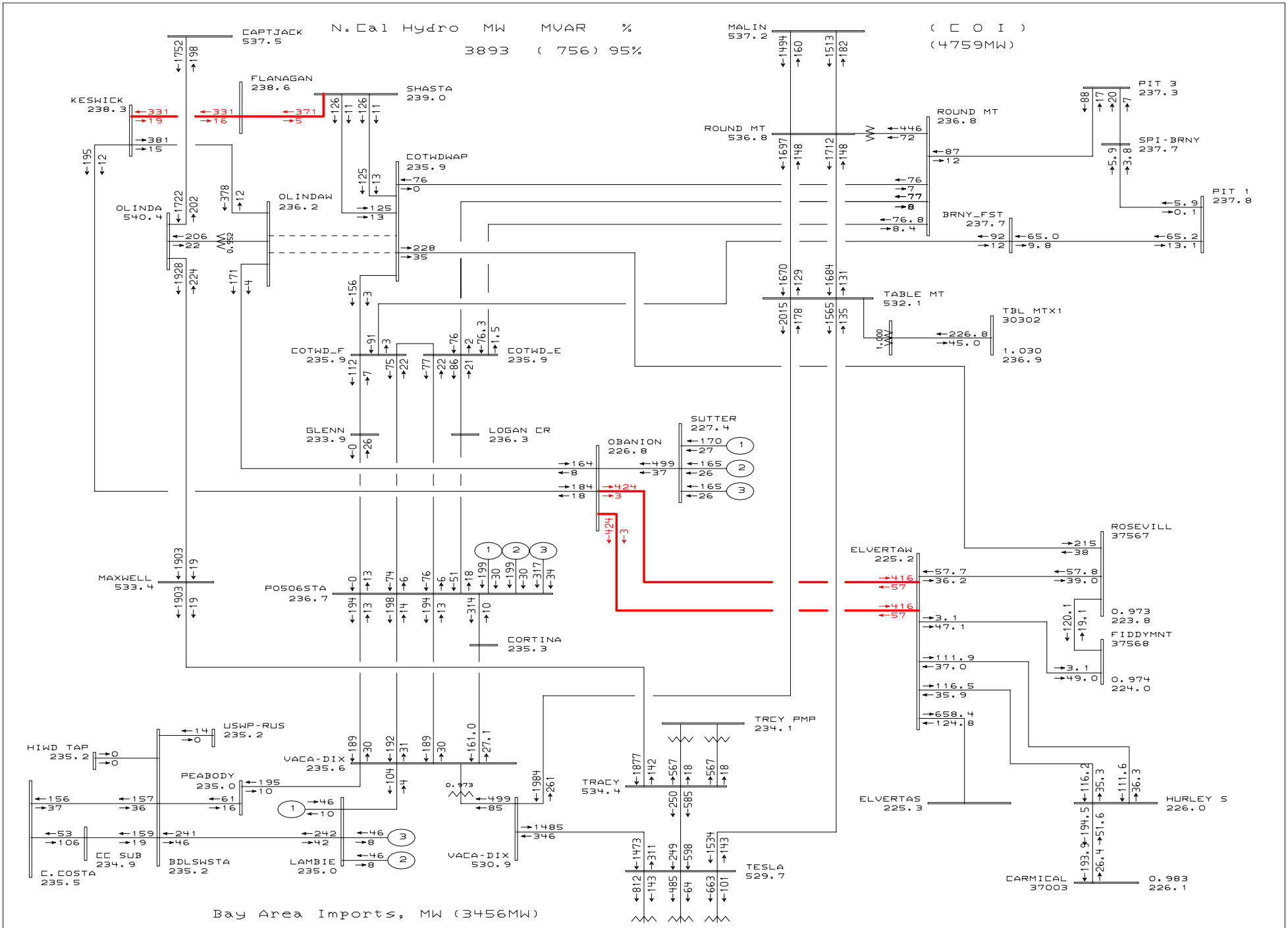


General Electric International, Inc. PSLF Program MW/MVAR Thu Dec 07 09:45:24 2006

PG&E 2004 BASE CASE SERIES - 2010 North Valley Summer Peak Case
PATH15=-1127 MW(S-N) PATH26=3313 MW(N-S) PDCI=3105 MW(N-S) COI=4753 MW(N-S)
CPV Colusa - 2010 Summer Peak - after (TMPP & P0441 removed)

Plot 67 - Heavy Summer - After Project
Outage: Olinda-Cottonwood #1 & #2 230 kV Lines

C:\PSLF_Work\Projects\EL_Colus
C:\PSLF_Work\Projects\EL_Colus
Rating = 2

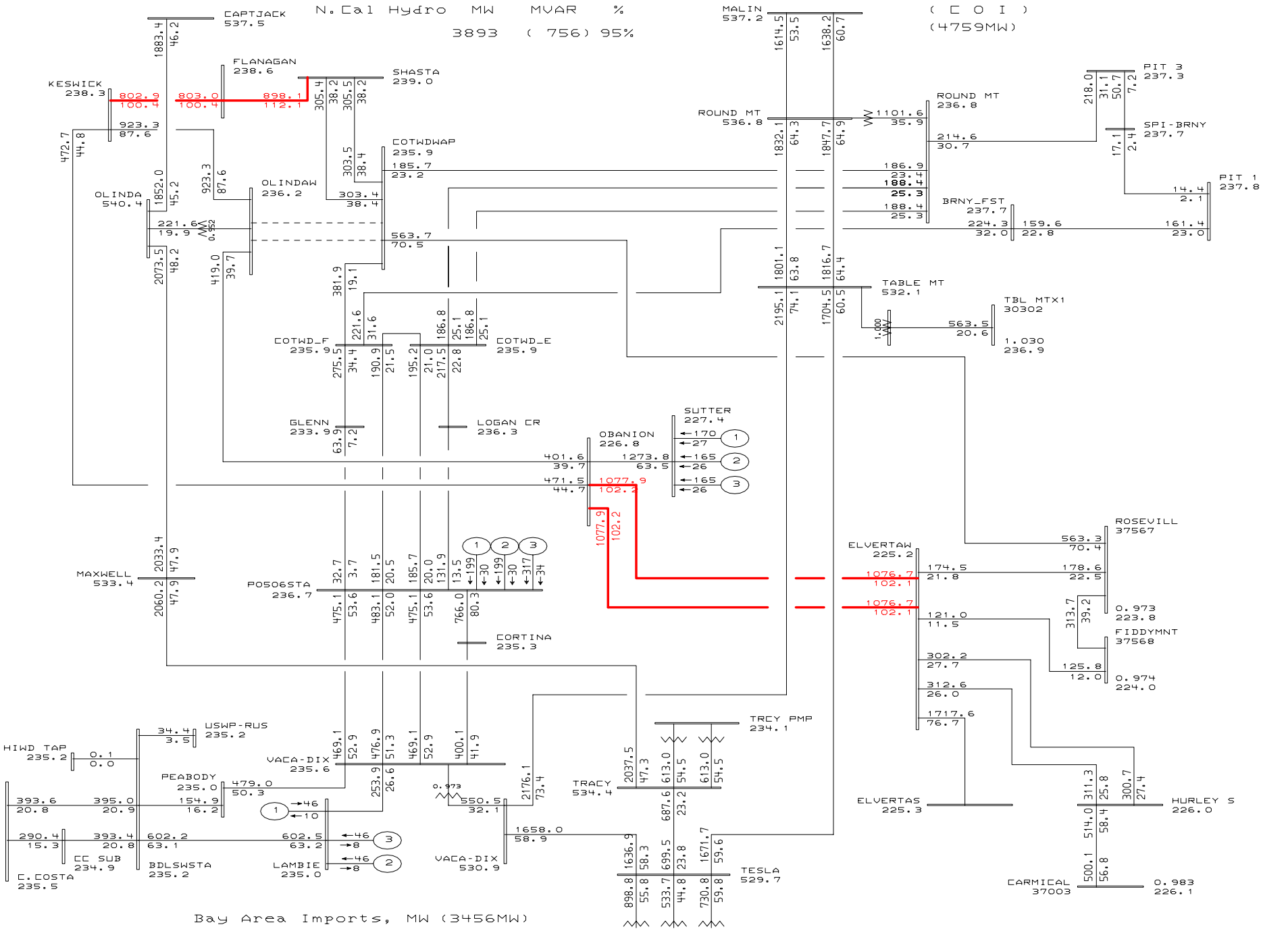


General Electric International, Inc. PSLF Program AMPS/Pct Thu Dec 07 09:45:27 2006

PG&E 2004 BASE CASE SERIES - 2010 North Valley Summer Peak Case
PATH15=-1127 MW(S-N) PATH26=3313 MW(N-S) PDCI=3105 MW(N-S) COI=4753 MW(N-S)
CPV Colusa - 2010 Summer Peak - after (TMPP & PO441 removed)

Plot 68 - Heavy Summer - After Project
Outage: Olinda-Cottonwood #1 & #2 230 kV Lines

C:\PSLF_Work\Projects\EL_Colus
C:\PSLF_Work\Projects\EL_Colus
Rating = 2

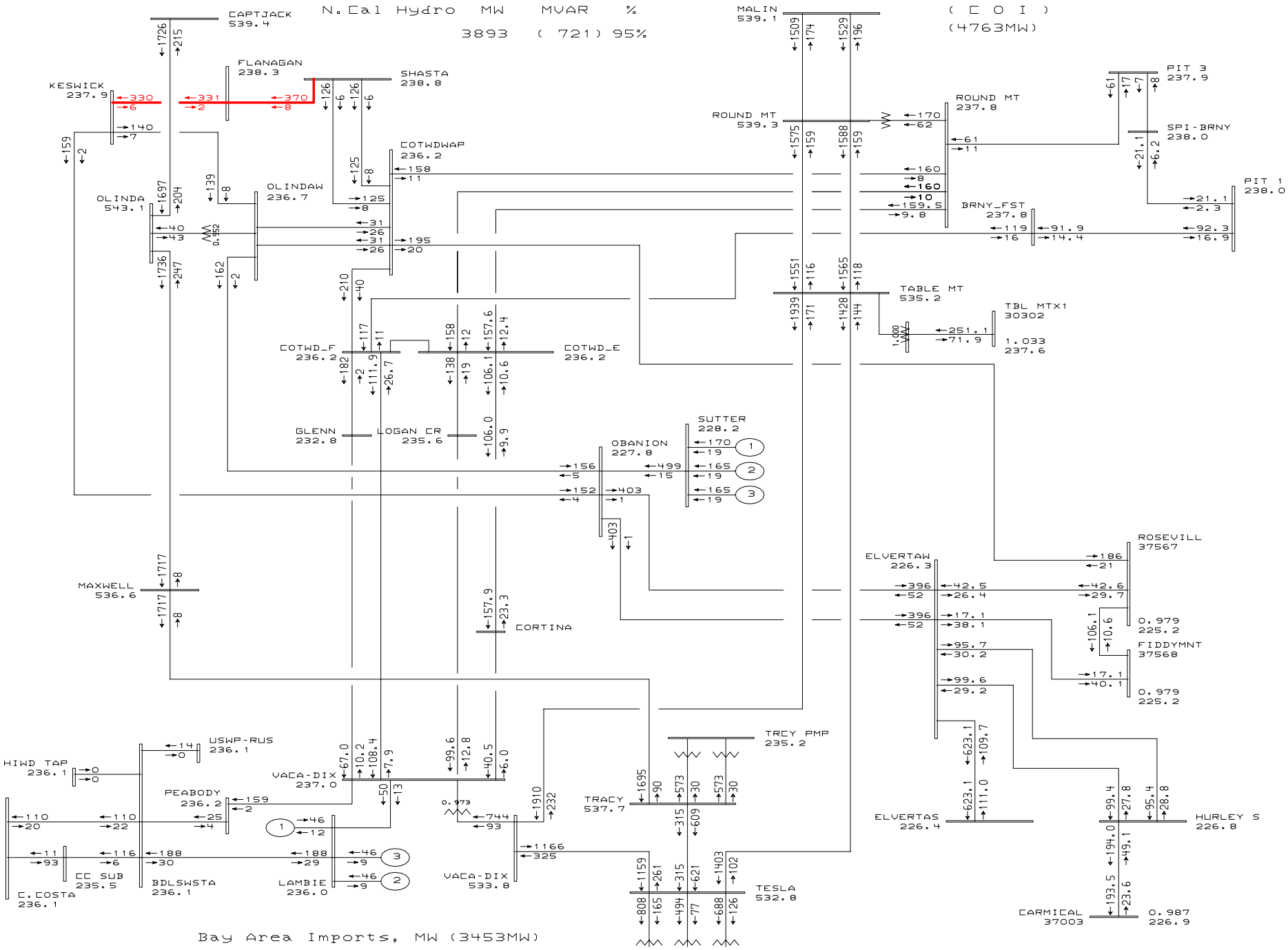


General Electric International, Inc. PSLF Program MW/MVAR Thu Dec 07 09:45:29 2006

PG&E 2004 BASE CASE SERIES - 2010 North Valley Summer Peak Case
PATH15=-518 MW(S-N) PATH26=3352 MW(N-S) PDCI=3105 MW(N-S) COI=4754 MW(N-S)
CPV Colusa - 2010 Summer Peak - before (TMPP & P0441 removed)

Plot 69 - Heavy Summer - Before Project
Outage: Keswick-JF Carr #1 & #2 230 kV Lines

C:\PSLF_Work\Projects\EL_Colus
C:\PSLF_Work\Projects\EL_Colus
Rating = 2

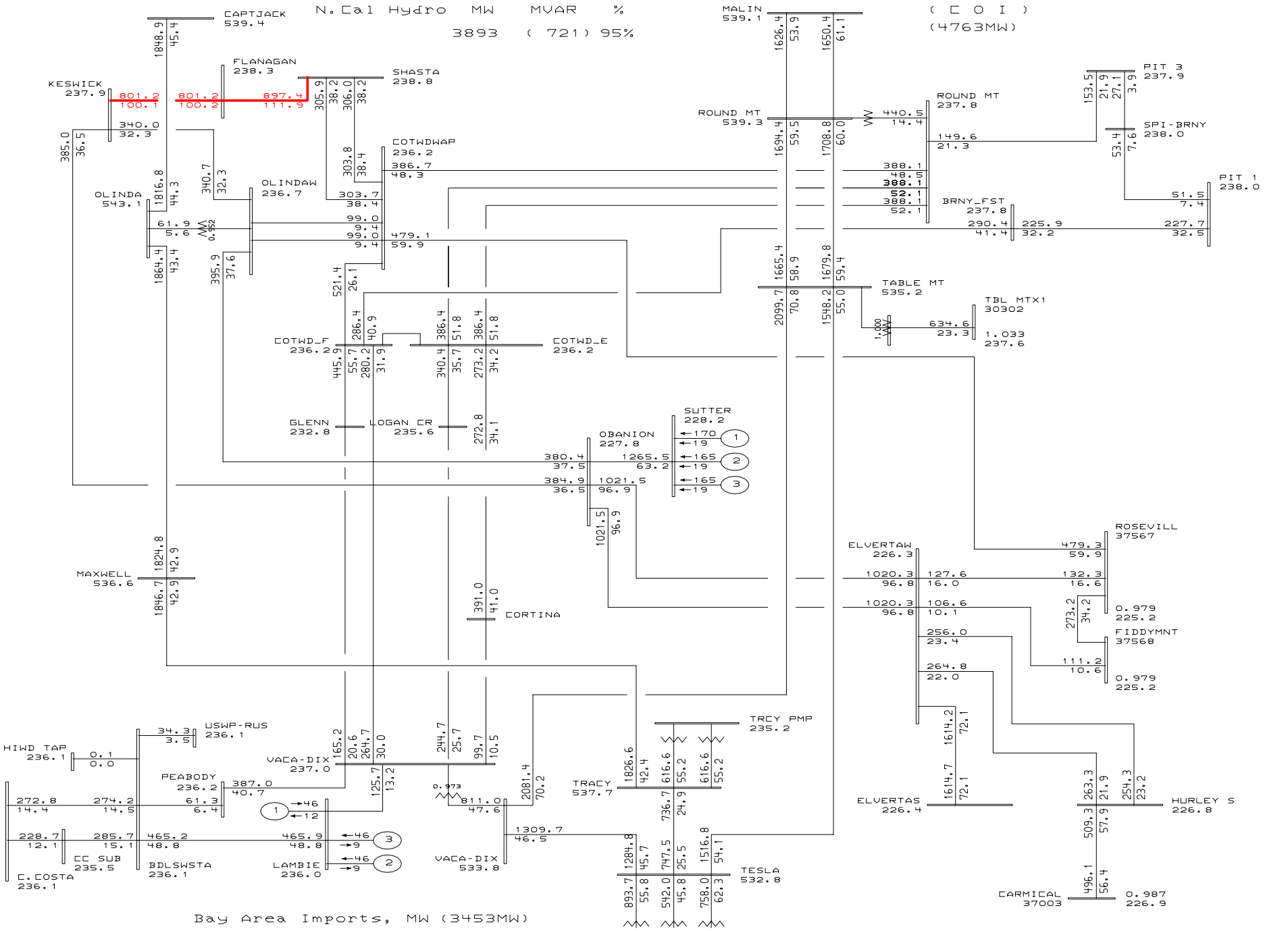


General Electric International, Inc. PSLF Program AMPS/Pct Thu Dec 07 09:45:31 2006

PG&E 2004 BASE CASE SERIES - 2010 North Valley Summer Peak Case
PATH15=-518 MW(S-N) PATH26=3352 MW(N-S) PDCI=3105 MW(N-S) COI=4754 MW(N-S)
CPV Colusa - 2010 Summer Peak - before (TMPP & P0441 removed)

Plot 70 - Heavy Summer - Before Project
Outage: Keswick-JF Carr #1 & #2 230 kV Lines

C:\PSLF_Work\Projects\EL_Colus
C:\PSLF_Work\Projects\EL_Colus
Rating = 2

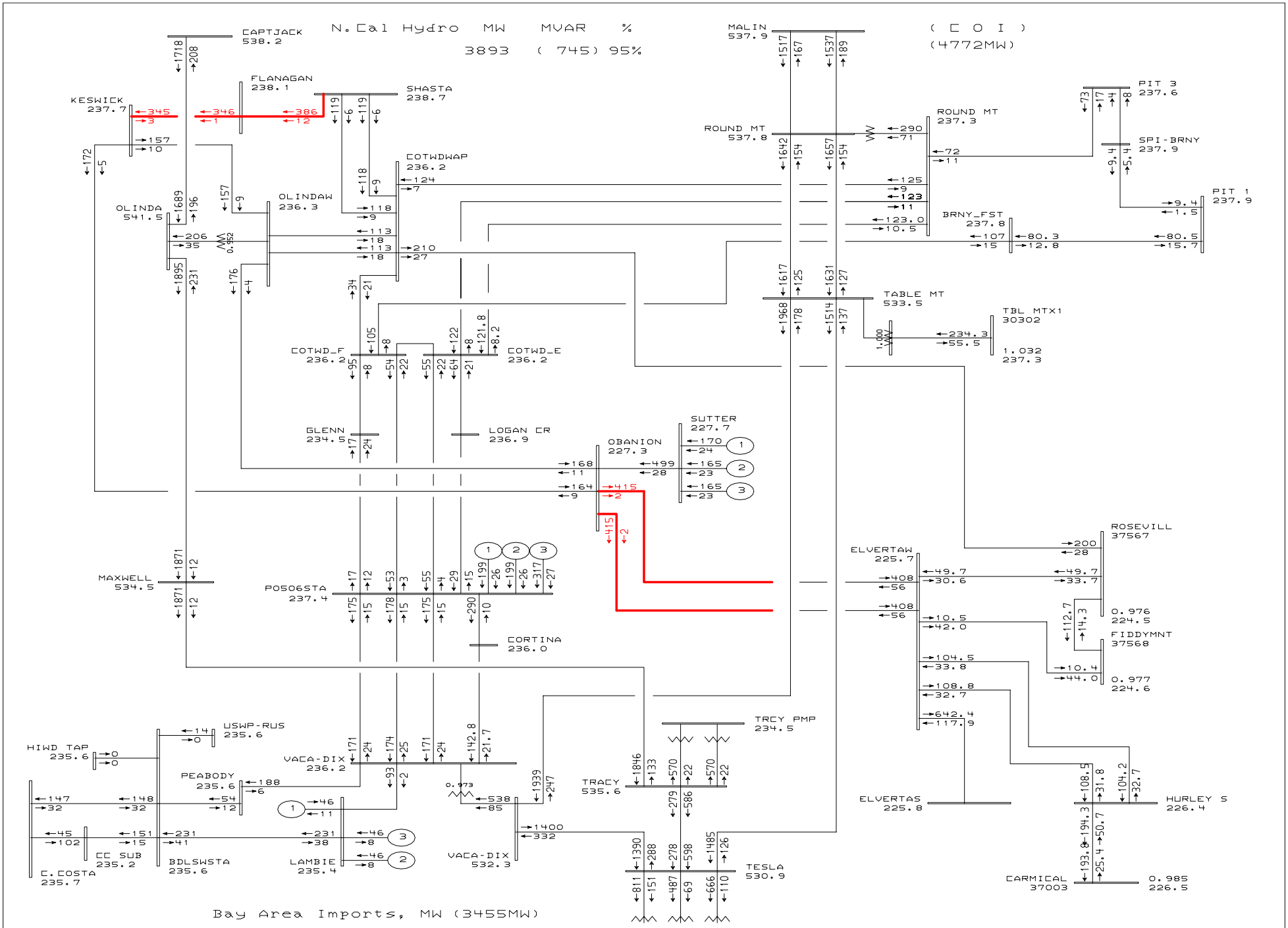


General Electric International, Inc. PSLF Program MW/MVAR Thu Dec 07 09:45:34 2006

PG&E 2004 BASE CASE SERIES - 2010 North Valley Summer Peak Case
PATH15=-1127 MW(S-N) PATH26=3313 MW(N-S) PDCI=3105 MW(N-S) COI=4753 MW(N-S)
CPV Colusa - 2010 Summer Peak - after (TMPP & P0441 removed)

Plot 71 - Heavy Summer - After Project
Outage: Keswick-JF Carr #1 & #2 230 kV Lines

C:\PSLF_Work\Projects\EL_Colus
C:\PSLF_Work\Projects\EL_Colus
Rating = 2

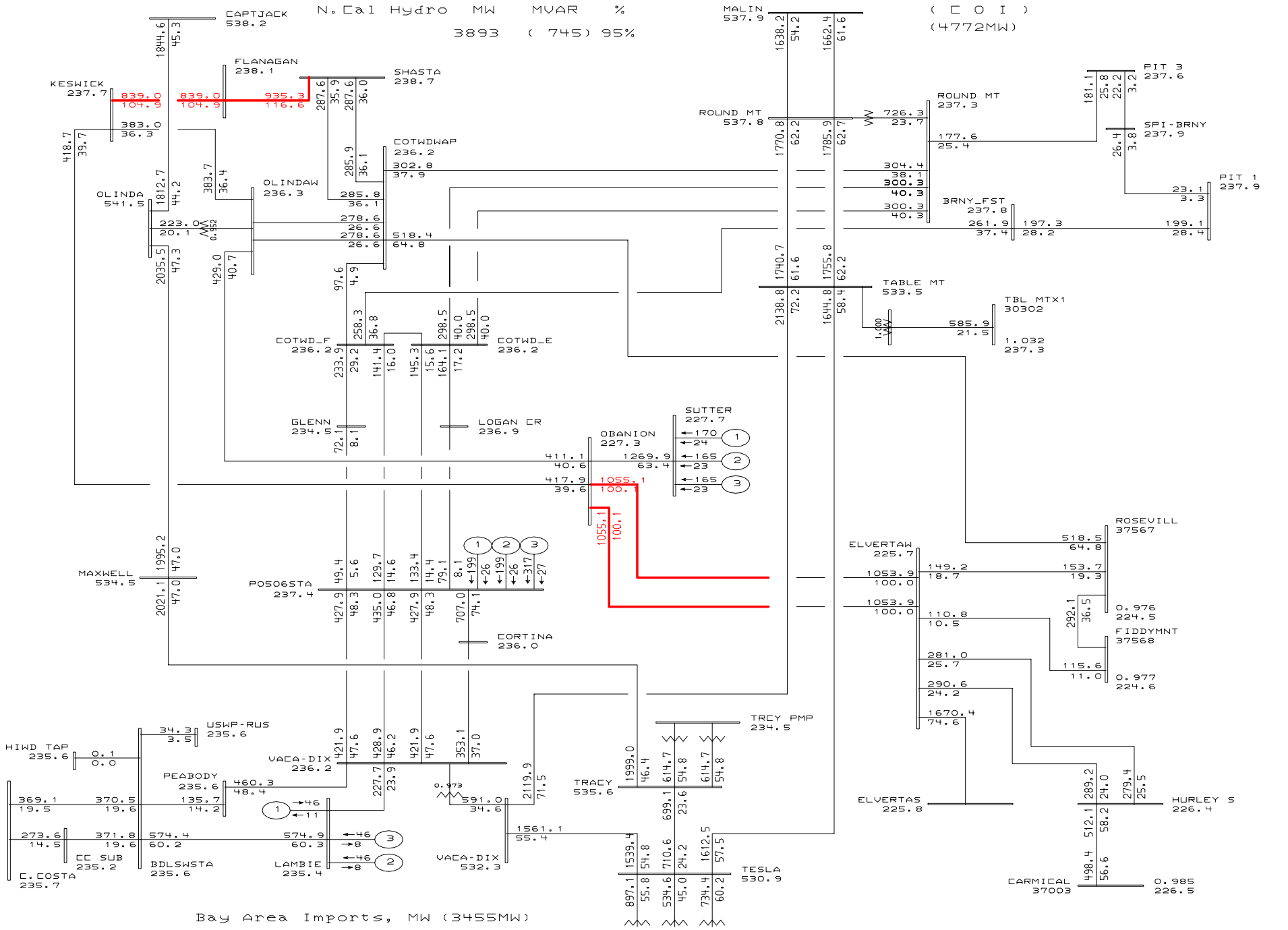


General Electric International, Inc. PSLF Program AMPS/Pct Thu Dec 07 09:45:38 2006

PG&E 2004 BASE CASE SERIES - 2010 North Valley Summer Peak Case
PATH15=-1127 MW(S-N) PATH26=3313 MW(N-S) PDCI=3105 MW(N-S) COI=4753 MW(N-S)
CPV Colusa - 2010 Summer Peak - after (TMPP & P0441 removed)

Plot 72 - Heavy Summer - After Project
Outage: Keswick-JF Carr #1 & #2 230 kV Lines

C:\PSLF_Work\Projects\EL_Colus
C:\PSLF_Work\Projects\EL_Colus
Rating = 2

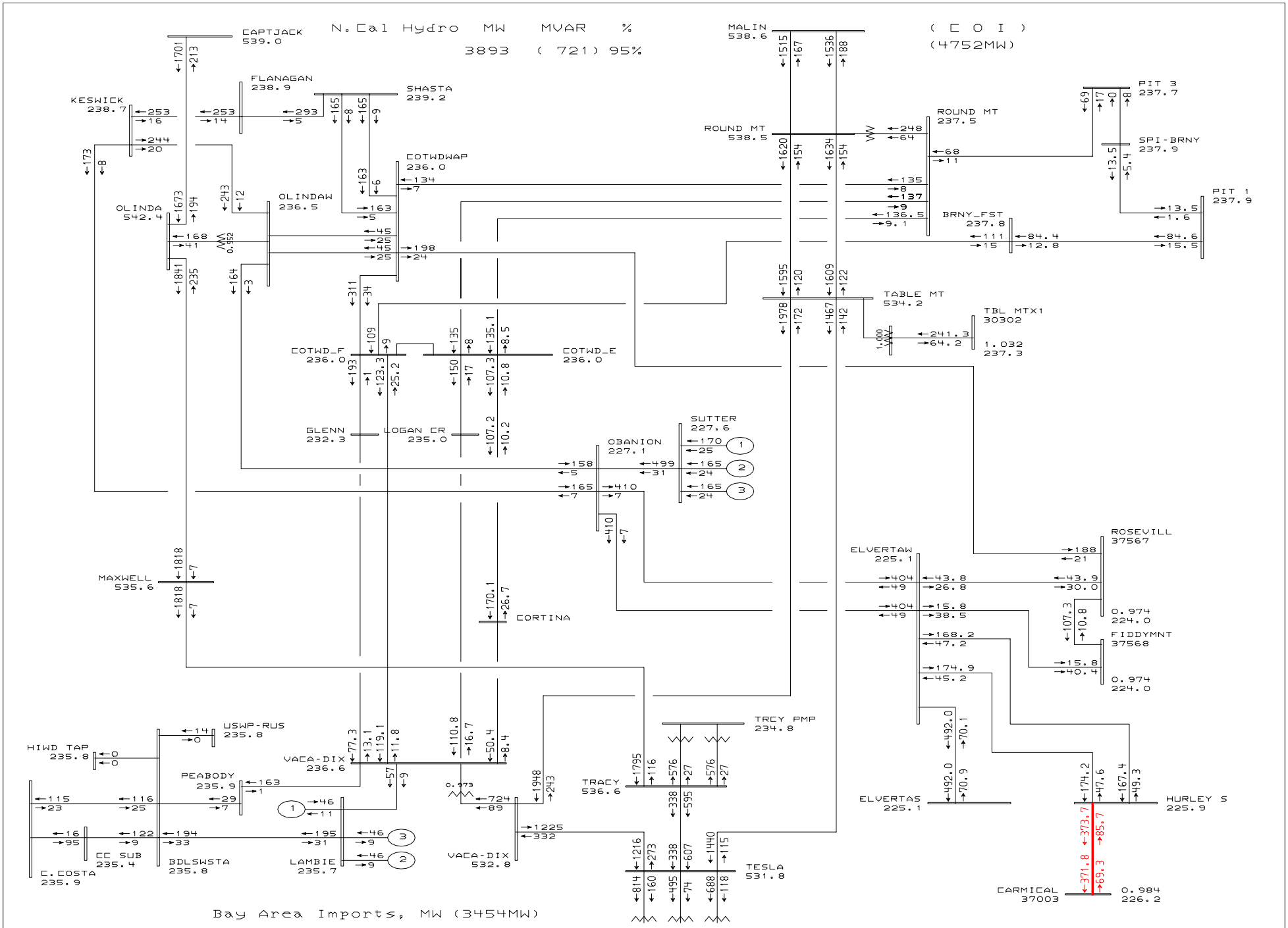


General Electric International, Inc. PSLF Program MW/MVAR Thu Dec 07 09:45:40 2006

PG&E 2004 BASE CASE SERIES - 2010 North Valley Summer Peak Case
PATH15=-518 MW(S-N) PATH26=3352 MW(N-S) PDCI=3105 MW(N-S) COI=4754 MW(N-S)
CPV Colusa - 2010 Summer Peak - before (TMPP & P0441 removed)

Plot 73 - Heavy Summer - Before Project
Outage: Elverta-Foothill & Orangvale 230 kV Lines

C:\PSLF_Work\Projects\EL_Colus
C:\PSLF_Work\Projects\EL_Colus
Rating = 2

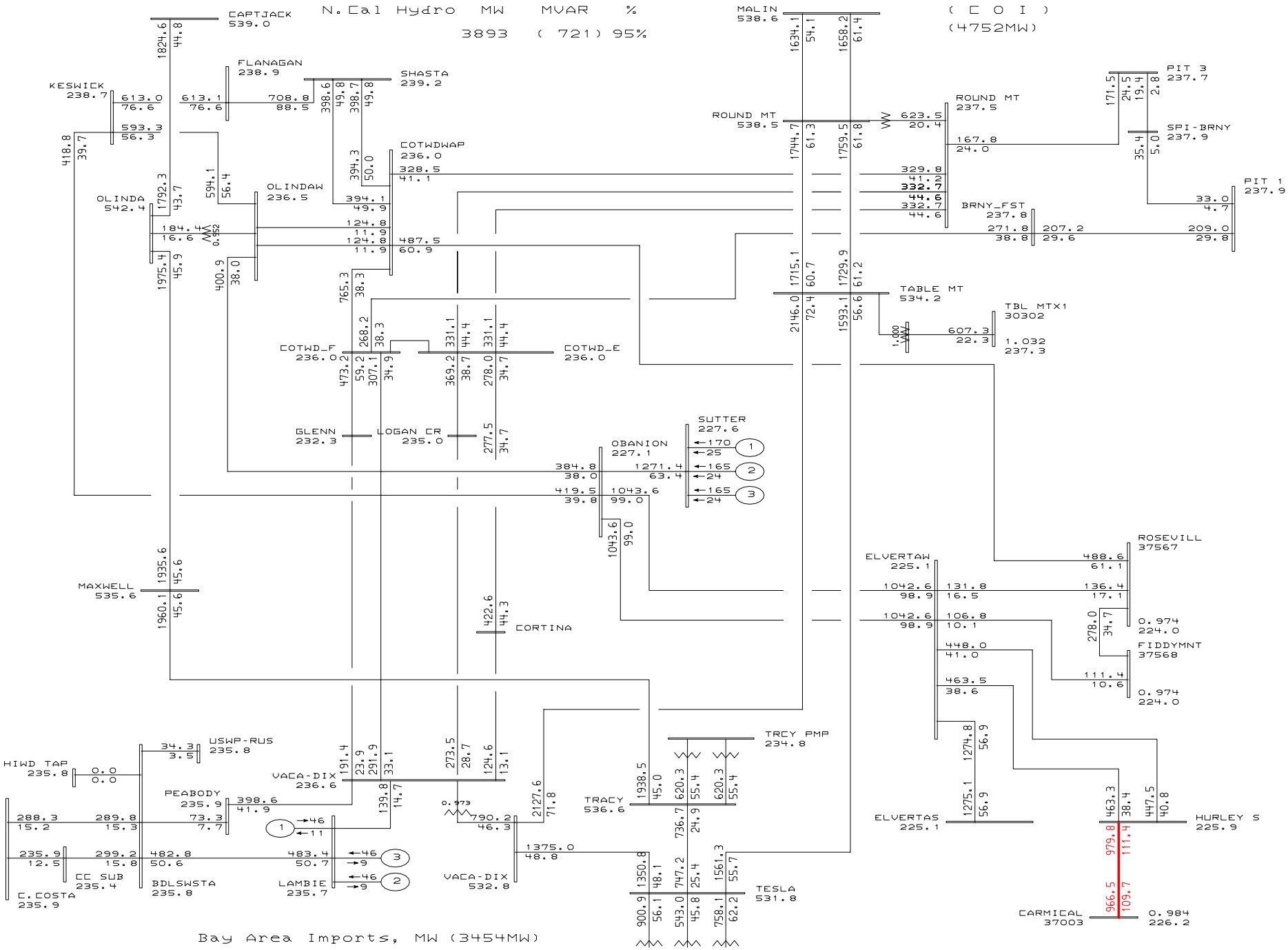


General Electric International, Inc. PSLF Program AMPS/Pct Thu Dec 07 09:45:43 2006

PG&E 2004 BASE CASE SERIES - 2010 North Valley Summer Peak Case
PATH15=-518 MW(S-N) PATH26=3352 MW(N-S) PDCI=3105 MW(N-S) COI=4754 MW(N-S)
CPV Colusa - 2010 Summer Peak - before (TMPP & P0441 removed)

Plot 74 - Heavy Summer - Before Project
Outage: Elverta-Foothill & Orangvale 230 kV Lines

C:\PSLF_Work\Projects\EL_Colus
C:\PSLF_Work\Projects\EL_Colus
Rating = 2

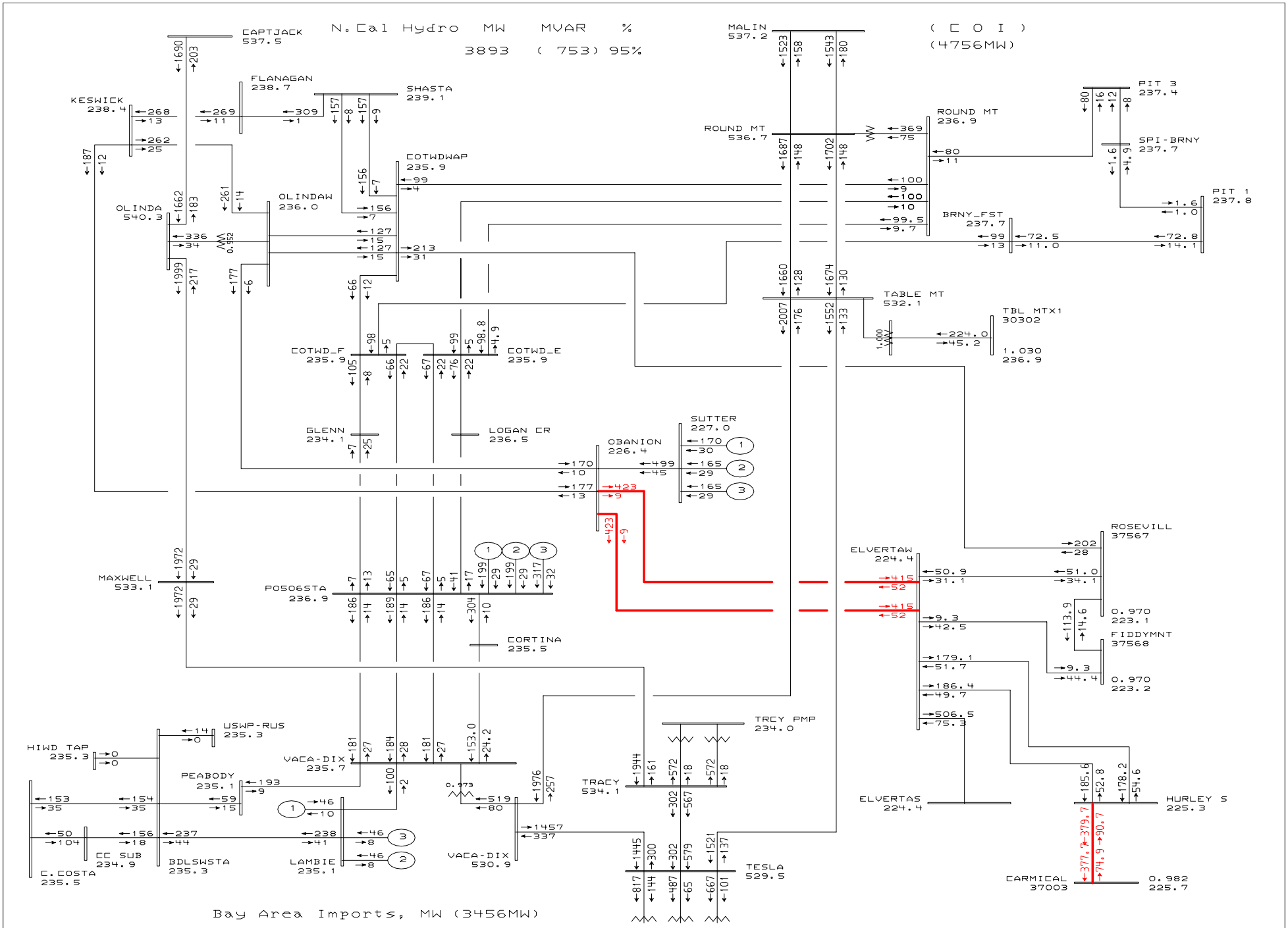


General Electric International, Inc. PSLF Program MW/MVAR Thu Dec 07 09:45:48 2006

PG&E 2004 BASE CASE SERIES - 2010 North Valley Summer Peak Case
PATH15=-1127 MW(S-N) PATH26=3313 MW(N-S) PDCI=3105 MW(N-S) COI=4753 MW(N-S)
CPV Colusa - 2010 Summer Peak - after (TMPP & P0441 removed)

Plot 75 - Heavy Summer - After Project
Outage: Elverta-Foothill & Orangvale 230 kV Lines

C:\PSLF_Work\Projects\EL_Colus
C:\PSLF_Work\Projects\EL_Colus
Rating = 2

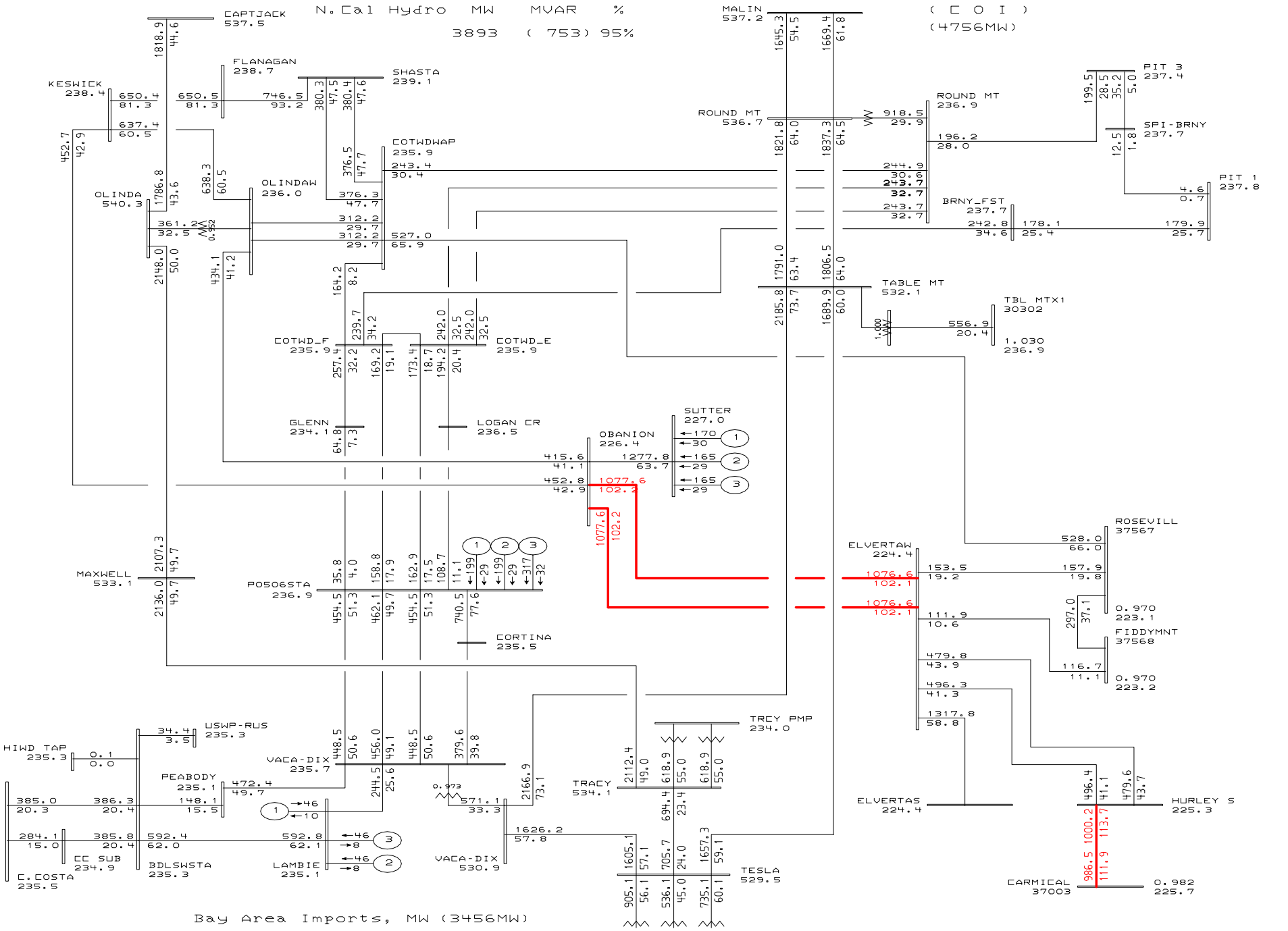


General Electric International, Inc. PSLF Program AMPS/Pct Thu Dec 07 09:45:54 2006

PG&E 2004 BASE CASE SERIES - 2010 North Valley Summer Peak Case
PATH15=-1127 MW(S-N) PATH26=3313 MW(N-S) PDCI=3105 MW(N-S) COI=4753 MW(N-S)
CPV Colusa - 2010 Summer Peak - after (TMPP & P0441 removed)

Plot 76 - Heavy Summer - After Project
Outage: Elverta-Foothill & Orangvale 230 kV Lines

C:\PSLF_Work\Projects\EL_Colus
C:\PSLF_Work\Projects\EL_Colus
Rating = 2

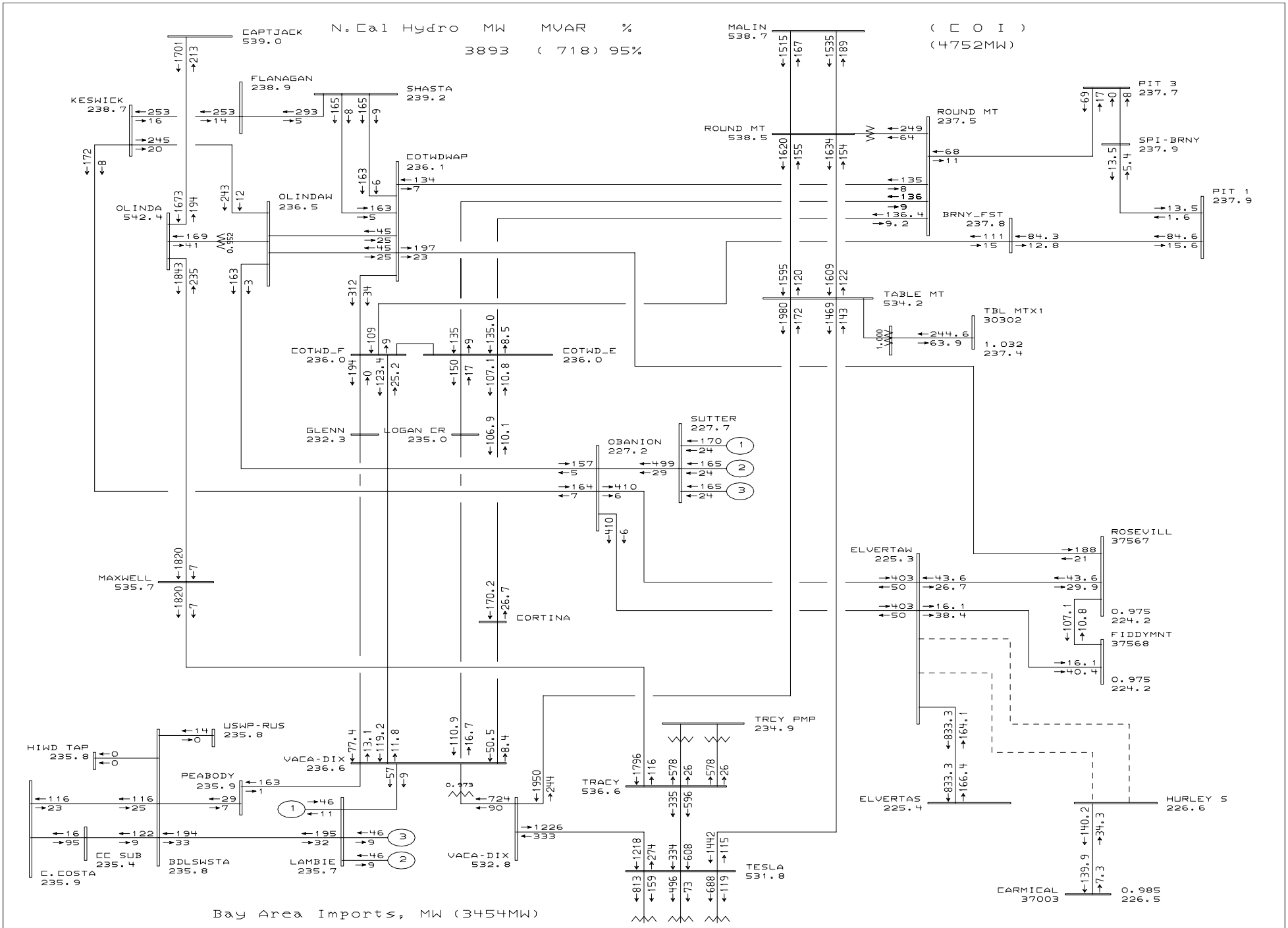


General Electric International, Inc. PSLF Program MW/MVAR Thu Dec 07 09:45:56 2006

PG&E 2004 BASE CASE SERIES - 2010 North Valley Summer Peak Case
PATH15=-518 MW(S-N) PATH26=3352 MW(N-S) PDCI=3105 MW(N-S) COI=4754 MW(N-S)
CPV Colusa - 2010 Summer Peak - before (TMPP & P0441 removed)

Plot 77 - Heavy Summer - Before Project
Outage: Elverta-Hurley #1 & #2 230 kV Lines

C:\PSLF_Work\Projects\EL_Colus
C:\PSLF_Work\Projects\EL_Colus
Rating = 2

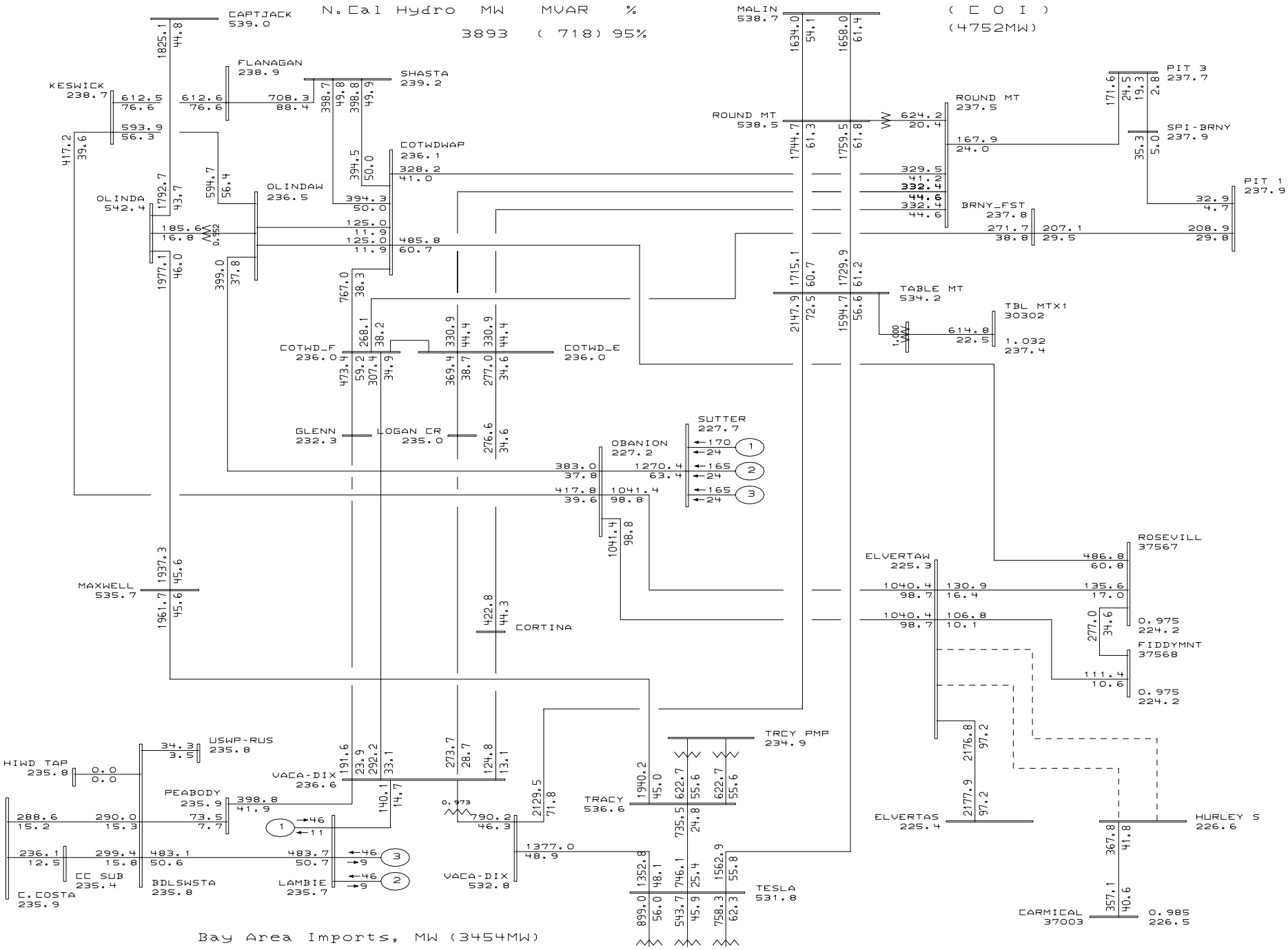


General Electric International, Inc. PSLF Program AMPS/Pct Thu Dec 07 09:45:59 2006

PG&E 2004 BASE CASE SERIES - 2010 North Valley Summer Peak Case
PATH15=-518 MW(S-N) PATH26=3352 MW(N-S) PDCI=3105 MW(N-S) COI=4754 MW(N-S)
CPV Colusa - 2010 Summer Peak - before (TMPP & P0441 removed)

Plot 78 - Heavy Summer - Before Project
Outage: Elverta-Hurley #1 & #2 230 kV Lines

C:\PSLF_Work\Projects\EL_Colus
C:\PSLF_Work\Projects\EL_Colus
Rating = 2

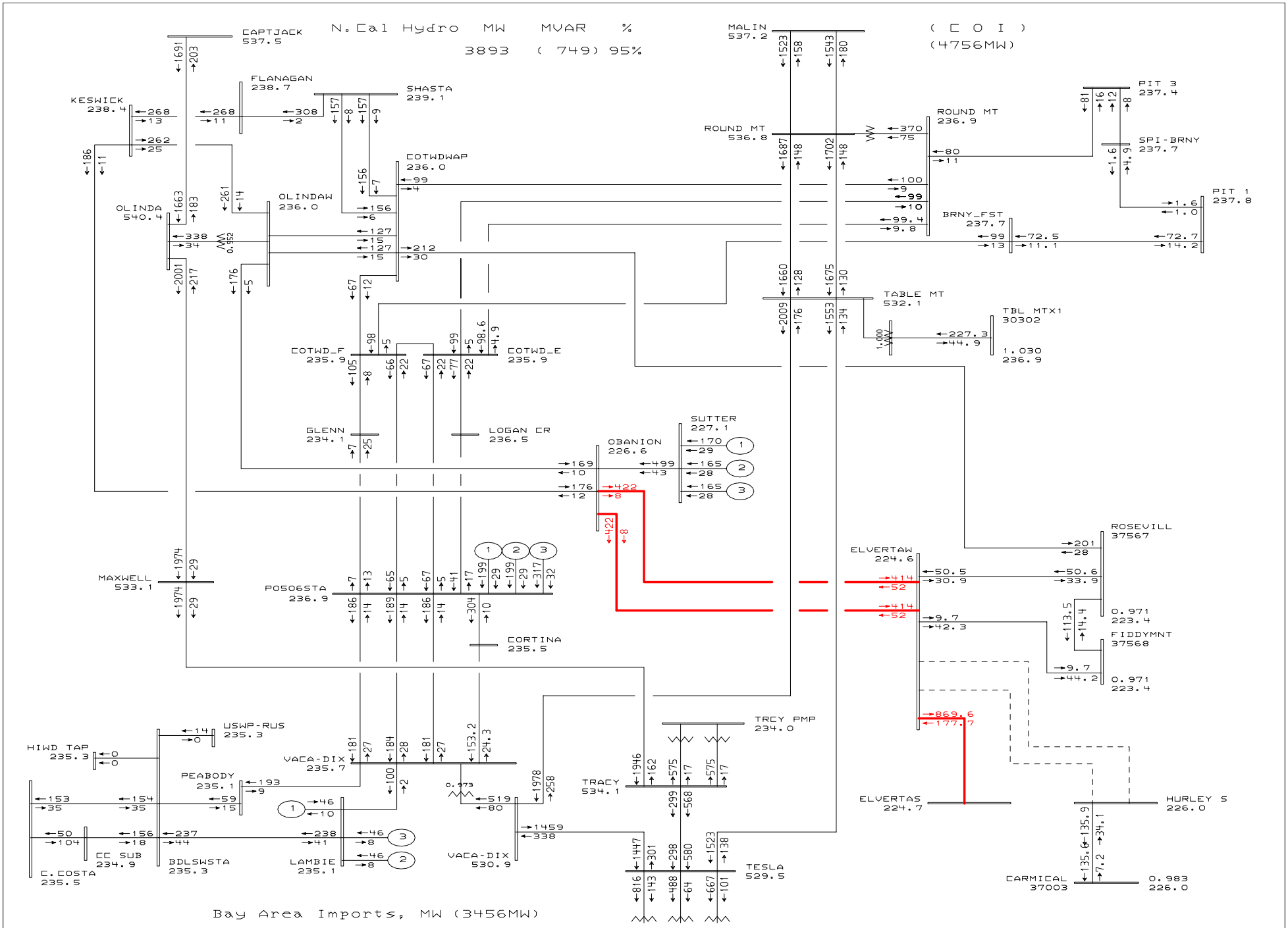


General Electric International, Inc. PSLF Program MW/MVAR Thu Dec 07 09:46:02 2006

PG&E 2004 BASE CASE SERIES - 2010 North Valley Summer Peak Case
PATH15=-1127 MW(S-N) PATH26=3313 MW(N-S) PDCI=3105 MW(N-S) COI=4753 MW(N-S)
CPV Colusa - 2010 Summer Peak - after (TMPP & P0441 removed)

Plot 79 - Heavy Summer - After Project
Outage: Elverta-Hurley #1 & #2 230 kV Lines

C:\PSLF_Work\Projects\EL_Colus
C:\PSLF_Work\Projects\EL_Colus
Rating = 2

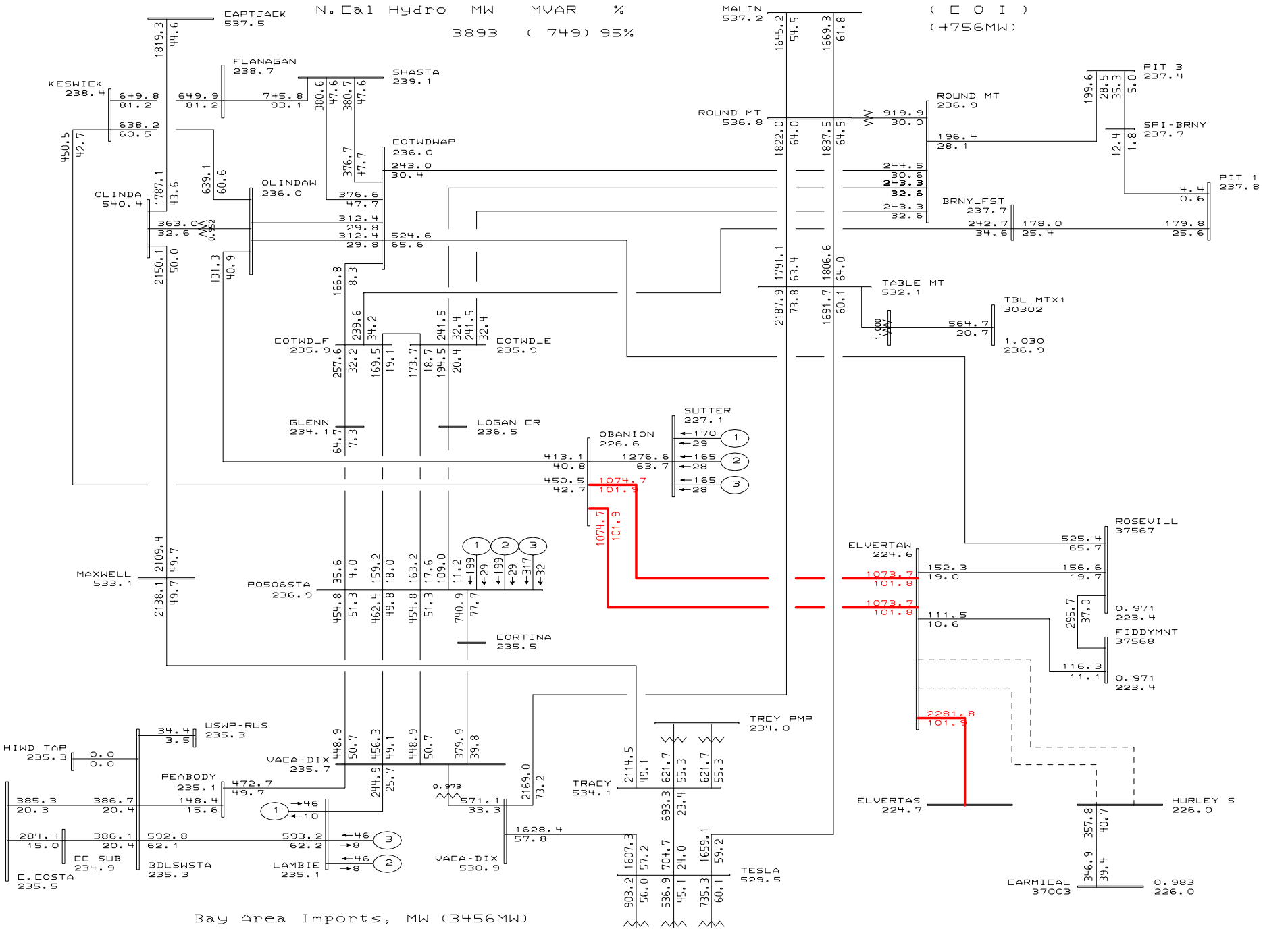


General Electric International, Inc. PSLF Program AMPS/Pct Thu Dec 07 09:46:05 2006

PG&E 2004 BASE CASE SERIES - 2010 North Valley Summer Peak Case
PATH15=-1127 MW(S-N) PATH26=3313 MW(N-S) PDCI=3105 MW(N-S) COI=4753 MW(N-S)
CPV Colusa - 2010 Summer Peak - after (TMPP & PO441 removed)

Plot 80 - Heavy Summer - After Project
Outage: Elverta-Hurley #1 & #2 230 kV Lines

C:\PSLF_Work\Projects\EL_Colus
C:\PSLF_Work\Projects\EL_Colus
Rating = 2

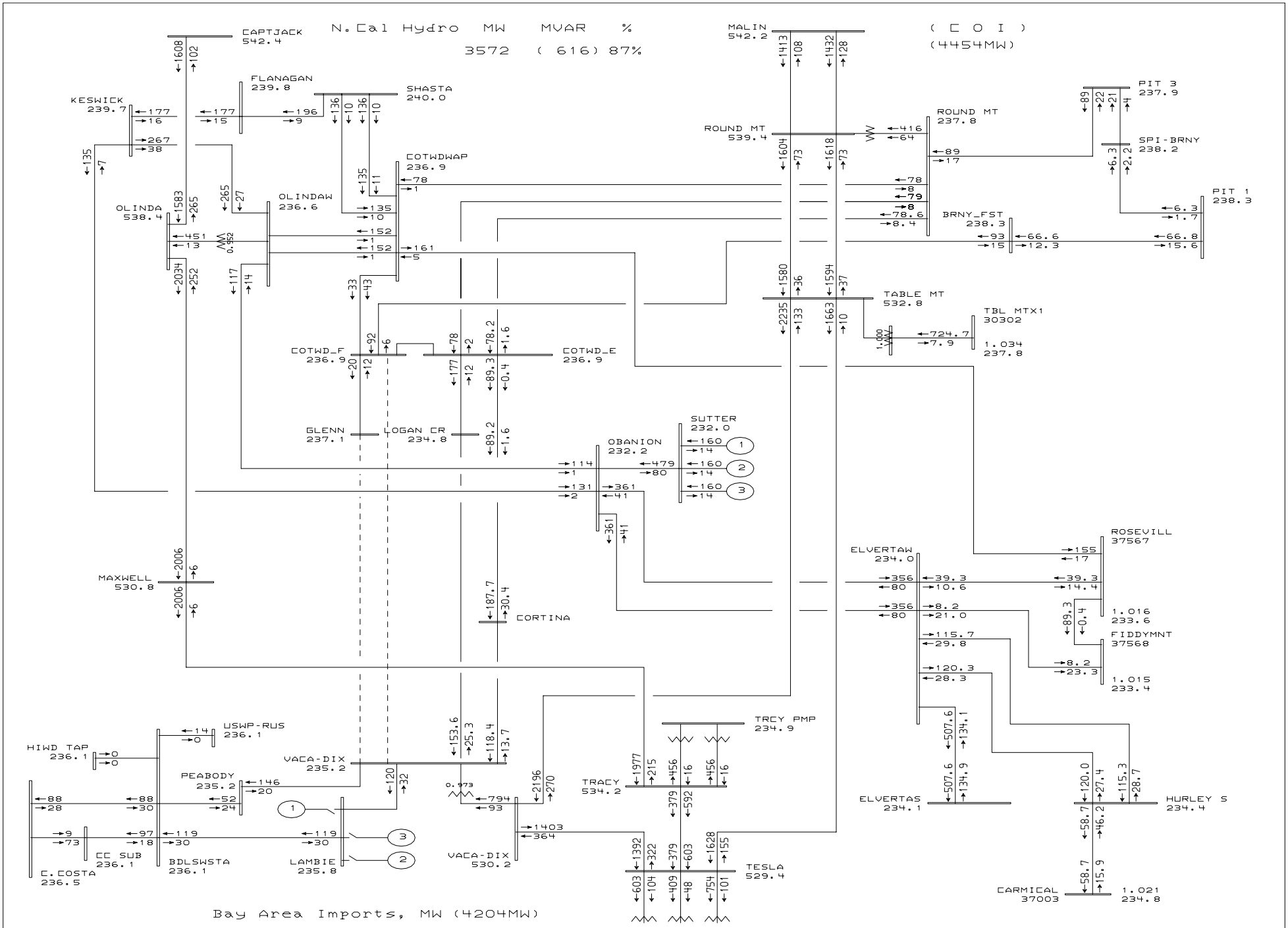


General Electric International, Inc. PSLF Program MW/MVAR Thu Dec 07 09:46:08 2006

PG&E 2004 BASE CASE SERIES - 2010 North Valley Spring Off Peak Case
PATH15=-2139 MW(S-N) PATH26=3365 MW(N-S) PDCI=3105 MW(N-S) COI=4460 MW(N-S)
CPV Colusa - 2010 Spring Off Peak - before (TMPP and P0441 removed)

Plot 81 - Spring Off-peak - Before Project
Outage: Vaca Dixon-Cottwd & Glenn 230kV Lines

C:\PSLF_Work\Projects\EL_Colus
C:\PSLF_Work\Projects\EL_Colus
Rating = 2

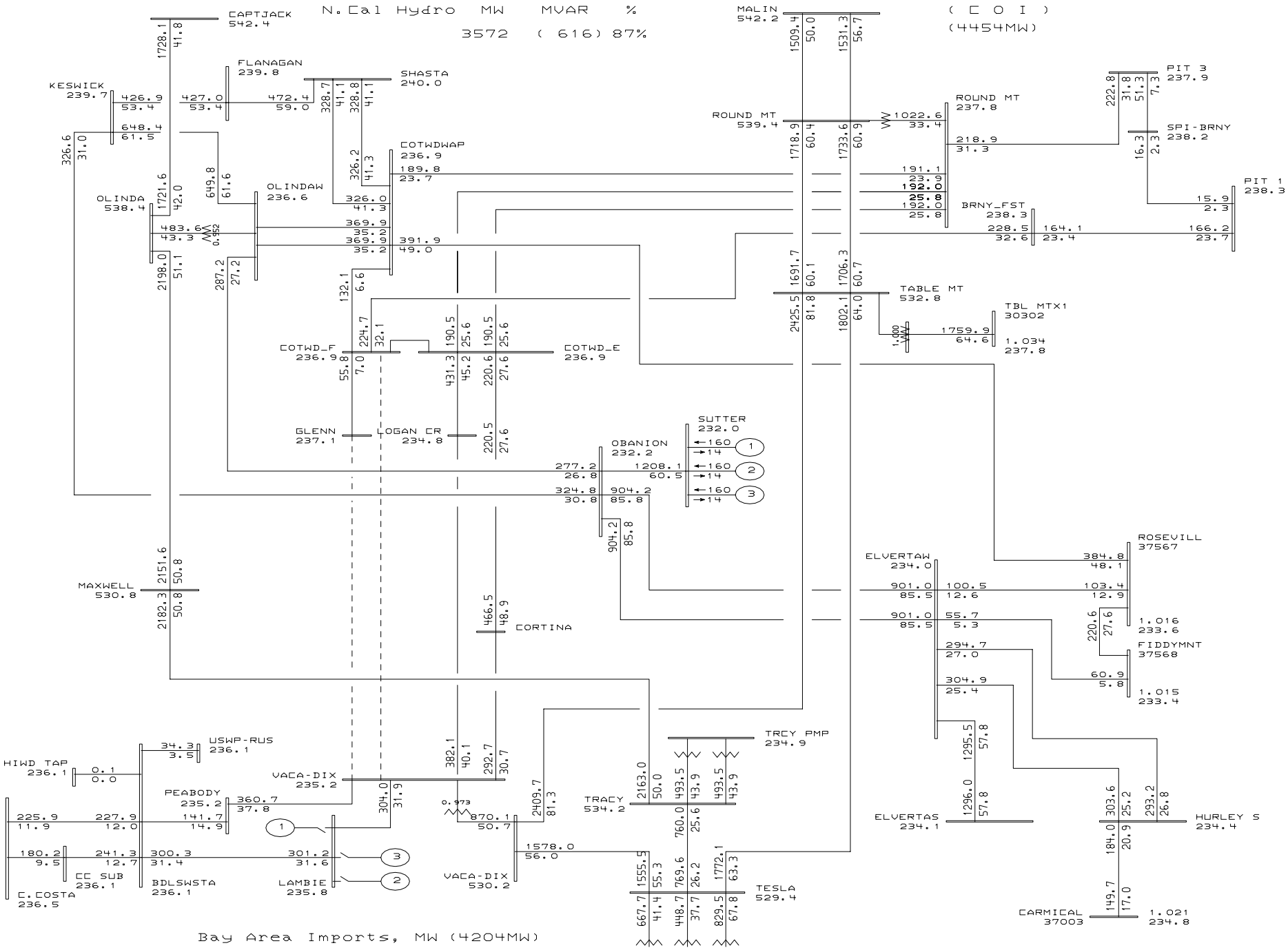


General Electric International, Inc. PSLF Program AMPS/Pct Thu Dec 07 09:46:10 2006

PG&E 2004 BASE CASE SERIES - 2010 North Valley Spring Off Peak Case
PATH15=-2139 MW(S-N) PATH26=3365 MW(N-S) PDCI=3105 MW(N-S) COI=4460 MW(N-S)
CPV Colusa - 2010 Spring Off Peak - before (TMPP and P0441 removed)

Plot 82 - Spring Off-peak - Before Project
Outage: Vaca Dixon-Cottwd & Glenn 230kV Lines

C:\PSLF_Work\Projects\EL_Colus
C:\PSLF_Work\Projects\EL_Colus
Rating = 2

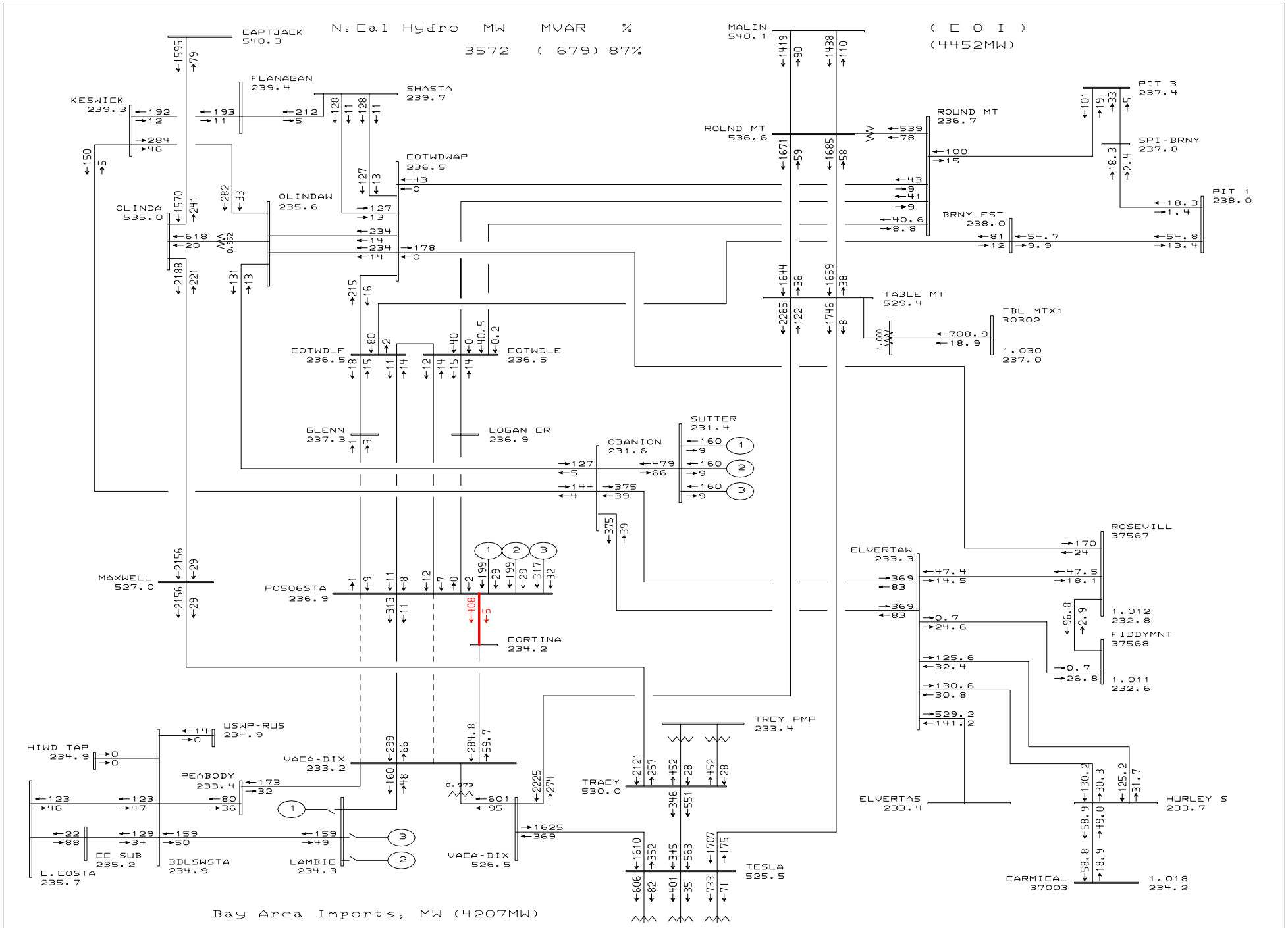


General Electric International, Inc. PSLF Program MW/MVAR Thu Dec 07 09:46:12 2006

PG&E 2004 BASE CASE SERIES - 2010 North Valley Spring Off Peak Case
PATH15=-2732 MW(S-N) PATH26=3330 MW(N-S) PDCI=3103 MW(N-S) COI=4458 MW(N-S)
CPV Colusa - 2010 Spring Off Peak - after (TMPP & P0441 removed)

Plot 83 - Spring Off-peak - After Project
Outage: CPV-Vaca Dixon #2 & #4 230kV Lines

C:\PSLF_Work\Projects\EL_Colus
C:\PSLF_Work\Projects\EL_Colus
Rating = 2

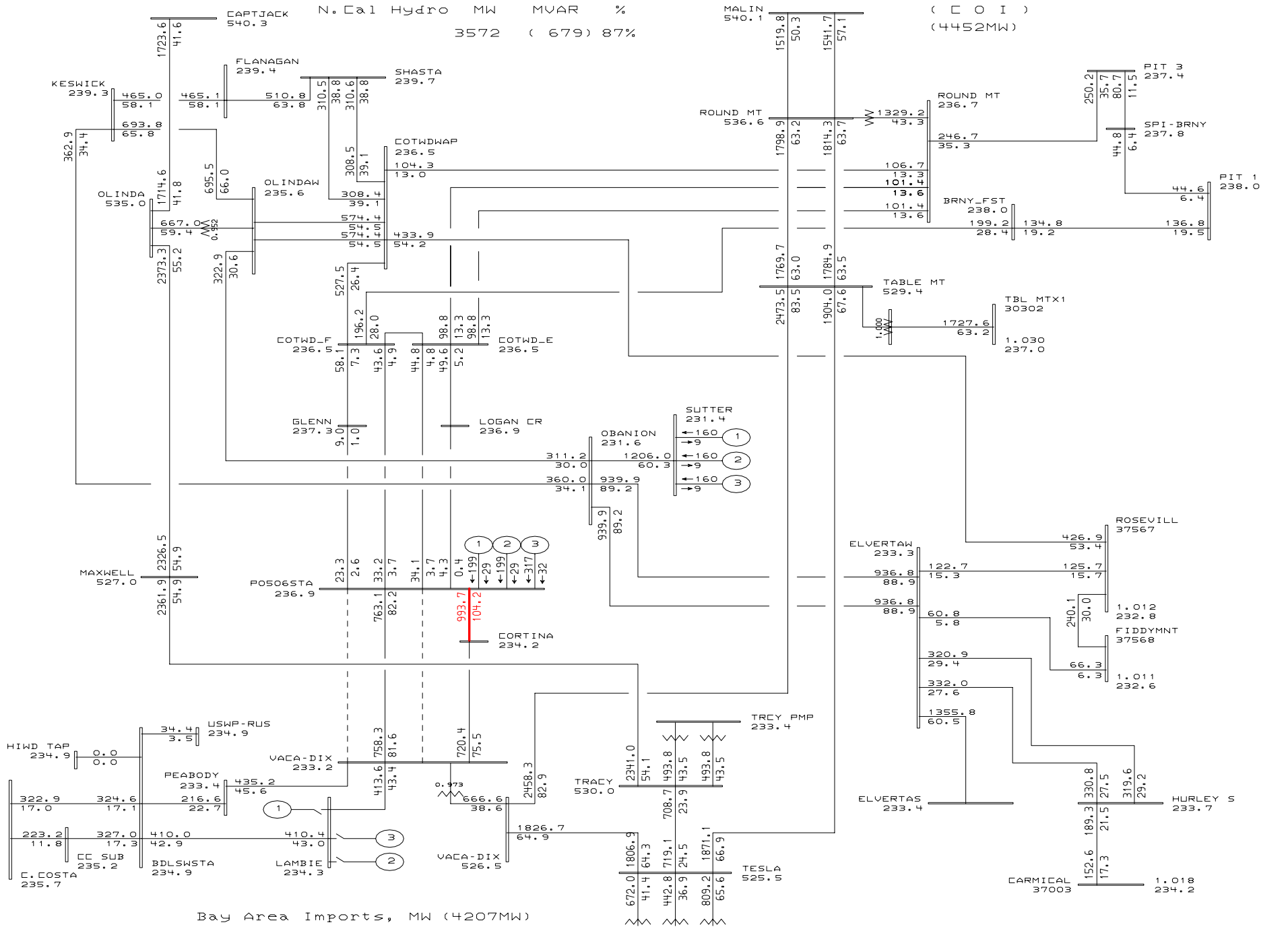


General Electric International, Inc. PSLF Program AMPS/Pct Thu Dec 07 09:46:15 2006

PG&E 2004 BASE CASE SERIES - 2010 North Valley Spring Off Peak Case
PATH15=-2732 MW(S-N) PATH26=3330 MW(N-S) PDCI=3103 MW(N-S) COI=4458 MW(N-S)
CPV Colusa - 2010 Spring Off Peak - after (TMPP & P0441 removed)

Plot 84 - Spring Off-peak - After Project
Outage: CPV-Vaca Dixon #2 & #4 230kV Lines

C:\PSLF_Work\Projects\EL_Colus
C:\PSLF_Work\Projects\EL_Colus
Rating = 2

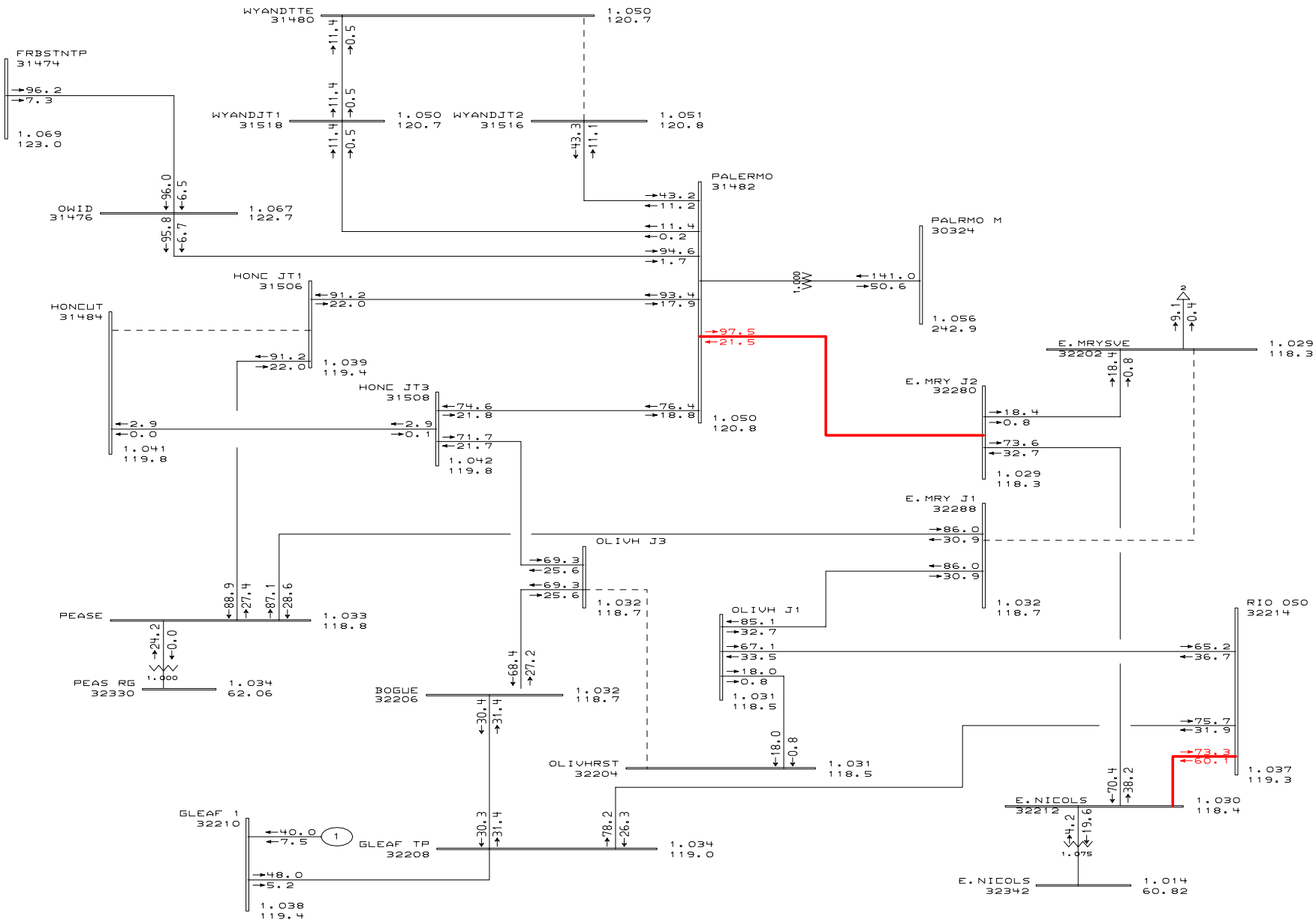


General Electric International, Inc. PSLF Program MW/MVAR Thu Dec 07 09:46:17 2006

PG&E 2004 BASE CASE SERIES - 2010 North Valley Spring Off Peak Case
PATH15=-2139 MW(S-N) PATH26=3365 MW(N-S) PDCI=3105 MW(N-S) COI=4460 MW(N-S)
CPV Colusa - 2010 Spring Off Peak - before (TMPP and P0441 removed)

Plot 85 - Spring Off-peak - Before Project
Outage: Rio Oso-Tbl & Colgate 230kV Lines & Coltage Unit 2

C:\PSLF_Work\Projects\EL_Colus
C:\PSLF_Work\Projects\EL_Colus
Rating = 2

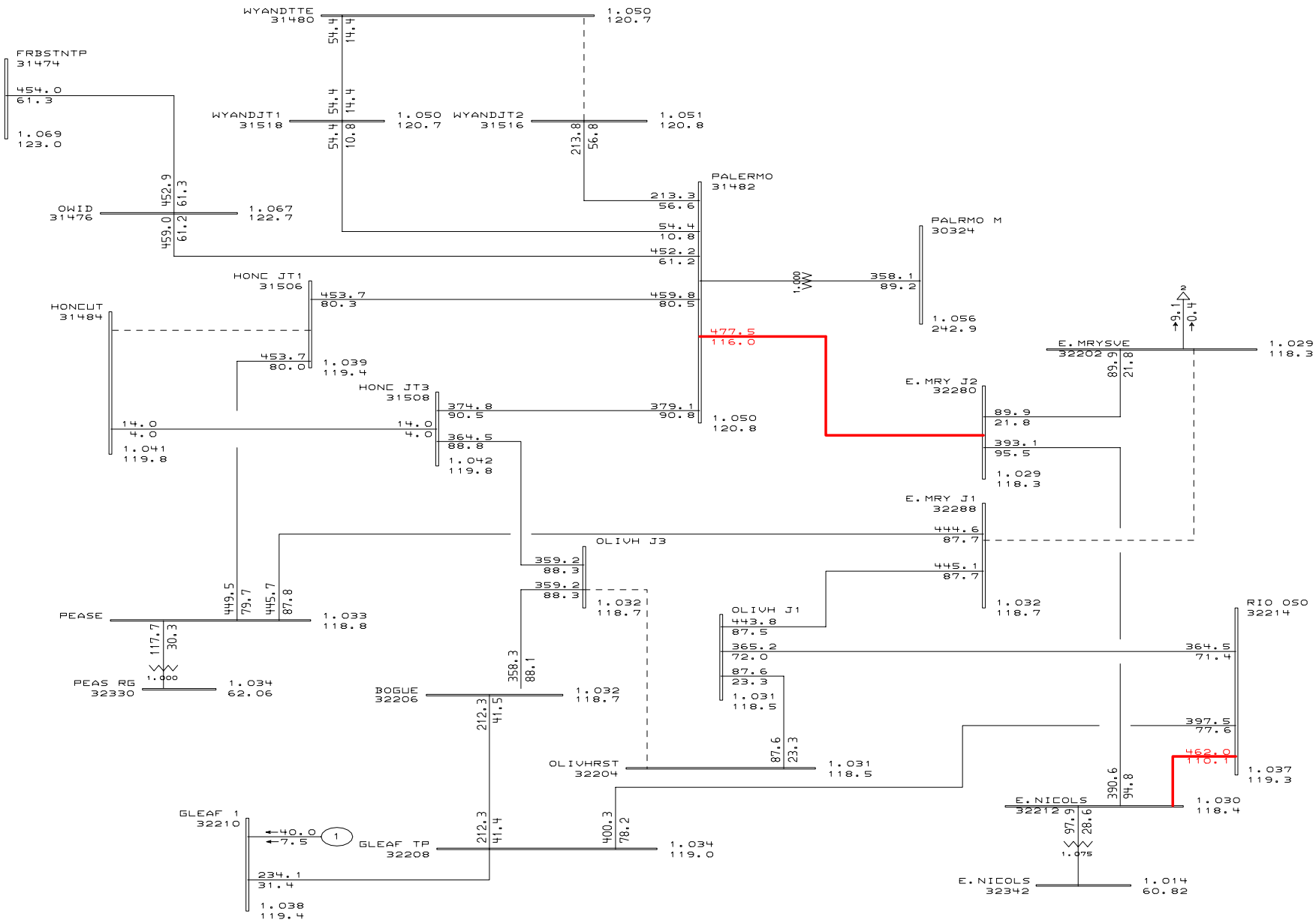


General Electric International, Inc. PSLF Program AMPS/Pct Thu Dec 07 09:46:19 2006

PG&E 2004 BASE CASE SERIES - 2010 North Valley Spring Off Peak Case
PATH15=-2139 MW(S-N) PATH26=3365 MW(N-S) PDCI=3105 MW(N-S) COI=4460 MW(N-S)
CPV Colusa - 2010 Spring Off Peak - before (TMPP and P0441 removed)

Plot 86 - Spring Off-peak - Before Project
Outage: Rio Oso-Tbl & Colgate 230kV Lines & Coltage Unit 2

C:\PSLF_Work\Projects\EL_Colus
C:\PSLF_Work\Projects\EL_Colus
Rating = 2

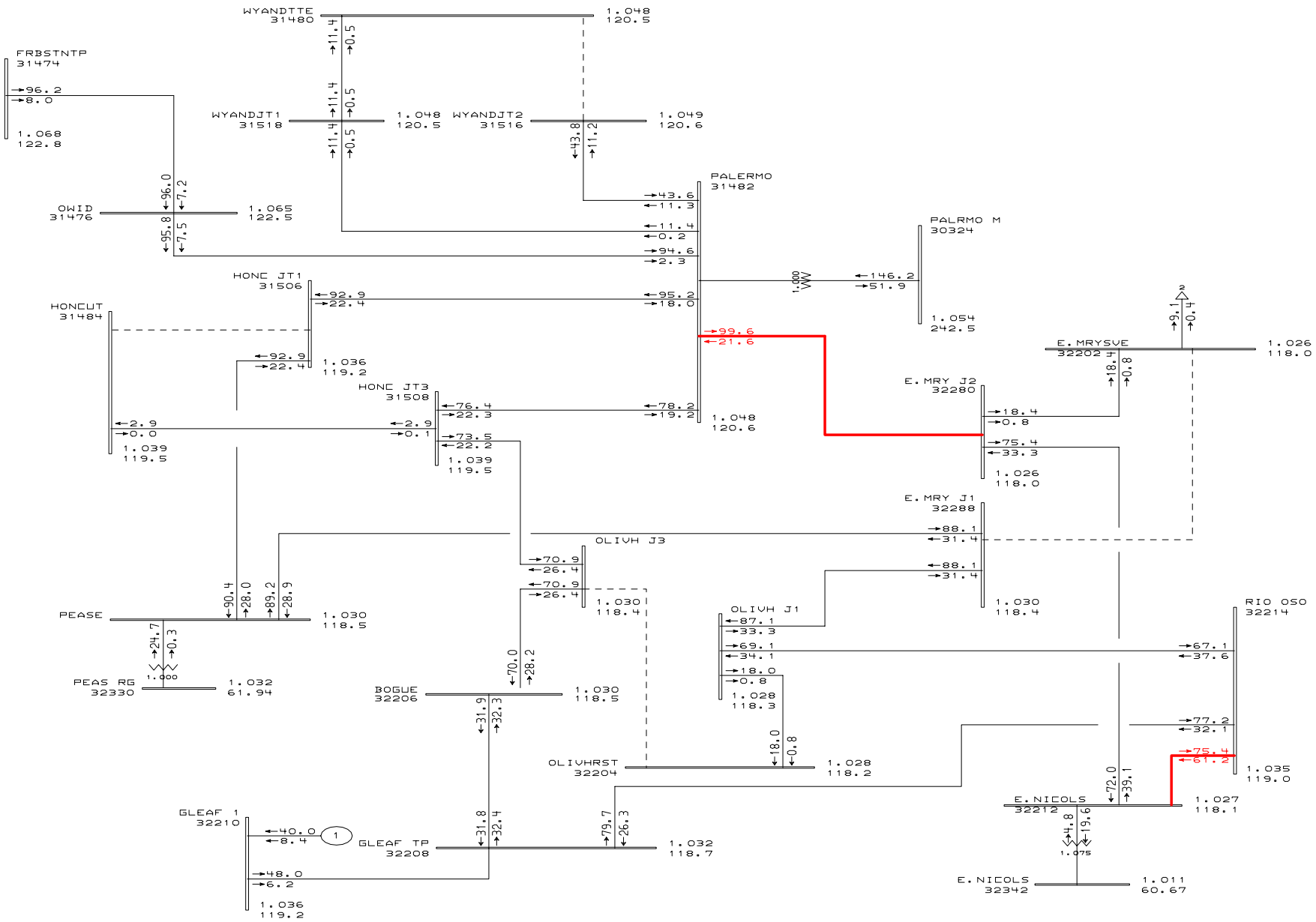


General Electric International, Inc. PSLF Program MW/MVAR Thu Dec 07 09:46:22 2006

PG&E 2004 BASE CASE SERIES - 2010 North Valley Spring Off Peak Case
PATH15=-2732 MW(S-N) PATH26=3330 MW(N-S) PDCI=3103 MW(N-S) COI=4458 MW(N-S)
CPV Colusa - 2010 Spring Off Peak - after (TMPP & P0441 removed)

Plot 87 - Spring Off-peak - After Project
Outage: Rio Oso-Tbl & Colgate 230kV Lines & Coltage Unit 2

C:\PSLF_Work\Projects\EL_Colus
C:\PSLF_Work\Projects\EL_Colus
Rating = 2

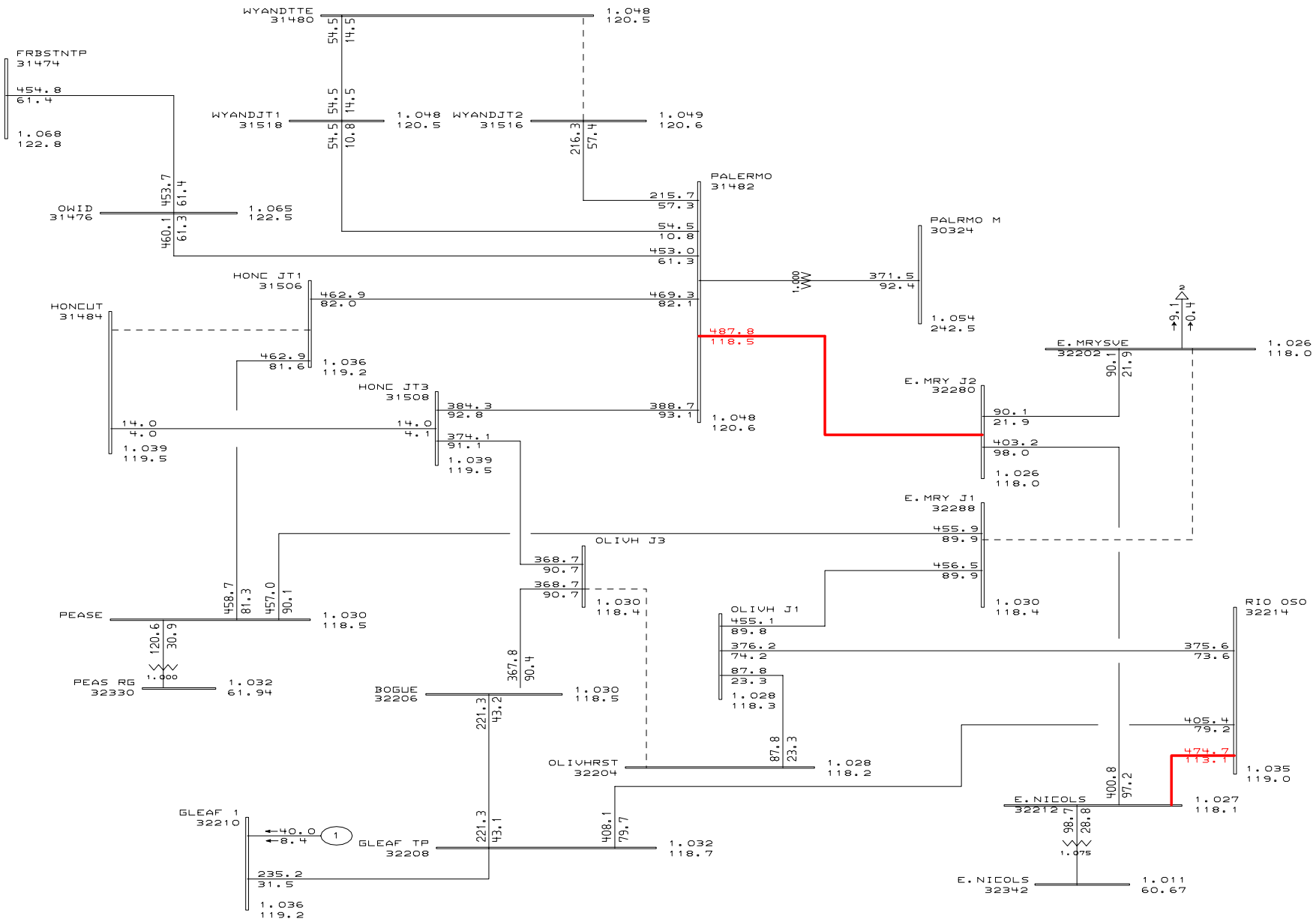


General Electric International, Inc. PSLF Program AMPS/Pct Thu Dec 07 09:46:25 2006

PG&E 2004 BASE CASE SERIES - 2010 North Valley Spring Off Peak Case
PATH15=-2732 MW(S-N) PATH26=3330 MW(N-S) PDCI=3103 MW(N-S) COI=4458 MW(N-S)
CPV Colusa - 2010 Spring Off Peak - after (TMPP & P0441 removed)

Plot 88 - Spring Off-peak - After Project
Outage: Rio Oso-Tbl & Colgate 230kV Lines & Coltage Unit 2

C:\PSLF_Work\Projects\EL_Colus
C:\PSLF_Work\Projects\EL_Colus
Rating = 2

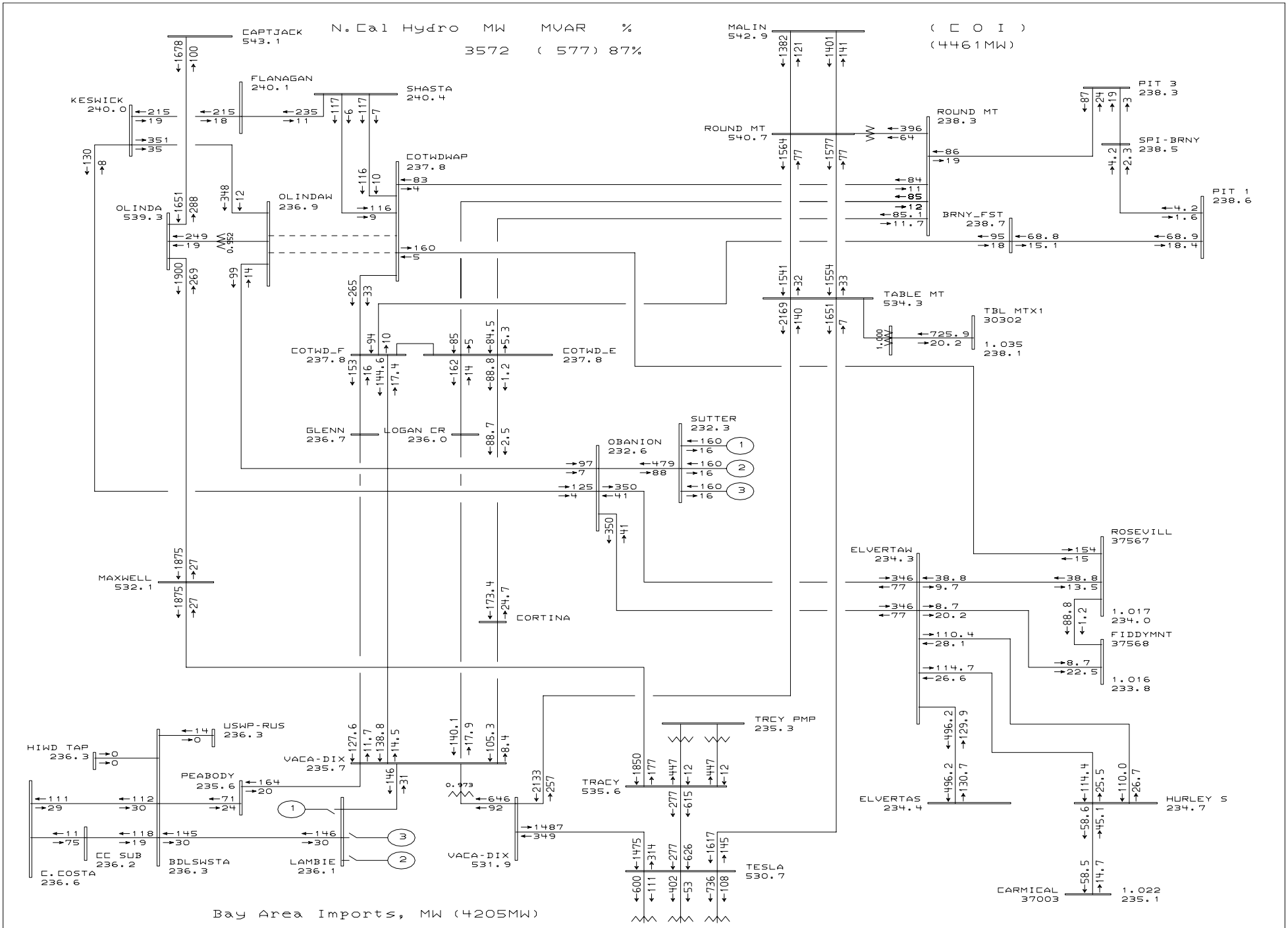


General Electric International, Inc. PSLF Program MW/MVAR Thu Dec 07 09:46:27 2006

PG&E 2004 BASE CASE SERIES - 2010 North Valley Spring Off Peak Case
PATH15=-2139 MW(S-N) PATH26=3365 MW(N-S) PDCI=3105 MW(N-S) COI=4460 MW(N-S)
CPV Colusa - 2010 Spring Off Peak - before (TMPP and P0441 removed)

Plot 89 - Spring Off-peak - Before Project
Outage: Olinda-Cottonwood #1 & #2 230 kV Lines

C:\PSLF_Work\Projects\EL_Colus
C:\PSLF_Work\Projects\EL_Colus
Rating = 2

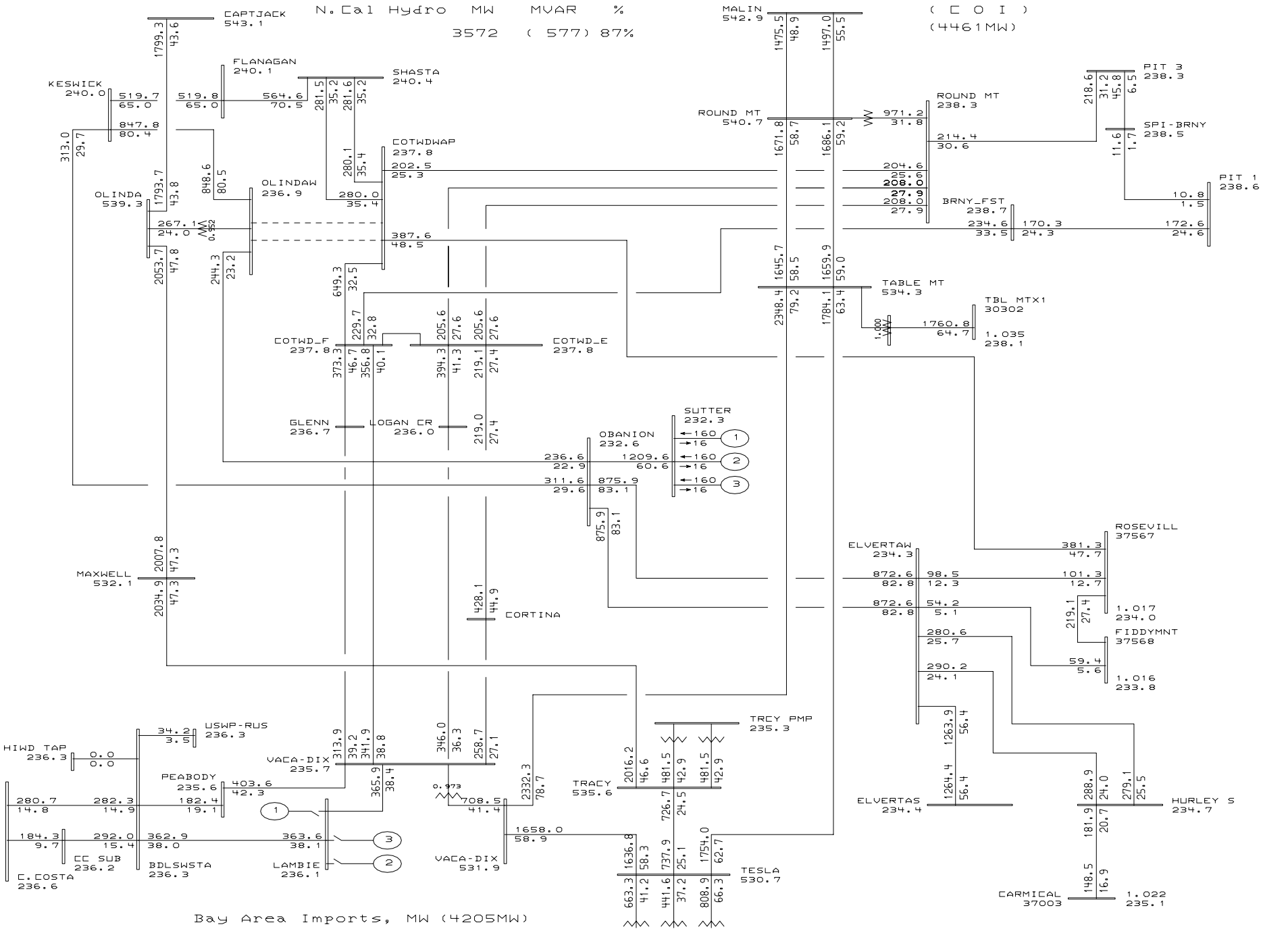


General Electric International, Inc. PSLF Program AMPS/Pct Thu Dec 07 09:46:29 2006

PG&E 2004 BASE CASE SERIES - 2010 North Valley Spring Off Peak Case
PATH15=-2139 MW(S-N) PATH26=3365 MW(N-S) PDCI=3105 MW(N-S) COI=4460 MW(N-S)
CPV Colusa - 2010 Spring Off Peak - before (TMPP and P0441 removed)

Plot 90 - Spring Off-peak - Before Project
Outage: Olinda-Cottonwood #1 & #2 230 kV Lines

C:\PSLF_Work\Projects\EL_Colus
C:\PSLF_Work\Projects\EL_Colus
Rating = 2

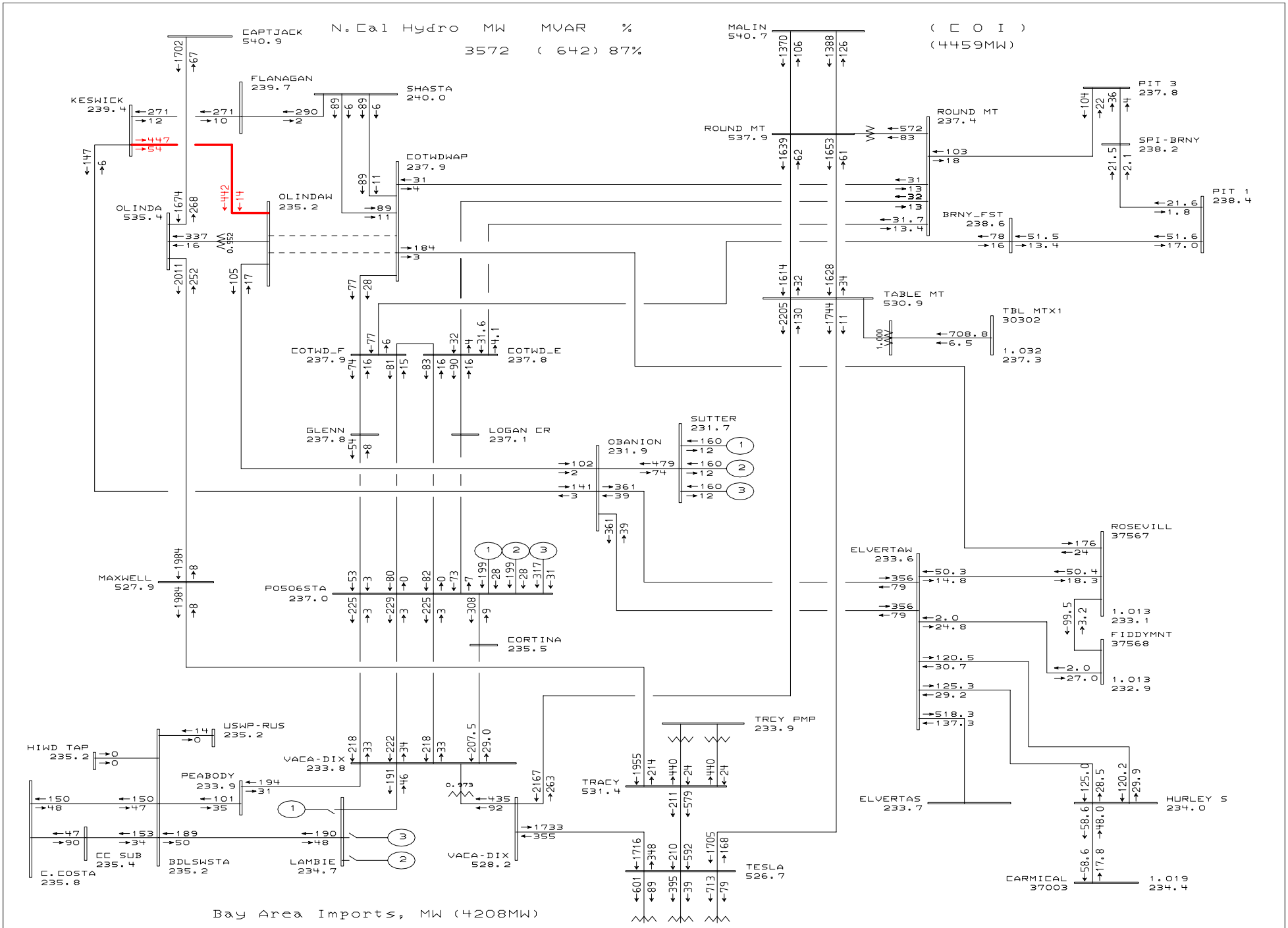


General Electric International, Inc. PSLF Program MW/MVAR Thu Dec 07 09:46:31 2006

PG&E 2004 BASE CASE SERIES - 2010 North Valley Spring Off Peak Case
PATH15=-2732 MW(S-N) PATH26=3330 MW(N-S) PDCI=3103 MW(N-S) COI=4458 MW(N-S)
CPV Colusa - 2010 Spring Off Peak - after (TMPP & P0441 removed)

Plot 91 - Spring Off-peak - After Project
Outage: Olinda-Cottonwood #1 & #2 230 kV Lines

C:\PSLF_Work\Projects\EL_Colus
C:\PSLF_Work\Projects\EL_Colus
Rating = 2

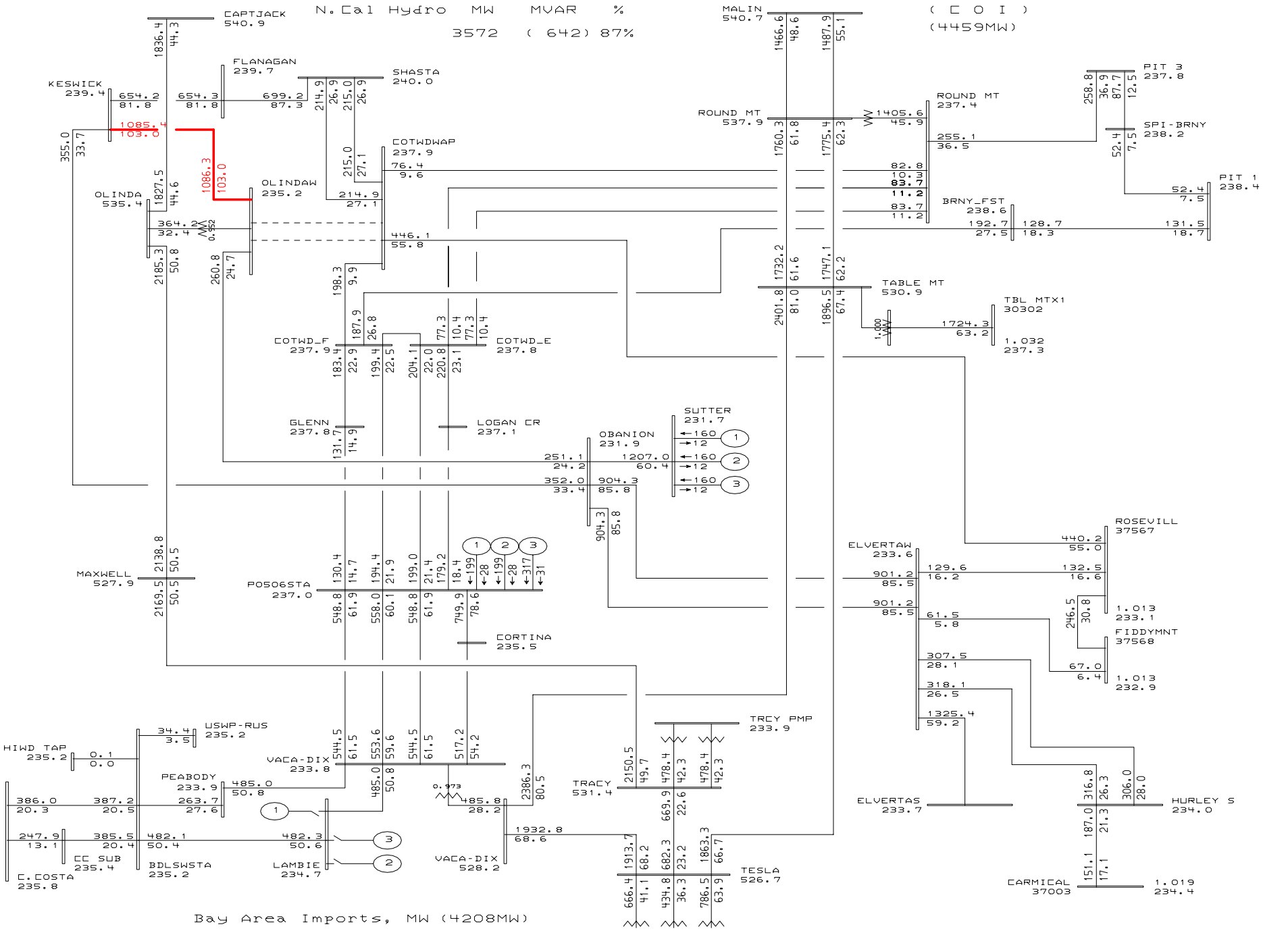


General Electric International, Inc. PSLF Program AMPS/Pct Thu Dec 07 09:46:34 2006

PG&E 2004 BASE CASE SERIES - 2010 North Valley Spring Off Peak Case
PATH15=-2732 MW(S-N) PATH26=3330 MW(N-S) PDCI=3103 MW(N-S) COI=4458 MW(N-S)
CPV Colusa - 2010 Spring Off Peak - after (TMPP & P0441 removed)

Plot 92 - Spring Off-peak - After Project
Outage: Olinda-Cottonwood #1 & #2 230 kV Lines

C:\PSLF_Work\Projects\EL_Colus
C:\PSLF_Work\Projects\EL_Colus
Rating = 2

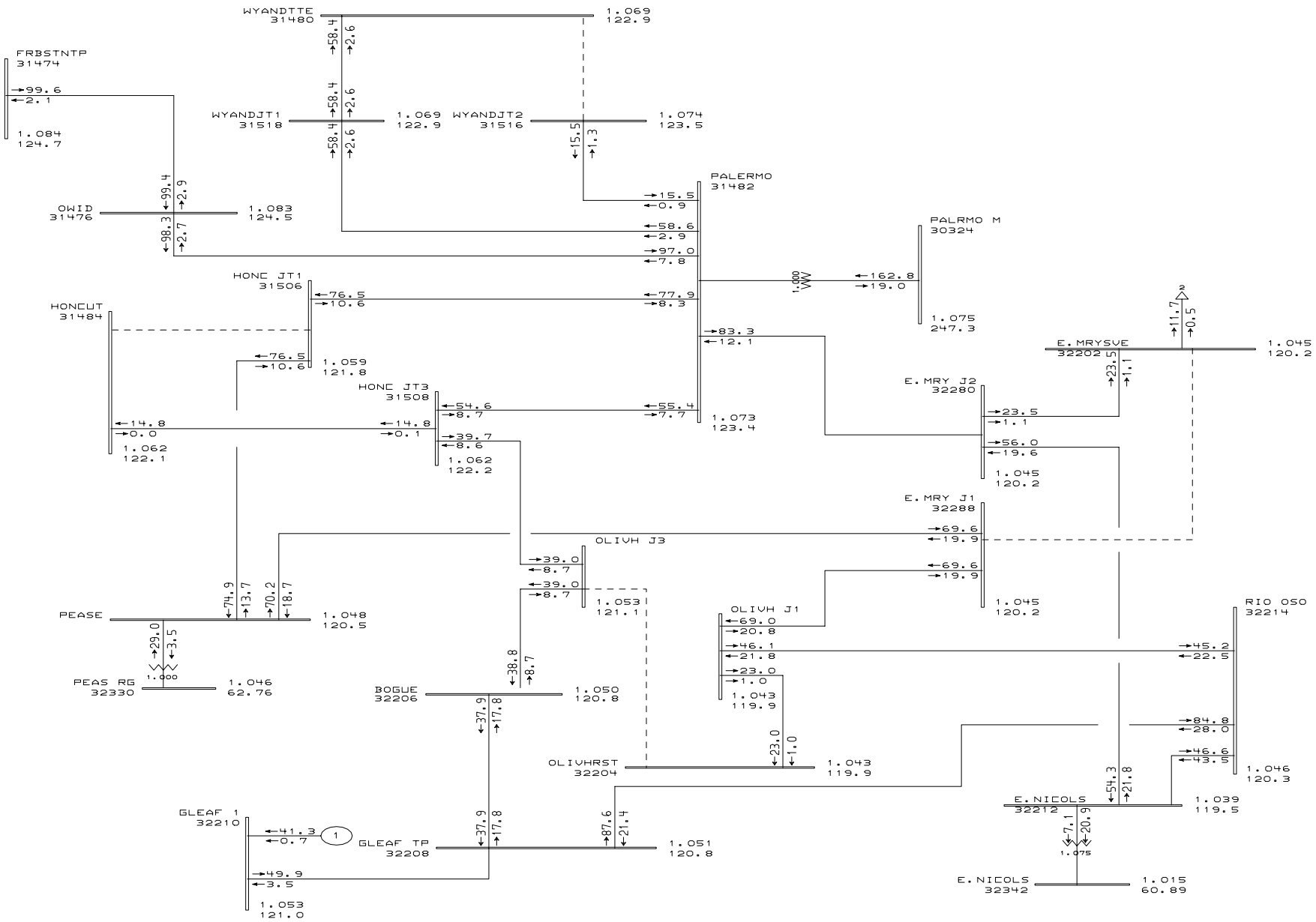


General Electric International, Inc. PSLF Program MW/MVAR Thu Dec 07 09:46:34 2006

PG&E 2004 BASE CASE SERIES - 2010 North Valley Summer Peak Case
PATH15=-518 MW(S-N) PATH26=3352 MW(N-S) PDCI=3105 MW(N-S) COI=4754 MW(N-S)
CPV Colusa - 2010 Summer Peak - before (TMPP & P0441 removed)

Plot 93 - Heavy Summer - Before Project
Outage: Table Mt.-Tesla & Vaca Dixon 500 kV DLO

C:\PSLF_Work\Projects\EL_Colus
C:\PSLF_Work\Projects\EL_Colus
Rating = 2

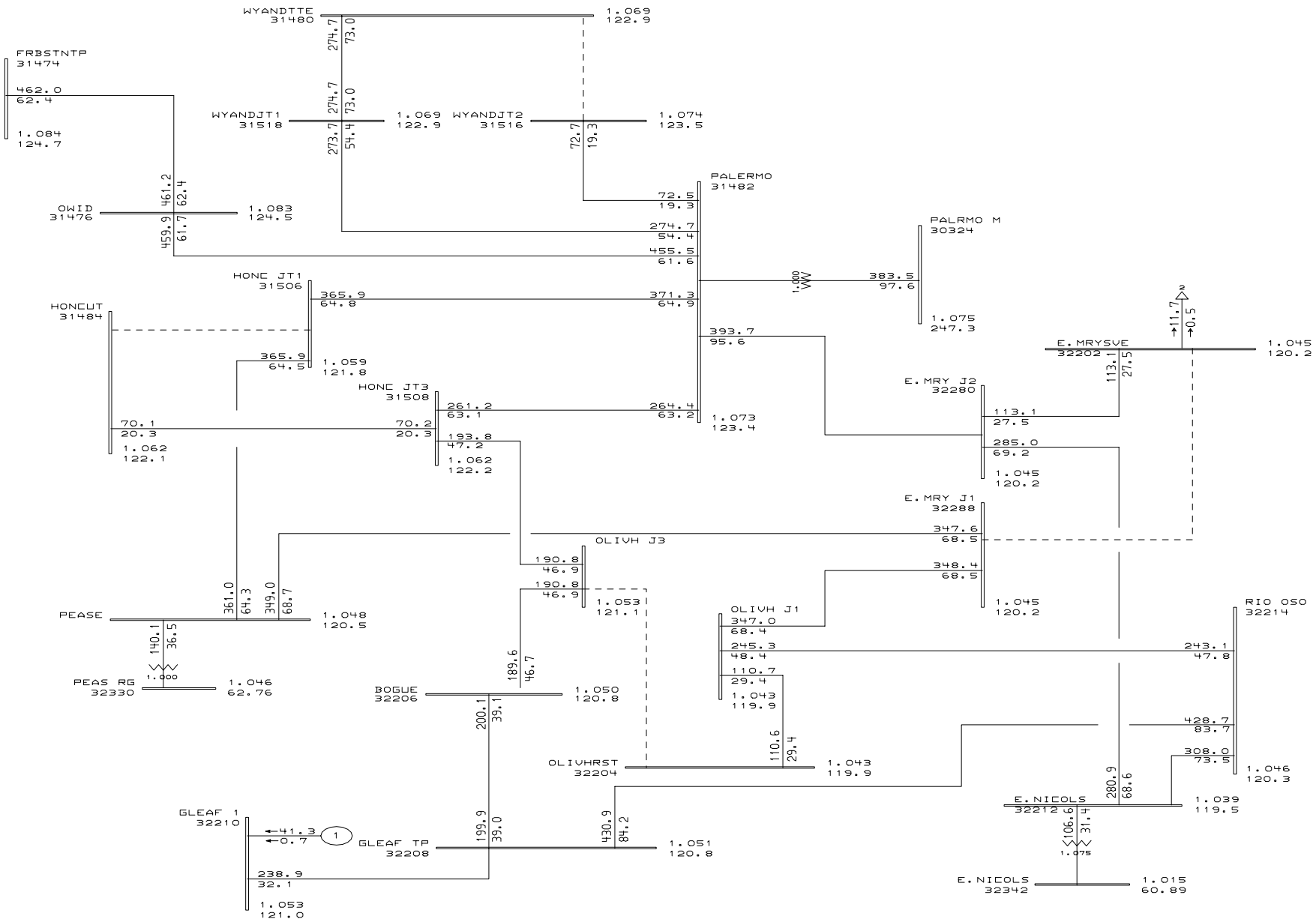


General Electric International, Inc. PSLF Program AMPS/Pct Thu Dec 07 09:46:34 2006

PG&E 2004 BASE CASE SERIES - 2010 North Valley Summer Peak Case
PATH15=-518 MW(S-N) PATH26=3352 MW(N-S) PDCI=3105 MW(N-S) COI=4754 MW(N-S)
CPV Colusa - 2010 Summer Peak - before (TMPP & P0441 removed)

Plot 94 - Heavy Summer - Before Project
Outage: Table Mt.-Tesla & Vaca Dixon 500 kV DLO

C:\PSLF_Work\Projects\EL_Colus
C:\PSLF_Work\Projects\EL_Colus
Rating = 2

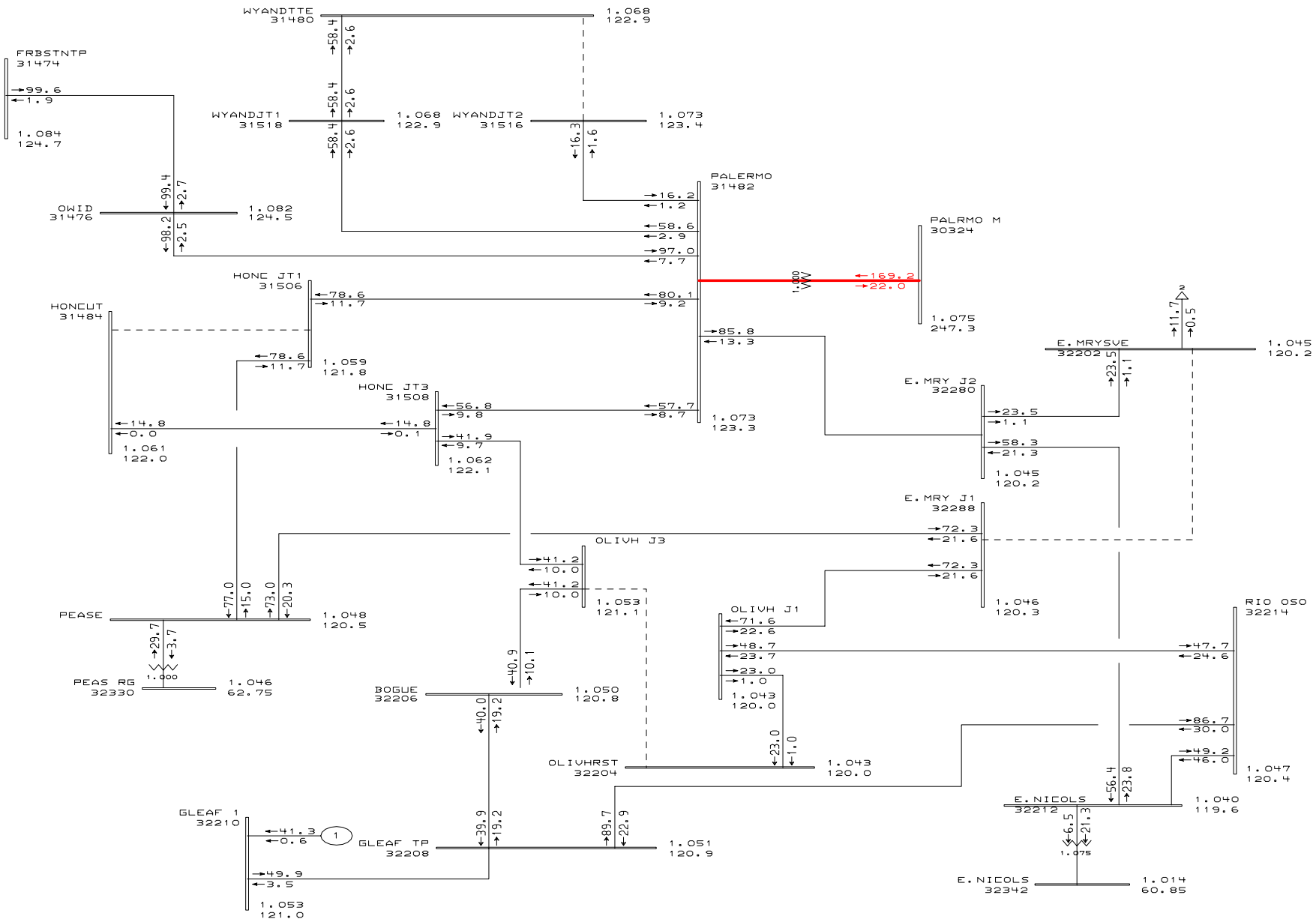


General Electric International, Inc. PSLF Program MW/MVAR Thu Dec 07 09:46:35 2006

PG&E 2004 BASE CASE SERIES - 2010 North Valley Summer Peak Case
PATH15=-1127 MW(S-N) PATH26=3313 MW(N-S) PDCI=3105 MW(N-S) COI=4753 MW(N-S)
CPV Colusa - 2010 Summer Peak - after (TMPP & P0441 removed)

Plot 95 - Heavy Summer - After Project
Outage: Table Mt.-Tesla & Vaca Dixon 500 kV DLO

C:\PSLF_Work\Projects\EL_Colus
C:\PSLF_Work\Projects\EL_Colus
Rating = 2

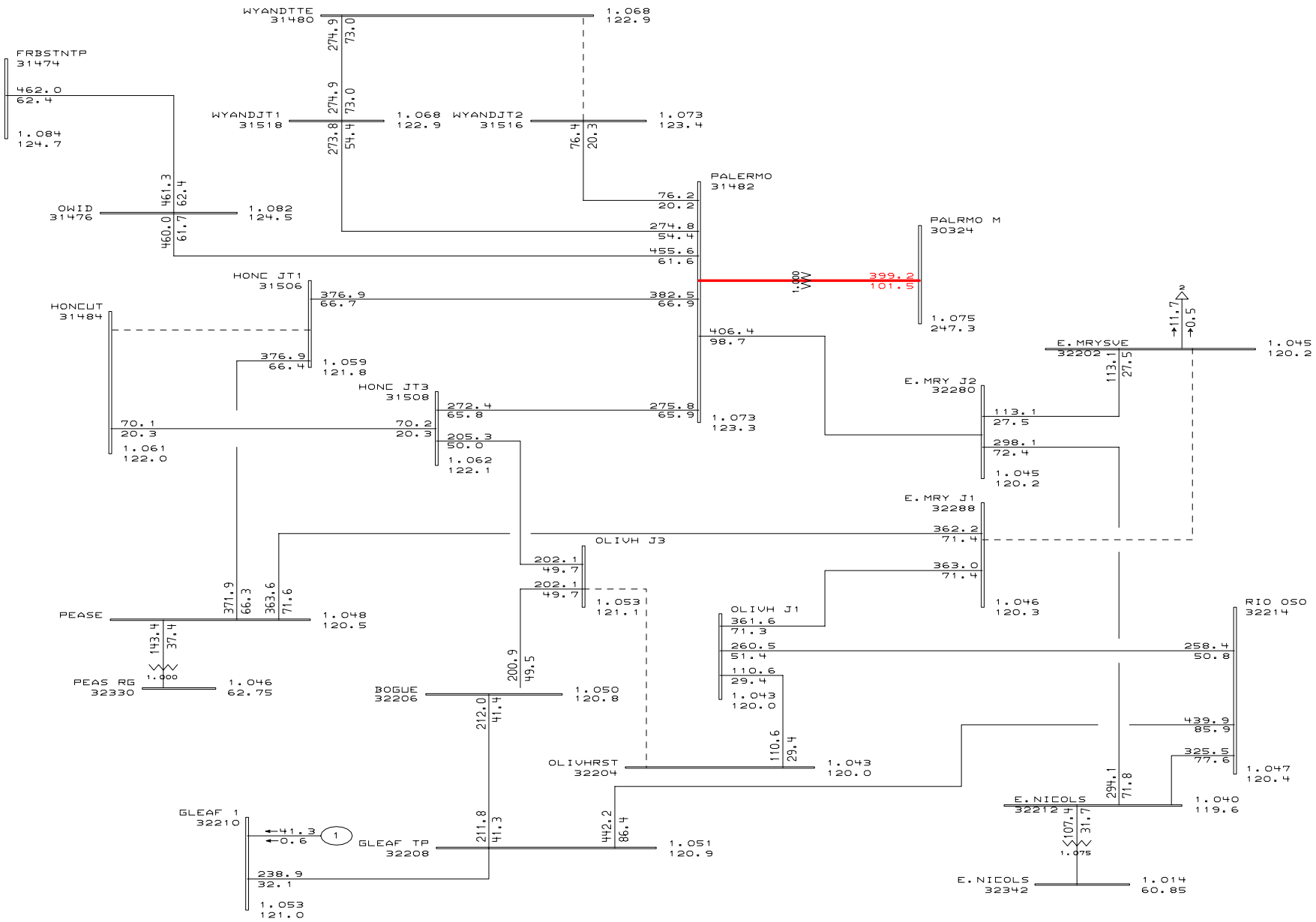


General Electric International, Inc. PSLF Program AMPS/Pct Thu Dec 07 09:46:35 2006

PG&E 2004 BASE CASE SERIES - 2010 North Valley Summer Peak Case
PATH15=-1127 MW(S-N) PATH26=3313 MW(N-S) PDCI=3105 MW(N-S) COI=4753 MW(N-S)
CPV Colusa - 2010 Summer Peak - after (TMPP & P0441 removed)

Plot 96 - Heavy Summer - After Project
Outage: Table Mt.-Tesla & Vaca Dixon 500 kV DLO

C:\PSLF_Work\Projects\EL_Colus
C:\PSLF_Work\Projects\EL_Colus
Rating = 2

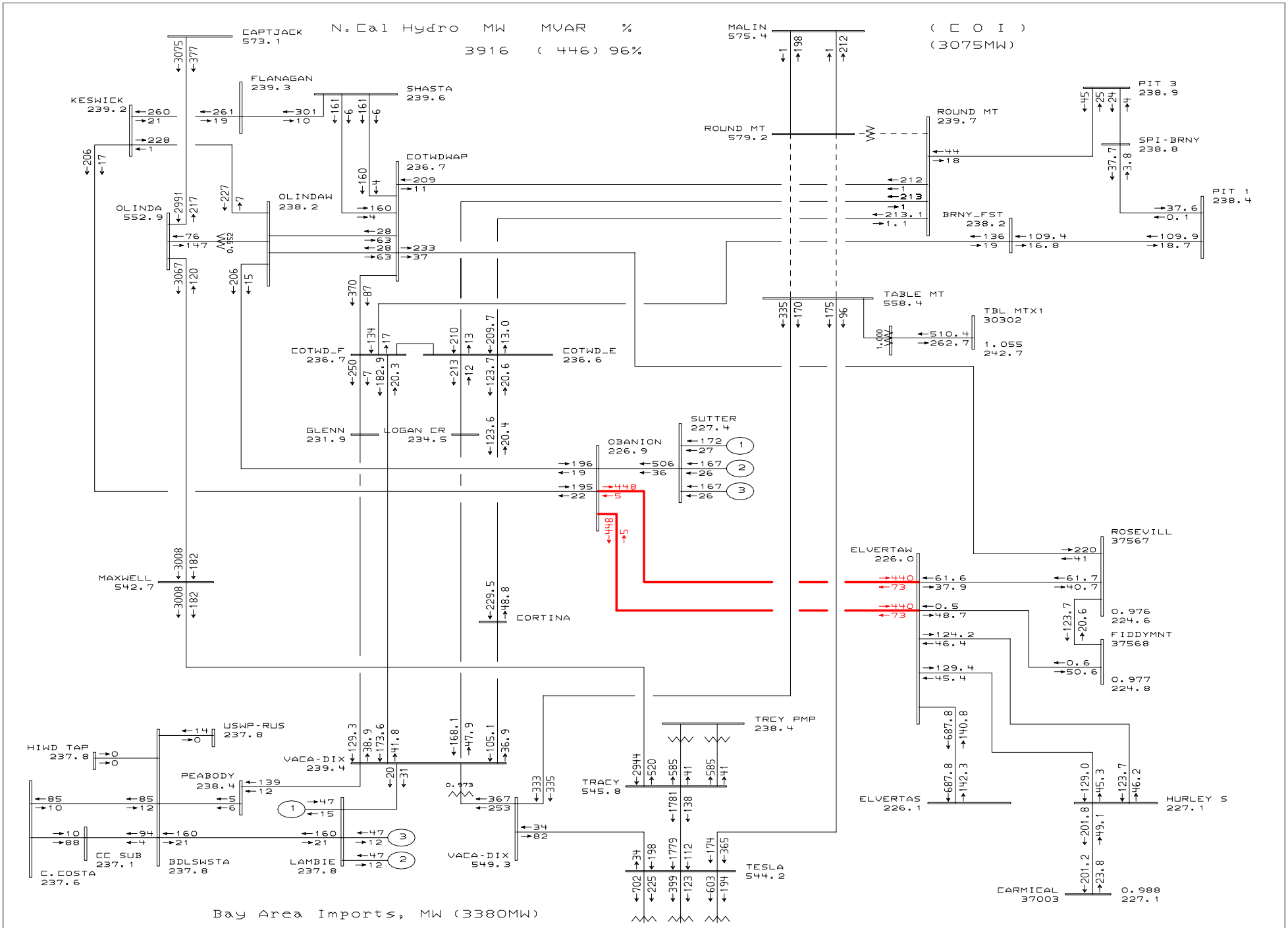


General Electric International, Inc. PSLF Program MW/MVAR Thu Dec 07 09:46:36 2006

PG&E 2004 BASE CASE SERIES - 2010 North Valley Summer Peak Case
PATH15=-518 MW(S-N) PATH26=3352 MW(N-S) PDCI=3105 MW(N-S) COI=4754 MW(N-S)
CPV Colusa - 2010 Summer Peak - before (TMPP & P0441 removed)

Plot 97 - Heavy Summer - Before Project
Outage: Round Mt.-Table Mt.#1 & #2 500 kV DLO

C:\PSLF_Work\Projects\EL_Colus
C:\PSLF_Work\Projects\EL_Colus
Rating = 2

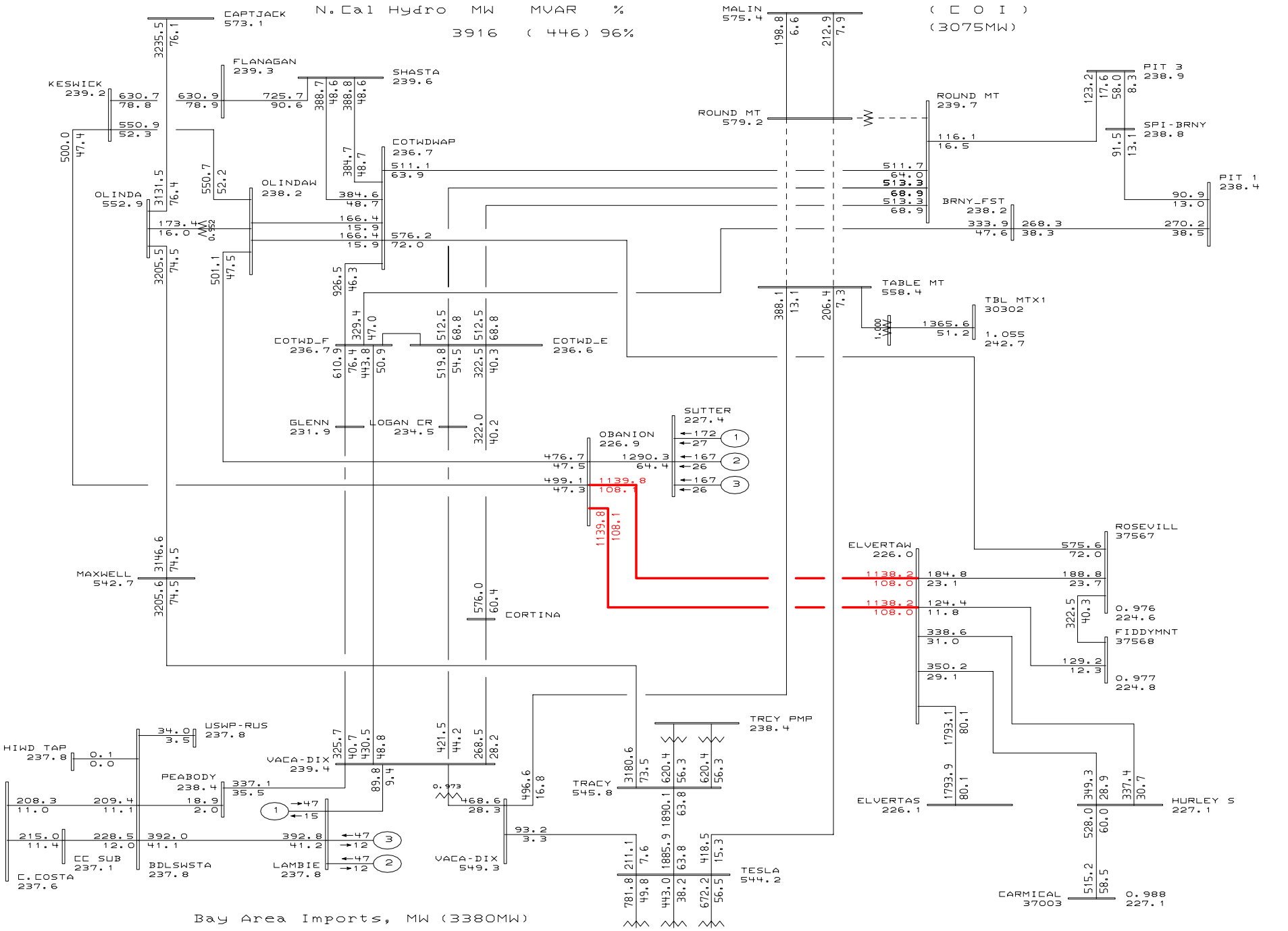


General Electric International, Inc. PSLF Program AMPS/Pct Thu Dec 07 09:46:36 2006

PG&E 2004 BASE CASE SERIES - 2010 North Valley Summer Peak Case
PATH15=-518 MW(S-N) PATH26=3352 MW(N-S) PDCI=3105 MW(N-S) COI=4754 MW(N-S)
CPV Colusa - 2010 Summer Peak - before (TMPP & P0441 removed)

Plot 98 - Heavy Summer - Before Project
Outage: Round Mt.-Table Mt.#1 & #2 500 kV DLO

C:\PSLF_Work\Projects\EL_Colus
C:\PSLF_Work\Projects\EL_Colus
Rating = 2

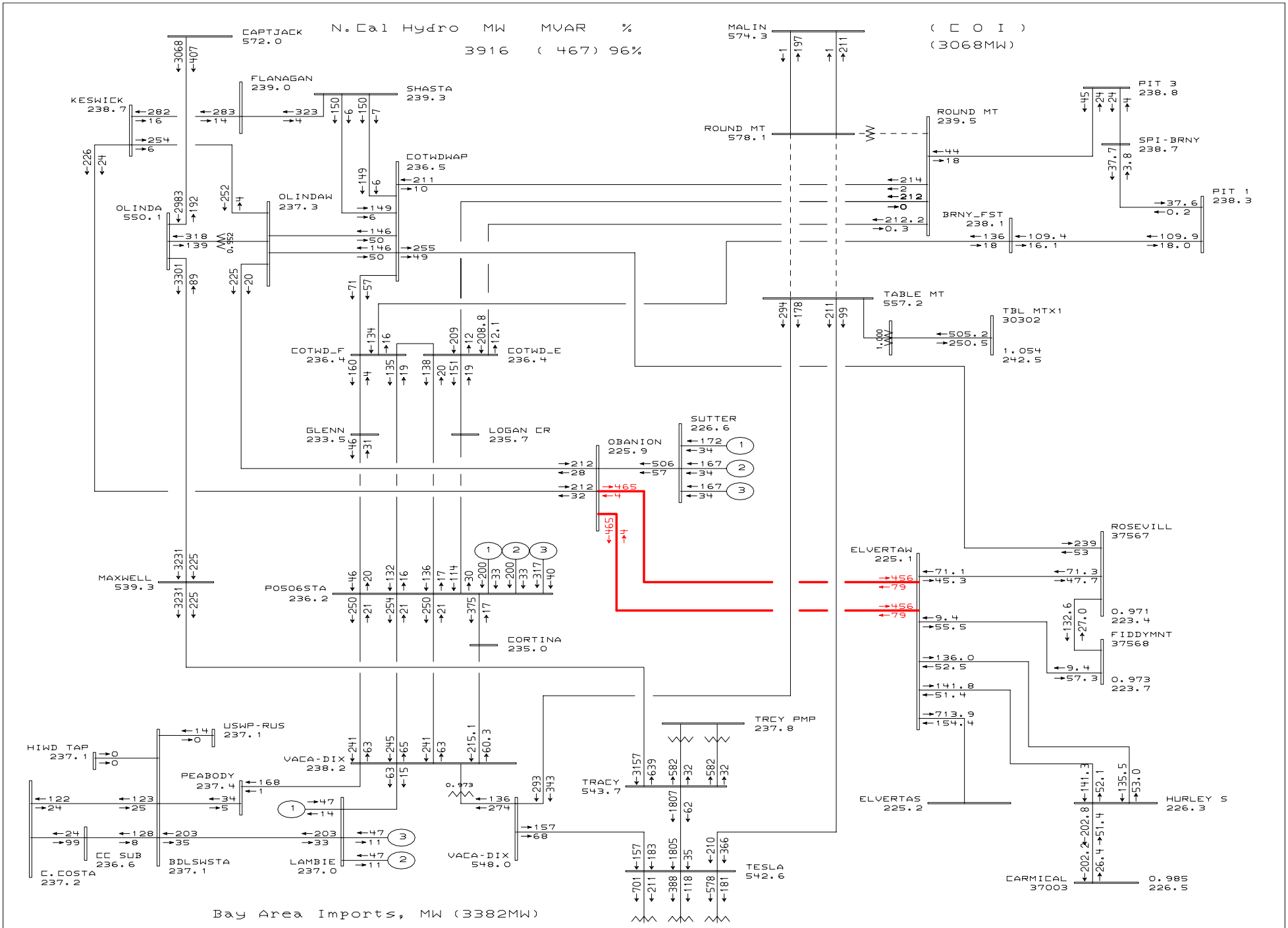


General Electric International, Inc. PSLF Program MW/MVAR Thu Dec 07 09:46:37 2006

PG&E 2004 BASE CASE SERIES - 2010 North Valley Summer Peak Case
PATH15=-1127 MW(S-N) PATH26=3313 MW(N-S) PDCI=3105 MW(N-S) COI=4753 MW(N-S)
CPV Colusa - 2010 Summer Peak - after (TMPP & P0441 removed)

Plot 99 - Heavy Summer - After Project
Outage: Round Mt.-Table Mt.#1 & #2 500 kV DLO

C:\PSLF_Work\Projects\EL_Colus
C:\PSLF_Work\Projects\EL_Colus
Rating = 2

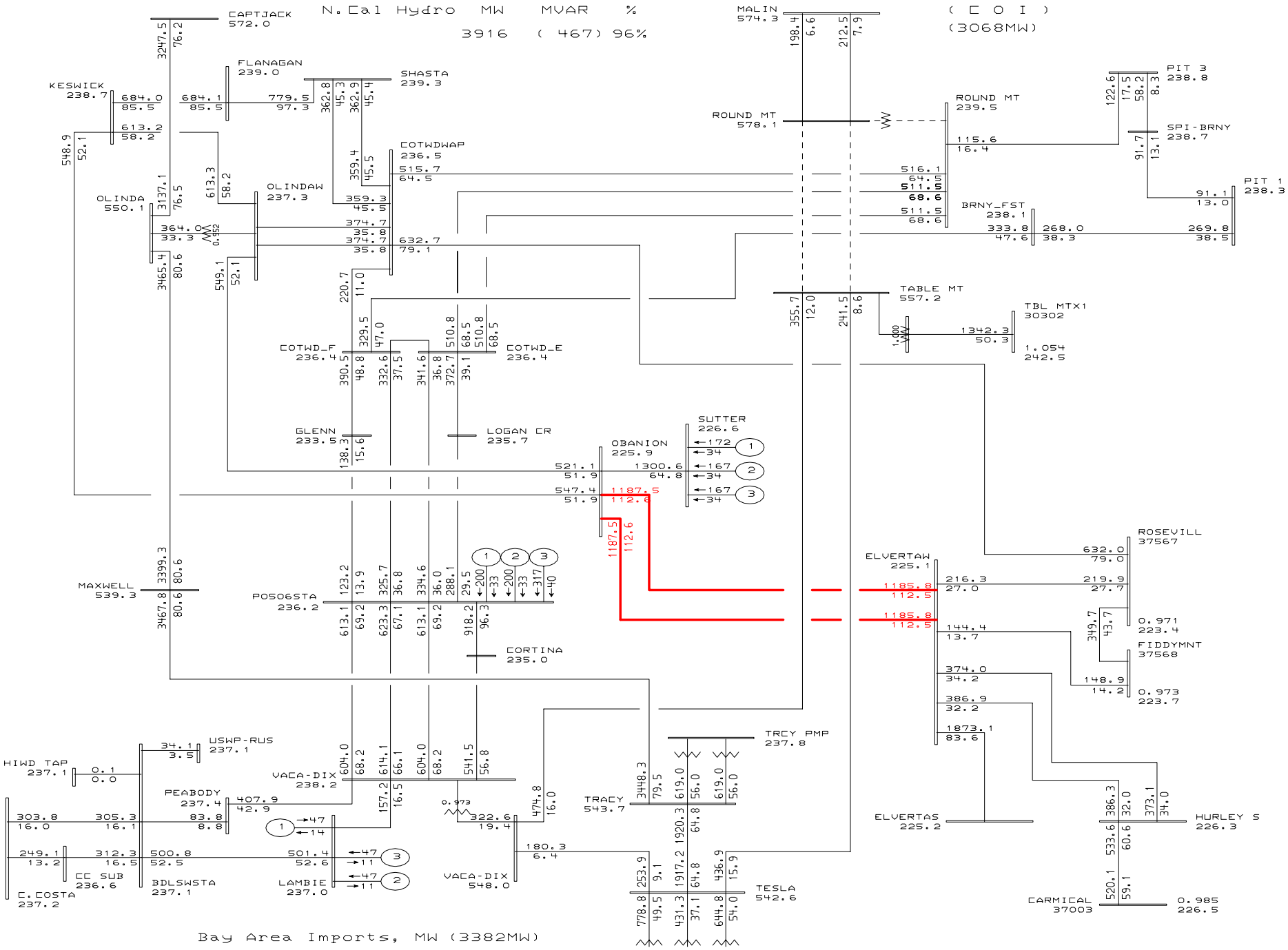


General Electric International, Inc. PSLF Program AMPS/Pct Thu Dec 07 09:46:37 2006

PG&E 2004 BASE CASE SERIES - 2010 North Valley Summer Peak Case
PATH15=-1127 MW(S-N) PATH26=3313 MW(N-S) PDCI=3105 MW(N-S) COI=4753 MW(N-S)
CPV Colusa - 2010 Summer Peak - after (TMPP & P0441 removed)

Plot 100 - Heavy Summer - After Project
Outage: Round Mt.-Table Mt.#1 & #2 500 kV DLO

C:\PSLF_Work\Projects\EL_Colus
C:\PSLF_Work\Projects\EL_Colus
Rating = 2

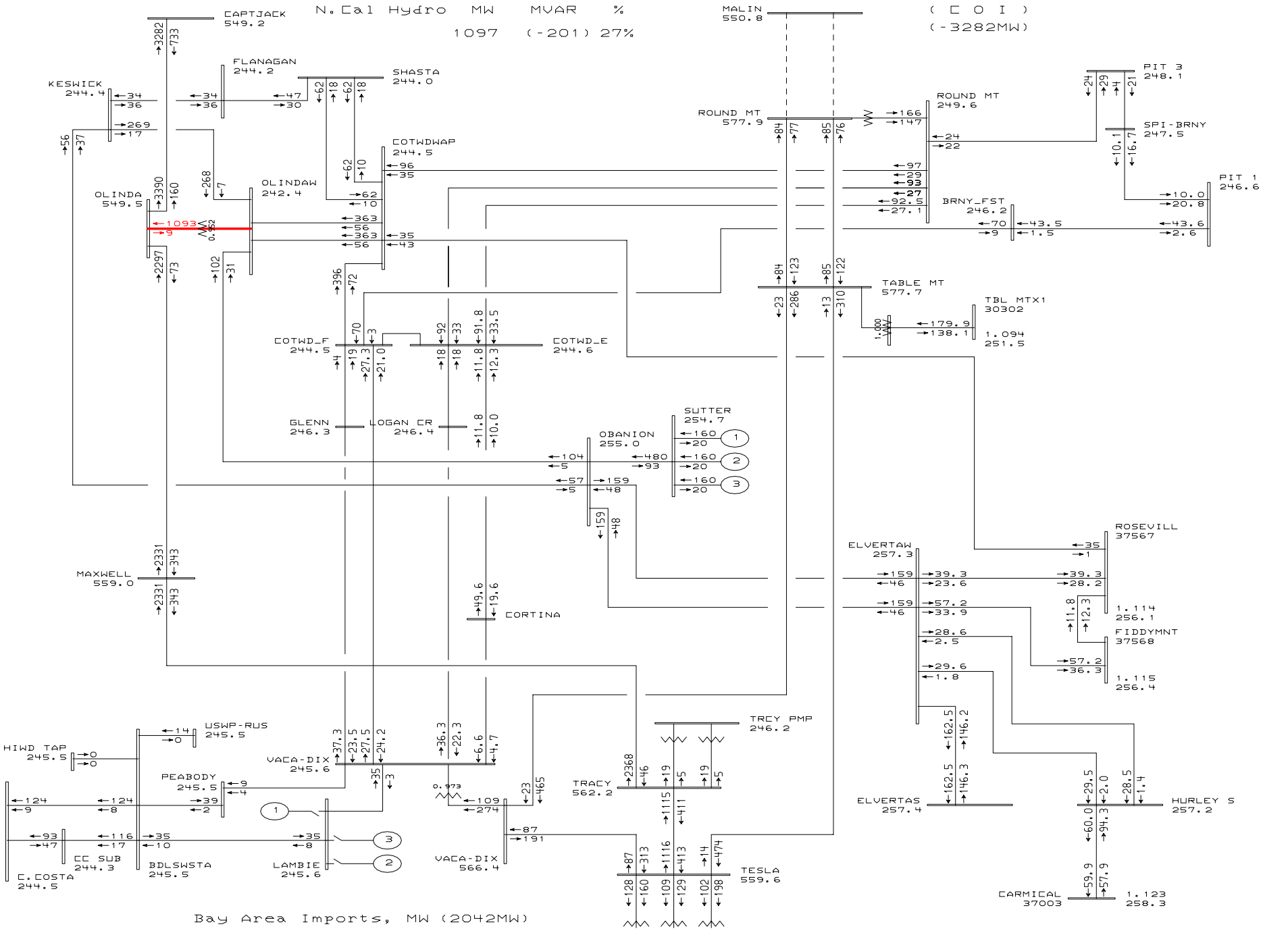


General Electric International, Inc. PSLF Program MW/MVAR Thu Dec 07 09:46:38 2006

PG&E 2004 BASE CASE SERIES - 2010 Summer Off Peak Case
PATH15=4675 MW(S-N) PATH26=-1448 MW(N-S) PDCI=-1848 MW(N-S) COI=-3632 MW(N-S)
CPV Colusa - 2010 Summer Off Peak - before (TMPP & PO441 removed)

Plot 101 - Summer Off-peak - Before Project
Outage: Malin-Round Mt. #1 & #2 500 kV DLO

C:\PSLF_Work\Projects\EL_Colus
C:\PSLF_Work\Projects\EL_Colus
Rating = 2

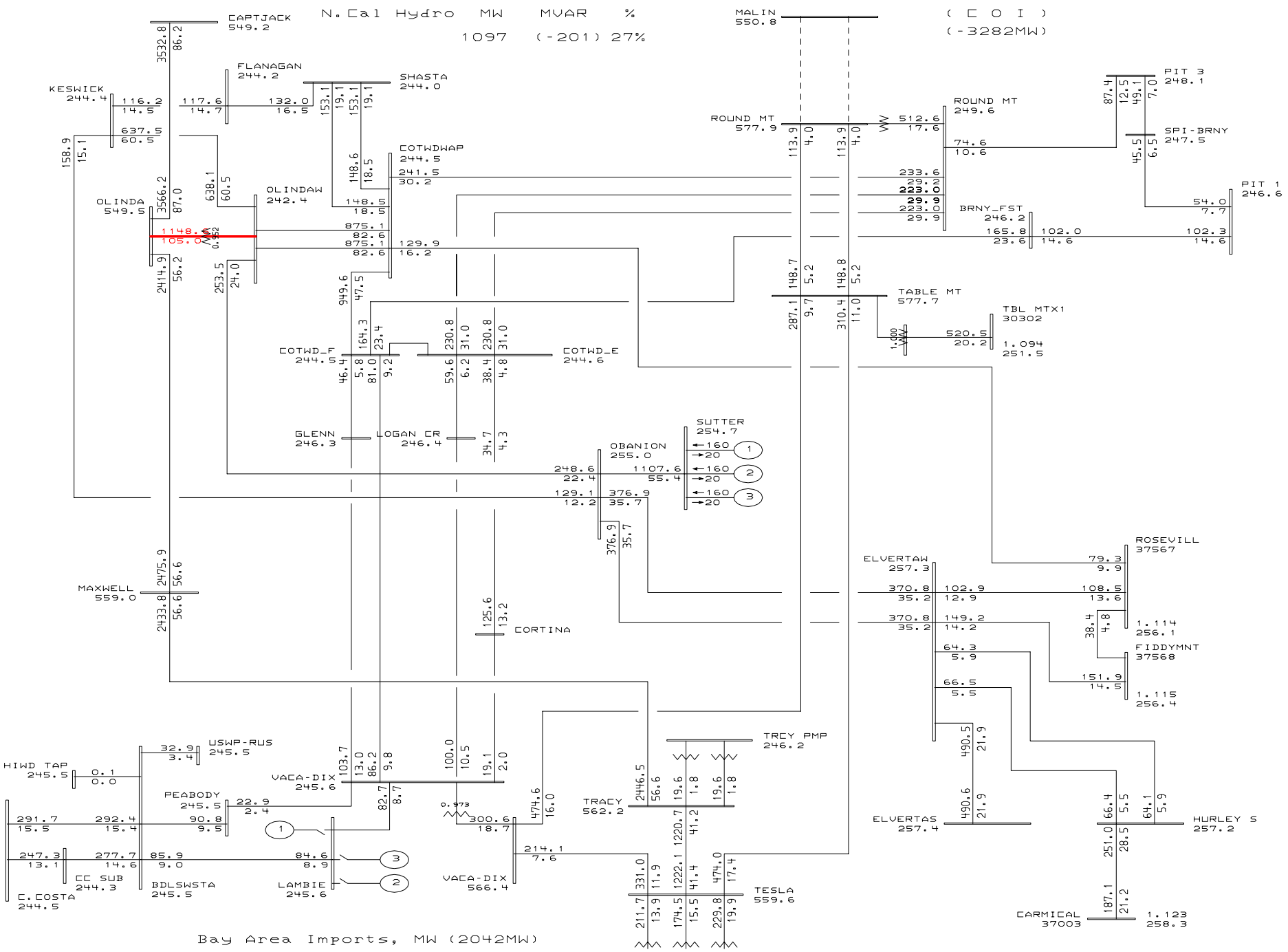


General Electric International, Inc. PSLF Program AMPS/Pct Thu Dec 07 09:46:38 2006

PG&E 2004 BASE CASE SERIES - 2010 Summer Off Peak Case
PATH15=4675 MW(S-N) PATH26=-1448 MW(N-S) PDCI=-1848 MW(N-S) COI=-3632 MW(N-S)
CPV Colusa - 2010 Summer Off Peak - before (TMPP & PO441 removed)

Plot 102 - Summer Off-peak - Before Project
Outage: Malin-Round Mt. #1 & #2 500 kV DLO

C:\PSLF_Work\Projects\EL_Colus
C:\PSLF_Work\Projects\EL_Colus
Rating = 2

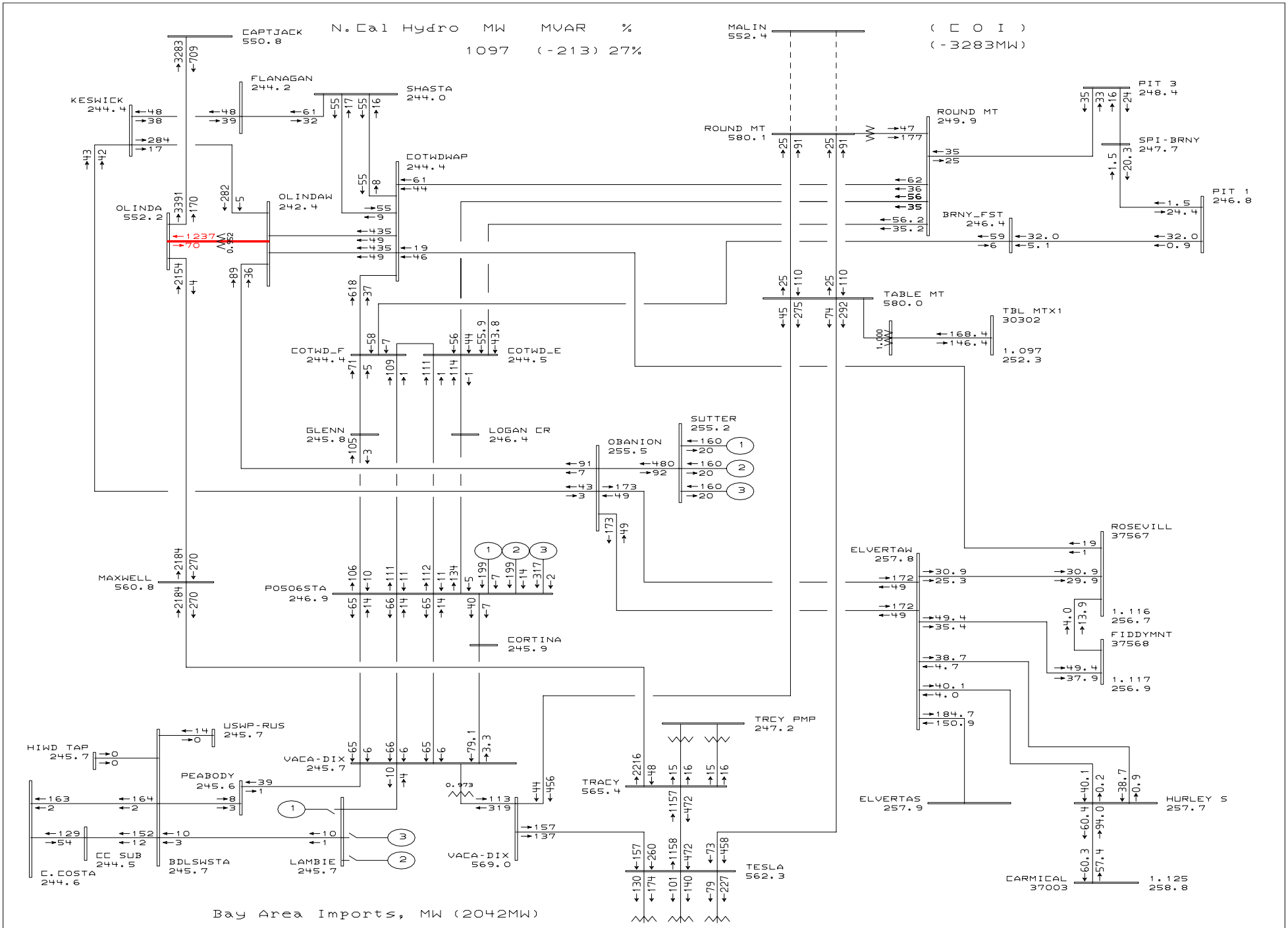


General Electric International, Inc. PSLF Program MW/MVAR Thu Dec 07 09:46:38 2006

PG&E 2004 BASE CASE SERIES - 2010 Summer Off Peak Case
PATH15=4015 MW(S-N) PATH26=-1492 MW(N-S) PDCI=-1848 MW(N-S) COI=-3634 MW(N-S)
CPV Colusa - 2010 Summer Off Peak - after (TMPP & P0441 removed)

Plot 103 - Summer Off-peak - After Project
Outage: Malin-Round Mt. #1 & #2 500 kV DLO

C:\PSLF_Work\Projects\EL_Colus
C:\PSLF_Work\Projects\EL_Colus
Rating = 2

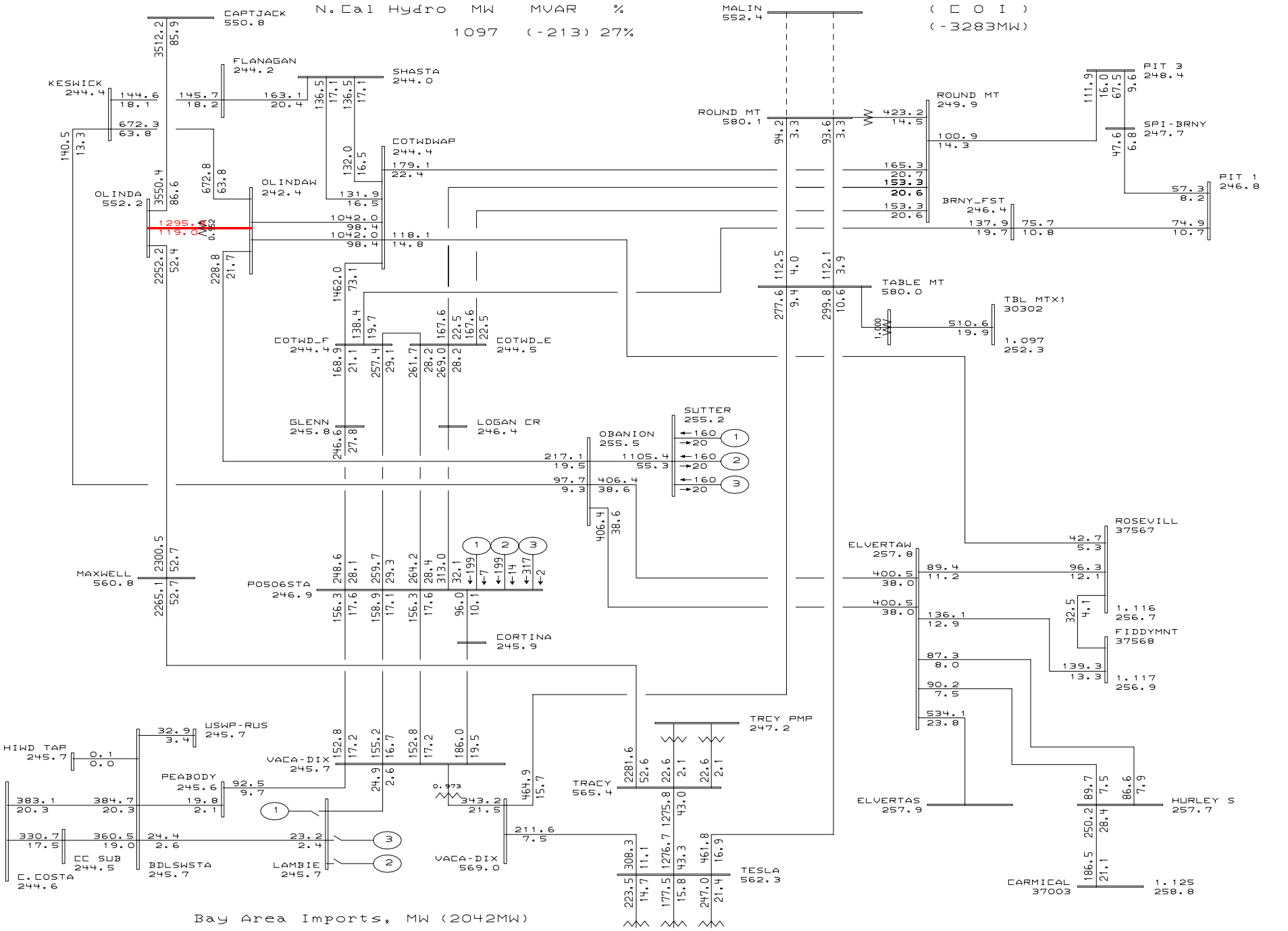


General Electric International, Inc. PSLF Program AMPS/Pct Thu Dec 07 09:46:39 2006

PG&E 2004 BASE CASE SERIES - 2010 Summer Off Peak Case
PATH15=4015 MW(S-N) PATH26=-1492 MW(N-S) PDCI=-1848 MW(N-S) COI=-3634 MW(N-S)
CPV Colusa - 2010 Summer Off Peak - after (TMPP & P0441 removed)

Plot 104 - Summer Off-peak - After Project
Outage: Malin-Round Mt. #1 & #2 500 kV DLO

C:\PSLF_Work\Projects\EL_Colus
C:\PSLF_Work\Projects\EL_Colus
Rating = 2