RESPONSE TO DATA REQUESTS

Application for Certification (06-AFC-9)

for

COLUSA GENERATING STATION

Colusa County, California

February 12, 2007

Prepared for:

E&L Westcoast, LLC

Prepared by:

URS

TABLE OF CONTENTS

RESPONSES TO DATA REQUESTS 1 THROUGH 116

AIR QUALITY
1 THROUGH 50

ALTERNATIVES
51 THROUGH 55

BIOLOGICAL RESOURCES
56 THROUGH 62

CULTURAL RESOURCES
63 THROUGH 76

GEOLOGY
77 THROUGH 80

LAND USE
81 THROUGH 83

SOCIOECONOMICS
84 THROUGH 90

SOIL AND WATER RESOURCES
91 THROUGH 95

TRAFFIC
96 AND 97

TRANSMISSION SYSTEM ENGINEERING
98 THROUGH 107

VISUAL RESOURCES
108 THROUGH 112

WORKER SAFETY AND FIRE PROTECTION
113 THROUGH 116

ATTACHMENTS

Attachment 2-1	Colusa County Air Pollution Control District Letter
Attachment 10-1	CARB 2005 Estimated Annual Average Emissions, Colusa County
Attachment 21-1	Air Quality and Public Health Modeling Files (Revised) (three copies provided on CD)
Attachment 27-1	Manufacturer's Data Sheets for Diesel Engine and Generator
Attachment 28-1	Manufacturer's Data Sheets for Larger Fire Pump Engine
Attachment 28-2	Updated AERMOD Results, Normal Operation
Attachment 30-1	Updated AERMOD Results, Commissioning
Attachment 36-1	Revised Tables G.2-3 through G.2-8
Attachment 38-1	Laboratory Data Sheets for March 2001 Soil Samples
Attachment 46-1	Revised Construction Output Modeling Summary
Attachment 68-1	Letters Sent to Local Historical and Archaeological Organizations
Attachment 100-1	PG&E's 2006 Electric Transmission Grid Expansion Plan
Attachment 102-1	Colusa Power Project Letter to WAPA and SMUD
Attachment 102-2	Notes from October 2005 Meeting Regarding Mitigation of CGS Impacts
Attachment 103-1	System Impact Study Files (three copies provided on CD)

FIGURES

Figure 10-1	Sacramento Area Ozone Study – Simulated Ozone – July 13, 1990
Figure 10-2	2006 Livermore Ozone Sensitivity Using 2000 Base Year
Figure 10-3	Reproduction of Figure 10-2: 2006 Livermore Ozone Sensitivity Using 2000 Base Year
Figure 51-1	Location of Alternative Site 1, PG&E Cortina Substation
Figure 51-2	Location of Alternative Site 2, Holthouse Ranch
Figure 72-1	Transmission Tower Removal/Replacement
Figure 96-1	Teresa Creek Bridge: Construction Right-of-Way

TABLES

Table 7-1	Certificate Crops and Acreage
Table 8-1	Emission Factors and Fuel Loading Values
Table 8-2	Quarterly and Historical Burn Fractions
Table 8-3	Emission Factors – Colusa County – Rice
Table 8-4	Emission Factors – Colusa County – Wheat
Table 9-1	Particulate Matter Size Fractions for Straw Removal Operations
Table 9-2	Managed Burning Emission Factor Table
Table 15-1	Quarterly Sulfur Concentrations
Table 18-1	Estimated Worst-Case Short-Term Emissions from CGS
Table 19-1	Model Assumptions
Revised Table 8.1-24	Proposed Colusa Generating Station Project AERMOD Modeling Results 21-1
Table 23-1	Comparison of 1-Hour Maximum Ambient Nitrogen Dioxide Levels in Colusa Region, 1996-2005
Revised Table 8.1-19	Auxiliary Boiler Emissions 26-1
Table 29-1	Commissioning Phase Test Description
Table 30-1	Summary of Estimated Commissioning Emissions
Table 36-1	Construction Equipment Hourly Emissions Factors

Revised Table 8.1-10 Estimated Criteria Pollutant Emissions From Construction Equipment Exhaust 36-4
Revised Table 8.1-11 Estimated Peak PM_{10} Emissions During Construction 36-4
Table 38-1 Summary of Surface Soil Moisture Data
Table 49-1 Estimated $PM_{2.5}$ Emissions During Construction
Table 97-1 Heavy Equipment Delivery Schedule

AIR QUALITY

Technical Area: Air Quality
Author: William Walters

AIR QUALITY PERMIT APPLICATION

BACKGROUND

The proposed project will require permits (the Preliminary Determination of Compliance and Final Determination of Compliance) from the Colusa County Air Pollution Control District (CCAPCD or "District") and a Prevention of Significant Deterioration (PSD) permit from the United States Environmental Protection Agency (USEPA). The CCAPCD permits are integrated into the staff analysis, and the PSD permit is also of interest as issues could arise that would impact the air quality analysis. Therefore, staff will need copies of all correspondence between the applicant and the District and USEPA in a timely manner in order to stay up to date on any permit issues that arise prior to completion of the Preliminary and Final Staff Analysis. In addition, if there is dialogue between EPA and the applicant that results in permit changes to the District FDOC in the period after the Evidentiary Hearings up to the final Commission Decision, then staff can recommend changes to the PMPD to reflect such changes.

DATA REQUEST

1. Please provide copies of all substantive correspondence regarding the CGS permit applications with the District and USEPA, including e-mails, within one week of submittal or receipt. This request is in effect until the final Commission Decision has been docketed.

RESPONSE

The applicant will comply with this request. The applicant is not currently in possession of any responsive correspondence that has not already been provided to CEC staff.

EMISSION OFFSETS

BACKGROUND [2 THROUGH 5]

The emission offset package identified by the applicant is substantial but not yet complete to meet District rule requirements for NO_X and PM_{10}. For this project to be expedited, the applicant must obtain additional emission reduction credits (ERCs) to complete the offset package. Staff needs a finalized and complete offset package prior to the completion of the Preliminary Staff Analysis.

DATA REQUEST

2. Please provide the final list of the ERC sources that the applicant has bought or has option contracts to buy that provides a complete offset package for NO_X and PM_{10}.

RESPONSE

The applicant understands that the identified incompleteness in the offset package relates to a question of the appropriate application of the CCAPCD 25-ton-per-year offset threshold. Under certain interpretations of the CCAPCD rules, the offset package could be viewed as incomplete. Attached is a letter from the CCAPCD setting forth its interpretation of the relevant CCAPCD rule. Under this interpretation, the applicant believes that that the offset package is complete.

A copy of the CCAPCD letter is provided as Attachment 2-1.

COLUSA COUNTY
DEPARTMENT OF AGRICULTURE - AIR POLLUTION CONTROL DISTRICT
HARRY A. KRUG
AGRICULTURAL COMMISSIONER & SEALER OF WEIGHTS & MEASURES - (530) 458-0580
DIRECTOR OF AIR QUALITY STANDARDS - (530) 458-0590
100 SUNRISE BLVD., SUITE F, COLUSA, CALIFORNIA 95932

January 18, 2007

Mr. Andrew Welch, P.E.
Project Manager
E&L Westcoast, LLC
8403 Colesville, Suite 915
Silver Spring, Maryland 20910

Subject: Interpretation of Colusa County Air District offset requirement

Dear Mr. Welch:

In an email that we received today a question was raised by the California Energy Commission regarding the Colusa County Air Pollution Control District's interpretation of the offset threshold limit in the District's New Source Review (NSR) rule.

The pertinent section of **RULE 3.6 STANDARDS FOR AUTHORITY TO CONSTRUCT (NEW SOURCE REVIEW) (adopted 09/14/93)** states:

> Offsets shall be required for a new stationary source with a potential to emit, calculated pursuant to Section d.4., of nonattainment pollutants or their precursors equal to or exceeding twenty-five (25) tons per year. The amount of offsets required shall be at least equal to that portion of the potential to emit that exceeds 25 tons per year.

District interpretation of the offset threshold limit of the NSR rule is that allowable emissions of 25 tons per year or less of nonattainment pollutants or precursors may be emitted in any amount in any calendar quarter or quarters and is not evenly distributed among the quarters.

If you have any questions regarding this rule interpretation, do not hesitate to contact the Air District or our consultant Les Fife at (530) 668-1559.

Sincerely,

Harry A. Krug
Director Air Quality Standards

cc: Mark Strehlow, URS

ATTACHMENT 2-1

	Colusa Generating Station
28067004	E&L Westcoast, LLC
February 2007	Colusa County, California

URS

DATA REQUEST

3. Please clearly identify all distance and interpollutant offset ratios that, by District rule, need to be applied to each of the new ERC sources not previously supplied in the data adequacy response.

RESPONSE

The applicant understands that the identified incompleteness in the offset package relates to a question of the appropriate application of the CCAPCD 25-ton-per-year offset threshold. Under certain interpretations of the CCAPCD rules, the offset package could be viewed as incomplete. Attached is a letter from the CCAPCD setting forth its interpretation of the relevant CCAPCD rule. Under this interpretation, the applicant believes that that the offset package is complete.

A copy of the CCAPCD letter is provided as Attachment 2-1.

DATA REQUEST

4. Please provide the quantity, the location, the method of emission reduction, and the date of emission reduction for each of the new ERC sources not previously supplied in the data adequacy response.

RESPONSE

The applicant understands that the identified incompleteness in the offset package relates to a question of the appropriate application of the CCAPCD 25-ton-per-year offset threshold. Under certain interpretations of the CCAPCD rules, the offset package could be viewed as incomplete. Attached is a letter from the CCAPCD setting forth its interpretation of the relevant CCAPCD rule. Under this interpretation, the applicant believes that that the offset package is complete.

A copy of the CCAPCD letter is provided as Attachment 2-1.

DATA REQUEST

5. If the final offset package includes the proposal to use interpollutant offsets for offsetting a portion of the project's PM_{10} emissions please provide:

a. The source and quantity of PM_{10} precursor pollutant being used to offset the project's PM_{10} emissions;

b. The proposed interpollutant offset ratios, and the technical analysis that supports the appropriate interpollutant offset ratio;

c. Documentation from the District to confirm that the interpollutant emission offset ratio is acceptable.

RESPONSE

a, b, and c. Use of interpollutant offsets to offset PM_{10} emissions is not proposed for this project at this time.

BACKGROUND

Staff needs additional information to both describe and assess the two stationary ERC sources included in the offset package information provided as part of the data adequacy response.

DATA REQUEST

6. Please provide the date of emission reduction and a description of the original emission source(s) that were included in the two stationary emission sources proposed to be used. These descriptions should include the original facility name(s) for each of the emission sources that were shutdown to create these ERCs.

RESPONSE

A brief summary of the of the stationary ERC sources is provided below. Data were provided by the applicable Air Districts.

Highway 70 Industrial Park

Certificates: 08-05-36, 08-05-37, and 08-05-39
Stationary ERC

Date of Shut-Down:	01/06/2001
Source Name:	Louisiana Pacific Corporation 4801 Feather River Boulevard Oroville, CA 95965
Source Description:	Fiberboard Production Plant
Emissions Source Description:	Louisiana Pacific Corporation received ERCs for VOC, NO_X, CO, and PM_{10} as a result of the permanent shutdown of a continuous fiberboard production line and associated support equipment at their Oroville plant. The equipment associated with the ERCs included a hardboard production line, two boilers, a gasoline storage tank, and a steam blow-off vault.

Jack W. Baber

Certificate: ERC-9937006-00T
Stationary ERC

Date of Shut-Down:	07/10/1995
Source Name:	Sierra Mountain Mills (SMM)
Source Description:	SMM was a lumber mill. Its primary function was processing raw logs into marketable lumber.
Emissions Source Description:	Lumber processing at the SMM entailed debarking, rough saw cutting, planning, and drying. Process heat for drying was provided by two wood-fired boilers (the wood burned was waste from milling). ERCs were obtained from shutting down the two wood-fired boilers.

BACKGROUND [7 AND 8]

Staff needs additional information to assess the agricultural burning cessation ERCs. Both the type of crop and the specific calculations used for each type of crop are needed to complete staff's analysis of these ERCs.

DATA REQUEST

7. Please provide, in a single table, the type of crop and acres associated with each proposed agricultural burning cessation ERC source.

RESPONSE

Table 7-1 contains a list of the crops and associated acreage of each agricultural burning cessation ERC in the proposed offset package.

Table 7-1
Certificate Crops and Acreage

Certificate	Crop Type	Associated Acres
Baber Family Trust/Colusa County		
Certificate: 06-01-02-03	Rice	218.70
Note: Crop type was estimated by developing quarterly emission factors (lb pollutant/acre/quarter) Data were taken directly from ERC. ERC does not list crop type.		
Jack W. Baber and Judith S. Baber/Colusa County		
Certificate: 06-01-02-04	Rice	522.78
Note: Crop type was estimated by developing quarterly emission factors (lb pollutant/acre/quarter) Data were taken directly from ERC. ERC does not list crop type.		
Estate of Jack W. Baber Jr./Colusa County		
Certificate: 06-01-02-05	Rice	184.40
Note: Crop type was estimated by developing quarterly emission factors (lb pollutant/acre/quarter) Data were taken directly from ERC. ERC does not list crop type.		
Pixie E. Baber/Colusa County		
Certificate: 06-01-02-05.2		164.10
Note: Crop is most likely rice. Data were taken directly from ERC. ERC does not list crop type.		
Jack W. Baber and Judith S. Baber/Colusa County		
Certificate: 06-01-02-06	Rice	127.95
Note: Crop type was estimated by developing quarterly emission factors (lb pollutant/acre/quarter) Data were taken directly from ERC. ERC does not list crop type.		
Inez Garrette/Colusa County		
Certificate: 06-01-02-07	Rice	42.65
Note: Crop type was estimated by developing quarterly emission factors (lb pollutant/acre/quarter) Data were taken directly from ERC. ERC does not list crop type.		
Jack W. Baber and Judith S. Baber/Colusa County		
Certificate: 06-01-02-08	Rice	453.50
Note: Crop type was estimated by developing quarterly emission factors (lb pollutant/acre/quarter) Data were taken directly from ERC. ERC does not list crop type.		

Table 7-1
Certificate Crops and Acreage

Certificate	Crop Type	Associated Acres
Jack W. Baber Jr./Colusa County		
Certificate: 06-01-02-09	Rice	343.30
Note: Crop type was estimated by developing quarterly emission factors (lb pollutant/acre/quarter) Data were taken directly from ERC. ERC does not list crop type.		
Davis Ranches/Colusa County		
Certificate: 06-7-2001-1	Rice	2,837.10
Gunnersfield Ent., Inc./Colusa County		
Certificate: 06-01-02-02	Rice	1,222.40
Jon B. Chaney/Colusa County		
Certificate: 06-01-02-01	Rice	458.00
Jack DeWit/Colusa County		
Certificate: 06-07-02-05	Rice	248.80
Jerry Maltby et al./Colusa County		
Certificate: 06-06-11-01	Rice	984.40
A&R Farms/Colusa County		
Certificate: 06-05-02-01	Rice	357.00
Note: Crop is most likely rice. Data were taken directly from ERC. ERC does not list crop type.		
Jim Lagrande/Colusa County		
Certificate: 06-01-03-01	Rice	287.10
	Wheat	86.50
Charles Tuttle, Gordon Ranch/Colusa County		
Certificate: 06-07-02-01	Rice	346.60
	Wheat	168.30
Charles Tuttle, Tenant Ranch/Colusa County		
Certificate: 06-07-02-03	Safflower	41.70
	Wheat	121.70
Charles Tuttle, Helphenstine Ranch/Colusa County		
Certificate: 06-07-02-02	Wheat	87.90
Charles Tuttle, Williams Ranch/Colusa County		
Certificate: 06-07-02-04	Wheat	62.40
William Payne/Woodland, CA/Sutter County		
Certificate: ERC 2001-26	Rice	1,449.90

DATA REQUEST

8. Please provide the emission reduction calculation methods and assumptions associated with each type of crop related to the proposed ERCs, or for each ERC if the emission reduction calculations are not consistent for each type of crop and vary based on site specific factors other than acreage.

RESPONSE

Emissions of criteria pollutants will be offset through the purchase of ERCs generated by the cessation of agricultural burning. Colusa County is primarily an agricultural county, as is the adjacent Sutter County. The primary crop in these counties is rice, with some wheat and safflower. ERCs generated by cessation of agricultural burning are calculated by a methodology that takes into account the following factors:

- Historical burn fraction (what percentage of the crop land is actually burned in a given year), or HBF;
- Quarterly burn fraction (how much of the total annual burning takes place in a given quarter), or QBF;
- Fuel loading factor (how many tons of crop residue there are per acre), or FL;
- Emission factors (pounds of emissions per ton of crop residue burned), or EF;
- Acreage (how many acres of crop are burned by an owner), or ACR; and
- County Bank Fraction (what percentage of the ERC the county retains for the community bank), or CBF.

ERCs are calculated on a quarterly basis. Multiplying the first four values above generates a pollutant, crop, quarter, and county-specific emission factor, or CSEF. Values for HBF, QBF, FL, and EF are published by CARB (FL, EF) or maintained by applicable Air Districts (HBF, QBF). The values specific to this project (for Colusa County) are presented in Tables 8-1 and 8-2. The CSEF values specific to CGS are calculated as shown. CSEF values applicable to the proposed CGS ERC package (for Colusa County) are presented in Tables 8-2 through 8-5. This methodology is the same for adjacent counties; the only differences are the QBFs and HBFs, which vary by Air District.

CSEF – Colusa County – Rice – PM_{10} in the First Quarter

CSEF (lb/acre) = HBF × QBF × FL (ton/acre) × EF (lb/ton)

5.859 (lb PM_{10}/acre) = 1 × 0.31 × 3 (ton/acre) × 6.3 (lb/ton)

Quarterly ERC values listed on the ERC itself are calculated as shown. ACR varies with each owner for whom the ERC is issued. CBF is generally 95 percent (the county retains 5 percent of the emission reduction credit for a community bank). The Baber Family Trust ERC (Cert. 06-01-02-03) has been used as an example. All ERCs are calculated in the same manner.

Quarterly ERC (Cert. 06-01-02-03) – Colusa County – Rice – PM_{10} in the First Quarter

Quarterly Emissions (lb) = CSEF (lb/acre) × ACR (acre) × CBF

1,217.3 (lb PM_{10}) = 5.859 (lb PM_{10}/acre) × 218.7 (acre) × 0.95

Because rice is the most prominent crop in the area, ERCs from the cessation of rice straw burning are most readily available. However, since rice straw is mainly burned in the first,

second, and fourth quarters, it was necessary to supplement ERCs from rice straw burning with ERCs from other crops. For this project, the other crops are wheat and safflower, which have a better third quarter distribution. The cessation of this combination of crops provides the necessary pollutant offsets for CGS.

Table 8-1
Emission Factors and Fuel Loading Values

Crop Name	Emission Factors (lbs/ton)				Fuel Loading (tons/acre)	Source of Data
	PM_{10}	NO_X	SO_2	VOC		
Rice	6.30	5.20	1.10	4.70	3.000	Jenkins (EF)
Safflower	17.70	4.50	0.60	14.80	1.300	AP-42, Jenkins NO_X and SO_2
Wheat	10.60	4.30	0.90	7.60	1.900	Jenkins (EF)

Source: California Air Resources Board, Managed Burn Emission Factor Table.

Table 8-2
Quarterly and Historical Burn Fractions

County	Crop	Quarterly Burn Fractions				Historical Burn Fractions
		First Quarter	Second Quarter	Third Quarter	Fourth Quarter	
Colusa	Rice	0.31	0.25	0.10	0.34	1
Colusa	Safflower	0.01	0.00	0.99	0.00	0.67
Colusa	Wheat	0.00	0.37	0.62	0.01	0.34

Note: Data provided by CCAPCD

Table 8-3
Emission Factors – Colusa County – Rice

Pollutant	First Quarter (lbs/acre)	Second Quarter (lbs/acre)	Third Quarter (lbs/acre)	Fourth Quarter (lbs/acre)
NO_X	4.84	3.90	1.56	5.30
VOC	4.37	3.53	1.41	4.79
PM_{10}	5.86	4.73	1.89	6.43
SO_2	1.02	0.83	0.33	1.12

Table 8-4
Emission Factors – Colusa County – Safflower

Pollutant	First Quarter (lbs/acre)	Second Quarter (lbs/acre)	Third Quarter (lbs/acre)	Fourth Quarter (lbs/acre)
NO_X	0.04	0.00	3.88	0.00
VOC	0.13	0.00	12.76	0.00
PM_{10}	0.15	0.00	15.26	0.00
SO_2	0.01	0.00	0.52	0.00

Table 8-5
Emission Factors – Colusa County – Wheat

Pollutant	First Quarter (lbs/acre)	Second Quarter (lbs/acre)	Third Quarter (lbs/acre)	Fourth Quarter (lbs/acre)
NO_X	0.00	1.03	1.72	0.03
VOC	0.00	1.82	3.04	0.05
PM_{10}	0.00	2.53	4.25	0.07
SO_2	0.00	0.22	0.36	0.01

BACKGROUND

Staff needs additional information to determine if the project's proposed emission reduction credits will mitigate the project's $PM_{2.5}$ emissions impacts. The project's operating particulate emissions are described as all $PM_{2.5}$ due to being from combustion sources, and the stationary source PM_{10} credits that are being proposed are noted to come from combustion source reductions. However, it is unclear whether PM_{10} emission reduction credits from agricultural burning, an uncontrolled combustion process, are also essentially all $PM_{2.5}$. Staff needs additional information to assess the use of the agricultural burning cessation ERCs with respect to $PM_{2.5}$ impact reduction.

DATA REQUEST

9. Please provide information regarding the particle size for particulate emissions from agricultural burning, specifically for the types of crops related to the proposed agricultural burning cessation ERCs.

RESPONSE

The emission reductions represented by the ERCs are essentially all $PM_{2.5}$, as described below.

Size distribution for rice is based on a study prepared by the California Air Resources Board (CARB) and Department of Food and Agriculture. Emission factors for agricultural burning (recommended by CARB) were used to detail size distribution for safflower and wheat.

Rice

The following information was taken from a report prepared by CARB and the Department of Food and Agriculture entitled "Report to the Legislature, Progress Report on the Phase Down of Rice Straw Burning in the Sacramento Valley Air Basin 1995-1996":

> "Burning emissions and exhaust emissions include higher percentages of fine particles ($PM_{2.5}$) than dust created by straw tilling and discing operations. Table IV-5 [shown as Table 9-1] summarizes these differences."

Table 9-1
Particulate Matter Size Fractions for Straw Removal Operations

Source	< 2.5 μm	< 10 μm	> 10 μm
Straw Burning Smoke	85%	88%	12%
Diesel Exhaust	94%	96%	4%
Tilling/Discing Dust	10%	45%	55%

By dividing the fraction of particulate present as $PM_{2.5}$ by the fraction present as PM_{10}, the percentage of $PM_{2.5}$ represented as PM_{10} can be numerically described as shown:

- Fraction of $PM_{2.5}$/Fraction of PM_{10} = Fraction $PM_{2.5}$ present in PM_{10}
- 85/88 = 96.59 percent $PM_{2.5}$ in PM_{10}

As shown in the above equation, PM_{10} emissions from the burning of rice straw are approximately 96.59 percent $PM_{2.5}$.

Safflower and Wheat

CARB has recommended managed burn factors for use in calculating emissions for agricultural burning: "The Managed Burn Emission Factor Table provides emission factors and fuel loading factors by fuel type." The following emission factors (shown as Table 9-2) are provided for $PM_{2.5}$ and PM_{10} for safflower and wheat:

Table 9-2
Managed Burning Emission Factor Table

Crop Name	Emission Factors (lbs/ton)		Percentage of PM_{10} as $PM_{2.5}$
	PM_{10}	$PM_{2.5}$	
Safflower	17.70	16.90	95.48%
Wheat	10.60	10.10	95.28%

By dividing the emission factor for $PM_{2.5}$ by the emission factor for PM_{10}, the percentage of $PM_{2.5}$ represented as PM_{10} can be numerically described as shown for safflower:

- Emission Factor for $PM_{2.5}$/Emission Factor for PM_{10} = Fraction $PM_{2.5}$ present in PM_{10}
- 16.90/17.70 = 95.48 percent $PM_{2.5}$ in PM_{10}

As shown in the above table, PM_{10} emissions from the burning of safflower and wheat are essentially all $PM_{2.5}$.

References

CARB (California Air Resources Board) and California Department of Food and Agriculture, 1997. Report to the Legislature, Progress Report on the Phase Down of Rice Straw Burning in the Sacramento Valley Air Basin 1995-1996.

CARB (California Air Resources Board), no date. Agricultural Burning and Other Managed Burns Ag Burning-Field Crops and Pruning, Weed Abatement, Rangeland Improvement, and Waste Burning (unspecified) – Managed Burn Emission Factor Table http://www.arb.ca.gov/ei/see/see.htm

BACKGROUND

The applicant is proposing a VOC for NO_X interpollutant offset ratio of 1.4 to 1. While staff is aware that this offset ratio is currently acceptable to the District, and that this question was raised several years ago during the processing of the withdrawn Colusa Power Project (01-AFC-10) siting case, no updated calculations or other technical justification for this interpollutant offset ratio have been provided for this project. Staff needs additional information on this interpollutant offset ratio to evaluate its effectiveness in mitigating the project's regional ozone impacts.

DATA REQUEST

10. Please provide calculations, using recent pollutant emission data and ambient monitoring data as appropriate, or other appropriate technical justification to provide a demonstration that the proposed interpollutant VOC for NO_X offset ratio would fully mitigate the project's impacts to regional ozone pollution levels.

RESPONSE

Calculations have been added and recent emissions data and recent ambient monitoring data have been included in the technical discussion used to justify the interpollutant offset ratio used by the applicant. The complete and updated discussion follows.

Regulations for the Colusa County Air Pollution Control District (CCAPCD) address interpollutant offsets, but do not provide a specific NO_X-to-VOC offset ratio, whereas other air districts specify a ratio (e.g., Bay Area Air Quality Management District [BAAQMD] specifies 1:1 NO_X to VOC). In lieu of regulatory guidance from the applicable air district, an area-specific NO_X to VOC relationship must be established in order to quantify an interpollutant offset.

NO_X and VOC are generally accepted as the principal precursors to the formation of ground level ozone. The rate of ozone formation is heavily dependent on initial NO_X and VOC concentrations, as well as local meteorological conditions. The relationship between ozone formations and the initial concentrations of NO_X and VOC has been the subject of many studies and is often depicted graphically through ozone isopleth diagrams. Ozone isopleth diagrams illustrate the dependence of ozone production on the initial amounts of VOC and NO_X.

These diagrams can be used to establish an offset ratio between NO_X and VOC and were the basis for the interpollutant offset ratio of 1.4 to 1 (VOC to NO_X) for the project's offset package. The methodology used to develop this ratio is summarized below.

The two nearest relevant studies (i.e., isopleth diagrams) are the Sacramento Area Ozone Study (CARB, 1995) and the San Francisco Bay Area Ozone Attainment Plan (OAP) (ABAG, BAAQMD, and MTC, 2001).

The results of the Sacramento study are shown on Figure 10-1. Figure 10-1 provides the modeled predicted relationship between NO_X and VOC emission rates and ozone concentrations in units of parts per hundred million (pphm). The scales on the x and y axis are presented in a normalized manner. The body of the report explains that the actual inventory representing the unit emission rate, or "1.0" on the axis, was 268 tons per day of NO_X and 365 tons per day of VOC (CARB, 1995).

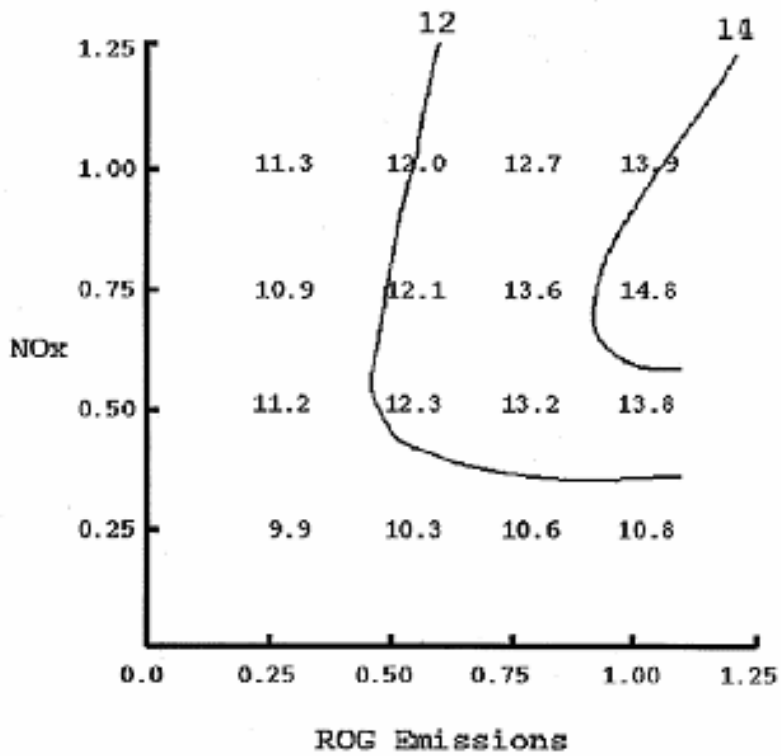

Figure 10-1. Sacramento Area Ozone Study – Simulated Ozone – July 13, 1990

The slope of the isopleths represented in the diagram, nearest to the point of intersection of the location-specific NO_X and VOC emissions, can be used to determine the area-specific interpollutant offset ratio (i.e., the slope represents the ratio of NO_X to VOC required to form the depicted ozone concentration). The total 2005 VOC and NO_X emissions for Colusa County were 6.81 ton per day VOC and 10.12 ton per day NO_X (see Attachment 10-1). Figure 10-1 has no ozone isopleths near this point of intersection. Therefore, Figure 10-1 cannot be used to determine the area-specific interpollutant offset ratio.

BAAQMD has conducted extensive ozone modeling and has developed ozone isopleths based on a variety of data collected from monitoring sites. The San Francisco Bay Area OAP (ABAG, BAAQMD, and MTC, 2001) set forth reduction strategies to achieve attainment of the 1-hour ozone standard by 2006 based on the data presented in ozone isopleth diagrams.

The 1999 and 2001 OAP focused on Livermore monitoring site due to the fact that it had a combination of the highest and most exceedances of the 1-hour national ozone standard." The Livermore isopleth diagram is shown in Figure 10-2. Figure 10-2 provides the modeled relationship between NO_X and VOC emission rates and predicted ozone concentrations in units of parts per billion (ppb).

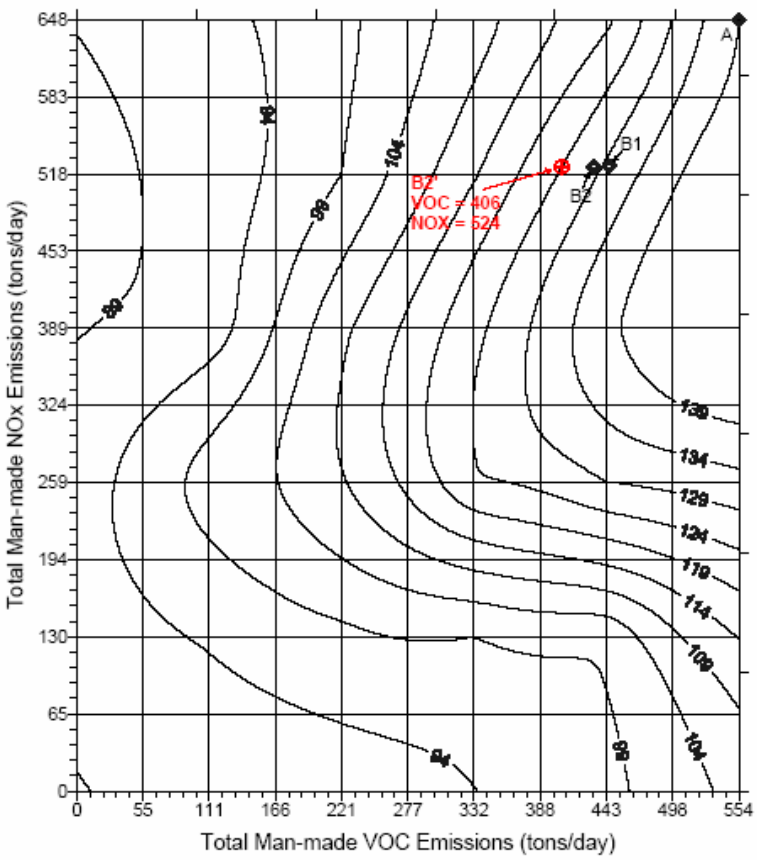

Figure 10-2. 2006 Livermore Ozone Sensitivity[1] Using 2000 Base Year

A comparison of the Figures 10-1 and 10-2, with specific attention to shape of the isopleths, shows that there is a relevant resemblance in the two depictions. Comparing the 12 pphm isopleth on Figure 10-1 with the nearly corresponding isopleth (shown as 119 ppb which equals 11.9 pphm) on Figure 10-2, and comparing the 14 pphm isopleth on Figure 10-1 with, again, the nearly corresponding 139 ppb isopleth on Figure 10-2, shows a high degree of similarity. This correspondence in data demonstrates the validity of using the Livermore isopleth as an alternative to the Sacramento isopleth. Figure 10-2 is of particular interest due to the 89 ppb ozone isopleth. The lower left hand corner of Figure 10-2 has been graphically reproduced to provide greater detail, as shown in Figure 10-3.

[1] Isopleths of Livermore peak ozone concentrations (parts per billion) are based on photochemical model future-year sensitivity simulations of a September 1989 ozone episode. The contours are scaled to reflect the 2000 design value of 139 ppb in Livermore. Point A represents the Bay Area's total anthropogenic emissions and ozone design value for 2000. Point B1 represents the projected emissions for Year 2006 (considering growth and controls already submitted to EPA for the Site Implementation Plan). Point B2 includes the effect of new control measures included in this Plan. The 124 ppb isopleth represents the design value needed for attainment of the national 1-hour standard. The VOC inventory level, represented by Point B2′, is 406 tons/day, given projected NO_X levels.

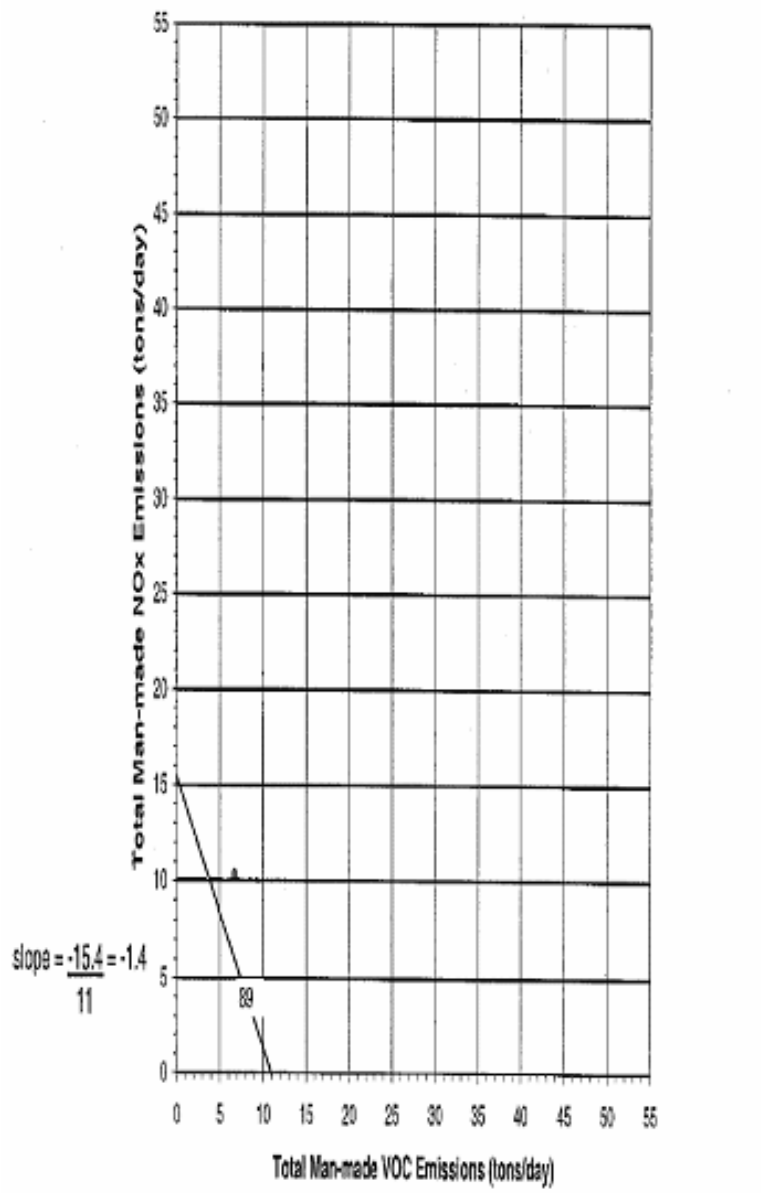

Figure 10-3. Reproduction of Figure 10-2:
2006 Livermore Ozone Sensitivity Using 2000 Base Year

As mentioned previously, the total 2005 VOC and NO_X emissions for Colusa County were 6.81 tons per day VOC and 10.12 tons per day NO_X (shown as Point A in Figure 10-3). Point A falls just above the 89 ppb isopleth. The peak 1-hour ozone level, used as the background in the current AFC (see Table 8.1-2), was 89 ppb. Therefore, there is consistency between the peak ozone reading predicted by the isopleth on Figure 10-3 and the actual peak ozone concentration measured in Colusa.

The slope of the 89 ppb isopleth can by calculated through the following equation, assuming a linear relationship over the values shown in the graph.

$$\text{Slope} = \left(\frac{\Delta y}{\Delta x}\right) = \left(\frac{y_2 - y_1}{x_2 - x_1}\right) = \left(\frac{0 - 15.4}{11 - 0}\right) = -1.4\left(\frac{\frac{\text{ton NO}_X}{\text{day}}}{\frac{\text{ton VOC}}{\text{day}}}\right)$$

Theoretically, this means that the predicted ozone concentration would remain constant if a 1.4-ton reduction of NO_X were to accompany a 1.0-ton increase of VOC. Hence, the appropriate area-specific interpollutant offset ratio is 1.4:1 (NO_X to VOC). Looking at this ratio graphically on Figure 10-3, increases to the emissions inventory of NO_X accompanied by reductions in the inventory of VOC at the above ratio would move Point A along a line parallel to the ozone isopleth, resulting in ozone levels remaining constant.

However, the applicant has chosen to use the reverse of this ratio for the CGS offset package. Hence, 1.4 tons of VOC were proposed to offset each 1.0 ton of NO_X emissions. Therefore, the current offset proposal is very conservative with respect to the results of the above analysis. Looking at this reversed ratio graphically on Figure 10-3, providing 1.4 tons of VOC offsets for each 1.0 ton of NO_X emissions would move Point A closer to the ozone isopleth, resulting in a reduction in ozone.

References

ABAG (Association of Bay Area Governments), BAAQMD (Bay Area Air Quality Management District), and MTC (Metropolitan Transportation Commission), 2001. San Francisco Bay Area Ozone Attainment Plan for the 1-Hour National Ozone Standard, prepared by the Adopted October 24, 2001.

CARB (California Air Resources Board), 1995. Sacramento Area Modeling Analysis for the 1994 State Implementation Plan, Control Modeling Section, Technical Support Division. April 1995.

Air Resources Board

Almanac Emission Projection Data (published in 2006)

2005 Estimated Annual Average Emissions

COLUSA COUNTY

All emissions are represented in Tons per Day and reflect the most current data provided to ARB.
Download these results (as a comma delimited file).
Download more detailed data (as a comma delimited file).
Start a new query.

STATIONARY SOURCES	TOG	ROG	CO	NOX	SOX	PM	PM10	PM2.5
FUEL COMBUSTION								
ELECTRIC UTILITIES	0.00	0.00	0.41	0.42	0.25	0.06	0.05	0.06
OIL AND GAS PRODUCTION (COMBUSTION)	0.72	0.30	0.23	1.78	-	-	-	-
MANUFACTURING AND INDUSTRIAL	0.01	0.00	0.06	0.06	-	0.00	0.00	0.00
FOOD AND AGRICULTURAL PROCESSING	0.04	0.03	0.03	0.23	0.00	0.04	0.02	0.04
SERVICE AND COMMERCIAL	0.06	0.03	0.30	1.63	0.00	0.02	0.02	0.02
OTHER (FUEL COMBUSTION)	0.05	0.01	0.35	0.60	-	0.01	0.01	0.01
*** TOTAL FUEL COMBUSTION**	**0.88**	**0.36**	**1.38**	**4.72**	**0.25**	**0.12**	**0.10**	**0.12**
WASTE DISPOSAL								
SEWAGE TREATMENT	-	-	-	-	-	-	-	-
LANDFILLS	-	-	-	-	-	-	-	-
*** TOTAL WASTE DISPOSAL**	-	-	-	-	-	-	-	-
CLEANING AND SURFACE COATINGS								
LAUNDERING	0.01	0.00	-	-	-	-	-	-
DEGREASING	0.04	0.04	-	-	-	-	-	-
COATINGS AND RELATED PROCESS SOLVENTS	0.39	0.39	-	-	-	0.00	0.00	0.00
ADHESIVES AND SEALANTS	0.01	0.01	-	-	-	-	-	-
*** TOTAL CLEANING AND SURFACE COATINGS**	**0.45**	**0.43**	-	-	-	**0.00**	**0.00**	**0.00**
PETROLEUM PRODUCTION AND MARKETING								

OIL AND GAS PRODUCTION	3.15	0.91	-	-	-	-	-	-
PETROLEUM MARKETING	0.36	0.36	-	-	-	-	-	-
*** TOTAL PETROLEUM PRODUCTION AND MARKETING**	**3.50**	**1.26**	-	-	-	-	-	-
INDUSTRIAL PROCESSES								
FOOD AND AGRICULTURE	0.29	0.28	-	-	-	1.29	0.53	0.18
OTHER (INDUSTRIAL PROCESSES)	0.01	0.00	0.03	0.06	0.00	0.42	0.14	0.01
*** TOTAL INDUSTRIAL PROCESSES**	**0.29**	**0.29**	**0.03**	**0.06**	**0.00**	**1.71**	**0.67**	**0.19**
**** TOTAL STATIONARY SOURCES**	**5.13**	**2.35**	**1.41**	**4.78**	**0.25**	**1.83**	**0.77**	**0.31**
AREA-WIDE SOURCES	**TOG**	**ROG**	**CO**	**NOX**	**SOX**	**PM**	**PM10**	**PM2.5**
SOLVENT EVAPORATION								
CONSUMER PRODUCTS	0.19	0.17	-	-	-	-	-	-
ARCHITECTURAL COATINGS AND RELATED PROCESS SOLVENTS	0.06	0.06	-	-	-	-	-	-
PESTICIDES/FERTILIZERS	0.52	0.52	-	-	-	-	-	-
ASPHALT PAVING / ROOFING	0.65	0.65	-	-	-	-	-	-
*** TOTAL SOLVENT EVAPORATION**	**1.42**	**1.40**	-	-	-	-	-	-
MISCELLANEOUS PROCESSES								
RESIDENTIAL FUEL COMBUSTION	0.19	0.08	1.21	0.05	0.01	0.19	0.18	0.17
FARMING OPERATIONS	9.38	0.75	-	-	-	15.38	7.00	1.57
CONSTRUCTION AND DEMOLITION	-	-	-	-	-	0.08	0.04	0.01
PAVED ROAD DUST	-	-	-	-	-	2.25	1.03	0.17
UNPAVED ROAD DUST	-	-	-	-	-	7.70	4.57	0.97
FUGITIVE WINDBLOWN DUST	-	-	-	-	-	3.50	1.61	0.36
FIRES	-	-	0.00	-	-	-	-	-
MANAGED BURNING AND DISPOSAL	1.49	0.83	9.88	0.67	0.13	1.15	1.13	1.07
COOKING	0.00	0.00	-	-	-	0.01	0.01	0.01
OTHER (MISCELLANEOUS PROCESSES)	-	-	-	-	-	-	-	-
*** TOTAL MISCELLANEOUS PROCESSES**	**11.06**	**1.67**	**11.10**	**0.72**	**0.13**	**30.26**	**15.57**	**4.32**
**** TOTAL AREA-WIDE SOURCES**	**12.48**	**3.07**	**11.10**	**0.72**	**0.13**	**30.26**	**15.57**	**4.32**
MOBILE SOURCES	**TOG**	**ROG**	**CO**	**NOX**	**SOX**	**PM**	**PM10**	**PM2.5**
ON-ROAD MOTOR VEHICLES								
LIGHT DUTY PASSENGER (LDA)	0.21	0.20	1.74	0.16	0.00	0.01	0.01	0.00

LIGHT DUTY TRUCKS - 1 (LDT1)	0.20	0.19	1.97	0.19	0.00	0.01	0.01	0.00
LIGHT DUTY TRUCKS - 2 (LDT2)	0.10	0.09	1.00	0.12	-	0.00	0.00	0.00
MEDIUM DUTY TRUCKS (MDV)	0.05	0.04	0.48	0.06	-	0.00	0.00	0.00
LIGHT HEAVY DUTY GAS TRUCKS - 1 (LHDV1)	0.02	0.02	0.14	0.02	-	-	-	-
LIGHT HEAVY DUTY GAS TRUCKS - 2 (LHDV2)	0.00	0.00	0.03	0.00	-	-	-	-
MEDIUM HEAVY DUTY GAS TRUCKS (MHDV)	0.13	0.13	0.84	0.04	-	-	-	-
HEAVY HEAVY DUTY GAS TRUCKS (HHDV)	0.04	0.04	0.61	0.03	-	-	-	-
LIGHT HEAVY DUTY DIESEL TRUCKS - 1 (LHDV1)	0.00	0.00	0.01	0.04	-	-	-	-
LIGHT HEAVY DUTY DIESEL TRUCKS - 2 (LHDV2)	0.00	0.00	0.00	0.01	-	-	-	-
MEDIUM HEAVY DUTY DIESEL TRUCKS (MHDV)	0.01	0.01	0.04	0.18	0.00	0.01	0.01	0.00
HEAVY HEAVY DUTY DIESEL TRUCKS (HHDV)	0.06	0.05	0.23	1.16	0.01	0.03	0.03	0.02
MOTORCYCLES (MCY)	0.01	0.01	0.06	0.00	-	-	-	-
HEAVY DUTY DIESEL URBAN BUSES (UB)	-	-	0.00	0.01	-	-	-	-
HEAVY DUTY GAS URBAN BUSES (UB)	0.00	0.00	0.02	0.00	-	-	-	-
SCHOOL BUSES (SB)	0.00	0.00	0.04	0.02	-	0.00	0.00	0.00
MOTOR HOMES (MH)	0.01	0.01	0.16	0.01	-	-	-	-
*** TOTAL ON-ROAD MOTOR VEHICLES**	**0.85**	**0.78**	**7.37**	**2.06**	**0.02**	**0.05**	**0.05**	**0.04**
OTHER MOBILE SOURCES								
AIRCRAFT	0.00	0.00	0.09	0.00	0.00	-	-	-
TRAINS	0.01	0.01	0.03	0.17	0.02	0.01	0.01	0.00
RECREATIONAL BOATS	0.25	0.23	0.55	0.03	0.00	0.03	0.03	0.02
OFF-ROAD RECREATIONAL VEHICLES	0.02	0.02	0.28	0.01	0.00	0.00	0.00	0.00
OFF-ROAD EQUIPMENT	0.10	0.09	0.78	0.48	0.00	0.02	0.02	0.02
FARM EQUIPMENT	0.30	0.25	1.83	1.86	0.01	0.12	0.12	0.11
FUEL STORAGE AND HANDLING	0.02	0.02	-	-	-	-	-	-
*** TOTAL OTHER MOBILE SOURCES**	**0.69**	**0.61**	**3.56**	**2.55**	**0.03**	**0.18**	**0.18**	**0.16**
**** TOTAL MOBILE SOURCES**	**1.54**	**1.39**	**10.93**	**4.62**	**0.05**	**0.24**	**0.23**	**0.20**
GRAND TOTAL FOR COLUSA	**19.16**	**6.81**	**23.44**	**10.12**	**0.44**	**32.33**	**16.58**	**4.83**

See NATURAL Sources
Start a new query.
Top of Page

OPERATING EMISSIONS

BACKGROUND

Staff is concerned that the proposed operating Turbine/Heat Recovery Steam Generator (HRSG) emission limits for PM_{10} are very high in comparison to other recent projects of similar size and design. The applicant is proposing turbine/HRSG PM_{10} emission rates of 12.8 to 12.9 lbs/hour and 19.9 to 20.1 lbs/hour for full turbine load without and with duct firing, respectively. These emission rates are considerably higher than recent General Electric (GE) F-frame projects with comparatively large duct burners that have requested PM_{10} limits on the order of 9 to 11 lbs/hour and 11.5 to 14 lbs/hour for full turbine load without and with duct firing, respectively. Additionally, source test data that staff has reviewed to date would support the use of PM_{10} emission limits that are substantially lower than those being proposed. These conservative emission limits significantly increase the project's PM_{10} offset needs which is a concern for the project. Staff requests additional information to confirm the need for the requested turbine/HRSG PM_{10} emission limits.

DATA REQUEST

11. Please provide appropriate GE emission guarantees and test results from similar turbines that substantiate the need for the requested turbine/HRSG PM_{10} emission rates of 12.8 to 12.9 lb/hour and 19.9 to 20.1 lb/hour for full turbine load without and with duct firing, respectively.

RESPONSE

Based on emissions information provided by GE and the calculation methodology provided by Bechtel, the applicant maintains its proposal for emission rates of 12.8 to 12.9 lb/hour and 19.9 to 20.1 lb/hour for full turbine load without and with duct firing, respectively. GE provided the following justification for the proposed PM_{10} emission rates:

> "General Electric (GE) has conducted numerous tests for PM_{10} emissions associated with 7FA DLN gas turbines (GTs) in natural gas operations. Emission test results vary widely from less than 10 lbs/hr to almost 20 lb/hr for the GT alone. GE's value of 12 lb/hr for the Colusa project is based on an analysis of these observed test values. GE's value includes a reasonable margin to account for the high test variability.
>
> GE's theoretical predictions of actual GT emissions are lower and more consistent than measured values. GE believes that the high and variable measured PM_{10} values are due to the inherent limitations of the manual test methods used, for example EPA Methods 201a and 202. Specifically, the detection limits of these methods are not sufficiently low for GTs in natural gas operation, and the manual nature of the methods and test artifacts can cause a high basis and widely variable results. This is particularly true when different test firms, equipment and test personnel are utilized and GE does not provide oversight to ensure the highest level of testing quality control."

Bechtel calculated the proposed PM_{10} emission rates based on the information provided by GE. Bechtel provided the following justification of their proposed emission rates:

> "We have calculated PM_{10} emissions as follows: GT emissions are 12 lb/hr per GE. Duct burner emissions are based on an industry established value of

> 0.01 lb/MMBTU HHV of duct firing. We then added in the ammonia salt formation due to conversion of sulfur in the fuel to SO_3, which reacts with ammonia to form ammonia salts. We then added 10 percent margin to the sum of all the above. The issue with establishing a value for PM_{10} is somewhat academic, since actual PM_{10} emissions are very small, and most of what is caught is due to errors in the test method. By selecting an experienced testing firm, performing the optional nitrogen purge in Method 202, and getting a catch of at least four hours duration, PM_{10} values should be substantially less than the calculated number. However, the continuing concern is that PM_{10} testing measured numbers can vary widely. Since such a small amount is caught, small errors will make for big differences."

It should be noted that existing GE 7FA projects have shown emissions values of 12 lb/hr and 18 lb/hr without and with duct firing, respectively. The proposed emission scenario of 12 lb/hr without duct firing is therefore valid, but is at the higher end of a broad range of emissions scenarios. It is important to point out that GE generated this value through numerous tests of the 7FA DLN GT. The proposed emission scenario of 19.9 to 20.1 lb/hour for full turbine load with duct firing is a result of the larger amount of duct firing in these units than previous projects and GE's value for the GTs.

BACKGROUND [12 AND 13]

There are apparent errors in the quarterly emission calculations presented in air quality Appendix G3, Attachment 1. The average operating hours for the third quarter are set to zero when they should be approximately 1,000 hours. The assumed unsteady state (startup and shutdown intervals) operating hours (including the number of cold, warm and hot starts, and the number of shutdowns) are significantly different in the third quarter than what is presented in the other three quarters. Staff requests that the information presented in this Attachment 1 be reviewed and corrected where necessary.

DATA REQUEST

12. Please provide a corrected table for the third quarter emission calculations presented on page 3 of 5 in Appendix G3 Attachment 1.

RESPONSE

There are no errors in the quarterly emission calculations that the applicant is aware of, so no corrected table is necessary. The quarterly emissions presented in Appendix G3, Attachment 1 demonstrate two widely different operating scenarios, both of which result in approximately the same emissions. Many other possible operating scenarios were not included. These two scenarios are intentionally widely different in an attempt to bound the potential range of operating scenarios. An operating scenario typical of base load operation is presented in the first quarter, the second quarter, and the fourth quarter. An operating scenario representative of a 6 by 16 operation (six days per week of operation for 16 hours per day, down at night and on Sundays) is presented in the third quarter. The applicant is not expecting conditions of certification which specify hours of operation per quarter or number of starts per quarter. The applicant is expecting conditions of certification which specify maximum allowable pollutant emissions per quarter based on the values presented in this appendix and reproduced in Table 8.1-21 in the AFC.

DATA REQUEST

13. Please confirm all of the unsteady state hour assumptions for each quarter presented in Appendix G3 Attachment 1.

RESPONSE

See response to Data Request 12.

BACKGROUND

The daily NO_X, CO, and VOC emissions estimates for the gas turbine/HRSG shown in Table 8.1-17 do not match the emission assumptions provided on page 8.1-6 using the hourly emissions shown for steady and unsteady state operations in Tables 8.1-14 and 8.1-15. Staff needs information to determine if the basis described on page 8.1-6 is incorrect or if the specified values in Table 8.1-17 are incorrect.

DATA REQUEST

14. Please either provide a revised description of the worst-case daily gas turbine/HRSG operations or revise Table 8.1-17 with 24-hour emissions of NO_X, CO, and VOC that conform to the operating assumptions specified on page 8.1-6 of the AFC.

RESPONSE

The daily emissions estimates shown in Table 8.1-17 are correct. The description on page 8.1-6 is incorrect by one hour. It should state "The 24-hour NO_X, CO, and VOC emission rates were calculated assuming six hours of startup emissions (three hot starts and three stops) and the balance (18 hours) operating at the worst-case condition (turbine and duct burners are running at 100 percent and the ambient temperature is 18°F)." More details of this calculation are found in Appendix G3 Operating Emissions, Attachment 1, Page 5 of 5, under Worst-Case Daily Emissions per Turbine.

BACKGROUND

The natural gas fuel sulfur assumption used for the project (approximately 0.22 gr/100 scf) is low in comparison with other recent projects that would also receive natural gas from PG&E. This assumption may be a product of considering limited recent fuel composition data. Staff needs additional information to confirm that the lower sulfur content is a reasonable short-term value and long-term average value. The sulfur content assumption is directly related to the amount of SO_2 emissions and the related offset determination.

DATA REQUEST

15. Please provide additional, recent data from PG&E that confirms that the assumed fuel sulfur content of 0.22 gr/100 scf is a reasonable short-term value and long-term average value.

RESPONSE

The proposed project assumed an approximate sulfur concentration of 0.20 gr/100 scf. This assumption was made based on recent data published by PG&E on their website (PG&E, 2007). This sulfur concentration represents the long-term value (e.g., annual average). A reasonable sulfur concentration representing the short-term value (e.g., grab sample or 24-hour average) is 0.50 gr/100 scf. Revised operations phase emission modeling results are included in Attachment 21-1, maintaining the 0.20 gr/100 scf value for assessing annual emission impacts but basing emissions of the 0.50 gr/100 scf limit for assessing emission impacts for 24 hours or less.

The following information is presented as justification for the assumed sulfur concentration and was taken directly from PG&E's website (PG&E, 2007).

Sulfur Information

Much of the sulfur contained in the gas delivered by PG&E consists of compounds that naturally occur in the gas, but PG&E also adds sulfur compounds to odorize the gas. The gas is odorized as a safety measure so that leaks can be detected by consumers.

Common sulfur compounds that may be found in the gas supply are tetrahydrothiophene (THT), tertiary butyl mercaptan (TBM), dimethyl sulfide (DMS), and hydrogen sulfide (H_2S). A more comprehensive listing of typical sulfur compounds that may be found in the PG&E gas supply is shown below. These compounds are harmless at low levels but can cause customer complaints due to excessive gas odor, or in the case of hydrogen sulfide become dangerous at very high levels.

PG&E continuously monitors the gas stream for specific sulfur compounds at several points on its system as part of its program to ensure that the gas is properly odorized and that sulfur levels are within established limits. The monitoring equipment works well for the intended purpose but it does not provide comprehensive data on all potential sulfur compounds flowing in the gas supply. To supplement the continuous monitoring equipment, PG&E has started a program to collect and analyze samples from representative parts of the system to provide an estimate of the total sulfur contained in the PG&E gas supply expressed as parts per million by volume or grains per 100 standard cubic feet.

PG&E's Gas Rule 21, Section C contains specifications on the quality of the gas received into the system and these specifications include limits for sulfur compounds as well as for other

constituents contained in the natural gas. Gas Rule 21 can be found in the PGE.com web tariff book and the sulfur limits are summarized below.

Rule 21, Section C

Section C of Gas Rule 21 provides quality specifications for gas delivered into the PG&E pipeline system from California gas wells and generally governs the quality of gas received from interconnecting pipelines. However, gas quality specifications contained in the interconnection agreement may supersede the Gas Rule 21 C specifications.

- **Total Sulfur:** The gas shall contain no more than one grain (17 ppm) of total sulfur per one hundred standard cubic feet.
- **Mercaptan Sulfur:** The gas shall contain no more than 0.5 grain (8 ppm) of mercaptan sulfur per one hundred standard cubic feet.
- **Hydrogen sulfide:** The gas shall contain no more than 0.25 grain (4 ppm) of hydrogen sulfide per one hundred standard cubic feet.

Pipeline Quality Gas

Many air quality compliance reporting requirements can be met by certifying that the fuel used in the process was "pipeline quality natural gas." The EPA criteria for pipeline quality natural gas from [40CFR72.2] is as follows:

> "Pipeline natural gas means a naturally occurring fluid mixture of hydrocarbons (e.g., methane, ethane, or propane) produced in geological formations beneath the Earth's surface that maintains a gaseous state at standard atmospheric temperature and pressure under ordinary conditions, and which is provided by a supplier through a pipeline. Pipeline natural gas contains 0.5 grains or less of total sulfur per 100 standard cubic feet. Additionally, pipeline natural gas must either be composed of at least 70 percent methane by volume or have a gross calorific value between 950 and 1100 Btu per standard cubic foot."

One criterion is that the total sulfur be less than 0.5 gr/100 scf which is a lower amount than in PG&E's tariff. To help customers understand PG&E gas quality in relation to their reporting requirements, the total sulfur measured in the gas stream as total sulfur is expressed as grains per 100 standard cubic feet (gr/100 scf). PG&E's gas supply typically qualifies as "pipeline quality natural gas" as shown in the Gas System Survey Results table below.

Gas System Sulfur Survey Results

PG&E has a program of periodically surveying representative locations on the system to determine the sulfur-containing compound concentrations in the gas stream. PG&E tests for sulfur using American Society of Testing and Materials (ASTM) D 5504 "Standard Test Method for Determination of Sulfur Compounds in Natural Gas and Gaseous Fuels by Gas Chromatography and Chemiluminescence." Our detection limit is approximately 10 parts per billion by volume for each compound. PG&E odorizes our gas with a 50/50 blend of tetrahydothiophene (THT) and tertiary butyl mercaptan (TBM), which are each typically present at approximately 1 part per million by volume (ppmv) in the natural gas on our system. The values shown in the table (shown as Table 15-1) below provide a representative sample of the gas flowing on the PG&E system.

Table 15-1
Quarterly Sulfur Concentrations

Date	Total Sulfur Average all sites		Total Sulfur Maximum	
	gr/100 scf	ppmv	gr/100 scf	ppmv
Third Quarter 2006	0.241	4.05	0.466	7.88
Second Quarter 2006	0.16	2.7	0.408	6.9
First Quarter 2006	0.145	2.45	0.318	5.37
ppmv = parts per million by volume.				

The total readings include 0.400 ppmv of sulfur to account for compounds not measured by the existing equipment. This amount has been determined by supplemental testing at selected locations on the gas system.

References

PG&E (Pacific Gas and Electric Company), 2007. California Gas Transmission. "Gas System Sulfur Survey Results" http://www.pge.com/pipeline/operations/sulfur/sulfur_info.shtml# survey_results.

BACKGROUND [16 THROUGH 18]

The daily emission potential of the auxiliary boiler, emergency generator engine, and firewater pump engine is unclear. Staff requires additional information to determine the daily emissions potential for these three emission sources and the worst-case project total daily emissions.

DATA REQUEST

16. Please confirm that the worst case daily emissions for the auxiliary boiler would be based on 24 hours per day of operation.

RESPONSE

The auxiliary boiler will operate up to 24 hours in a day, up to 936 hours in a calendar quarter, and up to 3,744 hours in a year.

DATA REQUEST

17. Please confirm that the worst-case normal operation of the emergency generator engine and firewater pump engine is one hour per day.

RESPONSE

The emergency diesel generator and the firewater pump each will operate in non-emergency situations up to 1 hour per day and up to 50 hours per year.

DATA REQUEST

18. Please identify the maximum concurrent emission source operation and provide the calculated all emission source worst-case daily emissions.

RESPONSE

This information is provided in Table 18-1.

Table 18-1
Estimated Worst-Case Short-Term Emissions from CGS

Source	Both Turbines[a]	Auxiliary Boiler	Generator	Fire Pump	Total
1-Hour Emissions (lbs/hr)					
NO_X	666.60	0.48	13.88	2.82	683.78
CO	967.00	1.63	0.32	0.22	967.17
VOC	55.40	0.18	0.15	Incl. in NO_X	55.73
PM_{10}	40.20	0.22	0.09	0.08	40.59
SO_2	8.00	0.07	0.01	<0.01	8.09
3-Hour Emissions (lbs/3-hr)					
SO_2	24.00	0.21	0.01	<0.01	24.23
8-Hour Emissions (lbs/8-hr)					
CO	7,054.20	13.04	0.32	0.22	7,067.78
24-Hour Emissions (lbs/day)					
NO_X	2,994.60	11.52	13.88	2.82	3,022.82
CO	7,659.00	39.12	0.32	0.22	7,698.66
VOC	630.60	4.32	0.15	Incl. in NO_X	635.07
PM_{10}	964.80	5.28	0.09	0.08	970.25
SO_2	192.00	1.58	0.01	<0.01	193.60
Note: [a]Normal operation excluding commissioning					

OPERATING EMISSIONS MODELING

BACKGROUND

The operating emissions modeling appears to include the auxiliary boiler, emergency generator engine, and the firewater pump engine; however, the assumptions used to model those sources in combination with the gas turbine/HRSG for the different modeling timeframes do not appear to be provided in the AFC or AFC appendices. Staff needs additional information on the modeling cases to complete the evaluation of the project.

DATA REQUEST

19. Please provide the operating and emissions assumptions used for all emission sources to complete the 1-hour, 3-hour, 8-hour, 24-hour and annual operating emissions modeling runs.

RESPONSE

Table 19-1 contains the modeling assumptions associated with the auxiliary boiler, firewater pump, and emergency generator.

Table 19-1
Model Assumptions

Maximum 1-hour	Worst-Case 1-Hour Emissions for NO_2 and CO are equal to Cold Startup and Shutdown emission rates, respectively. Worst-Case 1-Hour Emissions for SO_2 are equal to 18°F; 100 percent load, duct firing emission rates. Includes 1 hour of each auxiliary boiler, fire pump and emergency generator
Maximum 3-hour	Only SO_2 is considered for an average 3-hour Ambient Air Quality Standard. Emission rates are equal to 18°F; 100 percent load, duct firing emission rates. Includes 1 hour of each fire pump and emergency generator and 3 hours of auxiliary boiler
Maximum 8-hour	Only CO is considered for an average 3-hour Ambient Air Quality Standard. Worst-case 8-Hour Scenario includes six hours at Startup and Shutdown rate. Remainder of 8 hours is at 18°F; 100 percent load, duct firing emission rates. Includes 1 hour of each fire pump and emergency generator and 8 hours of auxiliary boiler
Maximum 24-hour	For NO_X, CO and VOC assume six hours at startup and shutdown emission rate (approx. three hot startups and three shutdowns), remainder of 18 hours per day at extreme low temperature, 100 percent full load. Includes 1 hour of each fire pump and emergency generator and 24 hours of auxiliary boiler
Maximum Annual	Worst-case annual emissions of all criteria pollutants from the turbine/HRSG equal the sum of the emissions of the fours quarters. Includes 50 hours of each fire pump and emergency generator and 2,400 hours of auxiliary boiler

BACKGROUND

The operating emissions modeling assumptions appear to include an unrealistically high velocity assumption for the emergency generator engine (119.44 m/s) and what is likely a low velocity assumption for the firewater pump engine (24.66 m/s). Staff needs additional information to determine if these input parameters need to be revised.

DATA REQUEST

20. Please provide information that confirms the exhaust stack diameters and velocities for the emergency generator engine and the firewater pump engine.

RESPONSE

The manufacturer's data sheets for the emergency diesel generator are provided in response to Data Request 27. Information on the exhaust system can be found on page 4 of the data sheets. The given exhaust gas flow rate of 8,207.1 cubic feet per minute out of an 8-inch-internal-diameter exhaust pipe will result in a velocity of 392.06 feet per minute, which is equal to 119.44 meters per second.

The manufacturer's data sheets for the fire pump engine are provided in Attachment 28-2, with the response to Data Request 28. The size of the fire pump engine has increased. Information on the exhaust flow can be found on page 1 of the data sheets. The given exhaust gas flow rate is 1,740 cubic feet per minute but no exhaust diameter was provided. The applicant assumed a diameter of 6 inches. These values result a velocity of 147.77 feet per minute, which is equal to 45.05 meters per second. The air dispersion modeling used these values.

BACKGROUND

The operating emissions modeling analysis results presented in the AFC do not present results for $PM_{2.5}$ impacts. Staff needs more information to assess the project's impacts on the $PM_{2.5}$ ambient air quality standards.

DATA REQUEST

21. Please expand Table 8.1-24 to include $PM_{2.5}$ 24-hour and annual impacts.

RESPONSE

Table 8.1-24 from the AFC has been revised and is provided below. Revised electronic modeling files for construction and operation are provided on the CD included as Attachment 21-1. (Three copies are being provided.)

The upper portion of Revised Table 8.1-24 provides modeled results from the construction phase. The following changes have been made relative to the results shown in the AFC:

- Revised SCAQMD emission factors for equipment exhaust per Data Request 36
- Modeled construction activities using actual hours per day of operation per Data Request 46
- Combined PM_{10} and $PM_{2.5}$ emissions from equipment exhaust and from fugitive dust when reporting results per Data Request 47
- $PM_{2.5}$ was included in analysis per Data Request 49

The lower portion of Revised Table 8.1-24 provides modeled results from the operations phase. The following changes have been made relative to the results shown in the AFC:

- The larger fire pump emissions are included
- $PM_{2.5}$ was included in analysis per this data request.

Revised Table 8.1-24 (Rev. 1)
Proposed Colusa Generating Station Project AERMOD Modeling Results

Pollutant	Averaging Period	Maximum Modeled Impact ($\mu g/m^3$)	PSD Significant Impact Level[a] ($\mu g/m^3$)	Background[b] ($\mu g/m^3$)	Total Predicted Concentration ($\mu g/m^3$)	AAQS ($\mu g/m^3$)	UTM Coordinates East (m)	UTM Coordinates North (m)
Construction Impacts								
CO	1-hour	1,354.7	NA	6,444	7,799	23,000	562,750	4,357,230
	8-hour	190.0	NA	3,768	3,958	10,000	563,060	4,357,131
NO_2	1-hour[c]	230.81	NA	120.3	351.1	470	562,750	4,357,230
	Annual[c]	8.40	NA	26.3	34.7	100	562,750	4,357,523
PM_{10}	24-hour	332.60	NA	92	424.6	50	563,060	4,357,131
	Annual	3.33	NA	25.5	28.8	20	562,750	4,357,523

Revised Table 8.1-24 (Rev. 1)
Proposed Colusa Generating Station Project AERMOD Modeling Results

Pollutant	Averaging Period	Maximum Modeled Impact ($\mu g/m^3$)	PSD Significant Impact Level[a] ($\mu g/m^3$)	Background[b] ($\mu g/m^3$)	Total Predicted Concentration ($\mu g/m^3$)	AAQS ($\mu g/m^3$)	UTM Coordinates	
							East (m)	North (m)
$PM_{2.5}$	24-hour	26.61	NA	26	52.6	35	562,750	4,357,500
	Annual[d]	0.69	NA	11	11.7	12	562,750	4,357,523
SO_2	1-hour	2.06	NA	15.6	17.7	655	562,750	4,357,230
	3-hour[e]	0.69	NA	15.6	16.3	1,300	562,750	4,357,230
	24-hour	0.100	NA	7.8	7.9	105	563,060	4,357,131
	Annual	.0083	NA	2.6	2.6	80	562,750	4,357,523
Routine Plant Operation Impacts								
CO	1-hour	1,396	2,000	6,444	7,840	23,000	558,375	4,359,450
	8-hour	293	500	3768	4,061	10,000	558,325	4,359,325
NO_2	1-hour[c]	336.3	NA	120.3	456.6	470	558,800	4,353,925
	Annual[e]	0.64	1	26.3	27.0	100	562,750.2	4,357,572
PM_{10}	24-hour	4.35	5	92	96.4	50	562,600	4,357,800
	Annual	0.5	1	25.5	26.0	30	562,425	4,358,075
$PM_{2.5}$	24-hour[d]	2.73	NA	26	28.6	35	562,325	4,358,200
	Annual	0.51	NA	11	11.5	12	562,425	4,358,075
SO_2	1-hour	10.94	NA	15.6	26.5	655	558,350	4,359,500
	3-hour[e]	4.62	NA	15.6	20.2	1,300	559,025	4,355,700
	24-hour	0.87	NA	7.8	8.7	105	562,600	4,357,800
	Annual	0.04	NA	2.6	2.6	80	562,425	4,358,075

Notes:

[a] Source: 40 CFR 52.21.
[b] Background represents the maximum value measured at various air monitoring stations around the CGS site, 2003-2005 (except for 1-hour NO_2 which uses the arithmetic average of 2004-2005 measurements).
[c] Results used OLM to estimate NO_2 impacts.
[d] $PM_{2.5}$ results are 98th percentile and background is 3-year average, 98th percentile
[e] Background 3-hour SO_2 not reported, used 1-hr background

AAQS = Most stringent ambient air quality standard for the averaging period
NA = Not applicable
NR = Not reported
m = meters
OLM = ozone limiting method
$\mu g/m^3$ = micrograms per cubic meter
CO = carbon monoxide
NO_2 = nitrogen dioxide
PM_{10} = particulate matter less than or equal to 10 microns in diameter
SO_2 = sulfur dioxide

BACKGROUND [22 THROUGH 25]

The NO_X Ozone Limiting Method modeling (NOx_OLM) is restricted to 2001 through 2004, and does not include 2005, while the background NO_2 concentration is the average of 2004 and 2005 maximum levels. This approach is inconsistent and may not properly indicate the maximum project impacts, which might otherwise be shown to exceed the 1-hour ambient air quality standard. Additionally, it should be noted that the other pollutant modeling runs include 2001 through 2005. The cumulative operating impacts for NO_2 are shown in Table 8.1-28 to be essentially at the ambient air quality standard, without any room for additional sources or emissions. Staff needs additional information to examine whether the inconsistent modeling analysis approach creates potential issues for the NO_2 impact analysis and determine if other measures can be used to minimize potential project NO_2 impacts.

DATA REQUEST

22. Please explain why NOx_OLM modeling was not performed for 2005. If ozone files are available please perform a NOx_OLM modeling run for 2005 for operational and cumulative 1-hour NO_X impacts.

RESPONSE

The NO_X OLM modeling year 2005 was not included in the AFC because the 2005 ozone data from the Colusa monitoring station required for that modeling was not available. Those data have since been obtained. The maximum NO_2 impact for 2005 is 238.9 $\mu g/m^3$ for the 1-hour impact and 0.60 $\mu g/m^3$ for the annual average. These numbers are both less than the maximum reported in the AFC which occurred in year 2001. Therefore, the maximum values reported in the AFC now represent the full five-year period consistent with the approach used for the other pollutants. The results of the full five years of OLM modeling are included with the modeling files provided elsewhere in this response to the data requests.

DATA REQUEST

23. Please explain the rationale for the procedure used to determine the NO_2 background concentration, which was different than the procedure used for all other pollutants.

RESPONSE

The NO_2 concentrations used for background were obtained from the Yuba City monitoring station in Sutter County. This monitoring station is located in a medium-sized city and is closer to the Sacramento Metropolitan Area, which has higher monitored NO_2, than the CGS site. The actual NO_2 background at the CGS site would be expected to be lower because the site is rural and farther from the Sacramento Metropolitan Area influence (this could explain why NO_2 is not even measured at the Colusa-Sunrise Boulevard Station—the station used in the AFC for background concentration of other pollutants). Therefore, using the average of the past two years monitoring data from Yuba City as representing the background value for the CGS site is still very conservative. For example, the monitoring station on Manzanita Avenue in Chico is located in a city about the same size as the Yuba City/Marysville area but farther from Sacramento. The highest 1-hour NO_2 readings from the Chico monitoring Station are 0.057, 0.056, and 0.048 ppm for years 2003, 2004 and 2005, respectively as shown in Table 23-1 (source: California Air Resources Board, www.arb.ca.gov, accessed January 30, 2007). The highest measured value from the last three years, 0.057 ppm, is lower than the 0.064 value used in the AFC. Therefore, an even greater margin of compliance would be demonstrated if the Chico data were used as background in lieu of the Yuba City data. The Chico monitoring station is located closer to the CGS site than the Yuba City monitoring station and may be even more representative of background concentrations of NO_2 than Yuba City.

Table 23-1
Comparison of 1-Hour Maximum Ambient Nitrogen Dioxide Levels in Colusa Region, 1996-2005 (ppm)

Averaging Time	1996	1997	1998	1999	2000	2001	2002	2003	2004	2005
Yuba City–Almond Street Station, Sutter County										
Maximum 1-Hour Average[a]	0.068	0.073	0.074	0.085	0.072	0.079	0.068	**0.080**	0.066	0.062
Chico – Manzanita Avenue Station, Butte County										
Maximum 1-Hour Average[a]	0.070	0.061	0.068	0.077	0.078	0.062	0.058	**0.057**	0.056	0.048

Source: California Air Resources Board (CARB), 2006, www.arb.ca.gov.
Notes:
Maximum average values occurring during the most recent 3 years are indicated in bold.
Arithmetic average 1-hour for 2004 – 2005 period equals 0.064 ppm.
[a] All 1-hour concentrations are below the California NO_2 ambient air quality standard of 0.25 ppm.

DATA REQUEST

24. The peak 1-hour NO_X impacts from operation (shown in Table 8.1-24 and Table 8.1-28) occur during turbine startup, with the assumption that both turbines are in simultaneous startup. In order to minimize a potential significant impact, please indicate if a condition of certification that would require sequential rather than simultaneous turbine startups would be acceptable.

RESPONSE

In light of the responses to Data Requests 22 and 23, such a condition is not required because the applicant has demonstrated compliance during simultaneous turbine startup.

DATA REQUEST

25. In lieu of a startup condition of certification identified above, please provide a revised NOx_OLM modeling analysis that uses both hourly monitored NO_2 and hourly monitored ozone concentrations for 2001 through 2005 to clearly demonstrate that simultaneous turbine startup would not cause an exceedance of the 1-hour ambient air quality standard.

RESPONSE

In light of the responses to Data Requests 22 and 23, the requested modeling is not required because the applicant has demonstrated compliance during simultaneous turbine startup.

EMISSION CONTROL TECHNOLOGIES

BACKGROUND [26 THROUGH 28]

There is very little description regarding the assumed control technologies that will be used to ensure the emission values for the auxiliary boiler, the emergency generator engine, and the firewater pump engine. Additionally, manufacturer data sheets, stated in the AFC to be provided in Appendix G, were not provided. Staff needs additional description of the control technologies assumed for these three emission sources.

DATA REQUEST

26. Please provide a brief description of the auxiliary boiler's assumed emission control technology and a copy of the vendor supplied emission factors that were noted on page 8.1-7 of the AFC.

RESPONSE

The auxiliary boiler capacity is based on a maximum heat input of approximately 44 mmbtu/hr and is designed to fire natural gas only. The auxiliary boiler is equipped with dry low NO_X burners to reduce NO_X emissions.

The emission factors are based on EPA's publication AP-42, Volume 1, 5th Edition, Chapter 1 criteria for small boilers (<100 mmbtu/hr heat input) and not specific vendor data as this equipment supplier has not been selected.

The auxiliary boiler is required for applying steam seals to the steam turbine to permit pulling vacuum. Because the plant has a commitment to 250 starts per year, 6 days per week/16 hours per day operating regimen, with a startup time from cold start of 270 minutes maximum, this boiler will most likely operate 8 hours per day (night time startup upon the shutdown of the CTs), 6 days a week and all day Sunday, for a total of 3,744 hours per year.

A revised summary of the auxiliary boiler's emissions reflecting the changes above is provided in Revised Table 8.1-19.

Revised Table 8.1-19 (Rev. 1)
Auxiliary Boiler Emissions

Pollutant[a]	Emission Factor (lb/MMBtu)	Emissions	
		lb/hr	ton/yr[b]
NO_X	0.049	2.16	4.04
CO	0.082	3.61	6.75
PM_{10}	0.0075	0.33	0.62
SO_2	0.0006	0.03	0.05
VOC	0.0054	0.24	0.44

Notes:
[a] Emissions factors are from AP-42 Table 1.4-1 and Table 1.4-2.
[b] Annual emissions based on 3,744 hours of operation.

DATA REQUEST

27. Please provide a brief description of the emergency generator engine's assumed emission control technology and a copy of the manufacturer's data sheets that were not provided in Appendix G as stated on page 8.1-7 of the AFC.

RESPONSE

The emergency generator will be driven by a 1,340 horsepower diesel engine. The manufacturer's data sheets for this engine and generator are provided as Attachment 27-1. The emissions comply with EPA Tier 2 and CARB Emissions Certifications for non-road applications without need for add-on abatement. Special features and emission control systems include direct diesel injection, turbocharger, charge air cooler and engine control module. The vendor for this equipment has not been selected.

DIESEL GENERATOR SET

CATERPILLAR®

Image shown may not reflect actual package.

STANDBY
1000 ekW 1250 kVA
60 Hz 1800 rpm 480 Volts

Caterpillar is leading the power generation marketplace with Power Solutions engineered to deliver unmatched flexibility, expandability, reliability, and cost-effectiveness.

FEATURES

EMISSIONS
·EPA Tier 2 and CARB Emissions Certified for non-road mobile applications

DESIGN CRITERIA
•The generator set accepts rated load in one step

FULL RANGE OF ATTACHMENTS
• Wide range of bolt-on system expansion attachments, factory designed and tested

UL 2200
•UL 2200 listed packages are available. Certain restrictions may apply. Consult with your Caterpillar Dealer.

WORLDWIDE PRODUCT SUPPORT
•Worldwide parts availability through the Caterpillar dealer network
•With over 1844 dealer branch stores operating in 200 countries, you're never far from the Caterpillar part you need
•99.7% of parts orders filled within 24 hours. The best product support record in the industry.
•Caterpillar dealers service technicians are trained to service every aspect of your electric power generation system
•Preventative maintenance agreements
•The Cat® SOS program effectively detects internal engine component condition, even the presence of unwanted fluids and combustion by products

CAT C32 ATAAC DIESEL ENGINE
• Utilizes ACERT™ Technology
• Reliable, rugged, durable design
• Four-cycle diesel engine combines consistent performance and excellent fuel economy with minimum weight
• Electronic engine control

CAT SR4B GENERATOR
•Designed to match performance and output characteristics of Caterpillar diesel engines
•Optimum winding pitch for minimum total harmonic distortion and maximum efficiency
•Single point access to accessory connections
•UL 1446 recognized Class H insulation system
•Digital Voltage Regulator

CAT EMCP 3 SERIES CONTROL PANELS
• Controls designed to meet individual customer needs
• EMCP 3 provides the option for full-featured power metering and protective relaying

ATTACHMENT 27-1

28067004
February 2007

Colusa Generating Station
E&L Westcoast, LLC
Colusa County, California

URS

STANDBY 1000 ekW 1250 kVA

60 Hz 1800 rpm 480 Volts

CATERPILLAR®

FACTORY INSTALLED STANDARD & OPTIONAL EQUIPMENT

System	Standard	Optional
Air Inlet	• Single element canister type air cleaner • Service indicator	• Dual element air cleaners • Air inlet adapters
Cooling	• Radiator with guard (43°C) • Low profile (frontal area) • Low airflow • Coolant drain line with valve • Fan and belt guards • Caterpillar Extended Life Coolant • Coolant level sensors • Radiator duct flange	• Radiator with 27°C ambient capability • Jacket water heater
Exhaust	• Dry exhaust manifold • Flanged faced outlets	• Stainless steel exhaust flex fittings • Elbows, flanges, expanders & Y adapters
Fuel	• Primary fuel filter with water separator • Secondary fuel filter • Fuel priming pump • Flexible fuel lines • Fuel cooler	
Generators	• Permanent magnet excited • Class H insulation • Class F temperature (105°C prime/130°C standby) • Winding temperature detectors (select models) • Anti-condensation space heaters	• Oversize & premium generators
Power Termination	• Bus bar (NEMA and IEC mechanical lug holes) -right side standard • Bottom cable entry	• Circuit breakers, UL listed, 3 pole with shunt trip, 80% or 100% rated, choice of trip units, manual or electrically operated (low voltage only) • Circuit breakers, IEC compliant, 3 or 4 pole with shunt trip (low voltage only), choice of trip units, manual or electrically operated • Shroud cover for bottom cable entry • Power terminations can be located on the left and/or rear as an option. Also, multiple circuit breakers can be ordered (up to 3) • Top cable entry
Governor	• ADEM™ A4	• Load Share Module
Control Panels	• User Interface panel (UIP) - rear mount • EMCP 3.1 generator set controller • Speed adjust • AC & DC customer wiring area (right side) • CAT Digital Voltage Regulator (CDVR) with KVAR/PF control, 3-phase sensing • Emergency Stop Push button	• EMCP 3.2 and EMCP 3.3 • Option for right or left mount UIP • Option for rear or left mount Customer wiring area • Local & remote annunciator modules • Discrete I/0 Module • Generator temperature monitoring & protection • Voltage raise/lower switch
Lube	• Lubricating oil and filter • Oil drain line with valves • Fumes disposal • Gear type lube oil pump	• Deep sump oil pan
Mounting	• Structual steel tube • Anti-vibration mounts (shipped loose)	
Starting/Charging	• 24 volt starting motor(s) • Batteries with rack and cables • Battery disconnect	• Battery chargers (10 Amp) • 45 amp charging alternator • Oversize batteries • Ether starting aid
General	• Right-hand service • Paint - Caterpillar Yellow (except rails and radiators gloss black) • SAE standard rotation • Flywheel and Flywheel housing - SAE No. 0	• UL 2200 • CSA certification • EU Declaration of Incorporation • EEC Declaration of Conformity

STANDBY 1000 ekW 1250 kVA

60 Hz 1800 rpm 480 Volts

CATERPILLAR®

SPECIFICATIONS

CAT GENERATOR

SR4B Generator
Frame size..... 692
Excitation..... Permanent Magnet
Pitch..... 0.7143
Number of poles.....4
Number of bearings..... 002
Insulation..... UL 1446 Recognized Class H with tropicalization and antiabrasion
IP rating.....Drip Proof IP22
Alignment..... Close Coupled
Overspeed capability - % of rated..... 150
Wave form.....003.00
Voltage regulator.3 Phase sensing with selectible volts/Hz
Voltage regulation.....Less than +/- 1/2% (steady state)
Less than +/- 1% (no load to full load)
Telephone Influence Factor..... Less than 50
Harmonic distortion..... Less than 5%

CAT DIESEL ENGINE

C32 TA, V-12, 4-stroke watercooled diesel
Bore - mm..... 145.00 mm (5.71 in)
Stroke - mm..... 162.00 mm (6.38 in)
Displacement - L..... 32.10 L (1958.86 in^3)
Compression ratio..... 15:1
Aspiration..... TA
Fuel system.....MEUI
Governor type.....ADEM™ A4

CAT EMCP 3 SERIES CONTROLS

• EMCP 3.1 (Standard)
•Integral to generator terminal box
•Single location for customer connection
•IP 23 enclosure
• 24 Volt DC Control
• UL/CSA
• Lockable hinged door (option)
• Run/Auto/Stop control
• True RMS metering, 3-phase
•Speed Adjust
• Voltage adjust (optional on 3.1)
• Digital indications for:
  - RPM
  - Operating hours
  - Oil pressure
  - Coolant temperature
  - System DC volts
  - L-L volts, L-N volts, phase amps, Hz
- ekW, kVA, kVAR, kW-hr, %kW, PF(*)
• Shutdowns with indicating lights (with optional annunciator):
  - Low oil pressure
  - High coolant temperature
  - Overspeed
  - Emergency stop
  - Failure to start (overcrank)
• Programmable protective relaying functions (*):
  - Under and over voltage
  - Under and over frequency
  - Reverse power
  - Overcurrent
• MODBUS isolated data link (RS-485 half-duplex) supports serial communication at data rate up to 115.2 kbaud (*)
(*) Available on EMCP 3.2 & EMCP 3.3

STANDBY 1000 ekW 1250 kVA

60 Hz 1800 rpm 480 Volts

CATERPILLAR®

TECHNICAL DATA

Open Generator Set - - 1800 rpm/60 Hz/480 Volts	DM7714	
EPA Certified Tier 2		
Generator Set Package Performance		
Genset Power rating @ 0.8 pf	1250 kVA	
Genset Power rating with fan	1000 ekW	
Coolant to aftercooler		
Coolant to aftercooler temp max	49 ° C	120 ° F
Fuel Consumption		
100% load with fan	274.3 L/hr	72.5 Gal/hr
75% load with fan	215.7 L/hr	57.0 Gal/hr
50% load with fan	148.4 L/hr	39.2 Gal/hr
Cooling System[1]		
Ambient air temperature	51 ° C	124 ° F
Air flow restriction (system)	0.12 kPa	0.48 in. water
Air flow (max @ rated speed for radiator arrangement)	1253 m³/min	44249 cfm
Engine Coolant capacity with radiator/exp. tank	190.0 L	50.2 gal
Engine coolant capacity	55.0 L	14.5 gal
Radiator coolant capacity	135.0 L	35.7 gal
Inlet Air		
Combustion air inlet flow rate	91.9 m³/min	3245.4 cfm
Exhaust System		
Exhaust stack gas temperature	445.3 ° C	833.5 ° F
Exhaust gas flow rate	232.4 m³/min	8207.1 cfm
Exhaust flange size (internal diameter)	203 mm	8 in
Exhaust system backpressure (maximum allowable)	10.0 kPa	40.2 in. water
Heat Rejection		
Heat rejection to coolant (total)	350 kW	19904 Btu/min
Heat rejection to exhaust (total)	1102 kW	62671 Btu/min
Heat rejection to aftercooler	306 kW	17402 Btu/min
Heat rejection to atmosphere from engine	51 kW	2900 Btu/min
Heat rejection to atmosphere from generator	56.0 kW	3184.7 Btu/min
Alternator[2]		
Motor starting capability @ 30% voltage dip	1990 skVA	
Frame	692	
Temperature Rise	130 ° C	266 ° F
Lube System		
Sump refill with filter	68.0 L	18.0 gal
Emissions (Nominal)[3]		
NOx g/hp-hr	4.7 g/hp-hr	
CO g/hp-hr	.11 g/hp-hr	
HC g/hp-hr	.05 g/hp-hr	
PM g/hp-hr	.029 g/hp-hr	

[1] Ambient capability at 300m (984 ft) above sea level. For ambient capability at other altitudes, consult your Caterpillar dealer.

[2] UL 2200 Listed packages may have oversized generators with a different temperature rise and motor starting characteristics. Generator temperature rise is based on a 40°C ambient per NEMA MG1-32.

[3] Emissions data measurement procedures are consistent with those described in EPA CFR 40 Part 89, Subpart D & E and ISO8178-1 for measuring HC, CO, PM, NOx. Data shown is based on steady state operating conditions of 77°F, 28.42 in HG and number 2 diesel fuel with 35° API and LHV of 18,390 btu/lb. The nominal emissions data shown is subject to instrumentation, measurement, facility and engine to engine variations. Emissions data is based on 100% load and thus cannot be used to compare to EPA regulations which use values based on a weighted cycle.

RATING DEFINITIONS AND CONDITIONS

Meets or Exceeds International Specifications: AS1359, BS4999, EGSA101P, ISO3046, ISO8528, NEMA MG 1-32, 89/336/EEC, 98/37/EEC, 72/23/EEC, CSA, UL 508 and IEC 60034

Standby - Output available with varying load for the duration of the interruption of the normal source power. Standby power in accordance with ISO8528. Fuel stop power in accordance with ISO3046/1, AS2789, DIN6271, and BS5514. Standby ambients shown indicate ambient temperature at 100 percent load which results in a coolant top tank temperature just below the shutdown temperature.

Ratings are based on SAE J1995 standard conditions. These ratings also apply at ISO3046/1, DIN6271, and BS5514 standard conditions.

Fuel Rates are based on fuel oil of 35° API (16° C or 60° F) gravity having an LHV of 42 780 kJ/kg (18,390 Btu/lb) when used at 29° C (85° F) and weighing 838.9 g/liter (7.001 lbs/U.S. gal.).

Additional Ratings may be available for specific customer requirements. Consult your Caterpillar representative for details.

DIMENSIONS

Package Dimensions		
Length	**4766.9 mm**	**187.67 in**
Width	**2024.3 mm**	**79.7 in**
Height	**2254.0 mm**	**88.74 in**
Weight	**8046 kg**	**17,738 lb**

Note: Do not use for installation design. See general dimension drawings for detail (Drawing #2763027).

© 2006 Caterpillar
All rights reserved.

Materials and specifications are subject to change without notice. The International System of Units (SI) is used in this publication.

CAT, CATERPILLAR, their respective logos and "Caterpillar Yellow," as well as corporate and product identity used herein, are trademarks of Caterpillar and may not be used without permission.

Performance No.: DM7714

Feature Code:: C32DE06

Source:: U.S. Sourced

19 April 2006 6757272

DATA REQUEST

28. Please provide a brief description of the firewater pump engine's assumed emission control technology and a copy of the manufacturer's data sheets that were not provided in Appendix G as stated on page 8.1-7 of the AFC.

RESPONSE

It has been determined that the firewater pump engine size needs to be increased to 300 horsepower (hp) from the original size of 160 hp. The manufacturer's data sheets for the larger diesel engine are provided in Attachment 28-1. The emissions comply with California ATCM Tier 2 certifications for non-road applications without need for add-on abatement. Special features and emission control systems include direct diesel injection, turbocharger, charge air cooler and engine control module. The vendor for this equipment has not been selected.

An updated summary of the results of the air dispersion modeling including the new fire pump size is provided in Attachment 28-2. The air dispersion modeling files and Public Health modeling files are included on a CD provided as Attachment 21-1.

The Public Health impacts changed negligibly due to the increased fire pump size. The only change was an increase in the maximum incremental cancer risk to 1.34 in one million from 1.19 in one million and the movement of the location of the maximum impact point 75 meters south along the same western fence line as reported in the AFC.

JW6H-UF40

FIRE PUMP DRIVER

EMISSION DATA

FOR

CALIFORNIA ATCM TIER 2

6 *Cylinders*
Four *Cycle*
Lean *Burn*
Turbocharged & Raw Water Aftercooled

15 PPM SULFUR #2 DIESEL FUEL (3b)								
RPM	BHP (1)	FUEL GAL/HR (L/HR)	GRAMS / HP / HR				EXHAUST	
			NMHC	NOx	CO	PM (2)	°F (°C)	CFM (m^3/min)
2100	300	14.0 (53)	0.32	4.27	0.33	0.12	770 (396)	1740 (49)

6081H Base Model Engine Manufactured by John Deere Co.

Notes:

1) *Engines are rated at standard conditions of 29.61in. (7521 mm) Hg barometer and 77°F (25° C) inlet air temperature. (SAE J1349)*

2) *PM is a measure of total particulate matter, including PM_{10}.*

3) *These emission values:*
   a) *are dependent on CUSTOMER PURCHASED special option C131329 on the engine*

   b) *are dependent on the use of fuel with the following properties:*
      i) maximum 15 parts per million (PPM) sulfur content
      ii) maximum 10% by volume aromatic hydrocarbon content
      iii) minimum lubricity level of a maximum wear scar diameter of 520 microns based on ASTM D6079 or D6079-02

   c) *have been determined using single engine test data*

   d) *see disclaimer on reverse side*

Disclaimer

1. Stationary diesel-fueled compression ignition engines installed in California after January 1, 2005 are subject to California's Airborne Toxic Control Measure for Stationary Compression Ignition Engines (the "ATCM"), Cal. Code Regs. Title 17, Section 93115.

2. The California Air Resources Board ("CARB") has reviewed the emissions estimation methodology provided by Clarke Fire Protection Products, Inc. ("Clarke") and has concluded that Clarke has used a valid methodology for estimating the emissions from engines supplied by Clarke and that the engines presumptively comply with the ATCM's emissions standards. Clarke's methodology used existing emissions test data associated with similar engines to estimate the emissions produced by the emergency fire pump engines supplied by Clarke.

3. The reverse side of this document shows the estimated emissions from this model engine [footnote (2)] supplied by Clarke using Clarke's methodology.

4. CARB's determination is not binding on the local air districts, which have primary jurisdiction for implementing and enforcing the ATCM.

5. The reverse side of this document also shows the emissions from this model engine [footnote (3)] supplied by Clarke Fire Protection Products ("Clarke"). These emissions values are calculated based on a ISO 8178 part 4 D1 cycle weighted average of actual test data from a single engine test.

6. Actual test data in the field or other information established by the local air districts or CARB that show actual emissions from an engine supplied by Clarke in excess of the ATCM limitations could indicate a violation of the ATCM and subject the seller, owner and operator of the engine to penalties under California law. Although Clarke believes that the engines supplied by Clarke comply with the ATCM based on the available data and methodology accepted by CARB, for the foregoing reasons, Clarke cannot, and does not, guarantee that its engines will comply with the ATCM emission regulations.

7. CLARKE MAKES NO WARRANTIES OR GUARANTIES, EXPRESS OR IMPLIED, INCLUDING ANY WARRANTY OF MERCHANTABILITY, FITNESS FOR A PARTICULAR PURPOSE OR OTHERWISE, THAT THE ENGINES SUPPLIED BY CLARKE WILL COMPLY WITH THE ATCM. CLARKE ALSO EXPRESSLY DISCLAIMS THAT THE ENGINES SUPPLIED BY CLARKE WILL, IN FACT, COMPLY WITH THE ATCM. IN NO EVENT SHALL CLARKE BE LIABLE FOR SPECIAL, INCIDENTAL OR CONSEQUENTIAL DAMAGES ARISING OUT OF OR IN CONNECTION WITH THESE TERMS AND CONDITIONS OR THE ENGINES SUPPLIED BY CLARKE OR FOR INDEMNIFICATION OF BUYER ON ACCOUNT OF ANY CLAIM ASSERTED AGAINST BUYER, OR FOR ANY OTHER DAMAGE OF ANY KIND, WHETHER DIRECT OR INDIRECT, IF THE ENGINES SUPPLIED BY CLARKE DO NOT COMPLY WITH THE ATCM.

Colusa Generating Station
AERMOD results
Normal Operations

Pollutant	Averaging Period	Maximum Modeled Concentration			PSD SIL	PSD Class II Increment	PSD Monitoring Significance	Measured Background Concentration	Measured Background Concentration	Mamimum Total Concentration	NAAQS	CAAQS
		($\mu g/m^3$)	UTM X (m)	UTM Y (m)	($\mu g/m^3$)	($\mu g/m^3$)	($\mu g/m^3$)	(ppm)	($\mu g/m^3$)	($\mu g/m^3$)	($\mu g/m^3$)	($\mu g/m^3$)
NO_2	1-hour	336.34	558,800	4,353,925	-	-	-	0.064	120.3	456.6	-	470
	Annual	0.64	562,750	4,357,575	1	25	14	0.014	26.3	27.0	100	-
CO	1-hour	1,395.82	558,375	4,359,450	2,000	-	-	5.8	6,444.4	7,840.3	40,000	23,000
	8-hour	293.07	558,325	4,359,325	500	-	575	3.39	3,766.7	4,059.7	10,000	10,000
SO_2	1-hour[1]	10.94	558,350	4,359,500	-	-	-	0.006	15.6	26.5	-	655
	3-hour	4.62	559,025	4,355,700	25	512	-	0.006	15.6	20.2	1,300	-
	24-hour	0.87	562,600	4,357,800	5	91	13	0.003	7.8	8.7	365	105
	Annual	0.04	562,425	4,358,075	1	20	-	0.001	2.6	2.6	80	-
$PM_{2.5}$	24-hour[2,4]	2.55	562,675	4,357,725	-	-	-	-	26.0	28.6	35	-
	24-hour[3,4]	2.73	562,325	4,358,200	-	-	-	-	26.0	28.7	35	-
	Annual	0.51	562,425	4,358,075	-	-	-	-	11.0	11.5	15	12
PM_{10}	24-hour[2]	6.11	558,375	4,359,325	5	30	10	-	92.0	98.1	150	50
	24-hour[3]	4.35	562,600	4,357,800	5	30	10	-	92.0	96.4	150	50
	Annual	0.51	562,425	4,358,075	1	17	-	-	25.5	26.0	50	20

Note that all cases are based on stack parameters in both turbines from 100% load, 59F ambient temperature except
[1]SO_2 1 hour is based on 2 turbines operating at 100% load, 18F ambient temerature
[2]PM 24 hour is based on 2 turbines operating at 50% load, 114F ambient temperature
[3]PM 24 hour is based on 2 turbines operating at 100% load, 59F ambient temperature
[4]$PM_{2.5}$ 24 hour is based on H8H value

ATTACHMENT 28-2

Colusa Generating Station
E&L Westcoast, LLC
Colusa County, California

28067004
February 2007

URS

INITIAL COMMISSIONING

BACKGROUND [29 AND 30]

Staff needs additional information regarding the initial commissioning phases/tests in order to evaluate the initial commissioning impact analysis. Specifically, the criteria pollutant emissions and exhaust parameters for each type of commissioning phase/test and the time required for each type of commissioning phase/test are needed to evaluate the project impacts and confirm the total initial commissioning period emission estimate.

DATA REQUEST

29. Please provide a brief description of each type of phase/test that will be performed to complete the initial commission interval for each turbine/HRSG.

RESPONSE

The phase tests associated with the initial commissioning of the turbine/HRSG are summarized in Table 29-1.

Table 29-1
Commissioning Phase Test Description

Phase Test	Description
First fire	Initial firing of the gas turbine.
Green rotor run-in	A minimum 4-hour run to check for vibration stability required by GE on machines that had not been run at the factory.
Steam blows	Steam generated in the HRSGs is blown through steam piping to ensure that debris is cleaned from the piping.
Restoration	Steam blow restoration, the time during which steam blow temporary piping is removed.
Turbine roll/overspeed	Initial admission of steam to the steam turbine to ensure proper operation. Includes overspeed testing.
Part load DLN tuning	Tuning of the gas turbine dry low NO_X system to ensure proper operation at part load.
Outage/WW	Outage to perform a water wash of the gas turbines for fine DLN tuning.
Fine DLN tuning/Finalize control constants	Final gas turbine DLN tuning to ensure proper NO_X control. Final setting of gas turbine controls to ensure proper operation.
Duct burners and safety valves	Duct burner firing, and setting the boiler safety valves.
Outage (strainers/catalyst, etc.)	Outage to remove/clean strainers, as well as install SCR and CO catalyst.
CEMS drift and Source testing	Testing of the Continuous Emissions Monitoring System, plus emissions source testing.
Functional tests	Testing of operation of various components as required by Owner.

Table 29-1
Commissioning Phase Test Description

Phase Test	Description
Outage/WW	Outage to perform a water wash of the gas turbines before performance testing; includes cleaning the gas turbine inlet guide vanes and installing final test instruments.
Performance test	Testing of the facility to prove it meets its guaranteed performance.
Continuous operation test	Longer term test of the facility to prove extended operation.

DATA REQUEST

30. Please provide a table that gives the hourly pollutant emissions, the number of hours required, and the exhaust parameters for each type of initial commissioning phase/test.

RESPONSE

Table 30-1 depicts the estimated hourly pollutant rates, required hours of each phase test, and total emissions for the commissioning period. The highest NO_X emissions shown in Table 30-1 are 450 pounds per hour. They occur when the turbine is operating at the 50 percent load condition. The highest CO emissions shown in Table 30-1 are 1,287.3 pounds per hour and occur when the turbine is operating under the 25 percent load conditions. Commissioning emissions were modeled in the AFC using stack exhaust parameters for the 50 percent load, 59 °F case which include a stack exit temperature of 175 °F and an exit velocity of 42.8 feet per second. When the turbine is operating at the 25 percent load case, these are reduced to a stack exit temperature of 172 °F and an exit velocity of 35 feet per second.

Revised modeling of commissioning impacts for NO_2 using the 50 percent load case show a maximum 1-hour impact of 197 $\mu g/m^3$. Revised modeling of commissioning impacts for CO using the 25 percent load case show a maximum 1-hour impact of 2,504 $\mu g/m^3$ and a maximum 8-hour impact of 888 $\mu g/m^3$. Revised electronic modeling files for commissioning are on the CD included in Attachment 21-1. Attachment 30-1 provides an updated summary of the results of the commissioning modeling.

Table 30-1
Summary of Estimated Commissioning Emissions

Phase Test	Unit	Load	Test Time (hr)	SO_X (lb/hr)	NO_X (lb/hr)	CO (lb/hr)	VOC (lb/hr)	PM_{10} (lb/hr)	SO_X (lb)	NO_X (lb)	CO (lb)	VOC (lb)	PM_{10} (lb)
First fire	CT # 1	10.0%	4.0	0.3	146.0	250.0	24.2	12.0	1.2	584.0	1,000.0	96.8	48.0
	CT # 2	10.0%	4.0	0.3	146.0	250.0	24.2	12.0	1.2	584.0	1,000.0	96.8	48.0
Green rotor run-in	CT # 1	25.0%	12.0	0.4	217.3	1,287.3	47.1	12.0	4.7	2,607.0	15,447.0	565.2	144.0
	CT # 2	25.0%	12.0	0.4	217.3	1,287.3	47.1	12.0	4.7	2,607.0	15,447.0	565.2	144.0
Steam blows	CT # 1	25.0%	168.0	0.4	217.3	1,287.3	47.1	12.0	65.9	36,498.0	216,258.0	7,912.8	2,016.0
	CT # 2	25.0%	168.0	0.4	217.3	1,287.3	47.1	12.0	65.9	36,498.0	216,258.0	7,912.8	2,016.0
Restoration	CT # 1	n/a	n/a	n/a	n/a	n/a	n/a	n/a	n/a	n/a	n/a	n/a	n/a
	CT # 2	n/a	n/a	n/a	n/a	n/a	n/a	n/a	n/a	n/a	n/a	n/a	n/a
Turbine roll/ overspeed	CT # 1	10.0%	16.0	0.3	146.0	250.0	24.2	12.0	4.7	2,336.0	4,000.0	387.2	192.0
	CT # 2	10.0%	16.0	0.3	146.0	250.0	24.2	12.0	4.7	2,336.0	4,000.0	387.2	192.0
Part load DLN tuning	CT # 1	50.0%	12.0	0.6	475.0	808.0	8.2	12.0	6.7	5,700.0	9,696.0	98.4	144.0
	CT # 1	100.0%	18.0	0.9	58.0	29.0	2.8	12.0	16.1	1,044.0	522.0	50.4	216.0
	CT # 2	50.0%	12.0	0.6	475.0	808.0	8.2	12.0	6.7	5,700.0	9,696.0	98.4	144.0
	CT # 2	100.0%	18.0	0.9	58.0	29.0	2.8	12.0	16.1	1,044.0	522.0	50.4	216.0
Outage/ Water Wash	CT # 1	n/a	n/a	n/a	n/a	n/a	n/a	n/a	n/a	n/a	n/a	n/a	n/a
	CT # 2	n/a	n/a	n/a	n/a	n/a	n/a	n/a	n/a	n/a	n/a	n/a	n/a
Fine DLN tuning/ Finalize control constants	CT # 1	50.0%	40.0	0.6	475.0	808.0	8.2	12.0	22.4	19,000.0	32,320.0	328.0	480.0
	CT # 1	75.0%	24.0	0.7	58.0	29.0	2.8	12.0	17.5	1,392.0	696.0	67.2	288.0
	CT # 1	100.0%	96.0	0.9	58.0	29.0	2.8	12.0	86.1	5,568.0	2,784.0	268.8	1,152.0
	CT # 2	50.0%	40.0	0.6	475.0	808.0	8.2	12.0	22.4	19,000.0	32,320.0	328.0	480.0
	CT # 2	75.0%	24.0	0.7	58.0	29.0	2.8	12.0	17.5	1,392.0	696.0	67.2	288.0
	CT # 2	100.0%	96.0	0.9	58.0	29.0	2.8	12.0	86.1	5,568.0	2,784.0	268.8	1,152.0

Table 30-1
Summary of Estimated Commissioning Emissions

Phase Test	Unit	Load	Test Time (hr)	SO_X (lb/hr)	NO_X (lb/hr)	CO (lb/hr)	VOC (lb/hr)	PM_{10} (lb/hr)	SO_X (lb)	NO_X (lb)	CO (lb)	VOC (lb)	PM_{10} (lb)
Duct burners and safety valves	CT # 1	100.0%	144.0	0.9	58.0	29.0	2.8	12.0	129.1	8,352.0	4,176.0	403.2	1,728.0
	CT # 2	100.0%	144.0	0.9	58.0	29.0	2.8	12.0	129.1	8,352.0	4,176.0	403.2	1,728.0
	DB # 1	50.0%	24.0	0.2	23.9	23.9	3.0	3.0	3.7	574.6	574.6	71.8	71.8
	DB # 1	100.0%	96.0	0.3	47.9	47.9	6.0	6.0	29.4	4,596.6	4,596.6	574.6	574.6
	DB # 2	50.0%	24.0	0.2	23.9	23.9	3.0	3.0	3.7	574.6	574.6	71.8	71.8
	DB # 2	100.0%	96.0	0.3	47.9	47.9	6.0	6.0	29.4	4,596.6	4,596.6	574.6	574.6
Outage (strainers/ catalyst, etc.)	CT # 1	n/a	n/a	n/a	n/a	n/a	n/a	n/a	n/a	n/a	n/a	n/a	n/a
	CT # 2	n/a	n/a	n/a	n/a	n/a	n/a	n/a	n/a	n/a	n/a	n/a	n/a
	DB # 1	n/a	n/a	n/a	n/a	n/a	n/a	n/a	n/a	n/a	n/a	n/a	n/a
	DB # 2	n/a	n/a	n/a	n/a	n/a	n/a	n/a	n/a	n/a	n/a	n/a	n/a
CEMS drift and Source testing	CT # 1	100.0%	64.0	0.9	12.8	11.6	2.0	12.0	57.4	816.6	742.4	125.4	768.0
	CT # 2	100.0%	64.0	0.9	12.8	11.6	2.0	12.0	57.4	816.6	742.4	125.4	768.0
	DB # 1	100.0%	64.0	0.3	10.5	19.2	4.2	6.0	19.6	674.2	1,225.8	268.1	383.0
	DB # 2	100.0%	64.0	0.3	10.5	19.2	4.2	6.0	19.6	674.2	1,225.8	268.1	383.0
Functional tests	CT # 1	100.0%	96.0	0.9	12.8	11.6	2.0	12.0	86.1	1,225.0	1,113.6	188.2	1,152.0
	CT # 2	100.0%	96.0	0.9	12.8	11.6	2.0	12.0	86.1	1,225.0	1,113.6	188.2	1,152.0
	DB # 1	100.0%	96.0	0.3	10.5	19.2	4.2	6.0	29.4	1,011.2	1,838.6	402.2	574.6
	DB # 2	100.0%	96.0	0.3	10.5	19.2	4.2	6.0	29.4	1,011.2	1,838.6	402.2	574.6
Outage/ Water Wash	CT # 1	n/a	n/a	n/a	n/a	n/a	n/a	n/a	n/a	n/a	n/a	n/a	n/a
	CT # 2	n/a	n/a	n/a	n/a	n/a	n/a	n/a	n/a	n/a	n/a	n/a	n/a
	DB # 1	n/a	n/a	n/a	n/a	n/a	n/a	n/a	n/a	n/a	n/a	n/a	n/a
	DB # 2	n/a	n/a	n/a	n/a	n/a	n/a	n/a	n/a	n/a	n/a	n/a	n/a

Table 30-1
Summary of Estimated Commissioning Emissions

Phase Test	Unit	Load	Test Time (hr)	SO_X (lb/hr)	NO_X (lb/hr)	CO (lb/hr)	VOC (lb/hr)	PM_{10} (lb/hr)	SO_X (lb)	NO_X (lb)	CO (lb)	VOC (lb)	PM_{10} (lb)
Performance test	CT # 1	100.0%	24.0	0.9	12.8	11.6	2.0	12.0	21.5	306.2	278.4	47.0	288.0
	CT # 2	100.0%	24.0	0.9	12.8	11.6	2.0	12.0	21.5	306.2	278.4	47.0	288.0
	DB # 1	100.0%	24.0	0.3	10.5	19.2	4.2	6.0	7.3	252.8	459.7	100.6	143.6
	DB # 2	100.0%	24.0	0.3	10.5	19.2	4.2	6.0	7.3	252.8	459.7	100.6	143.6
Continuous operation test	CT # 1	100.0%	192.0	0.9	12.8	11.6	2.0	12.0	172.1	2,449.9	2,227.2	376.3	2,304.0
	CT # 2	100.0%	192.0	0.9	12.8	11.6	2.0	12.0	172.1	2,449.9	2,227.2	376.3	2,304.0
	DB # 1	100.0%	192.0	0.3	10.5	19.2	4.2	6.0	58.7	2,022.5	3,677.3	804.4	1,149.1
	DB # 2	100.0%	192.0	0.3	10.5	19.2	4.2	6.0	58.7	2,022.5	3,677.3	804.4	1,149.1

Note:

CT = Combustion Turbine

DB = Duct Burner

Totals for Commissioning (lb)	**1,679.0**	**194,021.2**	**607,266.1**	**26,273.3**	**27,633.6**
Totals for Commissioning (ton)	**0.8**	**97.0**	**303.6**	**13.1**	**13.8**
Totals for Commissioning per Turbine (ton)	**0.4**	**48.5**	**152**	**6.57**	**7**

Colusa Generating Station
AERMOD results
Commissioning

Pollutant	Averaging Period	Maximum Modeled Concentration			PSD SIL	PSD Class II Increment	PSD Monitoring Significance	Measured Background Concentration	Measured Background Concentration	Mamimum Total Concentration	NAAQS	CAAQS
		(µg/m^3)	UTM X (m)	UTM Y (m)	(µg/m^3)	(µg/m^3)	(µg/m^3)	(ppm)	(µg/m^3)	(µg/m^3)	(µg/m^3)	(µg/m^3)
NO_2	1-hour	196.97	562,725	4,357,575	-	-	-	0.064	120.3	317.3	-	470
CO	1-hour	2,504.25	559,000	4,356,500	2,000	-	-	5.8	6,444.4	8,948.7	40,000	23,000
	8-hour	888.11	558,000	4,359,500	500	-	575	3.39	3,766.7	4,654.8	10,000	10,000

Note that commissioning modeling is based on 1 turbine commissioning at a time
Worst-Case 1-hour Emissions per Turbine for Commissioning

	lb/hr	
NO_X	450	Modeled with 50% load stack parameters, 59F ambient temperature
CO	1,287.3	Modeled with 25% load stack parameters
		Estimated 25 % load stack parameters are: exit temperature 172 F, velocity 35 fps.

ATTACHMENT 30-1

Colusa Generating Station
E&L Westcoast, LLC
Colusa County, California

28067004
February 2007

URS

STARTUP AND SHUTDOWN EMISSIONS

BACKGROUND [31 THROUGH 35]

The startup emission levels shown in Table 8.1-15 appear to be too low for PM_{10} and SO_2 emissions. Additionally, staff does not have enough information to assess whether the shutdown PM_{10} and SO_2 rates are reasonable. Staff needs additional information regarding the startup/shutdown event assumptions and PM_{10}/SO_2 emissions estimate.

DATA REQUEST

31. Please explain assumed load ramping along with maximum hourly and total fuel consumption for the three types (cold, warm and hot) of startup events and shutdown.

RESPONSE

The PM_{10} and SO_2 emissions during startup and shutdown shown in Table 8.1-15 of the AFC and the startup and shutdown durations are conservative estimates that contain contingency. They are not directly based on fuel flow to the turbine because the PM_{10} emission guarantees provided by the turbine manufacturer are not linear with fuel flow. Startup comprises the period from the introduction of fuel into the gas turbine until the emissions come into compliance with applicable limits. Compliance limits are met at 50 percent load for all three types of startup. Startups also include “hold” periods where loads are held constant (e.g., held at about 10 percent load for cold and warm startups and at about 20 percent load for hot startups) for significant periods of time (e.g., roughly two hours for cold and warm startups and roughly one-half hour for hot startup) relative to the overall startup time. Typically the total fuel consumption for a turbine startup event is less than half of the fuel needed to run the turbine at a 50 percent load for the same amount of time as the startup event.

DATA REQUEST

32. Please identify if duct firing can be initiated during the cold/warm/hot startup events and if duct firing would be shutdown prior to initiating the turbine shutdown event.

RESPONSE

While it might be possible to initiate duct firing during a startup event, it is not the intent of this facility to do so. Duct firing would be shut down coincident with initiating a turbine shutdown event—barring a turbine trip or some other unplanned event.

DATA REQUEST

33. Please explain how the startup SO_2 maximum hourly emission rates are estimated to be about one-third of the normal hourly full load no duct firing emission rates.

RESPONSE

The startup SO_2 maximum hourly emission rates were estimated to be one-half of the maximum hourly emission rates at the 50 percent load, winter low temperature, no duct firing operating condition (see the end of the response to Data Request 31).

DATA REQUEST

34. Please explain how the startup PM_{10} maximum hourly emission rates are estimated to be marginally less than the normal hourly full load emission rates with no duct firing.

RESPONSE

The startup PM_{10} maximum hourly emission rates for all types of startups were set equal to the turbine manufacturer's guaranteed PM_{10} emission rate of 12 lb/hr. The marginal difference is due to ammonia not contributing to PM_{10} emissions during startup.

DATA REQUEST

35. Please provide calculations to show that the estimated shutdown PM_{10} and SO_2 emission rates are reasonable given the assumed fuel flow during a shutdown event.

RESPONSE

The estimated emissions during a 30-minute shutdown event are the same whether expressed as pounds per hour or pounds per 30 minutes because the emissions are assumed to be zero during the 30-minute period immediately following the conclusion of a shutdown. If a startup were to be initiated anytime sooner than 30 minutes after a shutdown, those emissions would be captured in the emission estimates for that startup. Therefore, the PM_{10} emissions for the shutdown are 30 minutes at the turbine manufacturer's guaranteed PM_{10} emission rate of 12 lb/hr, which equals 6 pounds. The SO_2 emissions for the shutdown are 30 minutes at the maximum startup SO_2 emission rate of 0.40 lb/hr, which equals 0.20 pound.

CONSTRUCTION EMISSIONS

BACKGROUND [36 AND 37]

Staff requires additional information to understand the emission factors used to calculate the offroad construction equipment emissions as shown in Appendix G2, Tables G.2-4 to G.2-8.

DATA REQUEST

36. Please indicate the emission factors source and provide a table of the emission factors used in the offroad construction equipment emissions estimate.

RESPONSE

Construction equipment emissions were calculated using the table "Off-road Mobile Source Emission Factors (Scenario Years 2006-2020)" posted on the South Coast Air Quality Management District (SCAQMD) website.[2] However, during a review of work done, it was noticed that the SCAQMD had added a statement to this website declaring that the emissions factors posted from October 25 to December 7, 2006 were in error and had been revised. As the original emissions calculations had been made during this time period, the calculations were revised using updated emissions factors (shown in Table 36-1).

The revised emission inventories resulting from the use of the updated SCAQMD emission factors for the construction period are shown in Revised Table 8.1-10 for equipment exhaust and Revised Table 8.1-11 for fugitive dust.

Attachment 36-1 updates the entire emissions inventory for construction, replacing Tables G.2-3 and G.2-8 in the AFC.

[2] http://www.aqmd.gov/ceqa/handbook/offroad/offroad.html

Table 36-1
Construction Equipment Hourly Emissions Factors

Construction Equipment	Fuel	Engine HP	Emission Factors, gms/hp-hr					Hourly Emissions, lb/hr				
			NO_X	CO	VOC	SO_X	PM_{10}	NO_X	CO	VOC	SO_X	PM_{10}
Excavator Loader	Diesel	150	3.709	1.871	0.541	0.003	0.263	1.226	0.619	0.179	0.001	0.087
Excavator Backhoe	Diesel	150	3.709	1.871	0.541	0.003	0.263	1.226	0.619	0.179	0.001	0.087
Dozer Tractor Crawler	Diesel	100	3.790	2.185	0.821	0.003	0.353	0.836	0.482	0.181	0.001	0.078
Front End Loader	Diesel	100	2.687	1.731	0.600	0.002	0.256	0.592	0.382	0.132	0.001	0.056
Trenching Machine	Diesel	20	3.881	2.147	0.599	0.006	0.254	0.171	0.095	0.026	0.000	0.011
Excavator Motor Grader	Diesel	100	2.567	0.560	0.055	0.002	0.199	0.566	0.123	0.012	0.000	0.044
Vibrating Plate Compactor	Gasoline	8	1.991	1.493	0.305	0.004	0.140	0.035	0.026	0.005	0.000	0.002
Roller Vibrator	Diesel	100	3.176	1.847	0.667	0.003	0.282	0.700	0.407	0.147	0.001	0.062
Water Truck	Diesel	150	4.388	2.590	0.649	0.004	0.299	1.451	0.856	0.215	0.001	0.099
Concrete Mixer	Gasoline	20	2.676	1.681	0.590	0.004	0.198	0.118	0.074	0.026	0.000	0.009
Concrete Pump, trailer mount	Diesel	50	2.669	2.959	1.230	0.003	0.294	0.294	0.326	0.136	0.000	0.032
Mortar Mixer	Gasoline	11	0.533	0.516	0.934	0.002	0.024	0.013	0.013	0.023	0.000	0.001
Paving Machine	Diesel	100	4.039	2.295	0.866	0.003	0.362	0.890	0.506	0.191	0.001	0.080
Dump Truck	Diesel	150	4.388	2.590	0.649	0.004	0.299	1.451	0.856	0.215	0.001	0.099
Crane (6-ton)	Diesel	30	1.869	5.051	2.444	0.003	0.351	0.124	0.334	0.162	0.000	0.023
Crane (20-ton)	Diesel	75	2.693	2.176	0.893	0.002	0.280	0.445	0.360	0.148	0.000	0.046
Crane (50-ton)	Diesel	150	2.870	2.450	0.584	0.002	0.246	0.949	0.810	0.193	0.001	0.081
Crane (100-ton)	Diesel	270	2.549	0.751	0.257	0.002	0.099	1.518	0.447	0.153	0.001	0.059
Crane (300-ton)	Diesel	450	1.993	0.767	0.201	0.002	0.078	1.977	0.761	0.199	0.002	0.077
Crane (360-ton)	Diesel	450	1.993	1.739	0.450	0.003	0.171	1.977	1.726	0.446	0.003	0.169
Crane (500-ton)	Diesel	685	2.136	0.843	0.213	0.002	0.082	3.226	1.272	0.322	0.003	0.124

Table 36-1
Construction Equipment Hourly Emissions Factors

Construction Equipment	Fuel	Engine HP	Emission Factors, gms/hp-hr					Hourly Emissions, lb/hr				
			NO_X	CO	VOC	SO_X	PM_{10}	NO_X	CO	VOC	SO_X	PM_{10}
Manlift, telescoping	Diesel	43	2.575	2.646	1.084	0.003	0.268	0.244	0.251	0.103	0.000	0.025
Welder (250 amp)	Diesel	35	2.359	2.210	0.950	0.003	0.233	0.182	0.171	0.073	0.000	0.018
Air Compressor (185 cfm)	Diesel	5	3.501	6.029	0.531	0.013	0.340	0.039	0.066	0.006	0.000	0.004
Air Compressor (750 cfm)	Diesel	25	2.095	1.034	0.333	0.003	0.134	0.115	0.057	0.018	0.000	0.007
Generator (6 kW)	Diesel	30	3.142	2.309	0.814	0.004	0.245	0.208	0.153	0.054	0.000	0.016
Forklift (2-ton)	Gasoline	62	1.543	1.578	0.664	0.002	0.179	0.211	0.216	0.091	0.000	0.024
Forklift (4-ton)	Diesel	83	1.598	1.214	0.472	0.001	0.170	0.292	0.222	0.086	0.000	0.031
Fuel/Lube Truck	Diesel	175	4.116	1.995	0.543	0.004	0.238	1.588	0.770	0.209	0.001	0.092
Pickup Truck (1/2-ton)	Gasoline	150	4.388	2.590	0.649	0.004	0.299	1.451	0.856	0.215	0.001	0.099
Stakebed Truck	Diesel	325	3.148	0.894	0.309	0.003	0.113	2.255	0.640	0.221	0.002	0.081
Hydraulic Boom Truck	Diesel	260	3.548	0.920	0.344	0.003	0.126	2.033	0.527	0.197	0.002	0.072
Concrete Trowel	Gasoline	8	5.021	3.419	0.791	0.009	0.346	0.089	0.060	0.014	0.000	0.006
Concrete Floor Saw	Gasoline	14	4.541	2.233	0.696	0.007	0.290	0.140	0.069	0.021	0.000	0.009
Bobcat Skip Loader	Diesel	70	2.813	2.538	0.998	0.003	0.297	0.434	0.392	0.154	0.000	0.046
Hydrotest Pump	Diesel	25	2.095	1.034	0.333	0.003	0.134	0.115	0.057	0.018	0.000	0.007

NOTE: (8/30/01) Soot filters with 90 percent efficiency added to engines greater than 100 hp

Revised Table 8.1-10 (Rev. 1)
Estimated Criteria Pollutant Emissions From Construction Equipment Exhaust

	NO_X	CO	VOC	SO_X	PM_{10}	$PM_{2.5}$[c]
Worst-Case Monthly Emissions (lbs/month)	6,589.70	3,941.50	1166.4	6.2	447.6	443.6
Worst-Case Hourly Emissions (lbs/hr)[a]	33	19.7	5.8	0.03	2.2	2.2
Worst-Case Annual Emissions (lbs/yr)[b]	66,110.50	39,157.60	11,661.20	61.1	4624.1	4582.5
Worst-Case Annual Emissions (lbs/hr)based on 10 hrs/day of operation	18.11	10.73	3.19	0.02	1.27	1.26

Notes:
[a] Worst-case hourly emissions were estimated by dividing worst-case monthly emissions by 200 hours (20 days of 10 hours each). Total emissions were based on projected daily hours of equipment operation in a given month. Daily average hours of operation are shown in Appendix G.
[b] Worst-case annual emissions were estimated by summing emissions for each 12-month period (i.e., months 1 to 12, 2 to 13, etc.) during the 24-month construction period and taking the maximum emissions for the worst 12-month period (i.e., month 1 to 12 for CO, VOC, SO_X, PM_{10}, and NO_X).
[c] $PM_{2.5}$ calculations are based on conversion factors as presented in the SCAQMD's Air Quality Analysis Handbook Appendix A – Updated CEIDARS Table with $PM_{2.5}$ Fractions. The factor given for diesel-fueled internal combustion vehicles was 0.991.

Revised Table 8.1-11 (Rev. 1)
Estimated Peak PM_{10} Emissions During Construction

Emissions Estimate Scenario	Fugitive Dust PM_{10} Peak	Exhaust PM_{10} (during fugitive dust peak)[a]	Total PM_{10} Combined Peak
Worst-Case Monthly Emissions (lbs/month)	3,056.60	327.6	3,384.20
Worst-Case Hourly Emissions (lbs/hr)[b]	15.3	1.6	16.9
Worst-Case Daily Emissions (lbs/day)[b]	152.83	16.38	169.2
Worst-Case Annual Emissions (lbs/yr)[c]	14,532	4,624	19,156

Notes:
[a] Exhaust PM_{10} peak month does not occur in same month as Fugitive Dust Emissions peak month.
[b] Worst-case hourly emissions were estimated by dividing worst-case monthly emissions by 200 hours (20 days of 10 hours each). Total emissions were based on projected daily hours of equipment operation in a given month. Daily average hours of operation are shown in Appendix G.
[c] Worst-case annual emissions were estimated by summing emissions for each 12-month period (i.e., months 1 to 12, 2 to 13, etc.) during the 24-month construction period and taking the maximum emissions for the worst 12-month period.

Table G.2-3 Combined Fugitive Dust Emissions During CGS Construction

Uncontrolled Emission Factor[a]	0.11	tons PM10/acre-month
Controlled Emission Factor	0.011	tons PM10/acre-month
Control Efficiency[b]	90%	

Month	Construction Trailer and Parking Areas	Construction Laydown Area	Power Block Area	Switchyard	Plant Access Road	Proposed Transmission Line Interconnection	Natural Gas and Water Supply Pipelines	Teresa Creek Bridge	Disturbed Area	Uncontrolled Emissions	Controlled Emissions	Earth Moving	Fugitive Dust TOTAL	Equip. Exhaust PM10	Total PM10
	(acres)	(acres)	(acres)	(acres)	(acres)	(acres)	(acres)	(acres)	(acres)	(tons/month)	(tons/month)	(tons/month)	(tons/mo)	(tons/mo)	(tons/mo)
-1								2.0	2	0.22	0.02	0	**0.02**	**0.16**	**0.19**
1	5.0	20.0	15.00	20.0	7.4	4.3	0	2.0	73.7	8.11	0.81	0.718	**1.53**	**0.16**	**1.69**
2	5.0	20.0	15.00	20.0	7.4	4.3	0	2.0	73.7	8.11	0.81	0.415	**1.23**	**0.19**	**1.41**
3	2.5	10.0	7.50	10.0	3.7	2.2	0	0	35.85	3.94	0.39	0.415	**0.81**	**0.19**	**1.00**
4	2.5	10.0	7.38	10.0	3.7	2.2	0	0	35.73	3.93	0.39	0.00	**0.39**	**0.15**	**0.55**
5	2.5	10.0	7.37	10.0	3.7	2.2	0	0	35.72	3.93	0.39	0.00	**0.39**	**0.17**	**0.56**
6	2.5	10.0	7.32	10.0	3.7	2.2	2.4	0	38.02	4.18	0.42	0.00	**0.42**	**0.19**	**0.60**
7	2.5	10.0	7.30	10.0	3.7	2.2	2.4	0	38	4.18	0.42	0.00	**0.42**	**0.22**	**0.63**
8	2.5	10.0	7.21	10.0	3.7	2.2	2.4	0	37.91	4.17	0.42	0.00	**0.42**	**0.22**	**0.63**
9	2.5	10.0	7.18	10.0	3.7	2.2	2.4	0	37.88	4.17	0.42	0.00	**0.42**	**0.22**	**0.64**
10	2.5	10.0	7.10	10.0	3.7	2.2	2.4	0	37.8	4.16	0.42	0.00	**0.42**	**0.21**	**0.63**
11	2.5	10.0	7.09	10.0	3.7	2.2	2.4	0	37.785	4.16	0.42	0.00	**0.42**	**0.20**	**0.62**
12	2.5	10.0	7.07	10.0	3.7	2.2	2.4	0	37.77	4.15	0.42	0.00	**0.42**	**0.19**	**0.61**
13	2.5	10.0	7.06	10.0	3.7	2.2	2.4	0	37.755	4.15	0.42	0.00	**0.42**	**0.15**	**0.56**
14	2.5	10.0	7.04	10.0	3.7	2.2	2.4	0	37.74	4.15	0.42	0.00	**0.42**	**0.13**	**0.55**
15	2.5	10.0	7.03	10.0	3.7	2.2	2.4	0	37.725	4.15	0.41	0.00	**0.41**	**0.13**	**0.55**
16	2.5	10.0	7.02	10.0	3.7	2.2	2.4	0	37.715	4.15	0.41	0.00	**0.41**	**0.12**	**0.53**
17	2.5	10.0	7.01	10.0	3.7	2.2	2.4	0	37.705	4.15	0.41	0.00	**0.41**	**0.10**	**0.51**
18	2.5	10.0	7.00	10.0	3.7	2.2	2.4	0	37.7	4.15	0.41	0.00	**0.41**	**0.06**	**0.48**
19	2.5	10.0	7.00	10.0	3.7	2.2	2.4	0	37.7	4.15	0.41	0.00	**0.41**	**0.05**	**0.47**
20	2.5	10.0	7.00	10.0	3.7	2.2	2.4	0	37.7	4.15	0.41	0.00	**0.41**	**0.04**	**0.45**
21	2.5	0	0	0	0	0	0	0	2.5	0.28	0.03	0.00	**0.03**	**0.03**	**0.06**
22	2.5	0	0	0	0	0	0	0	2.5	0.28	0.03	0.00	**0.03**	**0.03**	**0.06**
23	2.5	0	0	0	0	0	0	0	2.5	0.28	0.03	0.00	**0.03**	**0.03**	**0.06**
24	2.5	0	0	0	0	0	0	0	2.5	0.28	0.03	0.00	**0.03**	**0.03**	**0.06**

Worst-Case Onsite Controlled Emissions

Months	Total Annual Emissions (tons/year)			lb/unit time
-1-11	9.16	**Annual Worst-case Emission Rate (ton/year)**	9.6	**19156.1**
1-12	9.58	**Annual Worst-case Emission Rate (g/s)[f]**	0.28	
2-13	8.45	**Monthly Worst-case Emission Rate (ton/month)**	1.7	**3384.2**
3-14	7.58	**24-hour Worst-Case Emissions (lb/day)**	169.2	
4-15	7.13	**24-hour Worst-Case Emissions (lb/hr)**	16.92	
5-16	7.11	**1-hour Worst-case Emission Rate (lb/hr)[d]**	15.4	
6-17	7.07	**1-hour Worst-case Emission Rate (g/s)**	1.94	
7-18	6.94			
8-19	6.77			
9-20	6.59			
10-21	6.01			
11-22	5.55			

7.2660 **2.3120**

[a]Uncontrolled emission factor from Midwest Research Institute (MRI, 1996).

[b]A 90% control efficiency was assumed due to fugitive dust compliance program.

[c] Based on 8760 hours per year.

[d] Based on 22 days/month and 10 hrs/day.

ATTACHMENT 36-1

Colusa Generating Station
E&L Westcoast, LLC
Colusa County, California

28067004
February 2007

URS

TABLE G.2-4. CONSTRUCTION MONTHLY NOx EMISSIONS SUMMARY

Construction Equipment	NOx Emissions Per Month of Construction																							
	1	2	3	4	5	6	7	8	9	10	11	12	13	14	15	16	17	18	19	20	21	22	23	24
Excavator Loader	223.2	669.6	669.6	669.6	446.4	446.4	223.2	223.2	223.2	223.2	223.2	223.2	-	-	-	-	-	-	-	-	-	-	-	-
Excavator Backhoe	223.2	669.6	669.6	669.6	446.4	446.4	223.2	223.2	223.2	223.2	223.2	223.2	-	-	-	-	-	-	-	-	-	-	-	-
Dozer Tractor Crawler	456.2	456.2	456.2	-	-	-	-	-	-	-	-	-	-	-	-	-	-	-	-	-	-	-	-	-
Fron End Loader	-	-	-	107.8	107.8	107.8	107.8	107.8	107.8	107.8	107.8	107.8	107.8	107.8	107.8	107.8	-	-	-	-	-	-	-	-
Trenching Machine	26.7	53.4	53.4	26.7	-	-	-	-	-	-	-	-	-	-	-	-	-	-	-	-	-	-	-	-
Excavator Motor Grader	103.0	103.0	103.0	-	-	-	-	-	-	-	-	-	-	-	-	-	-	-	-	-	-	-	-	-
Vibrating Plate Compactor	5.5	11.0	11.0	11.0	11.0	16.4	16.4	16.4	16.4	16.4	16.4	11.0	5.5	5.5	5.5	5.5	5.5	-	-	-	-	-	-	-
Roller Vibrator	109.2	109.2	109.2	109.2	109.2	218.5	218.5	218.5	218.5	109.2	109.2	109.2	109.2	-	-	-	-	-	-	-	-	-	-	-
Water Truck	226.4	226.4	226.4	226.4	226.4	226.4	226.4	226.4	226.4	226.4	226.4	226.4	226.4	226.4	226.4	226.4	226.4	-	-	-	-	-	-	-
Concrete Mixer	-	9.2	9.2	9.2	9.2	9.2	9.2	9.2	9.2	9.2	9.2	9.2	9.2	9.2	9.2	9.2	9.2	-	-	-	-	-	-	-
Concrete Pump, trailer mount	-	-	-	22.9	22.9	22.9	22.9	22.9	22.9	22.9	22.9	-	-	-	-	-	-	-	-	-	-	-	-	-
Mortar Mixer	-	-	1.3	1.3	2.7	2.7	2.7	2.7	2.7	2.7	1.3	1.3	1.3	-	1.3	-	-	-	-	-	-	-	-	-
Paving Machine	115.8	115.8	-	-	-	-	-	-	-	-	-	-	-	-	-	-	115.8	115.8	115.8	-	-	-	-	-
Dump Truck	1,584.5	792.2	792.2	264.1	528.2	528.2	528.2	528.2	528.2	528.2	528.2	528.2	528.2	528.2	528.2	528.2	264.1	264.1	264.1	264.1	264.1	264.1	264.1	264.1
Crane (6-ton)	-	22.5	22.5	22.5	22.5	22.5	22.5	22.5	22.5	22.5	22.5	22.5	22.5	22.5	22.5	22.5	22.5	22.5	-	-	-	-	-	-
Crane (20-ton)	81.0	162.0	162.0	162.0	162.0	162.0	243.1	243.1	243.1	243.1	243.1	243.1	162.0	162.0	162.0	81.0	-	-	-	-	-	-	-	-
Crane (50-ton)	172.7	345.4	345.4	345.4	518.1	518.1	518.1	518.1	690.9	690.9	690.9	518.1	518.1	345.4	345.4	172.7	172.7	-	-	-	-	-	-	-
Crane (100-ton)	-	-	-	-	276.2	276.2	276.2	276.2	276.2	276.2	276.2	276.2	276.2	276.2	276.2	-	-	-	-	-	-	-	-	-
Crane (300-ton)	-	-	-	-	-	-	411.3	411.3	411.3	411.3	411.3	411.3	-	-	-	-	-	-	-	-	-	-	-	-
Crane (360-ton)	-	-	-	-	-	-	411.3	411.3	411.3	411.3	411.3	411.3	-	-	-	-	-	-	-	-	-	-	-	-
Crane (500-ton)	-	-	-	-	-	-	671.0	671.0	671.0	671.0	-	-	-	-	-	-	-	-	-	-	-	-	-	-
Manlift, telescoping	-	-	-	25.4	25.4	50.8	50.8	50.8	50.8	50.8	50.8	50.8	50.8	25.4	50.8	25.4	25.4	25.4	25.4	25.4	25.4	25.4	25.4	25.4
Welder (250 amp)	-	28.4	28.4	56.8	56.8	56.8	85.2	113.6	113.6	113.6	85.2	85.2	56.8	56.8	56.8	56.8	56.8	28.4	28.4	-	-	-	-	-
Air Compressor (185 cfm)	8.0	8.0	8.0	8.0	8.0	8.0	8.0	8.0	8.0	8.0	8.0	8.0	8.0	8.0	8.0	8.0	8.0	8.0	8.0	8.0	-	-	-	-
Air Compressor (750 cfm)	-	-	-	-	24.0	48.0	48.0	48.0	48.0	48.0	48.0	24.0	24.0	24.0	24.0	24.0	24.0	24.0	-	-	-	-	-	-
Generator (6 kW)	43.2	43.2	43.2	43.2	86.4	86.4	86.4	86.4	86.4	86.4	86.4	86.4	86.4	86.4	86.4	86.4	86.4	-	-	-	-	-	-	-
Forklift (2-ton)	32.9	32.9	32.9	32.9	32.9	32.9	65.8	65.8	65.8	32.9	32.9	32.9	32.9	32.9	32.9	32.9	32.9	32.9	32.9	32.9	32.9	32.9	32.9	32.9
Forklift (4-ton)	-	-	45.6	45.6	91.2	91.2	91.2	91.2	91.2	91.2	91.2	91.2	91.2	91.2	91.2	91.2	-	-	-	-	-	-	-	-
Fuel/Lube Truck	165.2	165.2	165.2	165.2	165.2	165.2	165.2	165.2	165.2	165.2	165.2	165.2	165.2	165.2	165.2	165.2	165.2	165.2	165.2	165.2	165.2	165.2	165.2	165.2
Pickup Truck (1/2-ton)	565.9	565.9	565.9	565.9	565.9	943.1	943.1	943.1	943.1	943.1	943.1	943.1	943.1	943.1	943.1	943.1	943.1	754.5	754.5	565.9	377.3	377.3	377.3	377.3
Stakebed Truck	351.8	351.8	351.8	351.8	351.8	351.8	351.8	351.8	351.8	351.8	351.8	351.8	351.8	351.8	351.8	351.8	351.8	351.8	-	-	-	-	-	-
Hydrolic Boom Truck	-	211.5	211.5	211.5	211.5	211.5	211.5	211.5	211.5	-	211.5	211.5	211.5	211.5	211.5	211.5	211.5	211.5	211.5	-	-	-	-	-
Concrete Trowel	6.9	6.9	13.8	13.8	13.8	13.8	13.8	13.8	6.9	6.9	6.9	-	-	-	-	-	-	-	-	-	-	-	-	-
Concrete Floor Saw	-	-	-	-	7.3	7.3	7.3	7.3	7.3	7.3	7.3	7.3	7.3	7.3	7.3	7.3	-	-	-	-	-	-	-	-
Bobcat Skip Loader	67.7	67.7	135.4	135.4	135.4	135.4	135.4	135.4	135.4	135.4	135.4	135.4	135.4	135.4	135.4	135.4	135.4	-	-	-	-	-	-	-
Hydrotest Pump	-	-	-	-	-	-	-	-	-	-	-	-	-	-	9.0	9.0	9.0	9.0	-	-	-	-	-	-
Total	4,569.0	5,227.1	5,233.0	4,303.4	4,664.8	5,206.1	6,395.5	6,423.9	6,589.7	6,236.1	5,746.9	5,514.8	4,131.0	3,822.3	3,858.0	3,301.4	2,865.7	2,013.1	1,605.7	1,061.4	864.8	864.8	864.8	864.8

Note: Above estimates are for a single shift execution and 5/10 work week.

Yearly Emissions (lbs/yr)	
Month 1-12	66,110.5
Month 2-13	65,672.4
Month 3-14	64,267.6
Month 4-15	62,892.7
Month 5-16	61,890.6
Month 6-17	60,091.5
Month 7-18	56,898.5
Month 8-19	52,108.6
Month 9-20	46,746.1
Month 10-21	41,021.1
Month 11-22	35,649.8
Month 12-23	30,767.7
Month 13-24	26,117.6

Worst-Case Emissions	
Worst Month	6589.7 lb/month
Worst 1-hr	32.9 lb/hr
Worst Year	66110.5 lb/year

TABLE G.2-5. CONSTRUCTION MONTHLY CO EMISSIONS SUMMARY

Construction Equipment	CO Emissions Per Month of Construction																							
	1	2	3	4	5	6	7	8	9	10	11	12	13	14	15	16	17	18	19	20	21	22	23	24
Excavator Loader	112.6	337.9	337.9	337.9	225.2	225.2	112.6	112.6	112.6	112.6	112.6	112.6	-	-	-	-	-	-	-	-	-	-	-	-
Excavator Backhoe	112.6	337.9	337.9	337.9	225.2	225.2	112.6	112.6	112.6	112.6	112.6	112.6	-	-	-	-	-	-	-	-	-	-	-	-
Dozer Tractor Crawler	263.0	263.0	263.0	-	-	-	-	-	-	-	-	-	-	-	-	-	-	-	-	-	-	-	-	-
Fron End Loader	-	-	-	69.4	69.4	69.4	69.4	69.4	69.4	69.4	69.4	69.4	69.4	69.4	69.4	69.4	-	-	-	-	-	-	-	-
Trenching Machine	14.8	29.5	29.5	14.8	-	-	-	-	-	-	-	-	-	-	-	-	-	-	-	-	-	-	-	-
Excavator Motor Grader	22.5	22.5	22.5	-	-	-	-	-	-	-	-	-	-	-	-	-	-	-	-	-	-	-	-	-
Vibrating Plate Compactor	4.1	8.2	8.2	8.2	8.2	12.3	12.3	12.3	12.3	12.3	12.3	8.2	4.1	4.1	4.1	4.1	4.1	-	-	-	-	-	-	-
Roller Vibrator	63.5	63.5	63.5	63.5	63.5	127.0	127.0	127.0	127.0	63.5	63.5	63.5	63.5	-	-	-	-	-	-	-	-	-	-	-
Water Truck	133.6	133.6	133.6	133.6	133.6	133.6	133.6	133.6	133.6	133.6	133.6	133.6	133.6	133.6	133.6	133.6	133.6	-	-	-	-	-	-	-
Concrete Mixer	-	5.8	5.8	5.8	5.8	5.8	5.8	5.8	5.8	5.8	5.8	5.8	5.8	5.8	5.8	5.8	5.8	-	-	-	-	-	-	-
Concrete Pump, trailer mount	-	-	-	25.4	25.4	25.4	25.4	25.4	25.4	25.4	25.4	-	-	-	-	-	-	-	-	-	-	-	-	-
Mortar Mixer	-	-	1.3	1.3	2.6	2.6	2.6	2.6	2.6	2.6	1.3	1.3	1.3	-	1.3	-	-	-	-	-	-	-	-	-
Paving Machine	65.8	65.8	-	-	-	-	-	-	-	-	-	-	-	-	-	-	65.8	65.8	65.8	-	-	-	-	-
Dump Truck	935.2	467.6	467.6	155.9	311.7	311.7	311.7	311.7	311.7	311.7	311.7	311.7	311.7	311.7	311.7	311.7	155.9	155.9	155.9	155.9	155.9	155.9	155.9	155.9
Crane (6-ton)	-	60.8	60.8	60.8	60.8	60.8	60.8	60.8	60.8	60.8	60.8	60.8	60.8	60.8	60.8	60.8	60.8	60.8	-	-	-	-	-	-
Crane (20-ton)	65.5	131.0	131.0	131.0	131.0	131.0	196.4	196.4	196.4	196.4	196.4	196.4	131.0	131.0	131.0	65.5	-	-	-	-	-	-	-	-
Crane (50-ton)	147.4	294.8	294.8	294.8	442.3	442.3	442.3	442.3	589.7	589.7	589.7	442.3	442.3	294.8	294.8	147.4	147.4	-	-	-	-	-	-	-
Crane (100-ton)	-	-	-	-	81.3	81.3	81.3	81.3	81.3	81.3	81.3	81.3	81.3	81.3	81.3	-	-	-	-	-	-	-	-	-
Crane (300-ton)	-	-	-	-	-	-	158.3	158.3	158.3	158.3	158.3	158.3	-	-	-	-	-	-	-	-	-	-	-	-
Crane (360-ton)	-	-	-	-	-	-	358.9	358.9	358.9	358.9	358.9	358.9	-	-	-	-	-	-	-	-	-	-	-	-
Crane (500-ton)	-	-	-	-	-	-	264.6	264.6	264.6	264.6	-	-	-	-	-	-	-	-	-	-	-	-	-	-
Manlift, telescoping	-	-	-	26.1	26.1	52.2	52.2	52.2	52.2	52.2	52.2	52.2	52.2	26.1	52.2	26.1	26.1	26.1	26.1	26.1	26.1	26.1	26.1	26.1
Welder (250 amp)	-	26.6	26.6	53.2	53.2	53.2	79.8	106.4	106.4	106.4	79.8	79.8	53.2	53.2	53.2	53.2	53.2	26.6	26.6	-	-	-	-	-
Air Compressor (185 cfm)	13.8	13.8	13.8	13.8	13.8	13.8	13.8	13.8	13.8	13.8	13.8	13.8	13.8	13.8	13.8	13.8	13.8	13.8	13.8	13.8	-	-	-	-
Air Compressor (750 cfm)	-	-	-	-	11.9	23.7	23.7	23.7	23.7	23.7	23.7	11.9	11.9	11.9	11.9	11.9	11.9	11.9	-	-	-	-	-	-
Generator (6 kW)	31.8	31.8	31.8	31.8	63.5	63.5	63.5	63.5	63.5	63.5	63.5	63.5	63.5	63.5	63.5	63.5	63.5	-	-	-	-	-	-	-
Forklift (2-ton)	33.6	33.6	33.6	33.6	33.6	33.6	67.3	67.3	67.3	33.6	33.6	33.6	33.6	33.6	33.6	33.6	33.6	33.6	33.6	33.6	33.6	33.6	33.6	33.6
Forklift (4-ton)	-	-	34.7	34.7	69.3	69.3	69.3	69.3	69.3	69.3	69.3	69.3	69.3	69.3	69.3	69.3	-	-	-	-	-	-	-	-
Fuel/Lube Truck	80.1	80.1	80.1	80.1	80.1	80.1	80.1	80.1	80.1	80.1	80.1	80.1	80.1	80.1	80.1	80.1	80.1	80.1	80.1	80.1	80.1	80.1	80.1	80.1
Pickup Truck (1/2-ton)	334.0	334.0	334.0	334.0	334.0	556.7	556.7	556.7	556.7	556.7	556.7	556.7	556.7	556.7	556.7	556.7	556.7	445.4	445.4	334.0	222.7	222.7	222.7	222.7
Stakebed Truck	99.9	99.9	99.9	99.9	99.9	99.9	99.9	99.9	99.9	99.9	99.9	99.9	99.9	99.9	99.9	99.9	99.9	99.9	-	-	-	-	-	-
Hydrolic Boom Truck	-	54.8	54.8	54.8	54.8	54.8	54.8	54.8	54.8	-	54.8	54.8	54.8	54.8	54.8	54.8	54.8	54.8	54.8	-	-	-	-	-
Concrete Trowel	4.7	4.7	9.4	9.4	9.4	9.4	9.4	9.4	4.7	4.7	4.7	-	-	-	-	-	-	-	-	-	-	-	-	-
Concrete Floor Saw	-	-	-	-	3.6	3.6	3.6	3.6	3.6	3.6	3.6	3.6	3.6	3.6	3.6	3.6	-	-	-	-	-	-	-	-
Bobcat Skip Loader	61.1	61.1	122.2	122.2	122.2	122.2	122.2	122.2	122.2	122.2	122.2	122.2	122.2	122.2	122.2	122.2	122.2	-	-	-	-	-	-	-
Hydrotest Pump	-	-	-	-	-	-	-	-	-	-	-	-	-	-	4.4	4.4	4.4	4.4	-	-	-	-	-	-
Total	2,599.6	2,962.2	2,998.2	2,533.9	2,761.6	3,089.9	3,772.2	3,798.8	3,941.5	3,789.6	3,551.8	3,358.3	2,519.6	2,281.3	2,313.1	1,991.5	1,693.6	1,079.0	902.0	643.5	518.3	518.3	518.3	518.3

Note: Above estimates are for a single shift execution and 5/10 work week.

Yearly Emissions (lbs/yr)	
Month 1-12	39,157.6
Month 2-13	39,077.7
Month 3-14	38,396.8
Month 4-15	37,711.7
Month 5-16	37,169.4
Month 6-17	36,101.4
Month 7-18	34,090.5
Month 8-19	31,220.3
Month 9-20	28,065.0
Month 10-21	24,641.8
Month 11-22	21,370.5
Month 12-23	18,337.0
Month 13-24	15,497.1

Worst-Case Emissions	
Worst Month	**3941.5 lb/month**
Worst 1-hr	**19.7 lb/hr**
Worst Year	**39157.6 lb/year**

TABLE G.2-6. CONSTRUCTION MONTHLY VOC EMISSIONS SUMMARY

Construction Equipment	VOC Emissions Per Month of Construction																							
	1	2	3	4	5	6	7	8	9	10	11	12	13	14	15	16	17	18	19	20	21	22	23	24
Excavator Loader	32.6	97.7	97.7	97.7	65.1	65.1	32.6	32.6	32.6	32.6	32.6	32.6	-	-	-	-	-	-	-	-	-	-	-	-
Excavator Backhoe	32.6	97.7	97.7	97.7	65.1	65.1	32.6	32.6	32.6	32.6	32.6	32.6	-	-	-	-	-	-	-	-	-	-	-	-
Dozer Tractor Crawler	98.9	98.9	98.9	-	-	-	-	-	-	-	-	-	-	-	-	-	-	-	-	-	-	-	-	-
Fron End Loader	-	-	-	24.1	24.1	24.1	24.1	24.1	24.1	24.1	24.1	24.1	24.1	24.1	24.1	24.1	-	-	-	-	-	-	-	-
Trenching Machine	4.1	8.2	8.2	4.1	-	-	-	-	-	-	-	-	-	-	-	-	-	-	-	-	-	-	-	-
Excavator Motor Grader	2.2	2.2	2.2	-	-	-	-	-	-	-	-	-	-	-	-	-	-	-	-	-	-	-	-	-
Vibrating Plate Compactor	0.8	1.7	1.7	1.7	1.7	2.5	2.5	2.5	2.5	2.5	2.5	1.7	0.8	0.8	0.8	0.8	0.8	-	-	-	-	-	-	-
Roller Vibrator	22.9	22.9	22.9	22.9	22.9	45.9	45.9	45.9	45.9	22.9	22.9	22.9	22.9	-	-	-	-	-	-	-	-	-	-	-
Water Truck	33.5	33.5	33.5	33.5	33.5	33.5	33.5	33.5	33.5	33.5	33.5	33.5	33.5	33.5	33.5	33.5	33.5	-	-	-	-	-	-	-
Concrete Mixer	-	2.0	2.0	2.0	2.0	2.0	2.0	2.0	2.0	2.0	2.0	2.0	2.0	2.0	2.0	2.0	2.0	-	-	-	-	-	-	-
Concrete Pump, trailer mount	-	-	-	10.6	10.6	10.6	10.6	10.6	10.6	10.6	10.6	-	-	-	-	-	-	-	-	-	-	-	-	-
Mortar Mixer	-	-	2.4	2.4	4.7	4.7	4.7	4.7	4.7	4.7	2.4	2.4	2.4	-	2.4	-	-	-	-	-	-	-	-	-
Paving Machine	24.8	24.8	-	-	-	-	-	-	-	-	-	-	-	-	-	-	24.8	24.8	24.8	-	-	-	-	-
Dump Truck	234.4	117.2	117.2	39.1	78.1	78.1	78.1	78.1	78.1	78.1	78.1	78.1	78.1	78.1	78.1	78.1	39.1	39.1	39.1	39.1	39.1	39.1	39.1	39.1
Crane (6-ton)	-	29.4	29.4	29.4	29.4	29.4	29.4	29.4	29.4	29.4	29.4	29.4	29.4	29.4	29.4	29.4	29.4	29.4	-	-	-	-	-	-
Crane (20-ton)	26.9	53.8	53.8	53.8	53.8	53.8	80.6	80.6	80.6	80.6	80.6	80.6	53.8	53.8	53.8	26.9	-	-	-	-	-	-	-	-
Crane (50-ton)	35.2	70.3	70.3	70.3	105.5	105.5	105.5	105.5	140.6	140.6	140.6	105.5	105.5	70.3	70.3	35.2	35.2	-	-	-	-	-	-	-
Crane (100-ton)	-	-	-	-	27.8	27.8	27.8	27.8	27.8	27.8	27.8	27.8	27.8	27.8	27.8	-	-	-	-	-	-	-	-	-
Crane (300-ton)	-	-	-	-	-	-	41.4	41.4	41.4	41.4	41.4	41.4	-	-	-	-	-	-	-	-	-	-	-	-
Crane (360-ton)	-	-	-	-	-	-	92.8	92.8	92.8	92.8	92.8	92.8	-	-	-	-	-	-	-	-	-	-	-	-
Crane (500-ton)	-	-	-	-	-	-	66.9	66.9	66.9	66.9	-	-	-	-	-	-	-	-	-	-	-	-	-	-
Manlift, telescoping	-	-	-	10.7	10.7	21.4	21.4	21.4	21.4	21.4	21.4	21.4	21.4	10.7	21.4	10.7	10.7	10.7	10.7	10.7	10.7	10.7	10.7	10.7
Welder (250 amp)	-	11.4	11.4	22.9	22.9	22.9	34.3	45.7	45.7	45.7	34.3	34.3	22.9	22.9	22.9	22.9	22.9	11.4	11.4	-	-	-	-	-
Air Compressor (185 cfm)	1.2	1.2	1.2	1.2	1.2	1.2	1.2	1.2	1.2	1.2	1.2	1.2	1.2	1.2	1.2	1.2	1.2	1.2	1.2	1.2	-	-	-	-
Air Compressor (750 cfm)	-	-	-	-	3.8	7.6	7.6	7.6	7.6	7.6	7.6	3.8	3.8	3.8	3.8	3.8	3.8	3.8	-	-	-	-	-	-
Generator (6 kW)	11.2	11.2	11.2	11.2	22.4	22.4	22.4	22.4	22.4	22.4	22.4	22.4	22.4	22.4	22.4	22.4	22.4	-	-	-	-	-	-	-
Forklift (2-ton)	14.1	14.1	14.1	14.1	14.1	14.1	28.3	28.3	28.3	14.1	14.1	14.1	14.1	14.1	14.1	14.1	14.1	14.1	14.1	14.1	14.1	14.1	14.1	14.1
Forklift (4-ton)	-	-	13.5	13.5	26.9	26.9	26.9	26.9	26.9	26.9	26.9	26.9	26.9	26.9	26.9	26.9	-	-	-	-	-	-	-	-
Fuel/Lube Truck	21.8	21.8	21.8	21.8	21.8	21.8	21.8	21.8	21.8	21.8	21.8	21.8	21.8	21.8	21.8	21.8	21.8	21.8	21.8	21.8	21.8	21.8	21.8	21.8
Pickup Truck (1/2-ton)	83.7	83.7	83.7	83.7	83.7	139.5	139.5	139.5	139.5	139.5	139.5	139.5	139.5	139.5	139.5	139.5	139.5	111.6	111.6	83.7	55.8	55.8	55.8	55.8
Stakebed Truck	34.5	34.5	34.5	34.5	34.5	34.5	34.5	34.5	34.5	34.5	34.5	34.5	34.5	34.5	34.5	34.5	34.5	34.5	-	-	-	-	-	-
Hydrolic Boom Truck	-	20.5	20.5	20.5	20.5	20.5	20.5	20.5	20.5	-	20.5	20.5	20.5	20.5	20.5	20.5	20.5	20.5	20.5	-	-	-	-	-
Concrete Trowel	1.1	1.1	2.2	2.2	2.2	2.2	2.2	2.2	1.1	1.1	1.1	-	-	-	-	-	-	-	-	-	-	-	-	-
Concrete Floor Saw	-	-	-	-	1.1	1.1	1.1	1.1	1.1	1.1	1.1	1.1	1.1	1.1	1.1	1.1	-	-	-	-	-	-	-	-
Bobcat Skip Loader	24.0	24.0	48.0	48.0	48.0	48.0	48.0	48.0	48.0	48.0	48.0	48.0	48.0	48.0	48.0	48.0	48.0	-	-	-	-	-	-	-
Hydrotest Pump	-	-	-	-	-	-	-	-	-	-	-	-	-	-	1.4	1.4	1.4	1.4	-	-	-	-	-	-
Total	740.6	884.0	900.2	773.6	838.3	932.4	1,120.9	1,132.3	1,166.4	1,108.8	1,048.6	997.1	758.6	687.5	702.0	599.0	505.8	324.5	255.3	170.6	141.5	141.5	141.5	141.5

Note: Above estimates are for a single shift execution and 5/10 work week.

Yearly Emissions (lbs/yr)	
Month 1-12	11,643.2
Month 2-13	11,661.2
Month 3-14	11,464.7
Month 4-15	11,266.5
Month 5-16	11,091.9
Month 6-17	10,759.4
Month 7-18	10,151.4
Month 8-19	9,285.9
Month 9-20	8,324.2
Month 10-21	7,299.3
Month 11-22	6,332.0
Month 12-23	5,424.9
Month 13-24	4,569.3

Worst-Case Emissions	
Worst Month	1166.4 lb/month
Worst 1-hr	5.8 lb/hr
Worst Year	11661.2 lb/year

TABLE G.2-7. CONSTRUCTION MONTHLY SOx EMISSIONS SUMMARY

Construction Equipment	SOx Emissions Per Month of Constructior																							
	1	2	3	4	5	6	7	8	9	10	11	12	13	14	15	16	17	18	19	20	21	22	23	24
Excavator Loader	0.2	0.6	0.6	0.6	0.4	0.4	0.2	0.2	0.2	0.2	0.2	0.2	-	-	-	-	-	-	-	-	-	-	-	-
Excavator Backhoe	0.2	0.6	0.6	0.6	0.4	0.4	0.2	0.2	0.2	0.2	0.2	0.2	-	-	-	-	-	-	-	-	-	-	-	-
Dozer Tractor Crawler	0.4	0.4	0.4	-	-	-	-	-	-	-	-	-	-	-	-	-	-	-	-	-	-	-	-	-
Fron End Loader	-	-	-	0.1	0.1	0.1	0.1	0.1	0.1	0.1	0.1	0.1	0.1	0.1	0.1	0.1	-	-	-	-	-	-	-	-
Trenching Machine	0.0	0.1	0.1	0.0	-	-	-	-	-	-	-	-	-	-	-	-	-	-	-	-	-	-	-	-
Excavator Motor Grader	0.1	0.1	0.1	-	-	-	-	-	-	-	-	-	-	-	-	-	-	-	-	-	-	-	-	-
Vibrating Plate Compactor	0.0	0.0	0.0	0.0	0.0	0.0	0.0	0.0	0.0	0.0	0.0	0.0	0.0	0.0	0.0	0.0	0.0	-	-	-	-	-	-	-
Roller Vibrator	0.1	0.1	0.1	0.1	0.1	0.2	0.2	0.2	0.2	0.1	0.1	0.1	0.1	-	-	-	-	-	-	-	-	-	-	-
Water Truck	0.2	0.2	0.2	0.2	0.2	0.2	0.2	0.2	0.2	0.2	0.2	0.2	0.2	0.2	0.2	0.2	0.2	-	-	-	-	-	-	-
Concrete Mixer	-	0.0	0.0	0.0	0.0	0.0	0.0	0.0	0.0	0.0	0.0	0.0	0.0	0.0	0.0	0.0	0.0	-	-	-	-	-	-	-
Concrete Pump, trailer mount	-	-	-	0.0	0.0	0.0	0.0	0.0	0.0	0.0	0.0	-	-	-	-	-	-	-	-	-	-	-	-	-
Mortar Mixer	-	-	0.0	0.0	0.0	0.0	0.0	0.0	0.0	0.0	0.0	0.0	0.0	-	0.0	-	-	-	-	-	-	-	-	-
Paving Machine	0.1	0.1	-	-	-	-	-	-	-	-	-	-	-	-	-	-	0.1	0.1	0.1	-	-	-	-	-
Dump Truck	1.4	0.7	0.7	0.2	0.5	0.5	0.5	0.5	0.5	0.5	0.5	0.5	0.5	0.5	0.5	0.5	0.2	0.2	0.2	0.2	0.2	0.2	0.2	0.2
Crane (6-ton)	-	0.0	0.0	0.0	0.0	0.0	0.0	0.0	0.0	0.0	0.0	0.0	0.0	0.0	0.0	0.0	0.0	0.0	-	-	-	-	-	-
Crane (20-ton)	0.1	0.1	0.1	0.1	0.1	0.1	0.2	0.2	0.2	0.2	0.2	0.2	0.1	0.1	0.1	0.1	-	-	-	-	-	-	-	-
Crane (50-ton)	0.1	0.3	0.3	0.3	0.4	0.4	0.4	0.4	0.6	0.6	0.6	0.4	0.4	0.3	0.3	0.1	0.1	-	-	-	-	-	-	-
Crane (100-ton)	-	-	-	-	0.2	0.2	0.2	0.2	0.2	0.2	0.2	0.2	0.2	0.2	0.2	-	-	-	-	-	-	-	-	-
Crane (300-ton)	-	-	-	-	-	-	0.3	0.3	0.3	0.3	0.3	0.3	-	-	-	-	-	-	-	-	-	-	-	-
Crane (360-ton)	-	-	-	-	-	-	0.6	0.6	0.6	0.6	0.6	0.6	-	-	-	-	-	-	-	-	-	-	-	-
Crane (500-ton)	-	-	-	-	-	-	0.6	0.6	0.6	0.6	-	-	-	-	-	-	-	-	-	-	-	-	-	-
Manlift, telescoping	-	-	-	0.0	0.0	0.1	0.1	0.1	0.1	0.1	0.1	0.1	0.1	0.0	0.1	0.0	0.0	0.0	0.0	0.0	0.0	0.0	0.0	0.0
Welder (250 amp)	-	0.0	0.0	0.1	0.1	0.1	0.1	0.1	0.1	0.1	0.1	0.1	0.1	0.1	0.1	0.1	0.1	0.0	0.0	-	-	-	-	-
Air Compressor (185 cfm)	0.0	0.0	0.0	0.0	0.0	0.0	0.0	0.0	0.0	0.0	0.0	0.0	0.0	0.0	0.0	0.0	0.0	0.0	0.0	0.0	-	-	-	-
Air Compressor (750 cfm)	-	-	-	-	0.0	0.1	0.1	0.1	0.1	0.1	0.1	0.0	0.0	0.0	0.0	0.0	0.0	0.0	-	-	-	-	-	-
Generator (6 kW)	0.1	0.1	0.1	0.1	0.1	0.1	0.1	0.1	0.1	0.1	0.1	0.1	0.1	0.1	0.1	0.1	0.1	-	-	-	-	-	-	-
Forklift (2-ton)	0.0	0.0	0.0	0.0	0.0	0.0	0.1	0.1	0.1	0.0	0.0	0.0	0.0	0.0	0.0	0.0	0.0	0.0	0.0	0.0	0.0	0.0	0.0	0.0
Forklift (4-ton)	-	-	0.0	0.0	0.1	0.1	0.1	0.1	0.1	0.1	0.1	0.1	0.1	0.1	0.1	0.1	-	-	-	-	-	-	-	-
Fuel/Lube Truck	0.1	0.1	0.1	0.1	0.1	0.1	0.1	0.1	0.1	0.1	0.1	0.1	0.1	0.1	0.1	0.1	0.1	0.1	0.1	0.1	0.1	0.1	0.1	0.1
Pickup Truck (1/2-ton)	0.5	0.5	0.5	0.5	0.5	0.8	0.8	0.8	0.8	0.8	0.8	0.8	0.8	0.8	0.8	0.8	0.8	0.7	0.7	0.5	0.3	0.3	0.3	0.3
Stakebed Truck	0.3	0.3	0.3	0.3	0.3	0.3	0.3	0.3	0.3	0.3	0.3	0.3	0.3	0.3	0.3	0.3	0.3	0.3	-	-	-	-	-	-
Hydrolic Boom Truck	-	0.2	0.2	0.2	0.2	0.2	0.2	0.2	0.2	-	0.2	0.2	0.2	0.2	0.2	0.2	0.2	0.2	0.2	-	-	-	-	-
Concrete Trowel	0.0	0.0	0.0	0.0	0.0	0.0	0.0	0.0	0.0	0.0	0.0	-	-	-	-	-	-	-	-	-	-	-	-	-
Concrete Floor Saw	-	-	-	-	0.0	0.0	0.0	0.0	0.0	0.0	0.0	0.0	0.0	0.0	0.0	0.0	-	-	-	-	-	-	-	-
Bobcat Skip Loader	0.1	0.1	0.1	0.1	0.1	0.1	0.1	0.1	0.1	0.1	0.1	0.1	0.1	0.1	0.1	0.1	0.1	-	-	-	-	-	-	-
Hydrotest Pump	-	-	-	-	-	-	-	-	-	-	-	-	-	-	0.0	0.0	0.0	0.0	-	-	-	-	-	-
Total	4.0	4.6	4.7	4.0	4.3	4.8	6.0	6.1	6.2	5.9	5.5	5.2	3.8	3.5	3.6	3.1	2.7	1.9	1.4	1.0	0.8	0.8	0.8	0.8

Note: Above estimates are for a single shift execution and 5/10 work week.

Yearly Emissions (lbs/yr)	
Month 1-12	61.1
Month 2-13	60.9
Month 3-14	59.8
Month 4-15	58.7
Month 5-16	57.8
Month 6-17	56.2
Month 7-18	53.2
Month 8-19	48.7
Month 9-20	43.6
Month 10-21	38.1
Month 11-22	33.1
Month 12-23	28.4
Month 13-24	23.9

Worst-Case Emissions	
Worst Month	6.2 lb/month
Worst 1-hr	0.03 lb/hr
Worst Year	61.1 lb/year

TABLE G.2-8. CONSTRUCTION MONTHLY PM10 EMISSIONS SUMMARY

Construction Equipment	PM10 Emissions Per Month of Construction																							
	1	2	3	4	5	6	7	8	9	10	11	12	13	14	15	16	17	18	19	20	21	22	23	24
Excavator Loader	15.9	47.6	47.6	47.6	31.7	31.7	15.9	15.9	15.9	15.9	15.9	15.9	-	-	-	-	-	-	-	-	-	-	-	-
Excavator Backhoe	15.9	47.6	47.6	47.6	31.7	31.7	15.9	15.9	15.9	15.9	15.9	15.9	-	-	-	-	-	-	-	-	-	-	-	-
Dozer Tractor Crawler	42.4	42.4	42.4	-	-	-	-	-	-	-	-	-	-	-	-	-	-	-	-	-	-	-	-	-
Fron End Loader	-	-	-	10.3	10.3	10.3	10.3	10.3	10.3	10.3	10.3	10.3	10.3	10.3	10.3	10.3	-	-	-	-	-	-	-	-
Trenching Machine	1.7	3.5	3.5	1.7	-	-	-	-	-	-	-	-	-	-	-	-	-	-	-	-	-	-	-	-
Excavator Motor Grader	8.0	8.0	8.0	-	-	-	-	-	-	-	-	-	-	-	-	-	-	-	-	-	-	-	-	-
Vibrating Plate Compactor	0.4	0.8	0.8	0.8	0.8	1.2	1.2	1.2	1.2	1.2	1.2	0.8	0.4	0.4	0.4	0.4	0.4	-	-	-	-	-	-	-
Roller Vibrator	9.7	9.7	9.7	9.7	9.7	19.4	19.4	19.4	19.4	9.7	9.7	9.7	9.7	-	-	-	-	-	-	-	-	-	-	-
Water Truck	15.4	15.4	15.4	15.4	15.4	15.4	15.4	15.4	15.4	15.4	15.4	15.4	15.4	15.4	15.4	15.4	15.4	-	-	-	-	-	-	-
Concrete Mixer	-	0.7	0.7	0.7	0.7	0.7	0.7	0.7	0.7	0.7	0.7	0.7	0.7	0.7	0.7	0.7	0.7	-	-	-	-	-	-	-
Concrete Pump, trailer mount	-	-	-	2.5	2.5	2.5	2.5	2.5	2.5	2.5	2.5	-	-	-	-	-	-	-	-	-	-	-	-	-
Mortar Mixer	-	-	0.1	0.1	0.1	0.1	0.1	0.1	0.1	0.1	0.1	0.1	0.1	-	0.1	-	-	-	-	-	-	-	-	-
Paving Machine	10.4	10.4	-	-	-	-	-	-	-	-	-	-	-	-	-	-	10.4	10.4	10.4	-	-	-	-	-
Dump Truck	108.1	54.1	54.1	18.0	36.0	36.0	36.0	36.0	36.0	36.0	36.0	36.0	36.0	36.0	36.0	36.0	18.0	18.0	18.0	18.0	18.0	18.0	18.0	18.0
Crane (6-ton)	-	4.2	4.2	4.2	4.2	4.2	4.2	4.2	4.2	4.2	4.2	4.2	4.2	4.2	4.2	4.2	4.2	4.2	-	-	-	-	-	-
Crane (20-ton)	8.4	16.8	16.8	16.8	16.8	16.8	25.3	25.3	25.3	25.3	25.3	25.3	16.8	16.8	16.8	8.4	-	-	-	-	-	-	-	-
Crane (50-ton)	14.8	29.6	29.6	29.6	44.5	44.5	44.5	44.5	59.3	59.3	59.3	44.5	44.5	29.6	29.6	14.8	14.8	-	-	-	-	-	-	-
Crane (100-ton)	-	-	-	-	10.8	10.8	10.8	10.8	10.8	10.8	10.8	10.8	10.8	10.8	10.8	-	-	-	-	-	-	-	-	-
Crane (300-ton)	-	-	-	-	-	-	16.0	16.0	16.0	16.0	16.0	16.0	-	-	-	-	-	-	-	-	-	-	-	-
Crane (360-ton)	-	-	-	-	-	-	35.2	35.2	35.2	35.2	35.2	35.2	-	-	-	-	-	-	-	-	-	-	-	-
Crane (500-ton)	-	-	-	-	-	-	25.8	25.8	25.8	25.8	-	-	-	-	-	-	-	-	-	-	-	-	-	-
Manlift, telescoping	-	-	-	2.6	2.6	5.3	5.3	5.3	5.3	5.3	5.3	5.3	5.3	2.6	5.3	2.6	2.6	2.6	2.6	2.6	2.6	2.6	2.6	2.6
Welder (250 amp)	-	2.8	2.8	5.6	5.6	5.6	8.4	11.2	11.2	11.2	8.4	8.4	5.6	5.6	5.6	5.6	5.6	2.8	2.8	-	-	-	-	-
Air Compressor (185 cfm)	0.8	0.8	0.8	0.8	0.8	0.8	0.8	0.8	0.8	0.8	0.8	0.8	0.8	0.8	0.8	0.8	0.8	0.8	0.8	0.8	-	-	-	-
Air Compressor (750 cfm)	-	-	-	-	1.5	3.1	3.1	3.1	3.1	3.1	3.1	1.5	1.5	1.5	1.5	1.5	1.5	1.5	-	-	-	-	-	-
Generator (6 kW)	3.4	3.4	3.4	3.4	6.8	6.8	6.8	6.8	6.8	6.8	6.8	6.8	6.8	6.8	6.8	6.8	6.8	-	-	-	-	-	-	-
Forklift (2-ton)	3.8	3.8	3.8	3.8	3.8	3.8	7.6	7.6	7.6	3.8	3.8	3.8	3.8	3.8	3.8	3.8	3.8	3.8	3.8	3.8	3.8	3.8	3.8	3.8
Forklift (4-ton)	-	-	4.9	4.9	9.7	9.7	9.7	9.7	9.7	9.7	9.7	9.7	9.7	9.7	9.7	9.7	-	-	-	-	-	-	-	-
Fuel/Lube Truck	9.6	9.6	9.6	9.6	9.6	9.6	9.6	9.6	9.6	9.6	9.6	9.6	9.6	9.6	9.6	9.6	9.6	9.6	9.6	9.6	9.6	9.6	9.6	9.6
Pickup Truck (1/2-ton)	38.6	38.6	38.6	38.6	38.6	64.3	64.3	64.3	64.3	64.3	64.3	64.3	64.3	64.3	64.3	64.3	64.3	51.5	51.5	38.6	25.7	25.7	25.7	25.7
Stakebed Truck	12.7	12.7	12.7	12.7	12.7	12.7	12.7	12.7	12.7	12.7	12.7	12.7	12.7	12.7	12.7	12.7	12.7	12.7	-	-	-	-	-	-
Hydrolic Boom Truck	-	7.5	7.5	7.5	7.5	7.5	7.5	7.5	7.5	-	7.5	7.5	7.5	7.5	7.5	7.5	7.5	7.5	7.5	-	-	-	-	-
Concrete Trowel	0.5	0.5	1.0	1.0	1.0	1.0	1.0	1.0	0.5	0.5	0.5	-	-	-	-	-	-	-	-	-	-	-	-	-
Concrete Floor Saw	-	-	-	-	0.5	0.5	0.5	0.5	0.5	0.5	0.5	0.5	0.5	0.5	0.5	0.5	-	-	-	-	-	-	-	-
Bobcat Skip Loader	7.2	7.2	14.3	14.3	14.3	14.3	14.3	14.3	14.3	14.3	14.3	14.3	14.3	14.3	14.3	14.3	14.3	-	-	-	-	-	-	-
Hydrotest Pump	-	-	-	-	-	-	-	-	-	-	-	-	-	-	0.6	0.6	0.6	0.6	-	-	-	-	-	-
Total	327.6	377.5	379.7	309.7	330.1	370.1	430.5	433.3	447.6	426.6	405.5	385.7	291.2	264.0	267.3	230.6	194.1	126.0	107.0	73.4	59.8	59.8	59.8	59.8

Note: Above estimates are for a single shift execution and 5/10 work week.

Yearly Emissions (lbs/yr)	
Month 1-12	4,624.1
Month 2-13	4,587.7
Month 3-14	4,474.1
Month 4-15	4,361.7
Month 5-16	4,282.6
Month 6-17	4,146.5
Month 7-18	3,902.4
Month 8-19	3,578.9
Month 9-20	3,219.0
Month 10-21	2,831.1
Month 11-22	2,464.3
Month 12-23	2,118.6
Month 13-24	1,792.6

Worst-Case Emissions	
Worst Month	447.6 lb/month
Worst 1-hr	2.2 lb/hr
Worst Year	4624.1 lb/year

DATA REQUEST

37. If horsepower is used as a basis for the emission factor determination please provide the assumed horsepower size for each piece of offroad equipment assumed in the construction equipment emissions estimate.

RESPONSE

The horsepower information for each piece of equipment is provided in Table 36-1.

BACKGROUND [38 AND 39]

Staff requires additional information to understand the emission factors and operating basis used to calculate the fugitive dust emissions. Specifically, additional information on the assumed soil moisture content is necessary to assess the fugitive dust emission calculations. Staff is concerned that the high moisture content assumed (i.e., 18 percent) is primarily a function of the time of the tests conducted in 2001 (March) and do not reflect soil moisture at other times of the year. Additionally, the geotechnical report indicates that any additional water would cause these soils to swell, which to staff means that watering of these soils for particulate control could create engineering problems. Staff needs additional information to assess whether the soil moisture content assumption used in the fugitive dust emission calculations should be revised.

DATA REQUEST

38. Please indicate if additional testing was performed during a summer or fall period to confirm the very high latent soil moisture contents found in the March 2001 samples from the geotechnical report (Appendix Q) that appears to be used as the basis for the 18 percent soil moisture content assumption.

RESPONSE

March 2001 soil samples were the only samples collected for soil moisture content. No additional testing was performed during a summer or fall period. Test results on soil samples collected at the site are summarized in AFC Volume II, Appendix Q, Table Q-1. Because the earthwork activities would generally involve only the top 15 feet of soil, only samples from this table with depths between 0.0 foot and 15.0 feet were considered in the calculation of surface soil moisture content. The individual samples used and the average moisture calculated are itemized in Table 38-1. Attachment 38-1 provides copies of the laboratory data sheets for all samples and indicates actual soil moisture contents measured in the laboratory.

Table 38-1
Summary of Surface Soil Moisture Data

Boring	Depth (feet)	Moisture Content (%)
B1	5.0	13.8
	10.0	16.7
	15.0	24.3
B2	3.0	18.9
	10.0	15.1
	15.0	21.2
B3	5.0	13.2
	10.0	18.1
	15.0	22.4
B4	0.0	22.5
	5.0	14.7
	10.0	13.2
	15.0	22.9
Average	NA	18.2

MOISTURE & DENSITY TEST (with % - #200 as needed)

Client : URS/Dames & Moore Project : Reliant Energy Colusa County Job no : 46800-930-043

	Boring #	B-1	B-1	B-1	B-1	B-1	B-1	B-2	B-2	
	Sample #	1	2	3	4	6	8	1	2	
	Depth (ft.)	5	10	15	20	30	40	2-3	10	
	Soil type: (visual)	Yellowish brown silty sand	Dark yellowish brown clayey silt	Yellowish brown silty clay	Yellowish brown silty clay	Strong brown silty clay	Strong brown silty clay	Dark yellowish brown sandy lean clay	Dark yellowish brown clayey silt	
1.	Date tested:	4/7/01	4/6/01	4/7/01	4/6/01	4/6/01	4/6/01	4/5/01	4/6/01	1.
2.	Tested by:	PS/KP	KP	KP	KP	KP	KP	PS	KP	2.
3.	Specimen height (in.)	3.94		3.00						3.
4.	Wt. of specimen + tare (gm)	616.1		585.8						4.
5.	Tare wt. (gm)	83.11		139.89						5.
6.	Diameter (in.)	2.40		2.40						6.
7.	Wet wt. of soil + dish wt. (gm)	552.70	273.42	718.30	266.75	273.46	255.93	243.29	233.74	7.
8.	Dry wt. of soil + dish wt. (gm)	505.80	240.32	632.00	226.97	236.35	215.27	211.44	208.66	8.
9.	Wt. of dish (gm)	165.32	42.65	276.76	51.92	51.68	43.70	42.92	42.54	9.
10.	Dish ID									10.
	Wet Density (pcf)	113.8		125.1						
	Dry Density (pcf)	100.0		100.6						
	Moisture Content (%)	13.8	16.7	24.3	22.7	20.1	23.7	18.9	15.1	
	Gs (Assumed)	2.70	2.70	2.70	2.70	2.70	2.70	2.70	2.70	
	Void Ratio	0.684		0.674						
	Saturation (%)	54.4		97.3						

Additional data:

Wt. of dry soil + dish before washing (gm)								
Wt. of dry soil + dish after washing (gm)								
% Passing # 200 sieve								
USCS symbol								

Signet Testing Labs Page of

MOISTURE & DENSITY TEST (with % - #200 as needed)

Client : URS/Dames & Moore Project : Reliant Energy Colusa County Job no : 46800-930-043

	Boring #	B-2	B-2	B-2	B-2	B-2	B-3	B-3	B-3	
	Sample #	3	4	6	7	10		2	3	
	Depth (ft.)	15	20	30	35	50	+/- 3	5	10	
	Soil type: (visual)	Light olive brown silty clay	Yellowish brown sandy clay	Yellowish brown sandy clay	Yellowish brown sandy clay	Yellowish brown sandy clay	Dark yellowish brown clay	Olive yellow sandy silt	Light olive brown clayey sand with gravel	
1.	Date tested:	4/7/01	4/7/01	4/7/01	4/7/01	4/7/01	4/5/01	4/6/01	4/6/01	1.
2.	Tested by:	KP	KP	KP	KP	KP	PS	KP	KP	2.
3.	Specimen height (in.)	2.78							2.00	3.
4.	Wt. of specimen + tare (gm)	509.2							350.7	4.
5.	Tare wt. (gm)	83.11							93.14	5.
6.	Diameter (in.)	2.40							2.40	6.
7.	Wet wt. of soil + dish wt. (gm)	410.50	296.89	257.80	325.89	225.91	829.80	250.68	291.58	7.
8.	Dry wt. of soil + dish wt. (gm)	346.25	246.62	217.93	276.31	190.38	719.00	226.40	253.23	8.
9.	Wt. of dish (gm)	42.59	42.43	40.52	51.93	43.22	166.47	43.10	41.20	9.
10.	Dish ID									10.
	Wet Density (pcf)	129.0							108.4	
	Dry Density (pcf)	106.4							91.8	
	Moisture Content (%)	21.2	24.6	22.5	22.1	24.1	20.1	13.2	18.1	
	Gs (Assumed)	2.70	2.70	2.70	2.70	2.70	2.70	2.70	2.70	
	Void Ratio	0.583							0.836	
	Saturation (%)	98.0							58.4	

Additional data:

Wt. of dry soil + dish before washing (gm)								
Wt. of dry soil + dish after washing (gm)								
% Passing # 200 sieve								
USCS symbol								

Attach 38-1_pg2.pdf

MOISTURE & DENSITY TEST (with % - #200 as needed)

Client : URS/Dames & Moore Project : Reliant Energy Colusa County Job no : 46800-930-043

	Boring #	B-3	B-3	B-3	B-3	B-3	B-3	B-3	B-3	
	Sample #	4	5	7	8	10	12	13	15	
	Depth (ft.)	15	20	30	35	45	55	60	80	
	Soil type: (visual)	Olive brown clay with sand	Light olive brown clayey sand	Light olive brown clay	Yellowish brown sandy clay	Yellowish brown sandy clay	Yellowish brown sandy clay	Bluish gray lean clay with sand	Dark grayish green sandy clay	
1.	Date tested:	4/5/01	4/7/01	4/6/01	4/6/01	4/6/01	4/6/01	4/5/01	4/6/01	1.
2.	Tested by:	KP	KP	KP	KP	KP	KP	PS	KP	2.
3.	Specimen height (in.)		3.00	3.00				2.00		3.
4.	Wt. of specimen + tare (gm)		586.1	591.7				304.5		4.
5.	Tare wt. (gm)		139.05	140.43				0.00		5.
6.	Diameter (in.)		2.40	2.40				2.40		6.
7.	Wet wt. of soil + dish wt. (gm)	217.06	744.00	503.00	252.89	154.80	235.66	356.20	280.00	7
8.	Dry wt. of soil + dish wt. (gm)	187.15	671.30	414.20	219.15	131.94	196.52	298.20	239.03	8
9.	Wt. of dish (gm)	53.44	297.32	52.01	52.66	40.43	51.40	51.81	40.08	9.
10.	Dish ID									10.
	Wet Density (pcf)		125.4	126.6				128.1		
	Dry Density (pcf)		105.0	101.6				103.7		
	Moisture Content (%)	22.4	19.4	24.5	20.3	25.0	27.0	23.5	20.6	
	Gs (Assumed)	2.70	2.70	2.70	2.70	2.70	2.70	2.70	2.70	
	Void Ratio		0.605	0.658				0.625		
	Saturation (%)		86.8	100.7				101.7		

Additional data:

Wt. of dry soil + dish before washing (gm)								
Wt. of dry soil + dish after washing (gm)								
% Passing # 200 sieve								
USCS symbol								

Attach 38-1_pg3.pdf

MOISTURE & DENSITY TEST (with % - #200 as needed)

Client : URS/Dames & Moore Project : Reliant Energy Colusa County Job no : 46800-930-043

	Boring #	B-4	B-4	B-4	B-4	B-4	B-4	B-4	B-4	
	Sample #	1	2	3	4	6	9	10	11	
	Depth (ft.)	0-5	5	10	15	25	40	45	50	
	Soil type: (visual)	Strong brown fat clay with sand	Pale yellow clayey sand	Light olive brown clayey sand	Yellowish brown sandy clay	Brown sandy clay	Light olive brown sandy clay	Yellowish brown sandy clay	Strong brown sandy clay	
1.	Date tested:	4/6/01	4/7/01	4/7/01	4/6/01	4/6/01	4/7/01	4/6/01	4/6/01	1.
2.	Tested by:	KP	KP	KP	KP	KP	KP	KP	KP	2
3.	Specimen height (in.)		3.00	3.00			2.00			3.
4.	Wt. of specimen + tare (gm)		535.3	570.4			403.1			4.
5.	Tare wt. (gm)		140.54	140.57			94.23			5.
6.	Diameter (in.)		2.40	2.40			2.40			6.
7.	Wet wt. of soil + dish wt. (gm)	632.70	676.00	471.80	234.60	270.79	346.40	305.84	244.27	7.
8.	Dry wt. of soil + dish wt. (gm)	569.10	626.00	419.80	198.95	232.48	292.30	259.80	211.21	8.
9.	Wt. of dish (gm)	285.94	285.39	24.49	43.53	51.47	52.12	52.30	39.80	9.
10.	Dish ID									10.
	Wet Density (pcf)		110.7	120.6			129.9			
	Dry Density (pcf)		96.5	106.5			106.1			
	Moisture Content (%)	22.5	14.7	13.2	22.9	21.2	22.5	22.2	19.3	
	Gs (Assumed)	2.70	2.70	2.70	2.70	2.70	2.70	2.70	2.70	
	Void Ratio		0.745	0.581			0.589			
	Saturation (%)		53.2	61.1			103.3			

Additional data:

Wt. of dry soil + dish before washing (gm)								
Wt. of dry soil + dish after washing (gm)								
% Passing # 200 sieve								
USCS symbol								

DATA REQUEST

39. Please provide documentation that the site's very fine soils can be adequately worked (graded and compacted) with this high moisture content and with the addition of water used for particulate emissions control.

RESPONSE

The natural moisture content of the predominantly silty soils at the CGS site tends to increase with depth. Within the depth of the soil profile to be excavated and used for fill, however, the natural moisture content tends to be lower and more suitable for earthwork. Prior to construction, bulk samples of representative soils will be obtained and compaction curves developed. This will allow an appropriate compaction specification to be developed. Typically, fine soils with higher moisture contents are worked several percentage points dry of the optimum moisture content. This can be achieved by air drying or discing, if necessary. Alternatively, the finer silts can be blended with coarser materials (e.g., sands), to yield an appropriate fill material. The addition of moisture for dust suppression can thus be regulated to be consistent with the moisture content needed for optimum earthwork activities.

BACKGROUND

Staff needs additional information to understand the use of a fugitive dust emission control efficiency factor in addition to the assumption of already very moist soils. Staff believes that the assumption of 18 percent soil moisture is questionable, and that an additional 80 percent control efficiency for watering is double counting the soil watering emission control factor.

DATA REQUEST

40. Please provide information that supports the use of the 80 percent fugitive dust control factor for watering on top of the 18 percent soil moisture assumption used in the uncontrolled fugitive emission calculations.

RESPONSE

The AFC assumed a 90 percent fugitive dust control factor for watering. The Western Regional Air Partnership (WRAP)'s Fugitive Dust Handbook discusses the assumptions behind the EPA's AP-42 emission factors for coal mining and in Table 11-5 lists the correction factors used to develop the emission factors. The range of soil moisture listed under bulldozers, overburden removal, is 2.2 to 16.8 percent, which suggests that using EPA equations to estimate fugitive dust emissions from soil with a moisture content of 18 percent is reasonable.

In the EPA's background document on control of fugitive dust at heavy industrial facilities (EPA, 1998), e.g., cement manufacturing, the EPA estimates the control efficiency for water addition to unpaved roads with the equation:

$$CE = 100 - [(0.8)pdt]/i$$

where

CE = average control efficiency (%);

p = potential average hourly daytime evaporation rate (mm/hr);

d = average hourly daytime traffic (hr^{-1});

i = application intensity (liters per square meter [L/m^2]); and

t = time between applications (hr).

An evaporation rate for the project site was calculated by averaging the monthly evapotranspiration rates for eastern Colusa County published by the California Irrigation Management Information System (CIMIS) on their Reference Evapotranspiration map (http://www.cimis.water.ca.gov/cimis/images/etomap.jpg). This average value is 4.44 inches per month, which is equal to 0.157 mm/hour. The average hourly daytime traffic is 10.63 trips per hour during the earth moving period of the project. The EPA uses an application rate of 1 L/m^2 in its example calculations so that rate is used here as well. The time between applications will be assumed to be twice a day, or 4 hours. Using these values we obtain:

$$CE = 100 - [(0.8)(0.157\ mm/hr)(10.63\ trips/hr)(4\ hr)]/(1\ L/m^2)$$

CE = 94.7 percent

Consequently, we believe that using 90 percent control efficiency is a reasonable assumption for fugitive dust control. Water application for dust control can be easily adjusted depending on actual site conditions during the earth moving portion of the construction period.

Reference

EPA (U.S. Environmental Protection Agency), 1998. "Technical Background Document on Control of Fugitive Dust at Cement Manufacturing Facilities." Office of Solid Waste and Emergency Response. March 20, 1998.

BACKGROUND [41 AND 42]

Staff requires additional information to understand the construction assumptions used to calculate the unpaved road fugitive dust emissions. Specifically, unpaved road travel is assumed to only occur during the first three months of construction. Staff needs to understand what measures will ensure that material deliveries, construction employee vehicles, etc., are not traveling on unpaved roads after the first three months of construction.

DATA REQUEST

41. Please indicate if the site will have onsite paved access roads after the first three months of construction, and if not provide an estimate of unpaved road travel and emissions for the remainder of the project construction.

RESPONSE

The project will not have paved roads on site after the first three months of the construction schedule. However, all PM_{10} emissions are considered in Table G.2-3 in the AFC. What will be different starting in the fourth month is that the major earthmoving operation occurring during the first three months of construction activity will have been completed. The emissions during the earthmoving operation were calculated using several itemized emission factors (e.g., grading, truck loading, travel on unpaved roads, etc.). The emissions from the other construction activities during the 24 months of the construction period used a composite emission factor. The PM_{10} emissions from the earth moving activities in the first three months were added to the PM_{10} emissions calculated using the composite emission factor. The composite emission factor includes vehicle travel on site on unpaved roads. The composite emission factor was not applicable to the major earth moving portion of the construction period. Table G.2-3 in the AFC provides the PM_{10} emission estimates by month during construction. Note that Table G.2-3 was updated in response to Data Request 36 (in Attachment 36-1); however, that update was not required by this data request. It shows that the composite emission factor was applied to all disturbed acreage, including unpaved roads, for the entire 24-month construction schedule and the PM_{10} emissions from earth moving were included in addition for the first three months.

DATA REQUEST

42. Please confirm that the entire route into the site is paved, and considering the number of unpaved roads in the area, provide a description of the measures that will be taken to ensure that project construction traffic will only travel on paved roads into and out of the site.

RESPONSE

All roads other than those included in Table G.2-3 are paved. Construction traffic in the area will be monitored to ensure that it stays on the identified routes.

BACKGROUND [43 THROUGH 45]

Staff needs additional information to understand if the construction of the project's linear facilities (transmission interconnection, natural gas pipeline, and water pipeline) are properly included in all of the emission calculations. Table G.2-3 clearly shows some of the linear construction being included in the disturbed area fugitive dust calculations; however, the work activity for some of the related necessary equipment for linear construction appears to be missing and other assumptions regarding schedule in Table G.2-3 and Tables G.2-4 through G.2-8 appear in conflict. Staff needs additional information to understand the schedule and emissions associated with the linear construction.

DATA REQUEST

43. Please provide the anticipated schedule of construction for the natural gas pipeline, water pipeline, and transmission interconnection in relation to the 24-month schedule identified in Appendix G2.

RESPONSE

Construction of the natural gas pipeline will occur from Months 13 to 19. Construction of the water pipeline will occur in Months 9 and 10. Section 5.4 of the AFC indicates that construction of the electrical interconnection will occur from Months 6 to 14, which would be from approximately August 2008 to April 2009. However, the schedule will be adjusted to plan activities at the northern towers to be replaced to comply with Mitigation Measure BIO-4 outlined in Section 8.2.4.2 in the AFC. This mitigation measure stipulates that work would be timed to occur during the dry season (May 1 to October 15) when branchiopod habitat is less likely to be indirectly affected by erosion or sedimentation. Therefore, construction of the transmission interconnection at the northern towers to be replaced would occur between May 1 and October 18.

DATA REQUEST

44. Please identify the specific construction equipment necessary for the construction of the natural gas pipeline, water pipeline, and transmission interconnection and, considering the provided construction schedule, revise Tables G.2-4 through G.2-8 as appropriate.

RESPONSE

All equipment specific to the construction of the linear features was included in Table 8.1-8 in the AFC. Specifically, the following equipment will be used during construction of the water pipeline, natural gas pipeline, and transmission line towers, including line pulling.

- Trucks (transport of fill/soil stabilization materials)
- Excavating/compacting equipment (excavation for tower foundations/backfill)
- Concrete pump trucks/ready-mix trucks and other trucks (for tower foundation construction)
- Trucks, tractor trailer (transport of structural steel poles for transmission towers)
- Welding unit
- Compactor
- Mobile crane (erection of transmission towers)
- Trucks, line (transport of electrical cables)
- Trucks, bucket (elevation of workers for access to conductors and erected towers)
- Trenchers (installation of the pipelines)

Note that Tables G.2-4 through G.2-8 have been modified for other purposes in the response to Data Request 36, and are provided in Attachment 36-1.

DATA REQUEST

45. Please indicate why the natural gas pipeline area is not included in Table G.2-3 or add it to the table as appropriate.

RESPONSE

The estimated active disturbed areas per month for both the natural gas supply pipeline and the water supply pipeline are included in the column headed "Water Supply Pipelines" on Table G.2-3 of the AFC. Note that Table G.2-3 has been for modified for other reasons in response to Data Request 36. The column heading has also been modified.

CONSTRUCTION DISPERSION MODELING

BACKGROUND

Several of the construction dispersion modeling files improperly spread the daily emissions over 24 hours rather than over the actual daily construction schedule. The construction modeling needs to be corrected to model emissions during the actual daily construction schedule.

DATA REQUEST

46. Please provide revised construction modeling files that incorporate all revisions to construction emissions that are provided in response to the other data requests, and that are corrected to model actual hour of day emissions based on the assumed construction schedule.

RESPONSE

Revised construction modeling results are reported on Revised Table 8.1-24 (Rev. 1) included as part of the response to Data Request 21. Revised construction modeling output summary is provided in Attachment 46-1, which replaces Appendix G4 of the AFC. Revised electronic modeling files for construction are included on the CD in Attachment 21-1.

The revisions to the construction modeling done in response to this and other data requests include:

- Revised SCAQMD emission factors for equipment exhaust per Data Request 36
- Modeled construction activities using actual hours of day operation per this data request
- Combined PM_{10} and $PM_{2.5}$ emissions from equipment exhaust and from fugitive dust when reporting results per Data Request 47
- $PM_{2.5}$ was included in the analysis per Data Request 49

COLUSA CONSTRUCTION COMBUSTION MODELING RESULTS
modeling file: "colusa1"
modeling file: "colusa1_OLM"

(all values in micrograms per cubic meter)	2001	2002	2003	2004	2005	OLM ADJUSTED	MAXIMUM	BACKGROUND	TOTAL	STANDARDS CAAQS	STANDARDS NAAQS
NO_X											
1 hour	881.80	2027.25	1933.22	**2269.09**	1089.65	230.82	230.82	150	**380.82**	470	
annual	**8.40**	7.47	8.03	8.08	6.68		8.40	26.4	**34.80**		100
CO											
1 hour	526.41	1210.30	1154.26	**1354.65**	650.41		1354.65	6670	**8024.65**	23000	40000
8 hour	92.50	**190.01**	160.12	176.28	98.34		190.01	3767	**3957.01**	10000	10000
PM_{10}											
24 hour (1st highest)	5.44	**7.44**	6.89	6.56	4.85		7.44	92	**99.44**	50	150
annual	**0.59**	0.52	0.56	0.57	0.47		0.59	25.5	**26.09**	20	50
$PM_{2.5}$											
24 hour (98th % =highest 8th highest)	2.65	2.82	2.65	**2.96**	2.69		2.96	26	**28.96**	NA	65
annual	**0.58**	0.52	0.55	0.56	0.46		0.58	11	**11.58**	12	15
SO_2											
1 hour	0.80	1.84	1.76	**2.06**	0.99		2.06	15.72	**17.78**	655	
3 hour	0.32	0.62	0.59	**0.69**	0.48		0.69	15.72	**16.41**		1300
24 hour	0.073	**0.100**	0.093	0.089	0.066		0.10	7.88	**7.98**	105	356
annual	**0.0083**	0.0074	0.0079	0.0080	0.0066		0.01	2.67	**2.68**		80

Note: Red font indicates value above state standard.

COLUSA CONSTRUCTION FUGITIVE DUST + CONSTRUCTION COMBUSTION MODELING RESULTS (Release Height = 3m)
modeling file: "colusadust_dust_combustion": 24 hour-highest and annual-highest

	2001	2002	2003	2004	2005		MONITORED BACKGROUND	TOTAL	STANDARDS CAAQS	STANDARDS NAAQS
PM_{10}										
24 hour (1st highest)	169.81	296.06	280.12	**332.60**	264.67		332.60	92	**372.12**	50	150
annual	3.09	3.09	3.05	**3.33**	2.65		3.33	25.5	**28.55**	20	50
$PM_{2.5}$											
24 hour (98th % =highest 8th highest)	19.11	22.05	20.64	**26.61**	14.96		26.61	26	**52.61**	NA	65
annual	0.65	0.64	0.64	**0.69**	0.55		0.69	11	**11.69**	12	15

ATTACHMENT 46-1

Colusa Generating Station
28067004 E&L Westcoast, LLC
February 2007 Colusa County, California

URS

UTM LOCATIONS FOR MAX VALUES

COMBUSTION

NO_X	East UTM (:	North UTM	Elevation	Time (y/mm/dd/hh or total hour)
1 hour	562749.62	4357229.5	56.51	4020109
annual	562750.12	4357523	61	8760
CO				
1 hour	562749.62	4357229.5	56.51	4020109
8 hour	563060	4357131	54.81	2020116
PM_{10}				
24 hour	563060	4357131	54.81	2020124
annual	562750.12	4357523	61	8760
$PM_{2.5}$				
24 hour(H8H)	562750	4357500	61	4120424
annual	562750.12	4357523	61	8760
SO_2				
1 hour	562749.62	4357229.5	56.51	4020109
3 hour	562749.62	4357229.5	56.51	4020109
24 hour	563060	4357131	54.81	2020124
annual	562750.12	4357523	61	8760

FUGITIVE DUST + COMBUSTION

PM_{10}				
24 hour (1st highest)	562725	4357175	58	4121124
annual	562750	4357425.5	58.79	8784
$PM_{2.5}$				
24 hour (98th % =highest 8th highest)	562749.88	4357376.5	57.86	4112324
annual	562750	4357425.5	58.79	8784

BACKGROUND [47 AND 48]

The construction modeling results presented (Table 8.1-24) for PM_{10} appear to only include fugitive dust but do not include both fugitive dust and construction equipment emissions impacts together. Additionally, the 24-hour impact results presented for PM_{10} are based on the high sixth high predicted impact rather than actual peak 24-hour results. Staff needs to have the construction PM_{10} modeling files to be corrected and explanation regarding the presentation of results.

DATA REQUEST

47. Please provide revised construction PM_{10} modeling files that incorporate both fugitive dust and construction equipment emission sources.

RESPONSE

Revised electronic modeling files for construction are included on the CD in Attachment 21-1. A revised construction modeling output summary showing both the equipment exhaust and the fugitive dust for PM_{10} and $PM_{2.5}$ analysis is provided in Attachment 46-1, which replaces Appendix G4 of the AFC.

DATA REQUEST

48. Please explain why the impacts results provided for PM_{10} are derived from the high sixth high predicted impact results.

RESPONSE

The revised construction modeling analysis reports the highest first high for PM_{10}. The revised construction modeling analysis reports the highest eighth high (H8H) for 24-hour $PM_{2.5}$ so that it can be added to the 98th percentile background reported from the ambient air monitoring station (as presented on Table 8.1-4 of the AFC). The H8H is the 98th percentile when 365 daily averages per year are produced by the model. These results are summarized in Attachment 46-1, provided in response to Data Request 46.

CONSTRUCTION FINE PARTICULATE EMISSIONS AND IMPACTS

BACKGROUND [49 AND 50]

Staff needs a construction $PM_{2.5}$ (fine particulate) emission estimate and modeling analysis to assess the project's impacts on all criteria pollutants.

DATA REQUEST

49. Please provide a construction $PM_{2.5}$ emission estimate. The $PM_{2.5}$ emission estimate can be calculated per the specific fugitive dust emission calculation methodologies or by using appropriate $PM_{2.5}/PM_{10}$ emission fractions created by CARB as part of the California Emission Inventory Development and Reporting System (CEIDARS). The CEIDARS particulate fraction data can be uploaded at http://www.aqmd.gov/ceqa/handbook/PM2_5/finalAppA.doc.

RESPONSE

A construction $PM_{2.5}$ emission estimate is provided in Table 49-1. The CEIDARS source referenced above was used to obtain the $PM_{2.5}$-to-PM_{10} ratios needed to develop the $PM_{2.5}$ inventory. The PM_{10} emissions were based on the revised PM_{10} inventory reported in response to Data Request 36.

Table 49-1
Estimated $PM_{2.5}$ Emissions During Construction

Emissions Estimate Scenario	Fugitive Dust $PM_{2.5}$ Peak[a]	Exhaust $PM_{2.5}$ (during fugitive dust peak)[b, c]	Total Combined Peak
Worst-Case Monthly Emissions (lbs/month)	641.89	324.65	966.54
Worst-Case Hourly Emissions (lbs/hr)	3.2	1.6	4.8
Worst-Case Daily Emissions (lbs/day)	32.09	16.23	48.3
Worst-Case Annual Emissions (lbs/yr)	3,052	4,582	7,634

Notes:

[a] $PM_{2.5}$ Fugitive Dust calculations are based on conversion factors as presented in the SCAQMD's Air Quality Analysis Handbook Appendix A – Updated CEIDARS Table with $PM_{2.5}$ Fractions. The factor given for these operations was 0.21. Values depicted = PM_{10} values presented in Table 8.1-11 times 0.21.

[b] $PM_{2.5}$ Exhaust calculations are based on conversion factors as presented in the SCAQMD's Air Quality Analysis Handbook Appendix A – Updated CEIDARS Table with $PM_{2.5}$ Fractions. The factor given for these operations was 0.991. Values depicted are PM_{10} values presented in Table 8.1-11 multiplied by 0.991.

[c] Exhaust $PM_{2.5}$ peak month does not occur in same month as Fugitive Dust Emissions peak month.

DATA REQUEST

50. Please provide a construction $PM_{2.5}$ modeling impact analysis including a summary of the modeling results and copies of all electronic modeling files.

RESPONSE

See response to Data Request 46. Revised electronic modeling files for construction are included on the CD in Attachment 21-1.

ALTERNATIVES

Technical Area: Alternatives
Author: Jack W. Caswell

BACKGROUND [51 THROUGH 55]

Staff requires additional information to adequately compare and discuss feasible project alternatives. The AFC does not provide all of the basic information necessary for a comparative review of the alternatives. The following information is necessary for a complete alternatives analysis.

DATA REQUEST

51. Please provide a map that shows the location, elevation and topography of the two alternatives sites as described in Section 9.0, page 9-3 of the AFC.

RESPONSE

Alternative Site 1 (Cortina) – This site is located approximately 4.5 miles southwest of Williams on Walnut Drive. The proposed alternative site considered is adjacent to PG&E's 230 kV Cortina substation, on the substation's west side. Alternative Site 1 is shown on Figure 51-1.

The alternative site considered encompasses approximately 26 acres. Beginning approximately 100 yards north of Walnut Drive, the majority of the site lies within property owned by PG&E and a local landowner. The site elevation is approximately +40 feet above mean sea level (msl) and the elevation on the site varies no more than 10 feet on average. The land surrounding the alternative site is also relatively flat with insignificant topographic features. The alternative site consists of both nonagricultural grassland and active farmland.

Alternative Site 2 (Holthouse Ranch) – This site is located approximately 14 miles north of the community of Williams, approximately 5 miles to the west of Interstate 5 near Delevan Road. It is located in the southeastern portion of the Holthouse Ranch. Alternative Site 2 is shown on Figure 51-2.

The alternative site encompasses approximately 26 acres. Topography in this area of the ranch is relatively flat to undulating. The site elevation is approximately +140 feet above msl with topographic variation of no more than 20 to 30 feet. The site and surrounding area are currently used for cattle grazing.

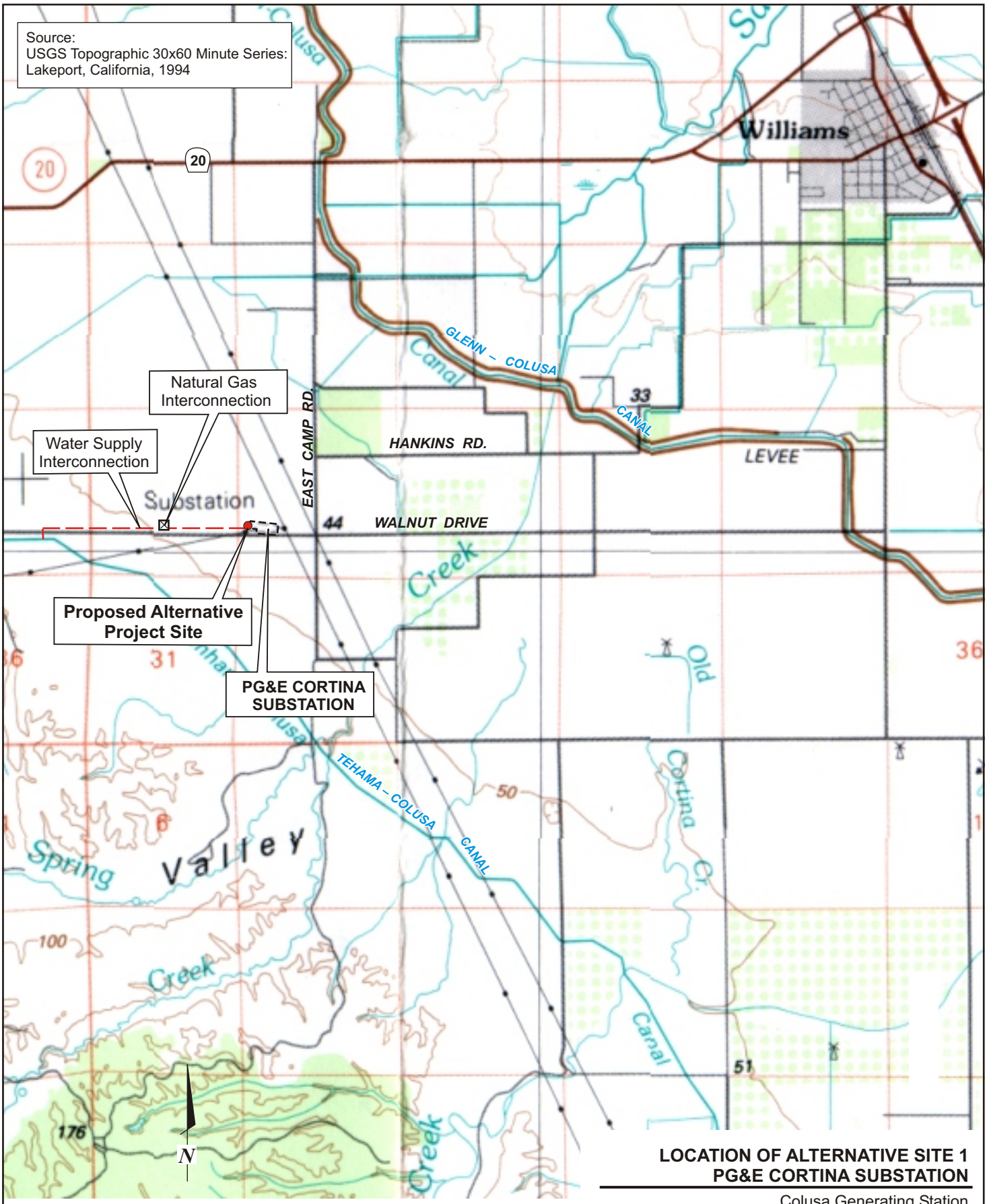

0 1 2

Scale in Miles
1:50,000

LOCATION OF ALTERNATIVE SITE 1
PG&E CORTINA SUBSTATION

28067004
February 2007

Colusa Generating Station
E&L Westcoast, LLC
Colusa County, California

URS

FIGURE 51-1

2/02/07 vsa ..\28067004 CPV Colusa 2007\Data Request_feb07\51-1_Alt 1 pge cortina.cdr

Source:
USGS Topographic Maps, 7.5 Minute Series:
Logan Ridge, California, 1973
Sites, California, 1973
Colusa County Assessors Office

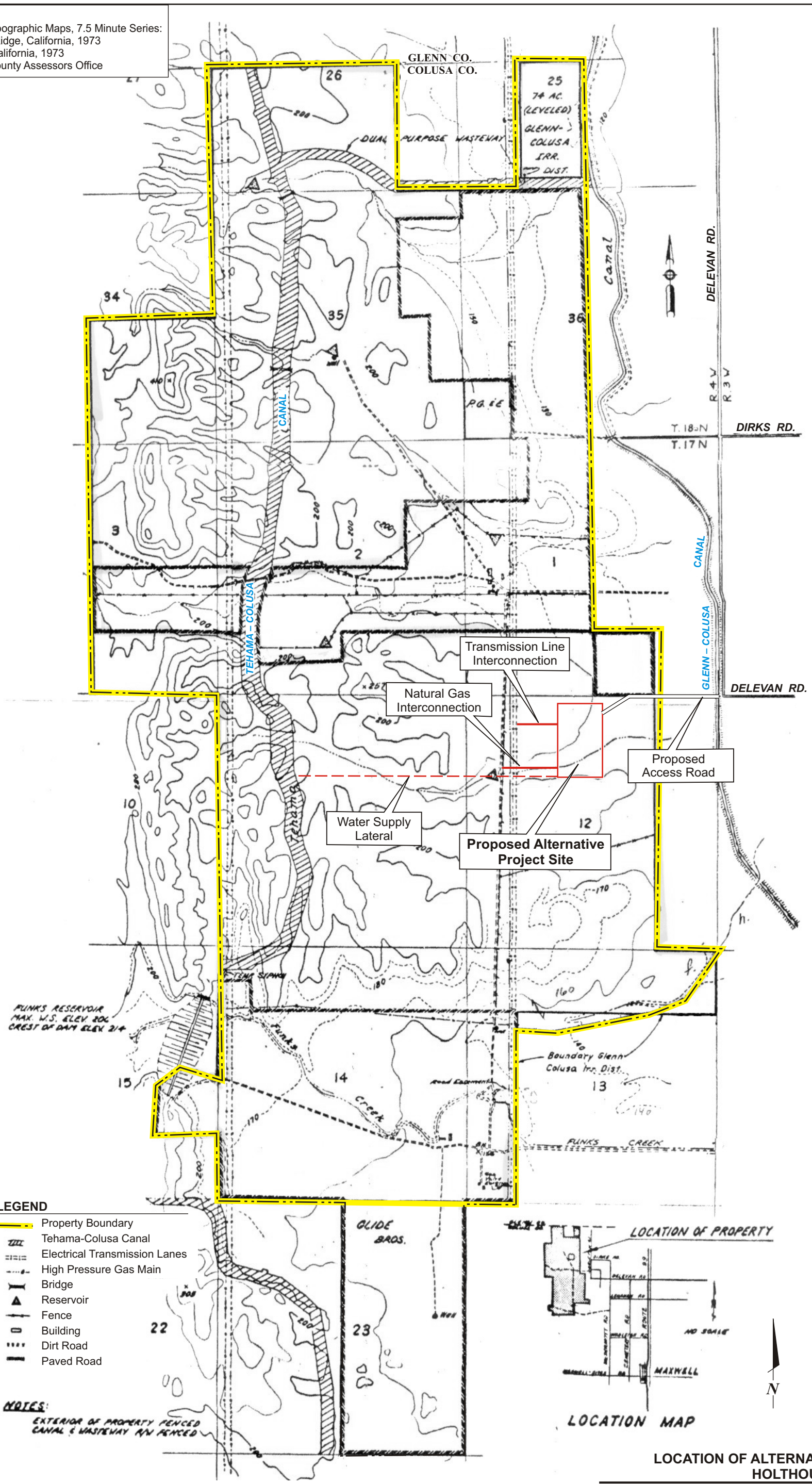

LOCATION OF ALTERNATIVE SITE 2
HOLTHOUSE RANCH

28067004
February 2007

Colusa Generating Station
E&L Westcoast, LLC
Colusa County, California

URS

FIGURE 51-2

2/02/07 vsa ..\28067004 CPV Colusa 2007\Data Request_feb07\51-2_Alt 2 holthouse.cdr

DATA REQUEST

52. Provide a map that shows the site location in relationship to the transmission routes, water, natural gas lines, and any other associated facilities (e.g., linear facilities) that would be required for the two alternative sites discussed in Section 9.0, page 9-3.

RESPONSE

Alternative Site 1 (Cortina) – See Figure 51-1. The site's location in relation to other associated facilities is as follows:

- Interconnection to the PG&E transmission system would be at the adjacent Cortina Substation and would have sufficient capacity to accommodate the output of the proposed power plant.
- Natural gas is available via PG&E's #400 and #401 gas pipelines located approximately one-half mile to the west of Alternative Site 1.
- Water for the plant could be provided from the Tehama-Colusa Canal under the same contractual terms as the proposed project site.

Alternative Site 2 (Holthouse Ranch) – See Figure 51-2. The site's location in relation to other associated facilities is as follows:

- Interconnection to the PG&E transmission system would be to PG&E's north-south transmission corridor via a new switchyard.
- Natural gas is available via PG&E's #400 and #401 gas pipelines located less than one-half mile to the west of the Alternative Site 2.
- Water for the plant could be provided from the Tehama-Colusa Canal under the same contractual terms as the proposed project site.

DATA REQUEST

53. Provide a list of site location alternatives that were reviewed but not considered as feasible due to the site selection criteria as discussed on page 9-2 Section 9.5.

RESPONSE

No site locations were reviewed in detail other than the two site locations that were considered feasible, as detailed in responses to Data Requests 51 and 52.

DATA REQUEST

54. If biological information (e.g., a biological survey) was gathered that is specific to the two alternative sites, please provide that information.

RESPONSE

No site-specific biological surveys were performed on or adjacent to the proposed alternative sites. General biological literature used in the selection of the proposed site was also consulted in the identification of site alternatives. References to that literature have been included in Section 8.2.8 of the AFC.

DATA REQUEST

55. If cultural resource information (e.g., a cultural resource survey) was completed that is specific to the two alternative sites, please provide that information.

RESPONSE

No cultural resource information was collected during the evaluation of the alternatives.

BIOLOGICAL RESOURCES

Technical Area: Biological Resources
Author: John Mathias

BACKGROUND [56 AND 57]

Figure 8.2-2A of the AFC mapped a general area of vernal pool and alkali grassland habitat. There is also some general discussion about the proximity of the transmission towers to the vernal pool complex (AFC page 8.2-21). U.S. Fish & Wildlife Service guidance on vernal pools states impacts are likely when project development occurs within 250 feet of a vernal pool. Staff needs additional information to make a determination regarding potential impacts to the vernal pools during construction and maintenance of the transmission towers and during construction of the Glenn-Colusa Canal bridge replacement and road realignment.

DATA REQUEST

56. Please provide a description of the types of equipment to be used during the construction of the transmission towers and line pulling, and indicate what time of year the work is likely to occur. Explain what types of impacts the equipment are expected to have on soils, especially during wet periods.

RESPONSE

Section 5.4 of the AFC indicates that construction of the electrical interconnection will occur from Months 6 to 14, which would be from approximately August 2008 to April 2009. However, the schedule will be adjusted to plan activities near the northern towers to be replaced to comply with Mitigation Measure BIO-4 outlined in Section 8.2.4.2 in the AFC. This mitigation measure stipulates that work would be timed to occur during the dry season (May 1 to October 15), when branchiopod habitat is less likely to be indirectly affected by erosion or sedimentation.

The following equipment will be used during construction of the transmission line towers and line pulling:

- Trucks (transport of fill/soil stabilization materials)
- Excavating/compacting equipment (excavation for foundations and backfill)
- Concrete pump trucks/ready-mix trucks and other trucks (for foundation construction)
- Trucks, tractor trailer (transport of structural steel for transmission towers)
- Crane (erection of transmission towers)
- Trucks, line (transport of electrical cables)
- Trucks, bucket (elevation of workers for access to conductors and erected towers)

Potential impacts to soils would be avoided since construction near the northern towers to be replaced will occur during the dry season. Matting, wood timbers, or rubber-tired vehicles will be considered during construction and maintenance of the transmission line towers and line pulling, depending on final design, the final construction staging plan, and equipment used. A combination of the timing of the work activities (dry season) and the use of avoidance and minimization measures, such as using rubber-tired vehicles to avoid surface compaction, will minimize potential impacts to branchiopod habitat. For a complete description of how potential impacts to branchiopod habitat will be avoided, please refer to Section 8.2.4.2 (page 8.2-33) of the AFC.

DATA REQUEST

57. Please provide a map that shows the location of any lay-down areas that may be used during construction of the Glenn-Colusa Canal bridge replacement and road realignment.

RESPONSE

Figure 3.6-6 in the AFC shows the construction right-of-way for the Glenn-Colusa Canal bridge replacement and road realignment. All laydown areas will be located within the right-of-way shown on this figure.

BACKGROUND

Bridge replacement work is proposed at Teresa Creek. The underside of the bridge was inspected for bats on March 9 and March 26, 2001 and August 24, 2006, according to AFC page 8.2-17. No guano or staining was detected even though there are several species that may potentially occur. Staff is concerned about possible impacts to bats during demolition of the existing bridge.

DATA REQUEST

58. Please provide staff with a discussion on how impacts to bats will be avoided during the replacement of the Teresa Creek Bridge.

RESPONSE

Although it is unlikely that bats are using the Teresa Creek Bridge, the existing bridge will be re-inspected for bats by a qualified biologist prior to removal. Two pre-construction surveys will be conducted at Teresa Creek Bridge. The first survey will be conducted during daylight hours, while the second survey will be conducted around dusk. These inspections will be conducted no more than 30 days but not less than 5 days prior to demolition of the existing bridge or prior to June 1, whichever is earlier. If roosting bats are present, the following avoidance and minimization measures will be implemented:

- Bats will be excluded from the bridge prior to demolition. Exclusion will not be initiated during the nursery season (June 1 through August 15) to avoid impacting the bats during the nursery season, or when dependent young are present.

- Exclusion will take place under the supervision of a qualified biologist. Fine mesh curtains would be dropped over the sides of the bridge after the animals have exited the roost at dusk, immediately prior to the scheduled demolition. A qualified biologist will also be present during demolition. An effort will be made to rescue any animals that may still be present at that time.

BACKGROUND

According to Section 3.6.3.1 (page 3-20) in the AFC, a temporary bridge could be used at Teresa Creek while replacement of the permanent bridge is being completed. Culverts would be placed in Teresa Creek as a temporary bridge and fill material would be placed on top of them.

DATA REQUEST

59. a. Please identify the culvert's size and provide a discussion of anticipated impacts to stream depth and flow rate in Teresa Creek while the culverts are in place, and discuss the significance.

b. For any significant impacts identified above, discuss mitigation options.

RESPONSE

a. Bridge work will be divided into three components, as generally described below (final design has not been completed). Please note that, if required due to timing constraints, a preassembled span bridge which could be lifted in place by a mobile truck-mounted crane might be employed as a bypass route, rather than the components described below.

1. **Temporary Bypass.** It is not expected that traffic will be detoured by an alternate route during the bridge reconstruction. This expectation is based on (1) the poor conditions of the unpaved detour route, which would increase potential dust generation, and (2) impacts that would occur to local farming operations from using the detour route due to increased duration. Therefore, the road would not be closed during construction, and a temporary bypass would be needed next to the existing bridge. This bypass is anticipated to consist of pipe culverts laid in the creek, with sufficient capacity for the passage of creek flow during the allowable construction period for the new bridge. The construction period will occur during the dry season. The pipe culverts will be laid on gravel placed on the creek bed, and overlain with gravel and backfill to form a roadway embankment placed over the culverts, and a road graded and possibly paved (depending on the average daily traffic count) for the passage of traffic. After the new bridge is constructed, the temporary embankment and culverts will be removed, and the creek embankments and bed will be returned to original contour and revegetated.

   Pipe culverts will be laid with truck and tractor equipment. Earthmoving equipment (tractor, dozer, backhoe) will be used to place and remove the temporary embankment. Paving machines and rollers will be needed if the temporary bypass needs to be paved.

2. **Bridge Removal.** Unless a permanent preassembled span bridge is employed, bridge demolition equipment will be needed to remove the existing structure. Timber superstructure will be removed with a small crane, tractor, and truck. Abutments will be demolished using concrete demolition equipment. The use of sheet piling or coffer dams could be considered during the final design process, to limit intrusion into the creek during bridge demolition. All existing bridge structure will be removed from site and disposed in an approved landfill. It is not

known whether the existing bridge is on piles. If there are existing piles, the top 2 feet will be removed in accordance with the Caltrans Standard Specifications.

3. **Permanent Structure.** It is anticipated that earthmoving equipment (tractor, dozer, backhoe) will be used to excavate the necessary soil for construction of the project. Culvert or abutment walls will use wood forms to accommodate cast-in-place construction. Falsework supports will be used in the creek to allow cast-in-place construction of the bridge superstructure or culvert roof. Forms and falsework will then be removed from the channel. Wingwalls at the upstream and downstream sides of the structure will be constructed using either cast-in-place or shotcrete construction techniques.

   Temporary impacts to stream depth and flow rate in Teresa Creek will be avoided by placement of temporary culverts that are adequately sized to convey the expected flows in Teresa Creek. At this time, the culvert is expected to be 16 feet wide and 11 feet high. This will be confirmed during final design. The applicant will coordinate construction activities with Colusa County and the Glenn-Colusa Irrigation District to determine the anticipated flow rate of discharges into Teresa Creek during the construction period. The permanent structure will meet all applicable design standards for conveying expected flows to avoid changes in stream depth and flow rates in the project area.

b. **Impacts**

On the north bank of Teresa Creek, immediately west of the existing bridge, two culverts empty into the creek. The action of the water draining from the culverts has caused considerable erosion of the stream bank at the outfall. During the bridge replacement, a wall would be constructed in front of the culverts; the culverts would be extended through the wall; and the stream bank behind the wall, which has been eroded, would be back-filled. Although it is located below the ordinary high water elevation, the area where this erosion is occurring is primarily unvegetated but is located below the ordinary high water elevation of the stream. Therefore, this area is a non-wetland water of the United States. The described wall, construction, and backfill would result in the permanent fill of approximately 600 square feet (0.013 acre) of non-wetland waters of the United States.

Temporary fill in waters of the United States may be required to construct an alternate crossing while the Teresa Creek Bridge is under construction. Impacts to wetlands resulting from placement of this fill are included in the 1,000 square feet of temporary wetland impacts described in Section 8.2.2.1.2 of the AFC.

Mitigation

Compensation for impacts to jurisdictional waters of the United States during the Teresa Creek Bridge replacement would be mitigated according to the ratios listed in Table 8.2-7 (page 8.2-76) of the AFC at the USFWS approved Dolan Ranch Conservation Bank or another option reviewed and approved by the U.S. Fish and Wildlife Service.

General avoidance and minimization measures that will be implemented during the Teresa Creek Bridge replacement are described in Section 8.2.4.1 (Page 8.2-33) of the AFC.

BACKGROUND

The Applicant's proposed mitigation measure BIO-18 states that a Biological Resources Mitigation Implementation and Monitoring Plan (BRMIMP) will be prepared prior to construction; staff typically requests a working draft be submitted prior to publication of the Preliminary Staff Assessment if state and/or federally listed species could be affected by a proposed project.

DATA REQUEST

60. Please provide staff with a draft of the BRMIMP which identifies all sensitive biological resources, timing of construction (and any times when construction is restricted), all proposed biological resource mitigation measures, monitoring and compliance measures in federal and state agency terms and conditions, local agency permits, monitoring methodologies, and proposal for monitoring objectives and performance standards.

RESPONSE

Prior to completion, the BRMIMP will require input from resource agencies, including the U.S. Fish and Wildlife Service and the U.S. Army Corps of Engineers. After agency input is received, the draft BRMIMP will be submitted to the CEC prior to publication of the PSA.

BACKGROUND [61 AND 62]

The AFC includes drawings of the power plant access road (Figures 3.3-1 and 3.5-4), but staff could not find a discussion of construction techniques. No drawings or discussion are provided regarding proposed roads to the construction lay-down area and the transmission line towers.

DATA REQUEST

61. Please provide specific information regarding any grading or excavation needed (e.g., depth of cut, amount of fill, source of fill material, location of culverts if road is bermed) and the types of materials to be used (e.g., use of geo-textiles) for the power plant access road.

RESPONSE

Please refer to the Grading Plan (Figure 3.5-2 in the AFC). The maximum depth of cut for the power plant access road is approximately 4 feet, and the maximum height of fill is approximately 4 feet. The approximate volume of the cut is 11,000 cubic yards, and the approximate volume of fill is 11,000 cubic yards. The intent is to have a balanced cut and fill; therefore, no soil import is anticipated and a source of fill materials is therefore not identified or required. The plant access road will be 3 inches of asphaltic concrete pavement over 10 inches of compacted aggregate base and crowned. Stormwater runoff will sheet flow and collect in roadside ditches. It will be conveyed by reinforced concrete pipe culverts where it crosses the road. The use of geotextile fabric for plant roads is not anticipated.

DATA REQUEST

62. a. Please provide specific information on the composition and construction of the roads to the construction lay-down area and transmission lines. Please indicate what best management practices will be in place, whether any fill be used, and the source of any fill material.

b. Provide a discussion of which road segments will be restored after construction and include a description of the proposed seed mix, seeding rate, application techniques, and timing of restoration.

RESPONSE

a. Please refer to the grading plans (Figures 3.5-2 and 3.5-3 in the AFC), which show the access roads to the construction laydown area. The roads to the construction laydown area will be surfaced with gravel over a compacted dirt subgrade. They will be sloped to drain to the drainage ditches along the sides. Culverts and energy dissipaters will be used where flows are concentrated and go under the roads. The transmission line road will follow the length of the transmission line rights-of-way shown on Figure 3.3-1 in the AFC.

No imported fill is anticipated for grading of the roads, including the construction laydown area and transmission line roads. No gravel or fill material will be placed in the area near the northern towers to be replaced. All work activities associated with the northern towers to be replaced will be conducted during the dry season, May 1 to October 15. Only rubber-tired vehicles will be allowed with construction work associated with this area. If necessary, a path along the transmission road may be mowed through the vegetation to reduce fire hazard, using an attachment to the rubber-tired vehicle. No blading of vegetation may occur. The mitigation measures from Section 8.2.4.2 (page 8.2-33) in the AFC will be implemented to avoid potential impacts to vernal pool habitat.

The main construction laydown area would be located in the upper portion of a small watershed north of the power plant site that drains east toward the Glenn-Colusa Canal. The grading in the laydown area has been designed to minimize cuts and fill and to be consistent with the general site topography. The grading plan for the laydown area would direct surface water runoff from the laydown area toward the same watershed. This runoff may be concentrated at one or more discharge points but the total area of the watershed and the volume of water leaving the watershed would not be altered because the laydown area would be covered with gravel and not paved. The road surface would be at the same elevation as the surrounding laydown pads; therefore, runoff would not be restricted or impeded. BMP erosion control measures would be implemented along the downslope perimeter of the laydown area to collect sediment and prevent erosion. BMP pollution prevention measures would be implemented for vehicle washing and refueling facilities to prevent discharge of contaminated runoff beyond the perimeter of the laydown area. After construction, the area will be revegetated.

The road to the construction laydown areas and the roads that enter the construction laydown areas will be removed, graded back to the pre-existing condition as much as possible, and planted with native vegetation. The rate, technique, and timing of revegetation will be determined during the final design phase.

Permanent erosion control for the construction laydown area and temporary access roads would consist of revegetation with a standard erosion control seed mix equivalent to the following:

Common Name	Species	Application Rate (PLS#/acre)
Blando brome	*Bromus hordeaceus*	30
Zorro fescue	*Vulpia myuros*	6
Hykon rose clover	*Trifolium hirtum*	12

Erosion control blankets will be installed on all slopes greater than 2:1 (vertical:horizontal). Detailed specifications for installation of the seed mix, erosion control blankets, and other BMPs are described below in the response to Data Request 62b and in the BRMIMP.

b. All temporary disturbance areas will be revegetated as follows:

Upland Areas

Transmission line towers and access roads, the construction laydown area, and the water pipeline will be planted with standard erosion control seed mix.

Topsoil Salvage (Temporary Work Areas). The upper 12 inches (topsoil) in temporary work areas will be excavated and stockpiled separately during grading for all temporary laydown areas, temporary access roads and other temporary work areas that will be revegetated following the completion of construction. Stockpiled topsoil will be reapplied to temporary work areas following construction and prior to implementation of revegetation measures described below.

Upland Erosion Control Seed Mix. Permanent erosion control for the construction laydown area and temporary access roads would consist of revegetation with a native erosion control seed mix equivalent to the following: California brome (*Bromus carinatus*) at 30 pounds of pure live seed per acre, small fescue (*Vulpia microstachys*) at 8 pounds of pure live seed per acre, and tomcat clover (*Trifolium wildenovii*) at 4 pounds of pure live seed per acre.

Performance Criteria for Upland Erosion Control Revegetation. A qualified biologist or erosion control specialist will evaluate the upland revegetation using the following performance criteria:

- Year 1 – 70 percent of vegetation cover measured at undisturbed reference sites adjacent to project site;
- Year 2 – 80 percent of vegetation cover measured at undisturbed reference sites adjacent to project site;
- Year 3 – 95 percent of vegetation cover measured at undisturbed reference sites adjacent to project area.

Erosion control will be considered successful if the following erosion thresholds are not exceeded:

- Flow Pattern Development – More than 25 percent of the area shows evidence of recent translocation and deposition of soil and litter.

- Rills – Usually greater than 3 inches deep and found at 10-foot intervals.

- Gullies – More frequent than 200-foot intervals and appear to be unstable.

If performance criteria for revegetation or erosion control are not met, remedial measures will be implemented as follows:

- Areas that do not meet revegetation criteria will be reseeded. If necessary, the erosion control seed mix may be modified to substitute other native species to improve success; and

- Temporary erosion control measures, including silt fences, erosion control blankets, bio-logs, or straw bales, will be installed as necessary to prevent ongoing erosion or sedimentation until remedial seeding measures can be fully implemented.

All erosion control measures will be monitored monthly during the wet season (approximately December 1 to April 1). Revegetation will be monitored each May for the first three years following project completion. Monitoring will be conducted by a USFWS-approved biologist.

Giant Garter Snake Habitat

Teresa Creek Bridge, Glenn-Colusa Canal Bridge and the associated road alignment, and Tehama-Colusa Canal will be planted following the USFWS planting plan and seed mix as described below.

Glenn-Colusa Canal, Tehama Colusa Canal, and Teresa Creek Revegetation

Revegetation of the project site at Teresa Creek, the Glenn-Colusa Canal, and adjacent areas will be implemented according to USFWS guidelines for restoration and/or replacement of giant garter snake habitat. Vegetation disturbed during the bridge replacements will be replanted with appropriate native species, such as California bulrush (*Scirpus californicus*), cattail (*Typha* spp.), and water primrose (*Ludwigia peploides*) in the emergent wetland area. Native erosion control seed mix including creeping wild-rye (*Leymus triticoides*), meadow barley (*Hordeum brachyantherum*), tomcat clover (*Trifolium wildenovii*) annual fescue (*Vulpia* spp.), blue wildrye (*Elymus glaucus*), mugwort (*Artemisia vulgaris*), and California brome (*Bromus carinatus*) would be applied to upland areas and areas adjacent to streams. An erosion control mat will be laid down if stabilization of the bank is needed.

The topography of these three sites will be restored once proposed construction activities have been completed. New plantings would be monitored for one year until the banks are adequately revegetated to prevent erosion and sedimentation of these areas and the banks have similar total vegetation cover equal to or greater than adjacent areas. Additional plantings will be implemented if adequate vegetation cover is not attained after one year. A monitoring report of the Glenn-Colusa Canal and Teresa Creek will be submitted to the USFWS one year after restoration is implemented.

Tehama-Colusa Canal

The Tehama-Colusa Canal does not provide habitat for giant garter snake during the inactive period because of the lack of suitable aestivation sites. It is unlikely that giant garter snake use the canal because it is a closed-end system that provides very little opportunity for dispersal of snakes in the project vicinity. However, the following avoidance and minimization measures will be implemented during construction of the intake and associated pipeline at the Tehama-Colusa Canal to protect giant garter snake:

- Giant garter snakes would only be present in the Tehama-Colusa Canal during their active period when this species might use the canal as a dispersal corridor. Therefore, construction of the water intake and any associated work within 200 feet of the Tehama-Colusa Canal will be completed during the period when giant garter snakes are inactive and unlikely to be present in the project area (October 2 to April 30). All excavation within the 200-foot buffer will be monitored. If a giant garter snake is observed, the work will be halted immediately to allow the snake to move out of the work area. Work will resume upon approval by the monitoring biologist.

The following avoidance and minimization measure will be implemented after construction of the intake and associated pipeline at the Tehama-Colusa Canal:

- Native erosion control seed mix including creeping wild-rye (*Leymus triticoides*), meadow barley (*Hordeum brachyantherum*), tomcat clover (*Trifolium willdenovii*), annual fescue (*Vulpia* spp.), blue wildrye (*Elymus glaucus*), mugwort (*Artemisia vulgaris*), and California brome (*Bromus carinatus*) would be applied to upland areas and areas adjacent to streams. Silt fences and erosion control blankets will be installed on all disturbed slopes greater than 2:1.

The topography of this site will be restored once proposed construction activities have been completed. New plantings would be monitored for one year until the banks are adequately revegetated to prevent erosion and sedimentation of these areas and the banks have similar total vegetation cover equal to or greater than adjacent areas. Additional plantings will be implemented if adequate vegetation cover is not attained after one year. A monitoring report of the Tehama-Colusa Canal will be submitted to the USFWS one year after restoration is implemented.

CULTURAL RESOURCES

Technical Area: Cultural Resources
Author: Cindy Baker

BACKGROUND [63 THROUGH 66]

Reliant Energy sent letters describing the project to Native Americans on February 28, 2001. The Native American Heritage Commission (NAHC) provided Reliant Energy with a list of Native American contacts in the area. Reliant Energy sent letters to all the individuals and groups on the list provided by the NAHC. E&L Westcoast did not provide information that they have contacted the NAHC or sent letters to all the individuals and groups on the list provided by the NAHC. The list of Native American contacts interested in the area may have changed in the last five years. When the NAHC provides a list of Native Americans who wish to be contacted regarding construction disturbances on land where they have heritage concerns, the NAHC requests that the project make a follow-up telephone call to Native Americans who have not responded.

DATA REQUEST

63. Please request the NAHC to provide the applicant with a current list of Native American contacts in the project area, and send letters to all the individuals and groups on the list regarding the current project.

RESPONSE

The NAHC was contacted via fax on January 19, 2007 with a request that they search their Sacred Lands File for any sites of cultural significance to the Native American community within or adjacent to the proposed location of the Colusa Generating Station. Additionally, the NAHC was requested to provide a list of groups or individuals who may have additional knowledge of cultural resources in the project area. The NAHC responded on January 27, 2007 with a negative search of its Sacred Lands Files; however, they also provided a list of nine individuals and groups of Native Americans who the NAHC feels should be contacted regarding this proposed project. On February 7, 2007, an informational letter describing the proposed project was sent to the nine individuals and groups whose names were provided by the NAHC. The letters were sent via U.S. Postal Service (USPS) Priority Mail with Delivery Confirmation receipt.

DATA REQUEST

64. Please provide copies of all responses to the letter.

RESPONSE

As responses to the informational letters are received from the Native American community, they will be documented and copies will be provided to the CEC.

DATA REQUEST

65. Please make one telephone call to Native American individuals or groups listed by the NAHC who have not responded within two weeks to ensure that they have received the correspondence and gather any information they may have regarding cultural resources in the project area. Please provide documentation for each call, and note any comments regarding the project area provided by the Native Americans.

RESPONSE

The informational letters have been sent via USPS Priority Mail with Delivery Confirmation in order to establish proof that the letters were sent and received. Additionally, two weeks after receipt of the letters, the progress of which will be tracked online at www.usps.com, followup telephone calls will be made to any individuals or groups who had not replied prior to that time in order to determine the level of sensitivity for Native American concerns in the project vicinity including the presence of sacred sites or archaeological sites. All telephone calls will be logged on a “Telcon” form that shows specifics about the time, duration, date, and content of the conversations.

DATA REQUEST

66. Please provide copies of any additional written responses received from Native Americans. If responses have been received by telephone, please provide a summary of each conversation. If the location of archaeological sites may be revealed in the information, please provide the responses under confidential cover.

RESPONSE

All correspondence with the Native American community will be thoroughly documented whether the communication is in written form or verbal (in person or over the telephone). A summary of each conversation will accompany each telcon log.

BACKGROUND

According to CEQA Guidelines Section 15064.5 (a) (2), cultural resources included in a local register of historical resources must be treated as significant by public agencies unless a preponderance of evidence demonstrates that a resource is not significant.

DATA REQUEST

67. Please review local registers maintained by Colusa County and provide a list of any cultural resources (prehistoric or historic archaeological or historic built environment) listed by the County within ½-mile of the project area.

RESPONSE

Currently the Colusa County General Plan does not provide a historic preservation ordinance or any ordinance designating a local list of historic resources (Moran, 2007; JRP, 2007). Therefore, there are no locally designated architectural or engineering cultural resources within ½ mile of the project area.

References

Moran, Kathleen, Colusa County Clerk-Recorder, 2007. Personal communications with Kathleen Kennedy, JRP Historical Consulting, LLC, January 22, 2007.

Colusa County Planning Department, 2007. Personal communications with Kathleen Kennedy, JRP Historical Consulting, LLC, January 22, 2007.

BACKGROUND

AFC Section 8.3.1.5.1 specifies historical and archaeological societies as sources of information used to identify the cultural resources that might be impacted by the project. It appears that the research was conducted as part of the Reliant Energy project in 2001, not for the E&L Westcoast project. Current information from local archaeological and historical societies, county lists, and other interested groups is essential to the process of identifying all the cultural resources.

DATA REQUEST

68. Please provide a discussion of the local historical and archaeological organizations that were contacted for this application. Include information regarding responses that were received and historical or archaeological resources that were identified.

RESPONSE

Letters to the Colusa County Historical Society and Colusa County Historical Records Commission were mailed January 19, 2007. To date, no response has been received from either organization and no known historic architectural or engineering resources have been reported. Copies of these letters are attached (Attachment 68-1).

Partners
Rand F. Herbert
Stephen R. Wee
Meta Bunse
Christopher McMorris

JRP HISTORICAL CONSULTING, LLC

January 19, 2006

Dr. Richard Johnson, Director
Colusi County Historical Society
P.O. Box 643
Willows, CA. 95988

RE: Colusa Generating Station (06-AFC-9)

Dear Dr. Johnson,

As you may already know, E&L Westcoast, LLC has submitted an Application for Certification (AFC) to the California Energy Commission for the licensing and construction of a nominal 660 megawatt (MW) combined cycle power plant in Colusa County. The Colusa Generating Station proposed site is adjacent to located in northern Colusa County near the Glenn County line, approximately four miles northwest of Delevan and nine miles southwest of Willows. Enclosed is a map showing the project site and its surrounding environment.

JRP Historical Consulting, LLC has been retained to study the historic architectural and engineering resources in the proposed project area to determine if any historic properties are potentially eligible for the National Register of Historic Places or the California Register of Historical Resources. We have reviewed national, state, and local historic properties inventories, and historians and our architectural historians have completed the evaluation of historic-era architectural properties near the proposed project site. Your ideas and concerns are important to us and we would like to incorporate them into our studies. If you or your organizations have any concerns regarding specific historic resources within the project area, please respond in writing to me at the above address citing your concerns within the next thirty days, or call me at (530) 757-2521.

Please contact me if you require further information. Thank you for your assistance.

Sincerely,

Toni Webb
Architectural Historian

Enclosures: Project Location Map

ATTACHMENT 68-1

28067004
February 2007

Colusa Generating Station
E&L Westcoast, LLC
Colusa County, California

URS

1490 Drew Avenue, Suite 110 • Davis, California 95618 • (530) 757-2521 • (530) 757-2566 Fax • www.jrphistorical.com
Water Resource/Land Use History • Cultural Resources Management • 106 Compliance • Expert Services

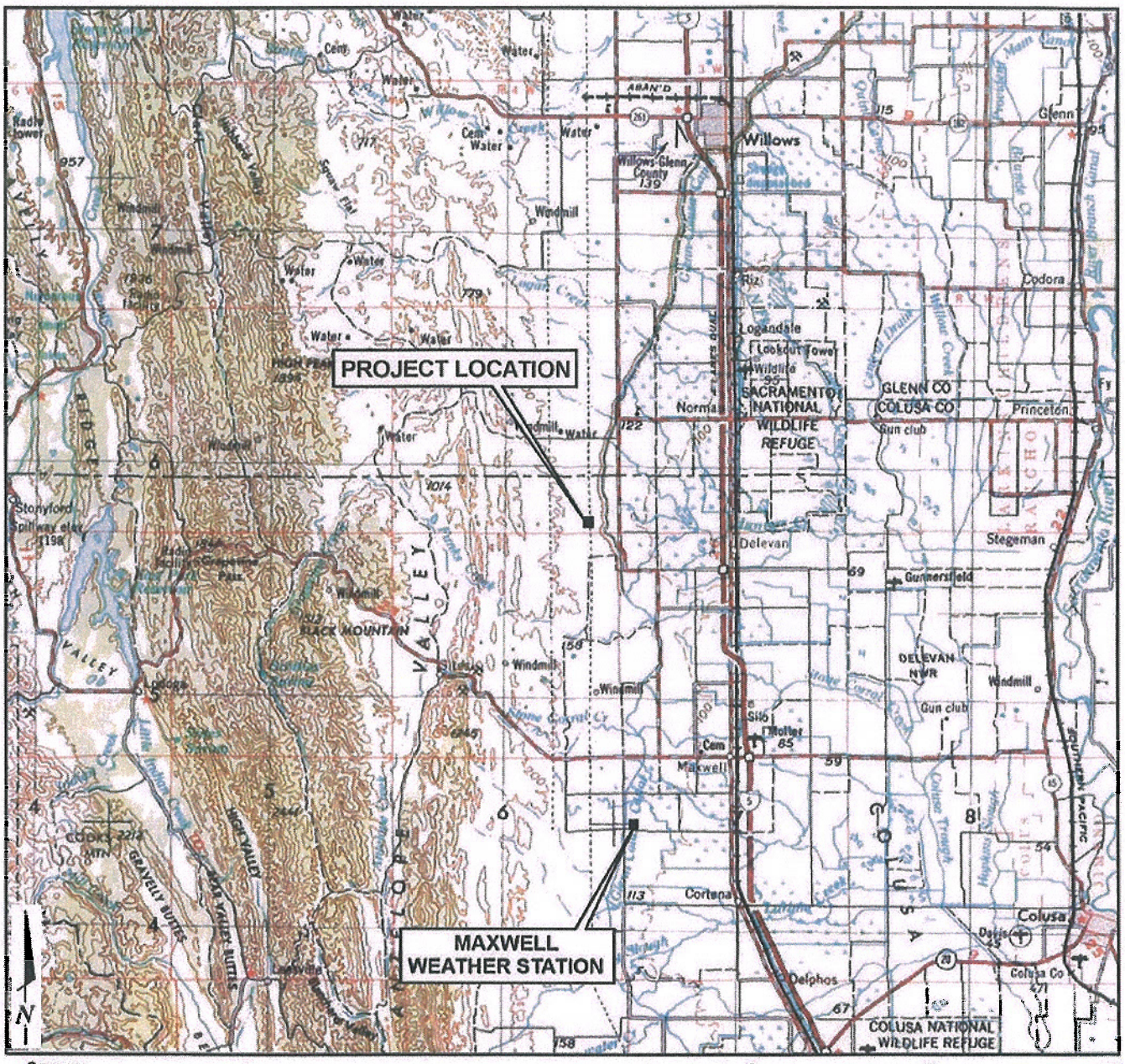

Source:
USGS Topographic-Bathymetric Series
Ukiah, California, 1979

0 5 10

Scale in Miles
1:250,000

Partners
Rand F. Herbert
Stephen R. Wee
Meta Bunse
Christopher McMorris

JRP HISTORICAL CONSULTING, LLC

January 19, 2006

Colusa County Historical Records Commission
c/o Colusa County Free Library
738 Market Street
Colusa, CA 96932

RE: Colusa Generating Station (06-AFC-9)

To Whom It May Concern:

As you may already know, E&L Westcoast, LLC has submitted an Application for Certification (AFC) to the California Energy Commission for the licensing and construction of a nominal 660 megawatt (MW) combined cycle power plant in Colusa County. The Colusa Generating Station proposed site is adjacent to located in northern Colusa County near the Glenn County line, approximately four miles northwest of Delevan and nine miles southwest of Willows. Enclosed is a map showing the project site and its surrounding environment.

JRP Historical Consulting, LLC has been retained to study the historic architectural and engineering resources in the proposed project area to determine if any historic properties are potentially eligible for the National Register of Historic Places or the California Register of Historical Resources. We have reviewed national, state, and local historic properties inventories, and historians and our architectural historians have completed the evaluation of historic-era architectural properties near the proposed project site. Your ideas and concerns are important to us and we would like to incorporate them into our studies. If you or your organizations have any concerns regarding specific historic resources within the project area, please respond in writing to me at the above address citing your concerns within the next thirty days, or call me at (530) 757-2521.

Please contact me if you require further information. Thank you for your assistance.

Sincerely,

Toni Webb
Architectural Historian

Enclosures: Project Location Map

1490 Drew Avenue, Suite 110 • Davis, California 95618 • (530) 757-2521 • (530) 757-2566 Fax • www.jrphistorical.com
Water Resource/Land Use History • Cultural Resources Management • 106 Compliance • Expert Services

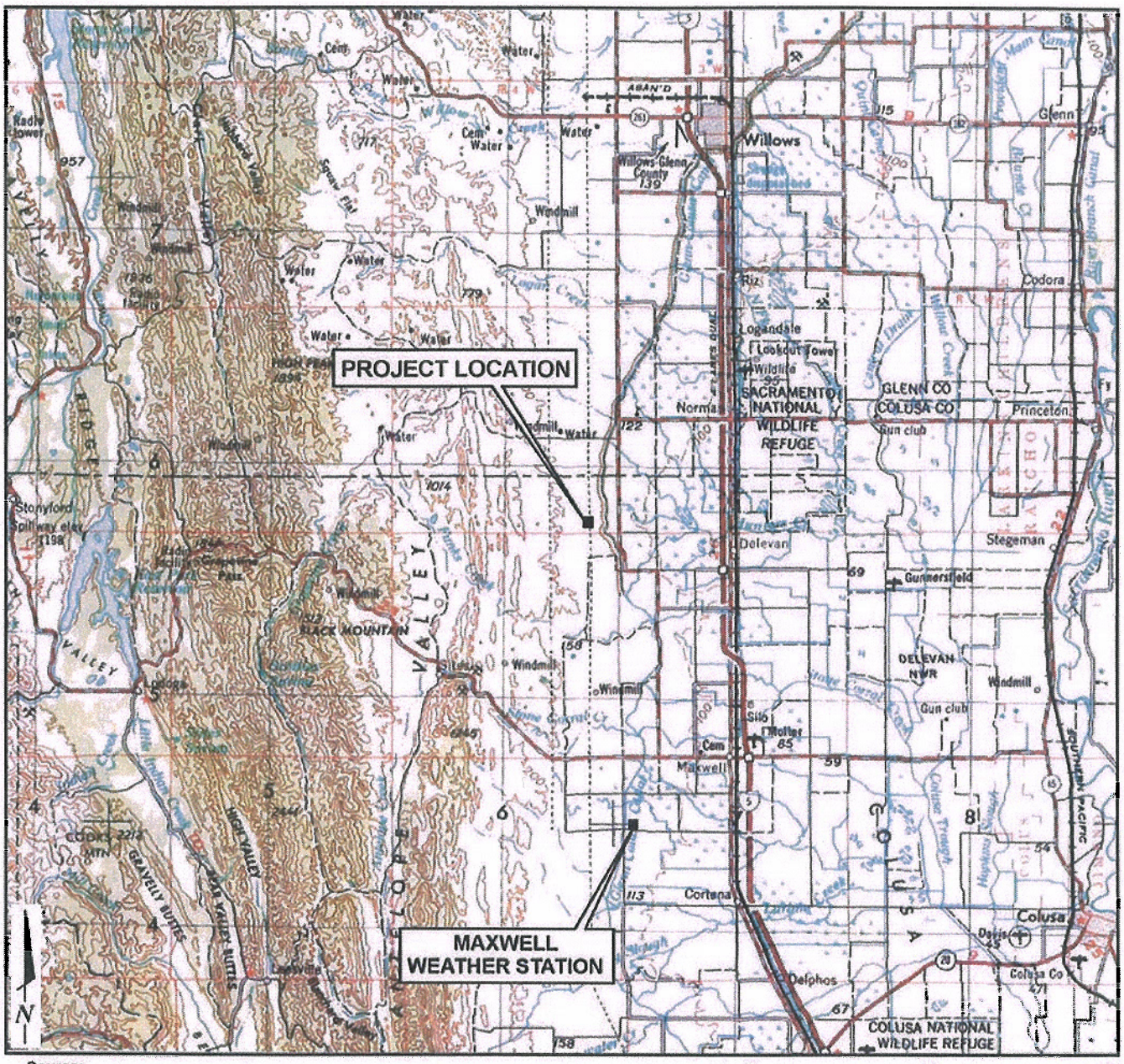

Source:
USGS Topographic-Bathymetric Series
Ukiah, California, 1979

0 5 10

Scale in Miles
1:250,000

BACKGROUND [69 THROUGH 71]

AFC Section 8.3.2.2.1, page 8.3-16, states that the Cottonwood-Vaca-Dixon 230 kV transmission line is a property potentially eligible for the National Register of Historic Places (NRHP). For CEQA purposes, staff deals with the California Register of Historical Resources (CRHR), with properties that are eligible for the National Register also eligible for the CRHR. The associated discussion does not make clear whether both of the parallel transmission lines that, apparently, constitute the Cottonwood-Vaca-Dixon 230 kV transmission line are together potentially eligible, or only one of them is. Staff needs to clarify how many potentially eligible resources are present.

AFC Appendix J, page J-3, indicates that, within the APE, the present towers of both lines of the Cottonwood-Vaca-Dixon 230 kV transmission line appear to be similar to Frank Baum's original 1920s engineering drawings, suggesting that this part of the potentially significant transmission line has integrity of design, materials, and workmanship. However, Appendix J1 states that "significant portions of the line have been rebuilt" (page J-7, Section J.4.1). The discussion does not indicate exactly what "rebuilt" means, and no source for that information is provided. Assuming that the Cottonwood-Vaca-Dixon 230 kV transmission line is an eligible historic resource under CEQA, staff needs to have the integrity of this line evaluated, so that the significance of the project's impacts on the line can be assessed.

Pacific Gas and Electric Company has conducted a NRHP evaluation of the Vaca-Dixon Substation in which it was determined that the substation and its accompanying switchyard (including transmission lines approaching from the north) constituted a historic district. The AFC does not appear to consider the Cottonwood-Vaca-Dixon 230 kV transmission line as part of a historic district. Staff needs to have this possibility evaluated.

DATA REQUEST

69. Please research the Cottonwood-Vaca-Dixon 230 kV transmission line and determine if both lines are the same age and could equally qualify for the CRHR. If the two do not equally qualify, please indicate which one does qualify, or, if they both qualify, in what ways they qualify, and for what reasons. Also, please determine whether one or both of the lines is/are historically associated with the Vaca-Dixon Substation.

RESPONSE

Are both lines the same age?

The easternmost line [including the segment within the current project APE] is known as the Cottonwood-Vaca section of the Pit-Vaca Dixon 220 kV line. This transmission line structure was built by the Mt. Shasta Power Corporation, a subsidiary of PG&E, to transmit power from the Pit 1 Powerhouse to the Vaca-Dixon substation in 1921-1922. In 1956, this line "underwent some structural changes and was fully reconductored with commercially available conductor." When the line was reconductored, the insulators may have also been replaced—PG&E does not keep records about changes of this type. These changes were made to the entire line. The westernmost line is known as the Cottonwood-Vaca Dixon 220 kV line. It was built by PG&E in 1945. Apart from maintenance, this line has not been changed.

Could both lines equally qualify for the CRHR? If the two do not equally qualify, please indicate which one does qualify, or, if they both qualify, in what ways they qualify, and for what reasons?

The transmission lines do not appear to be individually eligible for the CRHR.

Please determine whether one or both of the lines is/are historically associated with the Vaca-Dixon Substation.

Both the eastern and western lines have been transmitting power to the Vaca-Dixon Substation, since 1922 and 1945, respectively. Thus, both lines are historically associated with the Vaca-Dixon Substation, located some 70 miles to the south of the current project APE.

DATA REQUEST

70. Please provide evidence on how many towers there are in the entire Cottonwood-Vaca-Dixon 230 kV line and determine, through research and/or PG&E expert opinion, how many of them have been altered. Additionally, please describe the documented alterations.

RESPONSE

According to Pacific Gas and Electric Company's *Annual Report of the Department of Electrical Operation and Maintenance, 1930*, the entire transmission line, which spans from the Pit 1 Powerhouse to the Vaca-Dixon Substation, is 201.75 miles in length. According to PG&E, the Cottonwood-Vaca-Dixon 230 kV line currently includes 1,491 towers. Consultation with PG&E regarding the alterations to this line did not identify any towers that had been replaced (PG&E, 1930; Grosse, 2007). As noted above, in 1956 the entire line was structurally changed, including the reconductoring. It was also assumed that the insulators were changed at that time as well; however, PG&E does not maintain records of these types of changes. The western line, which was constructed in 1945, would include roughly the same number of towers. Besides standard maintenance, this line has not been altered.

References

Grosse, Karen, PG&E, 2007. Email correspondence with Greg Bosscawen, PG&E, January 24, 2007.

PG&E (Pacific Gas and Electric Company), 1930. *Annual Report of the Department of Electrical Operation and Maintenance, 1930*, p. 200, 206, 235, and 260.

DATA REQUEST

71. Please determine if the transmission line in the project area is associated with the Vaca-Dixon Substation and if it could be considered part of that historic district.

RESPONSE

The eastern and western lines have been transmitting power to the Vaca-Dixon Substation since 1922 and 1945, respectively. Both lines were built to transmit power from the Pit 1 Powerhouse to the San Francisco Bay Area; thus, both are associated with the Vaca-Dixon Substation. The question then is, are they contributing elements of the historic district formed by the substation?

The Vaca-Dixon Substation was evaluated for its eligibility for the National Register of Historic Places in November 2003 by PAR Environmental Services (PAR, 2003). That detailed and comprehensive evaluation addressed the buildings within the substation complex and the associated switchyard, and found that there was a National Register-eligible historic district. The contributing elements of the district were listed as the substation, switchyard, landscaping, garage, office/shop, and four pump houses. While the report mentions transmission towers within the district, none were listed as contributing elements by themselves, nor was the line running north toward the Pit River discussed as part of the district. In the introduction to the district evaluation, the authors noted "the substation switchyard within the enclosed fence portion examined for the purposes of this report is filled with electrical structures including transformers, bus structures, and transmission and distribution lines and towers," without further description (i.e., how many towers were within the switchyard, what kind of towers they are, etc.). Later, in discussing eligibility under Criterion A, the authors note that the district is eligible "because of the property's association with 1) the rapid development of the San Francisco Bay area that resulted from the introduction of a major supply of hydro-electricity to the region, and 2) the first long distance 220-kV transmission in the world." It did not address whether the towers were specifically designed for that purpose, or whether they were standard designs used to carry the power generated at Pit River 1 Powerhouse. Nevertheless, as noted above, the towers within the substation district boundary were not specifically identified as contributing elements to the historic district.

The transmission line from the power house to the substation is formed by 1,491 identical, manufactured towers that carried the original 220-kV line. The district evaluation does not address the transmission line as a whole, nor does it indicate that the central figure who designed the Pit River/220-kV system, Frank Baum, specifically designed these towers. It would, therefore, seem to be an over-broad conclusion to consider the line, as a whole, as a part of the Vaca-Dixon Substation Historic District.

Reference

PAR (PAR Environmental Services, Inc.), 2003. "National Register of Historic Places Evaluation, Vaca-Dixon Substation, Solano County, California, Final Report." Cindy L. Baker and Tracy Bakic. Prepared for PG&E, November 5, 2003.

BACKGROUND

On AFC page 3-25 (3.9.2.1), the applicant reports that four towers will be refitted and that two towers will be removed, but it is not clear which of the two parallel transmission lines will be affected by these changes.

DATA REQUEST

72. Please identify how many existing towers in each of the two lines will be removed and how many existing towers in each of the two lines will be altered and provide a drawing delineating the towers to be replaced. Please specify the types of alterations that are proposed and state if these changes will alter the integrity of the towers as contributing elements of the transmission line.

RESPONSE

Two existing transmission towers (one for each line) would be removed and four existing transmission towers (two for each line) would be replaced to accommodate changes in electrical line (cable) take-off angles. The change in the take-off angles may require replacement of the four towers with a change in the foundation. The removal of the two towers and necessary replacement of the other four towers will be undertaken through a redesign of the remaining towers, which will focus on maintaining the physical and electrical integrity of the transmission lines. While the proposed project will result in the demolition of two towers and alteration of four towers, the loss, or replacement, of these character-defining features (including the spacing of towers) is relatively minor and would not substantially impact the integrity of the line. The entire 201.75-mile line includes approximately 1,500 towers that have previously undergone some level of alteration. The removal of two towers among the more than 1,200 in between the Cottonwood and Vaca-Dixon substations would result in a less-than-significant impact to the overall resource. Figure 72-1 is a drawing that delineates the towers to be replaced.

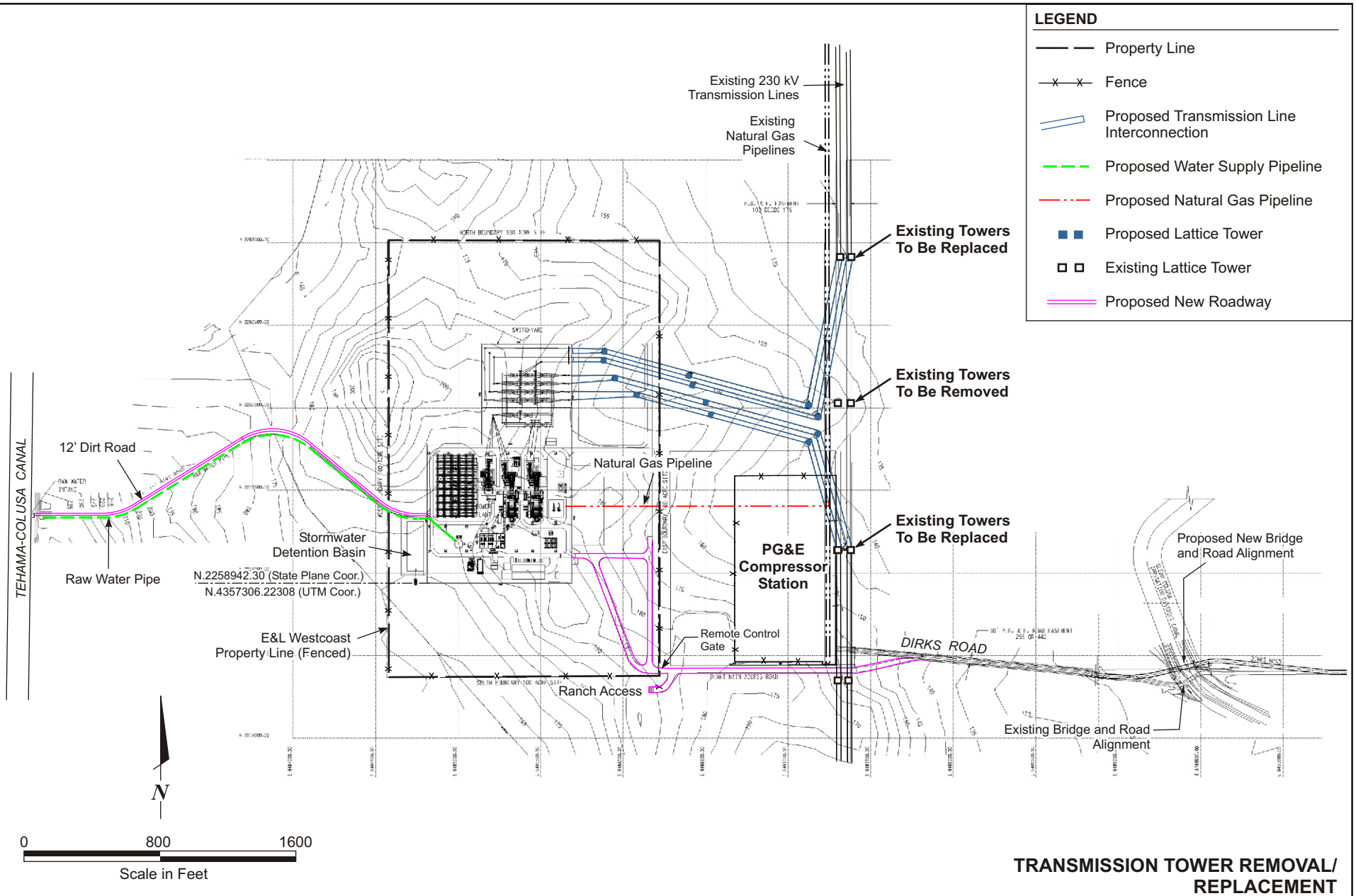

TRANSMISSION TOWER REMOVAL/ REPLACEMENT

Colusa Generating Station
E&L Westcoast, LLC
Colusa County, California

28067004
February 2007

URS

FIGURE 72-1

Source:
Bechtel Corporation; Colusa Power Plant, Dwg. No. P1-0100-00003
General Arrangement With Air Cooled Condenser (COL_GA05 Rev Oc) October 4, 2006;
Figure 7.2-1 in progress Oct 20, 2006

2/02/07 vsa ..\28067004 CPV Colusa 2007\Data Request_feb07\72-1_trans tower removal.cdr

BACKGROUND

AFC page 8.3-18 provides a discussion of cumulative impacts, but states it will not affect any historic resources. The application does not provide a list of all proposed projects in the project region. It is not clear whether any projects may contribute to cumulative impacts to cultural resources in the area.

DATA REQUEST

73. Please provide a discussion of cumulative impacts to the transmission line that describes projects that have been proposed or are under construction within a ½-mile radius of the proposed Colusa Generation Station project. Please discuss all types of development including residential.

RESPONSE

There are no known projects proposed or under construction within ½-mile radius of the proposed project site (Bosscawen, 2007; Colusa County Planning Department, 2007). Therefore, no cumulative impacts are predicted for this proposed project.

Reference

Bosscawen, Greg, PG&E, 2007. Email correspondence with Kathy Rushmore, URS Corporation. January 24, 2007.

Colusa County Planning Department, 2007. Personal communications with Kathleen Kennedy, JRP Historical Consulting, LLC, January 22, 2007.

BACKGROUND [74 THROUGH 76]

The California Historical Resources Information System has identified the proposed plant site as a location that has a low probability for archaeological resources. On AFC page 3-18, Section 3.5.8, states that approximately 330,000 cubic yards of cut and fill material will be required on the project site. Staff needs more information to assess potential project impacts to buried archaeological resources on the project site.

DATA REQUEST

74. If any additional geotechnical borings are completed for this project within the coming nine months, please have the borings examined by an archaeologist on site and provide a discussion of the findings.

RESPONSE

No additional geotechnical borings will be completed for this project within the next nine months.

DATA REQUEST

75. Please provide a discussion that identifies the probable locations of intrusion into native soil caused by either excavation or fill removal and replacement.

RESPONSE

The area of the proposed CGS will be stripped of vegetation and organics prior to construction of the facility. The area to be stripped is approximately 31 acres, including power block, switchyard, and storm water areas. The plant area and switchyard will be in-cut on the north, west, and south sides. The area to the east and north will be on fill and will be comprised of the east portion of the power plant, the construction facilities area to the east of the power plant and the construction laydown area to the north, which cover about 43 acres.

DATA REQUEST

76. If removed soils will be disposed of off-site and/or new soils brought in and if disposal and borrow sites are not commercial operations and consequently have not been surveyed for cultural resources, please conduct such surveys and provide the personnel qualifications, survey methods, and findings to staff.

RESPONSE

Earthwork on the power plant site will consist of removal of topsoil, vegetation, and debris; excavation and compaction of earth to create the plant grade; and excavation for foundations and underground systems. Materials suitable for compaction will be stored in stockpiles within designated locations on the site. Materials unsuitable for compaction will be stored in separate stockpiles and reused on the site, where appropriate. No soils are expected to be disposed of off site and no new soils are expected to be brought in during these activities. Any contaminated materials encountered during excavation will be disposed of in accordance with applicable laws, ordinances, regulations, and standards.

GEOLOGY

Technical Area: Geology
Author: Dr. Patrick Pilling, P.E., G.E.

BACKGROUND

The site is underlain by fine grain and clay soils which exhibit high plasticity indices, high in situ moisture contents, and high percentages of fines (i.e., percent passing a U.S. No. 200 sieve). Soils which exhibit such properties can be moderately to severely corrosive to buried steel and concrete.

DATA REQUEST

77. Please provide a discussion and/or evaluation of the site soils' potential to corrode buried steel and concrete.

RESPONSE

A corrosivity test was performed on surficial adobe soils at the adjacent PG&E compressor station during a soils and foundation investigation by Dames & Moore (a URS predecessor company) (Dames & Moore, 1966). The test results were as follows:

- pH 8.1
- electrical conductivity 0.6 millimho/cm
- electrical resistivity 1,700 ohm/cm
- soluble sulfur 0.96 milliequivalent/liter (saturated) or 17 parts per million (dry soil)

Prior to the start of engineering, the current soil corrosivity will be determined by test and the specifications for buried concrete and metallic materials will be adjusted to provide adequate protection against corrosion. For concrete, this will be by concrete formulation, and for buried metallic material by using cathodic protection systems, coatings and wrappings, and/or selecting different materials. Further evaluation of soil corrosivity will be conducted during the final design phase.

Reference

Dames & Moore, 1966. Report – Soils and Foundation Investigation, Compressor Station 16, Delevan, California, for the Pacific Gas and Electric Company. Job No. 160-110-03. February 3, 1966.

BACKGROUND

Access to the site will require the construction of a new bridge structure at Teresa Creek. Depending on the design flows in the creek and the foundation system upon which the bridge structure will be supported, scour at the base of the foundations could affect the performance of the structure foundations.

DATA REQUEST

78. Please provide a discussion and/or evaluation of the potential for design flows in Teresa Creek to scour foundation soils.

RESPONSE

Geotechnical and hydrologic data are not available for Teresa Creek and the existing bridge, but will be developed as part of the design process. However, based on URS' knowledge of general foundation conditions and bridge design in this part of Colusa County, the Teresa Creek Bridge will probably be pile-supported. Even with high calculated flows, which appear unlikely given the nature of Teresa Creek, the depth of pile support will preclude adverse foundation under cutting effects due to scouring. The bridge abutment wing walls will be designed to address the possibility of scouring effects.

BACKGROUND

Figure 8.15-5 presents information developed by the California Division of Mines and Geology (CDMG, 1999) regarding peak accelerations with a 10 percent probability of exceedance in 50 years. The peak accelerations referred to by this map are associated with the interface between Soil Profile Type B (Rock) and Type C (Very Dense Soil and Soft Rock) soils, or at the bedrock/soil interface. The information does not necessarily represent a Design Basis Ground Motion (DBGM) as required by Section 1632.2 of the CBC.

DATA REQUEST

79. Please provide the DBGM for this site. This information can be represented by a response spectrum developed in accordance with Section 1632.2 of the CBC.

RESPONSE

Figure 8.15-5 in the AFC provides an indication of the peak accelerations that the site might experience in the future based on regional tectonics. It is not intended to represent a Design Basis Ground Motion (DBGM). The DBGM will be developed during the plant's final design in conjunction with the design engineer.

BACKGROUND

Section 8.15.1.4.5, Mass Wasting and Slope Stability, of the AFC states that the potential for slope instability is negligible. Section 8.15.2.1, Construction, states that slopes as steep as 2H:1V (horizontal:vertical) will be constructed as a part of this project. As the foundation soils consist of highly plastic clay, the construction of such slopes could induce instability.

DATA REQUEST

80. Please provide a discussion of the methods and/or calculations which were used to assess slope stability at this site.

RESPONSE

URS conducted a preliminary geotechnical field investigation at the site in March 2001 as part of the Colusa Power Plant Seismic Hazards Study. The investigation included three borings to approximately 50 feet depth, one boring to 80 feet depth, and laboratory tests on standard penetration test (SPT) and Dames & Moore U samples. The results of this investigation are included in Appendix Q of the AFC.

The subsurface soils to the maximum depth explored (80 feet) can be divided into two strata: Surficial Clay and Silty Deposits. The Surficial Clay consists of a 2- to 8-foot-thick, medium stiff to very stiff dark brown clay to sandy clay with trace amounts of roots. Beneath this clay deposit is the Silty Deposits layer, which consists of very stiff to hard, brown silt to sandy silt with varying amounts of clay interbedded with occasional silty sand and lean clay lenses.

The groundwater table was not directly observed in the borings. However, at a depth of 60 feet in the deepest boring (B3), the color of the Silty Deposits changed from various shades of brown to dark greenish gray. The brown color above 60 feet could be an indication of oxidation as a result of exposure to air. The color change may indicate that, historically, the groundwater table has been as high as 60 feet below ground surface.

The software package SLOPE/W, Version 3 (GEO-SLOPE, 1995) was used to analyze the slope stability. This software uses the theory of limit equilibrium of forces and moments to compute a factor of safety against failure. The factor of safety is the factor by which the shear strength of the soil must be reduced in order to bring the mass of soil into a state of limiting equilibrium along a selected slip surface. The stability analysis involves passing a slip surface through the earth mass and dividing the inscribed portion into vertical slices. The major assumptions in this software are that the soil behaves as a Mohr-Coulomb material, the factor of safety of the cohesive component and the frictional component of strength are equal for all soils, and the factor of safety is the same for all soil slices.

Both static and seismic stability analyses were conducted. For seismic loading, the factor of safety was calculated using the pseudostatic approach. In this method, complex earthquake forces are simplified by using an equivalent static horizontal force. Based on the California Division of Mines and Geology Seismic Hazard Map of California (CDMG, 1999), ground motions with a 10 percent probability of being exceeded within the next 50 years are estimated at 0.2 to 0.3g. For the seismic analysis, we assumed a pseudostatic coefficient of 0.15g (CDMG, 1999), which includes a reduction due to the cyclic nature of earthquakes.

The Colusa site may have cuts as deep as 17 feet, with all cuts sloped at an inclination not exceeding 2:1 (horizontal:vertical), and fill slopes not exceeding 3:1.

Based on the preliminary geotechnical investigation, the assumed subsurface profile consisted of two soil layers:

1. **Surficial Clay**: 0 to 8 feet thick, total unit weight 110 pounds per cubic foot (pcf), residual effective friction angle 10°, residual effective cohesion 310 pounds per square foot (psf).

2. **Silty Deposits**: below 8 feet depth, total unit weight 120 pcf, effective residual friction angle 27°, effective residual cohesion 200 psf.

Because the subsurface soils are primarily fine-grained, the most critical drainage condition will be the long-term consolidated drained case. Assuming, conservatively, that the soils will have experienced some straining previously, residual effective stress parameters were chosen for the stability analysis.

Using the soil parameters and profile geometry above, two subsurface groundwater conditions were evaluated: (1) groundwater below 60 feet, and (2) groundwater at ground surface, assuming perched groundwater conditions. The perched groundwater condition is a conservative condition and assumes that the fine-grained soils will maintain full saturation following heavy rains.

For groundwater table at a depth of 60 feet or below, the analysis indicates that the 2H:1V slope has a factor of safety that may range from 2.1 to 2.3 (FS = 2.1 to 2.3) for static conditions. For seismic conditions, the factor of safety may range from 1.5 to 1.7. These are the factors of safety against failure of the entire slope. Minor slumping of the slope surface would probably occur.

These factors of safety assume that surface water can drain effectively and will not become “perched” at the surface. The slopes will be protected from rainwater penetration by providing a groundwater runoff or drainage system to prevent the soils from retaining water.

References

CDMG (California Division of Mines and Geology), 1999. *Seismic Shaking Hazard Maps of California.* M. Petersen, D. Beeby, and others.

Department of the Navy, 1982. *Soil Mechanics, Design Manual 7.1 (NAVFAC DM-7.1)*, Naval Facilities Engineering Command.

Fang, H. (ed.), 1991. *Foundation Engineering Handbook*, 2nd Edition, Van Nostrand Reinhold, New York.

GEO-SLOPE International Ltd., 1995, *SLOPE/W, Version 3*, Calgary, Alberta Canada.

Lambe, T.W. and Whitman, R.V., 1969. *Soil Mechanics*, John Wiley & Sons, New York.

LAND USE

Technical Area: Land Use
Author: Mark R. Hamblin

BACKGROUND [81 THROUGH 83]

For the project to be consistent with the Colusa County General Plan and Zoning Ordinance the project requires the County of Colusa's approvals on five individual land use entitlements.

The proposed project requires the approval of a parcel map to create a 100-acre parcel from an existing 451-acre property (the creation of the power plant property). The project requires the approval of a General Plan amendment and a zone amendment on the proposed 100-acre parcel changing the existing General Plan land use designation from Agricultural General (AG) to Industrial (I), and to change the zone district designation from Exclusive Agriculture (EA) to Industrial (M).

County Zone Ordinance Section 4.12.B.10 states that "Energy production plants" require approval of a Use Permit to operate within an Industrial (M) Zone district. Ordinance Section 4.12.C states that the maximum building height permitted within the M Zone is 50 feet. Therefore, the proposed project requires Colusa County's advisory approval of a use permit and a height variance.

In November 2006, the applicant submitted an application request for the identified land use entitlements to the Colusa County Department of Planning and Building. The application was determined by the Department of Planning and Building to be incomplete for processing in December 2006.

DATA REQUEST

81. ***Please provide a copy of the County of Colusa approved tentative parcel map, or preferably the filed Final Map with the County of Colusa, if available, as evidence demonstrating compliance with the Subdivision Map Act*** **(Note – a copy of the signed and date stamped Final Map recorded in the Colusa County Recorder's Office will be required to be provided to the Energy Commission prior to the start of commercial operation).**

RESPONSE

The applicant has not yet obtained an approved tentative parcel map from Colusa County. The applicant will provide this to the CEC once it is obtained.

DATA REQUEST

82. Please provide a copy of the adopted General Plan Amendment and Zone Amendment by the Colusa County Board of Supervisor's for the 100-acre project site.

RESPONSE

The applicant has not yet obtained an approved General Plan Amendment or Zoning Amendment from Colusa County. The applicant will provide these to the CEC once they have been obtained.

DATA REQUEST

83. Please provide a copy of the County of Colusa's advisory approval of a Use Permit and Height Variance for the proposed power plant.

RESPONSE

The applicant has not yet obtained a Use Permit or Height Variance from Colusa County. The applicant will provide these to the CEC once they have been obtained.

SOCIOECONOMICS

Technical Area: Socioeconomics
Author: Shaelyn Strattan

BACKGROUND [84 THROUGH 86]

As noted in AFC Section 8.8.2.4, approximately 40 percent of the construction workforce, or about 268 workers during peak activities, would be weekly commuters. The Commission staff's experience with power plant construction workers is that many commute on a daily basis from their homes, with some projects having a significant amount of ridesharing. The craft needs are staggered and coincide with the average and peak month pattern for the project labor force. Commute times of more than one hour are not unusual for large projects. Therefore, staff is uncertain about the AFC assumption regarding the percentage of weekly commuters.

DATA REQUEST

84. Please provide the basis for the AFC assumption that 40 percent of the construction workforce would be weekly commuters.

RESPONSE

This assumption came from a labor availability study that had been prepared by the applicant's engineering consultant, Duke/Fluor Daniel, for the 2001 AFC. The findings appear to be similar to those mentioned by CEC staff—i.e., that a majority of construction workers (approximately 60 percent) would commute on a daily basis to the work site, and only about 40 percent would seek temporary housing in the project vicinity.

DATA REQUEST

85. If the assumption of a 40 percent commuter workforce is accurate, please estimate the number of worker accommodations needed for the 60 percent of workers staying in the area by type. This should include long-term apartment or house rentals for workers staying in the area for several months, nightly and weekly motel rentals, and RV camping.

RESPONSE

As noted above, only 40 percent of workers (not 60 percent) were assumed to need temporary housing in the vicinity of the construction site, with 60 percent assumed to commute daily from their homes.

We do not know of any reliable statistical method for estimating the percentage of workers that would choose specific types of temporary housing from the varied resources that may be available. Housing is a very elastic commodity, and construction worker choices depend upon personal circumstances, as well as the variety and cost of housing options available at any particular time. For example, if a worker owns an RV, but RV accommodations are full, the worker may opt for motel accommodations or camping facilities, or, if the work assignment is longer term, he or she could rent an apartment or a home in the area. Typically, workers from the commuter workforce share rooms in existing RVs, homes, apartments or motel units, with two to four persons per room (Steelman, 2007). As the AFC demonstrates in response to Data Request 86, temporary accommodation resources in the project vicinity appear to be more than adequate to meet projected workforce demand, unless all workers were to seek the same type of accommodation, which would be unlikely.

Reference

Steelman, A.C., 2007. Telephone communication between A.C. Steelman, Mid Valley Building and Construction Trades Council, and Tammy Dorje, URS Corporation, February 9, 2007.

DATA REQUEST

86. Please identify potential weekly accommodations, including motels and RV camping areas, by type, for those areas of Colusa, Glenn, Sutter, Butte, and Yolo counties located less than one hour automobile commute time from the project site. (Due to existing road types and conditions, this would generally apply to areas within 30 to 35 miles of the project site, except those areas immediately adjacent to the I-5 highway corridor.) Provide data regarding vacancy rates, seasonal availability, restrictions on length of stay, and other limiting factors.

RESPONSE

As indicated in the AFC, approximately 2,333 hotel or motel rooms and RV spaces are located within an hour of the site.

Colusa County has approximately 550 hotel or motel rooms, with the majority of hotels located in the City of Williams (Jukusky, 2006). The average hotel occupancy is 75 percent, not including the approximately 100 migrant farm workers who stay in the area during planting and harvesting periods (Holiday Inn Williams, 2006; Jukusky, 2006). Applying the 75 percent occupancy rate to the 450 remaining rooms at high farming season, approximately 112 rooms would be available in Colusa alone. Approximately 212 rooms would be available were no migrant farm workers staying in area hotel or motel rooms. In Glenn County, the City of Willows has at least 265 hotel rooms available (Roadside, 2006). Average occupancy rate for the City of Willows is 65 percent, which includes the migrant farm workers who stay in the area during planting and harvesting season (Kersting, 2007, and Barrett, 2007). Applying the 65 percent occupancy rate to the 265 rooms, approximately 92 rooms would be available in the City of Willows.

A large variety of recreational vehicle (RV) parks are found within a one-hour automobile commute from the project site. The majority of these RV parks are located in the Cities of Colusa, Williams, Marysville, Dunnigan, and Arbuckle. All of the RV parks surveyed have varying seasonal vacancy. Several RV Parks indicated that spaces could be reserved far in advance to guarantee availability. On average, the busiest times are the winter and summer months; during this time vacancy rates range from 5 to 20 percent. The winter season is typically busy due to the holiday traveling season and summer is busy due to farming season and recreational travelers. The spring and fall months have average vacancy rates ranging from 25 to 50 percent. None of the RV parks surveyed have restrictions on the length of stay (McCartney, 2007; Kreuzer, 2007; Guzman, 2007; Harris, 2007; Wooten, 2007; Groce, 2007; and Bradburn, 2007).

As indicated on Table 8.8-10 in the AFC, the maximum period of employment for at least some of certain types of craft workers could exceed one year, making rental of apartments or homes another viable workforce housing option. According to census data, approximately 10 percent of Colusa County's 6,774 housing units and 8 percent of Glenn County's 9,982 housing units were vacant in 2000. Many of the vacant units in Colusa County, however, were for seasonal, recreational or occasional use, e.g., units used for duck hunting. At the time of the census, 53 units were available for rent—about 8 percent of all vacant units, for an effective vacancy rate of less than one percent. In Glenn County, the number of seasonal/recreational units is not as high. More than one-third of vacant units (285 of 810) were available for rent in 2000, for an effective vacancy rate of at least 2.85 percent (U.S. Census Bureau, 2007).

References

Barrett, Michelle, 2007. Telephone communication between Michelle Barrett, Best Western Inn-Willows, and Tammy Dorje, URS Corporation. February 8, 2007.

Bradburn, Emily, 2007. Telephone communication between Emily Bradburn, Grimes RV Park, and Tammy Dorje, URS Corporation. January 16, 2007.

Groce, Shelly, 2007. Telephone communication between Shelly Groce, Collins Lake RV Park, and Tammy Dorje, URS Corporation. January 16, 2007.

Guzman, Mary Ann, 2007. Telephone communication between Mary Ann Guzman, Tempers Inn, and Tammy Dorje, URS Corporation. January 16, 2007.

Harris, Karene, 2007. Telephone communication between Karene Harris, Happy Time RV Park, and Tammy Dorje, URS Corporation. January 16, 2007.

Holiday Inn Williams, 2006. Telephone communication between Perla, Holiday Inn Express Williams, and Tammy Dorje, URS Corporation, August 1, 2006.

Jukusky, Peter, 2006. Telephone communication between Peter Jukusky, Colusa County Economic Development Council, and Tammy Dorje, URS Corporation. August 1, 2006.

Kersting, Tara, 2007. Telephone communication between Tara Kersting, Amerihost Inn and Suites-Willows, and Tammy Dorje, URS Corporation. February 8, 2007.

Kreuzer, Susan, 2007. Telephone communication between Susan Kreuzer, Willow Glenn Mobile Home Park, and Tammy Dorje, URS Corporation. January 16, 2007.

McCartney, Mary, 2007. Telephone communication between Mary McCartney, Almond Grove Mobile Home Park, and Tammy Dorje, URS Corporation. January 16, 2007.

Roadside America, 2006. Website. http://www.roadsideamerica.com/hotels-motels/state/us-ca.html. August 1, 2006.

Wooten, Don, 2007. Telephone communication between Don Wooten, Travel Home Park, and Tammy Dorje, URS Corporation. January 16, 2007.

U.S. Census Bureau, 2007. Website. http://factfinder.census.gov/servlet/DatasetMainPage Servlet?_lang=en&_ts=189105033703&_ds_name=DEC_2000_SF1_U&_program=DEC. February 8, 2007.

BACKGROUND

AFC Section 8.8.2.5.2 indicates that law enforcement in the project area would be provided by the Colusa County Sheriff's Department, with onsite security provided by private security personnel. There is no discussion of primary and secondary (back-up) response times from local agencies.

DATA REQUEST

87. Please discuss the availability of Sheriff's officers in the project vicinity during various shifts. Identify primary and secondary (back-up) response times for the Colusa County Sheriff's Department, California Highway Patrol, and other cooperating agencies at various times during the day, including overnight hours.

RESPONSE

Onsite security would be provided to assist in law enforcement during project operation. The Colusa County Sheriff's Department, located at 929 Bridge Street, would provide law enforcement services to the proposed project. The Colusa County Sheriff's Department would be able to adequately serve the additional population associated with project construction and operation (Dickson, 2006). Typically, at all times one sergeant and three deputies are on duty. The typical primary response time to the project site is less than 10 minutes. The typical secondary response time to the project site is 15 to 20 minutes (Turner, 2007). The closest California Highway Patrol Office to the project site is located at 735 North 7th Street in Williams, where there are normally two to three officers on duty at any given time. Primary and secondary response times to the project site are 10 and 15 minutes, respectively (Hoover, 2007).

References

Dickson, Nancy, 2006. Telephone conversation between Nancy Dickson, Colusa County Sheriff's Office, and Tammy Dorje, URS Corporation. August 1, 2006.

Hoover, Shaun, 2007. Telephone communication between Shaun Hoover, California Highway Patrol, and Tammy Dorje, URS Corporation. January 16, 2007.

Turner, Doug, 2007. Telephone communication between Doug Turner, Colusa County Sheriff Department, and Tammy Dorje, URS Corporation. January 16, 2007.

BACKGROUND [88 AND 89]

AFC Section 8.8.2.5.1 provides a list of local emergency services for the areas surrounding the project site. It appears that Maxwell Rural Station has responsibility for emergency response to the project during both construction and operation. There is, however, no discussion of the availability of paramedic services. Even if Maxwell Rural Station has paramedic capability, the estimated response time of 15–20 minutes, as noted in AFC Section 8.7.5.1, is generally unacceptable unless on-site first-response facilities are also available.

DATA REQUEST

88. Please provide information on paramedic services; estimated emergency-specific response times for paramedic and ambulance; and transport times for both ground and airborne ambulances to local hospitals and trauma centers.

RESPONSE

Enloe Medical Center provides ground and airborne ambulance services to Glenn and Colusa Counties. Three ground-based ambulances are located in the Cities of Willows, Colusa, and Williams. The typical response time to the project site is less than 10 minutes. Transportation to Glenn Regional Medical Center, Colusa Regional Medical Center, Rideout Memorial Hospital, and Enloe Medical Center from the project site would take approximately 10, 18 to 20, 60, and 40 minutes, respectively. Typical ambulance staff consists of one driver and three paramedics. Enloe Medical Center's Flightcare Program provides emergency air transportation for the project area. The Flightcare helicopter is based at Enloe Medical Center in Chico; its approximate response time to the project area is approximately 20 minutes. Typical response time from the project site to Glenn Regional Medical Center and Enloe Medical Center would be 5 and 20 minutes, respectively. Typical Flightcare helicopter staff includes one pilot, one nurse, and one paramedic (Howard, 2007; Kiuttu, 2007).

References

Howard, Kim, 2007. Telephone communication between Kim Howard, Enloe Medical Center, and Tammy Dorje, URS Corporation. January 16, 2007 and January 19, 2007.

Kiuttu, Bob, 2007. Telephone communication between Bob Kiuttu, Enloe Medical Center, and Tammy Dorje, URS Corporation. January 16, 2007.

DATA REQUEST

89. Please discuss the availability of trained on-site or on-call Colusa Generating Station support personnel, during both construction and operational phases, to conduct a primary emergency response. Identify any equipment or personnel deficiencies in local fire and emergency response agencies that would be addressed and compensated for with on-site personnel or facilities.

RESPONSE

Construction and plant operational staff will undergo extensive training as detailed in Section 8.7.4 and Tables 8.7-4 and 8.7-5 of the AFC. This will include training on the plant's Injury and Illness Prevention Plan, plant Emergency Action plan, plant Hazardous Material Plan, and the Personal Protective Equipment Program. The construction and plant operational staff will also be trained in first-aid and incipient fire protection. The CGS project plans include the installation of fixed fire suppression systems that will be designed to quickly extinguish a fire, should one occur. These systems include carbon dioxide fire suppression; fire hydrants and hose stations; sprinkler systems and fire water deluge systems for lube oil systems and large power transformers; a 300,000-gallon fire water storage tank; one electric motor-driven fire water pump; one diesel engine-driven fire water pump; one electric motor-driven jockey fire water pump; smoke detectors; combustible gas detectors; and fire extinguishers. Sections 3.4.10 and 8.7.5.2 of the AFC provides a description of the plant fire protection. In addition, safety showers and eyewash stations will be installed in or adjacent to chemical storage and use areas.

BACKGROUND

The population of Maxwell, California is approximately 1,250 people. During peak construction months, the site staff could exceed 650 full-time employees, nearly half the community's permanent population. Although AFC Section 8.8.1.3.4 lists the medical facilities within approximately one hour of the site, there is no discussion regarding actual availability of hospital beds or emergency trauma staffing at Colusa Community Hospital, and no discussion whatsoever regarding the availability of trauma care, emergency staffing, or other medical services at Glenn General Hospital, which is closest to the site, or any other listed medical facility.

DATA REQUEST

90. Please discuss, in detail, the availability of trained trauma care and industrial medicine staff and facilities, including the number of beds normally available, at each of the hospitals designated to provide medical services for the site. Identify any other medical facilities, such as urgent care centers or medical clinics that would provide non-emergency care in the Maxwell and surrounding areas, by location, hours of operation, and type of services available. Indicate if facilities place any restrictions on who may be treated (e.g., does not accept Medicare patients or those without insurance).

RESPONSE

Facilities that provide medical services to the project site include the Glenn Medical Center, Colusa Regional Medical Center, Fremont Medical Center, Rideout Memorial Hospital, and Enloe Medical Center. Glenn Medical Center, formerly known as Glenn General Hospital, is the medical facility closest to the project site, located at 1133 West Sycamore Street in Willows, approximately 17 miles from the project site. This hospital has 10 active beds and has the ability to extend the capacity to 49 hospital beds. Glenn Medical Hospital has a total of 124 employees, day and night staff vary depending on the number of patients. The hospital offers the following services: family care clinic, women's health clinic, physical therapy, respiratory therapy, laboratory services, diagnostic imaging, inpatient nursing, and 24-hour emergency care. This hospital will treat all admitted patients, regardless of insurance status (McMillian, 2007).

The Colusa Regional Medical Center, also known as Colusa Community Hospital, is located at 199 East Webster Street in Colusa, approximately 20 miles from the project site. This hospital has 48 hospital beds and offers the following services: 24-hour emergency care, emergency room, maternity, home health, industrial medicine, and preventive medicine services. Typically, there are 50 staff on duty during the day, and 12 at night. This staff on duty is a combination of physicians, nurses, and technicians. Colusa Regional Medical Center will treat all admitted patients regardless of insurance status (Hughes, 2007).

The Fremont Rideout Health Group owns and operates the Fremont Medical Center, located at 970 Plumas Drive in Yuba City, 44 miles from the project site, Rideout Memorial Hospital, located at 726 Fourth Street in Marysville 45 miles from the project site. The Fremont Medical Center is an extension of the Rideout Memorial Hospital, which is the main facility. There are approximately 1,800 employees between the two facilities. Fremont Medical Center has 132 hospital beds. This hospital offers the following services: labor delivery, nursery, an intensive care unit, acute care surgery, outpatient department. Fremont Medical Center will treat all admitted patients regardless of insurance status; however, emergency patients will not be accepted at Fremont Medical Center, and they will be referred to Rideout Memorial Hospital.

Rideout Memorial Hospital has 113 hospital beds. This hospital offers the following services: emergency room, 24-hour care, an intensive care unit, acute care surgery, outpatient department, same day surgery. Rideout Memorial Hospital will treat all admitted patients regardless of insurance status (Wilbur, 2007).

Enloe Medical Center is located at 1531 Esplanade in Chico and is the regional Level II trauma center. It is the largest referral hospital in the project site area and is approximately 50 miles from the project site. This hospital has 391 hospital beds and provides health services ranging from preventative education, outpatient services, acute care, behavioral health, cardiac care, cancer care, stroke care, emergency room services, trauma center, maternity services, children services, behavioral services, inpatient rehabilitation, home health, and hospice services (Enloe, 2007). Enloe Medical Center has approximately 2,300 employees. On a typical day, there are 700 to 800 employees on duty at the hospital. Enloe Medical Center will treat all admitted patients regardless of insurance status (Kiuttu, 2007).

References

Enloe, 2007. Enloe Medical Center, Website. http://www.enloe.org/welcome_to_enloe/about_enloe.asp. January 15, 2007.

Hughes, Katherine, 2007. Telephone communication between Katherine Hughes, Colusa Regional Medical Center, and Tammy Dorje, URS Corporation. January 15, 2007.

Kiuttu, Bob, 2007. Telephone communication between Bob Kiuttu, Enloe Medical Center, and Tammy Dorje, URS Corporation. January 16, 2007.

McMillan, Deborah, 2007. Telephone communication between Deborah McMillan, Glenn Medical Center, and Tammy Dorje, URS Corporation. January 16, 2007.

Wilbur, Judy, 2007. Telephone communication between Judy Wilbur, Fremont Rideout Health Group, and Tammy Dorje, URS Corporation. January 16, 2007.

SOIL AND WATER RESOURCES

Technical Area: Soil and Water Resources
Author: Richard Latteri

BACKGROUND [91 THROUGH 93]

The Colusa Generating Station (CGS) proposes to use raw surface water for the proposed plant operational needs which would be provided from the Glenn-Colusa Irrigation District (GCID) via the Tehama-Colusa Canal. Contractually, GCID will provide water to the plant through a transfer agreement with Colusa County. The CGS is proposing to use dry cooling in conjunction with a zero liquid discharge system which will minimize consumptive use of water for CGS operation. Table 3.4-4 of the AFC reports average annual water consumption for the CGS at 126.1 acre-feet per year (AFY).

In the GCID "Will-Serve" Letter (Figure 7.1-1), GCID states: *Based on information presented by your staff and counsel, the Colusa Generating Station will require a maximum annual supply of 400 acre-feet of water per year. GCID believes the most feasible way to serve the project would be to have GCID transfer 400 AF to the County of Colusa for 30 years. The County of Colusa would, in turn, deliver that water to E&L Westcoast's power plant over a 12-month period for 30 years.* This estimate of water consumption in the "Will-Serve" Letter is over 3 times the estimated annual water consumption of 126.1 AFY reported in the AFC.

Additionally, the "Will-Serve" Letter contains numerous conditions that must be met prior to approval of the transfer agreement.

DATA REQUEST

91. a. Please provide a discussion/explanation for the transfer of 400 AFY for CGS operation for a 30-year period, which is far in excess of estimated CGS operational needs.

b. If 400 AFY will be provided over a 30-year period, please provide a discussion of the on-site storage facilities required to store the excess raw water from the Tehama-Colusa Canal.

RESPONSE

a. The will-serve letter from GCID states that *a maximum annual supply* of 400 acre-feet per year will be provided to the project. This does not mean that the maximum supply will be used. Project refinements subsequent to finalizing the will-serve letter that are presented in the AFC show that the annual water use will be less than 400 acre-feet. However, since the will-serve letter only identifies a not-to-exceed amount and the expected annual water use is well within that amount, a new will-serve letter is not required. Moreover, a water supply agreement that is more definitive than, and will supersede the will-serve letter, will be entered into by the applicant and GCID. That agreement will be provided to the CEC after it has been executed.

b. As discussed above, the annual water use for the project will be less than 400 acre-feet annually. The storage facilities described in Section 3.4.6.2 in the AFC are adequate for the plant's water needs. The Tehama-Colusa Canal has enormous storage capacity. The onsite storage facilities are only required for equalization of short-term (e.g., hourly) fluctuations.

DATA REQUEST

92. Please provide a copy of the U.S. Bureau of Reclamation's Letter Agreement for the transfer of surface water (up to 400 AFY) from the Glenn-Colusa Canal to the County of Colusa for a 30 year period which includes a provision to renew the contract after 30 years.

RESPONSE

Negotiations with GCID for the water supply agreement for the project are underway, and are expected to be completed in the near future. The U.S. Bureau of Reclamation (USBR) approval process cannot begin until the final water agreement with GCID has been completed. Once GCID requests approval of the agreement from the USBR, GCID's contract with the USBR requires that a decision be rendered by the USBR within 90 days. The USBR approval will be provided to the CEC as soon as it is available.

DATA REQUEST

93. Please provide a service agreement from the County of Colusa for delivery of water from the Tehama-Colusa Canal for up to 400 AFY for a 30-year period which includes a provision to renew the contract after 30 years.

RESPONSE

Negotiations with GCID for the water supply agreement for the project are underway, and are expected to be completed in the near future. Once that has occurred, GCID will undertake negotiations with Colusa County for acceptance of the transferred water for delivery to the project. That agreement will be provided to the CEC as soon as it is available.

BACKGROUND

The sanitary wastewater system will collect wastewater from sinks, toilets, and other sanitary facilities for discharge into an on-site septic system. The Porter-Cologne Water Quality Control Act controls discharge of wastewater to surface or groundwater in California, which is administered by the nine Regional Water Quality Control Boards. California Water Code Section 13260 requires a Report of Waste Discharge (RWD) for any discharge that could affect waters of the State to file a report with and receive requirements from the Regional Water Board.

DATA REQUEST

94. Please provide a Report of Waste Discharge which complies with California Water Code Section 13260 and a discussion of the regulatory authority of the Colusa County Department of Environmental Health in reviewing and approval of septic leach fields.

RESPONSE

Pursuant to the Basin Plan issued by the Central Valley Regional Water Quality Control Board (RWQCB) and governing the proposed project site (Water Quality Control Plan for the Sacramento River Basin and San Joaquin River Basin (revised August 2006)), waste discharge requirements are not required for onsite septic tanks and leach fields of the type proposed for the Colusa Generating Station. As described on page IV-23.00 of the Basin Plan, waste discharge requirements are not required for septic tanks and leach field systems provided that a permit is obtained for the system from the relevant county and that the RWQCB's guidelines related to such systems are followed. To this end, the AFC on page 8.14-15 states that a permit from the Colusa County Department of Health and Human Services Environmental Health Division will be obtained for the septic tank and that the leach field will be designed in conformance with the RWQCB's "Guidelines for Waste Disposal from Land Developments." Since the requirement to obtain waste discharge requirements has been waived by the RWQCB, a Report of Waste Discharge (which acts as an application for waste discharge requirements) is not required to be filed (Cal. Water Code Section 13260(b)).

BACKGROUND

To determine the potential impacts to water and soil resources from the construction of the Colusa Generating Station project, the Energy Commission requires a Drainage Erosion and Sediment Control Plan (DESCP). The DESCP will be updated and revised as the project moves from the preliminary to final design phases and is to be a separate document from the Construction SWPPP. The DESCP submitted prior to site mobilization must be designed and sealed by a professional engineer/erosion control specialist.

DATA REQUEST

95. Please provide a draft DESCP containing elements A through I below outlining site management activities and erosion/sediment control BMPs to be implemented during site mobilization, excavation/demolition, construction, and post-construction activities. The level of detail in the draft DESCP should be commensurate with the current level of planning for site grading and drainage. Please provide all conceptual erosion control information for those phases of construction and post-construction that have been developed or provide a statement when such information will be available.

A. Vicinity Map – A map(s) at a minimum scale 1" = 100' will be provided indicating the location of all project elements (construction site, laydown area, pipelines, etc.) with depictions of all significant geographic features including swales, storm drains, and sensitive areas.

B. Site Delineation – All areas subject to soil disturbance for the CGS (project site, laydown area, all linear facilities, landscaping areas, and any other project elements) shall be delineated showing boundary lines of all construction/demolition areas and the location of all existing and proposed structures, pipelines, roads, and drainage facilities.

C. Watercourses and Critical Areas – The DESCP shall show the location of all nearby watercourses including swales, storm drains, and drainage ditches. Indicate the proximity of those features to the CGS construction, laydown, and landscape areas and all transmission and pipeline construction corridors.

D. Drainage Map – The DESCP shall provide a topographic site map(s) at a minimum scale 1" = 100' showing all existing, interim and proposed drainage systems and drainage area boundaries. On the map, spot elevations are required where relatively flat conditions exist. The spot elevations and contours shall be extended off-site for a minimum distance of 100 feet in flat terrain.

E. Drainage of Project Site Narrative – The DESCP shall include a narrative of the drainage measures to be taken to protect the site and downstream facilities. The narrative should include the summary pages from the hydraulic analysis prepared by a professional engineer/erosion control specialist. The narrative shall state the watershed size(s) in acres that was used in the calculation of drainage measures. The hydraulic analysis should be used to support the selection of BMPs and structural controls to divert off-site and on-site drainage around or through the CGS construction and laydown areas.

F. Clearing and Grading Plans – The DESCP shall provide a delineation of all areas to be cleared of vegetation and areas to be preserved. The plan shall provide elevations, slopes, locations, and extent of all proposed grading as shown by contours, cross sections or other means. The locations of any disposal areas, fills, or other special features will also be shown. Illustrate existing and proposed topography tying in proposed contours with existing topography.

G. Clearing and Grading Narrative – The DESCP shall include a table with the quantities of material excavated or filled for the site and all project elements of the CGS project (project site, lay down area, transmission corridors, and pipeline corridors) whether such excavations or fill is temporary or permanent, and the amount of such material to be imported or exported.

H. Best Management Practices Plan – The DESCP shall identify on the topographic site map(s) the location of the site specific BMPs to be employed during each phase of construction (initial grading/demolition, project element excavation and construction, and final grading/stabilization). BMPs shall include measures designed to prevent wind and water erosion.

I. Best Management Practices Narrative – The DESCP shall show the location (as identified in H above), timing, and maintenance schedule of all erosion and sediment control BMPs to be used prior to initial grading, during all project element (site, pipelines, etc.) excavations and construction, final grading/stabilization, and post-construction. Separate BMP implementation schedules shall be provided for each project element for each phase of construction. The maintenance schedule should include post-construction maintenance of structural control BMPs, or a statement provided when such information will be available.

RESPONSE

A plan and program to establish a draft DESCP is being implemented. The level of effort to complete this will require a submittal after February 12, 2007. A draft DESCP will be submitted to the CEC as soon as it is available.

TRAFFIC AND TRANSPORTATION

Technical Area: Traffic and Transportation
Author: David Flores

BACKGROUND

The applicant indicates that the project will require offsite roadway improvements, which includes replacement of the Teresa Creek Bridge and the Glenn-Colusa Canal Bridge. The AFC provides minimal information on the need for securing necessary roadway easements beyond the County's right-of-way for the temporary roadway access routes. In addition, laydown areas for equipment and materials during construction of these bridge replacements will be necessary.

DATA REQUEST

96. Please clarify the easement requirements for the offsite bridge replacement/ improvements and include in your discussion, the following items:

- ***Discuss what agreements have been secured or are currently being negotiated with the owners of the adjacent parcels or whether a new or expanded easement is required.***
- ***Please discuss the location of the laydown area for equipment and materials.***
- ***Discuss whether the temporary roadway will meet the fire district's requirement as an all weather roadway.***

RESPONSE

a. Easements are currently being pursued for the Glenn-Colusa Canal bridge replacement and Teresa Creek Canal bridge replacements. The new Glenn-Colusa Canal would be placed on private property. The easement would extend from the current boundary of Dirks Road approximately 111 feet wide and 800 feet long on the north side of Dirks Road east of the bridge, and approximately 85 feet wide and 160 feet long on the west side of the bridge. This easement is currently being sought from the property owners.

The easement for the Teresa Creek Bridge extends 50 feet to the east of the current road and 300 feet to the north and 300 feet to the south side of the creek. This easement is currently being sought from the property owners.

The applicant will provide the CEC with evidence of easements as soon as they are completed. They are anticipated to be completed before the Final Staff Assessment is issued.

b. Figure 3.6-6 in the AFC shows the construction right-of-way for the Glenn-Colusa Canal bridge replacement and road realignment. Figure 96-1 shows the construction rights-of-way for the Teresa Creek bridge replacement. All laydown areas will be located within the right-of-way shown on these figures.

c. The bridge replacements and road improvements will meet the fire district's requirements as all-weather roads. In addition, the main plant access road and internal roads will also meet the requirements for all-weather roads. Fire hydrants will be located in close proximity of the plant roadway system for ready access by fire trucks.

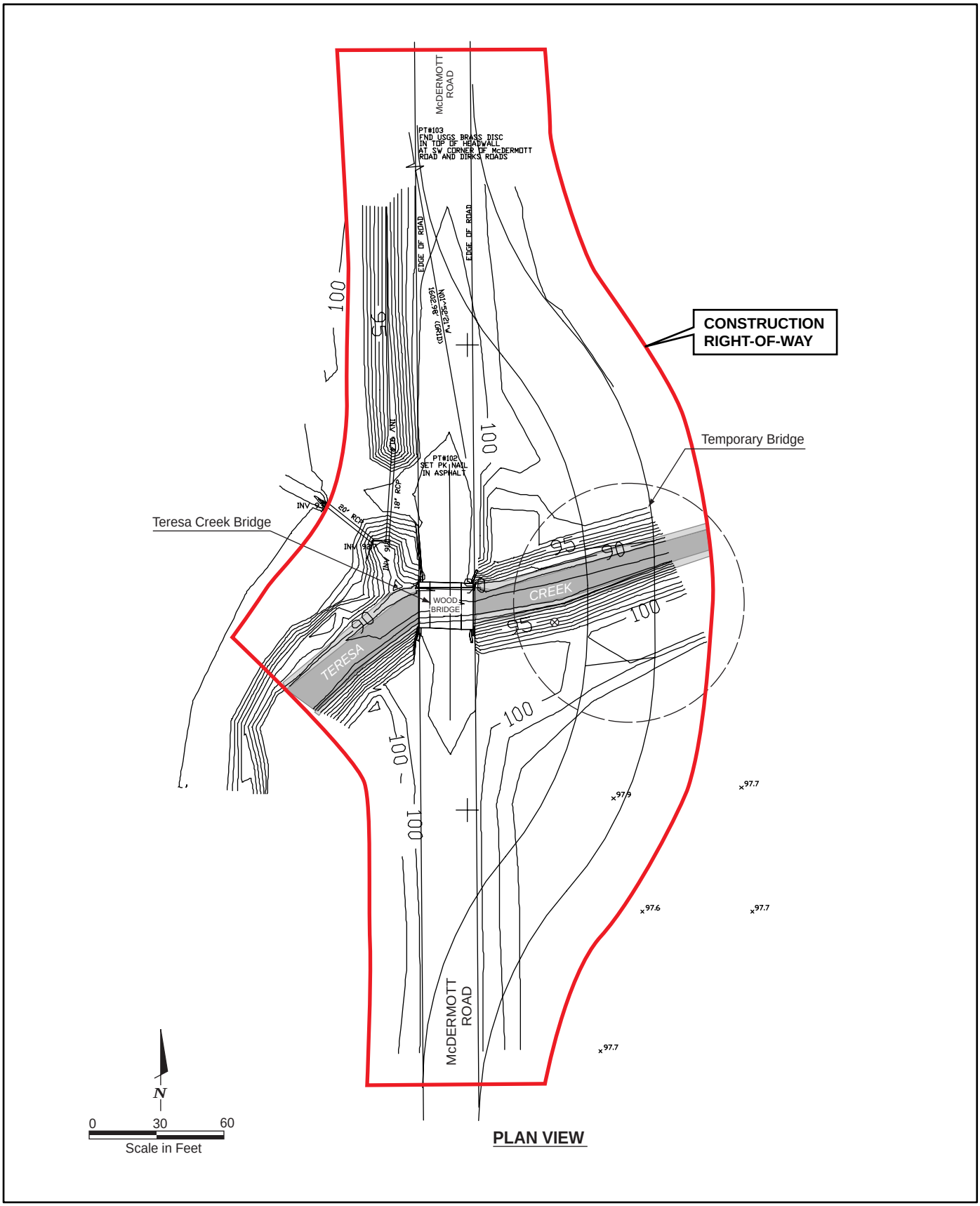

PLAN VIEW

TERESA CREEK BRIDGE:
CONSTRUCTION RIGHT-OF-WAY

28067004
February 2007

Colusa Generating Station
E&L Westcoast, LLC
Colusa County, California

URS

FIGURE 96-1

2/08/07 vsa ..T:\28067004 CPV Colusa 2007\Data Request_feb07\96-1_teresa const row.ai

BACKGROUND

On AFC page 8.10-7 of the AFC, the Goods and Movement section states "both I-5 and the railroad spur west of the project site have adequate capacity to accommodate delivery of goods and equipment to the project."

DATA REQUEST

97. To determine the effects and impact that the transportation of heavy equipment will have on the local and state roadways and traffic flow, please provide the following information:

- ***Please provide the location of the rail depot or other goods transfer facility that the project expects to use in the transition from rail to roadway.***
- ***The roadways to be used from the depot to transport the equipment to the facility.***
- ***The monthly schedule for the delivery of heavy equipment.***

RESPONSE

a. There are a number of available rail sidings in the area. There is a team track owned by the California Northern Railroad (CFNR) in Williams, located 14 miles south of Delevan and west of I-5. This has suitable track for six railcars or more and has sufficient space around the track for unloading and loading of a platform trailer and appears to have a suitable route to the site. This siding is currently the one expected to be used.

   Other sidings evaluated but potentially unsuitable include a rail car storage area just north of Delevan Road, which appears to be unsuitable for unloading. In addition, this siding would require crossing over I-5 to reach the site, which would also require beam trailers. A second location evaluated included a siding north of Delevan where a passing track is located in Willows, 14 miles north of the site. However, this site also requires crossing an overpass over I-5, and the roads north of the site do not appear to be acceptable for heavy haul.

b. The proposed route to the site is from the Williams siding to Business 5 North, left on Wadleigh Road, right on Sutton Road, left on Delevan Road, right on McDermott Road, and left on Dirks Road. Total distance is approximately 20 miles.

c. A representative monthly schedule for the delivery of heavy equipment is provided in the table below. The sequence and actual dates are subject to revision based on actual vendor delivery date commitments.

Table 97-1
Heavy Equipment Delivery Schedule

Equipment	Scheduled Delivery		Delivery Method	Notes
	Start	Completed		
Notice to proceed (NTP)	Mar-08		Rail deliveries are to Site by heavy haul transporter	Construction start date.
HRSG #1	Nov-08	Dec-08	Rail	12 Module deliveries would continue for 2 months after 1st delivery.
HRSG #2	Dec-08	Jan-09	Rail	12 Module deliveries would continue for 2 months after 1st delivery.
HP Drum #1	Jan-09	Jan-09	Rail	
HP Drum #2	Feb-09	Feb-09	Rail	
CT #1 and Gen #1	Feb-08	Apr-08	Rail	Auxiliaries delivery would continue for 3 months after 1st delivery by truck.
CT #2 and Gen #2	Mar-08	May-08	Rail	Auxiliaries delivery would continue for 3 months after 1st delivery by truck.
ST and Gen	Apr-08	Jul-08	Rail	Auxiliaries delivery would continue for 4 months after 1st delivery by truck.
Main Transformers #1, #2, #3	Mar-09	Apr-09	Rail	All transformers would be delivered consecutively
Air Cooled Condenser	Apr-08	Apr-09	Truck	First Steel to Final Steel
Structural Steel	Oct-08	May-09	Truck	Structural steel delivery would start 2 months prior to erection and continue during the first 75 percent of steel erection.

TRANSMISSION SYSTEM ENGINEERING

Technical Area: Transmission System Engineering
Author: Ajoy Guha, PE, Sudath Arachchige and Mark Hesters

INTRODUCTION

Staff needs to determine the system reliability impacts of the project interconnection and to identify the interconnection facilities including downstream facilities needed to support the reliable interconnection of the proposed Colusa Generating Station (CGS). The interconnection must comply with the Utility Reliability and Planning Criteria, North American Electric Reliability Council (NERC) Planning Standards, NERC/Western Electricity Coordinating Council (WECC) Planning Standards, and California Independent System Operator (CA ISO) Planning Standards. In addition the California Environmental Quality Act (CEQA) requires the identification and description of the "Direct and indirect significant effects of the project on the environment."

For the compliance with planning and reliability standards and the identification of indirect or downstream transmission impacts, staff relies on the System Impact Study (SIS) and Facilities Study (FS) as well as review of these studies by the agencies responsible for insuring the interconnecting grid meets reliability standards, in this case, the PG&E and CA ISO. The studies analyze the effect of the proposed project on the ability of the transmission network to meet reliability standards. When the studies determine that the project will cause the transmission to violate reliability requirements the potential mitigation or upgrades required to bring the system into compliance are identified. The mitigation measures often include modification and construction of downstream transmission facilities. The CEQA requires environmental analysis of any downstream facilities for potential indirect impacts of the proposed project.

BACKGROUND [98 AND 99]

The description of the CGS switchyard and interconnection facilities between generators and switchyard including major equipment and their ratings are incomplete as provided in the AFC (AFC, Section 3.4.4, Page 3-6, Figures 3.4-6 and 3.4-8).

DATA REQUEST

98. Provide a complete electrical one-line diagram (or resubmit Figures 3.4-6 and 3.4-8) of the CGS switchyard showing all equipment for generators' interconnection with the switchyard including any bus duct connectors or cables, 18 kV breakers on the low side, generator step-up transformers, short overhead line or conductors with its configuration, buses, breakers, disconnect switches on the 230 kV side and their respective ratings.

RESPONSE

Figure 3.4-8 in the AFC shows the interconnection between the three Main Step-Up Transformers (transformer bushings) and the Switchyard as overhead cable of approximately 300 feet in length. This figure also provides the electrical configuration of the Switchyard with all breakers, disconnect switches, and metering and relaying voltage transformers. The equipment ratings have not been shown, as detailed engineering has not been performed, but the design basis for the Switchyard is provided in Appendix E, Section 3.0. Figure 3.4-7 shows all of the switchgear and breakers in the power station.

DATA REQUEST

99. Provide a physical layout drawing of the CGS switchyard showing major equipment and transmission line outlets.

RESPONSE

Figure 3.4-1 shows the interconnection to the power station and the entire Switchyard physical arrangement, including the transmission interconnection lines. Figure 3.4-6 shows the required 18 kV Generator Breakers and Main Stepup Transformers (three total), the tie lines to the Switchyard, and location of CA ISO revenue metering.

BACKGROUND [100 THROUGH 103]

To offset overloads on the existing Palermo substation 230/115 kV transformer, the November 2006 SIS performed by Navigant Consulting, identifies mitigation as the PG&E project No. T686B for installation of a second 230/115 kV transformer at the Palermo substation by 2007 (SIS Section 12.1.1, Page 21). To mitigate identified overloads on the Palermo-East Marysville 115 kV line, the SIS (Section 12.1.2, pages 22) indicates the PG&E project No. T686 for reconductoring the Palermo-Bogue and Palermo-East Nicolaus 115 kV lines by 2007. However, the SIS report also indicates that the aforesaid PG&E projects have not yet been approved by PG&E management. To complete its analysis staff needs confirmation that these mitigation options will be funded and implemented.

To eliminate identified overloads on Western's Olinda Substation 500/230 kV transformer, the SIS (Section 12.4.1, pages 25) indicates installing a second 500/230 kV transformer or developing a remedial action scheme (RAS) to drop CGS generation as alternate mitigation options. No specific selection of the mitigation measure has been made. Staff needs this information for completing its analysis.

DATA REQUEST

100. For the identified mitigation PG&E project No. T686B (installation of a second 230/115 kV transformer at the Palermo substation) to eliminate overload on the existing 230/115 kV transformer, provide a report or letter from PG&E indicating whether or not the project has approval from PG&E management and the CA ISO, and any change in the expected on-line date.

RESPONSE

Pages from PG&E's 2006 Electric Transmission Grid Expansion Plan are provided as Attachment 100-1. On page 3-3 of the Plan, Project T686B (Palermo 230/115 kV Transformer) is listed as a transmission project previously approved by CAISO. Page 3-265 of the Plan indicates that the expected in-service date is May 2008.

PG&E's
2006 Electric Transmission Grid Expansion Plan

Pacific Gas and Electric Company

WE DELIVER ENERGY.

December 29, 2006

ATTACHMENT 100-1

Colusa Generating Station
E&L Westcoast, LLC
Colusa County, California

28067004
February 2007

URS

Table of Contents

EXECUTIVE SUMMARY

CHAPTER 1: PG&E'S ELECTRIC TRANSMISSION GRID EXPANSION PLAN

CHAPTER 2: ELECTRIC TRANSMISSION GRID EXPANSION PLAN PROCESS

- Background
- Transmission Projects Completed in Year 2006

CHAPTER 3: TRANSMISSION PROJECT INFORMATION

- Transmission Projects Previously CAISO Approved
- Transmission Project Proposals

CHAPTER 4: REGIONAL PLANNING ACTIVITIES AND RENEWABLE ENERGY

CHAPTER 5: LCR REDUCTION PLAN

CHAPTER 6: RELIABILITY IMPROVEMENT PROJECTS

- Single Transformer Service Reliability Improvement
- SCADA Switch program

CHAPTER 7: GENERATION RETIREMENT PLAN

APPENDICES:

- Appendix 1 - Planned Facility Re-rates
- Appendix 2 - CAISO and Stakeholder Comments
- Appendix 3 – Acronyms and Abbreviations
- Appendix 4 - Reliability Assessment Study Report (available upon request)

INDEX

Attach 100-1_pg2.pdf

Summary of Transmission Project Proposals

In this year's Expansion Plan, PG&E has a total of 93 transmission projects planned over the next ten years. Thirty-seven (37) of the 93 are project proposals that were previously approved by the CAISO. The remaining projects are new and previously proposed projects that do not yet have CAISO approval. The total cost of this expansion plan is between $1.5B and $3.0B. This chapter provides the technical details for each transmission project that is included in this year's expansion plan.

The purpose and benefit of each transmission project is included for additional information. For each project, the purpose and benefit can include increasing transmission capacity, improving service reliability, meeting tariff and compliance, congestion management, or accessing resource areas (including renewable resources).

Table 3-24 includes information on Special Protection Systems (SPS) and Operating Protection Systems (OPS) that PG&E has implemented or is planning to implement.

Table 3-25 includes information on maintenance projects that PG&E has recently constructed or plans to construct.

Summary of Transmission Project Proposals 3-1
Diablo Canyon 230 kV Shunt Capacitors 3-5
Sonoma Coast Batteries Project 3-11
Templeton – Atascadero 70 kV Reconductoring 3-20
Vaca Dixon – Contra Costa 230 kV Reconductoring 3-28
Weber #1 60 kV Line 3-38
Gregg 230 kV Reactor 3-47
Humboldt – Harris 60 kV Reconductoring 3-52
Humboldt Reactive Support Project 3-62
Martin 115/60 kV Transformer Replacement 3-76
Atlantic Lincoln Transmission Projects 3-83
Bogue Junction Reconfiguration 3-90
Brighton 230/115 kV Transformer Replacement 3-94
Crazy Horse Substation Project 3-97
Glass – Madera 70 kV Area Reinforcement (Scope Change) 3-101
Gold Hill – Clarksville 115 kV Line Reconductor & Missouri Flat – Gold Hill 3-115 kV Line Reconductor 3-107
Lakeville – Ignacio 230 kV No. 2 Line Project 3-110
Newark – Ravenswood 230 kV Reconductoring 3-113
Rio Oso 230/115 kV Transformer Upgrades 3-116
Rio Oso 115 kV Reactor 3-119
Sobrante, Lakeville and Ignacio 230 kV Capacity Increase Project 3-121
Soledad Transformer Capacity Increase Project 3-125
South of San Mateo Capacity Increase 3-133
West Point – Valley Springs 60 kV Line Reinforcement 3-136
West Sacramento – Brighton 115 kV Reconductor & Brighton – Davis 115 kV Reconductoring 3-138
Contra Costa – Moraga 230 kV Reconductoring 3-141
Half Moon Bay Reactive Support 3-144
Mendocino Coast Reactive Support Project 3-147
Moraga 230/115 kV Transformer Capacity Increase 3-150
Mosher Transmission Project 3-153
Pittsburg – Tesla 230 kV Reconductoring 3-157
Tesla 115 kV Capacity Increase 3-160
Vaca Dixon – Lakeville 230 kV Reconductoring 3-163
Vaca Dixon – Sobrante – Moraga 230 kV Reinforcement 3-166
Rio Oso – Atlantic and Rio Oso – Gold Hill 230 kV Lines 3-169
Cortina 60 kV Reliability Project 3-179
East Nicolaus Area Reinforcement 3-182
Herndon 230/115 kV Transformer 3-185
Lockeford – Lodi Area 60 kV Reconductoring 3-193
Missouri Flat Expansion 3-197
Monta Vista – Los Altos 60 kV Reconductoring 3-200
Pittsburg 230/115 kV Transformer Capacity Increase 3-203
Upgrade Tesla – Newark 230 kV Path 3-206

Valley Springs 230/60 kV Transformer 3-209
Atlantic – Placer Voltage Conversion 3-215
Bay Area 500 kV Station 3-217
Ignacio – San Rafael 115 kV Nos.1 & 3 Reconductoring 3-219
Vaca Dixon – Fulton Connection & Cortina – Eagle Rock 115 kV Reconductoring 3-222
San Leandro – Oakland "J" 115 kV Reconductoring 3-224
San Francisco Underground Cable Replacement 3-227
San Mateo and Moraga Synchronous Condenser Replacements 3-230
Gates – Gregg 230 kV Double Circuit Tower Line 3-232
Woodward 115 kV Reinforcement 3-235
Transmission Projects Previously Approved by CAISO 3-238
T314: Colgate 230/60 kV Transformer Capacity Increase 3-240
T568: Airways Substation Interconnection 3-241
T081A: Bair – Belmont 115 kV Reconductor 3-242
T177A: Davis – UC Davis 115 kV Conversion 3-243
T260A: Henrietta – Gregg 230 kV Reconductoring 3-244
T778: Henrietta 230/70 kV Transformer 3-245
T197A: Ignacio 115/60 kV Transformer Replacement 3-246
T253: Lakeville – Sonoma 115 kV Line 3-247
T737: Mesa 230/115 kV Transformer 3-248
T950: Mountain Quarries 60 kV Tap 3-249
T634A: Tulucay 230/60 kV Transformer 3-250
T790B: Bay Area Ravenswood Reactive Support 3-251
T949: Del Monte 115/60 kV Transformer Replacement 3-252
T867: Metcalf – Moss Landing 230 kV Reinforcement 3-253
T647A: Metcalf – Monta Vista 230 kV Reconductoring 3-254
T944: Newark – Newark Distribution 230 kV Line 3-255
T783B: Vaca Dixon 500/230 kV Transformer 3-256
T122: Herndon – Bullard 115 kV Reconductoring 3-257
T680A: Kasson – Lammers 115 kV Reconductoring 3-258
T571: Lakeville 230/60 KV Transformer 3-259
T141: Lone Tree Substation 3-260
T923A: McCall 230/115 kV Transformer Replacement 3-261
T694: Metcalf – El Patio 115 kV Reconductoring 3-262
T776: Monta Vista 115/60 kV Transformer 3-263
T847: Newark – Fremont 115 kV Reconductoring 3-264
T686B: Palermo 230/115 kV Transformer 3-265
T815: Pease – Marysville 60 kV Line 3-266
T844: Stagg 230/60 kV Transformers 3-267
T444: Placer – Gold Hill 115 kV Reinforcement 3-268
T458C: Hollister 115 kV Reconductoring 3-269
T897: Martin – Hunters Point 115 kV Underground Cable 3-270
T686A: Palermo – Rio Oso 115 kV Reconductoring 3-271
T249: Bay Meadows 115 kV Reconductoring Project 3-272
T983: Oakland Underground Cable Project 3-273

T854: Metcalf – Evergreen 115 kV Reconductoring 3-274
T692: Piercy/Swift – Metcalf and Newark – Dixon Landing 115 kV 3-275
Special Protection System Projects (SPS) 3-276
Maintenance Replacement Projects 3-278

T686B: Palermo 230/115 kV Transformer

(Expected In Service Date - May 2008)

PROJECT INFORMATION

This project proposes to install a new three phase, 420 MVA, 230/115 kV transformer at Palermo Substation. The existing 230/115/60 kV transformer would be disconnected from the 115 kV network and operated as a 230/60 kV transformer.

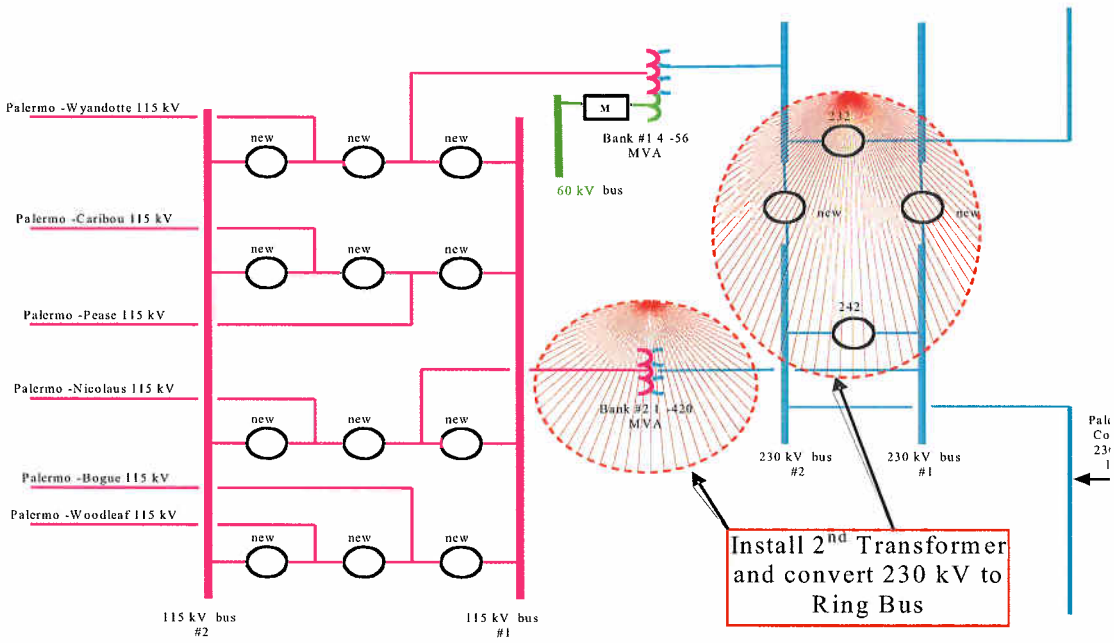

Figure 3-121: Scope Diagram

T686A: Palermo – Rio Oso 115 kV Reconductoring
(Expected In Service Date – May 2008)

PROJECT INFORMATION

This project proposes to reconductor portions of the Palermo – Rio Oso 115 kV Nos. 1 and 2 lines with 477 ACSS conductors. This project also proposes to rerate the Honcut – Pease section of the Palermo – Pease 115 kV line for higher ratings.

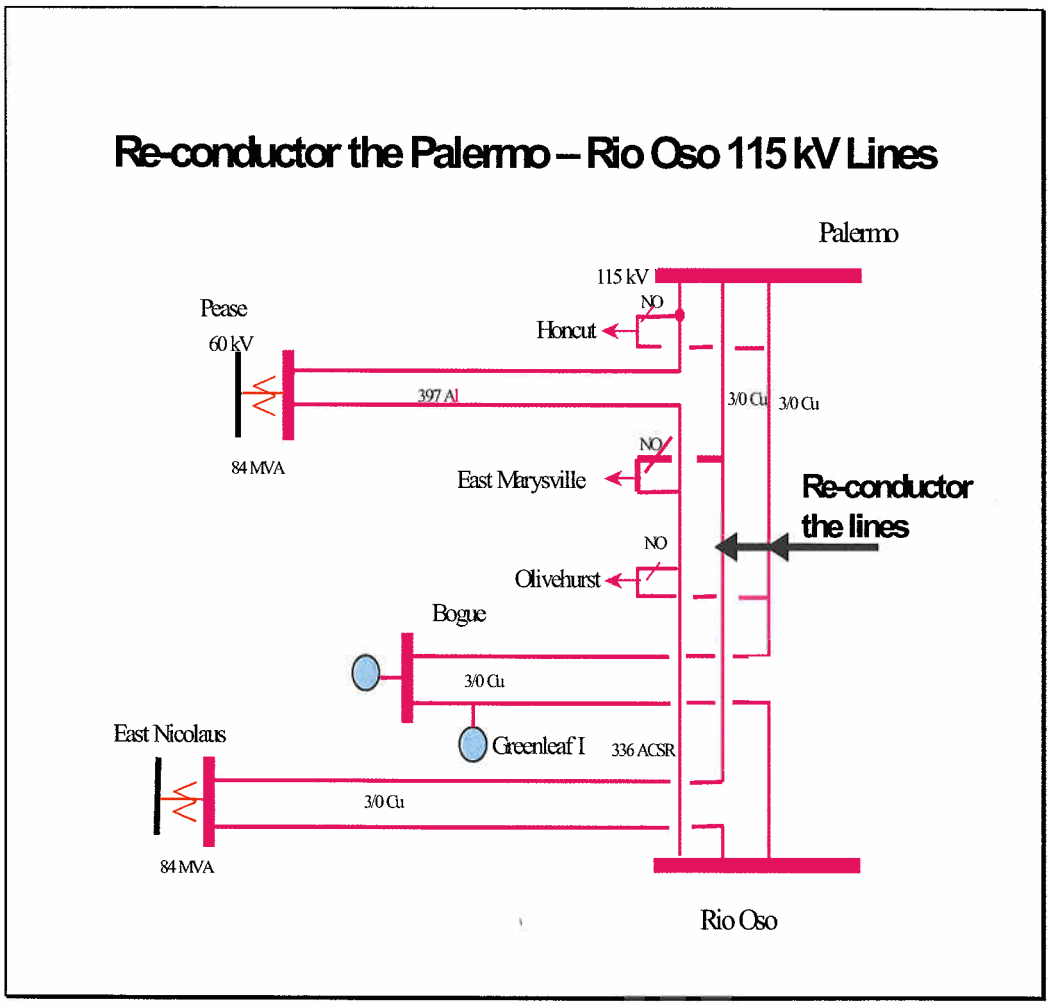

Figure 3-127: Scope Diagram

DATA REQUEST

101. For the identified mitigation by PG&E project No. T686 (reconductoring of the Palermo-Bouge and Palermo-East Nicolaus 115 kV lines) needed to eliminate overloads on the Palermo-East Marysville 115 kV line, provide a report or letter from PG&E indicating whether or not the project has the approvals from PG&E management as well as the CA ISO, and any change in the expected on-line date.

RESPONSE

Pages from PG&E's 2006 Electric Transmission Grid Expansion Plan are provided as Attachment 100-1. On page 3-3 of the Plan, Project T686A (Palermo-Rio Oso 115 kV reconductoring) is listed as a transmission project previously approved by CAISO. Page 3-271 of the Plan contains a diagram which shows that the Palermo-Bouge and Palermo-East Nicolaus lines are the line sections to be reconductored and indicates that the expected in-service date is May 2008.

DATA REQUEST

102. To eliminate overloads on the existing Olinda Substation 500/230 kV transformer, select and describe the identified mitigation measure and provide the expected on-line date. Provide a report or letter from PG&E and the owner of the Olinda substation indicating whether or not the selected mitigation has approval from PG&E, the CA ISO and the owner of the Olinda substation.

RESPONSE

The Olinda Substation is managed by Western. Attachment 102-1 provides a May 2006 letter from the applicant to Western and the Sacramento Municipal Utility District (SMUD) summarizing discussions with both parties about mitigating the impacts of the CGS. As shown, during discussions with Western and SMUD, it was determined that the impacts on the Olinda transformer could best be mitigated by the use of a special protection scheme (SPS) that would run-back project generation should the critical outages occur. Attachment 102-2, the final notes from an October 19, 2005 meeting with Western and SMUD, provides further support of communication and agreement with Western and SMUD on the implementation of this project and contains preliminary planning level details for certain other transmission projects discussed during the meeting. PG&E's and CA ISO's knowledge and acceptance of this project is reflected in the System Impact Study previously submitted to the CEC.

Dave Larsen/NCI
05/03/2006 02:02 PM

To Maury Kruth/NCI@Navigant, Bryan Griess/NCI@navigant
cc
bcc
Subject Colusa Power Project Letter to WAPA and SMUD

Attached, FYI, is a copy of the subject letter that was sent to WAPA and SMUD this week and which summarizes discussions with both parties about mitigating the impacts of the Project. Please let me know if you have any questions on it.

Dave Larsen
Director
Navigant Consulting
(916) 631-3247

WAPA SMUD Letter_050206.doc

ATTACHMENT 102-1

28067004
February 2007

Colusa Generating Station
E&L Westcoast, LLC
Colusa County, California

URS

Mr. Darren Buck
Power Operations Manager
Western Area Power Administration
Sierra Nevada Region
114 Parkshore Drive
Folsom, CA 95630

Mr. Vickan Kasarjian
Manager, System Operations and Reliability
Sacramento Municipal Utility District
6201 S Street
Sacramento, CA 95817-1899

Re: Colusa Power Project

Gentlemen:

Since December of 2004 E&L Westcoast LLC has been pursuing the development of the 660 MW (nominal) Colusa Generating Station. The ownership of the project is made up of affiliates of Competitive Power Ventures, General Electric, and ArcLight Capital. The Colusa Generating Station will be located in Colusa County, California and will be interconnected with the four Cottonwood-Vaca Dixon 230-kV lines of Pacific Gas & Electric (PG&E). Recently, the Colusa Generating Station owners and PG&E entered into an agreement which provides that E&L Westcoast will complete the licensing and construction of the Colusa Generating Station at which time it will be acquired by PG&E. This is expected to occur in 2010.

As part of its development efforts, the Colusa Generating Station retained the services of Navigant Consulting, Inc. (NCI) to perform the System Impact Study (SIS) and to coordinate these efforts with PG&E and the California ISO. In addition, NCI shared the SIS with representatives of Western and SMUD and have had meetings and conference calls with these representatives to discuss the results of the SIS.

In summary, the SIS indicated that the addition of the Project would exacerbate pre-Project overloads noted on the O'Banion-Elverta 230-kV lines, on the Hurley-Carmichael 230-kV line, on Western's Flanagan-Shasta and Flanagan-Keswick 230-kV lines, and on the Olinda 500/230-kV transformer.

During the above mentioned discussions with representatives of Western and SMUD it was determined that:

1. The proposed O'Banion-Elverta/Natomas Project being pursued by Western and SMUD would mitigate both the pre- and post-Project overloads on the O'Banion-Elverta lines,

2. The proposed Folsom Loop Project being discussed between WAPA and SMUD would mitigate the both the pre- and post-Project overloads on the Hurley-Carmichael line,
3. Mitigation of the overloads on the Flanagan-Shasta line and the Flanagan-Keswick line would require that these lines be reconductored, and
4. The Project impacts on the Olinda transformer could be mitigated by the use of a special protection scheme (SPS) that would run-back Project generation should the critical outages occur.

On April 26, 2006 representatives of the Project met with staff members of Western, SMUD, and NCI to discuss the status of the Colusa Generating Station as well as the status of the transmission Projects being proposed by Western and SMUD. During these discussions Western and SMUD staff briefed us on the status of both of the above transmission Projects and we also discussed the use of reconductoring and SPS to mitigate impacts as discussed above.

We wish to confirm to both Western and SMUD that the Colusa Generating Station owners are interested in seeing that the two transmission Projects are completed. Please keep us informed of the process, schedule, and any activities needed to support the effort.

This letter also requests that Western initiate the activities required to reconductor the two lines in the Shasta area mentioned above and to modify/expand existing SPS (or RAS) schemes to run-back Colusa Generating Station generation to mitigate impacts on the Olinda transformer.

I will plan on contacting you both within the next few days to discuss this matter further with you. In the meantime, please feel free to call me at (240) 723-2304 or Dave Larsen of NCI (916 631-3247) should you have any questions on this letter.

Sincerely,

Andrew C. Welch, P.E.
Vice President

NOTES FROM OCTOBER 19, 2005 MEETING
REGARDING MITIGATION OF CPV COLUSA PROJECT IMPACTS

The subject meeting was held at the offices of Navigant Consulting, Inc. (NCI) and was attended by:

- Mariam Mirzadeh – Western Area Power Administration
- Don DeBerry – Sacramento Municipal Utility District
- Catalin Micsa – California ISO
- Dave Larsen and Monte Meredith - NCI

The purpose of the meeting was to discuss methods whereby the new or increased overloads on the WAPA and SMUD systems that were noted in the System Impact Study (SIS) for the CPV Colusa Project could potentially be mitigated. The SIS indicated that the addition of the CPV Colusa Project impacted several WAPA/SMUD facilities, as follows:

- Increased pre-Project Category A, B, and C overloads on the O'Banion-Elverta lines and Category B and C overloads on the Hurley-Carmichael line during summer peak[1] conditions,
- Increased pre-Project Category B overloads on the Flanagan-Shasta and Flanagan-Keswick lines during summer peak conditions,
- Caused Category B overloads on the Olinda transformer during the spring off-peak[2] conditions and increased pre-Project Category C overloads on the transformer during summer off-peak[3] conditions, and
- Caused Category C overloads on the Olinda-Keswick line and on the WAPA-SMUD tie at Elverta during summer peak conditions.

Proposed Transmission/Generation Projects

Prior to the meeting, Don DeBerry had provided NCI with "change decks" whereby three planned/proposed projects could be added to the powerflow data sets used in assessing Colusa Project impacts. These three projects were as follows:

<u>O'Banion-Elverta/Natomas Project</u>

---

[1] The summer peak cases modeled COI at 4,750 MW and NoCal hydro generation at 95%; the COI flow modeled in these cases is approximately 300 MW higher than the allowable amount from the 2005 summer season operating nomogram.

[2] The spring off-peak cases modeled COI at 4,460 MW and NoCal hydro generation at 87%

[3] The summer off-peak studies modeled the COI at 3,630 MW (northbound) and NoCal hydro generation at 27%

This project, which is being proposed by WAPA, SMUD, and the City of Roseville would consist of constructing a new double-circuit 230-kV line from the O'Banion substation to SMUD's Elverta substation. One of these two lines would be terminated at the SMUD Elverta substation; the other would be used in conjunction with the existing Elverta-Natomas line to form an O'Banion-Natomas line.

The estimated cost of the above project is [redacted]; if funded, it is anticipated to be in service in 2009.

Folsom "Loop" Project

This project would consist of expanding WAPA's Folsom 230-kV substation and looping SMUD's existing Orangeville-Lake 230-kV line into the expanded substation via two short tie lines. The preliminary planning level estimated cost (by WAPA) for this project is [redacted]; an anticipated in service date for it has not yet been identified.

The Roseville Energy Project

This project is a 160 MW (nominal) combined-cycle generating facility presently under construction by the City of Roseville. The project is anticipated to be in-service in December 2007 and will be interconnected with the City's 69-kV system.

Impacts of Proposed Projects on Study Results

Prior to the meeting, NCI modified the pre- and post-Project powerflow data sets using the change decks provided by SMUD and reran the Category B and C contingencies on the modified cases. These studies indicated that the addition of the above projects had the following impacts on the overloads noted in the SIS:

Category A and B

The proposed additions:

- Mitigated both the pre- and post-Project overloads previously noted on the O'Banion-Elverta lines and the Hurley-Carmichael line
- Tended to reduce both the pre- and post-Project overloads previously noted on the various ISO-controlled facilities
- Had little impact on the pre- and post-Project overloads noted on the Olinda transformer during the spring off-peak studies
- Had little impact on the pre- and post-Project overloads noted on the Flanagan-

Shasta and Flanagan-Keswick lines during the summer peak studies.

Category C

The proposed additions:

- Mitigated both the pre- and post-Project overloads previously noted on the Hurley-Carmichael line and the WAPA-SMUD tie at Elverta
- Tended to reduce both the pre- and post-Project overloads previously noted on the various ISO-controlled facilities
- Tended to slightly increase the pre- and post-Project overloads noted on the Olinda transformer during the summer off-peak studies
- Tended to slightly increase the pre- and post-Project overloads noted on the Flanagan-Shasta, Flanagan-Keswick, and Olinda-Keswick lines during the summer peak studies

Mitigation Discussion

The parties subsequently discussed the above and agreed that:

- The proposed transmission projects would, if they are built, mitigate the pre- and post-Project overloads noted on the O'Banion-Elverta lines, the Hurley-Carmichael line, and the Elverta tie. If the transmission projects are not in service prior to the CVP Colusa Project, the Project would have to devise other methods to reduce the post-Project overloads to the pre-Project levels. There may be steps the Project could take that would facilitate development of these two projects.
- The overloads on the Olinda transformer (one Category B and one Category C) could be mitigated by the use of a special protection scheme (SPS) that would drop the Project generation for the critical outages.
- Mitigation of the overloads on the Shasta-Flanagan and Flanagan-Keswick lines would require that they be reconductored.

DATA REQUEST

103. In respect of the submitted SIS, provide electronic copies of *.sav,*.drw. *.dyd and *.swt GE PSLF files and EPCL contingency files in a CD (if available).

RESPONSE

A CD containing these System Impact Study files is included as Attachment 103-1 (three copies are being provided).

BACKGROUND [104 THROUGH 107]

The AFC (Section 5.5, Pages 5-3 to 5-6) indicates that several mitigation measures have been selected to eliminate identified overloads on some non-PG&E transmission facilities. Since these measures include modification and construction of downstream facilities, the applicant needs to comply with the CEQA requirements for environmental analysis of the potential indirect impacts of the proposed project. The facilities and proposed mitigation are:

- Western Area Power Administration (Western) reconductoring its Shasta-Flanigan-Keswick 8.75-mile 230 kV line; and
- Joint building of a new 26-mile O'Banion-Elverta and Natomas double circuit 230 kV line by Western, Sacramento Municipal Utility District (SMUD) and the City of Roseville; and
- Expanding Western's Folsom 230 kV substation and looping in SMUD's existing Orangeville-Lake 230 kV line via two tie lines.

DATA REQUEST

104. a. For the identified mitigation by reconductoring the Western Shasta-Flanigan-Keswick 8.75-mile 230 kV line, provide a full description of the project with one line diagrams showing pre-project and post-project line routes and indicate the expected on-line date.

b. For the environmental settings and impacts, provide a general environmental analysis and any recommended mitigation measures sufficient to meet CEQA requirements for indirect project impacts.* Alternatively, *should the environmental impact analysis be scheduled to be performed by Western as indicated in the AFC, then provide their analysis report.

RESPONSE

a. Western is in the process of developing a project description for the reconductoring of the Shasta-Flanagan-Keswick line. This information will be submitted to the CEC once it has been developed.

b. Western is in the process of conducting its own environmental review and developing a schedule for the reconductoring of the Shasta-Flanagan-Keswick line. This information will be submitted to the CEC once it has been developed.

DATA REQUEST

105. a. For the identified mitigation of building a new 26-mile O'Banion-Elverta and Natomas double circuit 230 kV line jointly by Western, SMUD and the City of Roseville, indicate the expected on-line date.

b. Provide a general environmental analysis sufficient to meet the CEQA requirement for indirect impacts or draft supplemental Environmental Impact Statement (EIS) and Environmental Impact Report (EIR).

RESPONSE

a. As indicated in Attachment 102-2, the O'Banion-Elverta and Natomas project was anticipated to be in service in 2009.

b. The O'Banion-Elverta and Natomas project would occur regardless of whether the CGS was to be built and placed into operation. Western, SMUD, and the City of Roseville are in the process of preparing a Supplemental Environmental Impact Statement and Environmental Impact Report for the O'Banion-Elverta and Natomas project. According to Western, the analysis report (Draft Supplemental EIS/EIR) will be available in April 2007. This report will be submitted to the CEC once it is available for public review.

DATA REQUEST

106. a. For the identified mitigation for expanding Western's Folsom 230 kV substation and looping in SMUD's existing Orangeville-Lake 230 kV line via two tie lines, provide a full description of the project with necessary diagrams showing pre-project and post-project facilities and line routes and indicate the expected on-line date.

b. For the environmental settings and impacts, provide a general environmental analysis and any recommended mitigation measures sufficient to meet CEQA requirements for indirect project impacts. **Alternatively,** ***should the environmental impact analysis is scheduled to be performed by SMUD and/or Western as indicated in the AFC, then provide their analysis report.***

RESPONSE

a. The project description is not available and the expected on-line date has not yet been determined for the Folsom Loop project. After a project description and schedule have been developed, they will be submitted to the CEC. However, recent discussions with SMUD indicate that the rerouting of the pertinent 230-kV lines such that they pass near the Folsom Substation should be completed in early 2007 (to accommodate additions to the road system in the Folsom area).

b. The Folsom Loop project would occur regardless of whether the CGS was to be built and placed into operation. Western and SMUD will conduct their own environmental review of the Folsom Loop project. This analysis report will be submitted to the CEC once it has been prepared.

DATA REQUEST

107. For the above selected downstream mitigation measures comprising new or modified transmission facilities, forward reports or letters from the respective transmission owners including PG&E, Western, SMUD and City of Roseville showing that the mitigation measure(s) selected in their system will effectively offset overload violations and be implemented on a timely basis before the on-line date of the CGC.

RESPONSE

PG&E, Western, and SMUD have all been consulted regarding the above selected downstream mitigation measures. The anticipated on-line service dates for the PG&E and Banion-Elverta projects are discussed in response to Data Requests 101, 102, and 105. Although the on-line dates for the Folsom Loop and Shasta-Flanagan-Keswick projects have not yet been confirmed in reports or letters, ongoing communication with these agencies continues to ensure that these projects would be implemented prior to the expected on-line date of spring 2010 for the CGS.

VISUAL RESOURCES

Technical Area: Visual Resources – Plume
Author: William Walters

DUCT FIRING ASSUMPTIONS

BACKGROUND [108 AND 109]

The applicant's plume analysis is based on 100% duct firing during the November to April seasonal period daylight hours. Staff believes that basis to be overly conservative and wishes to determine a more reasonable worst-case duct firing operation based on both normal load demand patterns and the applicant's air quality duct firing assumptions/hourly limits. The assumption regarding what hours of the day duct firing occurs is critical to the visible plume analysis for this project due to the large size of the duct burner that both decreases exhaust temperature and increases exhaust moisture content, creating conditions much more conducive to visual plume formation than occur during non-duct fired base load operation. Staff needs additional information to determine the proper facility operating conditions for the plume modeling analysis.

DATA REQUEST

108. Please confirm that the applicant will continue to seek air pollutant limits based on 1,040 hours of duct firing for every quarter, and will not seek to change those limits to reflect normal load demand.

RESPONSE

Examples of several different possible operating scenarios were provided in the AFC, in Section 8.1, Air Quality, in an attempt to present reasonable boundaries to the envelope of possible operating conditions and the emission estimates corresponding to those operating conditions. (See Response to Data Request 12.) It was not the intent of that section to establish quarterly limits on any operating parameters other than emissions. For example, the 1,040 hour number was based on using duct firing 16 hours per day, every weekday, for all thirteen weeks of the quarter. This is a reasonable estimate of duct burner usage. The applicant would expect that the conditions of certification could be crafted to allow the plant to operate within its emissions limits without imposing specific limits on individual process parameters.

DATA REQUEST

109. Please provide representative hourly load demand data for the PG&E and/or other load demand sources relevant to the project for no less than one full year.

RESPONSE

Estimates of load demand by hour are not available to the applicant at this time, nor are they expected. Information this specific is not required when designing a new power plant.

METEOROLOGICAL DATA

BACKGROUND

The plume analysis information provided by the applicant does not provide a complete description of the meteorological file used by the applicant. By comparing the air quality modeling files it appears that certain Maxwell surface data parameters were likely used; however, staff needs confirmation of which parameters are from Maxwell and which parameters are from other monitoring sites. The applicant notes in the air quality section (AFC p. 8.1-8 and 8.1-9) that cloud cover data from Red Bluff was used, so staff assumes that this is also the case for the applicant's CSVP modeling analysis. However, the information provided makes no mention of how the other meteorological data necessary for the completion of the plume analysis were obtained. Staff needs additional information and data to analyze appropriateness issues for the meteorological data used by the applicant and to determine if other single source meteorological data available from other Sacramento Valley monitoring stations should be used in place of that used by the applicant.

DATA REQUEST

110. Please identify the monitoring source of the following meteorological data parameters used in the applicant's CSVP modeling analysis:

A. Temperature

B. Wind speed

C. Wind direction

D. Relative humidity

E. Present weather

F. Visible range

G. Cloud Cover

RESPONSE

A. Temperature – Maxwell

B. Wind speed – Maxwell

C. Wind direction – Maxwell

D. Relative humidity – Maxwell

E. Present weather – Red Bluff

F. Visible range – Red Bluff

G. Cloud Cover – Red Bluff

The sources of these data were provided on the modeling CD in the file "ColusaAllwDB.xls."

STACK EXHAUST DATA

BACKGROUND [111 AND 112]

The gas turbine/heat recovery steam generator (HRSG) exhaust conditions for duct firing include a large jump in exhaust temperature between the 59 degree Fahrenheit and 114 degree Fahrenheit ambient conditions. This exhaust temperature jump does not occur during non-duct firing conditions, and staff believes that this may be a function of dry cooling design capacity limitation. Staff needs additional information to understand how the exhaust temperature changes with ambient temperature when duct firing between 59 and 114 degrees Fahrenheit in order to complete the plume modeling analysis.

DATA REQUEST

111. Please describe why the gas turbine/HRSG exhaust temperature changes significantly between the duct firing cases at 59 and 114 degrees Fahrenheit.

RESPONSE

Stack temperature is a complicated function of (among other things) condensate temperature and level of duct firing. Increasing duct firing tends to lower stack temperature, and increasing condensate temperature tends to raise stack temperature. Duct firing is limited such that steam turbine inlet flow limits are not exceeded. Because of this, as ambient temperature increases duct firing increases up to ~59°F. Above 59°F, evaporative coolers go on, so there is a drop in duct firing. Then as ambient temperature further increases above 59°F, with evaporative coolers on, duct firing again increases. Condensate temperature increases relatively slowly as ambient temperature increases below 59°F, but as ambient temperature increases above 59°F, condensate temperature increases at a faster rate, due to the characteristics of the air cooled condenser.

DATA REQUEST

112. Please identify at what ambient temperature the gas turbine/HRSG exhaust temperature, during full duct firing, starts to rise at a greater rate and provide an assumption for the slope of exhaust temperature change from this temperature, whether it is 59 degrees Fahrenheit or not, to 114 degrees Fahrenheit. Alternatively, a chart providing exhaust temperature during duct firing vs. integer values of temperature in Fahrenheit would be acceptable.

RESPONSE

As an approximation, stack temperature during duct firing at ambient temperatures above 59°F can be estimated by the following equation:

$$Tstack = 0.5352 \times Tamb + 129$$

For an ambient temperature of 94°F, estimated stack temperature would be $0.5352 \times 94 + 129 = 179$°F. Note that these temperatures are estimates. The HRSG design has not been finalized, nor has the supplier been selected.

WORKER SAFETY AND FIRE PROTECTION

Technical Area: Worker Safety and Fire Protection
Author: Rick Tyler

BACKGROUND [113 THROUGH 116]

AFC Sections 8.7, 8.7.5.1 and 8.7.5.2 provide discussion on fire suppression and prevention practices and services, along with emergency services. The application identifies the Maxwell Fire Protection District (MFPD) station as having the primary responsibility for fire and emergency off-site response to the project during both construction and operation. The MFPD is staffed entirely by volunteers. In an email to the Energy Commission's CGS project manager, dated 12/6/06, the MFPD expressed concern over its lack of funds and ability to provide adequate response to fires, hazardous materials releases or other emergencies during construction and operation of the Colusa Generating Station (CGS). Additionally, the MFPD expressed concern with the lack funding and training for its volunteer staff and its ability to conduct a safe, timely, and complete response to a fire or other emergency at this type of industrial facility.

DATA REQUEST

113. Please provide information on paramedic services; estimated emergency-specific response times and transport times, for both ground and airborne ambulances to local hospitals and trauma centers.

RESPONSE

See the response to Data Request 88.

DATA REQUEST

114. Provide information on how the proposed project might resolve the concerns expressed by the MFPD to reduce the impacts to the district to less than significant as a direct result of the development of the CGS.

RESPONSE

Construction and plant operational staff will undergo extensive training as detailed in Section 8.7.4 and Tables 8.7-4 and 8.7-5 of the AFC. This will include training on the plant Injury and Illness Prevention Plan; plant Emergency Action plan; plant Hazardous Material Plan; and the Personal Protective Equipment Program. The construction and plant operational staff will also be trained in first-aid and incipient fire protection. In addition, the construction contractor will hold coordination meetings with the Fire Marshall and present temporary and permanent fire protection plans for review and approval. The CGS project plans include the installation of fixed fire suppression systems that will be designed to quickly extinguish a fire, should one occur. These systems include carbon dioxide fire suppression; fire hydrants and hose stations; sprinkler systems and fire water deluge systems for lube oil systems and large power transformers; a 300,000-gallon fire water storage tank; one electric motor-driven fire water pump; one diesel engine-driven fire water pump; one electric motor-driven jockey fire water pump; smoke detectors; combustible gas detectors; and fire extinguishers. Sections 3.4.10 and 8.7.5.2 of the AFC provide a description of the plant fire protection. In addition, safety showers and eyewash stations will be installed in or adjacent to chemical storage and use areas.

DATA REQUEST

115. Please discuss mitigation measures that could resolve the safety and education issues raised by the MFPD for the department volunteers and any other local fire personnel for the construction phase, as well as the operation of the CGS.

RESPONSE

The construction contractor will hold coordination meetings with the Fire Marshall and present temporary and permanent fire protection plans for review and approval. During these reviews, the construction contractor and plant operator will educate the MFPD on the various plant systems and provide needed fire protection education as required.

DATA REQUEST

116. Given the volunteer status of the MFPD, please discuss the CGS project plans, if any, for an on-site fire/emergency response team and related operational staff training programs.

RESPONSE

The CGS project plans include the installation of fixed fire suppression systems that will be designed to quickly extinguish a fire, should one occur. These systems include carbon dioxide fire suppression; fire hydrants and hose stations; sprinkler systems; 300,000-gallon fire water storage tank; one electric motor-driven fire water pump; one diesel engine-driven fire water pump; one electric motor-driven jockey fire water pump; smoke detectors; combustible gas detectors; and fire extinguishers. In addition, safety showers and eyewash stations will be installed in or adjacent to chemical storage and use areas. Plant operational staff will undergo extensive training as detailed in Table 8.7-5 of the AFC. This will include training on PG&E's Injury and Illness Prevention Plan; plant Emergency Action plan; plant Hazardous Material Business Plan; and the Personal Protective Equipment Program. The plant operational staff will also be trained in first-aid and incipient fire protection.