TABLE OF CONTENTS

Page

3.0 FACILITY DESCRIPTION AND LOCATION 3-1
3.1 INTRODUCTION 3-1
3.2 PROJECT LOCATION 3-1
3.3 POWER PLANT SITE DESCRIPTION 3-1
3.4 POWER GENERATION FACILITY 3-2
3.4.1 Power Plant Site Arrangement 3-2
3.4.2 Process Description 3-2
3.4.3 Combustion Turbine-Generators, HRSGs, and Steam Turbine-Generator 3-3
3.4.4 Major Electrical Systems and Equipment 3-6
3.4.5 Fuel Gas Supply and Consumptive Use 3-7
3.4.6 Water Supply and Consumptive Requirements 3-8
3.4.7 Waste Management 3-10
3.4.8 Hazardous Material Management 3-12
3.4.9 Air Emissions Control and Monitoring 3-12
3.4.10 Fire Protection 3-13
3.4.11 Plant Auxiliary and Safety Systems 3-14
3.5 POWER PLANT CIVIL/STRUCTURAL FEATURES 3-15
3.5.1 CTGs, HRSGs, STG, Air Cooled Condenser, and Balance-of-Plant Equipment 3-16
3.5.2 Stacks 3-16
3.5.3 Buildings 3-16
3.5.4 Water Storage Tanks 3-16
3.5.5 Roads and Fencing 3-16
3.5.6 Sanitary Wastewater System 3-17
3.5.7 Site Drainage 3-17
3.5.8 Earthwork 3-18
3.5.9 Ammonia Storage Facility 3-18
3.6 PROJECT CONSTRUCTION 3-18
3.6.1 Power Generation Facility 3-18
3.6.2 Construction Plan 3-19
3.6.3 Offsite Roadway Improvements 3-20
3.6.4 Construction Land Disturbance Area 3-22
3.7 STARTUP AND COMMISSIONING 3-23
3.8 FACILITY OPERATION 3-23
3.9 SAFETY AND RELIABILITY 3-24
3.9.1 Facility Safety 3-24
3.9.2 Transmission Line Safety 3-25
3.9.3 Reliability and Availability 3-26
3.9.4 Applicable Laws, Ordinances, Regulations and Standards Related to Safety and Reliability 3-30
3.10 APPLICABLE LAWS, ORDINANCES, REGULATIONS AND STANDARDS (LORS) 3-32
3.10.1 Engineering Geology 3-32
3.10.2 Civil and Structural Engineering 3-32
3.10.3 Mechanical Engineering 3-32
3.10.4 Electrical and Control Systems Engineering 3-32
3.10.5 Seismic Design 3-32
3.11 INVOLVED AGENCIES AND AGENCY CONTACTS 3-32
3.12 REFERENCES 3-35

TABLES

Table 3.4-1 Heat and Material Balance Case Descriptions
Table 3.4-2 Major Mechanical Equipment
Table 3.4-3 Natural Gas Analysis
Table 3.4-4 Daily and Annual Average Water Consumption Requirements
Table 3.4-5 Water Balances
Table 3.4-6 Tehama-Colusa Canal Water Analysis
Table 3.4-7 Anticipated Hazardous Material Usage and Storage During Operation
Table 3.5-1 Major Structures
Table 3.6-1 Construction Staff by Trade
Table 3.6-2 Daily Average and Peak Construction Traffic
Table 3.6-3 Estimated Land Disturbance Areas for Construction and Operation
Table 3.8-1 Plant Operation Workforce
Table 3.9-1 Typical Audible Noise from Corona Discharge
Table 3.9-2 Major Equipment Redundancy
Table 3.10-1 Project Facility Design Laws, Ordinances, Regulations, and Standards and Compliance

FIGURES

Figure 3.2-1 Project Location Map
Figure 3.3-1 Site Plan
Figure 3.4-1 Plot Plan
Figure 3.4-2 South Elevation, 660 MW Combined Cycle Plant
Figure 3.4-3 West Elevation, 660 MW Combined Cycle Plant
Figure 3.4-4A Process Flow Diagram – Power Block: ACC, July Peak, Fired
Figure 3.4-4B Process Flow Diagram – Power Block: ACC, ISO, Fired
Figure 3.4-4C Process Flow Diagram – Power Block: ACC, ISO, Unfired
Figure 3.4-4D Process Flow Diagram – Power Block: ACC, ISO, Minimum Load, Unfired
Figure 3.4-5A Water Balance Diagram (Sheet 1)
Figure 3.4-5B Water Balance Diagram (Sheet 2)
Figure 3.4-6 Electrical Main One-Line Diagram
Figure 3.4-7 Electrical One-Line Diagram for Auxiliary Systems
Figure 3.4-8 Electrical 230 kV Switchyard One-Line Diagram
Figure 3.5-1 Pre-Construction Runoff and Drainage Pattern Plan
Figure 3.5-2 Site Grading – Generating Facility Stormwater Management and Erosion Control Plan
Figure 3.5-3 Site Grading – Construction Laydown Stormwater Management and Erosion Control Plan
Figure 3.5-4 Conceptual Design – Plant Access Road
Figure 3.5-5 Conceptual Design – Stormwater Detention Basin
Figure 3.5-6 Aqueous Ammonia Storage and Spill Containment
Figure 3.6-1 Project Construction Schedule
Figure 3.6-2 Construction Staff by Month
Figure 3.6-3 Construction Staff Vehicles, One-Way Peak Trips
Figure 3.6-4 Heavy and Light Trucks, One-Way Peak Trips
Figure 3.6-5 Conceptual Design – Teresa Creek Bridge
Figure 3.6-6 Conceptual Design – Glenn-Colusa Canal Bridge

APPENDICES [in Volume II]

Appendix A Civil Engineering Design Criteria
Appendix B Structural Engineering Design Criteria
Appendix C Mechanical Engineering Design Criteria
Appendix D Control Systems Engineering Design Criteria
Appendix E Electrical Engineering Design Criteria

3.0 FACILITY DESCRIPTION AND LOCATION

3.1 INTRODUCTION

The proposed Colusa Generating Station (CGS) consists of a natural gas–fired combined cycle power plant and associated linear facilities. The project will have a nominal electrical output of 660 MW with commercial operation planned by late spring 2010. The project will be fueled with pipeline-quality natural gas that will be delivered to the power plant site via a new 8-inch, 1,500-foot pipeline owned, operated, and maintained by PG&E and interconnecting to PG&E's gas transmission system. The power plant will supply power to the PG&E electrical transmission grid by connecting the plant switchyard with PG&E's existing 230 kV north-south transmission lines located approximately 1,800 feet east of the project site.

Water for the project will be provided by the Glenn-Colusa Irrigation District (GCID) via a new 2,700-foot-long 4-inch pipeline from the Tehama-Colusa Canal, which is located to the west of the project site. The project will use an air cooled condenser as the ultimate heat sink and will employ a zero liquid discharge system that will allow water to be recycled through the plant. The combination of these technologies will minimize the required consumptive use of water for plant operation to the absolute minimum technically possible. No water is being used for the plant heat sink systems. Usage is restricted to water for demineralization for the steam cycle, for combustion turbine inlet air evaporative cooling, fire water, service water, and potable water for eyewash stations, drinking, showers, and sanitation.

Process wastewater will be processed by a zero liquid discharge system; no wastewater will be discharged from the plant. Most of the water from the waste stream will be recycled within the plant, with a small amount evaporated; and the solids, which are nonhazardous, will be transported to an appropriate local landfill.

3.2 PROJECT LOCATION

The CGS will be located in the western Sacramento Valley, an agricultural region of the state. The project site is situated in Colusa County approximately 4 miles to the west of I-5, a primary north-south travel route through California. The site is approximately 14 miles north of the farming community of Williams and 72 miles north of Sacramento.

The project will be located within a 100-acre site leased by E&L Westcoast. This site is within the Holthouse Ranch and is found within the eastern half of Section 35, Township 18 North, Range 4 West, Mount Diablo Base and Meridian. The project site consists of 100 acres of a 451-acre parcel (Assessor's Parcel Number (APN) 11-040-024, Colusa County).

The location of the proposed project is shown on Figure 3.2-1, which also illustrates nearby roads and other features.

3.3 POWER PLANT SITE DESCRIPTION

The power plant, stormwater detention basin, and switchyard will occupy approximately 31 acres within the fenced 100-acre site, as shown on Figure 3.3-1. The plant access road, new transmission interconnection, and access road to the water supply intake on the Tehama-Colusa Canal will require an additional 2.7 acres. Approximately 97 acres will be disturbed during construction of the power plant, switchyard, road/bridge improvements, and linear facilities (the plant access road, proposed transmission line interconnection, natural gas pipeline, and water supply pipeline). Of these 97 acres, approximately 43 acres are for the temporary construction office area, construction parking, and construction equipment and material laydown area (Figure 3.2-1); this area will be returned to pre-construction conditions. The 100-acre site is currently undeveloped agricultural land used for grazing cattle. The terrain where the

plant will be located is rolling hills with topography ranging from 170 to 190 feet above mean sea level (msl). Cut and fill will be required to provide a level area and noncompressible soils for the power generation facility and switchyard. The plant finished grade elevation is estimated to be 183 feet above msl.

3.4 POWER GENERATION FACILITY

The following sections describe the power generation facility site arrangement, process flow diagrams and heat and material balances, major equipment and ancillary systems, including buildings and structures that constitute the proposed combined cycle power plant. The combined cycle power plant will be designed, constructed, and operated in accordance with applicable laws, ordinances, regulations, and standards (LORS). In addition, the power plant facilities will be designed and constructed in accordance with the design criteria provided in Appendices A through E.

3.4.1 Power Plant Site Arrangement

The site arrangement drawings—plot plan, south elevation, and west elevation of the proposed power generation facility—are shown on Figures 3.4-1, 3.4-2, and 3.4-3, respectively.

A 20-foot-wide paved road (Dirks Road) provides access to the existing PG&E Delevan Compressor Station. Access to the power plant site will be provided by a new 30-foot-wide, 2,500-foot-long extension of the existing access road and PG&E Road Easement 295 official record 442, as illustrated on Figure 3.3-1.

Approximately 20 acres are required to accommodate the power generation facility. The power generation facility includes the staff parking area, control/administration/warehouse building, air cooled condenser, power block area, gas metering and pressure regulating station, storage tanks, and water and wastewater treatment facilities. The switchyard will occupy approximately 8.2 acres north of the power generation facility. A stormwater detention basin will occupy approximately 2.5 acres at the southwest corner of the facility.

During construction, the project will use about 43 acres for temporary construction office area, construction parking, and construction equipment and material laydown area located north and east of the power plant. Approximately 5 acres will be disturbed for the Glenn-Colusa Canal Bridge, and about 3.6 acres will be disturbed for the gas and water pipelines.

The water supply intake will be at the Tehama-Colusa Canal. Access to the intake will be provided by a new 12-foot-wide, 2,700-foot-long unpaved road situated between the power plant site and the canal, along the water pipeline alignment.

3.4.2 Process Description

This section describes the power generation process and thermodynamic cycle employed by the proposed project.

The plant power generation facility (power block) consists of two combustion turbine-generators (CTGs) equipped with Dry Low-NO_X combustors and inlet air evaporative coolers; two heat recovery steam generators (HRSGs) equipped with duct burners; one steam turbine-generator (STG) with a multi-cell air cooled condenser; and associated auxiliary systems and equipment. Fuel for the CTGs and duct burners is pipeline-quality natural gas.

The net generating capacity of the combined cycle system will be approximately 660 MW. The actual net output of the system will vary in response to ambient air temperature conditions, use of evaporative

coolers, amount of auxiliary load, generator power factor, firing conditions of the combustion turbines, the amount of supplemental duct firing to the HRSG, and other operating factors. Full load output (net) of the facility under expected operating conditions will range from approximately 640 MW to 667 MW. Annual average ambient conditions and the assumed operating conditions produce the nominal rating.

Annual net output is estimated to be 2,700 GWhr for the full HRSG duct-fired mode and 2,100 GWhr for the unfired mode, each mode operating for 4,030 hours per year.

The plant can operate at part load with either or both of the CTGs operating down to minimum load while keeping the STG on-line. Operational modes will be driven by good operating practices, market conditions, and dispatch requirements.

Overall annual availability of the power plant is expected to be at least 92 percent. The power plant's annual output will depend on market conditions and dispatch requirements. The design of the power plant provides for operating flexibility (i.e., ability to start up, shut down, turn down, and provide peaking output) so that operations may be readily adapted to changing conditions in the energy and ancillary services markets.

Process flow diagrams of the power plant are shown on Figures 3.4-4A through 3.4-4D and 3.4-5A and 3.4-5B. Figures 3.4-4A through 3.4-4D show four different operating cases, which vary with ambient temperature, relative humidity, and operating conditions. Table 3.4-1 identifies the Heat and Material Balances for each of the four operating cases. Figures 3.4-5A and 3.4-5B show the plant water balances, which include the combustion turbine (CT) evaporative cooling water system and the water storage and treatment systems. The power plant's thermodynamic cycle is described briefly below.

Air flows through the CTG inlet air filter, evaporative coolers, and associated ductwork to the CTG compressor section. The compressed air from the compressor section flows to the CTG combustor section where it is mixed with compressed natural gas and ignited. The hot combustion gases flow through the CTG turbine expander section, which drives both the CTG compressor section and the separate electric generator. The combustion gases exit the turbine expander section and enter the inlet duct of the HRSG, which is also equipped with duct burners. The burners further increase the temperature of the exhaust gases, which then enter the HRSG steam generation section.

In the HRSG's steam generation section, heat from the combustion gases is transferred to water pumped through the HRSG steam generation components (economizers, evaporators, drums, superheaters, etc.). The water is converted to steam at three pressures: high pressure (HP), intermediate pressure (IP) and low pressure (LP). Each of these flows is superheated and is delivered to the STG. HP steam admitted to the HP section of the STG expands through the HP section and exits the HP section as "cold" reheat steam. The "cold" reheat steam is combined with superheated IP steam and returned to the reheater section of the HRSG, where it is reheated and returned to STG, continuing its expansion and driving the generator. Reheating the intermediate pressure steam improves the overall steam cycle efficiency. Exhaust steam from the STG is directed downward into a steam duct to the air cooled condenser where it is condensed into water and recycled back to the HRSG as boiler feed water. The absorbed heat from the air cooled condenser is rejected to the atmosphere.

3.4.3 Combustion Turbine-Generators, HRSGs, and Steam Turbine-Generator

This section describes the major components and systems of the proposed project: the CTGs, HRSGs, STG, and Heat Rejection (Cooling) System. A listing of major equipment is provided in Table 3.4-2.

3.4.3.1 Combustion Turbine-Generators

Thermal energy is produced in both of the two CTGs through the combustion of natural gas, and is converted into mechanical energy in the CTG turbine that drives the CTG compressor and electric generator. The CTGs are Model 7FA machines and will be supplied by GE Power Systems.

Each CTG will consist of a heavy-duty, single-shaft combustion turbine-generator and associated auxiliary equipment. The CTGs will be equipped with dry low NO_X combustors designed for natural gas and are designed to meet the following functional requirements:

- Air emissions at the gas turbine exhaust shall not exceed the levels described in Section 8.1, Air Quality.
- Noise emissions shall not exceed the near-field and property line levels described in Section 8.5, Noise.
- Each CTG shall be capable of operation across the broad range of 50 to 100 percent load while meeting required air emission performance.

The CTGs will be equipped with the following accessories required to provide efficient, safe, and reliable operation:

- Inlet air filters and on-line filter cleaning system
- Inlet air evaporative coolers
- On-line and off-line compressor wash system
- Metal acoustical enclosures
- Fire detection and protection system
- Lubrication oil system, including oil coolers and filters
- Generator coolers
- Starting system, auxiliary power system, and control system

The metal acoustical enclosures that contain the CTGs and accessory equipment will be located outdoors.

3.4.3.2 Heat Recovery Steam Generators

The HRSGs provide for the transfer of heat from the CTG exhaust gases to condensate and feedwater to produce steam.

The HRSGs will be multi-pressure, natural circulation boilers equipped with transition ducts and duct burners, and 19-foot-diameter exhaust stacks 175 feet tall, based on air quality modeling results. Pressure components of each HRSG include an LP economizer, LP evaporator, LP drum, LP superheater, IP economizer, IP evaporator, IP drum, IP superheater, HP economizer, HP evaporator, HP drum, HP superheater, and reheaters.

Superheated high-pressure steam is produced in the HRSG and flows to the steam turbine throttle inlet. The exhausted cold reheat steam from the steam turbine is mixed with intermediate pressure steam from the HRSG and is reintroduced into the HRSG through the reheaters. The hot reheat steam flows back from the HRSG into the STG. LP superheated steam from the HRSG is admitted to the LP sections of the STG.

Steam that is exhausted from the STG is condensed in an air cooled condenser. The condensate is pumped from the air cooled condenser by condensate pumps back to the HRSG. The condensate is preheated by an HRSG feedwater heater. Boiler feedwater pumps send the feedwater through

economizers and into the boiler drums of the HRSG, where steam is produced, completing the steam cycle.

Duct burners are installed in the HRSG transition duct between the HP superheater and reheat coils. Through the combustion of natural gas, the duct burners heat the CTG exhaust gases to generate additional steam.

Each HRSG is equipped with a selective catalytic reduction (SCR) system that uses aqueous ammonia in conjunction with a catalyst bed to reduce NO_X in the CTG exhaust gases. The catalyst bed is contained in a catalyst chamber located within each HRSG. Ammonia is injected upstream of the catalyst bed. The subsequent catalytic reaction converts NO_X to nitrogen and water, resulting in a reduced concentration of NO_X in the exhaust gases exiting the stack.

An oxidation catalyst located within each HRSG reduces the concentration of carbon monoxide in the exhaust gases exiting the stack. The oxidation catalyst also reduces the concentration of volatile organic compound emissions.

3.4.3.3 Steam Turbine-Generator

The STG system includes a reheat steam turbine-generator, a governor system, a steam admission system, and a gland steam system, a lubrication oil system including oil coolers and filters, and generator coolers.

Steam from the HP superheater, reheater, and LP superheater sections of the HRSG then enters the corresponding sections of the STG, where it expands and drives the steam turbine and its generator. Upon exiting the turbine, the steam enters the air cooled condenser where it is condensed to water.

3.4.3.4 Cooling System for Heat Rejection

The heat rejection system of the steam cycle consists of a deaerating type air cooled condenser and closed air cooled auxiliary cooling water system. The air cooled condenser receives exhaust steam from the LP section of the STG and condenses it to liquid, then deaerates the condensate for return to the HRSGs. The air cooled condenser is a multi-cell tubular heat exchanger with wet, saturated steam condensing on the tube side and air flowing across the outside of the tubes to provide cooling. The tube side of the condenser is designed to operate under a full vacuum, with an absolute pressure of 8.0 inches of mercury (in. Hg) at design ambient conditions.

The STG exhaust steam enters the air cooled condenser through a main duct, and is distributed among multiple cells. Each cell has a mechanical draft fan which forces air across finned tubes containing the steam. The air condenses the steam, and the condensate flows down to a collection header. The collection header empties into a deaerator where makeup water is also added. A steam jet air ejector removes oxygen and any noncondensable gases from the condensate. The condensate flows down into a condensate storage tank, and then is pumped back into the HRSGs via the vacuum condensate pumps.

The closed (air cooled) auxiliary cooling water system provides for indirect cooling of the CTGs' and STG's lube oil, hydraulics, and generators. The auxiliary system consists of pumps that pump the cooling medium (water/glycol mixture) through an air cooled fin fan heat exchanger where the heat is rejected to the air. The cooling medium passing through the plate and frame exchanger cools the lube and hydraulic oil and is returned to the auxiliary cooling water pump suction.

3.4.3.5 Project Noise Control Features

As part of the facilities design, specific noise control equipment will be incorporated:

- Inlet air silencer (8 feet for up and over with lined elbow)
- Gas turbine – enclosure
- Accessory compartment – enclosure
- Acoustical barrier walls around the exhaust diffuser and duct
- HRSG stack silencer

The incorporation of these noise control devices has been included in the formulation of equipment noise generation values used in the noise analysis contained in Section 8.5.

3.4.4 Major Electrical Systems and Equipment

This section describes the major electrical systems and equipment for the proposed project. A one-line electrical diagram of the major and auxiliary plant electrical systems is presented on Figures 3.4-6 and 3.4-7.

Step-up transformers and plant switchyard power will be generated at 18.0 kV by the two CTGs and one STG, and then stepped up to 230 kV for delivery to the power plant's interconnection with PG&E's transmission grid. Each of the plant's three generators will be connected by an 18 kV isolated phase bus duct to a dedicated 18-230 kV oil-filled, step-up transformer. Each step-up transformer is installed on a concrete pad/pit designed to contain the transformer oil in the event of a leak or spill.

The plant will be interconnected with PG&E transmission lines using a six-bay, ten-position breaker and a half configuration switchyard. Two positions of this switchyard will be used to connect the plant output to the switchyard. The high voltage side of one CTG transformer will be connected on one of the two positions of the switchyard. The high voltage side of two step-up transformers (one from one CTG and the other from the STG) will be connected on the other position of the switchyard. PG&E's existing four 230 kV transmission lines, which are located east of the plant and run north–south, will be looped into the new plant switchyard. A one-line electrical diagram of the 230 kV switchyard is shown on Figure 3.4-8. Additional information on the transmission interconnection with the PG&E transmission system is provided in Chapter 5, Transmission Facilities.

3.4.4.1 Electrical System for Plant Auxiliaries

Power for plant auxiliaries will be supplied at 4,160 volts (V) from the new 230 kV plant switchyard. Two 18 kV–4,160 V oil-filled, step-down, auxiliary transformers will be connected to the two CTGs between the generator breakers and the CTG main step-up transformers. The low voltage side of the auxiliary transformers will be connected to 4,160 V switchgear. This configuration allows the power for plant auxiliaries to be supplied from the plant switchyard regardless of whether the CTGs and STG are on-line or off-line. The auxiliary transformers will rest on concrete pads designed to contain the transformer oil in the event of a leak or spill.

The 4,160 V switchgear will distribute power to the plant's 4,160 V motors, to the CTG starting systems, and to 4,160–480 V auxiliary transformers. The low voltage side of the 4,160–480 V transformers will be connected to 480 V switchgear. The 480 V switchgear will distribute power to the plant's large 480 V loads and to 480 V motor control centers (MCCs). The MCCs will distribute power to the plant's intermediate 480 V loads and to power panels serving small 480 V loads.

The MCCs will also distribute power to 480–277 V isolation transformers serving 277 V single-phase loads and to 480–208/120 transformers serving 208 V and 120 V loads.

3.4.4.2 DC Power Supply System

The facility shall include two 125 V DC battery chargers for each battery system. These two chargers shall be powered from two separate sources of AC power.

Under normal operating conditions, the battery charger supplies DC power to the DC loads. The battery charger receives 480 V, three-phase AC power from the electrical system serving plant auxiliaries. The battery charger continuously charges the battery bank while supplying DC power to the DC loads. Under abnormal or emergency conditions when AC power is not available, the battery bank supplies DC power to the DC loads. The battery bank will be sized to power the DC loads for a sufficient amount of time to provide for safe and damage-free shutdown of the power plant. Recharging of the battery bank occurs whenever AC power becomes available.

The DC power supply system provides power for critical control circuits, power for control of the 4160 V and 480 V switchgear, and power for DC emergency backup systems. Emergency backup systems include DC lighting and DC lube oil and seal oil pumps for the CTGs and STG.

3.4.4.3 Uninterruptible Power Supply System

An uninterruptible power supply (UPS) system (120 V, single-phase) provides power to essential instrumentation, critical equipment loads, safety systems, and equipment protection systems that require uninterruptible AC power. This system and the DC power supply system will be designed to ensure that critical safety and equipment protection control circuits are always energized and able to function in the event of unit trip or loss of AC power.

This system will consist of an inverter, a solid-state transfer switch, a manual bypass switch, an alternate AC source transformer and voltage regulator, and AC panelboards.

The DC power supply system is the normal source of power to the UPS system. Power flows from the DC power supply system through the inverter to the AC panelboards. The solid-state transfer switch continuously monitors both the inverter output and the alternate AC source. Upon loss of the inverter output and without interruption of power, the transfer switch automatically transfers essential service AC loads from the inverter output to the alternate AC source. The manual bypass switch enables isolation of the inverter and transfer switch for testing and maintenance without interruption of power to the essential service AC loads.

3.4.4.4 Standby Diesel Generator

A 1,000 kW standby diesel generator will be connected to the essential system bus during extended utility outages. This bus will maintain a safe shutdown mode by supplying the plant essential loads including the battery chargers, essential AC system, selected HVAC, and loads required for safe shutdown of the CTGs, HRSGs and STG as required.

3.4.5 Fuel Gas Supply and Consumptive Use

Estimated fuel consumption at base load and 59°F ambient without duct firing is 3,214 million British thermal units (Btu) per hour, lower heating value. The estimated fuel consumption at the same conditions with duct firing is 4,426 million Btu per hour. Table 3.4-3 describes the expected properties of the natural gas to be supplied by PG&E.

The natural gas will be supplied at a pressure of 545 to 855 pounds per square inch gauge (psig) and will be letdown to a pressure of about 500 pounds psig at the plant, filtered, and pressure-regulated prior to entering the CTG and duct burner systems. Safety pressure relief valves will be provided downstream of the pressure regulation station. Each CTG fuel gas system will include a fuel gas performance heater, which uses hot water from the HRSG.

Natural gas will be supplied to the project site via a newly constructed 1,500-foot-long pipeline that will interconnect to PG&E's gas transmission system, as shown on Figure 3.3-1. A description of the pipeline, interconnection, and gas supply is given in Chapter 6, Natural Gas Supply.

3.4.6 Water Supply and Consumptive Requirements

This section provides estimated consumptive use of water and describes its source, quality, and proposed water treatment systems. The power plant's various water uses include makeup for the HRSGs, water for the CTG inlet air evaporative coolers, service water system, potable water, and fire protection water. A water balance diagram is presented on Figures 3.4-5A and 3.4-5B. The flow rate key to these diagrams is provided in Table 3.4-5.

3.4.6.1 Water Consumption Requirements

Average and annual water consumption requirements are summarized in Table 3.4-4. Average requirements are based on continuous plant consumption under an average annual operating condition of 59ºF dry bulb temperature (DBT) and 60 percent relative humidity. The CTG inlet air evaporative coolers are not in-service and there is no duct firing. Maximum requirements are based on water consumption at maximum operating conditions of 94ºF (DBT) and 25 percent relative humidity. Both CTG inlet air evaporative coolers are in-service at maximum duct firing. Annual requirements are derived from the weighted average requirements based on the plant operating 50 percent of the time with duct burners on, and with the CT evaporative coolers operating for six months out of the year (May to October). Average annual usage assumes that the plant has an equivalent availability of 100 percent, or 8,760 operating hours per year. Table 3.4-5, Water Balances, provides the estimated continuous water flow rates in gallons per minute corresponding to the heat and material balance case descriptions presented in Table 3.4-1.

3.4.6.2 Water Source and Quality

Water will be provided by the Glenn-Colusa Irrigation District (GCID) via a new 2,700-foot-long, 4-inch pipeline from the Tehama-Colusa Canal (see Figure 3.3-1). The water will be used to satisfy various process needs, including makeup water for the HRSG and auxiliary boiler, water for the combustion turbine inlet air evaporative coolers, general plant service water, stored firewater, and potable water. A sample water quality analysis from the Tehama-Colusa Canal is presented in Table 3.4-6.

The facility will include a raw water/firewater storage tank that has a combined nominal capacity of approximately 400,000 gallons. Its capacity will include storage of 61,000 gallons of water to satisfy 8 hours of plant operation at summer peak conditions in case of water supply interruption, and 300,000 gallons of water dedicated to the plant's fire protection system. Any excess water in the tank would be for plant usage. The tank will be totally enclosed. A more extensive discussion of the project's water supply and conveyance is given in Chapter 7, Water Supply.

3.4.6.3 Water Treatment

The Water Balance Diagrams, Figures 3.4-5A and 3.4-5B, show the power plant's water treatment processes and the distribution of treated water. Water treatment varies according to the quality required for each of the plant's various water uses: CTG inlet air evaporative coolers, HRSG makeup, service water, and potable water. The following sections describe the plant's water uses and treatment.

3.4.6.4 CTG Evaporative Coolers

Makeup water for the CTG evaporative coolers is supplied from the raw water/firewater storage tank. Water evaporates from the cooler and passes through the CTG. Minerals are concentrated in the remaining water that is not evaporated. To prevent minerals from concentrating to levels above the CTG design, the remaining water is removed as blowdown to approximately 5 cycles of concentration. The blowdown is routed to the evaporator in the zero liquid discharge system, where water is recovered for reuse in the plant and the remaining salts are concentrated for disposal off site. As required, makeup water is added to replace the water that is lost to evaporation and blowdown.

3.4.6.5 HRSG Makeup and Steam/Feedwater Conditioning and Monitoring

Water for the HRSGs must meet stringent specifications for suspended and dissolved solids. To meet these specifications, recovered (distilled) water from the evaporator of the zero liquid discharge system is routed to the demineralizer. Demineralization is accomplished using ion exchange equipment. Demineralization final treatment is by electro-deionization. Storage of demineralized product water is provided in a covered demineralized water storage tank with a nominal capacity of 200,000 gallons. This provides sufficient capacity for 48 hours of peak load operation coinciding with one redundant train of demineralizers not operating.

Additional conditioning of the condensate and feedwater circulating in the steam cycle is provided by means of a chemical feed system. To minimize corrosion, an oxygen scavenger for dissolved oxygen control and an alkaline solution for pH control are fed into the condensate. To minimize scale formation, a solution of alkaline phosphate is typically fed into both the HP and IP drums of the HRSG. The chemical feed system includes oxygen scavenger chemical containers, alkaline solution chemical containers, phosphate solution chemical containers for the HP drum, and phosphate solution chemical containers for the IP drum. Each of the chemical containers is provided with two full-capacity metering pumps, except the phosphate chemical feed system, which has two full-capacity metering pumps (one for HP, and one for IP), plus a common spare.

A steam cycle sampling and analysis system monitors the water quality at various points in the plant's steam cycle. The resulting water quality data are used to guide adjustments in water treatment processes and chemical feeds, and to determine the need for other corrective operational or maintenance measures. Steam and water samples are routed to a sample panel where steam samples are condensed and the pressure and temperature of all samples are reduced as necessary. The samples are then directed to automatic analyzers for continuous monitoring of conductivity, dissolved oxygen, and pH. All monitored values are indicated at the sample panel and critical values are transmitted to the plant control room. Grab samples are periodically obtained at the sample panel for chemical analyses that provide information on a range of water quality parameters.

3.4.6.6 Service Water

Utility stations in various locations of the facility provide service water to washdown tools, equipment, and areas adjacent to the utility station.

3.4.6.7 Potable Water

The raw water supplied by GCID will be treated for potable water use. The potable water will be used for toilets, showers, emergency eyewash, and shower stations. Bottled water will be used for drinking.

3.4.7 Waste Management

This section describes the waste management processes leading to proper collection, treatment, and disposal of wastes. Wastes include wastewater, solid nonhazardous waste, and hazardous waste. Additional information on waste management can be found in Section 8.13.

3.4.7.1 Wastewater

The Water Balance Diagrams, Figures 3.4-5A and 3.4-5B, show the power plant's wastewater streams and the disposition of wastewater. There are two separate wastewater collection systems. The first is the plant wastewater system, which collects wastewater from the CTG evaporative coolers and HRSGs, water treatment system, chemical feed area drains, and general plant drains. This system is designed as a zero liquid discharge system, such that most process wastewater is recycled within the plant, with a small amount evaporated or concentrated in the dryer. No wastewater will be discharged to surface waters. The second is the sanitary system, which collects sanitary wastewater from sinks, toilets, and other sanitary facilities and discharges it to an onsite septic system. The sanitary system is based on gravity flow and may include lift stations if required.

The plant wastewater system collects all wastewater generated in the operation of the plant and delivers it to the zero liquid discharge system. Wastewater streams, including CTG evaporative cooler and HRSG boiler blowdowns, are recycled through the water purification system and are returned to the demineralizer as a makeup supply. Reject streams are concentrated in a dryer, which reduces the waste stream to solids. These solids will be disposed of by trucking the waste off site to an approved landfill.

The plant's wastewater streams and treatments are described below in more detail.

Evaporative Cooler Blowdown

The concentration of dissolved solids in the evaporative cooler water is maintained below given limits, primarily for total dissolved solids (TDS), by withdrawing a portion of the evaporative cooler water (i.e., evaporative cooler blowdown) and replacing it with fresh makeup water from the raw water storage tank and recycling the evaporative cooler blowdown. The blowdown stream is sent to the demineralization water treatment system for reuse.

HRSG Blowdown

Water circulating in the plant's steam cycle accumulates dissolved solids that must be maintained below given limits to prevent deposition of solid particles on the steam turbine blading. The concentration of dissolved solids is maintained below such limits by withdrawing a portion of the water from the HRSG steam drums (i.e., HRSG blowdown), and replacing it with product water from the demineralization process described previously. HRSG blowdown is routed to the demineralization water treatment system for reuse.

Water Treatment System Demineralizer

The water treatment system demineralizer includes a micro filtration system, first and second pass reverse osmosis (RO) systems, and an electro-deionizer unit. The demineralizer receives recycled feed water that is distillate water from the evaporator unit of the zero liquid discharge system. Demineralized water from the demineralizer is sent to the demineralized water storage tank.

The electro-deionizer equipment consisting of a membrane and ion exchange system will continuously produce a concentrated reject water stream that contains all of the dissolved solids removed from the

distillate water stream. This reject water stream will be routed to the evaporator and dryer of the zero liquid discharge system.

Chemical Feed Area Drainage

Chemical feed area drainage consists of spillage, chemical tank overflows, maintenance operations, and chemical area wash downs, and is collected in corrosion-resistant piping separate from the general plant drainage system. The chemical feed area drainage is routed to a neutralization tank, adjusted to neutral pH, and then routed to the evaporator and dryer of the zero liquid discharge system.

General Plant Drainage

General plant drainage consists of wastewater collected by sample drains, equipment drains, equipment leakage, and area wash downs. Wastewater collected in the general plant drainage system is routed to the storm drain system. General plant drainage that potentially contains oil or grease is routed through an oily water separator, combined with the plant process wastewater and then discharged into the storm drain system. Water is then conveyed to the stormwater detention basin.

3.4.7.2 Solid Nonhazardous Waste

The construction, operation, and maintenance of the plant generates nonhazardous solid wastes typical of power generation facilities. Wastes generated during construction generally include soil, scrap wood, excess concrete, empty containers, scrap metal, and insulation. Typical wastes generated during operation and maintenance include scrap metal and plastic, insulation material, paper, glass, empty containers, sludge from the zero liquid discharge system, and other miscellaneous solid wastes. These materials are collected for recycling or transfer to landfills in accordance with applicable regulatory requirements. Descriptions of the types of wastes likely to be generated and their related quantities are provided in Section 8.13.2 and shown in Tables 8.13-1 and 8.13-4.

3.4.7.3 Hazardous Waste

Hazardous wastes will be generated as a result of project construction, operation, and maintenance. The majority of hazardous waste generated during construction will be liquid wastes such as waste oil and other lubricants from machinery operations, solvents used for cleaning and materials preparation, waste paints, and other material coatings. A description of the types and quantities of hazardous wastes that are likely to be generated is given in Section 8.13.2 and shown in Tables 8.13-1 and 8.13-4. The methods used to properly collect and dispose or recycle hazardous waste generated by the plant depend on the nature of the waste.

Hazardous wastes generated by the plant include spent selective catalytic reduction (SCR) and oxidation catalyst, used oil filters, used oil, and chemical cleaning wastes. Spent SCR and oxidation catalyst will be recycled by the catalyst supplier. Used oil filters will be recycled or disposed of to an offsite disposal facility. Used oil will be recovered and recycled by a waste oil recycling contractor.

Chemical cleaning wastes consist of acid and alkaline cleaning solutions used for pre-operational chemical cleaning of the HRSG pressure parts and steam cycle piping systems, acid cleaning solutions used for periodic chemical cleaning of the HRSGs, and wash water used in periodic cleaning of the HRSG, CTG, and STG. These wastes, which may have elevated concentrations of metals, will be tested. If allowable, they will be routed to the zero liquid discharge system. If hazardous, they will be disposed of in accordance with all applicable laws, ordinances, regulations, and standards. These and all other hazardous solid and liquid wastes will be disposed of in accordance with applicable laws, ordinances, regulations, and standards.

Workers will be trained to handle waste generated at the site as described in Section 8.7, Worker Safety and Health.

3.4.8 Hazardous Material Management

A variety of hazardous materials will be used and stored during construction and operation of the proposed project. All hazardous materials will be stored in appropriate storage facilities. Bulk materials will be stored in tanks, and other materials will be stored in delivery containers. All hazardous material storage and use areas will be designed to contain leaks and spills. Containment structures will be provided with sufficient volume to contain the spill of a full tank without overflow. For multiple tanks located within a single containment structure, the largest single tank will be used to size the containment volume.

The aqueous ammonia storage tanks for the SCR system will be provided with a containment structure and other safety features, as described in Section 3.5.9, Ammonia Storage Facility.

Hydrogen for the CT and ST hydrogen-cooled generators will be stored in a bulk tank outside, away from electric lines and other potential ignition sources, in secured areas as required by applicable building and fire codes. The hydrogen will be stored in a Compressed Gas Association (CGA)-approved tank. The tank will be secured to prevent physical upset and damage.

Carbon dioxide for the fire suppression system will be stored in a bulk tank outside, away from occupied areas, in secured areas as required by applicable building codes. The carbon dioxide will be stored in a CGA-approved tank. The tank will be secured to prevent physical upset and damage.

Safety showers and eye wash stations will be provided in the chemical feed areas. Service water hose connections will be provided near the chemical feed areas to facilitate flushing of leaks and spills of non–water-reactive materials to the chemical feed area drains. Appropriate safety gear will be provided for plant personnel for use during the handling, use, and cleanup of hazardous materials. Plant personnel will be properly trained in the handling, use, and cleanup of hazardous materials used at the plant and in procedures to be followed in the event of a leak or spill. Adequate supplies of appropriate cleanup materials will be stored on site.

All electric equipment will be specified to be free of polychlorinated biphenyls (PCBs). A list of the hazardous materials anticipated to be used at the plant is provided in Table 3.4-7. Each material is identified by type, intended use, and estimated quantity to be stored on site. Additional information on hazardous material management can be found in Section 8.12, Hazardous Materials Handling.

3.4.9 Air Emissions Control and Monitoring

Air emissions from the combustion of natural gas in the CTGs' and HRSGs' duct burners are controlled by state-of-the-art systems. Emissions that are controlled include NO_X, carbon monoxide (CO), volatile organic compounds (VOCs), fine particulate matter (PM_{10}), and sulfur dioxide (SO_2). A continuous emissions monitoring system will be installed to monitor the stack emissions. All emissions values stated in the following subsections are based on parts per million by volume, dry basis (ppmvd) corrected to 15 percent oxygen (O_2). Complete information on air quality matters, including startup emissions, is provided in Section 8.1, Air Quality.

3.4.9.1 NO_X Emissions Control

Dry Low-NO_X (DLN) combustors in the CTGs followed by SCR in the HRSGs will control stack emissions of nitrogen oxides (NO_X) to a maximum 2.0 parts per million by volume, dry (ppmvd) (1-hour average excluding startups). The DLN combustors control NO_X emissions to approximately 9 ppmvd at

the CTG exhausts by pre-mixing fuel and air immediately prior to combustion. Pre-mixing inhibits NO_X formation by minimizing the flame temperature and the concentration of oxygen at the flame front.

The SCR process uses aqueous ammonia (NH_3) as a reagent. Stack emissions of ammonia, referred to as "ammonia slip," will not exceed 5 ppmvd. The SCR system includes a catalyst chamber located within each HRSG, catalyst bed, ammonia storage system, and ammonia injection system. The catalyst chamber contains the catalyst bed and is located in a temperature zone of the HRSG where the catalyst is most effective over the range of loads at which the plant will operate. The ammonia injection grid is located upstream of the catalyst chamber. It is expected that the 20,000-gallon aqueous ammonia storage tank has a 10-day storage capacity.

3.4.9.2 CO and VOC Emissions Control

An oxidation catalyst will be provided in the HRSG to limit CO emissions to 3 ppmvd and to ensure that emissions of VOCs are controlled to less than 2 ppmvd at 15 percent O_2. These emission levels correspond to current California Best Available Control Technology (BACT). This catalytic system will promote the oxidation of CO to carbon dioxide and VOC to carbon dioxide and water vapor without the need for additional reagents such as ammonia.

3.4.9.3 PM_{10} and SO_2 Emissions Control

PM_{10} emissions consist primarily of hydrocarbon particles formed during combustion. PM_{10} emissions are controlled by inlet air filtration and by the use of natural gas fuel, which contains essentially zero particulate matter.

SO_2 emissions are controlled by the use of pipeline-quality natural gas fuel, which contains only trace quantities of sulfur.

3.4.9.4 Emissions Monitoring

The continuous emissions monitoring system (CEMS) samples, analyzes, and records NO_X, CO, and O_2 concentrations in the stack exhaust. The CEMS generates a log of emissions data for compliance documentation and activates an alarm in the plant control room when stack emissions exceed specified limits.

3.4.10 Fire Protection

Fire protection systems are provided to limit personnel injury, property loss, and plant down time resulting from a fire. The systems include a fire protection water system, carbon dioxide fire suppression systems for the CTGs, and portable fire extinguishers. The fire protection water will be supplied from a dedicated 300,000-gallon portion of the 400,000-gallon raw water/firewater storage tank located on the power block site. Two fire pumps that are 100 percent dedicated to the fire protection system, with a capacity of 2,500 gallons per minute each, deliver water to the fire protection water piping network. One of the fire pumps is driven by an electric motor; the second pump is driven by a diesel engine. A third pump, a small capacity jockey pump driven by an electric motor, maintains pressure in the piping network. If the jockey pump is unable to maintain a set operating pressure in the piping network, the electric motor-driven fire pump starts automatically. If the electric motor-driven fire pump is unable to maintain a set operating pressure, the diesel engine-driven fire pump starts automatically. The piping network is configured in a loop so that a piping failure can be isolated with shutoff valves without interrupting the supply of water to a majority of the loop. Fire suppression equipment supplied by the piping network includes fire hydrants and sprinkler systems. Fire hydrants are located at intervals throughout the power plant site. Sprinkler systems are provided in the administration building, control building, and warehouse.

The carbon dioxide (CO_2) fire suppression system provided for each CTG will include a CO_2 storage tank, CO_2 piping and nozzles, fire detection sensors, and a control system. The control system will

automatically shut down the CTG, turn off ventilation, close ventilation openings, release CO_2 upon detection, and confirm the existence of a fire. The CO_2 fire suppression systems will cover the turbine enclosure and accessory equipment enclosure of each CTG.

Portable fire extinguishers of appropriate sizes and types will be located throughout the power plant site.

3.4.11 Plant Auxiliary and Safety Systems

The plant auxiliary systems described below support, protect, and control the power plant.

3.4.11.1 Lighting System

The lighting system provides operations and maintenance personnel with illumination in both normal and emergency conditions. The system consists primarily of AC lighting, and includes DC lighting for activities or emergency egress required during an outage of the plant's AC electrical system. Lighting fixtures will be directionally oriented, shielded and hooded to minimize offsite migration of light. The electrical distribution system also provides AC convenience outlets for portable lamps and tools.

3.4.11.2 Grounding System

The power plant's electrical systems and equipment are susceptible to ground faults, switching surges, and lightning, which can impose hazardous voltage and current on plant equipment and structures. To protect against personnel injury and equipment damage, the grounding system provides an adequate path to dissipate hazardous voltage and current under the most severe conditions. Bare conductor is installed below grade in a grid pattern, and each junction of the grid is bonded together by welding or mechanical clamps. The grid spacing is designed to maintain safe voltage gradients. Ground resistivity readings are used to determine the necessary grid spacing and numbers of ground rods. Steel structures and nonenergized parts of plant electrical equipment are connected to the grounding grid.

3.4.11.3 Distributed Control System

The distributed control system (DCS) provides control, monitoring, alarm, and data storage functions for power plant systems.

The following functions will be provided:

- Control of the CTGs, STG, HRSGs, and balance-of-plant systems in a coordinated manner.
- Monitoring of operating parameters from plant systems and equipment, and visual display of the associated operating data to control operators and technicians.
- Detection of abnormal operating parameters and parameter trends, and provision of visual and audible alarms to apprise control operators of such conditions.
- Storage and retrieval of historical operating data.

The DCS is a microprocessor-based system. Redundant capability is provided for critical DCS components such that no single component failure will cause a plant outage. The DCS consists of the following major components:

- CRT-based control operator interface (redundant).
- CRT-based control technician workstation.
- Multi-function processors (redundant).
- Input/output processors (redundant for critical control parameters).
- Field sensors and distributed processors (redundant for critical control parameters).

- Historical data archive.
- Printers, data highways, data links, control cabling, and cable trays.

The DCS is linked to the control systems furnished by the CTG and STG supplier. These data links provide CTG and STG control, monitoring, alarm, and data storage functions via the CRT-based control operator interface and control technician work station of the DCS.

3.4.11.4 Cathodic Protection System

The cathodic protection system will be used as required to protect against electrochemical corrosion of underground metal piping and structures.

3.4.11.5 Freeze Protection Systems

Due to the infrequency and short duration of below-freezing ambient temperatures at the project site, freeze protection systems will be provided only in susceptible outdoor areas.

3.4.11.6 Service Air System

The service air system supplies compressed air to hose connections located at intervals throughout the power plant. Compressors deliver compressed air at a regulated pressure to the service air piping network.

3.4.11.7 Instrument Air System

The instrument air system provides dry, filtered air to pneumatic operators and devices throughout the power plant. Air from the service air system is dried, filtered, and pressure-regulated prior to delivery to the instrument air piping network.

3.4.11.8 Auxiliary Boiler System

An auxiliary boiler with superheater will be provided to maintain steam turbine seals during overnight and weekend shutdowns to facilitate fast startups, to provide steam for the air cooled condenser steam jet air ejectors (hogging and holding) to maintain vacuum during shutdown, and will include the capacity needed for zero liquid discharge operation.

The auxiliary boiler will be a 30,000 pounds per hour (44 mm BTU/hr) water tube boiler with superheater, and shall include all components comprising the furnace, steam drum, economizer, forced draft fan, firing equipment, ducts, dampers, stack, deaerator, pumps, piping, steam safety valves, instrumentation and other components required for a complete steam generating unit. The boiler shall be a bottom supported, pressurized furnace. The boiler will be designed to operate satisfactorily with the specified natural gas fuel and shall incorporate the vendor's standard Low NO_X burner and emissions control systems and meet the requirements of the Air Permit. The auxiliary boiler shall be designed to withstand and perform under the site ambient conditions specified. The auxiliary boiler will be located outdoors, and will be protected from freezing conditions when the unit is off-line.

3.5 POWER PLANT CIVIL/STRUCTURAL FEATURES

The following sections describe civil/structural features of the power plant, as illustrated in the site plan presented in Figure 3.3-1. Figures 3.5-1, 3.5-2, and 3.5-3 illustrate the site's existing topography, proposed stormwater management and erosion control plan. Table 3.5-1 lists the major structures of the power plant and gives their dimensions. In addition to the features described in this section, descriptions

of the electric transmission interconnection and the gas supply and water supply pipelines are given in Chapters 5, 6, and 7, Transmission Facilities, Natural Gas Supply, and Water Supply, respectively.

3.5.1 CTGs, HRSGs, STG, Air Cooled Condenser, and Balance-of-Plant Equipment

The CTGs, HRSGs, STG, and air cooled condenser will be supported at grade elevation on reinforced concrete mat foundations. The three step-up transformers and two auxiliary transformers are also supported at grade elevation on reinforced concrete mat foundations. Balance-of-plant mechanical and electrical equipment is supported at grade elevation on individual reinforced concrete pads. The concrete foundation design will be finalized as required by the final geotechnical report.

3.5.2 Stacks

Each HRSG will be provided with a self-supporting steel stack. The stacks will be approximately 19 feet in diameter and 175 feet tall. Each stack will include EPA sampling ports, ladders, side step platforms, and electrical grounding.

3.5.3 Buildings

Plant buildings include the Administration/Maintenance/Warehouse building (includes the control room), electrical power distribution centers, equipment shelter, covered general storage area, bulk storage building, water treatment building, and balance-of-plant mechanical and electrical equipment buildings or enclosures. Building columns will be supported on reinforced concrete mat foundations or individual spread footings. Ground floors will consist of reinforced concrete slabs. Thirty parking spaces will be provided on site to accommodate all employees and visitor vehicles.

3.5.4 Water Storage Tanks

Water storage tanks include a raw water/firewater storage tank with a nominal capacity of 400,000 gallons and a demineralized water storage tank with a nominal capacity of 200,000 gallons. Each water storage tank will be a fully enclosed, vertical, cylindrical, field-erected steel tank supported on a suitable foundation consisting of either a reinforced concrete mat or a reinforced concrete ring wall with an interior bearing layer of compacted sand supporting the tank bottom as required by the final geotechnical report.

3.5.5 Roads and Fencing

The power plant site will be accessed by a new 30-foot-wide, approximately 2,700-foot-long road extending from the existing PG&E Road Easement 295 or 442, as illustrated in Figures 3.3-1, 3.5-1, 3.5-2, and 3.5-4. The new road, plant perimeter road and parking areas, and miscellaneous access drives will be paved with asphalt.

Chain-link security fencing will be installed to include the power generation facility and the switchyard, and other areas requiring controlled access. Plant access will be via a remotely controlled slide gate.

In addition, ground disturbance along the existing PG&E easement road (Dirks Road) will be clearly marked during construction, and erosion control measures will be implemented to ensure that environmentally sensitive habitat, if present, is not affected. See Section 3.6.3, Offsite Roadway Improvements, for a description of offsite roadway improvements required for construction.

3.5.6 Sanitary Wastewater System

The sanitary wastewater system collects sanitary wastewater from sinks, toilets, and other sanitary facilities and discharges it to a septic tank served by a leach field. The leach field will be located on the southeastern corner of the site covering an area of about 3,000 square feet.

3.5.7 Site Drainage

The pre-construction site drainage is shown in Figure 3.5-1. The site grading and stormwater management and erosion control plans for permanent and temporary facilities are shown in Figures 3.5-2 and 3.5-3. The post-construction grading is also shown in Figures 3.5-2 and 3.5-3.

During construction activities, best management practices (BMPs), such as silt fences, straw bales, covered stockpiles, etc., will be used to minimize the potential for erosion and discharge of pollutants off the site. Stormwater runoff from the plant area and construction laydown area (approximately 63 acres) will be conveyed to a detention basin located near the southwestern portion of the site. This basin will be sized to allow sediments that may be carried in the runoff to settle and not be discharged off site. This temporary sediment basin would be converted to a permanent stormwater detention basin. A construction storm water pollution prevention plan (SWPPP) that includes temporary BMPs to be implemented during construction will be prepared in accordance with the National Pollutant Discharge Elimination System (NPDES) General Permit for Storm Water Discharge Associated with Construction Activities.

After construction is completed, the temporary construction areas will be returned to grazing land. The stormwater detention basin will be an unlined basin. The power facility area will be covered in gravel, except for designated roads, tanks, and building areas. Approximately 5 acres will be impervious (including buildings, roads, and tanks). The switchyard area will be covered with crushed rock. The proposed site drainage plan is shown on Figure 3.5-2. Stormwater runoff from the 31-acre plant area will be collected by a surface drainage system and conveyed to a 2.2-acre-foot stormwater detention basin. The basin will be designed to detain the difference in runoff before-construction (pre-development) and after-construction (post-development) conditions due to increased impervious area. The basin will also detain stormwater runoff to allow particles and associated pollutants to settle. The detention basin will be designed to accommodate the peak runoff of the pre-development condition resulting from a 10-year, 24-hour storm event and provide the required detention time for pollutant removal. The flow of stormwater will generally follow the existing drainage pattern.

A portion of the plant site will be curbed (e.g., equipment areas with the potential for leakage) and stormwater within these curbed areas will be collected and visually inspected, and then routed to the detention basin or to the oil/water separator and then to the detention basin. Design criteria for the site drainage system are provided in Appendix A, Civil Engineering Design Criteria. The drainage ditches will be designed to convey the 10-year, 24-hour rainfall runoff and will be protected by erosion control fabric, rip rap, concrete paving, or soil-cement to minimize erosion. As shown on Figure 3.5-5, the detention basin will be constructed with engineered earth dikes. A standpipe outlet structure will be used to regulate discharge from the basin. The outlet will be protected with rip rap, or other similar materials, to prevent erosion. The basin would be emptied within 48 hours or less after the cessation of a storm event to eliminate the potential for mosquito breeding. The outflow will be discharged back to the natural drainage of the area.

A construction storm water pollution prevention plan (SWPPP) that includes temporary BMPs to be implemented during construction will be prepared in accordance with the National Pollutant Discharge Elimination System (NPDES) General Permit for Storm Water Discharge Associated with Construction Activities. A SWPPP that describes the post-construction stormwater management system and best management practices to be implemented to prevent the discharge of pollutants off the site will be

prepared in accordance with the NPDES General Permit for Storm Water Discharge Associated with Industrial Activities.

3.5.8 Earthwork

Cut and fill will be required to provide a level area and noncompressible soils for the power generation facility and switchyard. The volume of cut and fill is estimated to be approximately 330,000 cubic yards.

Earthwork on the power plant site will consist of removal of topsoil, vegetation, and debris; excavation and compaction of earth to create the plant grade; and excavation for foundations and underground systems. Materials suitable for compaction will be stored in stockpiles within designated locations on the site using proper erosion prevention methods and then reused on site (e.g., plant power block). Materials unsuitable for compaction will be stored in separate stockpiles and reused on the site, where appropriate. Any contaminated materials encountered during excavation will be disposed in accordance with applicable laws, ordinances, regulations, and standards.

Compaction will be performed in uniform layers of specified thickness. Materials in each layer will be properly moistened to facilitate compaction to the specified density. To verify compaction, representative density and moisture content tests will be performed in the field during compaction. Structural fill material supporting foundations, roads, parking areas, etc., will be compacted. Prior to placing fill materials, subgrades will be examined for loose or soft areas and further excavated as necessary.

3.5.9 Ammonia Storage Facility

Operation of the SCR NO_X emission control system includes the use of aqueous ammonia, a solution consisting of water and 19 percent ammonia. This solution will be stored in the Aqueous Ammonia Storage Facility located on site, which will include a 20,000-gallon storage tank located within a dedicated concrete containment area and a tanker truck offloading facility located within a containment berm. The general design of the storage and receiving facility is shown on Figure 3.5-6.

As shown on the figure, the horizontally mounted storage tank will be placed in a containment basin. Below the containment basin is a containment sump sized to contain the entire volume of the tank and the rainfall that could collect within the containment over a 24-hour maximum recorded rainfall period (3.5 inches of rainfall recorded, WRCC, 1948-2005). This design specification assumes a worst-case failure event of complete rupture and drainage of the tank at the end of the worst 24-hour-long rainstorm. The underground containment sump will collect the spill, minimize the surface area of the spill, and limit volatilization of any spilled material.

Adjacent to the storage facility will be a tanker truck offloading facility to receive aqueous ammonia deliveries. The offloading facility will include a spill containment area to collect any ammonia solution spilled during offloading. Any offloading spills will be directed to the underground containment sump in order to minimize the surface area of the spill, and limit volatilization of any spilled material.

3.6 PROJECT CONSTRUCTION

Engineering, procurement, and construction (EP&C) of the CGS is estimated to take approximately 24 months. The project construction schedule, construction staff, and average frequency of vehicle traffic are detailed in the sections below.

3.6.1 Power Generation Facility

EP&C of the project is expected to ensue immediately upon receipt of certification. To ensure completion by the contractual deadline, some engineering and procurement may need to commence prior

to certification, at a considerable financial risk to E&L Westcoast. Onsite construction would commence no later than spring 2008, and would be completed prior to the contractual deadline in spring 2010, as shown in Figure 3.6-1. The schedule has been estimated on a single shift, 8-hour day, and 40-hour week. However, occasional use of a second shift and Saturdays may be necessary to make up schedule deficiencies or to complete critical construction activities. During the startup and testing phase of the project, some activities may continue 24 hours per day, 7 days per week. Construction operations are expected to take place between 6:00 a.m. and 6:00 p.m.

Projected construction staff by month is listed in Table 3.6-1 and shown on Figure 3.6-2. The estimated construction workforce is listed by trade in Table 3.6-1. The onsite workforce will consist of laborers, craftsmen, supervisory personnel, support personnel, and construction management personnel. The onsite workforce is expected to reach its peak of 669 individuals during the 14th month of construction. Construction access to the site will be via Delevan, McDermott, and Dirks roads. The estimated average number of construction staff (passenger) vehicle one-way trips per day is listed in Table 3.6-2; the estimated number of peak one-way trips is shown by month on Figure 3.6-3. The estimated average number of daily truck deliveries by heavy and light trucks is listed in Table 3.6-2. Figure 3.6-4 shows the estimated number of peak one-way truck trips. Truck deliveries will normally be on weekdays between 7:00 a.m. and 5:00 p.m. Estimates of the average and peak construction traffic during the onsite construction period are provided in Table 3.6-2.

3.6.2 Construction Plan

An EP&C contractor(s) will be selected for the design, procurement, and construction of the facility. The EP&C contractor(s) will select subcontractors for certain specialty work as required.

3.6.2.1 Mobilization

The EP&C contractor(s) will mobilize after project certification and the required letter authorizing the start of mobilization activities is received from the CEC Compliance Project Manager. Site preparation work will include site grading and stormwater control. Gravel will be used for temporary roads, laydown, and work areas.

3.6.2.2 Construction Offices, Parking, and Laydown Areas

Mobile trailers or similar suitable facilities (e.g., modular offices) will be used as construction offices for contractor and subcontractor personnel. Construction laydown and parking areas will be within designated construction areas shown on Figures 3.2-1 and 3.5-3. A separate sublease will be used as part of the agreement with the property owner to secure the additional area required for construction laydown. Site access will be controlled for personnel and vehicles. Temporary security fences will be installed around the construction laydown areas, along the new access road and existing PG&E road easement 295 official record 442.

3.6.2.3 Emergency Facilities

Emergency services will be coordinated with the local fire department and hospital. An urgent care facility will be contacted to set up nonemergency physician referrals. First-aid kits will be provided around the site and regularly maintained. One nurse and at least one person trained in first aid will be part of the construction staff. In addition, all foremen and supervisors will be required to have first-aid training. Fire extinguishers will be located throughout the site at strategic locations at all times during construction.

3.6.2.4 Construction Utilities and Site Services

During construction, temporary utilities will be provided for the construction offices, laydown area, and the project site. Temporary construction power will be utility-furnished. Area lighting will be provided and strategically located for safety and security.

Construction water will be supplied by the Glenn-Colusa Irrigation District via the Tehama-Colusa Canal for use at the project site. Average daily use of construction water is estimated to be about 8,000 gallons. The maximum daily water usage is estimated at 85,000 gallons during hydrotesting (not including the 5,000 gallons used during hydrotesting for the gas pipeline installation). The hydrotest water will be tested. If suitable for discharge, it will be routed to the stormwater detention basin. If the water quality is not suitable for discharge, it will be transported by trucks to an approved offsite disposal facility.

The following site services will be provided by the EP&C contractor:

- Environmental Health Safety Training
- Site Security
- Site First Aid
- Construction testing (NDE, Hydro, etc.)
- Site fire protection and extinguisher maintenance
- Furnishing and servicing of sanitary facilities
- Trash collection and disposal
- Disposal of hazardous materials and waste in accordance with local, state, and federal regulations

3.6.2.5 Construction Materials and Heavy Haul

Construction materials such as concrete, pipe, wire and cable, fuels, reinforcing steel, and small tools and consumables will be delivered to the site by truck.

Most of the heavy equipment and its components will be transported by rail to an existing rail spur at Delevan or Willows. Rail deliveries will be off-loaded and transported to the site by a heavy haul contractor. Estimated daily average and peak one-way truck trips are listed in Table 3.6-2; estimated peak trips by month are shown on Figure 3.6-4.

3.6.3 Offsite Roadway Improvements

Heavy-haul deliveries will require replacement of the Teresa Creek Bridge, Glenn-Colusa Canal Bridge, and widening of the shoulders at the eastern half of the intersection of Delevan Road and McDermott Road. At the completion of construction activities, Delevan Road from I-5 to McDermott Road, McDermott Road to Dirks Road, and Dirks Road to the plant access road will be repaved/resurfaced.

3.6.3.1 Replacement of Teresa Creek Bridge

The existing Teresa Creek Bridge is an older structure with a wood deck and will be replaced. The new bridge would be a clear span bridge (see Figure 3.6-5) or a prefabricated bridge approximately 75 feet in length. One of two options for replacement is likely, depending on schedule. The first option is to install a temporary 14-foot-wide bridge and detour road immediately downstream of the existing bridge prior to construction of the new bridge. The temporary bridge would include a culvert and backfill to the existing grade, or would be designed to span the creek bed with supports on each side and away from the edge of the creek slope. After the temporary bridge is installed and operational, the permanent replacement bridge would be erected as described above. After the permanent bridge has been constructed, the

temporary bridge and access road would be removed and all disturbed areas returned to pre-project conditions.

The second option would be to replace the bridge as the first scheduled construction event, and detour traffic from McDermott Road between Delevan Road and Dirks Road. This detour would reroute traffic on either I-5 or 99-W to the Road 68 exit north of the Delevan Road exit, west on Road 68 and south on McDermott Road.

3.6.3.2 Glenn-Colusa Canal Bridge Replacement

The existing Glenn-Colusa Canal Bridge located at the end of Dirks Road was built in 1965 to support the construction of the PG&E Delevan Gas Compressor Station. This bridge is a four-span concrete-decked structure that is 74 feet long by 20 feet wide. The bridge provides weight-limited one-way truck traffic and speed-limited two-way automobile traffic (due to the reduced lane width of 8 feet) with 2-foot shoulders. The bridge was originally designed for a 40-ton load, but is currently AASHTO rated H-20, which is a 20-ton load.

The new bridge will be a free-span steel beam and concrete bridge (see Figure 3.6-6) approximately 100 feet long by 30 feet wide. This would provide for two 12-foot lanes with 3-foot shoulders giving unimpeded two-way traffic flow, rated for the heaviest equipment for the plant, and will exceed HS-20 rating per AASHTO standards. No piers will be constructed in the canal to support the bridge. The east approach will be located approximately 20 feet north of the existing bridge and the west approach will be located about 40 feet north. The bridge will be fitted with side guard rails and will be striped to permit safe passage of traffic. The new bridge would be capable of handling the heaviest loads required for the construction and operation of the power plant, without any other temporary modifications.

The bridge deck will be replaced in time to accommodate the heavy haul equipment entering the site. The existing bridge would be used for initial construction mobilization site access while the new bridge is being installed. The new bridge would be constructed to minimize embankment impacts, and would not intrude into the water. The access road on both sides will be realigned to straighten and widen the approaches to allow for unimpeded two-way traffic.

The existing bridge will be left in place, or the deck may be removed. The original approaches would be final-graded to match the surrounding land contours and seeded with grass native to the region.

All disturbed areas will be returned to pre-project conditions after construction is complete.

3.6.3.3 Widening of Delevan/McDermott Intersection

To accommodate the wide-turning radius of some heavy-haul trucks, the northeastern and southeastern corners of the intersection of Delevan Road and McDermott Road will be widened by grading and placement of gravel around these corners. Grading will occur up to the area between the existing pavement and the concrete abutment to the irrigation canal. No modifications of the irrigation canal are proposed. Grading will require relocation of the stop sign and telephone conduit box at the northeastern corner of the intersection.

3.6.3.4 Tehama-Colusa Canal Access Road

A permanent 12-foot-wide dirt road will be constructed along the pipeline conveying water from the Tehama-Colusa Canal to the power plant (Figures 3.2-1 and 3.3-1). The road will be used for maintenance and access to the water intake at the Tehama-Colusa Canal.

3.6.4 Construction Land Disturbance Area

The power plant site and vicinity are currently unoccupied agricultural land used for grazing. The project will include construction of a new power generating facility, switchyard, and associated linear facilities. These facilities will occupy approximately 34.5 acres. During construction of these facilities, approximately 97 acres will be temporarily disturbed, including a 43-acre construction office, parking, and laydown area. Approximately 62.5 acres of the 97 acres disturbed will be returned to pre-construction conditions. Estimated areas of land disturbance during construction and operation of the plant are shown in Table 3.6-3.

In addition, the project will include construction of a new free-span bridge across the Glenn-Colusa canal, a new bridge across Teresa Creek, and improvements to the intersection of Delevan Road and McDermott Road. Estimated areas of disturbance, both temporary and permanent, associated with these improvements are summarized in Table 3.6-3.

The CGS will implement the following fugitive dust control measures during construction at the project site to minimize the formation of fugitive dust:

- Frequent watering of unpaved roads and disturbed areas (at least twice a day). Frequency of watering will be increased when wind speeds exceed 15 miles per hour (mph).
- Limit speed of vehicles within construction areas to no more than 10 mph.
- Sweep paved interval roads after the evening peak period.
- Sweep public roadways adjacent to the project site that are used by construction and worker vehicles at least twice a day.
- Treat the entrance roadways to the construction site with soil stabilization compounds.
- Place sandbags adjacent to roadways to prevent runoff to public roadways.
- Install windbreaks at the windward sides on construction areas prior to soil being disturbed. The windbreaks shall remain in place until the soil is stabilized or permanently covered.
- Replace ground cover in disturbed areas as quickly as possible.
- Employ tire washing and gravel ramps prior to entering a public roadway to limit accumulated mud and dirt deposited on public roadways.
- Cover all trucks hauling dirt, sand, soil, or other loose materials and maintain a minimum of 6 inches of freeboard between the top of the load and the top of the trailer.
- Limit equipment idle times (no more then 15 consecutive minutes).
- Use electric motor-driven construction equipment when feasible.
- Apply covers or dust suppressants to soil storage piles and disturbed areas that remain inactive for more than two weeks.
- Pre-wet soil to be excavated during construction.

- Designate a person to oversee the implementation of the fugitive dust control program.

As discussed in Section 8.1, the fugitive dust mitigation measures listed above are expected to control more than 90 percent of the fugitive dust that occurs during onsite construction.

The project will also employ oxidizing soot filters on all large suitable off-road construction equipment with an engine rating of at least 100 brake horsepower (bhp).

Many, but not all of the control measures listed above will be used during the construction of the transmission line. Not all apply, e.g., tire washing before entering a public roadway. Even though control efficiency is expected to be higher than this, to be conservative 50 percent efficiency was used to estimate fugitive dust emissions during construction of the transmission line.

Following completion of construction, grassland areas outside the project's permanently disturbed areas will be restored. In laydown areas where topsoil has been removed and crushed rock (gravel) placed for construction, the rock material will be removed, compacted soils loosened, and stockpiled topsoil replaced. Disturbed areas to be restored will be reseeded with appropriate native plants.

3.7 STARTUP AND COMMISSIONING

During startup, all pre-operational system checks, cleaning of systems, check out and testing of all instrumentation and control devices and systems, performance of initial operation, run in of all plant equipment, and startup of the integrated facility will be performed. During startup, E&L Westcoast's plant operation and maintenance (O&M) personnel will assist with equipment operations.

Project-specific procedures will be completed by using administrative and technical startup procedures (using standard procedures as a base), good industry and engineering practices, and project specific requirements. All startup activities will be coordinated with E&L Westcoast on a daily basis, the equipment/systems subcontractors, and utility representative, as appropriate, regarding startup requirements and operations of the facility.

Startup and testing of the 230 kV switchyard, down to the high side of the incoming transformers, shall be compatible with the requirements of the connecting utility.

The startup manager will provide overall coordination of the startup program from mechanical completion of construction through initial operation until substantial completion, liaising with E&L Westcoast's plant O&M personnel with regard to the scheduling of fuel consumption and power production. Until substantial completion, the startup manager will have care and custody of the facility.

During commissioning, the plant permanent components and systems will be systematically tested, including verifying safety interlocks and controls. Standard commissioning procedures, incorporating the necessary contractual and permit requirements, and other official project documentation will be used to complete the system procedures. The commissioning manager, which may be the startup manager, will have care and custody of the plant until commissioning completion. Until the plant has completed all acceptance testing, it is owned and controlled by E&L Westcoast. Once the plant is ready for commercial operation, PG&E will take ownership.

3.8 FACILITY OPERATION

The power plant operation will be controlled and monitored by highly trained technicians during each operating shift. In addition, support and supervisory personnel will generally be present during the day shift Monday through Friday and, as required, by specific operations or maintenance activities. Plant operation will require approximately 31 full-time permanent personnel (Table 3.8-1) with up to 16

employees during the day shift. The plant will be operated 7 days a week, 24 hours a day. When the plant is not operating, personnel will be present as necessary for maintenance and to prepare the plant for startup.

In any given hour, the plant may be operating at peak load, base load, or part load with both CTGs or with one CTG running. Peak load operation will most likely occur during summer on-peak hours, and minimum load operation during nonsummer off-peak hours. Shutdown periods for annual maintenance will be scheduled during extended periods of low demand, which typically occur in the winter or early spring.

Ancillary services will also be provided by the plant. These services include regulation, operating reserves to the extent the plant is not operating at full load, and reactive power production. Black start capability will not be provided.

3.9 SAFETY AND RELIABILITY

3.9.1 Facility Safety

The CGS will be designed for safe operation. Potential hazards that could affect project facilities include earthquake, flood, and fire. Safe operation includes safety for the power plant operating personnel, who will be trained to provide proper response to hazards and to avoid unsafe operating conditions.

3.9.1.1 Natural Hazards

A geotechnical investigation of the proposed power plant site is provided in Section 8.15, Geologic Hazards and Resources. This investigation includes a review of potential geologic hazards, seismic ground motion, and soil liquefaction. The principal natural hazard associated with the power plant site is potential seismic hazard. The site is located in Seismic Zone 3. All project structures will be designed in conformance with California Building Code criteria for Seismic Zone 3 to ensure safety for operating personnel and adequate protection against structural and equipment damage. The structural and seismic design criteria for project buildings and equipment is provided in Appendix B.

The power plant site varies in elevation from approximately 170 feet above msl to 190 feet above msl. The high point finished surface of the plant permanent facilities will be at approximately 183 feet above msl, as shown on Figure 3.5-2.

3.9.1.2 Onsite Fire Protection Systems

The power plant will be provided with onsite fire protection systems to limit personnel injury, property loss, and plant downtime resulting from a fire. The fire protection systems are described in Section 3.4.10. The facility will have a Fire Protection Plan as outlined in Section 8.7, Worker Safety and Health.

3.9.1.3 Local Fire Protection Services

In the event of a serious fire, the CGS will receive fire protection services from the nearest fire station located at Maxwell, approximately 5 miles from the project site. The project's Risk Management Plan described in Section 8.12, Hazardous Materials Handling, will provide necessary information on hazardous materials to ensure that safe and effective fire fighting measures are used. Additional information on local emergency services can be found in Section 8.8, Socioeconomics.

3.9.1.4 Personnel Safety Programs

The CGS will implement the personnel safety programs described in Section 8.7 to provide for personnel safety and ensure compliance with federal and state occupational safety and health requirements.

3.9.2 Transmission Line Safety

3.9.2.1 Transmission Lines

Four double circuit lines (approximately 2,000 feet) will connect the CGS switchyard with the existing PG&E transmission lines. The transmission interconnection will require approximately 12 new towers and 48 new tower footings. Four of the towers (16 footings) will be within the project site; eight of the towers (32 footings) are estimated to be outside of the 100-acre site and construction laydown area. The new transmission line structures will be approximately 100 to 125 feet in height. Four existing towers will need to be refitted and two towers will be removed. The final configuration will be determined by PG&E.

3.9.2.2 Audible Noise and Radio and Television Interference

When a transmission line is in operation, an electric field is generated in the air surrounding the conductors, forming a corona. Coronas result from the partial breakdown of the electrical insulating properties of the air surrounding the conductors. When the intensity of the electric field at the conductor surface exceeds the insulating strength of the surrounding air, a corona discharge occurs at the conductor surface. Corona discharge represents a small dissipation of heat and energy. Some of the energy may dissipate in the form of small local pressure changes that result in audible noise or in the form of a discharge that results in radio or television interference. Audible noise generated by corona discharge can be characterized as a hissing or crackling sound which, under certain conditions, is accompanied by a 120-Hertz hum.

The conductors of high-voltage transmission lines are designed to be free of corona under ideal conditions. However, slight irregularities or water droplets on the conductor surface accentuate the electric field strength near the conductor surface, making corona discharge and the associated audible noise more likely. The Electric Power Research Institute (EPRI, 1978, 1987) has conducted several studies of these effects. Typical noise levels for transmission lines with wet conductors are presented in Table 3.9-1.

During rainfall, the proposed transmission line will produce corona discharge noise levels roughly equivalent to those found inside a residence at night, and the transmission line noise will be largely masked by the noise of the rain. The maximum noise levels are encountered directly under the transmission line, where levels are estimated to be approximately 40 A-weighted decibels during rainfall. Since the nearest residence is approximately 1.5 mile from the transmission line tie-ins, the addition of the 230 kV interconnecting loop will have no significant noise impacts and should not cause any radio or television interference.

3.9.2.3 Electromagnetic Fields

Whenever electricity is used or transmitted, electric and magnetic fields are created by the electric charges. Electric charges of opposite sign attract each other, while those of the same sign repel each other. These forces of attraction and repulsion — when not moving — create electric fields. The strength of these fields is related to the voltage in the circuit. Once electric charges are in motion they create magnetic fields. The strength of the magnetic field is proportional to the magnitude of the current in the circuit. The strength of the electric and magnetic fields generally falls off rapidly with distance from the source.

The voltage, electric, and magnetic field strengths induced by high-voltage transmission lines are provided in the *EPRI Transmission Line Reference Book – 345 kV and Above* (EPRI, 1987). The maximum electric field strength for a 230 kV line would be on the order of 1.32 kilovolts per meter (kV/m) to 1.70 kV/m. These values are the maximum, unperturbed fields calculated at 1 meter above the ground directly under the line and at the edge of the rights-of-way. For a typical 95-foot pole with 800-foot span, the maximum calculated magnetic field strength directly under the line and at the edge of the 60-foot right-of-way is 73 milligauss (mG) and 44 mG, respectively. While California does not have a regulatory limit for magnetic field strength, these values are well below the levels established by those states that do have regulatory limits. States with magnetic field regulations have limits ranging from 150 mG to 250 mG at the edge of the rights-of-way, depending on line voltage. Average values reported to the CEC, for 230 kV transmission lines licensed by the CEC have been less than 100 mG (CEC, 1992).

3.9.2.4 Induced Voltage and Current

Hazardous shocks could be caused by a high-voltage transmission line, if it is not properly constructed. The 230 kV interconnecting lines constructed for this project will be built in conformance with California Public Utilities Commission (CPUC) General Order 95 (GO-95) and California Code of Regulations (CCR), Section 2700 requirements, and therefore hazardous shocks are unlikely to occur as a result of the project operation.

Nuisance shocks can be caused by touching ungrounded metallic objects under or near a transmission line. Assuming a large object remains under the 230 kV generation tie line for a lengthy period of time (e.g., a parked farm tractor, or other ungrounded platform) and also assuming the maximum value of electric field, the induced short-circuit currents would be negligible. Any permanent metal object, such as a metallic fence built near the transmission line, will be grounded.

The 230 kV interconnecting lines will be constructed in accordance with National Electric Safety Code (NESC) requirements, including the provisions for proper grounding of structures. The NESC requirements are intended to minimize the potential for direct or indirect contact with energized lines; therefore, no significant transmission line impacts will occur to the public.

3.9.2.5 Fire Prevention

The CGS will comply with Title 14, CCR, Section 1250, Article 4, which establishes fire prevention standards for electric power generation facilities.

3.9.3 Reliability and Availability

This section discusses plant reliability and availability, equipment redundancy, fuel availability, water availability, and project quality control measures.

3.9.3.1 Plant Reliability and Availability

The planned operational life of the project is 30 years. For this life to be realized, and for the plant to operate reliably, a preventative maintenance program will be implemented for the project. This program will begin during engineering and procurement for the project, when designs and specifications will be reviewed for reliability and maintainability of plant systems and equipment. During the operational phase of the project, the preventative maintenance program will consist of monitoring, record keeping, and maintenance work to detect and rectify deterioration in systems and equipment before such deterioration results in a forced outage or prolonged maintenance outage.

It is expected that the preventative maintenance program will result in high plant availability. Plant availability refers to the plant's available generating capability during a given period of time, and is

assessed using the Equivalent Availability Factor (EAF). The EAF is a weighted average measure of plant availability considering both full and partial outages. In determining the EAF, outages are weighted by magnitude (i.e., fractional reduction in available generating capacity) and duration. Outages consist of planned overhauls, maintenance outages, and forced outages. The plant's annual EAF is expected to be in the range of 92 to 96 percent.

3.9.3.2 Equipment Redundancy

The following subsections identify equipment redundancy as it applies to project availability. Equipment redundancy provides means for avoiding outages and reducing the magnitude of outages. For example, because the plant will include two auxiliary cooling water pumps that each have 100 percent capacity, an outage of a single pump would not result in a plant outage. As another example, because the air cooled condenser will consist of multiple cells, loss of one fan would result in a minor partial outage (i.e., minor reduction in available generating capacity) rather than a full outage. Redundancy of major equipment is shown in Table 3.9-2. Note that some elements may be subject to modification in final design.

3.9.3.3 Combined Cycle Power Block

Two separate combustion turbine generator/HRSG trains will operate in parallel within the combined cycle power block. Each combustion turbine generator/HRSG train will provide approximately 30 to 35 percent of the combined cycle power block output. The heat input from the exhaust gas from each combustion turbine will be used in the HRSG to produce steam. Heat input to each HRSG can be supplemented by firing the HRSG duct burners, which will increase steam generation, resulting in an increase in plant electrical output. Thermal energy in the steam from the HRSG will be converted to mechanical energy and ultimately into electrical energy in the steam turbine generator. The expanded steam from the steam turbine generator will be condensed and recycled to the feedwater system. Power from the steam turbine generator will contribute approximately 30 to 40 percent of the total combined cycle power block output.

Major components of the combined cycle power block consists of the following subsystems:

- CTG: The combustion turbine generator subsystems include the combustion turbine, inlet air filtration and evaporative cooling system, generator and excitation systems, and turbine control and instrumentation. The combustion turbine will produce thermal energy through the combustion of natural gas and conversion of the thermal energy into mechanical energy through rotation of the combustion turbine, which drives the compressor and generator. Exhaust gas from the combustion turbine will be used to produce steam in the associated HRSG. The generator will be hydrogen cooled. The generator excitation system will be a solid state static system. Combustion turbine control and instrumentation (interfaced with the DCS) will cover the turbine governing system, the protective system, and sequence logic.

- HRSG: The HRSG subsystems consist of the HRSG and blowdown systems. The HRSG system provides for the transfer of heat from the exhaust gas of a combustion turbine and from supplemental combustion of natural gas in the HRSG duct burners for the production of steam. This heat transfer produces steam at the pressures and temperatures required by the steam turbine generator. Each HRSG system consists of ductwork, duct burners, heat transfer sections, an SCR system and an oxidation (CO) catalyst module. The blowdown system provides drains for each HRSG boiler drum. The system includes a continuous and intermittent blowdown drum for each HRSG to control boiler feedwater quality.

- STG: The steam turbine generator converts the thermal energy in the steam to mechanical energy to drive the generator. The basic subsystems include the steam turbine and auxiliary system, turbine lube oil system, generator, and generator exciter system. The generator will be hydrogen cooled.

- Boiler Feedwater: The boiler feedwater system transfers feedwater from the LP drum to the HP and IP sections of the HRSGs. The system consists of two 100 percent boiler feed pumps per combustion turbine generator/HRSG train. The pumps are multistage, electric motor-driven with intermediate bleed-off, and have regulating control valves, minimum flow recirculation control and other associated piping and valves.

- Condensate: The condensate system provides a flow path from the air cooled condenser to the HRSG LP steam drums. The condensate system includes three 50 percent capacity, motor-driven condensate pumps.

- Air cooled condenser: A 45-cell air cooled condenser provides for the ultimate removal of the heat.

Balance of Plant Systems include:

- Distributed Control System: The DCS (sometimes referred to as Integrated Control System or KS) will be a redundant microprocessor-based system, which will provide control, monitoring, and alarm functions for plant systems and equipment. Redundancy will be such that no single processor failure can cause or prevent a unit trip. The DCS will interface with the control systems furnished by the combustion turbine generator and steam turbine generator suppliers and the existing water treatment system to provide remote control capabilities, as well as data acquisition, annunciation, and historical storage of turbine and generator operating information. Plant operation will be controlled from the operator panel, which will be located in the control room. The operator control panel will consists of individual CRT/keyboard consoles and an engineering workstation.

- Demineralized Water System and Power Cycle Makeup: The demineralized water system is designed to provide demineralized water for the power cycle makeup on a continuous basis. A storage tank provides additional demineralized water capacity for 48 hours in the event that the demineralized water system is down.

- Auxiliary Cooling Water System: The auxiliary cooling water system provides cooling water from the fin fan heat exchanger to the closed cooling water (CCW) heat exchangers. The CCW system provides heat rejection for all of the plant auxiliary systems, including combustion turbine and steam turbine generators, hydraulics and lube oil subsystems, boiler feedwater pumps, steam and water sampling system. The water is then returned to the auxiliary cooling water fin fan heat exchanger for cooling. Major components for this subsystem include auxiliary cooling water fin fan heat exchanger, two 100 percent, motor-driven pumps, and associated piping and valves.

- Compressed Air: The compressed air system is comprised two 100 percent skids containing the instrument air and service air subsystems. The service air subsystem has one compressor, service air headers, and distribution piping and hose connections. The instrument air subsystem supplies dry compressed air at the required pressure and capacity for all control air demands, including pneumatic controls, transmitters, instruments, and valve operators. The instrument air system will include two redundant

compressors with prefilters and after filters, instrument air headers, and distribution piping.

3.9.3.4 Power Plant Maturation

The anticipated maturation period of CGS will range between 6 and 9 months. The plant's first year EAF is estimated to be 92 to 96 percent. Functional testing, performance testing, punchlist resolution, reliability runs, and warranty claims will accelerate the maturation process, as well as extensive quality assurance and control during the commission and startup of the facility.

3.9.3.5 Commercially Proven Technology

Facility design utilizes commercially proven technologies from major equipment suppliers, including General Electric combustion turbines. These frame turbine designs are used throughout the world in this application. Steam turbine design has been proven for several decades and is well known for excellent reliability.

3.9.3.6 Special Design Features

The environmental setting of the CGS site is optimal for a power plant. The site is situated just west of existing PG&E transmission lines and natural gas pipelines, with the nearest residences located approximately 1.7 miles from the site. The project will use 126 acre-feet of water per year. Although incurring significant capital expenditure and performance impacts, the use of an air cooled condenser greatly reduces the water requirements compared to a mechanical draft cooling tower. The corresponding wastewater reduction allows incorporation of a zero liquid discharge system. The major component of the zero liquid discharge system is the dryer, which has minimal operational and maintenance constraints. Water requirements and wastewater generation are also reduced by recycling. The RO reject water is sent to the zero liquid discharge evaporator, the evaporator distillate is captured and sent back to the demineralizer system for reuse in the steam cycle as makeup water. In addition, the project will use an auxiliary boiler with superheaters to maintain steam turbine seals during overnight and weekend shutdowns.

3.9.3.7 Fuel Availability

The project will be fueled with pipeline-quality natural gas delivered by PG&E. Gas supplies will be acquired from gas providers in supply regions accessible through the PG&E gas transmission system. Over the life of the project it is expected that a variety of different suppliers will contract to provide the gas commodity to the PG&E system for transport to the project site. Gas will be provided at market prices. Natural gas will be supplied to the power plant site via a new 8-inch, 1,500-foot-long line connected to the high-pressure interstate gas main. The 8-inch line will tap into the gas main at the north end of PG&E's Compressor Station. The gas delivery pressure at this location is expected to be 545 to 855 pounds psig, which will adequately serve the power plant needs under all operating conditions. The availability of fuel gas will be high as its supply will be only interrupted (a remote possibility) during outage of the interstate gas transmission line.

3.9.3.8 Water Availability

Water will be supplied by the GCID via the Tehama-Colusa Canal. Water will be continuously available as described in Chapter 7, Water Supply. Normal operating plant water requirements amount to approximately 126 acre-feet per year, as presented in Table 3.4-4. Water will be supplied to the generating facility by a new 2,700-foot pipeline.

At the power plant site, a raw water storage tank with a nominal capacity of 400,000 gallons will hold 61,000 gallons of water for plant operation. This quantity is sufficient to satisfy 8-hour plant operation at summer peak conditions in case of water supply interruption. In addition, 300,000 gallons will be dedicated to the plant's fire protection water system and any excess water in the tank will be for plant usage.

3.9.3.9 Project Quality Control Measures

Suppliers and contractors providing equipment and services to the project will be required to implement quality control measures. This requirement will apply to the engineering, procurement, construction, and startup phases of the project. It is expected that such measures will be part of quality assurance programs established by the suppliers and contractors. The project will audit the quality assurance programs, and will also supplement the programs with independent design reviews, shop inspections, and construction site inspections.

3.9.4 Applicable Laws, Ordinances, Regulations and Standards Related to Safety and Reliability

Design, construction, and operation of the CGS including transmission lines, pipelines, and ancillary facilities will be conducted in accordance with all LORS pertinent to facility safety, transmission line safety and nuisance, and reliability and availability. The applicable LORS are discussed in the following sections.

3.9.4.1 Power Plant Reliability

The following LORS are applicable to the proposed CGS in the context of power plant reliability and availability, which are addressed in Section 3.9.3.

3.9.4.1.1 Industry Codes and Standards

Currently, there are no industry codes or standards that govern power plant reliability; however, there are trade organizations and associations that are generally recognized as authorities and leaders in the field of power plant availability and reliability. Definitions used by these organizations have become generally accepted as a common means of communicating and the data published have been found to be useful. The organizations are:

- The Electric Power Research Institute (EPRI): Copies of reports can be obtained from the Research Reports Center:

  3412 Hillview Avenue
  Palo Alto, California 94304-1395
  (650) 855-2000

- North American Electric Reliability Council (NERC):

  Princeton Forrestal Village
  116-390 Village Boulevard
  Princeton, New Jersey 08540
  (609) 452-8060

3.9.4.1.2 CGS Compliance with Power Plant Reliability LORS

As further described in Section 3.9.3, the CGS will be designed for reliable operations for an expected project life of 30 years. To create and maintain reliable operations, the CGS will include a maintenance program, equipment redundancy, dependable fuel source, and water supply.

Efficiency. CEQA requires a power plant or other new project to not waste energy. CEQA also requires the project to be more efficient in energy use than alternatives to the project. CEC is the administering agency.

3.9.4.2 Transmission Line Safety

3.9.4.2.1 Federal Authorities and Administering Agencies

47 USC § 15.25. This authority requires mitigation for any device that causes communications interference.

The administering agency for the above authority is the Federal Aviation Administration.

3.9.4.2.2 State Authorities and Administering Agencies

California Public Resources Code §25000 *et seq*., Warren-Alquist Act, §25520 Subdivision (g). Requires a detailed description of the transmission line, including all rights-of-way.

The administering agency for the above authority is the CEC.

General Order 52(GO-52) CPUC. Requires the prevention or mitigation of any inductive interference causes by the transmission lines.

The administering agency for the above authority is the California Public Utilities Commission (CPUC).

General Order 95 (GO-95) CPUC. Establishes rules and guidelines for transmission line construction.

The administering agency for the above authority is the CPUC and CEC.

3.9.4.2.3 Local Authorities and Administering Agencies

Colusa County. The Colusa County General Plan describes general policies regarding energy development in the county.

The administering agency for the above authority is the Colusa County Planning and Community Development Department.

3.9.4.2.4 Industry Codes and Standards

Radio and Television Interference (RI/TVI) Criteria. Criteria are established to determine whether any mitigation is necessary.

The administering agency for the above authority is the CEC.

3.9.4.2.5 CGS Compliance with Transmission Line Safety LORS

CGS' compliance with audible noise, communication interference and hazards are fully described in Chapter 5.

3.10 APPLICABLE LAWS, ORDINANCES, REGULATIONS AND STANDARDS (LORS)

LORS applicable to the proposed project are shown in Table 3.10-1. Please note that the design of all structures and facilities will be based on building codes, specifications, industry standards and regulations. All designs and construction methods will be in accordance with the LORS that are in effect at the time that building plans are first submitted to the Chief Building Official for review and approval. All building permits will be reviewed during the building permit approval process by Colusa County.

3.10.1 Engineering Geology

Unless specifically stated otherwise, the design of all structures and facilities will be based on the laws, ordinances, codes, specifications, industry standards and regulations, and other reference documents in effect at the time of design. Applicable codes and industry standards with respect to the project's engineering geology are summarized in sections of Appendix A, Foundations and Civil Engineering Design Criteria, and Appendix B, Structural and Seismic Engineering Design Criteria.

3.10.2 Civil and Structural Engineering

Unless specifically stated otherwise, the design of all structures and facilities will be based on the laws, ordinances, codes, specifications, industry standards and regulations, and other reference documents in effect at the time of design. Applicable codes and industry standards with respect to the project's engineering design criteria, construction and operation are summarized in Appendix A, Foundations and Civil Engineering Design Criteria, and Appendix B, Structural and Seismic Engineering Design Criteria.

3.10.3 Mechanical Engineering

Unless specifically stated otherwise, the design of all structures and facilities will be based on the laws, ordinances, codes, specifications, industry standards and regulations, and other reference documents in effect at the time of design. Applicable codes and industry standards with respect to the project's mechanical engineering design criteria, construction, and operation are summarized in Appendix C, Mechanical Engineering Design Criteria. Applicable sections of Appendix D, Control Systems Engineering Design Criteria, will also be considered.

3.10.4 Electrical and Control Systems Engineering

Unless specifically stated otherwise, the design of all structures and facilities will be based on the laws, ordinances, codes, specifications, industry standards and regulations, and other reference documents in effect at the time of design. Applicable codes and industry standards with respect to the project's electrical engineering design criteria, construction and operation are summarized in Appendix E, Electrical Engineering Design Criteria. Applicable sections of Appendix D, Control Systems Engineering Design Criteria, will also be considered.

3.10.5 Seismic Design

The CGS site is located in Seismic Risk Zone 3. Structures, their foundations, and equipment will be designed in accordance with the 2003 International Building Code, 2003 California Building Code and the Colusa County Building Code (Colusa County, 2000). Where there are conflicts in the requirements of these codes, the most conservative requirements will govern. Involved Agencies and Agency Contacts

3.11 INVOLVED AGENCIES AND AGENCY CONTACTS

Agency contacts regarding facility design of the CGS are shown below.

Agency	Contact/Title	Telephone
Colusa County Department of Public Works 1215 Market Street Colusa, CA 95932	Jon Wryzinski, Assistant Director	(530) 458-0466
Colusa County Department of Planning and Building 220 12th Street Colusa, CA 95932	Steve Hackney, Director	(530) 458-0480
Caltrans 703 B Street Marysville, CA 95901	Michael Forga, Chief, Office of Special Funded Projects	(530) 741-5456
Colusa County Air Pollution Control District 100 Sunrise Boulevard, Suite F Colusa, CA 95932-3246	Harry Krug, Director of Air Quality Standards	(530) 458-0590
U.S. Environmental Protection Agency 75 Hawthorne Street San Francisco, CA 94105	Gerardo Rios, New Source Review Section	(415) 744-1254
California Energy Commission 1519 Ninth Street Sacramento, California 95814	Eileen Allen, Siting Project Manager	(916) 654-4082
California Department of Fish and Game, Region 2 1701 Nimbus Road, Suite A Rancho Cordova, CA 95670	Dan Gifford, Wildlife Biologist	(916) 358-2900 (209) 369-8851
Colusa County Department of Environmental Health 251 E. Webster Street Colusa, CA 95932	Rob Kostlivy	(530) 458-0395
State of California, Central Valley Regional Water Quality Control Board 11020 Sun Center Drive #200 Rancho Cordova, CA 95670-6114	Jacque Kelley	(916) 464-4764
California Department of Occupational Health and Safety (District Office) 2424 Arden Way, Suite 410 Sacramento, CA 95825	Richard DaRosa, Area Manager, Consultation	(916) 263-0704

Agency	Contact/Title	Telephone
California Department of Occupational Health and Safety (Redding Office) 381 Hemsted Dr. Redding, CA 96002	Dennis Barker, Area Manager, Compliance/Permits	(530) 224-4743
U.S. Bureau of Reclamation 1140 West Wood Street P.O. Box 988 Williams, CA 95988	Donald A. Bultema, Chief	(530) 934-1361
California Department of Fish and Game 1416 Ninth Street, 13th Floor Sacramento, CA 95814	Duane Massa, Fisheries Biologist	(916) 358-2883
Glenn-Colusa Irrigation District 344 East Laurel Street Willows, CA 95988	Bill Menke, P.E., General Manager	(530) 934-8881

3.12 REFERENCES

CBC (California Building Code). 2003. Title 24 (Part 2) of the California Code of Regulations.

CEC (California Energy Commission). 1992. High Voltage Transmission Lines, Summary of Health Effects Studies. July 1992.

Colusa County. 2000. Building Code, Chapter 5 of Colusa County Code.

DeBerry, Donald, Sacramento Municipal Utilities District. 2006. Personal communication with K. Rushmore of URS Corporation. September 25.

EPRI (Electric Power Research Institute). 1978. Transmission Line Reference Book, 115-138 kV.

EPRI (Electric Power Research Institute). 1987. Transmission Line Reference Book, 345 kV and Above. Second Edition.

Larsen, Dave, Navigant Consulting. 2006. Personal communication with K. Rushmore of URS Corporation. August 22.

Marki, Tom, PG&E. 2006. Personal communication with K. Rushmore of URS Corporation. August 1.

Mirzadeh, Mariam, Western Area Power Administration. 2006. Personal communication with K. Rushmore of URS Corporation, June 19.

Navigant Consulting. 2005. System Impact Study, Generation Interconnection. CPV Colusa Project. September 19.

PG&E (Pacific Gas and Electric Company), 2006a. Facilities Study Report, Generation Interconnection, CPV Colusa Project. February 28.

PG&E (Pacific Gas and Electric Company), 2006b. Gas System Sulfur Survey Results. http://www.pge.com/pipeline/operations/sulfur/sulfur_info.shtml#survey_results. Accessed October 31.

WRCC (Western Regional Climate Center). 1948-2005. Climate Historical Summaries, Daily Records for Station 041948, Colusa 2 SSW.

Table 3.4-1
Heat and Material Balance Case Descriptions

Case	Description	Ambient Temperature, °F	Relative Humidity, percent	Duct Fire Status	Evap. Cooler Status
1	July Peak	94	25.4	On	On
2	ISO	59	60	On	Off
3	ISO	59	60	Off	Off
4	ISO, minimum	59	60	Off	Off

Table 3.4-2
Major Mechanical Equipment

Equipment	Qty	Size/Capacity	Service/Remarks
Combustion Turbine Generators (CTGs)	2	GE 7FA	DLN combustion control with inlet air evaporative coolers
Steam Turbine Generator (STG)	1	320 MW	Condensing Reheat STG
Heat Recovery Steam Generators (HRSGs)	2	1,800 psig HP Steam	Three pressure w/ reheat and supplemental duct firing
Auxiliary Boiler	1	44 mm Btu/hr	Natural gas fired for startup
Aqueous Ammonia Storage	1	20,000 U.S. gal, each	NO_X control (19 wt percent ammonia solution)
Hydrogen Storage tank	1	1,500 gallons (liquid volume)	Generator cooling gas
SCR Catalyst	2		NO_X control
Oxidation Catalyst	2		VOC and CO Control
HRSG Stacks	2	19 ft dia × 175 ft high	Includes silencers
Continuous Emissions Monitoring System (CEM)	2		NO_X, CO and O_2
HP/IP Boiler Feedwater Pumps	4	2,100 U.S. gpm each	HP/IP feed (2 × 100 percent per HRSG)
Air cooled condenser	1	1,930 mm Btu/hr	45 cells (estimated) 2 speed fans
Condensate Pumps	3	1,900 U.S. gpm each	Horizontal (3 × 50 percent capacity)
Auxiliary Cooling Water Pumps	2	8,600 U.S. gpm each	All auxiliary cooling water system heat loads, including generator and lube oil cooling (2 × 100 percent capacity)
Auxiliary Cooling Water Heat Exchanger	1	65 mm Btu/hr	18 cells (estimated) 1 speed fans
Fuel Gas Filter Separators	2	30,821 scfm	Natural gas fuel
Raw Water Intake Pump	1	150 gpm submersible	At Tehama-Colusa Canal (Spare in stock)
Raw Water/Firewater Storage Tank	1	Nominal 400,000 U.S. gal	300,000 dedicated to firewater reserve
Demineralized Water Storage Tank	1	Nominal 200,000 U.S. gal	Boiler feed water makeup
Emergency Generator	1	1,000 kW	Diesel engine powered
Fire Pumps	1 set	250 Hp; 250 Hp; 10 Hp	1 Diesel; 1 electric; 1 jockey pump

Note:
Refer to Figure 3.4-1 for location of Major Equipment

Table 3.4-3
Natural Gas Analysis

Constituent	Percent by Volume
Methane	94
Ethane	3
Propane	0.1
n-Butane	0.01
i-Butane	0.01
n-Pentane	0.00
i-Pentane	0.01
Hexane+	0.01
Oxygen	0.00
Nitrogen	2.2
Carbon dioxide	0.66
Total	**100.00**
Sulfur (grains per 100 scf)	<0.20
Specific Gravity (air = 1.00)	0.59
Higher Heating Value (Btu per scf)	1010

Source: PG&E, 2006b.

Notes:

Btu = British thermal units.
scf = standard cubic feet.

Table 3.4-4
Daily and Annual Average Water Consumption Requirements

Stream Name	Average Flow (gpm)	Maximum Flow (gpm)	Average Annual Usage (acre ft/year)
Sanitary Waste	5	5	8
Minor Losses	1	1	1.6
CTG Cooler Evaporation (1) (3)(4)	0	96	77.4
HRSG Blowdown Evaporation (2) (3)(4)	12.3	19.1	25.3
Steam Cycle Leakage (2) (3)(4)	5.5	9.0	11.7
Crystallizer Evaporation (2) (3)(4)	1.0	1.5	2.1
Total Plant Water Usage Requirements	**24.8**	**131.6**	**126.1**

Notes:

1 Average annual usage based on CTG evaporative cooler operation ON for six months per year.
2 Average annual usage assumes duct firing operation 50 percent of the time.
3 Average flow rates are calculated with duct firing OFF and CTG evaporative cooler OFF.
4 Maximum flow rates are calculated with duct firing ON and CTG evaporative cooler ON.

Table 3.4-5
Water Balances
(Page 1 of 2)

		Case 1	Case 2	Case 3	Case 4
Ambient Dry Bulb Temperature		59 °F DB	94 °F DB	59 °F DB	94 °F DB
Relative Humidity		60 percent RH	25.4 percent RH	60 percent RH	25.4 percent RH
Ambient Wet Bulb Temperature		49.5°F WB	67.5°F WB	49.5°F WB	67.5°F WB
GT Load		100 percent	100 percent	100 percent	100 percent
Duct Burner Status		ON	ON	OFF	OFF
CT Evaporative Cooler Status		OFF	ON	OFF	ON
CT/HRSG Trains Operating		2	2	2	2
Air Cooled Condenser Status		ON	ON	ON	ON
		Iso Conditions	Peak Summer	Iso Conditions	Peak Summer
Stream Number	**Stream Description**	**Flow Rate U.S. gpm**	**Flow Rate U.S. gpm**	**Flow Rate U.S. gpm**	**Flow Rate U.S. gpm**
1	System Makeup Water	30	126	21	117
2	*Not used*	-	-	-	-
3	*Not used*	-	-	-	-
4	Potable Water System Makeup	5	5	5	5
5	Boiler/Turbine Wash Water	5	5	5	5
6	Fire Water System Makeup	1	1	1	1
7	CTG Inlet Air Evap Cooler Makeup	0	128	0	128
8	Raw Water Makeup	59	27	35	3
9	*Not used*	-	-	-	0
10	Demin System Makeup (backup)	0	0	0	0
11	*Not used*	-	-	-	0
12	Wastewater to Oil Water Separator	6	6	6	6
13	Treated OWS Effluent	6	6	6	6
14	CTG Inlet Air Evap Cooler Blowdown	0	32	0	
15	*Not used*	-	-	-	
16	*Not used*	-	-	-	
17	Demin System Makeup (backup)	107	108	69	
18	HRSG Blowdown Quench Water	134	134	86	
19	Quenched HRSG Blowdown Return	174	174	111	
20	Microfiltration Reject	5	5	3	
21	Microfiltration Effluent	102	102	65	
22	Primary RO Permeate	77	77	49	
23	Primary RO Reject	26	26	16	
24	Secondary RO Permeate	65	65	42	
25	Secondary RO Reject	12	12	7	
26	EDI Feedwater	65	65	42	
27	EDI Reject	2	2	1	1

Table 3.4-5
Water Balances
(Page 2 of 2)

		Flow Rate U.S. gpm	Flow Rate U.S. gpm	Flow Rate U.S. gpm	Flow Rate U.S. gpm
28	Demineralized Water	63	63	41	40
29	Makeup Demineralized Water	63	63	41	40
30	HRSG Blowdown	54	54	33	33
31	Sampling Requirements	5	5	5	5
32	Steam Supply to Evap System	5	5	5	5
33	Condensate Return from Evap System	5	5	5	5
34	System Leakage and Losses	4	4	3	3
35	HRSG Quench Flash Evaporation	19	19	12	12
36	Sludge to Offsite Disposal	<1	<1	<1	<1
37	Sorbent Media to Disposal	Nil	Nil	Nil	Nil
38	Potable Water to Distribution	5	5	5	5
39	Treated Sanitary Waste	5	5	5	5
40	Evaporator Effluent Stream	2	2	1	1
41	Distillate Recycle	29	29	19	19
42	Crystallizer Feed	2	2	1	1
43	Crystallizer Solids to Disposal	<0.5	<0.5	<0.5	<0.5
44	Crystallizer Evaporation	2	2	1	1
45	*Not used*	-	-	-	-
46	CTG Evaporation	0	96	0	96
47	Wastewater to Evaporator	31	31	20	20

Notes:
1 Flow rates may not add due to differences in stream temperatures.
2 Flow rates reflect flows at normal conditions. Intermittent or negligible flows are not included.
3 All numbers are estimated.
4 See Figures 3.4-5A and 3.4-5B for Water Balance Diagram.

Table 3.4-6
Tehama-Colusa Canal Water Analysis

Water Quality Parameter	Average Concentration
Turbidity	3.8 NTU
Color	10 Units
pH	8.3 Units
Total Suspended Solids	35 mg/L
Total Dissolved Solids	94 mg/L
Hardness as $CaCO_3$	62 mg/L
Calcium	20 mg/L
Magnesium	2.91 mg/L
Sodium	8.0 mg/L
Potassium	Non Detect
Total Alkalinity	78 mg/L
Bicarbonate	78 mg/L
Sulfate	7.4 mg/L
Chloride	5.4 mg/L
Nitrate	1.2 mg/L[1]
Fluoride	<0.1 mg/L[1]
Arsenic	0.005 mg/L
Iron	<0.1 mg/L[1]
Boron	<0.1 mg/L[1]
Silica	8.8 mg/L[1]

Sources: Water Analysis by Curtis & Tompkins, Ltd., 06-Mar-01
Water Analysis by Curtis & Tompkins, Ltd., 11-April-01

$CaCO_3$ = calcium carbonate
mg/L = milligrams per liter
NTU = nephelometric turbidity units

Table 3.4-7
Anticipated Hazardous Material Usage and Storage During Operation

Material	Application	Amount Stored On Site	Phase	CAS Number	Hazards [(a)]	Threshold Quantity
Aqueous Ammonia, 19 wt percent	NO_X Emissions Control	20,000 U.S. gal	Liquid	7664-41-7	Acute, chronic, fire, pressure	20,000 lb
Mineral Insulating Oil	Electrical Transformers	55,000 U.S. gal [(b)]	Liquid	None	Acute, chronic, fire	N/A
Lubricating Oil	Mechanical Equipment	12,400 U.S. gal [(b)]	Liquid	None	Acute, chronic, fire	N/A
Propylene Glycol	Antifreeze for closed cooling water system	25 U.S. gal [(b)]	Liquid	57-55-6	Acute, chronic, fire	N/A
Sulfuric Acid, 29.5 wt percent	Station and Gas Turbine Batteries	1,500 U.S. gal	Liquid	7664-93-9	Acute, chronic, reactive	1,000 lb
Sulfuric Acid, 93 wt percent	Water Treatment Scaling Control	1 × 6,000 U.S. gal	Liquid	7664-93-9	Acute, chronic, reactive	1,000 lb
Sodium Hydroxide, 50 wt percent	Water Treatment pH Control	6,000 U.S. gal	Liquid	1310-73-2	Acute, chronic, reactive	1,000 lb
Sodium Hypochlorite, 12 wt percent	Water Treatment Disinfectant	1 × 6,000 U.S. gal	Liquid	7681-52-9	Acute	
Alkaline Phosphate Solution	Boiler Feedwater Scale Control	5 × 55 U.S. gal Containers/ 30 days storage [(c)]	Liquid			
Hydrazine, 35 wt percent	Boiler Feedwater Corrosion Inhibitor	2 × 400 U.S. gal Containers [(c)]	Liquid	302-01-2	Acute, chronic	1 lb
Aqueous Ammonia, 19 wt percent[1]	Boiler Feedwater Corrosion Control	2 × 400 U.S. gal Containers [(c)]	Liquid	7664-41-7	Acute, chronic, fire, pressure	20,000 lb
Hydrochloric Acid	HRSG Chemical Cleaning	Temporary Only [(d)]	Liquid	7647-01-0	Acute, chronic	5,000 lb [(e)]
Hydrated Lime	Wastewater Treatment	25 tons	Powder	471-34-1		
Soda Ash	Wastewater Treatment	25 tons	Powder	497-19-8		
Sodium Bisulfite, 38 wt percent	Water Treatment	2 × 400 U.S. gal Containers [(c)]	Liquid	7631-90-5	Acute, reactive	
Aluminum Sulfate, 50 wt percent	Water Treatment Coagulant	3,000 U.S. gal	Liquid	10043-01-3	Acute	5,000 lb
Ammonium Bifluoride	HRSG Chemical Cleaning	Temporary Only [(d)]	Liquid			
Citric Acid	HRSG Chemical Cleaning	Temporary Only [(d)]	Liquid	77-92-9	Acute, chronic	N/A
EDTA Chelant	HRSG Chemical Cleaning	Temporary Only [(d)]	Liquid			
Sodium Nitrite	HRSG Chemical Cleaning	Temporary Only [(d)]	Liquid	7632-00-0	Acute	N/A
Carbon Dioxide	Generator Purging	25,200 scf	Gas	124-38-9	Acute, chronic, pressure	N/A
Carbon Dioxide	Fire Suppression	24,000 lb	Liquid	124-38-9	Acute, chronic, pressure	N/A

Table 3.4-7
Anticipated Hazardous Material Usage and Storage During Operation

Material	Application	Amount Stored On Site	Phase	CAS Number	Hazards [(a)]	Threshold Quantity
Hydrogen	Generator Cooling	24,000 scf	Gas	1333-74-0	Acute, fire, pressure, reactive	10,000 lb
Nitrogen	Blanketing	200 lb	Gas	7727-37-9	Pressure	N/A
Diesel Fuel Oil	1. Diesel Firewater Pump Motor 2. Emergency Diesel Generator	1. 280 U.S. gal 2. 600 U.S. gal	Liquid	68476-34-6	Acute, chronic, fire	N/A
Natural Gas	Gas Turbine Generator and Duct Burner Fuel	1,300 lb [(b)]	Gas	None	Acute, fire, pressure	N/A

Notes:

1. All quantities are approximate.
2. Demineralizer regeneration chemicals for makeup water are not included — plant will use leased equipment , which are regenerated off site.

a Health hazards include acute (immediate) and chronic (delayed). Physical categories include fire, sudden release of pressure and reactive.

b In the equipment and pipelines.

c Chemicals are pre-mixed in portable containers.

d Gas turbine compressor water wash cleaning chemicals are not stored on site; cleaning is by a contractor.

e Threshold applies to hydrogen chloride.

Table 3.5-1 Major Structures			
Equipment	**Qty**	**Size, L×W×H (feet)**	**Service/Remarks**
Combustion Turbine Generators (CTGs)	2	140 × 45 × 58	DLN combustion control with inlet air foggers
Steam Turbine Generator (STG)	1	97 × 39 × 54	Condensing Reheat STG
Heat Recovery Steam Generators (HRSGs)	2	180 × 37 × 94	Three pressure w/ reheat and supplemental duct firing
Aqueous Ammonia Storage	2	44 × 9 DIA × 12	NO_X control
Fin Fan Coolers	1	60 × 70 × 17	Lube Oil Cooling
HRSG Stacks	2	19 DIA × 175	Self-supported
Air cooled condenser	1	220 × 384 × 144	45 Cells (estimated)
Admin/Control Bldg	1	260 × 90 × 24	
Water Treatment Bldg	1	150 × 90 × 24	
Main Transformer	3	30 × 22 × 20	
Lattice Tower	12	30 × 30 × 125	Transmission Lines (4 footings each)
Raw Water/Firewater Storage Tank	1	50 DIA × 34	400,000 gallons; 300,000 dedicated to firewater reserve
Demineralized Water Storage Tank	1	33 DIA × 32	Boiler feed water makeup and WAC Regeneration
Note: Refer to Figure 3.4-1 for location of Major Equipment			

Table 3.6-1
Construction Staff by Trade

Craft/Trade	1 Month	2 Months	3 Months	4 Months	5 Months	6 Months	7 Months	8 Months	9 Months	10 Months	11 Months	12 Months	13 Months	14 Months	15 Months	16 Months	17 Months	18 Months	19 Months	20 Months	21 Months	22 Month	23 month	24 month
Boilermakers						9	17	29	39	50	57	59	62	50	40	22	20	13	4		4	2	2	2
Carpenters	3	4	12	20	27	38	50	63	68	68	67	66	60	36	35	30	25	16	11	7	5	3	3	3
Electricians	1	1	2	2	3	10	11	11	16	14	58	78	98	146	150	165	154	130	62	55	33	10	7	6
Ironworkers		4	13	14	24	41	44	29	14	12	10	9	9	8	1	1					3	2	2	2
Laborers	9	12	19	26	29	39	43	44	44	48	54	61	68	67	65	64	59	45	32	17	11	10	9	9
Pipefitters	1	1	2	2	3	4	5	42	64	91	120	148	162	157	147	116	54	24	12	9	24	10	5	4
Painters/Insulation Workers											6	6	10	12	14	14	10	8	6	6				
Bricklayers/Masons		3	9	21	24	28	36	33	21	10	9	9	7	5	4	3	1							
Millwrights									13	26	43	59	76	85	97	97	79	46	26	20	12	6	1	1
Operating Engineers	8	11	16	21	24	29	30	31	31	35	45	50	55	55	52	51	40	27	19	8	6	4	4	3
Total Craft	**22**	**36**	**73**	**106**	**134**	**198**	**236**	**282**	**310**	**354**	**469**	**545**	**607**	**621**	**605**	**563**	**442**	**309**	**172**	**122**	**98**	**47**	**33**	**30**
Contractor Staff	14	18	23	26	27	32	38	43	43	43	44	44	48	48	46	46	45	45	32	30	9	3	2	2
Total Site Staff	**36**	**54**	**96**	**132**	**161**	**230**	**274**	**325**	**353**	**397**	**513**	**589**	**655**	**669**	**651**	**609**	**487**	**354**	**204**	**152**	**107**	**50**	**35**	**32**

Table 3.6-2
Daily Average and Peak Construction Traffic

Vehicle Type	Average One-Way Trips	Peak One-Way Trips[a]
Construction Worker Vehicles[b]	199	446
Delivery Vehicles (including heavy trucks)	15	16
Total	**214**	**462**

Notes:

[a] "Peak" refers to the scheduled peak construction period. Peak workforce is expected to be 669 persons in month 14.

[b] Assumes that part of the workforce will carpool (1.5 persons per vehicle).

Table 3.6-3
Estimated Land Disturbance Areas for Construction and Operation
(Page 1 of 2)

Project Component Item	Unit Area		Proposed Length	Construction Right-of-Way (ROW)	Notes
	Construction	Operations			
Power Plant Area					
Power Generation Facility	20 acres	20 acres	N/A	N/A	Temporary construction includes laydown, topsoil storage, parking and construction office area, and construction area for switchyard. Permanent disturbance is the area within the fence line of the power generation facility, plus the stormwater detention basin.
Switchyard	8.2 acres	8.2 acres	N/A	N/A	Temporary construction area for switchyard is included with temporary construction area for power generation facility. Permanent disturbance is the area within the fenceline of the switchyard facility.
Stormwater Basin	2.5 acres	2.5 acres	N/A	N/A	Stormwater basin is located at the southwest section of the project site.
Temporary Construction Area					
Construction Area	43 acres	N/A	N/A	N/A	Temporary construction area includes laydown, parking, and construction trailer/office.
Linear Facilities					
Plant Access Road	4.1 acres	1.7 acres	2,500 feet	70-foot width	Temporary construction disturbance is 70 feet wide. Road length is approximately 2,500 feet from the end of pavement on the PG&E Road Easement 295 or 442 to the plant fenceline. Permanent disturbance is 30 feet wide (24-foot-wide pavement plus 3-foot shoulder on each side).
Transmission Line Interconnection	7.3 acres	0.3 acre	1,800 feet	10,000 square feet per tower (12) 400 square feet per footing (48)	Four PG&E transmission lines loop in and out from the site switchyard. They are approximately 1,800 feet long and each is supported by approximately three structures (a total of 48 tower footings). Thirty-two tower footings are outside of the temporary construction disturbance area of the switchyard and laydown area. Each tower footing will have a temporary disturbance averaging about 10,000 square feet per tower. Permanent average disturbance is estimated at 400 square feet per footing.
Natural Gas Pipeline, underground	1.7 acres	N/A	1,500 feet	50-foot width	No temporary or permanent access road. Construction disturbance will be 50 feet wide. Pipeline is approximately 1,500 feet in length (from PG&E Gas Compressor to termination at plant metering station fenceline). Permanent 50-foot easement, but surface restored to original condition.

Table 3.6-3
Estimated Land Disturbance Areas for Construction and Operation
(Page 2 of 2)

Project Component Item	Unit Area		Proposed Length	Construction Right-of-Way (ROW)	Notes
	Construction	Operations			
Water Supply Pipeline and Associated Unpaved Road	1.9 acres	0.74 acre	2,700 feet	30-foot width	Temporary disturbance is assumed to be 30 feet wide. Pipeline is approximately 2,700 feet in length. The raw water intake structure at the Tehama-Colusa Canal will require a permanent area of 10 by 10 feet, and a temporary area of disturbance of twice that area. The surface above the buried pipeline will be maintained as a 12-foot-wide unpaved dirt service road, with the remaining area of disturbance.
Other Areas					
Glenn-Colusa Canal Bridge	5.4 acres	1 acres	100-foot bridge length 40-foot-long disturbance on each side of bridge	120-foot width	Maximum temporary disturbance is assumed to be a 200-foot radius, which includes the construction laydown, temporary road, bridge and parking, and 135-foot ROW during construction of the road. Maximum permanent disturbance is limited to the realignment of the approach roads and backfilling the area (40 by 120 feet) on both sides of the bridge
Teresa Creek Bridge	3 acres	0.04 acre	75 feet	200-foot radius	Maximum temporary disturbance is assumed to be within a 200-foot radius, which includes laydown, temporary road, and bridge and parking. Maximum permanent disturbance is limited to backfilling the 40 × 40-foot area at the northwestern corner of the bridge to bring it up to grade.
Delevan/ McDermott Intersection	0.02 acre	0.02 acre	N/A	N/A	Shoulders on Delevan Road east of McDermott Road will be widened at the intersection to provide a wider turning radius. This includes relocation of the stop sign and telephone conduit box at the northeastern corner, and placement of gravel at the northeastern and southeastern corners of the intersection.
TOTAL	**97.12 acres**	**34.50 acres**			

Table 3.8-1 Plant Operation Workforce			
Department	**Personnel**	**Shift**	**Workdays**
Operations	13 Power Plant Technicians 4 Lead Power Plant Technicians	Rotating 12-hour shift, 2 or 3 employees per shift	7 days a week.
Production	1 Operations Supervisor 1 Engineer 1 EH&S Coordinator 1 Chemist	Standard 8 to 10 hours per day.	4 to 5 days a week with additional coverage as required
Administration	1 Plant Manager 1 Procurement Specialist 1 Administrative Supervisor 1 Administrative Assistant	Standard 8 to 10 hours per day.	4 to 5 days a week with additional coverage as required.
Maintenance	1 Maintenance Supervisor 1 Maintenance Safety Engineer 2 ITC Technicians 1 Electrician 1 Mechanic	Standard 8 to 10 hours per day.	4 to 5 days a week with additional coverage as required.
Total: 31 Full Time Personnel			

Table 3.9-1 Typical Audible Noise from Corona Discharge	
Line Voltage	**Audible Noise Level**
138 kV	33.5 dBA
240 kV	40.4 dBA
356 kV	51.0 dBA
dBA = decibels measured using the A-weighted scale.	

Table 3.9-2 Major Equipment Redundancy		
Description	**Number**	**Notes**
Combustion Turbine Generator, Heat Recovery Steam Generator and Combustion Turbine Generator Main Transformer	Two Trains	Either train can operate independently. Also, bypass systems are provided around the Steam Turbine Generator to allow both Combustion Turbine Generator/HRSG trains to operate at full load without duct firing not on a continuous basis).
Steam Turbine Generator	One	Refer to note related to Combustion Turbine Generator/HRSG trains.
Steam Turbine Generator Main Transformer	One	Refer to note related to Combustion Turbine Generator/HRSG trains.
Boiler Feedwater Pump	Two at 100 percent per train	One Boiler Feedwater Pump per train can be down and the plant will be able to operate at full load.
Condensate Pump	Three at 50 percent (Each sized for one train)	One Condensate Pump can be down and the plant will be able to operate at full load.
Air cooled condenser	One	45 fans are provided, one per cell. Loss of a single fan would result in at most a loss of 2.3 percent of the total cooling capacity.
Auxiliary Cooling Water Pump	Two at 100 percent	One Auxiliary Cooling Water Pump can be down and the plant will be able to operate at full load.
Air Compressors	Two at 100 percent Instrument Air Compressors (each sized for one train)	One Air Compressor can be down and the plant will be able to operate at full load.

Table 3.10-1
Project Facility Design Laws, Ordinances, Regulations, and Standards and Compliance
(Page 1 of 7)

Engineering Activity	Laws, Ordinances, Regulations, and Standards	Administering Agency	Applicability/Compliance	AFC Section
Federal				
Engineering Geology	Occupational Safety and Health Act, 29 United States Code (USC) §651 et seq.; 29 Code of Federal Regulations (CFR) §§1901.1-1910, 1500, 29 CFR, Part 1926	Federal Occupational Safety and Health Administration (OSHA); Cal OSHA (per 29 CFR §1952.70-1952.175)	Specific occupational safety and health standards. E&L Westcoast will meet all standards.	Appendix A: Foundations and Civil Engineering Design; Appendix B: Structural and Seismic Engineering Design Criteria; Section 8.7.6: Worker Safety
Engineering Geology	Clean Water Act (CWA), 33 USC §1342 et seq.	Central Valley Regional Water Quality Control Board (CVRWQCB)	Requires permits for specified discharges into waters of the United States. E&L Westcoast will provide notice of intent to CVRWQCB to operate under and will comply with all General Industrial Activity Storm Water Permit requirements.	Appendices A and B; Section 8.14: Water Resources
State				
Engineering Geology	Business and Professions Code §6700 et seq.; 6730, 6736	Board of Professional Engineers and Land Surveyors	Requires state registration to practice as a civil or structural engineer in California and that all plans, specifications, reports, or documents be prepared by or under the direction of a registered engineer. E&L Westcoast will comply with all requirements.	Appendices A and B; Section 8.15: Geologic Hazards and Resources
Engineering Geology	California Occupational Safety and Health Act, Labor Code §6500 et seq.	California Occupational Safety and Health Administration (Cal OSHA)	Requires a permit for construction of trenches or excavation 5 feet or deeper into which personnel have to descend.	Appendices A and B; Section 8.7.6: Worker Safety

Table 3.10-1
Project Facility Design Laws, Ordinances, Regulations, and Standards and Compliance
(Page 2 of 7)

Engineering Activity	Laws, Ordinances, Regulations, and Standards	Administering Agency	Applicability/Compliance	AFC Section
Engineering Geology	California Building Code (CBC) (latest edition available)	CEC	Sets building standards and requirements. E&L Westcoast will comply with all CBC requirements.	Appendices A and B; Section 8.15: Geologic Hazards and Resources
Engineering Geology	Labor Code §6300 et seq.; 8 CCR 1500 et seq.; 2300 et seq., §3200 et seq.	Cal OSHA	Prescribes construction safety orders, industrial safety orders and work safety requirements. E&L Westcoast will comply with all safety requirements.	Appendices A and B; Section 8.7.6: Worker Safety
Engineering Geology	Vehicle Code §35780 et seq.	California Department of Transportation (Caltrans)	Requires a permit for transportation of oversize or overweight vehicles over state highways. E&L Westcoast will obtain all necessary permits.	Section 8.10: Traffic and Transportation
Local				
Engineering Geology	Code of Building Regulations	Colusa County Department of Building	Sets building standards and requirements for Colusa County.	Appendices A and B; Section 8.15: Geologic Hazards and Resources
Engineering Geology	Hydrology Manual	Colusa County Department of Building	Specifies drainage and grading requirements. E&L Westcoast will comply with all drainage and grading requirements.	Appendices A and B; Section 8.15: Geologic Hazards and Resources
Federal				
Civil and Structural Engineering	29 USC §651 et seq.; 29 CFR §§1901.1-1910, 1500; 29 CFR, Part 1926.	OSHA; Cal OSHA (per 29 CFR §§1952.70-1952.175)	Specific occupational safety and health standards. E&L Westcoast will meet all standards.	Appendices A and B; Section 8.7.6: Worker Safety

Table 3.10-1
Project Facility Design Laws, Ordinances, Regulations, and Standards and Compliance
(Page 3 of 7)

Engineering Activity	Laws, Ordinances, Regulations, and Standards	Administering Agency	Applicability/Compliance	AFC Section
Civil and Structural Engineering	33 USC §1342 et seq.	CVRWQCB	Requires permits for specified discharges into waters of the United States. E&L Westcoast will provide notice of intent to CVRWQCB to operate under and will comply with all General Industrial Activity Storm Water Permit requirements.	Section 8.14: Water Resources
State				
Civil and Structural Engineering	Business and Professions Code §6700 et seq.; §§6730, 6736	Board for Professional Engineers and Land Surveyors	Requires state registration to practice as a civil or structural engineer in California and that all plans, specifications, reports, or documents be prepared by or under the direction of a registered engineer. E&L Westcoast will comply with all requirements.	Appendices A and B
Civil and Structural Engineering	Labor Code §6500 et seq.	Cal OSHA	Requires a permit for construction of trenches or excavation 5 feet or deeper into which personnel have to descend.	Appendices A and B; Section 8.7.6: Worker Safety
Civil and Structural Engineering	California Building Code (CBC)	CEC	Sets building standards and requirements. E&L Westcoast will comply with all CBC requirements.	Appendices A and B; Section 8.7.6: Worker Safety

Table 3.10-1
Project Facility Design Laws, Ordinances, Regulations, and Standards and Compliance
(Page 4 of 7)

Engineering Activity	Laws, Ordinances, Regulations, and Standards	Administering Agency	Applicability/Compliance	AFC Section
Civil and Structural Engineering	Labor Code §6300 et seq.; 8 CCR 1500 et seq.; 2300 et seq.; §3200 et seq.	Cal OSHA	Prescribes construction safety orders, industrial safety orders and work safety requirements. E&L Westcoast will comply with all safety requirements.	Appendices A and B; Section 8.7.6: Worker Safety
Civil and Structural Engineering	Vehicle Code §35780 et seq.	Caltrans	Requires a permit for transportation of oversize or overweight vehicles over state highways. E&L Westcoast will obtain all necessary permits.	Section 8.10: Traffic and Transportation
Civil and Structural Engineering	49 CFR Part 192	Federal OSHA and Cal OSHA	Code of Federal Regulation 49 Part 192 – Transportation of Natural and Other Gas by Pipeline: Minimum Federal Safety Standards. Reliant will comply with standards	Appendices A and B; Section 6.3: Pipeline Construction
State				
Civil and Structural Engineering	California Public Utility Commission (CPUC) general Order 112E	CPUC	Requires a proposed installation report and construction and safety standards. Reliant will comply with CPUC regulations and standards.	Appendices A and B; Section 6.3: Pipeline Construction
Local				
Civil and Structural Engineering	Code of Building Regulations	Colusa County Department of Building	Sets building standards and requirements for Colusa County.	Appendices A and B; Section 8.15: Geologic Hazards and Resources

Table 3.10-1
Project Facility Design Laws, Ordinances, Regulations, and Standards and Compliance
(Page 5 of 7)

Engineering Activity	Laws, Ordinances, Regulations, and Standards	Administering Agency	Applicability/Compliance	AFC Section
Civil and Structural Engineering	Hydrology Manual	Colusa County Department of Building	Specifies drainage and grading requirements. E&L Westcoast will comply with all drainage and grading requirements.	Appendices A and B; Section 8.15: Geologic Hazards and Resources
Federal				
Mechanical Engineering	29 USC §651 et seq.; 29 CFR §§1901.1-1910, 1500; 29 CFR, Part 1926.	Federal OSHA; Cal OSHA (per 29 CFR §§1952.70-1952.175)	Specific occupational safety and health standards. E&L Westcoast will meet all standards.	Appendices C and D; Section 8.7.6: Worker Safety
State				
Mechanical Engineering	CBC, California Plumbing Code	CEC	Sets building standards and requirements. E&L Westcoast will comply with all CBC requirements.	Appendices C and D; Section 8.15: Geologic Hazards and Resources
Mechanical Engineering	Labor Code §6500 et seq.; 8 CCR 1500 et seq.; 2300 et seq.; §3200 et seq.	Cal OSHA	Prescribes construction safety orders, industrial safety orders and work safety requirements. E&L Westcoast will comply with all safety requirements.	Appendices C and D; Section 8.7.6: Worker Safety
Mechanical Engineering	8 CCR Chapters 4-7	CEC	Prescribes requirements for flammable liquids, gases, and vapors. E&L Westcoast will comply with all requirements.	Appendices C and D; Section 8.12: Hazardous Materials Handling
Mechanical Engineering	Business and Professions Code §6700 et seq., 6730, 6735 and 6736	Board of Professional Engineers and Land Surveyors	Requires state registration to practice as a mechanical engineer and that all plans, specifications, reports, or documents be prepared by a registered engineer. E&L Westcoast will use registered engineers.	Appendices C and D

Table 3.10-1
Project Facility Design Laws, Ordinances, Regulations, and Standards and Compliance
(Page 6 of 7)

Engineering Activity	Laws, Ordinances, Regulations, and Standards	Administering Agency	Applicability/Compliance	AFC Section
Federal				
Electrical Engineering	29 USC §651 et seq.; 29 CFR §§1901.1-1910, 1500, 29 CFR, Part 1926	Federal OSHA; Cal OSHA (per 29 CFR §§1952.70-1952.175)	Specific occupational safety and health standards. E&L Westcoast will meet all standards.	Appendices D and E; Section 8.7.6: Worker Safety
State				
Electrical Engineering	CBC, California Electrical Code	CEC	Sets building standards and requirements. E&L Westcoast will comply with all CBC requirements.	Appendices D and E; Section 8.15: Geologic Hazards and Resources
Electrical Engineering	Labor Code §6500 et seq.; 8 CCR 1500 et seq.; 2300 et seq.; §3200 et seq.	Cal OSHA	Prescribes construction safety orders, industrial safety orders and work safety requirements. E&L Westcoast will comply with all safety requirements.	Appendices D and E; Section 8.7.6: Worker Safety
Electrical Engineering	8 CCR Chapters 4-7	CEC	Prescribes requirements for flammable liquids, gases, and vapors. E&L Westcoast will comply with all requirements.	Appendices D and E; Section 8.12: Hazardous Materials Handling
Electrical Engineering	Business and Professions Code §6700 et seq., 6730, 6735 and 6736	Board of Professional Engineers and Land Surveyors	Requires state registration to practice as an electrical engineer and also requires all plans, specifications, reports, or documents be prepared by a registered engineer. E&L Westcoast will use registered engineers.	Appendices D and E

Table 3.10-1
Project Facility Design Laws, Ordinances, Regulations, and Standards and Compliance
(Page 7 of 7)

Engineering Activity	Laws, Ordinances, Regulations, and Standards	Administering Agency	Applicability/Compliance	AFC Section
Local				
Electrical Engineering	Code of Building Regulations	Colusa County Department of Building	Sets building standards and requirements for Colusa County.	Appendices D and E; Section 8.15: Geologic Hazards and Resources
Power Plant Reliability	EPRI, NERC		EPRI and NERC trade association standards will be followed	Appendix E; Section 3.8: Safety and Reliability
Federal				
Public Health/Worker Safety Protection	OSHA, 29 USC §651 et seq.; 29 CFR 1910 et seq.; and 29 CFR 1926 et seq.	Federal OSHA and Cal OSHA	Project will meet employee health and safety standards for employer-employee communications, electrical operations, and chemical exposures.	Section 8.7.6: Worker Safety
Public Health/Worker Safety Protection	Department of Labor, Safety and Health Regulations for Construction promulgated under Section 333 of the Contract Work Hours and Safety Standards Act, 40 USC 327 et seq.	Federal OSHA and Cal OSHA	Project will meet employee health and safety standards for construction activities. Requirements addressed by CCR Title 8, General Construction Safety Orders.	Section 8.7.6: Worker Safety

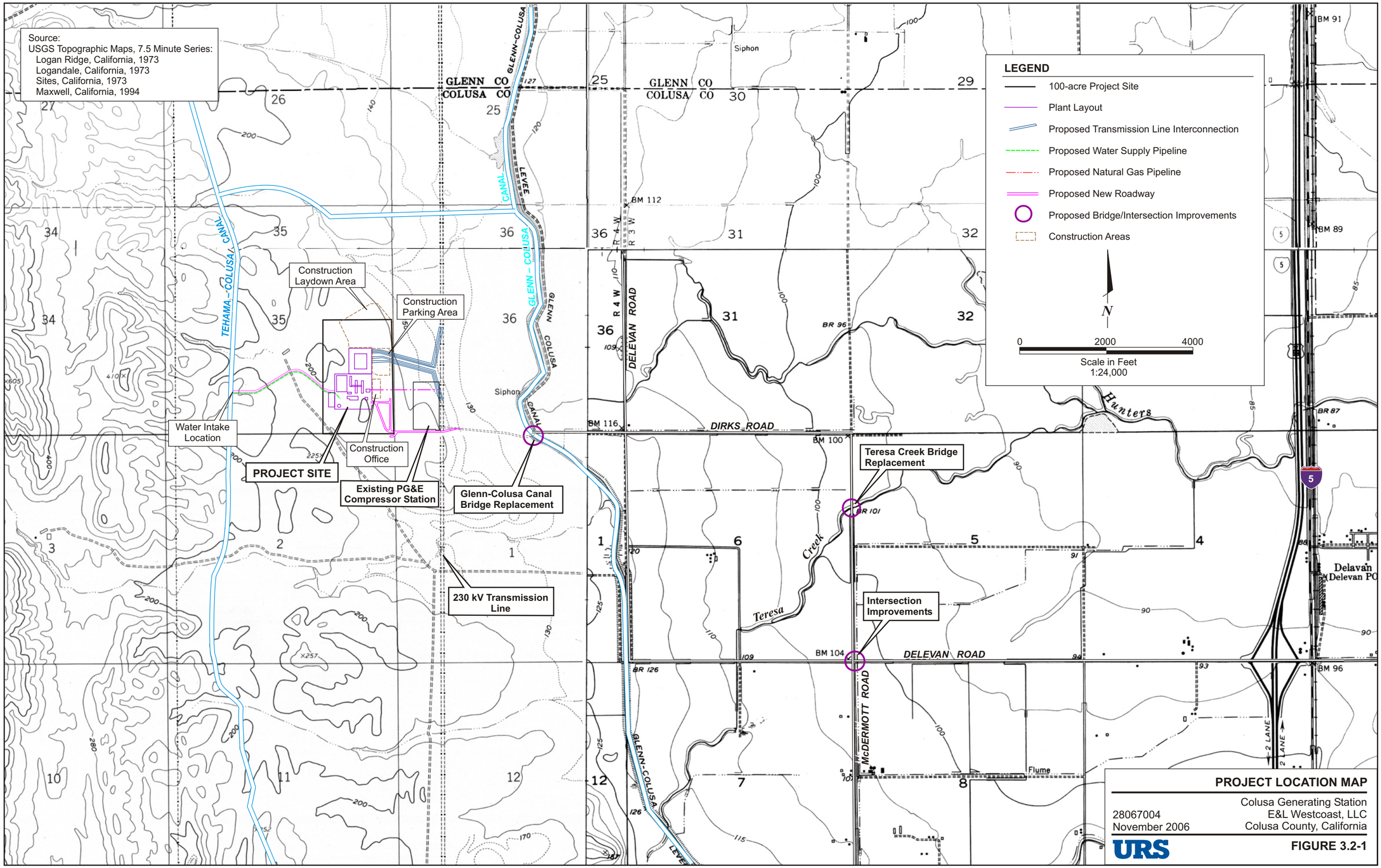

PROJECT LOCATION MAP

28067004
November 2006

Colusa Generating Station
E&L Westcoast, LLC
Colusa County, California

URS

FIGURE 3.2-1

11/02/06 vsa ..\28067004 CPV Colusa\3.0 Facility Description\3.2-1_plm.cdr

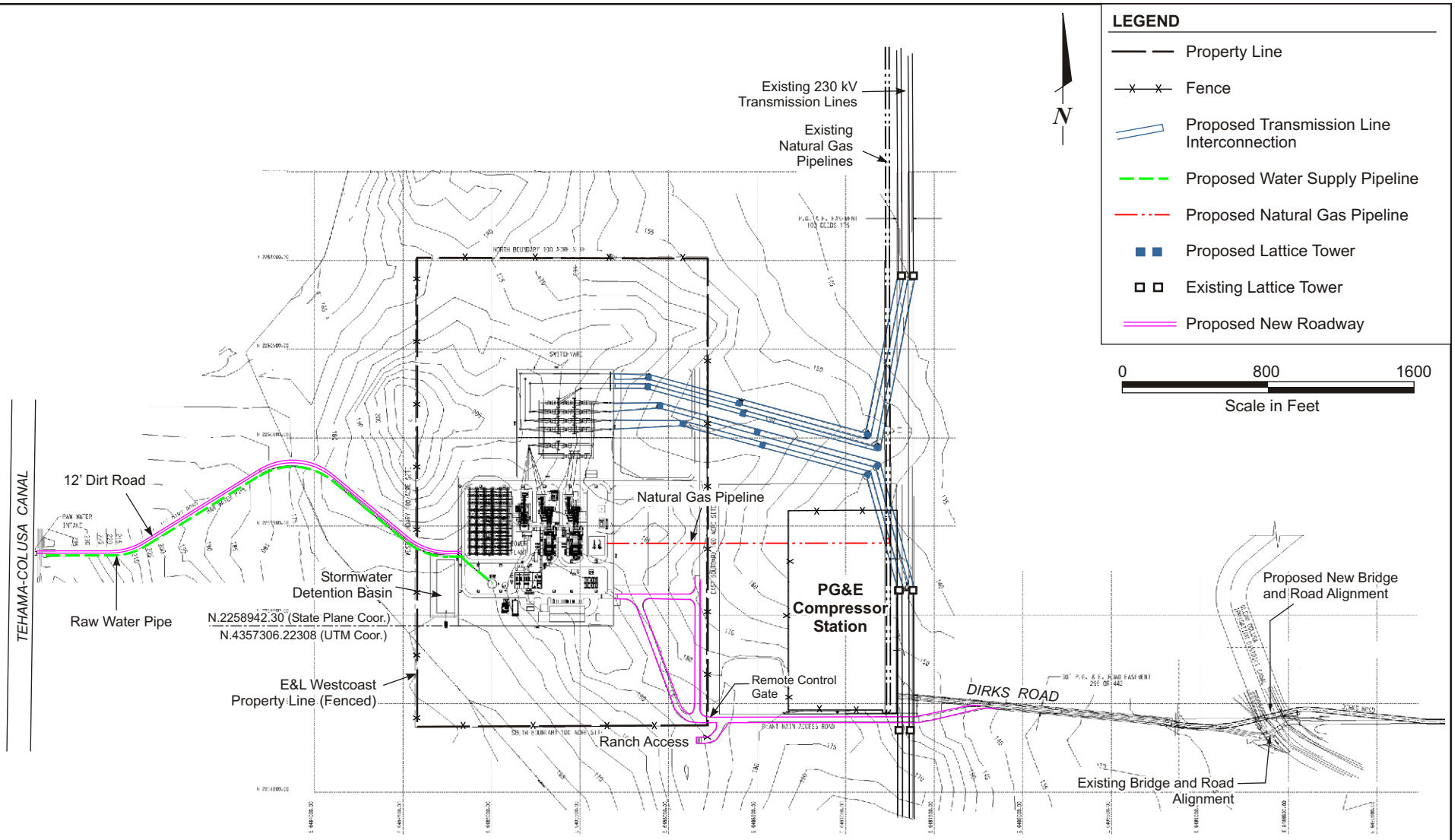

SITE PLAN

Colusa Generating Station
E&L Westcoast, LLC
Colusa County, California

28067004
November 2006

URS

FIGURE 3.3-1

Source:
Bechtel Corporation; Colusa Power Plant, Dwg. No. P1-0100-00003
General Arrangement With Air Cooled Condenser (COL_GA05 Rev Oc) October 4, 2006;
Figure 7.2-1 in progress Oct 20, 2006

LEGEND

1 Combustion Turbine
2 Heat Recovery System Generator (HRSG) with SCR & Oxidation Catalyst
3 Steam Turbine Generator
4 HRSG Exhaust Stack
5 Air Cooled Condenser
6 Auxiliary Boiler
7 Main Transformers
8 Steam Turbine
9 Electrical Auxiliary Transformers
10 Control Room Administration, Warehouse, and Maintenance Bldg.
11 Area Sump
12 Ammonia Storage Tank
13 STG Lube Oil Skid
14 Air Compressors
15 Boiler Feed Water Pump
16 Fuel Gas Separator and Heating
17 GTG Support Skids
18 Power Distribution Center
19 Demineralized Water Storage Tank
20 Fire Water Pump Skid
21 HRSG Blowdown Tank and Sump
22 Gas Metering and Regulating with Fuel Gas Filter/Separators
23 Water Treatment Area
24 Ammonia Transfer Pumps
25 Raw/Firewater Tank
26 General Storage
27 Equipment Shelter
28 Septic Tank
29 Bulk Storage Building
30 Hazardous Waste Storage Area
31 CO_2 Bottles
32 Waste Water Basin
33 Water Evaporator Area
34 Pipe Rack
35 Switchyard Control House
36 230 kV Switchyard
37 CEMS Equipment Room
38 Condensate Tank and Pumps
39 Fin Fan Coolers
40 Ammonia Dilution Skid
41 Steam Turbine Electrical Equipment
42 Electrical Switchgear Building
43 Unit Auxiliary Transformer
44 Generator Breakers
45 Emergency Diesel Generator
46 Hydrogen Storage Area Tank
47 CT Air Inlet
48 Phosphate Feed Skid
49 Sample Panel
50 Auxiliary Cooling Water Pumps & Heat Exchanger
51 Stormwater Detention Basin
52 Oil/Water Separator

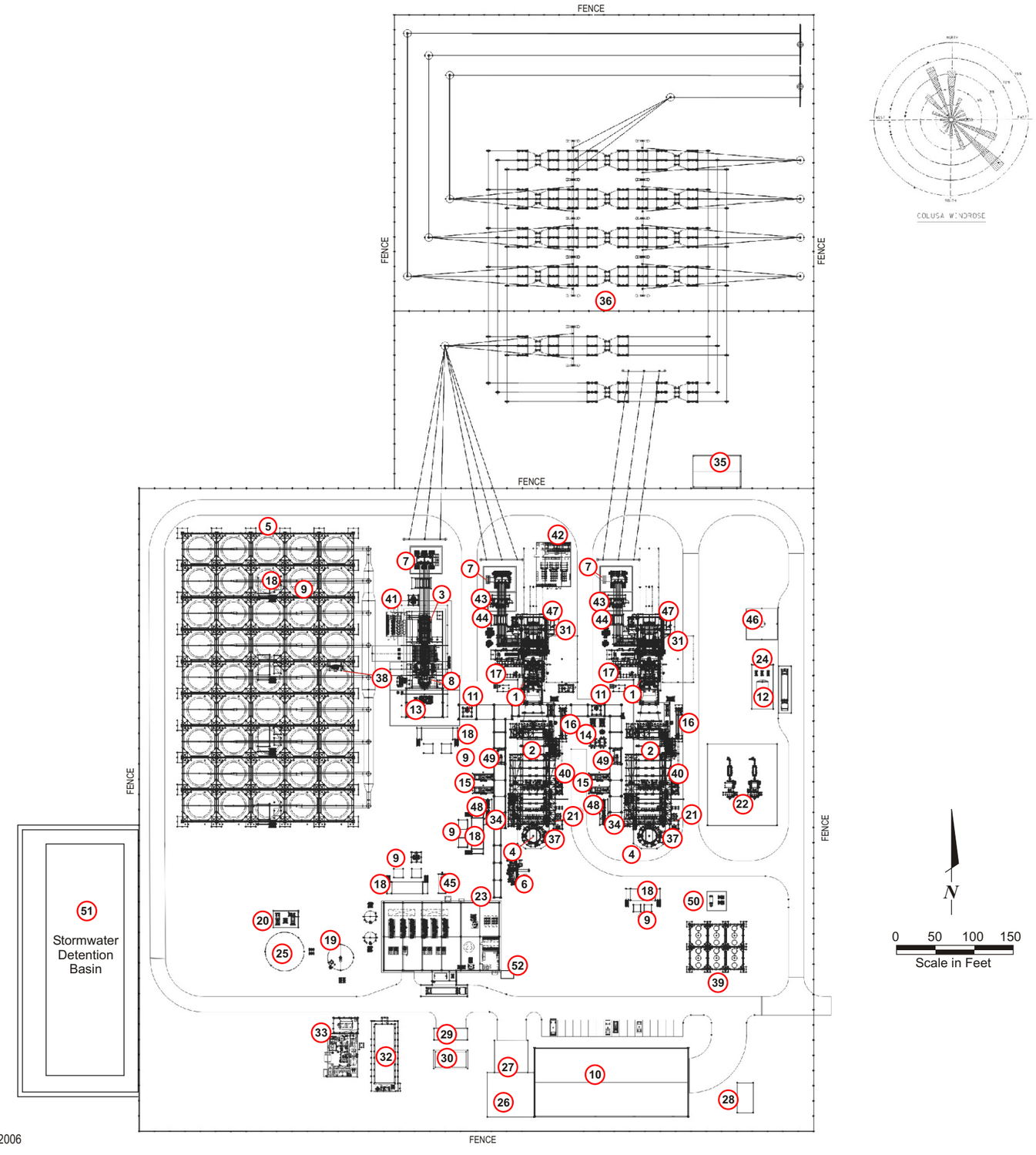

Source:
Bechtel Corporation; Colusa Power Plant, Dwg. No. P1-0100-00001
General Arrangement With Air Cooled Condenser (COL_GA05 Rev 0C), October 4, 2006

PLOT PLAN

28067004
November 2006

Colusa Generating Station
E&L Westcoast, LLC
Colusa County, California

URS

FIGURE 3.4-1

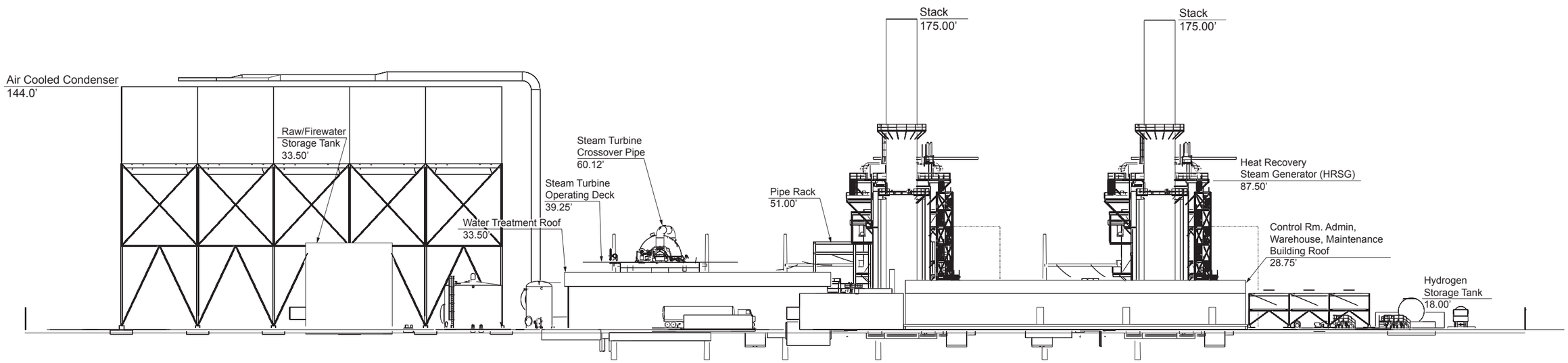

Source:
Bechtel Corporation; Colusa Power Plant, Col_RevC_SouthView.dgn; October 4, 2006

SOUTH ELEVATION
660 MW COMBINED CYCLE PLANT

Colusa Generating Station
28067004 E&L Westcoast, LLC
November 2006 Colusa County, California

URS

FIGURE 3.4-2

10/27/06 vsa ..\28067004 CPV Colusa\3.0 Facility Description\3.4-2_south elevation.ai

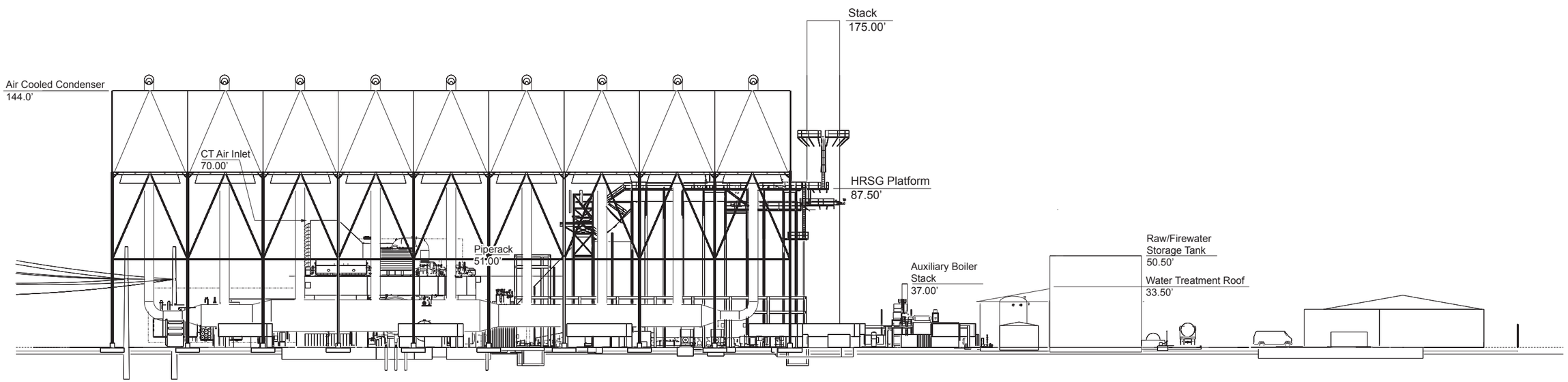

Source:
Bechtel Corporation; Colusa Power Plant, Col_RevC_WestView.dgn; October 4, 2006

WEST ELEVATION
660 MW COMBINED CYCLE PLANT

Colusa Generating Station
28067004 E&L Westcoast, LLC
November 2006 Colusa County, California

URS

FIGURE 3.4-3

10/27/06 vsa ..\28067004 CPV Colusa\3.0 Facility Description\3.4-3_west elevation.ai

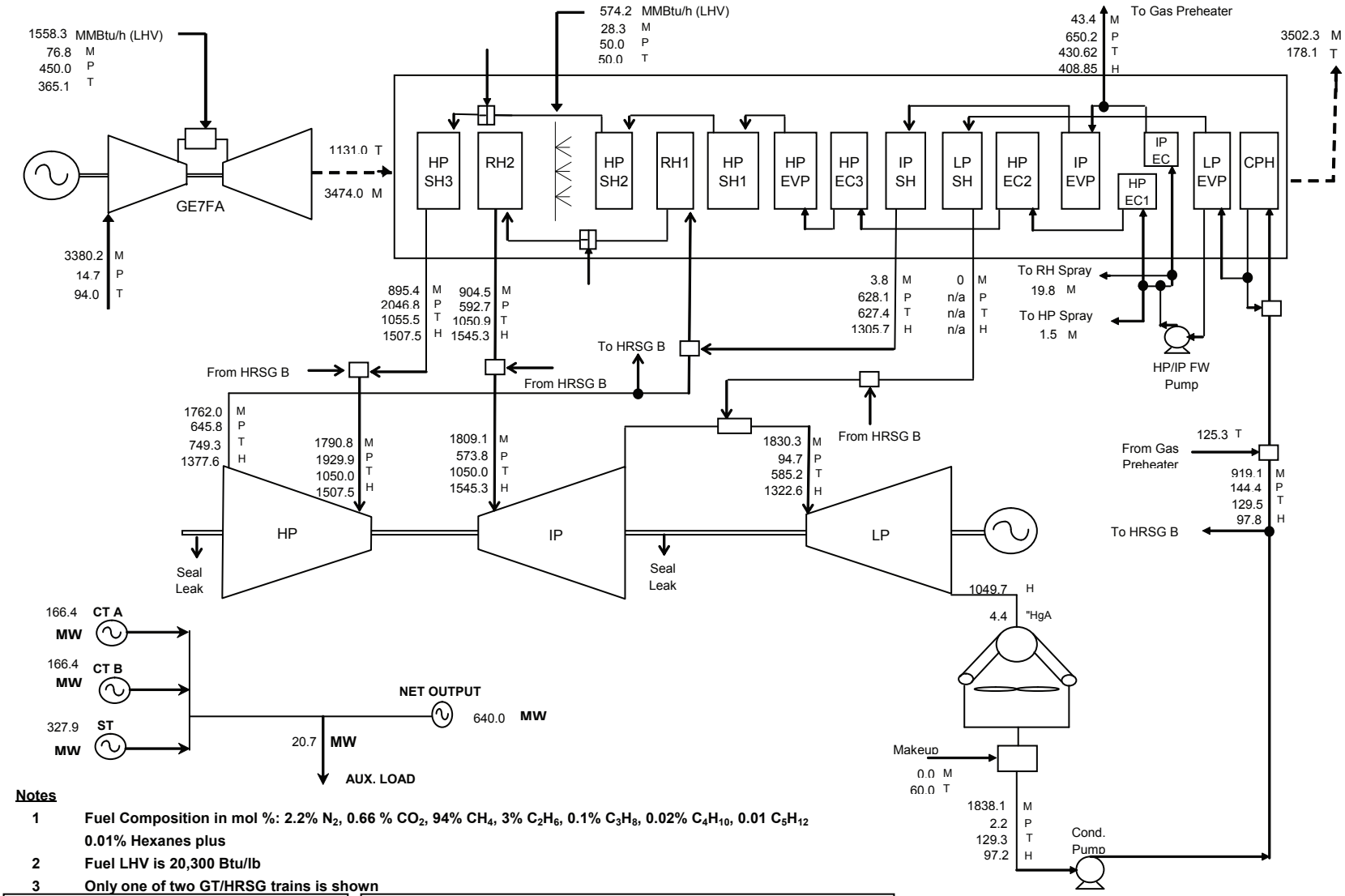

Notes

1. **Fuel Composition in mol %: 2.2% N_2, 0.66 % CO_2, 94% CH_4, 3% C_2H_6, 0.1% C_3H_8, 0.02% C_4H_{10}, 0.01 C_5H_{12} 0.01% Hexanes plus**
2. **Fuel LHV is 20,300 Btu/lb**
3. **Only one of two GT/HRSG trains is shown**

Legend

M: mass flow, kpph
P: pressure, psia
T: temperature, °F
H: enthalpy, Btu/lb

● Splitter
□ Mixer
⊞ Attemporator

Performance Summary

94.0	**°F (D.B.T)**	**Evap Cooler**	**on**
25.4	**% Rel. Hum.**	**Duct Burner**	**on**
14.669	**psia**	**GT/HRSG Trains**	**2**

Net Facility Output	**640.0**	**MW**
Net Facility Heat Rate	**7,397**	**Btu/kWh (HHV)**

Source:
Bechtel, Colusa ACC Diagram, Rev. 3, Oct. 2006

PROCESS FLOW DIAGRAM – POWER BLOCK: ACC, JULY PEAK, FIRED

Colusa Generating Station
28067004 E&L Westcoast, LLC
November 2006 Colusa County, California

URS

FIGURE 3.4-4A

10/25/06 vsa ..\28067004 CPV Colusa\3.0 Facility Description\3.4-4A_ACC JP-fired.ai

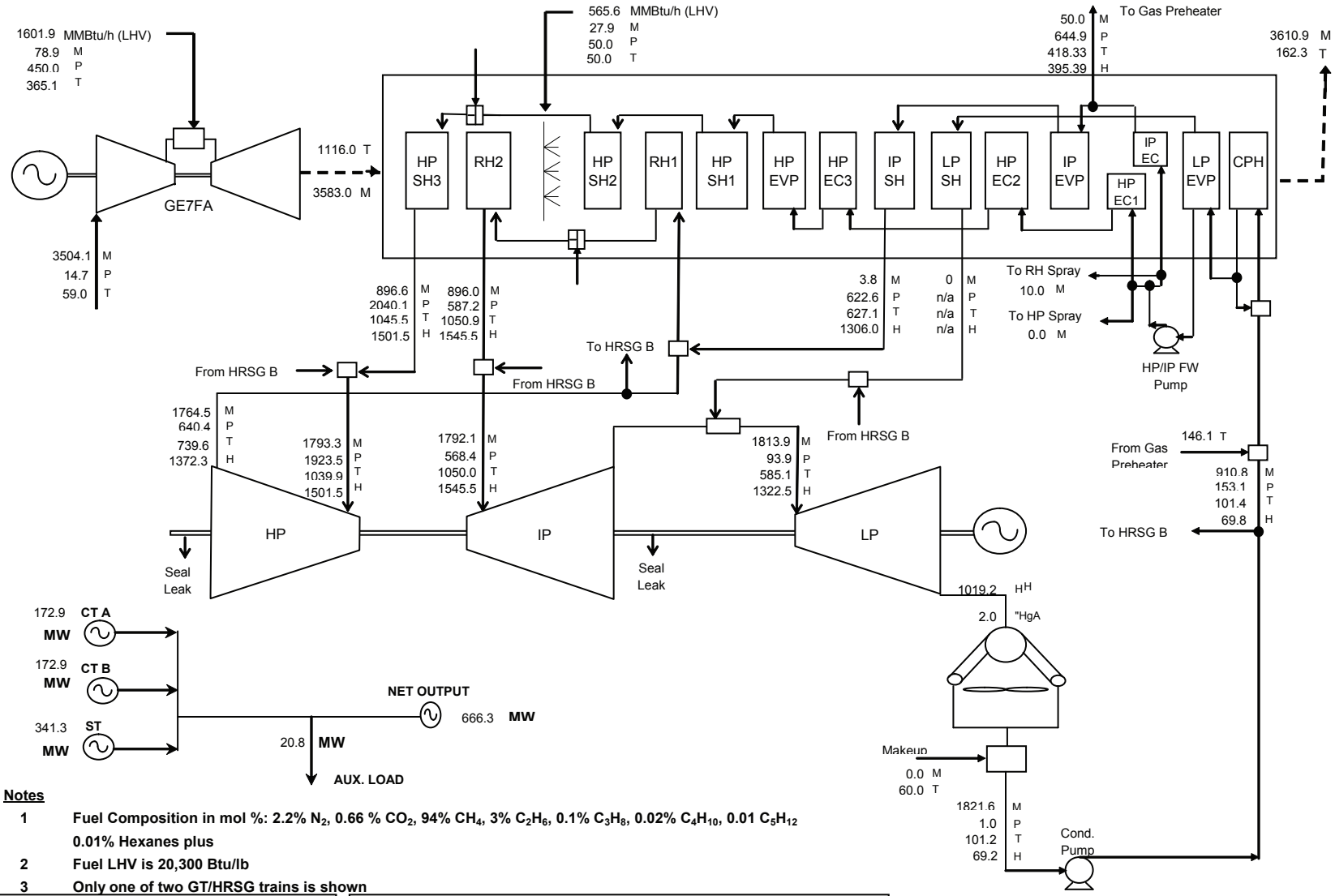

Notes

1. **Fuel Composition in mol %: 2.2% N_2, 0.66 % CO_2, 94% CH_4, 3% C_2H_6, 0.1% C_3H_8, 0.02% C_4H_{10}, 0.01 C_5H_{12} 0.01% Hexanes plus**
2. **Fuel LHV is 20,300 Btu/lb**
3. **Only one of two GT/HRSG trains is shown**

Legend

M: mass flow, kpph
P: pressure, psia
T: temperature, °F
H: enthalpy, Btu/lb

● Splitter
□ Mixer
⊞ Attemporator

Performance Summary

59.0	**°F (D.B.T)**	**Evap Cooler**	**off**
60.0	**% Rel. Hum.**	**Duct Burner**	**on**
14.669	**psia**	**GT/HRSG Trains**	**2**

Net Facility Output	**666.3**	**MW**
Net Facility Heat Rate	**7,222**	**Btu/kWh (HHV)**

Source:
Bechtel, Colusa ACC Diagram, Rev. 3, Oct. 2006

PROCESS FLOW DIAGRAM – POWER BLOCK: ACC, ISO, FIRED

Colusa Generating Station
28067004 E&L Westcoast, LLC
November 2006 Colusa County, California

URS

FIGURE 3.4-4B

10/25/06 vsa ..\28067004 CPV Colusa\3.0 Facility Description\3.4-4B_ACC ISOfired.ai

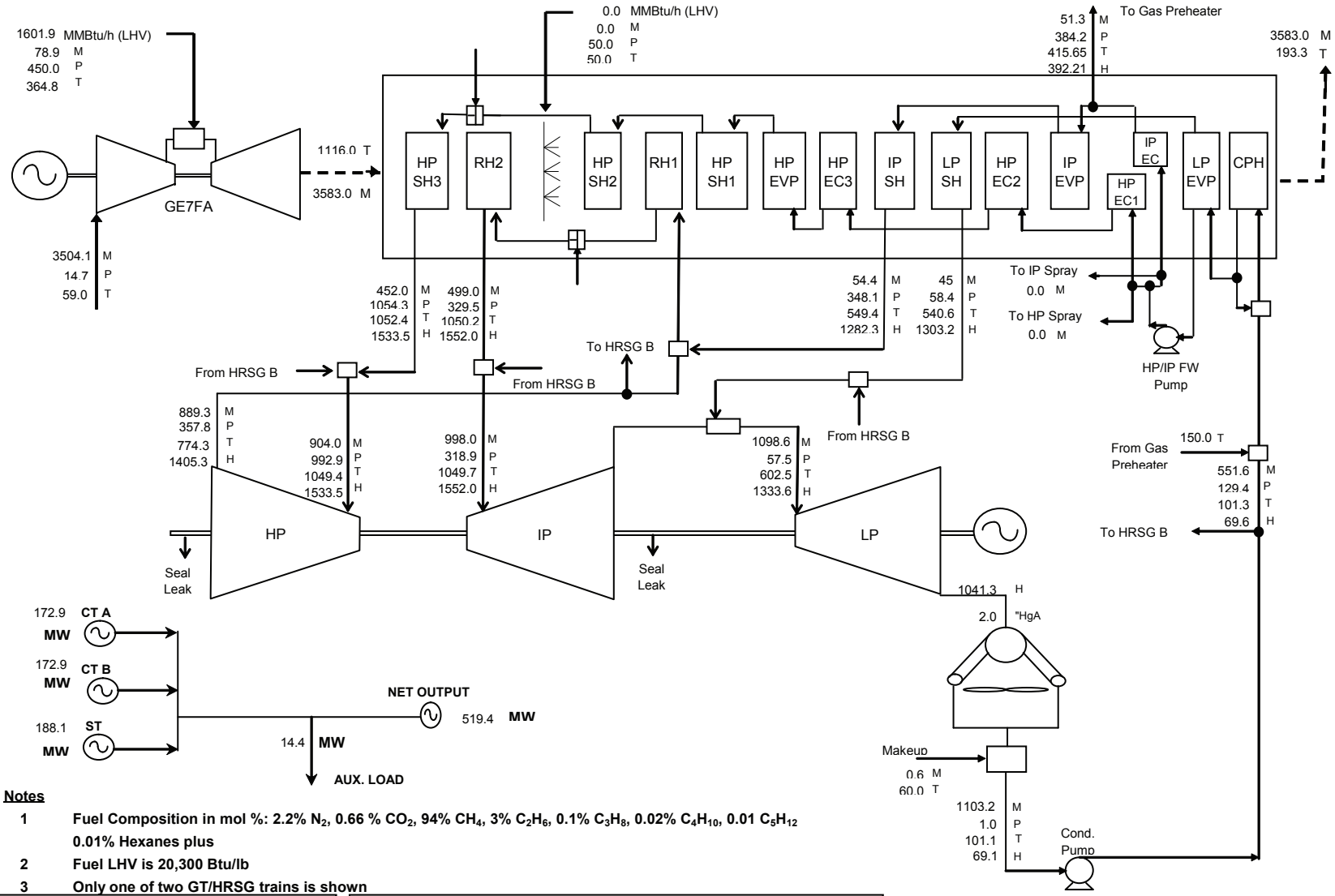

Notes

1. **Fuel Composition in mol %: 2.2% N_2, 0.66 % CO_2, 94% CH_4, 3% C_2H_6, 0.1% C_3H_8, 0.02% C_4H_{10}, 0.01 C_5H_{12} 0.01% Hexanes plus**
2. **Fuel LHV is 20,300 Btu/lb**
3. **Only one of two GT/HRSG trains is shown**

Legend

M: mass flow, kpph
P: pressure, psia
T: temperature, °F
H: enthalpy, Btu/lb

Splitter
Mixer
Attemporator

Performance Summary

59.0	**°F (D.B.T)**	**Evap Cooler**	**off**
60.0	**% Rel. Hum.**	**Duct Burner**	**off**
14.669	**psia**	**GT/HRSG Trains**	**2**

Net Facility Output	**519.4**	**MW**
Net Facility Heat Rate	**6,846**	**Btu/kWh (HHV)**

Source:
Bechtel, Colusa ACC Diagram, Rev. 3, Oct. 2006

PROCESS FLOW DIAGRAM – POWER BLOCK: ACC, ISO, UNFIRED

Colusa Generating Station
E&L Westcoast, LLC
Colusa County, California

28067004
November 2006

URS

FIGURE 3.4-4C

10/25/06 vsa ..\28067004 CPV Colusa\3.0 Facility Description\3.4-4C_ACC ISOunfired.ai

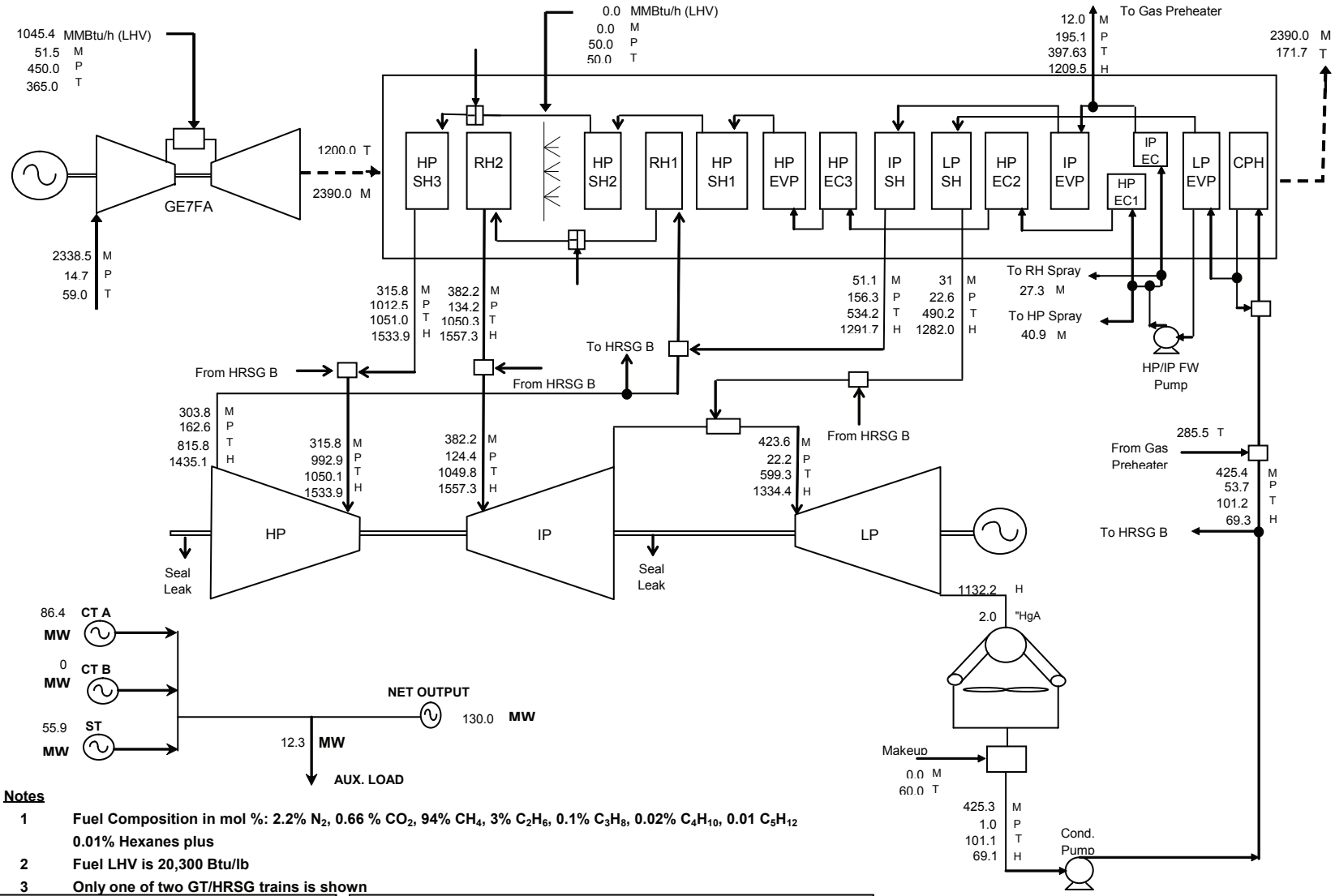

Notes

1. **Fuel Composition in mol %: 2.2% N_2, 0.66 % CO_2, 94% CH_4, 3% C_2H_6, 0.1% C_3H_8, 0.02% C_4H_{10}, 0.01 C_5H_{12} 0.01% Hexanes plus**
2. **Fuel LHV is 20,300 Btu/lb**
3. **Only one of two GT/HRSG trains is shown**

Legend

M: mass flow, kpph
P: pressure, psia
T: temperature, °F
H: enthalpy, Btu/lb

● Splitter
□ Mixer
⊞ Attemporator

Performance Summary

59.0	**°F (D.B.T)**	**Evap Cooler**	**off**
60.0	**% Rel. Hum.**	**Duct Burner**	**off**
14.669	**psia**	**GT/HRSG Trains**	**1**

Net Facility Output	**130.0**	**MW**
Net Facility Heat Rate	**8,924**	**Btu/kWh (HHV)**

Source:
Bechtel, Colusa ACC Diagram, Rev. 3, Oct. 2006

PROCESS FLOW DIAGRAM – POWER BLOCK: ACC, ISO, MINIMUM LOAD, UNFIRED

Colusa Generating Station
28067004 E&L Westcoast, LLC
November 2006 Colusa County, California

URS

FIGURE 3.4-4D

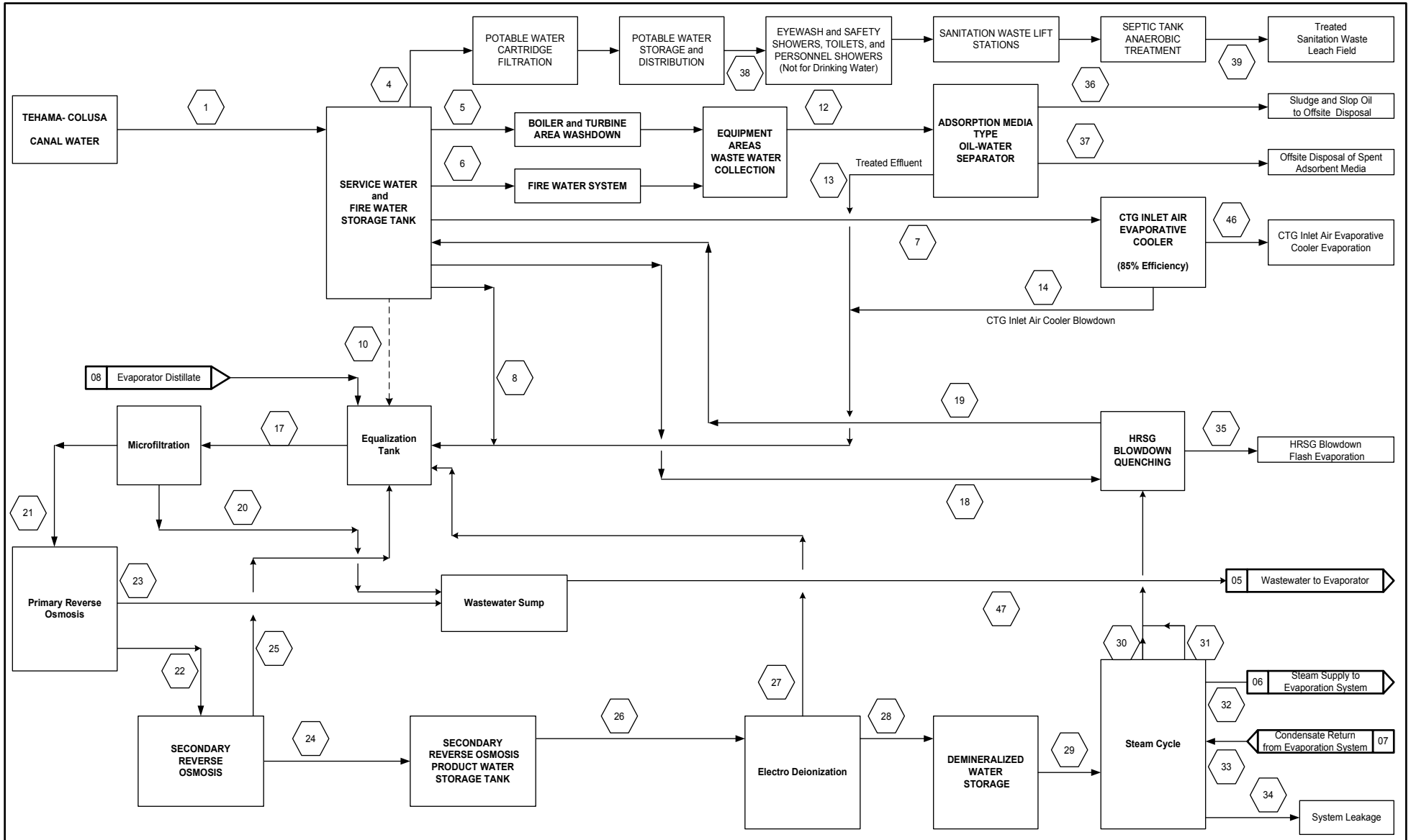

Note:
Table 3.4-5 provides flow rates for each stream.

Source:
Bechtel Dwg. No. M5-WA-G0001, Rev. C, Sheet 1, October 6, 2006

WATER BALANCE DIAGRAM

Colusa Generating Station
28067004 E&L Westcoast, LLC
November 2006 Colusa County, California

URS

FIGURE 3.4-5A

10/29/06 vsa ..\28067004 CPV Colusa\3.0 Facility Description\3.4-5A_water bal-1.ai

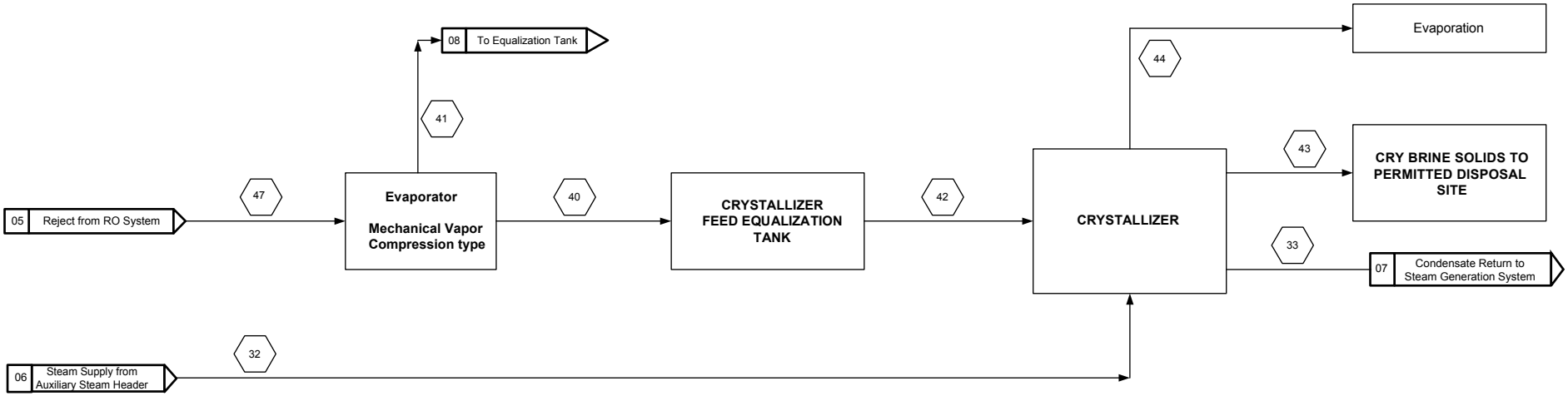

Note:
Table 3.4-5 provides flow rates for each stream.

Source:
Bechtel Dwg. No. M5-WA-G0001, Rev. C, Sheet 2, October 6, 2006

WATER BALANCE DIAGRAM

Colusa Generating Station
28067004 E&L Westcoast, LLC
November 2006 Colusa County, California

URS

FIGURE 3.4-5B

11/02/06 vsa ..\28067004 CPV Colusa\3.0 Facility Description\3.4-5B_water_bal-2.ai

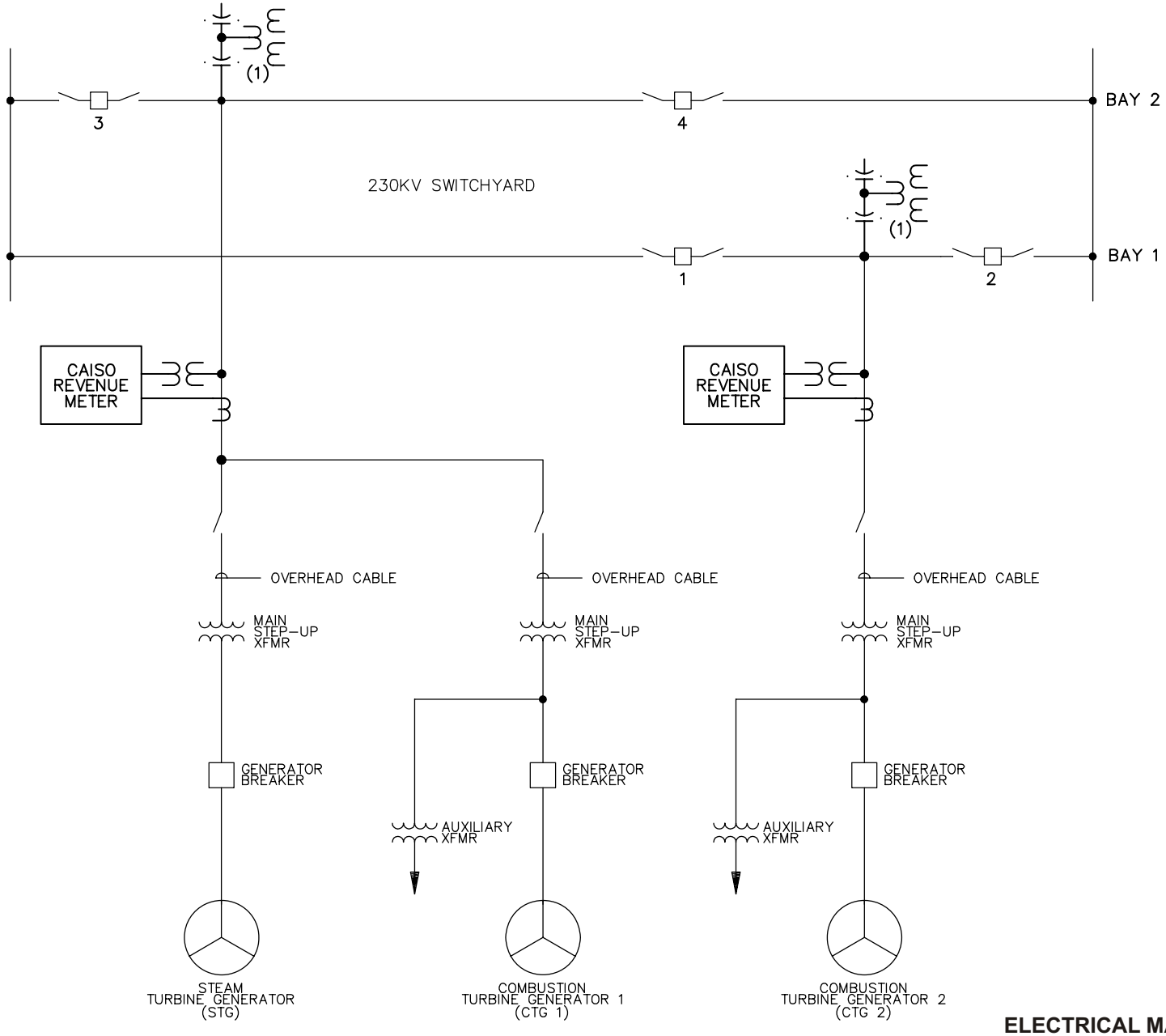

ELECTRICAL MAIN ONE-LINE DIAGRAM

28067004
November 2006

Colusa Generating Station
E&L Westcoast, LLC
Colusa County, California

URS

FIGURE 3.4-6

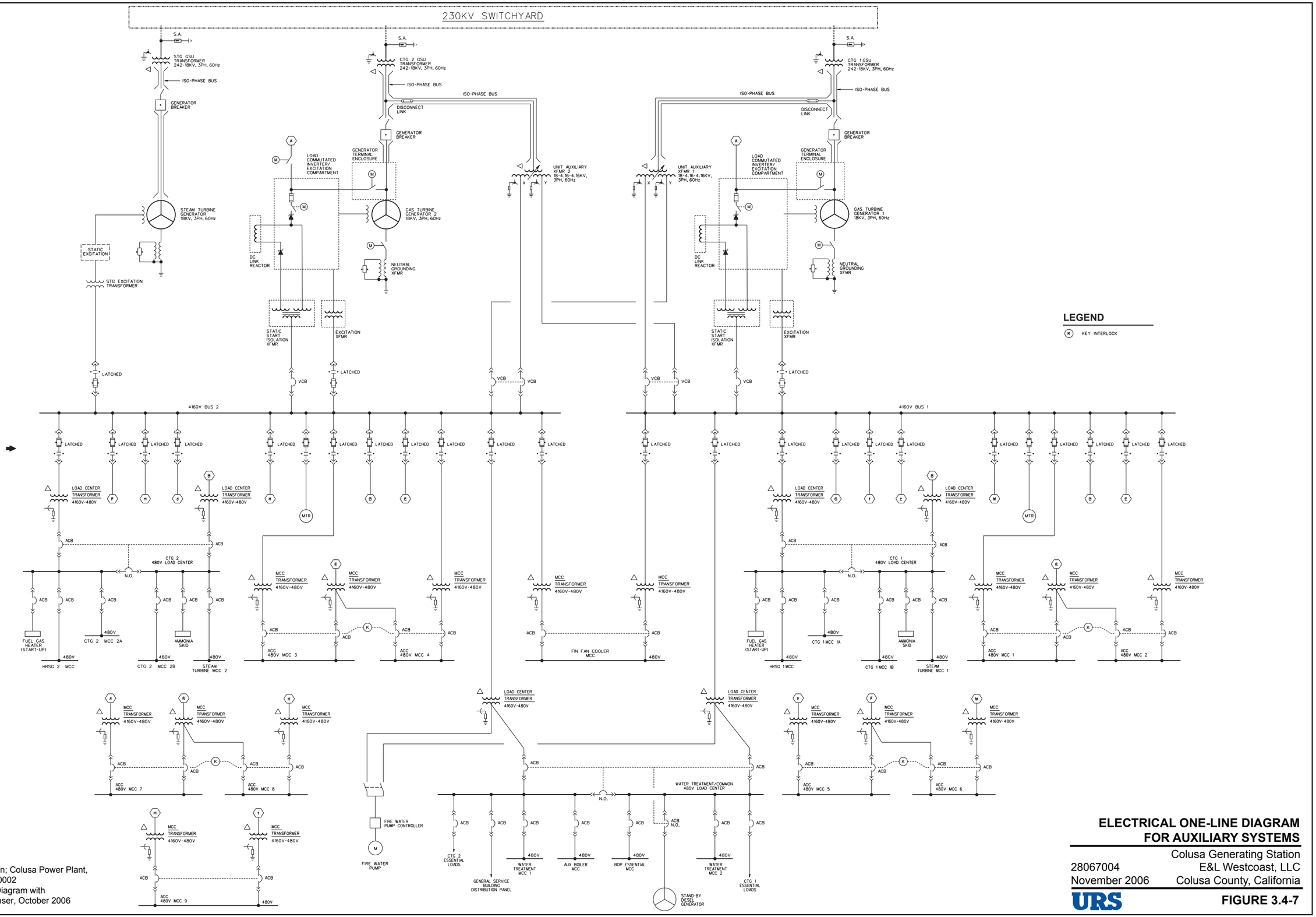

Source:
Bechtel Corporation; Colusa Power Plant,
Dwg. No. E1-000-0002
Main Single Line Diagram with
Air Cooled Condenser, October 2006

ELECTRICAL ONE-LINE DIAGRAM FOR AUXILIARY SYSTEMS

Colusa Generating Station
28067004 E&L Westcoast, LLC
November 2006 Colusa County, California

URS

FIGURE 3.4-7

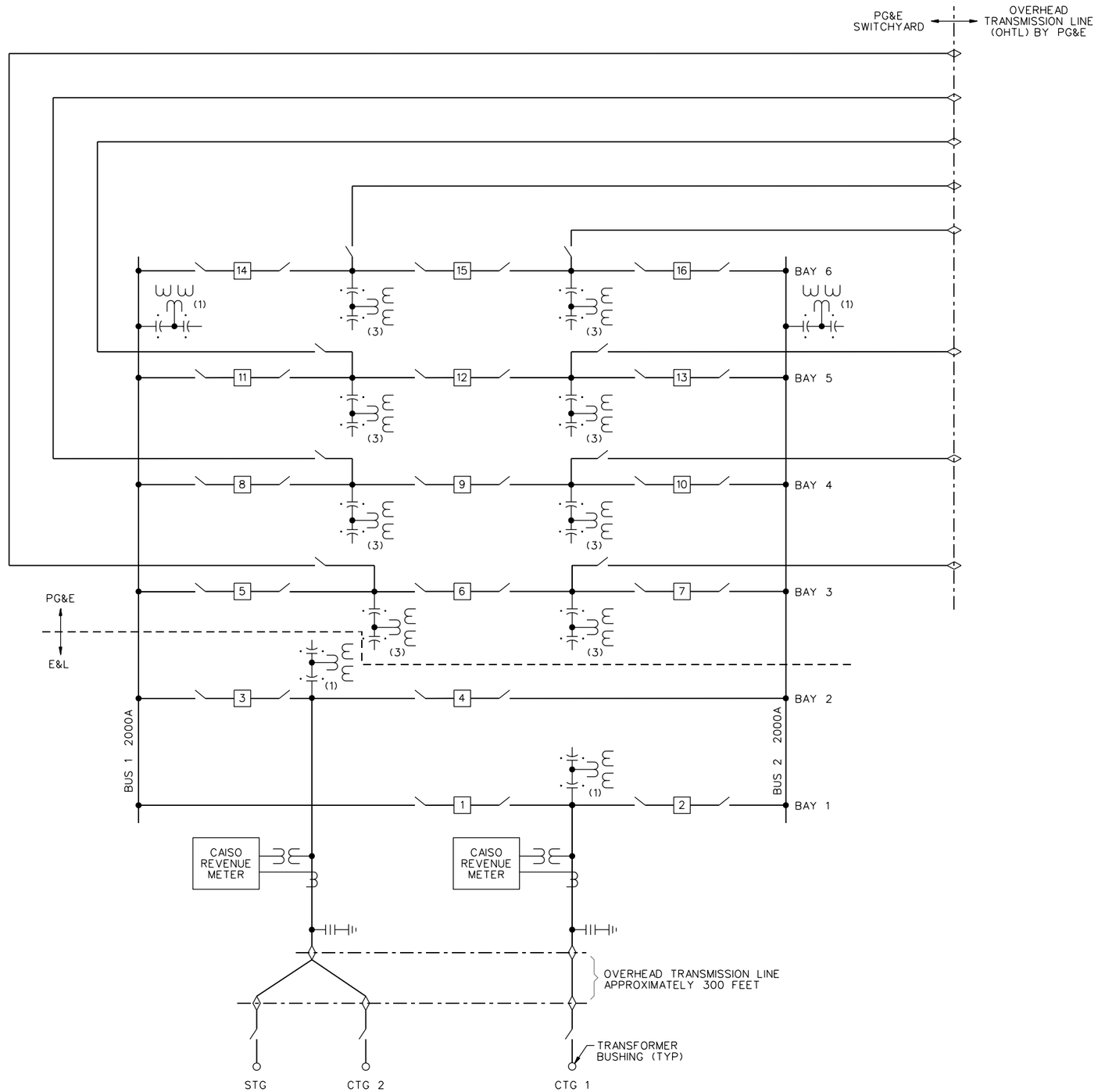

LEGEND:

- SF_6 BREAKER, 2000A, 40KA
- CURRENT TRANSFORMER (CT) ACCURACY 0.3, B1.8
- COUPLING CAPACITOR VOLTAGE TRANSFORMER (CCVT) ACCURACY 1.2, Z
- VOLTAGE TRANSFORMER (VT) ACCURACY 0.3, Z
- MANUALLY OPERATED DISCONNECT SWITCH 2000A
- SURGE ARRESTER
- TAKE-OFF STRUCTURE

THIS IS A CONCEPTUAL SINGLE LINE DIAGRAM. EQUIPMENT RATINGS WILL BE DETERMINED DURING DETAILED DESIGN PHASE

Source:
Bechtel Corporation; Colusa Power Plant, Dwg. No. E1.EZ-00001
230 kV Switchyard Single Line Diagram, July, 2006

ELECTRICAL 230 kV SWITCHYARD ONE-LINE DIAGRAM

Colusa Generating Station
E&L Westcoast, LLC
Colusa County, California

28067004
November 2006

URS

FIGURE 3.4-8

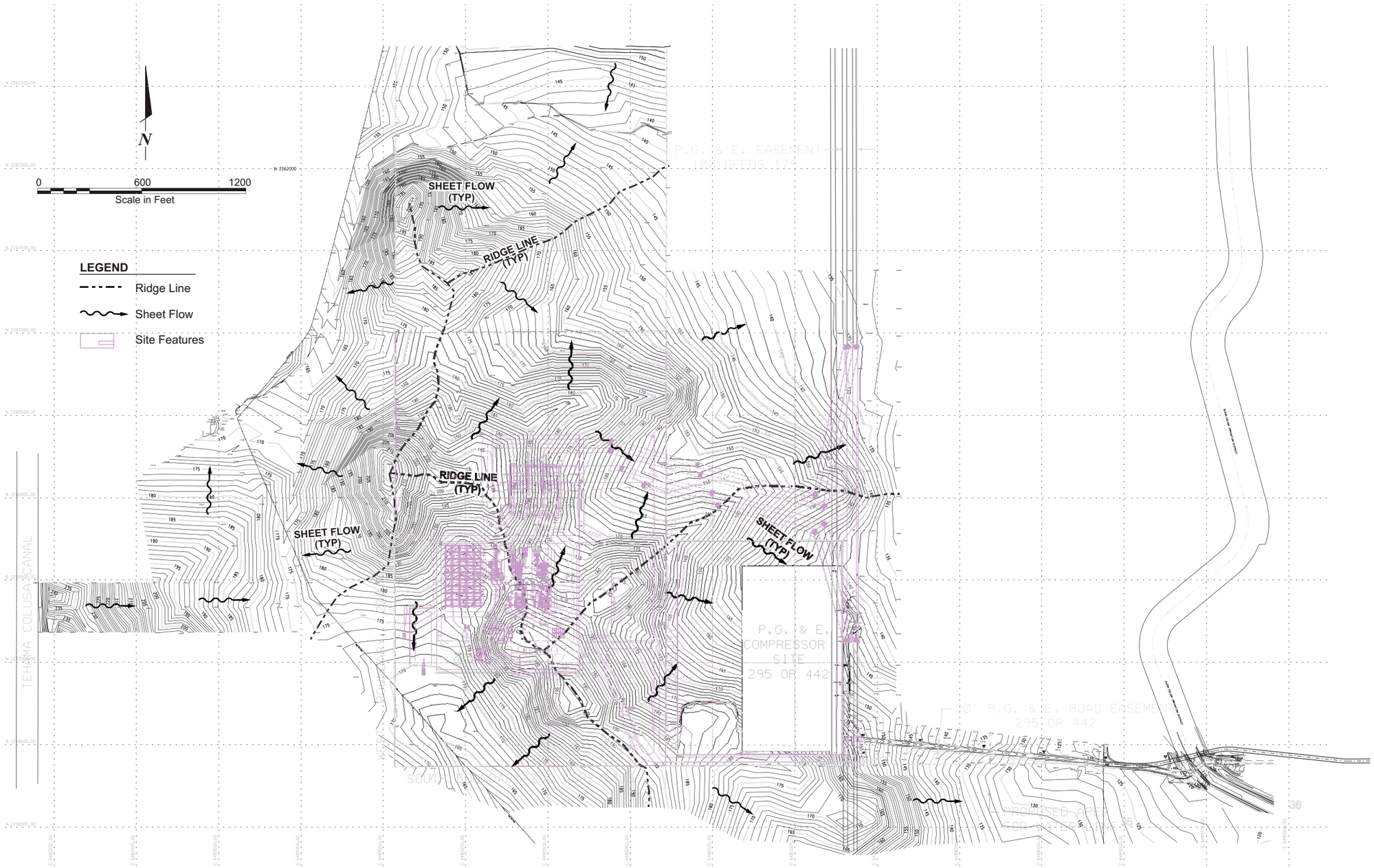

Source:
Bechtel Corporation; Colusa Power Plant, Dwg. No. 3.5-1 July 2006;
Dwg 7.2-1, rev 9/01/06; also Dwg no. 3.5-1 October 5, 2006.

PRE-CONSTRUCTION RUNOFF AND DRAINAGE PATTERN PLAN

28067004
November 2006

Colusa Generating Station
E&L Westcoast, LLC
Colusa County, California

URS

FIGURE 3.5-1

10/20/06 vsa ..\28067004 CPV Colusa\3.0 Facility Description\3.5-1_runoff.cdr

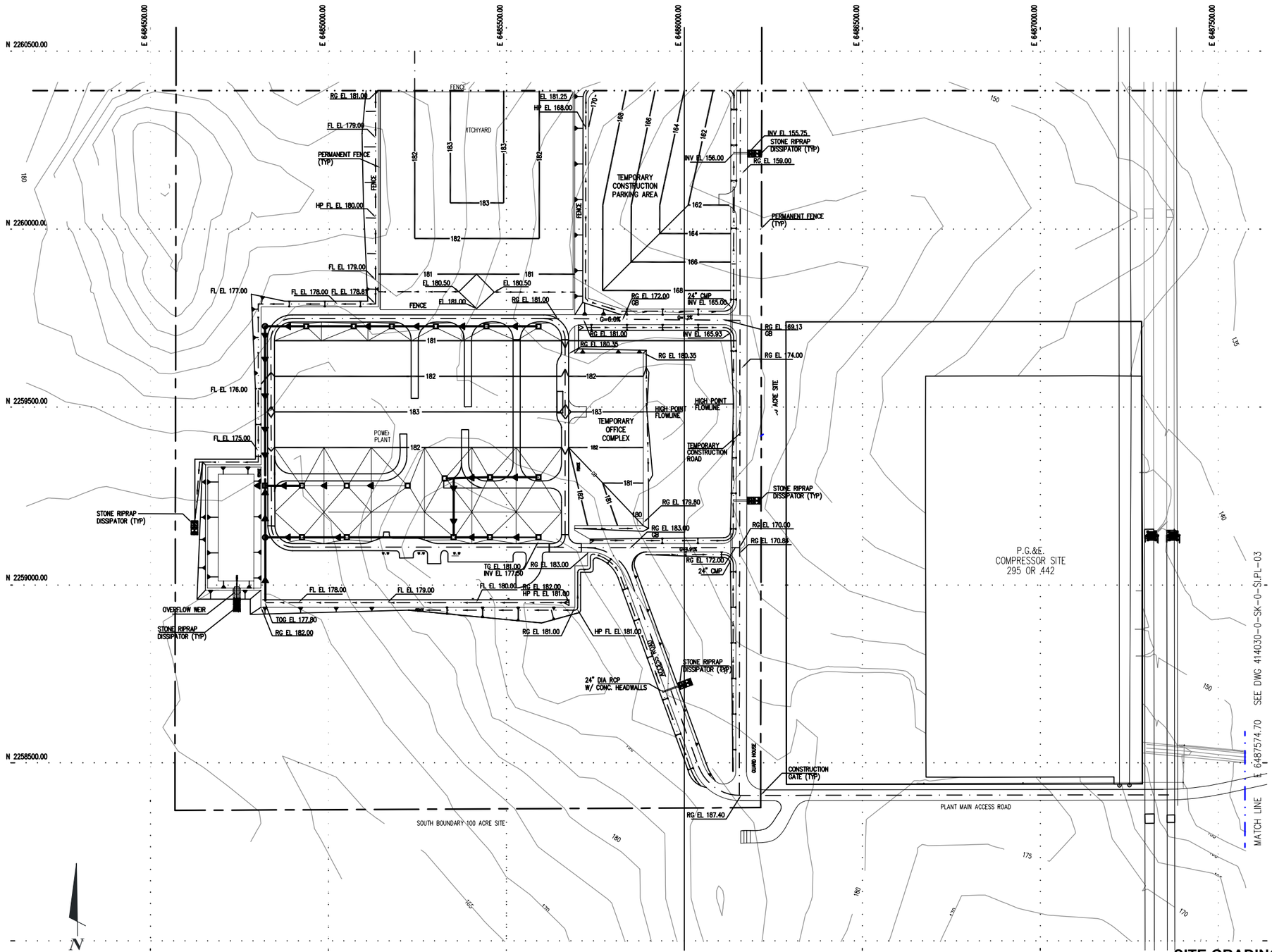

Source:
Bechtel Corporation; Colusa Power Plant, dwg no. 3.5-2, October 12, 2006 October 4, 2006

LEGEND

- Stormwater Collection System Showing Direction of Flow
- Swales
- 183 Final Grading Contour
- Existing Topographic Contours

SITE GRADING – GENERAL FACILITY STORMWATER MANAGEMENT AND EROSION CONTROL PLAN

Colusa Generating Station
28067004 E&L Westcoast, LLC
November 2006 Colusa County, California

URS

FIGURE 3.5-2

T:\28067004 CPV Colusa\Transfer\Incoming\Recd from Bechtel 10-12-06\FIG 3.5-2. URS.dwg, 11/1/2006 11:33:12 AM, akatanic

11/02/06 vsa ..\28067004 CPV Colusa\3.0 Facility Description\3.5-2_grading_110106.ai

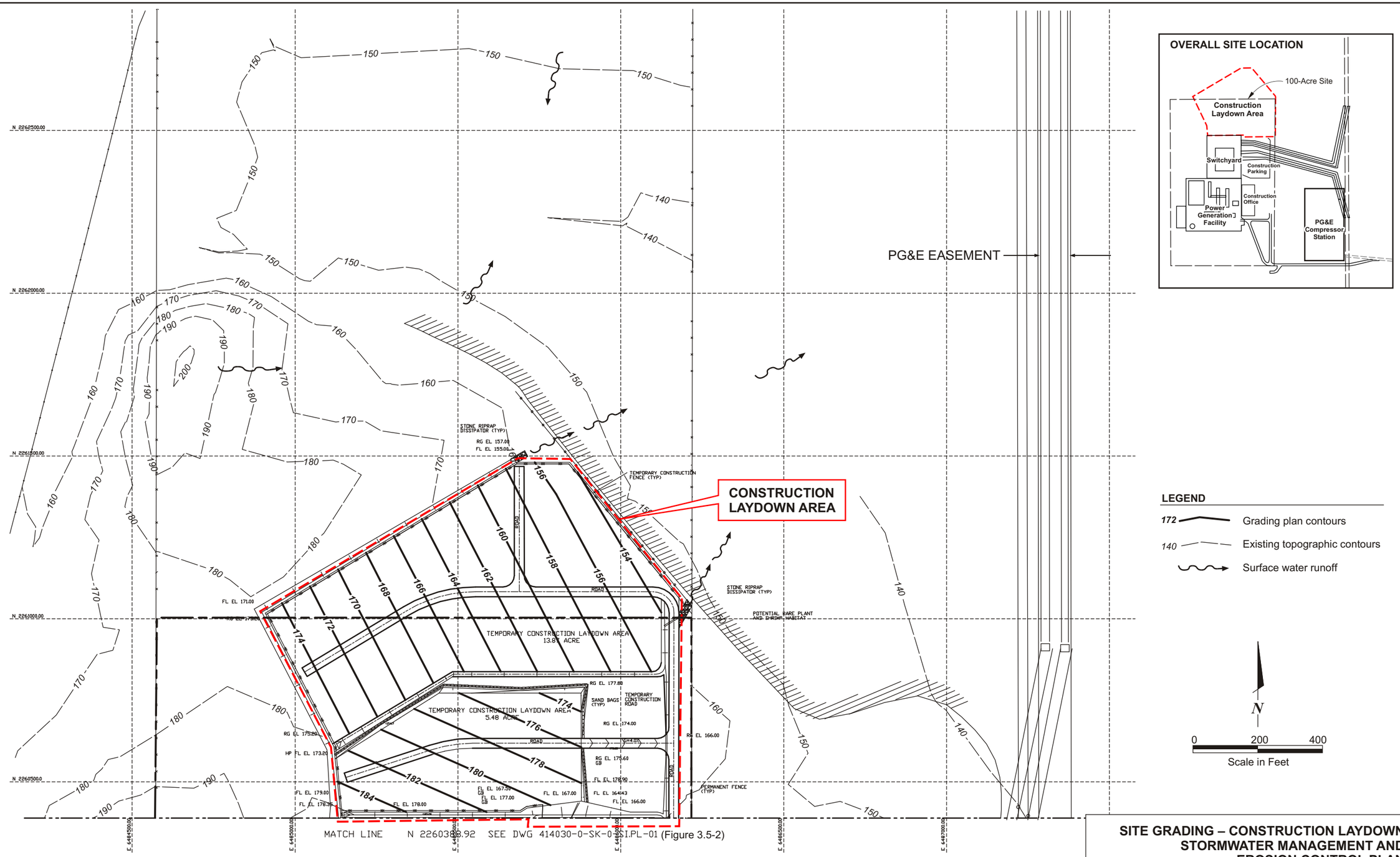

SITE GRADING – CONSTRUCTION LAYDOWN STORMWATER MANAGEMENT AND EROSION CONTROL PLAN

28067004
November 2006

Colusa Generating Station
E&L Westcoast, LLC
Colusa County, California

URS

FIGURE 3.5-3

10/29/06 vsa ..\28067004 CPV Colusa\3.0 Facility Description\3.5-3_grading.cdr

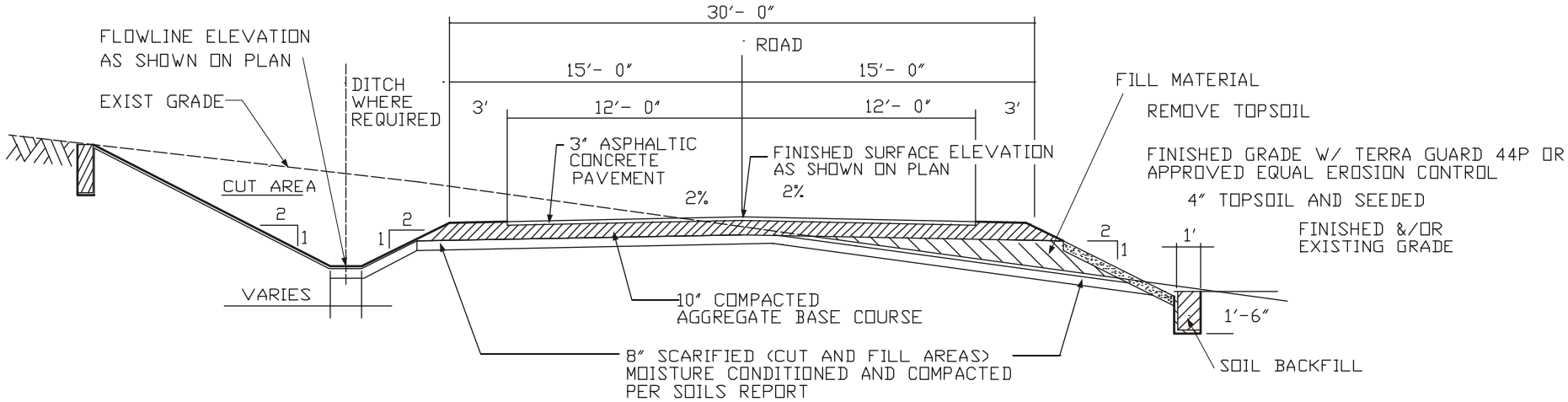

NOT TO SCALE

CONCEPTUAL DESIGN
PLANT ACCESS ROAD

28067004
November 2006

Colusa Generating Station
E&L Westcoast, LLC
Colusa County, California

URS

FIGURE 3.5-4

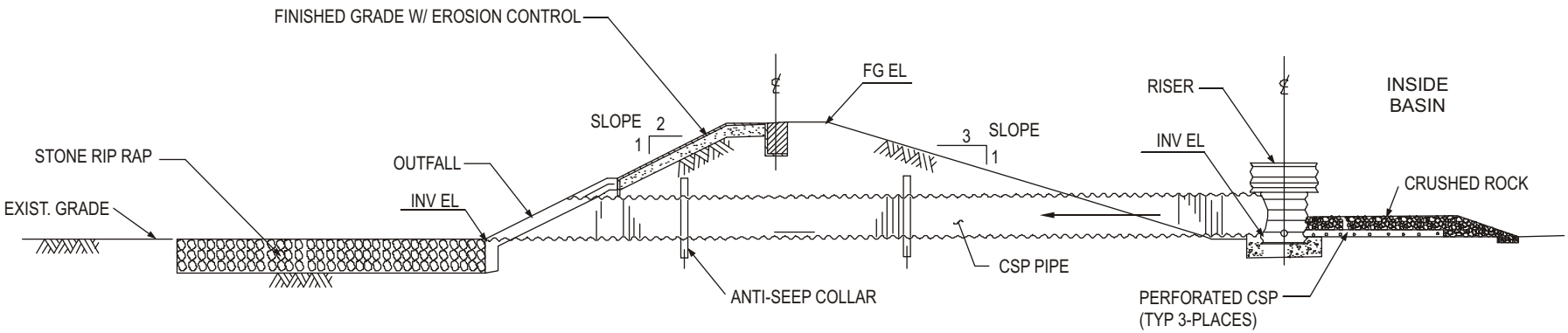

SECTION VIEW
Looking West

Notes:

CSP: Corrogated Steel Pipe

NOT TO SCALE

Source:
Duke/Fluor Daniel; Colusa Power Plant Project, Access Road, Bridge, Sections and Details, Rev. C, 5/17/01; amended, Bechtel October 2006

CONCEPTUAL DESIGN
STORMWATER DETENTION BASIN

Colusa Generating Station
E&L Westcoast, LLC
Colusa County, California

28067004
November 2006

URS

FIGURE 3.5-5

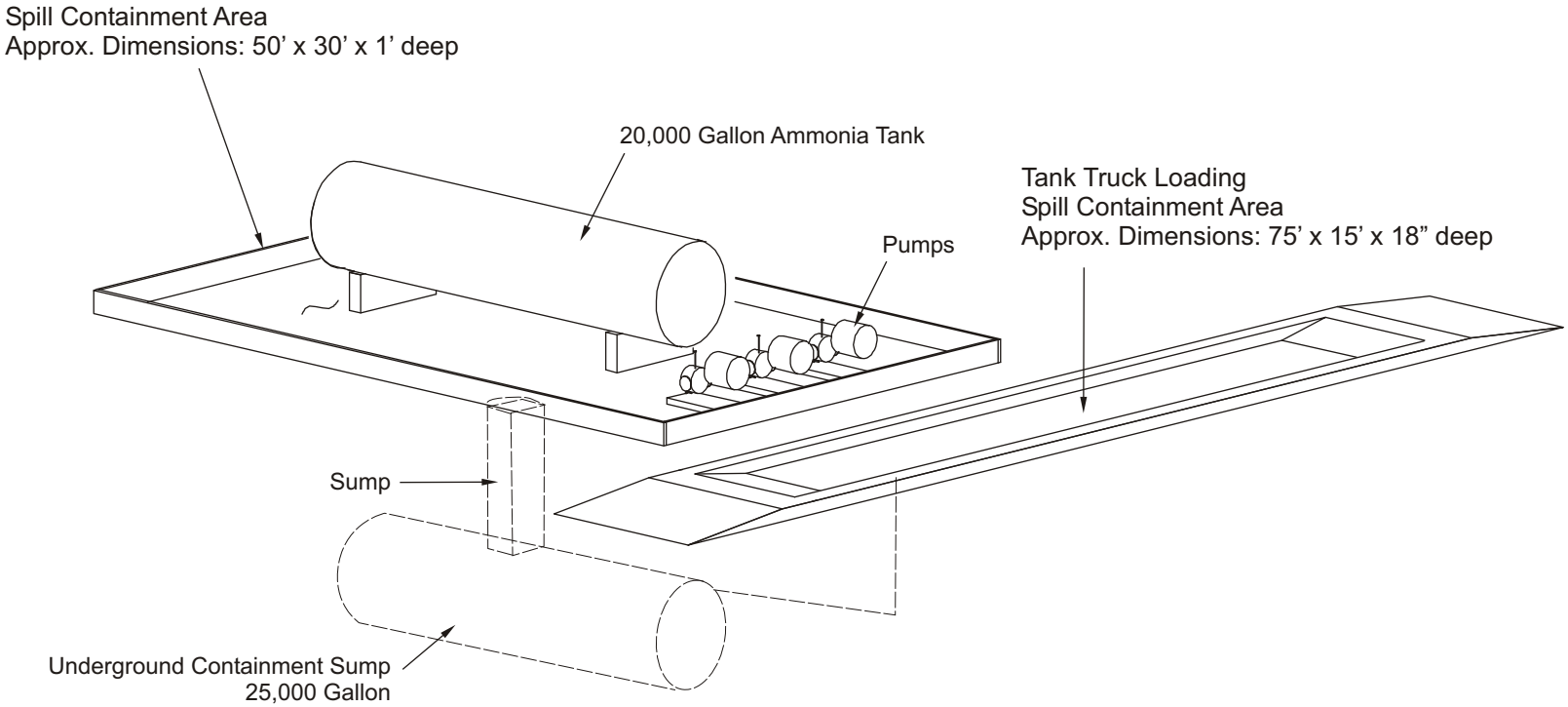

Source:
Bechtel, 10/23/06

AQUEOUS AMMONIA STORAGE AND SPILL CONTAINMENT

Colusa Generating Station
E&L Westcoast, LLC
Colusa County, California

28067004
November 2006

URS

FIGURE 3.5-6

11/02/06 vsa ..\28067004 CPV Colusa\3.0 Facility Description\3.5-6_aqammonia.cdr

(40-Hour Average Workweek)

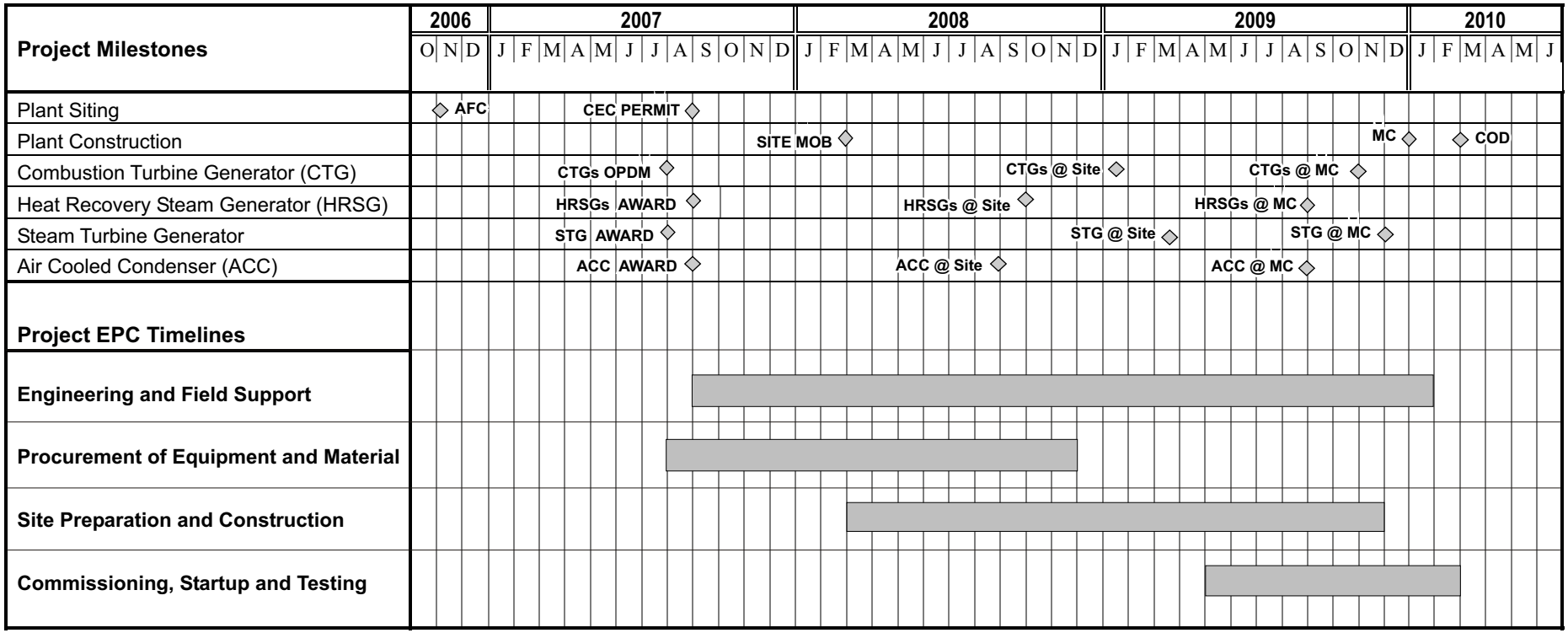

Notes:

MC Mechanical Completion
COD Commercial Operation Date
AFC Application for Certification
CEC California Energy Commission
EPC Engineering, Procurement and Construction

PROJECT CONSTRUCTION SCHEDULE

28067004
November 2006

Colusa Generating Station
E&L Westcoast, LLC
Colusa County, California

URS

FIGURE 3.6-1

10/19/06 vsa ..\28067004 CPV Colusa\3.0 Facility Description\3.6-1_schedule.cdr

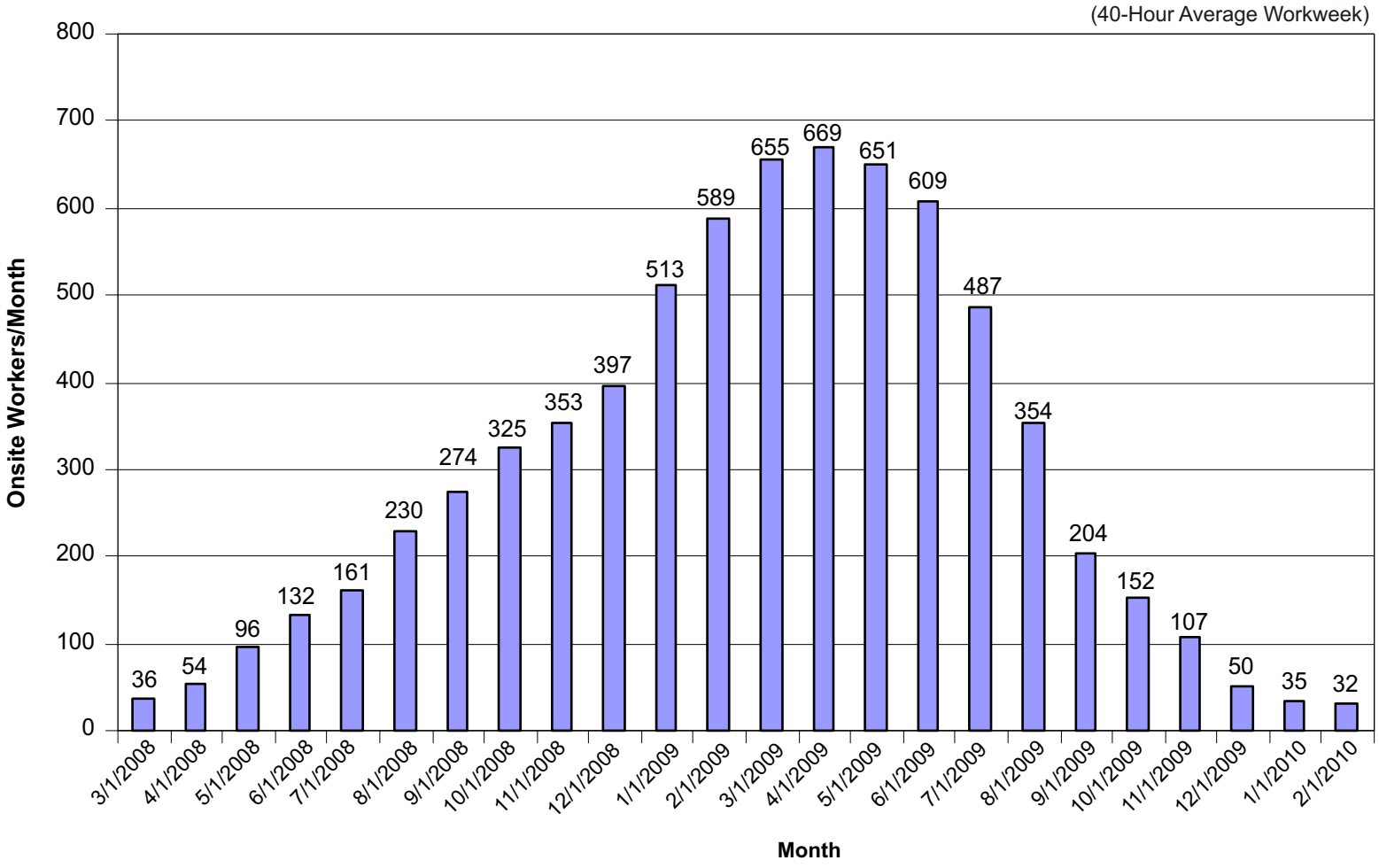

Source:
Bechtel, October 2006

CONSTRUCTION STAFF BY MONTH

Colusa Generating Station
E&L Westcoast, LLC
Colusa County, California

28067004
November 2006

URS

FIGURE 3.6-2

10/27/06 vsa ..\28067004 CPV Colusa\3.0 Facility Description\3.6-2_const staff.cdr

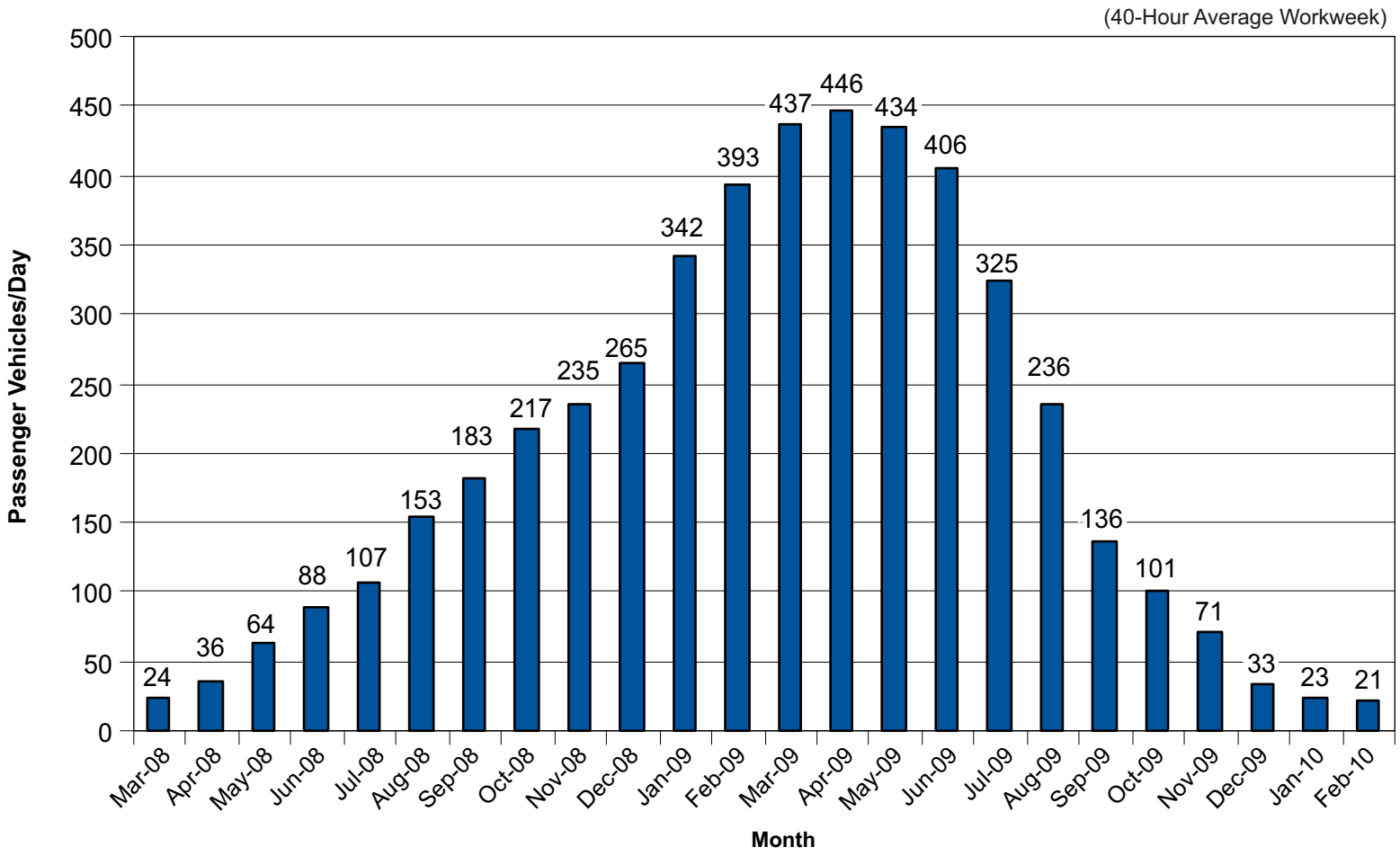

Source:
Bechtel, October 2006

CONSTRUCTION STAFF VEHICLES
ONE-WAY PEAK TRIPS

28067004
November 2006

Colusa Generating Station
E&L Westcoast, LLC
Colusa County, California

URS

FIGURE 3.6-3

10/27/06 vsa ..\28067004 CPV Colusa\3.0 Facility Description\3.6-3_const vehicles.cdr

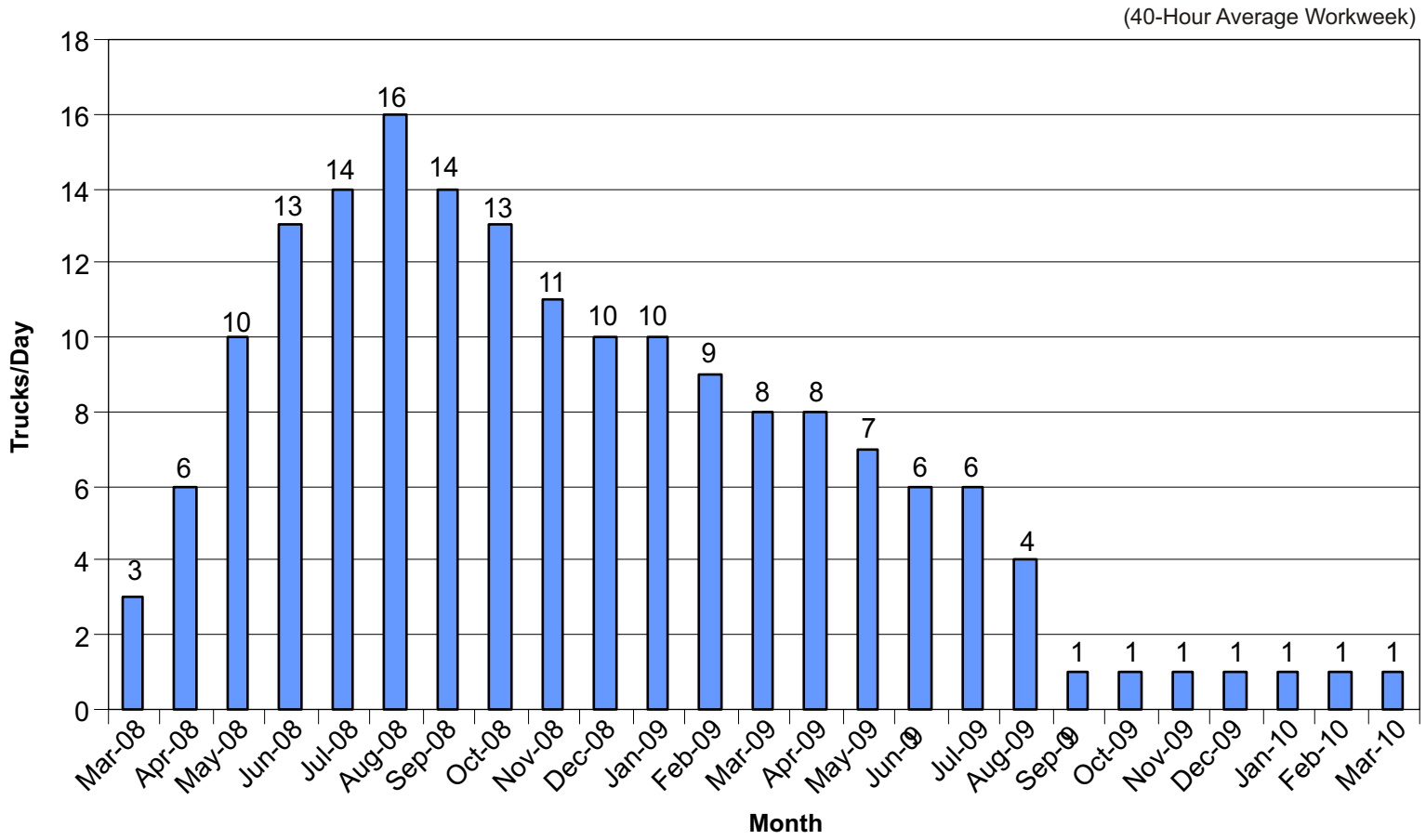

Source:
Bechtel, October 2006

HEAVY AND LIGHT TRUCKS
ONE-WAY PEAK TRIPS

Colusa Generating Station
E&L Westcoast, LLC
Colusa County, California

28067004
November 2006

URS

FIGURE 3.6-4

10/27/06 vsa ..\28067004 CPV Colusa\3.0 Facility Description\3.6-4_trucks.cdr

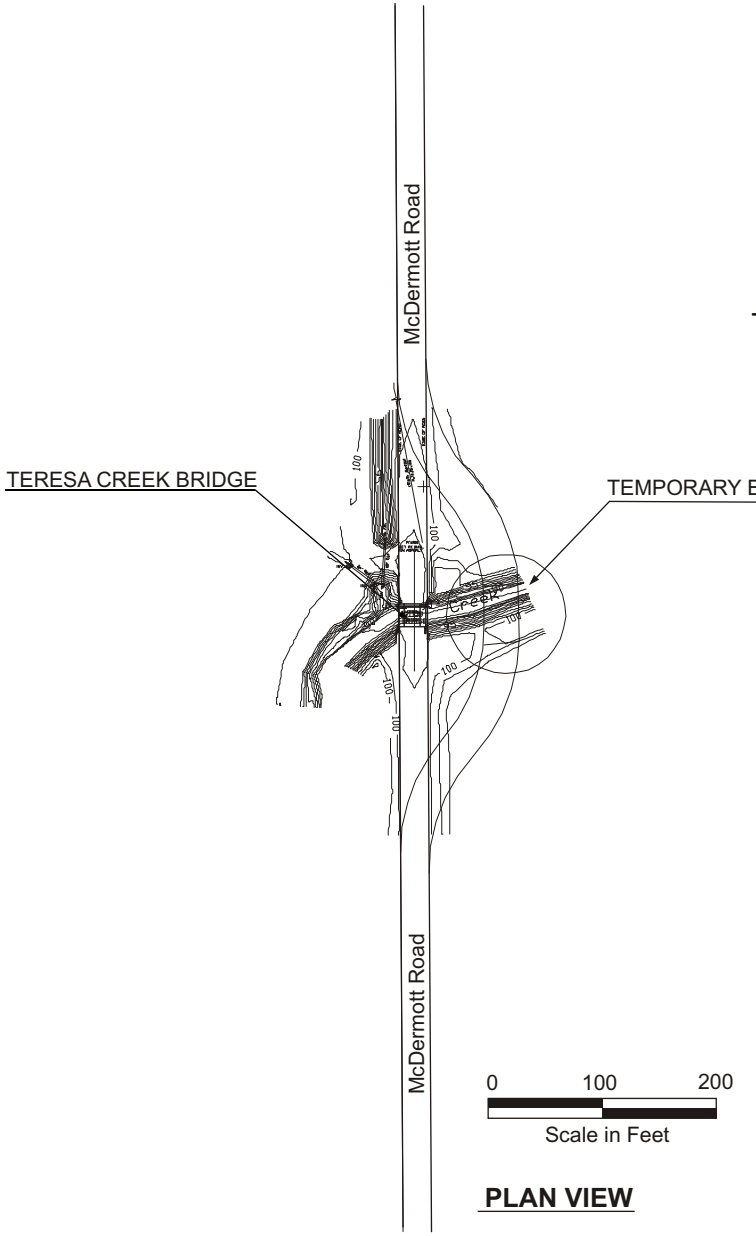

PLAN VIEW

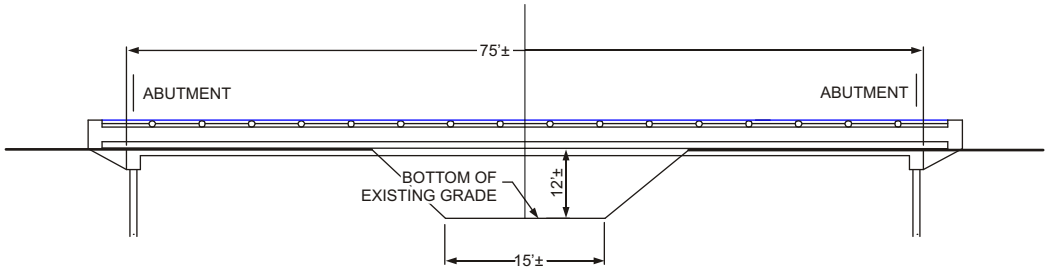

CROSS SECTION VIEW

NOT TO SCALE

CONCEPTUAL DESIGN
TERESA CREEK BRIDGE

Colusa Generating Station
E&L Westcoast, LLC
Colusa County, California

28067004
November 2006

URS

FIGURE 3.6-5

10/18/06 vsa ..\28067004 CPV Colusa\3.0 Facility Description\3.6-5_teresa crk bridge.cdr

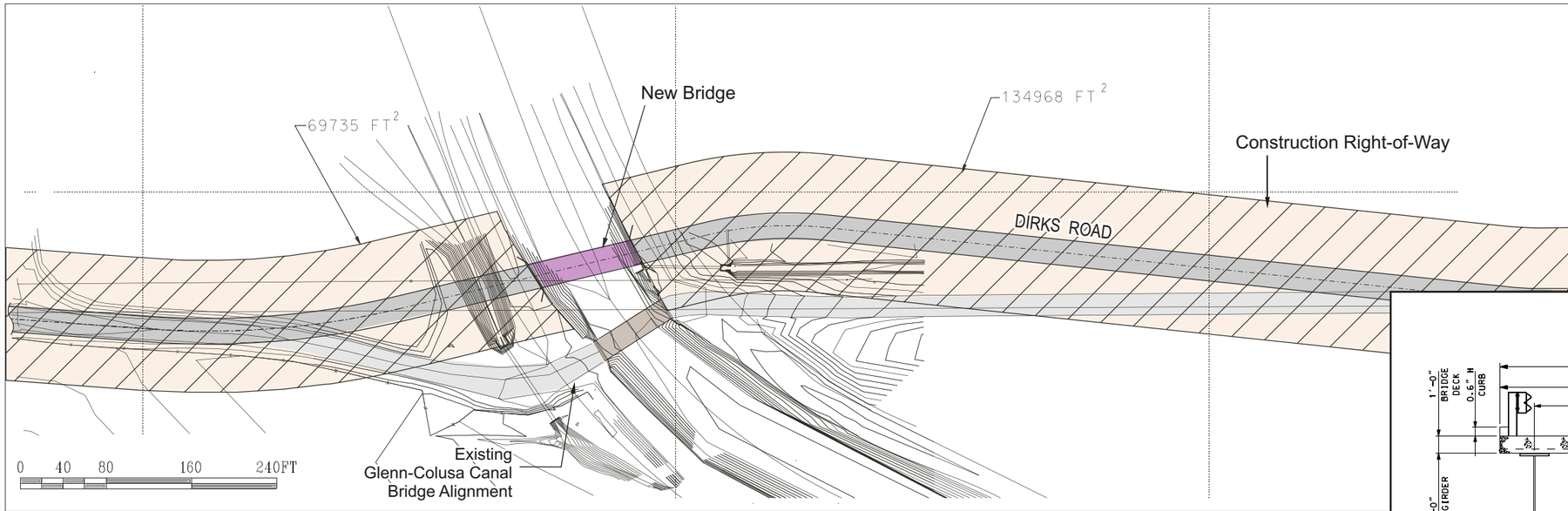

DISTURBED AREA

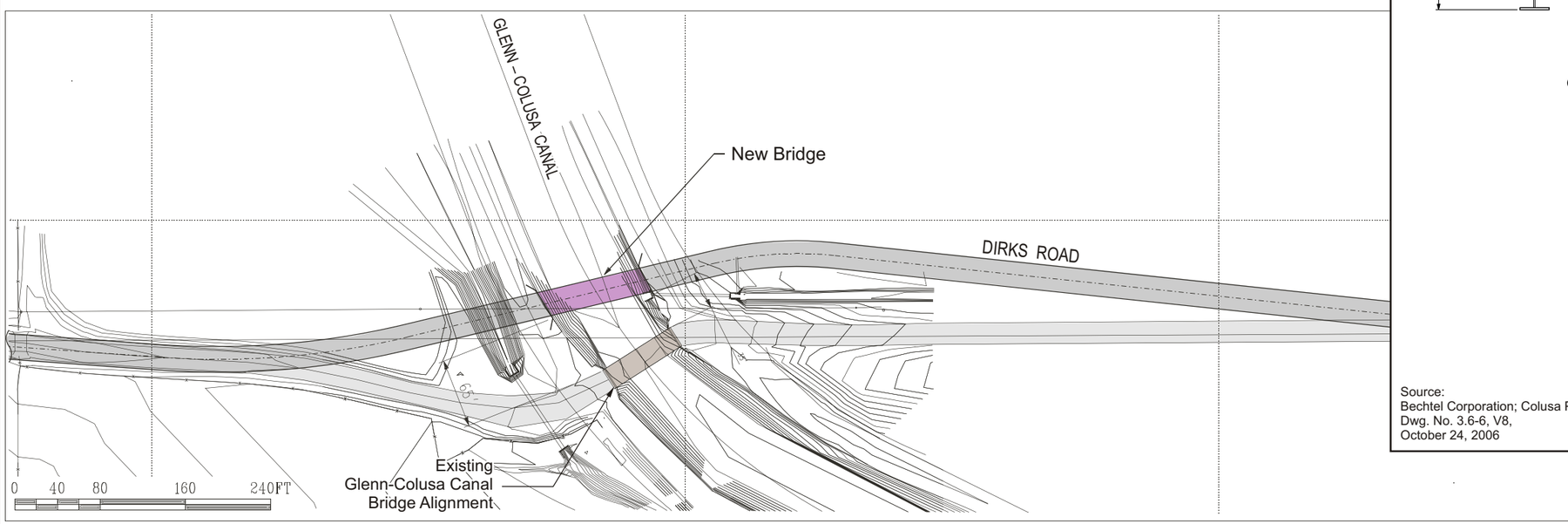

PLAN

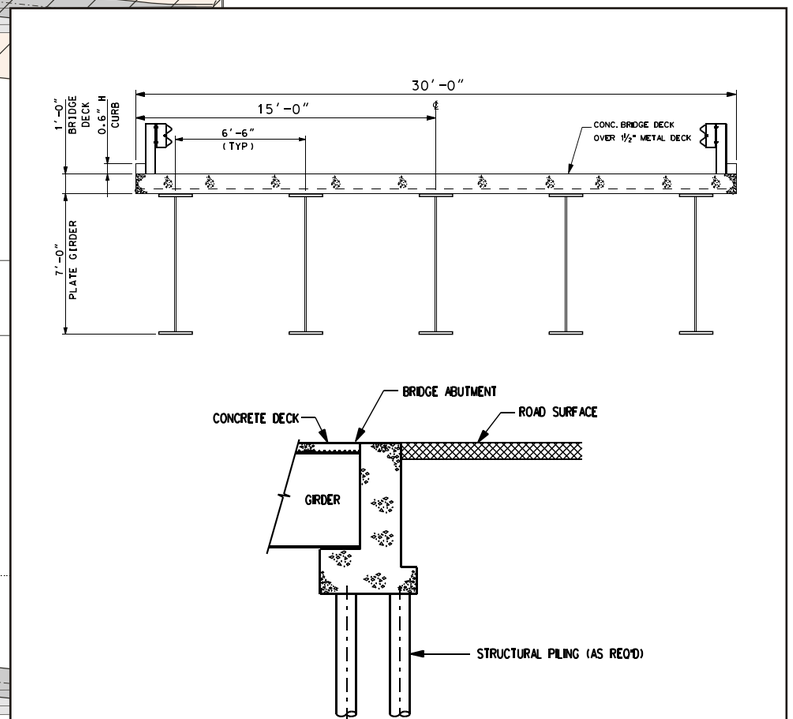

SECTION

Source:
Bechtel Corporation; Colusa Power Plant,
Dwg. No. 3.6-6, V8,
October 24, 2006

No Scale

N

Source:
Bechtel Corporation; Colusa Power Plant, Dwg. No. 7.2-1,
October 5, 2006

CONCEPTUAL DESIGN
GLENN-COLUSA CANAL BRIDGE

Colusa Generating Station
E&L Westcoast, LLC
Colusa County, California

28067004
November 2006

URS

FIGURE 3.6-6

10/30/06 vsa ..\28067004 CPV Colusa\3.0 Facility Description\3.6-6_glenn-colusa bridge.cdr