TABLE OF CONTENTS

Appendix F1 System Impact Study

Appendix F2 Facilities Study Report

Appendix F3 Large Generator Interconnection Agreement

APPENDIX F1
SYSTEM IMPACT STUDY

System Impact Study

Generation Interconnection

E&L Westcoast, LLC

CPV Colusa Project

Revised Final

September 19, 2005

Table of Contents

1.		Executive Summary	1
2.		Project and Interconnection Information	4
3.		Study Assumptions	5
4.		Power Flow Study Base Case	6
5.		Study Criteria Summary	7
	5.1	Steady State Study Criteria – Normal Overloads	7
	5.2	Steady State Study Criteria – Emergency Overloads	7
	5.3	Dynamic Stability Study Criteria	8
6.		Steady State Power Flow Study and Results	8
	6.1	Contingencies	9
	6.2	Results	9
7.		Governor Power Flow Study and Results	14
	7.1	Results for Category B Contingencies	14
	7.2	Results for Category C Contingencies	15
8.		Dynamic Stability Study and Results	16
	8.1	Dynamic Stability Study Scenarios	16
	8.2	Parameters Monitored to Evaluate System Stability Performance	17
	8.3	Results	18
9.		System Protection Study	18
10.		Substation Evaluation	19
	10.1	Results of Close-In Fault Analysis	19
	10.2	PG&E's Overstressed Breaker Replacement Policy	20
	10.3	Colusa Project Breaker Replacement Responsibility	20
11.		Reactive Power Deficiency Analysis	21
12.		Mitigation	21
	12.1	Pre-Existing Overloads – ISO Controlled Facilities	21
	12.2	Pre-Existing Overloads – Non ISO Facilities	22
	12.3	New Overload Description – ISO-Controlled Facilities	24
	12.4	New Overload Description – Non-ISO Facilities	24
13.		Environmental Evaluation/ Permitting	25
14.		Study Updates	26

15. Stand-by Power 26

Appendices:

A. Study Plan
B. Contingency Lists for Outages - Input Files
C. Power Flow Results- Comparison Files
D. Power Flow Plots
E. Generator Machine Dynamic Data
F. Dynamic Stability Plots

1. Executive Summary

E&L Westcoast, LLC (E&L) proposes to interconnect the 700 MW (net) CPV Colusa Project with the four Cottonwood-Vaca Dixon 230 kV lines owned by Pacific Gas & Electric (PG&E) at a site near Colusa, California. The planned operational date of the proposed Project is January 2010.

The California ISO (CAISO) and PG&E determined that a System Impact Study (SIS) was needed to determine the impact of the CPV Colusa Project on PG&E's transmission grid and on those portions of the transmission grid in Northern California owned by the Western Area Power Administration (Western), the Sacramento Municipal Utility District (SMUD), and the Transmission Agency of Northern California (TANC). This SIS identified:

- The transmission system impacts caused solely by the addition of the proposed project, and
- The system reinforcements, if any, necessary to mitigate the adverse impact of the proposed project under various system conditions.

To determine the system impacts caused by the addition of the CPV Colusa Project, studies were performed using the following full loop base cases: 1) 2010 Summer Peak, 2) 2010 Summer Off Peak, and 3) 2010 Spring Off Peak. The studies performed included:

- Steady State Power Flow
- Governor Power Flow
- Dynamic Stability Analysis
- System Protection/Substation Analysis
- Reactive Margin Analysis

This evaluation, which was conducted by Navigant Consulting, Inc (NCI) with input from PG&E and the CAISO, has concluded that the addition of the Project would cause a number of pre-existing normal and/or emergency overloads to increase and would result in some new emergency overloads. The impacted facilities and potential mitigation alternatives for all noted Category A and Category B contingency overloads are discussed in detail in Section 12 and are summarized in Table 1-1.

The Substation Evaluation, which was undertaken by PG&E, identified three 230 kV circuit breakers at the Cottonwood Substation and one 230 kV breaker at the Vaca-Dixon Substation that would have to be replaced to accommodate the addition of the CPV Colusa Project.

Dynamic Stability Study and Reactive Margin Study results indicated that the transmission system's performance, relative to the applicable reliability guidelines,

would not be impacted by the CPV Colusa Project following selected disturbances.

Overloaded Component	Critical Case	Rating [1] (Amps/ MVA)	Worst Case Loadings		Proposed Mitigation
			Pre-Project	Post-Project	
ISO-Controlled Facilities					
CPV Colusa-Cortina 230 kV Line	Summer Peak	954 (Emergency)	N/A	100%	None required
Lambie-Birds Landing 230 kV Line	Summer Peak	954 (Emergency)	85%	100%	None required
Palermo 230/115 kV Transformer	Summer Peak	168 (Emergency)	109%	111%	Install second transformer (PG&E Project #T686B) [2]
Palermo-E. Marysville Jct 2 115 kV Line	Summer Peak	357 (Normal) 412 (Emergency)	102% 104%	103% 106%	Reconductor Palermo-Bouge and Palermo-East Nicolaus 115 kV lines (PG&E Project #T686) [2]
Non-ISO Facilities					
Olinda 500/230 kV Transformer	Spring Off-Peak	1,041 (Emergency)	90%	106%	Install a second transformer at Olinda or use remedial action schemes (RAS) to drop the Project generation for the critical 500 kV contingency (Captain Jack-Olinda) [3]
O'Bannion-Elverta 230 kV Lines [4]	Summer Peak	1,054 (Normal) [5] 1,054 (Emergency)	100% 115%	103% 120%	New O'Bannion-Elverta 230 kV lines that have been proposed by Western [6]
Flanagan-Shasta 230 kV Line	Summer Peak	800 (Emergency) [5]	123%	126%	Initiate discussions with Western to identify required modifications and/or upgrades
Flanagan-Keswick 230 kV Line	Summer Peak	800 (Emergency) [5]	109%	113%	
Hurley S-Carmichael 230 kV Line	Summer Peak	880 (Emergency)	107%	109%	Initiate discussions with SMUD to identify required modifications and/or upgrades

Table 1-1: Summary of Proposed Mitigation Options for Category A and Category B Overloads

Most of the facilities listed in Table 1-1 experience Category C Contingency overloads that are greater than the worst-case overloads presented in Table 1-1. In addition, there are four other facilities which are not overloaded for Category A or B Contingency conditions but which experience overloads after Category C Contingencies. These facilities and the associated worst-case overloads are listed in Table 1-2. As discussed in Section 12 these increased or additional overloads could potentially be mitigated by load or generator dropping schemes.

[1] Ratings in Table 1-1 and subsequent Tables are in MVA for transformers and amps for lines.
[2] Project has not yet been approved by PG&E management and, in the event it is not completed by the in-service date of the CPV Colusa Project, the Project would have to mitigate any Project-related impacts.
[3] Final mitigation plan is subject to the approval of PG&E, the ISO, and the owners of the Olinda transformer.
[4] With the Sutter Project operating at 500 MW.
[5] The emergency ratings for Western's 230 kV lines in the powerflow data sets are the same as the normal ratings.
[6] In the event these lines are not completed by the in-service date of the CPV Colusa Project, the Project would have to mitigate any Project-related impacts on the existing lines.

Overloaded Component	Critical Case	Emergency Rating (Amps/ MVA)	Worst Case Loadings	
			Pre-Project	Post-Project
ISO-Controlled Facilities				
CPV Colusa-Cortina 230 kV Line	Summer Peak/ Spring Off-Peak	954		104%
Palermo 230/115 kV Transformer	Summer Peak	168	133%	136%
Palermo-Rio Oso Area 115 kV Lines	Summer Peak	Various	131%	133%
Palermo-Bangor	Summer Peak	327	114%	116%
Bangor-Colgate 60 kV Line	Summer Peak	282	113%	115%
Non-ISO Facilities				
Olinda 500/230 kV Transformer	Summer Off-Peak	1,041	106%	119%
Flanagan-Shasta 230 kV Line	Summer Peak	800	126%	131%
Flanagan-Keswick 230 kV Line	Summer Peak	800	113%	118%
Olinda-Keswick 230 kV Line	Summer Peak	1,054	81%	103%
Hurley-Carmichael 230 kV Line	Summer Peak	880	111%	114%
Elverta S-Elverta W 230 kV Line	Summer Peak	2,240	97%	102%

Table 1-2: Summary of Worst Case Category C Overloads

2. Project and Interconnection Information

The Project will be a combined cycle project with a maximum output of 715 MW and will consist of two GE combustion turbine generators (each rated at 199 MW) and one GE steam turbine generator (rated at 317 MW). The generator auxiliary load will be 15 MW resulting in a maximum net output of 700 MW at an 85% power factor. The step-up transformers for the combustion turbine generating units will rated at 18/242 kV and 205 MVA and while that for the steam turbine generating unit will be at rated 18/242 kV and 410 MVA. Figure 2-1 is a conceptual one-line diagram for the Project interconnection.

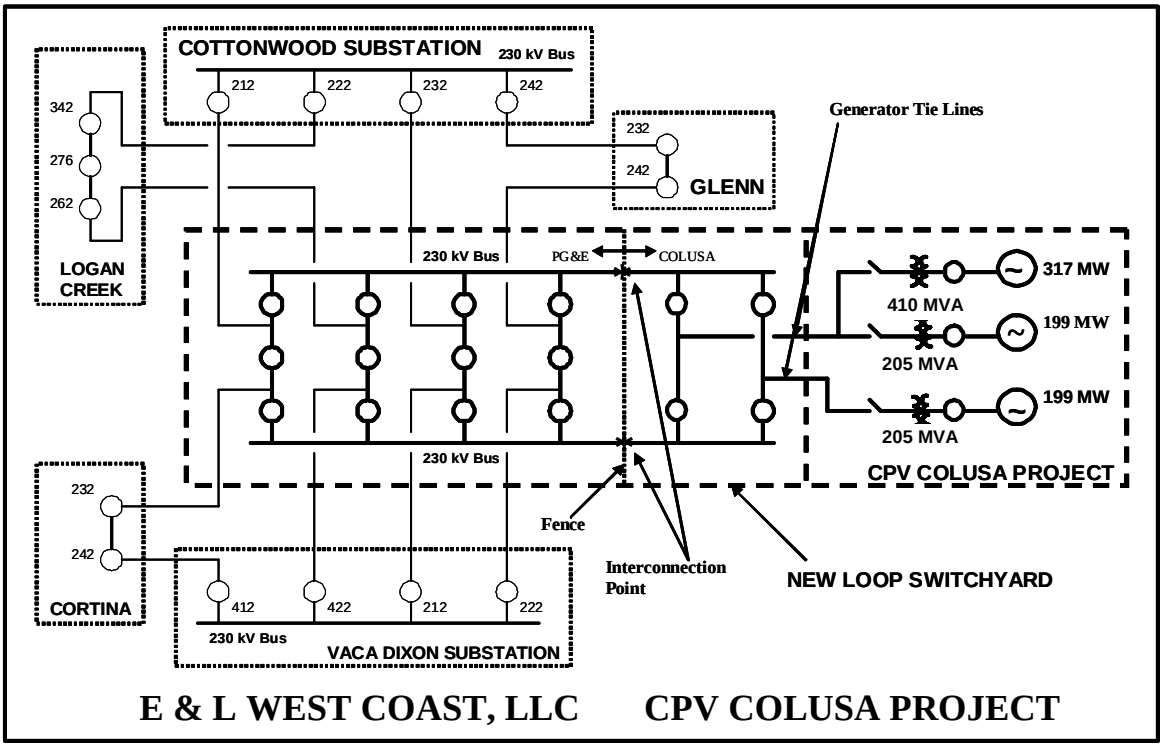

Figure 2-1: Conceptual One-line

Figure 2-2 shows the approximate location of the proposed CPV Colusa Project in relation to the Vaca-Dixon and Logan Creek substations and the transmission lines in the area.

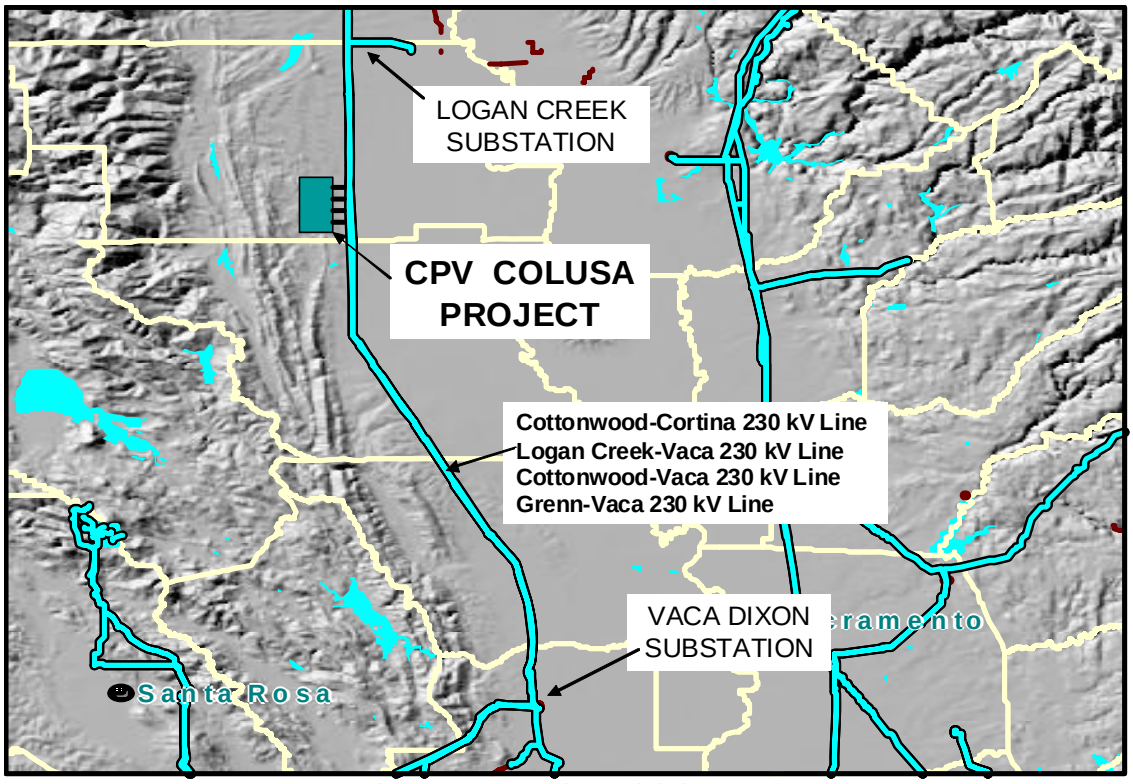

Figure 2-2: Project Vicinity Map

3. Study Assumptions

NCI, with the input of PG&E and the CAISO, conducted the SIS using the following assumptions:

1) The maximum net total output of the facilities is 700 MW; a 15 MW ancillary load was also modeled.

2) The expected on-line date of the CPV Colusa Project is January 2010.

3) The step-up transformers for the Project's combustion turbine generating units will rated at 18/242 kV and 205 MVA while that for the steam turbine generating unit will be at rated 18/242 kV and 410 MVA.

4) PG&E's Cottonwood-Vaca Dixon 230 kV lines are located approximately 1,300 feet east of the Project site. The Project will be interconnected with these lines by looping the Cottonwood-Cortina, Logan Creek-Vaca Dixon, Cottonwood-Vaca Dixon, and Glenn-Vaca Dixon 230 kV lines into the Project 230 kV switchyard. The required tie lines will be approximately 2,000 feet in length.

5) The plant configuration is as shown in Figures 2-1. E&L Westcoast, LLC will engineer, procure, construct, own, and maintain its project facility.

6) The study considered the planned generating facilities in PG&E's service territory whose schedules are concurrent with or precede the CPV Colusa Project's schedule and whose output would likely impact the same portions of the system as would that of the CPV Colusa Project.

7) CAISO and PG&E require that the generating entity must provide sufficient reactive voltage support to maintain unity power factor at the point of interconnection under all operating conditions.

8) The study considered all the approved PG&E transmission reliability projects that will be operational by January 2010.

4. Power Flow Study Base Case

Three power flow base cases were used to evaluate the transmission system impacts of the CPV Colusa Project. While it is impossible to study all combinations of system load and generation levels during all seasons and at all times of the day, these three base cases represent extreme loading and generation conditions for the study area.

PG&E cannot guarantee that the CPV Colusa Project can operate at maximum rated output 24 hours a day, year round, without system impacts, nor can PG&E guarantee that the CPV Colusa Project will not have system impacts during the times and seasons not studied in the SIS.

Power flow analysis and governor power flow analysis were conducted using all three base cases.[7] The 2010 Summer Peak Base Case was used for dynamic stability analysis.

2010 Summer Peak Base Case:

This base case was developed from PG&E's 2004 base case series and has a 1-in-10 year heat wave load forecast for PG&E's Valley North areas. This case was used to evaluate the potential transmission congestion caused by delivering power from local generation and new generation projects when the system has high hydro generation (at approximately 95% of installed capacity) and the COI is fully loaded (at approximately 4,800 MW) in the north-to-south direction.

2010 Spring Off Peak Base Case:

[7] In the initial SIS dated August 15, 2005, both the Three Mountain Power Project (TMPP) and Project ID# P0441 were included in the base cases. During the conduct of the initial SIS, Project P0441 withdrew from the ISO Generation Interconnection Queue and, subsequent to the completion of the SIS, the TMPP withdrew from the Queue. Because of the TMPP withdrawal PG&E requested that the SIS be redone. Because the most severe Project-related impacts noted in the initial SIS were thermal overloads, this report focuses on updating the results of the powerflow studies (both steady-state and governor) with the TMPP and Project P0441 removed from the data sets.

The 2010 Spring Off-Peak Full Loop Base Case contains PG&E Area conforming load levels that were reduced approximately 65% from the levels shown in the Summer Peak Base Case, which is representative of a typical spring off-peak day. This case was used to evaluate the potential transmission congestion caused by delivering power from local generation and new generation projects when the system is operating at the level typically assumed in seasonal operating studies (high hydro generation at approximately 90% of installed capacity and the COI at approximately 4,400 MW in the north-to-south direction).

2010 Summer Off Peak Base Case:

The 2010 Summer Off Peak Full Loop Base Case was used to evaluate potential congestion on transmission facilities when the COI is fully loaded in the south-to-north direction (around 3,675 MW).

These three base cases modeled all of the PG&E approved transmission reliability projects in the PG&E area that will be operational by January 2010.

Base Case Key Generation Assumptions

The data sets for these three base cases included all the proposed generation projects[7] that will be operational by January 2010; they did not include generation projects that are in the Generation Interconnection Queue but are scheduled to be on-line *after January 2010*. The major generation projects included in the data sets are shown in Attachment 1 of the Study Plan in Appendix A. However, some generation projects that are electrically far from the proposed project were either turned off or modeled with reduced generation to balance the loads and resources in the power flow models.

5. Study Criteria Summary

The CAISO Controlled Grid Reliability Criteria, which incorporate the Western Electricity Coordinating Council (WECC) and the North American Electric Reliability Council (NERC) planning criteria, were used to evaluate the impact of the project on the PG&E transmission system. The CAISO Controlled Grid Reliability Criteria are as follows:

5.1 Steady State Study Criteria – Normal Overloads

Normal overloads are those that exceed 100 percent of normal ratings.[8] The CAISO Controlled Grid Reliability Criteria requires the loading of all transmission system facilities be within their normal summer ratings.

5.2 Steady State Study Criteria – Emergency Overloads

Emergency overloads are those that exceed 100 percent of emergency ratings. The emergency overloads refer to overloads that occur during single

[8] The ratings are listed in the CAISO Transmission Register.

element contingencies (CAISO Category B[9]) and multiple element contingencies (CAISO Category C[10]).

5.3 Dynamic Stability Study Criteria

According to the WECC Disturbance-Performance Table of Allowable Effects on Other Systems[11], after a CAISO Category B disturbance, the transmission system performance should meet the following criteria:

- Transient voltage dip should not be below 25 percent at load buses or 30 percent at non-load buses at any time.
- The duration of the transient voltage dip greater than 20 percent should not exceed 20 cycles at load buses.
- The minimum transient frequency should not fall below 59.6 Hz for more than 6 cycles at load buses.

After a CAISO Category C disturbance, the transmission system performance should meet the following criteria:

- Transient voltage dip should not be below 30 percent at any bus at any time.
- The duration of a transient voltage dip greater than 20 percent should not exceed 40 cycles at load buses.
- The minimum transient frequency should not fall below 59.0 Hz for more than 6 cycles at load buses.

6. Steady State Power Flow Study and Results

The SIS studied the impact of the CPV Colusa Project on the transmission system in Northern California. Three base cases were used to simulate the impact of the new facility during normal operating conditions, as well as, single and multiple (ISO Categories B and C) outages:

- 2010 Summer Peak
- 2010 Spring Off Peak
- 2010 Summer Off Peak

[9] CAISO Category B contingency refers to all single component outages such as the loss of a transmission line (L-1), a generator (G-1), a transformer (T-1). Also, it refers to the loss of the combination of a single transmission line and a single generator unit.
[10] CAISO Category C contingency refers to outages resulting from the loss of two or more (multiple) components except the loss of the combination of a single transmission line and a single generator unit.
[11] Cited from NERC/WECC Planning Standards dated April 2003.

These base cases are described in Section 4 ("Base Case Information"). The SIS covered the transmission facilities within PG&E's Valley North, Sacramento, and North Coast planning areas. In addition, the impacts of contingencies on the non-PG&E system north of the Tracy Substation were studied.

It cannot be guaranteed that the CPV Colusa Project can operate at maximum rated output 24 hours a day, year round, without system impacts, nor can it be guaranteed that the CPV Colusa Project would not have system impacts during the times and seasons not studied in the SIS.

6.1 Contingencies

The CAISO Category B and C contingencies used in this analysis are provided in Appendix B. The single (ISO Category B) and selected multiple (ISO Category C) contingencies include the following outages:

6.1.1 CAISO Category B

- All single generator outages within the study area.
- All single (60 - 230 kV) transmission circuit outages within the study area.
- All single transformer outages within the study area.
- Overlapping single generator and transmission circuit outages for the transmission lines and generators within the study area.

6.1.2 CAISO Category C

- Selected bus outages (115 and 230 kV) within the study area.
- Outages caused by breaker failures (excluding bus tie and sectionalizing breakers) at the same bus section above.
- Combination of any two-generator/transmission line/transformer outages (except ones included above in Category B) within the study area.
- Outages of double circuit tower lines (115 and 230 kV) within the study area.

6.2 Results

Appendix B provides a list of the contingencies studied. Appendix C shows the steady state power flow analysis results. Appendix D includes selected power flow plots.

6.2.1 Normal Overloads (CAISO Category A)

The addition of the CPV Colusa Project results in new overloads on the O'Bannion-Elverta 230 kV lines and increases pre-Project overloads on

the Palermo-East Marysville Jct 2 115 kV line in the 2010 Summer Peak case. These overloads are shown in Table 6-1.

Overloaded Component	Rating (Amps)	Pre- Project Loading (Amps |%Rating)		Post-Project Loading (Amps |%Rating)		% Change from Pre-Project Loading
Palermo-East Marysville Jct 2 115 kV Line	357	363	102%	368	103%	+1%
O'Bannion-Elverta #1 and #2 230 kV Lines	1,054	1,054	100% [12]	1,088	103%	+3%

Table 6-1: Category A (Normal) Overloads

6.2.2 Emergency Overloads (CAISO Category B)

The addition of the CPV Colusa Project results in new and increased overloads on several transmission facilities for 2010 Summer Peak conditions. Information on the numbers and magnitudes of such overloads are summarized in Table 6-2; additional information on the contingencies resulting in the overloads is presented in Table 6-3.

Overloaded Component	Rating (Amps/ MVA)	New Overloads		Increased Overloads	
		Number	Magnitude	Number	Magnitude
ISO-Controlled Facilities					
Palermo 230/115 kV Transformer	168	1	1%	1	2%
Palermo-East Marysville Jct 2 115 kV Line	412	0	-----	1	2%
Non-ISO Facilities					
Flanagan-Shasta 230 kV Line	800	4	1-4%	5	3-5%
Flanagan-Keswick 230 kV Line	800	0	-----	2	4%
O'Bannion-Elverta 230 kV Lines	1,054	0	-----	24	3-6%
Hurley S-Carmichael 230 kV line	880	0	-----	1	2%

Table 6-2: Summary of Summer Peak Category B Contingency Overloads

Over Loaded Component	Contingency	Rating (MVA/ Amps)	Pre- Project Loading (MVA/Amps |%Rating)		Post-Project Loading (MVA/Amps |%Rating)		% Change from Pre-Project Loading
ISO-Controlled Facilities							
Lambie-Birds Landing 230 kV Line	Vaca Dixon-Peabody #1 230 kV Line and Contra Costa 7	954	810	85%	951	100%	15%
Palermo 230/115 kV Transformer	Palermo-OWID 115 kV Line	168	183	109%	186	111%	2%
	Table Mountain-Rio Oso 230 kV Line and Greenleaf 2	168	166	99%	170	101%	2%
Palermo-East Marysville Jct 2 115 kV Line	Palermo-Pease 115 kV Line	412	429	104%	436	106%	2%
	Palermo-Bouge 115 kV line	412	404	98%	411	100%	2%

[12] Sutter Project operating at 500 MW.

Over Loaded Component	Contingency	Rating (MVA/ Amps)	Pre- Project Loading (MVA/Amps |%Rating)		Post-Project Loading (MVA/Amps |%Rating)		% Change from Pre-Project Loading
Non-ISO Facilities							
Hurley S-Carmichael 230 kV Line	Elverta S-Elverta W 230 kV Line	880	939	107%	957	109%	2%
O'Bannion-Elverta 230 kV Lines	Cottonwood-Roseville 230 kV Line	1,054	1,115	106%	1,153	109%	3%
	Olinda 500/230 kV Transformer	1,054	1,078	102%	1,138	108%	6%
	Tracy-Hurley #1 or #2 230 kV Line	1,054	1,097	104%	1,129	107%	3%
	Folsom-Roseville 230 kV Line	1,054	1,095	104%	1,129	107%	3%
	19 Other Outages	1,054	------	101-104%	-----	105-107%	3-4%
Flanagan-Shasta 230 kV Line	Cottonwood-Shasta #1 or #2 230 kV Line	800	981	123%	1,006	126%	3%
	Keswick-Spring Creek 230 kV Line or Spring Creek 230/13.8 kV Transformer	800	831	104%	869	109%	5%
	J.F. Carr 230/13.8 kV Transformer and J.F. Carr 1 and 2	800	813	102%	850	106%	4%
	Trinity-J.F. Carr 230 kV Line or Trinity 230/13.8 kV Transformer	800	792	99%	830	104%	5%
	Spring Creek 1 or 2	800	771	96%	808	101%	5%
Flanagan-Keswick 230 kV Line	Cottonwood-Shasta #1 or #2 230 kV Line	800	875	109%	900	113%	4%

Table 6-3: 2007 Summer Peak – Category B Contingency Overloads

The addition of the CPV Colusa Project does not cause any new or increased overloads during Category B Contingencies under either 2010 Spring Off Peak conditions or 2010 Summer Off Peak conditions.

6.2.3 Emergency Overloads (Category C)

The addition of the CPV Colusa Project under 2010 Summer Peak conditions results in new and increased overloads on several transmission facilities. The numbers and magnitudes of such overloads are summarized in Table 6-4; additional information on the contingencies resulting in the overloads is presented in Table 6-5.

Overloaded Component	Rating (Amps/ MVA)	New Overloads		Increased Overloads	
		Number	Magnitude	Number	Magnitude
ISO-Controlled Facilities					
CPV Colusa-Cortina 230 kV Line	954	1	4%	0	-----
Palermo 230/115 kV Transformer	168	0	-----	2	3%
Palermo-East Marysville Jct 2 115 kV Line	412	0	-----	3	2%

Overloaded Component	Rating (Amps/ MVA)	New Overloads		Increased Overloads	
		Number	Magnitude	Number	Magnitude
Rio Oso-East Nicolaus 115 kV Line	417	0	-----	1	3%
East Marysville Jct 2-East Nicolaus 115 kV Line	412	0	-----	1	3%
East Marysville Jct 1-Olivehurst J1 115 kV Line	507	1	1%	0	-----
East Marysville Jct 1-Pease 115 kV Line	507	1	1%	0	-----
Palermo-Bangor 60 kV Line	327	0	-----	1	2%
Bangor-Colgate 60 kV Line	282	0	-----	1	2%
Non-ISO Facilities					
Flanagan-Shasta 230 kV Line	800	1	12%	3	5-8%
Flanagan-Keswick 230 kV Line	800	1	5%	1	5%
O'Bannion-Elverta 230 kV Lines	1,054	0	-----	18	3-4%
Hurley-Carmichael 230 kV Line	880	0	-----	1	3%
Elverta S-Elverta W 230 kV Line	2,240	1	2%	0	-----

Table 6-4: Summary of Summer Peak Category C Contingency Overloads

Over Loaded Component	Contingency	Rating (Amps/ MVA)	Pre- Project Loading (Amps/MVA |%Rating)		Post-Project Loading (Amps /MVA |%Rating)		% Change from Pre-Project Loading
ISO-Controlled Facilities							
Cottonwood-Cortina 230 kV Line	Cottonwood-Vaca Dixon and Glenn-Vaca Dixon 230 kV Lines	954	476	50%			
CPV Colusa-Cortina 230 kV Line	CPV Colusa- Vaca Dixon #2 and #4 230 kV Lines	954			988	104%	
Palermo 230/115 kV Transformer	Table Mountain-Rio Oso and Colgate-Rio Oso 230 kV Lines and Colgate 2	168	223	133%	228	136%	3%
	Table Mountain-Rio Oso and Palermo-Colgate 230 kV Lines and Colgate 1	168	193	115%	198	118%	3%
Palermo-East Marysville Jct 2 115 kV Line	Table Mountain-Rio Oso and Colgate-Rio Oso 230 kV Lines and Colgate 2	412	539	131%	549	133%	2%
	Table Mountain-Rio Oso and Colgate-Rio Oso 230 kV Lines and Colgate 2	412	485	118%	495	120%	2%
	Palermo-Pease and Pease-Rio Oso 115 kV Lines	412	421	102%	428	104%	2%
Rio Oso-East Nicolaus 115 kV Line	Table Mountain-Rio Oso and Colgate-Rio Oso 230 kV Lines and Colgate 2	417	495	119%	507	122%	3%
East Marysville Jct 2-East Nicolaus 115 kV Line	Table Mountain-Rio Oso and Colgate-Rio Oso 230 kV Lines and Colgate 2	412	429	104%	438	107%	3%
East Marysville Jct 1-Olivehurst J1 115 kV Line	Table Mountain-Rio Oso and Colgate-Rio Oso 230 kV Lines and Colgate 2	507	503	99%	514	101%	2%

Over Loaded Component	Contingency	Rating (Amps/ MVA)	Pre- Project Loading (Amps/MVA |%Rating)		Post-Project Loading (Amps /MVA |%Rating)		% Change from Pre-Project Loading
East Marysville Jct 1-Pease 115 kV Line	Table Mountain-Rio Oso and Colgate-Rio Oso 230 kV Lines and Colgate 2	507	503	99%	514	101%	2%
Palermo-Bangor 60 kV Line	Table Mountain-Rio Oso and Palermo-Colgate 230 kV Lines and Colgate 1	327	373	114%	380	116%	2%
Bangor-Colgate 60 kV Line	Table Mountain-Rio Oso and Palermo-Colgate 230 kV Lines and Colgate 1	282	318	113%	325	115%	2%
Non-ISO Facilities							
O'Bannion-Elverta 230 kV Lines	Tracy-Hurley #1 and #2 230 kV Lines	1,054	1,166	111%	1,197	114%	3%
	Rancho Seco-Bellota #1 and #2 230 kV Lines	1,054	1,155	110%	1,183	112%	3%
	Cottonwood WAPA #2 230 kV bus	1,054	1,119	106%	1,156	110%	4%
	Rancho Seco-Elk Grove and Rancho Seco-Hedge 230 kV Lines	1,054	1,099	104%	1,133	107%	3%
	Fourteen Other Outages	1,054	-----	101-103%	-----	104-107%	3-4%
Flanagan-Shasta 230 kV Line	Olinda-Cottonwood WAPA #1 and #2 230 kV Lines	800	765	96%	896	112%	16%
	Keswick-J.F. Carr #1 and #2 230 kV Lines	800	895	112%	933	117%	5%
	Cottonwood WAPA #1 230 kV bus	800	808	101%	872	109%	8%
	Cottonwood WAPA #2 230 kV bus	800	1,011	126%	1,050	131%	5%
Flanagan-Keswick 230 kV Line	Keswick-J.F. Carr #1 and #2 230 kV Lines	800	801	100%	839	105%	5%
	Cottonwood WAPA #2 230 kV bus	800	906	113%	946	118%	5%
Hurley S-Carmichael 230kV Line	Elverta-Foothill and Elverta-Orangevale 230 kV Lines	880	980	111%	1,000	114%	3%
Elverta S-Elverta W 230 kV Line	Elverta-Hurley #1 and #2 230 kV Lines	2,240	2,177	97%	2,281	102%	5%

Table 6-5: 2010 Summer Peak – Category C Contingency Overloads

Under 2010 Spring Off Peak conditions the addition of the CPV Colusa Project results in one (1) new Category C contingency overload on the CPV Colusa-Cortina 230 kV line and in two (2) new Category C contingency overloads on the Olinda-Keswick 230 kV line. The addition of the Project also increases overloads on the Palermo-East Marysville Jct. 2 115 kV line (during two (2) Category C Contingencies) and on the Rio Oso-East Nicolaus 115 kV line (during one (1) Category C Contingency). These overloads are summarized in Table 6-6.

Over Loaded Component	Contingency	Rating (Amps/ MVA)	Pre- Project Loading (Amps/MVA |%Rating)		Post-Project Loading (Amps /MVA |%Rating)		% Change from Pre-Project Loading
ISO-Controlled Facilities							
Cottonwood-Cortina 230 kV Line	Cottonwood-Vaca Dixon and Glenn-Vaca Dixon 230 kV Lines	954	475	50%			
CPV Colusa-Cortina 230 kV Line	CPV Colusa -Vaca Dixon #2 and #4 230 kV Lines	954			994	104%	
Palermo-East Marysville Jct 2 115 kV Line	Table Mountain-Rio Oso and Colgate-Rio Oso 230 kV Lines and Colgate 2	412	472	115%	481	117%	2%
	Table Mountain-Rio Oso and Palermo-Colgate 230 kV Lines and Colgate 1	412	413	100%	422	102%	2%
Rio Oso-East Nicolaus 115 kV Line	Table Mountain-Rio Oso and Colgate-Rio Oso 230 kV Lines and Colgate 2	417	452	108%	463	111%	3%
Non-ISO Facilities							
Olinda-Keswick 230 kV Line	Olinda-Cottonwood WAPA #1 and #2 230 kV Lines	1,054	848	81%	1,086	103%	22%
	Cottonwood WAPA #1 230 kV bus	1,054	1,027	98%	1,064	101%	3%

Table 6-6: 2010 Spring Off Peak – Category C Contingency Overloads

The addition of the CPV Colusa Project does not result in any new or increased overloads during Category C Contingencies under 2010 Summer Off Peak conditions.

7. Governor Power Flow Study and Results

The Base Cases described above were used in governor powerflow analyses to assess Project-related impacts for 500 kV Category B contingencies and selected 500 kV Category C contingencies on the system north of Tesla/Tracy.

7.1 Results for Category B Contingencies

Simulation of the 500 kV Category B Contingencies using governor powerflow techniques during 2010 conditions with the CPV Colusa Project added resulted in new and/or increased overloads on some of the impacted facilities discussed in Section 6. These overloads and critical contingencies are summarized in Table 7-1.

Over Loaded Component	Contingency	Rating (Amps/ MVA)	Pre- Project Loading (Amps/MVA |%Rating)		Post-Project Loading (Amps/MVA |%Rating)		% Change from Pre-Project Loading
Summer Peak 2010							
ISO-Controlled Facilities							
Cottonwood-Cortina 230 kV Line	Olinda-Tracy 500 kV Line	954		<90%			

Over Loaded Component	Contingency	Rating (Amps/ MVA)	Pre- Project Loading (Amps/MVA |%Rating)		Post-Project Loading (Amps/MVA |%Rating)		% Change from Pre-Project Loading
CPV Colusa-Cortina 230 kV Line		954			950	100%	
Palermo-East Marysville Jct 2 115 kV Line	Table Mountain-Vaca Dixon 500 kV Line	412	409	99%	416	101%	2%
Non-ISO Facilities							
Flanagan-Shasta 230 kV Line	Captain Jack-Olinda 500 kV Line	800	779	97%	816	102%	5%
O'Bannion-Elverta 230 kV Lines	Olinda-Tracy 500 kV Line	1,054	1,210	115%	1,261	120%	5%
Spring Off Peak 2010							
Non-ISO Facilities							
Olinda 500/230 kV Transformer	Captain Jack-Olinda 500 kV Line	1,041	941	90%	1,104	106%	16%
O'Bannion-Elverta 230 kV Lines	Olinda-Tracy 500 kV Line	1,054	1,053	100%	1,106	105%	5%

Table 7-1: Governor Power Flow Results for Category B Contingencies

7.2 Results for Category C Contingencies

As was the case with the Category B Contingencies, simulation of the 500 kV Category C Contingencies using the governor powerflow techniques during 2010 conditions with the CPV Colusa Project added resulted in new and/or increased overloads on some of the impacted facilities discussed in Section

Over Loaded Component	Contingency	Rating (Amps/ MVA)	Pre- Project Loading (Amps/MVA |%Rating)		Post-Project Loading (Amps/MVA |%Rating)		% Change from Pre-Project Loading
Summer Peak 2010							
ISO-Controlled Facilities							
Palermo 230/115 kV Transformer	Table Mountain-Tesla and Table Mountain-Vaca Dixon 500 kV lines	168	164	98%	171	102%	4%
Non-ISO Facilities							
O'Bannion-Elverta 230 kV Lines	Round Mountain-Table Mountain #1 and #2 500 kV Lines	1,054	1,144	108%	1,192	113%	5%
	Table Mountain-Tesla and Table Mountain-Vaca Dixon 500 kV lines	1,054	1,113	106%	1,152	109%	3%
	Tracy-Tesla and Tracy-Los Banos 500 kV Lines	1,054	1.129	107%	1,172	111%	4%
Summer Off Peak 2010							
Non-ISO Facilities							
Olinda 500/230 kV Transformer	Malin-Round Mountain #1 and #2 500 kV Lines	1,041	1,103	106%	1,242	119%	13%

6. These overloads and critical contingencies are summarized in Table 7-2.

Table 7-2: Governor Power Flow Results for Category C Contingencies

8. Dynamic Stability Study and Results

Dynamic stability studies were conducted using the 2010 Summer Peak Case to ensure that the transmission system would remain in operating equilibrium through normal and abnormal operating conditions after the CPV Generation goes in operation.

The machine dynamic data used to perform the studies was supplied by the CPV Colusa Project and was, as necessary, enhanced or replaced with data for similar units in the system when the supplied data was not appropriate for the existing GE PSLF dynamic models. The various models (i.e., generator, exciter and governor) are contained in Appendix E.

8.1 Dynamic Stability Study Scenarios

Disturbance simulations were performed for a study period of up to 20 seconds to determine whether Colusa Project would create any system instability during the following line and generator outages.

8.1.1 NERC/CAISO Category B

- Full load rejection 700 MW of the proposed CPV Colusa Project.
- A three-phase close-in fault on the Cottonwood-Colusa SWYD #1 230 kV line at Cottonwood Substation 230 kV bus with normal clearing time followed by loss of the Cottonwood-Colusa SWYD #1 230 kV line.
- A three-phase close-in fault on the Colusa SWYD-Cortina 230 kV line at Vaca Dixon Substation 230 kV bus with normal clearing time followed by loss of the Colusa SWYD-Cortina 230-kV line.
- A three-phase close-in fault on the Logan Creek-Colusa SWYD 230 kV line at Cottonwood Substation 230 kV bus with normal clearing time followed by loss of the Logan Creek-Colusa SWYD 230 kV line.
- A three-phase close-in fault on the Colusa SWYD-Vaca #1 230 kV line at Vaca Dixon Substation 230 kV bus with normal clearing time followed by loss of the Colusa SWYD-Vaca #1 230 kV line.
- A three-phase close-in fault on the Cottonwood-Colusa SWYD #2 230 kV line at Cottonwood Substation 230 kV bus with normal clearing time followed by loss of the Cottonwood-Colusa SWYD #2 230 kV line.

- A three-phase close-in fault on the Colusa SWYD-Vaca #2 230 kV line at Vaca Dixon Substation 230 kV bus with normal clearing time followed by loss of the Colusa SWYD-Vaca #2 230 kV line.
- A three-phase close-in fault on the Glenn-Colusa SWYD 230 kV line at Cottonwood Substation 230 kV bus with normal clearing time followed by loss of the Glenn-Colusa SWYD 230 kV line.
- A three-phase close-in fault on the Colusa SWYD-Vaca #3 230 kV line at Vaca Dixon Substation 230 kV bus with normal clearing time followed by loss of the Colusa SWYD-Vaca #3 230 kV line.

8.1.2 CAISO Category C

- A three-phase fault on Cottonwood Substation 230 kV bus with normal clearing time.
- A three-phase fault on Vaca Dixon Substation 230 kV bus with normal clearing time.
- A three-phase fault on Logan Creek Substation 230 kV bus with normal clearing time.
- A three-phase fault on Cortina Substation 230 kV bus with normal clearing time.
- A three-phase fault on Glenn Substation 230 kV bus with normal clearing time

8.2 Parameters Monitored to Evaluate System Stability Performance

8.2.1 Rotor Angle

The rotor angle plots shown in Appendix F provide a measure for determining how the proposed generation units would swing with respect to one another. The plots also provide a measure of how the units would swing with respect to other generation units in the area.

8.2.2 Bus Voltage

The bus voltage plots, in conjunction with the relative rotor angle plots, also shown in Appendix F, provide a means of detecting out-of-step conditions. The bus voltage plots are useful in assessing the magnitude and the duration of post disturbance voltage dips and peak-to-peak voltage oscillations. The bus voltage plots also give an indication of system damping and the level to which voltages are expected to recover in steady state conditions.

8.2.3 Bus Frequency

The bus frequency plots, also shown in Appendix F, provide information on the magnitude and the duration of post fault frequency swings with the CPV Colusa Project in service. These plots indicate the extent of possible over-frequency or under-frequency, which can occur because of the imbalance between the generation and load within an area.

8.2.4 Other Parameters

- Generator Terminal Power
- Generator Terminal Voltage
- Generator Rotor Speed
- Generator Field Voltage
- Bus Angle
- Line Flow
- Voltage Spread
- Frequency Spread

8.3 Results

Dynamic stability studies were conducted using the 2010 Summer Peak base case described in Section 4 and the generator models shown in Appendix E to determine whether the transmission system would attain operating equilibrium following selected outages described in Section 8.1.

These dynamic stability studies indicated that there would be no system performance issues caused by the CPV Colusa Project.

9. System Protection Study

Short circuit studies were performed by PG&E to determine the impact of adding the Colusa Project to the transmission system. Three phase and single line to ground fault duties were calculated before and after the Project. Table 9-1 lists the available short circuit duty at the buses electrically adjacent to the Project. These results were used to determine if any equipment would be overstressed by the addition of the Project. The information in Table 9-1 indicates that there would likely be overstressed breakers at the Cottonwood and Vaca-Dixon substations for the conditions studied.[13]

		Minimum Breaker Rating	Before Project (Total Bus Fault)		After Project (Total Bus Fault)		Percent Increase (or decrease due to Project)	
Bus Name	kV	kA	3LG (A)	1LG (A)	3LG (A)	1LG (A)	3LG (A)	1LG (A)
Anita	60 KV	*	1900	1203	1953	1219	3	1
Black Butt	60 KV	**	2669	2089	2761	2130	3	2
Capay	60 KV	**	5724	5091	6236	5402	9	6

[13] The short circuit data sets also included the Three Mountain Power Project (TMPP) and Project ID#P0441 both of which have withdrawn from the ISO Generation Interconnection Queue since the short circuit studies were done. The CPV Project-related short circuit impacts without the TMPP and Project P0441 will be assess during the Facility Study.

		Minimum Breaker Rating	Before Project (Total Bus Fault)		After Project (Total Bus Fault)		Percent Increase (or decrease due to Project	
Bus Name	**kV**	**kA**	**3LG (A)**	**1LG (A)**	**3LG (A)**	**1LG (A)**	**3LG (A)**	**1LG (A)**
Corning	60 KV	>3	2682	2627	2789	2697	4	3
Corning B	60 KV	>3	2683	2627	2790	2698	4	3
Cortina	115 KV	40	9583	9581	12836	12702	34	33
Cortina	230 KV	40	6184	5718	10400	9219	68	61
Cortina B3	115 KV	40	9572	9569	12813	12678	34	32
Cottonwd	230 KV	**34.45**	33557	28896	**34977**	29963	4	4
CPV Colusa	230 KV	n/a	0	0	21510	21900	n/a	n/a
Eagle Rock	115 KV	31.5	12074	10500	12262	10628	2	1
Elk Creek	60 KV	*	698	715	703	719	1	1
Elk Creek Tp	60 KV	*	1818	1314	1861	1331	2	1
Glenn	60 KV	13.69	8689	9985	9922	11314	14	13
Glenn	230 KV	40	4805	4117	6626	5467	38	33
Hamilton A	60 KV	*	2905	2534	3029	2602	4	3
Headgate M	60 KV	**	3688	2819	3892	2911	6	3
Highland	115 KV	*	6097	4598	6319	4700	4	2
Homestake	115 KV	**	3018	2015	3060	2030	1	1
Indian-Vly	115 KV	**	3166	2509	3328	2586	5	3
Jacinto	60 KV	*	1469	1297	1500	1313	2	1
Logan Crk	230 KV	40	4603	4170	10902	9380	137	125
Lucerne	115 KV	*	3607	3072	3728	3136	3	2
Mendocino	115 KV	>5.3	5067	5194	5145	5257	2	1
Orland B	60 KV	*	3703	2561	3903	2635	5	3
Provident	60 KV	**	1406	1220	1435	1235	2	1
Rice Le	60 KV	*	1053	820	1069	827	2	1
Schuller	230 KV	**	4595	4164	10855	9347	136	124
Stoney CRG	60 KV	**	695	715	700	718	1	0
Vaca Dixon	230 KV	**34.45**	**44146**	**42680**	**45803**	**43984**	4	3
Willows A	60 KV	*	1692	1199	1729	1213	2	1
* Protection provided by fuses					** Third party station			

Table 9-1 Results of Short Circuit Studies

10. Substation Evaluation

10.1 Results of Close-In Fault Analysis

The results from Section 9 consider that each breaker at a substation would need to have an interrupting capability to handle the total bus fault current. When this analysis indicates that some breakers might be overstressed, a more detailed investigation at each breaker on an individual basis is warranted. This detailed analysis, called a “close-in fault” looks at the maximum fault current that each breaker would have to interrupt. Typically

this maximum current is encountered for a fault on the line side of each breaker. Results of this "close-in fault" analysis, which was conducted by PG&E, are summarized in Table 10-1.

Substation	CB	Before 3LG (A pri)	After 3LG (A pri)	Breaker Rating	3 Phase Before	3 Phase After	% Incr.
Cottonwood	222	32690	34011	34454	95%	99%	4%
Cottonwood	232	32682	34006	34454	95%	99%	4%
Cottonwood	272	31919	33323	34454	93%	97%	4%
Cottonwood	292	30972	32374	34454	90%	94%	4%
Cottonwood	312	32914	34333	34454	96%	100%	4%
Cottonwood	332	31844	33251	34454	92%	97%	4%
Cottonwood	342	31841	33247	34454	92%	96%	4%
Cottonwood	352	32219	33637	34454	94%	98%	4%
Cottonwood	412	33557	34977	34454	97%	102%	4%
Cottonwood	522	33532	34952	34454	97%	101%	4%
Cottonwood	542	33243	34664	34454	96%	101%	4%
Vaca Dixon	412	42949	44771	40000	107%	112%	5%
Vaca Dixon	442	42479	44133	40000	106%	110%	4%
Vaca Dixon	452	42437	44091	40000	106%	110%	4%
Vaca Dixon	462	42641	44296	40000	107%	111%	4%
Vaca Dixon	622	44146	45803	34454	128%	133%	5%

Table 10-1 Results of "Close-In" Fault Analysis

10.2 PG&E's Overstressed Breaker Replacement Policy

PG&E applies the following policy to determine responsibility for projects that overstress or increase the level of overstress on existing circuit breakers:

- If a breaker is not overstressed before the project, and the project results in an overstressed condition of the breaker, then the project is responsible for the cost of replacement.
- If a breaker is already overstressed, and a project increases the overstress by 5% or more, or the post-project overstress level exceeds 25%, then the project is responsible for the cost of replacement.
- If the overstress level exceeds 25% before the project, and for all other circumstances, PG&E or other generation projects will be responsible for any replacement costs.

10.3 Colusa Project Breaker Replacement Responsibility

Based on the above "close-in fault" analysis, and PG&E's replacement policy, the following breaker replacements would be the responsibility of the Project:

Cottonwood 230kV Substation: Breakers 412, 522, & 542
Vaca-Dixon 230kV Substation: Breakers 412

11. Reactive Power Deficiency Analysis

NERC/WECC planning standards require that the system maintain post-transient voltage stability when either critical path transfers or area Loads increased by 5% for Category B contingencies and by 2.5% for Category C contingencies.

Using the above criteria, two base cases were developed from the post-Project Summer Peak case in which COI transfers were increased by 5% and North Valley Loads were increased by 5%. A total of 17 Category B contingencies involving each of the 500 kV lines or 500/230 kV transformers in Northern California were then simulated on these two cases. These studies showed that positive reactive margins would exist after each of the simulated contingencies.

Similarly, two base cases were developed from the post-Project Summer Peak case in which COI transfers were increased by 2.5% and North Valley Loads were increased by 2.5%. A total of 7 Category C contingencies involving two 500 kV lines in Northern California were then simulated on these two cases. These studies also showed that positive reactive margins would exist after each of the simulated contingencies.

12. Mitigation

This section presents alternatives available for mitigating the Category A and Category B emergency overloads of the facilities described in Section 6 and in Section 7. Overloads that result from CAISO Category C contingencies may, according to WECC reliability criteria, be mitigated by load shedding or generation dropping. PG&E or CAISO or both may require new generators to take part in and be responsible for the costs of operating procedures and/or Special Protection Schemes (SPS) that will eventually be planned to mitigate these rare occurrences.

12.1 Pre-Existing Overloads – ISO Controlled Facilities

The following lists two facilities for which pre-existing Category A or Category B overloads are increased by the addition of the CPV Colusa Project and presents options for mitigating these increased overloads.

12.1.1 Palermo 230/115 kV Transformer

Limiting Factor		Rating 168 MVA Normal / 168 MVA Emergency	
Pre-Project Emergency Loading	183 MVA (109%)	Post Project Emergency Loading	186 MVA (111%)
Worst Steady-state Power Flow Category B Contingency		Palermo-OWID 115 kV Line	
Overload Condition		Summer Emergency	

The above information summarizes the worst overloads observed on the transformer. In addition to the above, one other steady-state powerflow Category B contingency results in a new overload of 1%.

Solution: PG&E has a project (# T686B) to install a second 230/115 kV transformer at Palermo by 2007. However, this project has not yet been approved by PG&E management and, in the event it is not completed by the in-service date of the CPV Colusa Project, the Project would be responsible for mitigating Project-related impacts on this transformer.

12.1.2 Palermo-E. Marysville Jct 2 115 kV Line

Limiting Factor		Rating 357 Amps Normal / 412 Amps Emergency (21Miles)	
Pre-Project Normal Loading	363 Amps (102%)	Post Project Normal Loading	368 Amps (103%)
Overload Condition		Summer Peak	
Pre-Project Emergency Loading	429 Amps (104%)	Post Project Emergency Loading	435 Amps (106%)
Worst Steady-state Power Flow Category B Contingency		Palermo-Pease 115 kV Line	
Overload Condition		Summer Emergency	

Solution: PG&E has a project (# T686) to reconductor the Palermo-Bouge and Palermo-East Nicolaus 115 kV lines by 2007. However, this project has not yet been approved by PG&E management and, in the event it is not completed by the in-service date of the CPV Colusa Project, the Project would be responsible for mitigating Project-related impacts on this line.

12.2 Pre-Existing Overloads – Non ISO Facilities

The following lists four facilities for which pre-existing Category A or Category B overloads are increased by the addition of the CPV Colusa Project and presents options for mitigating these increased overloads.

12.2.1 O'Bannion-Elverta #1 and/or #2 230 kV Lines

Limiting Factor		Rating 1,054 Amps Normal / 1,054 Amps Emergency (26 Miles each)	
Pre-Project Normal Loading[14]	1,052 Amps (100%)	Post-Project Normal Loading	1,085 Amps (103%)
Overload Condition		Summer Peak Normal	
Pre-Project Emergency Loading	1,115 Amps (106%)	Post Project Emergency Loading	1,153 Amps (109%)
Worst Steady-state Power Flow Category B Contingency		Cottonwood (WAPA)-Roseville 230 kV	
Overload Condition		Summer Emergency	

[14] With 520 MW Sutter Project operating at 500 MW.

Pre-Project Emergency Loading	1,210 Amps (115%)	Post Project Emergency Loading	1,261 Amps (120%)
Worst Governor Power Flow Category B Contingency		Olinda-Tracy 500 kV Line	
Overload Condition		Summer Emergency	

The above information summarizes the worst overloads observed on these two lines that are owned by the Western Area Power Administration (Western). In addition, to the above, twenty-two other steady-state powerflow Category B contingencies resulted in overload increases of between 3% and 6% and one governor powerflow Category B contingency resulted in a new overload of 5%.

Solution: There is an existing generator RAS scheme that was installed to mitigate the impacts of the Sutter project on the O'Bannion-Elverta lines by running back or tripping Sutter generation. Because the availability of this RAS to mitigate the impacts of other generating projects should not be assumed, the mitigation options available to the Colusa Project include reconductoring the existing lines or building one or more new 230 kV lines from O'Bannion to Elverta.

Western has proposed plans to build two new O'Bannion-Elverta circuits; the Colusa Project should work with Western and others to see that these lines are constructed.

12.2.2 Flanagan-Keswick 230 kV Line

Limiting Factor		Rating 800 Amps Normal / 800 Amps Emergency (6 Miles)	
Pre-Project Emergency Loading	875 Amps (109%)	Post Project Emergency Loading	900 Amps (113%)
Worst Steady-state Power Flow Category B Contingency		Cottonwood-Shasta #1 or #2 230 kV Line	
Overload Condition		Summer Emergency	

The above information summarizes the worst overloads observed on this line that is owned by Western. In addition to the above, two other steady-state powerflow Category B contingencies resulted in new overloads of 5%.

Solution: Enter into discussions with Western to identify the best options for mitigating the Project-related impacts on this line.

12.2.3 Flanagan-Shasta 230 kV Line

Limiting Factor		Rating 800 Amps Normal / 800 Amps Emergency (3 Miles)	
Pre-Project Emergency Loading	981 Amps (123%)	Post Project Emergency Loading	1,006 Amps (126%)
Worst Steady-state Power Flow Category B Contingency		Cottonwood-Shasta #1 or #2 230 kV Line	

Overload Condition		Summer Emergency	
Pre-Project Emergency Loading	779 Amps (97%)	Post Project Emergency Loading	816 Amps (102%)
Worst Governor Power Flow Category B Contingency		Captain Jack-Olinda 500 kV Line	
Overload Condition		Summer Emergency	

The above information summarizes the worst overloads observed on this line (that is owned by Western). In addition to the above, four other Category B contingencies resulted in new overloads of between 1% and 5% and five steady-state powerflow Category B contingencies resulted in overload increases of between 3% and 5%.

Solution: Enter into discussions with Western to identify the best options for mitigating the Project-related impacts on this line.

12.2.4 Hurley S-Carmichael 230 kV Line

Limiting Factor		Rating 880 Amps Normal / 880 Amps Emergency (10 Miles)	
Pre-Project Emergency Loading	939 Amps (107%)	Post Project Emergency Loading	957 Amps (109%)
Worst Steady-state Power Flow Category B Contingency		Elverta W-Elverta S 230 kV Line	
Overload Condition		Summer Emergency	

Solution: Enter into discussions with the Sacramento Municipal Utility District (SMUD) to identify the best options for mitigating the Project-related impacts on this line.

12.3 New Overload Description – ISO-Controlled Facilities

There are no ISO-controlled facilities that experience new overloads as a result of the addition of the CPV Colusa Project; however the post-contingency loading on the Colusa Project-Cortina 230 kV line reaches 100% of the line's emergency rating after an outage of the Olinda-Tracy 500 kV line and the post-contingency loading on the Lambie-Birds Landing 230 kV line reaches 100% of the line's emergency rating after an overlapping outage of the Vaca Dixon-Peabody 230 kV line and Contra Costa Unit #7. Both of these post-contingency loading levels occur during summer peak conditions.

12.4 New Overload Description – Non-ISO Facilities

As discussed below, a single non-ISO facility, the Olinda 500/230 kV transformer, experiences contingency overloads due to the addition of the CPV Colusa Project.

12.4.1 Olinda 500/230 kV Transformer

Limiting Factor		Rating 850 MVA Normal / 1,041 MVA Emergency	
Pre-Project Emergency Loading	941 MVA (90%)	Post Project Emergency Loading	1,104 MVA (106%)
Worst Governor Power Flow Category B Contingency		Captain Jack-Olinda 500 kV Line	
Overload Condition		Spring Off-Peak Emergency	

Solution: Potential options to mitigate Project-related impacts on the Olinda transformer include:

- Installing a second 500/230 kV transformer at Olinda.
- Developing remedial action schemes (RAS) that would drop Project generation after an outage of the Captain Jack-Olinda 500 kV line.

The preferred option, subject to the approval of PG&E, the ISO, and the owners of the Olinda transformer, is the use of RAS as described above.

13. Environmental Evaluation/ Permitting

Pacific Gas and Electric Company (PG&E) is subject to the jurisdiction of the California Public Utilities Commission (CPUC); and must comply with CPUC General Order 131-D (Order) on the construction, modification, alteration, or addition of all electric transmission facilities (i.e., lines, substations, switchyards, etc.). This includes facilities to be constructed by others and deeded to PG&E. In cases where PG&E's electric facilities are part of a larger project (i.e., electric generation plant), the Order exempts PG&E from obtaining an approval from the CPUC provided it's planned facilities have been included in the larger project's California Environmental Quality Act (CEQA) review and the project's lead agency (i.e., California Energy Commission) finds no significant unavoidable environmental impacts. PG&E or the project developer may proceed with construction once PG&E has filed notice with the CPUC and the public on the project exempt status and the public has had a chance to protest PG&E's claim of exemption. The absence of evaluating PG&E facilities could require PG&E to seek approval from the CPUC (i.e., Certificate of Public Convenience and Necessity or Permit to Construct) taking as much as 18 months since the CPUC would need to conduct it's own environmental evaluation (i.e., Negative Declaration or Environmental Impact Report).

PG&E recommends that the project proponent include PG&E facility work in its project description and application to the lead agency performing CEQA review on the project. The lead agency must consider the environmental impacts of the interconnection electric facility, whether built by the developer with the intent to transfer ownership to PG&E or to be built and owned by PG&E directly, and make a finding of no significant unavoidable environmental impacts. Once the project has completed the review process and the environmental document (i.e.,

Negative Declaration or Environmental Impact Report) finds no significant unavoidable environmental impacts on PG&E's work, PG&E would file an Advice Letter with the CPUC and publish public notice on proposed construction of the facilities. Facilities built under this procedure must also be designed to include consideration of electric and magnetic field (EMF) mitigation measures pursuant to PG&E's "EMF Design Guidelines of New Electrical Facilities: Transmission, Substation and Distribution".

Please see Section III, B.1.(f) in General Order 131-D. This document can be found in the CPUC's web page at:

http://www.cpuc.ca.gov/PUBLISHED/GENERAL_ORDER/589.htm

14. Study Updates

This System Impact Study is performed according to the assumptions shown in the Sections titled "Study Assumptions" and "Power Flow Study Base Case". In the event such that these assumptions are changed, an updating study may be required to re-evaluate CPV Colusa Project's impact on PG&E's transmission grid. CPV Colusa would be responsible for paying for any such updating study. Examples of changes that might prompt such a study are:

- Change in interconnection date.
- Change in Interconnection Queue position.
- Change in project's MW size
- Change in interconnection plan

15. Stand-by Power

This study does not address any requirements for stand-by power that the project may require. The Applicant should contact their Generation Interconnection Services Representative regarding this service.

Note: The Applicant is urged to contact their Generation Interconnection Services Representative promptly regarding stand-by service in order to ensure its availability for the project's start-up date.

Appendix A

E&L Westcoast, LLC
Colusa Project
System Impact Study Plan

STUDY PLAN
FOR THE CPV COLUSA PROJECT
SYSTEM IMPACT STUDY

1. INTRODUCTION

E&L Westcoast, LLC (E&L) has submitted a completed Interconnection Application (IA) to the California Independent System Operator Corporation (CAISO) for the CPV Colusa Project (the Project). The proposed Project will consist of a combined cycle plant with two combustion turbine generators (CTGs) rated for 199 MW each and one steam turbine generator (STG) rated for 317 MW. The plant output is 715 MW with an auxiliary load of 15 MW. Therefore the maximum net output to the grid will be 700 MW. The commercial operation date of the proposed Project is January 2010. The proposed Project will be interconnected with the four Pacific Gas & Electric Co. (PG&E) Cottonwood-Vaca Dixon 230-kV lines near Colusa, California.

The California ISO (CAISO) and PG&E have agreed that a System Impact Study (SIS) is required to determine the impact of the CPV Colusa Project on PG&E's transmission grid. This study plan will form the basis for the System Impact Study (SIS) by defining the scope, content, assumptions, and terms of reference of this SIS. This SIS will:

- Identify transmission system impacts caused solely by the addition of the proposed project, and
- Identify the system reinforcements, if any, necessary to mitigate the adverse impact of the proposed project under various system conditions.

E&L has proposed to utilize Navigant Consulting, Inc. (NCI) to perform certain portions of the System Impact Study (SIS) for the CVP Colusa Project and the CAISO and PG&E have concurred with this approach.

2. SCHEDULE

PG&E and the CAISO have approved this Study Plan as of May 2, 2005. The anticipated schedule for the SIS is summarized in Table 2-1:

TABLE 2-1
ANTICIPATED SIS SCHEDULE

Activity	Day[1]
NCI provides PG&E and CAISO with powerflow "change decks"	1
PG&E prepares and sends pre- and post-Project base cases and	15

[1] Day 1 is the day upon which E&L returns a fully executed SISA to PG&E

TABLE 2-1 ANTICIPATED SIS SCHEDULE	
Activity	**Day[1]**
contingency lists to NCI	
NCI begins SIS Work	17
PG&E sends pre-Project dynamics data to NCI	22
PG&E and NCI initiate development of Aspen data base	22
NCI runs "no disturbance" test of post-Project dynamics data and forwards results to PG&E and CAISO	25
PG&E and CAISO provide NCI with any comments on "no disturbance" test	32
PG&E makes Aspen data base available to NCI for short circuit studies	32
NCI provides PG&E and CAISO with results of steady state and governor powerflow studies and information on proposed method(s) to mitigate new and increased post-Project overloads	33
NCI provides PG&E with short circuit duties for overstressed breaker analysis	37
Conference call to discuss powerflow studies and proposed mitigation methods	40
PG&E provides NCI with breaker overstress analysis and results of the transmission line and substation evaluations	44
Draft SIS report submitted to PG&E and CAISO for review	50
Meeting with PG&E and CAISO to obtain comments on Draft SIS	64
Final SIS report submitted to PG&E and CAISO for approval	69
PG&E and CAISO approve SIS	83

3. COST ESTIMATES

Cost estimates will not be provided in this SIS. Cost estimates will be developed and provided by PG&E when the proposed Project progresses to the Facilities Study.

4. PROJECT AND INTERCONNECTION INFORMATION

The Project will be located in PG&E's North Valley Region planning area and approximately 1.4 miles south of the Glenn/Colusa County line. PG&E's Cottonwood-Vaca Dixon 230-kV lines are located approximately 1,300 feet east of the Project site. The Project will be interconnected with these lines by looping the Cottonwood-Cortina, Logan Creek-Vaca Dixon, Cottonwood-Vaca Dixon, and Glenn-Vaca Dixon 230-kV lines into a new Project 230-kV switchyard. Figure 4-1 depicts the location of the Project and transmission lines in the vicinity of the Project.

Figure 4-1 – Project Location

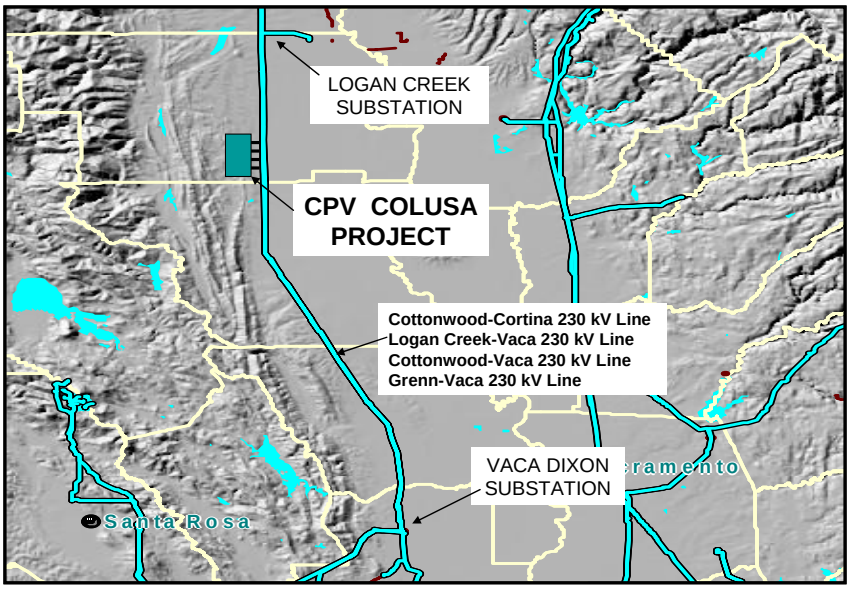

The Project will be a combined cycle project with a maximum output of 715 MW and will consist of two GE combustion turbine generators (each rated at 199 MW) and one GE steam turbine generator (rated at 317 MW). The generator auxiliary load will be 15 MW resulting in a maximum net output of 700 MW at an 85% power factor. The step-up transformers for the combustion turbine generating units will rated at 18/242-kV and 205 MVA and while that for the steam turbine generating unit will be at rated 18/242-kV and 410 MVA. Figure 4-2 is a conceptual one-line diagram for the Project interconnection.

Figure 4-2: Conceptual One-Line Diagram

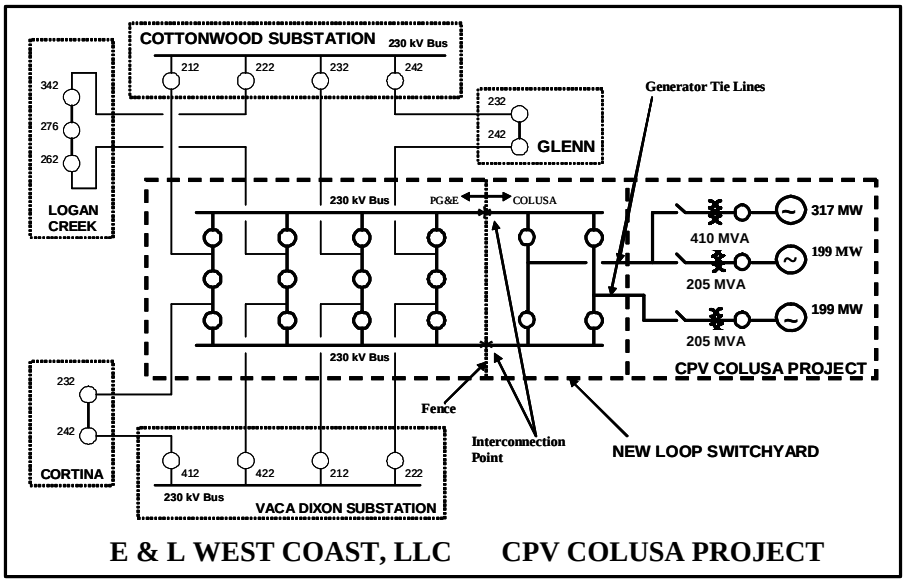

5. STUDY ASSUMPTIONS

NCI will conduct this SIS using the following assumptions:

1. The Project will be a combined cycle plant with two (2) combustion turbine generators rated for 199 MW and one (1) steam turbine generator rated for 317 MW. The maximum total output from the CPV Colusa Project is rated for 715 MW with an expected total plant load of 15 MW. Therefore, the maximum net output to the grid is 700 MW.
2. The expected commercial operation date is January 2010.
3. The step-up transformers for the two CTGs will be three phase, 18/242-kV delta/wye grounded units, rated at 205 MVA @ 65 degree C rise with an impedance of 14% @ 205 MVA base. The third step-up transformer, connecting to the STG, will be a three phase, 18/242-kV delta/wye grounded transformer, rated at 410 MVA @ 65 degree C rise with an impedance of 14% @ 410 MVA base.
4. The generator tie lines will be approximately 2000′ in length.
5. This study will take into account the planned generating facilities in PG&E's service territory whose schedules are concurrent with or precede the Project's schedule.

6. POWERFLOW STUDY BASE CASES

Three power flow base cases will be used to evaluate the transmission system impacts of the CPV Colusa Project. While it is impossible to study all combinations of system load and generation levels during all seasons and at all times of the day, these three base cases represent extreme loading and generation conditions for the study area. There is no guarantee that:

- The CPV Colusa Project can operate at maximum rated output 24 hours a day, year round, without system impacts, or
- The CPV Colusa Project will not cause system impacts during the times and seasons not studied in this SIS.

2010 Summer Peak Full Loop Base Case

Power flow analysis will be performed using PG&E's 2010 Summer Peak Full Loop Base Case (in General Electric Power Flow format). This base case was developed from PG&E's 2004 base case series. It has a 1-in-10 year heat wave load forecast for the PG&E's Valley North areas.

2010 Spring Off-Peak Full Loop Base Case

Power flow analysis will be performed using PG&E's 2010 Spring Off-Peak Full Loop Base Case (in General Electric Power Flow format). The PG&E Area conforming load levels are

reduced approximately 65% from the levels shown in the Summer Peak Base Case, which is representative of a typical spring off-peak day. This case is used to evaluate the potential transmission congestion caused by delivering power from local generation and new generation projects when the system has high hydro generation and the COI is fully loaded (at approximately 4,800 MW) in the north-to-south direction.

2010 Summer Off-Peak Full Loop Base Case

Power flow analysis will be performed using PG&E's 2010 Summer Off-Peak Full Loop Base Case to evaluate potential congestion on transmission facilities when the COI is fully loaded in the south-to-north direction (around 3,675 MW).

These three base cases will model all approved PG&E transmission reliability projects that will be operational by January 2010. They will also model all proposed generation projects that will be operational by January 2010. However, some generation projects that are electrically far from the proposed Project will be either turned off or modeled with reduced generation to balance the loads and resources in the power flow model. The major generation projects to be considered are listed in Attachment 1.

7. DATA PREPARATION

NCI will develop "change decks" modeling the interconnection of the Project to the four PG&E 230-kV lines discussed above and will send the change decks to PG&E for its use in preparing post-Project Base Cases (based on the three Base Cases discussed above) and the required Category "B" and Category "C" contingency lists for the studies. PG&E will then send NCI the pre- and post-Project Base Cases and the contingency lists for its use in the studies described in Section 8.

PG&E will also send NCI the pertinent pre-Project dyanamics data. NCI will add the Project dynamics data to the pre-Project data set and will use the resultant data to run a no disturbance simulation to assure the quality of the data. The results of this simulation will be forwarded to PG&E and the CAISO.

8. STUDY SCOPE

This SIS will determine the impact of the CPV Colusa Project on PG&E's transmission system. The specific studies conducted are outlined below:

8.1 Steady State Power Flow Analysis

Power Flow analysis will be performed using the six base cases (three pre-Project and

three post-Project) described in Sections 6 and 7. The base cases will be used to simulate the impact of the Project during normal operating conditions, as well as single (CAISO Category "B") and selected multiple (CAISO Category "C") outages. The study will cover the transmission facilities within PG&E's Valley North, Sacramento, and North Coast planning areas. In addition, the impacts of selected contingencies on the non-PG&E system north of the Tracy Substation will be studied.

The single (CAISO Category "B") and selected multiple (CAISO Category "C") contingencies include the following outages:

8.1.1 CAISO Category "B"

- All single generator outages within the study area.
- All single (60-kV to 230-kV) transmission circuit outages within the study area.
- All single transformer outages within the study area.
- Overlapping single generator and transmission circuit outages for the transmission lines and generators within the study area.

8.1.2 CAISO Category "C"

- Selected bus (60-kV to 230-kV) outages within the study area.
- Selected outages caused by selected breaker failures (excluding bus tie and sectionalizing breakers) at the same above bus section.
- Selected combination of any two-generator/transmission line/transformer outages (except ones included above in Category "B") within the study area.
- Selected outages of double circuit tower lines (60-kV to 230-kV) within the study area.

8.2 Governor Powerflow Analysis

The Base Cases described above will be used in governor powerflow analyses to assess Project-related impacts for 500-kV Category "B" contingencies and selected 500-kV Category "C" contingencies on the system north of Tesla/Tracy.

8.3 Identification of Options to Mitigate Overloads

At the completion of the steady state and governor powerflow studies NCI will identify and assess options to mitigate new or increased overloads caused by the addition of the Project. Mitigation options to be considered will include:

- Reducing Project output,
- System reinforcements, and

- Automatic remedial action schemes (RAS) that would drop portions of the Project generation.

The results of this analysis will be documented and forwarded to PG&E and the CAISO for review. A conference call will be held approximately one week after the submittal of this information to discuss the results and obtain the concurrence of PG&E and the CAISO on them.

8.4 System Protection Analysis

Short circuit studies will be performed to determine the maximum fault currents on various busses in the vicinity of the CPV Colusa Project. This SIS will assess the impact of increased fault duty resulting from the added generation. Because the data sets used for these studies and information on the ratings of potentially impacted breakers are not publicly available, NCI will work with PG&E staff to develop an equivalent data set that NCI can utilize with the Aspen model. NCI will then utilize this data set to calculate fault currents at the selected busses and will provide this information to PG&E. PG&E will identify equipment that may become overstressed as a result of the added generation and will provide information on preliminary system protection requirements.

8.5 Reactive Power Deficiency Analysis

With the Project included in the system model, CAISO Category "B" and "C" contingencies will be analyzed to identify any reactive power deficiency; i.e.:

- If they result in voltage drops of 5% or more from the pre-project levels, or
- If they fail to meet applicable voltage criteria.

A post-transient power flow analysis will be performed, if deemed necessary, after considering the network topology or power transfer paths involved when a significant amount of power transfer occurs.

8.6 Dynamic Stability Analysis

Dynamic stability studies will be conducted using the 2010 Summer Peak Full Loop Base Case to ensure that the transmission system remains in operating equilibrium through abnormal operating conditions after the new facility begins operation.

Disturbance simulations will be performed for a study period of up to 20 seconds to determine whether the new facility will create any system instability during the following line and generator outages:

8.6.1 CAISO Category "B"

- Full load rejection 700 MW of the proposed CPV Colusa Project.
- A three-phase close-in fault on the Cottonwood-Colusa SWYD #1 230-kV line at Cottonwood Substation 230-kV bus with normal clearing time followed by loss of the Cottonwood-Colusa SWYD #1 230-kV line.
- A three-phase close-in fault on the Colusa SWYD-Cortina 230-kV line at Vaca Dixon Substation 230-kV bus with normal clearing time followed by loss of the Colusa SWYD-Cortina 230-kV line.
- A three-phase close-in fault on the Logan Creek-Colusa SWYD 230-kV line at Cottonwood Substation 230-kV bus with normal clearing time followed by loss of the Logan Creek-Colusa SWYD 230-kV line.
- A three-phase close-in fault on the Colusa SWYD-Vaca #1 230-kV line at Vaca Dixon Substation 230-kV bus with normal clearing time followed by loss of the Colusa SWYD-Vaca #1 230-kV line.
- A three-phase close-in fault on the Cottonwood-Colusa SWYD #2 230-kV line at Cottonwood Substation 230-kV bus with normal clearing time followed by loss of the Cottonwood-Colusa SWYD #2 230-kV line.
- A three-phase close-in fault on the Colusa SWYD-Vaca #2 230-kV line at Vaca Dixon Substation 230-kV bus with normal clearing time followed by loss of the Colusa SWYD-Vaca #2 230-kV line.
- A three-phase close-in fault on the Glenn-Colusa SWYD 230-kV line at Cottonwood Substation 230-kV bus with normal clearing time followed by loss of the Glenn-Colusa SWYD 230-kV line.
- A three-phase close-in fault on the Colusa SWYD-Vaca #3 230-kV line at Vaca Dixon Substation 230-kV bus with normal clearing time followed by loss of the Colusa SWYD-Vaca #3 230-kV line.

8.6.2 CAISO Category "C"

- A three-phase fault on Cottonwood Substation 230-kV bus with normal clearing time.
- A three-phase fault on Vaca Dixon Substation 230-kV bus with normal clearing time.
- A three-phase fault on Logan Creek Substation 230-kV bus with normal clearing time.
- A three-phase fault on Cortina Substation 230-kV bus with normal clearing time.
- A three-phase fault on Glenn Substation 230-kV bus with normal clearing time

8.7 Transmission Line Evaluation

The transmission line evaluation will be undertaken by PG&E and will identify any existing equipment requiring upgrades to mitigate overload or overstress due to the new

generation, if any. However, this transmission line evaluation will not include the work scope and costs for these potential system impact upgrades. PG&E will forward the results of the transmission line evaluation to NCI for inclusion in the Project SIS report.

8.8 Substation Evaluation

The substation evaluation will be performed by PGE and will identify any existing equipment requiring upgrades, if any, to mitigate problems caused by overstress or overload due to the CPV Colusa Project. However, this substation evaluation will not include the work scope and cost estimates for any new equipment needed to accommodate the Project. PG&E will forward the results of the substation evaluation to NCI for inclusion in the Project SIS report.

9. COORDINATION WITH PG&E AND CAISO

During the activities described above it will be necessary that they be coordinated with PG&E and CAISO and that results be discussed with both parties as such become available. As a result of these contacts PG&E and/or CAISO may request that certain items be addressed in the studies. If such is the case, the required additional studies will be undertaken and will be discussed with PG&E and CAISO.

10. DOCUMENTATION OF RESULTS

Navigant Consulting will prepare a draft report that will present the results of the work undertaken in the above tasks and which will document the assumptions and data used in these studies. This report will be reviewed and discussed with E&L and will be revised to reflect comments received. It will then be submitted to PG&E and CAISO for review and comment and will be revised to reflect comments received. Once the report has been revised it will be submitted to PG&E and CAISO for approval.

ATTACHMENT 1 – GENERATION PROJECTS

PG&E Generation Projects						
PG&E Queue Position	**Applicant Name**	**Project Name**	**Nearest Substation**	**Capacity (MW)**	**Latest Expected On-Line Date**	**Modeled In Study Cases**
1	Calpine	Metcalf Energy Center	Metcalf	600	2005	Yes
2	Mirant	Contra Costa Power Plant Unit 8 Power Project	Contra Costa	590	2006	Yes
3	Midway Power, LLC	Tesla Power Project	Tesla	1156	2008	Yes
4	Duke Energy Morro Bay LLC	Morro Bay Modernization Project	Morro Bay	1200	2008	Yes
5	Mirant Potrero LLC	Potrero Power Plant Unit 7	Potrero	640	2008	Yes
6	Federal Power Avenal, LLC	Avenal Energy Project	Gates	620	2009	Yes
7	Calpine	Los Esteros Critical Energy Facility Phase II	Los Esteros	140	2008	Yes
8	Sacramento Municipal Utility District	Solano Wind Project	Russell	77	2006	Yes
9	Calpine	Los Esteros Critical Energy Facility Phase II	Los Esteros	335	2008	Yes
10	Sacramento Municipal Utility District	Solano Wind Project	Russell	15	2007	Yes

Non-PG&E Generation Projects to Be Modeled in Base Case per On-line Year						
	Applicant Name	**Project Name**	**Nearest Substation**	**Capacity (MW)**	**Latest Expected On-Line Date**	**Modeled In Study Cases**
SMUD	Sacramento Municipal Utility District	Consumnes Power Plant	Rancho Seco (SMUD)	500	2005	Yes
SVP	Silicon Valley Power	Pico Power Project	Kifer Receiving Station (SVP)	147	2005	Yes
TID	Turlock Irrigation District	Walnut Energy Center	Walnut (TID)	250	2006	Yes
SVP	Silicon Valley Power	Los Esteros Critical Energy Facility	SSS (SVP)	320	2008	Yes

ATTACHMENT 1 – GENERATION PROJECTS

PG&E Generation Projects – ISO Generation Interconnection Queue						
Project ID #	**Applicant Name**	**Project Name**	**Nearest Facility**	**Capacity (MW)**	**Latest Expected On-Line Date**	**Modeled In Study Cases**
P0301	Confidential	Confidential	Birds' Landing Switchyard	150	2006	Yes
P0302	Gaviota Energy / Global Renewable	Lompoc Wind Power Project	Cabrillo	120	2006	Yes
P0303	Kings River Conservation District	KRCD Peaking Project	Malaga	97	2005	Yes
P0304	FPL Energy, LLC	High Winds III	Birds' Landing Switchyard	38	2007	Yes
P0401	Confidential	Confidential	Birds' Landing Switchyard	150	2006	Yes
P0402	City and County of San Francisco	San Francisco Electric Reliability Power Project	Potrero	145.1	2007	Yes
P0403	Confidential	Confidential	Collector Station at Geysers #17 & Fulton Line	201	2007	Yes
P0404	City and County of San Francisco	San Francisco Airport Electric Reliability Project	San Francisco Airport	48.7	2007	Yes
P0405	NRG Energy Center San Francisco, LLC	San Francisco Cogeneration	Mission	14.26	2006	Yes
P0406	Confidential	Confidential	Panoche	99.9	2006	Yes
P0408	Confidential	Confidential	Tesla-Stockton 115-kV Line	99.9	2006	Yes
P0409	D. Milne Associated, LLC	Ripon Generation	Tesla	96.9	2007	Yes
P0410	Duke Energy North America, LLC	Duke Energy Oakland	Oakland C	320	2009	Yes
P0411	Confidential	Confidential	Humboldt Power Plant Substation	166	2008	Yes
P0412	Confidential	Confidential	Birds' Landing Switchyard	200	2008	Yes
P0413	Confidential	Confidential	East Shore	118	2007	Yes
P0414	Confidential	Confidential	Pease	99.9	2007	Yes
P0418	Confidential	Confidential	McCall	300	2007	Yes
P0419	Confidential	Confidential	Borden	126.5	2008	Yes
P0420	Confidential	Confidential	Tesla-Bellota 230-kV Line	168.7	2008	Yes
P0421	Three Mountain Power, LLC	Three Mountain Power Project	Pit 1-Pit 3 & Pit 1-Cottonwood 230-kV Line	295	2007	Yes

ATTACHMENT 1 – GENERATION PROJECTS

PG&E Generation Projects – ISO Generation Interconnection Queue						
Project ID #	**Applicant Name**	**Project Name**	**Nearest Facility**	**Capacity (MW)**	**Latest Expected On-Line Date**	**Modeled In Study Cases**
P0424	Calpine	Russell City Energy Center	East Shore	361	2006	Yes
P0427	Calpine	East Altamont Energy Center	Tracy Substation	806	2009	Yes
P0428	Confidential	Confidential	Evergreen-San Jose "B" 115-kV Line	94.5	2008	Yes
P0429	Confidential	Confidential	Herndon-Kearney 230-kV Line	200	2008	Yes
P0430	Confidential	Confidential	Contra Costa Power Plant 230-kV Substation	590	2009	Yes
P0431	Calpeak	Vaca Dixon	Vaca Dixon Substation	52	2008	Yes
P0432	Fresno Cogeneration Partners, LP	Fresno Cogen ICE Unit	Kerman-Helm 70-kV Line	0.55	2005	Yes
P0433	Cummins West Inc.	Willits Power Plant	Mendocino-Ft Bragg-Willits 60-kV Line	32	2007	Yes
P0434	Cummins West Inc.	West Sacramento Peaker	Rio Oso-West Sacramento 115-kV Line	49	2007	Yes
P0435	Confidential	Confidential	Panoche Substation	428	2008	Yes
P0436	Confidential	Confidential	Pleasant Grove Substation	116.8	2008	Yes
P0438	Northwest Energy System Co.	Oroville Energy II	Palermo-Oroville #2 60-kV Line	65	2008	Yes
P0440	Confidential	Confidential	Logan Creek-Vaca Dixon 230-kV Line	99.4	2008	Yes
P0441	Confidential	Confidential	Round Mountain-Cottonwood 230-kV Line	99.4	2008	Yes
P0442	Ramco Generating Two	West Fresno Energy Facility	West Fresno Substation	118	2007	Yes
P0501	Confidential	Confidential	Malaga - McCall 115-kV Line	116	2008	Yes
P0502	Confidential	Confidential	West Fresno-McCall 115-kV Line	99.9	2006	Yes

ATTACHMENT 1 – GENERATION PROJECTS

PG&E Generation Projects – ISO Generation Interconnection Queue						
Project ID #	**Applicant Name**	**Project Name**	**Nearest Facility**	**Capacity (MW)**	**Latest Expected On-Line Date**	**Modeled In Study Cases**
P0503	Confidential	Confidential	Los Banos Substation	165	2008	Yes
P0504	Calpeak Power, LLC	Panoche	Panoche Substation	104	2008	Yes
P0505	Calpine	Calpine Pittsburg Power Plant Unit 1	Pittsburg Power Plant	83.7	2007	Yes

Appendix B

Contingency Lists for Outages

Pflopro Input Files

```
CATEGORY B CONTINGENCIES

DEFINE BASE CASE LIST
10hs_pre_V2.sav  AO
DONE

MONITOR AREA OR ZONE VIOLATIONS
AREA 30
DONE

# CPV Colusa 2010 summer category b contingency list
# North Coast, North Valley, Sacramento, SMUD and WAPA divisions
  #
  #
  # Zone 302 North Coast division
  # 2010 category b contingencies
  #
  #
  # (1)  B2 LINE OUTAGE (BREAKER-TO-BREAKER)
  #
 1  30391 30393  "1 "    0     # line from  CR1T3_18 230.00   (3) to (3)   G14CRT15 230.00
 1  30391 30399  "1 "    0     # line from  CR1T3_18 230.00   (3) to (3)   NCPATT2  230.00
 1  30391 30430  "1 "    0     # line from  CR1T3_18 230.00   (3) to BRKR  FULTON   230.00
 1  30393 30394  "1 "    0     # line from  G14CRT15 230.00   (3) to (2)   GEYSR12  230.00
 1  30393 30396  "1 "    0     # line from  G14CRT15 230.00   (3) to (2)   GEYSR14  230.00
 1  30399 30400  "1 "    0     # line from  NCPATT2  230.00   (3) to (4)   G16T0_2  230.00
 1  30399 30404  "1 "    0     # line from  NCPATT2  230.00   (3) to (3)   NCPA2    230.00
 1  30400 30401  "1 "    0     # line from  G16T0_2  230.00   (4) to (2)   BEARCNYN 230.00
 1  30400 30402  "1 "    0     # line from  G16T0_2  230.00   (4) to (2)   WSFRDFLT 230.00
 1  30400 30403  "1 "    0     # line from  G16T0_2  230.00   (4) to (2)   GEYSR16  230.00
 2  30401 31402  "1 "    0     # TRAN from  BEARCNYN 230.00  BRKR to (1)   BEAR CAN  13.80
 2  30402 31404  "1 "    0     # TRAN from  WSFRDFLT 230.00  BRKR to (1)   WEST FOR  13.80
 2  30403 31420  "1 "    0     # TRAN from  GEYSR16  230.00  BRKR to (1)   GEYSER16  13.80
 2  30404 38110  "1 "    0     # TRAN from  NCPA2    230.00  BRKR to (1)   NCPA2GY1  13.80
 2  30404 38112  "1 "    0     # TRAN from  NCPA2    230.00  BRKR to (1)   NCPA2GY2  13.80
 2  30394 31414  "1 "    0     # TRAN from  GEYSR12  230.00  BRKR to (1)   GEYSER12  13.80
 2  30396 31418  "1 "    0     # TRAN from  GEYSR14  230.00  BRKR to (1)   GEYSER14  13.80
 3  31402     0  "1 "    0     # GEN-DROP    BEAR CAN  13.80  GEN==9.80(2.65)
 3  31402     0  "2 "    0     # GEN-DROP    BEAR CAN  13.80  GEN==9.80(2.65)
 3  31404     0  "1 "    0     # GEN-DROP    WEST FOR  13.80  GEN==12.10(6.35)
 3  31404     0  "2 "    0     # GEN-DROP    WEST FOR  13.80  GEN==12.00(6.30)
 3  31420     0  "1 "    0     # GEN-DROP    GEYSER16  13.80  GEN==64.00(18.85)
 3  38110     0  "1 "    0     # GEN-DROP    NCPA2GY1  13.80  GEN==36.00(4.11)
 3  38112     0  "1 "    0     # GEN-DROP    NCPA2GY2  13.80  GEN==36.00(4.11)
 3  31414     0  "1 "    0     # GEN-DROP    GEYSER12  13.80  GEN==31.00(7.89)
 3  31418     0  "1 "    0     # GEN-DROP    GEYSER14  13.80  GEN==54.00(7.99)
 0
  #
  #
```

```
 # (2)  B2 LINE OUTAGE (BREAKER-TO-BREAKER)
 #
1  30392 30405  "1 "    0     # line from  G9CRT2_9 230.00   (3) to (3)   G9CRT111 230.00
1  30392 30395  "1 "    0     # line from  G9CRT2_9 230.00   (3) to (2)   GEYSR18  230.00
1  30392 30397  "1 "    0     # line from  G9CRT2_9 230.00   (3) to (3)   CR2T3_18 230.00
1  30405 30406  "1 "    0     # line from  G9CRT111 230.00   (3) to (3)   G13TT1_9 230.00
1  30405 30413  "1 "    0     # line from  G9CRT111 230.00   (3) to (2)   SMUDGEO1 230.00
2  30395 31424  "1 "    0     # TRAN from  GEYSR18  230.00  BRKR to (1)   GEYSER18  13.80
1  30397 30398  "1 "    0     # line from  CR2T3_18 230.00   (3) to (3)   NCPA1    230.00
1  30397 30435  "1 "    0     # line from  CR2T3_18 230.00   (3) to BRKR  LAKEVILE 230.00
2  30398 38106  "1 "    0     # TRAN from  NCPA1    230.00  BRKR to (1)   NCPA1GY1  13.80
2  30398 38108  "1 "    0     # TRAN from  NCPA1    230.00  BRKR to (1)   NCPA1GY2  13.80
1  30406 30407  "1 "    0     # line from  G13TT1_9 230.00   (3) to (3)   G13TT1_8 230.00
1  30406 30410  "1 "    0     # line from  G13TT1_9 230.00   (3) to (2)   GEYSR20  230.00
1  30407 30408  "1 "    0     # line from  G13TT1_8 230.00   (3) to (2)   SNTAFE   230.00
1  30407 30409  "1 "    0     # line from  G13TT1_8 230.00   (3) to (2)   GEYSR13  230.00
2  30408 31400  "1 "    0     # TRAN from  SNTAFE   230.00  BRKR to (1)   SANTA FE  13.80
2  30409 31416  "1 "    0     # TRAN from  GEYSR13  230.00  BRKR to (1)   GEYSER13  13.80
2  30410 31426  "1 "    0     # TRAN from  GEYSR20  230.00  BRKR to (1)   GEYSER20  13.80
2  30413 31430  "1 "    0     # TRAN from  SMUDGEO1 230.00  BRKR to (1)   SMUDGEO1  13.80
3  31424     0  "1 "    0     # GEN-DROP    GEYSER18  13.80  GEN==56.00(8.47)
3  38106     0  "1 "    0     # GEN-DROP    NCPA1GY1  13.80  GEN==35.00(2.44)
3  38108     0  "1 "    0     # GEN-DROP    NCPA1GY2  13.80  GEN==35.00(2.44)
3  31400     0  "1 "    0     # GEN-DROP    SANTA FE  13.80  GEN==64.20(5.10)
3  31416     0  "1 "    0     # GEN-DROP    GEYSER13  13.80  GEN==68.00(23.47)
3  31426     0  "1 "    0     # GEN-DROP    GEYSER20  13.80  GEN==52.00(6.22)
3  31430     0  "1 "    0     # GEN-DROP    SMUDGEO1  13.80  GEN==33.00(10.44)
0
 #
 #
 # (3)  B2 LINE OUTAGE (BREAKER-TO-BREAKER)
 #
1  30427 30430  "1 "    0     # line from  GEYSR17  230.00   (2) to BRKR  FULTON   230.00
2  30427 31422  "1 "    0     # TRAN from  GEYSR17  230.00  BRKR to (1)   GEYSER17  13.80
3  31422     0  "1 "    0     # GEN-DROP    GEYSER17  13.80  GEN==36.00(24.28)
0
 #
 #
 # (4)  B2 LINE OUTAGE (BREAKER-TO-BREAKER)
 #
1  30430 30435  "1 "    0     # line from  FULTON   230.00  BRKR to BRKR  LAKEVILE 230.00
0
 #
 #
 # (5)  B2 LINE OUTAGE (BREAKER-TO-BREAKER)
 #
1  30430 30445  "1 "    0     # line from  FULTON   230.00  BRKR to BRKR  IGNACIO  230.00
0
 #
```

```
 #
 # (6)  B2 LINE OUTAGE (BREAKER-TO-BREAKER)
 #
1  30435 30440  "1 "    0     # line from  LAKEVILE 230.00  BRKR to BRKR  TULUCAY  230.00
0
 #
 #
 # (7)  B2 LINE OUTAGE (BREAKER-TO-BREAKER)
 #
1  30435 30445  "1 "    0     # line from  LAKEVILE 230.00  BRKR to BRKR  IGNACIO  230.00
0
 #
 #
 # (8)  B2 LINE OUTAGE (BREAKER-TO-BREAKER)
 #
1  30435 30460  "1 "    0     # line from  LAKEVILE 230.00  BRKR to BRKR  VACA-DIX 230.00
0
 #
 #
 # (9)  B2 LINE OUTAGE (BREAKER-TO-BREAKER)
 #
1  30435 30540  "2 "    0     # line from  LAKEVILE 230.00  BRKR to BRKR  SOBRANTE 230.00
0
 #
 #
 # (10)  B2 LINE OUTAGE (BREAKER-TO-BREAKER)
 #
1  30440 30460  "1 "    0     # line from  TULUCAY  230.00  BRKR to BRKR  VACA-DIX 230.00
0
 #
 #
 # (11)  B2 LINE OUTAGE (BREAKER-TO-BREAKER)
 #
1  31118 31308  "1 "    0     # line from  KEKAWAKA  60.00   (3) to (3)   LYTNVLLE  60.00
1  31118 31116  "1 "    0     # line from  KEKAWAKA  60.00   (3) to BRKR  GRBRVLLE  60.00
2  31118 31166  "1 "    0     # TRAN from  KEKAWAKA  60.00  BRKR to (1)   KEKAWAK    9.11
1  31308 31306  "1 "    0     # line from  LYTNVLLE  60.00   (3) to BRKR  WILLITS   60.00
1  31308 31310  "1 "    0     # line from  LYTNVLLE  60.00   (3) to (1)   COVELO6   60.00
4  31308     0  "1 "    0     # LOAD-DROP    LYTNVLLE  60.00  LOAD==5.83(1.18)
4  31310     0  "1 "    0     # LOAD-DROP    COVELO6   60.00  LOAD==2.69(0.55)
0
 #
 #
 # (12)  B2 LINE OUTAGE (BREAKER-TO-BREAKER)
 #
1  31200 31202  "1 "    0     # line from  MENDOCNO 115.00  BRKR to (2)   CALPELLA 115.00
1  31202 31204  "1 "    0     # line from  CALPELLA 115.00   (2) to BRKR  UKIAH    115.00
4  31202     0  "1 "    0     # LOAD-DROP    CALPELLA 115.00  LOAD==15.46(3.14)
0
```

```
 #
 #
 # (13)  B2 LINE OUTAGE (BREAKER-TO-BREAKER)
 #
1  31200 31217  "1 "    0     # line from  MENDOCNO 115.00  BRKR to (2)   LUCERNJ2 115.00
1  31217 31223  "1 "    0     # line from  LUCERNJ2 115.00   (2) to (2)   REDBUDJ1 115.00
1  31223 31222  "1 "    0     # line from  REDBUDJ1 115.00   (2) to BRKR  REDBUD   115.00
0
 #
 #
 # (14)  B2 LINE OUTAGE (BREAKER-TO-BREAKER)
 #
1  31204 31206  "1 "    0     # line from  UKIAH    115.00  BRKR to (3)   HPLND JT 115.00
1  31206 31208  "1 "    0     # line from  HPLND JT 115.00   (3) to BRKR  CLOVRDLE 115.00
2  31206 31336  "2 "    0     # TRAN from  HPLND JT 115.00  BRKR to BRKR  HPLND JT  60.00
0
 #
 #
 # (15)  B2 LINE OUTAGE (BREAKER-TO-BREAKER)
 #
1  31204 38020  "1 "    0     # line from  UKIAH    115.00   (3) to (1)   CITY UKH 115.00
1  31204 31202  "1 "    0     # line from  UKIAH    115.00  BRKR to (1)   CALPELLA 115.00
1  31204 31206  "1 "    0     # line from  UKIAH    115.00  BRKR to (1)   HPLND JT 115.00
4  31204     0  "1 "    0     # LOAD-DROP    UKIAH    115.00  LOAD==11.32(2.30)
4  31204     0  "2 "    0     # LOAD-DROP    UKIAH    115.00  LOAD==6.17(1.25)
4  38020     0  "1 "    0     # LOAD-DROP    CITY UKH 115.00  LOAD==34.05(13.01)
1  31204 31206  "1 "    1     # close line from UKIAH 115.00 to HPLND JT 115.00
1  31204 31202  "1 "    1     # close line from UKIAH 115.00 to CALPELLA 115.00
4  31204 0      "1 "    1     # restore load at UKIAH 115.00
4  31204 0      "2 "    1     # restore load at UKIAH 115.00
0
 #
 #
 # (16)  B2 LINE OUTAGE (BREAKER-TO-BREAKER)
 #
1  31208 31210  "1 "    0     # line from  CLOVRDLE 115.00  BRKR to (3)   MPE TAP  115.00
1  31210 31212  "1 "    0     # line from  MPE TAP  115.00   (3) to (2)   MPE      115.00
1  31210 31214  "1 "    0     # line from  MPE TAP  115.00   (3) to BRKR  GEYERS56 115.00
2  31212 31435  "1 "    0     # TRAN from  MPE      115.00   (2) to (1)   GEO.ENGY   9.11
3  31435     0  "1 "    0     # GEN-DROP    GEO.ENGY   9.11  GEN==8.90(-2.33)
3  31435     0  "2 "    0     # GEN-DROP    GEO.ENGY   9.11  GEN==8.90(-2.33)
0
 #
 #
 # (17)  B2 LINE OUTAGE (BREAKER-TO-BREAKER)
 #
1  31214 31220  "1 "    0     # line from  GEYERS56 115.00  BRKR to BRKR  EGLE RCK 115.00
0
 #
```

```
 #
 # (18)  B2 LINE OUTAGE (BREAKER-TO-BREAKER)
 #
1  31215 31200  "1 "    0     # line from  LUCERNJ1 115.00   (3) to BRKR  MENDOCNO 115.00
1  31215 31216  "1 "    0     # line from  LUCERNJ1 115.00   (3) to (1)   LUCERNE  115.00
1  31215 31224  "1 "    0     # line from  LUCERNJ1 115.00   (3) to (3)   INDIN VL 115.00
1  31224 31950  "1 "    0     # line from  INDIN VL 115.00   (3) to BRKR  CORTINA  115.00
2  31224 31436  "1 "    0     # TRAN from  INDIN VL 115.00  BRKR to (1)   INDIAN V   9.11
4  31216     0  "1 "    0     # LOAD-DROP    LUCERNE  115.00  LOAD==12.95(2.63)
3  31436     0  "1 "    0     # GEN-DROP    INDIAN V   9.11  GEN==0.90(0.00)
1  31217 31216  "1 "    1     # close line from LCERNJ2  115.00 to LUCERNE 115.00
4  31216 0      "**"    1     # restore all loads to LUCERNE 115.00 (Cortina - Mendocino 115 kV)
0
 #
 #
 # (19)  B2 LINE OUTAGE (BREAKER-TO-BREAKER)
 #
1  31218 32549  "1 "    0     # line from  ER_FTNJT 115.00   (3) to (3)   SILVRDJ1 115.00
1  31218 31219  "1 "    0     # line from  ER_FTNJT 115.00   (3) to (2)   ERFT5_25 115.00
1  31218 31249  "1 "    0     # line from  ER_FTNJT 115.00   (3) to (3)   RINCONJ1 115.00
1  32549 31264  "1 "    0     # line from  SILVRDJ1 115.00   (3) to (2)   STHELNJ1 115.00
1  32549 32550  "1 "    0     # line from  SILVRDJ1 115.00   (3) to (1)   SILVERDO 115.00
1  31219 31220  "1 "    0     # line from  ERFT5_25 115.00   (2) to BRKR  EGLE RCK 115.00
1  31249 31236  "1 "    0     # line from  RINCONJ1 115.00   (3) to BRKR  FULTON   115.00
1  31249 31250  "1 "    0     # line from  RINCONJ1 115.00   (3) to (1)   RINCON   115.00
1  31264 32553  "1 "    0     # line from  STHELNJ1 115.00   (2) to (3)   MNTCLOJ1 115.00
1  32553 32554  "1 "    0     # line from  MNTCLOJ1 115.00   (3) to (1)   MONTCLLO 115.00
1  32553 32559  "1 "    0     # line from  MNTCLOJ1 115.00   (3) to (2)   MTCLPHJ1 115.00
1  32559 32560  "1 "    0     # line from  MTCLPHJ1 115.00   (2) to (2)   MNTCLOPH 115.00
2  32560 32700  "1 "    0     # TRAN from  MNTCLOPH 115.00   (2) to (1)   MONTICLO   9.11
4  32550     0  "1 "    0     # LOAD-DROP    SILVERDO 115.00  LOAD==18.04(3.66)
4  32550     0  "2 "    0     # LOAD-DROP    SILVERDO 115.00  LOAD==21.25(4.31)
4  31250     0  "1 "    0     # LOAD-DROP    RINCON   115.00  LOAD==20.12(4.09)
4  31250     0  "2 "    0     # LOAD-DROP    RINCON   115.00  LOAD==17.35(3.52)
4  32554     0  "1 "    0     # LOAD-DROP    MONTCLLO 115.00  LOAD==5.00(1.02)
3  32700     0  "1 "    0     # GEN-DROP    MONTICLO   9.11  GEN==4.70(0.00)
3  32700     0  "2 "    0     # GEN-DROP    MONTICLO   9.11  GEN==4.70(0.00)
1  31251 31250  "1 "    1     # close line from RINCONJ2 115.00 to RINCON  115.00
4  31250 0      "**"    1     # restore all loads to RINCON  115.00  (Fulton Jct - Fulton 115 kV #2)
1  32551 32550  "1 "    1     # close line from SILVRDJ2 115.00 to SILVERDO 115.00
4  32550 0      "**"    1     # restore all loads to SILVERDO 115.00 (Fulton Jct - Fulton 115 kV #2)
0
 #
 #
 # (20)  B2 LINE OUTAGE (BREAKER-TO-BREAKER)
 #
1  31220 31221  "1 "    0     # line from  EGLE RCK 115.00  BRKR to (2)   GEYSR11  115.00
2  31221 31412  "1 "    0     # TRAN from  GEYSR11  115.00  BRKR to (1)   GEYSER11  13.80
3  31412     0  "1 "    0     # GEN-DROP    GEYSER11  13.80  GEN==60.00(24.50)
```

```
0
 #
 #
 # (21)  B2 LINE OUTAGE (BREAKER-TO-BREAKER)
 #
1  31220 31228  "1 "    0     # line from  EGLE RCK 115.00  BRKR to (3)   HOMSTKTP 115.00
1  31228 31227  "1 "    0     # line from  HOMSTKTP 115.00   (3) to (2)   HGHLNDJ2 115.00
1  31228 31230  "1 "    0     # line from  HOMSTKTP 115.00   (3) to (2)   HOMEPROC 115.00
1  31227 31261  "1 "    0     # line from  HGHLNDJ2 115.00   (2) to (2)   CACHE J1 115.00
1  31261 31950  "1 "    0     # line from  CACHE J1 115.00   (2) to BRKR  CORTINA  115.00
1  31230 31232  "1 "    0     # line from  HOMEPROC 115.00   (2) to (1)   HOMEGRND 115.00
4  31230     0  "1 "    0     # LOAD-DROP    HOMEPROC 115.00  LOAD==0.35(0.07)
0
 #
 #
 # (22)  B2 LINE OUTAGE (BREAKER-TO-BREAKER)
 #
1  31220 31263  "1 "    0     # line from  EGLE RCK 115.00  BRKR to (2)   LWRLAKEJ 115.00
1  31263 31225  "1 "    0     # line from  LWRLAKEJ 115.00   (2) to (3)   HGHLNDJ1 115.00
1  31225 31226  "1 "    0     # line from  HGHLNDJ1 115.00   (3) to (1)   HGHLAND  115.00
1  31225 31262  "1 "    0     # line from  HGHLNDJ1 115.00   (3) to (2)   CACHE J2 115.00
1  31262 31229  "1 "    0     # line from  CACHE J2 115.00   (2) to (2)   REDBUDJ2 115.00
1  31229 31222  "1 "    0     # line from  REDBUDJ2 115.00   (2) to BRKR  REDBUD   115.00
4  31226     0  "1 "    0     # LOAD-DROP    HGHLAND  115.00  LOAD==24.24(4.92)
1  31227 31226  "1 "    1     # close line from HGHLNDJ2 115.00 to HIGHLD  115.00
4  31226 0      "**"    1     # restore all loads to HIGHLD  115.00 (Eagle Rock - Cortina 115 kV)
0
 #
 #
 # (23)  B2 LINE OUTAGE (BREAKER-TO-BREAKER)
 #
1  31236 31238  "1 "    0     # line from  FULTON   115.00  BRKR to (2)   MONROE1  115.00
1  31238 31240  "1 "    0     # line from  MONROE1  115.00   (2) to BRKR  SNTA RSA 115.00
4  31238     0  "1 "    0     # LOAD-DROP    MONROE1  115.00  LOAD==28.91(5.87)
1  31238 31239  "1 "    1     # close line from MONROE1 115.00 to MONROE2 115.00
4  31238 0      "**"    1     # restore all loads to MONROE1   115.00 (Fulton - Santa Rosa 115 kV #1)
0
 #
 #
 # (24)  B2 LINE OUTAGE (BREAKER-TO-BREAKER)
 #
1  31236 31239  "1 "    0     # line from  FULTON   115.00  BRKR to (2)   MONROE2  115.00
1  31239 31240  "1 "    0     # line from  MONROE2  115.00   (2) to BRKR  SNTA RSA 115.00
4  31239     0  "2 "    0     # LOAD-DROP    MONROE2  115.00  LOAD==22.53(4.58)
4  31239     0  "3 "    0     # LOAD-DROP    MONROE2  115.00  LOAD==32.77(6.65)
1  31238 31239  "1 "    1     # close line from MONROE1 115.00 to MONROE2 115.00
4  31239 0      "**"    1     # restore all loads to MONROE2  115.00 (Fulton - Santa Rosa 115 kV #1)
0
 #
```

```
 #
 # (25)  B2 LINE OUTAGE (BREAKER-TO-BREAKER)
 #
1  31236 31251  "1 "    0     # line from  FULTON   115.00  BRKR to (2)   RINCONJ2 115.00
1  31251 32551  "1 "    0     # line from  RINCONJ2 115.00   (2) to (2)   SILVRDJ2 115.00
1  32551 31265  "1 "    0     # line from  SILVRDJ2 115.00   (2) to (3)   STHELNJ2 115.00
1  31265 32555  "1 "    0     # line from  STHELNJ2 115.00   (3) to (2)   MNTCLOJ2 115.00
1  31265 32562  "1 "    0     # line from  STHELNJ2 115.00   (3) to (2)   PUEBLOJT 115.00
1  32555 32561  "1 "    0     # line from  MNTCLOJ2 115.00   (2) to (1)   MTCLPHJ2 115.00
1  32562 32564  "1 "    0     # line from  PUEBLOJT 115.00   (2) to BRKR  PUEBLO   115.00
0
 #
 #
 # (26)  B2 LINE OUTAGE (BREAKER-TO-BREAKER)
 #
1  31240 31242  "1 "    0     # line from  SNTA RSA 115.00  BRKR to (3)   STNY PTP 115.00
1  31242 31244  "1 "    0     # line from  STNY PTP 115.00   (3) to (1)   STONY PT 115.00
1  31242 31246  "1 "    0     # line from  STNY PTP 115.00   (3) to BRKR  BELLVUE  115.00
4  31244     0  "1 "    0     # LOAD-DROP    STONY PT 115.00  LOAD==9.68(4.69)
0
 #
 #
 # (27)  B2 LINE OUTAGE (BREAKER-TO-BREAKER)
 #
1  31246 31248  "1 "    0     # line from  BELLVUE  115.00  BRKR to (2)   PENNGRVE 115.00
1  31248 31254  "1 "    0     # line from  PENNGRVE 115.00   (2) to BRKR  CORONA   115.00
4  31248     0  "1 "    0     # LOAD-DROP    PENNGRVE 115.00  LOAD==10.92(2.22)
0
 #
 #
 # (28)  B2 LINE OUTAGE (BREAKER-TO-BREAKER)
 #
1  31254 31255  "1 "    0     # line from  CORONA   115.00  BRKR to BRKR  LAKEVLLE 115.00
0
 #
 #
 # (29)  B2 LINE OUTAGE (BREAKER-TO-BREAKER)
 #
1  31255 31258  "1 "    0     # line from  LAKEVLLE 115.00  BRKR to BRKR  SONOMA   115.00
0
 #
 #
 # (30)  B2 LINE OUTAGE (BREAKER-TO-BREAKER)
 #
1  31255 31258  "2 "    0     # line from  LAKEVLLE 115.00  BRKR to BRKR  SONOMA   115.00
0
 #
 #
 # (31)  B2 LINE OUTAGE (BREAKER-TO-BREAKER)
```

```
 #
1  31258 32564  "1 "    0     # line from  SONOMA   115.00  BRKR to BRKR  PUEBLO   115.00
0
 #
 #
 # (32)  B2 LINE OUTAGE (BREAKER-TO-BREAKER)
 #
1  31300 31302  "1 "    0     # line from  MENDOCNO  60.00  BRKR to BRKR  PTTR VLY  60.00
0
 #
 #
 # (33)  B2 LINE OUTAGE (BREAKER-TO-BREAKER)
 #
1  31300 31306  "1 "    0     # line from  MENDOCNO  60.00  BRKR to BRKR  WILLITS   60.00
0
 #
 #
 # (34)  B2 LINE OUTAGE (BREAKER-TO-BREAKER)
 #
1  31300 31327  "1 "    0     # line from  MENDOCNO  60.00  BRKR to (2)   UKIAH JT  60.00
1  31327 31326  "1 "    0     # line from  UKIAH JT  60.00   (2) to BRKR  PHLO JCT  60.00
0
 #
 #
 # (35)  B2 LINE OUTAGE (BREAKER-TO-BREAKER)
 #
1  31300 31329  "1 "    0     # line from  MENDOCNO  60.00  BRKR to (2)   MASON TP  60.00
1  31329 31328  "1 "    0     # line from  MASON TP  60.00   (2) to (1)   MASONITE  60.00
4  31328     0  "1 "    0     # LOAD-DROP    MASONITE  60.00  LOAD==0.35(0.07)
1  31329 31327  "1 "    1     # close line from MASON TP 60.00 to UKIAH JT 60.00
1  31329 31328  "1 "    1     # close line from MASON TP 60.00 to MASONITE 60.00
4  31328 0      "**"    1     # restore all loads to MASONITE (Mendocino #1 60 kV)
0
 #
 #
 # (36)  B2 LINE OUTAGE (BREAKER-TO-BREAKER)
 #
1  31300 31330  "1 "    0     # line from  MENDOCNO  60.00  BRKR to (2)   UPPR LKE  60.00
1  31330 31332  "1 "    0     # line from  UPPR LKE  60.00   (2) to (2)   HARTLEY   60.00
1  31332 31334  "1 "    0     # line from  HARTLEY   60.00   (2) to BRKR  CLER LKE  60.00
4  31330     0  "1 "    0     # LOAD-DROP    UPPR LKE  60.00  LOAD==3.48(0.71)
4  31332     0  "1 "    0     # LOAD-DROP    HARTLEY   60.00  LOAD==8.60(1.74)
0
 #
 #
 # (37)  B2 LINE OUTAGE (BREAKER-TO-BREAKER)
 #
1  31302 31306  "1 "    0     # line from  PTTR VLY  60.00  BRKR to BRKR  WILLITS   60.00
0
```

```
 #
 #
 # (38)  B2 LINE OUTAGE (BREAKER-TO-BREAKER)
 #
1  31300 31397  "1 "    0     # line from  MENDOCNO  60.00  BRKR to (3)   WILLITSJ  60.00
1  31397 31304  "1 "    0     # line from  WILLITSJ  60.00   (3) to BRKR  P0433STA  60.00
1  31397 31312  "1 "    0     # line from  WILLITSJ  60.00   (3) to BRKR  FRT BRGG  60.00
0
 #
 #
 # (39)  B2 LINE OUTAGE (BREAKER-TO-BREAKER)
 #
1  31304 31306  "1 "    0     # line from  P0433STA  60.00  BRKR to BRKR  WILLITS   60.00
0
 #
 #
 # (40)  B2 LINE OUTAGE (BREAKER-TO-BREAKER)
 #
1  31312 31314  "1 "    0     # line from  FRT BRGG  60.00  BRKR to (3)   BIG RIVR  60.00
1  31314 31316  "1 "    0     # line from  BIG RIVR  60.00   (3) to BRKR  ELK       60.00
2  31314 31315  "1 "    0     # TRAN from  BIG RIVR  60.00   (3) to (1)   BIG_RVR_  12.47
4  31315     0  "1 "    0     # LOAD-DROP    BIG_RVR_  12.47  LOAD==4.52(0.00)
0
 #
 #
 # (41)  B2 LINE OUTAGE (BREAKER-TO-BREAKER)
 #
1  31316 31318  "1 "    0     # line from  ELK       60.00  BRKR to (3)   PNT ARNA  60.00
1  31318 31322  "1 "    0     # line from  PNT ARNA  60.00   (3) to (2)   GARCIA J  60.00
2  31318 31319  "1 "    0     # TRAN from  PNT ARNA  60.00   (3) to (1)   PNT_AREN  12.47
1  31322 31320  "1 "    0     # line from  GARCIA J  60.00   (2) to (1)   GARCIA    60.00
4  31319     0  "1 "    0     # LOAD-DROP    PNT_AREN  12.47  LOAD==1.89(0.00)
4  31320     0  "1 "    0     # LOAD-DROP    GARCIA    60.00  LOAD==0.10(0.02)
0
 #
 #
 # (42)  B2 LINE OUTAGE (BREAKER-TO-BREAKER)
 #
1  31316 31324  "1 "    0     # line from  ELK       60.00  BRKR to (3)   PHILO     60.00
1  31324 31326  "1 "    0     # line from  PHILO     60.00   (3) to BRKR  PHLO JCT  60.00
2  31324 31321  "1 "    0     # TRAN from  PHILO     60.00   (3) to (1)   PHILO_D   12.47
4  31321     0  "1 "    0     # LOAD-DROP    PHILO_D   12.47  LOAD==3.89(0.00)
0
 #
 #
 # (43)  B2 LINE OUTAGE (BREAKER-TO-BREAKER)
 #
1  31326 31336  "1 "    0     # line from  PHLO JCT  60.00  BRKR to BRKR  HPLND JT  60.00
0
```

```
 #
 #
 # (44)  B2 LINE OUTAGE (BREAKER-TO-BREAKER)
 #
1  31334 31336  "1 "    0     # line from  CLER LKE  60.00  BRKR to BRKR  HPLND JT  60.00
0
 #
 #
 # (45)  B2 LINE OUTAGE (BREAKER-TO-BREAKER)
 #
1  31334 31338  "1 "    0     # line from  CLER LKE  60.00  BRKR to (3)   KONOCTI6  60.00
1  31338 31340  "1 "    0     # line from  KONOCTI6  60.00   (3) to (2)   LOWR LKE  60.00
1  31338 31344  "1 "    0     # line from  KONOCTI6  60.00   (3) to (2)   EGLE RCK  60.00
1  31340 31342  "1 "    0     # line from  LOWR LKE  60.00   (2) to (1)   MIDDLTWN  60.00
2  31344 31220  "1 "    0     # TRAN from  EGLE RCK  60.00  BRKR to BRKR  EGLE RCK 115.00
4  31338     0  "1 "    0     # LOAD-DROP    KONOCTI6  60.00  LOAD==8.16(1.66)
4  31338     0  "2 "    0     # LOAD-DROP    KONOCTI6  60.00  LOAD==6.42(1.31)
4  31342     0  "1 "    0     # LOAD-DROP    MIDDLTWN  60.00  LOAD==6.39(1.30)
4  31342     0  "2 "    0     # LOAD-DROP    MIDDLTWN  60.00  LOAD==11.95(2.43)
4  31342 0      "**"    0     # Drop load at MIDDLTWN 60.00 (Eagle Rock 115/60 kV Bank Outage)
0
 #
 #
 # (46)  B2 LINE OUTAGE (BREAKER-TO-BREAKER)
 #
1  31336 31370  "1 "    0     # line from  HPLND JT  60.00  BRKR to (2)   CLVRDLJT  60.00
1  31370 31374  "1 "    0     # line from  CLVRDLJT  60.00   (2) to (2)   GYSRJCT1  60.00
1  31374 31382  "1 "    0     # line from  GYSRJCT1  60.00   (2) to (3)   FTCHMTNP  60.00
1  31382 31378  "1 "    0     # line from  FTCHMTNP  60.00   (3) to BRKR  FULTON    60.00
1  31382 31381  "1 "    0     # line from  FTCHMTNP  60.00   (3) to (2)   HDSBGTP1  60.00
1  31381 31380  "1 "    0     # line from  HDSBGTP1  60.00   (2) to (1)   FTCH MTN  60.00
4  31380     0  "1 "    0     # LOAD-DROP    FTCH MTN  60.00  LOAD==9.21(1.87)
4  31380     0  "2 "    0     # LOAD-DROP    FTCH MTN  60.00  LOAD==8.09(1.64)
1  31377 31380  "1 "    1     # close line from FCHMNTP2 60.00 to FTCH NTM 60.00
4  31380 0      "**"    1     # restore all loads to FTCH MTN (Fulton - Hopland 60 kV)
0
 #
 #
 # (47)  B2 LINE OUTAGE (BREAKER-TO-BREAKER)
 #
1  31346 31348  "1 "    0     # line from  GUALALA   60.00   (1) to (2)   ANNAPOLS  60.00
1  31348 31350  "1 "    0     # line from  ANNAPOLS  60.00   (2) to (2)   FORT RSS  60.00
1  31350 31352  "1 "    0     # line from  FORT RSS  60.00   (2) to (3)   SLMN JCT  60.00
1  31352 31354  "1 "    0     # line from  SLMN JCT  60.00   (3) to (1)   SLMN CRK  60.00
1  31352 31356  "1 "    0     # line from  SLMN JCT  60.00   (3) to BRKR  MONTE RO  60.00
4  31346     0  "1 "    0     # LOAD-DROP    GUALALA   60.00  LOAD==3.02(0.62)
4  31346     0  "2 "    0     # LOAD-DROP    GUALALA   60.00  LOAD==2.13(0.44)
4  31348     0  "1 "    0     # LOAD-DROP    ANNAPOLS  60.00  LOAD==0.33(0.07)
4  31350     0  "1 "    0     # LOAD-DROP    FORT RSS  60.00  LOAD==0.90(0.18)
```

```
4  31354     0  "1 "    0     # LOAD-DROP    SLMN CRK  60.00  LOAD==4.72(0.96)
1  31322 31346  "1 "    1     # close line from GARCIAJ 60.00 to GUALALA  60.00
4  31346 0      "**"    1     # restore all loads to GUALALA 60.00 (Monte Rio - Gualala 60 kV)
0
 #
 #
 # (48)  B2 LINE OUTAGE (BREAKER-TO-BREAKER)
 #
1  31358 31356  "1 "    0     # line from  WHLR JCT  60.00   (2) to (2)   MONTE RO  60.00
1  31358 31361  "1 "    0     # line from  WHLR JCT  60.00   (2) to (3)   MIRBELTP  60.00
1  31356 31352  "1 "    0     # line from  MONTE RO  60.00  BRKR to (1)   SLMN JCT  60.00
1  31361 31360  "1 "    0     # line from  MIRBELTP  60.00   (3) to (1)   MIRABEL   60.00
1  31361 31363  "1 "    0     # line from  MIRBELTP  60.00   (3) to (2)   TRNTN_JC  60.00
1  31363 31362  "1 "    0     # line from  TRNTN_JC  60.00   (2) to (3)   TRNTN JT  60.00
1  31362 31359  "1 "    0     # line from  TRNTN JT  60.00   (3) to (2)   WHLR TAP  60.00
1  31362 31378  "1 "    0     # line from  TRNTN JT  60.00   (3) to BRKR  FULTON    60.00
1  31359 31357  "1 "    0     # line from  WHLR TAP  60.00   (2) to (1)   WOHLER    60.00
4  31356     0  "1 "    0     # LOAD-DROP    MONTE RO  60.00  LOAD==4.61(0.93)
4  31356     0  "2 "    0     # LOAD-DROP    MONTE RO  60.00  LOAD==5.84(1.18)
4  31360     0  "1 "    0     # LOAD-DROP    MIRABEL   60.00  LOAD==12.79(2.59)
4  31357     0  "1 "    0     # LOAD-DROP    WOHLER    60.00  LOAD==7.18(3.06)
1  31346 31348  "1 "    0     # open line from GUALALA  60.00 to ANNAPOLS 60.00
1  31322 31346  "1 "    1     # close line from GARCIAJ 60.00 to GUALALA  60.00
4  31346 0      "**"    1     # restore all loads to GUALALA 60.00 (Fulton - Monte Rio 60 kV)
0
 #
 #
 # (49)  B2 LINE OUTAGE (BREAKER-TO-BREAKER)
 #
1  31364 31366  "1 "    0     # line from  MOLINO    60.00   (1) to (3)   MLNO JCT  60.00
1  31366 31378  "1 "    0     # line from  MLNO JCT  60.00   (3) to BRKR  FULTON    60.00
1  31366 31385  "1 "    0     # line from  MLNO JCT  60.00   (3) to (3)   LAGUNATP  60.00
1  31385 31383  "1 "    0     # line from  LAGUNATP  60.00   (3) to (1)   LAGUNA    60.00
1  31385 31391  "1 "    0     # line from  LAGUNATP  60.00   (3) to (3)   SNMA TAP  60.00
1  31391 31384  "1 "    0     # line from  SNMA TAP  60.00   (3) to (1)   COTATI    60.00
1  31391 31393  "1 "    0     # line from  SNMA TAP  60.00   (3) to (3)   SNMALDFL  60.00
2  31393 31446  "1 "    0     # TRAN from  SNMALDFL  60.00   (3) to (2)   SONMA LF   9.11
2  31393 31446  "2 "    0     # TRAN from  SNMALDFL  60.00   (3) to (2)   SONMA LF   9.11
4  31364     0  "1 "    0     # LOAD-DROP    MOLINO    60.00  LOAD==8.64(1.75)
4  31364     0  "2 "    0     # LOAD-DROP    MOLINO    60.00  LOAD==24.22(4.92)
4  31383     0  "1 "    0     # LOAD-DROP    LAGUNA    60.00  LOAD==4.58(1.15)
4  31384     0  "1 "    0     # LOAD-DROP    COTATI    60.00  LOAD==12.24(2.48)
4  31384     0  "2 "    0     # LOAD-DROP    COTATI    60.00  LOAD==10.49(2.13)
3  31446     0  "1 "    0     # GEN-DROP    SONMA LF   9.11  GEN==8.00(0.00)
1  31363 31364  "1 "    1     # close line from TRNTN_JC 60.00 to MOLINO 60.00
4  31364 0      "**"    1     # restore all loads to MOLINO (Fulton - Molino - Cotati 60 kV)
1  31389 31384  "1 "    1     # close line from PETC_JCT 60.00 to COTATI 60.00
4  31384 0      "**"    1     # restore all loads to COTATI (Fulton - Molino - Cotati 60 kV)
0
```

```
 #
 #
 # (50)  B2 LINE OUTAGE (BREAKER-TO-BREAKER)
 #
1  31368 31376  "1 "    0     # line from  GYSRVLLE  60.00   (1) to (3)   GYSRJCT2  60.00
1  31376 31372  "1 "    0     # line from  GYSRJCT2  60.00   (3) to (1)   GYSR 1-2  60.00
1  31376 31379  "1 "    0     # line from  GYSRJCT2  60.00   (3) to (3)   HDSBGTP2  60.00
1  31379 31377  "1 "    0     # line from  HDSBGTP2  60.00   (3) to (2)   FCHMNTP2  60.00
1  31379 38050  "1 "    0     # line from  HDSBGTP2  60.00   (3) to (1)   HELDSBRG  60.00
1  31377 31378  "1 "    0     # line from  FCHMNTP2  60.00   (2) to BRKR  FULTON    60.00
4  31368     0  "1 "    0     # LOAD-DROP    GYSRVLLE  60.00  LOAD==7.71(1.57)
4  31368     0  "2 "    0     # LOAD-DROP    GYSRVLLE  60.00  LOAD==8.73(1.77)
4  38050     0  "1 "    0     # LOAD-DROP    HELDSBRG  60.00  LOAD==18.97(5.07)
1  31381 38050  "1 "    1     # close line from HDSBGTP1 60.00 to HELDSBRG 60.00
4  38050 0      "**"    1     # restore all loads to HELDSBRG (Fulton #1 60 kV)
0
 #
 #
 # (51)  B2 LINE OUTAGE (BREAKER-TO-BREAKER)
 #
1  31378 32650  "1 "    0     # line from  FULTON    60.00  BRKR to (2)   ST.HELNA  60.00
1  32650 32652  "1 "    0     # line from  ST.HELNA  60.00   (2) to BRKR  CALISTGA  60.00
4  32652     0  "1 "    0     # LOAD-DROP    CALISTGA  60.00  LOAD==18.39(3.74)
0
 #
 #
 # (52)  B2 LINE OUTAGE (BREAKER-TO-BREAKER)
 #
1  31386 31388  "1 "    0     # line from  MCDWLLSW  60.00   (2) to (1)   PETLMA C  60.00
1  31386 31392  "1 "    0     # line from  MCDWLLSW  60.00   (2) to BRKR  LAKEVLLE  60.00
4  31388     0  "1 "    0     # LOAD-DROP    PETLMA C  60.00  LOAD==1.72(0.35)
4  31388     0  "2 "    0     # LOAD-DROP    PETLMA C  60.00  LOAD==12.84(1.83)
4  31388     0  "3 "    0     # LOAD-DROP    PETLMA C  60.00  LOAD==12.44(1.77)
4  31388     0  "4 "    0     # LOAD-DROP    PETLMA C  60.00  LOAD==17.80(2.54)
1  31388 31389  "1 "    1     # close line from PETLMA C to PETC_JCT (Lakeville - Petaluma C 60 kV)
4  31388 0      "**"    1     # restore all loads to PETLMA C (Lakeville - Petaluma C 60 kV)
0
 #
 # (53)  B2 LINE OUTAGE (BREAKER-TO-BREAKER)
 #
1  31389 31390  "1 "    0     # line from  PETC_JCT  60.00  BRKR to (2)   PETLMA A  60.00
1  31390 31394  "1 "    0     # line from  PETLMA A  60.00   (2) to (2)   LKVLE JT  60.00
1  31394 31392  "1 "    0     # line from  LKVLE JT  60.00   (2) to BRKR  LAKEVLLE  60.00
4  31390     0  "1 "    0     # LOAD-DROP    PETLMA A  60.00  LOAD==3.10(0.63)
1  31389 31384  "1 "    1     # close line from PETC_JCT 60.00 to COTATI 60.00 (Lakeville #2 60 kV)
1  31389 31390  "1 "    1     # close line from PETC_JCT 60.00 to PETLMA A  60.00 (Lakeville #2 60 kV)
4  31390 0      "**"    1     # restore all loads to PETLMA A (Lakeville #2 60 kV)
0
 #
```

```
 #
 # (54)  B2 LINE OUTAGE (BREAKER-TO-BREAKER)
 #
1  31392 31396  "1 "    0     # line from  LAKEVLLE  60.00  BRKR to (1)   DUNBAR    60.00
4  31396     0  "1 "    0     # LOAD-DROP    DUNBAR    60.00  LOAD==14.29(2.04)
4  31396     0  "2 "    0     # LOAD-DROP    DUNBAR    60.00  LOAD==11.19(1.59)
1  32650 31396  "1 "    1     # close line from ST.HELNA 60.00 to DUNBAR 60.00 (Lakeville #1 60 kV)
4  31396 0      "**"    1     # restore all loads to DUNBAR (Lakeville #1 60 kV)
0
 #
 #
 # (55)  B2 LINE OUTAGE (BREAKER-TO-BREAKER)
 #
1  31407 31220  "1 "    0     # line from  GYSR78TP 115.00   (2) to BRKR  EGLE RCK 115.00
2  31407 31408  "1 "    0     # TRAN from  GYSR78TP 115.00   (2) to (1)   GEYSER78  13.80
3  31408     0  "1 "    0     # GEN-DROP    GEYSER78  13.80  GEN==39.00(14.34)
3  31408     0  "2 "    0     # GEN-DROP    GEYSER78  13.80  GEN==32.00(11.76)
0
 #
 #
 # (56)  B2 LINE OUTAGE (BREAKER-TO-BREAKER)
 #
1  32077 32662  "1 "    0     # line from  CORD PMP  60.00   (1) to (4)   TULCY JT  60.00
1  32662 32655  "1 "    0     # line from  TULCY JT  60.00   (4) to (2)   TULCAY1   60.00
1  32662 32656  "1 "    0     # line from  TULCY JT  60.00   (4) to BRKR  NAPA      60.00
1  32662 32093  "1 "    0     # line from  TULCY JT  60.00   (4) to (3)   CRD-JCT   60.00
1  32655 32654  "1 "    0     # line from  TULCAY1   60.00   (2) to BRKR  TULUCAY   60.00
1  32093 32091  "1 "    0     # line from  CRD-JCT   60.00   (3) to (1)   CRD_INTR  60.00
1  32093 32074  "1 "    0     # line from  CRD-JCT   60.00   (3) to (1)   CORDELIA  60.00
4  32077     0  "1 "    0     # LOAD-DROP    CORD PMP  60.00  LOAD==4.74(1.56)
4  32091     0  "1 "    0     # LOAD-DROP    CRD_INTR  60.00  LOAD==2.80(0.90)
4  32074     0  "4 "    0     # LOAD-DROP    CORDELIA  60.00  LOAD==10.32(0.46)
1  32662 32656  "1 "    1     # close line from TULCY JT 60.00 to NAPA 60.00
1  32662 32077  "1 "    1     # close line from TULCY JT 60.00 to CORD PMP 60.00
1  32077 32074  "1 "    1     # close line from CORD PMP 60.00 to CORDELIA 60.00
4  32077 0      "**"    1     # restore all loads to CORD PMP 60.00
4  32074 0      "**"    1     # restore all loads to CORDELIA 60.00 (Tulucay - Napa #1 60 kV)
0
 #
 #
 # (57)  B2 LINE OUTAGE (BREAKER-TO-BREAKER)
 #
1  32654 32660  "1 "    0     # line from  TULUCAY   60.00  BRKR to (3)   BSLT TAP  60.00
1  32660 32656  "1 "    0     # line from  BSLT TAP  60.00   (3) to BRKR  NAPA      60.00
1  32660 32658  "1 "    0     # line from  BSLT TAP  60.00   (3) to (1)   BASALT    60.00
4  32658     0  "1 "    0     # LOAD-DROP    BASALT    60.00  LOAD==5.20(1.06)
4  32658     0  "2 "    0     # LOAD-DROP    BASALT    60.00  LOAD==20.02(4.06)
1  32655 32658  "1 "    1     # close line from TULUCAY   60.00 to BASALT 60.00
4  32658 0      "**"    1     # restore all loads to BASALT 60.00 (Tulucay - Napa #2 60 kV)
```

```
0
 #
 #
 # (58)  B3 TRANSFORMER OUTAGE (BREAKER-TO-BREAKER)
 #
2  31402 30401  "1 "    0     # TRAN from  BEAR CAN  13.80   (1) to BRKR  BEARCNYN 230.00
3  31402     0  "1 "    0     # GEN-DROP    BEAR CAN  13.80  GEN==9.80(2.65)
3  31402     0  "2 "    0     # GEN-DROP    BEAR CAN  13.80  GEN==9.80(2.65)
0
 #
 #
 # (59)  B3 TRANSFORMER OUTAGE (BREAKER-TO-BREAKER)
 #
2  31404 30402  "1 "    0     # TRAN from  WEST FOR  13.80   (1) to BRKR  WSFRDFLT 230.00
3  31404     0  "1 "    0     # GEN-DROP    WEST FOR  13.80  GEN==12.10(6.35)
3  31404     0  "2 "    0     # GEN-DROP    WEST FOR  13.80  GEN==12.00(6.30)
0
 #
 #
 # (60)  B3 TRANSFORMER OUTAGE (BREAKER-TO-BREAKER)
 #
2  31236 30430  "4 "    0     # TRAN from  FULTON   115.00  BRKR to BRKR  FULTON   230.00
0
 #
 #
 # (61)  B3 TRANSFORMER OUTAGE (BREAKER-TO-BREAKER)
 #
2  31236 30430  "9 "    0     # TRAN from  FULTON   115.00  BRKR to BRKR  FULTON   230.00
0
 #
 #
 # (62)  B3 TRANSFORMER OUTAGE (BREAKER-TO-BREAKER)
 #
2  31255 30435  "1 "    0     # TRAN from  LAKEVLLE 115.00  BRKR to BRKR  LAKEVILE 230.00
0
 #
 #
 # (63)  B3 TRANSFORMER OUTAGE (BREAKER-TO-BREAKER)
 #
2  31255 30435  "2 "    0     # TRAN from  LAKEVLLE 115.00  BRKR to BRKR  LAKEVILE 230.00
0
 #
 #
 # (64)  B3 TRANSFORMER OUTAGE (BREAKER-TO-BREAKER)
 #
2  31392 30435  "3 "    0     # TRAN from  LAKEVLLE  60.00  BRKR to BRKR  LAKEVILE 230.00
1  32650 31396  "1 "    1     # close line from ST.HELNA 60.00 to DUNBAR 60.00 (Lakeville Bank Outage)
1  31392 31396  "1 "    0     # open line from DUNBAR to LAKEVLLE (Lakeville Bank Outage)
1  31389 31384  "1 "    1     # close line from PETC_JCT 60.00 to COTATI 60.00 (Lakeville Bank Outage)
```

```
1  31388 31389  "1 "    1     # close line from PETLMA C 60.00 to PETC_JCT 60.00 (Lakeville Bank Outage
1  31386 31388  "1 "    0     # open line from  MCDWLLSW to PETLMA C (Lakeville Bank Outage)
1  31390 31394  "1 "    0     # open line from  PETLMA A to LKVLE JT (Lakeville Bank Outage)
1  31386 31392  "1 "    0     # open line from  MCDWLLSW to LAKEVLLE (Lakeville Bank Outage)
1  31392 31394  "1 "    0     # open line from  LAKEVLLE to LKVLE JT (Lakeville Bank Outage)
0
 #
 #
 # (65)  B3 TRANSFORMER OUTAGE (BREAKER-TO-BREAKER)
 #
2  32654 30440  "1 "    0     # TRAN from  TULUCAY   60.00  BRKR to BRKR  TULUCAY  230.00
0
 #
 #
 # (66)  B3 TRANSFORMER OUTAGE (BREAKER-TO-BREAKER)
 #
2  31300 31200  "2 "    0     # TRAN from  MENDOCNO  60.00  BRKR to BRKR  MENDOCNO 115.00
0
 #
 #
 # (67)  B3 TRANSFORMER OUTAGE (BREAKER-TO-BREAKER)
 #
2  31336 31206  "2 "    0     # TRAN from  HPLND JT  60.00  BRKR to BRKR  HPLND JT 115.00
0
 #
 #
 # (68)  B3 TRANSFORMER OUTAGE (BREAKER-TO-BREAKER)
 #
2  31406 31214  "1 "    0     # TRAN from  GEYSR5-6  13.80   (1) to BRKR  GEYERS56 115.00
3  31406     0  "1 "    0     # GEN-DROP    GEYSR5-6  13.80  GEN==39.00(13.38)
3  31406     0  "2 "    0     # GEN-DROP    GEYSR5-6  13.80  GEN==39.00(13.38)
0
 #
 #
 # (69)  B3 TRANSFORMER OUTAGE (BREAKER-TO-BREAKER)
 #
2  31344 31220  "1 "    0     # TRAN from  EGLE RCK  60.00  BRKR to BRKR  EGLE RCK 115.00
4 31342 0     "**" 0      # Drop load at MIDDLTWN 60.00 (Eagle Rock 115/60 kV Bank Outage)
0
 #
 #
 # (70)  B3 TRANSFORMER OUTAGE (BREAKER-TO-BREAKER)
 #
2  31412 31221  "1 "    0     # TRAN from  GEYSER11  13.80   (1) to BRKR  GEYSR11  115.00
3  31412     0  "1 "    0     # GEN-DROP    GEYSER11  13.80  GEN==60.00(24.50)
0
 #
 #
 # (71)  B3 TRANSFORMER OUTAGE (BREAKER-TO-BREAKER)
```

```
 #
2  31436 31224  "1 "    0     # TRAN from  INDIAN V   9.11   (1) to BRKR  INDIN VL 115.00
3  31436     0  "1 "    0     # GEN-DROP    INDIAN V   9.11  GEN==0.90(0.00)
0
 #
 #
 # (72)  B3 TRANSFORMER OUTAGE (BREAKER-TO-BREAKER)
 #
2  31378 31236  "1 "    0     # TRAN from  FULTON    60.00  BRKR to BRKR  FULTON   115.00
0
 #
 #
 # (73)  B3 TRANSFORMER OUTAGE (BREAKER-TO-BREAKER)
 #
2  31378 31236  "2 "    0     # TRAN from  FULTON    60.00  BRKR to BRKR  FULTON   115.00
0
 #
 #
 # (74)  B3 TRANSFORMER OUTAGE (BREAKER-TO-BREAKER)
 #
2  31200 31260  "1 "    0     # TRAN from  MENDOCNO 115.00  BRKR to (3)   MNDCNO M 115.00
2  31260 31300  "1 "    0     # TRAN from  MNDCNO M 115.00   (3) to BRKR  MENDOCNO  60.00
2  31260 31428  "1 "    0     # TRAN from  MNDCNO M 115.00   (3) to (1)   MENDCNTR  13.20
0
 #
 #
 # (75)  B3 TRANSFORMER OUTAGE (BREAKER-TO-BREAKER)
 #
2  31433 31302  "1 "    0     # TRAN from  POTTRVLY   2.40   (1) to BRKR  PTTR VLY  60.00
3  31433     0  "1 "    0     # GEN-DROP    POTTRVLY   2.40  GEN==3.20(2.80)
0
 #
 #
 # (76)  B3 TRANSFORMER OUTAGE (BREAKER-TO-BREAKER)
 #
2  31309 31312  "1 "    0     # TRAN from  FT_BRGD1  12.47   (1) to BRKR  FRT BRGG  60.00
4  31309     0  "1 "    0     # LOAD-DROP    FT_BRGD1  12.47  LOAD==10.52(0.00)
0
 #
 #
 # (77)  B3 TRANSFORMER OUTAGE (BREAKER-TO-BREAKER)
 #
2  31311 31312  "1 "    0     # TRAN from  FT_BRGD2  12.47   (1) to BRKR  FRT BRGG  60.00
4  31311     0  "2 "    0     # LOAD-DROP    FT_BRGD2  12.47  LOAD==3.16(0.00)
0
 #
 #
 # (78)  B3 TRANSFORMER OUTAGE (BREAKER-TO-BREAKER)
 #
```

```
 2  31444 31312  "1 "    0     # TRAN from  GA PACIF   9.11   (1) to BRKR  FRT BRGG  60.00
 4  31444     0  "SG"    0     # LOAD-DROP    GA PACIF   9.11  LOAD==0.50(0.10)
 0
  #
  #
  # (79)  B3 TRANSFORMER OUTAGE (BREAKER-TO-BREAKER)
  #
 2  31317 31316  "1 "    0     # TRAN from  ELK_D     12.47   (1) to BRKR  ELK       60.00
 4  31317     0  "1 "    0     # LOAD-DROP    ELK_D     12.47  LOAD==2.95(0.00)
 0
  #
  #
  # (80)  B1 GENERATOR OUTAGE
  #
 3  31433     0  "1"     0     # POTTRVLY   2.40       PGEN=3.20  QGEN=2.06
 0
  #
  #
  # (81)  B1 GENERATOR OUTAGE
  #
 3  31404     0  "2"     0     # WEST FOR  13.80       PGEN=12.00  QGEN=7.50
 0
  #
  #
  # (82)  B1 GENERATOR OUTAGE
  #
 3  31430     0  "1"     0     # SMUDGEO1  13.80       PGEN=33.00  QGEN=12.71
 0
  #
  #
  # (83)  B1 GENERATOR OUTAGE
  #
 3  31400     0  "1"     0     # SANTA FE  13.80       PGEN=64.22  QGEN=10.46
 0
  #
  #
  # (84)  B1 GENERATOR OUTAGE
  #
 3  31402     0  "1"     0     # BEAR CAN  13.80       PGEN=9.80  QGEN=3.94
 0
  #
  #
  # (85)  B1 GENERATOR OUTAGE
  #
 3  31402     0  "2"     0     # BEAR CAN  13.80       PGEN=9.80  QGEN=3.94
 0
  #
  #
  # (86)  B1 GENERATOR OUTAGE
```

```
 #
3  31404     0  "1"     0     # WEST FOR  13.80       PGEN=12.10  QGEN=7.50
0
 #
 #
 # (87)  B1 GENERATOR OUTAGE
 #
3  31406     0  "1"     0     # GEYSR5-6  13.80       PGEN=39.00  QGEN=14.97
0
 #
 #
 # (88)  B1 GENERATOR OUTAGE
 #
3  31406     0  "2"     0     # GEYSR5-6  13.80       PGEN=39.00  QGEN=14.97
0
 #
 #
 # (89)  B1 GENERATOR OUTAGE
 #
3  31408     0  "1"     0     # GEYSER78  13.80       PGEN=39.00  QGEN=16.25
0
 #
 #
 # (90)  B1 GENERATOR OUTAGE
 #
3  31408     0  "2"     0     # GEYSER78  13.80       PGEN=32.00  QGEN=13.33
0
 #
 #
 # (91)  B1 GENERATOR OUTAGE
 #
3  31412     0  "1"     0     # GEYSER11  13.80       PGEN=60.00  QGEN=27.81
0
 #
 #
 # (92)  B1 GENERATOR OUTAGE
 #
3  31414     0  "1"     0     # GEYSER12  13.80       PGEN=31.00  QGEN=14.44
0
 #
 #
 # (93)  B1 GENERATOR OUTAGE
 #
3  31416     0  "1"     0     # GEYSER13  13.80       PGEN=68.00  QGEN=28.50
0
 #
 #
 # (94)  B1 GENERATOR OUTAGE
 #
```

```
 3  31418     0  "1"     0     # GEYSER14  13.80       PGEN=54.00  QGEN=14.03
 0
  #
  #
  # (95)  B1 GENERATOR OUTAGE
  #
 3  31420     0  "1"     0     # GEYSER16  13.80       PGEN=64.00  QGEN=35.75
 0
  #
  #
  # (96)  B1 GENERATOR OUTAGE
  #
 3  31422     0  "1"     0     # GEYSER17  13.80       PGEN=36.00  QGEN=62.30
 0
  #
  #
  # (97)  B1 GENERATOR OUTAGE
  #
 3  31424     0  "1"     0     # GEYSER18  13.80       PGEN=56.00  QGEN=20.61
 0
  #
  #
  # (98)  B1 GENERATOR OUTAGE
  #
 3  31426     0  "1"     0     # GEYSER20  13.80       PGEN=52.00  QGEN=17.46
 0
  #
  #
  # (99)  B1 GENERATOR OUTAGE
  #
 3  38106     0  "1"     0     # NCPA1GY1  13.80       PGEN=35.00  QGEN=5.04
 0
  #
  #
  # (100)  B1 GENERATOR OUTAGE
  #
 3  38108     0  "1"     0     # NCPA1GY2  13.80       PGEN=35.00  QGEN=5.04
 0
  #
  #
  # (101)  B1 GENERATOR OUTAGE
  #
 3  38110     0  "1"     0     # NCPA2GY1  13.80       PGEN=36.00  QGEN=7.40
 0
  #
  #
  # (102)  B1 GENERATOR OUTAGE
  #
 3  38112     0  "1"     0     # NCPA2GY2  13.80       PGEN=36.00  QGEN=7.40
```

```
0
 #
 #
 # (103)  B1 GENERATOR OUTAGE
 #
3  32700     0  "1"     0     # MONTICLO   9.11       PGEN=4.65  QGEN=0.00
0
 #
 #
 # (104)  B1 GENERATOR OUTAGE
 #
3  32700     0  "2"     0     # MONTICLO   9.11       PGEN=4.65  QGEN=0.00
0
 #
 #
 # (105)  B1 GENERATOR OUTAGE
 #
3  31435     0  "1"     0     # GEO.ENGY   9.11       PGEN=8.92  QGEN=-2.03
0
 #
 #
 # (106)  B1 GENERATOR OUTAGE
 #
3  31435     0  "2"     0     # GEO.ENGY   9.11       PGEN=8.93  QGEN=-2.03
0
 #
 #
 # (107)  B1 GENERATOR OUTAGE
 #
3  31436     0  "1"     0     # INDIAN V   9.11       PGEN=0.88  QGEN=0.00
0
 #
 #
 # (108)  B1 GENERATOR OUTAGE
 #
3  31446     0  "1"     0     # SONMA LF   9.11       PGEN=4.00  QGEN=0.00
0
 #
 #
 # (109)  B1 GENERATOR OUTAGE
 #
3  31170     0  "1"     0     # HMBOLDT1  13.80       PGEN=50.00  QGEN=12.96
0
 #
 #
 # (110)  B1 GENERATOR OUTAGE
 #
3  31172     0  "1"     0     # HMBOLDT2  13.80       PGEN=50.00  QGEN=11.80
0
```

```
  #
  #
  # (111)  B1 GENERATOR OUTAGE
  #
 3  31158     0  "1"     0     # LP SAMOA  12.47       PGEN=12.00  QGEN=12.50
 0
  #
  #
  # (112)  B1 GENERATOR OUTAGE
  #
 3  31150     0  "1"     0     # FAIRHAVN  13.80       PGEN=15.90  QGEN=5.44
 0
  #
  #
  # (113)  B1 GENERATOR OUTAGE
  #
3  31152     0  "1"     0     # PAC.LUMB  13.80       PGEN=10.00  QGEN=0.69
0
  #
  #
  # (114)  L-1/G-1 OVERLAPPING OUTAGE
  # GEYSERS #12 - FULTON 230 KV AND GEYSER # 11
 3  31412     0  "1"     0     # GEYSER11  13.80       PGEN=60.00  QGEN=24.50
  #
 1  30391 30393  "1 "    0     # line from  CR1T3_18 230.00   (3) to (3)   G14CRT15 230.00
 1  30391 30399  "1 "    0     # line from  CR1T3_18 230.00   (3) to (3)   NCPATT2  230.00
 1  30391 30430  "1 "    0     # line from  CR1T3_18 230.00   (3) to BRKR  FULTON   230.00
 1  30393 30394  "1 "    0     # line from  G14CRT15 230.00   (3) to (2)   GEYSR12  230.00
 1  30393 30396  "1 "    0     # line from  G14CRT15 230.00   (3) to (2)   GEYSR14  230.00
 1  30399 30400  "1 "    0     # line from  NCPATT2  230.00   (3) to (4)   G16T0_2  230.00
 1  30399 30404  "1 "    0     # line from  NCPATT2  230.00   (3) to (3)   NCPA2    230.00
 1  30400 30401  "1 "    0     # line from  G16T0_2  230.00   (4) to (2)   BEARCNYN 230.00
 1  30400 30402  "1 "    0     # line from  G16T0_2  230.00   (4) to (2)   WSFRDFLT 230.00
 1  30400 30403  "1 "    0     # line from  G16T0_2  230.00   (4) to (2)   GEYSR16  230.00
 2  30401 31402  "1 "    0     # TRAN from  BEARCNYN 230.00  BRKR to (1)   BEAR CAN  13.80
 2  30402 31404  "1 "    0     # TRAN from  WSFRDFLT 230.00  BRKR to (1)   WEST FOR  13.80
 2  30403 31420  "1 "    0     # TRAN from  GEYSR16  230.00  BRKR to (1)   GEYSER16  13.80
 2  30404 38110  "1 "    0     # TRAN from  NCPA2    230.00  BRKR to (1)   NCPA2GY1  13.80
 2  30404 38112  "1 "    0     # TRAN from  NCPA2    230.00  BRKR to (1)   NCPA2GY2  13.80
 2  30394 31414  "1 "    0     # TRAN from  GEYSR12  230.00  BRKR to (1)   GEYSER12  13.80
 2  30396 31418  "1 "    0     # TRAN from  GEYSR14  230.00  BRKR to (1)   GEYSER14  13.80
 3  31402     0  "1 "    0     # GEN-DROP    BEAR CAN  13.80  GEN==9.80(2.65)
 3  31402     0  "2 "    0     # GEN-DROP    BEAR CAN  13.80  GEN==9.80(2.65)
 3  31404     0  "1 "    0     # GEN-DROP    WEST FOR  13.80  GEN==12.10(6.35)
 3  31404     0  "2 "    0     # GEN-DROP    WEST FOR  13.80  GEN==12.00(6.30)
 3  31420     0  "1 "    0     # GEN-DROP    GEYSER16  13.80  GEN==64.00(18.85)
 3  38110     0  "1 "    0     # GEN-DROP    NCPA2GY1  13.80  GEN==36.00(4.11)
 3  38112     0  "1 "    0     # GEN-DROP    NCPA2GY2  13.80  GEN==36.00(4.11)
 3  31414     0  "1 "    0     # GEN-DROP    GEYSER12  13.80  GEN==31.00(7.89)
```

```
 3  31418     0  "1 "    0     # GEN-DROP    GEYSER14  13.80  GEN==54.00(7.99)
 0
  #
  #
  # (115)  L-1/G-1 OVERLAPPING OUTAGE
  # GEYSERS #9 - LAKEVILLE 230 KV AND GEYSER # 11
 3  31412     0  "1"     0     # GEYSER11  13.80       PGEN=60.00  QGEN=27.81
  #
 1  30392 30405  "1 "    0     # line from  G9CRT2_9 230.00   (3) to (3)   G9CRT111 230.00
 1  30392 30395  "1 "    0     # line from  G9CRT2_9 230.00   (3) to (2)   GEYSR18  230.00
 1  30392 30397  "1 "    0     # line from  G9CRT2_9 230.00   (3) to (3)   CR2T3_18 230.00
 1  30405 30406  "1 "    0     # line from  G9CRT111 230.00   (3) to (3)   G13TT1_9 230.00
 1  30405 30413  "1 "    0     # line from  G9CRT111 230.00   (3) to (2)   SMUDGEO1 230.00
 2  30395 31424  "1 "    0     # TRAN from  GEYSR18  230.00  BRKR to (1)   GEYSER18  13.80
 1  30397 30398  "1 "    0     # line from  CR2T3_18 230.00   (3) to (3)   NCPA1    230.00
 1  30397 30435  "1 "    0     # line from  CR2T3_18 230.00   (3) to BRKR  LAKEVILE 230.00
 2  30398 38106  "1 "    0     # TRAN from  NCPA1    230.00  BRKR to (1)   NCPA1GY1  13.80
 2  30398 38108  "1 "    0     # TRAN from  NCPA1    230.00  BRKR to (1)   NCPA1GY2  13.80
 1  30406 30407  "1 "    0     # line from  G13TT1_9 230.00   (3) to (3)   G13TT1_8 230.00
 1  30406 30410  "1 "    0     # line from  G13TT1_9 230.00   (3) to (2)   GEYSR20  230.00
 1  30407 30408  "1 "    0     # line from  G13TT1_8 230.00   (3) to (2)   SNTAFE   230.00
 1  30407 30409  "1 "    0     # line from  G13TT1_8 230.00   (3) to (2)   GEYSR13  230.00
 2  30408 31400  "1 "    0     # TRAN from  SNTAFE   230.00  BRKR to (1)   SANTA FE  13.80
 2  30409 31416  "1 "    0     # TRAN from  GEYSR13  230.00  BRKR to (1)   GEYSER13  13.80
 2  30410 31426  "1 "    0     # TRAN from  GEYSR20  230.00  BRKR to (1)   GEYSER20  13.80
 2  30413 31430  "1 "    0     # TRAN from  SMUDGEO1 230.00  BRKR to (1)   SMUDGEO1  13.80
 3  31424     0  "1 "    0     # GEN-DROP    GEYSER18  13.80  GEN==56.00(8.47)
 3  38106     0  "1 "    0     # GEN-DROP    NCPA1GY1  13.80  GEN==35.00(2.44)
 3  38108     0  "1 "    0     # GEN-DROP    NCPA1GY2  13.80  GEN==35.00(2.44)
 3  31400     0  "1 "    0     # GEN-DROP    SANTA FE  13.80  GEN==64.20(5.10)
 3  31416     0  "1 "    0     # GEN-DROP    GEYSER13  13.80  GEN==68.00(23.47)
 3  31426     0  "1 "    0     # GEN-DROP    GEYSER20  13.80  GEN==52.00(6.22)
 3  31430     0  "1 "    0     # GEN-DROP    SMUDGEO1  13.80  GEN==33.00(10.44)
 0
  #
  #
  # (116)  L-1/G-1 OVERLAPPING OUTAGE
  # MENDOCINO - REDBUD 115 KV AND GEYSER # 11
 3  31412     0  "1"     0     # GEYSER11  13.80       PGEN=60.00  QGEN=27.81
  #
 1  31200 31217  "1 "    0     # line from  MENDOCNO 115.00  BRKR to (2)   LUCERNJ2 115.00
 1  31217 31223  "1 "    0     # line from  LUCERNJ2 115.00   (2) to (2)   REDBUDJ1 115.00
 1  31223 31222  "1 "    0     # line from  REDBUDJ1 115.00   (2) to BRKR  REDBUD   115.00
 0
  #
  #
  # (117)  L-1/G-1 OVERLAPPING OUTAGE
  # UKIAH - HOPLAND - CLOVERDALE 115 KV AND GEYSER # 11
 3  31412     0  "1"     0     # GEYSER11  13.80       PGEN=60.00  QGEN=27.81
```

```
 #
1  31204 31206  "1 "    0     # line from  UKIAH    115.00  BRKR to (3)   HPLND JT 115.00
1  31206 31208  "1 "    0     # line from  HPLND JT 115.00   (3) to BRKR  CLOVRDLE 115.00
2  31206 31336  "2 "    0     # TRAN from  HPLND JT 115.00  BRKR to BRKR  HPLND JT  60.00
0
 #
 #
 # (118)  L-1/G-1 OVERLAPPING OUTAGE
 # GEYSERS #3 - CLOVERDALE 115 KV AND GEYSER # 11
3  31412     0  "1"     0     # GEYSER11  13.80       PGEN=60.00  QGEN=27.81
 #
1  31208 31210  "1 "    0     # line from  CLOVRDLE 115.00  BRKR to (3)   MPE TAP  115.00
1  31210 31212  "1 "    0     # line from  MPE TAP  115.00   (3) to (2)   MPE      115.00
1  31210 31214  "1 "    0     # line from  MPE TAP  115.00   (3) to BRKR  GEYERS56 115.00
2  31212 31435  "1 "    0     # TRAN from  MPE      115.00   (2) to (1)   GEO.ENGY   9.11
3  31435     0  "1 "    0     # GEN-DROP    GEO.ENGY   9.11  GEN==8.90(-2.33)
3  31435     0  "2 "    0     # GEN-DROP    GEO.ENGY   9.11  GEN==8.90(-2.33)
0
 #
 #
 # (119)  L-1/G-1 OVERLAPPING OUTAGE
 # CORTINA - MENDOCINO 115 KV KV AND GEYSER # 11
3  31412     0  "1"     0     # GEYSER11  13.80       PGEN=60.00  QGEN=27.81
 #
1  31215 31200  "1 "    0     # line from  LUCERNJ1 115.00   (3) to BRKR  MENDOCNO 115.00
1  31215 31216  "1 "    0     # line from  LUCERNJ1 115.00   (3) to (1)   LUCERNE  115.00
1  31215 31224  "1 "    0     # line from  LUCERNJ1 115.00   (3) to (3)   INDIN VL 115.00
1  31224 31950  "1 "    0     # line from  INDIN VL 115.00   (3) to BRKR  CORTINA  115.00
2  31224 31436  "1 "    0     # TRAN from  INDIN VL 115.00  BRKR to (1)   INDIAN V   9.11
4  31216     0  "1 "    0     # LOAD-DROP    LUCERNE  115.00  LOAD==12.95(2.63)
3  31436     0  "1 "    0     # GEN-DROP    INDIAN V   9.11  GEN==0.90(0.00)
1  31217 31216  "1 "    1     # close line from LCERNJ2  115.00 to LUCERNE 115.00
4  31216 0      "**"    1     # restore all loads to LUCERNE 115.00 (Cortina - Mendocino 115 kV)
0
 #
 #
 # (120)  L-1/G-1 OVERLAPPING OUTAGE
 # EAGLE ROCK - REDBUD 115 KV AND GEYSER # 11
3  31412     0  "1"     0     # GEYSER11  13.80       PGEN=60.00  QGEN=27.81
 #
1  31220 31263  "1 "    0     # line from  EGLE RCK 115.00  BRKR to (2)   LWRLAKEJ 115.00
1  31263 31225  "1 "    0     # line from  LWRLAKEJ 115.00   (2) to (3)   HGHLNDJ1 115.00
1  31225 31226  "1 "    0     # line from  HGHLNDJ1 115.00   (3) to (1)   HGHLAND  115.00
1  31225 31262  "1 "    0     # line from  HGHLNDJ1 115.00   (3) to (2)   CACHE J2 115.00
1  31262 31229  "1 "    0     # line from  CACHE J2 115.00   (2) to (2)   REDBUDJ2 115.00
1  31229 31222  "1 "    0     # line from  REDBUDJ2 115.00   (2) to BRKR  REDBUD   115.00
4  31226     0  "1 "    0     # LOAD-DROP    HGHLAND  115.00  LOAD==24.24(4.92)
1  31227 31226  "1 "    1     # close line from HGHLNDJ2 115.00 to HIGHLD  115.00
4  31226 0      "**"    1     # restore all loads to HIGHLD  115.00 (Eagle Rock - Cortina 115 kV)
```

```
0
 #
 #
 # (121)  L-1/G-1 OVERLAPPING OUTAGE
 # CORONA - LAKEVILLE 115 KV AND GEYSER # 11
3  31412     0  "1"     0     # GEYSER11  13.80       PGEN=60.00  QGEN=27.81
 #
1  31254 31255  "1 "    0     # line from  CORONA   115.00  BRKR to BRKR  LAKEVLLE 115.00
0
 #
 #
 # (122)  L-1/G-1 OVERLAPPING OUTAGE
 # LAKEVILLE - SONOMA 115 KV AND GEYSER # 11
3  31412     0  "1"     0     # GEYSER11  13.80       PGEN=60.00  QGEN=27.81
 #
1  31255 31258  "1 "    0     # line from  LAKEVLLE 115.00  BRKR to BRKR  SONOMA   115.00
0
 #
 #
 # (123)  L-1/G-1 OVERLAPPING OUTAGE
 # SONOMA - PUEBLO 115 KV AND GEYSER # 11
3  31412     0  "1"     0     # GEYSER11  13.80       PGEN=60.00  QGEN=27.81
 #
1  31258 32564  "1 "    0     # line from  SONOMA   115.00  BRKR to BRKR  PUEBLO   115.00
0
 #
 #
 # (124)  L-1/G-1 OVERLAPPING OUTAGE
 # MENDOCINO - REDBUD 115 KV AND GEYSER # 13
3  31416     0  "1"     0     # GEYSER13  13.80       PGEN=68.00  QGEN=28.50
 #
1  31200 31217  "1 "    0     # line from  MENDOCNO 115.00  BRKR to (2)   LUCERNJ2 115.00
1  31217 31223  "1 "    0     # line from  LUCERNJ2 115.00   (2) to (2)   REDBUDJ1 115.00
1  31223 31222  "1 "    0     # line from  REDBUDJ1 115.00   (2) to BRKR  REDBUD   115.00
0
 #
 #
 # (125)  L-1/G-1 OVERLAPPING OUTAGE
 # UKIAH - HOPLAND - CLOVERDALE 115 KV AND GEYSER # 13
3  31416     0  "1"     0     # GEYSER13  13.80       PGEN=68.00  QGEN=28.50
 #
1  31204 31206  "1 "    0     # line from  UKIAH    115.00  BRKR to (3)   HPLND JT 115.00
1  31206 31208  "1 "    0     # line from  HPLND JT 115.00   (3) to BRKR  CLOVRDLE 115.00
2  31206 31336  "2 "    0     # TRAN from  HPLND JT 115.00  BRKR to BRKR  HPLND JT  60.00
0
 #
 #
 # (126)  L-1/G-1 OVERLAPPING OUTAGE
 # GEYSERS #3 - CLOVERDALE 115 KV AND GEYSER # 13
```

```
3  31416     0  "1"     0     # GEYSER13  13.80       PGEN=68.00  QGEN=28.50
 #
1  31208 31210  "1 "    0     # line from  CLOVRDLE 115.00  BRKR to (3)   MPE TAP  115.00
1  31210 31212  "1 "    0     # line from  MPE TAP  115.00   (3) to (2)   MPE      115.00
1  31210 31214  "1 "    0     # line from  MPE TAP  115.00   (3) to BRKR  GEYERS56 115.00
2  31212 31435  "1 "    0     # TRAN from  MPE      115.00   (2) to (1)   GEO.ENGY   9.11
3  31435     0  "1 "    0     # GEN-DROP    GEO.ENGY   9.11  GEN==8.90(-2.33)
3  31435     0  "2 "    0     # GEN-DROP    GEO.ENGY   9.11  GEN==8.90(-2.33)
0
 #
 #
 # (127)  L-1/G-1 OVERLAPPING OUTAGE
 # CORTINA - MENDOCINO 115 KV AND GEYSER # 13
3  31416     0  "1"     0     # GEYSER13  13.80       PGEN=68.00  QGEN=28.50
 #
1  31215 31200  "1 "    0     # line from  LUCERNJ1 115.00   (3) to BRKR  MENDOCNO 115.00
1  31215 31216  "1 "    0     # line from  LUCERNJ1 115.00   (3) to (1)   LUCERNE  115.00
1  31215 31224  "1 "    0     # line from  LUCERNJ1 115.00   (3) to (3)   INDIN VL 115.00
1  31224 31950  "1 "    0     # line from  INDIN VL 115.00   (3) to BRKR  CORTINA  115.00
2  31224 31436  "1 "    0     # TRAN from  INDIN VL 115.00  BRKR to (1)   INDIAN V   9.11
4  31216     0  "1 "    0     # LOAD-DROP    LUCERNE  115.00  LOAD==12.95(2.63)
3  31436     0  "1 "    0     # GEN-DROP    INDIAN V   9.11  GEN==0.90(0.00)
1  31217 31216  "1 "    1     # close line from LCERNJ2  115.00 to LUCERNE 115.00
4  31216 0      "**"    1     # restore all loads to LUCERNE 115.00 (Cortina - Mendocino 115 kV)
0
 #
 #
 # (128)  L-1/G-1 OVERLAPPING OUTAGE
 # EAGLE ROCK - REDBUD 115 KV AND GEYSER # 13
3  31416     0  "1"     0     # GEYSER13  13.80       PGEN=68.00  QGEN=28.50
 #
1  31220 31263  "1 "    0     # line from  EGLE RCK 115.00  BRKR to (2)   LWRLAKEJ 115.00
1  31263 31225  "1 "    0     # line from  LWRLAKEJ 115.00   (2) to (3)   HGHLNDJ1 115.00
1  31225 31226  "1 "    0     # line from  HGHLNDJ1 115.00   (3) to (1)   HGHLAND  115.00
1  31225 31262  "1 "    0     # line from  HGHLNDJ1 115.00   (3) to (2)   CACHE J2 115.00
1  31262 31229  "1 "    0     # line from  CACHE J2 115.00   (2) to (2)   REDBUDJ2 115.00
1  31229 31222  "1 "    0     # line from  REDBUDJ2 115.00   (2) to BRKR  REDBUD   115.00
4  31226     0  "1 "    0     # LOAD-DROP    HGHLAND  115.00  LOAD==24.24(4.92)
1  31227 31226  "1 "    1     # close line from HGHLNDJ2 115.00 to HIGHLD  115.00
4  31226 0      "**"    1     # restore all loads to HIGHLD  115.00 (Eagle Rock - Cortina 115 kV)
0
 #
 #
 # (129)  L-1/G-1 OVERLAPPING OUTAGE
 # LAKEVILLE - SONOMA 115 KV AND GEYSER # 13
3  31416     0  "1"     0     # GEYSER13  13.80       PGEN=68.00  QGEN=28.50
 #
1  31255 31258  "1 "    0     # line from  LAKEVLLE 115.00  BRKR to BRKR  SONOMA
0
```

```
 #
 #
 # (130)  L-1/G-1 OVERLAPPING OUTAGE
 # MENDOCNIO - WILLITS 60 KV AND GEYSER # 13
3  31416     0  "1"     0     # GEYSER13  13.80       PGEN=68.00  QGEN=28.50
 #
1  31300 31306  "1 "    0     # line from  MENDOCNO  60.00  BRKR to BRKR  WILLITS
0
 #
 # (131)  L-1/G-1 OVERLAPPING OUTAGE
 # GEYSERS #9 - LAKEVILLE 230 KV AND GEYSER # 16
3  31420     0  "1"     0     # GEYSER16  13.80       PGEN=64.00  QGEN=35.75
 #
1  30392 30405  "1 "    0     # line from  G9CRT2_9 230.00   (3) to (3)   G9CRT111 230.00
1  30392 30395  "1 "    0     # line from  G9CRT2_9 230.00   (3) to (2)   GEYSR18  230.00
1  30392 30397  "1 "    0     # line from  G9CRT2_9 230.00   (3) to (3)   CR2T3_18 230.00
1  30405 30406  "1 "    0     # line from  G9CRT111 230.00   (3) to (3)   G13TT1_9 230.00
1  30405 30413  "1 "    0     # line from  G9CRT111 230.00   (3) to (2)   SMUDGEO1 230.00
2  30395 31424  "1 "    0     # TRAN from  GEYSR18  230.00  BRKR to (1)   GEYSER18  13.80
1  30397 30398  "1 "    0     # line from  CR2T3_18 230.00   (3) to (3)   NCPA1    230.00
1  30397 30435  "1 "    0     # line from  CR2T3_18 230.00   (3) to BRKR  LAKEVILE 230.00
2  30398 38106  "1 "    0     # TRAN from  NCPA1    230.00  BRKR to (1)   NCPA1GY1  13.80
2  30398 38108  "1 "    0     # TRAN from  NCPA1    230.00  BRKR to (1)   NCPA1GY2  13.80
1  30406 30407  "1 "    0     # line from  G13TT1_9 230.00   (3) to (3)   G13TT1_8 230.00
1  30406 30410  "1 "    0     # line from  G13TT1_9 230.00   (3) to (2)   GEYSR20  230.00
1  30407 30408  "1 "    0     # line from  G13TT1_8 230.00   (3) to (2)   SNTAFE   230.00
1  30407 30409  "1 "    0     # line from  G13TT1_8 230.00   (3) to (2)   GEYSR13  230.00
2  30408 31400  "1 "    0     # TRAN from  SNTAFE   230.00  BRKR to (1)   SANTA FE  13.80
2  30409 31416  "1 "    0     # TRAN from  GEYSR13  230.00  BRKR to (1)   GEYSER13  13.80
2  30410 31426  "1 "    0     # TRAN from  GEYSR20  230.00  BRKR to (1)   GEYSER20  13.80
2  30413 31430  "1 "    0     # TRAN from  SMUDGEO1 230.00  BRKR to (1)   SMUDGEO1  13.80
3  31424     0  "1 "    0     # GEN-DROP    GEYSER18  13.80  GEN==56.00(8.47)
3  38106     0  "1 "    0     # GEN-DROP    NCPA1GY1  13.80  GEN==35.00(2.44)
3  38108     0  "1 "    0     # GEN-DROP    NCPA1GY2  13.80  GEN==35.00(2.44)
3  31400     0  "1 "    0     # GEN-DROP    SANTA FE  13.80  GEN==64.20(5.10)
3  31416     0  "1 "    0     # GEN-DROP    GEYSER13  13.80  GEN==68.00(23.47)
3  31426     0  "1 "    0     # GEN-DROP    GEYSER20  13.80  GEN==52.00(6.22)
3  31430     0  "1 "    0     # GEN-DROP    SMUDGEO1  13.80  GEN==33.00(10.44)
0
 #
 #
 # (132)  L-1/G-1 OVERLAPPING OUTAGE
 # FULTON - IGNACIO 230 KV AND GEYSER # 16
3  31420     0  "1"     0     # GEYSER16  13.80       PGEN=64.00  QGEN=35.75
 #
1  30430 30445  "1 "    0     # line from  FULTON   230.00  BRKR to BRKR  IGNACIO  230.00
0
 #
 #
```

```
 # (133)  L-1/G-1 OVERLAPPING OUTAGE
 # MENDOCINO - REDBUD 115 KV AND GEYSER # 16
3  31420     0  "1"     0     # GEYSER16  13.80       PGEN=64.00  QGEN=35.75
 #
1  31200 31217  "1 "    0     # line from  MENDOCNO 115.00  BRKR to (2)   LUCERNJ2 115.00
1  31217 31223  "1 "    0     # line from  LUCERNJ2 115.00   (2) to (2)   REDBUDJ1 115.00
1  31223 31222  "1 "    0     # line from  REDBUDJ1 115.00   (2) to BRKR  REDBUD   115.00
0
 #
 #
 # (134)  L-1/G-1 OVERLAPPING OUTAGE
 # UKIAH - HOPLAND - CLOVERDALE 115 KV AND GEYSER # 16
3  31420     0  "1"     0     # GEYSER16  13.80       PGEN=64.00  QGEN=35.75
 #
1  31204 31206  "1 "    0     # line from  UKIAH    115.00  BRKR to (3)   HPLND JT 115.00
1  31206 31208  "1 "    0     # line from  HPLND JT 115.00   (3) to BRKR  CLOVRDLE 115.00
2  31206 31336  "2 "    0     # TRAN from  HPLND JT 115.00  BRKR to BRKR  HPLND JT  60.00
0
 #
 #
 # (135)  L-1/G-1 OVERLAPPING OUTAGE
 # GEYSERS #3 - CLOVERDALE 115 KV AND GEYSER # 16
3  31420     0  "1"     0     # GEYSER16  13.80       PGEN=64.00  QGEN=35.75
 #
1  31208 31210  "1 "    0     # line from  CLOVRDLE 115.00  BRKR to (3)   MPE TAP  115.00
1  31210 31212  "1 "    0     # line from  MPE TAP  115.00   (3) to (2)   MPE      115.00
1  31210 31214  "1 "    0     # line from  MPE TAP  115.00   (3) to BRKR  GEYERS56 115.00
2  31212 31435  "1 "    0     # TRAN from  MPE      115.00   (2) to (1)   GEO.ENGY   9.11
3  31435     0  "1 "    0     # GEN-DROP    GEO.ENGY   9.11  GEN==8.90(-2.33)
3  31435     0  "2 "    0     # GEN-DROP    GEO.ENGY   9.11  GEN==8.90(-2.33)
0
 #
 #
 # (136)  L-1/G-1 OVERLAPPING OUTAGE
 # CORTINA - MENDOCINO 115 KV AND GEYSER # 16
3  31420     0  "1"     0     # GEYSER16  13.80       PGEN=64.00  QGEN=35.75
 #
1  31215 31200  "1 "    0     # line from  LUCERNJ1 115.00   (3) to BRKR  MENDOCNO 115.00
1  31215 31216  "1 "    0     # line from  LUCERNJ1 115.00   (3) to (1)   LUCERNE  115.00
1  31215 31224  "1 "    0     # line from  LUCERNJ1 115.00   (3) to (3)   INDIN VL 115.00
1  31224 31950  "1 "    0     # line from  INDIN VL 115.00   (3) to BRKR  CORTINA  115.00
2  31224 31436  "1 "    0     # TRAN from  INDIN VL 115.00  BRKR to (1)   INDIAN V   9.11
4  31216     0  "1 "    0     # LOAD-DROP    LUCERNE  115.00  LOAD==12.95(2.63)
3  31436     0  "1 "    0     # GEN-DROP    INDIAN V   9.11  GEN==0.90(0.00)
1  31217 31216  "1 "    1     # close line from LCERNJ2  115.00 to LUCERNE 115.00
4  31216 0      "*"    1     # restore all loads to LUCERNE 115.00 (Cortina - Mendocino 115 kV)
0
 #
 #
```

```
 # (137)  L-1/G-1 OVERLAPPING OUTAGE
 # EAGLE ROCK - REDBUD 115 KV AND GEYSER # 16
3  31420     0  "1"     0     # GEYSER16  13.80       PGEN=64.00  QGEN=35.75
 #
1  31220 31263  "1 "    0     # line from  EGLE RCK 115.00  BRKR to (2)   LWRLAKEJ 115.00
1  31263 31225  "1 "    0     # line from  LWRLAKEJ 115.00   (2) to (3)   HGHLNDJ1 115.00
1  31225 31226  "1 "    0     # line from  HGHLNDJ1 115.00   (3) to (1)   HGHLAND  115.00
1  31225 31262  "1 "    0     # line from  HGHLNDJ1 115.00   (3) to (2)   CACHE J2 115.00
1  31262 31229  "1 "    0     # line from  CACHE J2 115.00   (2) to (2)   REDBUDJ2 115.00
1  31229 31222  "1 "    0     # line from  REDBUDJ2 115.00   (2) to BRKR  REDBUD   115.00
4  31226     0  "1 "    0     # LOAD-DROP    HGHLAND  115.00  LOAD==24.24(4.92)
1  31227 31226  "1 "    1     # close line from HGHLNDJ2 115.00 to HIGHLD  115.00
4  31226 0      "1 "    1     # restore HIGHLD  115.00 LOAD (Eagle Rock - Cortina 115 kV)
0
 #
 # (138)  L-1/G-1 OVERLAPPING OUTAGE
 # CORONA - LAKEVILLE 115 KV AND GEYSER # 16
3  31420     0  "1"     0     # GEYSER16  13.80       PGEN=64.00  QGEN=35.75
 #
1  31254 31255  "1 "    0     # line from  CORONA   115.00  BRKR to BRKR  LAKEVLLE 115.00
0
 #
 # (139)  L-1/G-1 OVERLAPPING OUTAGE
 # LAKEVILLE - SONOMA 115 KV AND GEYSER # 16
3  31420     0  "1"     0     # GEYSER16  13.80       PGEN=64.00  QGEN=35.75
 #
1  31255 31258  "1 "    0     # line from  LAKEVLLE 115.00  BRKR to BRKR  SONOMA
0
 #
 #
 # (140)  L-1/G-1 OVERLAPPING OUTAGE
 # MENDOCINCO - WILLITS 60 KV AND GEYSER # 16
3  31420     0  "1"     0     # GEYSER16  13.80       PGEN=64.00  QGEN=35.75
 #
1  31300 31306  "1 "    0     # line from  MENDOCNO  60.00  BRKR to BRKR  WILLITS
0
 #
 # (141)  L-1/G-1 OVERLAPPING OUTAGE
 # SONOMA - PUEBLO 115 KV AND GEYSER # 16
1  31258 32564  "1 "    0     # line from  SONOMA   115.00  BRKR to BRKR  PUEBLO
3  31420     0  "1"     0     # GEYSER16  13.80       PGEN=64.00  QGEN=35.75
0
 #
 #
 # (142)  L-1/G-1 OVERLAPPING OUTAGE
 # GEYSERS #12 - FULTON 230 KV AND GEYSER # 17
3  31422     0  "1"     0     # GEYSER17  13.80       PGEN=36.00  QGEN=62.30
 #
1  30391 30393  "1 "    0     # line from  CR1T3_18 230.00   (3) to (3)   G14CRT15 230.00
```

```
 1  30391 30399  "1 "    0     # line from  CR1T3_18 230.00   (3) to (3)   NCPATT2  230.00
 1  30391 30430  "1 "    0     # line from  CR1T3_18 230.00   (3) to BRKR  FULTON   230.00
 1  30393 30394  "1 "    0     # line from  G14CRT15 230.00   (3) to (2)   GEYSR12  230.00
 1  30393 30396  "1 "    0     # line from  G14CRT15 230.00   (3) to (2)   GEYSR14  230.00
 1  30399 30400  "1 "    0     # line from  NCPATT2  230.00   (3) to (4)   G16T0_2  230.00
 1  30399 30404  "1 "    0     # line from  NCPATT2  230.00   (3) to (3)   NCPA2    230.00
 1  30400 30401  "1 "    0     # line from  G16T0_2  230.00   (4) to (2)   BEARCNYN 230.00
 1  30400 30402  "1 "    0     # line from  G16T0_2  230.00   (4) to (2)   WSFRDFLT 230.00
 1  30400 30403  "1 "    0     # line from  G16T0_2  230.00   (4) to (2)   GEYSR16  230.00
 2  30401 31402  "1 "    0     # TRAN from  BEARCNYN 230.00  BRKR to (1)   BEAR CAN  13.80
 2  30402 31404  "1 "    0     # TRAN from  WSFRDFLT 230.00  BRKR to (1)   WEST FOR  13.80
 2  30403 31420  "1 "    0     # TRAN from  GEYSR16  230.00  BRKR to (1)   GEYSER16  13.80
 2  30404 38110  "1 "    0     # TRAN from  NCPA2    230.00  BRKR to (1)   NCPA2GY1  13.80
 2  30404 38112  "1 "    0     # TRAN from  NCPA2    230.00  BRKR to (1)   NCPA2GY2  13.80
 2  30394 31414  "1 "    0     # TRAN from  GEYSR12  230.00  BRKR to (1)   GEYSER12  13.80
 2  30396 31418  "1 "    0     # TRAN from  GEYSR14  230.00  BRKR to (1)   GEYSER14  13.80
 3  31402     0  "1 "    0     # GEN-DROP    BEAR CAN  13.80  GEN==9.80(2.65)
 3  31402     0  "2 "    0     # GEN-DROP    BEAR CAN  13.80  GEN==9.80(2.65)
 3  31404     0  "1 "    0     # GEN-DROP    WEST FOR  13.80  GEN==12.10(6.35)
 3  31404     0  "2 "    0     # GEN-DROP    WEST FOR  13.80  GEN==12.00(6.30)
 3  31420     0  "1 "    0     # GEN-DROP    GEYSER16  13.80  GEN==64.00(18.85)
 3  38110     0  "1 "    0     # GEN-DROP    NCPA2GY1  13.80  GEN==36.00(4.11)
 3  38112     0  "1 "    0     # GEN-DROP    NCPA2GY2  13.80  GEN==36.00(4.11)
 3  31414     0  "1 "    0     # GEN-DROP    GEYSER12  13.80  GEN==31.00(7.89)
 3  31418     0  "1 "    0     # GEN-DROP    GEYSER14  13.80  GEN==54.00(7.99)
 0
  #
  #
  # (143)  L-1/G-1 OVERLAPPING OUTAGE
  # GEYSERS #9 - LAKEVILLE 230 KV AND GEYSER # 17
 3  31422     0  "1"     0     # GEYSER17  13.80       PGEN=36.00  QGEN=62.30
  #
 1  30392 30405  "1 "    0     # line from  G9CRT2_9 230.00   (3) to (3)   G9CRT111 230.00
 1  30392 30395  "1 "    0     # line from  G9CRT2_9 230.00   (3) to (2)   GEYSR18  230.00
 1  30392 30397  "1 "    0     # line from  G9CRT2_9 230.00   (3) to (3)   CR2T3_18 230.00
 1  30405 30406  "1 "    0     # line from  G9CRT111 230.00   (3) to (3)   G13TT1_9 230.00
 1  30405 30413  "1 "    0     # line from  G9CRT111 230.00   (3) to (2)   SMUDGEO1 230.00
 2  30395 31424  "1 "    0     # TRAN from  GEYSR18  230.00  BRKR to (1)   GEYSER18  13.80
 1  30397 30398  "1 "    0     # line from  CR2T3_18 230.00   (3) to (3)   NCPA1    230.00
 1  30397 30435  "1 "    0     # line from  CR2T3_18 230.00   (3) to BRKR  LAKEVILE 230.00
 2  30398 38106  "1 "    0     # TRAN from  NCPA1    230.00  BRKR to (1)   NCPA1GY1  13.80
 2  30398 38108  "1 "    0     # TRAN from  NCPA1    230.00  BRKR to (1)   NCPA1GY2  13.80
 1  30406 30407  "1 "    0     # line from  G13TT1_9 230.00   (3) to (3)   G13TT1_8 230.00
 1  30406 30410  "1 "    0     # line from  G13TT1_9 230.00   (3) to (2)   GEYSR20  230.00
 1  30407 30408  "1 "    0     # line from  G13TT1_8 230.00   (3) to (2)   SNTAFE   230.00
 1  30407 30409  "1 "    0     # line from  G13TT1_8 230.00   (3) to (2)   GEYSR13  230.00
 2  30408 31400  "1 "    0     # TRAN from  SNTAFE   230.00  BRKR to (1)   SANTA FE  13.80
 2  30409 31416  "1 "    0     # TRAN from  GEYSR13  230.00  BRKR to (1)   GEYSER13  13.80
 2  30410 31426  "1 "    0     # TRAN from  GEYSR20  230.00  BRKR to (1)   GEYSER20  13.80
```

```
 2  30413 31430  "1 "    0     # TRAN from  SMUDGEO1 230.00  BRKR to (1)   SMUDGEO1  13.80
 3  31424     0  "1 "    0     # GEN-DROP    GEYSER18  13.80  GEN==56.00(8.47)
 3  38106     0  "1 "    0     # GEN-DROP    NCPA1GY1  13.80  GEN==35.00(2.44)
 3  38108     0  "1 "    0     # GEN-DROP    NCPA1GY2  13.80  GEN==35.00(2.44)
 3  31400     0  "1 "    0     # GEN-DROP    SANTA FE  13.80  GEN==64.20(5.10)
 3  31416     0  "1 "    0     # GEN-DROP    GEYSER13  13.80  GEN==68.00(23.47)
 3  31426     0  "1 "    0     # GEN-DROP    GEYSER20  13.80  GEN==52.00(6.22)
 3  31430     0  "1 "    0     # GEN-DROP    SMUDGEO1  13.80  GEN==33.00(10.44)
 0
  #
  # (144)  L-1/G-1 OVERLAPPING OUTAGE
  # MENDOCINO - REDBUD 115 KV AND GEYSER # 17
 3  31422     0  "1"     0     # GEYSER17  13.80       PGEN=36.00  QGEN=62.30
  #
 1  31200 31217  "1 "    0     # line from  MENDOCNO 115.00  BRKR to (2)   LUCERNJ2 115.00
 1  31217 31223  "1 "    0     # line from  LUCERNJ2 115.00   (2) to (2)   REDBUDJ1 115.00
 1  31223 31222  "1 "    0     # line from  REDBUDJ1 115.00   (2) to BRKR  REDBUD   115.00
 0
  #
  #
  # (145)  L-1/G-1 OVERLAPPING OUTAGE
  # UKIAH - HOPLAND - CLOVERDALE 115 KV AND GEYSER # 17
 3  31422     0  "1"     0     # GEYSER17  13.80       PGEN=36.00  QGEN=62.30
  #
 1  31204 31206  "1 "    0     # line from  UKIAH    115.00  BRKR to (3)   HPLND JT 115.00
 1  31206 31208  "1 "    0     # line from  HPLND JT 115.00   (3) to BRKR  CLOVRDLE 115.00
 2  31206 31336  "2 "    0     # TRAN from  HPLND JT 115.00  BRKR to BRKR  HPLND JT  60.00
 0
  #
  #
  # (146)  L-1/G-1 OVERLAPPING OUTAGE
  # GEYSERS #3 - CLOVERDALE 115 KV AND GEYSER # 17
 3  31422     0  "1"     0     # GEYSER17  13.80       PGEN=36.00  QGEN=62.30
  #
 1  31208 31210  "1 "    0     # line from  CLOVRDLE 115.00  BRKR to (3)   MPE TAP  115.00
 1  31210 31212  "1 "    0     # line from  MPE TAP  115.00   (3) to (2)   MPE      115.00
 1  31210 31214  "1 "    0     # line from  MPE TAP  115.00   (3) to BRKR  GEYERS56 115.00
 2  31212 31435  "1 "    0     # TRAN from  MPE      115.00   (2) to (1)   GEO.ENGY   9.11
 3  31435     0  "1 "    0     # GEN-DROP    GEO.ENGY   9.11  GEN==8.90(-2.33)
 3  31435     0  "2 "    0     # GEN-DROP    GEO.ENGY   9.11  GEN==8.90(-2.33)
 0
  #
  #
  # (147)  L-1/G-1 OVERLAPPING OUTAGE
  # CORTINA - MENDOCINO 115 KV AND GEYSER # 17
 3  31422     0  "1"     0     # GEYSER17  13.80       PGEN=36.00  QGEN=62.30
  #
 1  31215 31200  "1 "    0     # line from  LUCERNJ1 115.00   (3) to BRKR  MENDOCNO 115.00
 1  31215 31216  "1 "    0     # line from  LUCERNJ1 115.00   (3) to (1)   LUCERNE  115.00
```

```
 1  31215 31224  "1 "    0     # line from  LUCERNJ1 115.00   (3) to (3)   INDIN VL 115.00
 1  31224 31950  "1 "    0     # line from  INDIN VL 115.00   (3) to BRKR  CORTINA  115.00
 2  31224 31436  "1 "    0     # TRAN from  INDIN VL 115.00  BRKR to (1)   INDIAN V   9.11
 4  31216     0  "1 "    0     # LOAD-DROP    LUCERNE  115.00  LOAD==12.95(2.63)
 3  31436     0  "1 "    0     # GEN-DROP    INDIAN V   9.11  GEN==0.90(0.00)
 1  31217 31216  "1 "    1     # close line from LCERNJ2  115.00 to LUCERNE 115.00
 4  31216 0      "**"    1     # restore all loads to LUCERNE 115.00 (Cortina - Mendocino 115 kV)
 0
  #
  #
  # (148)  L-1/G-1 OVERLAPPING OUTAGE
  # EAGLE ROCK - REDBUD 115 KV AND GEYSER # 17
 3  31422     0  "1"     0     # GEYSER17  13.80
  #
 1  31220 31263  "1 "    0     # line from  EGLE RCK 115.00  BRKR to (2)   LWRLAKEJ 115.00
 1  31263 31225  "1 "    0     # line from  LWRLAKEJ 115.00   (2) to (3)   HGHLNDJ1 115.00
 1  31225 31226  "1 "    0     # line from  HGHLNDJ1 115.00   (3) to (1)   HGHLAND  115.00
 1  31225 31262  "1 "    0     # line from  HGHLNDJ1 115.00   (3) to (2)   CACHE J2 115.00
 1  31262 31229  "1 "    0     # line from  CACHE J2 115.00   (2) to (2)   REDBUDJ2 115.00
 1  31229 31222  "1 "    0     # line from  REDBUDJ2 115.00   (2) to BRKR  REDBUD   115.00
 4  31226     0  "1 "    0     # LOAD-DROP    HGHLAND  115.00  LOAD==24.24(4.92)
 1  31227 31226  "1 "    1     # close line from HGHLNDJ2 115.00 to HIGHLD  115.00
 4  31226 0      "**"    1     # restore all loads to HIGHLD  115.00 (Eagle Rock - Cortina 115 kV)
 0
  #
  # (149)  L-1/G-1 OVERLAPPING OUTAGE
  # FULTON - PUEBLO 115 KV AND GEYSER # 17
 3  31422     0  "1"     0     # GEYSER17  13.80       PGEN=36.00  QGEN=62.30
  #
 1  32562 32564  "1 "    0     # line from  PUEBLOJT 115.00   (2) to BRKR  PUEBLO   115.00
 1  32562 31265  "1 "    0     # line from  PUEBLOJT 115.00   (2) to (3)   STHELNJ2 115.00
 1  31265 32555  "1 "    0     # line from  STHELNJ2 115.00   (3) to (2)   MNTCLOJ2 115.00
 1  31265 32551  "1 "    0     # line from  STHELNJ2 115.00   (3) to (2)   SILVRDJ2 115.00
 1  32555 32561  "1 "    0     # line from  MNTCLOJ2 115.00   (2) to (1)   MTCLPHJ2 115.00
 1  32551 31251  "1 "    0     # line from  SILVRDJ2 115.00   (2) to (2)   RINCONJ2 115.00
 1  31251 31236  "1 "    0     # line from  RINCONJ2 115.00   (2) to BRKR  FULTON   115.00
 0
  #
  #
  # (150)  L-1/G-1 OVERLAPPING OUTAGE
  # CORONA - LAKEVILLE 115 KV AND GEYSER # 17
 3  31422     0  "1"     0     # GEYSER17  13.80       PGEN=36.00  QGEN=62.30
  #
 1  31254 31255  "1 "    0     # line from  CORONA   115.00  BRKR to BRKR  LAKEVLLE 115.00
 0
  #
  #
  # (151)  L-1/G-1 OVERLAPPING OUTAGE LAKEVILLE -
  # SONOMA 115 KV AND GEYSER # 17
```

```
3  31422     0  "1"     0     # GEYSER17  13.80       PGEN=36.00  QGEN=62.30
 #
1  31255 31258  "1 "    0     # line from  LAKEVLLE 115.00  BRKR to BRKR  SONOMA
0
 #
 #
 # (152)  L-1/G-1 OVERLAPPING OUTAGE
 # MENDOCINO - WILLITS 60 KV AND GEYSER # 17
3  31422     0  "1"     0     # GEYSER17  13.80       PGEN=36.00  QGEN=62.30
 #
1  31300 31306  "1 "    0     # line from  MENDOCNO  60.00  BRKR to BRKR  WILLITS
0
 #
 # (153)  L-1/G-1 OVERLAPPING OUTAGE
 # LAKEVILLE #1 60 KV AND GEYSER # 17
3  31422     0  "1"     0     # GEYSER17  13.80       PGEN=36.00  QGEN=62.30
 #
1  31392 31396  "1 "    0     # line from  LAKEVLLE  60.00  BRKR to (1)   DUNBAR    60.00
4  31396     0  "1 "    0     # LOAD-DROP    DUNBAR    60.00  LOAD==14.29(2.04)
4  31396     0  "2 "    0     # LOAD-DROP    DUNBAR    60.00  LOAD==11.19(1.59)
1  32650 31396  "1 "    1     # close line from ST.HELNA 60.00 to DUNBAR 60.00 (Lakeville #1 60 kV)
4  31396 0      "**"    1     # restore all loads to DUNBAR (Lakeville #1 60 kV)
0
 #
 #
 # (154)  L-1/G-1 OVERLAPPING OUTAGE
 # SONOMA - PUEBLO 115 KV AND GEYSER # 17
3  31422     0  "1"     0     # GEYSER17  13.80       PGEN=36.00  QGEN=62.30
 #
1  31258 32564  "1 "    0     # line from  SONOMA   115.00  BRKR to BRKR  PUEBLO
0
 #
 #
 # (155)  L-1/G-1 OVERLAPPING OUTAGE
 # Fulton-Lakeville 230 kV AND GEYSER #11
3  31412     0  "1"     0     # GEYSER11  13.80       PGEN=60.00  QGEN=27.81
 #
1  30430 30435  "1 "    0     # line from  FULTON   230.00  BRKR to BRKR  LAKEVILE  230.00-1
0
 #
 #
 # (156)  L-1/G-1 OVERLAPPING OUTAGE
 # Fulton-Lakeville 230 kV AND GEYSER #13
3  31416     0  "1"     0     # GEYSER13  13.80       PGEN=68.00  QGEN=28.50
 #
1  30430 30435  "1 "    0     # line from  FULTON   230.00  BRKR to BRKR  LAKEVILE  230.00
0
 #
 #
```

```
 # (157)  L-1/G-1 OVERLAPPING OUTAGE
 # Fulton-Lakeville 230 kV AND GEYSER #16
3  31420     0  "1"     0     # GEYSER16  13.80       PGEN=64.00  QGEN=35.75
 #
1  30430 30435  "1 "    0     # line from  FULTON   230.00  BRKR to BRKR  LAKEVILE  230.00
0
 #
 #
 # (158)  L-1/G-1 OVERLAPPING OUTAGE
 # Fulton-Ignacio 230 kV AND GEYSER #11
3  31412     0  "1"     0     # GEYSER11  13.80       PGEN=60.00  QGEN=27.81
 #
1  30430 30445  "1 "    0     # line from  FULTON   230.00  BRKR to BRKR  IGNACIO  230.00
0
 #
 #
 # (159)  L-1/G-1 OVERLAPPING OUTAGE
 # Fulton-Ignacio 230 kV AND GEYSER #13
3  31416     0  "1"     0     # GEYSER13  13.80       PGEN=68.00  QGEN=28.50
 #
1  30430 30445  "1 "    0     # line from  FULTON   230.00  BRKR to BRKR  IGNACIO  230.00
0
 #
 #
 # North Valley Division Zones 303/333
 # 2010 summer category b contingencies
 #
 #
 # (160)  B2 LINE OUTAGE (BREAKER-TO-BREAKER)
 #
1  30105 30111  "1 "    0     # line from  COTWD_E  230.00  BRKR to BRKR  LOGAN CR 230.00
0
 #
 #
 # (161)  B2 LINE OUTAGE (BREAKER-TO-BREAKER)
 #
1  30105 30245  "2 "    0     # line from  COTWD_E  230.00  BRKR to BRKR  ROUND MT 230.00
0
 #
 #
 # (164)  B2 LINE OUTAGE (BREAKER-TO-BREAKER)
 #
1  30105 30245  "3 "    0     # line from  COTWD_E  230.00  BRKR to BRKR  ROUND MT 230.00
0
 #
 #
 # (165)  B2 LINE OUTAGE (BREAKER-TO-BREAKER)
 #
1  30106 30108  "1 "    0     # line from  COTWD_F  230.00  BRKR to (3)   BRNY_FST 230.00
```

```
1  30108 30185  "1 "    0     # line from  BRNY_FST 230.00   (3) to BRKR  PIT 1    230.00
2  30108 31798  "1 "    0     # TRAN from  BRNY_FST 230.00   (3) to (1)   BRNYFRST  13.20
3  31798     0  "1 "    0     # GEN-DROP    BRNYFRST  13.20  GEN==26.60(0.30)
0
 #
 #
 # # (167)  B2 LINE OUTAGE (BREAKER-TO-BREAKER)
 #
1  30185 30190  "1 "    0     # line from  PIT 1    230.00  BRKR to (3)   SPI-BRNY 230.00
1  30190 30195  "1 "    0     # line from  SPI-BRNY 230.00   (3) to BRKR  PIT 3    230.00
2  30190 31874  "1 "    0     # TRAN from  SPI-BRNY 230.00   (3) to (1)   SPI-BURN   9.11
4  31874     0  "SG"    0     # LOAD-DROP    SPI-BURN   9.11  LOAD==2.06(0.47)
3  31874     0  "1 "    0     # GEN-DROP    SPI-BURN   9.11  GEN==15.80(-1.76)
4  31874     0  "1 "    1     # SPI Plant load remains conected with its own generator
0
 #
 #
 # (168)  B2 LINE OUTAGE (BREAKER-TO-BREAKER)
 #
1  30106 30110  "1 "    0     # line from  COTWD_F  230.00  BRKR to BRKR  GLENN    230.00
0
 #
 #
 # (169)  B2 LINE OUTAGE (BREAKER-TO-BREAKER)
 #
1  30105 30450  "1 "    0     # line from  COTWD_E  230.00  BRKR to BRKR  CORTINA  230.00  before
0
 #
 #
 # (170)  B2 LINE OUTAGE (BREAKER-TO-BREAKER)
 #
1  30105 30114  "1 "    0     # line from  COTWD_E  230.00  BRKR to BRKR  P0506STA 230.00  after
0
 #
 #
 # (171)  B2 LINE OUTAGE (BREAKER-TO-BREAKER)
 #
1  30114 30450  "1 "    0     # line from  P0506STA 230.00  BRKR to BRKR  CORTINA  230.00  after
0
 #
 #
 # (172)  B2 LINE OUTAGE (BREAKER-TO-BREAKER)
 #
1  30106 30460  "1 "    0     # line from  COTWD_F  230.00  BRKR to BRKR  VACA-DIX 230.00  before
0
 #
 #
 # (173)  B2 LINE OUTAGE (BREAKER-TO-BREAKER)
 #
```

```
 1  30106 30114  "2 "    0     # line from  COTWD_F  230.00  BRKR to BRKR  P0506STA 230.00  after
 0
  #
  #
  # (174)  B2 LINE OUTAGE (BREAKER-TO-BREAKER)
  #
 1  30114 30460  "2 "    0     # line from  P0506STA 230.00  BRKR to BRKR  VACA-DIX 230.00  after
 0
  #
  #
  # (175)  B2 LINE OUTAGE (BREAKER-TO-BREAKER)
  #
 1  30110 30460  "1 "    0     # line from  GLENN    230.00  BRKR to BRKR  VACA-DIX 230.00  before
 0
  #
  #
  # (176)  B2 LINE OUTAGE (BREAKER-TO-BREAKER)
  #
 1  30110 30114  "4 "    0     # line from  GLENN    230.00  BRKR to BRKR  P0506STA 230.00  after
 0
  #
  #
  # (177)  B2 LINE OUTAGE (BREAKER-TO-BREAKER)
  #
 1  30114 30460  "4 "    0     # line from  P0506STA 230.00  BRKR to BRKR  VACA-DIX 230.00  after
 0
  #
  #
  # (178)  B2 LINE OUTAGE (BREAKER-TO-BREAKER)
  #
 1  30111 30460  "1 "    0     # line from  LOGAN CR 230.00  BRKR to BRKR  VACA-DIX 230.00  before
 0
  #
  #
  # (179)  B2 LINE OUTAGE (BREAKER-TO-BREAKER)
  #
 1  30111 30114  "3 "    0     # line from  LOGAN CR 230.00  BRKR to BRKR  P0506STA 230.00  after
 0
  #
  #
  # (180)  B2 LINE OUTAGE (BREAKER-TO-BREAKER)
  #
 1  30114 30460  "3 "    0     # line from  P0506STA 230.00  BRKR to BRKR  VACA-DIX 230.00  after
 0
  #
  #
  # (181)  B2 LINE OUTAGE (BREAKER-TO-BREAKER)  after project outage
  #
 1  30114 30115  "1 "    0     # line from  P0506STA 230.00  BRKR to (3)   P0506BS1 230.00
```

```
 2  30115 31924  "1 "    0     # TRAN from  P0506BS1 230.00   (3) to (1)   P0506GT2  18.00
 2  30115 31925  "1 "    0     # TRAN from  P0506BS1 230.00   (3) to (1)   P0506ST1  18.00
 4  31924     0  "SG"    0     # LOAD-DROP    P0506GT2  18.00  LOAD==5.00(2.77)
 4  31925     0  "SG"    0     # LOAD-DROP    P0506ST1  18.00  LOAD==5.00(2.77)
 3  31924     0  "2 "    0     # GEN-DROP    P0506GT2  18.00  GEN==199.00(33.24)
 3  31925     0  "3 "    0     # GEN-DROP    P0506ST1  18.00  GEN==317.00(40.32)
 0
  #
  #
  # (184)  B2 LINE OUTAGE (BREAKER-TO-BREAKER)
  #
 1  30186 30185  "1 "    0     # line from  MALACHA2 230.00   (2) to BRKR  PIT 1    230.00
 2  30186 31458  "2 "    0     # TRAN from  MALACHA2 230.00   (2) to BRKR  MALACHA2 115.00
 0
  #
  #
  # (185)  B2 LINE OUTAGE (BREAKER-TO-BREAKER)
  #
 1  30195 30245  "1 "    0     # line from  PIT 3    230.00  BRKR to BRKR  ROUND MT 230.00
 0
  #
  #
  # (186)  B2 LINE OUTAGE (BREAKER-TO-BREAKER)
  #
 1  30200 30225  "1 "    0     # line from  PIT 4    230.00  BRKR to (3)   PIT 4 JT 230.00
 1  30225 30209  "2 "    0     # line from  PIT 4 JT 230.00   (3) to (2)   PIT5JT2  230.00
 1  30225 30245  "2 "    0     # line from  PIT 4 JT 230.00   (3) to BRKR  ROUND MT 230.00
 1  30209 30205  "1 "    0     # line from  PIT5JT2  230.00   (2) to BRKR  BLACK    230.00
 0
  #
  #
  # (187)  B2 LINE OUTAGE (BREAKER-TO-BREAKER)
  #
 1  30210 30232  "1 "    0     # line from  PIT 5 JT 230.00  BRKR to (3)   COVE_RD. 230.00
 1  30232 30223  "1 "    0     # line from  COVE_RD. 230.00   (3) to (2)   PIT 7JT2 230.00
 1  30232 30231  "1 "    0     # line from  COVE_RD. 230.00   (3) to (2)   COVERDTP 230.00
 1  30223 30245  "1 "    0     # line from  PIT 7JT2 230.00   (2) to BRKR  ROUND MT 230.00
 2  30231 31846  "1 "    0     # TRAN from  COVERDTP 230.00   (2) to (1)   HATCHET+   9.11
 3  31846     0  "2 "    0     # GEN-DROP    HATCHET+   9.11  GEN==2.50(1.30)
 2  30210 31806  "1 "    0     # PIT generation goes off line with PIT 5-Round Mt. #1 230 kV outage
 2  30210 31804  "1 "    0     # PIT generation goes off line with PIT 5-Round Mt. #1 230 kV outage
 3  31806     0  "1 "    0     # PIT generation goes off line with PIT 5-Round Mt. #1 230 kV outage
 3  31806     0  "2 "    0     # PIT generation goes off line with PIT 5-Round Mt. #1 230 kV outage
 3  31804     0  "1 "    0     # PIT generation goes off line with PIT 5-Round Mt. #1 230 kV outage
 3  31804     0  "2 "    0     # PIT generation goes off line with PIT 5-Round Mt. #1 230 kV outage
 0
  #
  #
  # (188)  B2 LINE OUTAGE (BREAKER-TO-BREAKER)
```

```
 #
1  30215 30230  "1 "    0     # line from  PIT 6    230.00  BRKR to (2)   PIT 6 JT 230.00
1  30230 30222  "1 "    0     # line from  PIT 6 JT 230.00   (2) to (3)   PIT 7 JT 230.00
1  30222 30220  "1 "    0     # line from  PIT 7 JT 230.00   (3) to BRKR  PIT 7    230.00
1  30222 30245  "1 "    0     # line from  PIT 7 JT 230.00   (3) to BRKR  ROUND MT 230.00
0
 #
 #
 # (189)  B2 LINE OUTAGE (BREAKER-TO-BREAKER)
 #
1  30250 30261  "1 "    0     # line from  CARIBOU  230.00  BRKR to (2)   BELDENTP 230.00
1  30261 30300  "1 "    0     # line from  BELDENTP 230.00   (2) to BRKR  TBL MT D 230.00
3  31808     0  "1 "    0     # the RAS for Caribou-Table Mt 230 kV line loss will drop
3  31808     0  "2 "    0     # Caribou Units 2 & 3
3  31782     0  "1 "    0     # Caribou Units 4 & 5
3  31782     0  "2 "    0     # Caribou Units 4 & 5
3  31810     0  "1 "    0     # Caribou 1
3  31894     0  "1 "    0     # Collins Pine
3  31892     0  "1 "    0     # Lassen Power
3  31780     0  "1 "    0     # Butt Valley
2  31780 31490  "1 "    0     # Butt Valley transformer
1  31486 31490  "1 "    0     # Caribou - Butt Valley line
0
 #
 #
 # (190)  B2 LINE OUTAGE (BREAKER-TO-BREAKER)
 #
1  30260 30262  "1 "    0     # line from  BELDEN   230.00  BRKR to (3)   RK C JT1 230.00
1  30262 30268  "1 "    0     # line from  RK C JT1 230.00   (3) to BRKR  ROCKCK 1 230.00
1  30262 30280  "1 "    0     # line from  RK C JT1 230.00   (3) to BRKR  POE      230.00
2  30280 31790  "1 "    0     #Take the transformer out with ROCK CREEK-POE 230kV line outage
3  31790     0  "1 "    0     #Take generator #1 at POE 1 out with ROCK CREEK-POE 230kV line outage
0
 #
 #
 # (191)  B2 LINE OUTAGE (BREAKER-TO-BREAKER)
 #
1  30265 30272  "1 "    0     # line from  BCKS CRK 230.00  BRKR to (3)   RK C JT2 230.00
1  30272 30270  "1 "    0     # line from  RK C JT2 230.00   (3) to BRKR  ROCKCK 2 230.00
1  30272 30275  "1 "    0     # line from  RK C JT2 230.00   (3) to BRKR  CRESTA   230.00
0
 #
 #
 # (192)  B2 LINE OUTAGE (BREAKER-TO-BREAKER)
 #
1  30275 30330  "1 "    0     # line from  CRESTA   230.00  BRKR to BRKR  RIO OSO  230.00
0
 #
 #
```

```
 # (193)  B2 LINE OUTAGE (BREAKER-TO-BREAKER)
 #
1  30280 30330  "1 "    0     # line from  POE      230.00  BRKR to BRKR  RIO OSO  230.00
2  30280 31792  "1 "    0     # Take the transformer out with Rio Oso-Poe 230 kV line outage
3  31792     0  "1 "    0     # Take the generator out with Rio Oso-Poe 230 kV line outage
0
 #
 #
 # (194)  B2 LINE OUTAGE (BREAKER-TO-BREAKER)
 #
1  30300 30325  "1 "    0     # line from  TBL MT D 230.00  BRKR to BRKR  PALERMO  230.00
0
 #
 #
 # (195)  B2 LINE OUTAGE (BREAKER-TO-BREAKER)
 #
1  30300 30330  "1 "    0     # line from  TBL MT D 230.00  BRKR to BRKR  RIO OSO  230.00
0
 #
 #
 # (196)  B2 LINE OUTAGE (BREAKER-TO-BREAKER)
 #
1  30302 30300  "1 "    0     # line from  TBL MTX1 230.00   (3) to BRKR  TBL MT D 230.00
1  30302 30303  "1 "    0     # line from  TBL MTX1 230.00   (3) to BRKR  TBL MT E 230.00
2  30302 30066  "1 "    0     # TRAN from  TBL MTX1 230.00   (3) to (3)   TB MT 1M 500.00
2  30066 30015  "1 "    0     # TRAN from  TB MT 1M 500.00   (3) to BRKR  TABLE MT 500.00
2  30066 31762  "1 "    0     # TRAN from  TB MT 1M 500.00   (3) to (1)   TB MT 1T  13.80
0
 #
 #
 # (197)  B2 LINE OUTAGE (BREAKER-TO-BREAKER)
 #
1  30303 38621  "2 "    0     # line from  TBL MT E 230.00  BRKR to (3)   HYATT2   230.00
2  38621 38835  "1 "    0     # TRAN from  HYATT2   230.00   (3) to (1)   HYATT 3   12.50
2  38621 38840  "1 "    0     # TRAN from  HYATT2   230.00   (3) to (1)   HYATT 4   12.50
3  38835     0  "1 "    0     # GEN-DROP    HYATT 3   12.50  GEN==125.00(20.70)
3  38840     0  "1 "    0     # GEN-DROP    HYATT 4   12.50  GEN==115.00(19.87)
0
 #
 #
 # (198)  B2 LINE OUTAGE (BREAKER-TO-BREAKER)
 #
1  30303 38635  "1 "    0     # line from  TBL MT E 230.00  BRKR to (3)   THM JCT  230.00
1  38635 38620  "1 "    0     # line from  THM JCT  230.00   (3) to BRKR  HYATT    230.00
1  38635 38630  "2 "    0     # line from  THM JCT  230.00   (3) to BRKR  THERMLTO 230.00
1  38623 38630  "1"     1     # Transfer to alternate Thermalito tap
0
 #
 #
```

```
 # (199)  B2 LINE OUTAGE (BREAKER-TO-BREAKER)
 #
1  30325 30327  "1 "    0     # line from  PALERMO  230.00  BRKR to BRKR  COLGATE  230.00
2  30327 32450  "1 "    0     #Take one transformer out with Palermo-Colgate 230 kV line outage
3  32450     0  "1 "    0     #Take one generator out with Palermo-Colgate 230 kV line outage
0
 #
 #
 # (200)  B2 LINE OUTAGE (BREAKER-TO-BREAKER)
 #
1  31000 31452  "1 "    0     # line from  HUMBOLDT 115.00  BRKR to BRKR  TRINITY  115.00
0
 #
 #
 # (201)  B2 LINE OUTAGE (BREAKER-TO-BREAKER)
 #
1  31010 31450  "1 "    0     # line from  LOW GAP1 115.00   (2) to (2)   WILDWOOD 115.00
1  31010 31015  "1 "    0     # line from  LOW GAP1 115.00   (2) to BRKR  BRDGVLLE 115.00
1  31450 31464  "1 "    0     # line from  WILDWOOD 115.00   (2) to BRKR  COTWDPGE 115.00
4  31010     0  "1 "    0     # LOAD-DROP    LOW GAP1 115.00  LOAD==0.64(0.31)
4  31450     0  "1 "    0     # LOAD-DROP    WILDWOOD 115.00  LOAD==0.52(0.10)
0
 #
 #
 # (202)  B2 LINE OUTAGE (BREAKER-TO-BREAKER)
 #
1  31091 31093  "1 "    0     # line from  RDGE CBN  60.00   (2) to (3)   HYMPOMJT  60.00
1  31091 31092  "1 "    0     # line from  RDGE CBN  60.00   (2) to BRKR  MPLE CRK  60.00
1  31093 31554  "1 "    0     # line from  HYMPOMJT  60.00   (3) to (2)   GROUSCRK  60.00
1  31093 31556  "1 "    0     # line from  HYMPOMJT  60.00   (3) to BRKR  TRINITY   60.00
2  31554 31850  "1 "    0     # TRAN from  GROUSCRK  60.00  BRKR to (1)   CEDR FL+   9.11
4  31554     0  "1 "    0     # LOAD-DROP    GROUSCRK  60.00  LOAD==1.39(0.32)
4  31554     0  "2 "    0     # LOAD-DROP    GROUSCRK  60.00  LOAD==0.17(0.04)
4  31554     0  "3 "    0     # LOAD-DROP    GROUSCRK  60.00  LOAD==0.45(0.10)
2  31554 31850  "1"     0     #Transformer gets dropped
4  31554     0  "**"    0     #Load gets dropped at GROUSCRK
0
 #
 #
 # (203)  B2 LINE OUTAGE (BREAKER-TO-BREAKER)
 #
1  31452 31461  "1 "    0     # line from  TRINITY  115.00  BRKR to (2)   JESSTAP  115.00
1  31461 31464  "1 "    0     # line from  JESSTAP  115.00   (2) to BRKR  COTWDPGE 115.00
0
 #
 #
 # (204)  B2 LINE OUTAGE (BREAKER-TO-BREAKER)
 #
1  31454 31462  "1 "    0     # line from  PANRAMA  115.00   (1) to (3)   SMPSN-AN 115.00
```

```
 1  31462 31463  "1 "    0     # line from  SMPSN-AN 115.00   (3) to (3)   WHEELBR  115.00
 2  31462 31800  "1 "    0     # TRAN from  SMPSN-AN 115.00   (3) to (1)   SMPSN-AN  12.47
 1  31463 31464  "1 "    0     # line from  WHEELBR  115.00   (3) to BRKR  COTWDPGE 115.00
 2  31463 31465  "1 "    0     # TRAN from  WHEELBR  115.00   (3) to (1)   WHEELBR1   9.10
 4  31454     0  "1 "    0     # LOAD-DROP    PANRAMA  115.00  LOAD==9.53(0.43)
 4  31800     0  "SG"    0     # LOAD-DROP    SMPSN-AN  12.47  LOAD==0.60(0.14)
 4  31465     0  "SG"    0     # LOAD-DROP    WHEELBR1   9.10  LOAD==4.39(1.00)
 3  31800     0  "1 "    0     # GEN-DROP    SMPSN-AN  12.47  GEN==42.00(1.66)
 3  31465     0  "1 "    0     # GEN-DROP    WHEELBR1   9.10  GEN==16.60(-0.13)
 3  31465     0  "2 "    0     # GEN-DROP    WHEELBR1   9.10  GEN==16.60(-0.13)
 3  31465     0  "3 "    0     # GEN-DROP    WHEELBR1   9.10  GEN==16.60(-0.13)
 3  31465     0  "4 "    0     # GEN-DROP    WHEELBR1   9.10  GEN==7.80(-0.06)
 0
  #
  #
  # (205)  B2 LINE OUTAGE (BREAKER-TO-BREAKER)
  #
 1  31459 31469  "1 "    0     # line from  OREGNTRL 115.00   (2) to (3)   SPI_AND  115.00
 1  31459 31468  "1 "    0     # line from  OREGNTRL 115.00   (2) to BRKR  CASCADE  115.00
 1  31469 31466  "1 "    0     # line from  SPI_AND  115.00   (3) to (3)   JESSUPJ1 115.00
 2  31469 31471  "1 "    0     # TRAN from  SPI_AND  115.00   (3) to (1)   SPI_AND1   9.10
 1  31466 31464  "1 "    0     # line from  JESSUPJ1 115.00   (3) to BRKR  COTWDPGE 115.00
 1  31466 31467  "1 "    0     # line from  JESSUPJ1 115.00   (3) to (1)   JESSUP   115.00
 4  31459     0  "2 "    0     # LOAD-DROP    OREGNTRL 115.00  LOAD==13.87(0.62)
 4  31467     0  "1 "    0     # LOAD-DROP    JESSUP   115.00  LOAD==24.04(1.07)
 3  31471     0  "1 "    0     # GEN-DROP    SPI_AND1   9.10  GEN==4.30(-2.50)
 0
  #
  #
  # (206)  B2 LINE OUTAGE (BREAKER-TO-BREAKER)
  #
 1  31470 31472  "1 "    0     # line from  SLYCREEK 115.00   (2) to (4)   WODLF TP 115.00
 2  31470 31832  "1 "    0     # TRAN from  SLYCREEK 115.00  BRKR to (1)   SLY.CR.    9.11
 1  31472 31474  "1 "    0     # line from  WODLF TP 115.00   (4) to (3)   FRBSTNTP 115.00
 2  31472 31862  "1 "    0     # TRAN from  WODLF TP 115.00  BRKR to (1)   DEADWOOD   9.11
 2  31472 31794  "1 "    0     # TRAN from  WODLF TP 115.00  BRKR to (1)   WOODLEAF  13.80
 1  31474 31476  "1 "    0     # line from  FRBSTNTP 115.00   (3) to (3)   OWID     115.00
 2  31474 31814  "1 "    0     # TRAN from  FRBSTNTP 115.00  BRKR to (1)   FORBSTWN  11.50
 1  31476 31475  "1 "    0     # line from  OWID     115.00   (3) to (1)   KANAKAJT 115.00
 1  31476 31482  "1 "    0     # line from  OWID     115.00   (3) to BRKR  PALERMO  115.00
 4  31475     0  "KK"    0     # LOAD-DROP    KANAKAJT 115.00  LOAD==1.02(0.04)
 3  31832     0  "1 "    0     # GEN-DROP    SLY.CR.    9.11  GEN==12.00(-2.00)
 3  31794     0  "1 "    0     # GEN-DROP    WOODLEAF  13.80  GEN==55.00(14.18)
 3  31814     0  "1 "    0     # GEN-DROP    FORBSTWN  11.50  GEN==30.00(9.34)
 0
  #
  #
  # (207)  B2 LINE OUTAGE (BREAKER-TO-BREAKER)
  #
```

```
1  31478 31494  "1 "    0     # line from  TBLM JCT 115.00   (2) to (2)   BIGBENTP 115.00
1  31478 31504  "1 "    0     # line from  TBLM JCT 115.00   (2) to BRKR  TBLE MTN 115.00
1  31494 31514  "1 "    0     # line from  BIGBENTP 115.00   (2) to BRKR  PARADSE  115.00
0
 #
 #
 # (208)  B2 LINE OUTAGE (BREAKER-TO-BREAKER)
 #
1  31480 31518  "1 "    0     # line from  WYANDTTE 115.00   (1) to (2)   WYANDJT1 115.00
1  31518 31482  "1 "    0     # line from  WYANDJT1 115.00   (2) to BRKR  PALERMO  115.00
4  31480     0  "1 "    0     # LOAD-DROP    WYANDTTE 115.00  LOAD==7.80(0.35)
4  31480     0  "2 "    0     # LOAD-DROP    WYANDTTE 115.00  LOAD==24.60(1.10)
4  31480     0  "3 "    0     # LOAD-DROP    WYANDTTE 115.00  LOAD==18.74(0.84)
1  31480 31516  "1"     1     #Transfer load from PALERMO-WYANDOTTE to CARIBOU-PALERMO 115kV
4  31480     0  "**"    1     #Restore loads at Wyandotte
0
 #
 #
 # (209)  B2 LINE OUTAGE (BREAKER-TO-BREAKER)
 #
1  31482 31506  "1 "    0     # line from  PALERMO  115.00  BRKR to (2)   HONC JT1 115.00
1  31506 32200  "1 "    0     # line from  HONC JT1 115.00   (2) to BRKR  PEASE    115.00
0
 #
 #
 # (210)  B2 LINE OUTAGE (BREAKER-TO-BREAKER)
 #
1  31482 31508  "1 "    0     # line from  PALERMO  115.00  BRKR to (3)   HONC JT3 115.00
1  31508 31484  "1 "    0     # line from  HONC JT3 115.00   (3) to (1)   HONCUT   115.00
1  31508 32286  "1 "    0     # line from  HONC JT3 115.00   (3) to (2)   OLIVH J3 115.00
1  32286 32206  "1 "    0     # line from  OLIVH J3 115.00   (2) to BRKR  BOGUE    115.00
4  31484     0  "1 "    0     # LOAD-DROP    HONCUT   115.00  LOAD==13.02(0.00)
0
 #
 #
 # (211)  B2 LINE OUTAGE (BREAKER-TO-BREAKER)
 #
1  31482 31516  "2 "    0     # line from  PALERMO  115.00  BRKR to (2)   WYANDJT2 115.00
1  31516 31512  "2 "    0     # line from  WYANDJT2 115.00   (2) to (2)   BIG BEND 115.00
1  31512 31488  "1 "    0     # line from  BIG BEND 115.00   (2) to (3)   GRIZ JCT 115.00
1  31488 31486  "1 "    0     # line from  GRIZ JCT 115.00   (3) to BRKR  CARIBOU  115.00
1  31488 31492  "1 "    0     # line from  GRIZ JCT 115.00   (3) to (2)   GRIZZLY1 115.00
2  31492 31900  "1 "    0     # TRAN from  GRIZZLY1 115.00  BRKR to (1)   GRIZZLYG   6.90
3  31900     0  "1 "    0     # GEN-DROP    GRIZZLYG   6.90  GEN==16.80(-4.00)
0
 #
 #
 # (212)  B2 LINE OUTAGE (BREAKER-TO-BREAKER)
 #
```

```
1  31482 32280  "1 "    0     # line from  PALERMO  115.00  BRKR to (3)   E.MRY J2 115.00
1  32280 32202  "1 "    0     # line from  E.MRY J2 115.00   (3) to (1)   E.MRYSVE 115.00
1  32280 32212  "1 "    0     # line from  E.MRY J2 115.00   (3) to BRKR  E.NICOLS 115.00
4  32202     0  "2 "    0     # LOAD-DROP    E.MRYSVE 115.00  LOAD==11.26(0.51)
4  32202     0  "3 "    0     # LOAD-DROP    E.MRYSVE 115.00  LOAD==11.44(0.52)
1  32288 32202  "1"     1     #Close line from E.MRY J1 to E.MRYSVE 115 kV
4  32202     0  "**"    1     #Restore all load at E.MRYSVE 115 kV
0
 #
 #
 # (213)  B2 LINE OUTAGE (BREAKER-TO-BREAKER)
 #
1  31486 31490  "1 "    0     # line from  CARIBOU  115.00  BRKR to BRKR  BUTTVLLY 115.00
0
 #
 #
 # (214)  B2 LINE OUTAGE (BREAKER-TO-BREAKER)
 #
1  31496 31498  "1 "    0     # line from  NORD   1 115.00   (2) to BRKR  SYCAMORE 115.00
1  31496 31503  "1 "    0     # line from  NORD   1 115.00   (2) to (2)   CHICOTP2 115.00
1  31503 31500  "1 "    0     # line from  CHICOTP2 115.00   (2) to BRKR  BUTTE    115.00
4  31496     0  "1 "    0     # LOAD-DROP    NORD   1 115.00  LOAD==14.61(0.65)
4  31496     0  "2 "    0     # LOAD-DROP    NORD   1 115.00  LOAD==20.11(0.90)
0
 #
 #
 # (215)  B2 LINE OUTAGE (BREAKER-TO-BREAKER)
 #
1  31500 31501  "1 "    0     # line from  BUTTE    115.00  BRKR to (3)   CHICOTP1 115.00
1  31501 31502  "1 "    0     # line from  CHICOTP1 115.00   (3) to (1)   CHICO B  115.00
1  31501 31504  "1 "    0     # line from  CHICOTP1 115.00   (3) to BRKR  TBLE MTN 115.00
4  31502     0  "1 "    0     # LOAD-DROP    CHICO B  115.00  LOAD==15.45(0.70)
4  31502     0  "2 "    0     # LOAD-DROP    CHICO B  115.00  LOAD==15.45(0.70)
1  31503 31502  "1"     1     #Transfer load from Table Mountain-Butte #1 to Butte-Sycamore Creek 1
4  31502     0  "**"    1     #Restore load at Chico B
0
 #
 #
 # (216)  B2 LINE OUTAGE (BREAKER-TO-BREAKER)
 #
1  31500 31504  "2 "    0     # line from  BUTTE    115.00  BRKR to BRKR  TBLE MTN 115.00
0
 #
 #
 # (217)  B2 LINE OUTAGE (BREAKER-TO-BREAKER)
 #
1  31500 31514  "1 "    0     # line from  BUTTE    115.00  BRKR to BRKR  PARADSE  115.00
0
 #
```

```
 #
 # (218)  B2 LINE OUTAGE (BREAKER-TO-BREAKER)
 #
1  31504 31498  "1 "    0     # line from  TBLE MTN 115.00  BRKR to BRKR  SYCAMORE 115.00
0
 #
 #
 # (219)  B2 LINE OUTAGE (BREAKER-TO-BREAKER)
 #
1  31550 31552  "1 "    0     # line from  MC ARTHR  60.00   (2) to (2)   BIG VLY   60.00
1  31550 31628  "1 "    0     # line from  MC ARTHR  60.00   (2) to BRKR  PIT 1     60.00
2  31552 31876  "1 "    0     # TRAN from  BIG VLY   60.00  BRKR to (1)   BIG VLLY   9.11
4  31550     0  "1 "    0     # LOAD-DROP    MC ARTHR  60.00  LOAD==5.87(1.19)
0
 #
 #
 # (220)  B2 LINE OUTAGE (BREAKER-TO-BREAKER)
 #
1  31556 31558  "1 "    0     # line from  TRINITY   60.00  BRKR to (2)   DGLS CTY  60.00
1  31558 31560  "1 "    0     # line from  DGLS CTY  60.00   (2) to (2)   HAYFORK   60.00
2  31560 31880  "1 "    0     # TRAN from  HAYFORK   60.00  BRKR to BRKR  SPI-HAYF   9.11
4  31558     0  "1 "    0     # LOAD-DROP    DGLS CTY  60.00  LOAD==0.52(0.12)
4  31560     0  "1 "    0     # LOAD-DROP    HAYFORK   60.00  LOAD==2.62(0.59)
4  31880     0  "1 "    1     # SPI Plant load remains conected with its own generator
0
 #
 #
 # (221)  B2 LINE OUTAGE (BREAKER-TO-BREAKER)
 #
1  31556 31562  "1 "    0     # line from  TRINITY   60.00  BRKR to (2)   LEWISTON  60.00
1  31562 31564  "1 "    0     # line from  LEWISTON  60.00   (2) to (2)   FRNCHGLH  60.00
1  31564 31566  "1 "    0     # line from  FRNCHGLH  60.00   (2) to BRKR  KESWICK   60.00
4  31562     0  "1 "    0     # LOAD-DROP    LEWISTON  60.00  LOAD==3.20(0.73)
4  31564     0  "1 "    0     # LOAD-DROP    FRNCHGLH  60.00  LOAD==0.60(0.12)
0
 #
 #
 # (222)  B2 LINE OUTAGE (BREAKER-TO-BREAKER)
 #
1  31566 31582  "1 "    0     # line from  KESWICK   60.00   (2) to (2)   STLLWATR  60.00
1  31566 31564  "1 "    0     # line from  KESWICK   60.00  BRKR to (1)   FRNCHGLH  60.00
1  31582 31580  "1 "    0     # line from  STLLWATR  60.00   (2) to BRKR  CASCADE   60.00
4  31566     0  "1 "    0     # LOAD-DROP    KESWICK   60.00  LOAD==2.77(0.12)
4  31582     0  "1 "    0     # LOAD-DROP    STLLWATR  60.00  LOAD==7.49(0.34)
0
 #
 #
 # (223)  B2 LINE OUTAGE (BREAKER-TO-BREAKER)
 #
```

```
1  31570 31572  "1 "    0     # line from  BENTON    60.00  BRKR to (2)   GIRVAN    60.00
1  31572 31574  "1 "    0     # line from  GIRVAN    60.00   (2) to (2)   ANDERSON  60.00
1  31574 31604  "1 "    0     # line from  ANDERSON  60.00   (2) to BRKR  COTTONWD  60.00
4  31572     0  "1 "    0     # LOAD-DROP    GIRVAN    60.00  LOAD==6.75(0.30)
4  31574     0  "1 "    0     # LOAD-DROP    ANDERSON  60.00  LOAD==15.53(0.70)
0
 #
 #
 # (224)  B2 LINE OUTAGE (BREAKER-TO-BREAKER)
 #
1  31570 31604  "2 "    0     # line from  BENTON    60.00  BRKR to BRKR  COTTONWD  60.00
0
 #
 #
 # (225)  B2 LINE OUTAGE (BREAKER-TO-BREAKER)
 #
1  31576 31570  "1 "    0     # line from  WNTU PMS  60.00   (2) to BRKR  BENTON    60.00
1  31576 31578  "1 "    0     # line from  WNTU PMS  60.00   (2) to (3)   LOMS JCT  60.00
1  31578 31592  "1 "    0     # line from  LOMS JCT  60.00   (3) to BRKR  DESCHUTS  60.00
1  31578 31581  "1 "    0     # line from  LOMS JCT  60.00   (3) to (2)   OREGNTRL  60.00
1  31581 31580  "1 "    0     # line from  OREGNTRL  60.00   (2) to BRKR  CASCADE   60.00
4  31576     0  "1 "    0     # LOAD-DROP    WNTU PMS  60.00  LOAD==2.40(0.55)
4  31581     0  "1 "    0     # LOAD-DROP    OREGNTRL  60.00  LOAD==3.88(0.17)
0
 #
 #
 # (226)  B2 LINE OUTAGE (BREAKER-TO-BREAKER)
 #
1  31580 31584  "1 "    0     # line from  CASCADE   60.00  BRKR to BRKR  MTN GATE  60.00
4  31584     0  "**"    0     #Drop Mountain Gate load during Mountain Gate Jct-Cascade 60 kV outag
0
 #
 #
 # (227)  B2 LINE OUTAGE (BREAKER-TO-BREAKER)
 #
1  31584 31585  "1 "    0     # line from  MTN GATE  60.00  BRKR to (2)   ANTLER    60.00
1  31585 31586  "1 "    0     # line from  ANTLER    60.00   (2) to (1)   PPL       60.00
4  31585     0  "1 "    0     # LOAD-DROP    ANTLER    60.00  LOAD==2.99(0.61)
0
 #
 #
 # (228)  B2 LINE OUTAGE (BREAKER-TO-BREAKER)
 #
1  31587 31598  "1 "    0     # line from  OLSEN JT  60.00   (3) to BRKR  KILARC    60.00
1  31587 31588  "1 "    0     # line from  OLSEN JT  60.00   (3) to (2)   WHITMORE  60.00
2  31587 31854  "1 "    0     # TRAN from  OLSEN JT  60.00   (3) to (1)   OLSEN +4   9.11
1  31588 31595  "1 "    0     # line from  WHITMORE  60.00   (2) to (3)   TKO TAP   60.00
1  31595 31593  "1 "    0     # line from  TKO TAP   60.00   (3) to (3)   COWCK TP  60.00
2  31595 31855  "1 "    0     # TRAN from  TKO TAP   60.00   (3) to (1)   TKO        9.11
```

```
1  31593 31592  "1 "    0     # line from  COWCK TP  60.00   (3) to BRKR  DESCHUTS  60.00
2  31593 31856  "1 "    0     # TRAN from  COWCK TP  60.00   (3) to (1)   COWCRK     9.11
4  31588     0  "1 "    0     # LOAD-DROP    WHITMORE  60.00  LOAD==1.25(0.26)
3  31855     0  "3 "    0     # GEN-DROP    TKO        9.11  GEN==0.70(0.58)
3  31856     0  "2 "    0     # GEN-DROP    COWCRK     9.11  GEN==0.80(0.00)
0
 #
 #
 # (229)  B2 LINE OUTAGE (BREAKER-TO-BREAKER)
 #
1  31590 31591  "1 "    0     # line from  CEDR CRK  60.00   (1) to (3)   CLOV TAP  60.00
1  31591 31598  "1 "    0     # line from  CLOV TAP  60.00   (3) to BRKR  KILARC    60.00
2  31591 31872  "1 "    0     # TRAN from  CLOV TAP  60.00   (3) to (1)   CLOVER     9.11
4  31590     0  "1 "    0     # LOAD-DROP    CEDR CRK  60.00  LOAD==1.23(0.25)
3  31872     0  "1 "    0     # GEN-DROP    CLOVER     9.11  GEN==0.60(0.10)
3  31828     0  "1 "    0     #Drop Kilarc generation No.1 with Kilarc - Cedar Creek #60kV
3  31828     0  "2 "    0     #Drop Kilarc generation No.2 with Kilarc - Cedar Creek #60kV
0
 #
 #
 # (230)  B2 LINE OUTAGE (BREAKER-TO-BREAKER)
 #
1  31592 31594  "1 "    0     # line from  DESCHUTS  60.00  BRKR to BRKR  VOLTA     60.00
0
 #
 #
 # (231)  B2 LINE OUTAGE (BREAKER-TO-BREAKER)
 #
1  31594 31596  "1 "    0     # line from  VOLTA     60.00  BRKR to BRKR  SOUTH     60.00
3  31826     0  "1 "    0     #Drop South generation
0
 #
 #
 # (232)  B2 LINE OUTAGE (BREAKER-TO-BREAKER)
 #
1  31596 31600  "1 "    0     # line from  SOUTH     60.00  BRKR to (3)   INSKIP    60.00
1  31600 31602  "1 "    0     # line from  INSKIP    60.00   (3) to BRKR  COLEMAN   60.00
2  31600 31908  "1 "    0     # TRAN from  INSKIP    60.00   (3) to (1)   INSKIP     4.16
3  31908     0  "1 "    0     # GEN-DROP    INSKIP     4.16  GEN==6.90(1.18)
0
 #
 #
 # (233)  B2 LINE OUTAGE (BREAKER-TO-BREAKER)
 #
1  31602 31604  "1 "    0     # line from  COLEMAN   60.00  BRKR to BRKR  COTTONWD  60.00
0
 #
 #
 # (234)  B2 LINE OUTAGE (BREAKER-TO-BREAKER)
```

```
 #
1  31602 31606  "1 "    0     # line from  COLEMAN   60.00  BRKR to (3)   CLMN JCT  60.00
1  31606 31608  "1 "    0     # line from  CLMN JCT  60.00   (3) to BRKR  RED BLFF  60.00
1  31606 31612  "1 "    0     # line from  CLMN JCT  60.00   (3) to (2)   DIRYVLLE  60.00
1  31612 31619  "1 "    0     # line from  DIRYVLLE  60.00   (2) to (3)   LS ML JT  60.00
1  31619 31618  "1 "    0     # line from  LS ML JT  60.00   (3) to (1)   LS MLNSJ  60.00
1  31619 31620  "1 "    0     # line from  LS ML JT  60.00   (3) to (1)   VINA      60.00
4  31612     0  "1 "    0     # LOAD-DROP    DIRYVLLE  60.00  LOAD==3.35(0.15)
4  31618     0  "1 "    0     # LOAD-DROP    LS MLNSJ  60.00  LOAD==3.18(0.64)
4  31620     0  "1 "    0     # LOAD-DROP    VINA      60.00  LOAD==1.73(0.35)
0
 #
 #
 # (235)  B2 LINE OUTAGE (BREAKER-TO-BREAKER)
 #
1  31603 31609  "2 "    0     # line from  CANAL TP  60.00   (3) to (1)   CR CANAL  60.00
1  31603 31610  "2 "    0     # line from  CANAL TP  60.00   (3) to (1)   TYLER     60.00
1  31603 31611  "2 "    0     # line from  CANAL TP  60.00   (3) to (3)   RASN JNT  60.00
1  31611 31604  "2 "    0     # line from  RASN JNT  60.00   (3) to BRKR  COTTONWD  60.00
1  31611 31605  "2 "    0     # line from  RASN JNT  60.00   (3) to (2)   NEO REDT  60.00
2  31605 31621  "1 "    0     # TRAN from  NEO REDT  60.00   (2) to (1)   NEO REDB  13.80
4  31609     0  "CC"    0     # LOAD-DROP    CR CANAL  60.00  LOAD==3.00(0.68)
4  31610     0  "1 "    0     # LOAD-DROP    TYLER     60.00  LOAD==7.78(0.35)
4  31610     0  "2 "    0     # LOAD-DROP    TYLER     60.00  LOAD==7.05(0.32)
4  31611     0  "1 "    0     # LOAD-DROP    RASN JNT  60.00  LOAD==10.04(0.45)
4  31611     0  "PK"    0     # LOAD-DROP    RASN JNT  60.00  LOAD==6.53(3.53)
3  31621     0  "1 "    0     # GEN-DROP    NEO REDB  13.80  GEN==50.00(6.00)
0
 #
 #
 # (236)  B2 LINE OUTAGE (BREAKER-TO-BREAKER)
 #
1  31604 31607  "1 "    0     # line from  COTTONWD  60.00  BRKR to (2)   RED B JT  60.00
1  31607 31608  "1 "    0     # line from  RED B JT  60.00   (2) to BRKR  RED BLFF  60.00
1  31607 31614  "1 "    1     #Transfer Red Bluff to Alternate
0
 #
 #
 # (237)  B2 LINE OUTAGE (BREAKER-TO-BREAKER)
 #
1  31604 31614  "1 "    0     # line from  COTTONWD  60.00  BRKR to (3)   RWSN J2   60.00
1  31614 31613  "1 "    0     # line from  RWSN J2   60.00   (3) to (2)   TYLERJT   60.00
1  31614 31624  "1 "    0     # line from  RWSN J2   60.00   (3) to (2)   GRBR JCT  60.00
1  31613 31615  "1 "    0     # line from  TYLERJT   60.00   (2) to (1)   LP FB SP  60.00
1  31624 31616  "1 "    0     # line from  GRBR JCT  60.00   (2) to (1)   GERBER    60.00
4  31615     0  "1 "    0     # LOAD-DROP    LP FB SP  60.00  LOAD==3.35(3.71)
4  31615     0  "3 "    0     # LOAD-DROP    LP FB SP  60.00  LOAD==3.16(3.22)
4  31616     0  "1 "    0     # LOAD-DROP    GERBER    60.00  LOAD==6.54(1.33)
0
```

```
 #
 #
 # (238)  B2 LINE OUTAGE (BREAKER-TO-BREAKER)
 #
1  31626 31729  "4 "    0     # line from  CORNING   60.00   (1) to (2)   CORNSWCH  60.00
1  31729 31722  "4 "    0     # line from  CORNSWCH  60.00   (2) to BRKR  GLENN     60.00
4  31626     0  "1 "    0     # LOAD-DROP    CORNING   60.00  LOAD==1.88(0.38)
4  31626     0  "2 "    0     # LOAD-DROP    CORNING   60.00  LOAD==15.61(3.17)
4  31626     0  "3 "    0     # LOAD-DROP    CORNING   60.00  LOAD==11.26(2.28)
0
 #
 #
 # (239)  B2 LINE OUTAGE (BREAKER-TO-BREAKER)
 #
1  31628 31630  "1 "    0     # line from  PIT 1     60.00  BRKR to BRKR  HAT CRK1  60.00
4  31630     0  "1 "    0     #Drop Rising River load (HAT CRK1)
3  31902     0  "1 "    0     #Drop Hat Creek Generation
0
 #
 #
 # (240)  B2 LINE OUTAGE (BREAKER-TO-BREAKER)
 #
1  31628 31632  "1 "    0     # line from  PIT 1     60.00  BRKR to (3)   HAT CRK2  60.00
1  31632 31636  "1 "    0     # line from  HAT CRK2  60.00   (3) to (2)   BURNEY    60.00
2  31632 31904  "1 "    0     # TRAN from  HAT CRK2  60.00   (3) to (1)   HAT CRK2   6.60
1  31636 31638  "1 "    0     # line from  BURNEY    60.00   (2) to (2)   BURNEYQF  60.00
2  31638 31884  "1 "    0     # TRAN from  BURNEYQF  60.00   (2) to (1)   PAC.ENGY   9.11
4  31636     0  "1 "    0     # LOAD-DROP    BURNEY    60.00  LOAD==3.63(0.74)
4  31636     0  "2 "    0     # LOAD-DROP    BURNEY    60.00  LOAD==1.91(0.39)
3  31884     0  "1 "    0     # GEN-DROP    PAC.ENGY   9.11  GEN==9.80(0.63)
0
 #
 #
 # (241)  B2 LINE OUTAGE (BREAKER-TO-BREAKER)
 #
1  31634 31666  "1 "    0     # line from  HT CRKRG  60.00   (2) to (2)   HATLOSCK  60.00
2  31634 31630  "1 "    0     # TRAN from  HT CRKRG  60.00   (2) to BRKR  HAT CRK1  60.00
2  31666 31868  "1 "    0     # TRAN from  HATLOSCK  60.00   (2) to (1)   HATLOST+   9.11
4  31666     0  "BG"    0     # LOAD-DROP    HATLOSCK  60.00  LOAD==0.15(0.03)
0
 #
 #
 # (242)  B2 LINE OUTAGE (BREAKER-TO-BREAKER)
 #
1  31640 31644  "1 "    0     # line from  TRES VIS  60.00   (2) to (3)   BIGGSJCT  60.00
1  31640 31718  "1 "    0     # line from  TRES VIS  60.00   (2) to BRKR  TBLE MTN  60.00
1  31644 31642  "1 "    0     # line from  BIGGSJCT  60.00   (3) to BRKR  PEACHTON  60.00
1  31644 38052  "1 "    0     # line from  BIGGSJCT  60.00   (3) to (1)   BIGGS     60.00
4  31640     0  "1 "    0     # LOAD-DROP    TRES VIS  60.00  LOAD==6.18(1.25)
```

```
 4  38052     0  "1 "    0     # LOAD-DROP    BIGGS     60.00  LOAD==4.14(1.60)
 0
  #
  #
  # (243)  B2 LINE OUTAGE (BREAKER-TO-BREAKER)
  #
 1  31642 38054  "1 "    0     # line from  PEACHTON  60.00  BRKR to (2)   GRIDLEY   60.00
 1  38054 32334  "1 "    0     # line from  GRIDLEY   60.00   (2) to (2)   LIVE OAK  60.00
 1  32334 32326  "1 "    0     # line from  LIVE OAK  60.00   (2) to (3)   ENCL TAP  60.00
 1  32326 32322  "1 "    0     # line from  ENCL TAP  60.00   (3) to (1)   ENCINAL   60.00
 1  32326 32332  "1 "    0     # line from  ENCL TAP  60.00   (3) to BRKR  PEASE     60.00
 4  38054     0  "1 "    0     # LOAD-DROP    GRIDLEY   60.00  LOAD==9.28(1.89)
 4  32334     0  "1 "    0     # LOAD-DROP    LIVE OAK  60.00  LOAD==9.43(0.42)
 4  32322     0  "1 "    0     # LOAD-DROP    ENCINAL   60.00  LOAD==0.70(0.16)
 0
  #
  #
  # (244)  B2 LINE OUTAGE (BREAKER-TO-BREAKER)
  #
 1  31646 31648  "2 "    0     # line from  KLLY RDE  60.00   (2) to (3)   ELGN JCT  60.00
 2  31646 31834  "1 "    0     # TRAN from  KLLY RDE  60.00  BRKR to (1)   KELLYRDG   9.11
 1  31648 31651  "2 "    0     # line from  ELGN JCT  60.00   (3) to (3)   ORONRGTP  60.00
 1  31648 31656  "2 "    0     # line from  ELGN JCT  60.00   (3) to BRKR  PALERMO   60.00
 1  31651 31650  "2 "    0     # line from  ORONRGTP  60.00   (3) to BRKR  OROVILLE  60.00
 1  31651 31653  "1 "    0     # line from  ORONRGTP  60.00   (3) to (3)   OROENEGY  60.00
 1  31653 31655  "1 "    0     # line from  OROENEGY  60.00   (3) to (2)   P0439     60.00
 2  31653 31888  "1 "    0     # TRAN from  OROENEGY  60.00   (3) to (1)   OROVLLE    9.11
 2  31655 31889  "1 "    0     # TRAN from  P0439     60.00   (2) to (1)   P0439     13.80
 4  31888     0  "SG"    0     # LOAD-DROP    OROVLLE    9.11  LOAD==1.13(0.26)
 4  31889     0  "SG"    0     # LOAD-DROP    P0439     13.80  LOAD==5.00(2.77)
 3  31834     0  "1 "    0     # GEN-DROP    KELLYRDG   9.11  GEN==14.00(-2.00)
 3  31888     0  "1 "    0     # GEN-DROP    OROVLLE    9.11  GEN==8.50(-2.50)
 3  31889     0  "1 "    0     # GEN-DROP    P0439     13.80  GEN==49.00(3.19)
 3  31889     0  "2 "    0     # GEN-DROP    P0439     13.80  GEN==25.50(1.66)
 0
  #
  #
  # (245)  B2 LINE OUTAGE (BREAKER-TO-BREAKER)
  #
 1  31650 31652  "1 "    0     # line from  OROVILLE  60.00  BRKR to (3)   LSNA PCC  60.00
 1  31652 31654  "1 "    0     # line from  LSNA PCC  60.00   (3) to (3)   APT ORVC  60.00
 1  31652 31656  "1 "    0     # line from  LSNA PCC  60.00   (3) to BRKR  PALERMO   60.00
 2  31654 31890  "1 "    0     # TRAN from  APT ORVC  60.00   (3) to (2)   PO POWER   9.11
 2  31654 31890  "2 "    0     # TRAN from  APT ORVC  60.00   (3) to (2)   PO POWER   9.11
 3  31890     0  "1 "    0     # GEN-DROP    PO POWER   9.11  GEN==9.00(-2.50)
 0
  #
  #
  # (246)  B2 LINE OUTAGE (BREAKER-TO-BREAKER)
```

```
 #
1  31656 31658  "1 "    0     # line from  PALERMO   60.00  BRKR to (2)   BANGOR    60.00
1  31658 32308  "1 "    0     # line from  BANGOR    60.00   (2) to BRKR  COLGATE   60.00
4  31658     0  "1 "    0     # LOAD-DROP    BANGOR    60.00  LOAD==5.90(0.27)
0
 #
 #
 # (247)  B2 LINE OUTAGE (BREAKER-TO-BREAKER)
 #
1  31664 31668  "1 "    0     # line from  WESTWOOD  60.00   (3) to (3)   ULTR WSD  60.00
1  31664 36900  "1 "    0     # line from  WESTWOOD  60.00  BRKR to (1)   RICHMOND  60.00
1  31664 36902  "1 "    0     # line from  WESTWOOD  60.00  BRKR to (1)   MEADOWVW  60.00
1  31668 31672  "1 "    0     # line from  ULTR WSD  60.00   (3) to (4)   HMLTN BR  60.00
2  31668 31892  "1 "    0     # TRAN from  ULTR WSD  60.00  BRKR to (1)   PE.WWOOD   9.11
1  31672 31670  "1 "    0     # line from  HMLTN BR  60.00  BRKR to (1)   CHESTER   60.00
1  31672 31674  "1 "    0     # line from  HMLTN BR  60.00   (4) to (2)   BIG MDWS  60.00
2  31672 31830  "1 "    0     # TRAN from  HMLTN BR  60.00  BRKR to (1)   HAMIL.BR   9.11
1  31674 31690  "1 "    0     # line from  BIG MDWS  60.00   (2) to BRKR  CARIBOU   60.00
4  31672     0  "1 "    0     # LOAD-DROP    HMLTN BR  60.00  LOAD==4.25(0.86)
4  31674     0  "1 "    0     # LOAD-DROP    BIG MDWS  60.00  LOAD==3.93(0.80)
3  31892     0  "1 "    0     # GEN-DROP    PE.WWOOD   9.11  GEN==10.50(3.06)
3  31830     0  "1 "    0     # GEN-DROP    HAMIL.BR   9.11  GEN==2.00(0.10)
3  31830     0  "2 "    0     # GEN-DROP    HAMIL.BR   9.11  GEN==2.00(0.10)
1   31672 31670  "1 "    1    #Line section remains in service, HMLTN BR-CHESTER 60.00
1   31664 36900  "1 "    1    #Line section remains in service, WESTWOOD-RICHMOND 60.00
1   31664 36902  "1 "    1    #Line section remains in service, WESTWOOD-MEADOWVW 60.00
0
 #
 #
 # (248)  B2 LINE OUTAGE (BREAKER-TO-BREAKER)
 #
1  31670 31672  "1 "    0     # line from  CHESTER   60.00   (2) to BRKR  HMLTN BR  60.00
2  31670 31894  "1 "    0     # TRAN from  CHESTER   60.00   (2) to (1)   COLLINS    9.11
4  31670     0  "1 "    0     # LOAD-DROP    CHESTER   60.00  LOAD==3.01(0.61)
4  31894     0  "SG"    0     # LOAD-DROP    COLLINS    9.11  LOAD==4.72(1.08)
3  31894     0  "1 "    0     # GEN-DROP    COLLINS    9.11  GEN==8.30(3.06)
0
 #
 #
 # (249)  B2 LINE OUTAGE (BREAKER-TO-BREAKER)
 #
1  31676 31678  "2 "    0     # line from  HOWELLS   60.00   (2) to (3)   GRYS FLT  60.00
1  31676 31690  "2 "    0     # line from  HOWELLS   60.00   (2) to BRKR  CARIBOU   60.00
1  31678 31680  "2 "    0     # line from  GRYS FLT  60.00   (3) to (1)   GANSNER   60.00
1  31678 31682  "2 "    0     # line from  GRYS FLT  60.00   (3) to BRKR  SPANSHCK  60.00
4  31678     0  "1 "    0     # LOAD-DROP    GRYS FLT  60.00  LOAD==0.09(0.02)
4  31680     0  "1 "    0     # LOAD-DROP    GANSNER   60.00  LOAD==3.32(0.68)
4  31682     0  "CM"    0     # LOAD-DROP    SPANSHCK  60.00  LOAD==1.35(0.27)
4  31682     0  "GV"    0     # LOAD-DROP    SPANSHCK  60.00  LOAD==0.17(0.03)
```

```
0
 #
 #
 # (250)  B2 LINE OUTAGE (BREAKER-TO-BREAKER)
 #
1  31677 31689  "1 "    0     # line from  GRS F JT  60.00   (2) to (2)   ELIZ TWN  60.00
1  31677 31690  "1 "    0     # line from  GRS F JT  60.00   (2) to BRKR  CARIBOU   60.00
1  31689 31688  "1 "    0     # line from  ELIZ TWN  60.00   (2) to (4)   SPI       60.00
1  31688 31684  "1 "    0     # line from  SPI       60.00   (4) to (1)   EST QNCY  60.00
1  31688 38056  "1 "    0     # line from  SPI       60.00   (4) to BRKR  PLMS-SRA  60.00
2  31688 31896  "1 "    0     # TRAN from  SPI       60.00  BRKR to (1)   SPI-QUCY   9.11
4  31684     0  "1 "    0     # LOAD-DROP    EST QNCY  60.00  LOAD==2.86(0.58)
4  31896     0  "SG"    0     # LOAD-DROP    SPI-QUCY   9.11  LOAD==5.14(1.17)
3  31896     0  "1 "    0     # GEN-DROP    SPI-QUCY   9.11  GEN==19.00(2.97)
4  31896     0  "1 "    1     # SPI Plant load remains conected with its own generator
0
 #
 #
 # (251)  B2 LINE OUTAGE (BREAKER-TO-BREAKER)
 #
1  31692 31694  "1 "    0     # line from  DE SABLA  60.00   (4) to (2)   BTTE CRK  60.00
1  31692 31696  "1 "    0     # line from  DE SABLA  60.00   (4) to BRKR  CNTRVLLE  60.00
2  31692 31836  "1 "    0     # TRAN from  DE SABLA  60.00  BRKR to (1)   TOAD TWN   9.11
2  31692 31898  "1 "    0     # TRAN from  DE SABLA  60.00  BRKR to (1)   DE SABLA   6.90
2  31694 31870  "1 "    0     # TRAN from  BTTE CRK  60.00  BRKR to (1)   FORKBUTT   9.11
4  31692     0  "1 "    0     # LOAD-DROP    DE SABLA  60.00  LOAD==10.65(0.47)
3  31836     0  "1 "    0     # GEN-DROP    TOAD TWN   9.11  GEN==0.90(0.00)
3  31898     0  "1 "    0     # GEN-DROP    DE SABLA   6.90  GEN==14.50(-1.80)
0
 #
 #
 # (252)  B2 LINE OUTAGE (BREAKER-TO-BREAKER)
 #
1  31696 31704  "1 "    0     # line from  CNTRVLLE  60.00  BRKR to (2)   CLARK RD  60.00
1  31704 31702  "1 "    0     # line from  CLARK RD  60.00   (2) to (2)   MCNE JCT  60.00
1  31702 31718  "1 "    0     # line from  MCNE JCT  60.00   (2) to BRKR  TBLE MTN  60.00
4  31704     0  "1 "    0     # LOAD-DROP    CLARK RD  60.00  LOAD==6.92(1.41)
0
 #
 #
 # (253)  B2 LINE OUTAGE (BREAKER-TO-BREAKER)
 #
1  31696 31708  "1 "    0     # line from  CNTRVLLE  60.00  BRKR to (2)   DRHM JCA  60.00
1  31708 31709  "1 "    0     # line from  DRHM JCA  60.00   (2) to (2)   DRHMSW45  60.00
1  31709 31718  "1 "    0     # line from  DRHMSW45  60.00   (2) to BRKR  TBLE MTN  60.00
0
 #
 #
 # (254)  B2 LINE OUTAGE (BREAKER-TO-BREAKER)
```

```
 #
1  31710 31712  "1 "    0     # line from  CHICO A   60.00  BRKR to BRKR  BUTTE     60.00
0
 #
 #
 # (255)  B2 LINE OUTAGE (BREAKER-TO-BREAKER)
 #
1  31710 31712  "2 "    0     # line from  CHICO A   60.00  BRKR to BRKR  BUTTE     60.00
0
 #
 #
 # (256)  B2 LINE OUTAGE (BREAKER-TO-BREAKER)
 #
1  31712 31714  "1 "    0     # line from  BUTTE     60.00  BRKR to (2)   DRHM JCB  60.00
1  31714 31716  "1 "    0     # line from  DRHM JCB  60.00   (2) to (1)   ESQUON    60.00
4  31716     0  "1 "    0     # LOAD-DROP    ESQUON    60.00  LOAD==7.26(0.33)
0
 #
 #
 # (257)  B2 LINE OUTAGE (BREAKER-TO-BREAKER)
 #
1  31722 31723  "5 "    0     # line from  GLENN     60.00  BRKR to (3)   ORLND JT  60.00
1  31723 31724  "5 "    0     # line from  ORLND JT  60.00   (3) to (1)   ORLAND B  60.00
2  31723 31840  "1 "    0     # TRAN from  ORLND JT  60.00  BRKR to (1)   BLCKBUTT   9.11
4  31724     0  "1 "    0     # LOAD-DROP    ORLAND B  60.00  LOAD==10.95(2.23)
4  31724     0  "2 "    0     # LOAD-DROP    ORLAND B  60.00  LOAD==7.81(1.59)
3  31840     0  "1 "    0     # GEN-DROP    BLCKBUTT   9.11  GEN==2.20(-0.73)
1  31724 31725  "1 "    1     # Close line from Orland B to Orland B Jct
4  31724     0  "**"    1     # Restore the load at Orland
0
 #
 #
 # (258)  B2 LINE OUTAGE (BREAKER-TO-BREAKER)
 #
1  31722 31725  "1 "    0     # line from  GLENN     60.00  BRKR to (2)   ORL B JT  60.00
1  31725 31727  "1 "    0     # line from  ORL B JT  60.00   (2) to (3)   ELKCRKJT  60.00
1  31727 31726  "1 "    0     # line from  ELKCRKJT  60.00  BRKR to (1)   ELKCREEK  60.00
1  31727 31728  "1 "    0     # line from  ELKCRKJT  60.00   (3) to (1)   WILLOWS   60.00
4  31728     0  "1 "    0     # LOAD-DROP    WILLOWS   60.00  LOAD==12.95(2.63)
1  31726 31727  "1"     1     #Elks Creek Tap stays connected
0
 #
 #
 # (259)  B2 LINE OUTAGE (BREAKER-TO-BREAKER)
 #
1  31722 31733  "3 "    0     # line from  GLENN     60.00  BRKR to (2)   CAPYSWCH  60.00
1  31733 31731  "3 "    0     # line from  CAPYSWCH  60.00   (2) to (3)   CAPAYJCT  60.00
1  31731 31730  "3 "    0     # line from  CAPAYJCT  60.00   (3) to (1)   CAPAY     60.00
1  31731 31736  "3 "    0     # line from  CAPAYJCT  60.00   (3) to (2)   HEADGATE  60.00
```

```
1  31736 31735  "3 "    0     # line from  HEADGATE  60.00   (2) to (2)   CHICO JT  60.00
1  31735 31738  "3 "    0     # line from  CHICO JT  60.00   (2) to (1)   ANITA     60.00
4  31730     0  "1 "    0     # LOAD-DROP    CAPAY     60.00  LOAD==7.24(1.47)
4  31736     0  "1 "    0     # LOAD-DROP    HEADGATE  60.00  LOAD==3.30(0.75)
4  31738     0  "1 "    0     # LOAD-DROP    ANITA     60.00  LOAD==7.08(0.32)
0
 #
 #
 # (260)  B2 LINE OUTAGE (BREAKER-TO-BREAKER)
 #
1  31722 31734  "2 "    0     # line from  GLENN     60.00  BRKR to (2)   HAMILTON  60.00
1  31734 31732  "2 "    0     # line from  HAMILTON  60.00   (2) to (2)   HMLTN JT  60.00
1  31732 31740  "2 "    0     # line from  HMLTN JT  60.00   (2) to (2)   JACINTO   60.00
1  31740 32050  "2 "    0     # line from  JACINTO   60.00   (2) to (1)   RICE      60.00
4  31734     0  "1 "    0     # LOAD-DROP    HAMILTON  60.00  LOAD==6.38(1.30)
4  31740     0  "1 "    0     # LOAD-DROP    JACINTO   60.00  LOAD==5.33(1.08)
4  32050     0  "1 "    0     # LOAD-DROP    RICE      60.00  LOAD==5.42(0.25)
4  32050     0  "2 "    0     # LOAD-DROP    RICE      60.00  LOAD==1.65(0.08)
0
 #
 #
 # (261)  B2 LINE OUTAGE (BREAKER-TO-BREAKER)
 #
1  31727 31726  "1 "    0     # line from  ELKCRKJT  60.00  BRKR to (2)   ELKCREEK  60.00
2  31726 31842  "1 "    0     # TRAN from  ELKCREEK  60.00  BRKR to (1)   CSC HYDR   9.11
4  31726     0  "1 "    0     # LOAD-DROP    ELKCREEK  60.00  LOAD==2.11(0.43)
3  31842     0  "2 "    0     # GEN-DROP    CSC HYDR   9.11  GEN==0.30(0.00)
0
 #
 #
 # (262)  B2 LINE OUTAGE (BREAKER-TO-BREAKER)
 #
1  32309 31662  "1 "    0     # line from  CHLLNGEA  60.00   (2) to (1)   CHALLNGE  60.00
1  32309 31660  "1 "    0     # line from  CHLLNGEA  60.00   (2) to (2)   DOBBINS   60.00
1  31660 32307  "1 "    0     # line from  DOBBINS   60.00   (2) to (2)   COLGATEA  60.00
1  32307 32308  "1 "    0     # line from  COLGATEA  60.00   (2) to BRKR  COLGATE   60.00
4  31662     0  "1 "    0     # LOAD-DROP    CHALLNGE  60.00  LOAD==2.13(0.09)
4  31660     0  "1 "    0     # LOAD-DROP    DOBBINS   60.00  LOAD==2.39(0.10)
0
 #
 #
 # (263)  B2 LINE OUTAGE (BREAKER-TO-BREAKER)
 #
1  36900 31664  "1 "    0     # line from  RICHMOND  60.00   (2) to BRKR  WESTWOOD  60.00
1  36900 36904  "1 "    0     # line from  RICHMOND  60.00   (2) to (6)   MILLWOOD  60.00
1  36904 36902  "1 "    0     # line from  MILLWOOD  60.00   (6) to (3)   MEADOWVW  60.00
1  36904 36906  "1 "    0     # line from  MILLWOOD  60.00   (6) to (2)   WIN&AMED  60.00
1  36904 36908  "1 "    0     # line from  MILLWOOD  60.00   (6) to (2)   JELD-WEN  60.00
1  36904 36910  "1 "    0     # line from  MILLWOOD  60.00   (6) to (2)   HONEYLAK  60.00
```

```
 2  36904 36940  "1 "    0     # TRAN from  MILLWOOD  60.00   (6) to (1)   SPI        2.40
 1  36902 31664  "1 "    0     # line from  MEADOWVW  60.00   (3) to BRKR  WESTWOOD  60.00
 2  36902 36930  "1 "    0     # TRAN from  MEADOWVW  60.00   (3) to (1)   CHESTNUT  14.40
 2  36906 36934  "1 "    0     # TRAN from  WIN&AMED  60.00   (2) to (1)   WIN&AMDE   9.11
 2  36908 36936  "1 "    0     # TRAN from  JELD-WEN  60.00   (2) to (1)   JELD-WN    9.11
 2  36910 36938  "1 "    0     # TRAN from  HONEYLAK  60.00   (2) to (1)   HONEYLKE   9.11
 4  36900     0  "1 "    0     # LOAD-DROP    RICHMOND  60.00  LOAD==4.99(1.14)
 4  36904     0  "1 "    0     # LOAD-DROP    MILLWOOD  60.00  LOAD==16.82(3.83)
 4  36902     0  "1 "    0     # LOAD-DROP    MEADOWVW  60.00  LOAD==2.67(0.61)
 4  36908     0  "1 "    0     # LOAD-DROP    JELD-WEN  60.00  LOAD==1.66(0.38)
 4  36930     0  "1 "    0     # LOAD-DROP    CHESTNUT  14.40  LOAD==0.51(0.12)
 4  36936     0  "1 "    0     # LOAD-DROP    JELD-WN    9.11  LOAD==1.45(0.33)
 3  36940     0  "1 "    0     # GEN-DROP    SPI        2.40  GEN==10.50(0.68)
 3  36934     0  "2 "    0     # GEN-DROP    WIN&AMDE   9.11  GEN==0.60(0.05)
 3  36938     0  "1 "    0     # GEN-DROP    HONEYLKE   9.11  GEN==22.10(3.98)
 0
  #
  #
  # (264)  B2 LINE OUTAGE (BREAKER-TO-BREAKER)
  #
 1  37545 30245  "1 "    0     # line from  COTWDWAP 230.00  BRKR to BRKR  ROUND MT 230.00
 0
  #
  #
  # (265)  B2 LINE OUTAGE (BREAKER-TO-BREAKER)
  #
 1  38623 30303  "3 "    0     # line from  THM JCT2 230.00   (2) to BRKR  TBL MT E 230.00
 1  38623 38622  "3 "    0     # line from  THM JCT2 230.00   (2) to (3)   HYATT3   230.00
 2  38622 38845  "1 "    0     # TRAN from  HYATT3   230.00   (3) to (1)   HYATT 5   12.50
 2  38622 38850  "1 "    0     # TRAN from  HYATT3   230.00   (3) to (1)   HYATT 6   12.50
 3  38845     0  "1 "    0     # GEN-DROP    HYATT 5   12.50  GEN==125.00(20.75)
 3  38850     0  "1 "    0     # GEN-DROP    HYATT 6   12.50  GEN==115.00(19.92)
 0
  #
  #
  # (266)  B2 LINE OUTAGE (BREAKER-TO-BREAKER)
  #
 1  45087 31468  "1 "    0     # line from  DELTA    115.00  BRKR to BRKR  CASCADE  115.00
 0
  #
  #
  # (267)  B3 TRANSFORMER OUTAGE (BREAKER-TO-BREAKER)
  #
 2  30005 30245  "1 "    0     # TRAN from  ROUND MT 500.00  BRKR to (1)   ROUND MT 230.00
 0
  #
  #
  # (268)  B3 TRANSFORMER OUTAGE (BREAKER-TO-BREAKER)
  #
```

```
 2  31464 30105  "1 "    0     # TRAN from  COTWDPGE 115.00  BRKR to BRKR  COTWD_E  230.00
 0
  #
  #
  # (269)  B3 TRANSFORMER OUTAGE (BREAKER-TO-BREAKER)
  #
 2  31604 30105  "2 "    0     # TRAN from  COTTONWD  60.00  BRKR to BRKR  COTWD_E  230.00
 0
  #
  #
  # (270)  B3 TRANSFORMER OUTAGE (BREAKER-TO-BREAKER)
  #
 2  31604 30105  "3 "    0     # TRAN from  COTTONWD  60.00  BRKR to BRKR  COTWD_E  230.00
 0
  #
  #
  # (271)  B3 TRANSFORMER OUTAGE (BREAKER-TO-BREAKER)
  #
 2  31464 30106  "4 "    0     # TRAN from  COTWDPGE 115.00  BRKR to BRKR  COTWD_F  230.00
 0
  #
  #
  # (272)  B3 TRANSFORMER OUTAGE (BREAKER-TO-BREAKER)
  #
 2  31818 30185  "1 "    0     # TRAN from  PIT 1 U1  11.00  BRKR to BRKR  PIT 1    230.00
 3  31818     0  "1 "    0     # Take one of the generators out with the PIT 230/11 kV transformer
 0
  #
  #
  # (273)  B3 TRANSFORMER OUTAGE (BREAKER-TO-BREAKER)
  #
 2  31818 30185  "2 "    0     # TRAN from  PIT 1 U1  11.00  BRKR to BRKR  PIT 1    230.00
 3  31818     0  "2 "    0     # Take one of the generators out with the PIT 230/11 kV transformer
 0
  #
  #
  # (274)  B3 TRANSFORMER OUTAGE (BREAKER-TO-BREAKER)
  #
 2  31804 30210  "1 "    0     # TRAN from  PIT 5 U1  11.50   (1) to BRKR  PIT 5 JT 230.00
 4  31804     0  "1 "    0     # LOAD-DROP    PIT 5 U1  11.50  LOAD==0.23(0.04)
 3  31804     0  "1 "    0     # GEN-DROP    PIT 5 U1  11.50  GEN==39.00(9.67)
 3  31804     0  "2 "    0     # GEN-DROP    PIT 5 U1  11.50  GEN==39.00(9.67)
 0
  #
  #
  # (275)  B3 TRANSFORMER OUTAGE (BREAKER-TO-BREAKER)
  #
 2  31806 30210  "1 "    0     # TRAN from  PIT 5 U2  11.50   (1) to BRKR  PIT 5 JT 230.00
 3  31806     0  "1 "    0     # GEN-DROP    PIT 5 U2  11.50  GEN==39.00(9.66)
```

```
3  31806     0  "2 "    0     # GEN-DROP    PIT 5 U2  11.50  GEN==39.00(9.66)
0
 #
 #
 # (276)  B3 TRANSFORMER OUTAGE (BREAKER-TO-BREAKER)
 #
2  30250 30255  "1 "    0     # TRAN from  CARIBOU  230.00  BRKR to (3)   CARBOU M 230.00
2  30255 31486  "11"    0     # TRAN from  CARBOU M 230.00   (3) to BRKR  CARIBOU  115.00
2  30255 31690  "11"    0     # TRAN from  CARBOU M 230.00   (3) to BRKR  CARIBOU   60.00
0
 #
 #
 # (277)  B3 TRANSFORMER OUTAGE (BREAKER-TO-BREAKER)
 #
2  31784 30260  "1 "    0     # TRAN from  BELDEN    13.80   (1) to BRKR  BELDEN   230.00
3  31784     0  "1 "    0     # GEN-DROP    BELDEN    13.80  GEN==116.00(25.93)
0
 #
 #
 # (278)  B3 TRANSFORMER OUTAGE (BREAKER-TO-BREAKER)
 #
2  31820 30265  "1 "    0     # TRAN from  BCKS CRK  11.00   (1) to BRKR  BCKS CRK 230.00
4  31820     0  "4 "    0     # LOAD-DROP    BCKS CRK  11.00  LOAD==2.14(0.44)
3  31820     0  "1 "    0     # GEN-DROP    BCKS CRK  11.00  GEN==29.00(8.44)
3  31820     0  "2 "    0     # GEN-DROP    BCKS CRK  11.00  GEN==25.20(7.33)
0
 #
 #
 # (279)  B3 TRANSFORMER OUTAGE (BREAKER-TO-BREAKER)
 #
2  31812 30275  "1 "    0     # TRAN from  CRESTA    11.50   (1) to BRKR  CRESTA   230.00
3  31812     0  "1 "    0     # GEN-DROP    CRESTA    11.50  GEN==35.00(8.56)
3  31812     0  "2 "    0     # GEN-DROP    CRESTA    11.50  GEN==35.00(8.56)
0
 #
 #
 # (280)  B3 TRANSFORMER OUTAGE (BREAKER-TO-BREAKER)
 #
2  31504 30300  "4 "    0     # TRAN from  TBLE MTN 115.00  BRKR to BRKR  TBL MT D 230.00
0
 #
 #
 # (281)  B3 TRANSFORMER OUTAGE (BREAKER-TO-BREAKER)
 #
2  30300 30301  "1 "    0     # TRAN from  TBL MT D 230.00  BRKR to (2)   TBL MT2M 230.00
2  30301 31718  "2 "    0     # TRAN from  TBL MT2M 230.00   (2) to BRKR  TBLE MTN  60.00
0
 #
 #
```

```
 # (282)  B3 TRANSFORMER OUTAGE (BREAKER-TO-BREAKER)
 #
2  30300 30304  "1 "    0     # TRAN from  TBL MT D 230.00  BRKR to (3)   TBL MT3M 230.00
2  30304 31504  "3 "    0     # TRAN from  TBL MT3M 230.00   (3) to BRKR  TBLE MTN 115.00
2  30304 31763  "1 "    0     # TRAN from  TBL MT3M 230.00   (3) to (1)   TBL MT3T  13.80
0
 #
 #
 # (283)  B3 TRANSFORMER OUTAGE (BREAKER-TO-BREAKER)
 #
2  30325 30324  "1 "    0     # TRAN from  PALERMO  230.00  BRKR to (3)   PALRMO M 230.00
2  30324 31482  "1 "    0     # TRAN from  PALRMO M 230.00   (3) to BRKR  PALERMO  115.00
2  30324 31656  "1 "    0     # TRAN from  PALRMO M 230.00   (3) to BRKR  PALERMO   60.00
1  30325 30300  "1 "    0     # Table Mountain-Rio Oso 230 kV line lost during bank outage
1  30325 30327  "1 "    0     # Palermo-Colgate 230 kV line lost during bank outage
1  31648 31656  "2 "    0     # Open Palermo-Elgin Jct 60 kV section
1  31652 31656  "1 "    0     # Open Palermo-Louisiana Pacific 60 kV section
1  31656 31658  "1 "    0     # Open Palermo-Bangor 60 kV section
0
 #
 #
 # (284)  B3 TRANSFORMER OUTAGE (BREAKER-TO-BREAKER)
 #
2  31556 31452  "1 "    0     # TRAN from  TRINITY   60.00  BRKR to BRKR  TRINITY  115.00
1  31452 31461  "1 "    0     # Open Trinity-Cottonwood 115 kV section
1  31000 31452  "1 "    0     # Open Humboldt-Trinity 115 kV section
1  31093 31556  "1 "    0     # Open Trinity-Hympom Jct 60 kV section
1  31556 31558  "1 "    0     # Open Trinity-Douglas City 60 kV section
1  31556 31562  "1 "    0     # Open Trinity-Lewiston 60 kV section
0
 #
 #
 # (285)  B3 TRANSFORMER OUTAGE (BREAKER-TO-BREAKER)
 #
2  31580 31468  "1 "    0     # TRAN from  CASCADE   60.00  BRKR to (1)   CASCADE  115.00
1  45087 31468  "1 "    0     # With Cascade transformer outage take Delta-Cascade 115 kV out
1  31468 31459  "1 "    0     # With Cascade transformer outage take Cascade-Oregon Trail 115 kV ou
0
 #
 #
 # (286)  B3 TRANSFORMER OUTAGE (BREAKER-TO-BREAKER)
 #
2  31808 31486  "1 "    0     # TRAN from  CRBOU2-3  11.50   (1) to BRKR  CARIBOU  115.00
3  31808     0  "1 "    0     # GEN-DROP    CRBOU2-3  11.50  GEN==26.00(3.70)
3  31808     0  "2 "    0     # GEN-DROP    CRBOU2-3  11.50  GEN==24.00(3.30)
0
 #
 #
 # (287)  B3 TRANSFORMER OUTAGE (BREAKER-TO-BREAKER)
```

```
 #
2  31712 31500  "1 "    0     # TRAN from  BUTTE     60.00  BRKR to BRKR  BUTTE    115.00
0
 #
 #
 # (288)  B3 TRANSFORMER OUTAGE (BREAKER-TO-BREAKER)
 #
2  31880 31560  "1 "    0     # TRAN from  SPI-HAYF   9.11  BRKR to BRKR  HAYFORK   60.00
4  31880     0  "1 "    1     # SPI Plant load remains conected with its own generator
0
 #
 #
 # (289)  B3 TRANSFORMER OUTAGE (BREAKER-TO-BREAKER)
 #
2  31824 31594  "1 "    0     # TRAN from  VOLTA1-2   9.11   (1) to BRKR  VOLTA     60.00
3  31824     0  "1 "    0     # GEN-DROP    VOLTA1-2   9.11  GEN==7.80(-1.23)
3  31824     0  "2 "    0     # GEN-DROP    VOLTA1-2   9.11  GEN==0.90(-0.14)
0
 #
 #
 # (290)  B3 TRANSFORMER OUTAGE (BREAKER-TO-BREAKER)
 #
2  31828 31598  "1 "    0     # TRAN from  KILRC1-2   9.11   (1) to BRKR  KILARC    60.00
3  31828     0  "1 "    0     # GEN-DROP    KILRC1-2   9.11  GEN==1.00(0.00)
3  31828     0  "2 "    0     # GEN-DROP    KILRC1-2   9.11  GEN==1.00(0.00)
0
 #
 #
 # (291)  B3 TRANSFORMER OUTAGE (BREAKER-TO-BREAKER)
 #
2  31830 31672  "1 "    0     # TRAN from  HAMIL.BR   9.11   (1) to BRKR  HMLTN BR  60.00
3  31830     0  "1 "    0     # GEN-DROP    HAMIL.BR   9.11  GEN==2.00(0.10)
3  31830     0  "2 "    0     # GEN-DROP    HAMIL.BR   9.11  GEN==2.00(0.10)
0
 #
 #
 # (292)  B3 TRANSFORMER OUTAGE (BREAKER-TO-BREAKER)
 #
2  31896 31688  "1 "    0     # TRAN from  SPI-QUCY   9.11   (1) to BRKR  SPI       60.00
4  31896     0  "SG"    0     # LOAD-DROP    SPI-QUCY   9.11  LOAD==5.14(1.17)
3  31896     0  "1 "    0     # GEN-DROP    SPI-QUCY   9.11  GEN==19.00(2.97)
4  31896     0  "1 "    1     # SPI Plant load remains conected with its own generator
0
 #
 #
 # (293)  B3 TRANSFORMER OUTAGE (BREAKER-TO-BREAKER)
 #
2  30110 31722  "2 "    0     # TRAN from  GLENN    230.00  BRKR to BRKR  GLENN     60.00
0
```

```
 #
 #
 # (294)  B3 TRANSFORMER OUTAGE (BREAKER-TO-BREAKER)
 #
2  30200 31766  "1 "    0     # TRAN from  PIT 4    230.00  BRKR to (1)   PIT 4     13.80
3  31766     0  "1 "    0     # GEN-DROP    PIT 4     13.80  GEN==46.00(-9.20)
3  31766     0  "2 "    0     # GEN-DROP    PIT 4     13.80  GEN==47.00(-10.82)
0
 #
 #
 # (295)  B3 TRANSFORMER OUTAGE (BREAKER-TO-BREAKER)
 #
2  30250 31782  "1 "    0     # TRAN from  CARIBOU  230.00  BRKR to (1)   CRBU 4-5  13.80
3  31782     0  "1 "    0     # GEN-DROP    CRBU 4-5  13.80  GEN==55.00(17.32)
3  31782     0  "2 "    0     # GEN-DROP    CRBU 4-5  13.80  GEN==56.00(17.64)
0
 #
 #
 # (296)  B3 TRANSFORMER OUTAGE (BREAKER-TO-BREAKER)
 #
2  30195 31802  "1 "    0     # TRAN from  PIT 3    230.00  BRKR to (1)   PIT 3     11.50
4  31802     0  "1 "    0     # LOAD-DROP    PIT 3     11.50  LOAD==1.63(0.34)
3  31802     0  "1 "    0     # GEN-DROP    PIT 3     11.50  GEN==23.00(-5.31)
3  31802     0  "2 "    0     # GEN-DROP    PIT 3     11.50  GEN==23.70(-5.47)
3  31802     0  "3 "    0     # GEN-DROP    PIT 3     11.50  GEN==23.70(-5.47)
0
 #
 #
 # (297)  B3 TRANSFORMER OUTAGE (BREAKER-TO-BREAKER)
 #
2  31628 31818  "1 "    0     # TRAN from  PIT 1     60.00  BRKR to BRKR  PIT 1 U1  11.00
4  31818     0  "P1"    0     # With PIT 11/60 kv transformer outage take PIT1 load out
0
 #
 #
 # (298)  B1 GENERATOR OUTAGE
 #
3  31465     0  "1"     0     # WHEELBR1   9.10       PGEN=16.58  QGEN=-1.16
0
 #
 #
 # (299)  B1 GENERATOR OUTAGE
 #
3  31465     0  "2"     0     # WHEELBR1   9.10       PGEN=16.58  QGEN=-1.16
0
 #
 #
 # (300)  B1 GENERATOR OUTAGE
 #
```

```
 3  31465     0  "3"     0     # WHEELBR1   9.10       PGEN=16.58  QGEN=-1.16
 0
  #
  #
  # (301)  B1 GENERATOR OUTAGE
  #
 3  31465     0  "4"     0     # WHEELBR1   9.10       PGEN=7.85  QGEN=-0.55
 0
  #
  #
  # (302)  B1 GENERATOR OUTAGE
  #
 3  31471     0  "1"     0     # SPI_AND1   9.10       PGEN=4.30  QGEN=-2.50
 0
  #
  #
  # (303)  B1 GENERATOR OUTAGE
  #
 3  31621     0  "1"     0     # NEO REDB  13.80       PGEN=50.00  QGEN=6.39
 0
  #
  #
  # (304)  B1 GENERATOR OUTAGE
  #
 3  31764     0  "1"     0     # MALCHA    13.80       PGEN=12.54  QGEN=14.74
 0
  #
  #
  # (305)  B1 GENERATOR OUTAGE
  #
 3  31766     0  "1"     0     # PIT 4     13.80       PGEN=47.50  QGEN=-8.00
 0
  #
  #
  # (306)  B1 GENERATOR OUTAGE
  #
 3  31766     0  "2"     0     # PIT 4     13.80       PGEN=47.50  QGEN=-8.00
 0
  #
  #
  # (307)  B1 GENERATOR OUTAGE
  #
 3  31768     0  "1"     0     # JBBLACK1  13.80       PGEN=85.00  QGEN=16.39
 0
  #
  #
  # (308)  B1 GENERATOR OUTAGE
  #
 3  31770     0  "1"     0     # JBBLACK2  13.80       PGEN=75.00  QGEN=15.62
```

```
0
 #
 #
 # (309)  B1 GENERATOR OUTAGE
 #
3  31772     0  "1"     0     # PIT 6 U1  13.80       PGEN=39.00  QGEN=8.40
0
 #
 #
 # (310)  B1 GENERATOR OUTAGE
 #
3  31774     0  "1"     0     # PIT 6 U2  13.80       PGEN=40.00  QGEN=8.47
0
 #
 #
 # (311)  B1 GENERATOR OUTAGE
 #
3  31776     0  "1"     0     # PIT 7 U1  13.80       PGEN=55.50  QGEN=17.33
0
 #
 #
 # (312)  B1 GENERATOR OUTAGE
 #
3  31778     0  "1"     0     # PIT 7 U2  13.80       PGEN=54.60  QGEN=22.60
0
 #
 #
 # (313)  B1 GENERATOR OUTAGE
 #
3  31780     0  "1"     0     # BUTTVLLY  13.80       PGEN=41.00  QGEN=-1.16
0
 #
 #
 # (314)  B1 GENERATOR OUTAGE
 #
3  31782     0  "1"     0     # CRBU 4-5  13.80       PGEN=59.00  QGEN=15.66
0
 #
 #
 # (315)  B1 GENERATOR OUTAGE
 #
3  31782     0  "2"     0     # CRBU 4-5  13.80       PGEN=57.00  QGEN=15.13
0
 #
 #
 # (316)  B1 GENERATOR OUTAGE
 #
3  31784     0  "1"     0     # BELDEN    13.80       PGEN=116.00  QGEN=25.98
0
```

```
 #
 #
 # (317)  B1 GENERATOR OUTAGE
 #
3  31786     0  "1"     0     # ROCK CK1  13.80       PGEN=54.25  QGEN=16.21
0
 #
 #
 # (318)  B1 GENERATOR OUTAGE
 #
3  31788     0  "1"     0     # ROCK CK2  13.80       PGEN=54.25  QGEN=24.62
0
 #
 #
 # (319)  B1 GENERATOR OUTAGE
 #
3  31790     0  "1"     0     # POE 1     13.80       PGEN=68.00  QGEN=22.61
0
 #
 #
 # (320)  B1 GENERATOR OUTAGE
 #
3  31792     0  "1"     0     # POE 2     13.80       PGEN=60.00  QGEN=21.95
0
 #
 #
 # (321)  B1 GENERATOR OUTAGE
 #
3  31794     0  "1"     0     # WOODLEAF  13.80       PGEN=54.41  QGEN=12.75
0
 #
 #
 # (322)  B1 GENERATOR OUTAGE
 #
3  31798     0  "1"     0     # BRNYFRST  13.20       PGEN=26.56  QGEN=0.43
0
 #
 #
 # (323)  B1 GENERATOR OUTAGE
 #
3  31800     0  "1"     0     # SMPSN-AN  12.47       PGEN=42.00  QGEN=0.18
0
 #
 #
 # (324)  B1 GENERATOR OUTAGE
 #
3  31802     0  "1"     0     # PIT 3     11.50       PGEN=23.00  QGEN=-6.53
0
 #
```

```
 #
 # (325)  B1 GENERATOR OUTAGE
 #
3  31802     0  "2"     0     # PIT 3     11.50       PGEN=23.00  QGEN=-6.53
0
 #
 #
 # (326)  B1 GENERATOR OUTAGE
 #
3  31802     0  "3"     0     # PIT 3     11.50       PGEN=23.00  QGEN=-6.53
0
 #
 #
 # (327)  B1 GENERATOR OUTAGE
 #
3  31804     0  "1"     0     # PIT 5 U1  11.50       PGEN=38.00  QGEN=7.32
0
 #
 #
 # (328)  B1 GENERATOR OUTAGE
 #
3  31804     0  "2"     0     # PIT 5 U1  11.50       PGEN=37.00  QGEN=7.12
0
 #
 #
 # (329)  B1 GENERATOR OUTAGE
 #
3  31806     0  "1"     0     # PIT 5 U2  11.50       PGEN=38.00  QGEN=7.30
0
 #
 #
 # (330)  B1 GENERATOR OUTAGE
 #
3  31806     0  "2"     0     # PIT 5 U2  11.50       PGEN=37.00  QGEN=7.10
0
 #
 #
 # (331)  B1 GENERATOR OUTAGE
 #
3  31808     0  "1"     0     # CRBOU2-3  11.50       PGEN=24.00  QGEN=11.50
0
 #
 #
 # (332)  B1 GENERATOR OUTAGE
 #
3  31808     0  "2"     0     # CRBOU2-3  11.50       PGEN=21.00  QGEN=12.00
0
 #
 #
```

```
 # (333)  B1 GENERATOR OUTAGE
 #
3  31810     0  "1"     0     # CRBU 1    11.50       PGEN=25.00  QGEN=-4.59
0
 #
 #
 # (334)  B1 GENERATOR OUTAGE
 #
3  31812     0  "1"     0     # CRESTA    11.50       PGEN=35.00  QGEN=8.49
0
 #
 #
 # (335)  B1 GENERATOR OUTAGE
 #
3  31812     0  "2"     0     # CRESTA    11.50       PGEN=34.00  QGEN=8.25
0
 #
 #
 # (336)  B1 GENERATOR OUTAGE
 #
3  31814     0  "1"     0     # FORBSTWN  11.50       PGEN=35.00  QGEN=9.16
0
 #
 #
 # (337)  B1 GENERATOR OUTAGE
 #
3  31818     0  "1"     0     # PIT 1 U1  11.00       PGEN=32.00  QGEN=-13.10
0
 #
 #
 # (338)  B1 GENERATOR OUTAGE
 #
3  31818     0  "2"     0     # PIT 1 U1  11.00       PGEN=31.00  QGEN=-12.69
0
 #
 #
 # (339)  B1 GENERATOR OUTAGE
 #
3  31820     0  "1"     0     # BCKS CRK  11.00       PGEN=29.50  QGEN=8.14
0
 #
 #
 # (340)  B1 GENERATOR OUTAGE
 #
3  31820     0  "2"     0     # BCKS CRK  11.00       PGEN=29.50  QGEN=8.14
0
 #
 #
 # (341)  B1 GENERATOR OUTAGE
```

```
 #
3  31824     0  "1"     0     # VOLTA1-2   9.11       PGEN=7.77  QGEN=-0.92
0
 #
 #
 # (342)  B1 GENERATOR OUTAGE
 #
3  31824     0  "2"     0     # VOLTA1-2   9.11       PGEN=0.89  QGEN=-0.11
0
 #
 #
 # (343)  B1 GENERATOR OUTAGE
 #
3  31826     0  "1"     0     # SOUTH G    4.16       PGEN=6.91  QGEN=-2.90
0
 #
 #
 # (344)  B1 GENERATOR OUTAGE
 #
3  31830     0  "1"     0     # HAMIL.BR   9.11       PGEN=2.00  QGEN=0.10
0
 #
 #
 # (345)  B1 GENERATOR OUTAGE
 #
3  31830     0  "2"     0     # HAMIL.BR   9.11       PGEN=2.00  QGEN=0.10
0
 #
 #
 # (346)  B1 GENERATOR OUTAGE
 #
3  31832     0  "1"     0     # SLY.CR.    9.11       PGEN=12.80  QGEN=-2.00
0
 #
 #
 # (347)  B1 GENERATOR OUTAGE
 #
3  31834     0  "1"     0     # KELLYRDG   9.11       PGEN=10.00  QGEN=-2.00
0
 #
 #
 # (348)  B1 GENERATOR OUTAGE
 #
3  31836     0  "1"     0     # TOAD TWN   9.11       PGEN=0.90  QGEN=0.00
0
 #
 #
 # (349)  B1 GENERATOR OUTAGE
 #
```

```
 3  31838     0  "1"     0     # CNTRVL12   9.11       PGEN=4.00  QGEN=0.00
 0
  #
  #
  # (350)  B1 GENERATOR OUTAGE
  #
 3  31840     0  "1"     0     # BLCKBUTT   9.11       PGEN=2.23  QGEN=-0.93
 0
  #
  #
  # (351)  B1 GENERATOR OUTAGE
  #
 3  31842     0  "2"     0     # CSC HYDR   9.11       PGEN=0.30  QGEN=0.00
 0
  #
  #
  # (352)  B1 GENERATOR OUTAGE
  #
 3  31846     0  "2"     0     # HATCHET+   9.11       PGEN=2.47  QGEN=1.30
 0
  #
  #
  # (353)  B1 GENERATOR OUTAGE
  #
 3  31854     0  "1"     0     # OLSEN +4   9.11       PGEN=0.73  QGEN=0.23
 0
  #
  #
  # (354)  B1 GENERATOR OUTAGE
  #
 3  31872     0  "1"     0     # CLOVER     9.11       PGEN=0.60  QGEN=0.10
 0
  #
  #
  # (355)  B1 GENERATOR OUTAGE
  #
 3  31874     0  "1"     0     # SPI-BURN   9.11       PGEN=15.80  QGEN=-1.55
 0
  #
  #
  # (356)  B1 GENERATOR OUTAGE
  #
 3  31884     0  "1"     0     # PAC.ENGY   9.11       PGEN=9.80  QGEN=1.36
 0
  #
  #
  # (357)  B1 GENERATOR OUTAGE
  #
 3  31888     0  "1"     0     # OROVLLE    9.11       PGEN=8.50  QGEN=-2.50
```

```
0
 #
 #
 # (358)  B1 GENERATOR OUTAGE
 #
3  31890     0  "1"     0     # PO POWER   9.11       PGEN=9.00  QGEN=-2.50
0
 #
 #
 # (359)  B1 GENERATOR OUTAGE
 #
3  31892     0  "1"     0     # PE.WWOOD   9.11       PGEN=10.50  QGEN=2.26
0
 #
 #
 # (360)  B1 GENERATOR OUTAGE
 #
3  31894     0  "1"     0     # COLLINS    9.11       PGEN=8.30  QGEN=2.72
0
 #
 #
 # (361)  B1 GENERATOR OUTAGE
 #
3  31896     0  "1"     0     # SPI-QUCY   9.11       PGEN=19.00  QGEN=2.30
0
 #
 #
 # (362)  B1 GENERATOR OUTAGE
 #
3  31898     0  "1"     0     # DE SABLA   6.90       PGEN=14.48  QGEN=-1.71
0
 #
 #
 # (363)  B1 GENERATOR OUTAGE
 #
3  31900     0  "1"     0     # GRIZZLYG   6.90       PGEN=16.81  QGEN=-4.00
0
 #
 #
 # (364)  B1 GENERATOR OUTAGE
 #
3  31902     0  "1"     0     # HAT CRK1   6.60       PGEN=8.50  QGEN=-1.75
0
 #
 #
 # (365)  B1 GENERATOR OUTAGE
 #
3  31906     0  "1"     0     # COLEMAN    6.60       PGEN=8.73  QGEN=1.55
0
```

```
 #
 #
 # (366)  B1 GENERATOR OUTAGE
 #
3  31908     0  "1"     0     # INSKIP     4.16       PGEN=6.90  QGEN=1.15
0
 #
 #
 # (367)  B1 GENERATOR OUTAGE
 #
3  31828     0  "1 "    0     # GEN-DROP    KILRC1-2   9.11  GEN==1.00(0.00)
0
 #
 #
 # (368)  B1 GENERATOR OUTAGE
 #
3  31828     0  "2 "    0     # GEN-DROP    KILRC1-2   9.11  GEN==1.00(0.00)
0
 #
 #
 # (369)  B1 GENERATOR OUTAGE
 #
3  31889     0  "1"     0     # P0439     13.80       PGEN=49.00  QGEN=6.80
0
 #
 #
 # (370)  B1 GENERATOR OUTAGE
 #
3  31889     0  "2"     0     # P0439     13.80       PGEN=25.50  QGEN=3.54
0
 #
 #
 # (371)  B1 GENERATOR OUTAGE
 #
3  31911     0  "1"     0     # TMP CT1   13.80       PGEN=98.45  QGEN=9.68
0
 #
 #
 # (372)  B1 GENERATOR OUTAGE
 #
3  31912     0  "1"     0     # TMP CT2   13.80       PGEN=98.45  QGEN=9.68
0
 #
 #
 # (373)  B1 GENERATOR OUTAGE
 #
3  31913     0  "1"     0     # TMP CT3   13.80       PGEN=98.45  QGEN=9.68
0
 #
```

```
 #
 # (374)  B1 GENERATOR OUTAGE
 #
3  31921     0  "1"     0     # P0441GT1  13.80       PGEN=49.70  QGEN=5.51
0
 #
 #
 # (375)  B1 GENERATOR OUTAGE
 #
3  31922     0  "2"     0     # P0441GT2  13.80       PGEN=49.70  QGEN=5.51
0
 #
 #
 # (376)  L-1/G-1 OVERLAPPPING OUTAGE
 # Cottonwood - Red Bluff 60 kV Line and Coleman
1  31604 31607  "1 "    0     # line from  COTTONWD  60.00  BRKR to (2)   RED B JT  60.00
1  31607 31608  "1 "    0     # line from  RED B JT  60.00   (2) to BRKR  RED BLFF  60.00
1  31607 31614  "1 "    1     #Transfer Red Bluff to Alternate
 #
3  31906     0  "1"     0     # COLEMAN    6.60       PGEN=8.73  QGEN=1.55
0
 #
 #
 # (377)  L-1/G-1 OVERLAPPPING OUTAGE
 # Coleman - Red Bluff 60 kV Line and Coleman
1  31602 31606  "1 "    0     # line from  COLEMAN   60.00  BRKR to (3)   CLMN JCT  60.00
1  31606 31608  "1 "    0     # line from  CLMN JCT  60.00   (3) to BRKR  RED BLFF  60.00
1  31606 31612  "1 "    0     # line from  CLMN JCT  60.00   (3) to (2)   DIRYVLLE  60.00
1  31612 31619  "1 "    0     # line from  DIRYVLLE  60.00   (2) to (3)   LS ML JT  60.00
1  31619 31618  "1 "    0     # line from  LS ML JT  60.00   (3) to (1)   LS MLNSJ  60.00
1  31619 31620  "1 "    0     # line from  LS ML JT  60.00   (3) to (1)   VINA      60.00
4  31612     0  "1 "    0     # LOAD-DROP    DIRYVLLE  60.00  LOAD==3.35(0.15)
4  31618     0  "1 "    0     # LOAD-DROP    LS MLNSJ  60.00  LOAD==3.18(0.64)
4  31620     0  "1 "    0     # LOAD-DROP    VINA      60.00  LOAD==1.73(0.35)
 #
3  31906     0  "1"     0     # COLEMAN    6.60       PGEN=8.73  QGEN=1.55
0
 #
 #
 # (378)  L-1/G-1 OVERLAPPPING OUTAGE
 # Table Mountain - Centerville 60 kV Line and De Sabla 1
1  31696 31704  "1 "    0     # line from  CNTRVLLE  60.00  BRKR to (2)   CLARK RD  60.00
1  31704 31702  "1 "    0     # line from  CLARK RD  60.00   (2) to (2)   MCNE JCT  60.00
1  31702 31718  "1 "    0     # line from  MCNE JCT  60.00   (2) to BRKR  TBLE MTN  60.00
4  31704     0  "1 "    0     # LOAD-DROP    CLARK RD  60.00  LOAD==6.92(1.41)
 #
3  31898     0  "1"     0     # DE SABLA   6.90       PGEN=14.48  QGEN=-1.71
0
 #
```

```
 #
 # (379)  L-1/G-1 OVERLAPPPING OUTAGE
 # Table Mountain - Peachton 60 kV Line and De Sabla 1
1  31640 31644  "1 "    0     # line from  TRES VIS  60.00   (2) to (3)   BIGGSJCT  60.00
1  31640 31718  "1 "    0     # line from  TRES VIS  60.00   (2) to BRKR  TBLE MTN  60.00
1  31644 31642  "1 "    0     # line from  BIGGSJCT  60.00   (3) to BRKR  PEACHTON  60.00
1  31644 38052  "1 "    0     # line from  BIGGSJCT  60.00   (3) to (1)   BIGGS     60.00
4  31640     0  "1 "    0     # LOAD-DROP    TRES VIS  60.00  LOAD==6.18(1.25)
4  38052     0  "1 "    0     # LOAD-DROP    BIGGS     60.00  LOAD==4.14(1.60)
 #
3  31898     0  "1"     0     # DE SABLA   6.90       PGEN=14.48  QGEN=-1.71
0
 #
 #
 # (380)  L-1/G-1 OVERLAPPPING OUTAGE
 # De Sabla - Centerville 60 kV Line and Centerville #1
1  31692 31694  "1 "    0     # line from  DE SABLA  60.00   (4) to (2)   BTTE CRK  60.00
1  31692 31696  "1 "    0     # line from  DE SABLA  60.00   (4) to BRKR  CNTRVLLE  60.00
2  31692 31836  "1 "    0     # TRAN from  DE SABLA  60.00  BRKR to (1)   TOAD TWN   9.11
2  31692 31898  "1 "    0     # TRAN from  DE SABLA  60.00  BRKR to (1)   DE SABLA   6.90
2  31694 31870  "1 "    0     # TRAN from  BTTE CRK  60.00  BRKR to (1)   FORKBUTT   9.11
4  31692     0  "1 "    0     # LOAD-DROP    DE SABLA  60.00  LOAD==10.65(0.47)
3  31836     0  "1 "    0     # GEN-DROP    TOAD TWN   9.11  GEN==0.90(0.00)
3  31898     0  "1 "    0     # GEN-DROP    DE SABLA   6.90  GEN==14.50(-1.80)
 #
3  31838     0  "1"     0     # CNTRVL12   9.11       PGEN=4.00  QGEN=0.00
0
 #
 #
 # (381)  L-1/G-1 OVERLAPPPING OUTAGE
 # Table Mountain - Peachton 60 kV Line and GreenLeaf2
1  31640 31644  "1 "    0     # line from  TRES VIS  60.00   (2) to (3)   BIGGSJCT  60.00
1  31640 31718  "1 "    0     # line from  TRES VIS  60.00   (2) to BRKR  TBLE MTN  60.00
1  31644 31642  "1 "    0     # line from  BIGGSJCT  60.00   (3) to BRKR  PEACHTON  60.00
1  31644 38052  "1 "    0     # line from  BIGGSJCT  60.00   (3) to (1)   BIGGS     60.00
4  31640     0  "1 "    0     # LOAD-DROP    TRES VIS  60.00  LOAD==6.18(1.25)
4  38052     0  "1 "    0     # LOAD-DROP    BIGGS     60.00  LOAD==4.14(1.60)
 #
3  32492     0  "1"     0     # GRNLEAF2  13.80       PGEN=49.00  QGEN=5.99
0
 #
 #
 # (382)  L-1/G-1 OVERLAPPPING OUTAGE
 # Table Mountain - Rio Oso 230 kV Line and Greenleaf2
1  30300 30330  "1 "    0     # line from  TBL MT D 230.00  BRKR to BRKR  RIO OSO  230.00
 #
3  32492     0  "1"     0     # GRNLEAF2  13.80       PGEN=49.00  QGEN=5.99
0
 #
```

```
 #
 # (383)  L-1/G-1 OVERLAPPPING OUTAGE
 # Cresta - Rio Oso 230 kV Line and Greenleaf1 unit 1
1  30275 30330  "1 "    0     # line from  CRESTA   230.00  BRKR to BRKR  RIO OSO  230.00
 #
3  32490     0  "1"     0     # GRNLEAF1  13.80       PGEN=40.00  QGEN=-12.92
0
 #
 #
 # (384)  L-1/G-1 OVERLAPPPING OUTAGE
 # Palermo - Colgate 230 kV Line and GreenLeaf1 unit 1
1  30325 30327  "1 "    0     # line from  PALERMO  230.00  BRKR to BRKR  COLGATE  230.00
2  30327 32450  "1 "    0     #Take one transformer out with Palermo-Colgate 230 kV line outage
3  32450     0  "1 "    0     #Take one generator out with Palermo-Colgate 230 kV line outage
 #
3  32490     0  "1"     0     # GRNLEAF1  13.80       PGEN=40.00  QGEN=-12.92
0
 #
 #
 # (385)  L-1/G-1 OVERLAPPPING OUTAGE
 # Poe - Rio Oso 230 kV Line and Colgate 1
1  30280 30330  "1 "    0     # line from  POE      230.00  BRKR to BRKR  RIO OSO  230.00
2  30280 31792  "1 "    0     # Take the transformer out with Rio Oso-Poe 230 kV line outage
3  31792     0  "1 "    0     # Take the generator out with Rio Oso-Poe 230 kV line outage
 #
3  32450     0  "1"     0     # COLGATE1  13.80       PGEN=168.00  QGEN=40.66
0
 #
 #
 # Zone 304 Sacramento division
 # 2010 summer category b contingency list
 #
 #
 #
 # (386)  B2 LINE OUTAGE (BREAKER-TO-BREAKER
 #
1  30330 30348  "1 "    0     # line from  RIO OSO  230.00  BRKR to BRKR  BRIGHTON 230.00
0
 #
 #
 # (387)  B2 LINE OUTAGE (BREAKER-TO-BREAKER
 #
1  30348 30500  "1 "    0     # line from  BRIGHTON 230.00  BRKR to BRKR  BELLOTA  230.00
0
 #
 #
 # (388)  B2 LINE OUTAGE (BREAKER-TO-BREAKER
 #
1  30450 30460  "1 "    0     # line from  CORTINA  230.00  BRKR to BRKR  VACA-DIX 230.00
```

```
0
 #
 #
 # (389)  B2 LINE OUTAGE (BREAKER-TO-BREAKER
 #
1  30460 30465  "1 "    0     # line from  VACA-DIX 230.00  BRKR to BRKR  BAHIA    230.00
0
 #
 #
 # (390)  B2 LINE OUTAGE (BREAKER-TO-BREAKER
 #
1  30460 30467  "1 "    0     # line from  VACA-DIX 230.00  BRKR to BRKR  PARKWAY  230.00
0
 #
 #
 # (391)  B2 LINE OUTAGE (BREAKER-TO-BREAKER
 #
1  30460 30472  "1 "    0     # line from  VACA-DIX 230.00  BRKR to BRKR  PEABODY  230.00
0
 #
 #
 # (392)  B2 LINE OUTAGE (BREAKER-TO-BREAKER
 #
1  30460 30478  "1 "    0     # line from  VACA-DIX 230.00  BRKR to BRKR  LAMBIE   230.00
0
 #
 #
 # (393)  B2 LINE OUTAGE (BREAKER-TO-BREAKER
 #
1  30472 30479  "1 "    0     # line from  PEABODY  230.00  BRKR to BRKR  BDLSWSTA 230.00
0
 #
 #
 # (394)  B2 LINE OUTAGE (BREAKER-TO-BREAKER
 #
1  30475 30529  "1 "    0     # line from  HIGHWND3 230.00   (1) to (3)   HIWD TAP 230.00
1  30529 30479  "1 "    0     # line from  HIWD TAP 230.00   (3) to BRKR  BDLSWSTA 230.00
2  30529 32172  "1 "    0     # TRAN from  HIWD TAP 230.00   (3) to (1)   HIGHWNDS  34.50
0
 #
 #
 # (395)  B2 LINE OUTAGE (BREAKER-TO-BREAKER)
 #
1  30476 30479  "1 "    0     # line from  P0412    230.00   (1) to BRKR  BDLSWSTA 230.00
0
 #
 #
 # (396)  B2 LINE OUTAGE (BREAKER-TO-BREAKER
 #
```

```
1  30477 30479  "1 "    0     # line from  P0301    230.00   (1) to BRKR  BDLSWSTA 230.00
0
 #
 #
 # (397)  B2 LINE OUTAGE (BREAKER-TO-BREAKER
 #
1  30478 30479  "1 "    0     # line from  LAMBIE   230.00  BRKR to BRKR  BDLSWSTA 230.00
0
 #
 #
 # (398)  B2 LINE OUTAGE (BREAKER-TO-BREAKER
 #
1  30479 30480  "1 "    0     # line from  BDLSWSTA 230.00  BRKR to (3)   USWP-RUS 230.00
2  30480 32168  "1 "    0     # TRAN from  USWP-RUS 230.00   (3) to (1)   USWINDPW   9.11
2  30480 32169  "1 "    0     # TRAN from  USWP-RUS 230.00   (3) to (1)   SOLANOWP  21.00
3  32169     0  "1 "    0     # GEN-DROP    SOLANOWP  21.00  GEN==3.40(0.00)
0
 #
 #
 # (399)  B2 LINE OUTAGE (BREAKER-TO-BREAKER
 #
1  30479 30523  "1 "    0     # line from  BDLSWSTA 230.00  BRKR to BRKR  CC SUB   230.00
0
 #
 #
 # (400)  B2 LINE OUTAGE (BREAKER-TO-BREAKER
 #
1  30525 30479  "1 "    0     # line from  C.COSTA  230.00  BRKR to BRKR  BDLSWSTA 230.00
0
 #
 #
 # (401)  B2 LINE OUTAGE (BREAKER-TO-BREAKER
 #
1  31224 31950  "1 "    0     # line from  INDIN VL 115.00   (3) to BRKR  CORTINA  115.00
1  31224 31215  "1 "    0     # line from  INDIN VL 115.00   (3) to (3)   LUCERNJ1 115.00
2  31224 31436  "1 "    0     # TRAN from  INDIN VL 115.00  BRKR to (1)   INDIAN V   9.11
1  31215 31200  "1 "    0     # line from  LUCERNJ1 115.00   (3) to BRKR  MENDOCNO 115.00
1  31215 31216  "1 "    0     # line from  LUCERNJ1 115.00   (3) to (1)   LUCERNE  115.00
4  31216     0  "1 "    0     # LOAD-DROP    LUCERNE  115.00  LOAD==12.23(2.49)
3  31436     0  "1 "    0     # GEN-DROP    INDIAN V   9.11  GEN==0.90(0.00)
1 31217 31216 "1 " 1      # close line from LCERNJ2  115.00 to LUCERNE 115.00
4 31216 0     "**" 1      # restore all loads to LUCERNE 115.00 (Cortina - Mendocino 115 kV)
0
 #
 #
 # (402)  B2 LINE OUTAGE (BREAKER-TO-BREAKER
 #
1  31253 31974  "1 "    0     # line from  FLTN JT2 115.00   (2) to (1)   MADISON  115.00
1  31253 31952  "1 "    0     # line from  FLTN JT2 115.00   (2) to (2)   PUTH CRK 115.00
```

```
 1  31952 31998  "1 "    0     # line from  PUTH CRK 115.00   (2) to BRKR  VACA-DIX 115.00
 4  31974     0  "1 "    0     # LOAD-DROP    MADISON  115.00  LOAD==9.89(0.45)
 4  31974     0  "2 "    0     # LOAD-DROP    MADISON  115.00  LOAD==10.21(0.46)
 4  31952     0  "1 "    0     # LOAD-DROP    PUTH CRK 115.00  LOAD==14.74(0.66)
 0
  #
  #
  # (403)  B2 LINE OUTAGE (BREAKER-TO-BREAKER
  #
 1  31261 31950  "1 "    0     # line from  CACHE J1 115.00   (2) to BRKR  CORTINA  115.00
 1  31261 31227  "1 "    0     # line from  CACHE J1 115.00   (2) to (2)   HGHLNDJ2 115.00
 1  31227 31228  "1 "    0     # line from  HGHLNDJ2 115.00   (2) to (3)   HOMSTKTP 115.00
 1  31228 31220  "1 "    0     # line from  HOMSTKTP 115.00   (3) to BRKR  EGLE RCK 115.00
 1  31228 31230  "1 "    0     # line from  HOMSTKTP 115.00   (3) to (2)   HOMEPROC 115.00
 1  31230 31232  "1 "    0     # line from  HOMEPROC 115.00   (2) to (1)   HOMEGRND 115.00
 4  31230     0  "1 "    0     # LOAD-DROP    HOMEPROC 115.00  LOAD==0.35(0.07)
 0
  #
  #
  # (404)  B2 LINE OUTAGE (BREAKER-TO-BREAKER
  #
 1  31953 31256  "1 "    0     # line from  AMEGTAP  115.00   (3) to (1)   FLTN JCT 115.00
 1  31953 31954  "1 "    0     # line from  AMEGTAP  115.00   (3) to (1)   AMERIGAS 115.00
 1  31953 31998  "1 "    0     # line from  AMEGTAP  115.00   (3) to BRKR  VACA-DIX 115.00
 4  31954     0  "1 "    0     # LOAD-DROP    AMERIGAS 115.00  LOAD==6.60(1.34)
 0
  #
  #
  # (405)  B2 LINE OUTAGE (BREAKER-TO-BREAKER
  #
 1  31958 32012  "1 "    0     # line from  CORDELIA 115.00   (1) to (2)   HALE J2  115.00
 1  32012 32004  "1 "    0     # line from  HALE J2  115.00   (2) to (3)   VCVLLE2J 115.00
 1  32004 31998  "1 "    0     # line from  VCVLLE2J 115.00   (3) to BRKR  VACA-DIX 115.00
 1  32004 32002  "1 "    0     # line from  VCVLLE2J 115.00   (3) to BRKR  VACAVLL2 115.00
 4  31958     0  "2 "    0     # LOAD-DROP    CORDELIA 115.00  LOAD==16.52(0.74)
 4  32002     0  "2 "    0     # LOAD-DROP    VACAVLL2 115.00  LOAD==45.19(2.02)
 4  32002     0  "3 "    0     # LOAD-DROP    VACAVLL2 115.00  LOAD==45.19(2.02)
 1  32000 32002  "1"     1     #Transfer VACAVLL2 load to alternate
 4  32002     0  "**"    1     #Restore VACAVLL2 load
 0
  #
  #
  # (406)  B2 LINE OUTAGE (BREAKER-TO-BREAKER
  #
 1  31960 31966  "1 "    0     # line from  MOBILCHE 115.00   (2) to (3)   WODLNDJ1 115.00
 1  31960 31970  "1 "    0     # line from  MOBILCHE 115.00   (2) to BRKR  WOODLD   115.00
 1  31966 31965  "1 "    0     # line from  WODLNDJ1 115.00   (3) to (3)   KNIGHT1  115.00
 1  31966 31971  "1 "    0     # line from  WODLNDJ1 115.00   (3) to (1)   ZAMORA1  115.00
 1  31965 31963  "1 "    0     # line from  KNIGHT1  115.00   (3) to (1)   KNIGHTLD 115.00
```

```
1  31965 32214  "1 "    0     # line from  KNIGHT1  115.00   (3) to BRKR  RIO OSO  115.00
4  31960     0  "1 "    0     # LOAD-DROP    MOBILCHE 115.00  LOAD==2.42(0.00)
4  31963     0  "1 "    0     # LOAD-DROP    KNIGHTLD 115.00  LOAD==3.23(0.14)
0
 #
 #
 # (407)  B2 LINE OUTAGE (BREAKER-TO-BREAKER
 #
1  31962 31970  "1 "    0     # line from  WDLND_BM 115.00   (3) to BRKR  WOODLD   115.00
1  31962 31992  "1 "    0     # line from  WDLND_BM 115.00   (3) to (2)   HUNT     115.00
2  31962 32156  "1 "    0     # TRAN from  WDLND_BM 115.00   (3) to (1)   WOODLAND   9.11
1  31992 31990  "1 "    0     # line from  HUNT     115.00   (2) to BRKR  DAVIS    115.00
4  31992     0  "1 "    0     # LOAD-DROP    HUNT     115.00  LOAD==0.27(0.05)
4  32156     0  "SG"    0     # LOAD-DROP    WOODLAND   9.11  LOAD==2.74(0.62)
3  32156     0  "1 "    0     # GEN-DROP    WOODLAND   9.11  GEN==25.00(5.00)
0
 #
 #
 # (408)  B2 LINE OUTAGE (BREAKER-TO-BREAKER
 #
1  31964 31968  "2 "    0     # line from  KNIGHT2  115.00   (2) to (3)   WODLNDJ2 115.00
1  31964 32214  "2 "    0     # line from  KNIGHT2  115.00   (2) to BRKR  RIO OSO  115.00
1  31968 31970  "2 "    0     # line from  WODLNDJ2 115.00   (3) to BRKR  WOODLD   115.00
1  31968 31973  "2 "    0     # line from  WODLNDJ2 115.00   (3) to (2)   ZAMORA2  115.00
1  31973 31972  "2 "    0     # line from  ZAMORA2  115.00   (2) to (1)   ZAMORA   115.00
4  31972     0  "1 "    0     # LOAD-DROP    ZAMORA   115.00  LOAD==4.06(0.18)
0
 #
 #
 # (409)  B2 LINE OUTAGE (BREAKER-TO-BREAKER
 #
1  31976 31980  "1 "    0     # line from  POST     115.00   (1) to (3)   DPWTR_TP 115.00
1  31980 31986  "1 "    0     # line from  DPWTR_TP 115.00   (3) to BRKR  W.SCRMNO 115.00
1  31980 31990  "1 "    0     # line from  DPWTR_TP 115.00   (3) to BRKR  DAVIS    115.00
4  31976     0  "1 "    0     # LOAD-DROP    POST     115.00  LOAD==1.23(0.17)
4  31976     0  "1A"    0     # LOAD-DROP    POST     115.00  LOAD==1.23(0.17)
0
 #
 #
 # (410)  B2 LINE OUTAGE (BREAKER-TO-BREAKER
 #
1  31978 31984  "1 "    0     # line from  DPWT_TP2 115.00   (3) to BRKR  BRIGHTN  115.00
1  31978 31986  "1 "    0     # line from  DPWT_TP2 115.00   (3) to BRKR  W.SCRMNO 115.00
1  31978 31988  "1 "    0     # line from  DPWT_TP2 115.00   (3) to (1)   DEEPWATR 115.00
4  31988     0  "3 "    0     # LOAD-DROP    DEEPWATR 115.00  LOAD==19.45(0.87)
1  31976 31988  "1"     1     #Transfer load to alternate Deepwater tap
4  31988     0  "**"    1     #Restore load at Deepwater
0
 #
```

```
 #
 # (411)  B2 LINE OUTAGE (BREAKER-TO-BREAKER
 #
1  31984 31993  "1 "    0     # line from  BRIGHTN  115.00  BRKR to (3)   BRKRJCT  115.00
1  31993 31990  "1 "    0     # line from  BRKRJCT  115.00   (3) to BRKR  DAVIS    115.00
1  31993 31991  "1 "    0     # line from  BRKRJCT  115.00   (3) to (2)   BRKR TP  115.00
1  31991 31989  "1 "    0     # line from  BRKR TP  115.00   (2) to BRKR  BRKR SLG 115.00
4  31989     0  "1 "    0     # LOAD-DROP    BRKR SLG 115.00  LOAD==1.75(0.00)
0
 #
 #
 # (412)  B2 LINE OUTAGE (BREAKER-TO-BREAKER
 #
1  31984 31994  "1 "    0     # line from  BRIGHTN  115.00  BRKR to BRKR  GRAND IS 115.00
1  31984 31994  "2"     1     #Transfer Grand Island to alternate source
4  31994     0  "**"    1     #Restore Grand Island load
0
 #
 #
 # (413)  B2 LINE OUTAGE (BREAKER-TO-BREAKER
 #
1  31995 32013  "1 "    0     # line from  HALE     115.00   (2) to (1)   HALE2    115.00
1  31995 31996  "1 "    0     # line from  HALE     115.00   (2) to (3)   HALE J1  115.00
1  31996 32006  "1 "    0     # line from  HALE J1  115.00   (3) to (3)   VCVLLE1J 115.00
1  31996 32020  "1 "    0     # line from  HALE J1  115.00   (3) to (3)   JMSN JCT 115.00
1  32006 31998  "1 "    0     # line from  VCVLLE1J 115.00   (3) to BRKR  VACA-DIX 115.00
1  32006 32000  "1 "    0     # line from  VCVLLE1J 115.00   (3) to BRKR  VACAVLL1 115.00
1  32020 32010  "1 "    0     # line from  JMSN JCT 115.00   (3) to BRKR  JAMESON  115.00
1  32020 32618  "1 "    0     # line from  JMSN JCT 115.00   (3) to (1)   NTWRJCT1 115.00
4  31995     0  "1 "    0     # LOAD-DROP    HALE     115.00  LOAD==9.23(5.48)
4  32000     0  "1 "    0     # LOAD-DROP    VACAVLL1 115.00  LOAD==27.93(1.25)
4  32010     0  "1 "    0     # LOAD-DROP    JAMESON  115.00  LOAD==34.05(1.53)
1  32002 32000  "1"     1     #Line transfer VACAVLL1 115kV TO VACAVLL2 115kV
4  32000     0  "**"    1     #Restore VACAVLL1 load
1  31995 32013  "1 "    1     #Line transfer HALE to HALE2
1  32012 32013  "1 "    1     #Line transfer HALEJ2 to HALE2
4  31995     0  "**"    1     #Restore load at HALE
1  32010 32009  "1 "    1     # LINE-TRANSFER JMSN JCT 115.00 to JAMESN-A 115.00
4  32010     0  "**"    1     # RESTORE JAMESON load
0
 #
 #
 # (414)  B2 LINE OUTAGE (BREAKER-TO-BREAKER
 #
1  31998 31997  "1 "    0     # line from  VACA-DIX 115.00  BRKR to (3)   SCHMLBCH 115.00
1  31997 32008  "1 "    0     # line from  SCHMLBCH 115.00   (3) to BRKR  SUISUN   115.00
1  31997 32009  "1 "    0     # line from  SCHMLBCH 115.00   (3) to (1)   JAMESN-A 115.00
4  31997     0  "1 "    0     # LOAD-DROP    SCHMLBCH 115.00  LOAD==7.26(4.88)
0
```

```
 #
 #
 # (415)  B2 LINE OUTAGE (BREAKER-TO-BREAKER
 #
1  31998 32011  "1 "    0     # line from  VACA-DIX 115.00  BRKR to (3)   WEC      115.00
1  32011 32008  "1 "    0     # line from  WEC      115.00   (3) to BRKR  SUISUN   115.00
2  32011 32185  "1 "    0     # TRAN from  WEC      115.00   (3) to (1)   WOLFSKIL  13.80
4  32185     0  "1 "    0     # LOAD-DROP    WOLFSKIL  13.80  LOAD==1.30(0.81)
3  32185     0  "1 "    0     # GEN-DROP    WOLFSKIL  13.80  GEN==50.00(4.70)
0
 #
 #
 # (416)  B2 LINE OUTAGE (BREAKER-TO-BREAKER
 #
1  31999 31998  "1 "    0     # line from  VACA-CB  115.00   (3) to BRKR  VACA-DIX 115.00
2  31999 30460  "2 "    0     # TRAN from  VACA-CB  115.00   (3) to BRKR  VACA-DIX 230.00
2  31999 30460  "2A"    0     # TRAN from  VACA-CB  115.00   (3) to BRKR  VACA-DIX 230.00
0
 #
 #
 # (417)  B2 LINE OUTAGE (BREAKER-TO-BREAKER
 #
1  32050 31740  "2 "    0     # line from  RICE      60.00   (1) to (2)   JACINTO   60.00
1  31740 31732  "2 "    0     # line from  JACINTO   60.00   (2) to (2)   HMLTN JT  60.00
1  31732 31734  "2 "    0     # line from  HMLTN JT  60.00   (2) to (2)   HAMILTON  60.00
1  31734 31722  "2 "    0     # line from  HAMILTON  60.00   (2) to BRKR  GLENN     60.00
4  32050     0  "1 "    0     # LOAD-DROP    RICE      60.00  LOAD==5.52(0.25)
4  32050     0  "2 "    0     # LOAD-DROP    RICE      60.00  LOAD==1.68(0.08)
4  31740     0  "1 "    0     # LOAD-DROP    JACINTO   60.00  LOAD==5.44(1.10)
4  31734     0  "1 "    0     # LOAD-DROP    HAMILTON  60.00  LOAD==6.51(1.32)
0
 #
 #
 # (418)  B2 LINE OUTAGE (BREAKER-TO-BREAKER
 #
1  32052 32054  "4 "    0     # line from  CLSA CRS  60.00   (2) to (2)   MAXWELL   60.00
1  32052 32067  "4 "    0     # line from  CLSA CRS  60.00   (2) to (1)   WILSONAV  60.00
1  32054 32055  "4 "    0     # line from  MAXWELL   60.00   (2) to (3)   MAXTAP    60.00
1  32055 32053  "4 "    0     # line from  MAXTAP    60.00   (3) to (1)   DELEVAN   60.00
1  32055 32065  "4 "    0     # line from  MAXTAP    60.00   (3) to (2)   WILL JCT  60.00
1  32065 32056  "4 "    0     # line from  WILL JCT  60.00   (2) to BRKR  CORTINA   60.00
4  32054     0  "1 "    0     # LOAD-DROP    MAXWELL   60.00  LOAD==6.73(0.30)
0
 #
 #
 # (419)  B2 LINE OUTAGE (BREAKER-TO-BREAKER
 #
1  32056 32060  "1 "    0     # line from  CORTINA   60.00  BRKR to (2)   ARBUCKLE  60.00
1  32060 32058  "1 "    0     # line from  ARBUCKLE  60.00   (2) to (2)   HARINTON  60.00
```

```
1  32058 32062  "1 "    0     # line from  HARINTON  60.00   (2) to (2)   DRAKE     60.00
1  32062 32066  "1 "    0     # line from  DRAKE     60.00   (2) to (1)   DUNNIGAN  60.00
4  32060     0  "1 "    0     # LOAD-DROP    ARBUCKLE  60.00  LOAD==12.68(0.57)
4  32058     0  "1 "    0     # LOAD-DROP    HARINTON  60.00  LOAD==1.00(0.62)
4  32062     0  "1 "    0     # LOAD-DROP    DRAKE     60.00  LOAD==1.00(0.62)
4  32066     0  "1 "    0     # LOAD-DROP    DUNNIGAN  60.00  LOAD==6.84(0.31)
1  32061 32060  "1"     1     #Transfer Arbuckle to its alternate
1  32060 32058  "1 "    1     #Restore line from  ARBUCKLE  60.00   (2) to (2)   HARINTON  60.00
1  32058 32062  "1 "    0     #Restore line from  HARINTON  60.00   (2) to (2)   DRAKE     60.00
1  32062 32066  "1 "    0     #Restore line from  DRAKE     60.00   (2) to (1)   DUNNIGAN  60.00
4  32060     0  "**"    1     #Restore load at ARBUCKLE
4  32058     0  "**"    1     #Restore load at HARINTON
4  32062     0  "**"    1     #Restore load at DRAKE
4  32066     0  "**"    1     #Restore load at DUNNIGAN
0
 #
 #
 # (420)  B2 LINE OUTAGE (BREAKER-TO-BREAKER
 #
1  32057 32056  "2 "    0     # line from  HUSTD     60.00   (2) to BRKR  CORTINA   60.00
1  32057 32063  "2 "    0     # line from  HUSTD     60.00   (2) to (3)   ARBJCT    60.00
1  32063 32061  "2 "    0     # line from  ARBJCT    60.00   (3) to (1)   ARBALT    60.00
1  32063 32078  "2 "    0     # line from  ARBJCT    60.00   (3) to (2)   WLKSLJCT  60.00
1  32078 32076  "2 "    0     # line from  WLKSLJCT  60.00   (2) to (2)   WILKINS   60.00
1  32076 32080  "2 "    0     # line from  WILKINS   60.00   (2) to (1)   DIST2047  60.00
4  32076     0  "1 "    0     # LOAD-DROP    WILKINS   60.00  LOAD==5.37(0.24)
4  32080     0  "1 "    0     # LOAD-DROP    DIST2047  60.00  LOAD==0.58(0.19)
4  32080     0  "2 "    0     # LOAD-DROP    DIST2047  60.00  LOAD==1.63(0.54)
0
 #
 #
 # (421)  B2 LINE OUTAGE (BREAKER-TO-BREAKER
 #
1  32070 32071  "1 "    0     # line from  CLSA JCT  60.00  BRKR to (1)   MERIDJCT  60.00
0
 #
 #
 # (422)  B2 LINE OUTAGE (BREAKER-TO-BREAKER
 #
1  32070 32073  "3 "    0     # line from  CLSA JCT  60.00  BRKR to (2)   WESCOT1   60.00
1  32073 32075  "3 "    0     # line from  WESCOT1   60.00   (2) to (3)   WESCOT2   60.00
1  32075 32064  "3 "    0     # line from  WESCOT2   60.00   (3) to (1)   WILLIAMS  60.00
1  32075 32155  "3 "    0     # line from  WESCOT2   60.00   (3) to (3)   WADHMJCT  60.00
1  32155 32056  "3 "    0     # line from  WADHMJCT  60.00   (3) to BRKR  CORTINA   60.00
2  32155 32154  "1 "    0     # TRAN from  WADHMJCT  60.00   (3) to (1)   WADHAM     9.11
4  32064     0  "1 "    0     # LOAD-DROP    WILLIAMS  60.00  LOAD==4.63(0.20)
4  32064     0  "2 "    0     # LOAD-DROP    WILLIAMS  60.00  LOAD==4.96(0.22)
4  32154     0  "SG"    0     # LOAD-DROP    WADHAM     9.11  LOAD==2.27(0.52)
3  32154     0  "1 "    0     # GEN-DROP    WADHAM     9.11  GEN==22.80(4.92)
```

```
1  32070 32068  "1 "    0     #Take out Colusa-Colusa Jct line section with outage
1  32067 32068  "1"     1     #Transfer Colusa to alternate source
4  32068     0  "**"    1     #Restore Colusa load
0
 #
 #
 # (423)  B2 LINE OUTAGE (BREAKER-TO-BREAKER
 #
1  32072 32336  "1 "    0     # line from  MERIDIAN  60.00   (1) to (2)   ALMENDRA  60.00
1  32336 32328  "1 "    0     # line from  ALMENDRA  60.00   (2) to (3)   YBA CTYJ  60.00
1  32328 32301  "1 "    0     # line from  YBA CTYJ  60.00   (3) to (2)   GLEAF2TP  60.00
1  32328 32332  "1 "    0     # line from  YBA CTYJ  60.00   (3) to BRKR  PEASE     60.00
1  32301 32300  "1 "    0     # line from  GLEAF2TP  60.00   (2) to (2)   GLEAF2    60.00
2  32300 32492  "1 "    0     # TRAN from  GLEAF2    60.00  BRKR to (1)   GRNLEAF2  13.80
4  32072     0  "1 "    0     # LOAD-DROP    MERIDIAN  60.00  LOAD==4.58(0.20)
4  32492     0  "1 "    0     # LOAD-DROP    GRNLEAF2  13.80  LOAD==0.72(0.16)
3  32492     0  "1 "    0     # GEN-DROP    GRNLEAF2  13.80  GEN==49.00(5.80)
0
 #
 #
 # (424)  B2 LINE OUTAGE (BREAKER-TO-BREAKER
 #
1  32079 32083  "1 "    0     # line from  DST1001B  60.00   (3) to (1)   DIST1001  60.00
1  32079 32087  "1 "    0     # line from  DST1001B  60.00   (3) to (2)   KNTJALT   60.00
1  32079 32342  "1 "    0     # line from  DST1001B  60.00   (3) to BRKR  E.NICOLS  60.00
1  32087 32085  "1 "    0     # line from  KNTJALT   60.00   (2) to (2)   WOODJCT   60.00
1  32085 32084  "1 "    0     # line from  WOODJCT   60.00   (2) to (1)   WLLW SLJ  60.00
0
 #
 #
 # (425)  B2 LINE OUTAGE (BREAKER-TO-BREAKER
 #
1  32081 32086  "1 "    0     # line from  DIST1500  60.00   (1) to (2)   KNGHTSLJ  60.00
1  32086 32089  "1 "    0     # line from  KNGHTSLJ  60.00   (2) to (2)   DST1001A  60.00
1  32089 32342  "1 "    0     # line from  DST1001A  60.00   (2) to BRKR  E.NICOLS  60.00
4  32081     0  "1 "    0     # LOAD-DROP    DIST1500  60.00  LOAD==3.30(0.47)
0
 #
 #
 # (426)  B2 LINE OUTAGE (BREAKER-TO-BREAKER
 #
1  32082 32090  "1 "    0     # line from  PLFLDJCT  60.00   (2) to (2)   WINTERS   60.00
1  32082 32092  "1 "    0     # line from  PLFLDJCT  60.00   (2) to (1)   PLAINFLD  60.00
1  32090 32088  "1 "    0     # line from  WINTERS   60.00   (2) to BRKR  VACA-DXN  60.00
4  32090     0  "1 "    0     # LOAD-DROP    WINTERS   60.00  LOAD==5.27(0.23)
4  32092     0  "1 "    0     # LOAD-DROP    PLAINFLD  60.00  LOAD==10.51(0.47)
0
 #
 #
```

```
 # (427)  B2 LINE OUTAGE (BREAKER-TO-BREAKER
 #
1  32088 32094  "2 "    0     # line from  VACA-DXN  60.00  BRKR to (2)   VACA-JT2  60.00
1  32094 32109  "2 "    0     # line from  VACA-JT2  60.00   (2) to (3)   CACHSLJ2  60.00
1  32109 32101  "2 "    0     # line from  CACHSLJ2  60.00   (3) to (2)   DIXON-J2  60.00
1  32109 32107  "2 "    0     # line from  CACHSLJ2  60.00   (3) to (2)   CACHSTAP  60.00
1  32101 32100  "2 "    0     # line from  DIXON-J2  60.00   (2) to BRKR  DIXON     60.00
1  32107 32113  "2 "    0     # line from  CACHSTAP  60.00   (2) to (3)   BTAV-JCT  60.00
1  32113 32111  "2 "    0     # line from  BTAV-JCT  60.00   (3) to (1)   BATAVIA   60.00
1  32113 32114  "2 "    0     # line from  BTAV-JCT  60.00   (3) to (2)   MNPR_JCT  60.00
1  32114 32112  "2 "    0     # line from  MNPR_JCT  60.00   (2) to (1)   MAINE-PR  60.00
4  32111     0  "1 "    0     # LOAD-DROP    BATAVIA   60.00  LOAD==0.17(0.04)
4  32112     0  "1 "    0     # LOAD-DROP    MAINE-PR  60.00  LOAD==0.10(0.02)
0
 #
 #
 # (428)  B2 LINE OUTAGE (BREAKER-TO-BREAKER
 #
1  32088 32096  "1 "    0     # line from  VACA-DXN  60.00  BRKR to (3)   VACA-JT1  60.00
1  32096 32098  "1 "    0     # line from  VACA-JT1  60.00   (3) to (3)   TRAVISJT  60.00
1  32096 32108  "1 "    0     # line from  VACA-JT1  60.00   (3) to (2)   CACHSLJ1  60.00
1  32098 32097  "1 "    0     # line from  TRAVISJT  60.00   (3) to (1)   TRAVIS    60.00
1  32098 32099  "1 "    0     # line from  TRAVISJT  60.00   (3) to (1)   TRVS_HPT  60.00
1  32108 32105  "1 "    0     # line from  CACHSLJ1  60.00   (2) to (2)   DIXON-J1  60.00
1  32105 32100  "1 "    0     # line from  DIXON-J1  60.00   (2) to BRKR  DIXON     60.00
4  32097     0  "1 "    0     # LOAD-DROP    TRAVIS    60.00  LOAD==18.67(5.59)
4  32099     0  "1 "    0     # LOAD-DROP    TRVS_HPT  60.00  LOAD==4.82(1.40)
1  32094 32098  "1"     1     #Line transfer VACA-JT2 to TRAVISJT
1  32098 32097  "1 "    1     #Restore line from  TRAVISJT  60.00   (3) to (1)   TRAVIS    60.00
1  32098 32099  "1 "    1     #Restore line from  TRAVISJT  60.00   (3) to (1)   TRVS_HPT  60.00
4  32097     0  "**"    1     #Restore load at Travis AFB
4  32099     0  "**"    1     #Restore load at Travis Hospital
0
 #
 #
 # (429)  B2 LINE OUTAGE (BREAKER-TO-BREAKER
 #
1  32102 32116  "1 "    0     # line from  CAMPUS    60.00   (2) to (3)   UCDAVSJ1  60.00
2  32102 32166  "1 "    0     # TRAN from  CAMPUS    60.00   (2) to (1)   UC DAVIS   9.11
1  32116 32106  "1 "    0     # line from  UCDAVSJ1  60.00   (3) to (1)   DIXONCAN  60.00
1  32116 32104  "1 "    0     # line from  UCDAVSJ1  60.00   (3) to BRKR  DAVIS     60.00
4  32102     0  "1 "    0     # LOAD-DROP    CAMPUS    60.00  LOAD==34.00(7.75)
4  32106     0  "1 "    0     # LOAD-DROP    DIXONCAN  60.00  LOAD==3.59(0.82)
3  32166     0  "1 "    0     # GEN-DROP    UC DAVIS   9.11  GEN==3.50(1.80)
1  32103 32102  "1"     1     #Transfer load at Campus to alternate
4  32102     0  "**"    1     #Restore load at Campus
0
 #
 #
```

```
 # (430)  B2 LINE OUTAGE (BREAKER-TO-BREAKER
 #
1  32104 32103  "2 "    0     # line from  DAVIS     60.00  BRKR to (1)   UCDAVSJ2  60.00
0
 #
 #
 # (431)  B2 LINE OUTAGE (BREAKER-TO-BREAKER
 #
1  32021 31986  "1 "    0     # line from  P0434TAP 115.00   (3) to BRKR  W.SCRMNO 115.00
1  32021 32022  "1 "    0     # line from  P0434TAP 115.00   (3) to (2)   P0434    115.00
1  32021 32214  "1 "    0     # line from  P0434TAP 115.00   (3) to BRKR  RIO OSO  115.00
2  32022 32186  "1 "    0     # TRAN from  P0434    115.00   (2) to (1)   P0434     13.80
4  32186     0  "SG"    0     # LOAD-DROP    P0434     13.80  LOAD==1.00(0.55)
3  32186     0  "1 "    0     # GEN-DROP    P0434     13.80  GEN==2.00(0.08)
3  32186     0  "10"    0     # GEN-DROP    P0434     13.80  GEN==2.00(0.08)
3  32186     0  "11"    0     # GEN-DROP    P0434     13.80  GEN==2.00(0.08)
3  32186     0  "12"    0     # GEN-DROP    P0434     13.80  GEN==2.00(0.08)
3  32186     0  "13"    0     # GEN-DROP    P0434     13.80  GEN==2.00(0.08)
3  32186     0  "14"    0     # GEN-DROP    P0434     13.80  GEN==2.00(0.08)
3  32186     0  "15"    0     # GEN-DROP    P0434     13.80  GEN==2.00(0.08)
3  32186     0  "16"    0     # GEN-DROP    P0434     13.80  GEN==2.00(0.08)
3  32186     0  "17"    0     # GEN-DROP    P0434     13.80  GEN==2.00(0.08)
3  32186     0  "18"    0     # GEN-DROP    P0434     13.80  GEN==2.00(0.08)
3  32186     0  "19"    0     # GEN-DROP    P0434     13.80  GEN==2.00(0.08)
3  32186     0  "2 "    0     # GEN-DROP    P0434     13.80  GEN==2.00(0.08)
3  32186     0  "20"    0     # GEN-DROP    P0434     13.80  GEN==2.00(0.08)
3  32186     0  "21"    0     # GEN-DROP    P0434     13.80  GEN==2.00(0.08)
3  32186     0  "22"    0     # GEN-DROP    P0434     13.80  GEN==2.00(0.08)
3  32186     0  "23"    0     # GEN-DROP    P0434     13.80  GEN==2.00(0.08)
3  32186     0  "24"    0     # GEN-DROP    P0434     13.80  GEN==2.00(0.08)
3  32186     0  "25"    0     # GEN-DROP    P0434     13.80  GEN==2.00(0.08)
3  32186     0  "3 "    0     # GEN-DROP    P0434     13.80  GEN==2.00(0.08)
3  32186     0  "4 "    0     # GEN-DROP    P0434     13.80  GEN==2.00(0.08)
3  32186     0  "5 "    0     # GEN-DROP    P0434     13.80  GEN==2.00(0.08)
3  32186     0  "6 "    0     # GEN-DROP    P0434     13.80  GEN==2.00(0.08)
3  32186     0  "7 "    0     # GEN-DROP    P0434     13.80  GEN==2.00(0.08)
3  32186     0  "8 "    0     # GEN-DROP    P0434     13.80  GEN==2.00(0.08)
3  32186     0  "9 "    0     # GEN-DROP    P0434     13.80  GEN==2.00(0.08)
0
 #
 #
 # (432)  B2 LINE OUTAGE (BREAKER-TO-BREAKER
 #
1  32586 31956  "1 "    0     # line from  HGHWY J2 115.00   (3) to (2)   CORDELLT 115.00
1  32586 32578  "1 "    0     # line from  HGHWY J2 115.00   (3) to (2)   SKGGS J2 115.00
1  32586 32590  "1 "    0     # line from  HGHWY J2 115.00   (3) to BRKR  HIGHWAY  115.00
1  31956 32598  "1 "    0     # line from  CORDELLT 115.00   (2) to (2)   NTWR ALT 115.00
1  32578 32568  "1 "    0     # line from  SKGGS J2 115.00   (2) to BRKR  IGNACIO  115.00
1  32598 32608  "1 "    0     # line from  NTWR ALT 115.00   (2) to (2)   CRQNZTP2 115.00
```

```
1  32608 32616  "1 "    0     # line from  CRQNZTP2 115.00   (2) to (1)   MEYERTP2 115.00
4  32590     0  "1 "    0     # LOAD-DROP    HIGHWAY  115.00  LOAD==27.36(5.55)
1  32588 32590  "1 "    1     # LINE-TRANSFER HGHWY J2 115.00 to HIGHWAY 115.00
4  32590     0  "**"    1     # RESTORE HIGHWAY load
0
 #
 #
 # (433)  B3 TRANSFORMER OUTAGE (BREAKER-TO-BREAKER
 #
2  30460 30067  "1 "    0     # TRAN from  VACA-DIX 230.00  BRKR to (3)   VC DX11M 500.00
2  30067 30030  "1 "    0     # TRAN from  VC DX11M 500.00   (3) to BRKR  VACA-DIX 500.00
2  30067 32152  "1 "    0     # TRAN from  VC DX11M 500.00   (3) to (1)   VC DX11T  13.80
0
 #
 #
 # (434)  B3 TRANSFORMER OUTAGE (BREAKER-TO-BREAKER
 #
2  31984 30348  "10"    0     # TRAN from  BRIGHTN  115.00  BRKR to BRKR  BRIGHTON 230.00
0
 #
 #
 # (435)  B3 TRANSFORMER OUTAGE (BREAKER-TO-BREAKER
 #
2  30348 30349  "1 "    0     # TRAN from  BRIGHTON 230.00  BRKR to (3)   BRGHTN M 230.00
2  30349 31984  "9 "    0     # TRAN from  BRGHTN M 230.00   (3) to BRKR  BRIGHTN  115.00
2  30349 32170  "1 "    0     # TRAN from  BRGHTN M 230.00   (3) to BRKR  BRGHTN T   8.90
0
 #
 #
 # (436)  B3 TRANSFORMER OUTAGE (BREAKER-TO-BREAKER
 #
2  31950 30450  "2 "    0     # TRAN from  CORTINA  115.00  BRKR to BRKR  CORTINA  230.00
1  31950 31261  "1 "    0    # open line from  CORTINA 115.00 to CACHE_J1 115.00
0
 #
 #
 # (437)  B3 TRANSFORMER OUTAGE (BREAKER-TO-BREAKER
 #
2  30450 30451  "1 "    0     # TRAN from  CORTINA  230.00  BRKR to (3)   CRTNA  M 230.00
2  30451 31951  "1 "    0     # TRAN from  CRTNA  M 230.00   (3) to BRKR  CORT_D   115.00
2  30451 32056  "1 "    0     # TRAN from  CRTNA  M 230.00   (3) to BRKR  CORTINA   60.00
4  31951     0  "1 "    0     # LOAD-DROP    CORT_D   115.00  LOAD==7.49(0.34)
0
 #
 #
 # (438)  B3 TRANSFORMER OUTAGE (BREAKER-TO-BREAKER
 #
2  31998 30460  "3 "    0     # TRAN from  VACA-DIX 115.00  BRKR to BRKR  VACA-DIX 230.00
0
```

```
 #
 #
 # (439)  B3 TRANSFORMER OUTAGE (BREAKER-TO-BREAKER
 #
2  31998 30460  "4 "    0     # TRAN from  VACA-DIX 115.00  BRKR to BRKR  VACA-DIX 230.00
0
 #
 #
 # (440)  B3 TRANSFORMER OUTAGE (BREAKER-TO-BREAKER
 #
2  32104 31990  "4 "    0     # TRAN from  DAVIS     60.00  BRKR to BRKR  DAVIS    115.00
1  32104 32103  "2 "  0     #Open Davis-UC Davis Jct2
1  32116 32104  "1 "  0     #Open Davis-UC Davis Jct1
0
 #
 #
 # (441)  B3 TRANSFORMER OUTAGE (BREAKER-TO-BREAKER
 #
2  32162 31994  "1 "    0     # TRAN from  RIV.DLTA   9.11   (1) to BRKR  GRAND IS 115.00
0
 #
 #
 # (442)  B3 TRANSFORMER OUTAGE (BREAKER-TO-BREAKER
 #
2  32088 31998  "5 "    0     # TRAN from  VACA-DXN  60.00  BRKR to BRKR  VACA-DIX 115.00
0
 #
 #
 # (443)  B3 TRANSFORMER OUTAGE (BREAKER-TO-BREAKER
 #
2  32164 32008  "1 "    0     # TRAN from  CTY FAIR   9.11   (1) to BRKR  SUISUN   115.00
4  32164     0  "SG"    0     # LOAD-DROP    CTY FAIR   9.11  LOAD==0.58(0.13)
3  32164     0  "1 "    0     # GEN-DROP    CTY FAIR   9.11  GEN==0.80(0.07)
3  32164     0  "2 "    0     # GEN-DROP    CTY FAIR   9.11  GEN==1.50(0.13)
0
 #
 #
 # (444)  B1 GENERATOR OUTAGE
 #
3  32150     0  "1"     0     # DG_VADIX  13.80       PGEN=49.00  QGEN=7.34
0
 #
 #
 # (445)  B1 GENERATOR OUTAGE
 #
3  32154     0  "1"     0     # WADHAM     9.11       PGEN=22.84  QGEN=3.81
0
 #
 #
```

```
 # (446)  B1 GENERATOR OUTAGE
 #
3  32156     0  "1"     0     # WOODLAND   9.11       PGEN=25.00  QGEN=5.00
0
 #
 #
 # (447)  B1 GENERATOR OUTAGE
 #
3  32164     0  "1"     0     # CTY FAIR   9.11       PGEN=0.80  QGEN=0.07
0
 #
 #
 # (448)  B1 GENERATOR OUTAGE
 #
3  32164     0  "2"     0     # CTY FAIR   9.11       PGEN=1.50  QGEN=0.13
0
 #
 #
 # (449)  B1 GENERATOR OUTAGE
 #
3  32166     0  "1"     0     # UC DAVIS   9.11       PGEN=3.50  QGEN=1.80
0
 #
 #
 # (450)  B1 GENERATOR OUTAGE
 #
3  32168     0  "1"     0     # USWINDPW   9.11
0
 #
 #
 # (451)  B1 GENERATOR OUTAGE
 #
3  32169     0  "1"     0     # SOLANOWP  21.00
0
 #
 #
 # (452)  B1 GENERATOR OUTAGE
 #
3  32169     0  "2"     0     # SOLANOWP  21.00
0
 #
 #
 # (453)  B1 GENERATOR OUTAGE
 #
3  32169     0  "3"     0     # SOLANOWP  21.00
0
 #
 #
 # (454)  B1 GENERATOR OUTAGE
```

```
 #
3  32172     0  "1"     0     # HIGHWNDS  34.50       PGEN=162.00  QGEN=0.00
0
 #
 #
 # (455)  B1 GENERATOR OUTAGE
 #
3  32171     0  "1"     0     # HIGHWND3  34.50       PGEN=38.00  QGEN=0.00
0
 #
 #
 # (456)  B1 GENERATOR OUTAGE
 #
3  32173     0  "1"     0     # LAMBGT1   13.80       PGEN=46.30  QGEN=-8.35
0
 #
 #
 # (457)  B1 GENERATOR OUTAGE
 #
3  32174     0  "2"     0     # GOOSEHGT  13.80       PGEN=46.30  QGEN=-6.40
0
 #
 #
 # (458)  B1 GENERATOR OUTAGE
 #
3  32175     0  "3"     0     # CREEDGT1  13.80       PGEN=46.30  QGEN=-6.40
0
 #
 #
 # (459)  B1 GENERATOR OUTAGE
 #
3  32185     0  "1"     0     # WOLFSKIL  13.80       PGEN=50.00  QGEN=5.95
0
 #
 #
 # (460)  B1 GENERATOR OUTAGE
 #
3  32176     0  "1"     0     # P0301     34.50       PGEN=150.00  QGEN=0.00
0
 #
 #
 # (461)  B1 GENERATOR OUTAGE
 #
3  32176     0  "2"     0     # P0301     34.50       PGEN=150.00  QGEN=0.00
0
 #
 #
 # (462)  B1 GENERATOR OUTAGE
 #
```

```
 3  32177     0  "1"     0     # P0412     34.50       PGEN=200.00  QGEN=0.00
 0
  #
  #
  # (463)  B1 GENERATOR OUTAGE
  #
 3  32186     0  "1"     0     # P0434     13.80       PGEN=2.00  QGEN=0.08
 0
  #
  #
  # (464)  L-1/G-1 OVERLAPPING OUTAGE
  # Rio Oso - Brighton 230 kV Line and Woodland Biomass
  #
 1  30330 30348  "1 "    0     # line from  RIO OSO  230.00  BRKR to BRKR  BRIGHTON 230.00
  #
 3  32156     0  "1"     0     # WOODLAND   9.11       PGEN=25.00  QGEN=5.00
 0
  #
  #
  # (465)  L-1/G-1 OVERLAPPING OUTAGE
  # West Sacramento - Brighton 115 kV Line and Woodland Biomass
 1  31978 31984  "1 "    0     # line from  DPWT_TP2 115.00   (3) to BRKR  BRIGHTN  115.00
 1  31978 31986  "1 "    0     # line from  DPWT_TP2 115.00   (3) to BRKR  W.SCRMNO 115.00
 1  31978 31988  "1 "    0     # line from  DPWT_TP2 115.00   (3) to (1)   DEEPWATR 115.00
 4  31988     0  "3 "    0     # LOAD-DROP    DEEPWATR 115.00  LOAD==19.45(0.87)
 1  31976 31988  "1"     1     #Transfer load to alternate Deepwater tap
 4  31988     0  "**"    1     #Restore load at Deepwater
  #
 3  32156     0  "1"     0     # WOODLAND   9.11       PGEN=25.00  QGEN=5.00
 0
  #
  #
  # (466)  L-1/G-1 OVERLAPPING OUTAGE
  # Rio Oso - Woodland #1 115 kV Line and Woodland Biomass
 1  31960 31966  "1 "    0     # line from  MOBILCHE 115.00   (2) to (3)   WODLNDJ1 115.00
 1  31960 31970  "1 "    0     # line from  MOBILCHE 115.00   (2) to BRKR  WOODLD   115.00
 1  31966 31965  "1 "    0     # line from  WODLNDJ1 115.00   (3) to (3)   KNIGHT1  115.00
 1  31966 31971  "1 "    0     # line from  WODLNDJ1 115.00   (3) to (1)   ZAMORA1  115.00
 1  31965 31963  "1 "    0     # line from  KNIGHT1  115.00   (3) to (1)   KNIGHTLD 115.00
 1  31965 32214  "1 "    0     # line from  KNIGHT1  115.00   (3) to BRKR  RIO OSO  115.00
 4  31960     0  "1 "    0     # LOAD-DROP    MOBILCHE 115.00  LOAD==2.42(0.00)
 4  31963     0  "1 "    0     # LOAD-DROP    KNIGHTLD 115.00  LOAD==3.23(0.14)
  #
 3  32156     0  "1"     0     # WOODLAND   9.11       PGEN=25.00  QGEN=5.00
 0
  #
  #
  # (467)  L-1/G-1 OVERLAPPING OUTAGE
  # Rio Oso - Woodland #2 115 kV Line and Woodland Biomass
```

```
1  31964 31968  "2 "    0     # line from  KNIGHT2  115.00   (2) to (3)   WODLNDJ2 115.00
1  31964 32214  "2 "    0     # line from  KNIGHT2  115.00   (2) to BRKR  RIO OSO  115.00
1  31968 31970  "2 "    0     # line from  WODLNDJ2 115.00   (3) to BRKR  WOODLD   115.00
1  31968 31973  "2 "    0     # line from  WODLNDJ2 115.00   (3) to (2)   ZAMORA2  115.00
1  31973 31972  "2 "    0     # line from  ZAMORA2  115.00   (2) to (1)   ZAMORA   115.00
4  31972     0  "1 "    0     # LOAD-DROP    ZAMORA   115.00  LOAD==4.06(0.18)
 #
3  32156     0  "1"     0     # WOODLAND   9.11       PGEN=25.00  QGEN=5.00
0
 #
 #
 # (468)  L-1/G-1 OVERLAPPING OUTAGE
 # Vaca - Suisun - Jameson 115 kV Line and WEC
1  31998 31997  "1 "    0     # line from  VACA-DIX 115.00  BRKR to (3)   SCHMLBCH 115.00
1  31997 32008  "1 "    0     # line from  SCHMLBCH 115.00   (3) to BRKR  SUISUN   115.00
1  31997 32009  "1 "    0     # line from  SCHMLBCH 115.00   (3) to (1)   JAMESN-A 115.00
4  31997     0  "1 "    0     # LOAD-DROP    SCHMLBCH 115.00  LOAD==7.26(4.88)
 #
3  32185     0  "1"     0     # WOLFSKIL  13.80       PGEN=50.00  QGEN=5.95
0
 #
 #
 # (469)  L-1/G-1 OVERLAPPING OUTAGE
 # Vaca Dixon - Bahia 230 kV Line and Contra Costa 7
1  30460 30465  "1 "    0     # line from  VACA-DIX 230.00  BRKR to BRKR  BAHIA    230.00
 #
3  33117     0  "1"     0     # C. COS 7  18       PGEN=330  QGEN=94
0
 #
 #
 # (470)  L-1/G-1 OVERLAPPING OUTAGE
 # Vaca Dixon - Parkway 230 kV Line and Contra Costa 7
1  30460 30467  "1 "    0     # line from  VACA-DIX 230.00  BRKR to BRKR  PARKWAY  230.00
 #
3  33117     0  "1"     0     # C. COS 7  18       PGEN=330  QGEN=94
0
 #
 #
 # (471)  L-1/G-1 OVERLAPPING OUTAGE
 # Vaca Dixon - Peabody 230 kV Line and Contra Costa 7
1  30460 30472  "1 "    0     # line from  VACA-DIX 230.00  BRKR to BRKR  PEABODY  230.00
 #
3  33117     0  "1"     0     # C. COS 7  18       PGEN=330  QGEN=94
0
 #
 #
 # (472)  L-1/G-1 OVERLAPPING OUTAGE
 # Vaca Dixon - Lambie 230 kV Line and Contra Costa 7
1  30460 30478  "1 "    0     # line from  VACA-DIX 230.00  BRKR to BRKR  LAMBIE   230.00
```

```
 #
3  33117     0  "1"     0     # C. COS 7  18       PGEN=330  QGEN=94
0
 #
 #
 # (473)  L-1/G-1 OVERLAPPING OUTAGE
 # Peabody - Birds Landing 230 kV Line and Contra Costa 7
1  30472 30479  "1 "    0     # line from  PEABODY  230.00  BRKR to BRKR  BDLSWSTA 230.00
 #
3  33117     0  "1"     0     # C. COS 7  18       PGEN=330  QGEN=94
0
 #
 #
 # (474)  L-1/G-1 OVERLAPPING OUTAGE
 # Lambie - Birds Landing 230 kV Line and Contra Costa 7
1  30478 30479  "1 "    0     # line from  LAMBIE   230.00  BRKR to BRKR  BDLSWSTA 230.00
 #
3  33117     0  "1"     0     # C. COS 7  18       PGEN=330  QGEN=94
0
 #
 #
 # (475)  L-1/G-1 OVERLAPPING OUTAGE
 # Birds Landing - Contra Costa Sub 230 kV Line and Contra Costa 7
1  30479 30523  "1 "    0     # line from  BDLSWSTA 230.00  BRKR to BRKR  CC SUB   230.00
 #
3  33117     0  "1"     0     # C. COS 7  18       PGEN=330  QGEN=94
0
 #
 #
 # (476)  L-1/G-1 OVERLAPPING OUTAGE
 # Birds Landing - Contra Costa 230 kV Line and Contra Costa 7
1  30525 30479  "1 "    0     # line from  C.COSTA  230.00  BRKR to BRKR  BDLSWSTA 230.00
 #
3  33117     0  "1"     0     # C. COS 7  18       PGEN=330  QGEN=94
0
 #
 #
 # (477)  L-1/G-1 OVERLAPPING OUTAGE
 # Vaca Dixon - Bahia 230 kV Line and SECAL 1
1  30460 30465  "1 "    0     # line from  VACA-DIX 230.00  BRKR to BRKR  BAHIA    230.00
 #
3  33118     0  "1"     0     # SECAL_1   18.00       PGEN=200.00  QGEN=14.78
0
 #
 #
 # (478)  L-1/G-1 OVERLAPPING OUTAGE
 # Vaca Dixon - Parkway 230 kV Line and SECAL 1
1  30460 30467  "1 "    0     # line from  VACA-DIX 230.00  BRKR to BRKR  PARKWAY  230.00
 #
```

```
 3  33118     0  "1"     0     # SECAL_1   18.00       PGEN=200.00  QGEN=14.78
 0
  #
  #
  # (479)  L-1/G-1 OVERLAPPING OUTAGE
  # Vaca Dixon - Peabody 230 kV Line and SECAL 1
 1  30460 30472  "1 "    0     # line from  VACA-DIX 230.00  BRKR to BRKR  PEABODY  230.00
  #
 3  33118     0  "1"     0     # SECAL_1   18.00       PGEN=200.00  QGEN=14.78
 0
  #
  #
  # (480)  L-1/G-1 OVERLAPPING OUTAGE
  # Vaca Dixon - Lambie 230 kV Line and SECAL 1
 1  30460 30478  "1 "    0     # line from  VACA-DIX 230.00  BRKR to BRKR  LAMBIE   230.00
  #
 3  33118     0  "1"     0     # SECAL_1   18.00       PGEN=200.00  QGEN=14.78
 0
  #
  #
  # (481)  L-1/G-1 OVERLAPPING OUTAGE
  # Peabody - Birds Landing 230 kV Line and SECAL 1
 1  30472 30479  "1 "    0     # line from  PEABODY  230.00  BRKR to BRKR  BDLSWSTA 230.00
  #
 3  33118     0  "1"     0     # SECAL_1   18.00       PGEN=200.00  QGEN=14.78
 0
  #
  #
  # (482)  L-1/G-1 OVERLAPPING OUTAGE
  # Lambie - Birds Landing 230 kV Line and SECAL 1
 1  30478 30479  "1 "    0     # line from  LAMBIE   230.00  BRKR to BRKR  BDLSWSTA 230.00
  #
 3  33118     0  "1"     0     # SECAL_1   18.00       PGEN=200.00  QGEN=14.78
 0
  #
  #
  # (483)  L-1/G-1 OVERLAPPING OUTAGE
  # Birds Landing - Contra Costa Sub 230 kV Line and SECAL 1
 1  30479 30523  "1 "    0     # line from  BDLSWSTA 230.00  BRKR to BRKR  CC SUB   230.00
  #
 3  33118     0  "1"     0     # SECAL_1   18.00       PGEN=200.00  QGEN=14.78
 0
  #
  #
  # (484)  L-1/G-1 OVERLAPPING OUTAGE
  # Birds Landing - Contra Costa 230 kV Line and SECAL 1
 1  30525 30479  "1 "    0     # line from  C.COSTA  230.00  BRKR to BRKR  BDLSWSTA 230.00
  #
 3  33118     0  "1"     0     # SECAL_1   18.00       PGEN=200.00  QGEN=14.78
```

```
0
 #
 #
 # (485)  L-1/G-1 OVERLAPPING OUTAGE
 # Vaca Dixon - Bahia 230 kV Line and DEC
1  30460 30465  "1 "    0     # line from  VACA-DIX 230.00  BRKR to BRKR  BAHIA    230.00
 #
3  33107     0  "1"     0     # DEC STG1  24.00       PGEN=280.00  QGEN=84.02
3  33110     0  "1"     0     # DEC CTG3  18.00       PGEN=200.00  QGEN=60.02
3  33109     0  "1"     0     # DEC CTG2  18.00       PGEN=200.00  QGEN=60.02
3  33108     0  "1"     0     # DEC CTG1  18.00       PGEN=200.00  QGEN=60.02
0
 #
 #
 # (486)  L-1/G-1 OVERLAPPING OUTAGE
 # Vaca Dixon - Parkway 230 kV Line and DEC
1  30460 30467  "1 "    0     # line from  VACA-DIX 230.00  BRKR to BRKR  PARKWAY  230.00
 #
3  33107     0  "1"     0     # DEC STG1  24.00       PGEN=280.00  QGEN=84.02
3  33110     0  "1"     0     # DEC CTG3  18.00       PGEN=200.00  QGEN=60.02
3  33109     0  "1"     0     # DEC CTG2  18.00       PGEN=200.00  QGEN=60.02
3  33108     0  "1"     0     # DEC CTG1  18.00       PGEN=200.00  QGEN=60.02
0
 #
 #
 # SMUD Zone 323
 # 2010 category b contingencies
 #
 #
 # (487)  B2 LINE OUTAGE (BREAKER-TO-BREAKER)
 #
1  30337 37012  "1 "    0     # line from  GOLDHILL 230.00  BRKR to BRKR  LAKE     230.00
0
 #
 #
 # (488)  B2 LINE OUTAGE (BREAKER-TO-BREAKER)
 #
1  37001 37012  "1 "    0     # line from  CAMINO S 230.00  BRKR to BRKR  LAKE     230.00
0
 #
 #
 # (489)  B2 LINE OUTAGE (BREAKER-TO-BREAKER)
 #
1  37001 37017  "1 "    0     # line from  CAMINO S 230.00  BRKR to BRKR  UNIONVLY 230.00
0
 #
 #
 # (490)  B2 LINE OUTAGE (BREAKER-TO-BREAKER)
 #
```

```
 1  37001 37018  "1 "    0     # line from  CAMINO S 230.00  BRKR to BRKR  WHITEROK 230.00
 0
  #
  #
  # (491)  B2 LINE OUTAGE (BREAKER-TO-BREAKER)
  #
 1  37002 37009  "1 "    0     # line from  CAMPBELL 230.00  BRKR to BRKR  HEDGE    230.00
 0
  #
  #
  # (492)  B2 LINE OUTAGE (BREAKER-TO-BREAKER)
  #
 1  37002 37014  "1 "    0     # line from  CAMPBELL 230.00  BRKR to BRKR  POCKET   230.00
 0
  #
  #
  # (493)  B2 LINE OUTAGE (BREAKER-TO-BREAKER)
  #
 1  37003 37010  "1 "    0     # line from  CARMICAL 230.00  BRKR to BRKR  HURLEY S 230.00
 0
  #
  #
  # (494)  B2 LINE OUTAGE (BREAKER-TO-BREAKER)
  #
 1  37003 37013  "1 "    0     # line from  CARMICAL 230.00  BRKR to BRKR  ORANGEVL 230.00
 0
  #
  #
  # (495)  B2 LINE OUTAGE (BREAKER-TO-BREAKER)
  #
 1  37004 37009  "1 "    0     # line from  ELKGROVE 230.00  BRKR to BRKR  HEDGE    230.00
 0
  #
  #
  # (496)  B2 LINE OUTAGE (BREAKER-TO-BREAKER)
  #
 1  37004 37016  "1 "    0     # line from  ELKGROVE 230.00  BRKR to BRKR  RNCHSECO 230.00
 0
  #
  #
  # (497)  B2 LINE OUTAGE (BREAKER-TO-BREAKER)
  #
 1  37005 37008  "1 "    0     # line from  ELVERTAS 230.00  BRKR to BRKR  FOOTHILL 230.00
 0
  #
  #
  # (498)  B2 LINE OUTAGE (BREAKER-TO-BREAKER)
  #
 1  37005 37013  "1 "    0     # line from  ELVERTAS 230.00  BRKR to BRKR  ORANGEVL 230.00
```

```
0
 #
 #
 # (499)  B2 LINE OUTAGE (BREAKER-TO-BREAKER)
 #
1  37005 37021  "1 "    0     # line from  ELVERTAS 230.00  BRKR to BRKR  NATOMAS  230.00
0
 #
 #
 # (500)  B2 LINE OUTAGE (BREAKER-TO-BREAKER)
 #
1  37005 37546  "1 "    0     # line from  ELVERTAS 230.00  BRKR to BRKR  ELVERTAW 230.00
0
 #
 #
 # (501)  B2 LINE OUTAGE (BREAKER-TO-BREAKER)
 #
1  37008 37013  "1 "    0     # line from  FOOTHILL 230.00  BRKR to BRKR  ORANGEVL 230.00
0
 #
 #
 # (502)  B2 LINE OUTAGE (BREAKER-TO-BREAKER)
 #
1  37009 37016  "1 "    0     # line from  HEDGE    230.00  BRKR to BRKR  RNCHSECO 230.00
0
 #
 #
 # (503)  B2 LINE OUTAGE (BREAKER-TO-BREAKER)
 #
1  37011 37017  "1 "    0     # line from  JAYBIRD  230.00  BRKR to BRKR  UNIONVLY 230.00
0
 #
 #
 # (504)  B2 LINE OUTAGE (BREAKER-TO-BREAKER)
 #
1  37011 37018  "1 "    0     # line from  JAYBIRD  230.00  BRKR to BRKR  WHITEROK 230.00
0
 #
 #
 # (505)  B2 LINE OUTAGE (BREAKER-TO-BREAKER)
 #
1  37012 37013  "1 "    0     # line from  LAKE     230.00  BRKR to BRKR  ORANGEVL 230.00
0
 #
 #
 # (506)  B2 LINE OUTAGE (BREAKER-TO-BREAKER)
 #
1  37013 37018  "1 "    0     # line from  ORANGEVL 230.00  BRKR to BRKR  WHITEROK 230.00
0
```

```
 #
 #
 # (507)  B2 LINE OUTAGE (BREAKER-TO-BREAKER)
 #
1  37014 37012  "1 "    0     # line from  POCKET   230.00  BRKR to BRKR  LAKE     230.00
0
 #
 #
 # (508)  B2 LINE OUTAGE (BREAKER-TO-BREAKER)
 #
1  37014 37016  "1 "    0     # line from  POCKET   230.00  BRKR to BRKR  RNCHSECO 230.00
0
 #
 #
 # (509)  B2 LINE OUTAGE (BREAKER-TO-BREAKER)
 #
1  37014 37016  "2 "    0     # line from  POCKET   230.00  BRKR to BRKR  RNCHSECO 230.00
0
 #
 #
 # (510)  B2 LINE OUTAGE (BREAKER-TO-BREAKER)
 #
1  37015 37009  "1 "    0     # line from  PROCTER  230.00  BRKR to BRKR  HEDGE    230.00
0
 #
 #
 # (511)  B2 LINE OUTAGE (BREAKER-TO-BREAKER)
 #
1  37015 37010  "1 "    0     # line from  PROCTER  230.00  BRKR to BRKR  HURLEY S 230.00
0
 #
 #
 # (512)  B2 LINE OUTAGE (BREAKER-TO-BREAKER)
 #
1  37016 30500  "1 "    0     # line from  RNCHSECO 230.00  BRKR to BRKR  BELLOTA  230.00
0
 #
 #
 # (513)  B2 LINE OUTAGE (BREAKER-TO-BREAKER)
 #
1  37016 30500  "2 "    0     # line from  RNCHSECO 230.00  BRKR to BRKR  BELLOTA  230.00
0
 #
 #
 # (514)  B2 LINE OUTAGE (BREAKER-TO-BREAKER)
 #
1  37018 37009  "1 "    0     # line from  WHITEROK 230.00  BRKR to BRKR  HEDGE    230.00
0
 #
```

```
 #
 # (515)  B2 LINE OUTAGE (BREAKER-TO-BREAKER)
 #
1  37021 37010  "1 "    0     # line from  NATOMAS  230.00  BRKR to BRKR  HURLEY S 230.00
0
 #
 #
 # (516)  B2 LINE OUTAGE (BREAKER-TO-BREAKER)
 #
1  37051 37053  "1 "    0     # line from  EAST CTY 115.00  BRKR to BRKR  HEDGE    115.00
0
 #
 #
 # (517)  B2 LINE OUTAGE (BREAKER-TO-BREAKER)
 #
1  37051 37054  "1 "    0     # line from  EAST CTY 115.00  BRKR to BRKR  HURLEY   115.00
0
 #
 #
 # (518)  B2 LINE OUTAGE (BREAKER-TO-BREAKER)
 #
1  37051 37055  "1 "    0     # line from  EAST CTY 115.00  BRKR to BRKR  MID CTY  115.00
0
 #
 #
 # (519)  B2 LINE OUTAGE (BREAKER-TO-BREAKER)
 #
1  37051 37055  "2 "    0     # line from  EAST CTY 115.00  BRKR to BRKR  MID CTY  115.00
0
 #
 #
 # (520)  B2 LINE OUTAGE (BREAKER-TO-BREAKER)
 #
1  37052 37056  "1 "    0     # line from  ELVERTAS 115.00  BRKR to BRKR  NORTHCTY 115.00
0
 #
 #
 # (521)  B2 LINE OUTAGE (BREAKER-TO-BREAKER)
 #
1  37053 37057  "1 "    0     # line from  HEDGE    115.00  BRKR to BRKR  SOUTHCTY 115.00
0
 #
 #
 # (522)  B2 LINE OUTAGE (BREAKER-TO-BREAKER)
 #
1  37053 37057  "2 "    0     # line from  HEDGE    115.00  BRKR to BRKR  SOUTHCTY 115.00
0
 #
 #
```

```
 # (523)  B2 LINE OUTAGE (BREAKER-TO-BREAKER)
 #
1  37054 37056  "1 "    0     # line from  HURLEY   115.00  BRKR to BRKR  NORTHCTY 115.00
0
 #
 #
 # (524)  B2 LINE OUTAGE (BREAKER-TO-BREAKER)
 #
1  37054 37056  "2 "    0     # line from  HURLEY   115.00  BRKR to BRKR  NORTHCTY 115.00
0
 #
 #
 # (525)  B2 LINE OUTAGE (BREAKER-TO-BREAKER)
 #
1  37055 37059  "1 "    0     # line from  MID CTY  115.00  BRKR to BRKR  STA. B   115.00
0
 #
 #
 # (526)  B2 LINE OUTAGE (BREAKER-TO-BREAKER)
 #
1  37056 37058  "1 "    0     # line from  NORTHCTY 115.00  BRKR to BRKR  STA. A   115.00
0
 #
 #
 # (527)  B2 LINE OUTAGE (BREAKER-TO-BREAKER)
 #
1  37056 37058  "2 "    0     # line from  NORTHCTY 115.00  BRKR to BRKR  STA. A   115.00
0
 #
 #
 # (528)  B2 LINE OUTAGE (BREAKER-TO-BREAKER)
 #
1  37056 37059  "1 "    0     # line from  NORTHCTY 115.00  BRKR to BRKR  STA. B   115.00
0
 #
 #
 # (529)  B2 LINE OUTAGE (BREAKER-TO-BREAKER)
 #
1  37056 37059  "2 "    0     # line from  NORTHCTY 115.00  BRKR to BRKR  STA. B   115.00
0
 #
 #
 # (530)  B2 LINE OUTAGE (BREAKER-TO-BREAKER)
 #
1  37057 37059  "1 "    0     # line from  SOUTHCTY 115.00  BRKR to BRKR  STA. B   115.00
0
 #
 #
 # (531)  B2 LINE OUTAGE (BREAKER-TO-BREAKER)
```

```
 #
1  37058 37060  "1 "    0     # line from  STA. A   115.00  BRKR to BRKR  STA. D   115.00
0
 #
 #
 # (532)  B2 LINE OUTAGE (BREAKER-TO-BREAKER)
 #
1  37059 37060  "1 "    0     # line from  STA. B   115.00  BRKR to BRKR  STA. D   115.00
0
 #
 #
 # (533)  B2 LINE OUTAGE (BREAKER-TO-BREAKER)
 #
1  37103 37104  "1 "    0     # line from  ELVERTA1  69.00  BRKR to BRKR  ELVERTA2  69.00
0
 #
 #
 # (534)  B2 LINE OUTAGE (BREAKER-TO-BREAKER)
 #
1  37110 37120  "1 "    0     # line from  JONESFRK  69.00  BRKR to BRKR  UNIONVLY  69.00
0
 #
 #
 # (535)  B2 LINE OUTAGE (BREAKER-TO-BREAKER)
 #
1  37112 37118  "1 "    0     # line from  LOON LK   69.00  BRKR to BRKR  ROBBS PK  69.00
0
 #
 #
 # (536)  B2 LINE OUTAGE (BREAKER-TO-BREAKER)
 #
1  37112 37120  "1 "    0     # line from  LOON LK   69.00  BRKR to BRKR  UNIONVLY  69.00
0
 #
 #
 # (537)  B2 LINE OUTAGE (BREAKER-TO-BREAKER)
 #
1  37113 37105  "1 "    0     # line from  MCCLELLN  69.00  BRKR to BRKR  FOOTHIL1  69.00
0
 #
 #
 # (538)  B2 LINE OUTAGE (BREAKER-TO-BREAKER)
 #
1  37118 37120  "1 "    0     # line from  ROBBS PK  69.00  BRKR to BRKR  UNIONVLY  69.00
0
 #
 #
 # (539)  B2 LINE OUTAGE (BREAKER-TO-BREAKER)
 #
```

```
 1  37119 37116  "1 "    0     # line from  SRWTP     69.00  BRKR to BRKR  POCKET 1  69.00
 0
  #
  #
  # (540)  B2 LINE OUTAGE (BREAKER-TO-BREAKER)
  #
 1  37546 37010  "1 "    0     # line from  ELVERTAW 230.00  BRKR to BRKR  HURLEY S 230.00
 0
  #
  #
  # (541)  B2 LINE OUTAGE (BREAKER-TO-BREAKER)
  #
 1  37546 37010  "2 "    0     # line from  ELVERTAW 230.00  BRKR to BRKR  HURLEY S 230.00
 0
  #
  #
  # (542)  B2 LINE OUTAGE (BREAKER-TO-BREAKER)
  #
 1  37585 37010  "1 "    0     # line from  TRCY PMP 230.00  BRKR to BRKR  HURLEY S 230.00
 0
  #
  #
  # (543)  B2 LINE OUTAGE (BREAKER-TO-BREAKER)
  #
 1  37585 37010  "2 "    0     # line from  TRCY PMP 230.00  BRKR to BRKR  HURLEY S 230.00
 0
  #
  #
  # (544)  B3 TRANSFORMER OUTAGE (BREAKER-TO-BREAKER)
  #
 2  37101 37003  "1 "    0     # TRAN from  CARMICAL  69.00  BRKR to BRKR  CARMICAL 230.00
 4  37101     0  "1 "    0     # LOAD-DROP    CARMICAL  69.00  LOAD==185.58(34.67)
 0
  #
  #
  # (545)  B3 TRANSFORMER OUTAGE (BREAKER-TO-BREAKER)
  #
 2  37102 37004  "1 "    0     # TRAN from  ELKGROV1  69.00  BRKR to BRKR  ELKGROVE 230.00
 4  37102     0  "1 "    0     # LOAD-DROP    ELKGROV1  69.00  LOAD==125.42(23.45)
 0
  #
  #
  # (546)  B3 TRANSFORMER OUTAGE (BREAKER-TO-BREAKER)
  #
 2  37121 37004  "1 "    0     # TRAN from  ELKGROV2  69.00  BRKR to BRKR  ELKGROVE 230.00
 4  37121     0  "1 "    0     # LOAD-DROP    ELKGROV2  69.00  LOAD==185.58(34.67)
 0
  #
  #
```

```
 # (547)  B3 TRANSFORMER OUTAGE (BREAKER-TO-BREAKER)
 #
2  37005 37006  "1 "    0     # TRAN from  ELVERTAS 230.00  BRKR to BRKR  ELVRTAX1 230.00
0
 #
 #
 # (548)  B3 TRANSFORMER OUTAGE (BREAKER-TO-BREAKER)
 #
2  37103 37006  "1 "    0     # TRAN from  ELVERTA1  69.00  BRKR to BRKR  ELVRTAX1 230.00
0
 #
 #
 # (549)  B3 TRANSFORMER OUTAGE (BREAKER-TO-BREAKER)
 #
2  37005 37007  "1 "    0     # TRAN from  ELVERTAS 230.00  BRKR to BRKR  ELVRTAX2 230.00
0
 #
 #
 # (550)  B3 TRANSFORMER OUTAGE (BREAKER-TO-BREAKER)
 #
2  37104 37007  "1 "    0     # TRAN from  ELVERTA2  69.00  BRKR to BRKR  ELVRTAX2 230.00
0
 #
 #
 # (551)  B3 TRANSFORMER OUTAGE (BREAKER-TO-BREAKER)
 #
2  37105 37008  "1 "    0     # TRAN from  FOOTHIL1  69.00  BRKR to BRKR  FOOTHILL 230.00
0
 #
 #
 # (552)  B3 TRANSFORMER OUTAGE (BREAKER-TO-BREAKER)
 #
2  37106 37009  "1 "    0     # TRAN from  HEDGE 1   69.00  BRKR to BRKR  HEDGE    230.00
4  37106     0  "1 "    0     # LOAD-DROP    HEDGE 1   69.00  LOAD==183.54(34.67)
0
 #
 #
 # (553)  B3 TRANSFORMER OUTAGE (BREAKER-TO-BREAKER)
 #
2  37107 37009  "3 "    0     # TRAN from  HEDGE 3   69.00  BRKR to BRKR  HEDGE    230.00
4  37107     0  "1 "    0     # LOAD-DROP    HEDGE 3   69.00  LOAD==181.50(33.65)
0
 #
 #
 # (554)  B3 TRANSFORMER OUTAGE (BREAKER-TO-BREAKER)
 #
2  37108 37010  "1 "    0     # TRAN from  HURLEY 1  69.00  BRKR to BRKR  HURLEY S 230.00
4  37108     0  "1 "    0     # LOAD-DROP    HURLEY 1  69.00  LOAD==170.28(31.61)
0
```

```
 #
 #
 # (555)  B3 TRANSFORMER OUTAGE (BREAKER-TO-BREAKER)
 #
2  37109 37010  "2 "    0     # TRAN from  HURLEY 2  69.00  BRKR to BRKR  HURLEY S 230.00
4  37109     0  "1 "    0     # LOAD-DROP    HURLEY 2  69.00  LOAD==187.62(34.67)
0
 #
 #
 # (556)  B3 TRANSFORMER OUTAGE (BREAKER-TO-BREAKER)
 #
2  37111 37012  "1 "    0     # TRAN from  LAKE 1    69.00  BRKR to BRKR  LAKE     230.00
4  37111     0  "1 "    0     # LOAD-DROP    LAKE 1    69.00  LOAD==180.48(33.65)
0
 #
 #
 # (557)  B3 TRANSFORMER OUTAGE (BREAKER-TO-BREAKER)
 #
2  37122 37012  "1 "    0     # TRAN from  LAKE 2    69.00  BRKR to BRKR  LAKE     230.00
4  37122     0  "1 "    0     # LOAD-DROP    LAKE 2    69.00  LOAD==120.32(22.43)
0
 #
 #
 # (558)  B3 TRANSFORMER OUTAGE (BREAKER-TO-BREAKER)
 #
2  37114 37013  "1 "    0     # TRAN from  ORANGVL1  69.00  BRKR to BRKR  ORANGEVL 230.00
4  37114     0  "1 "    0     # LOAD-DROP    ORANGVL1  69.00  LOAD==184.56(34.67)
0
 #
 #
 # (559)  B3 TRANSFORMER OUTAGE (BREAKER-TO-BREAKER)
 #
2  37115 37013  "2 "    0     # TRAN from  ORANGVL2  69.00  BRKR to BRKR  ORANGEVL 230.00
4  37115     0  "1 "    0     # LOAD-DROP    ORANGVL2  69.00  LOAD==167.22(31.61)
0
 #
 #
 # (560)  B3 TRANSFORMER OUTAGE (BREAKER-TO-BREAKER)
 #
2  37116 37014  "1 "    0     # TRAN from  POCKET 1  69.00  BRKR to BRKR  POCKET   230.00
0
 #
 #
 # (561)  B3 TRANSFORMER OUTAGE (BREAKER-TO-BREAKER)
 #
2  37117 37014  "2 "    0     # TRAN from  POCKET 2  69.00  BRKR to BRKR  POCKET   230.00
4  37117     0  "1 "    0     # LOAD-DROP    POCKET 2  69.00  LOAD==195.77(36.71)
0
 #
```

```
 #
 # (562)  B3 TRANSFORMER OUTAGE (BREAKER-TO-BREAKER)
 #
2  37123 37021  "1 "    0     # TRAN from  NATOMAS   69.00  BRKR to BRKR  NATOMAS  230.00
4  37123     0  "1 "    0     # LOAD-DROP    NATOMAS   69.00  LOAD==157.03(29.57)
0
 #
 #
 # (563)  B3 TRANSFORMER OUTAGE (BREAKER-TO-BREAKER)
 #
2  37201 37051  "1 "    0     # TRAN from  EAST CTY  22.00   (1) to BRKR  EAST CTY 115.00
4  37201     0  "1 "    0     # LOAD-DROP    EAST CTY  22.00  LOAD==47.92(9.18)
0
 #
 #
 # (564)  B3 TRANSFORMER OUTAGE (BREAKER-TO-BREAKER)
 #
2  37006 37052  "1 "    0     # TRAN from  ELVRTAX1 230.00  BRKR to BRKR  ELVERTAS 115.00
0
 #
 #
 # (565)  B3 TRANSFORMER OUTAGE (BREAKER-TO-BREAKER)
 #
2  37007 37052  "1 "    0     # TRAN from  ELVRTAX2 230.00  BRKR to BRKR  ELVERTAS 115.00
0
 #
 #
 # (566)  B3 TRANSFORMER OUTAGE (BREAKER-TO-BREAKER)
 #
2  37009 37053  "2 "    0     # TRAN from  HEDGE    230.00  BRKR to BRKR  HEDGE    115.00
0
 #
 #
 # (567)  B3 TRANSFORMER OUTAGE (BREAKER-TO-BREAKER)
 #
2  37009 37053  "4 "    0     # TRAN from  HEDGE    230.00  BRKR to BRKR  HEDGE    115.00
0
 #
 #
 # (568)  B3 TRANSFORMER OUTAGE (BREAKER-TO-BREAKER)
 #
2  37009 37053  "6 "    0     # TRAN from  HEDGE    230.00  BRKR to BRKR  HEDGE    115.00
0
 #
 #
 # (569)  B3 TRANSFORMER OUTAGE (BREAKER-TO-BREAKER)
 #
2  37010 37054  "1 "    0     # TRAN from  HURLEY S 230.00  BRKR to BRKR  HURLEY   115.00
0
```

```
 #
 #
 # (570)  B3 TRANSFORMER OUTAGE (BREAKER-TO-BREAKER)
 #
2  37202 37055  "1 "    0     # TRAN from  MID CTY1  22.00   (1) to BRKR  MID CTY  115.00
4  37202     0  "1 "    0     # LOAD-DROP    MID CTY1  22.00  LOAD==13.26(2.04)
0
 #
 #
 # (571)  B3 TRANSFORMER OUTAGE (BREAKER-TO-BREAKER)
 #
2  37203 37055  "2 "    0     # TRAN from  MID CTY2  22.00   (1) to BRKR  MID CTY  115.00
4  37203     0  "1 "    0     # LOAD-DROP    MID CTY2  22.00  LOAD==13.26(2.04)
0
 #
 #
 # (572)  B3 TRANSFORMER OUTAGE (BREAKER-TO-BREAKER)
 #
2  37210 37055  "3 "    0     # TRAN from  MID CTY3  22.00   (2) to BRKR  MID CTY  115.00
1  37210 37211  "1 "    0     # line from  MID CTY3  22.00   (2) to (2)   UCDMC     22.00
2  37211 37320  "1 "    0     # TRAN from  UCDMC     22.00   (2) to (1)   UCDMC     12.50
4  37320     0  "1 "    0     # LOAD-DROP    UCDMC     12.50  LOAD==12.24(2.04)
3  37320     0  "1 "    0     # GEN-DROP    UCDMC     12.50  GEN==24.00(-5.10)
0
 #
 #
 # (573)  B3 TRANSFORMER OUTAGE (BREAKER-TO-BREAKER)
 #
2  37204 37056  "1 "    0     # TRAN from  NORTHCT1  22.00   (1) to BRKR  NORTHCTY 115.00
4  37204     0  "1 "    0     # LOAD-DROP    NORTHCT1  22.00  LOAD==53.02(10.20)
0
 #
 #
 # (574)  B3 TRANSFORMER OUTAGE (BREAKER-TO-BREAKER)
 #
2  37205 37056  "2 "    0     # TRAN from  NORTHCT2  22.00   (1) to BRKR  NORTHCTY 115.00
4  37205     0  "1 "    0     # LOAD-DROP    NORTHCT2  22.00  LOAD==43.85(8.16)
0
 #
 #
 # (575)  B3 TRANSFORMER OUTAGE (BREAKER-TO-BREAKER)
 #
2  37207 37057  "1 "    0     # TRAN from  SOUTHCTY  22.00   (1) to BRKR  SOUTHCTY 115.00
4  37207     0  "1 "    0     # LOAD-DROP    SOUTHCTY  22.00  LOAD==58.12(11.22)
0
 #
 #
 # (576)  B3 TRANSFORMER OUTAGE (BREAKER-TO-BREAKER)
 #
```

```
 2  37401 37058  "1 "    0     # TRAN from  STA. A 1  12.00   (1) to BRKR  STA. A   115.00
 4  37401     0  "1 "    0     # LOAD-DROP    STA. A 1  12.00  LOAD==8.16(1.02)
 0
  #
  #
  # (577)  B3 TRANSFORMER OUTAGE (BREAKER-TO-BREAKER)
  #
 2  37402 37058  "2 "    0     # TRAN from  STA. A 2  12.00   (1) to BRKR  STA. A   115.00
 4  37402     0  "1 "    0     # LOAD-DROP    STA. A 2  12.00  LOAD==8.16(1.02)
 0
  #
  #
  # (578)  B3 TRANSFORMER OUTAGE (BREAKER-TO-BREAKER)
  #
 2  37403 37058  "3 "    0     # TRAN from  STA. A 3  12.00   (1) to BRKR  STA. A   115.00
 4  37403     0  "1 "    0     # LOAD-DROP    STA. A 3  12.00  LOAD==8.16(1.02)
 0
  #
  #
  # (579)  B3 TRANSFORMER OUTAGE (BREAKER-TO-BREAKER)
  #
 2  37404 37058  "4 "    0     # TRAN from  STA. A 4  12.00   (1) to BRKR  STA. A   115.00
 4  37404     0  "1 "    0     # LOAD-DROP    STA. A 4  12.00  LOAD==8.16(1.02)
 0
  #
  #
  # (580)  B3 TRANSFORMER OUTAGE (BREAKER-TO-BREAKER)
  #
 2  37405 37058  "5 "    0     # TRAN from  STA. A 5  12.00   (1) to BRKR  STA. A   115.00
 4  37405     0  "1 "    0     # LOAD-DROP    STA. A 5  12.00  LOAD==8.16(1.02)
 0
  #
  #
  # (581)  B3 TRANSFORMER OUTAGE (BREAKER-TO-BREAKER)
  #
 2  37406 37058  "6 "    0     # TRAN from  STA. A 6  12.00   (1) to BRKR  STA. A   115.00
 4  37406     0  "1 "    0     # LOAD-DROP    STA. A 6  12.00  LOAD==8.16(1.02)
 0
  #
  #
  # (582)  B3 TRANSFORMER OUTAGE (BREAKER-TO-BREAKER)
  #
 2  37407 37059  "1 "    0     # TRAN from  STA. B    12.00   (1) to BRKR  STA. B   115.00
 4  37407     0  "1 "    0     # LOAD-DROP    STA. B    12.00  LOAD==42.83(8.16)
 0
  #
  #
  # (583)  B3 TRANSFORMER OUTAGE (BREAKER-TO-BREAKER)
  #
```

```
 2  37208 37060  "1 "    0     # TRAN from  STA. D 1  22.00   (1) to BRKR  STA. D   115.00
 4  37208     0  "1 "    0     # LOAD-DROP    STA. D 1  22.00  LOAD==28.55(5.10)
 0
  #
  #
  # (584)  B3 TRANSFORMER OUTAGE (BREAKER-TO-BREAKER)
  #
 2  37209 37060  "1 "    0     # TRAN from  STA. D 2  22.00   (1) to BRKR  STA. D   115.00
 4  37209     0  "1 "    0     # LOAD-DROP    STA. D 2  22.00  LOAD==28.55(5.10)
 0
  #
  #
  # (585)  B3 TRANSFORMER OUTAGE (BREAKER-TO-BREAKER)
  #
 2  37315 37119  "1 "    0     # TRAN from  SRWTPA    13.80   (1) to BRKR  SRWTP     69.00
 3  37315     0  "1 "    0     # GEN-DROP    SRWTPA    13.80  GEN==40.00(14.00)
 3  37315     0  "2 "    0     # GEN-DROP    SRWTPA    13.80  GEN==11.00(5.78)
 0
  #
  #
  # (586)  B3 TRANSFORMER OUTAGE (BREAKER-TO-BREAKER)
  #
 2  37017 37120  "1 "    0     # TRAN from  UNIONVLY 230.00  BRKR to BRKR  UNIONVLY  69.00
 0
  #
  #
  # (587)  B3 TRANSFORMER OUTAGE (BREAKER-TO-BREAKER)
  #
 2  37015 37310  "1 "    0     # TRAN from  PROCTER  230.00  BRKR to BRKR  PROCTER1  13.80
 0
  #
  #
  # (588)  B3 TRANSFORMER OUTAGE (BREAKER-TO-BREAKER)
  #
 2  37015 37312  "1 "    0     # TRAN from  PROCTER  230.00  BRKR to BRKR  PROCTER3  13.80
 0
  #
  #
  # (589)  B1 GENERATOR OUTAGE
  #
 3  37301     0  "1"     0     # CAMINO 1  13.80       PGEN=50.00  QGEN=10.56
 0
  #
  #
  # (590)  B1 GENERATOR OUTAGE
  #
 3  37302     0  "1"     0     # CAMINO 2  13.80       PGEN=50.00  QGEN=12.19
 0
  #
```

```
 #
 # (591)  B1 GENERATOR OUTAGE
 #
3  37303     0  "1"     0     # CAMPBEL1  13.80       PGEN=85.00  QGEN=39.00
0
 #
 #
 # (592)  B1 GENERATOR OUTAGE
 #
3  37304     0  "1"     0     # CAMPBEL2  13.80       PGEN=40.00  QGEN=20.00
0
 #
 #
 # (593)  B1 GENERATOR OUTAGE
 #
3  37305     0  "1"     0     # JAYBIRD1  13.80       PGEN=50.00  QGEN=11.16
0
 #
 #
 # (594)  B1 GENERATOR OUTAGE
 #
3  37306     0  "1"     0     # JAYBIRD2  13.80       PGEN=50.00  QGEN=11.43
0
 #
 #
 # (595)  B1 GENERATOR OUTAGE
 #
3  37307     0  "1"     0     # JONESFRK   4.16       PGEN=5.00  QGEN=3.40
0
 #
 #
 # (596)  B1 GENERATOR OUTAGE
 #
3  37308     0  "1"     0     # LOON LK   13.80       PGEN=70.00  QGEN=9.88
0
 #
 #
 # (597)  B1 GENERATOR OUTAGE
 #
3  37309     0  "1"     0     # MCCLELLN  13.80       PGEN=62.00  QGEN=6.91
0
 #
 #
 # (598)  B1 GENERATOR OUTAGE
 #
3  37310     0  "1"     0     # PROCTER1  13.80       PGEN=41.00  QGEN=15.00
0
 #
 #
```

```
 # (599)  B1 GENERATOR OUTAGE
 #
3  37311     0  "1"     0     # PROCTER2  13.80       PGEN=41.00  QGEN=3.36
0
 #
 #
 # (600)  B1 GENERATOR OUTAGE
 #
3  37312     0  "1"     0     # PROCTER3  13.80       PGEN=41.00  QGEN=15.00
0
 #
 #
 # (601)  B1 GENERATOR OUTAGE
 #
3  37313     0  "1"     0     # PROCTER4  13.80       PGEN=39.50  QGEN=3.30
0
 #
 #
 # (602)  B1 GENERATOR OUTAGE
 #
3  37314     0  "1"     0     # ROBBS PK  13.80       PGEN=20.00  QGEN=6.27
0
 #
 #
 # (603)  B1 GENERATOR OUTAGE
 #
3  37315     0  "1"     0     # SRWTPA    13.80       PGEN=40.00  QGEN=14.00
0
 #
 #
 # (604)  B1 GENERATOR OUTAGE
 #
3  37315     0  "2"     0     # SRWTPA    13.80       PGEN=11.00  QGEN=5.78
0
 #
 #
 # (605)  B1 GENERATOR OUTAGE
 #
3  37316     0  "1"     0     # SRWTPB    13.80       PGEN=40.00  QGEN=15.18
0
 #
 #
 # (606)  B1 GENERATOR OUTAGE
 #
3  37317     0  "1"     0     # UNIONVLY  13.80       PGEN=40.00  QGEN=14.20
0
 #
 #
 # (607)  B1 GENERATOR OUTAGE
```

```
 #
3  37318     0  "1"     0     # WHITERK1  13.80       PGEN=90.00  QGEN=13.46
0
 #
 #
 # (608)  B1 GENERATOR OUTAGE
 #
3  37319     0  "1"     0     # WHITERK2  13.80       PGEN=90.00  QGEN=19.28
0
 #
 #
 # (609)  B1 GENERATOR OUTAGE
 #
3  37320     0  "1"     0     # UCDMC     12.50       PGEN=24.00  QGEN=-5.10
0
 #
 #
 # (610)  B1 GENERATOR OUTAGE
 #
3  37321     0  "1"     0     # COSUMNE1  18.00       PGEN=165.00  QGEN=11.66
0
 #
 #
 # (611)  B1 GENERATOR OUTAGE
 #
3  37322     0  "1"     0     # COSUMNE2  18.00       PGEN=165.00  QGEN=11.66
0
 #
 #
 # (612)  B1 GENERATOR OUTAGE
 #
3  37323     0  "1"     0     # COSUMNE3  16.50       PGEN=170.00  QGEN=12.71
0
 #
 #
 # WAPA Zones 325
 # 2010 category b contingencies
 #
 #
 # (613)  B2 LINE OUTAGE (BREAKER-TO-BREAKER)
 #
1  34214 34282  "1 "    0     # line from  LOS BANS  70.00  BRKR to BRKR  ONLL PMP  70.00
0
 #
 #
 # (614)  B2 LINE OUTAGE (BREAKER-TO-BREAKER)
 #
1  37505 37648  "1 "    0     # line from  KESWICK  115.00  BRKR to BRKR  KNAUF    115.00
0
```

```
 #
 #
 # (615)  B2 LINE OUTAGE (BREAKER-TO-BREAKER)
 #
1  37505 37922  "1 "    0     # line from  KESWICK  115.00  BRKR to BRKR  EUREKA   115.00
0
 #
 #
 # (616)  B2 LINE OUTAGE (BREAKER-TO-BREAKER)
 #
1  37505 37947  "1 "    0     # line from  KESWICK  115.00  BRKR to BRKR  SULP CRK 115.00
0
 #
 #
 # (617)  B2 LINE OUTAGE (BREAKER-TO-BREAKER)
 #
1  37520 37546  "1 "    0     # line from  OBANION  230.00  BRKR to BRKR  ELVERTAW 230.00
3  37521     0  "1 "    0     # GEN-DROP    SUTTER1   18.00  GEN==160.00(16.77)
3  37522     0  "2 "    0     # GEN-DROP    SUTTER2   18.00  GEN==160.00(16.77)
3  37523     0  "3 "    0     # GEN-DROP    SUTTER3   18.00  GEN==160.00(16.77)
0
 #
 #
 # (618)  B2 LINE OUTAGE (BREAKER-TO-BREAKER)
 #
1  37520 37546  "2 "    0     # line from  OBANION  230.00  BRKR to BRKR  ELVERTAW 230.00
3  37521     0  "1 "    0     # GEN-DROP    SUTTER1   18.00  GEN==160.00(16.77)
3  37522     0  "2 "    0     # GEN-DROP    SUTTER2   18.00  GEN==160.00(16.77)
3  37523     0  "3 "    0     # GEN-DROP    SUTTER3   18.00  GEN==160.00(16.77)
0
 #
 #
 # (619)  B2 LINE OUTAGE (BREAKER-TO-BREAKER)
 #
1  37524 37520  "1 "    0     # line from  SUTTER   230.00  BRKR to BRKR  OBANION  230.00
0
 #
 #
 # (620)  B2 LINE OUTAGE (BREAKER-TO-BREAKER)
 #
1  37544 37545  "1 "    0     # line from  AIRPORTW 230.00  BRKR to BRKR  COTWDWAP 230.00
0
 #
 #
 # (621)  B2 LINE OUTAGE (BREAKER-TO-BREAKER)
 #
1  37545 37567  "1 "    0     # line from  COTWDWAP 230.00  BRKR to BRKR  ROSEVILL 230.00
0
 #
```

```
 #
 # (622)  B2 LINE OUTAGE (BREAKER-TO-BREAKER)
 #
1  37545 37580  "1 "    0     # line from  COTWDWAP 230.00  BRKR to BRKR  SHASTA   230.00
0
 #
 #
 # (623)  B2 LINE OUTAGE (BREAKER-TO-BREAKER)
 #
1  37545 37580  "2 "    0     # line from  COTWDWAP 230.00  BRKR to BRKR  SHASTA   230.00
0
 #
 #
 # (624)  B2 LINE OUTAGE (BREAKER-TO-BREAKER)
 #
1  37547 37647  "1 "    0     # line from  FOLSOM   115.00  BRKR to BRKR  NIMBUS   115.00
0
 #
 #
 # (625)  B2 LINE OUTAGE (BREAKER-TO-BREAKER)
 #
1  37558 37520  "1 "    0     # line from  KESWICK  230.00  BRKR to BRKR  OBANION  230.00
0
 #
 #
 # (626)  B2 LINE OUTAGE (BREAKER-TO-BREAKER)
 #
1  37558 37544  "1 "    0     # line from  KESWICK  230.00  BRKR to BRKR  AIRPORTW 230.00
0
 #
 #
 # (627)  B2 LINE OUTAGE (BREAKER-TO-BREAKER)
 #
1  37558 37555  "1 "    0     # line from  KESWICK  230.00  BRKR to BRKR  J.F.CARR 230.00
0
 #
 #
 # (628)  B2 LINE OUTAGE (BREAKER-TO-BREAKER)
 #
1  37558 37555  "2 "    0     # line from  KESWICK  230.00  BRKR to BRKR  J.F.CARR 230.00
0
 #
 #
 # (629)  B2 LINE OUTAGE (BREAKER-TO-BREAKER)
 #
1  37558 37641  "2 "    0     # line from  KESWICK  230.00  BRKR to BRKR  SPRINGCR 230.00
0
 #
 #
```

```
 # (630)  B2 LINE OUTAGE (BREAKER-TO-BREAKER)
 #
1  37563 30800  "1 "    0     # line from  MELONES  230.00  BRKR to BRKR  WILSON   230.00
0
 #
 #
 # (631)  B2 LINE OUTAGE (BREAKER-TO-BREAKER)
 #
1  37565 37520  "1 "    0     # line from  OLINDAW  230.00  BRKR to BRKR  OBANION  230.00
0
 #
 #
 # (632)  B2 LINE OUTAGE (BREAKER-TO-BREAKER)
 #
1  37565 37545  "1 "    0     # line from  OLINDAW  230.00  BRKR to BRKR  COTWDWAP 230.00
0
 #
 #
 # (633)  B2 LINE OUTAGE (BREAKER-TO-BREAKER)
 #
1  37565 37545  "2 "    0     # line from  OLINDAW  230.00  BRKR to BRKR  COTWDWAP 230.00
0
 #
 #
 # (634)  B2 LINE OUTAGE (BREAKER-TO-BREAKER)
 #
1  37565 37558  "1 "    0     # line from  OLINDAW  230.00  BRKR to BRKR  KESWICK  230.00
0
 #
 #
 # (635)  B2 LINE OUTAGE (BREAKER-TO-BREAKER)
 #
1  37567 37546  "1 "    0     # line from  ROSEVILL 230.00  BRKR to BRKR  ELVERTAW 230.00
0
 #
 #
 # (636)  B2 LINE OUTAGE (BREAKER-TO-BREAKER)
 #
1  37567 37548  "1 "    0     # line from  ROSEVILL 230.00  BRKR to BRKR  FOLSOM   230.00
0
 #
 #
 # (637)  B2 LINE OUTAGE (BREAKER-TO-BREAKER)
 #
1  37568 37546  "1 "    0     # line from  FIDDYMNT 230.00  BRKR to BRKR  ELVERTAW 230.00
0
 #
 #
 # (638)  B2 LINE OUTAGE (BREAKER-TO-BREAKER)
```

```
 #
1  37568 37567  "1 "    0     # line from  FIDDYMNT 230.00  BRKR to BRKR  ROSEVILL 230.00
0
 #
 #
 # (639)  B2 LINE OUTAGE (BREAKER-TO-BREAKER)
 #
1  37569 37558  "1 "    0     # line from  FLANAGAN 230.00  BRKR to BRKR  KESWICK  230.00
0
 #
 #
 # (640)  B2 LINE OUTAGE (BREAKER-TO-BREAKER)
 #
1  37570 37571  "1 "    0     # line from  FLANAGAN 115.00  BRKR to BRKR  SHAST LK 115.00
0
 #
 #
 # (641)  B2 LINE OUTAGE (BREAKER-TO-BREAKER)
 #
1  37570 37648  "1 "    0     # line from  FLANAGAN 115.00  BRKR to BRKR  KNAUF    115.00
0
 #
 #
 # (642)  B2 LINE OUTAGE (BREAKER-TO-BREAKER)
 #
1  37571 37648  "1 "    0     # line from  SHAST LK 115.00  BRKR to BRKR  KNAUF    115.00
0
 #
 #
 # (643)  B2 LINE OUTAGE (BREAKER-TO-BREAKER)
 #
1  37580 37569  "1 "    0     # line from  SHASTA   230.00  BRKR to BRKR  FLANAGAN 230.00
0
 #
 #
 # (644)  B2 LINE OUTAGE (BREAKER-TO-BREAKER)
 #
1  37582 37650  "1 "    0     # line from  TRACY YG  70.00  BRKR to (2)   MTHOUSE   69.00
1  37650 37582  "2 "    0     # line from  MTHOUSE   69.00   (2) to BRKR  TRACY YG  70.00
4  37650     0  "1 "    0     # LOAD-DROP    MTHOUSE   69.00  LOAD==14.00(4.12)
0
 #
 #
 # (645)  B2 LINE OUTAGE (BREAKER-TO-BREAKER)
 #
1  37585 30625  "1 "    0     # line from  TRCY PMP 230.00  BRKR to BRKR  TESLA D  230.00
0
 #
 #
```

```
 # (646)  B2 LINE OUTAGE (BREAKER-TO-BREAKER)
 #
1  37585 30625  "2 "    0     # line from  TRCY PMP 230.00  BRKR to BRKR  TESLA D  230.00
0
 #
 #
 # (647)  B2 LINE OUTAGE (BREAKER-TO-BREAKER)
 #
1  37585 30670  "1 "    0     # line from  TRCY PMP 230.00  BRKR to BRKR  WESTLEY  230.00
0
 #
 #
 # (648)  B2 LINE OUTAGE (BREAKER-TO-BREAKER)
 #
1  37585 37560  "1 "    0     # line from  TRCY PMP 230.00  BRKR to BRKR  LLNL     230.00
0
 #
 #
 # (649)  B2 LINE OUTAGE (BREAKER-TO-BREAKER)
 #
1  37640 37555  "2 "    0     # line from  TRINITY  230.00  BRKR to BRKR  J.F.CARR 230.00
0
 #
 #
 # (650)  B2 LINE OUTAGE (BREAKER-TO-BREAKER)
 #
1  37649 33574  "1 "    0     # line from  LLNLAB   115.00  BRKR to (2)   LLNL TAP 115.00
1  33574 33540  "1 "    0     # line from  LLNL TAP 115.00   (2) to BRKR  TESLA    115.00
0
 #
 #
 # (651)  B2 LINE OUTAGE (BREAKER-TO-BREAKER)
 #
1  38206 37563  "1 "    0     # line from  COTTLE A 230.00   (2) to BRKR  MELONES  230.00
1  38206 30500  "1 "    0     # line from  COTTLE A 230.00   (2) to BRKR  BELLOTA  230.00
4  38206     0  "1 "    0     # LOAD-DROP    COTTLE A 230.00  LOAD==19.81(0.00)
0
 #
 #
 # (652)  B3 TRANSFORMER OUTAGE (BREAKER-TO-BREAKER)
 #
2  37565 30020  "1 "    0     # TRAN from  OLINDAW  230.00  BRKR to BRKR  OLINDA   500.00
0
 #
 #
 # (653)  B3 TRANSFORMER OUTAGE (BREAKER-TO-BREAKER)
 #
2  37558 37505  "1 "    0     # TRAN from  KESWICK  230.00  BRKR to BRKR  KESWICK  115.00
0
```

```
 #
 #
 # (654)  B3 TRANSFORMER OUTAGE (BREAKER-TO-BREAKER)
 #
2  37558 37505  "2 "    0     # TRAN from  KESWICK  230.00  BRKR to BRKR  KESWICK  115.00
0
 #
 #
 # (655)  B3 TRANSFORMER OUTAGE (BREAKER-TO-BREAKER)
 #
2  37558 37505  "3 "    0     # TRAN from  KESWICK  230.00  BRKR to BRKR  KESWICK  115.00
0
 #
 #
 # (656)  B3 TRANSFORMER OUTAGE (BREAKER-TO-BREAKER)
 #
2  37548 37547  "1 "    0     # TRAN from  FOLSOM   230.00  BRKR to BRKR  FOLSOM   115.00
0
 #
 #
 # (657)  B3 TRANSFORMER OUTAGE (BREAKER-TO-BREAKER)
 #
2  37555 37553  "1 "    0     # TRAN from  J.F.CARR 230.00  BRKR to (1)   J.F.CARR  13.80
3  37553     0  "1 "    0     # GEN-DROP    J.F.CARR  13.80  GEN==77.00(19.27)
3  37553     0  "2 "    0     # GEN-DROP    J.F.CARR  13.80  GEN==77.00(19.27)
0
 #
 #
 # (658)  B3 TRANSFORMER OUTAGE (BREAKER-TO-BREAKER)
 #
2  37569 37570  "1 "    0     # TRAN from  FLANAGAN 230.00  BRKR to BRKR  FLANAGAN 115.00
0
 #
 #
 # (659)  B3 TRANSFORMER OUTAGE (BREAKER-TO-BREAKER)
 #
2  37567 37572  "1 "    0     # TRAN from  ROSEVILL 230.00  BRKR to BRKR  ROSEVLL1  60.00
0
 #
 #
 # (660)  B3 TRANSFORMER OUTAGE (BREAKER-TO-BREAKER)
 #
2  37567 37573  "2 "    0     # TRAN from  ROSEVILL 230.00  BRKR to (2)   ROSEVLL2  60.00
1  37573 37572  "1 "    0     # line from  ROSEVLL2  60.00   (2) to BRKR  ROSEVLL1  60.00
4  37573     0  "1 "    0     # LOAD-DROP    ROSEVLL2  60.00  LOAD==105.51(21.98)
0
 #
 #
 # (661)  B3 TRANSFORMER OUTAGE (BREAKER-TO-BREAKER)
```

```
 #
2  37568 37574  "1 "    0     # TRAN from  FIDDYMNT 230.00  BRKR to BRKR  FIDDYMNT  60.00
0
 #
 #
 # (662)  B3 TRANSFORMER OUTAGE (BREAKER-TO-BREAKER)
 #
2  37568 37574  "2 "    0     # TRAN from  FIDDYMNT 230.00  BRKR to BRKR  FIDDYMNT  60.00
0
 #
 #
 # (663)  B3 TRANSFORMER OUTAGE (BREAKER-TO-BREAKER)
 #
2  37641 37581  "1 "    0     # TRAN from  SPRINGCR 230.00  BRKR to (1)   SPRINGCR  13.80
3  37581     0  "1 "    0     # GEN-DROP    SPRINGCR  13.80  GEN==90.00(31.06)
3  37581     0  "2 "    0     # GEN-DROP    SPRINGCR  13.80  GEN==90.00(31.06)
0
 #
 #
 # (664)  B3 TRANSFORMER OUTAGE (BREAKER-TO-BREAKER)
 #
2  37585 37582  "1 "    0     # TRAN from  TRCY PMP 230.00  BRKR to (1)   TRACY YG  70.00
0
 #
 #
 # (665)  B3 TRANSFORMER OUTAGE (BREAKER-TO-BREAKER)
 #
2  37585 37582  "2 "    0     # TRAN from  TRCY PMP 230.00  BRKR to (1)   TRACY YG  70.00
0
 #
 #
 # (666)  B3 TRANSFORMER OUTAGE (BREAKER-TO-BREAKER)
 #
2  37640 37590  "1 "    0     # TRAN from  TRINITY  230.00  BRKR to (1)   TRINTY12  13.80
3  37590     0  "1 "    0     # GEN-DROP    TRINTY12  13.80  GEN==62.00(18.22)
3  37590     0  "2 "    0     # GEN-DROP    TRINTY12  13.80  GEN==62.00(18.22)
0
 #
 #
 # (667)  B3 TRANSFORMER OUTAGE (BREAKER-TO-BREAKER)
 #
2  37560 37649  "1 "    0     # TRAN from  LLNL     230.00  BRKR to BRKR  LLNLAB   115.00
0
 #
 #
 # (668)  B3 TRANSFORMER OUTAGE (BREAKER-TO-BREAKER)
 #
2  37544 37901  "1 "    0     # TRAN from  AIRPORTW 230.00  BRKR to BRKR  AIRPORTW 115.00
0
```

```
 #
 #
 # (669)  B3 TRANSFORMER OUTAGE (BREAKER-TO-BREAKER)
 #
2  37544 37901  "2 "    0     # TRAN from  AIRPORTW 230.00  BRKR to BRKR  AIRPORTW 115.00
0
 #
 #
 # (670)  B3 TRANSFORMER OUTAGE (BREAKER-TO-BREAKER)
 #
2  38625 38730  "1 "    0     # TRAN from  SN LS PP 230.00  BRKR to (1)   SANLUIS1  13.80
3  38730     0  "1 "    0     # GEN-DROP    SANLUIS1  13.80  GEN==20.00(0.00)
3  38730     0  "2 "    0     # GEN-DROP    SANLUIS1  13.80  GEN==20.00(0.00)
0
 #
 #
 # (671)  B3 TRANSFORMER OUTAGE (BREAKER-TO-BREAKER)
 #
2  38625 38735  "1 "    0     # TRAN from  SN LS PP 230.00  BRKR to (1)   SANLUIS2  13.80
3  38735     0  "1 "    0     # GEN-DROP    SANLUIS2  13.80  GEN==20.00(0.00)
3  38735     0  "2 "    0     # GEN-DROP    SANLUIS2  13.80  GEN==20.00(0.00)
0
 #
 #
 # (672)  B3 TRANSFORMER OUTAGE (BREAKER-TO-BREAKER)
 #
2  38625 38740  "1 "    0     # TRAN from  SN LS PP 230.00  BRKR to (1)   SANLUIS3  13.80
0
 #
 #
 # (673)  B3 TRANSFORMER OUTAGE (BREAKER-TO-BREAKER)
 #
2  38625 38745  "1 "    0     # TRAN from  SN LS PP 230.00  BRKR to (1)   SANLUIS4  13.80
0
 #
 #
 # (674)  B3 TRANSFORMER OUTAGE (BREAKER-TO-BREAKER)
 #
2  38615 38750  "1 "    0     # TRAN from  DS AMIGO 230.00  BRKR to (1)   DOS AMG1  13.20
3  38750     0  "1 "    0     # GEN-DROP    DOS AMG1  13.20  GEN==-30.00(0.00)
3  38750     0  "2 "    0     # GEN-DROP    DOS AMG1  13.20  GEN==-30.00(0.00)
3  38750     0  "3 "    0     # GEN-DROP    DOS AMG1  13.20  GEN==-30.00(0.00)
0
 #
 #
 # (675)  B3 TRANSFORMER OUTAGE (BREAKER-TO-BREAKER)
 #
2  38615 38755  "1 "    0     # TRAN from  DS AMIGO 230.00  BRKR to (1)   DOS AMG2  13.20
0
```

```
 #
 #
 # (676)  B1 GENERATOR OUTAGE
 #
3  37521     0  "1 "    0     # GEN-DROP    SUTTER1   18.00  GEN==160.00(16.77)
0
 #
 #
 # (677)  B1 GENERATOR OUTAGE
 #
3  37522     0  "2 "    0     # GEN-DROP    SUTTER2   18.00  GEN==160.00(16.77)
0
 #
 #
 # (678)  B1 GENERATOR OUTAGE
 #
3  37523     0  "3 "    0     # GEN-DROP    SUTTER3   18.00  GEN==160.00(16.77)
0
 #
 #
 # (679)  B1 GENERATOR OUTAGE
 #
3  37549     0  "1 "    0     # GEN-DROP    FOLSOM1   13.80  GEN==62.00(22.00)
0
 #
 #
 # (680)  B1 GENERATOR OUTAGE
 #
3  37550     0  "2 "    0     # GEN-DROP    FOLSOM2   13.80  GEN==62.00(22.00)
0
 #
 #
 # (681)  B1 GENERATOR OUTAGE
 #
3  37551     0  "3 "    0     # GEN-DROP    FOLSOM3   13.80  GEN==62.00(22.00)
0
 #
 #
 # (682)  B1 GENERATOR OUTAGE
 #
3  37553     0  "1 "    0     # GEN-DROP    J.F.CARR  13.80  GEN==77.00(19.27)
0
 #
 #
 # (683)  B1 GENERATOR OUTAGE
 #
3  37553     0  "2 "    0     # GEN-DROP    J.F.CARR  13.80  GEN==77.00(19.27)
0
 #
```

```
 #
 # (684)  B1 GENERATOR OUTAGE
 #
3  37561     0  "1 "    0     # GEN-DROP    MELONE1   13.80  GEN==166.00(25.54)
0
 #
 #
 # (685)  B1 GENERATOR OUTAGE
 #
3  37562     0  "2 "    0     # GEN-DROP    MELONE2   13.80  GEN==166.00(25.54)
0
 #
 #
 # (686)  B1 GENERATOR OUTAGE
 #
3  37575     0  "1 "    0     # GEN-DROP    SHASTA1   13.80  GEN==125.00(17.61)
0
 #
 #
 # (687)  B1 GENERATOR OUTAGE
 #
3  37576     0  "2 "    0     # GEN-DROP    SHASTA2   13.80  GEN==125.00(17.61)
0
 #
 #
 # (688)  B1 GENERATOR OUTAGE
 #
3  37577     0  "3 "    0     # GEN-DROP    SHASTA3   13.80  GEN==125.00(17.61)
0
 #
 #
 # (689)  B1 GENERATOR OUTAGE
 #
3  37578     0  "4 "    0     # GEN-DROP    SHASTA4   13.80  GEN==125.00(17.61)
0
 #
 #
 # (690)  B1 GENERATOR OUTAGE
 #
3  37579     0  "5 "    0     # GEN-DROP    SHASTA5   13.80  GEN==125.00(17.61)
0
 #
 #
 # (691)  B1 GENERATOR OUTAGE
 #
3  37581     0  "1 "    0     # GEN-DROP    SPRINGCR  13.80  GEN==90.00(31.06)
0
 #
 #
```

```
 # (692)  B1 GENERATOR OUTAGE
 #
3  37581     0  "2 "    0     # GEN-DROP    SPRINGCR  13.80  GEN==90.00(31.06)
0
 #
 #
 # (693)  B1 GENERATOR OUTAGE
 #
3  37590     0  "1 "    0     # GEN-DROP    TRINTY12  13.80  GEN==62.00(18.22)
0
 #
 #
 # (694)  B1 GENERATOR OUTAGE
 #
3  37590     0  "2 "    0     # GEN-DROP    TRINTY12  13.80  GEN==62.00(18.22)
0
 #
 #
 # (695)  B1 GENERATOR OUTAGE
 #
3  37645     0  "1 "    0     # GEN-DROP    NIMBUS12   4.20  GEN==7.00(4.00)
0
 #
 #
 # (696)  B1 GENERATOR OUTAGE
 #
3  38730     0  "1 "    0     # GEN-DROP    SANLUIS1  13.80  GEN==20.00(0.00)
0
 #
 #
 # (697)  B1 GENERATOR OUTAGE
 #
3  38730     0  "2 "    0     # GEN-DROP    SANLUIS1  13.80  GEN==20.00(0.00)
0
 #
 #
 # (698)  B1 GENERATOR OUTAGE
 #
3  38735     0  "1 "    0     # GEN-DROP    SANLUIS2  13.80  GEN==20.00(0.00)
0
 #
 #
 # (699)  B1 GENERATOR OUTAGE
 #
3  38735     0  "2 "    0     # GEN-DROP    SANLUIS2  13.80  GEN==20.00(0.00)
0
 #
 #
 # (700)  B1 GENERATOR OUTAGE
```

```
  #
 3  38750     0  "1 "    0     # GEN-DROP    DOS AMG1  13.20  GEN==-30.00(0.00)
 0
  #
  #
  # (701)  B1 GENERATOR OUTAGE
  #
 3  38750     0  "2 "    0     # GEN-DROP    DOS AMG1  13.20  GEN==-30.00(0.00)
 0
  #
  #
  # (702)  B1 GENERATOR OUTAGE
  #
 3  38750     0  "3 "    0     # GEN-DROP    DOS AMG1  13.20  GEN==-30.00(0.00)
0
-1
# EOF
DONE
```

```
CATEGORY C CONTINGENCIES

DEFINE BASE CASE LIST
10hs_pre_v2.sav  AO
DONE

MONITOR AREA OR ZONE VIOLATIONS
AREA 30
DONE

# CPV Colusa 2010 category c contingency list
# North Coast, North Valley, and Sacramento divisions
  #
  #
  # Zone 302 North Coast division
  # 2010 category c contingencies
  #
  #
  # (1) BUS FAULT  30435  "LAKEVILE BUS #1"
  #
 1  30435  30430  "1"    0     # LINE from  LAKEVILE 230.00  to  FULTON   230.00
 1  30435  30445  "1"    0     # LINE from  LAKEVILE 230.00  to  IGNACIO  230.00
 1  30435  30460  "1"    0     # LINE from  LAKEVILE 230.00  to  VACA-DIX 230.00
 2  30435  31255  "1"    0     # TRAN from  LAKEVILE 230.00  to  LAKEVLLE 115.00
 0
  #
  # (2) BUS FAULT  30435  "LAKEVILE BUS #2"
  #
 1  30435  30397  "1"    0     # LINE from  LAKEVILE 230.00  to  CR2T3_18 230.00
 1  30435  30440  "1"    0     # LINE from  LAKEVILE 230.00  to  TULUCAY  230.00
 1  30435  30540  "2"    0     # LINE from  LAKEVILE 230.00  to  SOBRANTE 230.00
 2  30435  31255  "2"    0     # TRAN from  LAKEVILE 230.00  to  LAKEVLLE 115.00
 2  30435  31392  "3"    0     # TRAN from  LAKEVILE 230.00  to  LAKEVLLE  60.00
 0
  #
  # (3) BUS FAULT  31236  "FULTON, BUS D1"
  #
 1  31236  31238  "1"    0     # LINE from  FULTON   115.00  to  MONROE1  115.00
 1  31236  31249  "1"    0     # LINE from  FULTON   115.00  to  RINCONJ1 115.00
 2  31236  30430  "9"    0     # TRAN from  FULTON   115.00  to  FULTON   230.00
 0
  #
  #
  # (4) BUS FAULT  31236  "FULTON, BUS D2"
  #
 1  31236  31239  "1"    0     # LINE from  FULTON   115.00  to  MONROE2  115.00
 1  31236  31251  "1"    0     # LINE from  FULTON   115.00  to  RINCONJ2 115.00
 0
  #
```

```
 #
 # (5) BUS FAULT  31236  "FULTON, BUS F2"
 #
2  31236  30430  "4"    0     # TRAN from  FULTON   115.00  to  FULTON   230.00
2  31236  31378  "1"    0     # TRAN from  FULTON   115.00  to  FULTON    60.00
2  31236  31378  "2"    0     # TRAN from  FULTON   115.00  to  FULTON    60.00
0
 #
 #
 # (6) BUS FAULT  30440  "TULUCAY"
 #
1  30440  30435  "1"    0     # LINE from  TULUCAY  230.00  to  LAKEVILE 230.00
1  30440  30460  "1"    0     # LINE from  TULUCAY  230.00  to  VACA-DIX 230.00
2  30440  32654  "1"    0     # TRAN from  TULUCAY  230.00  to  TULUCAY   60.00
0
 #
 #
 # (7) BUS FAULT  31200  "MENDOCNO"
 #
1  31200  31202  "1"    0     # LINE from  MENDOCNO 115.00  to  CALPELLA 115.00
1  31200  31217  "1"    0     # LINE from  MENDOCNO 115.00  to  LUCERNJ2 115.00
1  31200  31215  "1"    0     # LINE from  MENDOCNO 115.00  to  LUCERNJ1 115.00
2  31200  31300  "2"    0     # TRAN from  MENDOCNO 115.00  to  MENDOCNO  60.00
2  31200  31260  "1"    0     # TRAN from  MENDOCNO 115.00  to  MNDCNO M 115.00
0
 #
 #
 # (8) BUS FAULT  31208  "CLOVRDLE"
 #
1  31208  31206  "1"    0     # LINE from  CLOVRDLE 115.00  to  HPLND JT 115.00
1  31208  31210  "1"    0     # LINE from  CLOVRDLE 115.00  to  MPE TAP  115.00
4  31208     0  "1 "    0     # LOAD-DROP    CLOVRDLE 115.00  LOAD==16.14(3.28)
0
 #
 #
 # (9) BUS FAULT  31214  "GEYERS56"
 #
1  31214  31210  "1"    0     # LINE from  GEYERS56 115.00  to  MPE TAP  115.00
1  31214  31220  "1"    0     # LINE from  GEYERS56 115.00  to  EGLE RCK 115.00
2  31214  31406  "1"    0     # TRAN from  GEYERS56 115.00  to  GEYSR5-6  13.80
0
 #
 #
 # (10) BUS FAULT  31220  "EGLE RCK"
 #
1  31220  31214  "1"    0     # LINE from  EGLE RCK 115.00  to  GEYERS56 115.00
1  31220  31219  "1"    0     # LINE from  EGLE RCK 115.00  to  ERFT5_25 115.00
1  31220  31221  "1"    0     # LINE from  EGLE RCK 115.00  to  GEYSR11  115.00
1  31220  31228  "1"    0     # LINE from  EGLE RCK 115.00  to  HOMSTKTP 115.00
```

```
1  31220  31263  "1"    0     # LINE from  EGLE RCK 115.00  to  LWRLAKEJ 115.00
1  31220  31407  "1"    0     # LINE from  EGLE RCK 115.00  to  GYSR78TP 115.00
2  31220  31344  "1"    0     # TRAN from  EGLE RCK 115.00  to  EGLE RCK  60.00
0
 #
 #
 # (11) BUS FAULT  31222  "REDBUD"
 #
1  31222  31223  "1"    0     # LINE from  REDBUD   115.00  to  REDBUDJ1 115.00
1  31222  31229  "1"    0     # LINE from  REDBUD   115.00  to  REDBUDJ2 115.00
4  31222     0  "1 "    0     # LOAD-DROP    REDBUD   115.00  LOAD==4.93(1.00)
4  31222     0  "3 "    0     # LOAD-DROP    REDBUD   115.00  LOAD==7.89(1.60)
0
 #
 # (12) BUS FAULT  31240  "SNTA RSA"
 #
1  31240  31238  "1"    0     # LINE from  SNTA RSA 115.00  to  MONROE1  115.00
1  31240  31239  "1"    0     # LINE from  SNTA RSA 115.00  to  MONROE2  115.00
1  31240  31242  "1"    0     # LINE from  SNTA RSA 115.00  to  STNY PTP 115.00
4  31240     0  "1 "    0     # LOAD-DROP    SNTA RSA 115.00  LOAD==45.66(9.27)
4  31240     0  "2 "    0     # LOAD-DROP    SNTA RSA 115.00  LOAD==38.19(7.76)
4  31240     0  "3 "    0     # LOAD-DROP    SNTA RSA 115.00  LOAD==35.54(7.22)
0
 #
 #
 # (13) BUS FAULT  31246  "BELLVUE"
 #
1  31246  31242  "1"    0     # LINE from  BELLVUE  115.00  to  STNY PTP 115.00
1  31246  31248  "1"    0     # LINE from  BELLVUE  115.00  to  PENNGRVE 115.00
4  31246     0  "1 "    0     # LOAD-DROP    BELLVUE  115.00  LOAD==15.07(3.06)
4  31246     0  "2 "    0     # LOAD-DROP    BELLVUE  115.00  LOAD==17.59(3.57)
4  31246     0  "3 "    0     # LOAD-DROP    BELLVUE  115.00  LOAD==25.02(5.08)
0
 #
 #
 # (14) BUS FAULT  31254  "CORONA"
 #
1  31254  31248  "1"    0     # LINE from  CORONA   115.00  to  PENNGRVE 115.00
1  31254  31255  "1"    0     # LINE from  CORONA   115.00  to  LAKEVLLE 115.00
4  31254     0  "1 "    0     # LOAD-DROP    CORONA   115.00  LOAD==28.90(5.87)
0
 #
 #
 # (15) BUS FAULT  31255  "LAKEVLLE"
 #
1  31255  31254  "1"    0     # LINE from  LAKEVLLE 115.00  to  CORONA   115.00
1  31255  31258  "1"    0     # LINE from  LAKEVLLE 115.00  to  SONOMA   115.00
1  31255  31258  "2"    0     # LINE from  LAKEVLLE 115.00  to  SONOMA   115.00
2  31255  30435  "1"    0     # TRAN from  LAKEVLLE 115.00  to  LAKEVILE 230.00
```

```
 2  31255  30435  "2"    0     # TRAN from  LAKEVLLE 115.00  to  LAKEVILE 230.00
 4  31255     0  "4 "    0     # LOAD-DROP    LAKEVLLE 115.00  LOAD==20.17(4.09)
 0
  #
  #
  # (16) BUS FAULT  31258  "SONOMA"
  #
 1  31258  31255  "1"    0     # LINE from  SONOMA   115.00  to  LAKEVLLE 115.00
 1  31258  31255  "2"    0     # LINE from  SONOMA   115.00  to  LAKEVLLE 115.00
 1  31258  32564  "1"    0     # LINE from  SONOMA   115.00  to  PUEBLO   115.00
 4  31258     0   "1 "   0     # LOAD-DROP    SONOMA   115.00  LOAD==29.16(4.15)
 4  31258     0   "2 "   0     # LOAD-DROP    SONOMA   115.00  LOAD==33.27(4.74)
 0
  #
  #
  # (17) BUS FAULT  31300  "MENDOCNO"
  #
 1  31300  31302  "1"    0     # LINE from  MENDOCNO  60.00  to  PTTR VLY  60.00
 1  31300  31306  "1"    0     # LINE from  MENDOCNO  60.00  to  WILLITS   60.00
 1  31300  31327  "1"    0     # LINE from  MENDOCNO  60.00  to  UKIAH JT  60.00
 1  31300  31329  "1"    0     # LINE from  MENDOCNO  60.00  to  MASON TP  60.00
 1  31300  31330  "1"    0     # LINE from  MENDOCNO  60.00  to  UPPR LKE  60.00
 1  31300  31397  "1"    0     # LINE from  MENDOCNO  60.00  to  WILLITSJ  60.00
 2  31300  31200  "2"    0     # TRAN from  MENDOCNO  60.00  to  MENDOCNO 115.00
 2  31300  31260  "1"    0     # TRAN from  MENDOCNO  60.00  to  MNDCNO M 115.00
 4  31300     0  "2 "    0     # LOAD-DROP    MENDOCNO  60.00  LOAD==5.15(1.04)
 0
  #
  #
  # (18) BUS FAULT  31302  "PTTR VLY"
  #
 1  31302  31300  "1"    0     # LINE from  PTTR VLY  60.00  to  MENDOCNO  60.00
 1  31302  31306  "1"    0     # LINE from  PTTR VLY  60.00  to  WILLITS   60.00
 2  31302  31433  "1"    0     # TRAN from  PTTR VLY  60.00  to  POTTRVLY   2.40
 4  31302     0  "2 "    0     # LOAD-DROP    PTTR VLY  60.00  LOAD==0.56(0.11)
 4  31302     0  "5 "    0     # LOAD-DROP    PTTR VLY  60.00  LOAD==1.99(0.40)
 0
  #
  #
  # (19) BUS FAULT  31306  "WILLITS"
  #
 1  31306  31300  "1"    0     # LINE from  WILLITS   60.00  to  MENDOCNO  60.00
 1  31306  31302  "1"    0     # LINE from  WILLITS   60.00  to  PTTR VLY  60.00
 1  31306  31304  "1"    0     # LINE from  WILLITS   60.00  to  P0433TAP  60.00
 1  31306  31308  "1"    0     # LINE from  WILLITS   60.00  to  LYTNVLLE  60.00
 4  31306     0  "1 "    0     # LOAD-DROP    WILLITS   60.00  LOAD==16.14(3.28)
 0
  #
  #
```

```
 # (20) BUS FAULT  31312  "FRT BRGG"
 #
1  31312  31314  "1"    0     # LINE from  FRT BRGG  60.00  to  BIG RIVR  60.00
1  31312  31397  "1"    0     # LINE from  FRT BRGG  60.00  to  WILLITSJ  60.00
2  31312  31309  "1"    0     # TRAN from  FRT BRGG  60.00  to  FT_BRGD1  12.47
2  31312  31311  "1"    0     # TRAN from  FRT BRGG  60.00  to  FT_BRGD2  12.47
2  31312  31444  "1"    0     # TRAN from  FRT BRGG  60.00  to  GA PACIF   9.11
0
 #
 #
 # (21) BUS FAULT  31316  "ELK"
 #
1  31316  31314  "1"    0     # LINE from  ELK       60.00  to  BIG RIVR  60.00
1  31316  31318  "1"    0     # LINE from  ELK       60.00  to  PNT ARNA  60.00
1  31316  31324  "1"    0     # LINE from  ELK       60.00  to  PHILO     60.00
2  31316  31317  "1"    0     # TRAN from  ELK       60.00  to  ELK_D     12.47
0
 #
 #
 # (22) BUS FAULT  31326  "PHLO JCT"
 #
1  31326  31324  "1"    0     # LINE from  PHLO JCT  60.00  to  PHILO     60.00
1  31326  31336  "1"    0     # LINE from  PHLO JCT  60.00  to  HPLND JT  60.00
1  31326  31327  "1"    0     # LINE from  PHLO JCT  60.00  to  UKIAH JT  60.00
0
 #
 #
 # (23) BUS FAULT  31334  "CLER LKE"
 #
1  31334  31332  "1"    0     # LINE from  CLER LKE  60.00  to  HARTLEY   60.00
1  31334  31336  "1"    0     # LINE from  CLER LKE  60.00  to  HPLND JT  60.00
1  31334  31338  "1"    0     # LINE from  CLER LKE  60.00  to  KONOCTI6  60.00
4  31334     0  "1 "    0     # LOAD-DROP    CLER LKE  60.00  LOAD==9.69(1.96)
4  31334     0  "2 "    0     # LOAD-DROP    CLER LKE  60.00  LOAD==14.15(2.87)
0
 #
 #
 # (24) BUS FAULT  31336  "HPLND JT"
 #
1  31336  31326  "1"    0     # LINE from  HPLND JT  60.00  to  PHLO JCT  60.00
1  31336  31334  "1"    0     # LINE from  HPLND JT  60.00  to  CLER LKE  60.00
1  31336  31370  "1"    0     # LINE from  HPLND JT  60.00  to  CLVRDLJT  60.00
2  31336  31206  "2"    0     # TRAN from  HPLND JT  60.00  to  HPLND JT 115.00
4  31336     0  "1 "    0     # LOAD-DROP    HPLND JT  60.00  LOAD==5.91(1.20)
0
 #
 #
 # (25) BUS FAULT  31378  "FULTON"
 #
```

```
 1  31378  31362  "1"    0     # LINE from  FULTON    60.00  to  TRNTN JT  60.00
 1  31378  31366  "1"    0     # LINE from  FULTON    60.00  to  MLNO JCT  60.00
 1  31378  31377  "1"    0     # LINE from  FULTON    60.00  to  FCHMNTP2  60.00
 1  31378  31382  "1"    0     # LINE from  FULTON    60.00  to  FTCHMTNP  60.00
 1  31378  32650  "1"    0     # LINE from  FULTON    60.00  to  ST.HELNA  60.00
 2  31378  31236  "1"    0     # TRAN from  FULTON    60.00  to  FULTON   115.00
 2  31378  31236  "2"    0     # TRAN from  FULTON    60.00  to  FULTON   115.00
 0
  #
  #
  # (26) BUS FAULT  31389  "PETC_JCT"
  #
 1  31389  31384  "1"    0     # LINE from  PETC_JCT  60.00  to  COTATI    60.00
 1  31389  31388  "1"    0     # LINE from  PETC_JCT  60.00  to  PETLMA C  60.00
 1  31389  31390  "1"    0     # LINE from  PETC_JCT  60.00  to  PETLMA A  60.00
 0
  #
  #
  # (27) BUS FAULT  31392  "LAKEVLLE"
  #
 1  31392  31386  "1"    0     # LINE from  LAKEVLLE  60.00  to  MCDWLLSW  60.00
 1  31392  31394  "1"    0     # LINE from  LAKEVLLE  60.00  to  LKVLE JT  60.00
 1  31392  31396  "1"    0     # LINE from  LAKEVLLE  60.00  to  DUNBAR    60.00
 2  31392  30435  "3"    0     # TRAN from  LAKEVLLE  60.00  to  LAKEVILE 230.00
 0
  #
  #
  # (28)  C5 DCTL Outage:  Cortina - Mendocino 115 kV and Mendocino - Redbud 115 kV
  #
 1  31215 31200  "1 "    0     # line from  LUCERNJ1 115.00   (3) to BRKR  MENDOCNO 115.00
 1  31215 31216  "1 "    0     # line from  LUCERNJ1 115.00   (3) to (1)   LUCERNE  115.00
 1  31215 31224  "1 "    0     # line from  LUCERNJ1 115.00   (3) to (3)   INDIN VL 115.00
 1  31224 31950  "1 "    0     # line from  INDIN VL 115.00   (3) to BRKR  CORTINA  115.00
 2  31224 31436  "1 "    0     # TRAN from  INDIN VL 115.00  BRKR to (1)   INDIAN V   9.11
 4  31216     0  "1 "    0     # LOAD-DROP    LUCERNE  115.00  LOAD==12.95(2.63)
 3  31436     0  "1 "    0     # GEN-DROP    INDIAN V   9.11  GEN==0.90(0.00)
  #
 1  31200 31217  "1 "    0     # line from  MENDOCNO 115.00  BRKR to (2)   LUCERNJ2 115.00
 1  31217 31223  "1 "    0     # line from  LUCERNJ2 115.00   (2) to (2)   REDBUDJ1 115.00
 1  31223 31222  "1 "    0     # line from  REDBUDJ1 115.00   (2) to BRKR  REDBUD   115.00
 0
  #
  #
  # (29)  C5 DCTL Outage:  Eagle Rock - Cortina 115 kV and Cortina - Mendocino 115 kV
  #
 1  31220 31228  "1 "    0     # line from  EGLE RCK 115.00  BRKR to (3)   HOMSTKTP 115.00
 1  31228 31227  "1 "    0     # line from  HOMSTKTP 115.00   (3) to (2)   HGHLNDJ2 115.00
 1  31228 31230  "1 "    0     # line from  HOMSTKTP 115.00   (3) to (2)   HOMEPROC 115.00
 1  31227 31261  "1 "    0     # line from  HGHLNDJ2 115.00   (2) to (2)   CACHE J1 115.00
```

```
 1  31261 31950  "1 "    0     # line from  CACHE J1 115.00   (2) to BRKR  CORTINA  115.00
 1  31230 31232  "1 "    0     # line from  HOMEPROC 115.00   (2) to (1)   HOMEGRND 115.00
 4  31230     0  "1 "    0     # LOAD-DROP    HOMEPROC 115.00  LOAD==0.35(0.07)
  #
  #
 1  31215 31200  "1 "    0     # line from  LUCERNJ1 115.00   (3) to BRKR  MENDOCNO 115.00
 1  31215 31216  "1 "    0     # line from  LUCERNJ1 115.00   (3) to (1)   LUCERNE  115.00
 1  31215 31224  "1 "    0     # line from  LUCERNJ1 115.00   (3) to (3)   INDIN VL 115.00
 1  31224 31950  "1 "    0     # line from  INDIN VL 115.00   (3) to BRKR  CORTINA  115.00
 2  31224 31436  "1 "    0     # TRAN from  INDIN VL 115.00  BRKR to (1)   INDIAN V   9.11
 4  31216     0  "1 "    0     # LOAD-DROP    LUCERNE  115.00  LOAD==12.95(2.63)
 3  31436     0  "1 "    0     # GEN-DROP    INDIAN V   9.11  GEN==0.90(0.00)
 1  31217 31216  "1 "    1     # close line from LCERNJ2  115.00 to LUCERNE 115.00
 4  31216 0      "**"    1     # restore all loads to LUCERNE 115.00 (Cortina - Mendocino 115 kV)
 0
  #
  #
  # (30) C5 DCTL Outage:  Eagle Rock - Redbud 115 kV and Eagle Rock - Cortina 115 kV
  #
 1  31220 31263  "1 "    0     # line from  EGLE RCK 115.00  BRKR to (2)   LWRLAKEJ 115.00
 1  31263 31225  "1 "    0     # line from  LWRLAKEJ 115.00   (2) to (3)   HGHLNDJ1 115.00
 1  31225 31226  "1 "    0     # line from  HGHLNDJ1 115.00   (3) to (1)   HGHLAND  115.00
 1  31225 31262  "1 "    0     # line from  HGHLNDJ1 115.00   (3) to (2)   CACHE J2 115.00
 1  31262 31229  "1 "    0     # line from  CACHE J2 115.00   (2) to (2)   REDBUDJ2 115.00
 1  31229 31222  "1 "    0     # line from  REDBUDJ2 115.00   (2) to BRKR  REDBUD   115.00
 4  31226     0  "1 "    0     # LOAD-DROP    HGHLAND  115.00  LOAD==24.24(4.92)
  #
 1  31220 31228  "1 "    0     # line from  EGLE RCK 115.00  BRKR to (3)   HOMSTKTP 115.00
 1  31228 31227  "1 "    0     # line from  HOMSTKTP 115.00   (3) to (2)   HGHLNDJ2 115.00
 1  31228 31230  "1 "    0     # line from  HOMSTKTP 115.00   (3) to (2)   HOMEPROC 115.00
 1  31227 31261  "1 "    0     # line from  HGHLNDJ2 115.00   (2) to (2)   CACHE J1 115.00
 1  31261 31950  "1 "    0     # line from  CACHE J1 115.00   (2) to BRKR  CORTINA  115.00
 1  31230 31232  "1 "    0     # line from  HOMEPROC 115.00   (2) to (1)   HOMEGRND 115.00
 4  31230     0  "1 "    0     # LOAD-DROP    HOMEPROC 115.00  LOAD==0.35(0.07)
 0
  #
  #
  # (31) C5 DCTL Outage:  Geysers #3 - Eagle Rock 115 kV and Geysers #7 - Eagle Rock 115 kV
  #
 1  31407 31220  "1 "    0     # line from  GYSR78TP 115.00   (2) to BRKR  EGLE RCK 115.00
 2  31407 31408  "1 "    0     # TRAN from  GYSR78TP 115.00   (2) to (1)   GEYSER78  13.80
 3  31408     0  "1 "    0     # GEN-DROP    GEYSER78  13.80  GEN==39.00(14.34)
 3  31408     0  "2 "    0     # GEN-DROP    GEYSER78  13.80  GEN==32.00(11.76)
  #
 1  31214 31220  "1 "    0     # line from  GEYERS56 115.00  BRKR to BRKR  EGLE RCK 115.00
 0
  #
  #
  # (32) C5 DCTL Outage: Lakeville-Ignacio 230 kV and Fulton-Ignacio 230 kV
```

```
 #
1  30430 30445  "1 "    0     # line from  FULTON   230.00  BRKR to BRKR  IGNACIO  230.00
 #
1  30435 30445  "1 "    0     # line from  LAKEVILE 230.00  BRKR to BRKR  IGNACIO  230.00
0
 #
 #
 # (33) C5 DCTL Outage: Vaca-Dixon - Lakeville #1 and #2
 #
1  30435 30440  "1 "    0     # line from  LAKEVILE 230.00  BRKR to BRKR  TULUCAY  230.00
 #
1  30435 30460  "1 "    0     # line from  LAKEVILE 230.00  BRKR to BRKR  VACA-DIX 230.00
0
 #
 #
 # (34) C5 DCTL Outage: Lakeville-Ignacio 230 kV and Geysers#9-Lakeville 230 kV
 #
1  30392 30405  "1 "    0     # line from  G9CRT2_9 230.00   (3) to (3)   G9CRT111 230.00
1  30392 30395  "1 "    0     # line from  G9CRT2_9 230.00   (3) to (2)   GEYSR18  230.00
1  30392 30397  "1 "    0     # line from  G9CRT2_9 230.00   (3) to (3)   CR2T3_18 230.00
1  30405 30406  "1 "    0     # line from  G9CRT111 230.00   (3) to (3)   G13TT1_9 230.00
1  30405 30413  "1 "    0     # line from  G9CRT111 230.00   (3) to (2)   SMUDGEO1 230.00
2  30395 31424  "1 "    0     # TRAN from  GEYSR18  230.00  BRKR to (1)   GEYSER18  13.80
1  30397 30398  "1 "    0     # line from  CR2T3_18 230.00   (3) to (3)   NCPA1    230.00
1  30397 30435  "1 "    0     # line from  CR2T3_18 230.00   (3) to BRKR  LAKEVILE 230.00
2  30398 38106  "1 "    0     # TRAN from  NCPA1    230.00  BRKR to (1)   NCPA1GY1  13.80
2  30398 38108  "1 "    0     # TRAN from  NCPA1    230.00  BRKR to (1)   NCPA1GY2  13.80
1  30406 30407  "1 "    0     # line from  G13TT1_9 230.00   (3) to (3)   G13TT1_8 230.00
1  30406 30410  "1 "    0     # line from  G13TT1_9 230.00   (3) to (2)   GEYSR20  230.00
1  30407 30408  "1 "    0     # line from  G13TT1_8 230.00   (3) to (2)   SNTAFE   230.00
1  30407 30409  "1 "    0     # line from  G13TT1_8 230.00   (3) to (2)   GEYSR13  230.00
2  30408 31400  "1 "    0     # TRAN from  SNTAFE   230.00  BRKR to (1)   SANTA FE  13.80
2  30409 31416  "1 "    0     # TRAN from  GEYSR13  230.00  BRKR to (1)   GEYSER13  13.80
2  30410 31426  "1 "    0     # TRAN from  GEYSR20  230.00  BRKR to (1)   GEYSER20  13.80
2  30413 31430  "1 "    0     # TRAN from  SMUDGEO1 230.00  BRKR to (1)   SMUDGEO1  13.80
3  31424     0  "1 "    0     # GEN-DROP    GEYSER18  13.80  GEN==56.00(8.47)
3  38106     0  "1 "    0     # GEN-DROP    NCPA1GY1  13.80  GEN==35.00(2.44)
3  38108     0  "1 "    0     # GEN-DROP    NCPA1GY2  13.80  GEN==35.00(2.44)
3  31400     0  "1 "    0     # GEN-DROP    SANTA FE  13.80  GEN==64.20(5.10)
3  31416     0  "1 "    0     # GEN-DROP    GEYSER13  13.80  GEN==68.00(23.47)
3  31426     0  "1 "    0     # GEN-DROP    GEYSER20  13.80  GEN==52.00(6.22)
3  31430     0  "1 "    0     # GEN-DROP    SMUDGEO1  13.80  GEN==33.00(10.44)
 #
1  30435 30445  "1 "    0     # line from  LAKEVILE 230.00  BRKR to BRKR  IGNACIO  230.00
0
 #
 #
 #(35) C5 DCTL Outage: Geysers#12-Fulton 230 kV and Geysers#9-Lakeville 230 kV
 #
```

```
 1  30392 30405  "1 "    0     # line from  G9CRT2_9 230.00   (3) to (3)   G9CRT111 230.00
 1  30392 30395  "1 "    0     # line from  G9CRT2_9 230.00   (3) to (2)   GEYSR18  230.00
 1  30392 30397  "1 "    0     # line from  G9CRT2_9 230.00   (3) to (3)   CR2T3_18 230.00
 1  30405 30406  "1 "    0     # line from  G9CRT111 230.00   (3) to (3)   G13TT1_9 230.00
 1  30405 30413  "1 "    0     # line from  G9CRT111 230.00   (3) to (2)   SMUDGEO1 230.00
 2  30395 31424  "1 "    0     # TRAN from  GEYSR18  230.00  BRKR to (1)   GEYSER18  13.80
 1  30397 30398  "1 "    0     # line from  CR2T3_18 230.00   (3) to (3)   NCPA1    230.00
 1  30397 30435  "1 "    0     # line from  CR2T3_18 230.00   (3) to BRKR  LAKEVILE 230.00
 2  30398 38106  "1 "    0     # TRAN from  NCPA1    230.00  BRKR to (1)   NCPA1GY1  13.80
 2  30398 38108  "1 "    0     # TRAN from  NCPA1    230.00  BRKR to (1)   NCPA1GY2  13.80
 1  30406 30407  "1 "    0     # line from  G13TT1_9 230.00   (3) to (3)   G13TT1_8 230.00
 1  30406 30410  "1 "    0     # line from  G13TT1_9 230.00   (3) to (2)   GEYSR20  230.00
 1  30407 30408  "1 "    0     # line from  G13TT1_8 230.00   (3) to (2)   SNTAFE   230.00
 1  30407 30409  "1 "    0     # line from  G13TT1_8 230.00   (3) to (2)   GEYSR13  230.00
 2  30408 31400  "1 "    0     # TRAN from  SNTAFE   230.00  BRKR to (1)   SANTA FE  13.80
 2  30409 31416  "1 "    0     # TRAN from  GEYSR13  230.00  BRKR to (1)   GEYSER13  13.80
 2  30410 31426  "1 "    0     # TRAN from  GEYSR20  230.00  BRKR to (1)   GEYSER20  13.80
 2  30413 31430  "1 "    0     # TRAN from  SMUDGEO1 230.00  BRKR to (1)   SMUDGEO1  13.80
 3  31424     0  "1 "    0     # GEN-DROP    GEYSER18  13.80  GEN==56.00(8.47)
 3  38106     0  "1 "    0     # GEN-DROP    NCPA1GY1  13.80  GEN==35.00(2.44)
 3  38108     0  "1 "    0     # GEN-DROP    NCPA1GY2  13.80  GEN==35.00(2.44)
 3  31400     0  "1 "    0     # GEN-DROP    SANTA FE  13.80  GEN==64.20(5.10)
 3  31416     0  "1 "    0     # GEN-DROP    GEYSER13  13.80  GEN==68.00(23.47)
 3  31426     0  "1 "    0     # GEN-DROP    GEYSER20  13.80  GEN==52.00(6.22)
 3  31430     0  "1 "    0     # GEN-DROP    SMUDGEO1  13.80  GEN==33.00(10.44)
  #
 1  30391 30393  "1 "    0     # line from  CR1T3_18 230.00   (3) to (3)   G14CRT15 230.00
 1  30391 30399  "1 "    0     # line from  CR1T3_18 230.00   (3) to (3)   NCPATT2  230.00
 1  30391 30430  "1 "    0     # line from  CR1T3_18 230.00   (3) to BRKR  FULTON   230.00
 1  30393 30394  "1 "    0     # line from  G14CRT15 230.00   (3) to (2)   GEYSR12  230.00
 1  30393 30396  "1 "    0     # line from  G14CRT15 230.00   (3) to (2)   GEYSR14  230.00
 1  30399 30400  "1 "    0     # line from  NCPATT2  230.00   (3) to (4)   G16T0_2  230.00
 1  30399 30404  "1 "    0     # line from  NCPATT2  230.00   (3) to (3)   NCPA2    230.00
 1  30400 30401  "1 "    0     # line from  G16T0_2  230.00   (4) to (2)   BEARCNYN 230.00
 1  30400 30402  "1 "    0     # line from  G16T0_2  230.00   (4) to (2)   WSFRDFLT 230.00
 1  30400 30403  "1 "    0     # line from  G16T0_2  230.00   (4) to (2)   GEYSR16  230.00
 2  30401 31402  "1 "    0     # TRAN from  BEARCNYN 230.00  BRKR to (1)   BEAR CAN  13.80
 2  30402 31404  "1 "    0     # TRAN from  WSFRDFLT 230.00  BRKR to (1)   WEST FOR  13.80
 2  30403 31420  "1 "    0     # TRAN from  GEYSR16  230.00  BRKR to (1)   GEYSER16  13.80
 2  30404 38110  "1 "    0     # TRAN from  NCPA2    230.00  BRKR to (1)   NCPA2GY1  13.80
 2  30404 38112  "1 "    0     # TRAN from  NCPA2    230.00  BRKR to (1)   NCPA2GY2  13.80
 2  30394 31414  "1 "    0     # TRAN from  GEYSR12  230.00  BRKR to (1)   GEYSER12  13.80
 2  30396 31418  "1 "    0     # TRAN from  GEYSR14  230.00  BRKR to (1)   GEYSER14  13.80
 3  31402     0  "1 "    0     # GEN-DROP    BEAR CAN  13.80  GEN==9.80(2.65)
 3  31402     0  "2 "    0     # GEN-DROP    BEAR CAN  13.80  GEN==9.80(2.65)
 3  31404     0  "1 "    0     # GEN-DROP    WEST FOR  13.80  GEN==12.10(6.35)
 3  31404     0  "2 "    0     # GEN-DROP    WEST FOR  13.80  GEN==12.00(6.30)
 3  31420     0  "1 "    0     # GEN-DROP    GEYSER16  13.80  GEN==64.00(18.85)
 3  38110     0  "1 "    0     # GEN-DROP    NCPA2GY1  13.80  GEN==36.00(4.11)
```

```
 3  38112     0  "1 "    0     # GEN-DROP    NCPA2GY2  13.80  GEN==36.00(4.11)
 3  31414     0  "1 "    0     # GEN-DROP    GEYSER12  13.80  GEN==31.00(7.89)
 3  31418     0  "1 "    0     # GEN-DROP    GEYSER14  13.80  GEN==54.00(7.99)
 0
  #
  #
  # (36) C5 DCTL Outage: Fulton-Lakeville 230 kV AND FULTON - IGNACIO 230 KV
  #
 1  30430 30435  "1 "    0     # line from  FULTON   230.00  BRKR to BRKR  LAKEVILE  230.00
  #
 1  30430 30445  "1 "    0     # line from  FULTON   230.00  BRKR to BRKR  IGNACIO  230.00
 0
  #
  #
  # (37) C5 DCTL Outage: Essex-Arcata-Fairhaven 60 kV & Fairhaven-Humboldt 60 kV line outage
  #
 1  31054 31056  "1 "    0     # line from  ESSX JCT  60.00   (3) to (2)   JANCK TP  60.00
 1  31054 31052  "1 "    0     # line from  ESSX JCT  60.00  BRKR to (1)   TRINIDAD  60.00
 1  31054 31063  "1 "    0     # line from  ESSX JCT  60.00   (3) to (3)   BCHIP_TP  60.00
 1  31056 31067  "1 "    0     # line from  JANCK TP  60.00   (2) to (2)   ARC_JT2X  60.00
 1  31063 31061  "1 "    0     # line from  BCHIP_TP  60.00   (3) to (1)   BCHIPMIL  60.00
 1  31063 31062  "1 "    0     # line from  BCHIP_TP  60.00   (3) to (2)   BLUE LKE  60.00
 1  31062 31064  "1 "    0     # line from  BLUE LKE  60.00   (2) to (3)   SMPSNTAP  60.00
 1  31064 31060  "1 "    0     # line from  SMPSNTAP  60.00   (3) to (2)   ULTR_PWR  60.00
 1  31064 31068  "1 "    0     # line from  SMPSNTAP  60.00   (3) to (1)   SIMPSON   60.00
 2  31060 31156  "1 "    0     # TRAN from  ULTR_PWR  60.00   (2) to (1)   ULTRAPWR  12.47
 1  31067 31070  "1 "    0     # line from  ARC_JT2X  60.00   (2) to (3)   ARCTAJT2  60.00
 1  31070 31072  "1 "    0     # line from  ARCTAJT2  60.00   (3) to BRKR  ARCATA    60.00
 1  31070 31074  "1 "    0     # line from  ARCTAJT2  60.00   (3) to BRKR  FAIRHAVN  60.00
 1  31050 31051  "1 "    0     # line from  ORICK     60.00   (1) to (2)   BIG_LAGN  60.00
 1  31051 31052  "1 "    0     # line from  BIG_LAGN  60.00   (2) to (2)   TRINIDAD  60.00
 1  31052 31054  "1 "    0     # line from  TRINIDAD  60.00   (2) to BRKR  ESSX JCT  60.00
 4  31050     0  "1 "    0     # LOAD-DROP    ORICK     60.00  LOAD==1.96(0.45)
 4  31051     0  "1 "    0     # LOAD-DROP    BIG_LAGN  60.00  LOAD==0.18(0.04)
 4  31052     0  "1 "    0     # LOAD-DROP    TRINIDAD  60.00  LOAD==2.23(0.40)
 4  31061     0  "1 "    0     # LOAD-DROP    BCHIPMIL  60.00  LOAD==1.00(0.20)
 4  31062     0  "3 "    0     # LOAD-DROP    BLUE LKE  60.00  LOAD==3.01(0.33)
 4  31068     0  "1 "    0     # LOAD-DROP    SIMPSON   60.00  LOAD==3.79(2.35)
  #
 1  31071 31075  "1 "    0     # line from  ARCTA_J2  60.00   (2) to (2)   SIERA_PC  60.00
 1  31071 31080  "1 "    0     # line from  ARCTA_J2  60.00   (2) to BRKR  HUMBOLDT  60.00
 1  31075 31074  "1 "    0     # line from  SIERA_PC  60.00   (2) to BRKR  FAIRHAVN  60.00
 4  31075     0  "1 "    0     # LOAD-DROP    SIERA_PC  60.00  LOAD==2.44(2.15)
 0
  #
  #
  # (38) C5 DCTL Outage: Humboldt Bay - Humboldt #2 60 kV & Humboldt Bay - Humboldt #1 115 kV line outage
  #
 1  31080 31090  "1 "    0     # line from  HUMBOLDT  60.00  BRKR to BRKR  HMBLT BY  60.00
```

```
 #
1  31000 31005  "1 "    0     # line from  HUMBOLDT 115.00  BRKR to BRKR  HMBLDT B 115.00
0
 #
 #
 # North Valley Division Zones 303/333
 # 2010 category c contingencies
 #
 #
 # (39) BUS FAULT  30105  "COTWD_E" bus section 1e
 #
1  30105  30450  "1"    0     # LINE from  COTWD_E  230.00  to  CORTINA  230.00  before
1  30105  30114  "1"    0     # LINE from  COTWD_E  230.00  to  P0506STA 230.00  after
1  30105  30245  "3"    0     # LINE from  COTWD_E  230.00  to  ROUND MT 230.00
2  30105  31464  "1"    0     # TRAN from  COTWD_E  230.00  to  COTWDPGE 115.00
2  30105  31604  "3"    0     # TRAN from  COTWD_E  230.00  to  COTTONWD  60.00
0
 #
 #
 # (40) BUS FAULT  30105  "COTWD_E" bus section 2e
 #
1  30105  30111  "1"    0     # LINE from  COTWD_E  230.00  to  LOGAN CR 230.00
1  30105  30245  "2"    0     # LINE from  COTWD_E  230.00  to  ROUND MT 230.00
2  30105  31604  "2"    0     # TRAN from  COTWD_E  230.00  to  COTTONWD  60.00
0
 #
 #
 # (41) BUS FAULT  30106  "COTWD_F" bus section 1f
 #
1  30106  30460  "1"    0     # LINE from  COTWD_F  230.00  to  VACA-DIX 230.00  before
1  30106  30114  "2"    0     # LINE from  COTWD_F  230.00  to  P0506STA 230.00  after
0
 #
 #
 # (42) BUS FAULT  30106  "COTWD_F" bus section 2f
 #
1  30106  30108  "1"    0     # LINE from  COTWD_F  230.00  to  BRNY_FST 230.00
1  30106  30110  "1"    0     # LINE from  COTWD_F  230.00  to  GLENN    230.00
2  30106  31464  "4"    0     # TRAN from  COTWD_F  230.00  to  COTWDPGE 115.00
0
 #
 #
 # (43) BUS FAULT  37545  "COTWDWAP" bus section 1
 #
1  37545  37565  "1"    0     # LINE from  COTWDWAP 230.00  to  OLINDAW  230.00
1  37545  37544  "1"    0     # LINE from  COTWDWAP 230.00  to  AIRPORTW 230.00
1  37545  37580  "2"    0     # LINE from  COTWDWAP 230.00  to  SHASTA   230.00
1  37545  30245  "1"    0     # LINE from  COTWDWAP 230.00  to  ROUND MT 230.00
0
```

```
 #
 #
 # (44) BUS FAULT  37545  "COTWDWAP" bus section 2
 #
1  37545  37565  "2"    0     # LINE from  COTWDWAP 230.00  to  OLINDAW  230.00
1  37545  37567  "1"    0     # LINE from  COTWDWAP 230.00  to  ROSEVILL 230.00
1  37545  37580  "1"    0     # LINE from  COTWDWAP 230.00  to  SHASTA   230.00
0
 #
 #
 # (45) BUS FAULT  30110  "GLENN"
 #
1  30110  30106  "1"    0     # LINE from  GLENN    230.00  to  COTWD_F  230.00
1  30110  30460  "1"    0     # LINE from  GLENN    230.00  to  VACA-DIX 230.00  before
1  30110  30114  "4"    0     # LINE from  GLENN    230.00  to  P0506STA 230.00  after
2  30110  31720  "1"    0     # TRAN from  GLENN    230.00  to  GLENN RG  60.00
2  30110  31722  "2"    0     # TRAN from  GLENN    230.00  to  GLENN     60.00
0
 #
 #
 # (46) BUS FAULT  30111  "LOGAN CR"
 #
1  30111  30105  "1"    0     # LINE from  LOGAN CR 230.00  to  COTWD_E  230.00
1  30111  30460  "1"    0     # LINE from  LOGAN CR 230.00  to  VACA-DIX 230.00  before
1  30111  30114  "3"    0     # LINE from  LOGAN CR 230.00  to  P0506STA 230.00  after
4  30111     0  "1 "    0     # LOAD-DROP    LOGAN CR 230.00  LOAD==14.28(2.89)
4  30111     0  "SL"    0     # LOAD-DROP    LOGAN CR 230.00  LOAD==18.58(9.52)
0
 #
 #
 # (47) BUS FAULT  30185  "PIT 1"
 #
1  30185  30190  "1"    0     # LINE from  PIT 1    230.00  to  SPI-BRNY 230.00
1  30108  30185  "1"    0     # LINE from  BRNY_FST 230.00  to  PIT 1    230.00
1  30185  30186  "1"    0     # LINE from  PIT 1    230.00  to  MALACHA2 230.00
2  30185  31818  "1"    0     # TRAN from  PIT 1    230.00  to  PIT 1 U1  11.00
2  30185  31818  "2"    0     # TRAN from  PIT 1    230.00  to  PIT 1 U1  11.00
0
 #
 #
 # (48) BUS FAULT  30195  "PIT 3"
 #
1  30195  30190  "1"    0     # LINE from  PIT 3    230.00  to  SPI-BRNY 230.00
1  30195  30245  "1"    0     # LINE from  PIT 3    230.00  to  ROUND MT 230.00
2  30195  31802  "1"    0     # TRAN from  PIT 3    230.00  to  PIT 3     11.50
0
 #
 #
 # (49) BUS FAULT  30200  "PIT 4"
```

```
 #
1  30200  30225  "1"    0     # LINE from  PIT 4    230.00  to  PIT 4 JT 230.00
2  30200  31766  "1"    0     # TRAN from  PIT 4    230.00  to  PIT 4     13.80
0
 #
 #
 # (50) BUS FAULT  30205  "BLACK"
 #
1  30205  30209  "1"    0     # LINE from  BLACK    230.00  to  PIT5JT2  230.00
2  30205  31768  "1"    0     # TRAN from  BLACK    230.00  to  JBBLACK1  13.80
2  30205  31770  "1"    0     # TRAN from  BLACK    230.00  to  JBBLACK2  13.80
0
 #
 #
 # (51) BUS FAULT  30210  "PIT 5 JT"
 #
1  30210  30209  "1"    0     # LINE from  PIT 5 JT 230.00  to  PIT5JT2  230.00
1  30210  30232  "1"    0     # LINE from  PIT 5 JT 230.00  to  COVE_RD. 230.00
2  30210  31804  "1"    0     # TRAN from  PIT 5 JT 230.00  to  PIT 5 U1  11.50
2  30210  31806  "1"    0     # TRAN from  PIT 5 JT 230.00  to  PIT 5 U2  11.50
0
 #
 #
 # (52) BUS FAULT  30215  "PIT 6"
 #
1  30215  30230  "1"    0     # LINE from  PIT 6    230.00  to  PIT 6 JT 230.00
2  30215  31772  "1"    0     # TRAN from  PIT 6    230.00  to  PIT 6 U1  13.80
2  30215  31774  "1"    0     # TRAN from  PIT 6    230.00  to  PIT 6 U2  13.80
0
 #
 #
 # (53) BUS FAULT  30220  "PIT 7"
 #
1  30220  30222  "1"    0     # LINE from  PIT 7    230.00  to  PIT 7 JT 230.00
1  30220  30223  "1"    0     # LINE from  PIT 7    230.00  to  PIT 7JT2 230.00
2  30220  31776  "1"    0     # TRAN from  PIT 7    230.00  to  PIT 7 U1  13.80
2  30220  31778  "1"    0     # TRAN from  PIT 7    230.00  to  PIT 7 U2  13.80
0
 #
 #
 # (54) BUS FAULT  30245  "ROUND MT" bus section 1d
 #
1  30245  30222  "1"    0     # LINE from  ROUND MT 230.00  to  PIT 7 JT 230.00
1  30245  30223  "1"    0     # LINE from  ROUND MT 230.00  to  PIT 7JT2 230.00
1  30245  30225  "2"    0     # LINE from  ROUND MT 230.00  to  PIT 4 JT 230.00
1  30245  37545  "1"    0     # LINE from  ROUND MT 230.00  to  COTWDWAP 230.00
0
 #
 #
```

```
 # (55) BUS FAULT  30245  "ROUND MT" bus section 1e
 #
1  30105  30245  "2 "   0     # LINE from  COTWD_E  230.00  to  ROUND MT 230.00
1  30245  30105  "3"    0     # LINE from  ROUND MT 230.00  to  COTWD_E  230.00
1  30245  30195  "1"    0     # LINE from  ROUND MT 230.00  to  PIT 3    230.00
0
 #
 #
 # (56) BUS FAULT  30250  "CARIBOU"
 #
1  30250  30261  "1"    0     # LINE from  CARIBOU  230.00  to  BELDENTP 230.00
2  30250  30255  "1"    0     # TRAN from  CARIBOU  230.00  to  CARBOU M 230.00
2  30250  31782  "1"    0     # TRAN from  CARIBOU  230.00  to  CRBU 4-5  13.80
0
 #
 #
 # (57) BUS FAULT  30260  "BELDEN"
 #
1  30260  30262  "1"    0     # LINE from  BELDEN   230.00  to  RK C JT1 230.00
1  30260  30261  "1"    0     # LINE from  BELDEN   230.00  to  BELDENTP 230.00
2  30260  31784  "1"    0     # TRAN from  BELDEN   230.00  to  BELDEN    13.80
0
 #
 #
 # (58) BUS FAULT  30265  "BCKS CRK"
 #
1  30265  30272  "1"    0     # LINE from  BCKS CRK 230.00  to  RK C JT2 230.00
2  30265  31820  "1"    0     # TRAN from  BCKS CRK 230.00  to  BCKS CRK  11.00
0
 #
 #
 # (59) BUS FAULT  30268  "ROCKCK 1"
 #
1  30268  30262  "1"    0     # LINE from  ROCKCK 1 230.00  to  RK C JT1 230.00
1  30268  30270  "1"    0     # LINE from  ROCKCK 1 230.00  to  ROCKCK 2 230.00
2  30268  31786  "1"    0     # TRAN from  ROCKCK 1 230.00  to  ROCK CK1  13.80
0
 #
 #
 # (60) BUS FAULT  30270  "ROCKCK 2"
 #
1  30270  30268  "1"    0     # LINE from  ROCKCK 2 230.00  to  ROCKCK 1 230.00
1  30270  30272  "1"    0     # LINE from  ROCKCK 2 230.00  to  RK C JT2 230.00
2  30270  31788  "1"    0     # TRAN from  ROCKCK 2 230.00  to  ROCK CK2  13.80
0
 #
 #
 # (61) BUS FAULT  30275  "CRESTA"
 #
```

```
 1  30275  30272  "1"    0     # LINE from  CRESTA   230.00  to  RK C JT2 230.00
 1  30275  30330  "1"    0     # LINE from  CRESTA   230.00  to  RIO OSO  230.00
 2  30275  31812  "1"    0     # TRAN from  CRESTA   230.00  to  CRESTA    11.50
 0
  #
  #
  # (62) BUS FAULT  30280  "POE"
  #
 1  30280  30262  "1"    0     # LINE from  POE      230.00  to  RK C JT1 230.00
 1  30280  30330  "1"    0     # LINE from  POE      230.00  to  RIO OSO  230.00
 2  30280  31790  "1"    0     # TRAN from  POE      230.00  to  POE 1     13.80
 2  30280  31792  "1"    0     # TRAN from  POE      230.00  to  POE 2     13.80
 0
  #
  #
  # (63) BUS FAULT  30300  "TBL MT D" bus section 2d
  #
 1  30300  30261  "1"    0     # LINE from  TBL MT D 230.00  to  BELDENTP 230.00
 1  30300  30303  "1"    0     # LINE from  TBL MT D 230.00  to  TBL MT E 230.00
 1  30300  30325  "1"    0     # LINE from  TBL MT D 230.00  to  PALERMO  230.00
 1  30300  30330  "1"    0     # LINE from  TBL MT D 230.00  to  RIO OSO  230.00
 1  30300  30302  "1"    0     # LINE from  TBL MT D 230.00  to  TBL MTX1 230.00
 2  30300  31504  "4"    0     # TRAN from  TBL MT D 230.00  to  TBLE MTN 115.00
 2  30300  30301  "1"    0     # TRAN from  TBL MT D 230.00  to  TBL MT2M 230.00
 2  30300  30304  "1"    0     # TRAN from  TBL MT D 230.00  to  TBL MT3M 230.00
 0
  #
  #
  # (64) BUS FAULT  30303  "TBL MT E" bus section 1e
  #
 1  30303  38635  "1"    0     # LINE from  TBL MT E 230.00  to  THM JCT  230.00
 1  30303  38621  "2"    0     # LINE from  TBL MT E 230.00  to  HYATT2   230.00
 1  30303  30302  "1"    0     # LINE from  TBL MT E 230.00  to  TBL MTX1 230.00
 0
  #
  #
  # (65) BUS FAULT  30303  "TBL MT E" bus section 2e
  #
 1  30303  38623  "3"    0     # LINE from  TBL MT E 230.00  to  THM JCT2 230.00
 0
  #
  #
  # (66) BUS FAULT  30325  "PALERMO"
  #
 1  30325  30300  "1"    0     # LINE from  PALERMO  230.00  to  TBL MT D 230.00
 1  30325  30327  "1"    0     # LINE from  PALERMO  230.00  to  COLGATE  230.00
 2  30325  30324  "1"    0     # TRAN from  PALERMO  230.00  to  PALRMO M 230.00
 0
  #
```

```
 #
 # (67) BUS FAULT  31452  "TRINITY"
 #
1  31452  31000  "1"    0     # LINE from  TRINITY  115.00  to  HUMBOLDT 115.00
1  31452  31461  "1"    0     # LINE from  TRINITY  115.00  to  JESSTAP  115.00
2  31452  31556  "1"    0     # TRAN from  TRINITY  115.00  to  TRINITY   60.00
0
 #
 #
 # (68) BUS FAULT  31456  "MALACHA1"
 #
1  31456  31458  "1"    0     # LINE from  MALACHA1 115.00  to  MALACHA2 115.00
2  31456  31764  "1"    0     # TRAN from  MALACHA1 115.00  to  MALCHA    13.80
0
 #
 #
 # (69) BUS FAULT  31458  "MALACHA2"
 #
1  31458  31456  "1"    0     # LINE from  MALACHA2 115.00  to  MALACHA1 115.00
2  31458  30186  "2"    0     # TRAN from  MALACHA2 115.00  to  MALACHA2 230.00
0
 #
 #
 # (70) BUS FAULT  31464  "COTWDPGE" bus section1
 #
1  31464  31461  "1"    0     # LINE from  COTWDPGE 115.00  to  JESSTAP  115.00
1  31464  31463  "1"    0     # LINE from  COTWDPGE 115.00  to  WHEELBR  115.00
2  31464  30105  "1"    0     # TRAN from  COTWDPGE 115.00  to  COTWD_E  230.00
4  31464     0  "6 "    0     # LOAD-DROP    COTWDPGE 115.00  LOAD==17.47(0.78)
0
 #
 #
 # (71) BUS FAULT  31464  "COTWDPGE" bus section 2
 #
1  31464  31450  "1"    0     # LINE from  COTWDPGE 115.00  to  WILDWOOD 115.00
1  31464  31466  "1"    0     # LINE from  COTWDPGE 115.00  to  JESSUPJ1 115.00
2  31464  30106  "4"    0     # TRAN from  COTWDPGE 115.00  to  COTWD_F  230.00
0
 #
 #
 # (72) BUS FAULT  31468  "CASCADE"
 #
1  31468  31459  "1"    0     # LINE from  CASCADE  115.00  to  OREGNTRL 115.00
1  31468  45087  "1"    0     # LINE from  CASCADE  115.00  to  DELTA    115.00
2  31468  31797  "1"    0     # TRAN from  CASCADE  115.00  to  CSCDE  M  13.50
0
 #
 #
 # (73) BUS FAULT  31482  "PALERMO"
```

```
 #
1  31482  31476  "1"    0     # LINE from  PALERMO  115.00  to  OWID     115.00
1  31482  31506  "1"    0     # LINE from  PALERMO  115.00  to  HONC JT1 115.00
1  31482  31508  "1"    0     # LINE from  PALERMO  115.00  to  HONC JT3 115.00
1  31482  31516  "2"    0     # LINE from  PALERMO  115.00  to  WYANDJT2 115.00
1  31482  32280  "1"    0     # LINE from  PALERMO  115.00  to  E.MRY J2 115.00
1  31482  31518  "1"    0     # LINE from  PALERMO  115.00  to  WYANDJT1 115.00
2  31482  30324  "1"    0     # TRAN from  PALERMO  115.00  to  PALRMO M 230.00
0
 #
 #
 # (74) BUS FAULT  31486  "CARIBOU"
 #
1  31486  31488  "1"    0     # LINE from  CARIBOU  115.00  to  GRIZ JCT 115.00
1  31486  31490  "1"    0     # LINE from  CARIBOU  115.00  to  BUTTVLLY 115.00
2  31486  30255  "11"    0     # TRAN from  CARIBOU  115.00  to  CARBOU M 230.00
2  31486  31808  "1"    0     # TRAN from  CARIBOU  115.00  to  CRBOU2-3  11.50
0
 #
 #
 # (75) BUS FAULT  31490  "BUTTVLLY"
 #
1  31490  31486  "1"    0     # LINE from  BUTTVLLY 115.00  to  CARIBOU  115.00
2  31490  31780  "1"    0     # TRAN from  BUTTVLLY 115.00  to  BUTTVLLY  13.80
0
 #
 #
 # (76) BUS FAULT  31498  "SYCAMORE"
 #
1  31498  31496  "1"    0     # LINE from  SYCAMORE 115.00  to  NORD   1 115.00
1  31498  31504  "1"    0     # LINE from  SYCAMORE 115.00  to  TBLE MTN 115.00
4  31498     0  "1 "    0     # LOAD-DROP    SYCAMORE 115.00  LOAD==30.81(1.38)
4  31498     0  "2 "    0     # LOAD-DROP    SYCAMORE 115.00  LOAD==21.41(0.96)
4  31498     0  "3 "    0     # LOAD-DROP    SYCAMORE 115.00  LOAD==30.35(1.36)
0
 #
 #
 # (77) BUS FAULT  31500  "BUTTE"
 #
1  31500  31501  "1"    0     # LINE from  BUTTE    115.00  to  CHICOTP1 115.00
1  31500  31504  "2"    0     # LINE from  BUTTE    115.00  to  TBLE MTN 115.00
1  31500  31514  "1"    0     # LINE from  BUTTE    115.00  to  PARADSE  115.00
1  31500  31503  "1"    0     # LINE from  BUTTE    115.00  to  CHICOTP2 115.00
2  31500  31712  "1"    0     # TRAN from  BUTTE    115.00  to  BUTTE     60.00
4  31500     0  "2 "    0     # LOAD-DROP    BUTTE    115.00  LOAD==13.96(0.63)
4  31500     0  "3 "    0     # LOAD-DROP    BUTTE    115.00  LOAD==24.20(1.08)
0
 #
 #
```

```
 # (78) BUS FAULT  31504  "TBLE MTN"
 #
1  31504  31478  "1"    0     # LINE from  TBLE MTN 115.00  to  TBLM JCT 115.00
1  31504  31500  "2"    0     # LINE from  TBLE MTN 115.00  to  BUTTE    115.00
1  31504  31501  "1"    0     # LINE from  TBLE MTN 115.00  to  CHICOTP1 115.00
1  31504  31498  "1"    0     # LINE from  TBLE MTN 115.00  to  SYCAMORE 115.00
2  31504  30300  "4"    0     # TRAN from  TBLE MTN 115.00  to  TBL MT D 230.00
2  31504  30301  "2"    0     # TRAN from  TBLE MTN 115.00  to  TBL MT2M 230.00
2  31504  30304  "3"    0     # TRAN from  TBLE MTN 115.00  to  TBL MT3M 230.00
0
 #
 #
 # (79) BUS FAULT  31514  "PARADSE"
 #
1  31514  31500  "1"    0     # LINE from  PARADSE  115.00  to  BUTTE    115.00
1  31514  31494  "1"    0     # LINE from  PARADSE  115.00  to  BIGBENTP 115.00
4  31514     0  "1 "    0     # LOAD-DROP    PARADSE  115.00  LOAD==18.33(0.83)
4  31514     0  "2 "    0     # LOAD-DROP    PARADSE  115.00  LOAD==30.65(1.37)
0
 #
 #
 # (80) BUS FAULT  31556  "TRINITY"
 #
1  31556  31093  "1"    0     # LINE from  TRINITY   60.00  to  HYMPOMJT  60.00
1  31556  31558  "1"    0     # LINE from  TRINITY   60.00  to  DGLS CTY  60.00
1  31556  31562  "1"    0     # LINE from  TRINITY   60.00  to  LEWISTON  60.00
2  31556  31452  "1"    0     # TRAN from  TRINITY   60.00  to  TRINITY  115.00
2  31556  31852  "1"    0     # TRAN from  TRINITY   60.00  to  WEBR FL+   9.11
4  31556     0  "1 "    0     # LOAD-DROP    TRINITY   60.00  LOAD==1.05(0.24)
4  31556     0  "WV"    0     # LOAD-DROP    TRINITY   60.00  LOAD==6.73(1.54)
0
 #
 #
 # (81) BUS FAULT  31570  "BENTON"
 #
1  31570  31572  "1"    0     # LINE from  BENTON    60.00  to  GIRVAN    60.00
1  31570  31604  "2"    0     # LINE from  BENTON    60.00  to  COTTONWD  60.00
1  31570  31576  "1"    0     # LINE from  BENTON    60.00  to  WNTU PMS  60.00
0
 #
 #
 # (82) BUS FAULT  31580  "CASCADE"
 #
1  31580  31581  "1"    0     # LINE from  CASCADE   60.00  to  OREGNTRL  60.00
1  31580  31582  "1"    0     # LINE from  CASCADE   60.00  to  STLLWATR  60.00
1  31580  31584  "1"    0     # LINE from  CASCADE   60.00  to  MTN GATE  60.00
2  31580  31797  "1"    0     # TRAN from  CASCADE   60.00  to  CSCDE  M  13.50
0
 #
```

```
 #
 # (83) BUS FAULT  31584  "MTN GATE"
 #
1  31584  31580  "1"    0     # LINE from  MTN GATE  60.00  to  CASCADE   60.00
1  31584  31585  "1"    0     # LINE from  MTN GATE  60.00  to  ANTLER    60.00
4  31584     0  "1 "    0     # LOAD-DROP    MTN GATE  60.00  LOAD==12.61(4.98)
0
 #
 #
 # (84) BUS FAULT  31592  "DESCHUTS"
 #
1  31592  31578  "1"    0     # LINE from  DESCHUTS  60.00  to  LOMS JCT  60.00
1  31592  31594  "1"    0     # LINE from  DESCHUTS  60.00  to  VOLTA     60.00
1  31592  31593  "1"    0     # LINE from  DESCHUTS  60.00  to  COWCK TP  60.00
4  31592     0  "1 "    0     # LOAD-DROP    DESCHUTS  60.00  LOAD==10.54(0.47)
0
 #
 #
 # (85) BUS FAULT  31594  "VOLTA"
 #
1  31594  31592  "1"    0     # LINE from  VOLTA     60.00  to  DESCHUTS  60.00
1  31594  31596  "1"    0     # LINE from  VOLTA     60.00  to  SOUTH     60.00
2  31594  31824  "1"    0     # TRAN from  VOLTA     60.00  to  VOLTA1-2   9.11
4  31594     0  "2 "    0     # LOAD-DROP    VOLTA     60.00  LOAD==6.52(1.32)
0
 #
 #
 # (86) BUS FAULT  31596  "SOUTH"
 #
1  31596  31594  "1"    0     # LINE from  SOUTH     60.00  to  VOLTA     60.00
1  31596  31600  "1"    0     # LINE from  SOUTH     60.00  to  INSKIP    60.00
2  31596  31826  "1"    0     # TRAN from  SOUTH     60.00  to  SOUTH G    4.16
0
 #
 #
 # (87) BUS FAULT  31598  "KILARC"
 #
1  31598  31587  "1"    0     # LINE from  KILARC    60.00  to  OLSEN JT  60.00
1  31598  31591  "1"    0     # LINE from  KILARC    60.00  to  CLOV TAP  60.00
2  31598  31828  "1"    0     # TRAN from  KILARC    60.00  to  KILRC1-2   9.11
0
 #
 #
 # (88) BUS FAULT  31602  "COLEMAN"
 #
1  31602  31600  "1"    0     # LINE from  COLEMAN   60.00  to  INSKIP    60.00
1  31602  31604  "1"    0     # LINE from  COLEMAN   60.00  to  COTTONWD  60.00
1  31602  31606  "1"    0     # LINE from  COLEMAN   60.00  to  CLMN JCT  60.00
2  31602  31906  "1"    0     # TRAN from  COLEMAN   60.00  to  COLEMAN    6.60
```

```
0
 #
 #
 # (89) BUS FAULT  31604  "COTTONWD"
 #
1  31604  31570  "2"    0     # LINE from  COTTONWD  60.00  to  BENTON    60.00
1  31604  31574  "1"    0     # LINE from  COTTONWD  60.00  to  ANDERSON  60.00
1  31604  31602  "1"    0     # LINE from  COTTONWD  60.00  to  COLEMAN   60.00
1  31604  31607  "1"    0     # LINE from  COTTONWD  60.00  to  RED B JT  60.00
1  31604  31611  "2"    0     # LINE from  COTTONWD  60.00  to  RASN JNT  60.00
1  31604  31614  "1"    0     # LINE from  COTTONWD  60.00  to  RWSN J2   60.00
2  31604  30105  "2"    0     # TRAN from  COTTONWD  60.00  to  COTWD_E  230.00
2  31604  30105  "3"    0     # TRAN from  COTTONWD  60.00  to  COTWD_E  230.00
0
 #
 #
 # (90) BUS FAULT  31608  "RED BLFF"
 #
1  31608  31606  "1"    0     # LINE from  RED BLFF  60.00  to  CLMN JCT  60.00
1  31608  31607  "1"    0     # LINE from  RED BLFF  60.00  to  RED B JT  60.00
4  31608     0  "1 "    0     # LOAD-DROP    RED BLFF  60.00  LOAD==8.96(0.40)
4  31608     0  "2 "    0     # LOAD-DROP    RED BLFF  60.00  LOAD==9.86(0.44)
4  31608     0  "3 "    0     # LOAD-DROP    RED BLFF  60.00  LOAD==7.96(0.35)
0
 #
 #
 # (91) BUS FAULT  31628  "PIT 1"
 #
1  31628  31550  "1"    0     # LINE from  PIT 1     60.00  to  MC ARTHR  60.00
1  31628  31550  "2"    0     # LINE from  PIT 1     60.00  to  MC ARTHR  60.00
1  31628  31630  "1"    0     # LINE from  PIT 1     60.00  to  HAT CRK1  60.00
1  31628  31632  "1"    0     # LINE from  PIT 1     60.00  to  HAT CRK2  60.00
2  31628  31818  "1"    0     # TRAN from  PIT 1     60.00  to  PIT 1 U1  11.00
4  31628     0  "1 "    0     # LOAD-DROP    PIT 1     60.00  LOAD==2.52(0.51)
0
 #
 #
 # (92) BUS FAULT  31630  "HAT CRK1"
 #
1  31630  31628  "1"    0     # LINE from  HAT CRK1  60.00  to  PIT 1     60.00
2  31630  31902  "1"    0     # TRAN from  HAT CRK1  60.00  to  HAT CRK1   6.60
2  31630  31634  "1"    0     # TRAN from  HAT CRK1  60.00  to  HT CRKRG  60.00
4  31630     0  "1 "    0     # LOAD-DROP    HAT CRK1  60.00  LOAD==1.43(0.29)
0
 #
 #
 # (93) BUS FAULT  31642  "PEACHTON"
 #
1  31642  31644  "1"    0     # LINE from  PEACHTON  60.00  to  BIGGSJCT  60.00
```

```
 1  31642  38054  "1"    0     # LINE from  PEACHTON  60.00  to  GRIDLEY   60.00
 4  31642     0  "1 "    0     # LOAD-DROP    PEACHTON  60.00  LOAD==4.62(0.94)
 4  31642     0  "2 "    0     # LOAD-DROP    PEACHTON  60.00  LOAD==4.43(0.90)
 0
  #
  #
  # (94) BUS FAULT  31650  "OROVILLE"
  #
 1  31650  31652  "1"    0     # LINE from  OROVILLE  60.00  to  LSNA PCC  60.00
 1  31650  31651  "2"    0     # LINE from  OROVILLE  60.00  to  OROENEGY  60.00
 1  31650  31702  "1"    0     # LINE from  OROVILLE  60.00  to  MCNE JCT  60.00
 4  31650     0  "1 "    0     # LOAD-DROP    OROVILLE  60.00  LOAD==1.72(0.00)
 4  31650     0  "2 "    0     # LOAD-DROP    OROVILLE  60.00  LOAD==16.54(0.74)
 4  31650     0  "3 "    0     # LOAD-DROP    OROVILLE  60.00  LOAD==9.28(0.41)
 0
  #
  #
  # (95) BUS FAULT  31656  "PALERMO"
  #
 1  31656  31648  "2"    0     # LINE from  PALERMO   60.00  to  ELGN JCT  60.00
 1  31656  31652  "1"    0     # LINE from  PALERMO   60.00  to  LSNA PCC  60.00
 1  31656  31658  "1"    0     # LINE from  PALERMO   60.00  to  BANGOR    60.00
 2  31656  30324  "1"    0     # TRAN from  PALERMO   60.00  to  PALRMO M 230.00
 0
  #
  #
  # (96) BUS FAULT  31682  "SPANSHCK"
  #
 1  31682  31678  "2"    0     # LINE from  SPANSHCK  60.00  to  GRYS FLT  60.00
 1  31682  31689  "1"    0     # LINE from  SPANSHCK  60.00  to  ELIZ TWN  60.00
 4  31682     0  "CM"    0     # LOAD-DROP    SPANSHCK  60.00  LOAD==1.35(0.27)
 4  31682     0  "GV"    0     # LOAD-DROP    SPANSHCK  60.00  LOAD==0.17(0.03)
 0
  #
  #
  # (97) BUS FAULT  31690  "CARIBOU"
  #
 1  31690  31674  "1"    0     # LINE from  CARIBOU   60.00  to  BIG MDWS  60.00
 1  31690  31676  "2"    0     # LINE from  CARIBOU   60.00  to  HOWELLS   60.00
 1  31690  31677  "1"    0     # LINE from  CARIBOU   60.00  to  GRS F JT  60.00
 2  31690  30255  "11"    0     # TRAN from  CARIBOU   60.00  to  CARBOU M 230.00
 2  31690  31810  "1"    0     # TRAN from  CARIBOU   60.00  to  CRBU 1    11.50
 0
  #
  #
  # (98) BUS FAULT  31696  "CNTRVLLE"
  #
 1  31696  31692  "1"    0     # LINE from  CNTRVLLE  60.00  to  DE SABLA  60.00
 1  31696  31704  "1"    0     # LINE from  CNTRVLLE  60.00  to  CLARK RD  60.00
```

```
 1  31696  31708  "1"    0     # LINE from  CNTRVLLE  60.00  to  DRHM JCA  60.00
 2  31696  31838  "1"    0     # TRAN from  CNTRVLLE  60.00  to  CNTRVL12   9.11
 4  31696     0  "1 "    0     # LOAD-DROP    CNTRVLLE  60.00  LOAD==1.86(0.09)
 0
  #
  #
  # (99) BUS FAULT  31710  "CHICO A"
  #
 1  31710  31712  "1"    0     # LINE from  CHICO A   60.00  to  BUTTE     60.00
 1  31710  31712  "2"    0     # LINE from  CHICO A   60.00  to  BUTTE     60.00
 4  31710     0  "1 "    0     # LOAD-DROP    CHICO A   60.00  LOAD==1.91(0.44)
 4  31710     0  "2 "    0     # LOAD-DROP    CHICO A   60.00  LOAD==17.40(0.78)
 0
  #
  #
  # (100) BUS FAULT  31712  "BUTTE"
  #
 1  31712  31710  "1"    0     # LINE from  BUTTE     60.00  to  CHICO A   60.00
 1  31712  31710  "2"    0     # LINE from  BUTTE     60.00  to  CHICO A   60.00
 1  31712  31714  "1"    0     # LINE from  BUTTE     60.00  to  DRHM JCB  60.00
 2  31712  31500  "1"    0     # TRAN from  BUTTE     60.00  to  BUTTE    115.00
 0
  #
  #
  # (101) BUS FAULT  31718  "TBLE MTN"
  #
 1  31718  31640  "1"    0     # LINE from  TBLE MTN  60.00  to  TRES VIS  60.00
 1  31718  31702  "1"    0     # LINE from  TBLE MTN  60.00  to  MCNE JCT  60.00
 1  31718  31709  "1"    0     # LINE from  TBLE MTN  60.00  to  DRHMSW45  60.00
 2  31718  30301  "2"    0     # TRAN from  TBLE MTN  60.00  to  TBL MT2M 230.00
 0
  #
  #
  # (102) BUS FAULT  31722  "GLENN"
  #
 1  31722  31723  "5"    0     # LINE from  GLENN     60.00  to  ORLND JT  60.00
 1  31722  31725  "1"    0     # LINE from  GLENN     60.00  to  ORL B JT  60.00
 1  31722  31729  "4"    0     # LINE from  GLENN     60.00  to  CORNSWCH  60.00
 1  31722  31733  "3"    0     # LINE from  GLENN     60.00  to  CAPYSWCH  60.00
 1  31722  31734  "2"    0     # LINE from  GLENN     60.00  to  HAMILTON  60.00
 2  31722  31720  "1"    0     # TRAN from  GLENN     60.00  to  GLENN RG  60.00
 2  31722  30110  "2"    0     # TRAN from  GLENN     60.00  to  GLENN    230.00
 0
  #
  #
  # (103)   C5 DOUBLE CIRCUIT TOWERLINE OUTAGE
  # Cottonwood - Benton #1 and #2 60 kV Lines
 1  31570 31572  "1 "    0     # line from  BENTON    60.00  BRKR to (2)   GIRVAN    60.00
 1  31572 31574  "1 "    0     # line from  GIRVAN    60.00   (2) to (2)   ANDERSON  60.00
```

```
 1  31574 31604  "1 "    0     # line from  ANDERSON  60.00   (2) to BRKR  COTTONWD  60.00
 4  31572     0  "1 "    0     # LOAD-DROP    GIRVAN    60.00  LOAD==6.75(0.30)
 4  31574     0  "1 "    0     # LOAD-DROP    ANDERSON  60.00  LOAD==15.53(0.70)
  #
 1  31570 31604  "2 "    0     # line from  BENTON    60.00  BRKR to BRKR  COTTONWD  60.00
 0
  #
  #
  # (104)   C5 DOUBLE CIRCUIT TOWERLINE OUTAGE
  # Cottonwood #1 and #2 60 kV Lines
 1  31604 31614  "1 "    0     # line from  COTTONWD  60.00  BRKR to (3)   RWSN J2   60.00
 1  31614 31613  "1 "    0     # line from  RWSN J2   60.00   (3) to (2)   TYLERJT   60.00
 1  31614 31624  "1 "    0     # line from  RWSN J2   60.00   (3) to (2)   GRBR JCT  60.00
 1  31613 31615  "1 "    0     # line from  TYLERJT   60.00   (2) to (1)   LP FB SP  60.00
 1  31624 31616  "1 "    0     # line from  GRBR JCT  60.00   (2) to (1)   GERBER    60.00
 4  31615     0  "1 "    0     # LOAD-DROP    LP FB SP  60.00  LOAD==3.35(3.71)
 4  31615     0  "3 "    0     # LOAD-DROP    LP FB SP  60.00  LOAD==3.16(3.22)
 4  31616     0  "1 "    0     # LOAD-DROP    GERBER    60.00  LOAD==6.54(1.33)
  #
 1  31603 31609  "2 "    0     # line from  CANAL TP  60.00   (3) to (1)   CR CANAL  60.00
 1  31603 31610  "2 "    0     # line from  CANAL TP  60.00   (3) to (1)   TYLER     60.00
 1  31603 31611  "2 "    0     # line from  CANAL TP  60.00   (3) to (3)   RASN JNT  60.00
 1  31611 31604  "2 "    0     # line from  RASN JNT  60.00   (3) to BRKR  COTTONWD  60.00
 1  31611 31605  "2 "    0     # line from  RASN JNT  60.00   (3) to (2)   NEO REDT  60.00
 2  31605 31621  "1 "    0     # TRAN from  NEO REDT  60.00   (2) to (1)   NEO REDB  13.80
 4  31609     0  "CC"    0     # LOAD-DROP    CR CANAL  60.00  LOAD==3.00(0.68)
 4  31610     0  "1 "    0     # LOAD-DROP    TYLER     60.00  LOAD==7.78(0.35)
 4  31610     0  "2 "    0     # LOAD-DROP    TYLER     60.00  LOAD==7.05(0.32)
 4  31611     0  "1 "    0     # LOAD-DROP    RASN JNT  60.00  LOAD==10.04(0.45)
 4  31611     0  "PK"    0     # LOAD-DROP    RASN JNT  60.00  LOAD==6.53(3.53)
 3  31621     0  "1 "    0     # GEN-DROP    NEO REDB  13.80  GEN==50.00(6.00)
 0
  #
  #
  # (105)   C5 DOUBLE CIRCUIT TOWERLINE OUTAGE
  # Table Mountain - Butte #2 and Table Mountain - Paradise 115 kV Lines
 1  31500 31504  "2 "    0     # line from  BUTTE    115.00  BRKR to BRKR  TBLE MTN 115.00
  #
 1  31478 31494  "1 "    0     # line from  TBLM JCT 115.00   (2) to (2)   BIGBENTP 115.00
 1  31478 31504  "1 "    0     # line from  TBLM JCT 115.00   (2) to BRKR  TBLE MTN 115.00
 1  31494 31514  "1 "    0     # line from  BIGBENTP 115.00   (2) to BRKR  PARADSE  115.00
 0
  #
  #
  # (106)   C5 DOUBLE CIRCUIT TOWERLINE OUTAGE
  # Table Mountain - Butte #2 115 kV and Table Mountain - Sycamore 115 kV Lines
 1  31500 31504  "2 "    0     # line from  BUTTE    115.00  BRKR to BRKR  TBLE MTN 115.00
  #
 1  31504 31498  "1 "    0     # line from  TBLE MTN 115.00  BRKR to BRKR  SYCAMORE 115.00
```

```
0
 #
 #
 # (107)   C5 DOUBLE CIRCUIT TOWERLINE OUTAGE
 # Palermo - Oroville #2 60 kV and Palermo - Wyandotte 115 kV Lines
1  31646 31648  "2 "    0     # line from  KLLY RDE  60.00   (2) to (3)   ELGN JCT  60.00
2  31646 31834  "1 "    0     # TRAN from  KLLY RDE  60.00  BRKR to (1)   KELLYRDG   9.11
1  31648 31651  "2 "    0     # line from  ELGN JCT  60.00   (3) to (3)   ORONRGTP  60.00
1  31648 31656  "2 "    0     # line from  ELGN JCT  60.00   (3) to BRKR  PALERMO   60.00
1  31651 31650  "2 "    0     # line from  ORONRGTP  60.00   (3) to BRKR  OROVILLE  60.00
1  31651 31653  "1 "    0     # line from  ORONRGTP  60.00   (3) to (3)   OROENEGY  60.00
1  31653 31655  "1 "    0     # line from  OROENEGY  60.00   (3) to (2)   P0439     60.00
2  31653 31888  "1 "    0     # TRAN from  OROENEGY  60.00   (3) to (1)   OROVLLE    9.11
2  31655 31889  "1 "    0     # TRAN from  P0439     60.00   (2) to (1)   P0439     13.80
4  31888     0  "SG"    0     # LOAD-DROP    OROVLLE    9.11  LOAD==1.13(0.26)
4  31889     0  "SG"    0     # LOAD-DROP    P0439     13.80  LOAD==5.00(2.77)
3  31834     0  "1 "    0     # GEN-DROP    KELLYRDG   9.11  GEN==14.00(-2.00)
3  31888     0  "1 "    0     # GEN-DROP    OROVLLE    9.11  GEN==8.50(-2.50)
3  31889     0  "1 "    0     # GEN-DROP    P0439     13.80  GEN==49.00(3.19)
3  31889     0  "2 "    0     # GEN-DROP    P0439     13.80  GEN==25.50(1.66)
 #
1  31480 31518  "1 "    0     # line from  WYANDTTE 115.00   (1) to (2)   WYANDJT1 115.00
1  31518 31482  "1 "    0     # line from  WYANDJT1 115.00   (2) to BRKR  PALERMO  115.00
4  31480     0  "1 "    0     # LOAD-DROP    WYANDTTE 115.00  LOAD==7.80(0.35)
4  31480     0  "2 "    0     # LOAD-DROP    WYANDTTE 115.00  LOAD==24.60(1.10)
4  31480     0  "3 "    0     # LOAD-DROP    WYANDTTE 115.00  LOAD==18.74(0.84)
1  31480 31516  "1"     1     #Transfer load from PALERMO-WYANDOTTE to CARIBOU-PALERMO 115kV
4  31480     0  "**"    1     #Restore loads at Wyandotte
0
 #
 #
 # (108)   C5 DOUBLE CIRCUIT TOWERLINE OUTAGE
 # Palermo - Wyandotte 115 kV and Caribou - Table Mountain 230 kV Lines
1  31480 31518  "1 "    0     # line from  WYANDTTE 115.00   (1) to (2)   WYANDJT1 115.00
1  31518 31482  "1 "    0     # line from  WYANDJT1 115.00   (2) to BRKR  PALERMO  115.00
4  31480     0  "1 "    0     # LOAD-DROP    WYANDTTE 115.00  LOAD==7.80(0.35)
4  31480     0  "2 "    0     # LOAD-DROP    WYANDTTE 115.00  LOAD==24.60(1.10)
4  31480     0  "3 "    0     # LOAD-DROP    WYANDTTE 115.00  LOAD==18.74(0.84)
1  31480 31516  "1"     1     #Transfer load from PALERMO-WYANDOTTE to CARIBOU-PALERMO 115kV
4  31480     0  "**"    1     #Restore loads at Wyandotte
 #
1  30250 30261  "1 "    0     # line from  CARIBOU  230.00  BRKR to (2)   BELDENTP 230.00
1  30261 30300  "1 "    0     # line from  BELDENTP 230.00   (2) to BRKR  TBL MT D 230.00
3  31808     0  "1 "    0     # the RAS for Caribou-Table Mt 230 kV line loss will drop
3  31808     0  "2 "    0     # Caribou Units 2 & 3
3  31782     0  "1 "    0     # Caribou Units 4 & 5
3  31782     0  "2 "    0     # Caribou Units 4 & 5
3  31810     0  "1 "    0     # Caribou 1
3  31894     0  "1 "    0     # Collins Pine
```

```
 3  31892     0  "1 "    0     # Lassen Power
 3  31780     0  "1 "    0     # Butt Valley
 2  31780 31490  "1 "    0     # Butt Valley transformer
 1  31486 31490  "1 "    0     # Caribou - Butt Valley line
 0
  #
  #
  # (109)   C5 DOUBLE CIRCUIT TOWERLINE OUTAGE
  # Palermo - Wyandotte 115 kV and Caribou - Palermo 115 kV Lines
 1  31480 31518  "1 "    0     # line from  WYANDTTE 115.00   (1) to (2)   WYANDJT1 115.00
 1  31518 31482  "1 "    0     # line from  WYANDJT1 115.00   (2) to BRKR  PALERMO  115.00
 4  31480     0  "1 "    0     # LOAD-DROP    WYANDTTE 115.00  LOAD==7.80(0.35)
 4  31480     0  "2 "    0     # LOAD-DROP    WYANDTTE 115.00  LOAD==24.60(1.10)
 4  31480     0  "3 "    0     # LOAD-DROP    WYANDTTE 115.00  LOAD==18.74(0.84)
 1  31480 31516  "1"     1     #Transfer load from PALERMO-WYANDOTTE to CARIBOU-PALERMO 115kV
 4  31480     0  "**"    1     #Restore loads at Wyandotte
  #
 1  31482 31516  "2 "    0     # line from  PALERMO  115.00  BRKR to (2)   WYANDJT2 115.00
 1  31516 31512  "2 "    0     # line from  WYANDJT2 115.00   (2) to (2)   BIG BEND 115.00
 1  31512 31488  "1 "    0     # line from  BIG BEND 115.00   (2) to (3)   GRIZ JCT 115.00
 1  31488 31486  "1 "    0     # line from  GRIZ JCT 115.00   (3) to BRKR  CARIBOU  115.00
 1  31488 31492  "1 "    0     # line from  GRIZ JCT 115.00   (3) to (2)   GRIZZLY1 115.00
 2  31492 31900  "1 "    0     # TRAN from  GRIZZLY1 115.00  BRKR to (1)   GRIZZLYG   6.90
 3  31900     0  "1 "    0     # GEN-DROP    GRIZZLYG   6.90  GEN==16.80(-4.00)
 0
  #
  #
  # (110)   C5 DOUBLE CIRCUIT TOWERLINE OUTAGE
  # Caribou - Palermo 115 kV and Palermo - Pease 115 kV Lines
 1  31482 31516  "2 "    0     # line from  PALERMO  115.00  BRKR to (2)   WYANDJT2 115.00
 1  31516 31512  "2 "    0     # line from  WYANDJT2 115.00   (2) to (2)   BIG BEND 115.00
 1  31512 31488  "1 "    0     # line from  BIG BEND 115.00   (2) to (3)   GRIZ JCT 115.00
 1  31488 31486  "1 "    0     # line from  GRIZ JCT 115.00   (3) to BRKR  CARIBOU  115.00
 1  31488 31492  "1 "    0     # line from  GRIZ JCT 115.00   (3) to (2)   GRIZZLY1 115.00
 2  31492 31900  "1 "    0     # TRAN from  GRIZZLY1 115.00  BRKR to (1)   GRIZZLYG   6.90
 3  31900     0  "1 "    0     # GEN-DROP    GRIZZLYG   6.90  GEN==16.80(-4.00)
  #
 1  31482 31506  "1 "    0     # line from  PALERMO  115.00  BRKR to (2)   HONC JT1 115.00
 1  31506 32200  "1 "    0     # line from  HONC JT1 115.00   (2) to BRKR  PEASE    115.00
 0
  #
  #
  # (111)   C5 DOUBLE CIRCUIT TOWERLINE OUTAGE
  # Palermo - Pease 115 kV and Palermo - Wyandotte 115 kV Lines
 1  31482 31506  "1 "    0     # line from  PALERMO  115.00  BRKR to (2)   HONC JT1 115.00
 1  31506 32200  "1 "    0     # line from  HONC JT1 115.00   (2) to BRKR  PEASE    115.00
  #
 1  31480 31518  "1 "    0     # line from  WYANDTTE 115.00   (1) to (2)   WYANDJT1 115.00
 1  31518 31482  "1 "    0     # line from  WYANDJT1 115.00   (2) to BRKR  PALERMO  115.00
```

```
 4  31480     0  "1 "    0     # LOAD-DROP    WYANDTTE 115.00  LOAD==7.80(0.35)
 4  31480     0  "2 "    0     # LOAD-DROP    WYANDTTE 115.00  LOAD==24.60(1.10)
 4  31480     0  "3 "    0     # LOAD-DROP    WYANDTTE 115.00  LOAD==18.74(0.84)
 1  31480 31516  "1"     1     #Transfer load from PALERMO-WYANDOTTE to CARIBOU-PALERMO 115kV
 4  31480     0  "**"    1     #Restore loads at Wyandotte
 0
  #
  #
  # (112)   C5 DOUBLE CIRCUIT TOWERLINE OUTAGE
  # Round Mountain - Cottonwood 230 kV and Volta - Deschutes 60 kV Lines
 1  30105 30245  "2 "    0     # line from  COTWD_E  230.00  BRKR to BRKR  ROUND MT 230.00
  #
 1  31592 31594  "1 "    0     # line from  DESCHUTS  60.00  BRKR to BRKR  VOLTA     60.00
 0
  #
  #
  # (113)   C5 DOUBLE CIRCUIT TOWERLINE OUTAGE
  # Pit 1 - Cottonwood 230 kV and Round Mountain - Cottonwood #3 230 kV Lines
 1  30106 30108  "1 "    0     # line from  COTWD_F  230.00  BRKR to (3)   BRNY_FST 230.00
 1  30108 30185  "1 "    0     # line from  BRNY_FST 230.00   (3) to BRKR  PIT 1    230.00
 2  30108 31798  "1 "    0     # TRAN from  BRNY_FST 230.00   (3) to (1)   BRNYFRST  13.20
 3  31798     0  "1 "    0     # GEN-DROP    BRNYFRST  13.20  GEN==26.60(0.30)
  #
 1  30105 30245  "3 "    0     # line from  COTWD_E  230.00  BRKR to BRKR  ROUND MT 230.00
 0
  #
  #
  # (114)   C5 DOUBLE CIRCUIT TOWERLINE OUTAGE
  # P0441STA - Cottonwood #2 and Round Mountain - Cottonwood #3 230 kV Lines
 1  30105 30245  "2 "    0     # line from  COTWD_E  230.00  BRKR to BRKR  ROUND MT 230.00
  #
 1  30105 30245  "3 "    0     # line from  COTWD_E  230.00  BRKR to BRKR  ROUND MT 230.00
 0
  #
  #
  # (116)  C5 DOUBLE CIRCUIT TOWER LINE OUTAGE
  # Colgate - Rio Oso 230 kV and Table Mountain - Rio Oso 230 kV Lines
 1  30327 30330  "1 "    0     # line from  COLGATE  230.00  BRKR to BRKR  RIO OSO  230.00
 2  30327 32452  "1 "    0     #Take one transformer out with Colgate-Rio Oso 230 kV line outage
 3  32452     0  "1 "    0     #Take one generator out with Colgate-Rio Oso 230 kV line outage
  #
 1  30300 30330  "1 "    0     # line from  TBL MT D 230.00  BRKR to BRKR  RIO OSO  230.00
 0
  #
  #
  # (117)  C5 DOUBLE CIRCUIT TOWER LINE OUTAGE
  # Palermo - East Nicolaus 115 kV and Palermo - Bogue 115 kV Lines
 1  31482 32280  "1 "    0     # line from  PALERMO  115.00  BRKR to (3)   E.MRY J2 115.00
 1  32280 32202  "1 "    0     # line from  E.MRY J2 115.00   (3) to (1)   E.MRYSVE 115.00
```

```
 1  32280 32212  "1 "    0     # line from  E.MRY J2 115.00   (3) to BRKR  E.NICOLS 115.00
 4  32202     0  "2 "    0     # LOAD-DROP    E.MRYSVE 115.00  LOAD==11.67(0.53)
 4  32202     0  "3 "    0     # LOAD-DROP    E.MRYSVE 115.00  LOAD==11.86(0.53)
 1  32288 32202  "1"     1     #Close line from E.MRY J1 to E.MRYSVE 115 kV
 4  32202     0  "**"    1     #Restore all load at E.MRYSVE 115 kV
  #
 1  31508 32286  "1 "    0     # line from  HONC JT3 115.00   (3) to (2)   OLIVH J3 115.00
 1  31508 31482  "1 "    0     # line from  HONC JT3 115.00   (3) to BRKR  PALERMO  115.00
 1  31508 31484  "1 "    0     # line from  HONC JT3 115.00   (3) to (1)   HONCUT   115.00
 1  32286 32206  "1 "    0     # line from  OLIVH J3 115.00   (2) to BRKR  BOGUE    115.00
 4  31484     0  "1 "    0     # LOAD-DROP    HONCUT   115.00  LOAD==13.27(0.00)
 0
  #
  #
  # (118)   C5 DOUBLE CIRCUIT TOWERLINE OUTAGE
  # Palermo - Pease 115 kV and Pease - Rio Oso 115 kV Lines
 1  32200 31506  "1 "    0     # line from  PEASE    115.00  BRKR to (2)   HONC JT1 115.00
 1  31506 31482  "1 "    0     # line from  HONC JT1 115.00   (2) to BRKR  PALERMO  115.00
  #
 1  32200 32288  "1 "    0     # line from  PEASE    115.00  BRKR to (2)   E.MRY J1 115.00
 1  32288 32290  "1 "    0     # line from  E.MRY J1 115.00   (2) to (3)   OLIVH J1 115.00
 1  32290 32204  "1 "    0     # line from  OLIVH J1 115.00   (3) to (1)   OLIVHRST 115.00
 1  32290 32214  "1 "    0     # line from  OLIVH J1 115.00   (3) to BRKR  RIO OSO  115.00
 4  32204     0  "1 "    0     # LOAD-DROP    OLIVHRST 115.00  LOAD==9.90(0.44)
 4  32204     0  "2 "    0     # LOAD-DROP    OLIVHRST 115.00  LOAD==13.07(0.59)
 1  32204 32286  "1"     1     #Close line from OLIVH J3 to OLIVHRST 115 kV
 4  32204     0  "**"    1     #Restore load Olivehurst 115 kV
 0
  #
  # (119)   C5 DOUBLE CIRCUIT TOWERLINE OUTAGE
  # Belden - Poe 230 kV and Cresta - Rio Oso 230 kV Lines
 1  30260 30262  "1 "    0     # line from  BELDEN   230.00  BRKR to (3)   RK C JT1 230.00
 1  30262 30268  "1 "    0     # line from  RK C JT1 230.00   (3) to BRKR  ROCKCK 1 230.00
 1  30262 30280  "1 "    0     # line from  RK C JT1 230.00   (3) to BRKR  POE      230.00
 2  30280 31790  "1 "    0     #Take the transformer out with ROCK CREEK-POE 230kV line outage
 3  31790     0  "1 "    0     #Take generator #1 at POE 1 out with ROCK CREEK-POE 230kV line outage
  #
 1  30275 30330  "1 "    0     # line from  CRESTA   230.00  BRKR to BRKR  RIO OSO  230.00
 0
  #
  #
  # (120)  C5 DOUBLE CIRCUIT TOWER LINE OUTAGE
  # Poe - Rio Oso 230 kV and Cresta - Rio Oso 230 kV Lines
 1  30280 30330  "1 "    0     # line from  POE      230.00  BRKR to BRKR  RIO OSO  230.00
 2  30280 31792  "1 "    0     # Take the transformer out with Rio Oso-Poe 230 kV line outage
 3  31792     0  "1 "    0     # Take the generator out with Rio Oso-Poe 230 kV line outage
  #
 1  30275 30330  "1 "    0     # line from  CRESTA   230.00  BRKR to BRKR  RIO OSO  230.00
 0
```

```
 #
 #
 # (121)   C5 DOUBLE CIRCUIT TOWERLINE OUTAGE
 # Table Mountain - Rio Oso 230 kV and Table Mountain - Palermo 230 kV Lines
1  30300 30330  "1 "    0     # line from  TBL MT D 230.00  BRKR to BRKR  RIO OSO  230.00
 #
1  30300 30325  "1 "    0     # line from  TBL MT D 230.00  BRKR to BRKR  PALERMO  230.00
0
 #
 #
 # (122)  C5 DOUBLE CIRCUIT TOWER LINE OUTAGE
 # Palermo - Colgate 230 kV and Table Mountain - Rio Oso 230 kV Lines
1  30325 30327  "1 "    0     # line from  PALERMO  230.00  BRKR to BRKR  COLGATE  230.00
2  30327 32450  "1 "    0     #Take one transformer out with Palermo-Colgate 230 kV line outage
3  32450     0  "1 "    0     #Take one generator out with Palermo-Colgate 230 kV line outage
 #
1  30300 30330  "1 "    0     # line from  TBL MT D 230.00  BRKR to BRKR  RIO OSO  230.00
0
 #
 #
 # (123)  C5 DOUBLE CIRCUIT TOWER LINE OUTAGE
 # Palermo - Colgate 230 kV and Colgate - Rio Oso 230 kV Lines
1  30325 30327  "1 "    0     # line from  PALERMO  230.00  BRKR to BRKR  COLGATE  230.00
2  30327 32450  "1 "    0     #Take one transformer out with Palermo-Colgate 230 kV line outage
3  32450     0  "1 "    0     #Take one generator out with Palermo-Colgate 230 kV line outage
 #
1  30327 30330  "1 "    0     # line from  COLGATE  230.00  BRKR to BRKR  RIO OSO  230.00
2  30327 32452  "1 "    0     #Take one transformer out with Colgate-Rio Oso 230 kV line outage
3  32452     0  "1 "    0     #Take one generator out with Colgate-Rio Oso 230 kV line outage
0
 #
 #
 # (124)   CATEGORY D COMMON ROW OUTAGE
 # Pit #3 - Round Mountain and Round Mountain - Cottonwood #3 230 kV Lines
1  30195 30245  "1 "    0     # line from  PIT 3    230.00  BRKR to BRKR  ROUND MT 230.00
 #
1  30105 30245  "3 "    0     # line from  COTWD_E  230.00  BRKR to BRKR  ROUND MT 230.00
0
 #
 #
 # (125)   C5 DOUBLE CIRCUIT TOWER LINE OUTAGE  before
 # Cottonwood - Cortina and Cottonwood - Logan Creek 230 kV Lines
1  30105 30450  "1 "    0     # line from  COTWD_E  230.00  BRKR to BRKR  CORTINA  230.00
 #
1  30105 30111  "1 "    0     # line from  COTWD_E  230.00  BRKR to BRKR  LOGAN CR 230.00
0
 #
 #
 # (126)   C5 DOUBLE CIRCUIT TOWER LINE OUTAGE  after
```

```
 # Cottonwood - P0506STA #1 and Cottonwood - Logan Creek 230 kV Lines
1  30105 30114  "1 "    0     # line from  COTWD_E  230.00  BRKR to BRKR  P0506STA 230.00  after
 #
1  30105 30111  "1 "    0     # line from  COTWD_E  230.00  BRKR to BRKR  LOGAN CR 230.00
0
 #
 #
 # (127)   C5 DOUBLE CIRCUIT TOWER LINE OUTAGE  after
 # Cottonwood - P0506STA #1 and Logan Creek - P0506STA #3 230 kV Lines
1  30105 30114  "1 "    0     # line from  COTWD_E  230.00  BRKR to BRKR  P0506STA 230.00  after
 #
1  30111 30114  "3 "    0     # line from  LOGAN CR 230.00  BRKR to BRKR  P0506STA 230.00  after
0
 #
 #
 # (128)   C5 DOUBLE CIRCUIT TOWERLINE OUTAGE before
 # Cottonwood - Cortina and Logan Creek - Vaca Dixon 230 kV Lines
1  30105 30450  "1 "    0     # line from  COTWD_E  230.00  BRKR to BRKR  CORTINA  230.00
 #
1  30111 30460  "1 "    0     # line from  LOGAN CR 230.00  BRKR to BRKR  VACA-DIX 230.00
0
 #
 #
 # (129)   C5 DOUBLE CIRCUIT TOWER LINE OUTAGE before
 # Logan Creek - Vaca Dixon and Cortina - Vaca Dixon 230 kV Lines
1  30111 30460  "1 "    0     # line from  LOGAN CR 230.00  BRKR to BRKR  VACA-DIX 230.00
 #
1  30450 30460  "1 "    0     # line from  CORTINA  230.00  BRKR to BRKR  VACA-DIX 230.00
0
 #
 #
 # (130)   C5 DOUBLE CIRCUIT TOWER LINE OUTAGE after
 # P0506STA - Cortina #1 and P0506STA - Vaca Dixon #3 230 kV Lines
1  30114 30450  "1 "    0     # line from  P0506STA 230.00  BRKR to BRKR  CORTINA  230.00  after
 #
1  30114 30460  "3 "    0     # line from  P0506STA 230.00  BRKR to BRKR  VACA-DIX 230.00  after
0
 #
 #
 # (131)   C5 DOUBLE CIRCUIT TOWER LINE OUTAGE after
 # Cortina - Vaca Dixon and P0506STA - Vaca Dixon #3 230 kV Lines
1  30450 30460  "1 "    0     # line from  CORTINA  230.00  BRKR to BRKR  VACA-DIX 230.00
 #
1  30114 30460  "3 "    0     # line from  P0506STA 230.00  BRKR to BRKR  VACA-DIX 230.00  after
0
 #
 #
 # (132)   C5 DOUBLE CIRCUIT TOWERLINE OUTAGE before
 # Cottonwood - Vaca Dixon and Cottonwood - Glenn 230 kV Lines
```

```
1  30106 30460  "1 "    0     # line from  COTWD_F  230.00  BRKR to BRKR  VACA-DIX 230.00
 #
1  30106 30110  "1 "    0     # line from  COTWD_F  230.00  BRKR to BRKR  GLENN    230.00
0
 #
 #
 # (133)   DOUBLE CIRCUIT TOWER LINE OUTAGE before
 # Glenn - Vaca Dixon and Cottonwood - Vaca Dixon 230 kV Lines
1  30110 30460  "1 "    0     # line from  GLENN    230.00  BRKR to BRKR  VACA-DIX 230.00
 #
1  30106 30460  "1 "    0     # line from  COTWD_F  230.00  BRKR to BRKR  VACA-DIX 230.00
0
 #
 #
 # (134)   C5 DOUBLE CIRCUIT TOWERLINE OUTAGE after
 # Cottonwood - P0506STA #2  and Cottonwood - Glenn 230 kV Lines
1  30106 30114  "2 "    0     # line from  COTWD_F  230.00  BRKR to BRKR  P0506STA 230.00  after
 #
1  30106 30110  "1 "    0     # line from  COTWD_F  230.00  BRKR to BRKR  GLENN    230.00
0
 #
 #
 # (135)   C5 DOUBLE CIRCUIT TOWERLINE OUTAGE after
 # Cottonwood - P0506STA #2  and Glenn - P0506STA #4 230 kV Lines
1  30106 30114  "2 "    0     # line from  COTWD_F  230.00  BRKR to BRKR  P0506STA 230.00  after
 #
1  30110 30114  "4 "    0     # line from  GLENN    230.00  BRKR to BRKR  P0506STA 230.00  after
0
 #
 #
 # (136)   C5 DOUBLE CIRCUIT TOWERLINE OUTAGE after
 # P0506STA - Vaca Dixon #2  and P0506STA - Vaca Dixon #4 230 kV Lines
1  30114 30460  "2 "    0     # line from  P0506STA 230.00  BRKR to BRKR  VACA-DIX 230.00  after
 #
1  30114 30460  "4 "    0     # line from  P0506STA 230.00  BRKR to BRKR  VACA-DIX 230.00  after
0
 #
 #
 # Zone 304 Sacramento division
 # 2010 category c contingency list
 #
 #
 # (137) BUS FAULT  30450  "CORTINA"
1  30450  30105  "1"    0     # LINE from  CORTINA  230.00  to  COTWD_E  230.00  before
1  30450  30114  "1"    0     # LINE from  CORTINA  230.00  to  P0506STA 230.00  after
1  30450  30460  "1"    0     # LINE from  CORTINA  230.00  to  VACA-DIX 230.00
2  30450  31950  "2"    0     # TRAN from  CORTINA  230.00  to  CORTINA  115.00
2  30450  30451  "1"    0     # TRAN from  CORTINA  230.00  to  CRTNA  M 230.00
0
```

```
 #
 #
 # (138) BUS FAULT  30460  "VACA-DIX" bus section 1 D
 #
1  30460  30467  "1"    0     # LINE from  VACA-DIX 230.00  to  PARKWAY  230.00
1  30460  30435  "1"    0     # LINE from  VACA-DIX 230.00  to  LAKEVILE 230.00
1  30460  30450  "1"    0     # LINE from  VACA-DIX 230.00  to  CORTINA  230.00
6  30460     0  "v "    0     # SVD-DROP     VACA-DIX 230.00
0
 #
 #
 # (139) BUS FAULT  30460  "VACA-DIX" bus section 1 E
 #
1  30460  30106  "1"    0     # LINE from  VACA-DIX 230.00  to  COTWD_F  230.00  before
1  30460  30114  "2"    0     # LINE from  VACA-DIX 230.00  to  P0506STA 230.00  after
1  30460  30478  "1"    0     # LINE from  VACA-DIX 230.00  to  LAMBIE   230.00
2  30460  31998  "3"    0     # TRAN from  VACA-DIX 230.00  to  VACA-DIX 115.00
0
 #
 #
 # (140) BUS FAULT  30460  "VACA-DIX" bus section 2 D
 #
1  30460  30465  "1"    0     # LINE from  VACA-DIX 230.00  to  BAHIA    230.00
1  30460  30440  "1"    0     # LINE from  VACA-DIX 230.00  to  TULUCAY  230.00
1  30460  30111  "1"    0     # LINE from  VACA-DIX 230.00  to  LOGAN CR 230.00  before
1  30460  30114  "3"    0     # LINE from  VACA-DIX 230.00  to  P0506STA 230.00  after
0
 #
 #
 # (141) BUS FAULT  30460  "VACA-DIX" bus section 2 E
 #
1  30460  30110  "1"    0     # LINE from  VACA-DIX 230.00  to  GLENN    230.00  before
1  30460  30114  "4"    0     # LINE from  VACA-DIX 230.00  to  P0506STA 230.00  after
1  30460  30450  "1"    0     # LINE from  VACA-DIX 230.00  to  CORTINA  230.00
1  30460  30472  "1"    0     # LINE from  VACA-DIX 230.00  to  PEABODY  230.00
2  30460  31998  "4"    0     # TRAN from  VACA-DIX 230.00  to  VACA-DIX 115.00
2  30460  31999  "2"    0     # TRAN from  VACA-DIX 230.00  to  VACA-CB  115.00
2  30460  31999  "2A"    0     # TRAN from  VACA-DIX 230.00  to  VACA-CB  115.00
0
 #
 #
 # (142) BUS FAULT  30472  "PEABODY"
 #
1  30472  30460  "1"    0     # LINE from  PEABODY  230.00  to  VACA-DIX 230.00
1  30472  30479  "1"    0     # LINE from  PEABODY  230.00  to  BDLSWSTA 230.00
4  30472     0  "1 "    0     # LOAD-DROP    PEABODY  230.00  LOAD==43.61(1.95)
4  30472     0  "2 "    0     # LOAD-DROP    PEABODY  230.00  LOAD==52.16(2.33)
4  30472     0  "3 "    0     # LOAD-DROP    PEABODY  230.00  LOAD==40.59(1.82)
0
```

```
 #
 #
 # (143) BUS FAULT  31950  "CORTINA"
 #
1  31950  31224  "1"    0     # LINE from  CORTINA  115.00  to  INDIN VL 115.00
1  31950  31261  "1"    0     # LINE from  CORTINA  115.00  to  CACHE J1 115.00
1  31950  31951  "1"    0     # LINE from  CORTINA  115.00  to  CORT_D   115.00
2  31950  30450  "2"    0     # TRAN from  CORTINA  115.00  to  CORTINA  230.00
0
 #
 #
 # (144) BUS FAULT  31951  "CORT_D"
 #
1  31951  31950  "1"    0     # LINE from  CORT_D   115.00  to  CORTINA  115.00
2  31951  30451  "1"    0     # TRAN from  CORT_D   115.00  to  CRTNA  M 230.00
4  31951     0  "1 "    0     # LOAD-DROP    CORT_D   115.00  LOAD==7.49(0.34)
0
 #
 #
 # (145) BUS FAULT  31970  "WOODLD"
 #
1  31970  31960  "1"    0     # LINE from  WOODLD   115.00  to  MOBILCHE 115.00
1  31970  31962  "1"    0     # LINE from  WOODLD   115.00  to  WDLND_BM 115.00
1  31970  31968  "2"    0     # LINE from  WOODLD   115.00  to  WODLNDJ2 115.00
4  31970     0  "1 "    0     # LOAD-DROP    WOODLD   115.00  LOAD==46.95(2.10)
4  31970     0  "2 "    0     # LOAD-DROP    WOODLD   115.00  LOAD==46.95(2.10)
4  31970     0  "3 "    0     # LOAD-DROP    WOODLD   115.00  LOAD==26.24(1.17)
0
 #
 #
 # (146) BUS FAULT  31984  "BRIGHTN"
 #
1  31984  31978  "1"    0     # LINE from  BRIGHTN  115.00  to  DPWT_TP2 115.00
1  31984  31993  "1"    0     # LINE from  BRIGHTN  115.00  to  BRKRJCT  115.00
1  31984  31994  "1"    0     # LINE from  BRIGHTN  115.00  to  GRAND IS 115.00
1  31984  31994  "2"    0     # LINE from  BRIGHTN  115.00  to  GRAND IS 115.00
2  31984  30348  "10"    0     # TRAN from  BRIGHTN  115.00  to  BRIGHTON 230.00
2  31984  30349  "9"    0     # TRAN from  BRIGHTN  115.00  to  BRGHTN M 230.00
0
 #
 #
 # (147) BUS FAULT  31986  "W.SCRMNO"
 #
1  31986  31978  "1"    0     # LINE from  W.SCRMNO 115.00  to  DPWT_TP2 115.00
1  31986  31980  "1"    0     # LINE from  W.SCRMNO 115.00  to  DPWTR_TP 115.00
1  31986  32021  "1"    0     # LINE from  W.SCRMNO 115.00  to  P0434TAP 115.00
4  31986     0  "1 "    0     # LOAD-DROP    W.SCRMNO 115.00  LOAD==32.03(1.43)
4  31986     0  "2 "    0     # LOAD-DROP    W.SCRMNO 115.00  LOAD==20.20(0.91)
4  31986     0  "3 "    0     # LOAD-DROP    W.SCRMNO 115.00  LOAD==30.31(1.35)
```

```
0
 #
 #
 # (148) BUS FAULT  31989  "BRKR SLG"
 #
1  31989  31991  "1"    0     # LINE from  BRKR SLG 115.00  to  BRKR TP  115.00
4  31989     0  "1 "    0     # LOAD-DROP    BRKR SLG 115.00  LOAD==1.75(0.00)
0
 #
 #
 # (149) BUS FAULT  31990  "DAVIS"
 #
1  31990  31980  "1"    0     # LINE from  DAVIS    115.00  to  DPWTR_TP 115.00
1  31990  31992  "1"    0     # LINE from  DAVIS    115.00  to  HUNT     115.00
1  31990  31993  "1"    0     # LINE from  DAVIS    115.00  to  BRKRJCT  115.00
2  31990  32104  "4"    0     # TRAN from  DAVIS    115.00  to  DAVIS     60.00
4  31990     0  "1 "    0     # LOAD-DROP    DAVIS    115.00  LOAD==29.38(1.32)
4  31990     0  "2 "    0     # LOAD-DROP    DAVIS    115.00  LOAD==39.74(1.78)
4  31990     0  "3 "    0     # LOAD-DROP    DAVIS    115.00  LOAD==43.38(1.94)
0
 #
 #
 # (150) BUS FAULT  31994  "GRAND IS"
 #
1  31994  31984  "1"    0     # LINE from  GRAND IS 115.00  to  BRIGHTN  115.00
1  31994  31984  "2"    0     # LINE from  GRAND IS 115.00  to  BRIGHTN  115.00
1  31994  33046  "1"    0     # LINE from  GRAND IS 115.00  to  FIBRJCT2 115.00
1  31994  33048  "1"    0     # LINE from  GRAND IS 115.00  to  RVECTP   115.00
2  31994  32162  "1"    0     # TRAN from  GRAND IS 115.00  to  RIV.DLTA   9.11
4  31994     0  "1 "    0     # LOAD-DROP    GRAND IS 115.00  LOAD==15.68(0.71)
4  31994     0  "2 "    0     # LOAD-DROP    GRAND IS 115.00  LOAD==14.39(0.65)
0
 #
 #
 # (151) BUS FAULT  31998  "VACA-DIX" bus section 1
 #
1  31998  31953  "1"    0     # LINE from  VACA-DIX 115.00  to  AMEGTAP  115.00
1  31998  31952  "1"    0     # LINE from  VACA-DIX 115.00  to  PUTH CRK 115.00
1  31998  32006  "1"    0     # LINE from  VACA-DIX 115.00  to  VCVLLE1J 115.00
1  31998  32011  "1"    0     # LINE from  VACA-DIX 115.00  to  WEC      115.00
2  31998  30460  "3"    0     # TRAN from  VACA-DIX 115.00  to  VACA-DIX 230.00
2  31998  32088  "5"    0     # TRAN from  VACA-DIX 115.00  to  VACA-DXN  60.00
4  31998     0  "8 "    0     # LOAD-DROP    VACA-DIX 115.00  LOAD==20.09(0.90)
0
 #
 #
 # (152) BUS FAULT  31998  "VACA-DIX" bus section 2
 #
1  31998  32004  "1"    0     # LINE from  VACA-DIX 115.00  to  VCVLLE2J 115.00
```

```
 1  31998  31997  "1"    0     # LINE from  VACA-DIX 115.00  to  SCHMLBCH 115.00
 1  31998  31999  "1"    0     # LINE from  VACA-DIX 115.00  to  VACA-CB  115.00
 2  31998  30460  "4"    0     # TRAN from  VACA-DIX 115.00  to  VACA-DIX 230.00
 2  31998  32150  "1"    0     # TRAN from  VACA-DIX 115.00  to  DG_VADIX  13.80
 4  31998     0  "6 "    0     # LOAD-DROP    VACA-DIX 115.00  LOAD==15.17(0.68)
 4  31998     0  "7 "    0     # LOAD-DROP    VACA-DIX 115.00  LOAD==21.13(0.95)
 0
  #
  #
  # (153) BUS FAULT  32000  "VACAVLL1"
  #
 1  32000  32002  "1"    0     # LINE from  VACAVLL1 115.00  to  VACAVLL2 115.00
 1  32000  32006  "1"    0     # LINE from  VACAVLL1 115.00  to  VCVLLE1J 115.00
 4  32000     0  "1 "    0     # LOAD-DROP    VACAVLL1 115.00  LOAD==27.93(1.25)
 0
  #
  #
  # (154) BUS FAULT  32002  "VACAVLL2"
  #
 1  32002  32000  "1"    0     # LINE from  VACAVLL2 115.00  to  VACAVLL1 115.00
 1  32002  32004  "1"    0     # LINE from  VACAVLL2 115.00  to  VCVLLE2J 115.00
 4  32002     0  "2 "    0     # LOAD-DROP    VACAVLL2 115.00  LOAD==45.19(2.02)
 4  32002     0  "3 "    0     # LOAD-DROP    VACAVLL2 115.00  LOAD==45.19(2.02)
 0
  #
  #
  # (155) BUS FAULT  32008  "SUISUN"
  #
 1  32008  31997  "1"    0     # LINE from  SUISUN   115.00  to  SCHMLBCH 115.00
 1  32008  32011  "1"    0     # LINE from  SUISUN   115.00  to  WEC      115.00
 2  32008  32164  "1"    0     # TRAN from  SUISUN   115.00  to  CTY FAIR   9.11
 4  32008     0  "1 "    0     # LOAD-DROP    SUISUN   115.00  LOAD==30.05(1.34)
 4  32008     0  "2 "    0     # LOAD-DROP    SUISUN   115.00  LOAD==31.49(1.41)
 4  32008     0  "3 "    0     # LOAD-DROP    SUISUN   115.00  LOAD==28.51(1.28)
 0
  #
  #
  # (156) BUS FAULT  32010  "JAMESON"
  #
 1  32010  32009  "1"    0     # LINE from  JAMESON  115.00  to  JAMESN-A 115.00
 1  32010  32020  "1"    0     # LINE from  JAMESON  115.00  to  JMSN JCT 115.00
 4  32010     0  "1 "    0     # LOAD-DROP    JAMESON  115.00  LOAD==34.05(1.53)
 0
  #
  #
  # (157) BUS FAULT  32056  "CORTINA"
  #
 1  32056  32060  "1"    0     # LINE from  CORTINA   60.00  to  ARBUCKLE  60.00
 1  32056  32065  "4"    0     # LINE from  CORTINA   60.00  to  WILL JCT  60.00
```

```
1  32056  32057  "2"    0     # LINE from  CORTINA   60.00  to  HUSTD     60.00
1  32056  32155  "3"    0     # LINE from  CORTINA   60.00  to  WADHMJCT  60.00
2  32056  30451  "1"    0     # TRAN from  CORTINA   60.00  to  CRTNA  M 230.00
0
 #
 #
 # (158) BUS FAULT  32070  "CLSA JCT"
 #
1  32070  32068  "1"    0     # LINE from  CLSA JCT  60.00  to  COLUSA    60.00
1  32070  32071  "1"    0     # LINE from  CLSA JCT  60.00  to  MERIDJCT  60.00
1  32070  32073  "3"    0     # LINE from  CLSA JCT  60.00  to  WESCOT1   60.00
4  32070     0  "1 "    0     # LOAD-DROP    CLSA JCT  60.00  LOAD==3.74(0.16)
0
 #
 #
 # (159) BUS FAULT  32088  "VACA-DXN"
 #
1  32088  32090  "1"    0     # LINE from  VACA-DXN  60.00  to  WINTERS   60.00
1  32088  32094  "2"    0     # LINE from  VACA-DXN  60.00  to  VACA-JT2  60.00
1  32088  32096  "1"    0     # LINE from  VACA-DXN  60.00  to  VACA-JT1  60.00
2  32088  31998  "5"    0     # TRAN from  VACA-DXN  60.00  to  VACA-DIX 115.00
0
 #
 #
 # (160) BUS FAULT  32100  "DIXON"
 #
1  32100  32101  "2"    0     # LINE from  DIXON     60.00  to  DIXON-J2  60.00
1  32100  32105  "1"    0     # LINE from  DIXON     60.00  to  DIXON-J1  60.00
4  32100     0  "1 "    0     # LOAD-DROP    DIXON     60.00  LOAD==17.47(0.78)
4  32100     0  "2 "    0     # LOAD-DROP    DIXON     60.00  LOAD==14.44(0.65)
0
 #
 #
 # (161) BUS FAULT  32104  "DAVIS"
 #
1  32104  32103  "2"    0     # LINE from  DAVIS     60.00  to  UCDAVSJ2  60.00
1  32104  32116  "1"    0     # LINE from  DAVIS     60.00  to  UCDAVSJ1  60.00
2  32104  31990  "4"    0     # TRAN from  DAVIS     60.00  to  DAVIS    115.00
0
 #
 #
 # (162)   DOUBLE CIRCUIT TOWER LINE OUTAGE
 # Vaca Dixon - Lambie 230 kV and Vaca Dixon - Peabody 230 kV Lines
1  30460 30478  "1 "    0     # line from  VACA-DIX 230.00  BRKR to BRKR  LAMBIE   230.00
 #
1  30460 30472  "1 "    0     # line from  VACA-DIX 230.00  BRKR to BRKR  PEABODY  230.00
0
 #
 #
```

```
 # (163)   DOUBLE CIRCUIT TOWER LINE OUTAGE
 # Vaca Dixon - Lambie 230 kV and Peabody - Birds Landing Sw Sta 230 kV Lines
1  30460 30478  "1 "    0     # line from  VACA-DIX 230.00  BRKR to BRKR  LAMBIE   230.00
 #
1  30472 30479  "1 "    0     # line from  PEABODY  230.00  BRKR to BRKR  BDLSWSTA 230.00
0
 #
 #
 # (164)   DOUBLE CIRCUIT TOWER LINE OUTAGE
 # Lambie - Birds Landing Sw Sta 230 kV and Peabody - Birds Landing Sw Sta 230 kV Lines
1  30478 30479  "1 "    0     # line from  LAMBIE   230.00  BRKR to BRKR  BDLSWSTA 230.00
 #
1  30472 30479  "1 "    0     # line from  PEABODY  230.00  BRKR to BRKR  BDLSWSTA 230.00
0
 #
 #
 # (165)   DOUBLE CIRCUIT TOWER LINE OUTAGE
 # Birds Landing Sw Sta - Contra Costa Sub 230 kV and Birds Landing Sw Sta - Contra Costa 230 kV Lines
1  30479 30523  "1 "    0     # line from  BDLSWSTA 230.00  BRKR to BRKR  CC SUB   230.00
 #
1  30525 30479  "1 "    0     # line from  C.COSTA  230.00  BRKR to BRKR  BDLSWSTA 230.00
0
 #
 #
 # (166)   DOUBLE CIRCUIT TOWER LINE OUTAGE
 # Vaca Dixon - Parkway 230 kV and Vaca Dixon - Bahia 230 kV Lines
1  30460 30467  "1 "    0     # line from  VACA-DIX 230.00  BRKR to BRKR  PARKWAY  230.00
 #
1  30460 30465  "1 "    0     # line from  VACA-DIX 230.00  BRKR to BRKR  BAHIA    230.00
0
 #
 #
 # (167)   DOUBLE CIRCUIT TOWER LINE OUTAGE
 # Tulucay - Vaca Dixon 230 kV and Lakeville - Vaca Dixon 230 kV Lines
1  30440 30460  "1 "    0     # line from  TULUCAY  230.00  BRKR to BRKR  VACA-DIX 230.00
 #
1  30435 30460  "1 "    0     # line from  LAKEVILE 230.00  BRKR to BRKR  VACA-DIX 230.00
0
 #
 #
 # (168)   DOUBLE CIRCUIT TOWER LINE OUTAGE
 # Brighton - Bellota 230 kV and  Rio Oso - Lockford 230 kV Lines
1  30348 30500  "1 "    0     # line from  BRIGHTON 230.00  BRKR to BRKR  BELLOTA  230.00
 #
1  30330 30482  "1 "    0     # line from  RIO OSO  230.00  BRKR to BRKR  LOCKFORD 230.00
0
 #
 #
 # (169)   DOUBLE CIRCUIT TOWER LINE OUTAGE
```

```
 # Rio Oso - Brighton 230 kV and  Rio Oso - Lockford 230 kV Lines
1  30330 30348  "1 "    0     # line from  RIO OSO  230.00  BRKR to BRKR  BRIGHTON 230.00
 #
1  30330 30482  "1 "    0     # line from  RIO OSO  230.00  BRKR to BRKR  LOCKFORD 230.00
0
 #
 #
 # (170)   DOUBLE CIRCUIT TOWER LINE OUTAGE
 # Fulton Jct - Vaca Dixon 115 kV and Madison - Vaca Dixon 115 kV Lines
1  31953 31256  "1 "    0     # line from  AMEGTAP  115.00   (3) to (1)   FLTN JCT 115.00
1  31953 31954  "1 "    0     # line from  AMEGTAP  115.00   (3) to (1)   AMERIGAS 115.00
1  31953 31998  "1 "    0     # line from  AMEGTAP  115.00   (3) to BRKR  VACA-DIX 115.00
4  31954     0  "1 "    0     # LOAD-DROP    AMERIGAS 115.00  LOAD==6.60(1.34)
 #
1  31253 31974  "1 "    0     # line from  FLTN JT2 115.00   (2) to (1)   MADISON  115.00
1  31253 31952  "1 "    0     # line from  FLTN JT2 115.00   (2) to (2)   PUTH CRK 115.00
1  31952 31998  "1 "    0     # line from  PUTH CRK 115.00   (2) to BRKR  VACA-DIX 115.00
4  31974     0  "1 "    0     # LOAD-DROP    MADISON  115.00  LOAD==9.89(0.45)
4  31974     0  "2 "    0     # LOAD-DROP    MADISON  115.00  LOAD==10.21(0.46)
4  31952     0  "1 "    0     # LOAD-DROP    PUTH CRK 115.00  LOAD==14.74(0.66)
0
 #
 #
 # (171)   DOUBLE CIRCUIT TOWER LINE OUTAGE
 # Vaca Dixon - Vacaville - Jameson - North Tower 115 kV and Vaca Dixon - Vacaville - Cordelia 115 kV Lines
1  31995 32013  "1 "    0     # line from  HALE     115.00   (2) to (1)   HALE2    115.00
1  31995 31996  "1 "    0     # line from  HALE     115.00   (2) to (3)   HALE J1  115.00
1  31996 32006  "1 "    0     # line from  HALE J1  115.00   (3) to (3)   VCVLLE1J 115.00
1  31996 32020  "1 "    0     # line from  HALE J1  115.00   (3) to (3)   JMSN JCT 115.00
1  32006 31998  "1 "    0     # line from  VCVLLE1J 115.00   (3) to BRKR  VACA-DIX 115.00
1  32006 32000  "1 "    0     # line from  VCVLLE1J 115.00   (3) to BRKR  VACAVLL1 115.00
1  32020 32010  "1 "    0     # line from  JMSN JCT 115.00   (3) to BRKR  JAMESON  115.00
1  32020 32618  "1 "    0     # line from  JMSN JCT 115.00   (3) to (1)   NTWRJCT1 115.00
4  31995     0  "1 "    0     # LOAD-DROP    HALE     115.00  LOAD==9.23(5.48)
4  32000     0  "1 "    0     # LOAD-DROP    VACAVLL1 115.00  LOAD==27.93(1.25)
4  32010     0  "1 "    0     # LOAD-DROP    JAMESON  115.00  LOAD==34.05(1.53)
1  32002 32000  "1"     1     #Line transfer VACAVLL1 115kV TO VACAVLL2 115kV
4  32000     0  "**"    1     #Restore VACAVLL1 load
1  31995 32013  "1 "    1     #Line transfer HALE to HALE2
1  32012 32013  "1 "    1     #Line transfer HALEJ2 to HALE2
4  31995     0  "**"    1     #Restore load at HALE
1  32010 32009  "1 "    1     # LINE-TRANSFER JMSN JCT 115.00 to JAMESN-A 115.00
4  32010     0  "**"    1     # RESTORE JAMESON load
 #
1  31958 32012  "1 "    0     # line from  CORDELIA 115.00   (1) to (2)   HALE J2  115.00
1  32012 32004  "1 "    0     # line from  HALE J2  115.00   (2) to (3)   VCVLLE2J 115.00
1  32004 31998  "1 "    0     # line from  VCVLLE2J 115.00   (3) to BRKR  VACA-DIX 115.00
1  32004 32002  "1 "    0     # line from  VCVLLE2J 115.00   (3) to BRKR  VACAVLL2 115.00
4  31958     0  "2 "    0     # LOAD-DROP    CORDELIA 115.00  LOAD==16.52(0.74)
```

```
 4  32002     0  "2 "    0     # LOAD-DROP    VACAVLL2 115.00  LOAD==45.19(2.02)
 4  32002     0  "3 "    0     # LOAD-DROP    VACAVLL2 115.00  LOAD==45.19(2.02)
 1  32000 32002  "1"     1     #Transfer VACAVLL2 load to alternate
 4  32002     0  "**"    1     #Restore VACAVLL2 load
 0
  #
  #
  # (172)   DOUBLE CIRCUIT TOWER LINE OUTAGE
  # Rio Oso - Woodland #1 115 kV and Rio Oso - Woodland #2 115 kV Lines
 1  31960 31966  "1 "    0     # line from  MOBILCHE 115.00   (2) to (3)   WODLNDJ1 115.00
 1  31960 31970  "1 "    0     # line from  MOBILCHE 115.00   (2) to BRKR  WOODLD   115.00
 1  31966 31965  "1 "    0     # line from  WODLNDJ1 115.00   (3) to (3)   KNIGHT1  115.00
 1  31966 31971  "1 "    0     # line from  WODLNDJ1 115.00   (3) to (1)   ZAMORA1  115.00
 1  31965 31963  "1 "    0     # line from  KNIGHT1  115.00   (3) to (1)   KNIGHTLD 115.00
 1  31965 32214  "1 "    0     # line from  KNIGHT1  115.00   (3) to BRKR  RIO OSO  115.00
 4  31960     0  "1 "    0     # LOAD-DROP    MOBILCHE 115.00  LOAD==2.42(0.00)
 4  31963     0  "1 "    0     # LOAD-DROP    KNIGHTLD 115.00  LOAD==3.23(0.14)
  #
 1  31964 31968  "2 "    0     # line from  KNIGHT2  115.00   (2) to (3)   WODLNDJ2 115.00
 1  31964 32214  "2 "    0     # line from  KNIGHT2  115.00   (2) to BRKR  RIO OSO  115.00
 1  31968 31970  "2 "    0     # line from  WODLNDJ2 115.00   (3) to BRKR  WOODLD   115.00
 1  31968 31973  "2 "    0     # line from  WODLNDJ2 115.00   (3) to (2)   ZAMORA2  115.00
 1  31973 31972  "2 "    0     # line from  ZAMORA2  115.00   (2) to (1)   ZAMORA   115.00
 4  31972     0  "1 "    0     # LOAD-DROP    ZAMORA   115.00  LOAD==4.06(0.18)
 0
  #
  #
  # (173)   DOUBLE CIRCUIT TOWER LINE OUTAGE
  # Rio Oso - West Sacramento 115 kV and West Sacramento - Brighton 115 kV Lines
 1  32021 31986  "1 "    0     # line from  P0434TAP 115.00   (3) to BRKR  W.SCRMNO 115.00
 1  32021 32022  "1 "    0     # line from  P0434TAP 115.00   (3) to (2)   P0434    115.00
 1  32021 32214  "1 "    0     # line from  P0434TAP 115.00   (3) to BRKR  RIO OSO  115.00
 2  32022 32186  "1 "    0     # TRAN from  P0434    115.00   (2) to (1)   P0434     13.80
 4  32186     0  "SG"    0     # LOAD-DROP    P0434     13.80  LOAD==1.00(0.55)
 3  32186     0  "1 "    0     # GEN-DROP    P0434     13.80  GEN==2.00(0.08)
 3  32186     0  "10"    0     # GEN-DROP    P0434     13.80  GEN==2.00(0.08)
 3  32186     0  "11"    0     # GEN-DROP    P0434     13.80  GEN==2.00(0.08)
 3  32186     0  "12"    0     # GEN-DROP    P0434     13.80  GEN==2.00(0.08)
 3  32186     0  "13"    0     # GEN-DROP    P0434     13.80  GEN==2.00(0.08)
 3  32186     0  "14"    0     # GEN-DROP    P0434     13.80  GEN==2.00(0.08)
 3  32186     0  "15"    0     # GEN-DROP    P0434     13.80  GEN==2.00(0.08)
 3  32186     0  "16"    0     # GEN-DROP    P0434     13.80  GEN==2.00(0.08)
 3  32186     0  "17"    0     # GEN-DROP    P0434     13.80  GEN==2.00(0.08)
 3  32186     0  "18"    0     # GEN-DROP    P0434     13.80  GEN==2.00(0.08)
 3  32186     0  "19"    0     # GEN-DROP    P0434     13.80  GEN==2.00(0.08)
 3  32186     0  "2 "    0     # GEN-DROP    P0434     13.80  GEN==2.00(0.08)
 3  32186     0  "20"    0     # GEN-DROP    P0434     13.80  GEN==2.00(0.08)
 3  32186     0  "21"    0     # GEN-DROP    P0434     13.80  GEN==2.00(0.08)
 3  32186     0  "22"    0     # GEN-DROP    P0434     13.80  GEN==2.00(0.08)
```

```
 3  32186     0  "23"    0     # GEN-DROP    P0434     13.80  GEN==2.00(0.08)
 3  32186     0  "24"    0     # GEN-DROP    P0434     13.80  GEN==2.00(0.08)
 3  32186     0  "25"    0     # GEN-DROP    P0434     13.80  GEN==2.00(0.08)
 3  32186     0  "3 "    0     # GEN-DROP    P0434     13.80  GEN==2.00(0.08)
 3  32186     0  "4 "    0     # GEN-DROP    P0434     13.80  GEN==2.00(0.08)
 3  32186     0  "5 "    0     # GEN-DROP    P0434     13.80  GEN==2.00(0.08)
 3  32186     0  "6 "    0     # GEN-DROP    P0434     13.80  GEN==2.00(0.08)
 3  32186     0  "7 "    0     # GEN-DROP    P0434     13.80  GEN==2.00(0.08)
 3  32186     0  "8 "    0     # GEN-DROP    P0434     13.80  GEN==2.00(0.08)
 3  32186     0  "9 "    0     # GEN-DROP    P0434     13.80  GEN==2.00(0.08)
  #
 1  31978 31984  "1 "    0     # line from  DPWT_TP2 115.00   (3) to BRKR  BRIGHTN  115.00
 1  31978 31986  "1 "    0     # line from  DPWT_TP2 115.00   (3) to BRKR  W.SCRMNO 115.00
 1  31978 31988  "1 "    0     # line from  DPWT_TP2 115.00   (3) to (1)   DEEPWATR 115.00
 4  31988     0  "3 "    0     # LOAD-DROP    DEEPWATR 115.00  LOAD==19.45(0.87)
 1  31976 31988  "1"     1     #Transfer load to alternate Deepwater tap
 4  31988     0  "**"    1     #Restore load at Deepwater
0
  #
  # SMUD Zone 323
  # 2010 category c contingencies
  #
  #
#   (174)  DOUBLE CIRCUIT TOWER LINE OUTAGE
#   Elverta-Hurley #1 and #2 230 kV Lines
 1  37546 37010  "2 "    0   # line from  ELVERTAW 230.0   BRKR to BRKR  HURLEY S 230.0
 1  37546 37010  "1 "    0   # line from  ELVERTAW 230.0   BRKR to BRKR  HURLEY S 230.0
 0
#   (175)   DOUBLE CIRCUIT TOWER LINE OUTAGE
#   Hedge-Elk Grove and Hedge-Rancho Seco 230 kV Lines
 1  37004 37009  "1 "    0   # line from  ELKGROVE 230.0   BRKR to BRKR  HEDGE    230.0
 1  37009 37016  "1 "    0   # line from  HEDGE    230.0   BRKR to BRKR  RNCHSECO 230.0
 0
#   (176)   DOUBLE CIRCUIT TOWER LINE OUTAGE
#   Elk Grove-Rancho Seco and Hedge-Rancho Seco 230 kV Lines
 1  37004 37016  "1 "    0   # line from  ELKGROVE 230.0   BRKR to BRKR  RNCHSECO 230.0
 1  37009 37016  "1 "    0   # line from  HEDGE    230.0   BRKR to BRKR  RNCHSECO 230.0
 0
#   (177)   DOUBLE CIRCUIT TOWER LINE OUTAGE
#   Elverta-Foothill and Elverta-Orangevale 230 kV Lines
 1  37005 37008  "1 "    0   # line from  ELVERTAS 230.0   BRKR to BRKR  FOOTHILL 230.0
 1  37005 37013  "1 "    0   # line from  ELVERTAS 230.0   BRKR to BRKR  ORANGEVL 230.0
 0
#   (178)   DOUBLE CIRCUIT TOWER LINE OUTAGE
#   Elverta-Orangevale and Foothill-Orangevale 230 kV Lines
 1  37005 37013  "1 "    0   # line from  ELVERTAS 230.0   BRKR to BRKR  ORANGEVL 230.0
 1  37008 37013  "1 "    0   # line from  FOOTHILL 230.0   BRKR to BRKR  ORANGEVL 230.0
 0
#   (179)   DOUBLE CIRCUIT TOWER LINE OUTAGE
```

```
#   Pocket-Rancho Seco #1 and #2 230 kV Lines
 1  37014 37016  "1 "    0   # line from  POCKET   230.0   BRKR to BRKR  RNCHSECO 230.0
 1  37014 37016  "2 "    0   # line from  POCKET   230.0   BRKR to BRKR  RNCHSECO 230.0
 0
#   (180)   DOUBLE CIRCUIT TOWER LINE OUTAGE
#   Pocket-Lake and Hedge-Whiterock 230 kV Lines
 1  37014 37012  "1 "    0   # line from  POCKET   230.0   BRKR to BRKR  LAKE     230.0
 1  37018 37009  "1 "    0   # line from  WHITEROK 230.0   BRKR to BRKR  HEDGE    230.0
 0
#   (181)  DOUBLE CIRCUIT TOWER LINE OUTAGE
#   Rancho Seco-Bellota #1 and #2 230 kV Lines
 1  37016 30500  "2 "    0   # line from  RNCHSECO 230.0   BRKR to BRKR  BELLOTA  230.0
 1  37016 30500  "1 "    0   # line from  RNCHSECO 230.0   BRKR to BRKR  BELLOTA  230.0
 0
#   (182)  DOUBLE CIRCUIT TOWER LINE OUTAGE
#   Elverta-Foothill and Foothill-Orangevale 230 kV Lines
 1  37005 37008  "1 "    0   # line from  ELVERTAS 230.0   BRKR to BRKR  FOOTHILL 230.0
 1  37008 37013  "1 "    0   # line from  FOOTHILL 230.0   BRKR to BRKR  ORANGEVL 230.0
 2  37105 37008  "1 "    0   # TRAN from  FOOTHIL1  69.00  BRKR to BRKR  FOOTHILL 230.00
 1  37113 37105  "1 "    0   # line from  MCCLELLN  69.00  BRKR to BRKR  FOOTHIL1  69.00
 2  37113 37309  "1 "    0   # TRAN from  MCCLELLN  69.00  BRKR to BRKR  MCCLELLN  13.80
 3  37309     0  "1"     0   # Drop Generator at MCCLELLN 13.8 #1
 4  37105     0  "1"     0   # Drop Load at FOOTHIL1 69 #1
 0
#   (183)  DOUBLE CIRCUIT TOWER LINE OUTAGE
#   Lake-Camino and Hedge-Whiterock 230 kV Lines
 1  37001 37012  "1 "    0   # line from  CAMINO S 230.0   BRKR to BRKR  LAKE     230.0
 1  37018 37009  "1 "    0   # line from  WHITEROK 230.0   BRKR to BRKR  HEDGE    230.0
 0
#   (184)  DOUBLE CIRCUIT TOWER LINE OUTAGE
#   Pocket-Lake and Pocket-Campbell 230 kV Lines
 1  37014 37012  "1 "    0   # line from  POCKET   230.0   BRKR to BRKR  LAKE     230.0
 1  37002 37014  "1 "    0   # line from  CAMPBELL 230.0   BRKR to BRKR  POCKET   230.0
 0
#   (185)  DOUBLE CIRCUIT TOWER LINE OUTAGE
#   Pocket-Lake and Hedge-Campbell 230 kV Lines
 1  37014 37012  "1 "    0   # line from  POCKET   230.0   BRKR to BRKR  LAKE     230.0
 1  37002 37009  "1 "    0   # line from  CAMPBELL 230.0   BRKR to BRKR  HEDGE    230.0
 0
#
  #
  # WAPA Zones 325
  # 2010 category c contingencies
  #
#   (186)  DOUBLE CIRCUIT TOWER LINE OUTAGE
#   Keswick-O'Bannion and Olinda-O'Bannion 230 kV Lines
 1  37558 37520  "1 "    0   # line from  KESWICK  230.0   BRKR to BRKR  OBANION  230.0
 1  37565 37520  "1 "    0   # line from  OLINDAW  230.0   BRKR to BRKR  OBANION  230.0
 0
```

```
#   (187)  DOUBLE CIRCUIT TOWER LINE OUTAGE
#   O'Bannion-Elverta #1 and #2 230 kV Lines
 1  37520 37546  "2 "    0   # line from  OBANION  230.0   BRKR to BRKR  ELVERTAW 230.0
 1  37520 37546  "1 "    0   # line from  OBANION  230.0   BRKR to BRKR  ELVERTAW 230.0
 3  37521     0  "1 "    0     # GEN-DROP    SUTTER1   18.00
 3  37522     0  "2 "    0     # GEN-DROP    SUTTER2   18.00
 3  37523     0  "3 "    0     # GEN-DROP    SUTTER3   18.00
 0
#   (188)  DOUBLE CIRCUIT TOWER LINE OUTAGE
#   Fiddyment-Elverta and Roseville-Elverta 230 kV Lines
 1  37568 37546  "1 "    0   # line from  FIDDYMNT 230.0   BRKR to BRKR  ELVERTAW 230.0
 1  37567 37546  "1 "    0   # line from  ROSEVILL 230.0   BRKR to BRKR  ELVERTAW 230.0
 2  37568 37574  "1 "    0   # tran from  FIDDYMNT 230.00  BRKR to BRKR  FIDDYMNT  60.00
 2  37568 37574  "2 "    0   # tran from  FIDDYMNT 230.00  BRKR to BRKR  FIDDYMNT  60.00
 4  37574     0  "1"     0   # Drop Load at FIDDYMNT 60 #1
 4  37574     0  "2"     0   # Drop Load at FIDDYMNT 60 #2
 0
#   (189)  DOUBLE CIRCUIT TOWER LINE OUTAGE
#   Tracy-Hurley #1 and #2 230 kV Lines
 1  37585 37010  "1 "    0   # line from  TRCY PMP 230.0   BRKR to BRKR  HURLEY S 230.0
 1  37585 37010  "2 "    0   # line from  TRCY PMP 230.0   BRKR to BRKR  HURLEY S 230.0
 0
#   (190)  DOUBLE CIRCUIT TOWER LINE OUTAGE
#   Olinda-Cottonwood #1 and #2 230 kV Lines
 1  37565 37545  "2 "    0   # line from  OLINDAW  230.0   BRKR to BRKR  COTWDWAP 230.0
 1  37565 37545  "1 "    0   # line from  OLINDAW  230.0   BRKR to BRKR  COTWDWAP 230.0
 0
#   (191)  DOUBLE CIRCUIT TOWER LINE OUTAGE
#   Cottonwood-Shasta #1 and #2 230 kV Lines
 1  37545 37580  "1 "    0   # line from  COTWDWAP 230.0   BRKR to BRKR  SHASTA   230.0
 1  37545 37580  "2 "    0   # line from  COTWDWAP 230.0   BRKR to BRKR  SHASTA   230.0
 0
#   (192)  DOUBLE CIRCUIT TOWER LINE OUTAGE
#   Airport-Cottonwood and Airport-Keswick 230 kV Lines
 1  37544 37545  "1 "    0   # line from  AIRPORTW 230.0   BRKR to BRKR  COTWDWAP 230.0
 1  37558 37544  "1 "    0   # line from  KESWICK  230.0   BRKR to BRKR  AIRPORTW 230.0
 2  37544 37901  "1 "    0   # TRAN from  AIRPORTW 230.00  BRKR to BRKR  AIRPORTW 115.00
 2  37544 37901  "2 "    0   # TRAN from  AIRPORTW 230.00  BRKR to BRKR  AIRPORTW 115.00
 0
#   (193)  DOUBLE CIRCUIT TOWER LINE OUTAGE
#   Keswick-JF Carr #1 and #2 230 kV Lines
 1  37558 37555  "1 "    0   # line from  KESWICK  230.0   BRKR to BRKR  J.F.CARR 230.0
 1  37558 37555  "2 "    0   # line from  KESWICK  230.0   BRKR to BRKR  J.F.CARR 230.0
 1  37640 37555  "2 "    0   # line from  TRINITY  230.00  BRKR to BRKR  J.F.CARR 230.00
 2  37555 37553  "1 "    0   # TRAN from  J.F.CARR 230.00  BRKR to (1)   J.F.CARR  13.80
 3  37553     0  "1 "    0   # GEN-DROP    J.F.CARR  13.80
 3  37553     0  "2 "    0   # GEN-DROP    J.F.CARR  13.80
 2  37640 37590  "1 "    0   # TRAN from  TRINITY  230.00  BRKR to (1)   TRINTY12  13.80
 3  37590     0  "1 "    0   # GEN-DROP    TRINTY12  13.80
```

```
 3  37590     0  "2 "    0   # GEN-DROP    TRINTY12  13.80
0
-1
# EOF
DONE
```

Appendix C

Steady State Power Flow Result

Comparison Tables

COMPARISON OF CATEGORY B POWERFLOW STUDY RESULTS - 2010 SUMMER PEAK CASES

					Pre-Project		Post-Project		Loading
Outage #	Involved Facility(ies)	Impacted Facility(ies)	Rating		Amps/ MVA	% Loading	Amps/ MVA	% Loading	Change %
64	Open Xfmr LAKEVLLE 60/LAKEVILE 230 #3	COTATI -SNMA TAP 60.00kV Ckt#1 Sec# 1	346	Amps	1,929	557	1,924	555	(2)
	Close Line ST.HELNA 60-DUNBAR 60 #1	LAGUNATP-MLNO JCT 60.00kV Ckt#1 Sec# 1	346	Amps	1,863	538	1,857	536	(2)
	Open Line LAKEVLLE 60-DUNBAR 60 #1	MLNO JCT-FULTON 60.00kV Ckt#1 Sec# 1	739	Amps	2,145	290	2,140	290	0
	Close Line PETC_JCT 60-COTATI 60 #1	PETC_JCT-COTATI 60.00kV Ckt#1 Sec# 1	510	Amps	1,558	306	1,552	304	(2)
	Close Line PETLMA C 60-PETC_JCT 60 #1	PETC_JCT-PETLMA C 60.00kV Ckt#1 Sec# 1	510	Amps	1,460	286	1,455	285	(1)
	Open Line MCDWLLSW 60-PETLMA C 60 #1	SNMA TAP-COTATI 60.00kV Ckt#1 Sec# 1	346	Amps	1,929	557	1,924	555	(2)
	Open Line PETLMA A 60-LKVLE JT 60 #1	SNMA TAP-LAGUNATP 60.00kV Ckt#1 Sec# 1	346	Amps	1,800	520	1,795	518	(2)
	Open Line MCDWLLSW 60-LAKEVLLE 60 #1								
	Open Line LAKEVLLE 60-LKVLE JT 60 #1								
69	Open Xfmr EGLE RCK 60/EGLE RCK 115 #1	CLER LKE-HPLND JT 60.00kV Ckt#1 Sec# 1	346	Amps	359	104	356	103	(1)
	Drop Load at MIDDLTWN 60 #**: 5.5 MW 1.1 MVAR Dro								
165	Open Line COTWD_F 230-GLENN 230 #1	OBANION -ELVERTAW 230.00kV Ckt#1 Sec# 1	1,054	Amps	1,067	101			
		OBANION -ELVERTAW 230.00kV Ckt#2 Sec# 1	1,054	Amps	1,067	101			
166	Open Line COTWD_E 230-CORTINA 230 #1	OBANION -ELVERTAW 230.00kV Ckt#1 Sec# 1	1,054	Amps	1,066	101			
		OBANION -ELVERTAW 230.00kV Ckt#2 Sec# 1	1,054	Amps	1,066	101			
190	Open Line TBL MT D 230-RIO OSO 230 #1	PALERMO -E.MRY J2 115.00kV Ckt#1 Sec# 1	412	Amps	422	103	430	104	1
		OBANION -ELVERTAW 230.00kV Ckt#1 Sec# 1	1,054	Amps	1,068	101	1,103	105	4
		OBANION -ELVERTAW 230.00kV Ckt#2 Sec# 1	1,054	Amps	1,068	101	1,103	105	4
191	Open Line TBL MTX1 230-TBL MT D 230 #1	PALERMO -E.MRY J2 115.00kV Ckt#1 Sec# 1	412	Amps	442	107	442	107	0
	Open Line TBL MTX1 230-TBL MT E 230 #1	PALRMO M-PALERMO 230.00/ 115.00kV Bk#1	168	MVA	168	100	168	100	0
	Open Xfmr TBL MTX1 230/TB MT 1M 500 #1								
	Open Xfmr TB MT 1M 500/TABLE MT 500 #1								
	Open Xfmr TB MT 1M 500/TB MT 1T 13.8 #1								
201	Open Line SLYCREEK 115-WODLF TP 115 #1	PALRMO M-PALERMO 230.00/ 115.00kV Bk#1	168	MVA	183	109	186	111	2
	Open Xfmr SLYCREEK 115/SLY.CR. 9.11 #1								
	Open Line WODLF TP 115-FRBSTNTP 115 #1								
	Open Xfmr WODLF TP 115/DEADWOOD 9.11 #1								
	Open Xfmr WODLF TP 115/WOODLEAF 13.8 #1								
	Open Line FRBSTNTP 115-OWID 115 #1								
	Open Xfmr FRBSTNTP 115/FORBSTWN 11.5 #1								
	Open Line OWID 115-KANAKAJT 115 #1								
	Open Line OWID 115-PALERMO 115 #1								
	Drop Load at KANAKAJT 115 #KK: 1.2 MW 0 MVAR Drop								
204	Open Line PALERMO 115-HONC JT1 115 #1	PALERMO -E.MRY J2 115.00kV Ckt#1 Sec# 1	412	Amps	429	104	436	106	2
	Open Line HONC JT1 115-PEASE 115 #1								

COMPARISON OF CATEGORY B POWERFLOW STUDY RESULTS - 2010 SUMMER PEAK CASES

Outage #	Involved Facility(ies)	Impacted Facility(ies)	Rating		Pre-Project Amps/ MVA	Pre-Project % Loading	Post-Project Amps/ MVA	Post-Project % Loading	Loading Change %
205	Open Line PALERMO 115-HONC JT3 115 #1	PALERMO -E.MRY J2 115.00kV Ckt#1 Sec# 1	412	Amps	404	98	411	100	2
	Open Line HONC JT3 115-HONCUT 115 #1								
	Open Line HONC JT3 115-OLIVH J3 115 #1								
	Open Line OLIVH J3 115-BOGUE 115 #1								
	Drop Load at HONCUT 115 #1 : 14.8 MW 0 MVAR Dropp								
213	Open Line TBLE MTN 115-SYCAMORE 115 #1	NORD 1-CHICOTP2 115.00kV Ckt#1 Sec# 1	688	Amps	704	102	706	103	1
231	Open Line COTTONWD 60-RED B JT 60 #1	CLMN JCT-COLEMAN 60.00kV Ckt#1 Sec# 1	327	Amps	407	124	406	124	0
	Open Line RED B JT 60-RED BLFF 60 #1								
	Close Line RED B JT 60-RWSN J2 60 #1								
240	Open Line OROVILLE 60-LSNA PCC 60 #1	ELGN JCT-PALERMO 60.00kV Ckt#2 Sec# 1	378	Amps	526	139	526	139	0
	Open Line LSNA PCC 60-APT ORVC 60 #1	ORONRGTP-ELGN JCT 60.00kV Ckt#2 Sec# 1	344	Amps	403	117	403	117	0
	Open Line LSNA PCC 60-PALERMO 60 #1								
	Open Xfmr APT ORVC 60/PO POWER 9.11 #1								
	Open Xfmr APT ORVC 60/PO POWER 9.11 #2								
	Drop Generator at PO POWER 9.11 #1 : 9 MW Dropped								
262	Open Xfmr ROUND MT 500/ROUND MT 230 #1	OBANION -ELVERTAW 230.00kV Ckt#1 Sec# 1	1,054	Amps	1,075	102	1,119	106	4
		OBANION -ELVERTAW 230.00kV Ckt#2 Sec# 1	1,054	Amps	1,075	102	1,119	106	4
353	Drop Generator at PO POWER 9.11 #1: 9 MW Dropped	ORONRGTP-OROVILLE 60.00kV Ckt#2 Sec# 1	344	Amps	444	129	444	129	0
371	Open Line COTTONWD 60-RED B JT 60 #1	CLMN JCT-COLEMAN 60.00kV Ckt#1 Sec# 1	327	Amps	409	125	409	125	0
	Open Line RED B JT 60-RED BLFF 60 #1								
	Close Line RED B JT 60-RWSN J2 60 #1								
	Drop Generator at COLEMAN 6.6 #1: 8.7 MW Dropped								
377	Open Line TBL MT D 230-RIO OSO 230 #1	PALERMO -E.MRY J2 115.00kV Ckt#1 Sec# 1	412	Amps	422	103	429	104	1
	Drop Generator at GRNLEAF2 13.8 #1: 49 MW Dropped	OBANION -ELVERTAW 230.00kV Ckt#1 Sec# 1	1,054	Amps	1,068	101	1,103	105	4
		OBANION -ELVERTAW 230.00kV Ckt#2 Sec# 1	1,054	Amps	1,068	101	1,103	105	4
		PALRMO M-PALERMO 230.00/ 115.00kV Bk#1	168	MVA	166	99	170	101	2
466	Open Line VACA-DIX 230-PEABODY 230 #1	LAMBIE -BDLSWSTA 230.00kV Ckt#1 Sec# 1	954	Amps	810	85	951	100	15
	Drop Generator at C.COS 7 18 #1: 330 MW Dropped								
482	Open Line GOLDHILL 230-LAKE 230 #1	OBANION -ELVERTAW 230.00kV Ckt#1 Sec# 1	1,054	Amps	1,080	102	1,113	106	4
		OBANION -ELVERTAW 230.00kV Ckt#2 Sec# 1	1,054	Amps	1,080	102	1,113	106	4
491	Open Line ELKGROVE 230-RNCHSECO 230 #1	OBANION -ELVERTAW 230.00kV Ckt#1 Sec# 1	1,054	Amps	1,070	102	1,104	105	3
		OBANION -ELVERTAW 230.00kV Ckt#2 Sec# 1	1,054	Amps	1,070	102	1,104	105	3
495	Open Line ELVERTAS 230-ELVERTAW 230 #1	HURLEY S-CARMICAL 230.00kV Ckt#1 Sec# 1	880	Amps	939	107	957	109	2
507	Open Line RNCHSECO 230-BELLOTA 230 #1	OBANION -ELVERTAW 230.00kV Ckt#1 Sec# 1	1,054	Amps	1,072	102	1,105	105	3
		OBANION -ELVERTAW 230.00kV Ckt#2 Sec# 1	1,054	Amps	1,072	102	1,105	105	3

COMPARISON OF CATEGORY B POWERFLOW STUDY RESULTS - 2010 SUMMER PEAK CASES

Outage #	Involved Facility(ies)	Impacted Facility(ies)	Rating		Pre-Project Amps/ MVA	Pre-Project % Loading	Post-Project Amps/ MVA	Post-Project % Loading	Loading Change %
508	Open Line RNCHSECO 230-BELLOTA 230 #2	OBANION -ELVERTAW 230.00kV Ckt#1 Sec# 1	1,054	Amps	1,072	102	1,105	105	3
		OBANION -ELVERTAW 230.00kV Ckt#2 Sec# 1	1,054	Amps	1,072	102	1,105	105	3
534	Open Line SRWTP 69-POCKET 1 69 #1	OBANION -ELVERTAW 230.00kV Ckt#1 Sec# 1	1,054	Amps	1,068	101	1,102	105	4
		OBANION -ELVERTAW 230.00kV Ckt#2 Sec# 1	1,054	Amps	1,068	101	1,102	105	4
537	Open Line TRCY PMP 230-HURLEY S 230 #1	OBANION -ELVERTAW 230.00kV Ckt#1 Sec# 1	1,054	Amps	1,095	104	1,127	107	3
		OBANION -ELVERTAW 230.00kV Ckt#2 Sec# 1	1,054	Amps	1,095	104	1,127	107	3
538	Open Line TRCY PMP 230-HURLEY S 230 #2	OBANION -ELVERTAW 230.00kV Ckt#1 Sec# 1	1,054	Amps	1,097	104	1,129	107	3
		OBANION -ELVERTAW 230.00kV Ckt#2 Sec# 1	1,054	Amps	1,097	104	1,129	107	3
542	Open Xfmr ELVERTAS 230/ELVRTAX1 230 #1	ELVRTAX2-ELVERTA2 230.00/ 69.00kV Bk#1	111	MVA	188	169	189	170	1
543	Open Xfmr ELVERTA1 69/ELVRTAX1 230 #1	ELVERTA2-ELVRTAX2 69.00/ 230.00kV Bk#1	111	MVA	146	132	146	132	0
544	Open Xfmr ELVERTAS 230/ELVRTAX2 230 #1	ELVERTA1-ELVRTAX1 69.00/ 230.00kV Bk#1	111	MVA	218	196	219	198	2
545	Open Xfmr ELVERTA2 69/ELVRTAX2 230 #1	ELVERTA1-ELVRTAX1 69.00/ 230.00kV Bk#1	111	MVA	146	132	146	132	0
560	Open Xfmr ELVRTAX2 230/ELVERTAS 115 #1	ELVERTA2-ELVRTAX2 69.00/ 230.00kV Bk#1	111	MVA	110	99	112	101	2
581	Open Xfmr UNIONVLY 230/UNIONVLY 69 #1	OBANION -ELVERTAW 230.00kV Ckt#1 Sec# 1	1,054	Amps	1,068	101	1,102	105	4
		OBANION -ELVERTAW 230.00kV Ckt#2 Sec# 1	1,054	Amps	1,068	101	1,102	105	4
582	Open Xfmr PROCTER 230/PROCTER1 13.8 #1	OBANION -ELVERTAW 230.00kV Ckt#1 Sec# 1	1,054	Amps	1,068	101	1,102	105	4
		OBANION -ELVERTAW 230.00kV Ckt#2 Sec# 1	1,054	Amps	1,068	101	1,102	105	4
583	Open Xfmr PROCTER 230/PROCTER3 13.8 #1	OBANION -ELVERTAW 230.00kV Ckt#1 Sec# 1	1,054	Amps	1,067	101	1,101	104	3
		OBANION -ELVERTAW 230.00kV Ckt#2 Sec# 1	1,054	Amps	1,067	101	1,101	104	3
586	Drop Generator at CAMPBEL1 13.8 #1: 85 MW Dropped	OBANION -ELVERTAW 230.00kV Ckt#1 Sec# 1	1,054	Amps	1,067	101	1,101	104	3
		OBANION -ELVERTAW 230.00kV Ckt#2 Sec# 1	1,054	Amps	1,067	101	1,101	104	3
602	Drop Generator at WHITERK1 13.8 #1: 90 MW Dropped	OBANION -ELVERTAW 230.00kV Ckt#1 Sec# 1	1,054	Amps	1,068	101	1,102	105	4
		OBANION -ELVERTAW 230.00kV Ckt#2 Sec# 1	1,054	Amps	1,068	101	1,102	105	4
603	Drop Generator at WHITERK2 13.8 #1: 90 MW Dropped	OBANION -ELVERTAW 230.00kV Ckt#1 Sec# 1	1,054	Amps	1,068	101	1,102	105	4
		OBANION -ELVERTAW 230.00kV Ckt#2 Sec# 1	1,054	Amps	1,068	101	1,102	105	4
605	Drop Generator at COSUMNE1 18 #1: 165 MW Dropped	OBANION -ELVERTAW 230.00kV Ckt#1 Sec# 1	1,054	Amps	1,074	102	1,108	105	3
		OBANION -ELVERTAW 230.00kV Ckt#2 Sec# 1	1,054	Amps	1,074	102	1,108	105	3
606	Drop Generator at COSUMNE2 18 #1: 165 MW Dropped	OBANION -ELVERTAW 230.00kV Ckt#1 Sec# 1	1,054	Amps	1,074	102	1,108	105	3
		OBANION -ELVERTAW 230.00kV Ckt#2 Sec# 1	1,054	Amps	1,074	102	1,108	105	3
607	Drop Generator at COSUMNE3 16.5 #1: 170 MW Dropped	OBANION -ELVERTAW 230.00kV Ckt#1 Sec# 1	1,054	Amps	1,075	102	1,109	105	3
		OBANION -ELVERTAW 230.00kV Ckt#2 Sec# 1	1,054	Amps	1,075	102	1,109	105	3
610	Open Line KESWICK 115-EUREKA 115 #1	SULP CRK-KESWICK 115.00kV Ckt#1 Sec# 1	576	Amps	793	138	786	136	(2)
		CANBY -SULP JCT 115.00kV Ckt#1 Sec# 1	576	Amps	593	103	586	102	(1)
		SULP JCT-SULP CRK 115.00kV Ckt#1 Sec# 1	576	Amps	593	103	586	102	(1)
611	Open Line KESWICK 115-SULP CRK 115 #1	EUREKA -KESWICK 115.00kV Ckt#1 Sec# 1	576	Amps	736	128	729	127	(1)
		OREGON -EUREKA 115.00kV Ckt#1 Sec# 1	576	Amps	657	114	650	113	(1)

COMPARISON OF CATEGORY B POWERFLOW STUDY RESULTS - 2010 SUMMER PEAK CASES

Outage #	Involved Facility(ies)	Impacted Facility(ies)	Rating		Pre-Project Amps/ MVA	Pre-Project % Loading	Post-Project Amps/ MVA	Post-Project % Loading	Loading Change %
614	Open Line SUTTER 230-OBANION 230 #1	FLANAGAN-SHASTA 230.00kV Ckt#1 Sec# 1	800	Amps	761	95	798	100	5
616	Open Line COTWDWAP 230-ROSEVILL 230 #1	OBANION -ELVERTAW 230.00kV Ckt#1 Sec# 1	1,054	Amps	1,115	106	1,153	109	3
		OBANION -ELVERTAW 230.00kV Ckt#2 Sec# 1	1,054	Amps	1,115	106	1,153	109	3
617	Open Line COTWDWAP 230-SHASTA 230 #1	SHASTA -FLANAGAN 230.00kV Ckt#1 Sec# 1	800	Amps	981	123	1,006	126	3
		FLANAGAN-KESWICK 230.00kV Ckt#1 Sec# 1	800	Amps	875	109	900	113	4
618	Open Line COTWDWAP 230-SHASTA 230 #2	SHASTA -FLANAGAN 230.00kV Ckt#1 Sec# 1	800	Amps	981	123	1,006	126	3
		FLANAGAN-KESWICK 230.00kV Ckt#1 Sec# 1	800	Amps	875	109	901	113	4
621	Open Line KESWICK 230-AIRPORTW 230 #1	SULP CRK-KESWICK 115.00kV Ckt#1 Sec# 1	576	Amps	647	112	634	110	(2)
624	Open Line KESWICK 230-SPRINGCR 230 #2	FLANAGAN-SHASTA 230.00kV Ckt#1 Sec# 1	800	Amps	831	104	869	109	5
629	Open Line OLINDAW 230-KESWICK 230 #1	OBANION -ELVERTAW 230.00kV Ckt#1 Sec# 1	1,054	Amps	1,066	101	1,100	104	3
		OBANION -ELVERTAW 230.00kV Ckt#2 Sec# 1	1,054	Amps	1,066	101	1,100	104	3
631	Open Line ROSEVILL 230-FOLSOM 230 #1	OBANION -ELVERTAW 230.00kV Ckt#1 Sec# 1	1,054	Amps	1,095	104	1,129	107	3
		OBANION -ELVERTAW 230.00kV Ckt#2 Sec# 1	1,054	Amps	1,095	104	1,129	107	3
644	Open Line TRINITY 230-J.F.CARR 230 #2	SHASTA -FLANAGAN 230.00kV Ckt#1 Sec# 1	800	Amps	792	99	830	104	5
647	Open Xfmr OLINDAW 230/OLINDA 500 #1	OBANION -ELVERTAW 230.00kV Ckt#1 Sec# 1	1,054	Amps	1,078	102	1,138	108	6
		OBANION -ELVERTAW 230.00kV Ckt#2 Sec# 1	1,054	Amps	1,078	102	1,138	108	6
651	Open Xfmr FOLSOM 230/FOLSOM 115 #1	OBANION -ELVERTAW 230.00kV Ckt#1 Sec# 1	1,054	Amps	1,068	101	1,102	105	4
		OBANION -ELVERTAW 230.00kV Ckt#2 Sec# 1	1,054	Amps	1,068	101	1,102	105	4
652	Open Xfmr J.F.CARR 230/J.F.CARR 13.8 #1	SHASTA -FLANAGAN 230.00kV Ckt#1 Sec# 1	800	Amps	813	102	850	106	4
	Drop Generator at J.F.CARR 13.8 #1 : 77 MW Dropped								
	Drop Generator at J.F.CARR 13.8 #2 : 77 MW Dropped								
654	Open Xfmr ROSEVILL 230/ROSEVLL1 60 #1	ROSEVILL-ROSEVLL2 230.00/ 60.00kV Bk#2	170	MVA	243	143	243	143	0
658	Open Xfmr SPRINGCR 230/SPRINGCR 13.8 #1	FLANAGAN-SHASTA 230.00kV Ckt#1 Sec# 1	800	Amps	831	104	869	109	5
	Drop Generator at SPRINGCR 13.8 #1 : 90 MW Dropped								
	Drop Generator at SPRINGCR 13.8 #2 : 90 MW Dropped								
661	Open Xfmr TRINITY 230/TRINTY12 13.8 #1	SHASTA -FLANAGAN 230.00kV Ckt#1 Sec# 1	800	Amps	792	99	830	104	5
	Drop Generator at TRINTY12 13.8 #1 : 62 MW Dropped								0
	Drop Generator at TRINTY12 13.8 #2 : 62 MW Dropped								0
663	Open Xfmr AIRPORTW 230/AIRPORTW 115 #1	SULP CRK-KESWICK 115.00kV Ckt#1 Sec# 1	576	Amps	574	100	570	99	(1)
664	Open Xfmr AIRPORTW 230/AIRPORTW 115 #2	SULP CRK-KESWICK 115.00kV Ckt#1 Sec# 1	576	Amps	574	100	570	99	(1)
686	Drop Generator at SPRINGCR 13.8 #1 : 90 MW Dropped	SHASTA -FLANAGAN 230.00kV Ckt#1 Sec# 1	800	Amps	771	96	808	101	5
687	Drop Generator at SPRINGCR 13.8 #2 : 90 MW Dropped	SHASTA -FLANAGAN 230.00kV Ckt#1 Sec# 1	800	Amps	771	96	808	101	5

COMPARISON OF CATEGORY C POWERFLOW STUDY RESULTS - 2010 SUMMER PEAK CASES

					Pre-Project		Post-Project		Loading
Outage #	Involved Facility(ies)	Impacted Facility(ies)	Rating		Amps/ MVA	% Loading	Amps/ MVA	% Loading	Change %
43	Open Line COTWDWAP 230-OLINDAW 230 #1	OBANION -ELVERTAW 230.00kV Ckt#1 Sec# 1	1,054	Amps	1,069	101	1,100	104	3
	Open Line COTWDWAP 230-AIRPORTW 230 #1	OBANION -ELVERTAW 230.00kV Ckt#2 Sec# 1	1,054	Amps	1,069	101	1,100	104	3
	Open Line COTWDWAP 230-SHASTA 230 #2	SHASTA -FLANAGAN 230.00kV Ckt#1 Sec# 1	800	Amps	808	101	872	109	8
	Open Line COTWDWAP 230-ROUND MT 230 #1								
44	Open Line COTWDWAP 230-OLINDAW 230 #2	SHASTA -FLANAGAN 230.00kV Ckt#1 Sec# 1	800	Amps	1,011	126	1,050	131	5
	Open Line COTWDWAP 230-ROSEVILL 230 #1	FLANAGAN-KESWICK 230.00kV Ckt#1 Sec# 1	800	Amps	906	113	946	118	5
	Open Line COTWDWAP 230-SHASTA 230 #1	OBANION -ELVERTAW 230.00kV Ckt#1 Sec# 1	1,054	Amps	1,119	106	1,156	110	4
		OBANION -ELVERTAW 230.00kV Ckt#2 Sec# 1	1,054	Amps	1,119	106	1,156	110	4
56	Open Line CARIBOU 230-BELDENTP 230 #1	BIG BEND-WYANDJT2 115.00kV Ckt#2 Sec# 1	377	Amps	538	143	538	143	0
	Open Xfmr CARIBOU 230/CARBOU M 230 #1	WYANDJT2-PALERMO 115.00kV Ckt#2 Sec# 1	377	Amps	537	143	537	143	0
	Open Xfmr CARIBOU 230/CRBU 4-5 13.8 #1	BIG BEND-GRIZ JCT 115.00kV Ckt#1 Sec# 1	402	Amps	538	134	538	134	0
		GRIZ JCT-CARIBOU 115.00kV Ckt#1 Sec# 1	402	Amps	455	113	455	113	0
73	Open Line PALERMO 115-OWID 115 #1	CARIBOU -CARBOU M 115.00/ 230.00kV Bk#11	101	MVA	106	106	106	106	0
	Open Line PALERMO 115-HONC JT1 115 #1								
	Open Line PALERMO 115-HONC JT3 115 #1								
	Open Line PALERMO 115-WYANDJT2 115 #2								
	Open Line PALERMO 115-E.MRY J2 115 #1								
	Open Line PALERMO 115-WYANDJT1 115 #1								
	Open Xfmr PALERMO 115/PALRMO M 230 #1								
88	Open Line COLEMAN 60-INSKIP 60 #1	RED B JT-COTTONWD 60.00kV Ckt#1 Sec# 1	327	Amps	397	121	397	121	0
	Open Line COLEMAN 60-COTTONWD 60 #1	RED BLFF-RED B JT 60.00kV Ckt#1 Sec# 1	327	Amps	397	121	397	121	0
	Open Line COLEMAN 60-CLMN JCT 60 #1								
	Open Xfmr COLEMAN 60/COLEMAN 6.6 #1								
105	Open Line BUTTE 115-TBLE MTN 115 #2	CHICOTP1-TBLE MTN 115.00kV Ckt#1 Sec# 1	739	Amps	910	123	911	123	0
	Open Line TBLM JCT 115-BIGBENTP 115 #1	BUTTE -CHICOTP1 115.00kV Ckt#1 Sec# 1	739	Amps	737	100	738	100	0
	Open Line TBLM JCT 115-TBLE MTN 115 #1								
	Open Line BIGBENTP 115-PARADSE 115 #1								
106	Open Line BUTTE 115-TBLE MTN 115 #2	CHICOTP1-TBLE MTN 115.00kV Ckt#1 Sec# 1	739	Amps	1,127	152	1,122	152	0
	Open Line TBLE MTN 115-SYCAMORE 115 #1	BUTTE -CHICOTP1 115.00kV Ckt#1 Sec# 1	739	Amps	956	129	952	129	0
		NORD 1-CHICOTP2 115.00kV Ckt#1 Sec# 1	688	Amps	727	106	724	105	(1)
111	Open Line PALERMO 115-HONC JT1 115 #1	PALERMO -E.MRY J2 115.00kV Ckt#1 Sec# 1	412	Amps	460	112	467	113	1
	Open Line HONC JT1 115-PEASE 115 #1								
	Open Line WYANDTTE 115-WYANDJT1 115 #1								
	Open Line WYANDJT1 115-PALERMO 115 #1								
	Drop Load at WYANDTTE 115 #1 : 8.9 MW 0.3 MVAR Dr								
	Drop Load at WYANDTTE 115 #2 : 28.1 MW 1.2 MVAR D								
	Drop Load at WYANDTTE 115 #3 : 21.4 MW 0.9 MVAR D								
	Close Line WYANDTTE 115-WYANDJT2 115 #1								

COMPARISON OF CATEGORY C POWERFLOW STUDY RESULTS - 2010 SUMMER PEAK CASES

Outage #	Involved Facility(ies)	Impacted Facility(ies)	Rating		Pre-Project Amps/ MVA	Pre-Project % Loading	Post-Project Amps/ MVA	Post-Project % Loading	Loading Change %
115	Open Line COLGATE 230-RIO OSO 230 #1	PALRMO M-PALERMO 230.00/ 115.00kV Bk#1	168	MVA	223	133	228	136	3
	Open Xfmr COLGATE 230/COLGATE2 13.8 #1	PALERMO -E.MRY J2 115.00kV Ckt#1 Sec# 1	412	Amps	539	131	549	133	2
	Drop Generator at COLGATE2 13.8 #1 : 147 MW Droppe	E.NICOLS-RIO OSO 115.00kV Ckt#1 Sec# 1	417	Amps	495	119	507	122	3
	Open Line TBL MT D 230-RIO OSO 230 #1	GLEAF TP-RIO OSO 115.00kV Ckt#1 Sec# 1	512	Amps	537	105	544	106	1
		E.MRY J2-E.NICOLS 115.00kV Ckt#1 Sec# 1	412	Amps	429	104	438	107	3
		OBANION -ELVERTAW 230.00kV Ckt#1 Sec# 1	1,054	Amps	1,088	103	1,123	107	4
		OBANION -ELVERTAW 230.00kV Ckt#2 Sec# 1	1,054	Amps	1,088	103	1,123	107	4
		PEASE -E.MRY J1 115.00kV Ckt#1 Sec# 1	507	Amps	503	99	514	101	2
		E.MRY J1-OLIVH J1 115.00kV Ckt#1 Sec# 1	507	Amps	503	99	514	101	2
117	Open Line PEASE 115-HONC JT1 115 #1	PALERMO -E.MRY J2 115.00kV Ckt#1 Sec# 1	412	Amps	421	102	428	104	2
	Open Line HONC JT1 115-PALERMO 115 #1								
	Open Line PEASE 115-E.MRY J1 115 #1								
	Open Line E.MRY J1 115-OLIVH J1 115 #1								
	Open Line OLIVH J1 115-OLIVHRST 115 #1								
	Open Line OLIVH J1 115-RIO OSO 115 #1								
	Drop Load at OLIVHRST 115 #1 : 9.9 MW 0.4 MVAR Dr								
	Drop Load at OLIVHRST 115 #2 : 13.1 MW 0.5 MVAR D								
	Close Line OLIVHRST 115-OLIVH J3 115 #1								
118	Open Line BELDEN 230-RK C JT1 230 #1	OBANION -ELVERTAW 230.00kV Ckt#1 Sec# 1	1,054	Amps	1,066	101	1,100	104	3
	Open Line RK C JT1 230-ROCKCK 1 230 #1	OBANION -ELVERTAW 230.00kV Ckt#2 Sec# 1	1,054	Amps	1,066	101	1,100	104	3
	Open Line RK C JT1 230-POE 230 #1								
	Open Xfmr POE 230/POE 1 13.8 #1								
	Drop Generator at POE 1 13.8 #1 : 55 MW Dropped								
	Open Line CRESTA 230-RIO OSO 230 #1								
119	Open Line POE 230-RIO OSO 230 #1	OBANION -ELVERTAW 230.00kV Ckt#1 Sec# 1	1,054	Amps	1,068	101	1,102	105	4
	Open Xfmr POE 230/POE 2 13.8 #1	OBANION -ELVERTAW 230.00kV Ckt#2 Sec# 1	1,054	Amps	1,068	101	1,102	105	4
	Drop Generator at POE 2 13.8 #1 : 55 MW Dropped								
	Open Line CRESTA 230-RIO OSO 230 #1								
120	Open Line TBL MT D 230-RIO OSO 230 #1	OBANION -ELVERTAW 230.00kV Ckt#1 Sec# 1	1,054	Amps	1,082	103	1,117	106	3
	Open Line TBL MT D 230-PALERMO 230 #1	OBANION -ELVERTAW 230.00kV Ckt#2 Sec# 1	1,054	Amps	1,082	103	1,117	106	3
121	Open Line PALERMO 230-COLGATE 230 #1	PALERMO -E.MRY J2 115.00kV Ckt#1 Sec# 1	412	Amps	485	118	495	120	2
	Open Xfmr COLGATE 230/COLGATE1 13.8 #1	PALRMO M-PALERMO 230.00/ 115.00kV Bk#1	168	MVA	193	115	198	118	3
	Drop Generator at COLGATE1 13.8 #1 : 147 MW Droppe	PALERMO -BANGOR 60.00kV Ckt#1 Sec# 1	327	Amps	373	114	380	116	2
	Open Line TBL MT D 230-RIO OSO 230 #1	BANGOR -COLGATE 60.00kV Ckt#1 Sec# 1	282	Amps	318	113	325	115	2
		OBANION -ELVERTAW 230.00kV Ckt#1 Sec# 1	1,054	Amps	1,081	102	1,116	106	4
		OBANION -ELVERTAW 230.00kV Ckt#2 Sec# 1	1,054	Amps	1,081	102	1,116	106	4
		PALRMO M-PALERMO 230.00/ 230.00kV Bk#1	168	MVA	166	99	172	102	3

COMPARISON OF CATEGORY C POWERFLOW STUDY RESULTS - 2010 SUMMER PEAK CASES

Outage #	Involved Facility(ies)	Impacted Facility(ies)	Rating		Pre-Project Amps/ MVA	Pre-Project % Loading	Post-Project Amps/ MVA	Post-Project % Loading	Loading Change %
122	Open Line PALERMO 230-COLGATE 230 #1	BANGOR -COLGATE 60.00kV Ckt#1 Sec# 1	282	Amps	369	131	371	132	1
	Open Xfmr COLGATE 230/COLGATE1 13.8 #1	BANGOR -PALERMO 60.00kV Ckt#1 Sec# 1	327	Amps	428	131	429	131	0
	Drop Generator at COLGATE1 13.8 #1 : 147 MW Droppe								
	Open Line COLGATE 230-RIO OSO 230 #1								
	Open Xfmr COLGATE 230/COLGATE2 13.8 #1								
	Drop Generator at COLGATE2 13.8 #1 : 147 MW Droppe								
124	Open Line COTWD_E 230-CORTINA 230 #1	OBANION -ELVERTAW 230.00kV Ckt#1 Sec# 1	1,054	Amps	1,078	102			
	Open Line COTWD_E 230-LOGAN CR 230 #1	OBANION -ELVERTAW 230.00kV Ckt#2 Sec# 1	1,054	Amps	1,078	102			
127	Open Line COTWD_E 230-CORTINA 230 #1	OBANION -ELVERTAW 230.00kV Ckt#1 Sec# 1	1,054	Amps	1,075	102			
	Open Line LOGAN CR 230-VACA-DIX 230 #1	OBANION -ELVERTAW 230.00kV Ckt#2 Sec# 1	1,054	Amps	1,075	102			
129	Open Line P0506STA 230-CORTINA 230 #1	OBANION -ELVERTAW 230.00kV Ckt#1 Sec# 1	1,054	Amps			1,111	105	
	Open Line P0506STA 230-VACA-DIX 230 #3	OBANION -ELVERTAW 230.00kV Ckt#2 Sec# 1	1,054	Amps			1,111	105	
130	Open Line CORTINA 230-VACA-DIX 230 #1	OBANION -ELVERTAW 230.00kV Ckt#1 Sec# 1	1,054	Amps			1,103	105	
	Open Line P0506STA 230-VACA-DIX 230 #3	OBANION -ELVERTAW 230.00kV Ckt#2 Sec# 1	1,054	Amps			1,103	105	
131	Open Line COTWD_F 230-VACA-DIX 230 #1	OBANION -ELVERTAW 230.00kV Ckt#1 Sec# 1	1,054	Amps	1,077	102			
	Open Line COTWD_F 230-GLENN 230 #1	OBANION -ELVERTAW 230.00kV Ckt#2 Sec# 1	1,054	Amps	1,077	102			
132	Open Line GLENN 230-VACA-DIX 230 #1	OBANION -ELVERTAW 230.00kV Ckt#1 Sec# 1	1,054	Amps	1,069	101			
	Open Line COTWD_F 230-VACA-DIX 230 #1	OBANION -ELVERTAW 230.00kV Ckt#2 Sec# 1	1,054	Amps	1,069	101			
135	Open Line P0506STA 230-VACA-DIX 230 #2	OBANION -ELVERTAW 230.00kV Ckt#1 Sec# 1	1,054	Amps			1,105	105	
	Open Line P0506STA 230-VACA-DIX 230 #4	OBANION -ELVERTAW 230.00kV Ckt#2 Sec# 1	1,054	Amps			1,105	105	
		P0506STA-CORTINA 230.00kV Ckt#1 Sec# 1	954	Amps			988	104	
168	Open Line RIO OSO 230-BRIGHTON 230 #1	OBANION -ELVERTAW 230.00kV Ckt#1 Sec# 1	1,054	Amps	1,068	101	1,103	105	4
	Open Line RIO OSO 230-LOCKFORD 230 #1	OBANION -ELVERTAW 230.00kV Ckt#2 Sec# 1	1,054	Amps	1,068	101	1,103	105	4
171	Open Line MOBILCHE 115-WODLNDJ1 115 #1	DPWT_TP2-BRIGHTN 115.00kV Ckt#1 Sec# 1	607	Amps	694	114	694	114	0
	Open Line MOBILCHE 115-WOODLD 115 #1	BRKRJCT -BRIGHTN 115.00kV Ckt#1 Sec# 1	607	Amps	626	103	627	103	0
	Open Line WODLNDJ1 115-KNIGHT1 115 #1								
	Open Line WODLNDJ1 115-ZAMORA1 115 #1								
	Open Line KNIGHT1 115-KNIGHTLD 115 #1								
	Open Line KNIGHT1 115-RIO OSO 115 #1								
	Drop Load at MOBILCHE 115 #1 : 2.4 MW 0 MVAR Drop								
	Drop Load at KNIGHTLD 115 #1 : 2.6 MW 0.1 MVAR Dr								
	Open Line KNIGHT2 115-WODLNDJ2 115 #2								
	Open Line KNIGHT2 115-RIO OSO 115 #2								
173	Open Line ELVERTAW 230-HURLEY S 230 #2	ELVERTAS-ELVERTAW 230.00kV Ckt#1 Sec# 1	2,240	Amps	2,177	97	2,281	102	5
	Open Line ELVERTAW 230-HURLEY S 230 #1								
174	Open Line ELKGROVE 230-HEDGE 230 #1	OBANION -ELVERTAW 230.00kV Ckt#1 Sec# 1	1,054	Amps	1,071	102	1,104	105	3
	Open Line HEDGE 230-RNCHSECO 230 #1	OBANION -ELVERTAW 230.00kV Ckt#2 Sec# 1	1,054	Amps	1,071	102	1,104	105	3

COMPARISON OF CATEGORY C POWERFLOW STUDY RESULTS - 2010 SUMMER PEAK CASES

Outage #	Involved Facility(ies)	Impacted Facility(ies)	Rating		Pre-Project Amps/ MVA	Pre-Project % Loading	Post-Project Amps/ MVA	Post-Project % Loading	Loading Change %
175	Open Line ELKGROVE 230-RNCHSECO 230 #1	OBANION -ELVERTAW 230.00kV Ckt#1 Sec# 1	1,054	Amps	1,099	104	1,133	107	3
	Open Line HEDGE 230-RNCHSECO 230 #1	OBANION -ELVERTAW 230.00kV Ckt#2 Sec# 1	1,054	Amps	1,099	104	1,133	107	3
176	Open Line ELVERTAS 230-FOOTHILL 230 #1	HURLEY S-CARMICAL 230.00kV Ckt#1 Sec# 1	880	Amps	980	111	1,000	114	3
	Open Line ELVERTAS 230-ORANGEVL 230 #1								
178	Open Line POCKET 230-RNCHSECO 230 #1	OBANION -ELVERTAW 230.00kV Ckt#1 Sec# 1	1,054	Amps	1,071	102	1,104	105	3
	Open Line POCKET 230-RNCHSECO 230 #2	OBANION -ELVERTAW 230.00kV Ckt#2 Sec# 1	1,054	Amps	1,071	102	1,104	105	3
180	Open Line RNCHSECO 230-BELLOTA 230 #2	OBANION -ELVERTAW 230.00kV Ckt#1 Sec# 1	1,054	Amps	1,155	110	1,183	112	2
	Open Line RNCHSECO 230-BELLOTA 230 #1	OBANION -ELVERTAW 230.00kV Ckt#2 Sec# 1	1,054	Amps	1,155	110	1,183	112	2
182	Open Line CAMINO S 230-LAKE 230 #1	ORANGEVL-WHITEROK 230.00kV Ckt#1 Sec# 1	880	Amps	1,279	145	1,281	146	1
	Open Line WHITEROK 230-HEDGE 230 #1								
187	Open Line FIDDYMNT 230-ELVERTAW 230 #1	OBANION -ELVERTAW 230.00kV Ckt#1 Sec# 1	1,054	Amps	1,074	102	1,112	105	3
	Open Line ROSEVILL 230-ELVERTAW 230 #1	OBANION -ELVERTAW 230.00kV Ckt#2 Sec# 1	1,054	Amps	1,074	102	1,112	105	3
	Open Xfmr FIDDYMNT 230/FIDDYMNT 60 #1								
	Open Xfmr FIDDYMNT 230/FIDDYMNT 60 #2								
	Drop Load at FIDDYMNT 60 #1: 61.5 MW 12.7 MVAR Dr								
	Drop Load at FIDDYMNT 60 #2: 61.5 MW 12.7 MVAR Dr								
188	Open Line TRCY PMP 230-HURLEY S 230 #1	OBANION -ELVERTAW 230.00kV Ckt#1 Sec# 1	1,054	Amps	1,166	111	1,197	114	3
	Open Line TRCY PMP 230-HURLEY S 230 #2	OBANION -ELVERTAW 230.00kV Ckt#2 Sec# 1	1,054	Amps	1,166	111	1,197	114	3
189	Open Line OLINDAW 230-COTWDWAP 230 #2	SHASTA -FLANAGAN 230.00kV Ckt#1 Sec# 1	800	Amps	765	96	896	112	16
	Open Line OLINDAW 230-COTWDWAP 230 #1	FLANAGAN-KESWICK 230.00kV Ckt#1 Sec# 1	800	Amps	671	84	803	100	16
190	Open Line COTWDWAP 230-SHASTA 230 #1	FLANAGAN-KESWICK 230.00kV Ckt#1 Sec# 1	800	Amps	1,376	172	1,379	172	0
	Open Line COTWDWAP 230-SHASTA 230 #2	FLANAGAN-SHASTA 230.00kV Ckt#1 Sec# 1	800	Amps	1,503	188	1,503	188	0
		OBANION -ELVERTAW 230.00kV Ckt#1 Sec# 1	1,054	Amps	1,071	102	1,104	105	3
		OBANION -ELVERTAW 230.00kV Ckt#2 Sec# 1	1,054	Amps	1,071	102	1,104	105	3
		SULP CRK-KESWICK 115.00kV Ckt#1 Sec# 1	576	Amps	595	103	587	102	(1)
191	Open Line AIRPORTW 230-COTWDWAP 230 #1	SULP CRK-KESWICK 115.00kV Ckt#1 Sec# 1	576	Amps	709	123	709	123	0
	Open Line KESWICK 230-AIRPORTW 230 #1	EUREKA -KESWICK 115.00kV Ckt#1 Sec# 1	576	Amps	603	105	603	105	0
	Open Xfmr AIRPORTW 230/AIRPORTW 115 #1								
	Open Xfmr AIRPORTW 230/AIRPORTW 115 #2								
192	Open Line KESWICK 230-J.F.CARR 230 #1	FLANAGAN-SHASTA 230.00kV Ckt#1 Sec# 1	800	Amps	895	112	933	117	5
	Open Line KESWICK 230-J.F.CARR 230 #2	FLANAGAN-KESWICK 230.00kV Ckt#1 Sec# 1	800	Amps	801	100	839	105	5
	Open Line TRINITY 230-J.F.CARR 230 #2								
	Open Xfmr J.F.CARR 230/J.F.CARR 13.8 #1								
	Drop Generator at J.F.CARR 13.8 #1 : 77 MW Dropped								
	Drop Generator at J.F.CARR 13.8 #2 : 77 MW Dropped								
	Drop Generator at TRINTY12 13.8 #1 : 62 MW Dropped								
	Drop Generator at TRINTY12 13.8 #2 : 62 MW Dropped								

COMPARISON OF CATEGORY B POWERFLOW STUDY RESULTS - 2010 SPRING OFF-PEAK CASES

					Pre-Project		Post-Project		Loading
Outage #	Involved Facility(ies)	Impacted Facility(ies)	Rating		Amps/ MVA	% Loading	Amps/ MVA	% Loading	Change %
64	Open Xfmr LAKEVLLE 60/LAKEVILE 230 #3	SNMA TAP-COTATI 60.00kV Ckt#1 Sec# 1	346	Amps	2,029	586	2,022	584	(2)
	Close Line ST.HELNA 60-DUNBAR 60 #1	LAGUNATP-MLNO JCT 60.00kV Ckt#1 Sec# 1	346	Amps	1,971	569	1,963	567	(2)
	Open Line LAKEVLLE 60-DUNBAR 60 #1	SNMA TAP-LAGUNATP 60.00kV Ckt#1 Sec# 1	346	Amps	1,911	552	1,904	550	(2)
	Close Line PETC_JCT 60-COTATI 60 #1	PETC_JCT-COTATI 60.00kV Ckt#1 Sec# 1	510	Amps	1,769	347	1,761	345	(2)
	Close Line PETLMA C 60-PETC_JCT 60 #1	PETLMA C-PETC_JCT 60.00kV Ckt#1 Sec# 1	510	Amps	1,650	324	1,643	322	(2)
	Open Line MCDWLLSW 60-PETLMA C 60 #1	MLNO JCT-FULTON 60.00kV Ckt#1 Sec# 1	739	Amps	2,151	291	2,145	290	(1)
	Open Line PETLMA A 60-LKVLE JT 60 #1								
	Open Line MCDWLLSW 60-LAKEVLLE 60 #1								
	Open Line LAKEVLLE 60-LKVLE JT 60 #1								
191	Open Line TBL MTX1 230-TBL MT D 230 #1	PALERMO -E.MRY J2 115.00kV Ckt#1 Sec# 1	412	Amps	564	137	564	137	0
	Open Line TBL MTX1 230-TBL MT E 230 #1	TBL MT D-RIO OSO 230.00kV Ckt#1 Sec# 1	1,077	Amps	1,472	137	1,475	137	0
	Open Xfmr TBL MTX1 230/TB MT 1M 500 #1	E.NICOLS-RIO OSO 115.00kV Ckt#1 Sec# 1	417	Amps	540	130	540	130	0
	Open Xfmr TB MT 1M 500/TABLE MT 500 #1	E.MRY J2-E.NICOLS 115.00kV Ckt#1 Sec# 1	412	Amps	476	116	476	116	0
	Open Xfmr TB MT 1M 500/TB MT 1T 13.8 #1	RIO OSO -COLGATE 230.00kV Ckt#1 Sec# 1	1,077	Amps	1,225	114	1,227	114	0
		PALRMO M-PALERMO 230.00/ 115.00kV Bk#1	168	MVA	185	110	185	110	0
		PALERMO -HONC JT3 115.00kV Ckt#1 Sec# 1	414	Amps	456	110	456	110	0
		HONC JT3-OLIVH J3 115.00kV Ckt#1 Sec# 1	158	MVA	172	109	441	109	0
		OLIVH J3-BOGUE 115.00kV Ckt#1 Sec# 1	32	MVA	35	108	439	108	0
		RIO OSO -BRIGHTON 230.00kV Ckt#1 Sec# 1	407	Amps	439	108	940	109	1
		PEASE -E.MRY J1 115.00kV Ckt#1 Sec# 1	864	Amps	932	108	532	105	(3)
		E.MRY J1-OLIVH J1 115.00kV Ckt#1 Sec# 1	507	Amps	532	105	531	105	0
		RIO OSO -ATLANTC 230.00kV Ckt#1 Sec# 1	75	MVA	77	103	1,088	101	(2)
200	Open Line OREGNTRL 115-SPI_AND 115 #1	CASCADE -OREGNTRL 60.00kV Ckt#1 Sec# 1	327	Amps	347	106	349	107	1
	Open Line OREGNTRL 115-CASCADE 115 #1	OREGNTRL-LOMS JCT 60.00kV Ckt#1 Sec# 1	327	Amps	339	104	342	105	1
	Open Line SPI_AND 115-JESSUPJ1 115 #1								
	Open Xfmr SPI_AND 115/SPI_AND1 9.1 #1								
	Open Line JESSUPJ1 115-COTWDPGE 115 #1								
	Open Line JESSUPJ1 115-JESSUP 115 #1								
	Drop Load at OREGNTRL 115 #2 : 3.1 MW 0.1 MVAR Dr								
	Drop Load at JESSUP 115 #1 : 5.4 MW 0.2 MVAR Drop								
	Drop Generator at SPI_AND1 9.1 #1 : 4.3 MW Dropped								
240	Open Line OROVILLE 60-LSNA PCC 60 #1	ORONRGTP-ELGN JCT 60.00kV Ckt#2 Sec# 1	344	Amps	625	181	625	181	0
	Open Line LSNA PCC 60-APT ORVC 60 #1	ELGN JCT-PALERMO 60.00kV Ckt#2 Sec# 1	378	Amps	625	165	624	165	0
	Open Line LSNA PCC 60-PALERMO 60 #1								
	Open Xfmr APT ORVC 60/PO POWER 9.11 #1								
	Open Xfmr APT ORVC 60/PO POWER 9.11 #2								
	Drop Generator at PO POWER 9.11 #1 : 9 MW Dropped								

COMPARISON OF CATEGORY B POWERFLOW STUDY RESULTS - 2010 SPRING OFF-PEAK CASES

					Pre-Project		Post-Project		Loading
Outage #	Involved Facility(ies)	Impacted Facility(ies)	Rating		Amps/ MVA	% Loading	Amps/ MVA	% Loading	Change %
483	Open Line CAMINO S 230-LAKE 230 #1	WHITEROK-ORANGEVL 230.00kV Ckt#1 Sec# 1	880	Amps	869	99	864	98	(1)
531	Open Line LOON LK 69-UNIONVLY 69 #1	ROBBS PK-UNIONVLY 69.00kV Ckt#1 Sec# 1	805	Amps	790	98	790	98	0
533	Open Line ROBBS PK 69-UNIONVLY 69 #1	LOON LK -UNIONVLY 69.00kV Ckt#1 Sec# 1	805	Amps	791	98	792	98	0
542	Open Xfmr ELVERTAS 230/ELVRTAX1 230 #1	ELVERTA2-ELVRTAX2 69.00/ 230.00kV Bk#1	111	MVA	153	138	155	139	1
543	Open Xfmr ELVERTA1 69/ELVRTAX1 230 #1	ELVERTA2-ELVRTAX2 69.00/ 230.00kV Bk#1	111	MVA	119	107	119	107	0
544	Open Xfmr ELVERTAS 230/ELVRTAX2 230 #1	ELVERTA1-ELVRTAX1 69.00/ 230.00kV Bk#1	111	MVA	153	138	155	140	2
545	Open Xfmr ELVERTA2 69/ELVRTAX2 230 #1	ELVERTA1-ELVRTAX1 69.00/ 230.00kV Bk#1	111	MVA	119	107	119	107	0
654	Open Xfmr ROSEVILL 230/ROSEVLL1 60 #1	ROSEVILL-ROSEVLL2 230.00/ 60.00kV Bk#2	170	MVA	191	112	191	112	0

COMPARISON OF CATEGORY C POWERFLOW STUDY RESULTS - 2010 SPRING OFF-PEAK CASES

					Pre-Project		Post-Project		Loading
Outage #	Involved Facility(ies)	Impacted Facility(ies)	Rating		Amps/ MVA	% Loading	Amps/ MVA	% Loading	Change %
43	Open Line COTWDWAP 230-OLINDAW 230 #1	OLINDAW -KESWICK 230.00kV Ckt#1 Sec# 1	1,054	Amps	1,027	98	1,064	101	3
	Open Line COTWDWAP 230-AIRPORTW 230 #1								
	Open Line COTWDWAP 230-SHASTA 230 #2								
	Open Line COTWDWAP 230-ROUND MT 230 #1								
71	Open Line COTWDPGE 115-WILDWOOD 115 #1	CASCADE -OREGNTRL 60.00kV Ckt#1 Sec# 1	327	Amps	329	101	333	102	1
	Open Line COTWDPGE 115-JESSUPJ1 115 #1	OREGNTRL-LOMS JCT 60.00kV Ckt#1 Sec# 1	327	Amps	322	98	326	100	2
	Open Xfmr COTWDPGE 115/COTWD_F 230 #4								
115	Open Line COLGATE 230-RIO OSO 230 #1	PALERMO -E.MRY J2 115.00kV Ckt#1 Sec# 1	412	Amps	472	115	481	117	2
	Open Xfmr COLGATE 230/COLGATE2 13.8 #1	E.NICOLS-RIO OSO 115.00kV Ckt#1 Sec# 1	417	Amps	452	108	463	111	3
	Drop Generator at COLGATE2 13.8 #1 : 154.5 MW Drop								
	Open Line TBL MT D 230-RIO OSO 230 #1								
121	Open Line PALERMO 230-COLGATE 230 #1	PALERMO -E.MRY J2 115.00kV Ckt#1 Sec# 1	412	Amps	413	100	422	102	2
	Open Xfmr COLGATE 230/COLGATE1 13.8 #1	BANGOR -COLGATE 60.00kV Ckt#1 Sec# 1	282	Amps	276	98	283	100	2
	Drop Generator at COLGATE1 13.8 #1 : 154.5 MW Drop								
	Open Line TBL MT D 230-RIO OSO 230 #1								
122	Open Line PALERMO 230-COLGATE 230 #1	BANGOR -COLGATE 60.00kV Ckt#1 Sec# 1	282	Amps	298	106	300	106	0
	Open Xfmr COLGATE 230/COLGATE1 13.8 #1	PALERMO -BANGOR 60.00kV Ckt#1 Sec# 1	327	Amps	339	104	341	104	0
	Drop Generator at COLGATE1 13.8 #1 : 154.5 MW Drop								
	Open Line COLGATE 230-RIO OSO 230 #1								
	Open Xfmr COLGATE 230/COLGATE2 13.8 #1								
	Drop Generator at COLGATE2 13.8 #1 : 154.5 MW Drop								
135	Open Line P0506STA 230-VACA-DIX 230 #2	P0506STA-CORTINA 230.00kV Ckt#1 Sec# 1	954	Amps			994	104	
	Open Line P0506STA 230-VACA-DIX 230 #4								
181	Open Line CAMINO S 230-LAKE 230 #1	WHITEROK-ORANGEVL 230.00kV Ckt#1 Sec# 1	880	Amps	1,489	169	1,491	169	0
	Open Line WHITEROK 230-HEDGE 230 #1								
188	Open Line OLINDAW 230-COTWDWAP 230 #2	OLINDAW -KESWICK 230.00kV Ckt#1 Sec# 1	1,054	Amps	848	81	1,086	103	22
	Open Line OLINDAW 230-COTWDWAP 230 #1								
189	Open Line COTWDWAP 230-SHASTA 230 #1	SHASTA -FLANAGAN 230.00kV Ckt#1 Sec# 1	800	Amps	1,125	141	1,126	141	0
	Open Line COTWDWAP 230-SHASTA 230 #2	FLANAGAN-KESWICK 230.00kV Ckt#1 Sec# 1	800	Amps	1,052	132	1,055	132	0

COMPARISON OF CATEGORY B POWERFLOW STUDY RESULTS - 2010 SUMMER OFF-PEAK CASES

					Pre-Project		Post-Project		Loading
Outage #	Involved Facility(ies)	Impacted Facility(ies)	Rating		Amps/ MVA	% Loading	Amps/ MVA	% Loading	Change %
64	Open Xfmr LAKEVLLE 60/LAKEVILE 230 #3	COTATI -SNMA TAP 60.00kV Ckt#1 Sec# 1	346	Amps	2,098	606	2,098	606	0
	Close Line ST.HELNA 60-DUNBAR 60 #1	LAGUNATP-MLNO JCT 60.00kV Ckt#1 Sec# 1	346	Amps	2,038	588	2,038	588	0
	Open Line LAKEVLLE 60-DUNBAR 60 #1	MLNO JCT-FULTON 60.00kV Ckt#1 Sec# 1	739	Amps	2,147	291	2,147	291	0
	Close Line PETC_JCT 60-COTATI 60 #1	PETC_JCT-COTATI 60.00kV Ckt#1 Sec# 1	510	Amps	1,941	381	1,941	381	0
	Close Line PETLMA C 60-PETC_JCT 60 #1	PETLMA C-PETC_JCT 60.00kV Ckt#1 Sec# 1	510	Amps	1,818	357	1,818	357	0
	Open Line MCDWLLSW 60-PETLMA C 60 #1	SNMA TAP-LAGUNATP 60.00kV Ckt#1 Sec# 1	346	Amps	2,000	577	2,000	577	0
	Open Line PETLMA A 60-LKVLE JT 60 #1								
	Open Line MCDWLLSW 60-LAKEVLLE 60 #1								
	Open Line LAKEVLLE 60-LKVLE JT 60 #1								
194	Open Line PALERMO 230-COLGATE 230 #1	PALRMO M-PALERMO 230.00/ 60.00kV Bk#1	84	MVA	84	100	84	100	0
	Open Xfmr COLGATE 230/COLGATE1 13.8 #1								
	Drop Generator at COLGATE1 13.8 #1 : 85.5 MW Dropp								
240	Open Line OROVILLE 60-LSNA PCC 60 #1	ELGN JCT-PALERMO 60.00kV Ckt#2 Sec# 1	378	Amps	687	182	688	182	0
	Open Line LSNA PCC 60-APT ORVC 60 #1	ORONRGTP-ELGN JCT 60.00kV Ckt#2 Sec# 1	344	Amps	597	173	597	173	0
	Open Line LSNA PCC 60-PALERMO 60 #1								
	Open Xfmr APT ORVC 60/PO POWER 9.11 #1								
	Open Xfmr APT ORVC 60/PO POWER 9.11 #2								
	Drop Generator at PO POWER 9.11 #1 : 9 MW Dropped								
241	Open Line PALERMO 60-BANGOR 60 #1	PALRMO M-PALERMO 230.00/ 60.00kV Bk#1	84	MVA	89	106	89	106	0
	Open Line BANGOR 60-COLGATE 60 #1								
	Drop Load at BANGOR 60 #1 : 2 MW 0 MVAR Dropped								
342	Drop Generator at KELLYRDG 9.11 #1: 10.3 MW Dropped	ORONRGTP-ELGN JCT 60.00kV Ckt#2 Sec# 1	344	Amps	412	120	413	120	0
379	Open Line PALERMO 230-COLGATE 230 #1	PALRMO M-PALERMO 230.00/ 60.00kV Bk#1	84	MVA	85	102	85	102	0
	Open Xfmr COLGATE 230/COLGATE1 13.8 #1								
	Drop Generator at COLGATE1 13.8 #1 : 85.5 MW Dropp								
	Drop Generator at GRNLEAF1 13.8 #1: 40 MW Dropped								
482	Open Line GOLDHILL 230-LAKE 230 #1	ELVERTA1-ELVRTAX1 69.00/ 230.00kV Bk#1	111	MVA	109	99	110	99	0
495	Open Line ELVERTAS 230-ELVERTAW 230 #1	ELVERTA1-ELVRTAX1 69.00/ 230.00kV Bk#1	111	MVA	109	98	110	99	1
537	Open Line TRCY PMP 230-HURLEY S 230 #1	ELVERTA1-ELVRTAX1 69.00/ 230.00kV Bk#1	111	MVA	110	99	110	99	0
538	Open Line TRCY PMP 230-HURLEY S 230 #2	ELVERTA1-ELVRTAX1 69.00/ 230.00kV Bk#1	111	MVA	110	99	110	100	1
603	Drop Generator at WHITERK2 13.8 #1: 20 MW Dropped	ELVERTA1-ELVRTAX1 69.00/ 230.00kV Bk#1	111	MVA	109	98	110	99	1
605	Drop Generator at COSUMNE1 18 #1: 165 MW Dropped	ELVERTA1-ELVRTAX1 69.00/ 230.00kV Bk#1	111	MVA	109	99	110	99	0
606	Drop Generator at COSUMNE2 18 #1: 165 MW Dropped	ELVERTA1-ELVRTAX1 69.00/ 230.00kV Bk#1	111	MVA	109	99	110	99	0
607	Drop Generator at COSUMNE3 16.5 #1: 170 MW Dropped	ELVERTA1-ELVRTAX1 69.00/ 230.00kV Bk#1	111	MVA	110	99	110	99	0
614	Open Line SUTTER 230-OBANION 230 #1	ELVERTA1-ELVRTAX1 69.00/ 230.00kV Bk#1	111	MVA	109	98	110	99	1

COMPARISON OF CATEGORY C POWERFLOW STUDY RESULTS - 2010 SUMMER OFF-PEAK CASES

Outage #	Involved Facility(ies)	Impacted Facility(ies)	Rating		Pre-Project Amps/ MVA	Pre-Project % Loading	Post-Project Amps/ MVA	Post-Project % Loading	Loading Change %
38	Open Line HUMBOLDT 60-HMBLT BY 60 #1	HMBLT JT-HUMBOLDT 60.00kV Ckt#2 Sec# 1	356	Amps	353	99	354	99	0
	Open Line HUMBOLDT 115-HMBLDT B 115 #1								
56	Open Line CARIBOU 230-BELDENTP 230 #1	BIG BEND-WYANDJT2 115.00kV Ckt#2 Sec# 1	377	Amps	395	105	395	105	0
	Open Xfmr CARIBOU 230/CARBOU M 230 #1	WYANDJT2-PALERMO 115.00kV Ckt#2 Sec# 1	377	Amps	394	105	394	105	0
	Open Xfmr CARIBOU 230/CRBU 4-5 13.8 #1	GRIZ JCT-BIG BEND 115.00kV Ckt#1 Sec# 1	402	Amps	396	99	396	99	0
63	Open Line TBL MT D 230-BELDENTP 230 #1	BIG BEND-WYANDJT2 115.00kV Ckt#2 Sec# 1	377	Amps	524	139	524	139	0
	Open Line TBL MT D 230-TBL MT E 230 #1	WYANDJT2-PALERMO 115.00kV Ckt#2 Sec# 1	377	Amps	523	139	523	139	0
	Open Line TBL MT D 230-PALERMO 230 #1	BIG BEND-GRIZ JCT 115.00kV Ckt#1 Sec# 1	402	Amps	524	130	524	130	0
	Open Line TBL MT D 230-RIO OSO 230 #1	GRIZ JCT-CARIBOU 115.00kV Ckt#1 Sec# 1	402	Amps	445	111	445	111	0
	Open Line TBL MT D 230-TBL MTX1 230 #1								
	Open Xfmr TBL MT D 230/TBLE MTN 115 #4								
	Open Xfmr TBL MT D 230/TBL MT2M 230 #1								
	Open Xfmr TBL MT D 230/TBL MT3M 230 #1								
66	Open Line PALERMO 230-TBL MT D 230 #1	ELGN JCT-PALERMO 60.00kV Ckt#2 Sec# 1	378	Amps	480	127	480	127	0
	Open Line PALERMO 230-COLGATE 230 #1	ORONRGTP-ELGN JCT 60.00kV Ckt#2 Sec# 1	344	Amps	391	113	391	114	1
	Open Xfmr PALERMO 230/PALRMO M 230 #1	PALRMO M-PALERMO 230.00/ 60.00kV Bk#1	84	MVA	82	98	82	98	0
121	Open Line PALERMO 230-COLGATE 230 #1	PALRMO M-PALERMO 230.00/ 60.00kV Bk#1	84	MVA	87	103	86	103	0
	Open Xfmr COLGATE 230/COLGATE1 13.8 #1								
	Drop Generator at COLGATE1 13.8 #1 : 85.5 MW Dropp								
	Open Line TBL MT D 230-RIO OSO 230 #1								
122	Open Line PALERMO 230-COLGATE 230 #1	PALRMO M-PALERMO 230.00/ 60.00kV Bk#1	84	MVA	84	100	84	100	0
	Open Xfmr COLGATE 230/COLGATE1 13.8 #1								
	Drop Generator at COLGATE1 13.8 #1 : 85.5 MW Dropp								
	Open Line COLGATE 230-RIO OSO 230 #1								
	Open Xfmr COLGATE 230/COLGATE2 13.8 #1								
	Drop Generator at COLGATE2 13.8 #1 : 85.5 MW Dropp								
174	Open Line ELKGROVE 230-HEDGE 230 #1	ELVERTA1-ELVRTAX1 69.00/ 230.00kV Bk#1	111	MVA	110	99	111	100	1
	Open Line HEDGE 230-RNCHSECO 230 #1								
175	Open Line ELKGROVE 230-RNCHSECO 230 #1	ELVERTA1-ELVRTAX1 69.00/ 230.00kV Bk#1	111	MVA	110	99	110	100	1
	Open Line HEDGE 230-RNCHSECO 230 #1								
186	Open Line OBANION 230-ELVERTAW 230 #2	ELVERTA1-ELVRTAX1 69.00/ 230.00kV Bk#1	111	MVA	109	98	110	99	1
	Open Line OBANION 230-ELVERTAW 230 #1								
	Drop Generator at SUTTER1 18 #1 : 160 MW Dropped								
	Drop Generator at SUTTER2 18 #2 : 160 MW Dropped								
	Drop Generator at SUTTER3 18 #3 : 160 MW Dropped								

COMPARISON OF CATEGORY C POWERFLOW STUDY RESULTS - 2010 SUMMER OFF-PEAK CASES

				Pre-Project		Post-Project		Loading
Outage #	Involved Facility(ies)	Impacted Facility(ies)	Rating	Amps/ MVA	% Loading	Amps/ MVA	% Loading	Change %
187	Open Line FIDDYMNT 230-ELVERTAW 230 #1	ELVERTA1-ELVRTAX1 69.00/ 230.00kV Bk#1	111 MVA	110	99	111	100	1
	Open Line ROSEVILL 230-ELVERTAW 230 #1							
	Open Xfmr FIDDYMNT 230/FIDDYMNT 60 #1							
	Open Xfmr FIDDYMNT 230/FIDDYMNT 60 #2							
	Drop Load at FIDDYMNT 60 #1: 22.7 MW 12.7 MVAR Dr							
	Drop Load at FIDDYMNT 60 #2: 22.7 MW 12.7 MVAR Dr							

Appendix D

Steady State and Governor Power Flow Plots

CPV SIS Power Flow Plots

Steady-state Power Flow Category A

Plot	Description
Plot #1	2010 Heavy Summer - Before Project : Normal Conditions (MW/MVAr) 230 kV system
Plot #2	2010 Heavy Summer - Before Project : Normal Conditions (Amps/Pct) 230 kV system
Plot #3	2010 Heavy Summer - After Project : Normal Conditions (MW/MVAr) 230 kV system
Plot #4	2010 Heavy Summer - After Project : Normal Conditions (Amps/Pct) 230 kV system
Plot #5	2010 Heavy Summer - Before Project : Normal Conditions (MW/MVAr) 115kV system
Plot #6	2010 Heavy Summer - Before Project : Normal Conditions (Amps/Pct) 115kV system
Plot #7	2010 Heavy Summer - After Project : Normal Conditions (MW/MVAr) 115kV system
Plot #8	2010 Heavy Summer - After Project : Normal Conditions (Amps/Pct) 115kV system
Plot #9	2010 Summer Off-peak - Before Project : Normal Conditions (MW/MVAr)
Plot #10	2010 Summer Off-peak - Before Project : Normal Conditions (Amps/Pct)
Plot #11	2010 Summer Off-peak - After Project : Normal Conditions (MW/MVAr)
Plot #12	2010 Summer Off-peak - After Project : Normal Conditions (Amps/Pct)
Plot #13	2010 Spring Off-peak - Before Project : Normal Conditions (MW/MVAr)
Plot #14	2010 Spring Off-peak - Before Project : Normal Conditions (Amps/Pct)
Plot #15	2010 Spring Off-peak - After Project : Normal Conditions (MW/MVAr)
Plot #16	2010 Spring Off-peak - After Project : Normal Conditions (Amps/Pct)

Worst Steady-state Power Flow Category B Contingency

Plot	Description
Plot #17	2010 Heavy Summer - Before Project : Palermo - OWID 115 kV Line Outage (MW/MVAr)
Plot #18	2010 Heavy Summer - Before Project : Palermo - OWID 115 kV Line Outage (Amps/Pct)
Plot #19	2010 Heavy Summer - After Project : Palermo - OWID 115 kV Line Outage (MW/MVAr)
Plot #20	2010 Heavy Summer - After Project : Palermo - OWID 115 kV Line Outage (Amps/Pct)
Plot #21	2010 Heavy Summer - Before Project : Palermo - Pease 115 kV Line Outage (MW/MVAr)
Plot #22	2010 Heavy Summer - Before Project : Palermo - Pease 115 kV Line Outage (Amps/Pct)
Plot #23	2010 Heavy Summer - After Project : Palermo - Pease 115 kV Line Outage (MW/MVAr)
Plot #24	2010 Heavy Summer - After Project : Palermo - Pease 115 kV Line Outage (Amps/Pct)
Plot #25	2010 Heavy Summer - Before Project : Cottonwood (WAPA) - Roseville 230 kV Line Outage (MW/MVAr)
Plot #26	2010 Heavy Summer - Before Project : Cottonwood (WAPA) - Roseville 230 kV Line Outage (Amps/Pct)
Plot #27	2010 Heavy Summer - After Project : Cottonwood (WAPA) - Roseville 230 kV Line Outage (MW/MVAr)
Plot #28	2010 Heavy Summer - After Project : Cottonwood (WAPA) - Roseville 230 kV Line Outage (Amps/Pct)
Plot #29	2010 Heavy Summer - Before Project : Cottonwood - Shasta #1 230 kV Line Outage (MW/MVAr)
Plot #30	2010 Heavy Summer - Before Project : Cottonwood - Shasta #1 230 kV Line Outage (Amps/Pct)
Plot #31	2010 Heavy Summer - After Project : Cottonwood - Shasta #1 230 kV Line Outage (MW/MVAr)
Plot #32	2010 Heavy Summer - After Project : Cottonwood - Shasta #1 230 kV Line Outage (Amps/Pct)
Plot #33	2010 Heavy Summer - Before Project : Elverta W - Elverta S 230 kV Line Outage (MW/MVAr)
Plot #34	2010 Heavy Summer - Before Project : Elverta W - Elverta S 230 kV Line Outage (Amps/Pct)
Plot #35	2010 Heavy Summer - After Project : Elverta W - Elverta S 230 kV Line Outage (MW/MVAr)
Plot #36	2010 Heavy Summer - After Project : Elverta W - Elverta S 230 kV Line Outage (Amps/Pct)

Worst Governor Power Flow Category B Contingency

Plot	Description
Plot #37	2010 Heavy Summer - Before Project : Olinda - Tracy 500 kV Line Outage (MW/MVAr)
Plot #38	2010 Heavy Summer - Before Project : Olinda - Tracy 500 kV Line Outage (Amps/Pct)
Plot #39	2010 Heavy Summer - After Project : Olinda - Tracy 500 kV Line Outage (MW/MVAr)
Plot #40	2010 Heavy Summer - After Project : Olinda - Tracy 500 kV Line Outage (Amps/Pct)

Plot #41	2010 Heavy Summer - Before Project : Captain Jack - Olinda 500 kV Line Outage (MW/MVAr)
Plot #42	2010 Heavy Summer - Before Project : Captain Jack - Olinda 500 kV Line Outage (Amps/Pct)
Plot #43	2010 Heavy Summer - After Project : Captain Jack - Olinda 500 kV Line Outage (MW/MVAr)
Plot #44	2010 Heavy Summer - After Project : Captain Jack - Olinda 500 kV Line Outage (Amps/Pct)
Plot #45	2010 Spring Off-peak - Before Project : Captain Jack - Olinda 500 kV Line Outage (MW/MVAr)
Plot #46	2010 Spring Off-peak - Before Project : Captain Jack - Olinda 500 kV Line Outage (Amps/Pct)
Plot #47	2010 Spring Off-peak - After Project : Captain Jack - Olinda 500 kV Line Outage (MW/MVAr)
Plot #48	2010 Spring Off-peak - After Project : Captain Jack - Olinda 500 kV Line Outage (Amps/Pct)

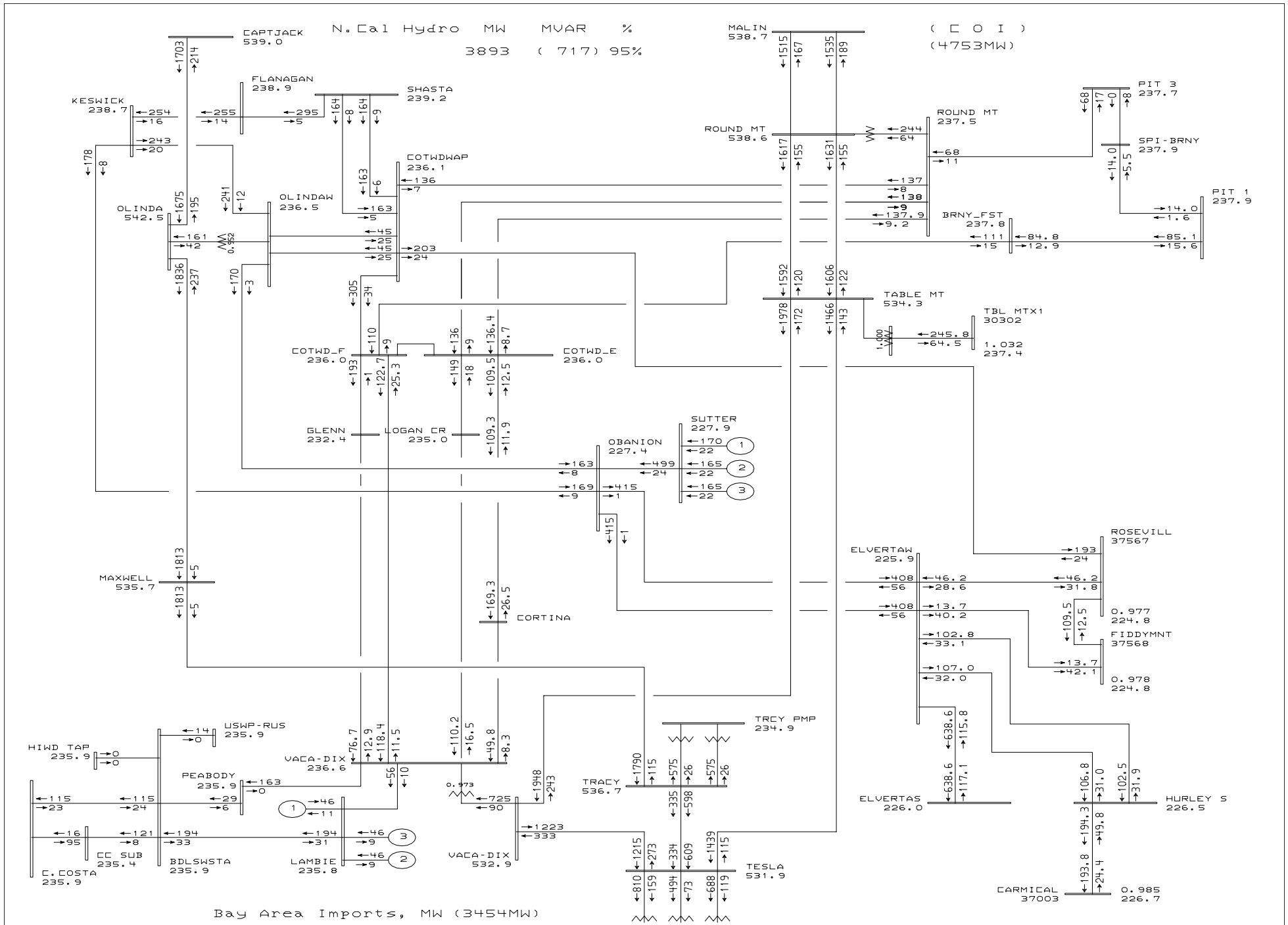

General Electric International, Inc. PSLF Program MW/MVAR Tue Sep 06 10:21:49 2005

PG&E 2004 BASE CASE SERIES - 2010 North Valley Summer Peak Case
PATH15=-518 MW(S-N) PATH26=3352 MW(N-S) PDCI=3105 MW(N-S) COI=4754 MW(N-S)
CPV Colusa - 2010 Summer Peak - before (TMPP & P0441 removed)

Plot 01 - Heavy Summer - Before Project

D:\PSLF_Work\Projects\EL_Colus
D:\PSLF_Work\Projects\EL_Colus
Rating = 1

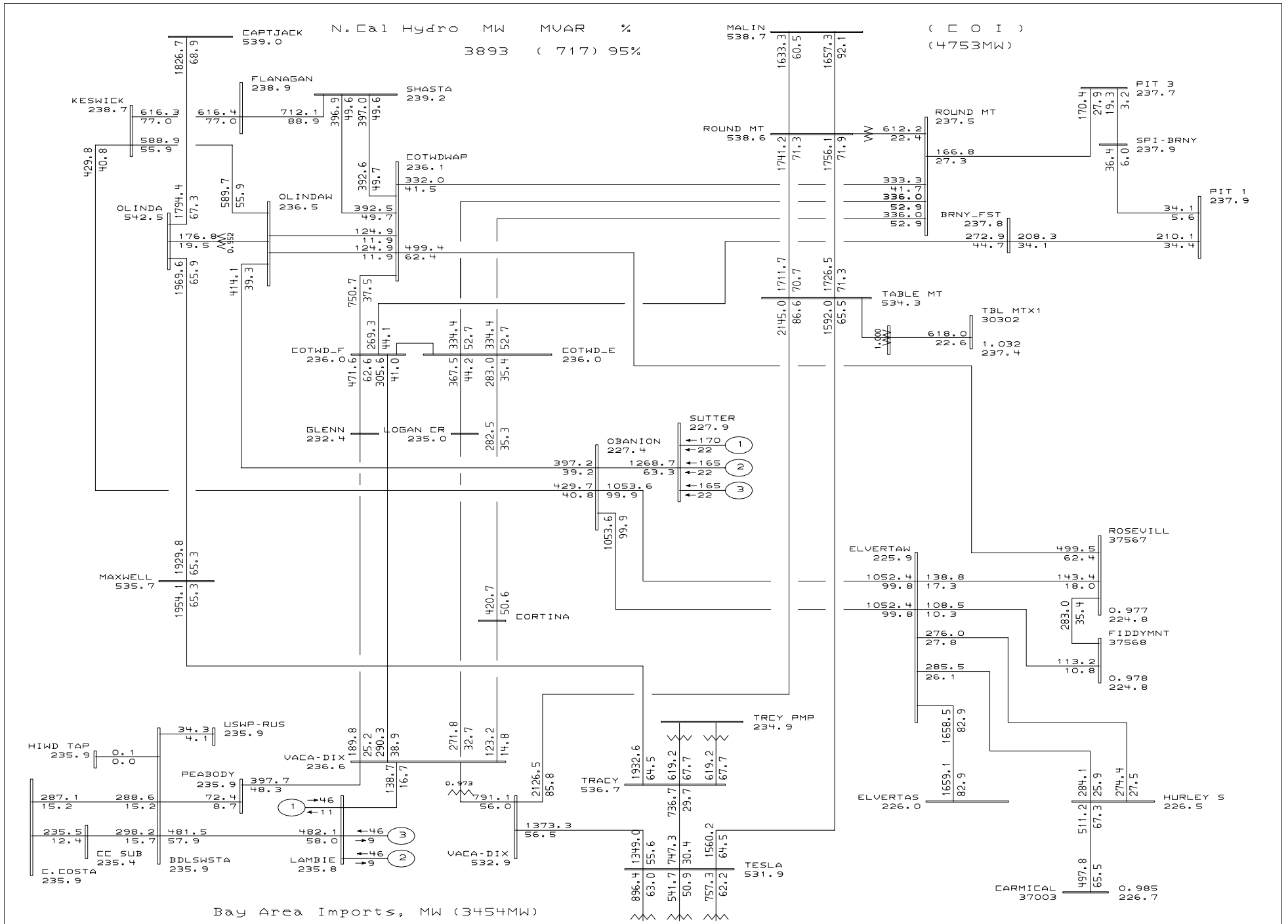

General Electric International, Inc. PSLF Program AMPS/Pct Tue Sep 06 10:21:50 2005

PG&E 2004 BASE CASE SERIES - 2010 North Valley Summer Peak Case
PATH15=-518 MW(S-N) PATH26=3352 MW(N-S) PDCI=3105 MW(N-S) COI=4754 MW(N-S)
CPV Colusa - 2010 Summer Peak - before (TMPP & P0441 removed)

Plot 02 - Heavy Summer - Before Project

D:\PSLF_Work\Projects\EL_Colus
D:\PSLF_Work\Projects\EL_Colus
Rating = 1

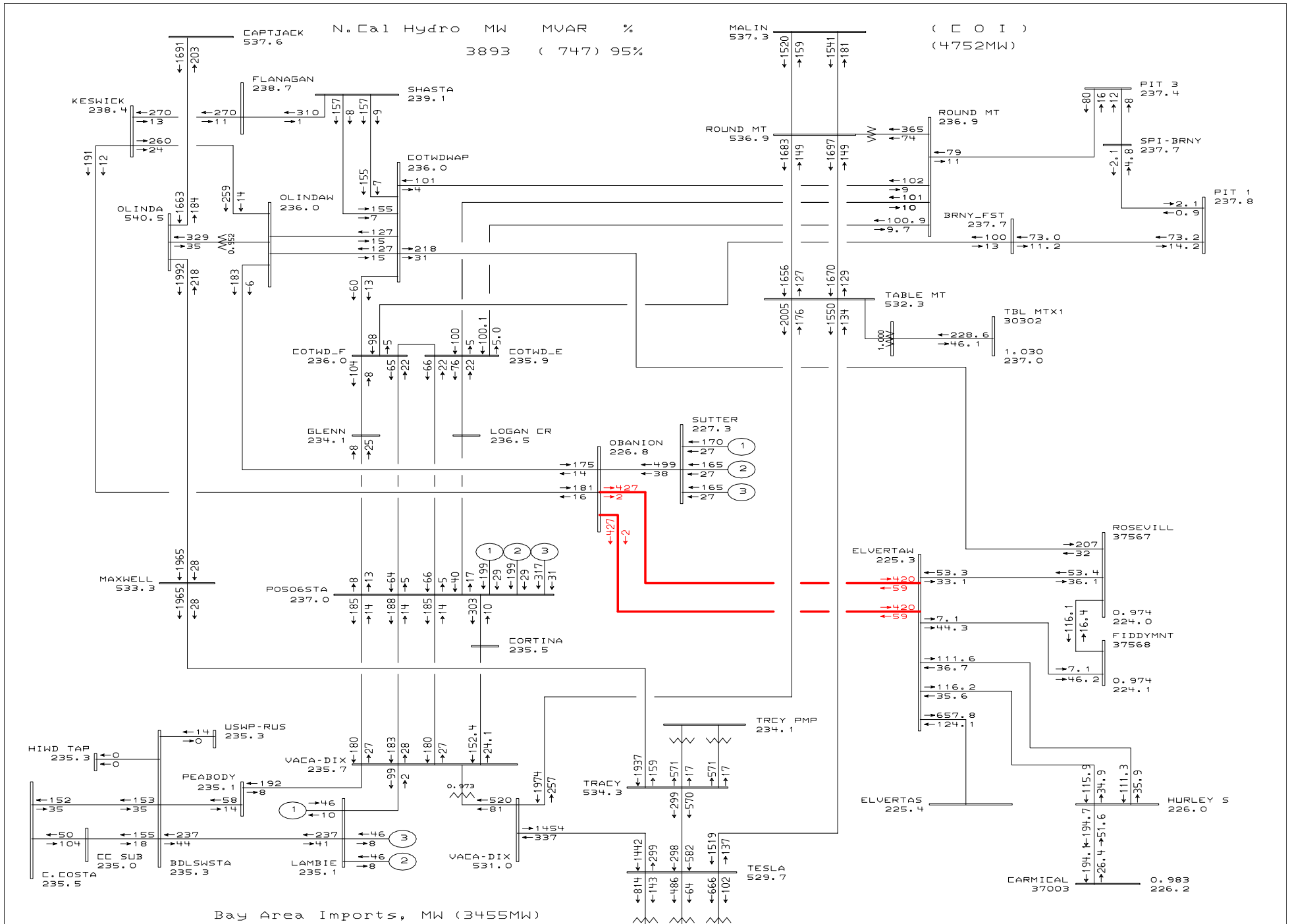

General Electric International, Inc. PSLF Program MW/MVAR Tue Sep 06 10:21:49 2005

PG&E 2004 BASE CASE SERIES - 2010 North Valley Summer Peak Case
PATH15=-1127 MW(S-N) PATH26=3313 MW(N-S) PDCI=3105 MW(N-S) COI=4753 MW(N-S)
CPV Colusa - 2010 Summer Peak - after (TMPP & P0441 removed)

Plot 03 - Heavy Summer - After Project

D:\PSLF_Work\Projects\EL_Colus
D:\PSLF_Work\Projects\EL_Colus
Rating = 1

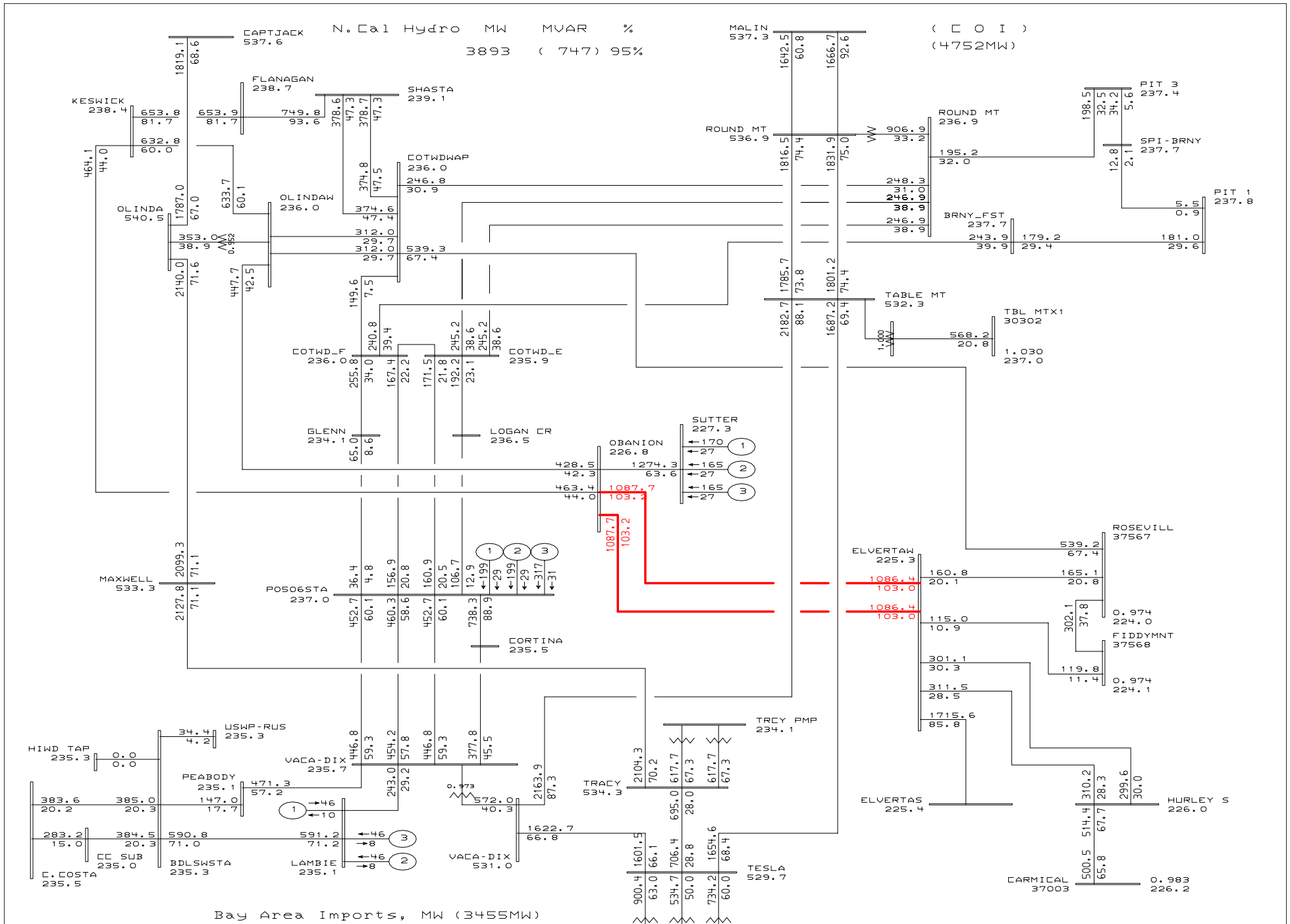

General Electric International, Inc. PSLF Program AMPS/Pct Tue Sep 06 10:21:50 2005

PG&E 2004 BASE CASE SERIES - 2010 North Valley Summer Peak Case
PATH15=-1127 MW(S-N) PATH26=3313 MW(N-S) PDCI=3105 MW(N-S) COI=4753 MW(N-S)
CPV Colusa - 2010 Summer Peak - after (TMPP & P0441 removed)

Plot 04 - Heavy Summer - After Project

D:\PSLF_Work\Projects\EL_Colus
D:\PSLF_Work\Projects\EL_Colus
Rating = 1

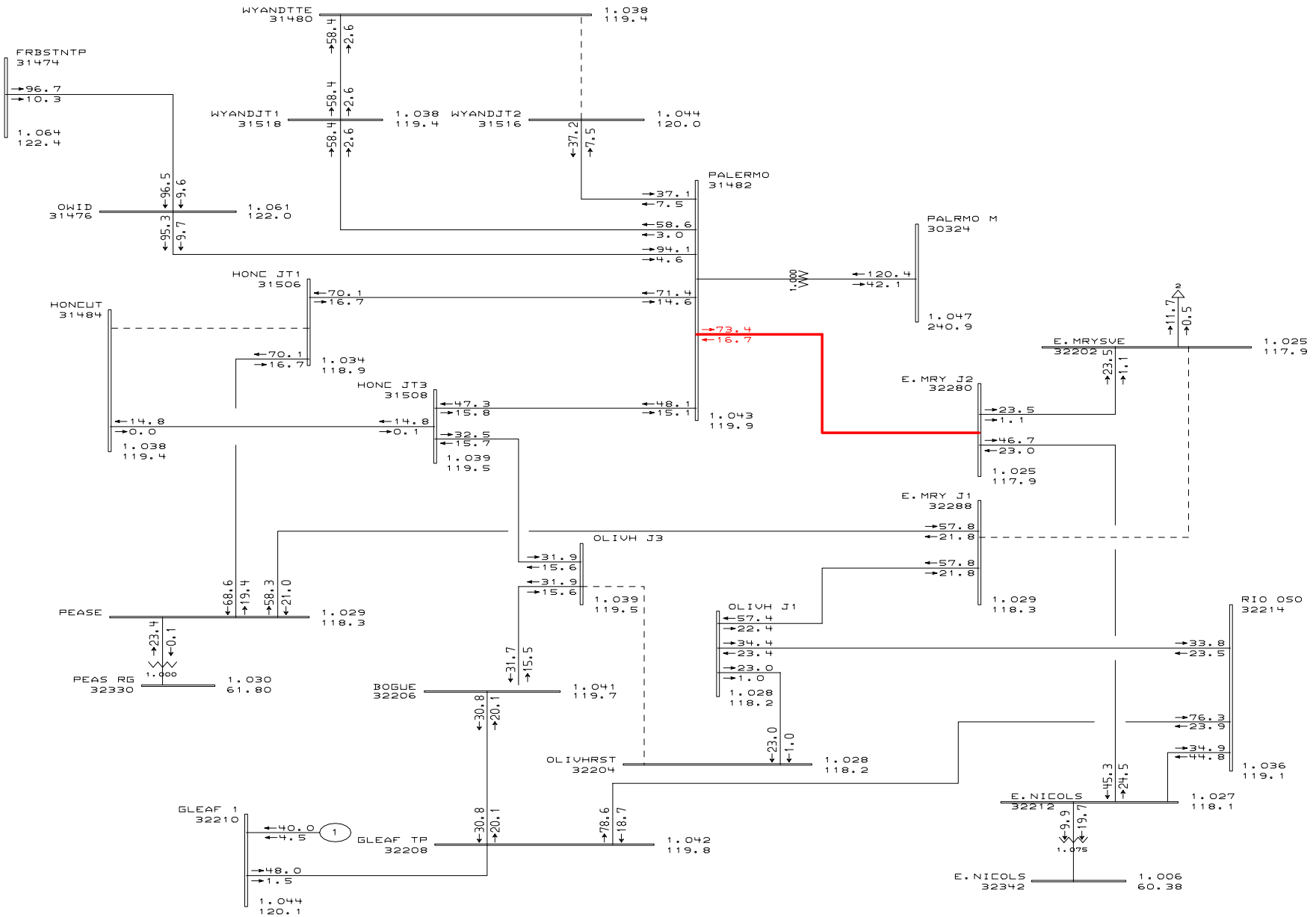

General Electric International, Inc. PSLF Program MW/MVAR Tue Sep 06 10:21:50 2005

PG&E 2004 BASE CASE SERIES - 2010 North Valley Summer Peak Case
PATH15=-518 MW(S-N) PATH26=3352 MW(N-S) PDCI=3105 MW(N-S) COI=4754 MW(N-S)
CPV Colusa - 2010 Summer Peak - before (TMPP & P0441 removed)

Plot 05 - Heavy Summer - Before Project

D:\PSLF_Work\Projects\EL_Colus
D:\PSLF_Work\Projects\EL_Colus
Rating = 1

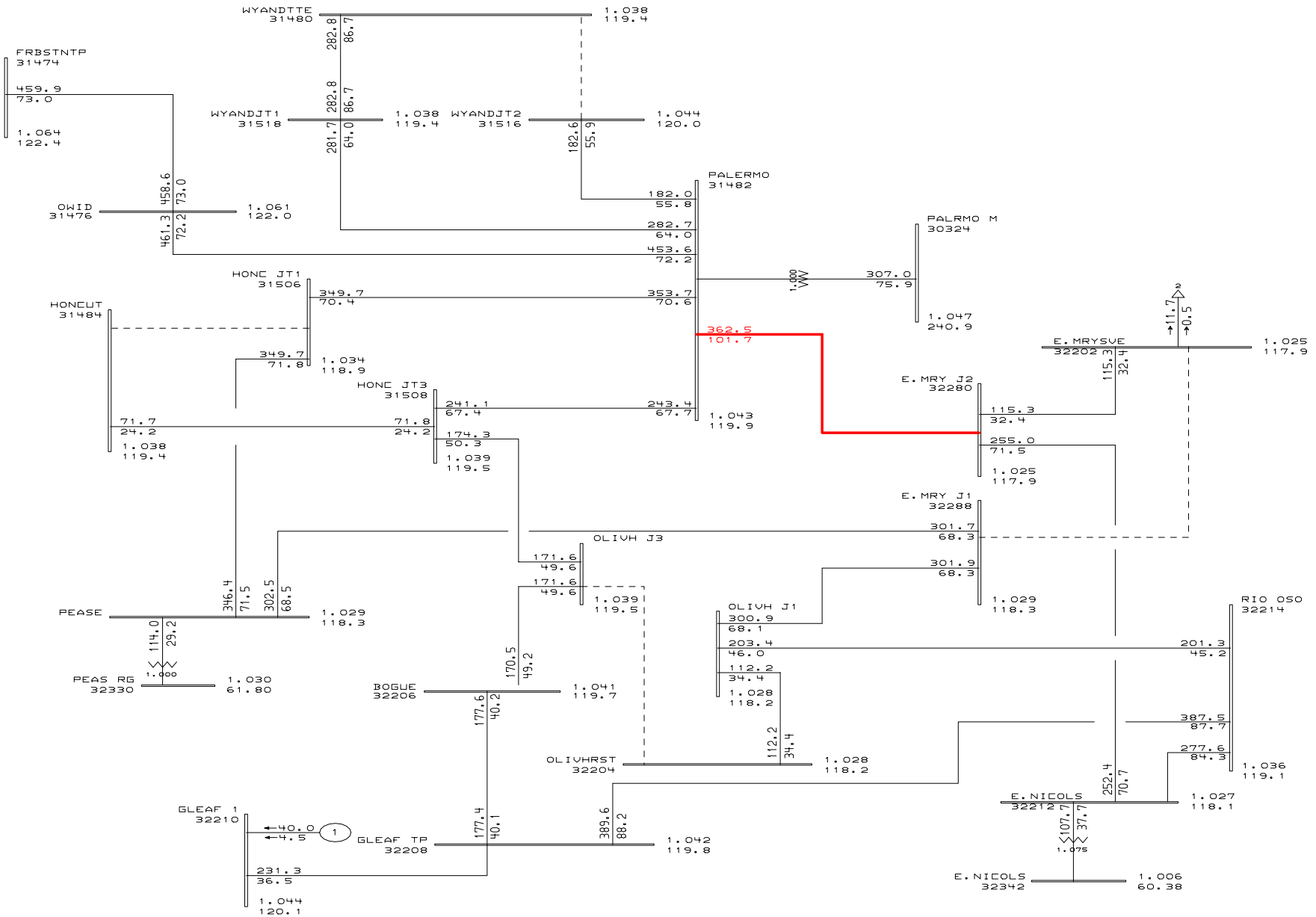

General Electric International, Inc. PSLF Program AMPS/Pct Tue Sep 06 10:21:50 2005

PG&E 2004 BASE CASE SERIES - 2010 North Valley Summer Peak Case
PATH15=-518 MW(S-N) PATH26=3352 MW(N-S) PDCI=3105 MW(N-S) COI=4754 MW(N-S)
CPV Colusa - 2010 Summer Peak - before (TMPP & P0441 removed)

Plot 06 - Heavy Summer - Before Project

D:\PSLF_Work\Projects\EL_Colus
D:\PSLF_Work\Projects\EL_Colus
Rating = 1

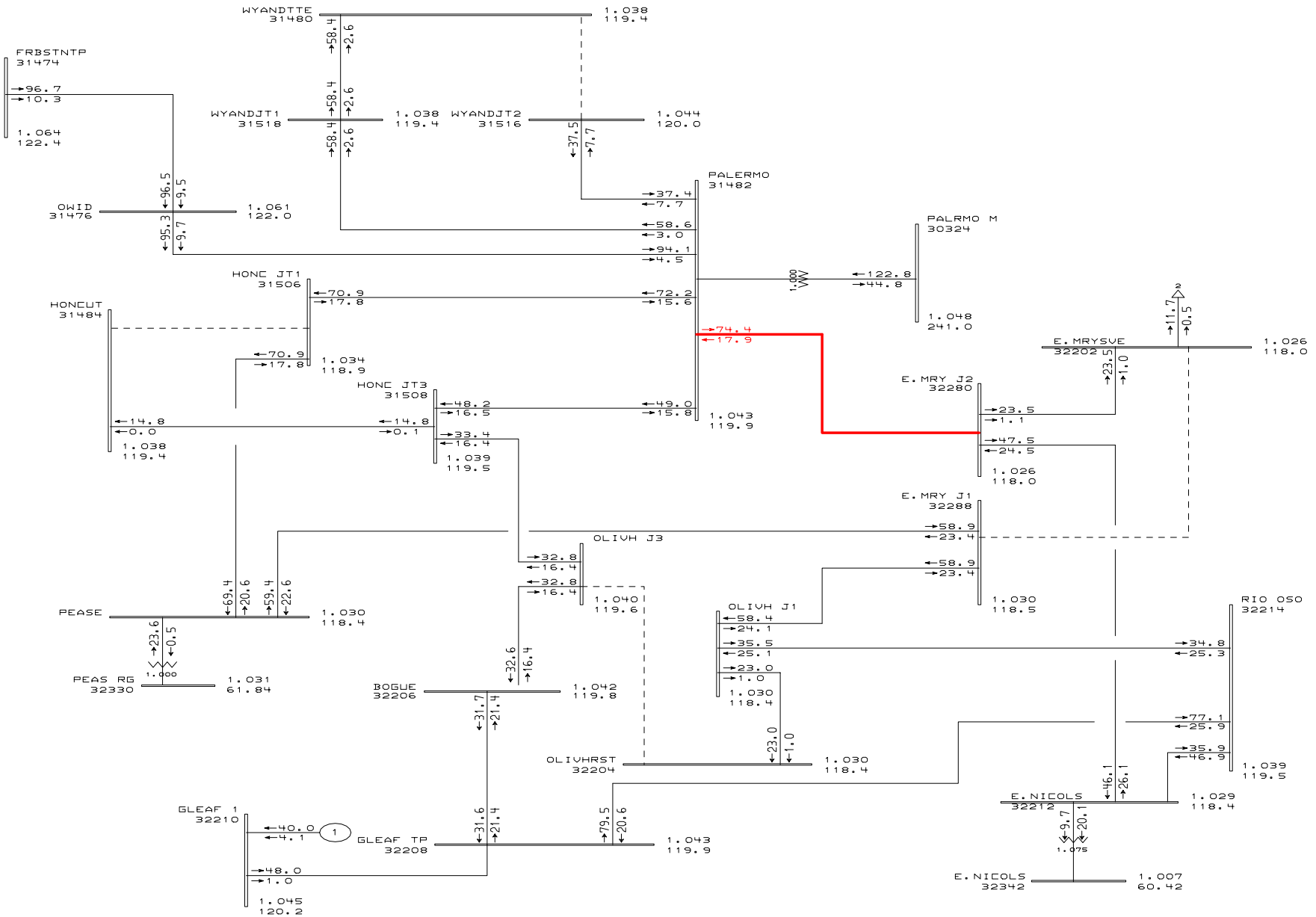

General Electric International, Inc. PSLF Program MW/MVAR Tue Sep 06 10:21:50 2005

PG&E 2004 BASE CASE SERIES - 2010 North Valley Summer Peak Case
PATH15=-1127 MW(S-N) PATH26=3313 MW(N-S) PDCI=3105 MW(N-S) COI=4753 MW(N-S)
CPV Colusa - 2010 Summer Peak - after (TMPP & P0441 removed)

Plot 07 - Heavy Summer - After Project

D:\PSLF_Work\Projects\EL_Colus
D:\PSLF_Work\Projects\EL_Colus
Rating = 1

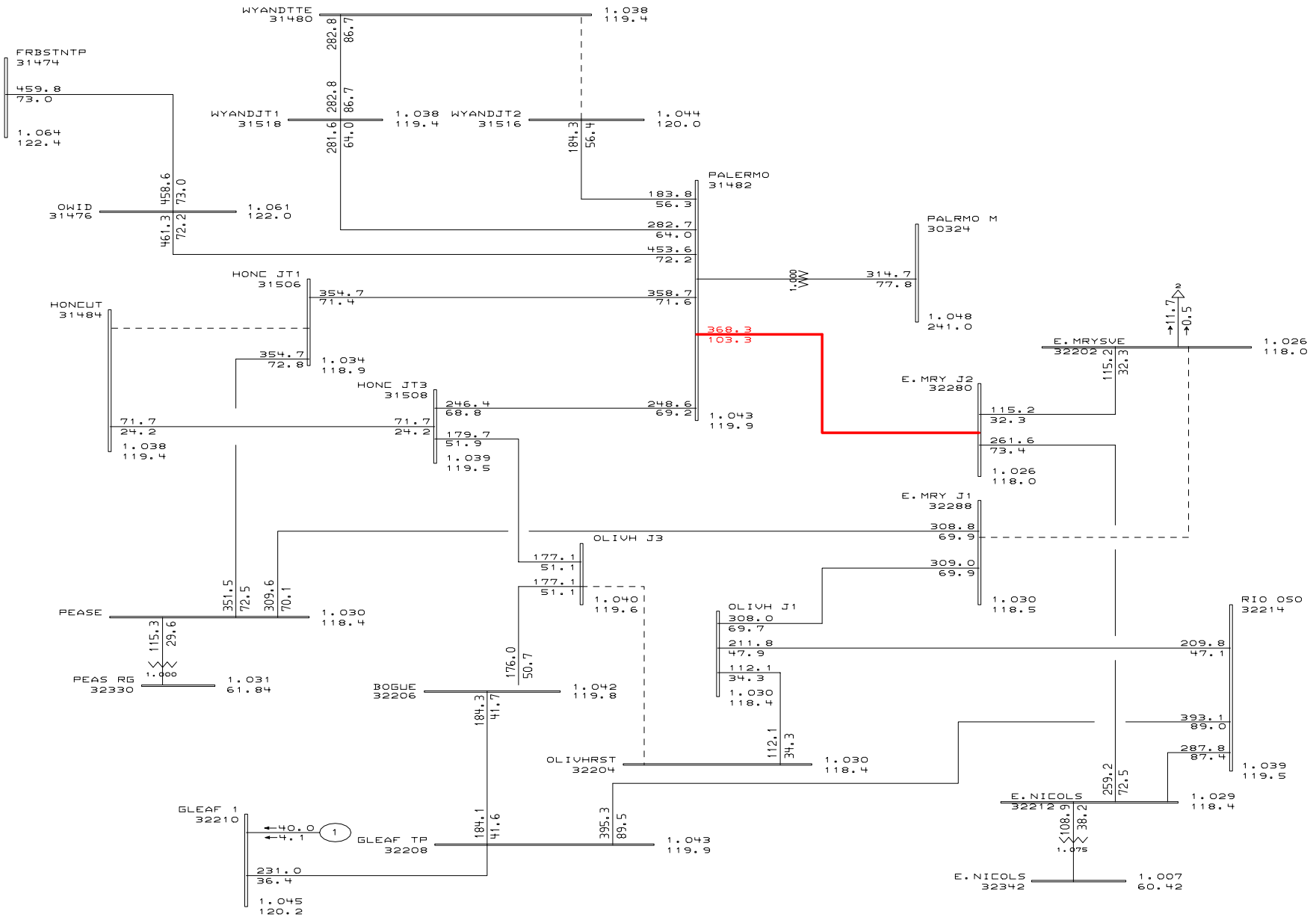

General Electric International, Inc. PSLF Program AMPS/Pct Tue Sep 06 10:21:51 2005

PG&E 2004 BASE CASE SERIES - 2010 North Valley Summer Peak Case
PATH15=-1127 MW(S-N) PATH26=3313 MW(N-S) PDCI=3105 MW(N-S) COI=4753 MW(N-S)
CPV Colusa - 2010 Summer Peak - after (TMPP & P0441 removed)

Plot 08 - Heavy Summer - After Project

D:\PSLF_Work\Projects\EL_Colus
D:\PSLF_Work\Projects\EL_Colus
Rating = 1

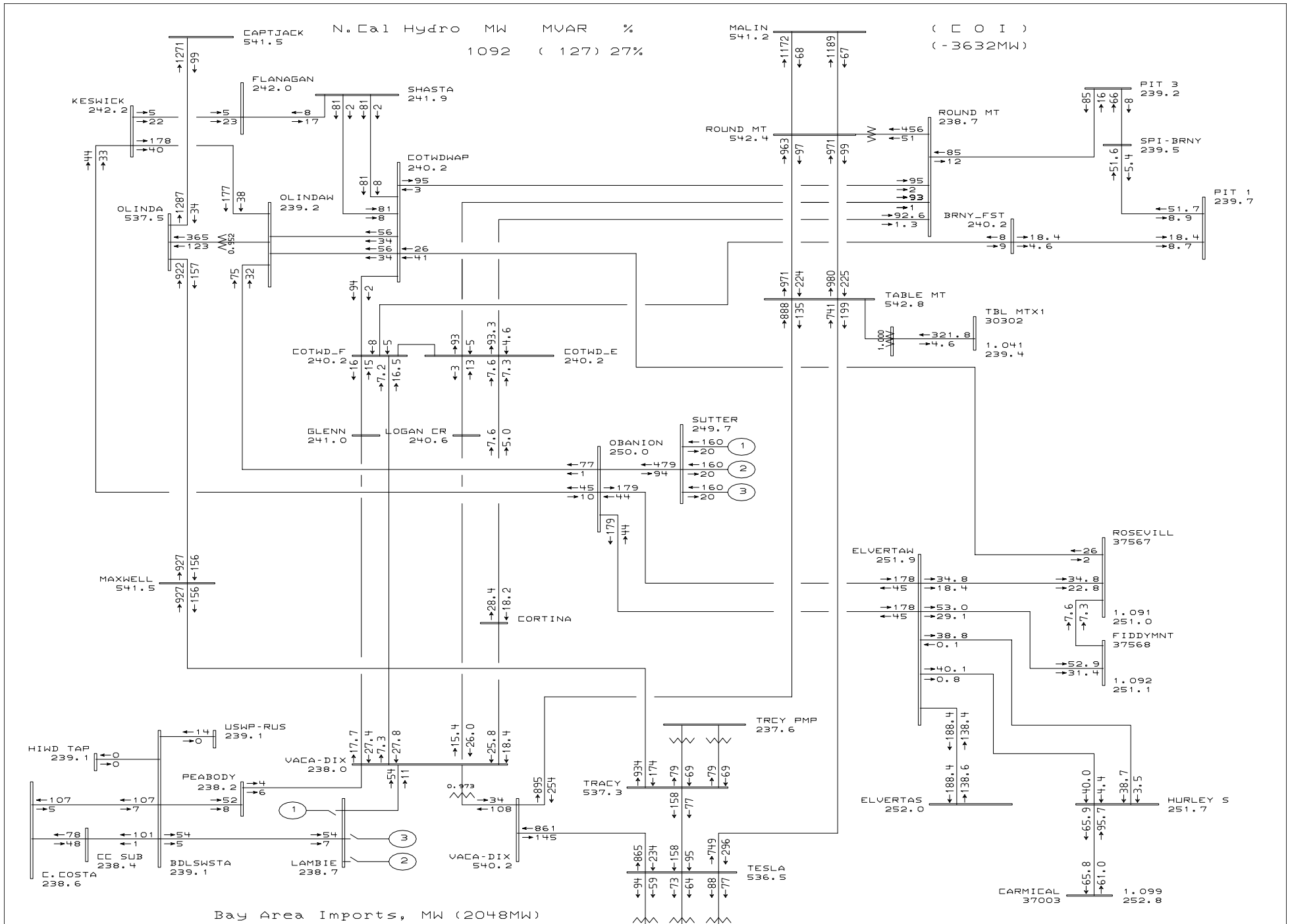

General Electric International, Inc. PSLF Program MW/MVAR Tue Sep 06 10:21:51 2005

PG&E 2004 BASE CASE SERIES - 2010 Summer Off Peak Case
PATH15=4675 MW(S-N) PATH26=-1448 MW(N-S) PDCI=-1848 MW(N-S) COI=-3632 MW(N-S)
CPV Colusa - 2010 Summer Off Peak - before (TMPP & PO441 removed)

Plot 09 - Summer Off-peak - Before Project

D:\PSLF_Work\Projects\EL_Colus
D:\PSLF_Work\Projects\EL_Colus
Rating = 1

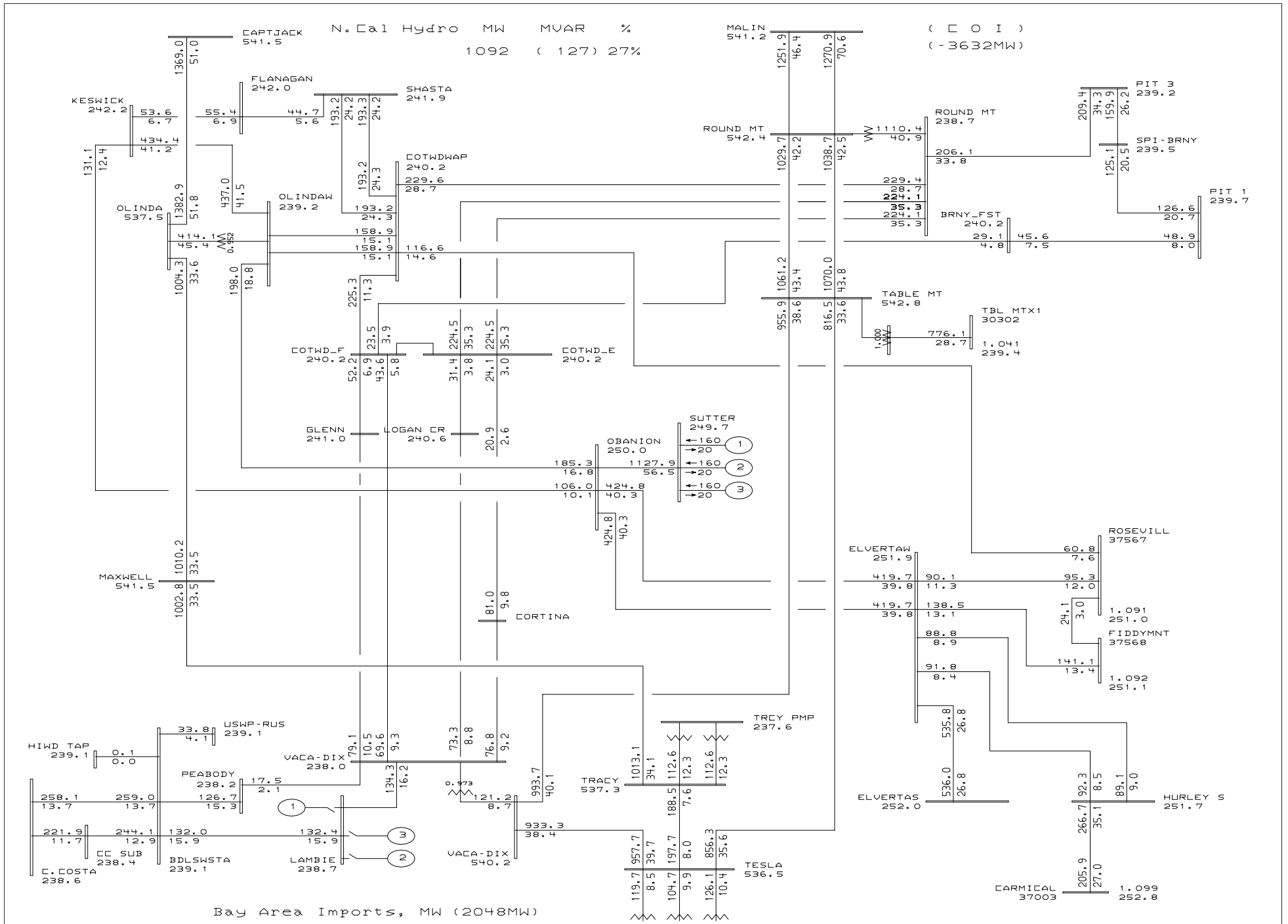

General Electric International, Inc. PSLF Program AMPS/Pct Tue Sep 06 10:21:52 2005

PG&E 2004 BASE CASE SERIES - 2010 Summer Off Peak Case
PATH15=4675 MW(S-N) PATH26=-1448 MW(N-S) PDCI=-1848 MW(N-S) COI=-3632 MW(N-S)
CPV Colusa - 2010 Summer Off Peak - before (TMPP & PO441 removed)

Plot 10 - Summer Off-peak - Before Project

D:\PSLF_Work\Projects\EL_Colus
D:\PSLF_Work\Projects\EL_Colus
Rating = 1

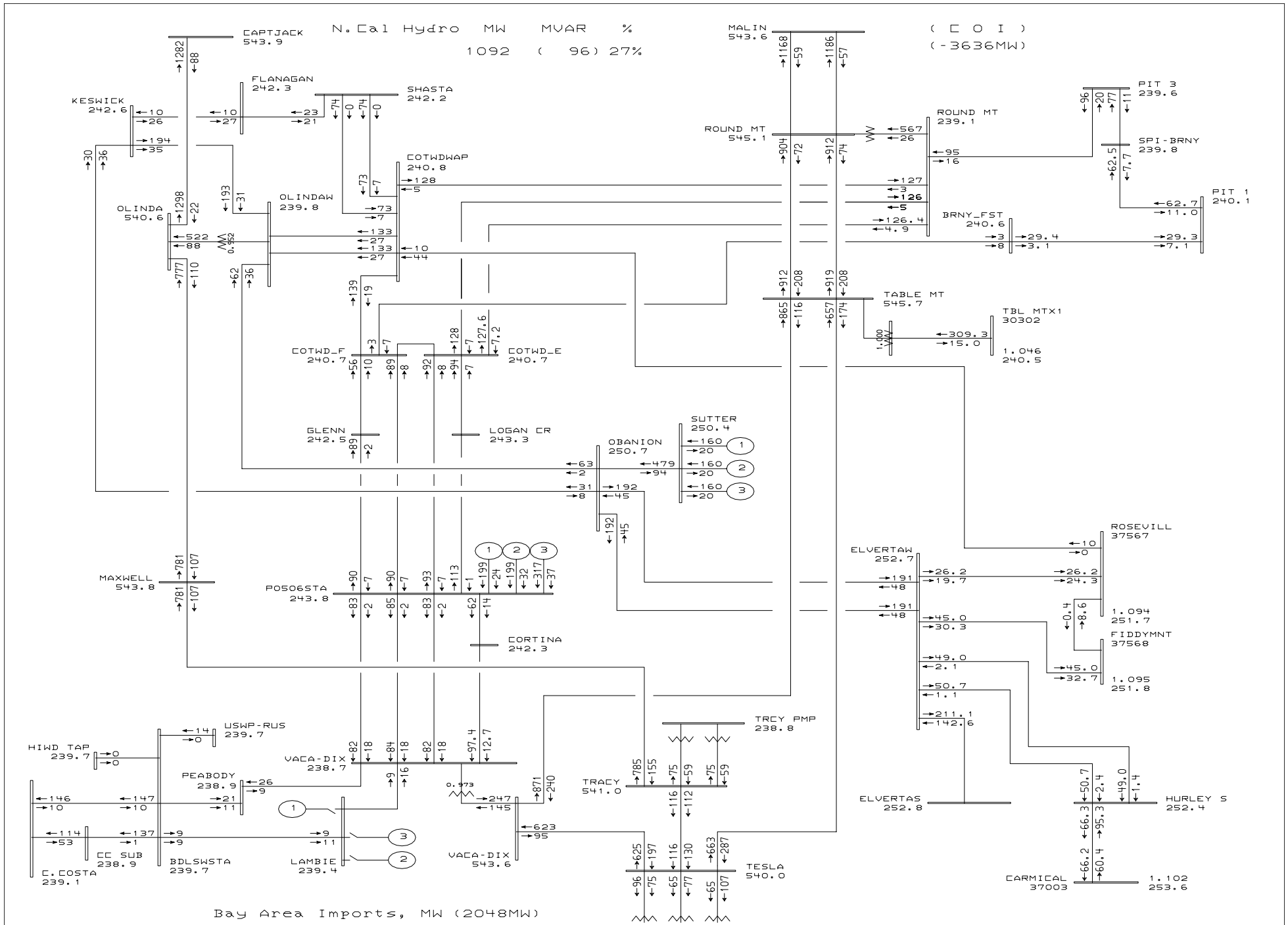

General Electric International, Inc. PSLF Program MW/MVAR Tue Sep 06 10:21:51 2005

PG&E 2004 BASE CASE SERIES - 2010 Summer Off Peak Case
PATH15=4015 MW(S-N) PATH26=-1492 MW(N-S) PDCI=-1848 MW(N-S) COI=-3634 MW(N-S)
CPV Colusa - 2010 Summer Off Peak - after (TMPP & P0441 removed)

Plot 11 - Summer Off-peak - After Project

D:\PSLF_Work\Projects\EL_Colus
D:\PSLF_Work\Projects\EL_Colus
Rating = 1

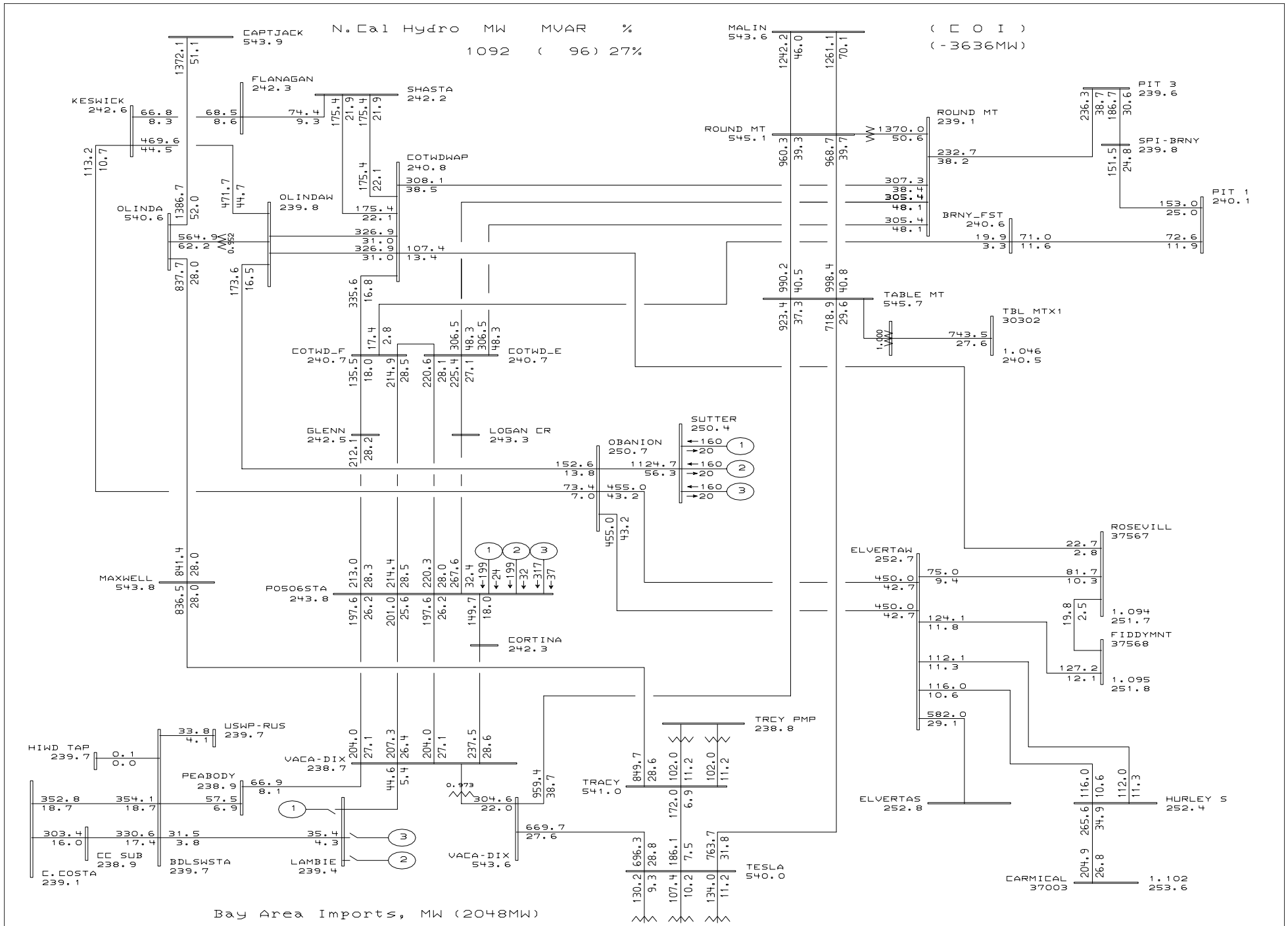

General Electric International, Inc. PSLF Program AMPS/Pct Tue Sep 06 10:21:52 2005

PG&E 2004 BASE CASE SERIES - 2010 Summer Off Peak Case
PATH15=4015 MW(S-N) PATH26=-1492 MW(N-S) PDCI=-1848 MW(N-S) COI=-3634 MW(N-S)
CPV Colusa - 2010 Summer Off Peak - after (TMPP & P0441 removed)

Plot 12 - Summer Off-peak - After Project

D:\PSLF_Work\Projects\EL_Colus
D:\PSLF_Work\Projects\EL_Colus
Rating = 1

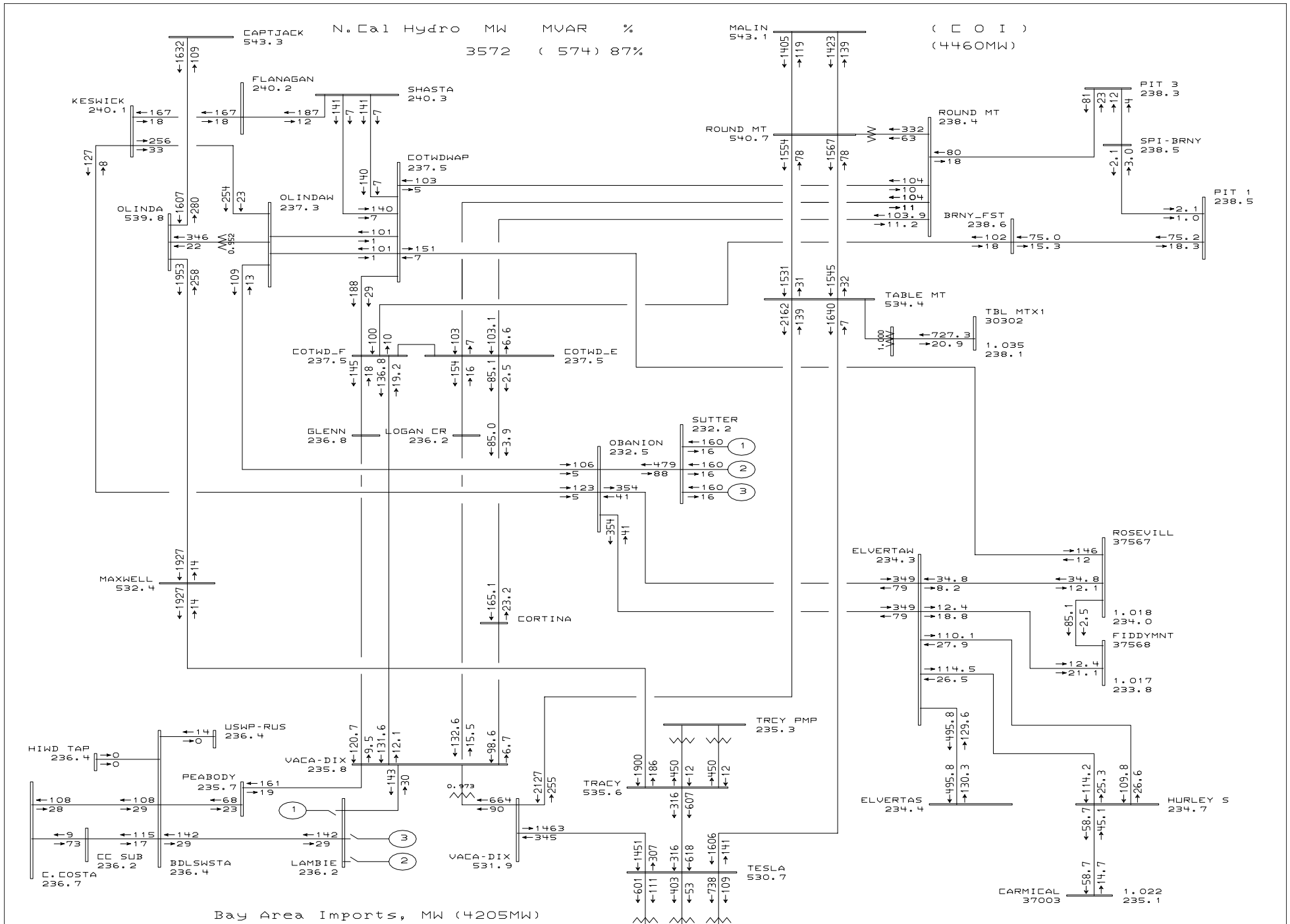

General Electric International, Inc. PSLF Program MW/MVAR Tue Sep 06 10:21:52 2005

PG&E 2004 BASE CASE SERIES - 2010 North Valley Spring Off Peak Case
PATH15=-2139 MW(S-N) PATH26=3365 MW(N-S) PDCI=3105 MW(N-S) COI=4460 MW(N-S)
CPV Colusa - 2010 Spring Off Peak - before (TMPP and P0441 removed)

Plot 13 - Spring Off-peak - Before Project

D:\PSLF_Work\Projects\EL_Colus
D:\PSLF_Work\Projects\EL_Colus
Rating = 1

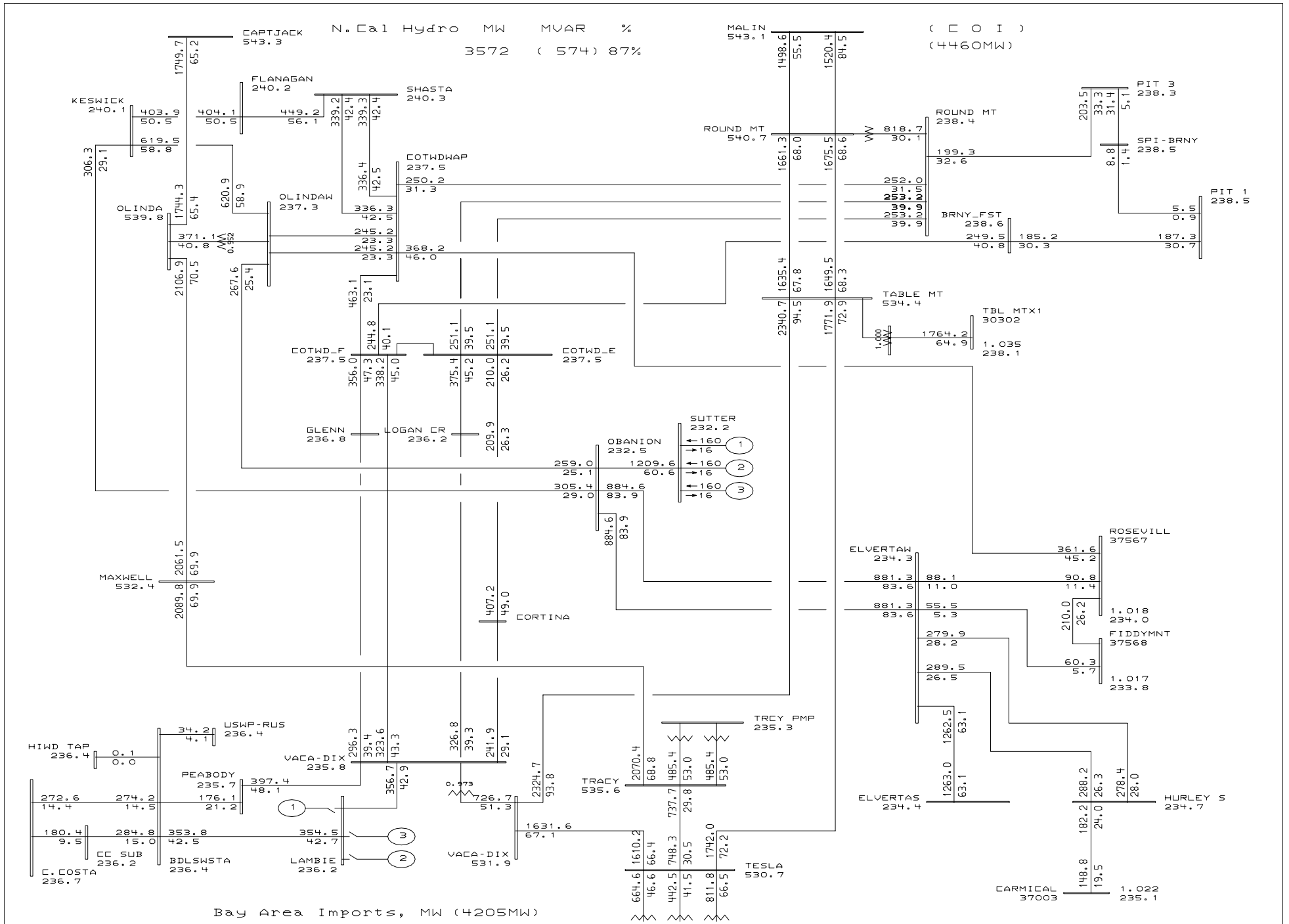

General Electric International, Inc. PSLF Program AMPS/Pct Tue Sep 06 10:21:53 2005

PG&E 2004 BASE CASE SERIES - 2010 North Valley Spring Off Peak Case
PATH15=-2139 MW(S-N) PATH26=3365 MW(N-S) PDCI=3105 MW(N-S) COI=4460 MW(N-S)
CPV Colusa - 2010 Spring Off Peak - before (TMPP and PO441 removed)

Plot 14 - Spring Off-peak - Before Project

D:\PSLF_Work\Projects\EL_Colus
D:\PSLF_Work\Projects\EL_Colus
Rating = 1

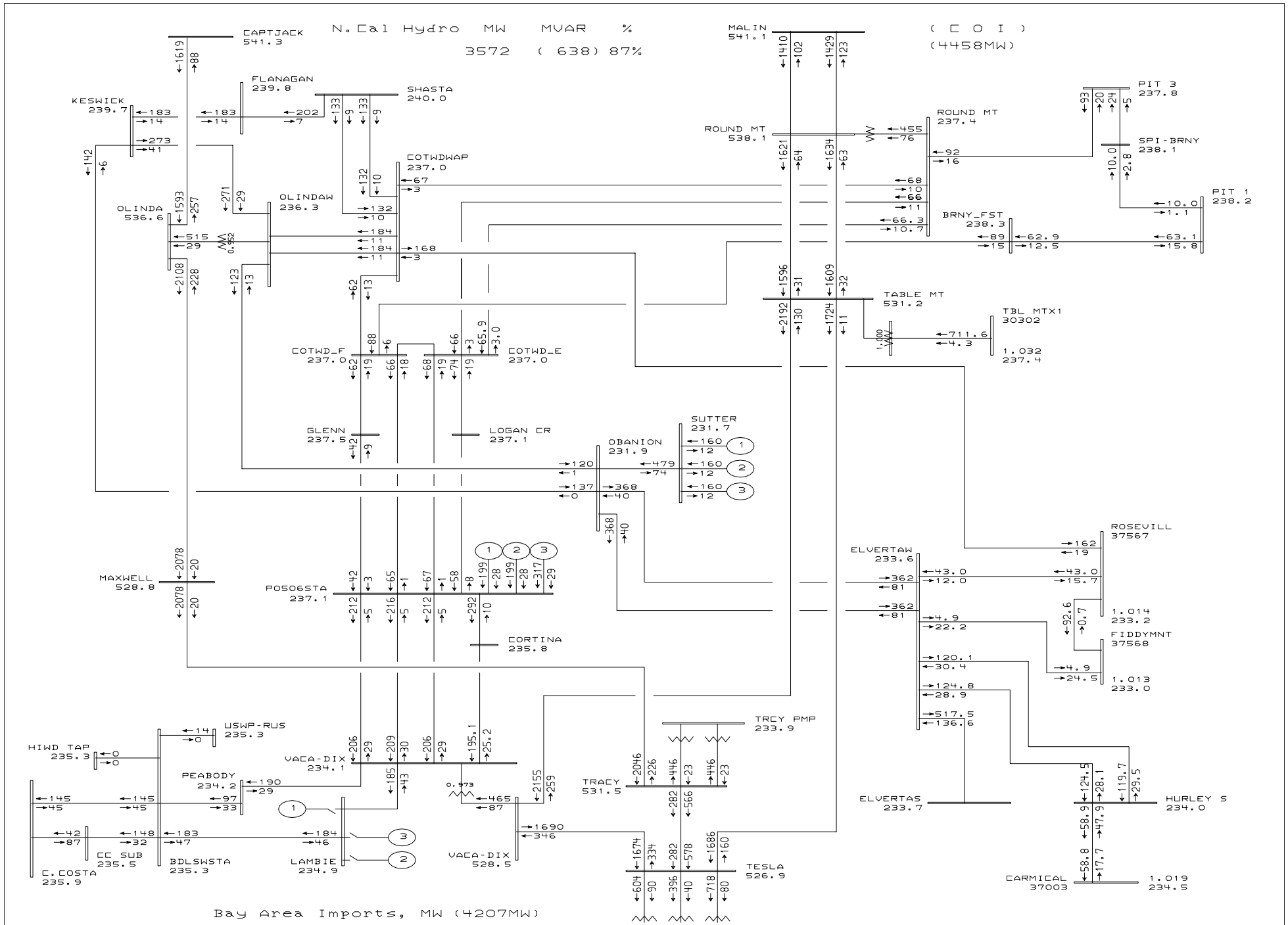
N. Cal Hydro MW MVAR %
3572 (638) 87%
(C O I)
(4458MW)
CAPTJACK 541.3
MALIN 541.1
FLANAGAN 239.8
SHASTA 240.0
KESWICK 239.7
ROUND MT 538.1
ROUND MT 237.4
PIT 3 237.8
SPI-BRNY 238.1
PIT 1 238.2
BRNY_FST 238.3
COTWDWAP 237.0
OLINDAW 236.3
OLINDA 536.6
TABLE MT 531.2
TBL MTX1 30302
1.032 237.4
COTWD_F 237.0
COTWD_E 237.0
GLENN 237.5
LOGAN CR 237.1
SUTTER 231.7
OBANION 231.9
ROSEVILL 37567
ELVERTAW 233.6
MAXWELL 528.8
POSO6STA 237.1
1.014 233.2
FIDDYMNT 37568
1.013 233.0
CORTINA 235.8
TRCY PMP 233.9
USWP-RUS 235.3
HIWD TAP 235.3
VACA-DIX 234.1
PEABODY 234.2
TRACY 531.5
ELVERTAS 233.7
HURLEY S 234.0
CC SUB 235.5
BDLSWSTA 235.3
LAMBIE 234.9
VACA-DIX 528.5
TESLA 526.9
C.COSTA 235.9
CARMICAL 37003
1.019 234.5
Bay Area Imports, MW (4207MW)

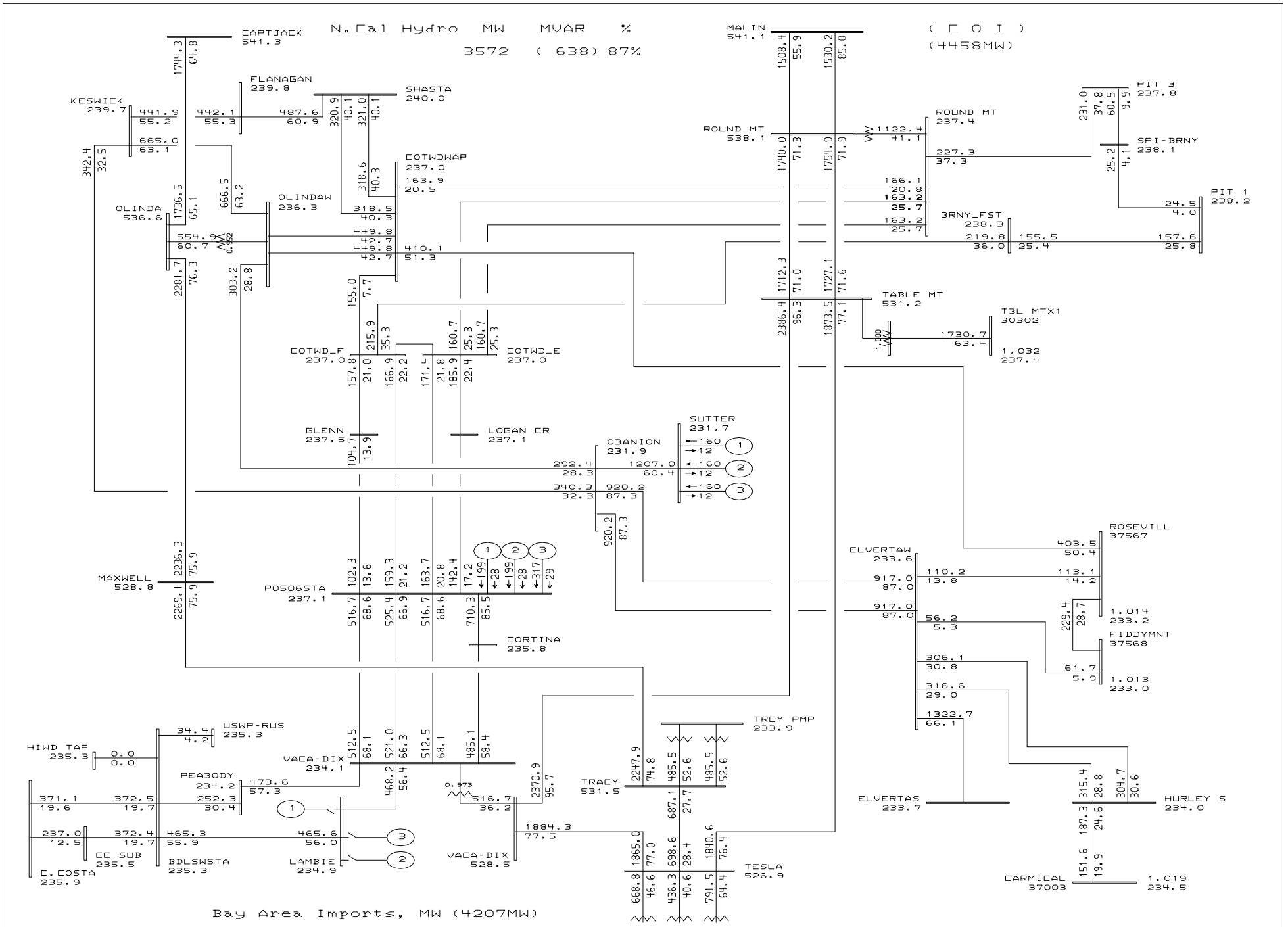

General Electric International, Inc. PSLF Program AMPS/Pct Tue Sep 06 10:21:53 2005

PG&E 2004 BASE CASE SERIES - 2010 North Valley Spring Off Peak Case
PATH15=-2732 MW(S-N) PATH26=3330 MW(N-S) PDCI=3103 MW(N-S) COI=4458 MW(N-S)
CPV Colusa - 2010 Spring Off Peak - after (TMPP & P0441 removed)

Plot 16 - Spring Off-peak - After Project

D:\PSLF_Work\Projects\EL_Colus
D:\PSLF_Work\Projects\EL_Colus
Rating = 1

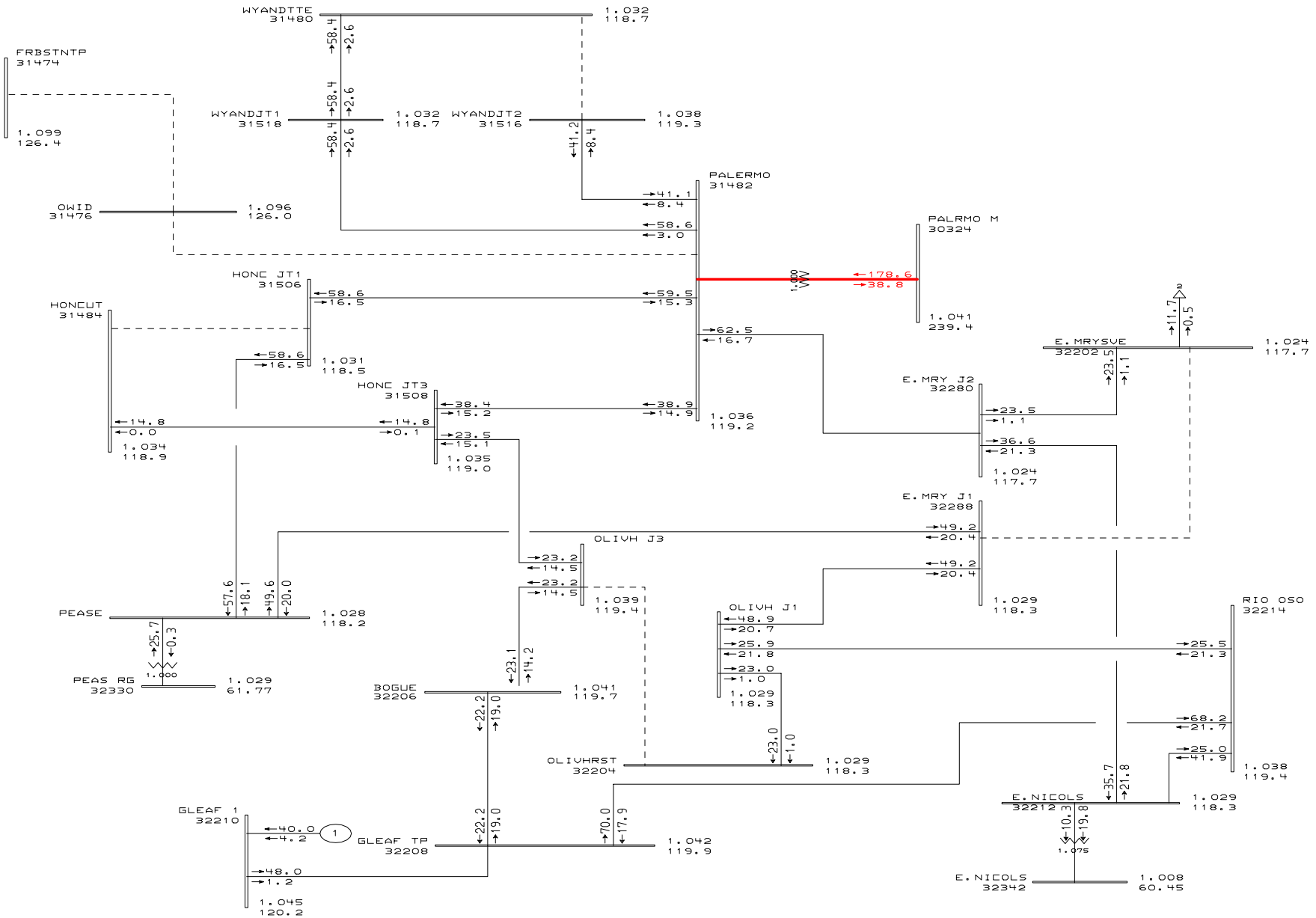

General Electric International, Inc. PSLF Program MW/MVAR Tue Sep 06 10:21:55 2005

PG&E 2004 BASE CASE SERIES - 2010 North Valley Summer Peak Case
PATH15=-518 MW(S-N) PATH26=3352 MW(N-S) PDCI=3105 MW(N-S) COI=4754 MW(N-S)
CPV Colusa - 2010 Summer Peak - before (TMPP & P0441 removed)

Plot 17 - Heavy Summer - Before Project
Outage: Palermo - OWID 115 kV Line

D:\PSLF_Work\Projects\EL_Colus
D:\PSLF_Work\Projects\EL_Colus
Rating = 2

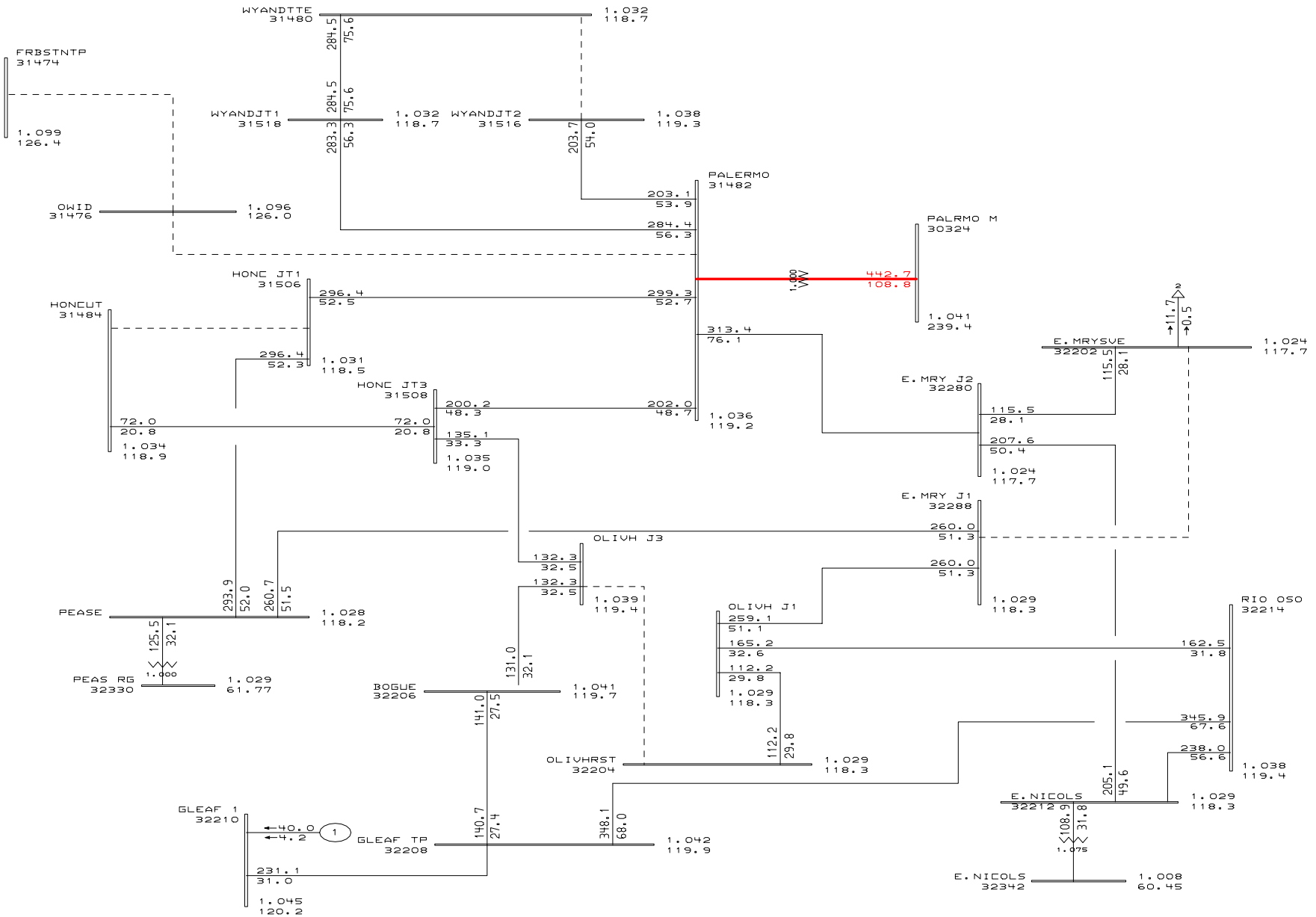

General Electric International, Inc. PSLF Program AMPS/Pct Tue Sep 06 10:21:58 2005

PG&E 2004 BASE CASE SERIES - 2010 North Valley Summer Peak Case
PATH15=-518 MW(S-N) PATH26=3352 MW(N-S) PDCI=3105 MW(N-S) COI=4754 MW(N-S)
CPV Colusa - 2010 Summer Peak - before (TMPP & P0441 removed)

Plot 18 - Heavy Summer - Before Project
Outage: Palermo - OWID 115 kV Line

D:\PSLF_Work\Projects\EL_Colus
D:\PSLF_Work\Projects\EL_Colus
Rating = 2

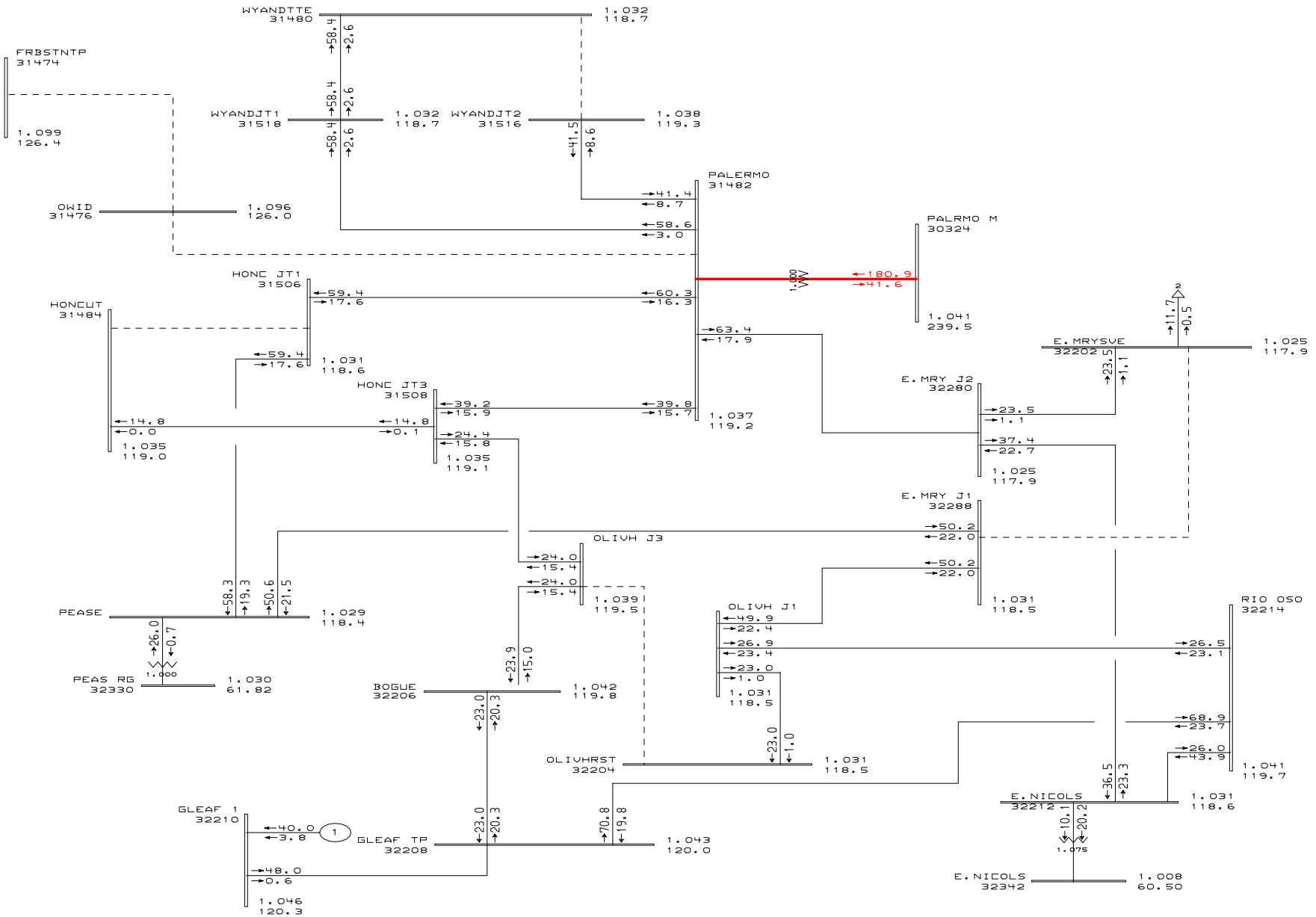

General Electric International, Inc. PSLF Program MW/MVAR Tue Sep 06 10:22:00 2005

PG&E 2004 BASE CASE SERIES - 2010 North Valley Summer Peak Case
PATH15=-1127 MW(S-N) PATH26=3313 MW(N-S) PDCI=3105 MW(N-S) COI=4753 MW(N-S)
CPV Colusa - 2010 Summer Peak - after (TMPP & P0441 removed)

Plot 19 - Heavy Summer - After Project
Outage: Palermo - OWID 115 kV Line

D:\PSLF_Work\Projects\EL_Colus
D:\PSLF_Work\Projects\EL_Colus
Rating = 2

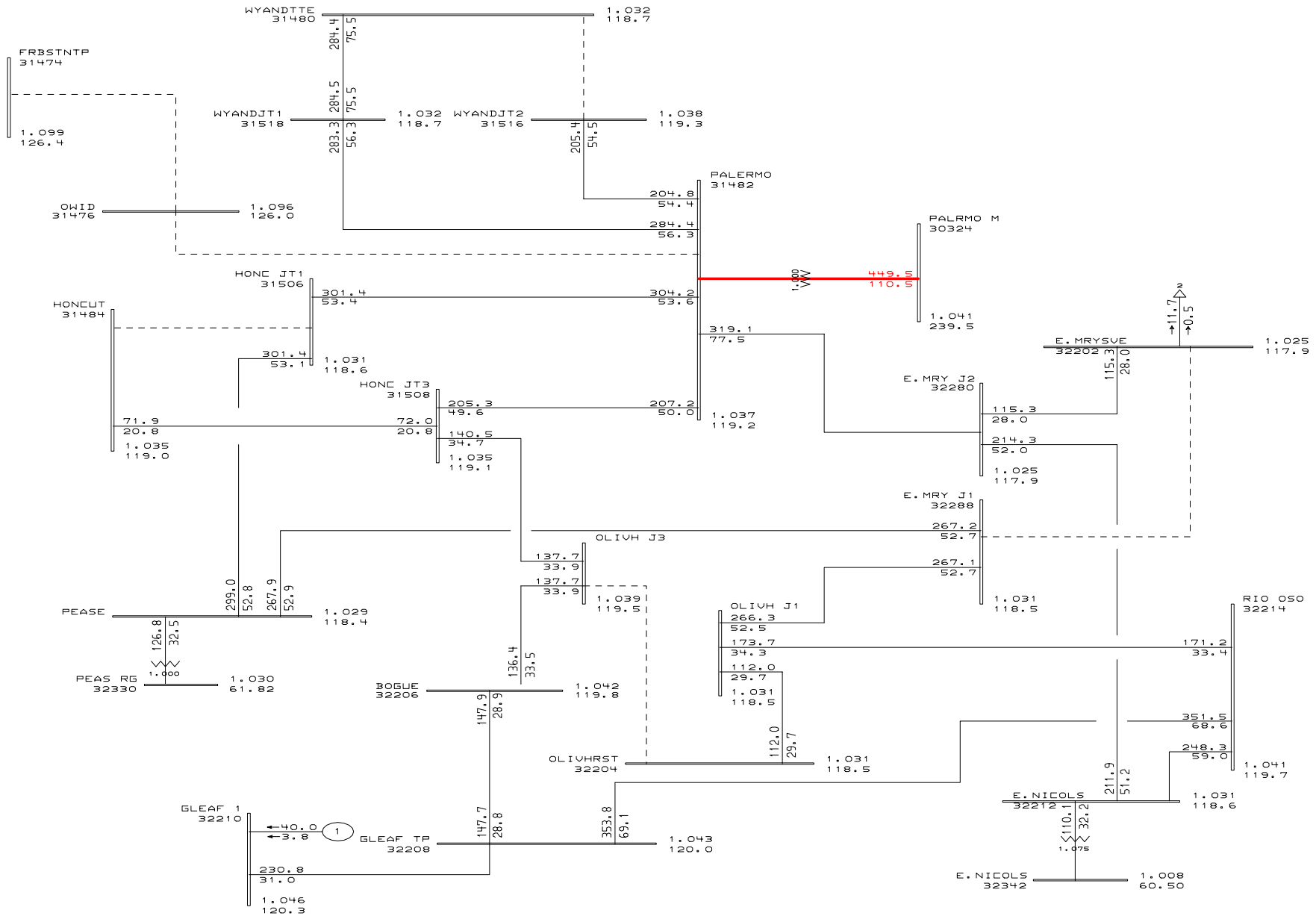

General Electric International, Inc. PSLF Program AMPS/Pct Tue Sep 06 10:22:03 2005

PG&E 2004 BASE CASE SERIES - 2010 North Valley Summer Peak Case
PATH15=-1127 MW(S-N) PATH26=3313 MW(N-S) PDCI=3105 MW(N-S) COI=4753 MW(N-S)
CPV Colusa - 2010 Summer Peak - after (TMPP & P0441 removed)

Plot 20 - Heavy Summer - After Project
Outage: Palermo - OWID 115 kV Line

D:\PSLF_Work\Projects\EL_Colus
D:\PSLF_Work\Projects\EL_Colus
Rating = 2

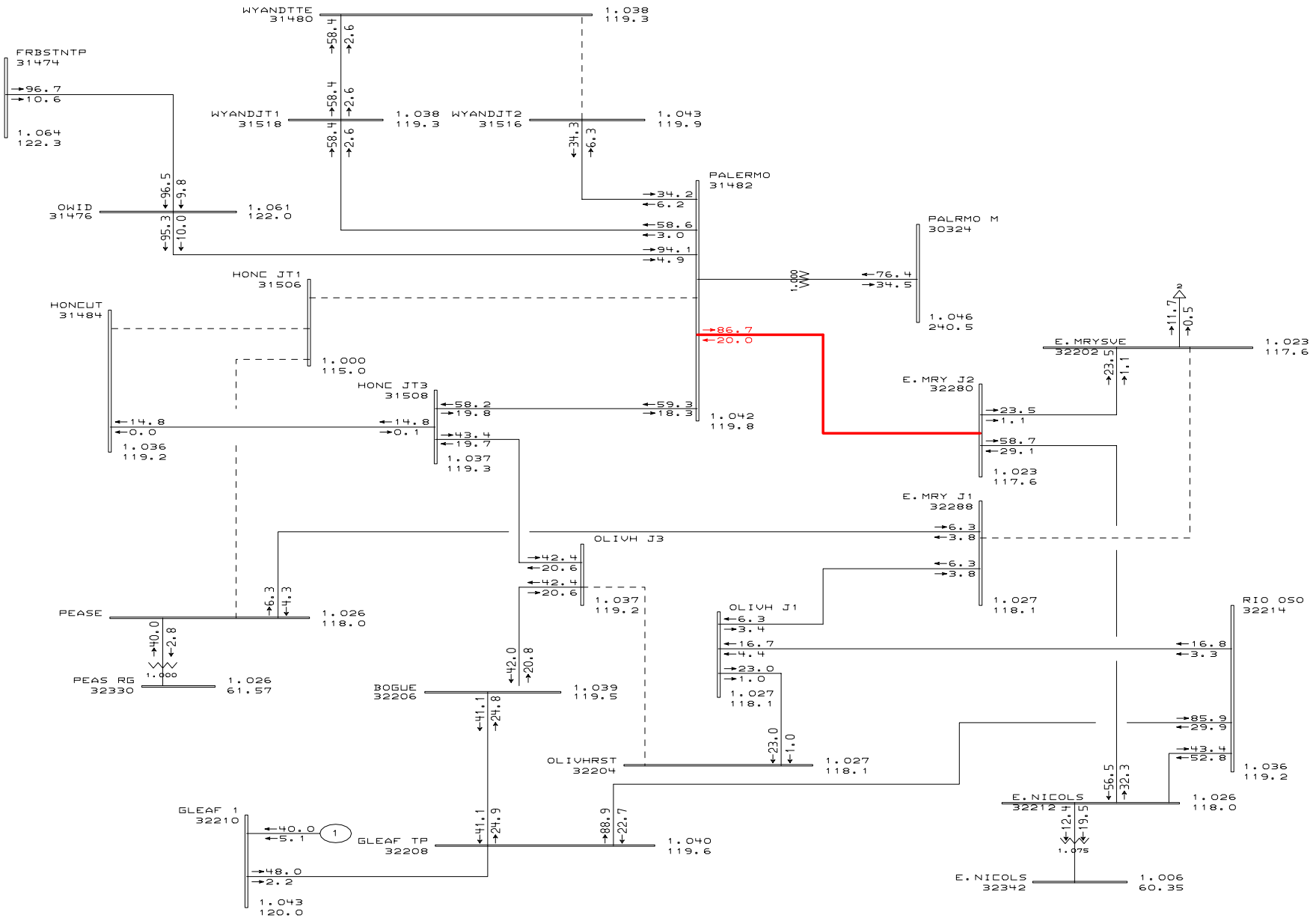

General Electric International, Inc. PSLF Program MW/MVAR Tue Sep 06 10:22:06 2005

PG&E 2004 BASE CASE SERIES - 2010 North Valley Summer Peak Case
PATH15=-518 MW(S-N) PATH26=3352 MW(N-S) PDCI=3105 MW(N-S) COI=4754 MW(N-S)
CPV Colusa - 2010 Summer Peak - before (TMPP & P0441 removed)

Plot 21 - Heavy Summer - Before Project
Outage: Palermo - Pease 115 kV Line

D:\PSLF_Work\Projects\EL_Colus
D:\PSLF_Work\Projects\EL_Colus
Rating = 2

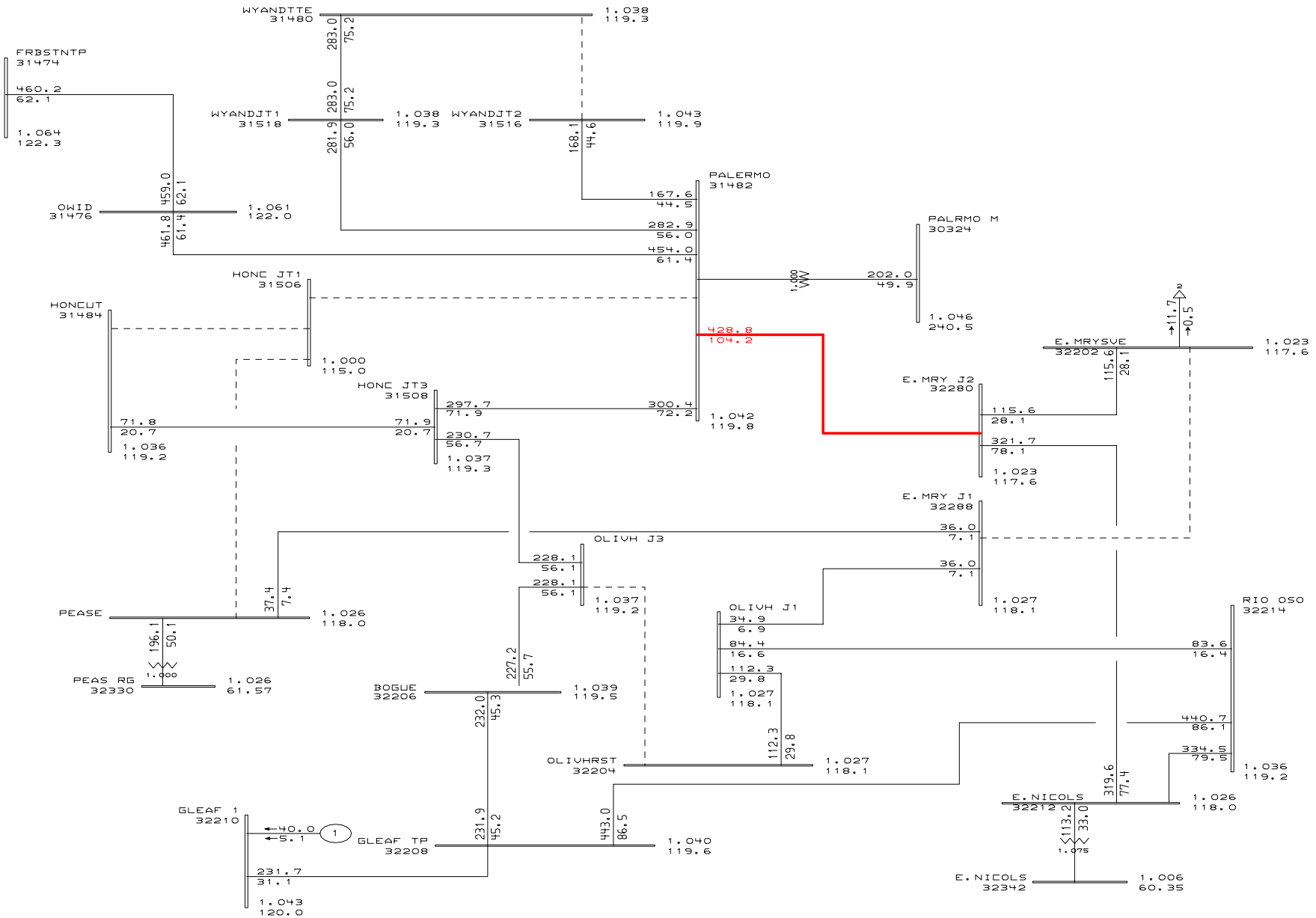

General Electric International, Inc. PSLF Program AMPS/Pct Tue Sep 06 10:22:09 2005

PG&E 2004 BASE CASE SERIES - 2010 North Valley Summer Peak Case
PATH15=-518 MW(S-N) PATH26=3352 MW(N-S) PDCI=3105 MW(N-S) COI=4754 MW(N-S)
CPV Colusa - 2010 Summer Peak - before (TMPP & P0441 removed)

Plot 22 - Heavy Summer - Before Project
Outage: Palermo - Pease 115 kV Line

D:\PSLF_Work\Projects\EL_Colus
D:\PSLF_Work\Projects\EL_Colus
Rating = 2

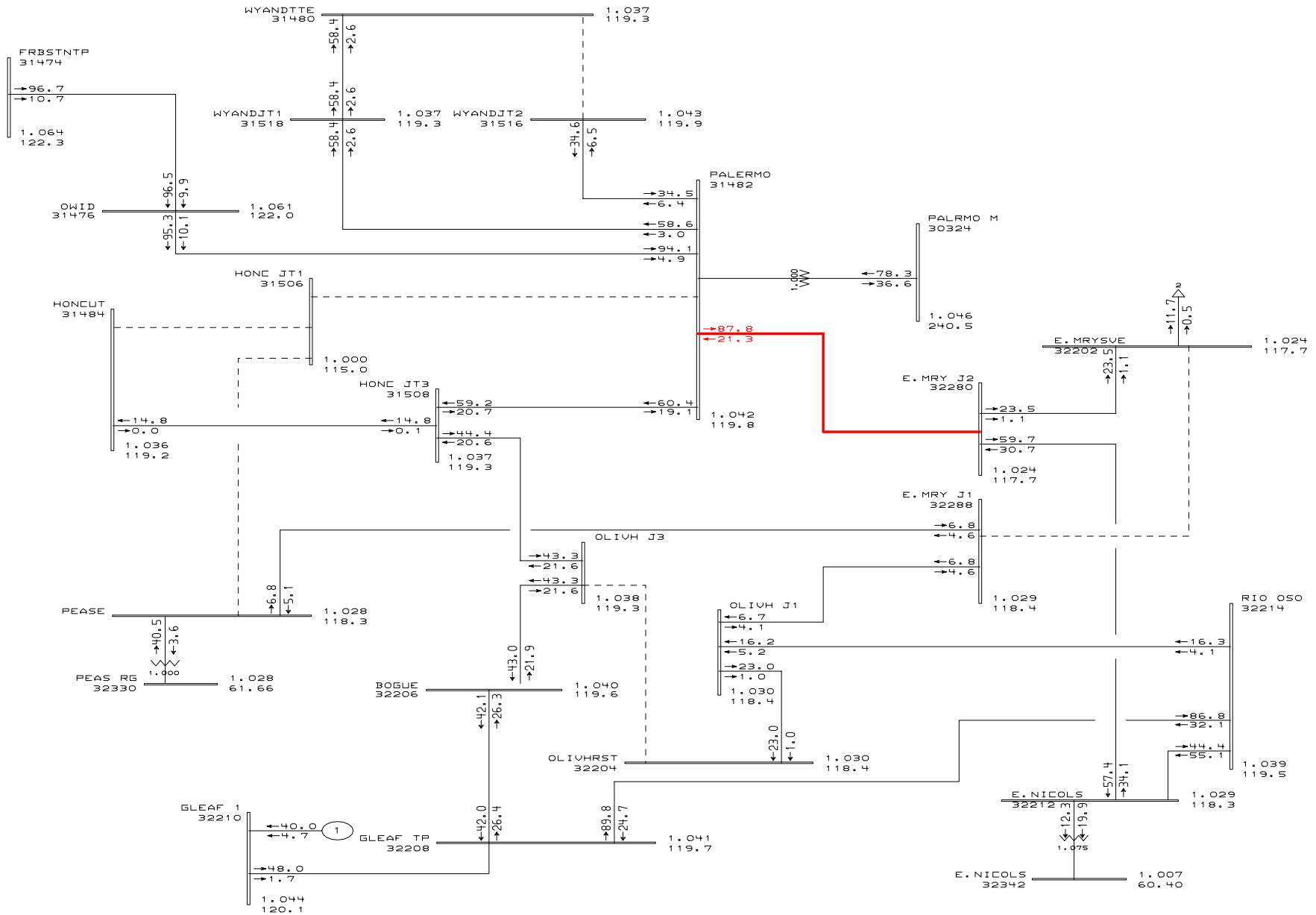

General Electric International, Inc. PSLF Program MW/MVAR Tue Sep 06 10:22:11 2005

PG&E 2004 BASE CASE SERIES - 2010 North Valley Summer Peak Case
PATH15=-1127 MW(S-N) PATH26=3313 MW(N-S) PDCI=3105 MW(N-S) COI=4753 MW(N-S)
CPV Colusa - 2010 Summer Peak - after (TMPP & P0441 removed)

Plot 23 - Heavy Summer - After Project
Outage: Palermo - Pease 115 kV Line

D:\PSLF_Work\Projects\EL_Colus
D:\PSLF_Work\Projects\EL_Colus
Rating = 2

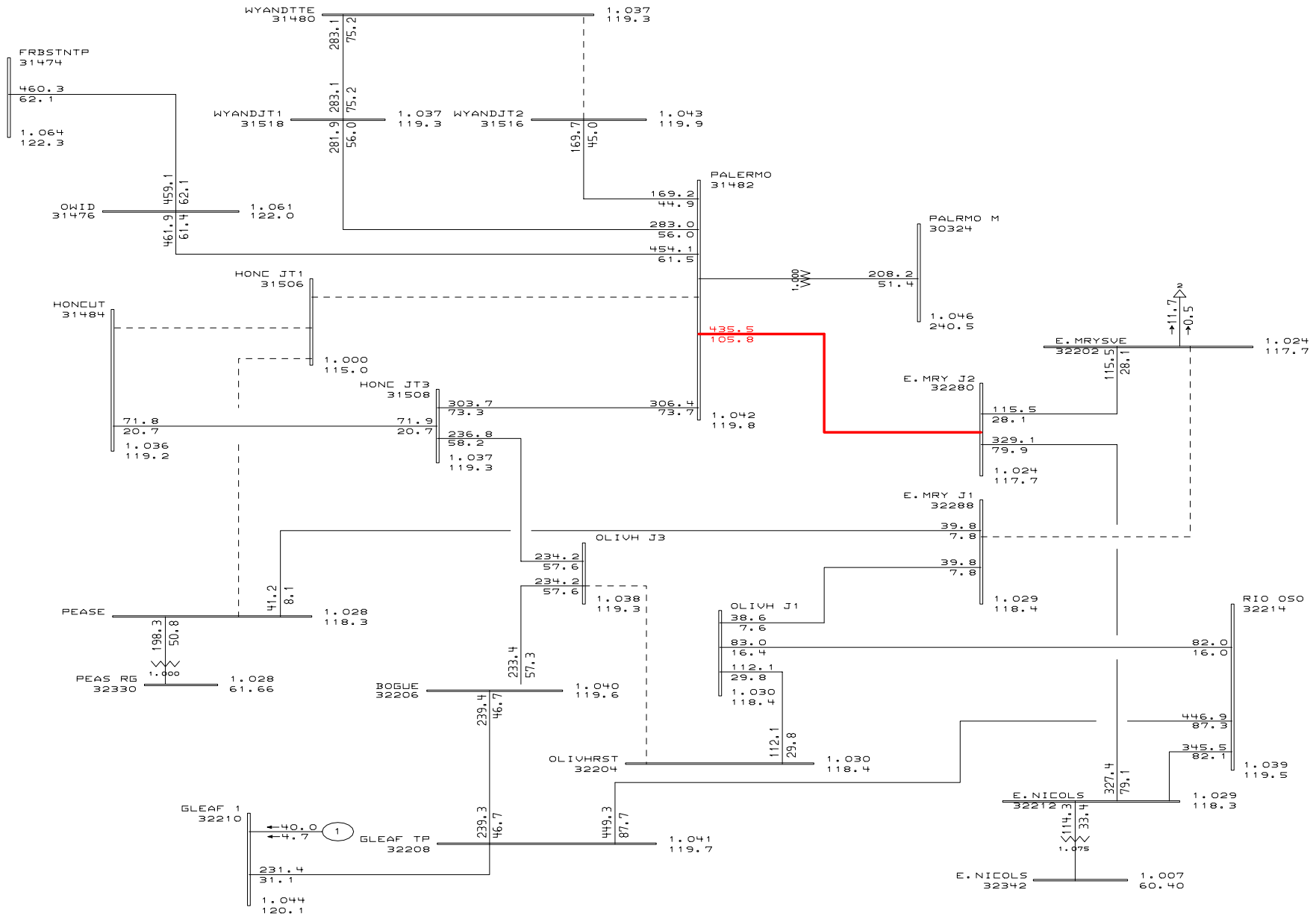

General Electric International, Inc. PSLF Program AMPS/Pct Tue Sep 06 10:22:14 2005

PG&E 2004 BASE CASE SERIES - 2010 North Valley Summer Peak Case
PATH15=-1127 MW(S-N) PATH26=3313 MW(N-S) PDCI=3105 MW(N-S) COI=4753 MW(N-S)
CPV Colusa - 2010 Summer Peak - after (TMPP & P0441 removed)

Plot 24 - Heavy Summer - After Project
Outage: Palermo - Pease 115 kV Line

D:\PSLF_Work\Projects\EL_Colus
D:\PSLF_Work\Projects\EL_Colus
Rating = 2

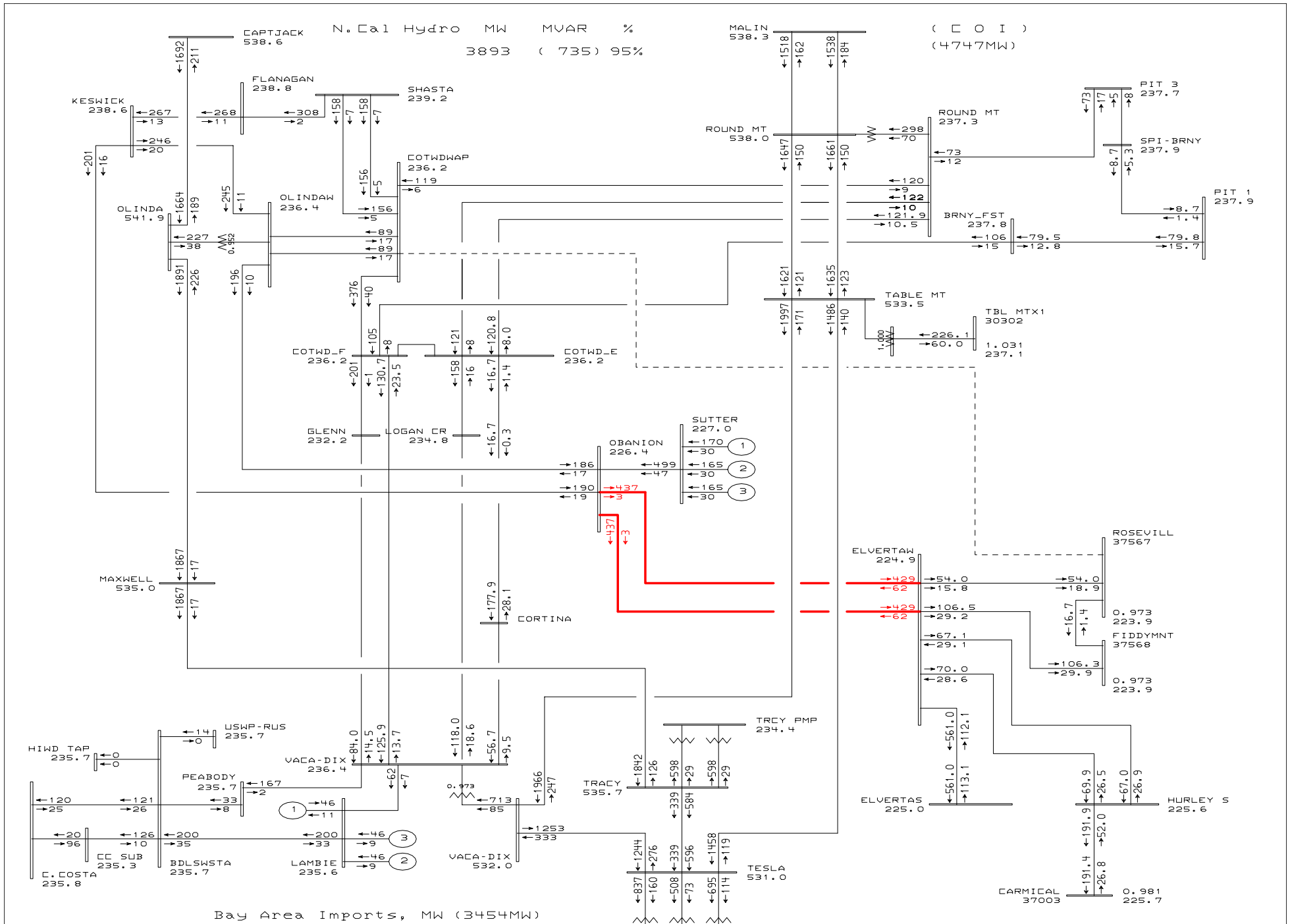

General Electric International, Inc. PSLF Program MW/MVAR Tue Sep 06 10:22:16 2005

PG&E 2004 BASE CASE SERIES - 2010 North Valley Summer Peak Case
PATH15=-518 MW(S-N) PATH26=3352 MW(N-S) PDCI=3105 MW(N-S) COI=4754 MW(N-S)
CPV Colusa - 2010 Summer Peak - before (TMPP & P0441 removed)

Plot 25 - Heavy Summer - Before Project
Outage: Cottonwood (WAPA)-Roseville 230 kV Line

D:\PSLF_Work\Projects\EL_Colus
D:\PSLF_Work\Projects\EL_Colus
Rating = 2

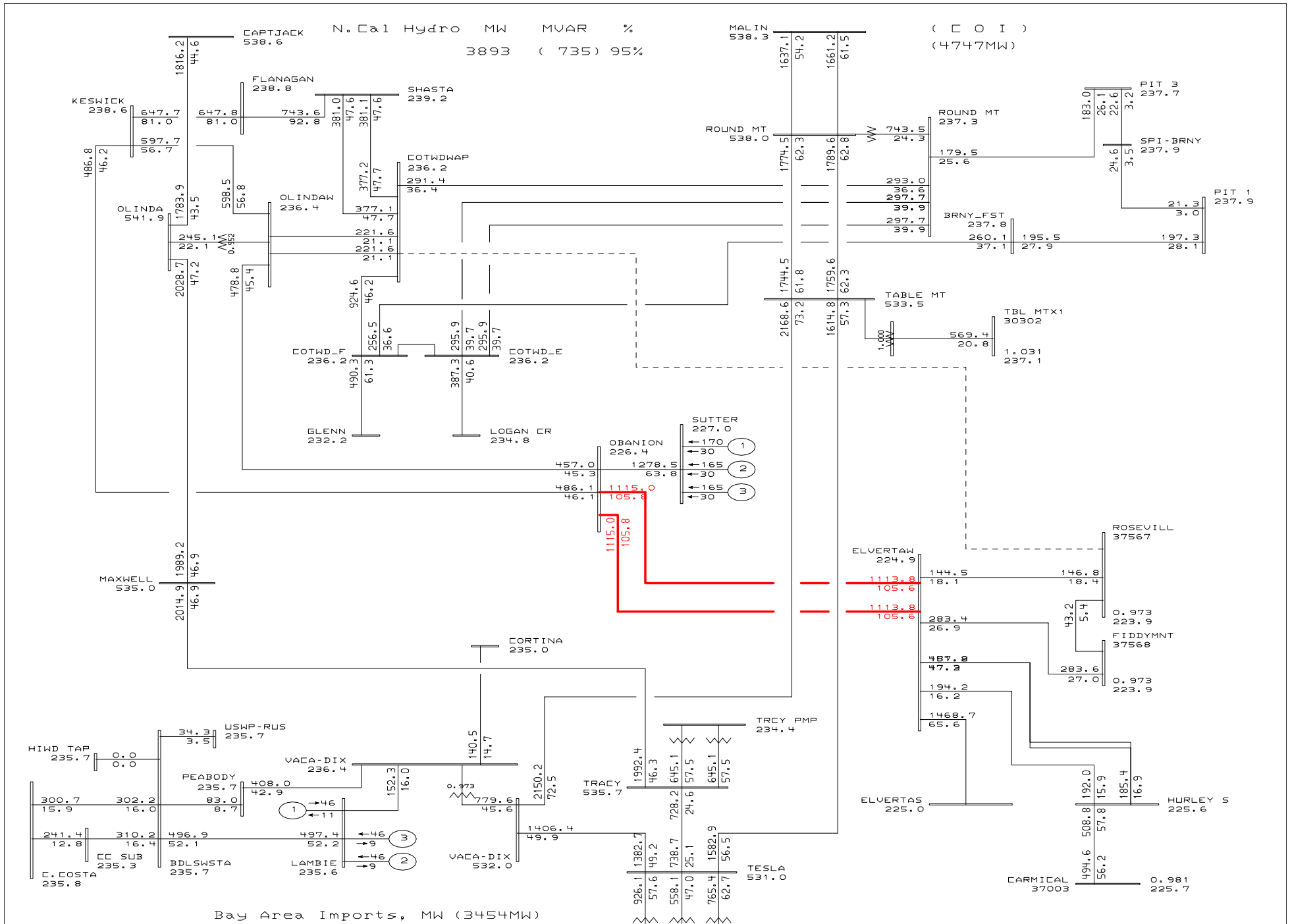

General Electric International, Inc. PSLF Program AMPS/Pct Tue Sep 06 10:22:18 2005

PG&E 2004 BASE CASE SERIES - 2010 North Valley Summer Peak Case
PATH15=-518 MW(S-N) PATH26=3352 MW(N-S) PDCI=3105 MW(N-S) COI=4754 MW(N-S)
CPV Colusa - 2010 Summer Peak - before (TMPP & P0441 removed)

Plot 26 - Heavy Summer - Before Project
Outage: Cottonwood (WAPA)-Roseville 230 kV Line

D:\PSLF_Work\Projects\EL_Colus
D:\PSLF_Work\Projects\EL_Colus
Rating = 2

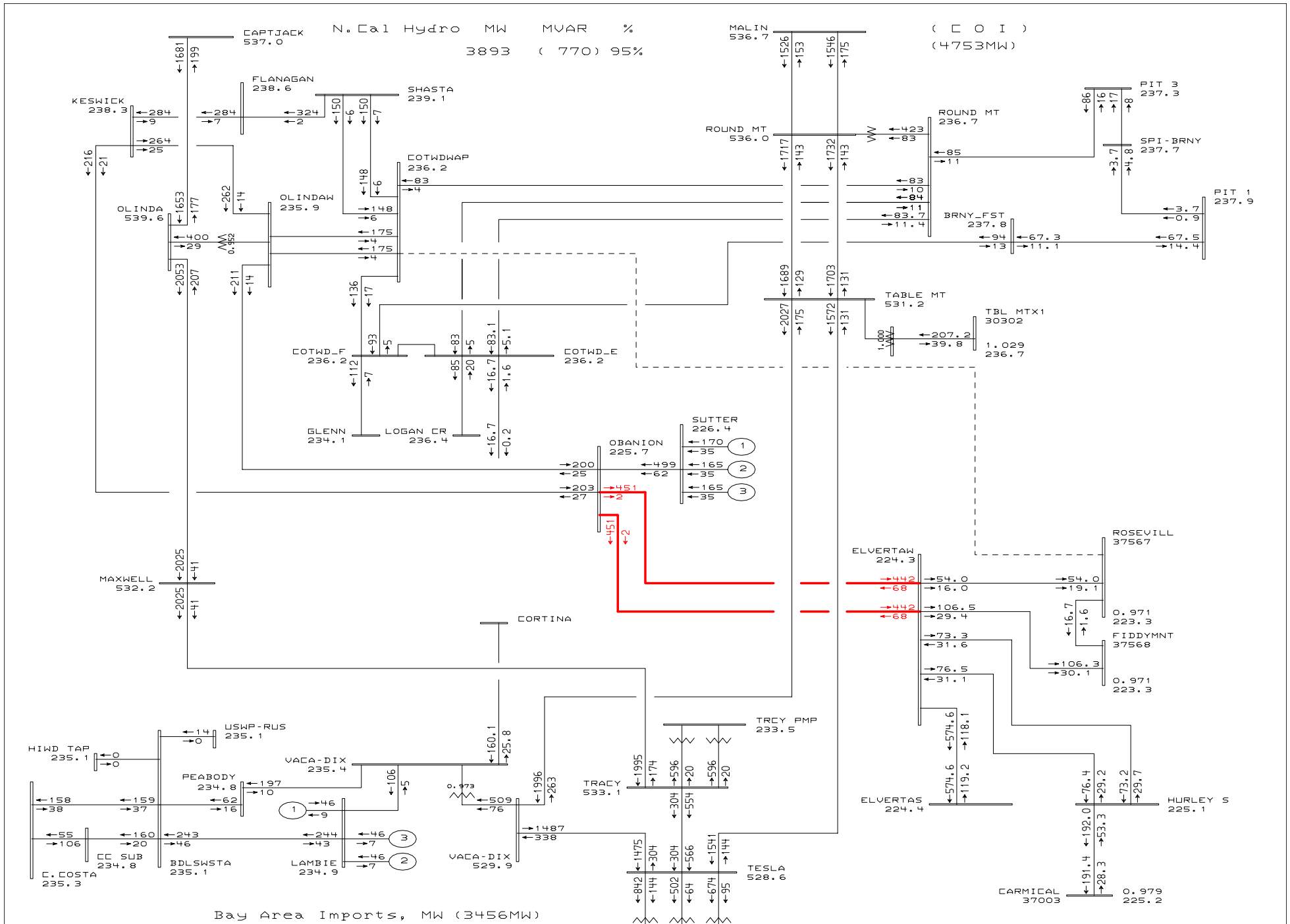

General Electric International, Inc. PSLF Program MW/MVAR Tue Sep 06 10:22:21 2005

PG&E 2004 BASE CASE SERIES - 2010 North Valley Summer Peak Case
PATH15=-1127 MW(S-N) PATH26=3313 MW(N-S) PDCI=3105 MW(N-S) COI=4753 MW(N-S)
CPV Colusa - 2010 Summer Peak - after (TMPP & P0441 removed)

Plot 27 - Heavy Summer - After Project
Outage: Cottonwood (WAPA)-Roseville 230 kV Line

D:\PSLF_Work\Projects\EL_Colus
D:\PSLF_Work\Projects\EL_Colus
Rating = 2

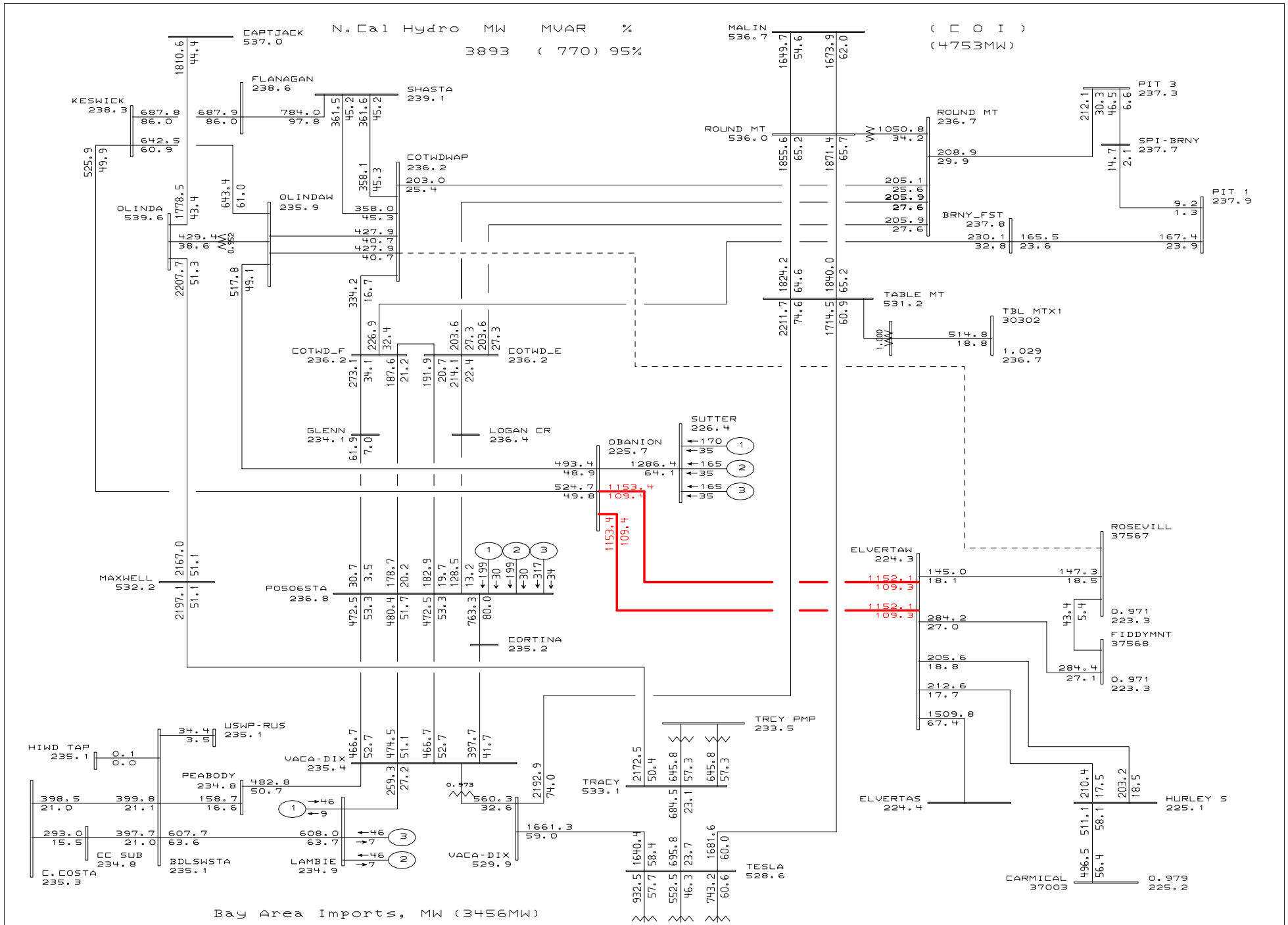

General Electric International, Inc. PSLF Program AMPS/Pct Tue Sep 06 10:22:23 2005

PG&E 2004 BASE CASE SERIES - 2010 North Valley Summer Peak Case
PATH15=-1127 MW(S-N) PATH26=3313 MW(N-S) PDCI=3105 MW(N-S) COI=4753 MW(N-S)
CPV Colusa - 2010 Summer Peak - after (TMPP & P0441 removed)

Plot 28 - Heavy Summer - After Project
Outage: Cottonwood (WAPA)-Roseville 230 kV Line

D:\PSLF_Work\Projects\EL_Colus
D:\PSLF_Work\Projects\EL_Colus
Rating = 2

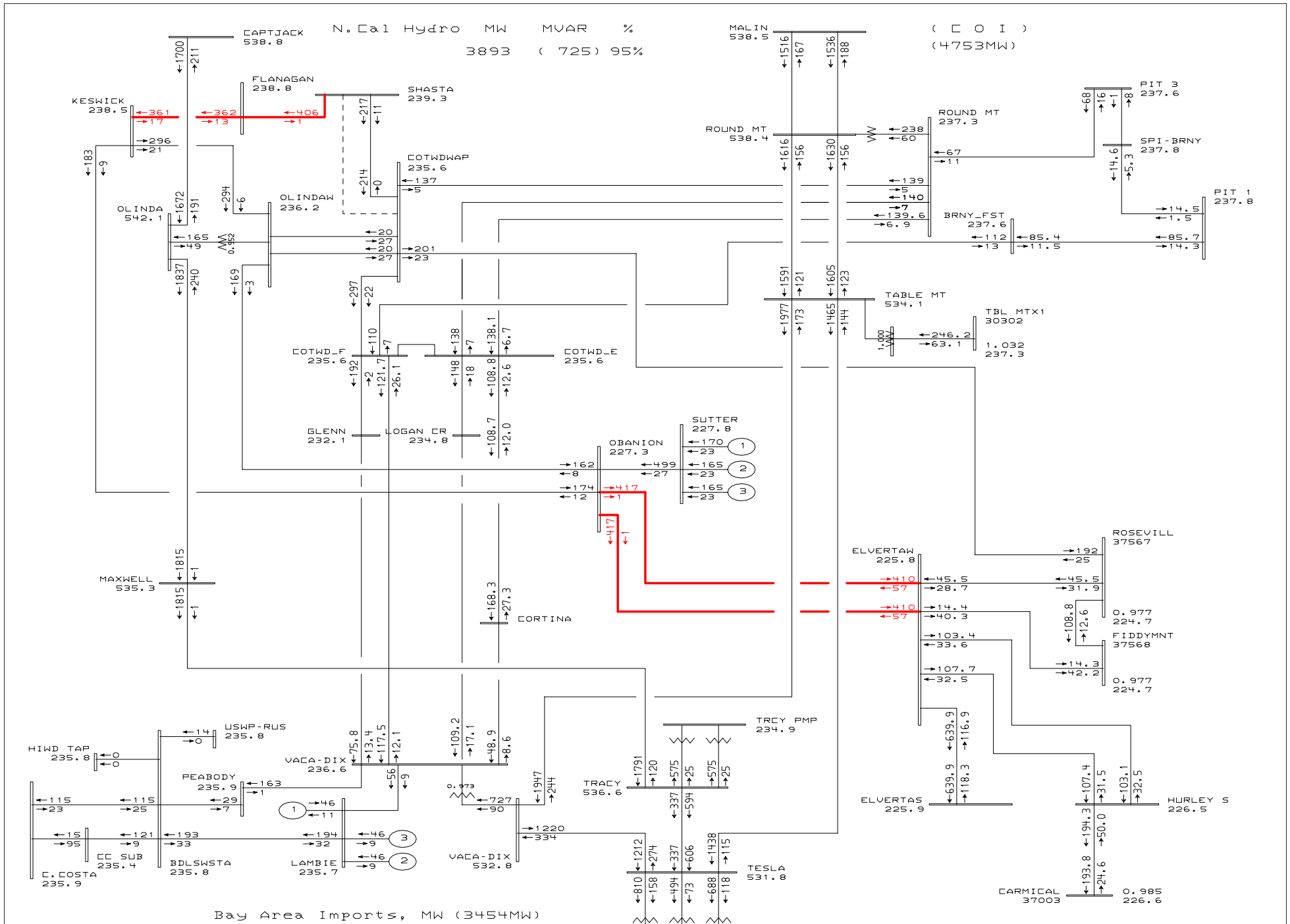

General Electric International, Inc. PSLF Program MW/MVAR Tue Sep 06 10:22:25 2005

PG&E 2004 BASE CASE SERIES - 2010 North Valley Summer Peak Case
PATH15=-518 MW(S-N) PATH26=3352 MW(N-S) PDCI=3105 MW(N-S) COI=4754 MW(N-S)
CPV Colusa - 2010 Summer Peak - before (TMPP & P0441 removed)

Plot 29 - Heavy Summer - Before Project
Outage: Cottonwood - Shasta #1 230 kV Line

D:\PSLF_Work\Projects\EL_Colus
D:\PSLF_Work\Projects\EL_Colus
Rating = 2

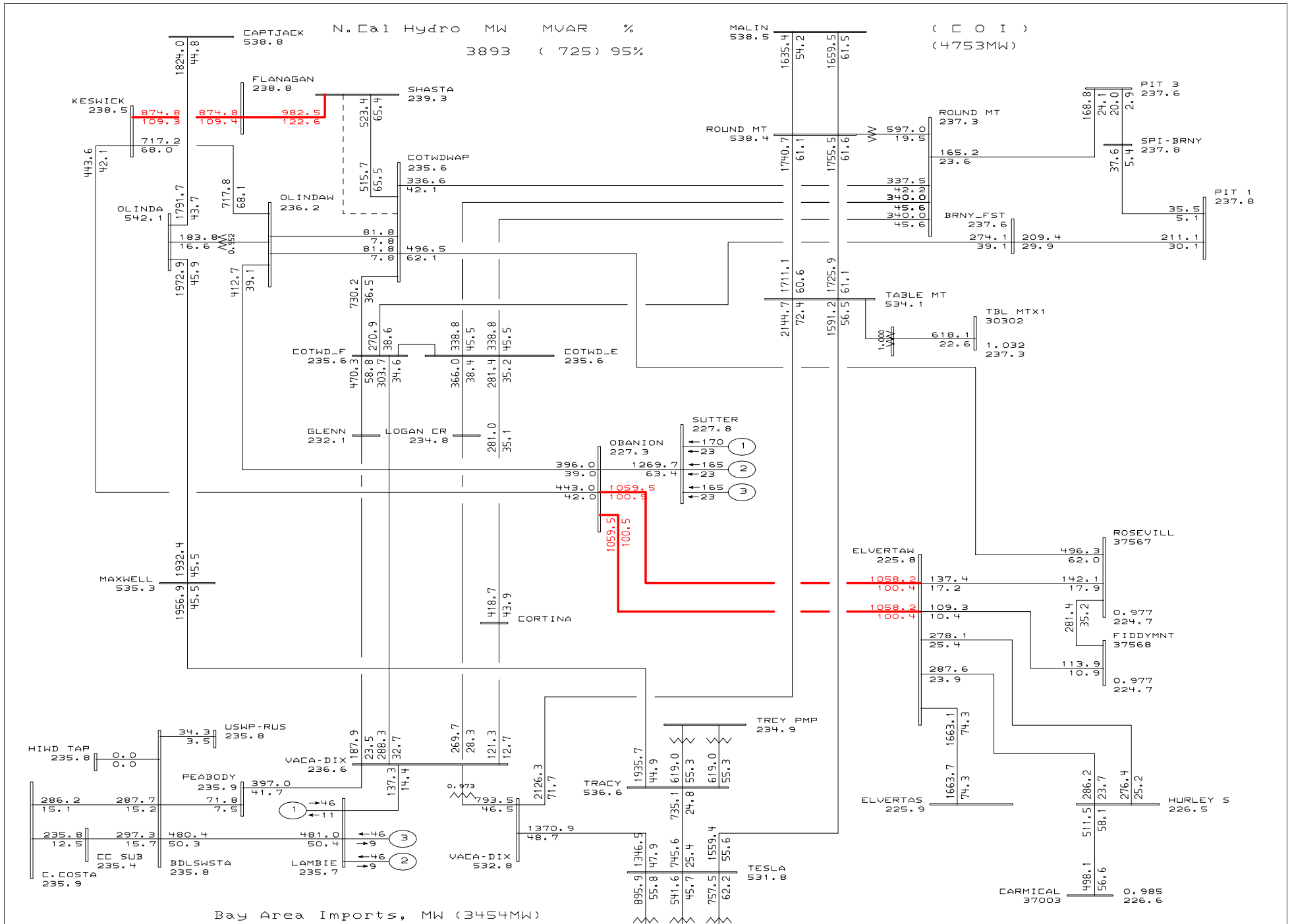

General Electric International, Inc. PSLF Program AMPS/Pct Tue Sep 06 10:22:28 2005

PG&E 2004 BASE CASE SERIES - 2010 North Valley Summer Peak Case
PATH15=-518 MW(S-N) PATH26=3352 MW(N-S) PDCI=3105 MW(N-S) COI=4754 MW(N-S)
CPV Colusa - 2010 Summer Peak - before (TMPP & P0441 removed)

Plot 30 - Heavy Summer - Before Project
Outage: Cottonwood - Shasta #1 230 kV Line

D:\PSLF_Work\Projects\EL_Colus
D:\PSLF_Work\Projects\EL_Colus
Rating = 2

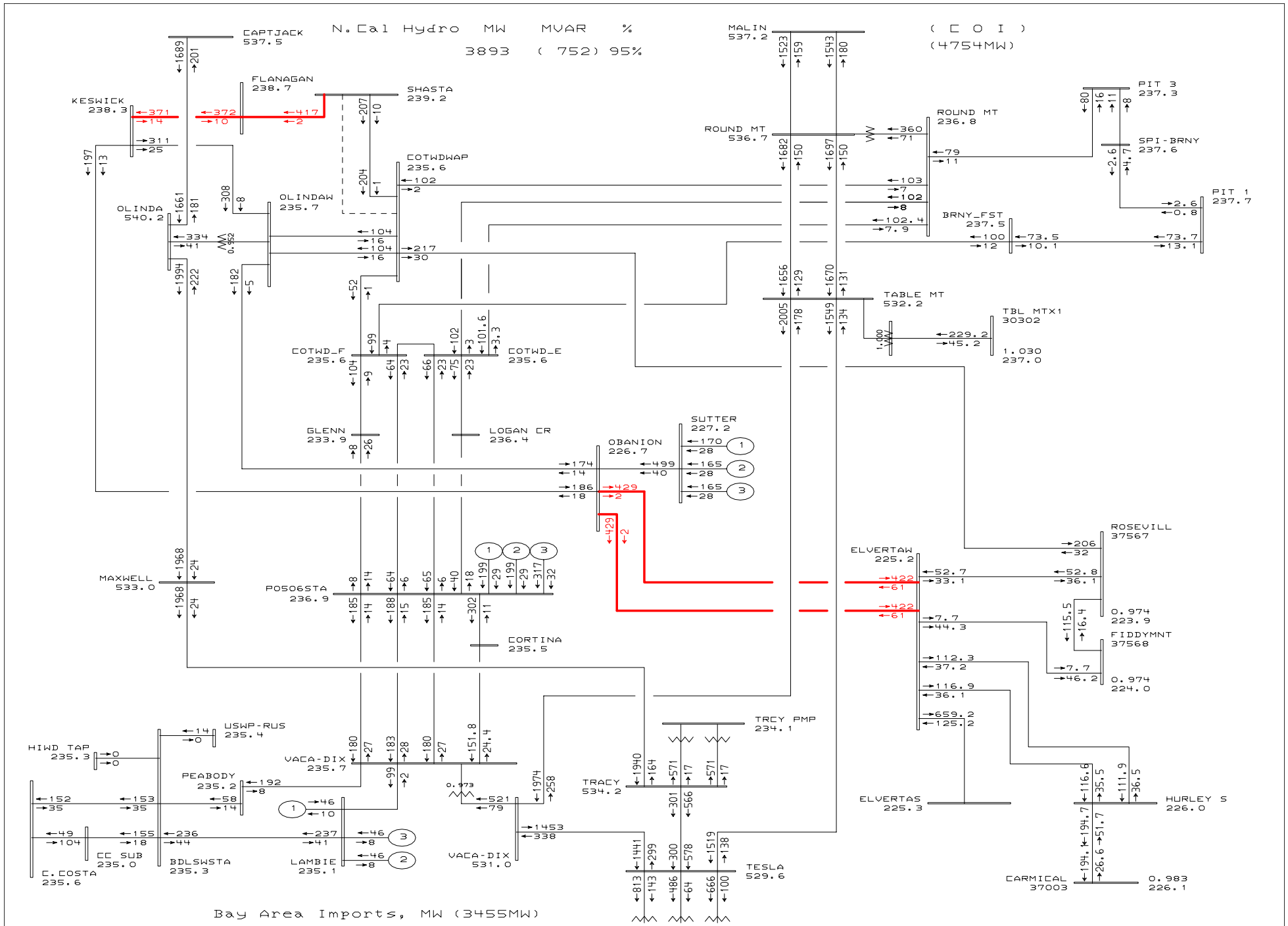

General Electric International, Inc. PSLF Program MW/MVAR Tue Sep 06 10:22:31 2005

PG&E 2004 BASE CASE SERIES - 2010 North Valley Summer Peak Case
PATH15=-1127 MW(S-N) PATH26=3313 MW(N-S) PDCI=3105 MW(N-S) COI=4753 MW(N-S)
CPV Colusa - 2010 Summer Peak - after (TMPP & P0441 removed)

Plot 31 - Heavy Summer - After Project
Outage: Cottonwood - Shasta #1 230 kV Line

D:\PSLF_Work\Projects\EL_Colus
D:\PSLF_Work\Projects\EL_Colus
Rating = 2

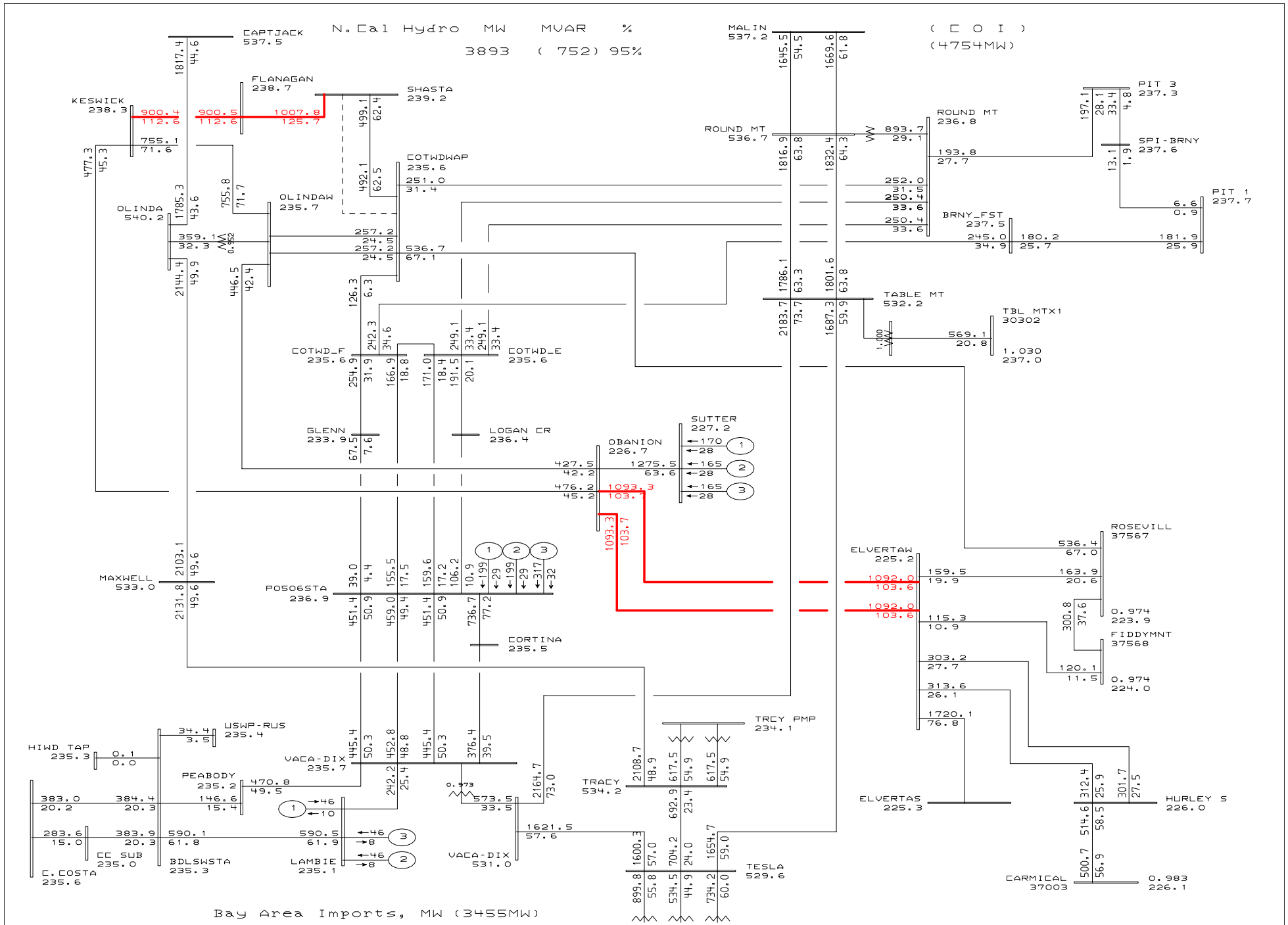

General Electric International, Inc. PSLF Program AMPS/Pct Tue Sep 06 10:22:35 2005

PG&E 2004 BASE CASE SERIES - 2010 North Valley Summer Peak Case
PATH15=-1127 MW(S-N) PATH26=3313 MW(N-S) PDCI=3105 MW(N-S) COI=4753 MW(N-S)
CPV Colusa - 2010 Summer Peak - after (TMPP & P0441 removed)

Plot 32 - Heavy Summer - After Project
Outage: Cottonwood - Shasta #1 230 kV Line

D:\PSLF_Work\Projects\EL_Colus
D:\PSLF_Work\Projects\EL_Colus
Rating = 2

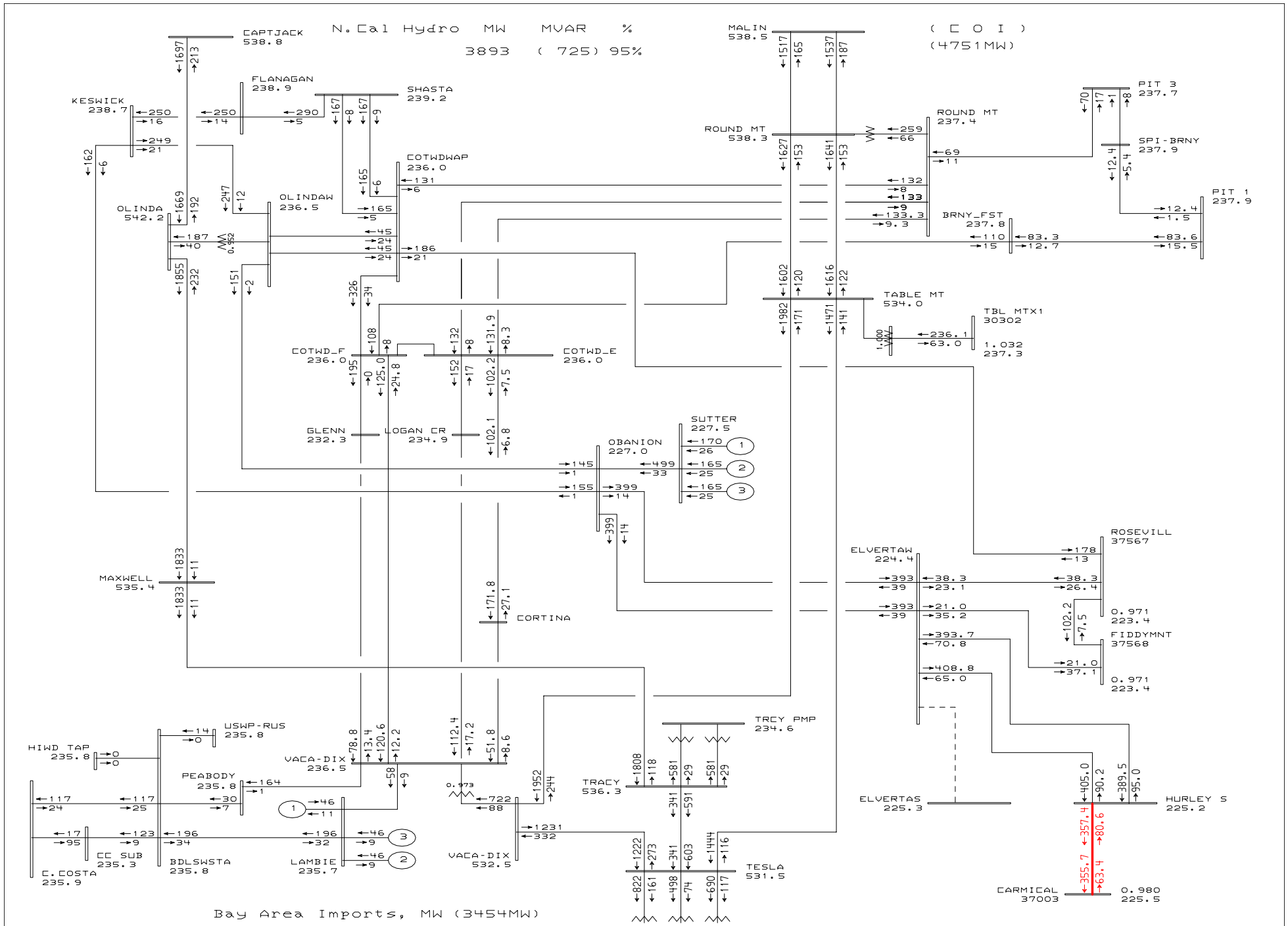

General Electric International, Inc. PSLF Program MW/MVAR Tue Sep 06 10:22:38 2005

PG&E 2004 BASE CASE SERIES - 2010 North Valley Summer Peak Case
PATH15=-518 MW(S-N) PATH26=3352 MW(N-S) PDCI=3105 MW(N-S) COI=4754 MW(N-S)
CPV Colusa - 2010 Summer Peak - before (TMPP & P0441 removed)

Plot 33 - Heavy Summer - Before Project
Outage: Elverta W - Elverta S 230 kV Line

D:\PSLF_Work\Projects\EL_Colus
D:\PSLF_Work\Projects\EL_Colus
Rating = 2

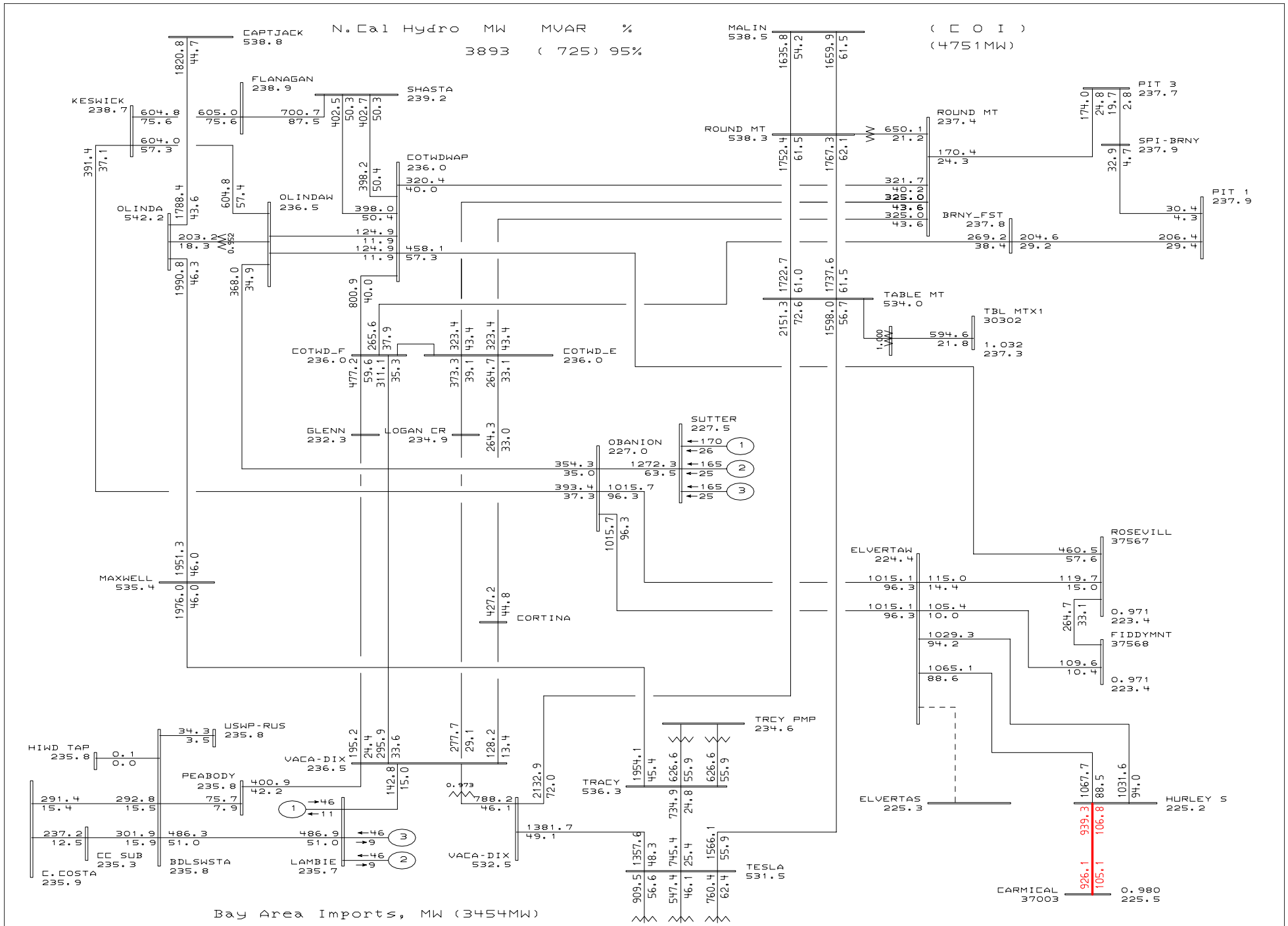

General Electric International, Inc. PSLF Program AMPS/Pct Tue Sep 06 10:22:41 2005

PG&E 2004 BASE CASE SERIES - 2010 North Valley Summer Peak Case
PATH15=-518 MW(S-N) PATH26=3352 MW(N-S) PDCI=3105 MW(N-S) COI=4754 MW(N-S)
CPV Colusa - 2010 Summer Peak - before (TMPP & P0441 removed)

Plot 34 - Heavy Summer - Before Project
Outage: Elverta W - Elverta S 230 kV Line

D:\PSLF_Work\Projects\EL_Colus
D:\PSLF_Work\Projects\EL_Colus
Rating = 2

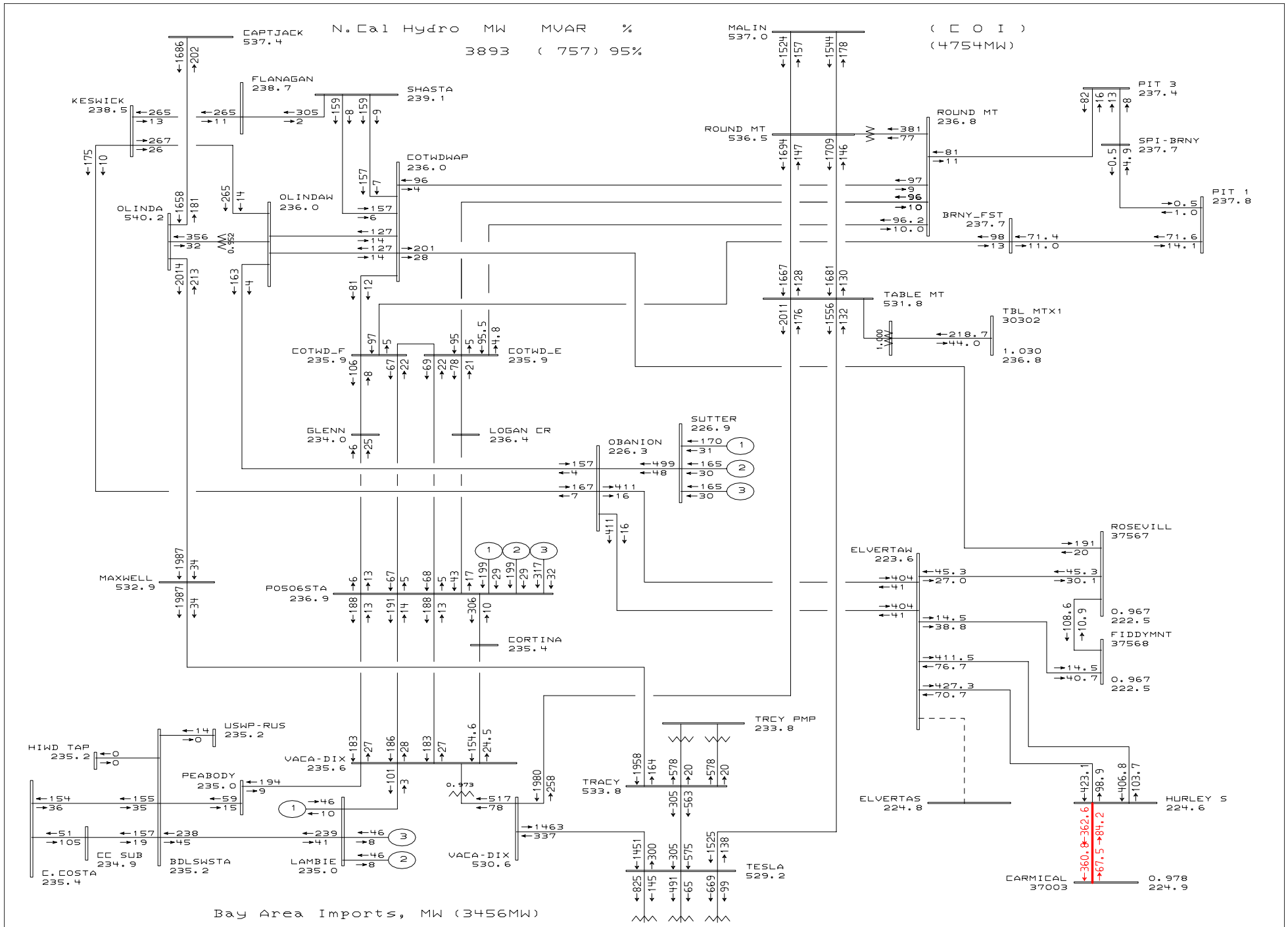

General Electric International, Inc. PSLF Program MW/MVAR Tue Sep 06 10:22:46 2005

PG&E 2004 BASE CASE SERIES - 2010 North Valley Summer Peak Case
PATH15=-1127 MW(S-N) PATH26=3313 MW(N-S) PDCI=3105 MW(N-S) COI=4753 MW(N-S)
CPV Colusa - 2010 Summer Peak - after (TMPP & P0441 removed)

Plot 35 - Heavy Summer - After Project
Outage: Elverta W - Elverta S 230 kV Line

D:\PSLF_Work\Projects\EL_Colus
D:\PSLF_Work\Projects\EL_Colus
Rating = 2

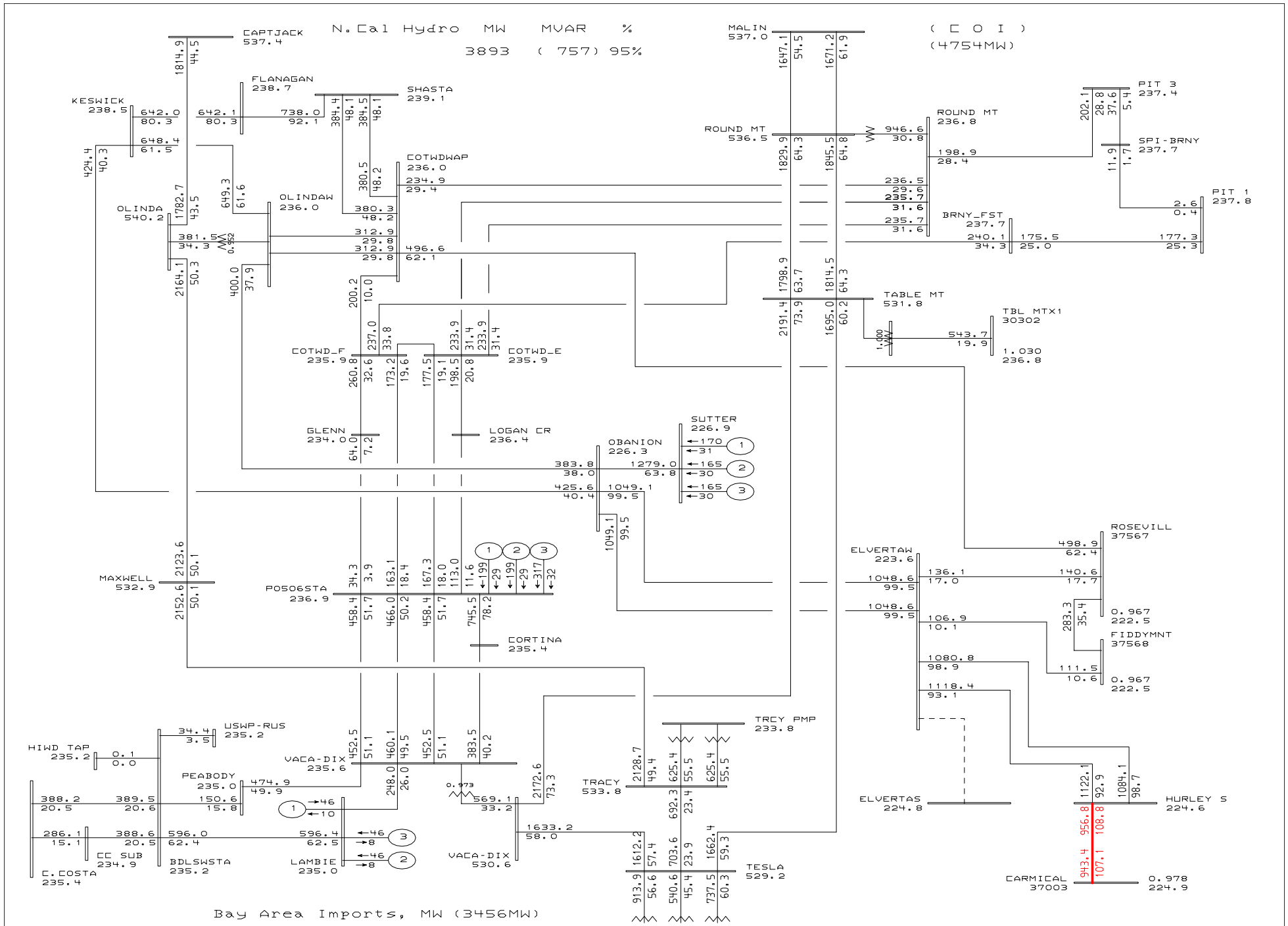

General Electric International, Inc. PSLF Program AMPS/Pct Tue Sep 06 10:22:51 2005

PG&E 2004 BASE CASE SERIES - 2010 North Valley Summer Peak Case
PATH15=-1127 MW(S-N) PATH26=3313 MW(N-S) PDCI=3105 MW(N-S) COI=4753 MW(N-S)
CPV Colusa - 2010 Summer Peak - after (TMPP & P0441 removed)

Plot 36 - Heavy Summer - After Project
Outage: Elverta W - Elverta S 230 kV Line

D:\PSLF_Work\Projects\EL_Colus
D:\PSLF_Work\Projects\EL_Colus
Rating = 2

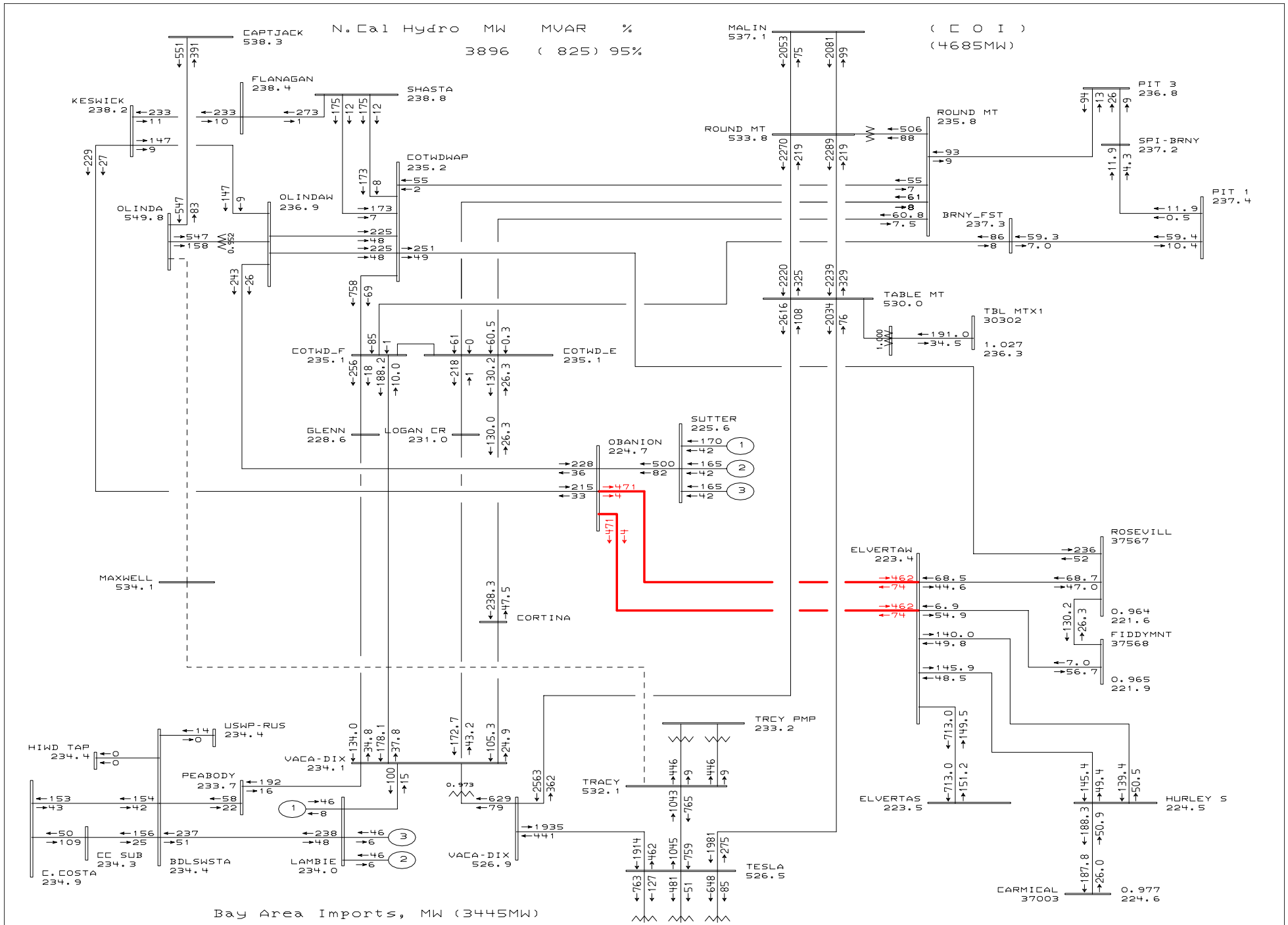

General Electric International, Inc. PSLF Program MW/MVAR Tue Sep 06 10:22:51 2005

PG&E 2004 BASE CASE SERIES - 2010 North Valley Summer Peak Case
PATH15=-518 MW(S-N) PATH26=3352 MW(N-S) PDCI=3105 MW(N-S) COI=4754 MW(N-S)
CPV Colusa - 2010 Summer Peak - before (TMPP & P0441 removed)

Plot 37 - Heavy Summer - Before Project
Outage: Olinda - Tracy 500 kV Line

D:\PSLF_Work\Projects\EL_Colus
D:\PSLF_Work\Projects\EL_Colus
Rating = 2

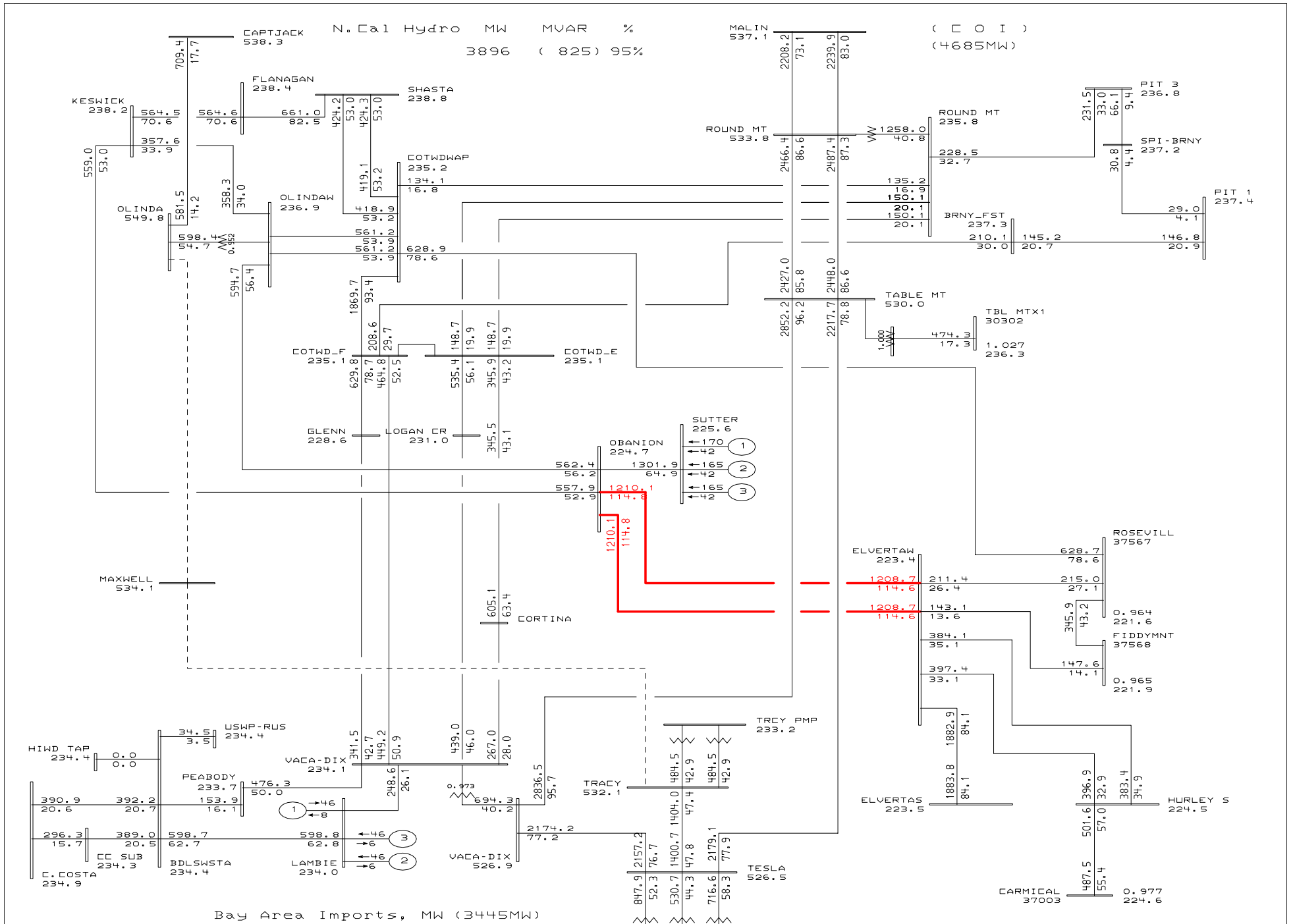

General Electric International, Inc. PSLF Program AMPS/Pct Tue Sep 06 10:22:51 2005

PG&E 2004 BASE CASE SERIES - 2010 North Valley Summer Peak Case
PATH15=-518 MW(S-N) PATH26=3352 MW(N-S) PDCI=3105 MW(N-S) COI=4754 MW(N-S)
CPV Colusa - 2010 Summer Peak - before (TMPP & P0441 removed)

Plot 38 - Heavy Summer - Before Project
Outage: Olinda - Tracy 500 kV Line

D:\PSLF_Work\Projects\EL_Colus
D:\PSLF_Work\Projects\EL_Colus
Rating = 2

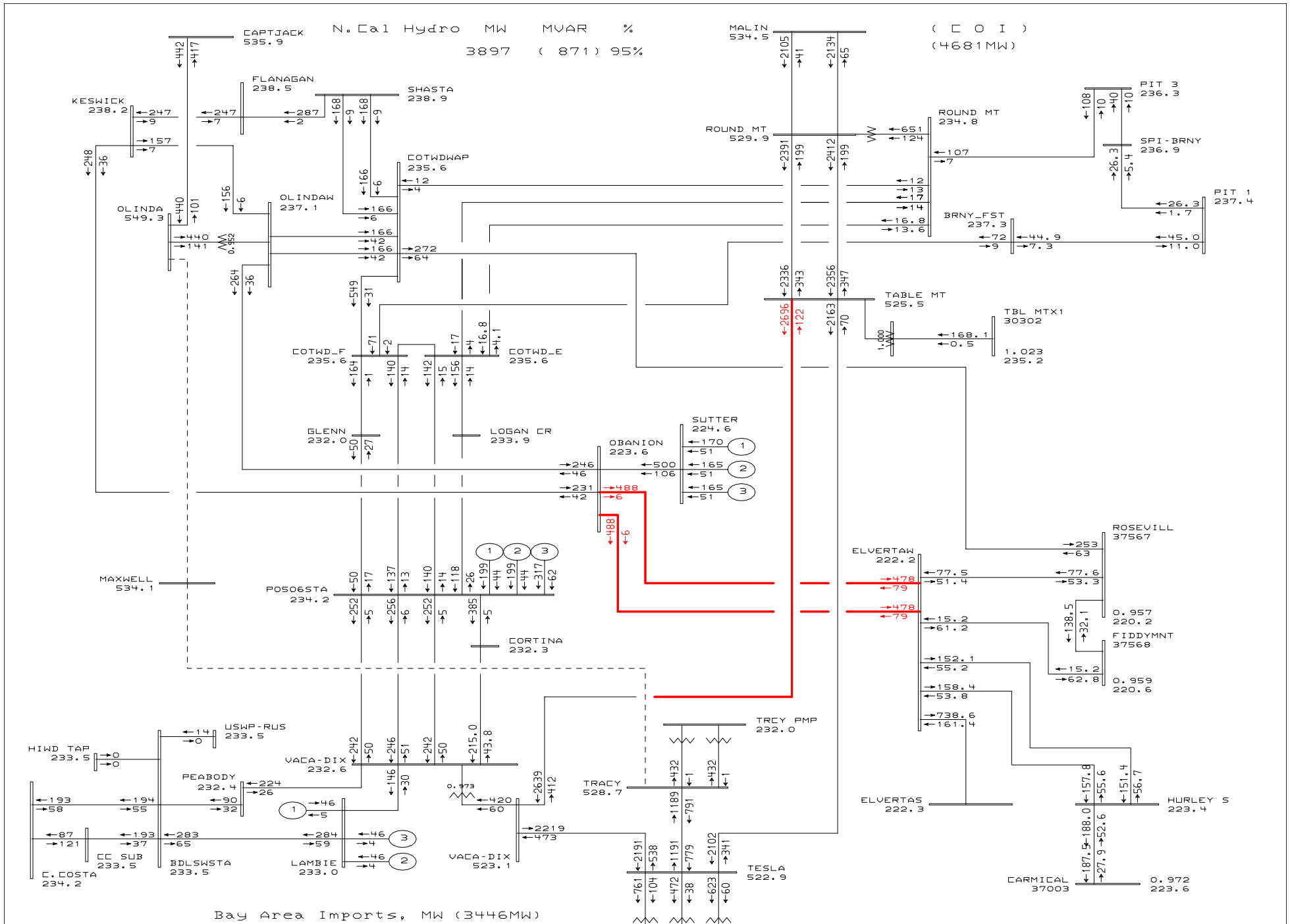

General Electric International, Inc. PSLF Program MW/MVAR Tue Sep 06 10:22:52 2005

PG&E 2004 BASE CASE SERIES - 2010 North Valley Summer Peak Case
PATH15=-1127 MW(S-N) PATH26=3313 MW(N-S) PDCI=3105 MW(N-S) COI=4753 MW(N-S)
CPV Colusa - 2010 Summer Peak - after (TMPP & P0441 removed)

Plot 39 - Heavy Summer - After Project
Outage: Olinda - Tracy 500 kV Line

D:\PSLF_Work\Projects\EL_Colus
D:\PSLF_Work\Projects\EL_Colus
Rating = 2

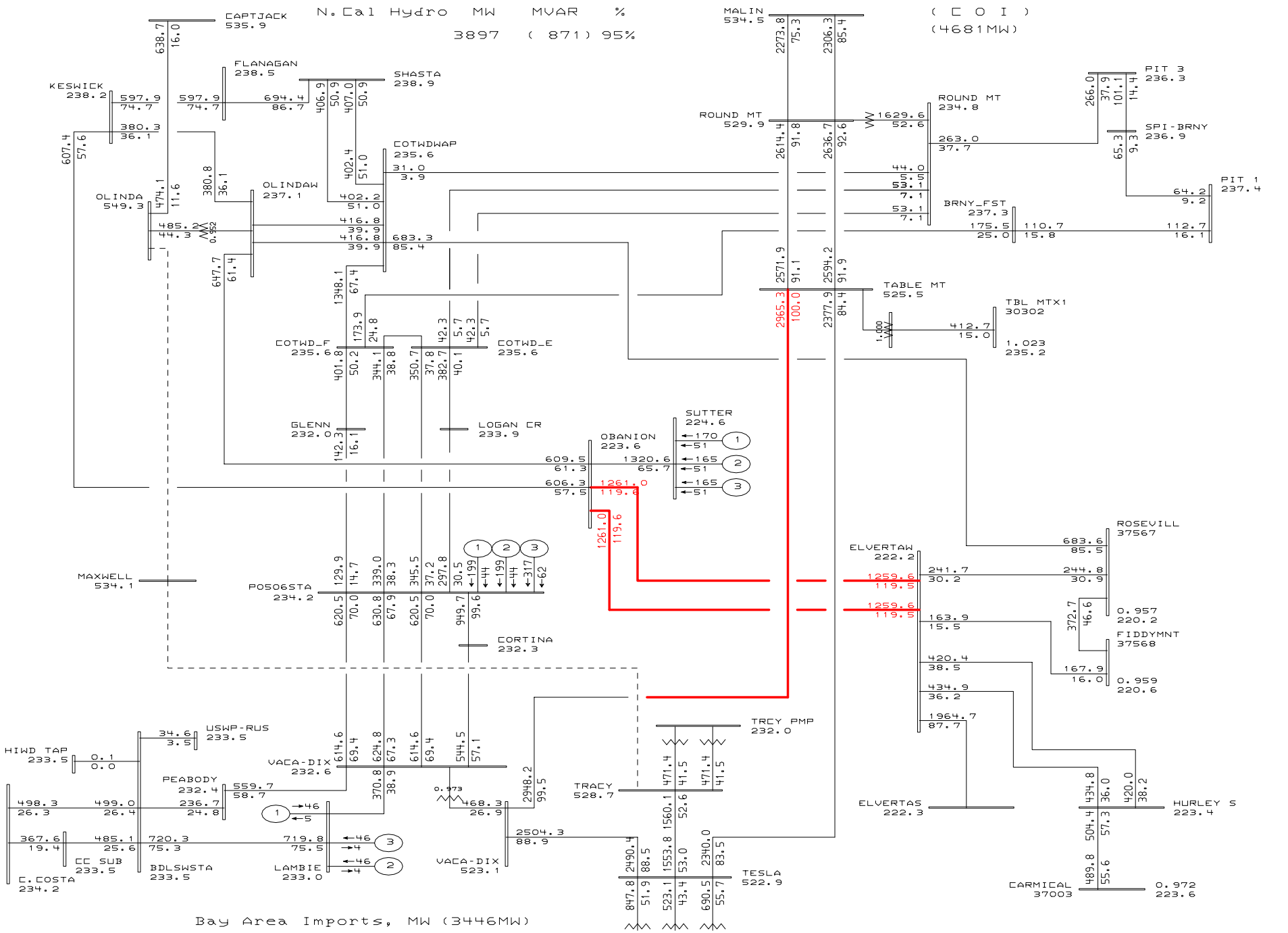

General Electric International, Inc. PSLF Program AMPS/Pct Tue Sep 06 10:22:52 2005

PG&E 2004 BASE CASE SERIES - 2010 North Valley Summer Peak Case
PATH15=-1127 MW(S-N) PATH26=3313 MW(N-S) PDCI=3105 MW(N-S) COI=4753 MW(N-S)
CPV Colusa - 2010 Summer Peak - after (TMPP & P0441 removed)

Plot 40 - Heavy Summer - After Project
Outage: Olinda - Tracy 500 kV Line

D:\PSLF_Work\Projects\EL_Colus
D:\PSLF_Work\Projects\EL_Colus
Rating = 2

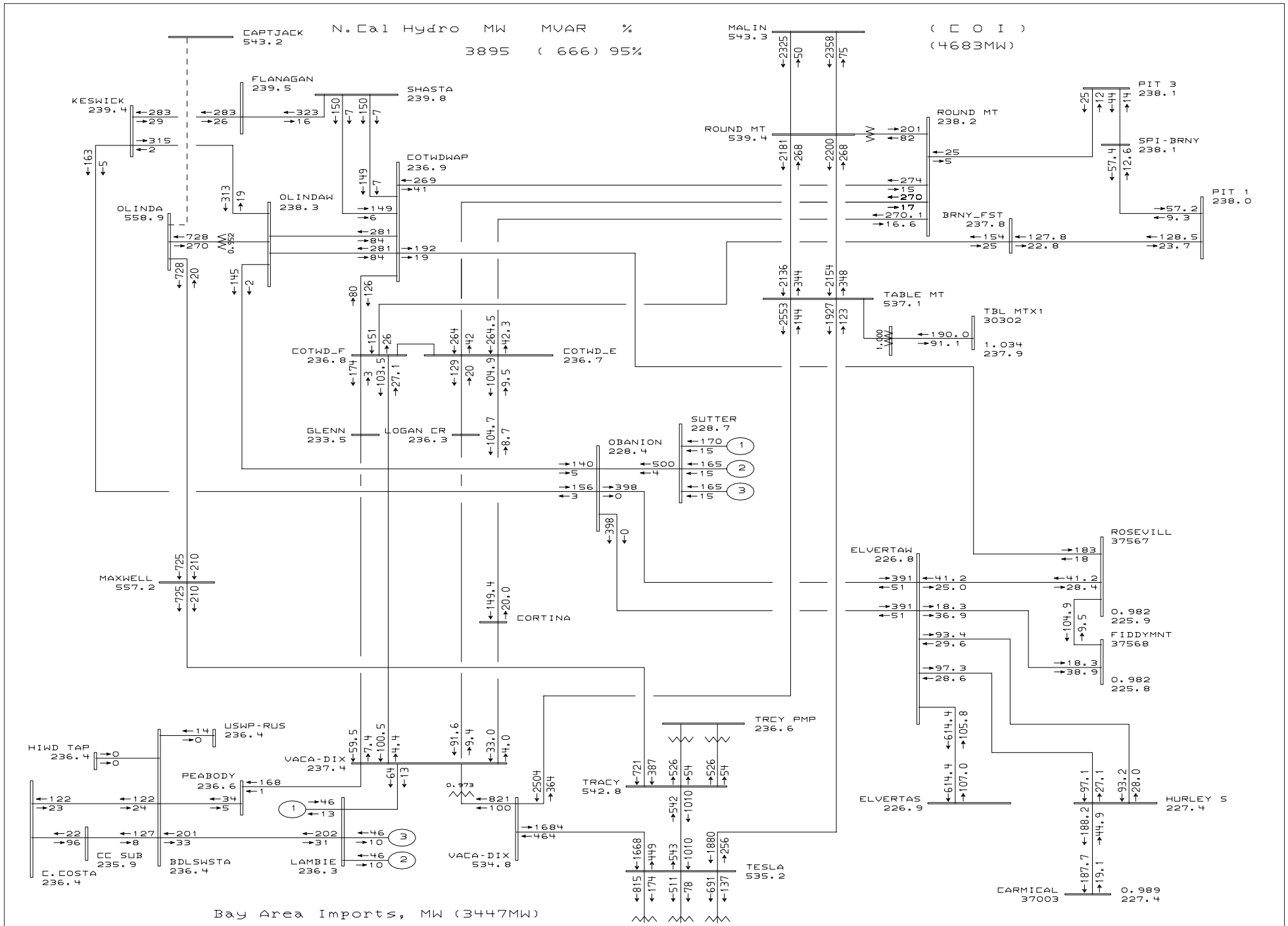

General Electric International, Inc. PSLF Program MW/MVAR Tue Sep 06 10:22:52 2005

PG&E 2004 BASE CASE SERIES - 2010 North Valley Summer Peak Case
PATH15=-518 MW(S-N) PATH26=3352 MW(N-S) PDCI=3105 MW(N-S) COI=4754 MW(N-S)
CPV Colusa - 2010 Summer Peak - before (TMPP & P0441 removed)

Plot 41 - Heavy Summer - Before Project
Outage: Captain Jack - Olinda 500 kV Line

D:\PSLF_Work\Projects\EL_Colus
D:\PSLF_Work\Projects\EL_Colus
Rating = 2

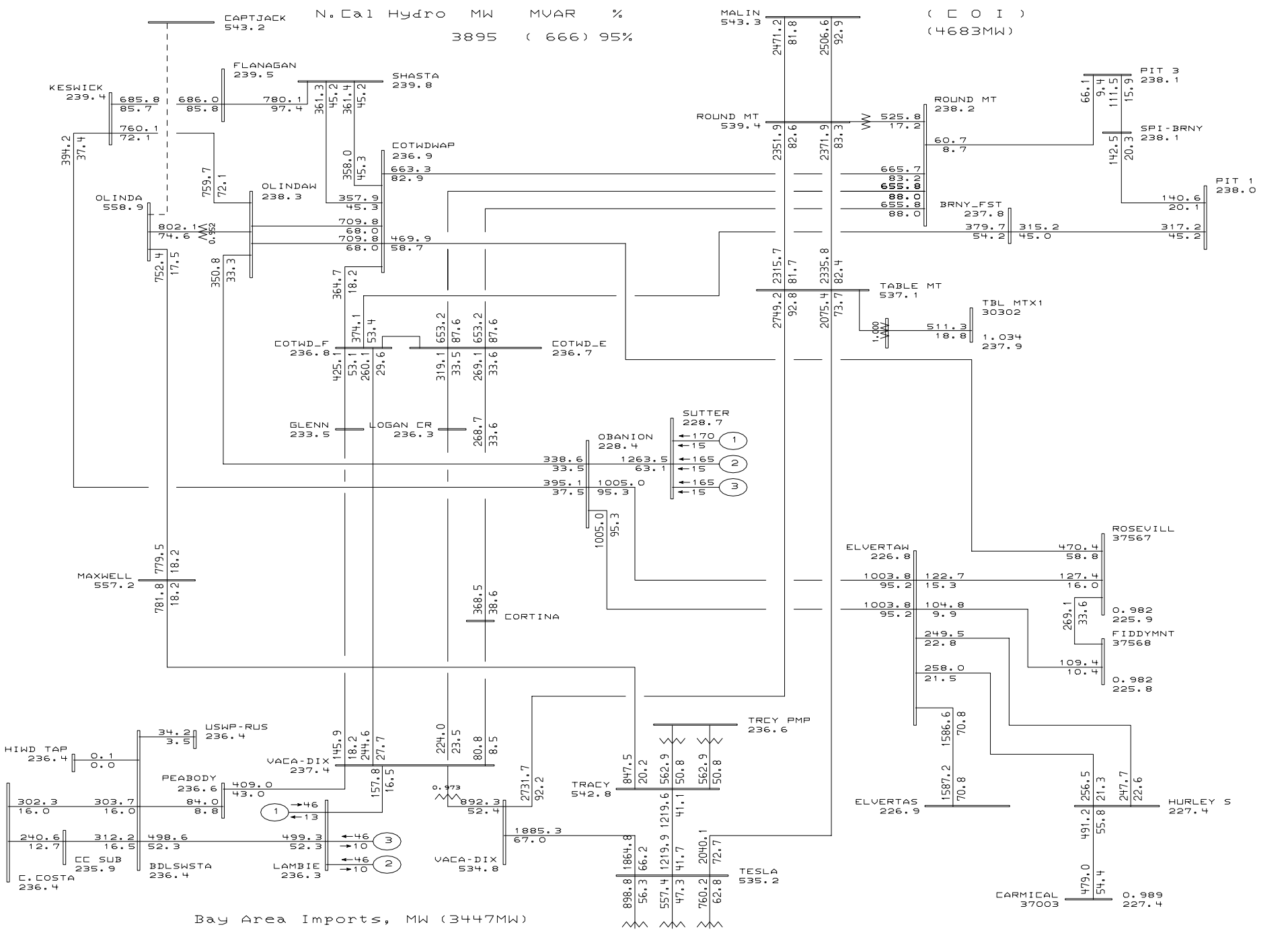

General Electric International, Inc. PSLF Program AMPS/Pct Tue Sep 06 10:22:53 2005

PG&E 2004 BASE CASE SERIES - 2010 North Valley Summer Peak Case
PATH15=-518 MW(S-N) PATH26=3352 MW(N-S) PDCI=3105 MW(N-S) COI=4754 MW(N-S)
CPV Colusa - 2010 Summer Peak - before (TMPP & P0441 removed)

Plot 42 - Heavy Summer - Before Project
Outage: Captain Jack - Olinda 500 kV Line

D:\PSLF_Work\Projects\EL_Colus
D:\PSLF_Work\Projects\EL_Colus
Rating = 2

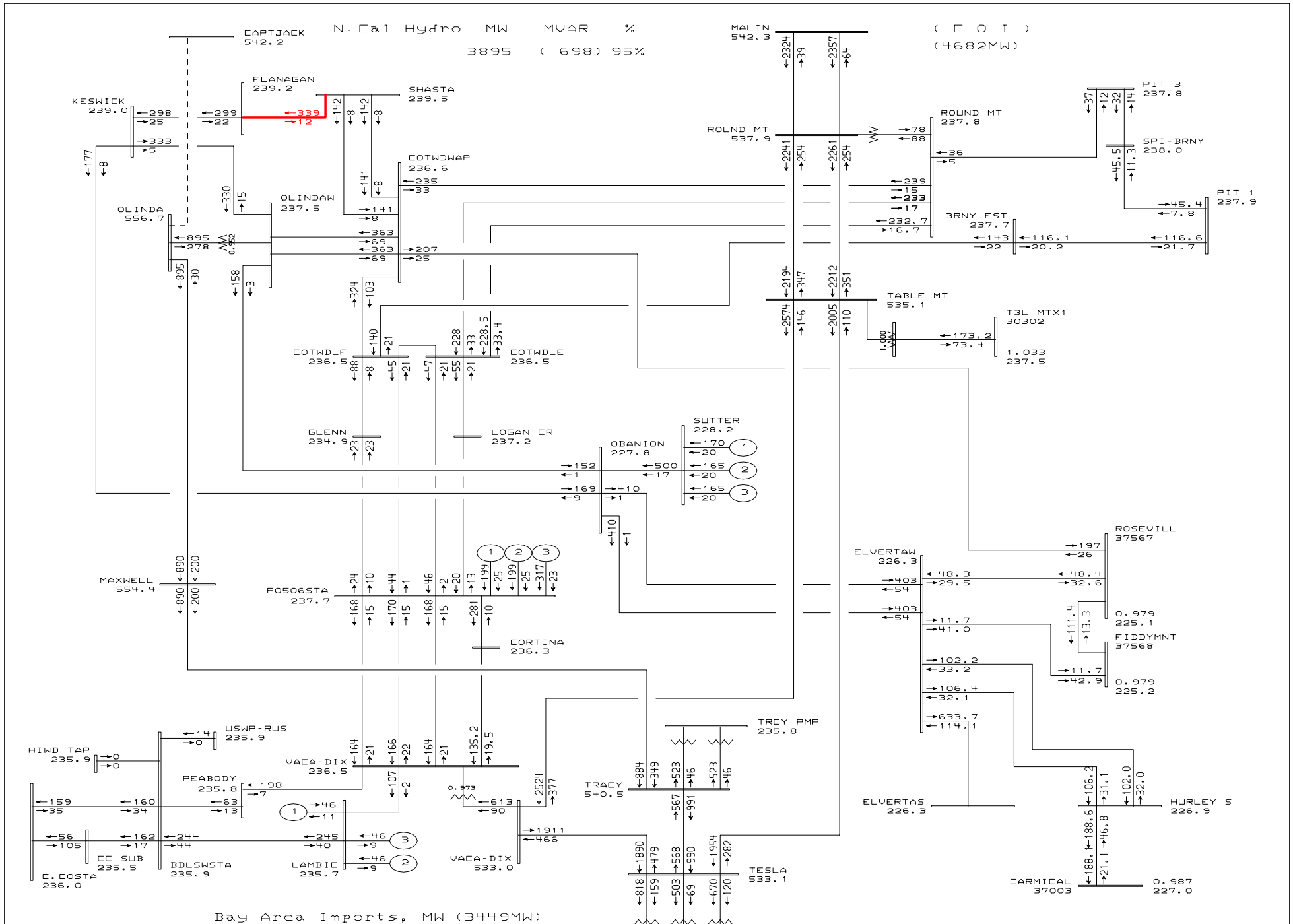

General Electric International, Inc. PSLF Program MW/MVAR Tue Sep 06 10:22:53 2005

PG&E 2004 BASE CASE SERIES - 2010 North Valley Summer Peak Case
PATH15=-1127 MW(S-N) PATH26=3313 MW(N-S) PDCI=3105 MW(N-S) COI=4753 MW(N-S)
CPV Colusa - 2010 Summer Peak - after (TMPP & P0441 removed)

Plot 43 - Heavy Summer - After Project
Outage: Captain Jack - Olinda 500 kV Line

D:\PSLF_Work\Projects\EL_Colus
D:\PSLF_Work\Projects\EL_Colus
Rating = 2

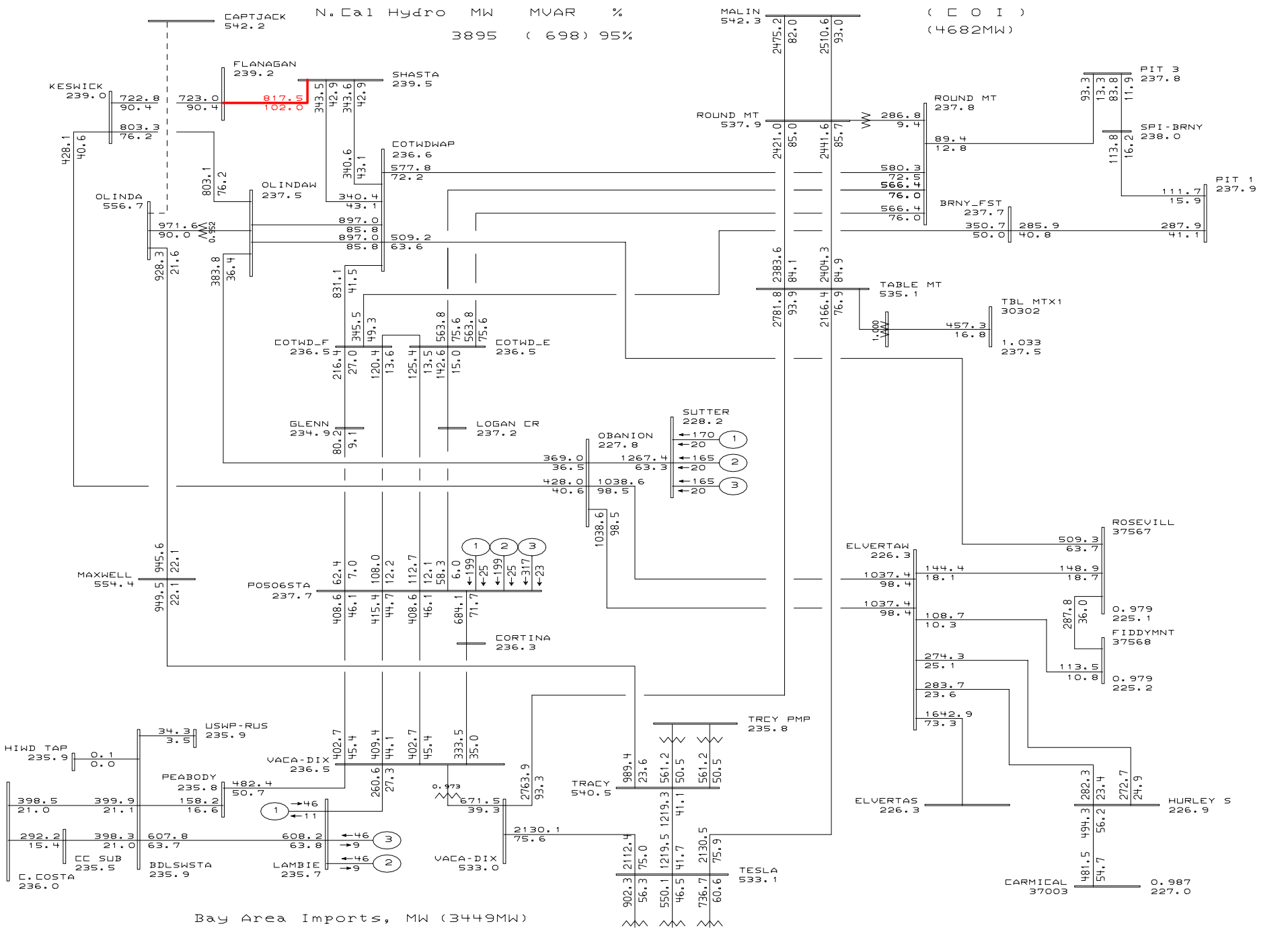

General Electric International, Inc. PSLF Program AMPS/Pct Tue Sep 06 10:22:53 2005

PG&E 2004 BASE CASE SERIES - 2010 North Valley Summer Peak Case
PATH15=-1127 MW(S-N) PATH26=3313 MW(N-S) PDCI=3105 MW(N-S) COI=4753 MW(N-S)
CPV Colusa - 2010 Summer Peak - after (TMPP & P0441 removed)

Plot 44 - Heavy Summer - After Project
Outage: Captain Jack - Olinda 500 kV Line

D:\PSLF_Work\Projects\EL_Colus
D:\PSLF_Work\Projects\EL_Colus
Rating = 2

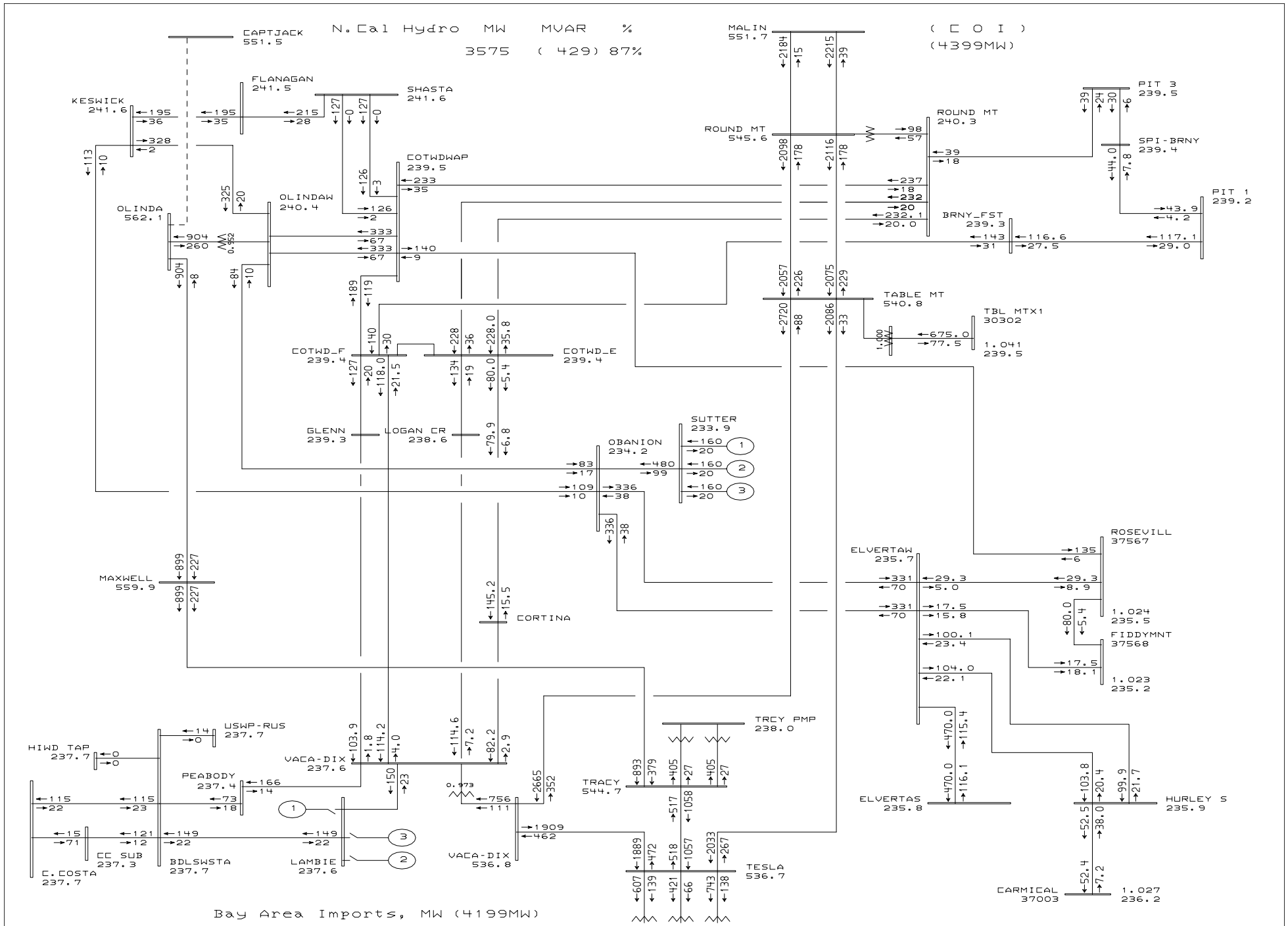

General Electric International, Inc. PSLF Program MW/MVAR Tue Sep 06 10:22:54 2005

PG&E 2004 BASE CASE SERIES - 2010 North Valley Spring Off Peak Case
PATH15=-2139 MW(S-N) PATH26=3365 MW(N-S) PDCI=3105 MW(N-S) COI=4460 MW(N-S)
CPV Colusa - 2010 Spring Off Peak - before (TMPP and PO441 removed)

Plot 45 - Spring Off-peak - Before Project
Outage: Captain Jack - Olinda 500 kV Line

D:\PSLF_Work\Projects\EL_Colus
D:\PSLF_Work\Projects\EL_Colus
Rating = 2

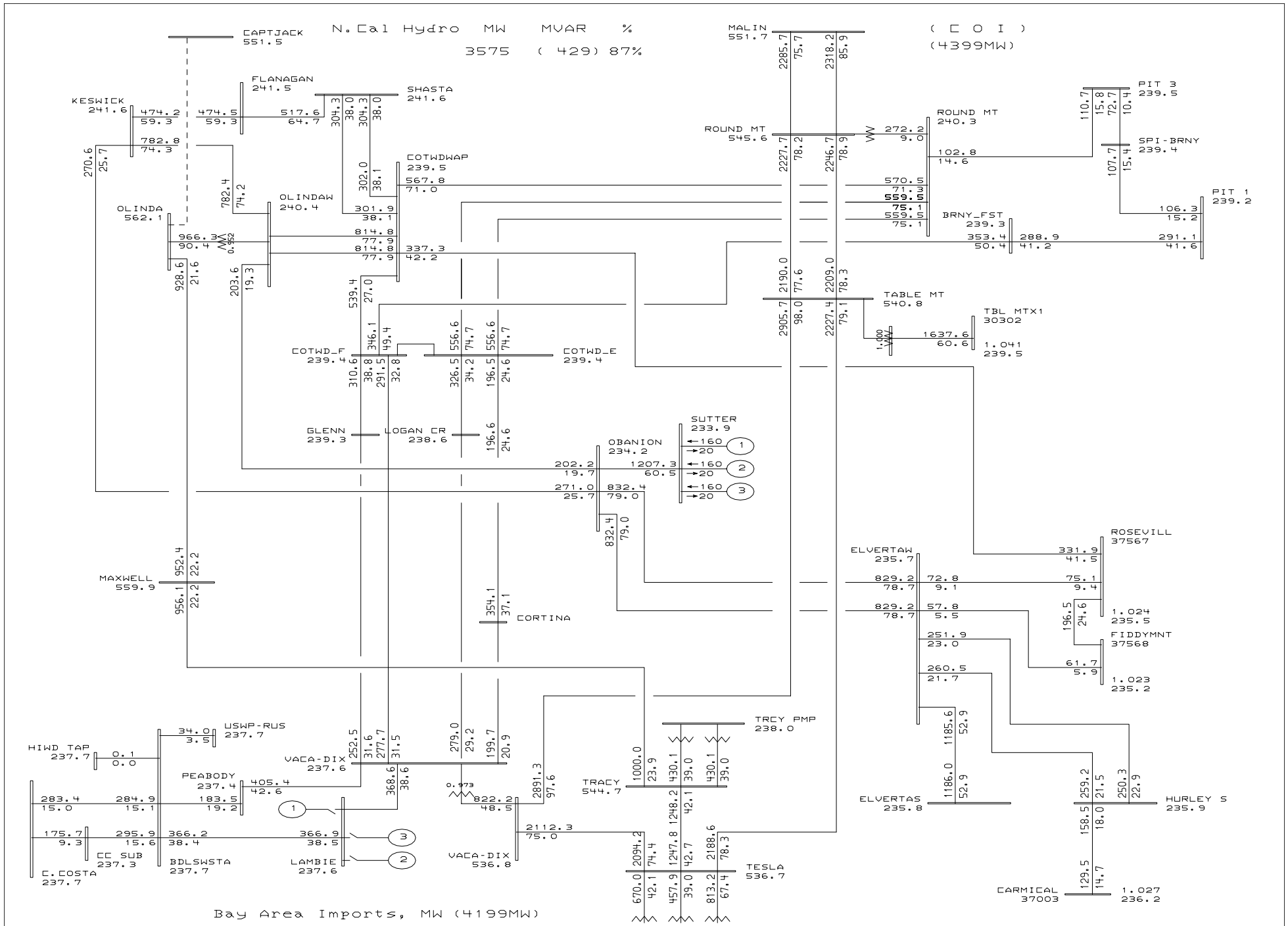

General Electric International, Inc. PSLF Program AMPS/Pct Tue Sep 06 10:22:54 2005

PG&E 2004 BASE CASE SERIES - 2010 North Valley Spring Off Peak Case
PATH15=-2139 MW(S-N) PATH26=3365 MW(N-S) PDCI=3105 MW(N-S) COI=4460 MW(N-S)
CPV Colusa - 2010 Spring Off Peak - before (TMPP and PO441 removed)

Plot 46 - Spring Off-peak - Before Project
Outage: Captain Jack - Olinda 500 kV Line

D:\PSLF_Work\Projects\EL_Colus
D:\PSLF_Work\Projects\EL_Colus
Rating = 2

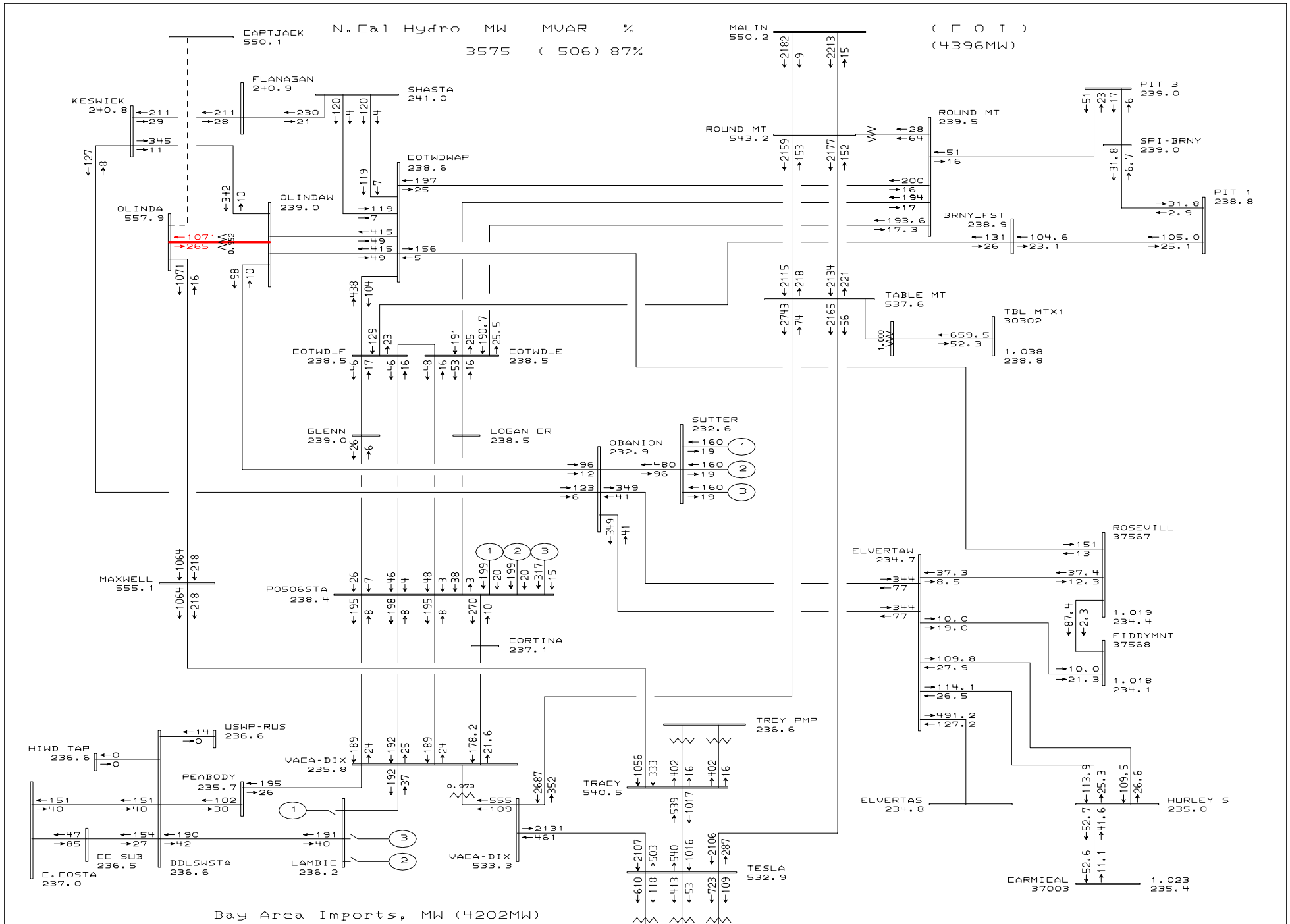
N. Cal Hydro MW MVAR %
3575 (506) 87%
(C O I)
(4396MW)
CAPTJACK 550.1
MALIN 550.2
FLANAGAN 240.9
SHASTA 241.0
KESWICK 240.8
ROUND MT 543.2
ROUND MT 239.5
PIT 3 239.0
SPI-BRNY 239.0
PIT 1 238.8
BRNY_FST 238.9
COTWDWAP 238.6
OLINDAW 239.0
OLINDA 557.9
TABLE MT 537.6
TBL MTX1 30302
COTWD_F 238.5
COTWD_E 238.5
GLENN 239.0
LOGAN CR 238.5
SUTTER 232.6
OBANION 232.9
MAXWELL 555.1
POSO6STA 238.4
CORTINA 237.1
ROSEVILL 37567
ELVERTAW 234.7
FIDDYMNT 37568
TRCY PMP 236.6
USWP-RUS 236.6
HIWD TAP 236.6
VACA-DIX 235.8
PEABODY 235.7
TRACY 540.5
ELVERTAS 234.8
HURLEY S 235.0
CC SUB 236.5
BDLSWSTA 236.6
LAMBIE 236.2
VACA-DIX 533.3
TESLA 532.9
CARMICAL 37003
C.COSTA 237.0
Bay Area Imports, MW (4202MW)

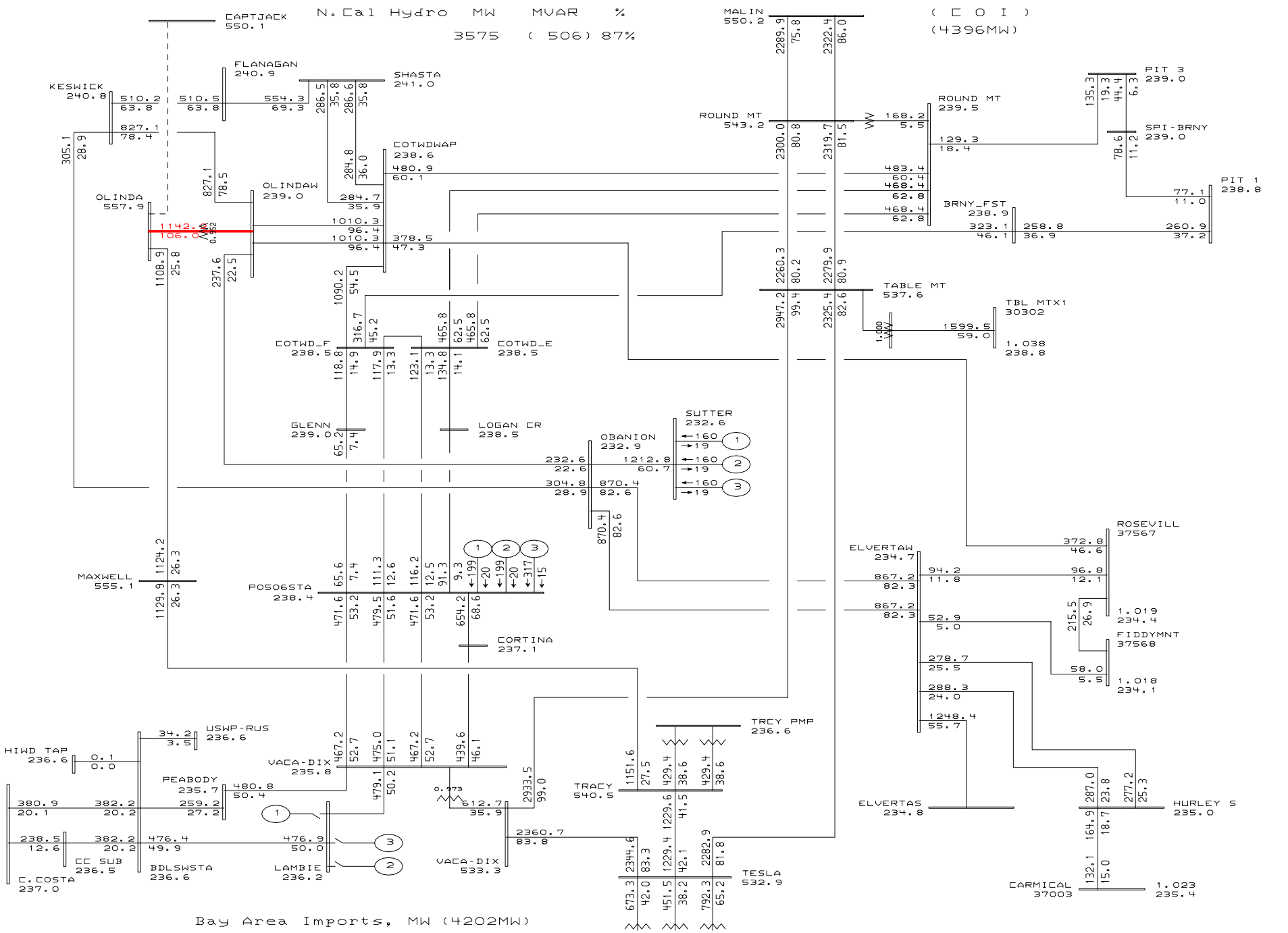

General Electric International, Inc. PSLF Program AMPS/Pct Tue Sep 06 10:22:54 2005

PG&E 2004 BASE CASE SERIES - 2010 North Valley Spring Off Peak Case
PATH15=-2732 MW(S-N) PATH26=3330 MW(N-S) PDCI=3103 MW(N-S) COI=4458 MW(N-S)
CPV Colusa - 2010 Spring Off Peak - after (TMPP & P0441 removed)

Plot 48 - Spring Off-peak - After Project
Outage: Captain Jack - Olinda 500 kV Line

D:\PSLF_Work\Projects\EL_Colus
D:\PSLF_Work\Projects\EL_Colus
Rating = 2

Appendix E

Generator Machine Dynamic Data

CPV Gas Turbine 1

Generator Model:

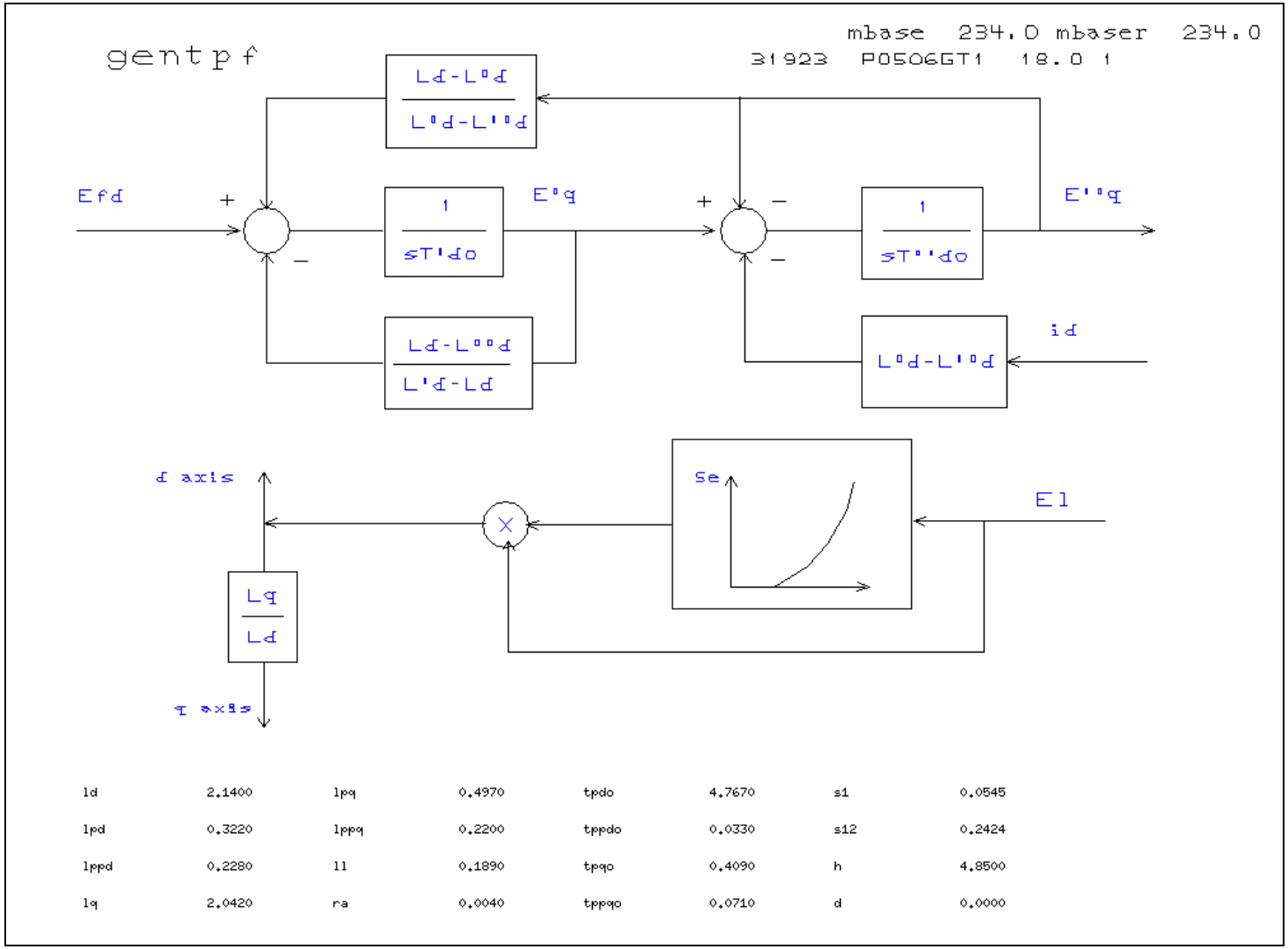

ld	2.1400	lpq	0.4970	tpdo	4.7670	s1	0.0545
lpd	0.3220	lppq	0.2200	tppdo	0.0330	s12	0.2424
lppd	0.2280	ll	0.1890	tpqo	0.4090	h	4.8500
lq	2.0420	ra	0.0040	tppqo	0.0710	d	0.0000

Governor Model:

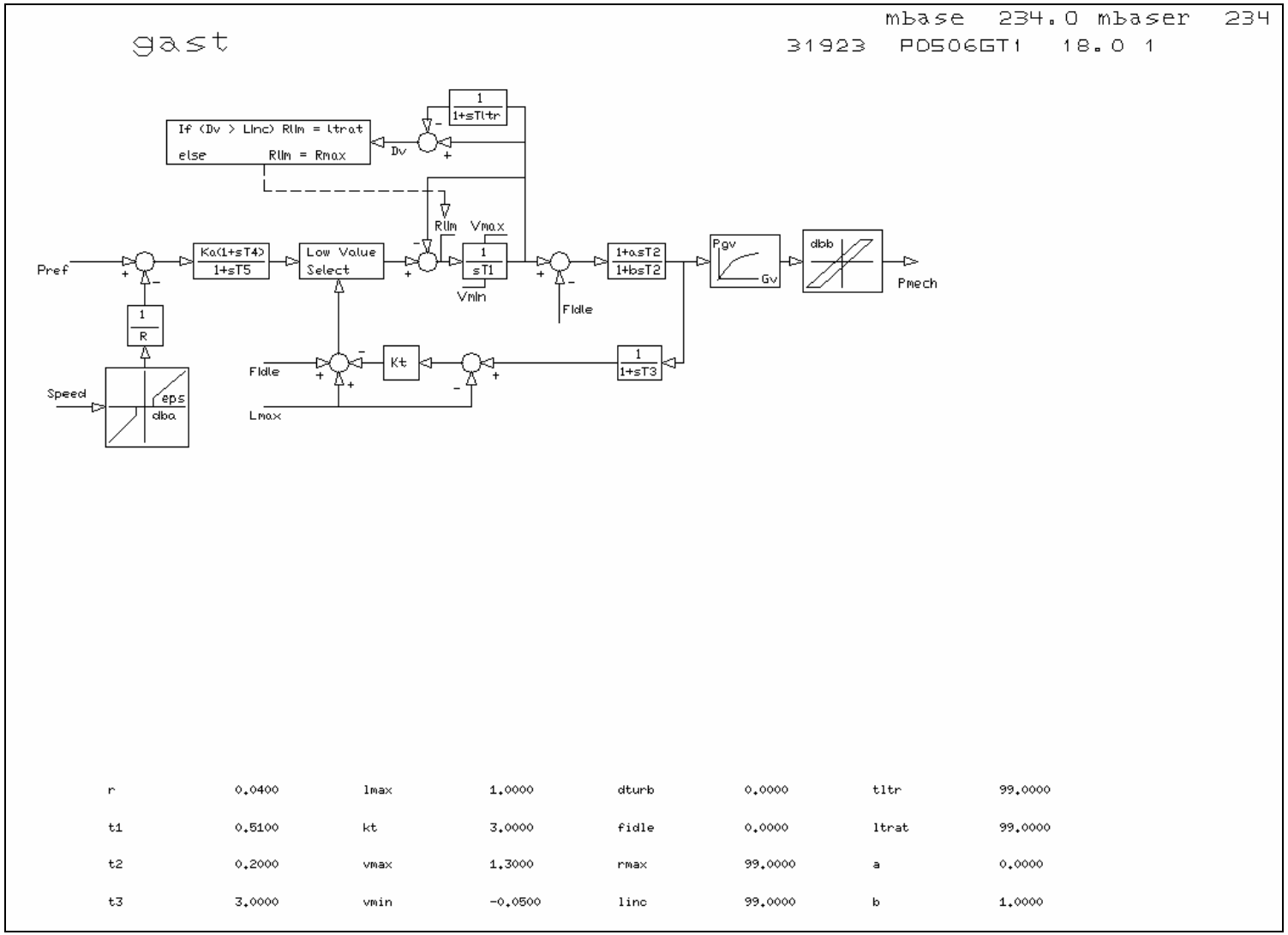

r	0.0400	lmax	1.0000	dturb	0.0000	tltr	99.0000
t1	0.5100	kt	3.0000	fidle	0.0000	ltrat	99.0000
t2	0.2000	vmax	1.3000	rmax	99.0000	a	0.0000
t3	3.0000	vmin	-0.0500	linc	99.0000	b	1.0000

Excitation Model:

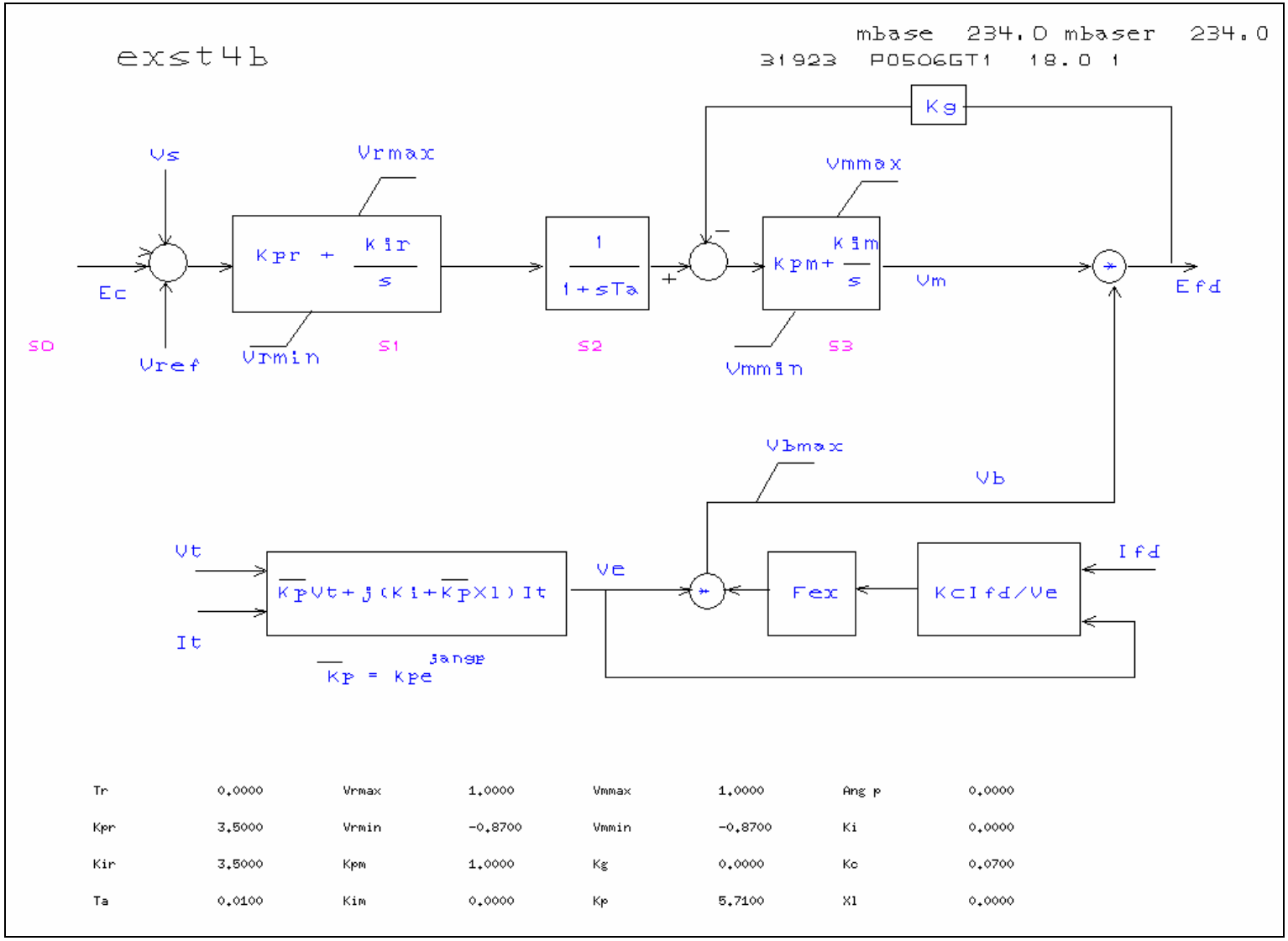

Tr	0.0000	Vrmax	1.0000	Vmmax	1.0000	Ang p	0.0000
Kpr	3.5000	Vrmin	-0.8700	Vmmin	-0.8700	Ki	0.0000
Kir	3.5000	Kpm	1.0000	Kg	0.0000	Kc	0.0700
Ta	0.0100	Kim	0.0000	Kp	5.7100	X1	0.0000

Power System Stabilizer Model:

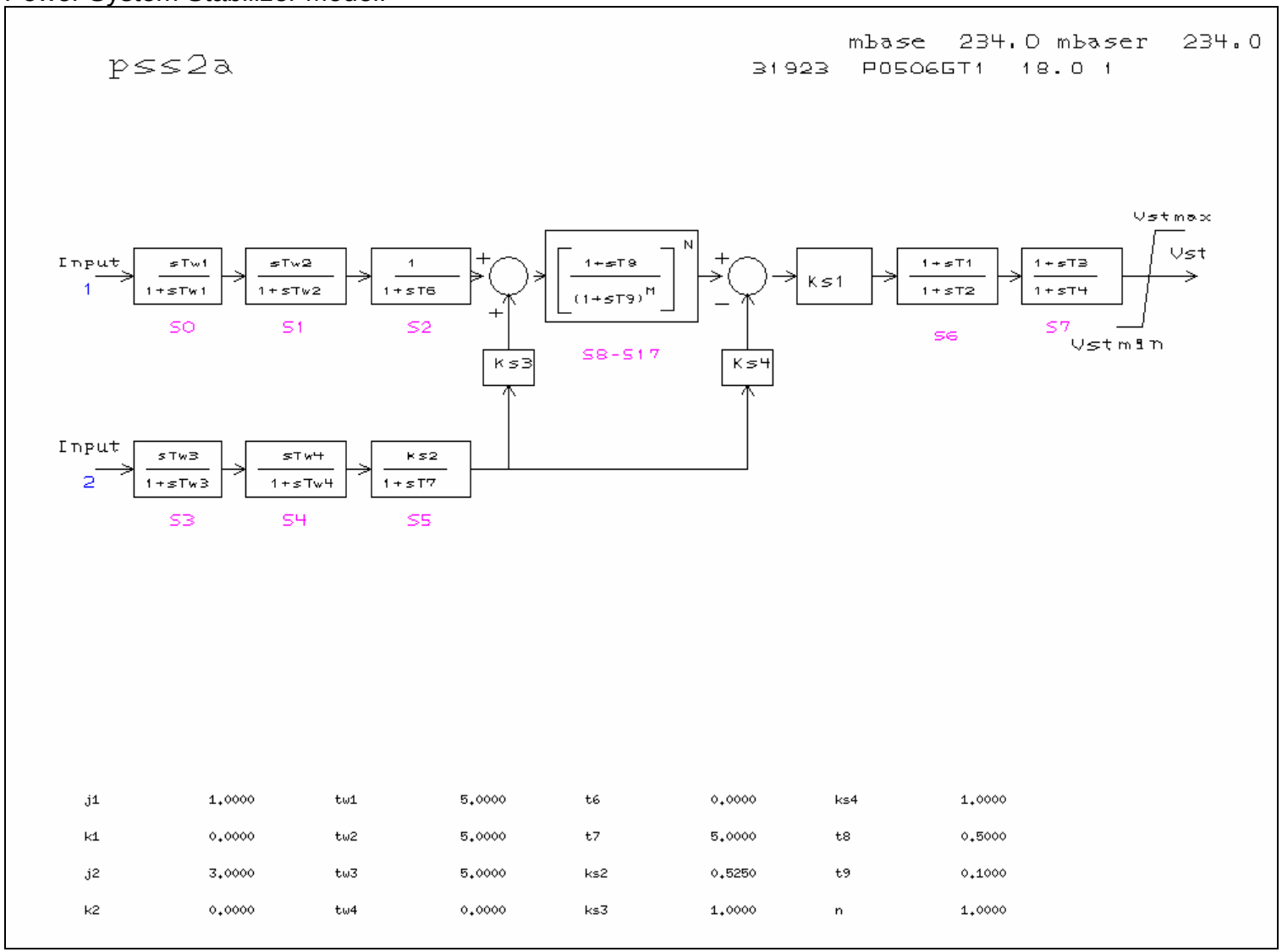

j1	1.0000	tw1	5.0000	t6	0.0000	ks4	1.0000
k1	0.0000	tw2	5.0000	t7	5.0000	t8	0.5000
j2	3.0000	tw3	5.0000	ks2	0.5250	t9	0.1000
k2	0.0000	tw4	0.0000	ks3	1.0000	n	1.0000

CPV Gas Turbine 2

Generator Model:

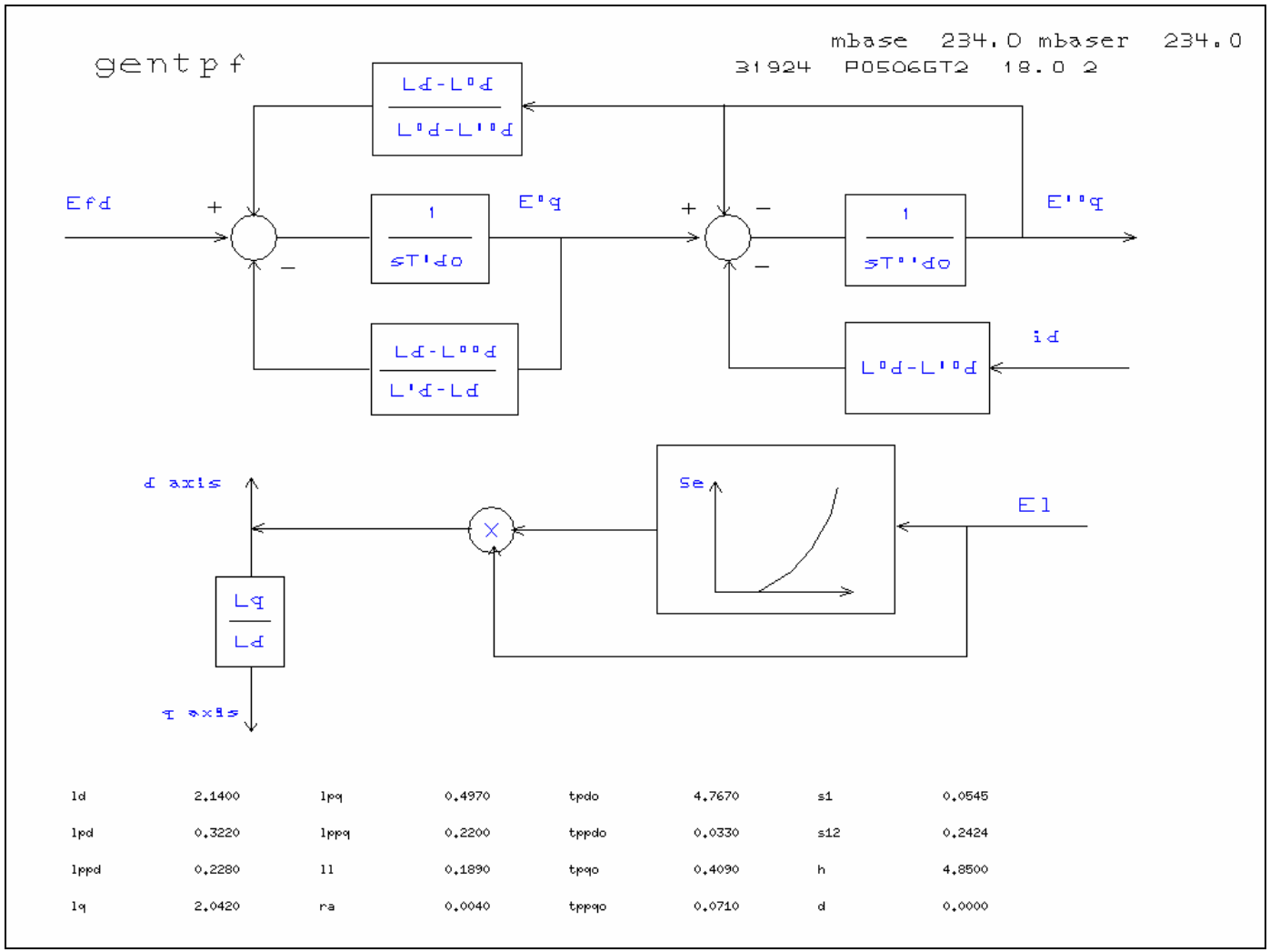

ld	2.1400	lpq	0.4970	tpdo	4.7670	s1	0.0545
lpd	0.3220	lppq	0.2200	tppdo	0.0330	s12	0.2424
lppd	0.2280	ll	0.1890	tpqo	0.4090	h	4.8500
lq	2.0420	ra	0.0040	tppqo	0.0710	d	0.0000

Governor Model:

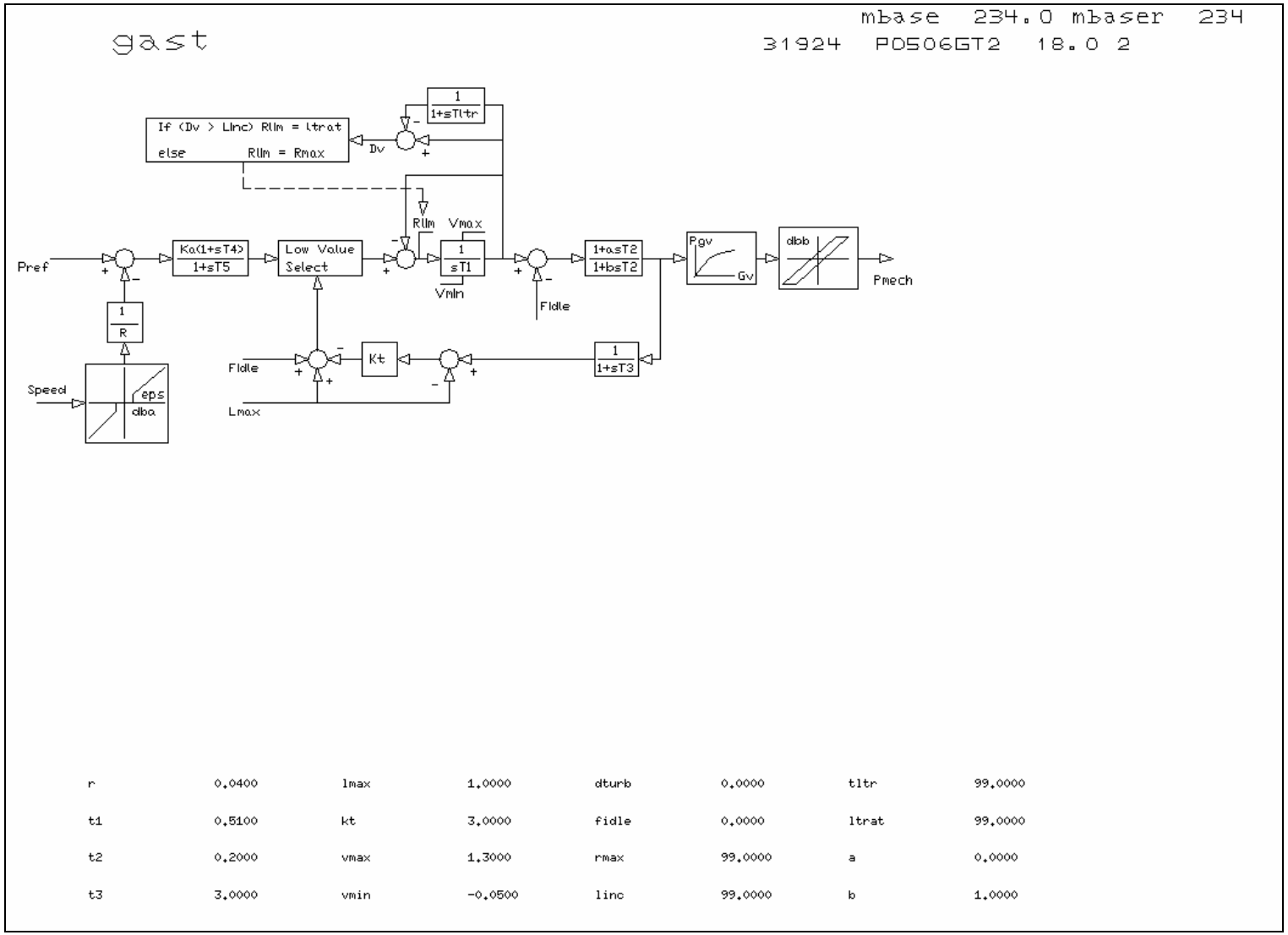

r	0.0400	lmax	1.0000	dturb	0.0000	tltr	99.0000
t1	0.5100	kt	3.0000	fidle	0.0000	ltrat	99.0000
t2	0.2000	vmax	1.3000	rmax	99.0000	a	0.0000
t3	3.0000	vmin	-0.0500	linc	99.0000	b	1.0000

Excitation Model:

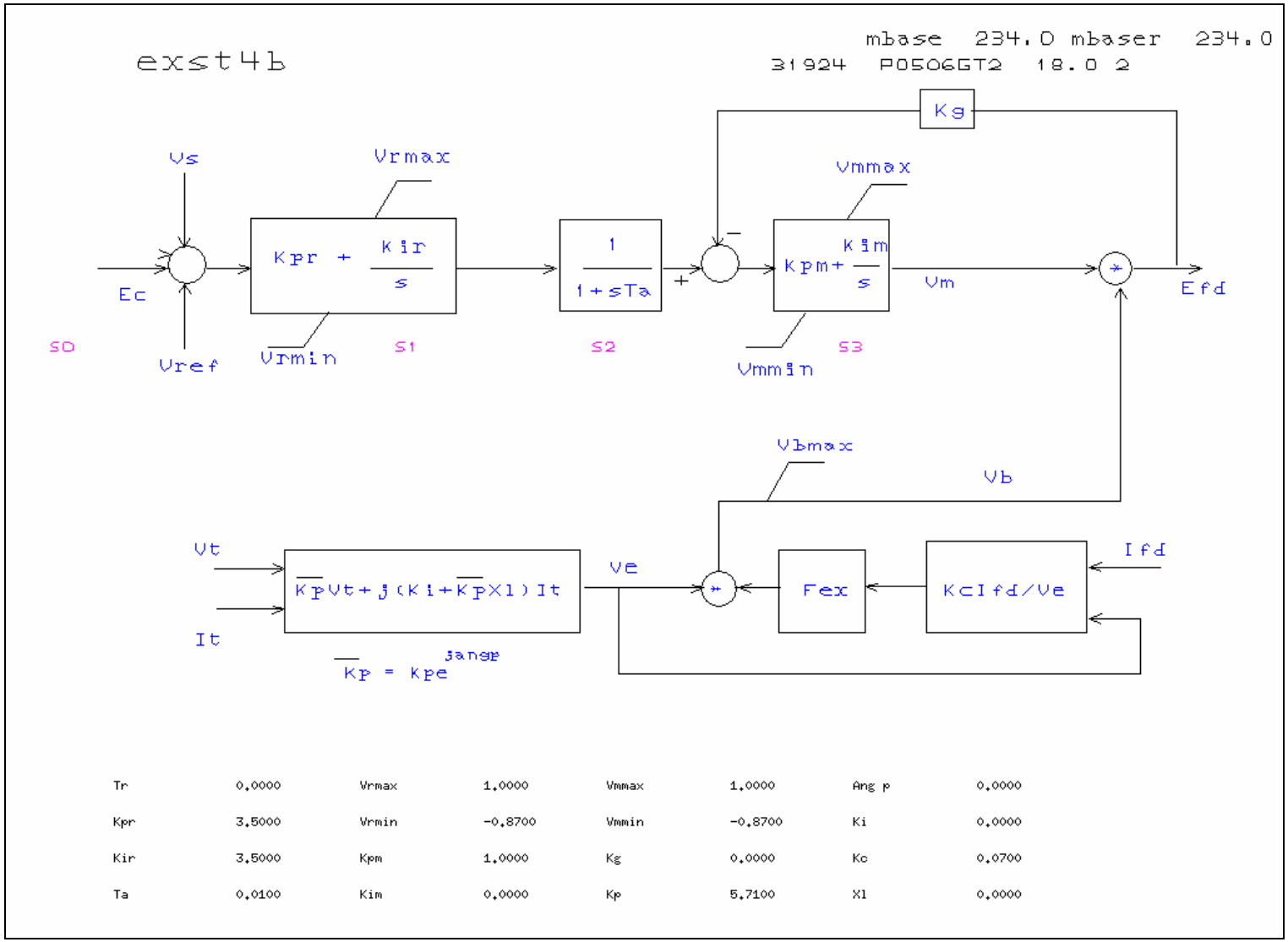

Tr	0.0000	Vrmax	1.0000	Vmmax	1.0000	Ang p	0.0000
Kpr	3.5000	Vrmin	-0.8700	Vmmin	-0.8700	Ki	0.0000
Kir	3.5000	Kpm	1.0000	Kg	0.0000	Kc	0.0700
Ta	0.0100	Kim	0.0000	Kp	5.7100	Xl	0.0000

Power System Stabilizer Model:

pss2a

mbase 234.0 mbaser 234.0

31924 P0506GT2 18.0 2

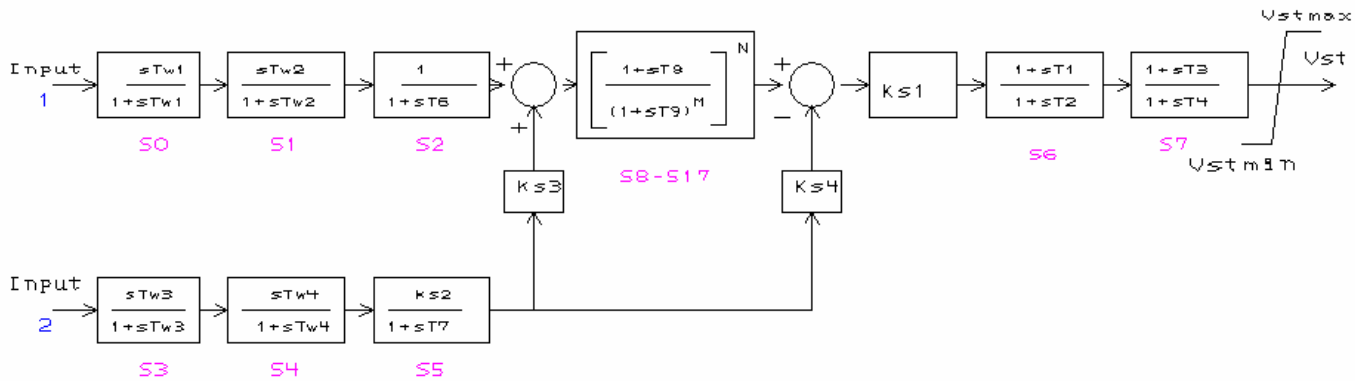

j1	1.0000	tw1	5.0000	t6	0.0000	ks4	1.0000
k1	0.0000	tw2	5.0000	t7	5.0000	t8	0.5000
j2	3.0000	tw3	5.0000	ks2	0.5250	t9	0.1000
k2	0.0000	tw4	0.0000	ks3	1.0000	n	1.0000

CPV Steam Turbine

Generator Model:

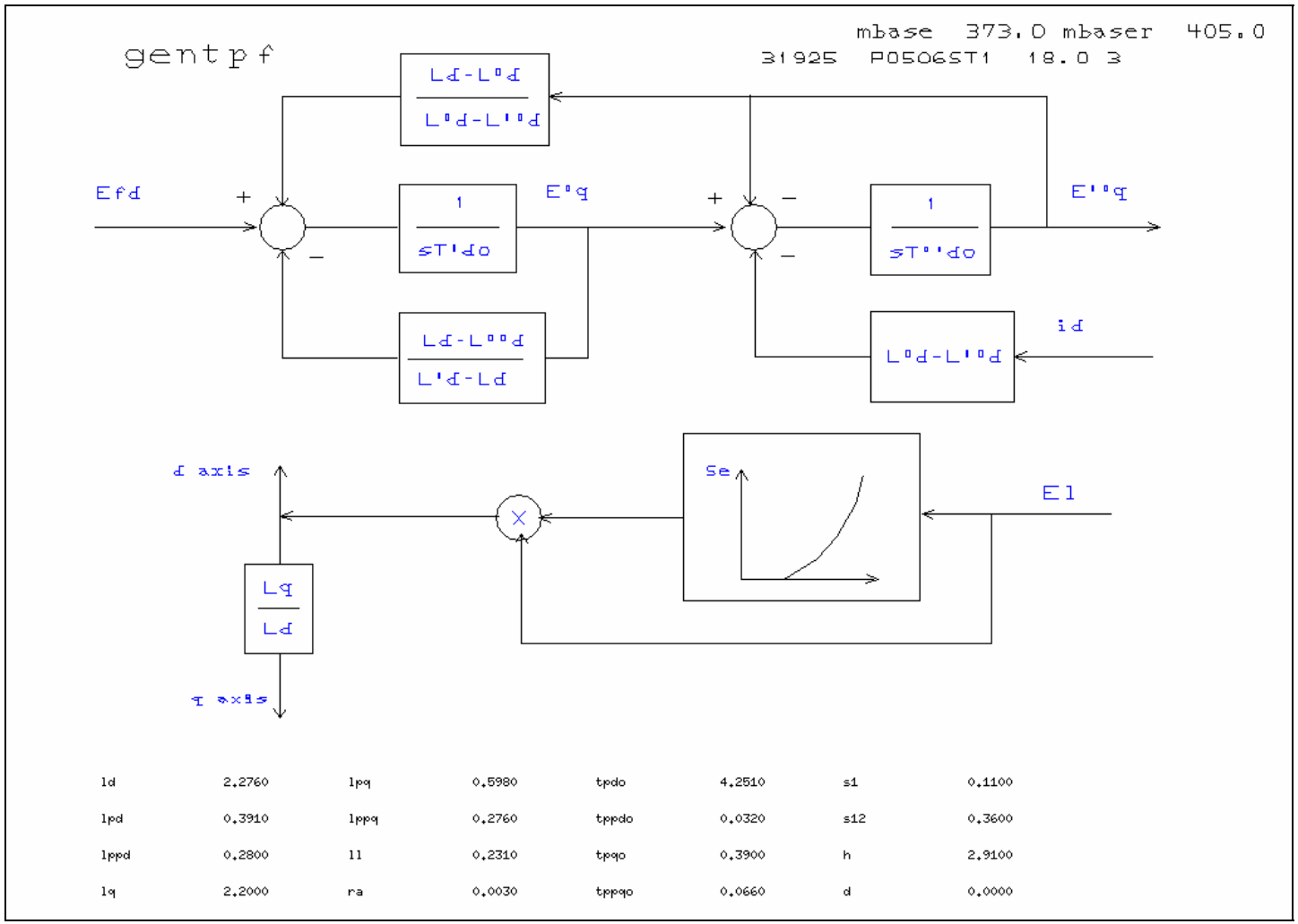

ld	2.2760	lpq	0.5980	tpdo	4.2510	s1	0.1100
lpd	0.3910	lppq	0.2760	tppdo	0.0320	s12	0.3600
lppd	0.2800	ll	0.2310	tpqo	0.3900	h	2.9100
lq	2.2000	ra	0.0030	tppqo	0.0660	d	0.0000

Governor Model:

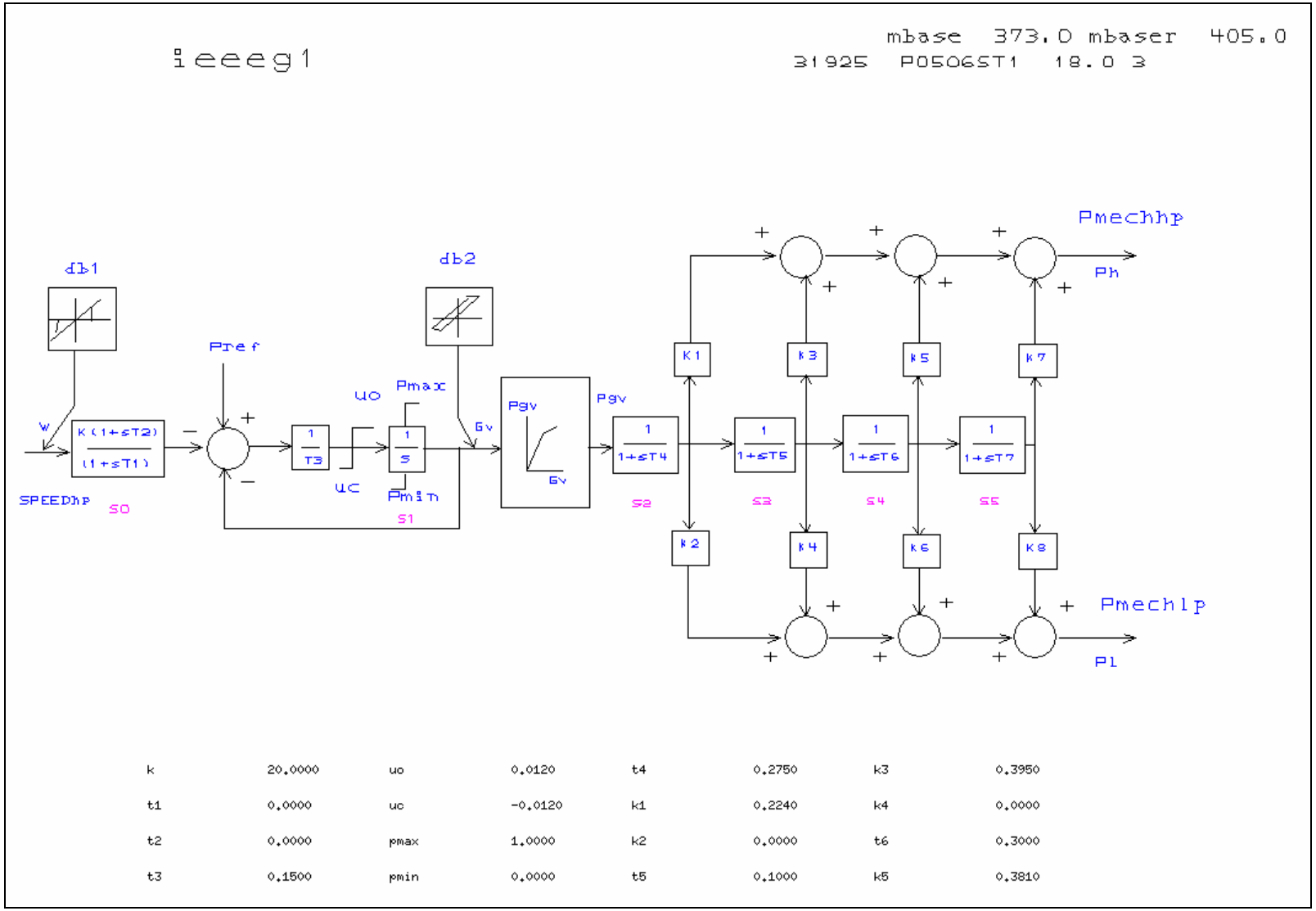

k	20.0000	uo	0.0120	t4	0.2750	k3	0.3950
t1	0.0000	uc	-0.0120	k1	0.2240	k4	0.0000
t2	0.0000	pmax	1.0000	k2	0.0000	t6	0.3000
t3	0.1500	pmin	0.0000	t5	0.1000	k5	0.3810

Exciter Model:

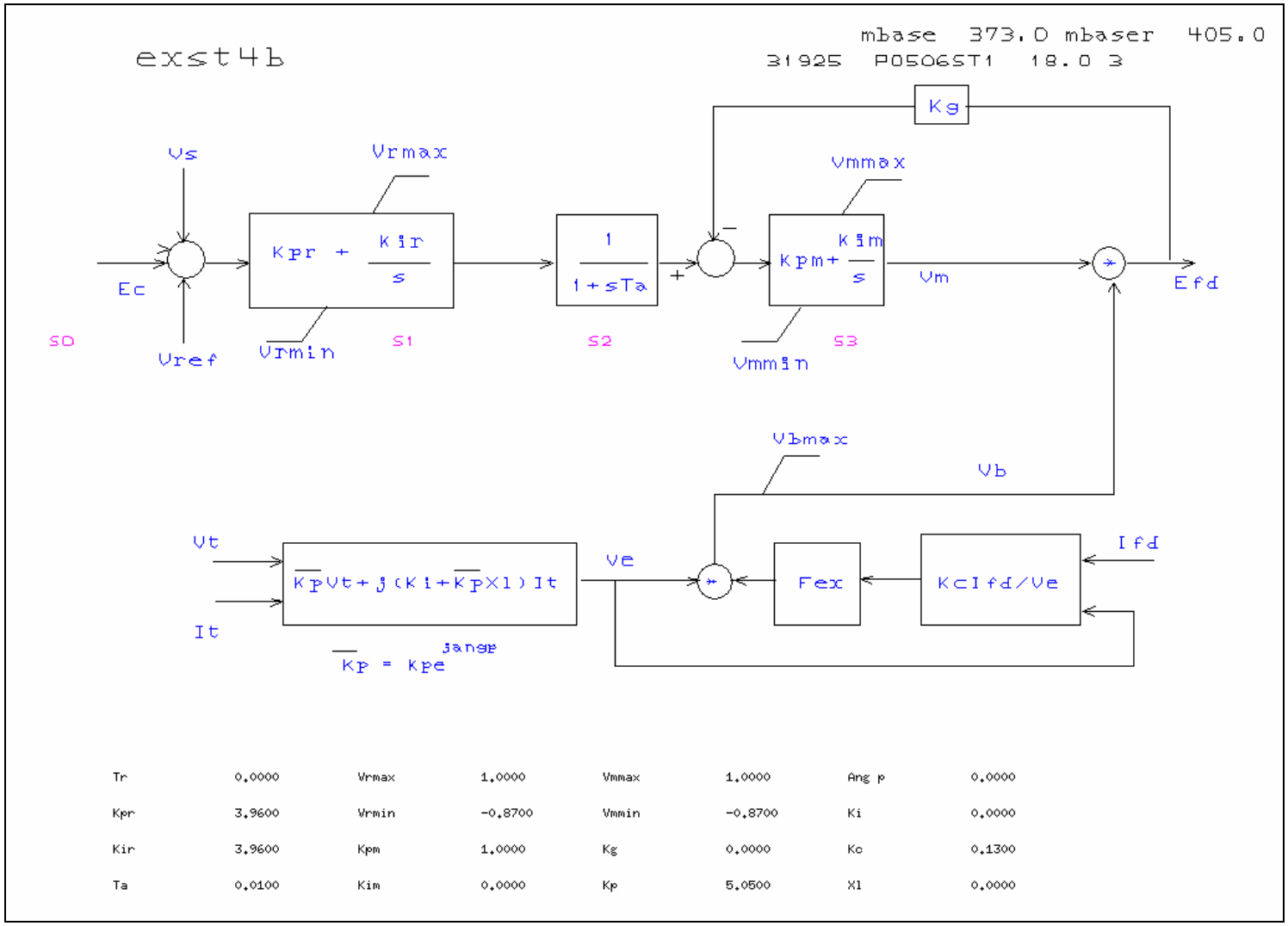

Tr	0.0000	Vrmax	1.0000	Vmmax	1.0000	Ang p	0.0000
Kpr	3.9600	Vrmin	-0.8700	Vmmin	-0.8700	Ki	0.0000
Kir	3.9600	Kpm	1.0000	Kg	0.0000	Kc	0.1300
Ta	0.0100	Kim	0.0000	Kp	5.0500	Xl	0.0000

Appendix F

Stability Plots

CAISO Category "B"	
Plot Group 1	Full load rejection 700 MW of the proposed CPV Colusa Project
Plot Group 2	A three-phase close-in fault on the Cottonwood-Colusa SWYD #1 230-kV line at Cottonwood Substation 230-kV bus with normal clearing time followed by loss of the Cottonwood-Colusa SWYD #1 230-kV line
Plot Group 3	A three-phase close-in fault on the Colusa SWYD-Cortina 230-kV line at Vaca Dixon Substation 230-kV bus with normal clearing time followed by loss of the Colusa SWYD-Cortina 230-kV line
Plot Group 4	A three-phase close-in fault on the Logan Creek-Colusa SWYD 230-kV line at Cottonwood Substation 230-kV bus with normal clearing time followed by loss of the Logan Creek-Colusa SWYD 230-kV line
Plot Group 5	A three-phase close-in fault on the Colusa SWYD-Vaca #1 230-kV line at Vaca Dixon Substation 230-kV bus with normal clearing time followed by loss of the Colusa SWYD-Vaca #1 230-kV line
Plot Group 6	A three-phase close-in fault on the Cottonwood-Colusa SWYD #2 230-kV line at Cottonwood Substation 230-kV bus with normal clearing time followed by loss of the Cottonwood-Colusa SWYD #2 230-kV line
Plot Group 7	A three-phase close-in fault on the Colusa SWYD-Vaca #2 230-kV line at Vaca Dixon Substation 230-kV bus with normal clearing time followed by loss of the Colusa SWYD-Vaca #2 230-kV line
Plot Group 8	A three-phase close-in fault on the Glenn-Colusa SWYD 230-kV line at Cottonwood Substation 230-kV bus with normal clearing time followed by loss of the Glenn-Colusa SWYD 230-kV line
Plot Group 9	A three-phase close-in fault on the Colusa SWYD-Vaca #3 230-kV line at Vaca Dixon Substation 230-kV bus with normal clearing time followed by loss of the Colusa SWYD-Vaca #3 230-kV line
CAISO Category "C"	
Plot Group 10	A three-phase fault on Cottonwood Substation 230-kV bus 1 section E with normal clearing time
Plot Group 11	A three-phase fault on Cottonwood Substation 230-kV bus 1 section F with normal clearing time
Plot Group 12	A three-phase fault on Cottonwood Substation 230-kV bus 2 section E with normal clearing time
Plot Group 13	A three-phase fault on Cottonwood Substation 230-kV bus 2 section F with normal clearing time
Plot Group 14	A three-phase fault on Cottonwood Substation 230-kV bus WAPA section 1 with normal clearing time
Plot Group 15	A three-phase fault on Cottonwood Substation 230-kV bus WAPA section 2 with normal clearing time
Plot Group 16	A three-phase fault on Vaca Dixon Substation 230-kV bus 1 section d with normal clearing time
Plot Group 17	A three-phase fault on Vaca Dixon Substation 230-kV bus 1 section e with normal clearing time
Plot Group 18	A three-phase fault on Vaca Dixon Substation 230-kV bus 2 section d with normal clearing time
Plot Group 19	A three-phase fault on Vaca Dixon Substation 230-kV bus 2 section e with normal clearing time
Plot Group 20	A three-phase fault on Logan Creek Substation 230-kV bus with normal clearing time
Plot Group 21	A three-phase fault on Cortina Substation 230-kV bus with normal clearing time
Plot Group 22	A three-phase fault on Glenn Substation 230-kV bus with normal clearing time

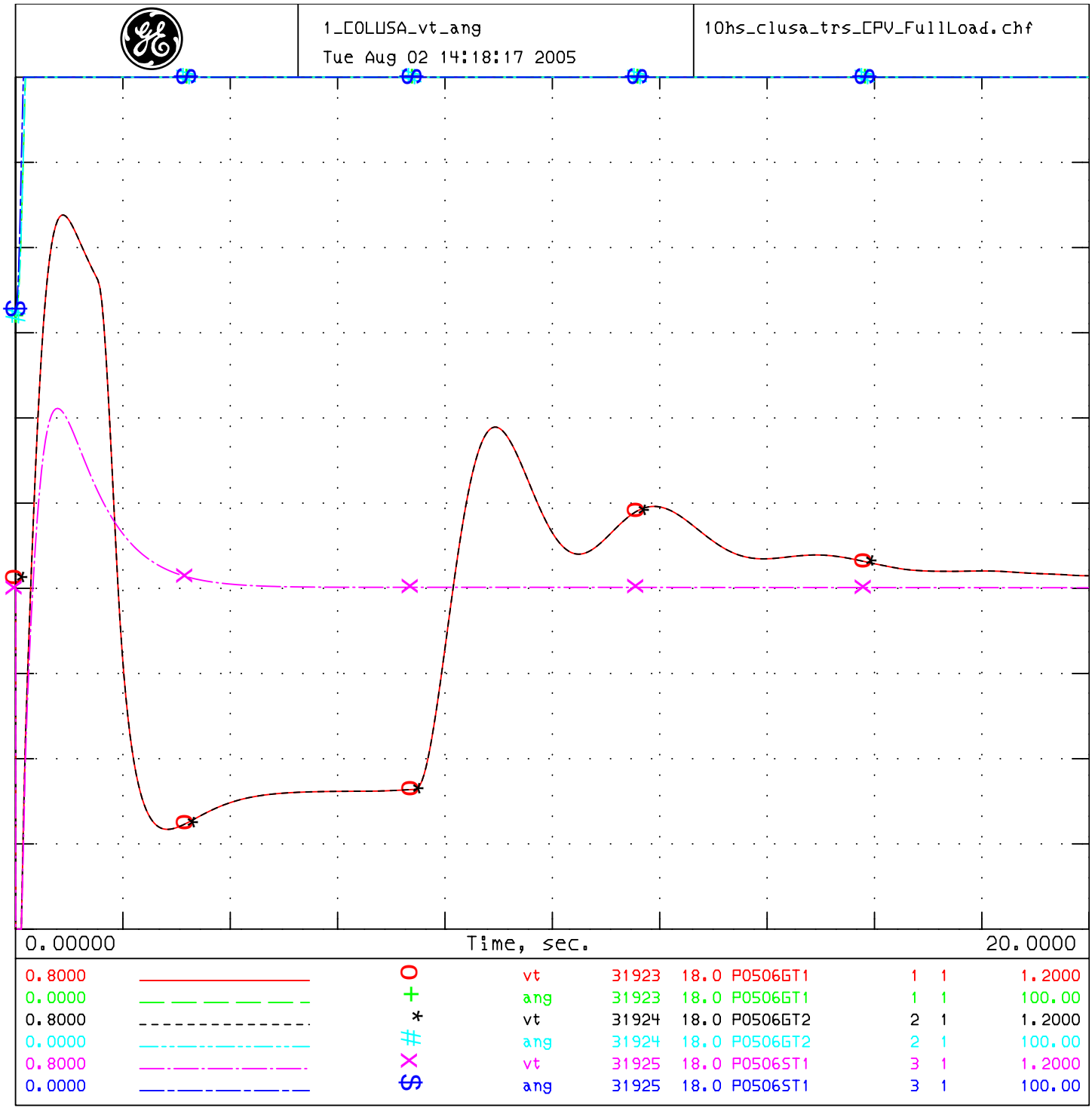

PG&E 2004 BASE CASE SERIES - 2010 North Valley Summer Peak Case
PATH15=-1127 MW(S-N) PATH26=3313 MW(N-S) PDCI=3105 MW(N-S) COI=4710 MW(N-S)
CPV Colusa - 2010 Summer Peak - after

CVP Colusa Full Load Rejection

original case 3/26/2004 by SATS 2009 system summer peak
updated loads to 2010 system summer peak
added 2010 North Valley 1-in-10 loads and generation dispatch
Morro Bay 4 is the swing bus
Proposed new generation in queue added
CPV Colusa 97 MW looped onto:
Cottonwood - Cortina 230 kV Line (#1)
Cottonwood - Vaca Dixon 230 kV Line (#2)
Logan Creek - Vaca Dixon 230 kV Line (#3)
Glenn - Vaca Dixon 230 kV Line (#4)

2_COLUSA_spd_pg
Tue Aug 02 14:18:17 2005

10hs_clusa_trs_CPV_FullLoad.chf

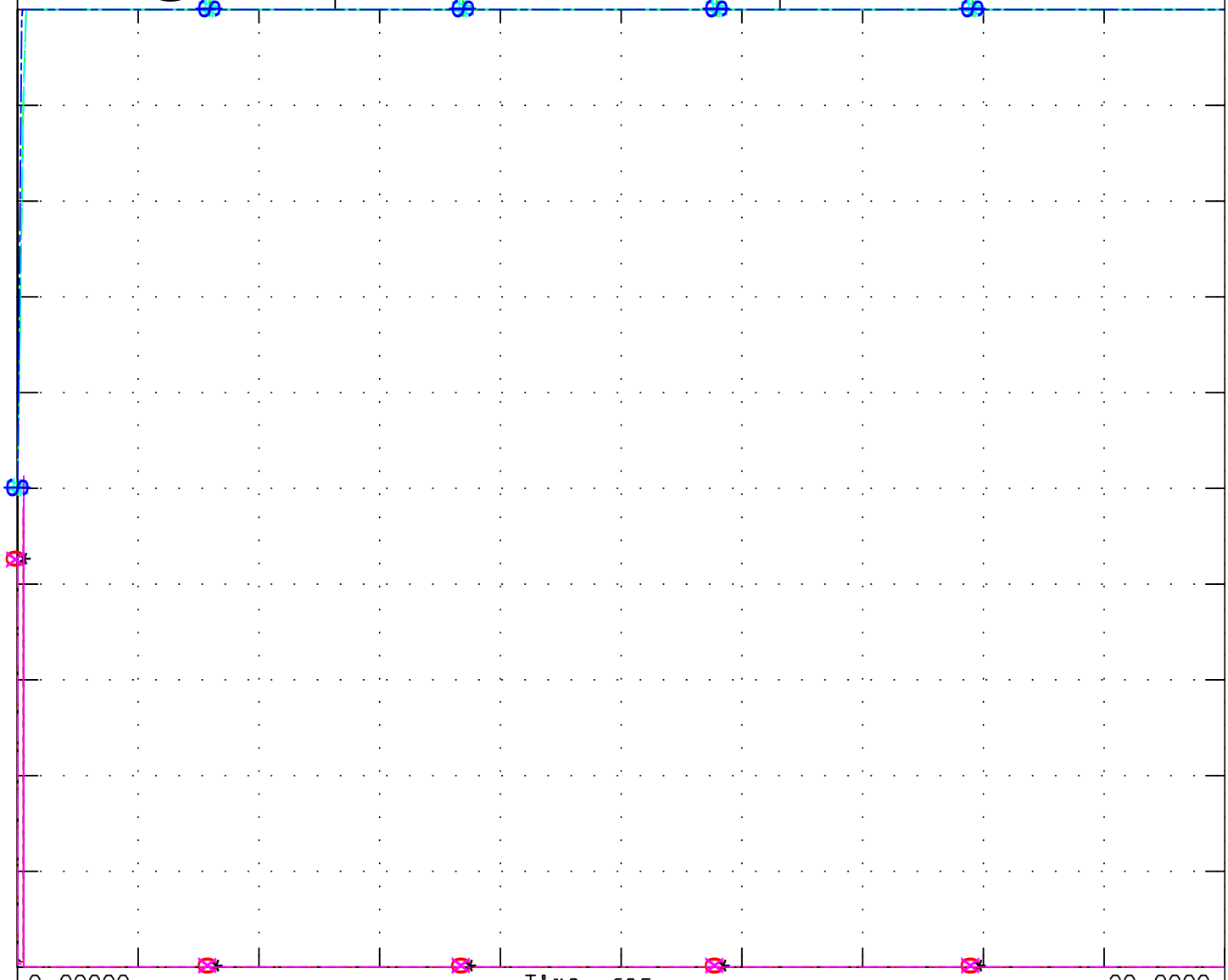

0.0000		O	pg	31923	18.0	P0506GT1	1	1	n	468.00
0.9900		+	spd	31923	18.0	P0506GT1	1	1	n	1.0100
0.0000		*	pg	31924	18.0	P0506GT2	2	1	n	468.00
0.9900		#	spd	31924	18.0	P0506GT2	2	1	n	1.0100
0.0000		X	pg	31925	18.0	P0506ST1	3	1	n	746.00
0.9900		S	spd	31925	18.0	P0506ST1	3	1	n	1.0100

PG&E 2004 BASE CASE SERIES - 2010 North Valley Summer Peak Case
PATH15=-1127 MW(S-N) PATH26=3313 MW(N-S) PDCI=3105 MW(N-S) COI=4710 MW(N-S)
CPV Colusa - 2010 Summer Peak - after

CVP Colusa Full Load Rejection

original case 3/26/2004 by SATS 2009 system summer peak
updated loads to 2010 system summer peak
added 2010 North Valley 1-in-10 loads and generation dispatch
Morro Bay 4 is the swing bus
Proposed new generation in queue added
CPV Colusa 97 MW looped onto:
Cottonwood - Cortina 230 kV Line (#1)
Cottonwood - Vaca Dixon 230 kV Line (#2)
Logan Creek - Vaca Dixon 230 kV Line (#3)
Glenn - Vaca Dixon 230 kV Line (#4)

3_BUS_VOLT_MAG_230:
Tue Aug 02 14:18:17 2005

10hs_clusa_trs_CPV_FullLoad.chf

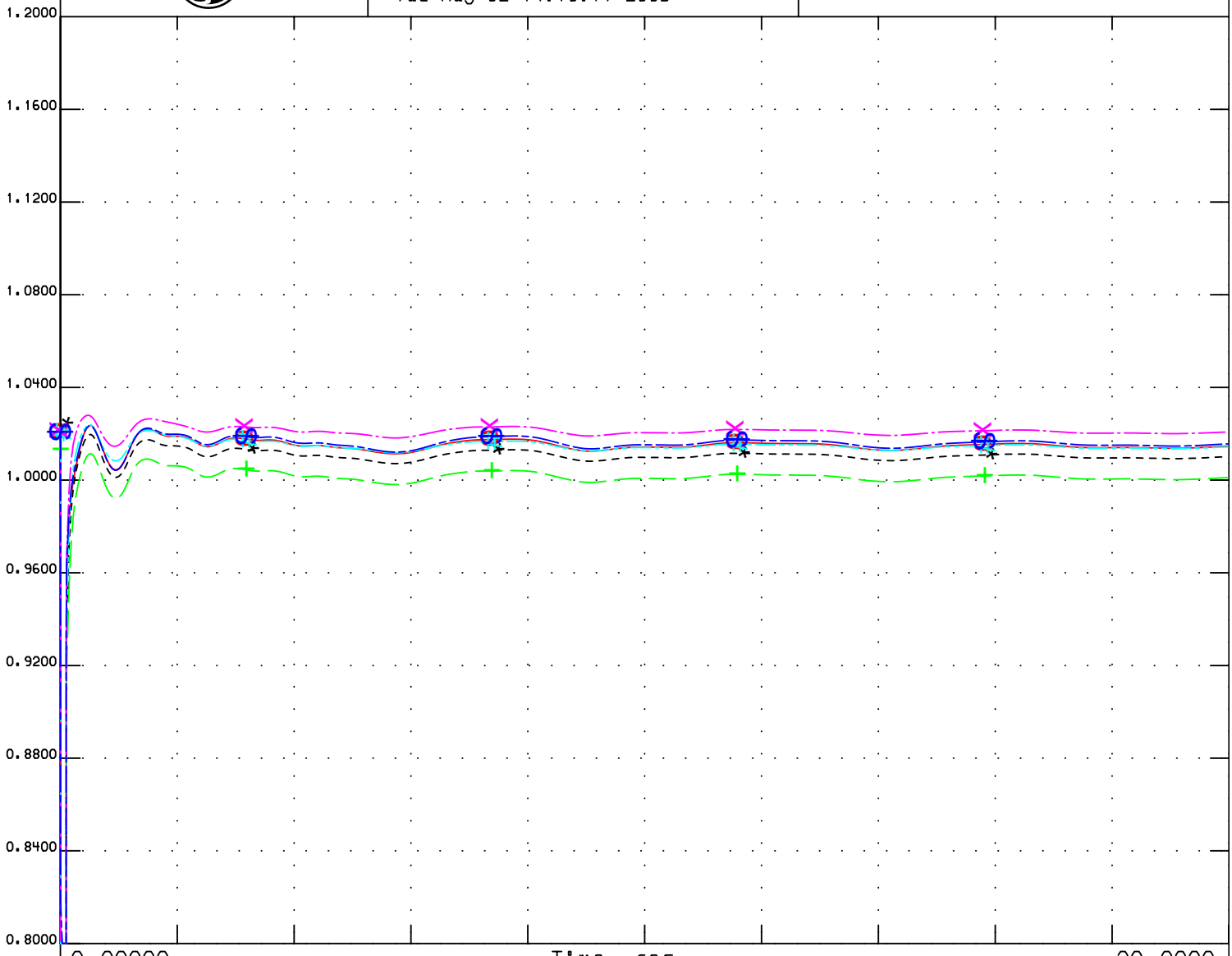

0.8000		O	vbus	30106	230.0	COTWD_F	1	1	n	1.2000
0.8000		+	vbus	30110	230.0	GLENN	1	1	n	1.2000
0.8000		*	vbul	30111	230.0	LOGAN CR	1	1	n	1.2000
0.8000		#	vbus	30450	230.0	CORTINA	1	1	n	1.2000
0.8000		X	vbus	30460	230.0	VACA-DIX	1	1	n	1.2000
0.8000		$	vbus	37565	230.0	OLINDAW	1	1	n	1.2000

PG&E 2004 BASE CASE SERIES - 2010 North Valley Summer Peak Case
PATH15=-1127 MW(S-N) PATH26=3313 MW(N-S) PDCI=3105 MW(N-S) COI=4710 MW(N-S)
CPV Colusa - 2010 Summer Peak - after

CVP Colusa Full Load Rejection

original case 3/26/2004 by SATS 2009 system summer peak
updated loads to 2010 system summer peak
added 2010 North Valley 1-in-10 loads and generation dispatch
Morro Bay 4 is the swing bus
Proposed new generation in queue added
CPV Colusa 97 MW looped onto:
Cottonwood - Cortina 230 kV Line (#1)
Cottonwood - Vaca Dixon 230 kV Line (#2)
Logan Creek - Vaca Dixon 230 kV Line (#3)
Glenn - Vaca Dixon 230 kV Line (#4)

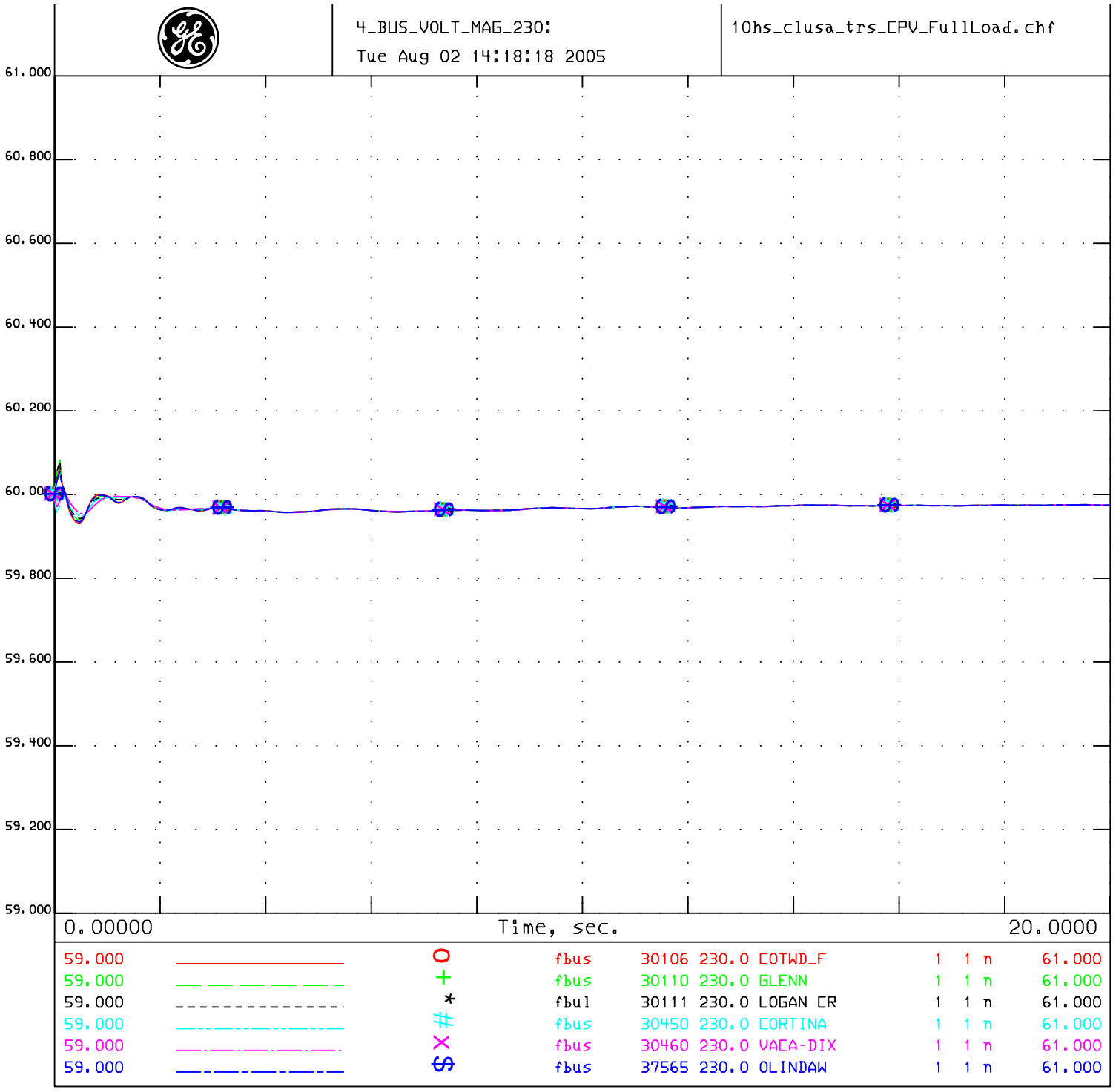

PG&E 2004 BASE CASE SERIES - 2010 North Valley Summer Peak Case
PATH15=-1127 MW(S-N) PATH26=3313 MW(N-S) PDCI=3105 MW(N-S) COI=4710 MW(N-S)
CPV Colusa - 2010 Summer Peak - after

CVP Colusa Full Load Rejection

original case 3/26/2004 by SATS 2009 system summer peak
updated loads to 2010 system summer peak
added 2010 North Valley 1-in-10 loads and generation dispatch
Morro Bay 4 is the swing bus
Proposed new generation in queue added
CPV Colusa 97 MW looped onto:
Cottonwood - Cortina 230 kV Line (#1)
Cottonwood - Vaca Dixon 230 kV Line (#2)
Logan Creek - Vaca Dixon 230 kV Line (#3)
Glenn - Vaca Dixon 230 kV Line (#4)

5_LOCAL_GEN_ang:
Tue Aug 02 14:18:18 2005

10hs_clusa_trs_CPV_FullLoad.chf

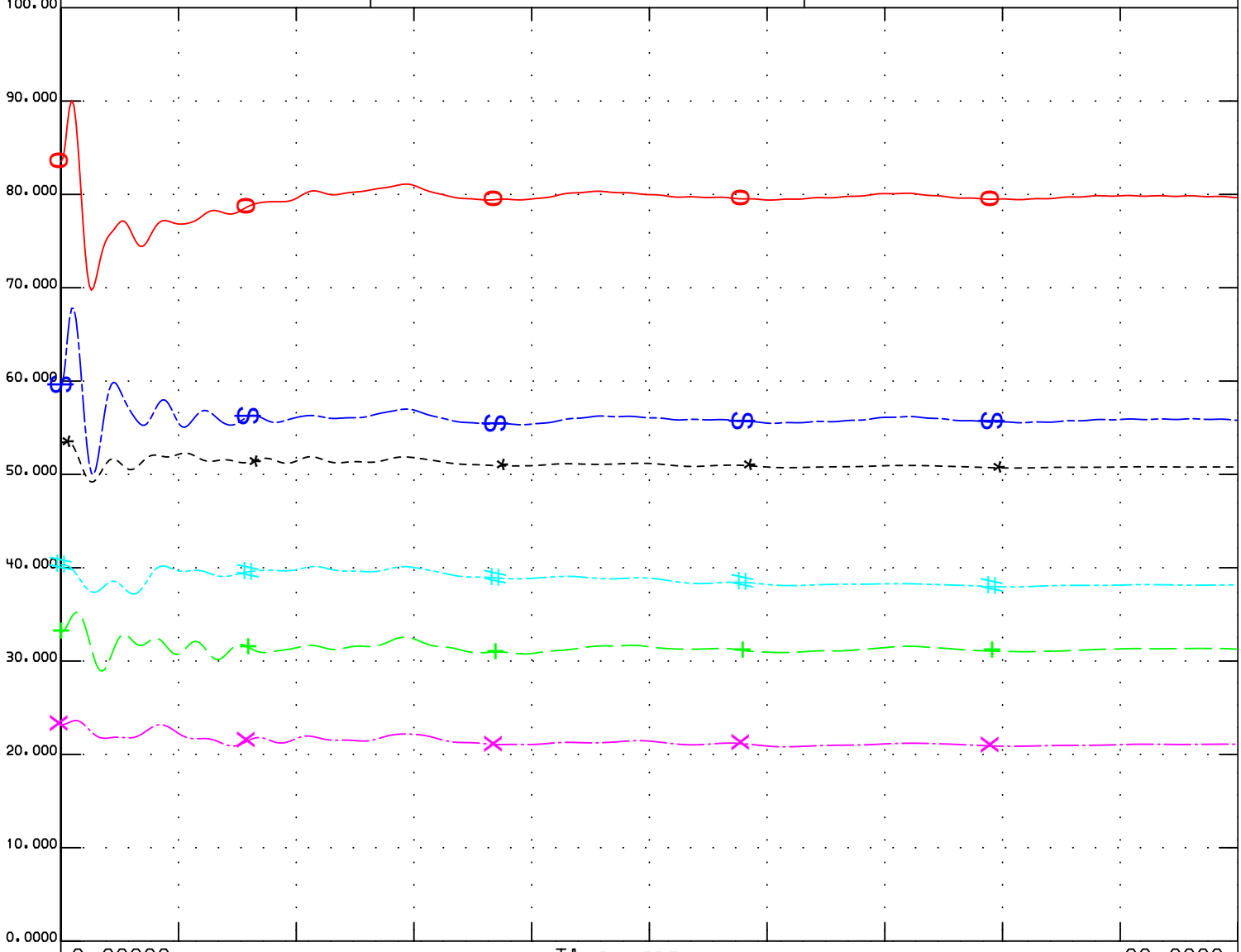

0.0000		ang	31911	13.8	TMP CT1	1	1	n	100.00
0.0000		ang	32450	13.8	COLGATE1	1	1	n	100.00
0.0000		ang	33108	18.0	DEC CTG1	1	1	n	100.00
0.0000		ang	37521	18.0	SUTTER1	1	1	n	100.00
0.0000		ang	37550	13.8	FOLSOM2	2	1	n	100.00
0.0000		ang	37575	13.8	SHASTA1	1	1	n	100.00

PG&E 2004 BASE CASE SERIES - 2010 North Valley Summer Peak Case
PATH15=-1127 MW(S-N) PATH26=3313 MW(N-S) PDCI=3105 MW(N-S) COI=4710 MW(N-S)
CPV Colusa - 2010 Summer Peak - after

CVP Colusa Full Load Rejection

original case 3/26/2004 by SATS 2009 system summer peak
updated loads to 2010 system summer peak
added 2010 North Valley 1-in-10 loads and generation dispatch
Morro Bay 4 is the swing bus
Proposed new generation in queue added
CPV Colusa 97 MW looped onto:
Cottonwood - Cortina 230 kV Line (#1)
Cottonwood - Vaca Dixon 230 kV Line (#2)
Logan Creek - Vaca Dixon 230 kV Line (#3)
Glenn - Vaca Dixon 230 kV Line (#4)

6_LOCAL_GEN_vt:
Tue Aug 02 14:18:18 2005

10hs_clusa_trs_CPV_FullLoad.chf

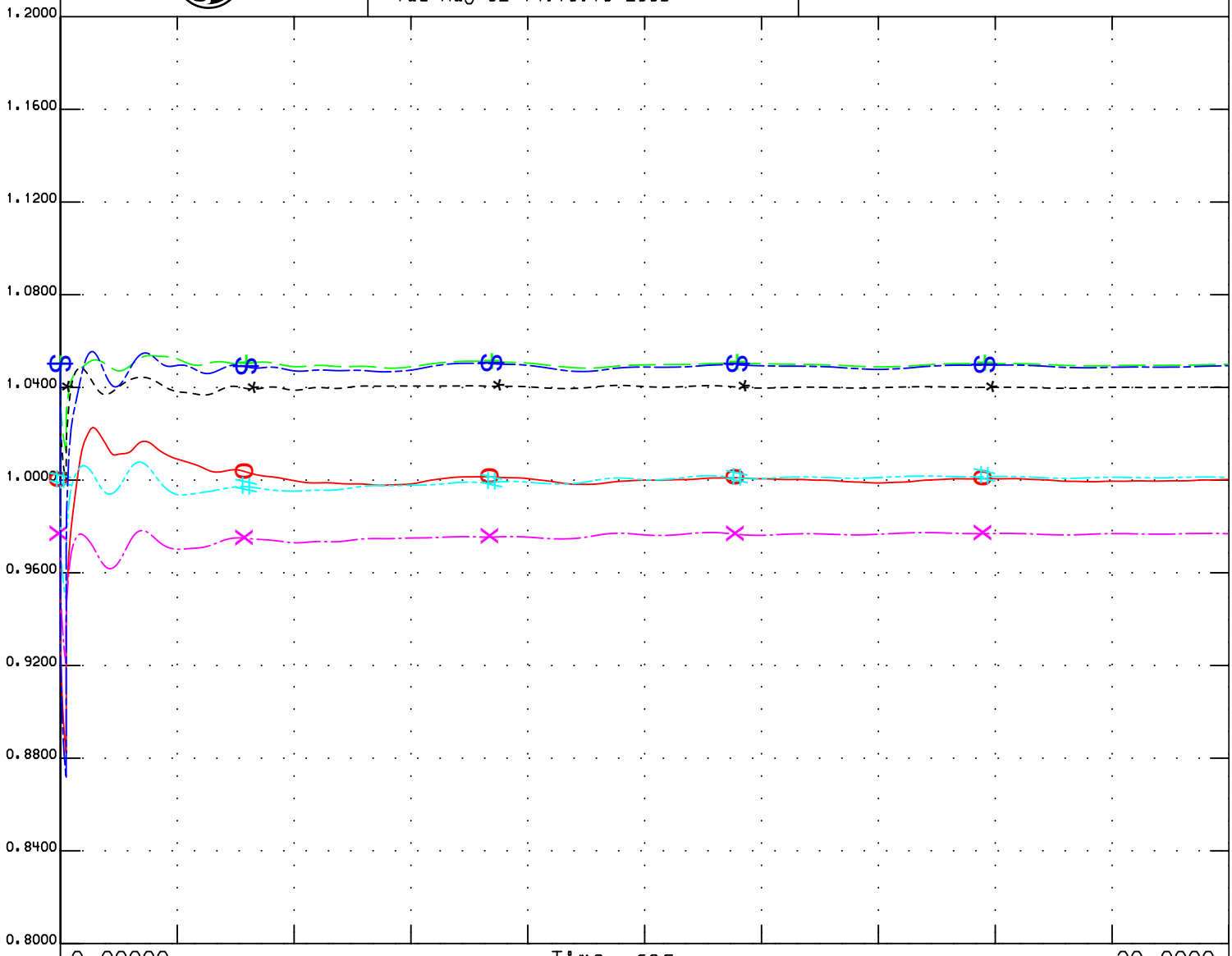

0.8000		O	vt	31911	13.8	TMP CT1	1	1	n	1.2000
0.8000		+	vt	32450	13.8	COLGATE1	1	1	n	1.2000
0.8000		*	vt	33108	18.0	DEC CTG1	1	1	n	1.2000
0.8000		#	vt	37521	18.0	SUTTER1	1	1	n	1.2000
0.8000		X	vt	37550	13.8	FOLSOM2	2	1	n	1.2000
0.8000		$	vt	37575	13.8	SHASTA1	1	1	n	1.2000

PG&E 2004 BASE CASE SERIES - 2010 North Valley Summer Peak Case
PATH15=-1127 MW(S-N) PATH26=3313 MW(N-S) PDCI=3105 MW(N-S) COI=4710 MW(N-S)
CPV Colusa - 2010 Summer Peak - after

CVP Colusa Full Load Rejection

original case 3/26/2004 by SATS 2009 system summer peak
updated loads to 2010 system summer peak
added 2010 North Valley 1-in-10 loads and generation dispatch
Morro Bay 4 is the swing bus
Proposed new generation in queue added
CPV Colusa 97 MW looped onto:
Cottonwood - Cortina 230 kV Line (#1)
Cottonwood - Vaca Dixon 230 kV Line (#2)
Logan Creek - Vaca Dixon 230 kV Line (#3)
Glenn - Vaca Dixon 230 kV Line (#4)

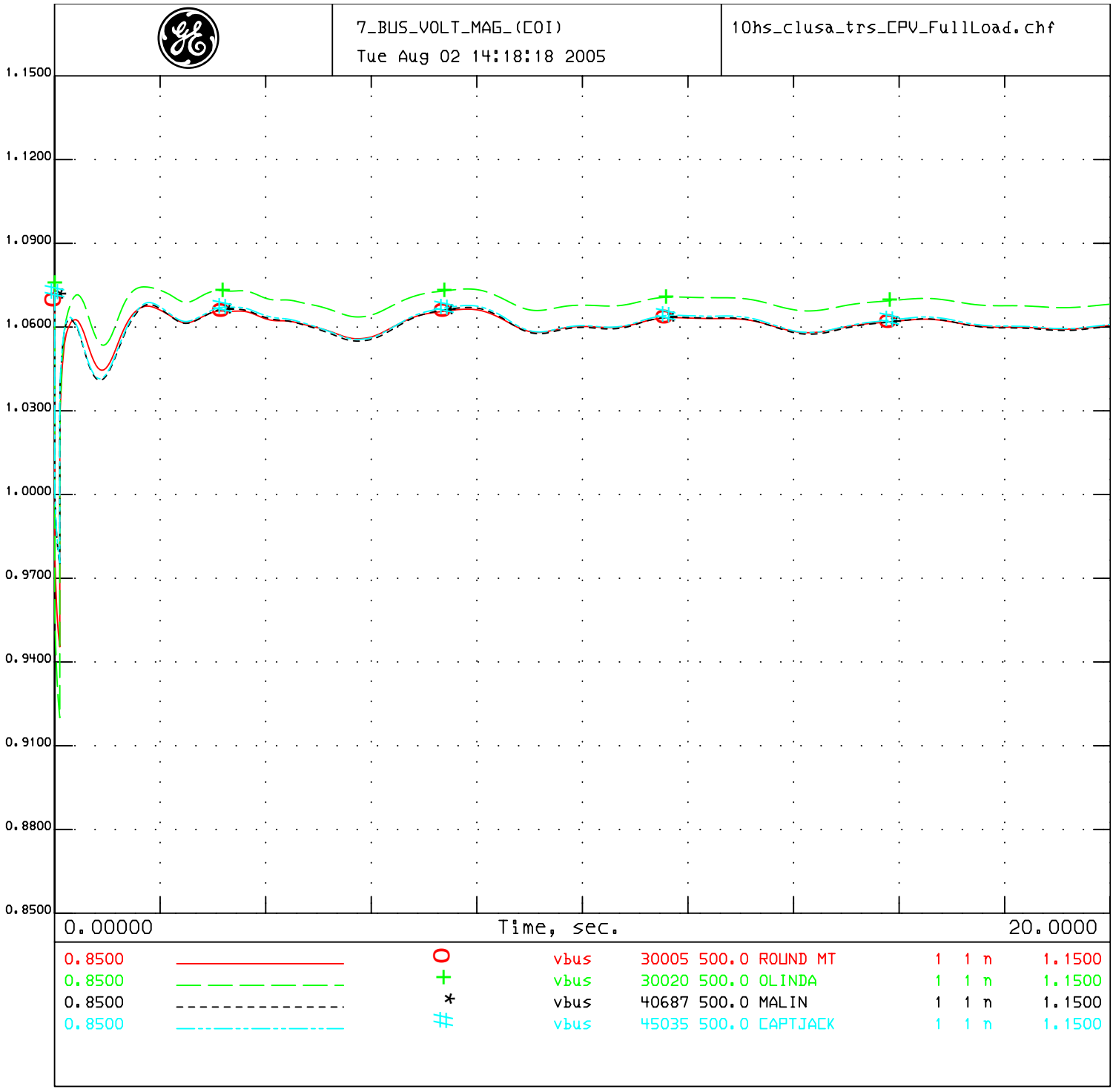

PG&E 2004 BASE CASE SERIES - 2010 North Valley Summer Peak Case
PATH15=-1127 MW(S-N) PATH26=3313 MW(N-S) PDCI=3105 MW(N-S) COI=4710 MW(N-S)
CPV Colusa - 2010 Summer Peak - after

CVP Colusa Full Load Rejection

original case 3/26/2004 by SATS 2009 system summer peak
updated loads to 2010 system summer peak
added 2010 North Valley 1-in-10 loads and generation dispatch
Morro Bay 4 is the swing bus
Proposed new generation in queue added
CPV Colusa 97 MW looped onto:
Cottonwood - Cortina 230 kV Line (#1)
Cottonwood - Vaca Dixon 230 kV Line (#2)
Logan Creek - Vaca Dixon 230 kV Line (#3)
Glenn - Vaca Dixon 230 kV Line (#4)

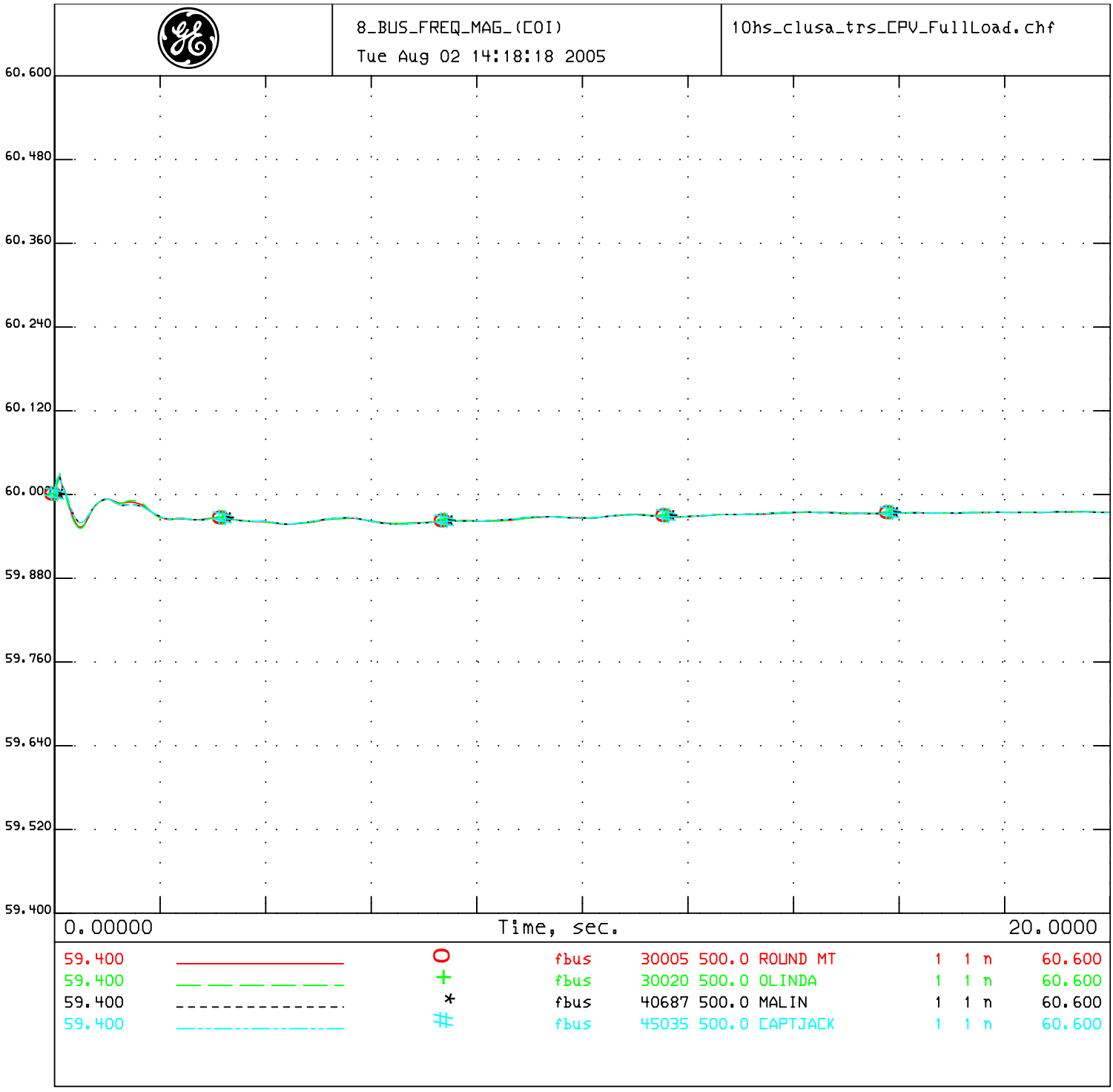

PG&E 2004 BASE CASE SERIES - 2010 North Valley Summer Peak Case
PATH15=-1127 MW(S-N) PATH26=3313 MW(N-S) PDCI=3105 MW(N-S) COI=4710 MW(N-S)
CPV Colusa - 2010 Summer Peak - after

CVP Colusa Full Load Rejection

original case 3/26/2004 by SATS 2009 system summer peak
updated loads to 2010 system summer peak
added 2010 North Valley 1-in-10 loads and generation dispatch
Morro Bay 4 is the swing bus
Proposed new generation in queue added
CPV Colusa 97 MW looped onto:
Cottonwood - Cortina 230 kV Line (#1)
Cottonwood - Vaca Dixon 230 kV Line (#2)
Logan Creek - Vaca Dixon 230 kV Line (#3)
Glenn - Vaca Dixon 230 kV Line (#4)

1_COLUSA_vt_ang
Tue Aug 02 16:05:35 2005

10hs_clusa_trs_ctwd-clsa1.chf

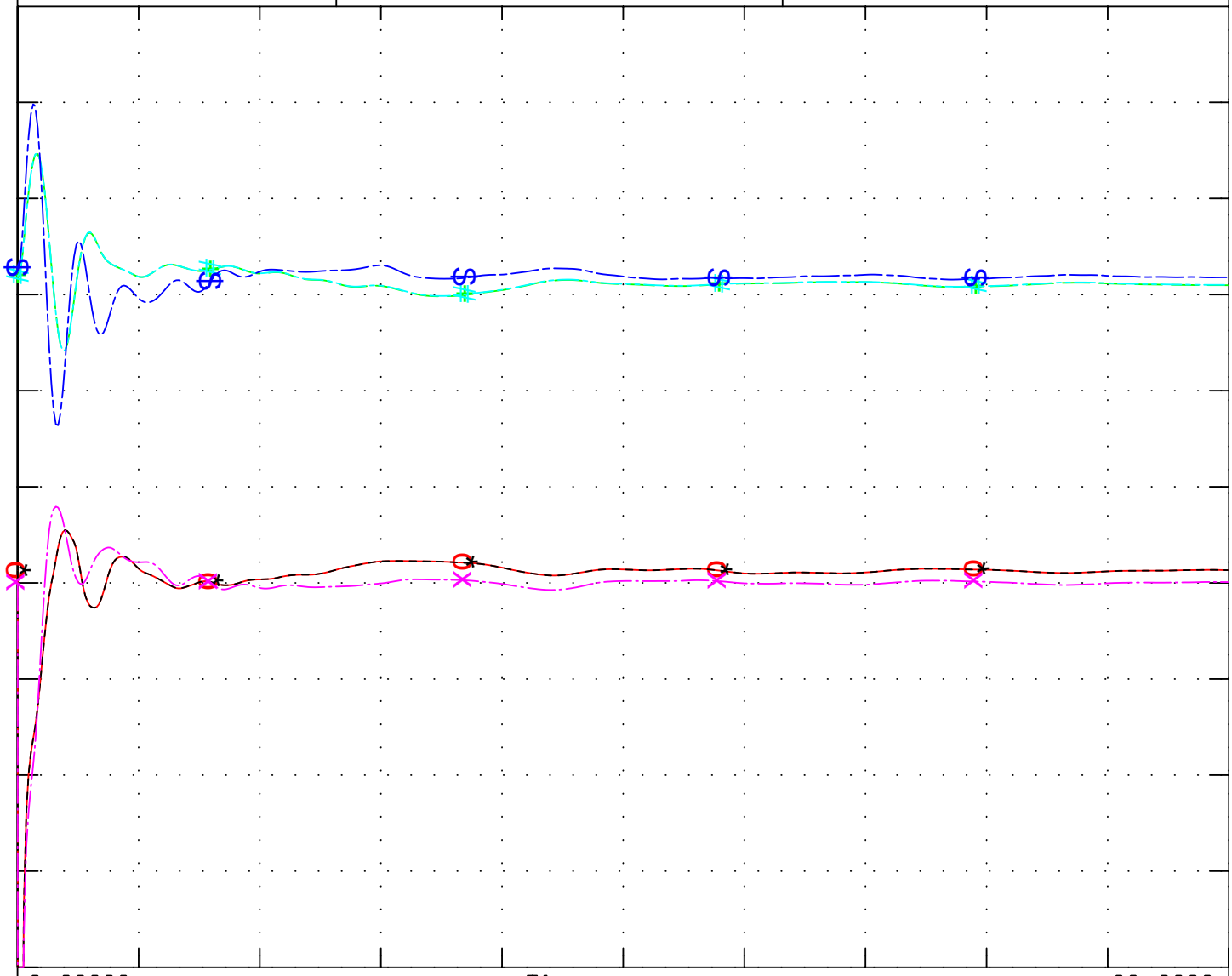

0.8000		O	vt	31923	18.0	P0506GT1	1	1	1.2000
0.0000		+	ang	31923	18.0	P0506GT1	1	1	100.00
0.8000		*	vt	31924	18.0	P0506GT2	2	1	1.2000
0.0000		#	ang	31924	18.0	P0506GT2	2	1	100.00
0.8000		X	vt	31925	18.0	P0506ST1	3	1	1.2000
0.0000		⊗	ang	31925	18.0	P0506ST1	3	1	100.00

PG&E 2004 BASE CASE SERIES - 2010 North Valley Summer Peak Case
PATH15=-1127 MW(S-N) PATH26=3313 MW(N-S) PDCI=3105 MW(N-S) COI=4710 MW(N-S)
CPV Colusa - 2010 Summer Peak - after

Trip Cottonwood - Colusa SWYD #1 230 kV LINE

original case 3/26/2004 by SATS 2009 system summer peak
updated loads to 2010 system summer peak
added 2010 North Valley 1-in-10 loads and generation dispatch
Morro Bay 4 is the swing bus
Proposed new generation in queue added
CPV Colusa 97 MW looped onto:
Cottonwood - Cortina 230 kV Line (#1)
Cottonwood - Vaca Dixon 230 kV Line (#2)
Logan Creek - Vaca Dixon 230 kV Line (#3)
Glenn - Vaca Dixon 230 kV Line (#4)

2_COLUSA_spd_pg
Tue Aug 02 16:05:35 2005

10hs_clusa_trs_ctwd-clsa1.chf

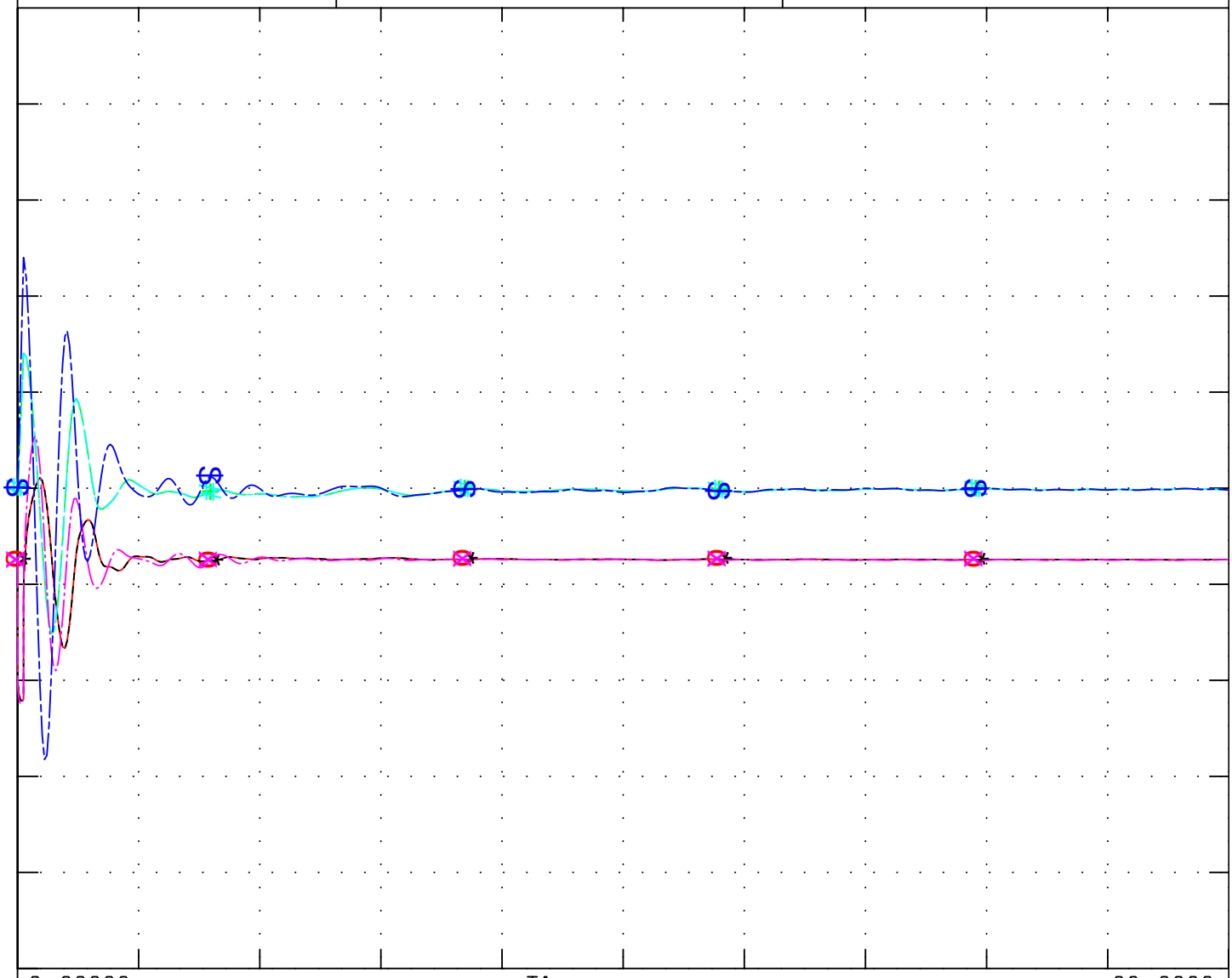

0.0000		O	pg	31923	18.0	P0506GT1	1	1	n	468.00
0.9900		+	spd	31923	18.0	P0506GT1	1	1	n	1.0100
0.0000		*	pg	31924	18.0	P0506GT2	2	1	n	468.00
0.9900		#	spd	31924	18.0	P0506GT2	2	1	n	1.0100
0.0000		X	pg	31925	18.0	P0506ST1	3	1	n	746.00
0.9900		$	spd	31925	18.0	P0506ST1	3	1	n	1.0100

PG&E 2004 BASE CASE SERIES - 2010 North Valley Summer Peak Case
PATH15=-1127 MW(S-N) PATH26=3313 MW(N-S) PDCI=3105 MW(N-S) COI=4710 MW(N-S)
CPV Colusa - 2010 Summer Peak - after

Trip Cottonwood - Colusa SWYD #1 230 kV LINE

original case 3/26/2004 by SATS 2009 system summer peak
updated loads to 2010 system summer peak
added 2010 North Valley 1-in-10 loads and generation dispatch
Morro Bay 4 is the swing bus
Proposed new generation in queue added
CPV Colusa 97 MW looped onto:
Cottonwood - Cortina 230 kV Line (#1)
Cottonwood - Vaca Dixon 230 kV Line (#2)
Logan Creek - Vaca Dixon 230 kV Line (#3)
Glenn - Vaca Dixon 230 kV Line (#4)

3_BUS_VOLT_MAG_230:
Tue Aug 02 16:05:35 2005

10hs_clusa_trs_ctwd-clsa1.chf

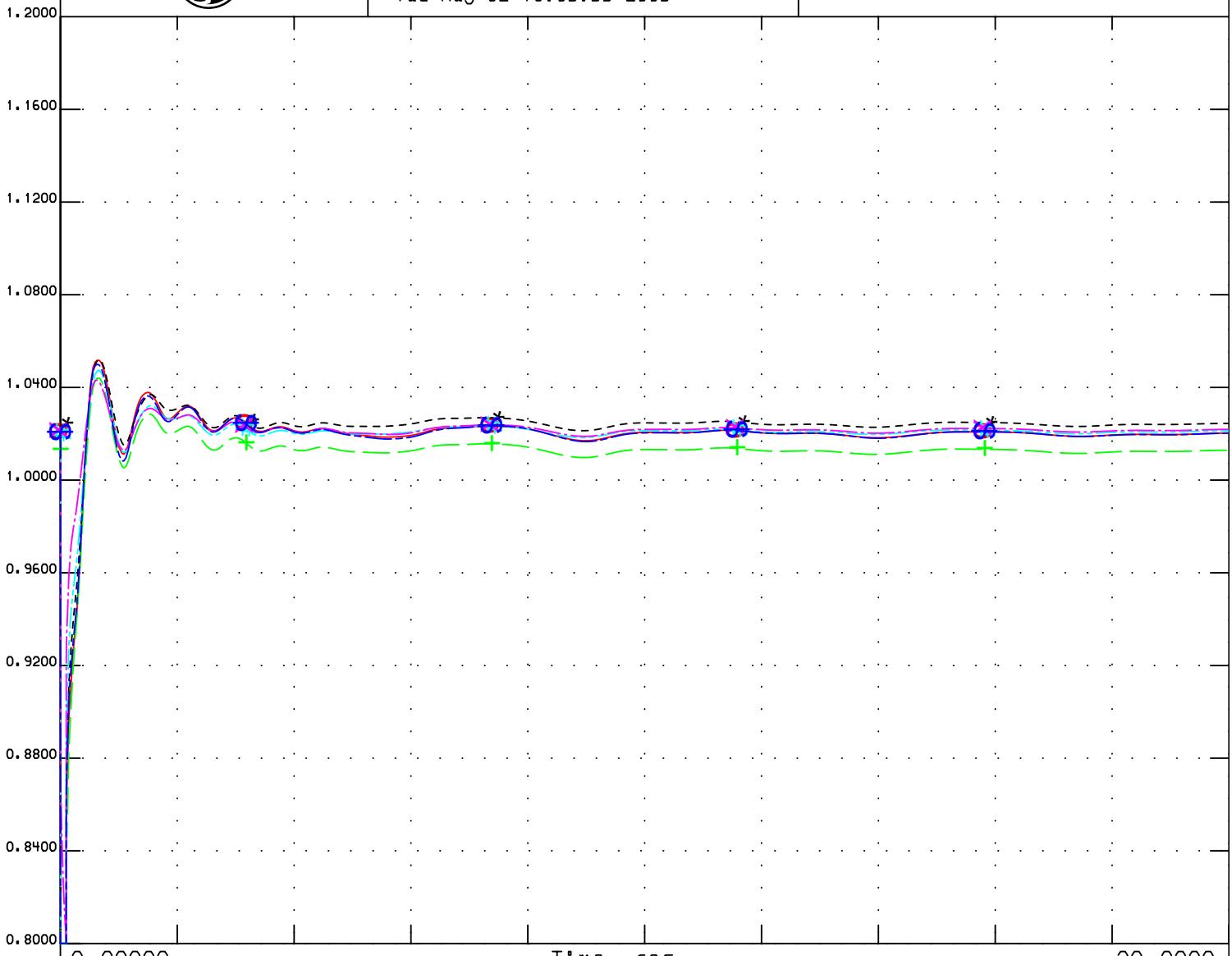

0.8000		O	vbus	30106	230.0	COTWD_F	1	1	n	1.2000
0.8000		+	vbus	30110	230.0	GLENN	1	1	n	1.2000
0.8000		*	vbul	30111	230.0	LOGAN CR	1	1	n	1.2000
0.8000		#	vbus	30450	230.0	CORTINA	1	1	n	1.2000
0.8000		X	vbus	30460	230.0	VACA-DIX	1	1	n	1.2000
0.8000		$	vbus	37565	230.0	OLINDAW	1	1	n	1.2000

PG&E 2004 BASE CASE SERIES - 2010 North Valley Summer Peak Case
PATH15=-1127 MW(S-N) PATH26=3313 MW(N-S) PDCI=3105 MW(N-S) COI=4710 MW(N-S)
CPV Colusa - 2010 Summer Peak - after

Trip Cottonwood - Colusa SWYD #1 230 kV LINE

original case 3/26/2004 by SATS 2009 system summer peak
updated loads to 2010 system summer peak
added 2010 North Valley 1-in-10 loads and generation dispatch
Morro Bay 4 is the swing bus
Proposed new generation in queue added
CPV Colusa 97 MW looped onto:
Cottonwood - Cortina 230 kV Line (#1)
Cottonwood - Vaca Dixon 230 kV Line (#2)
Logan Creek - Vaca Dixon 230 kV Line (#3)
Glenn - Vaca Dixon 230 kV Line (#4)

4_BUS_VOLT_MAG_230:
Tue Aug 02 16:05:35 2005

10hs_clusa_trs_ctwd-clsa1.chf

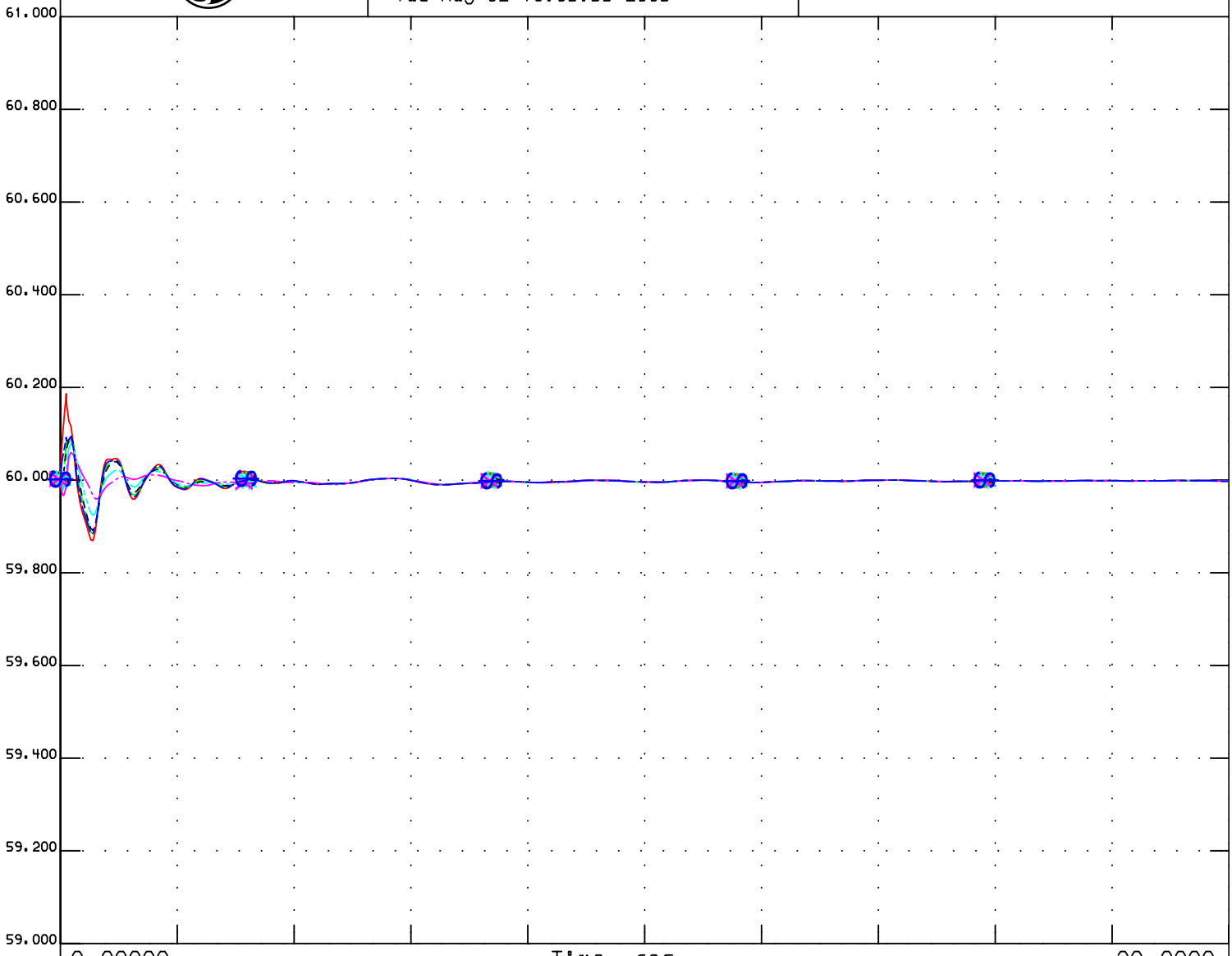

59.000		O	fbus	30106	230.0	COTWD_F	1	1 n	61.000
59.000		+	fbus	30110	230.0	GLENN	1	1 n	61.000
59.000		*	fbul	30111	230.0	LOGAN CR	1	1 n	61.000
59.000		#	fbus	30450	230.0	CORTINA	1	1 n	61.000
59.000		X	fbus	30460	230.0	VACA-DIX	1	1 n	61.000
59.000		$	fbus	37565	230.0	OLINDAW	1	1 n	61.000

PG&E 2004 BASE CASE SERIES - 2010 North Valley Summer Peak Case
PATH15=-1127 MW(S-N) PATH26=3313 MW(N-S) PDCI=3105 MW(N-S) COI=4710 MW(N-S)
CPV Colusa - 2010 Summer Peak - after

Trip Cottonwood - Colusa SWYD #1 230 kV LINE

original case 3/26/2004 by SATS 2009 system summer peak
updated loads to 2010 system summer peak
added 2010 North Valley 1-in-10 loads and generation dispatch
Morro Bay 4 is the swing bus
Proposed new generation in queue added
CPV Colusa 97 MW looped onto:
Cottonwood - Cortina 230 kV Line (#1)
Cottonwood - Vaca Dixon 230 kV Line (#2)
Logan Creek - Vaca Dixon 230 kV Line (#3)
Glenn - Vaca Dixon 230 kV Line (#4)

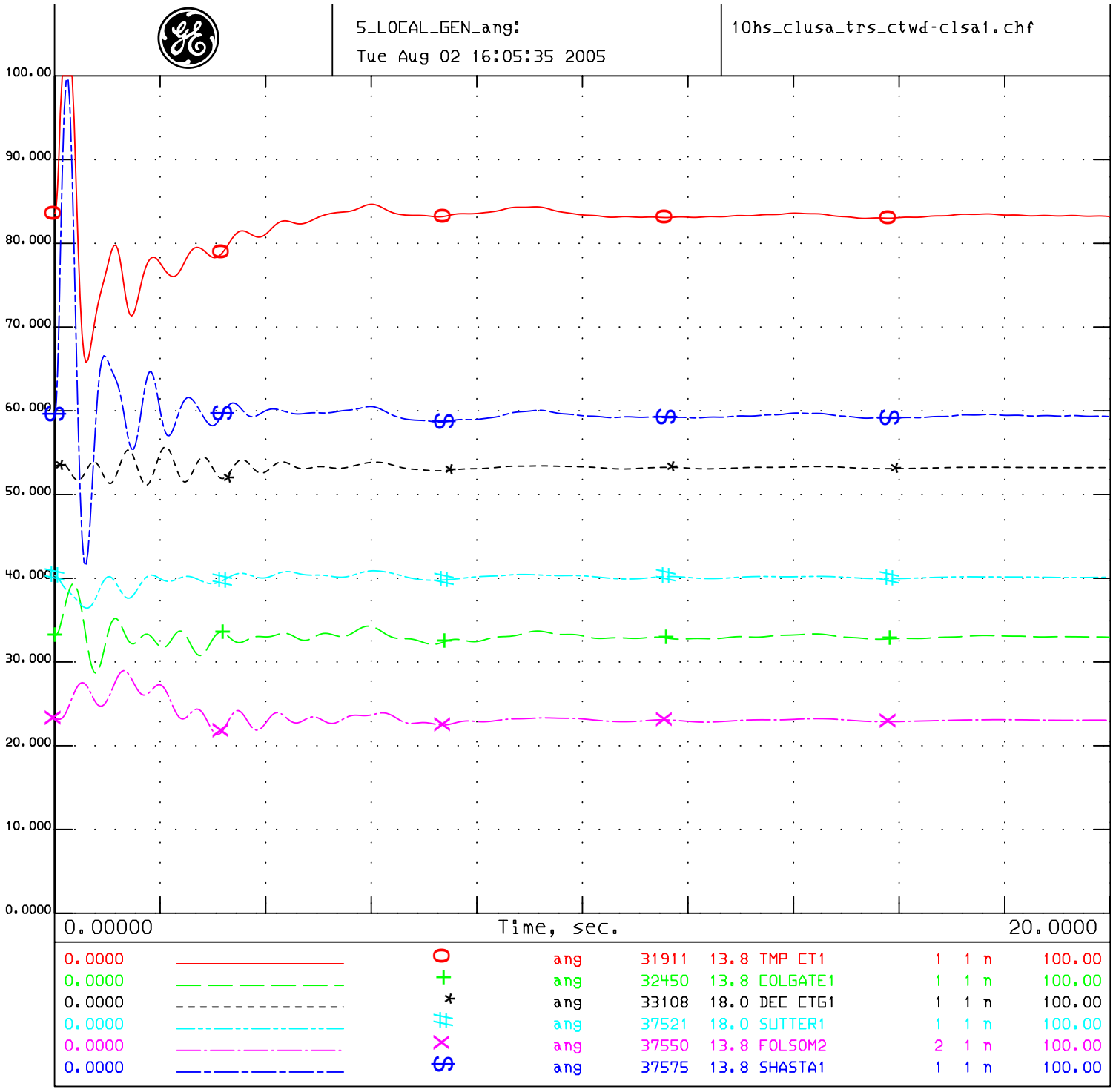

PG&E 2004 BASE CASE SERIES - 2010 North Valley Summer Peak Case
PATH15=-1127 MW(S-N) PATH26=3313 MW(N-S) PDCI=3105 MW(N-S) COI=4710 MW(N-S)
CPV Colusa - 2010 Summer Peak - after

Trip Cottonwood - Colusa SWYD #1 230 kV LINE

original case 3/26/2004 by SATS 2009 system summer peak
updated loads to 2010 system summer peak
added 2010 North Valley 1-in-10 loads and generation dispatch
Morro Bay 4 is the swing bus
Proposed new generation in queue added
CPV Colusa 97 MW looped onto:
Cottonwood - Cortina 230 kV Line (#1)
Cottonwood - Vaca Dixon 230 kV Line (#2)
Logan Creek - Vaca Dixon 230 kV Line (#3)
Glenn - Vaca Dixon 230 kV Line (#4)

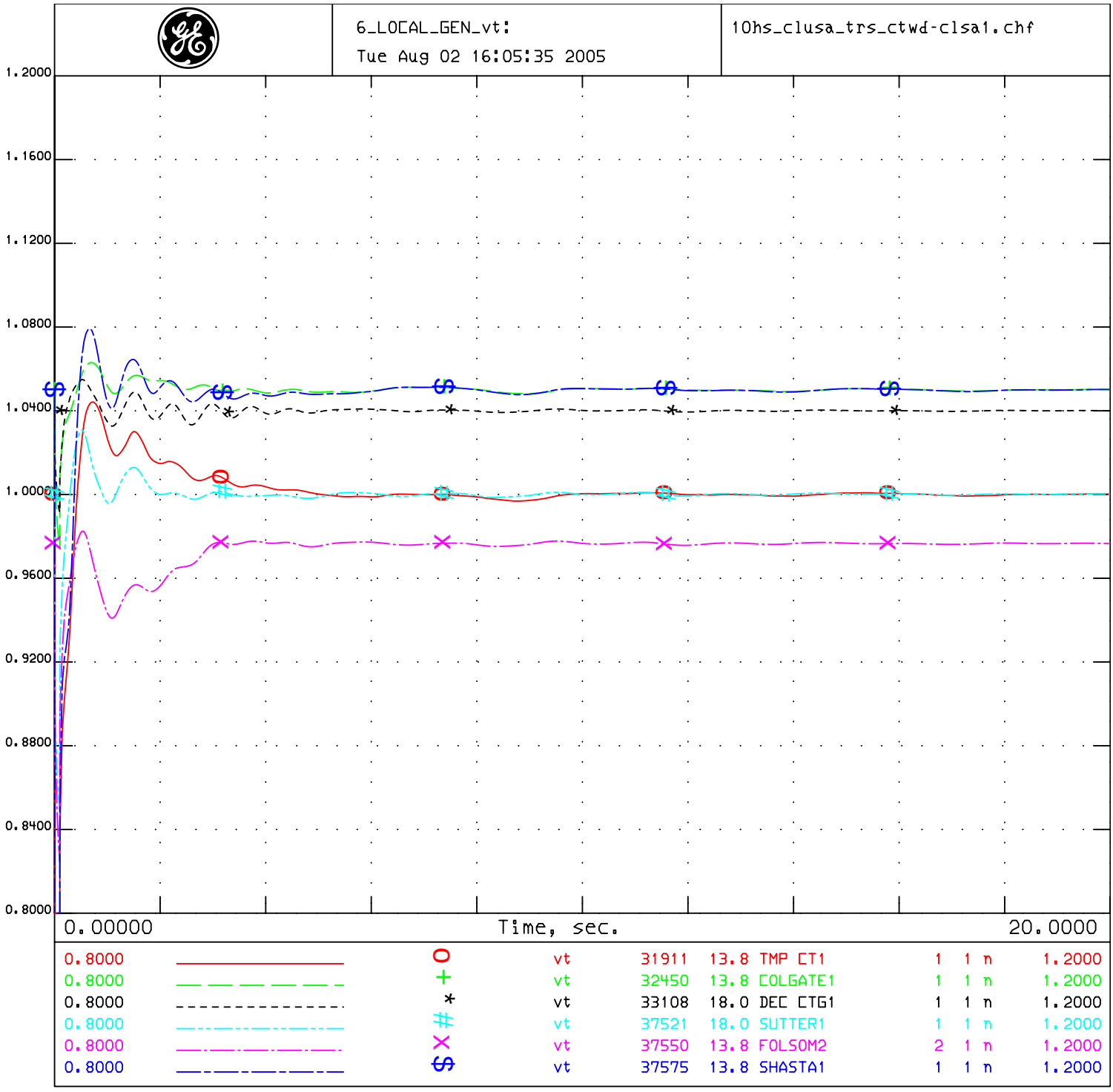

PG&E 2004 BASE CASE SERIES - 2010 North Valley Summer Peak Case
PATH15=-1127 MW(S-N) PATH26=3313 MW(N-S) PDCI=3105 MW(N-S) COI=4710 MW(N-S)
CPV Colusa - 2010 Summer Peak - after

Trip Cottonwood - Colusa SWYD #1 230 kV LINE

original case 3/26/2004 by SATS 2009 system summer peak
updated loads to 2010 system summer peak
added 2010 North Valley 1-in-10 loads and generation dispatch
Morro Bay 4 is the swing bus
Proposed new generation in queue added
CPV Colusa 97 MW looped onto:
Cottonwood - Cortina 230 kV Line (#1)
Cottonwood - Vaca Dixon 230 kV Line (#2)
Logan Creek - Vaca Dixon 230 kV Line (#3)
Glenn - Vaca Dixon 230 kV Line (#4)

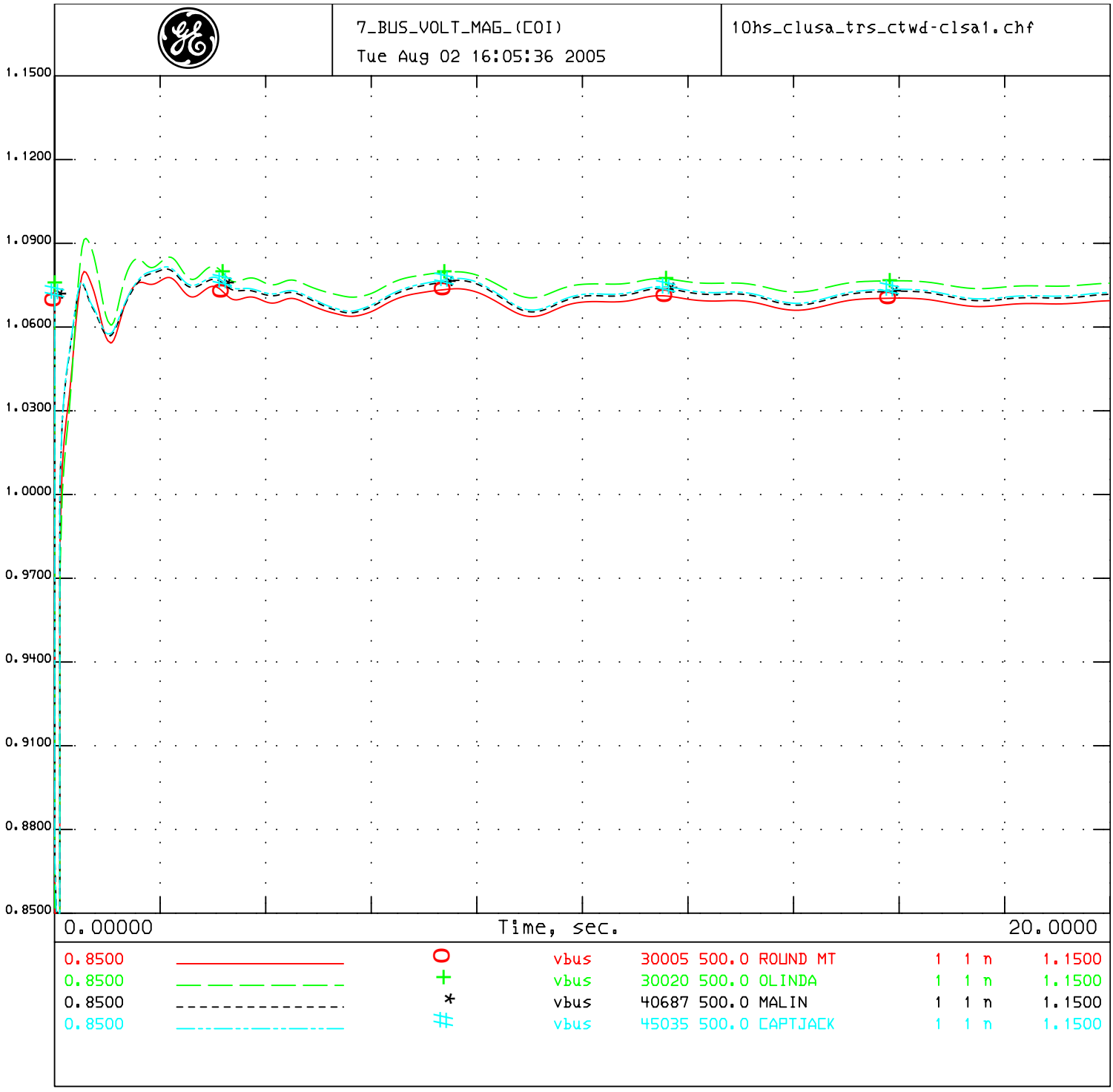

PG&E 2004 BASE CASE SERIES - 2010 North Valley Summer Peak Case
PATH15=-1127 MW(S-N) PATH26=3313 MW(N-S) PDCI=3105 MW(N-S) COI=4710 MW(N-S)
CPV Colusa - 2010 Summer Peak - after

Trip Cottonwood - Colusa SWYD #1 230 kV LINE

original case 3/26/2004 by SATS 2009 system summer peak
updated loads to 2010 system summer peak
added 2010 North Valley 1-in-10 loads and generation dispatch
Morro Bay 4 is the swing bus
Proposed new generation in queue added
CPV Colusa 97 MW looped onto:
Cottonwood - Cortina 230 kV Line (#1)
Cottonwood - Vaca Dixon 230 kV Line (#2)
Logan Creek - Vaca Dixon 230 kV Line (#3)
Glenn - Vaca Dixon 230 kV Line (#4)

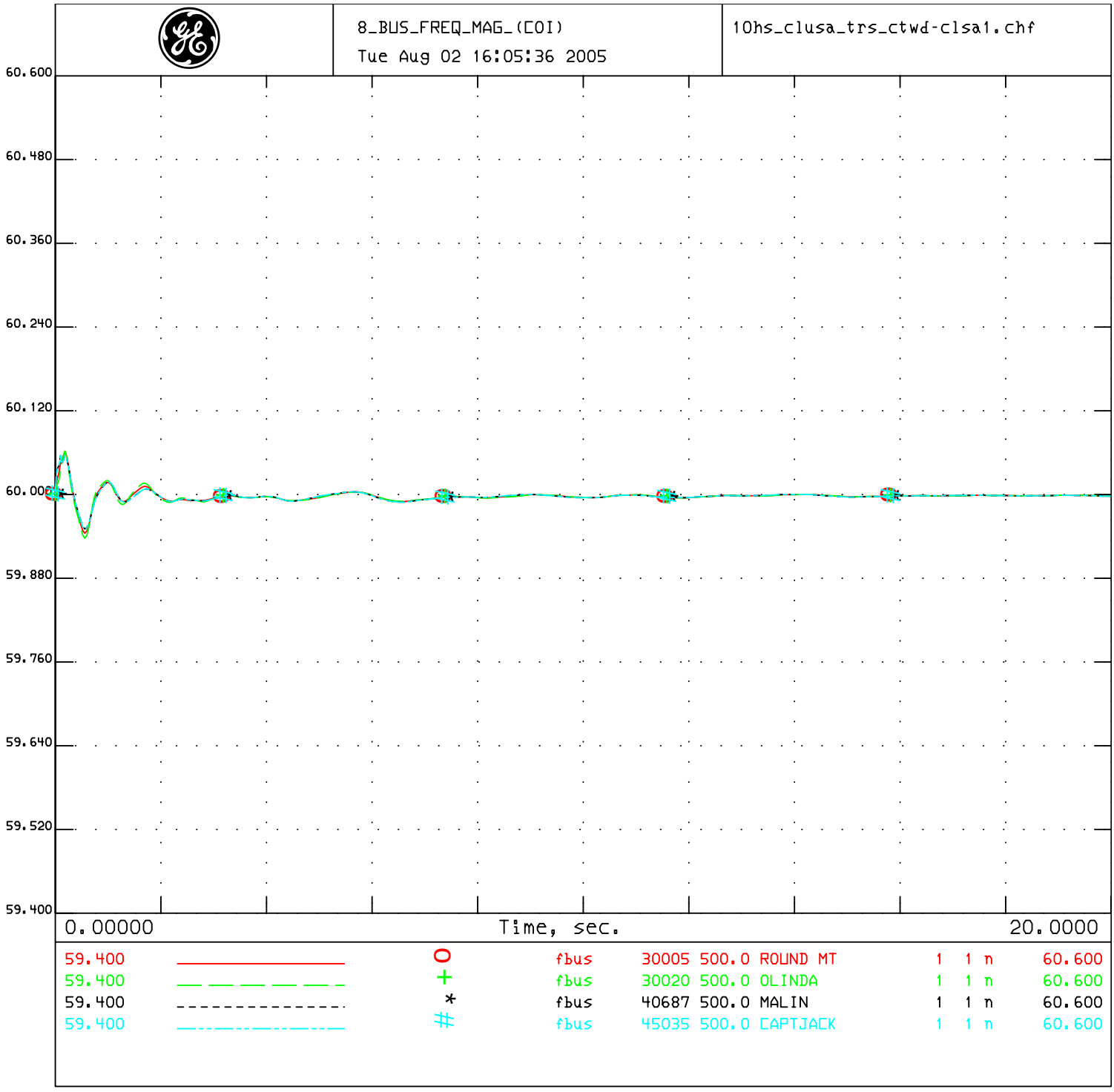

PG&E 2004 BASE CASE SERIES - 2010 North Valley Summer Peak Case
PATH15=-1127 MW(S-N) PATH26=3313 MW(N-S) PDCI=3105 MW(N-S) COI=4710 MW(N-S)
CPV Colusa - 2010 Summer Peak - after

Trip Cottonwood - Colusa SWYD #1 230 kV LINE

original case 3/26/2004 by SATS 2009 system summer peak
updated loads to 2010 system summer peak
added 2010 North Valley 1-in-10 loads and generation dispatch
Morro Bay 4 is the swing bus
Proposed new generation in queue added
CPV Colusa 97 MW looped onto:
Cottonwood - Cortina 230 kV Line (#1)
Cottonwood - Vaca Dixon 230 kV Line (#2)
Logan Creek - Vaca Dixon 230 kV Line (#3)
Glenn - Vaca Dixon 230 kV Line (#4)

1_COLUSA_vt_ang
Tue Aug 02 16:19:04 2005

10hs_clusa_trs_clsa-crtna.chf

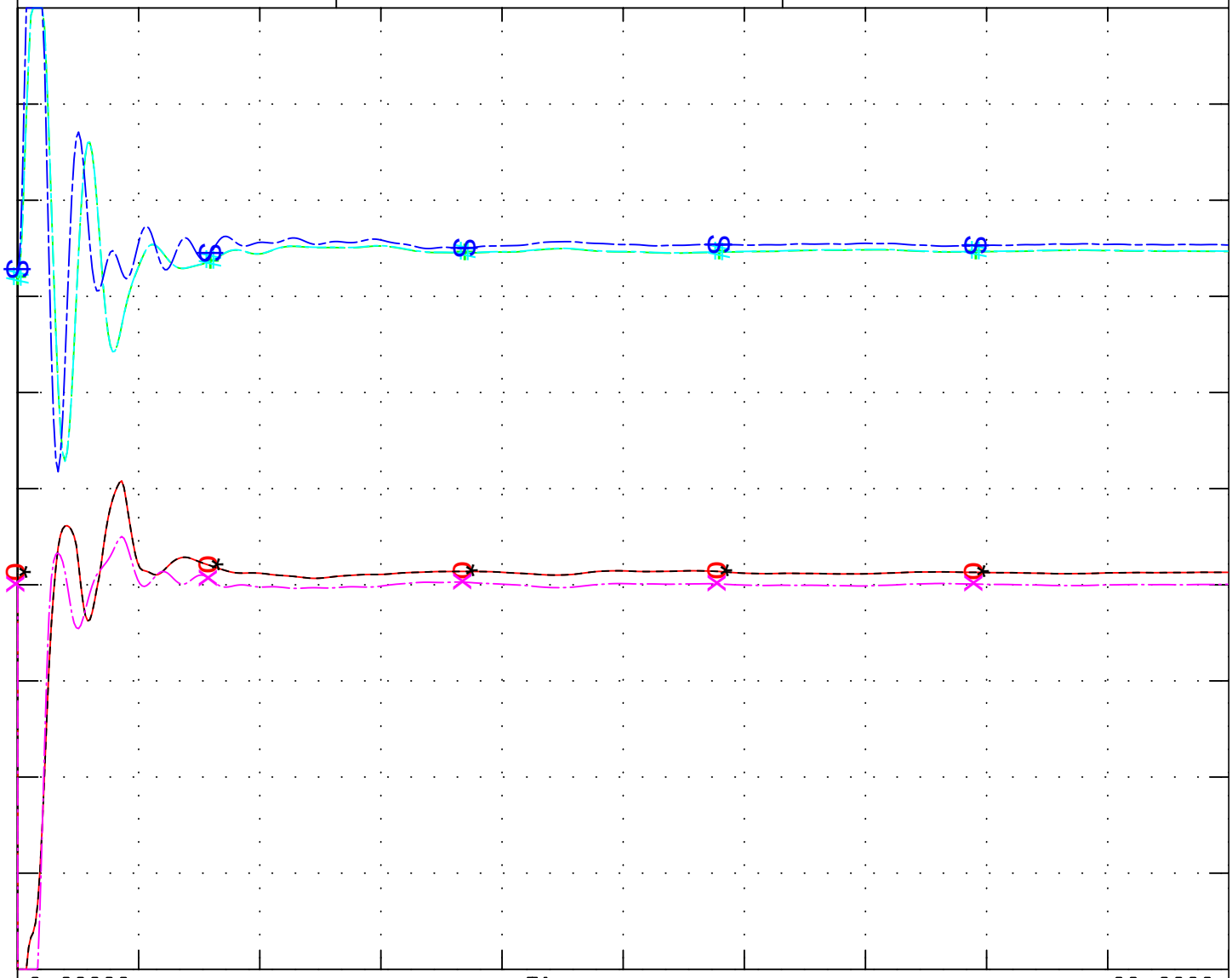

0.8000		O	vt	31923	18.0	P0506GT1	1	1	1.2000
0.0000		+	ang	31923	18.0	P0506GT1	1	1	100.00
0.8000		*	vt	31924	18.0	P0506GT2	2	1	1.2000
0.0000		#	ang	31924	18.0	P0506GT2	2	1	100.00
0.8000		X	vt	31925	18.0	P0506ST1	3	1	1.2000
0.0000		⊕	ang	31925	18.0	P0506ST1	3	1	100.00

PG&E 2004 BASE CASE SERIES - 2010 North Valley Summer Peak Case
PATH15=-1127 MW(S-N) PATH26=3313 MW(N-S) PDCI=3105 MW(N-S) COI=4710 MW(N-S)
CPV Colusa - 2010 Summer Peak - after

Trip Colusa SWYD - Cortina 230 kV LINE

original case 3/26/2004 by SATS 2009 system summer peak
updated loads to 2010 system summer peak
added 2010 North Valley 1-in-10 loads and generation dispatch
Morro Bay 4 is the swing bus
Proposed new generation in queue added
CPV Colusa 97 MW looped onto:
Cottonwood - Cortina 230 kV Line (#1)
Cottonwood - Vaca Dixon 230 kV Line (#2)
Logan Creek - Vaca Dixon 230 kV Line (#3)
Glenn - Vaca Dixon 230 kV Line (#4)

2_COLUSA_spd_pg
Tue Aug 02 16:19:04 2005

10hs_clusa_trs_clsa-crtna.chf

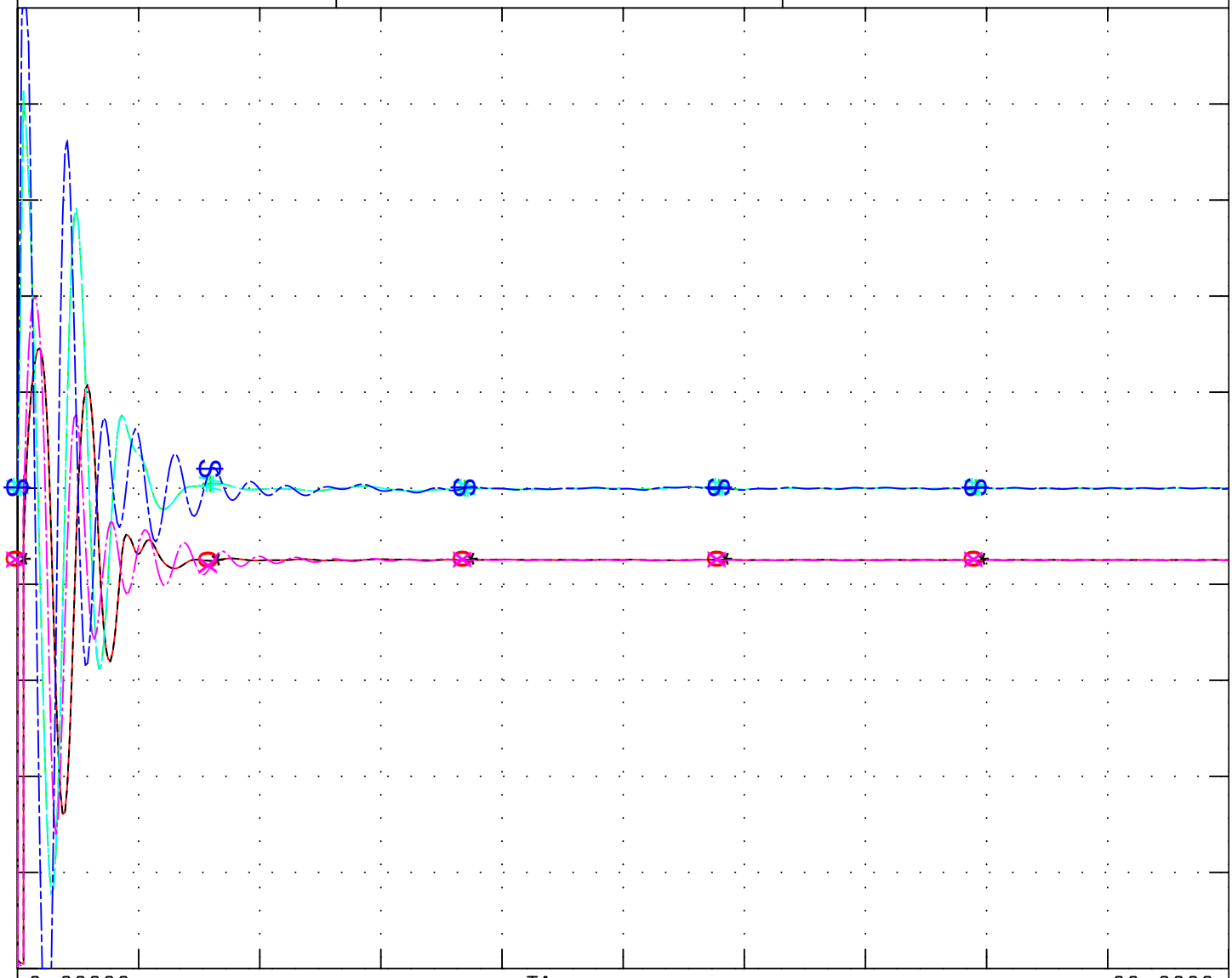

0.0000		O	pg	31923	18.0	P0506GT1	1	1	n	468.00
0.9900		+	spd	31923	18.0	P0506GT1	1	1	n	1.0100
0.0000		*	pg	31924	18.0	P0506GT2	2	1	n	468.00
0.9900		#	spd	31924	18.0	P0506GT2	2	1	n	1.0100
0.0000		X	pg	31925	18.0	P0506ST1	3	1	n	746.00
0.9900		$	spd	31925	18.0	P0506ST1	3	1	n	1.0100

PG&E 2004 BASE CASE SERIES - 2010 North Valley Summer Peak Case
PATH15=-1127 MW(S-N) PATH26=3313 MW(N-S) PDCI=3105 MW(N-S) COI=4710 MW(N-S)
CPV Colusa - 2010 Summer Peak - after

Trip Colusa SWYD - Cortina 230 kV LINE

original case 3/26/2004 by SATS 2009 system summer peak
updated loads to 2010 system summer peak
added 2010 North Valley 1-in-10 loads and generation dispatch
Morro Bay 4 is the swing bus
Proposed new generation in queue added
CPV Colusa 97 MW looped onto:
Cottonwood - Cortina 230 kV Line (#1)
Cottonwood - Vaca Dixon 230 kV Line (#2)
Logan Creek - Vaca Dixon 230 kV Line (#3)
Glenn - Vaca Dixon 230 kV Line (#4)

3_BUS_VOLT_MAG_230:
Tue Aug 02 16:19:04 2005

10hs_clusa_trs_clsa-crtna.chf

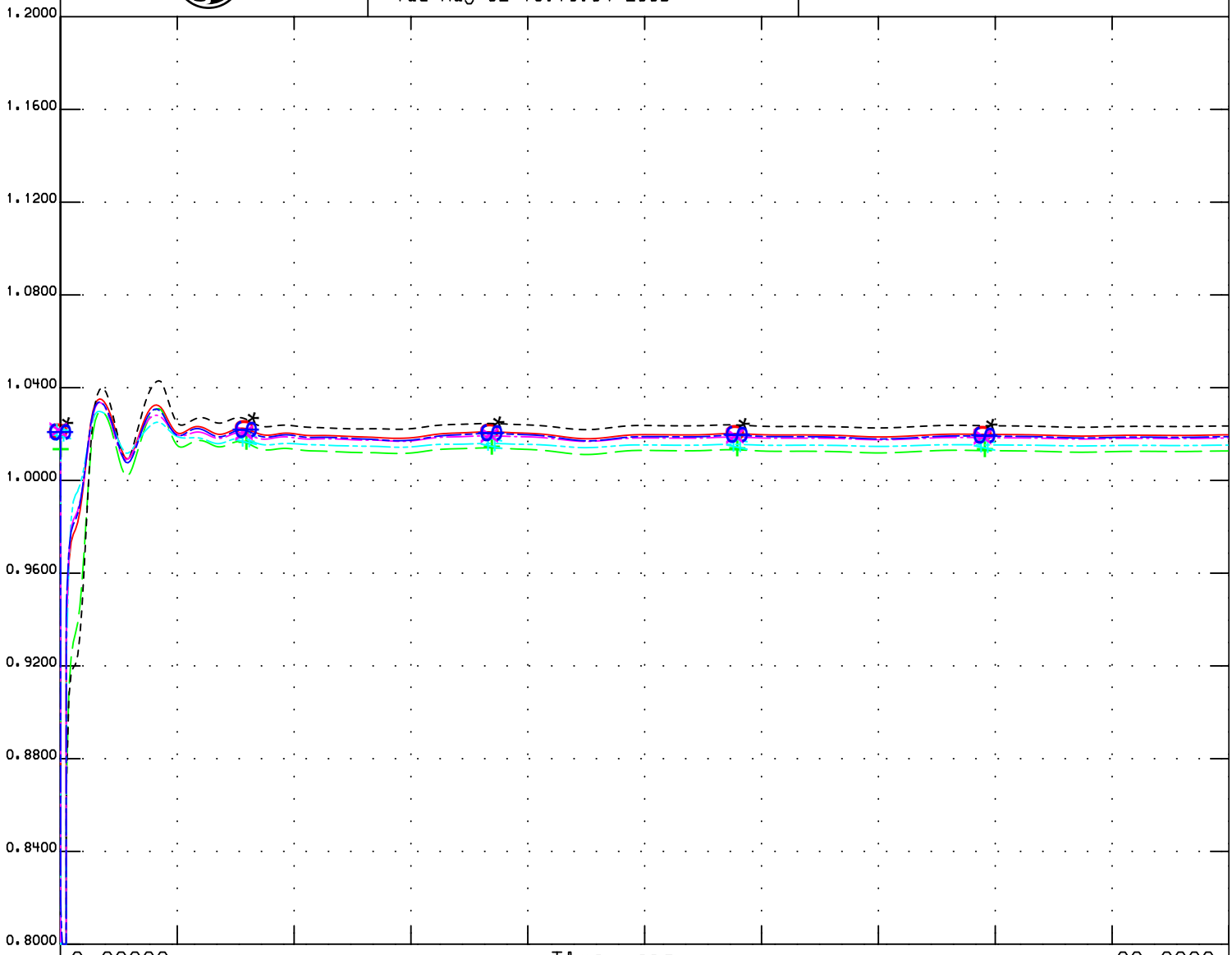

0.8000	————————	O	vbus	30106	230.0	COTWD_F	1	1	n	1.2000
0.8000	— — — — — —	+	vbus	30110	230.0	GLENN	1	1	n	1.2000
0.8000	- - - - - - - - - - - - - -	*	vbul	30111	230.0	LOGAN CR	1	1	n	1.2000
0.8000	—-—-—-—-—-—	#	vbus	30450	230.0	CORTINA	1	1	n	1.2000
0.8000	—.—.—.—.—.—	X	vbus	30460	230.0	VACA-DIX	1	1	n	1.2000
0.8000	—-—-—-—-—-—	$	vbus	37565	230.0	OLINDAW	1	1	n	1.2000

PG&E 2004 BASE CASE SERIES - 2010 North Valley Summer Peak Case
PATH15=-1127 MW(S-N) PATH26=3313 MW(N-S) PDCI=3105 MW(N-S) COI=4710 MW(N-S)
CPV Colusa - 2010 Summer Peak - after

Trip Colusa SWYD - Cortina 230 kV LINE

original case 3/26/2004 by SATS 2009 system summer peak
updated loads to 2010 system summer peak
added 2010 North Valley 1-in-10 loads and generation dispatch
Morro Bay 4 is the swing bus
Proposed new generation in queue added
CPV Colusa 97 MW looped onto:
Cottonwood - Cortina 230 kV Line (#1)
Cottonwood - Vaca Dixon 230 kV Line (#2)
Logan Creek - Vaca Dixon 230 kV Line (#3)
Glenn - Vaca Dixon 230 kV Line (#4)

4_BUS_VOLT_MAG_230:
Tue Aug 02 16:19:04 2005

10hs_clusa_trs_clsa-crtna.chf

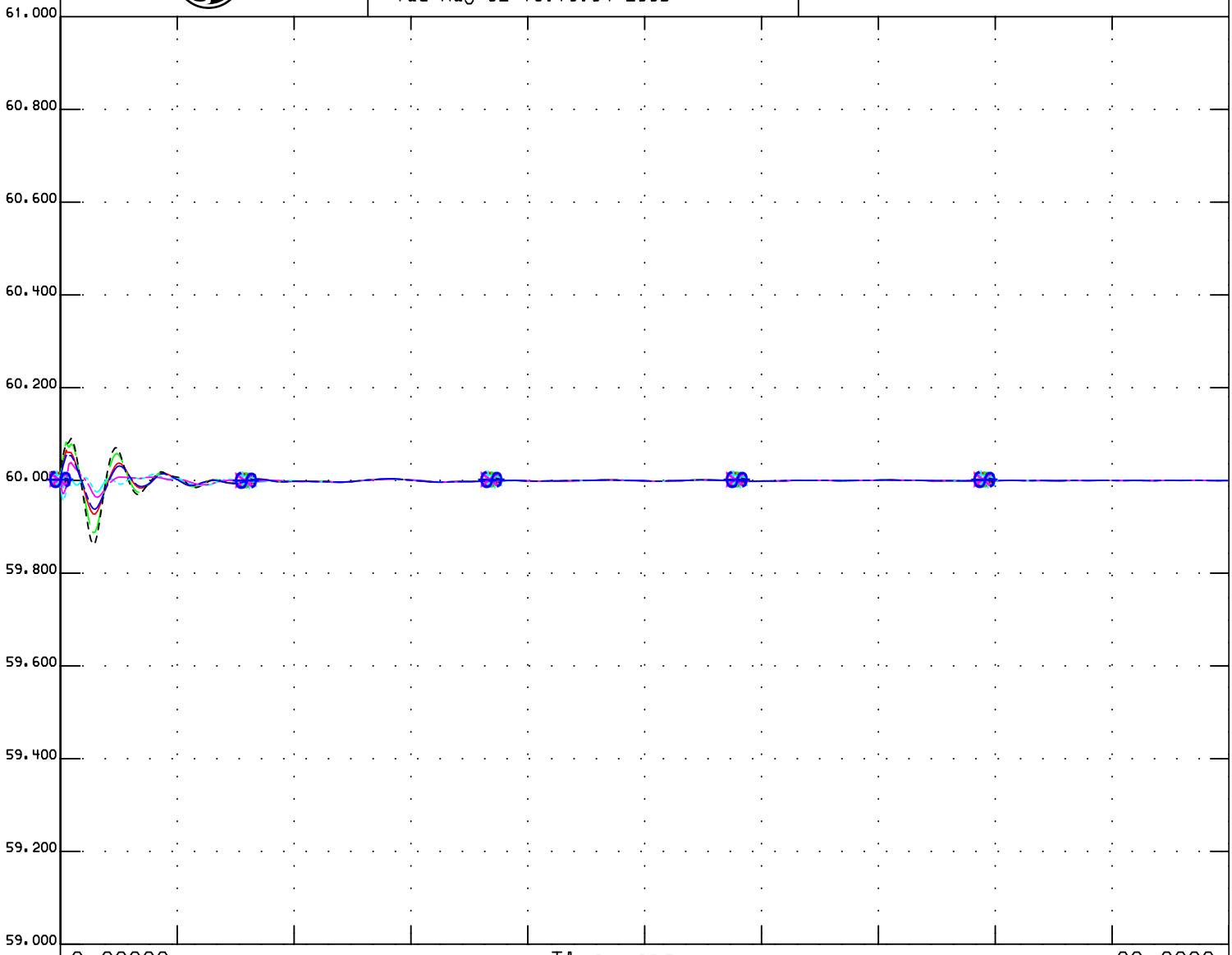

59.000	————	O	fbus	30106	230.0	COTWD_F	1	1	n	61.000
59.000	— — — — — —	+	fbus	30110	230.0	GLENN	1	1	n	61.000
59.000	- - - - - - - - - - - - - -	*	fbul	30111	230.0	LOGAN CR	1	1	n	61.000
59.000	—·—·—·—·—·—	#	fbus	30450	230.0	CORTINA	1	1	n	61.000
59.000	—·—·—·—·—·—	X	fbus	30460	230.0	VACA-DIX	1	1	n	61.000
59.000	— — — — — —	S	fbus	37565	230.0	OLINDAW	1	1	n	61.000

PG&E 2004 BASE CASE SERIES - 2010 North Valley Summer Peak Case
PATH15=-1127 MW(S-N) PATH26=3313 MW(N-S) PDCI=3105 MW(N-S) COI=4710 MW(N-S)
CPV Colusa - 2010 Summer Peak - after

Trip Colusa SWYD - Cortina 230 kV LINE

original case 3/26/2004 by SATS 2009 system summer peak
updated loads to 2010 system summer peak
added 2010 North Valley 1-in-10 loads and generation dispatch
Morro Bay 4 is the swing bus
Proposed new generation in queue added
CPV Colusa 97 MW looped onto:
Cottonwood - Cortina 230 kV Line (#1)
Cottonwood - Vaca Dixon 230 kV Line (#2)
Logan Creek - Vaca Dixon 230 kV Line (#3)
Glenn - Vaca Dixon 230 kV Line (#4)

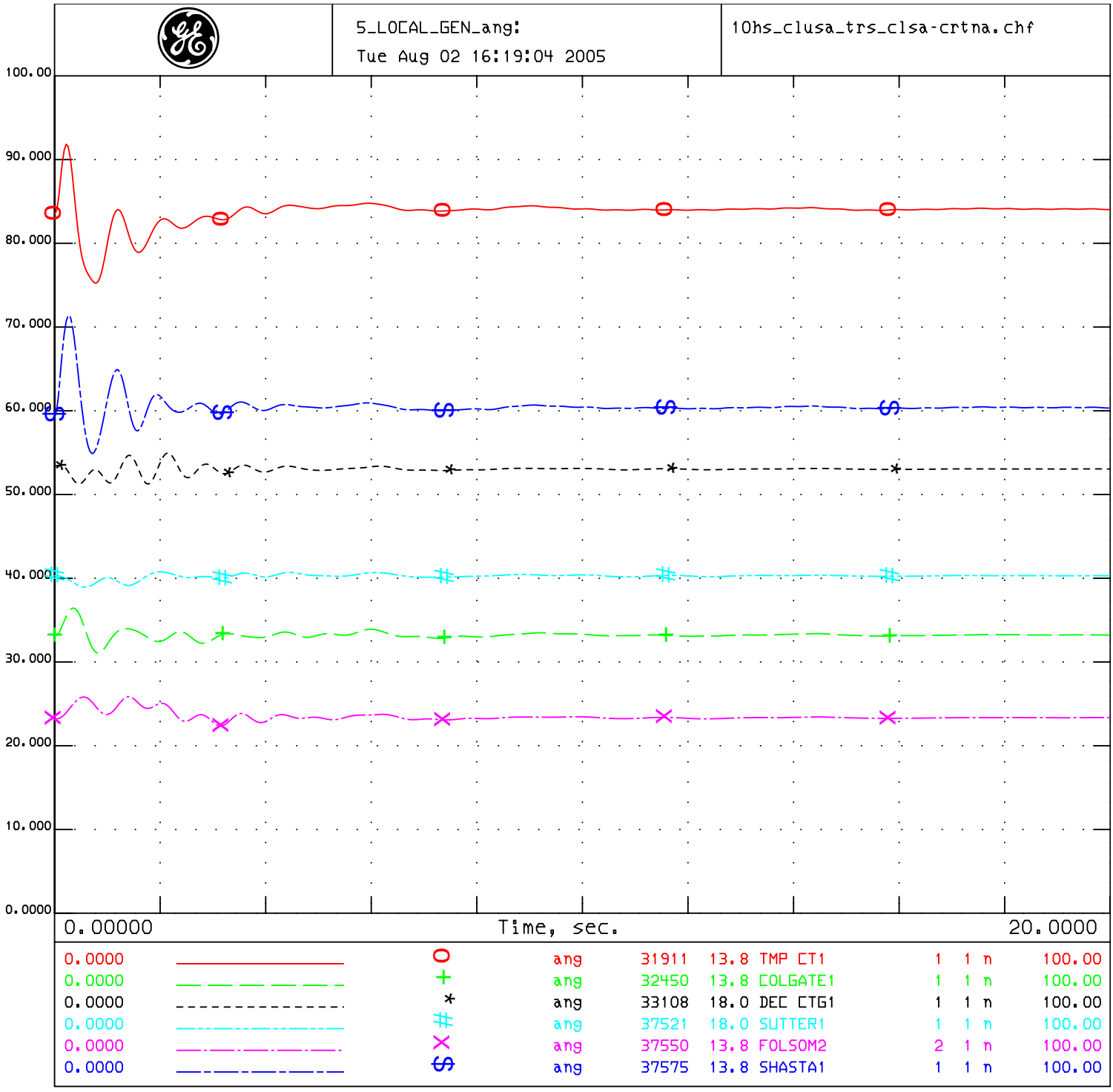

PG&E 2004 BASE CASE SERIES - 2010 North Valley Summer Peak Case
PATH15=-1127 MW(S-N) PATH26=3313 MW(N-S) PDCI=3105 MW(N-S) COI=4710 MW(N-S)
CPV Colusa - 2010 Summer Peak - after

Trip Colusa SWYD - Cortina 230 kV LINE

original case 3/26/2004 by SATS 2009 system summer peak
updated loads to 2010 system summer peak
added 2010 North Valley 1-in-10 loads and generation dispatch
Morro Bay 4 is the swing bus
Proposed new generation in queue added
CPV Colusa 97 MW looped onto:
Cottonwood - Cortina 230 kV Line (#1)
Cottonwood - Vaca Dixon 230 kV Line (#2)
Logan Creek - Vaca Dixon 230 kV Line (#3)
Glenn - Vaca Dixon 230 kV Line (#4)

6_LOCAL_GEN_vt:
Tue Aug 02 16:19:04 2005

10hs_clusa_trs_clsa-crtna.chf

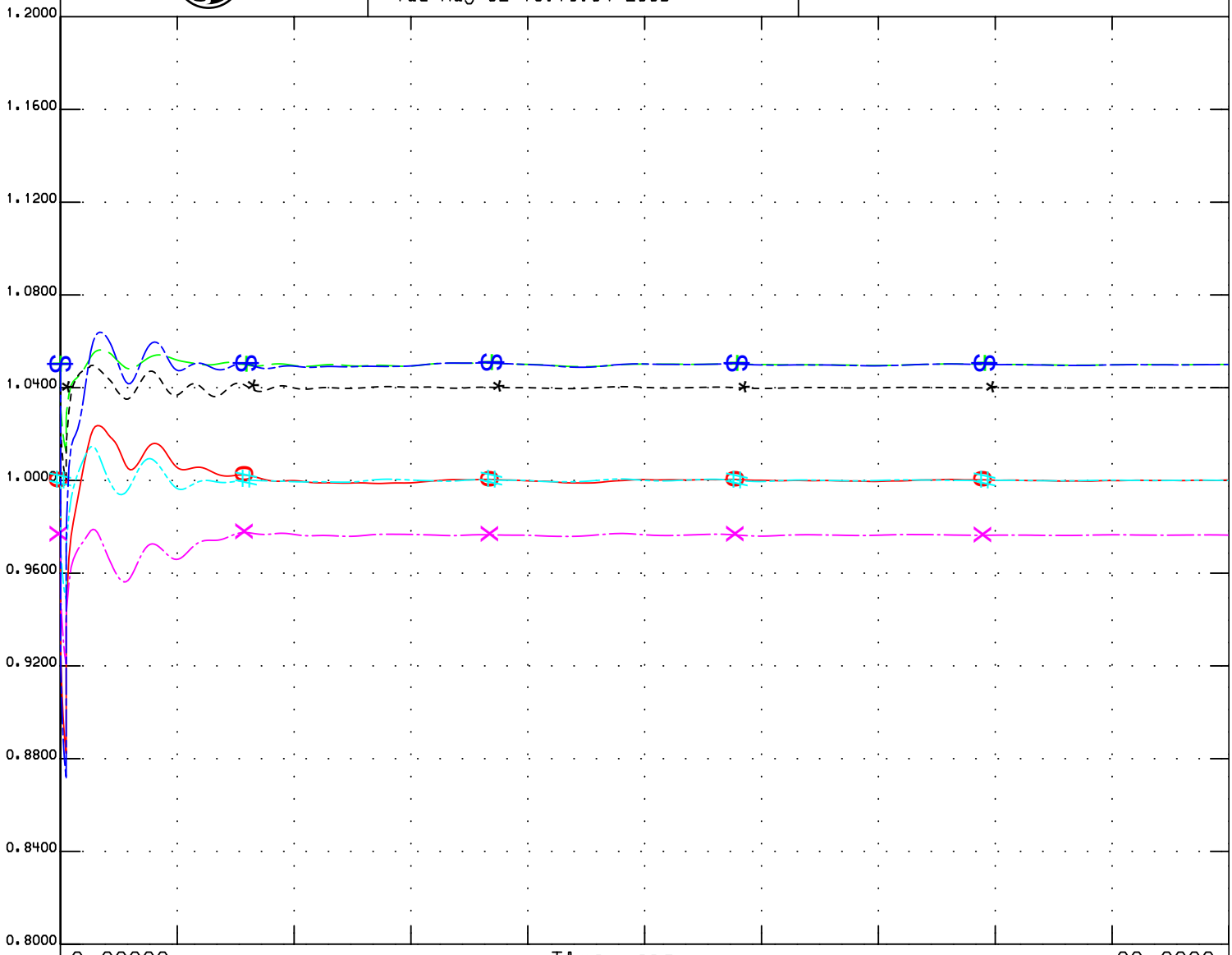

0.8000		O	vt	31911	13.8	TMP CT1	1	1	n	1.2000
0.8000		+	vt	32450	13.8	COLGATE1	1	1	n	1.2000
0.8000		*	vt	33108	18.0	DEC CTG1	1	1	n	1.2000
0.8000		#	vt	37521	18.0	SUTTER1	1	1	n	1.2000
0.8000		X	vt	37550	13.8	FOLSOM2	2	1	n	1.2000
0.8000		S	vt	37575	13.8	SHASTA1	1	1	n	1.2000

PG&E 2004 BASE CASE SERIES - 2010 North Valley Summer Peak Case
PATH15=-1127 MW(S-N) PATH26=3313 MW(N-S) PDCI=3105 MW(N-S) COI=4710 MW(N-S)
CPV Colusa - 2010 Summer Peak - after

Trip Colusa SWYD - Cortina 230 kV LINE

original case 3/26/2004 by SATS 2009 system summer peak
updated loads to 2010 system summer peak
added 2010 North Valley 1-in-10 loads and generation dispatch
Morro Bay 4 is the swing bus
Proposed new generation in queue added
CPV Colusa 97 MW looped onto:
Cottonwood - Cortina 230 kV Line (#1)
Cottonwood - Vaca Dixon 230 kV Line (#2)
Logan Creek - Vaca Dixon 230 kV Line (#3)
Glenn - Vaca Dixon 230 kV Line (#4)

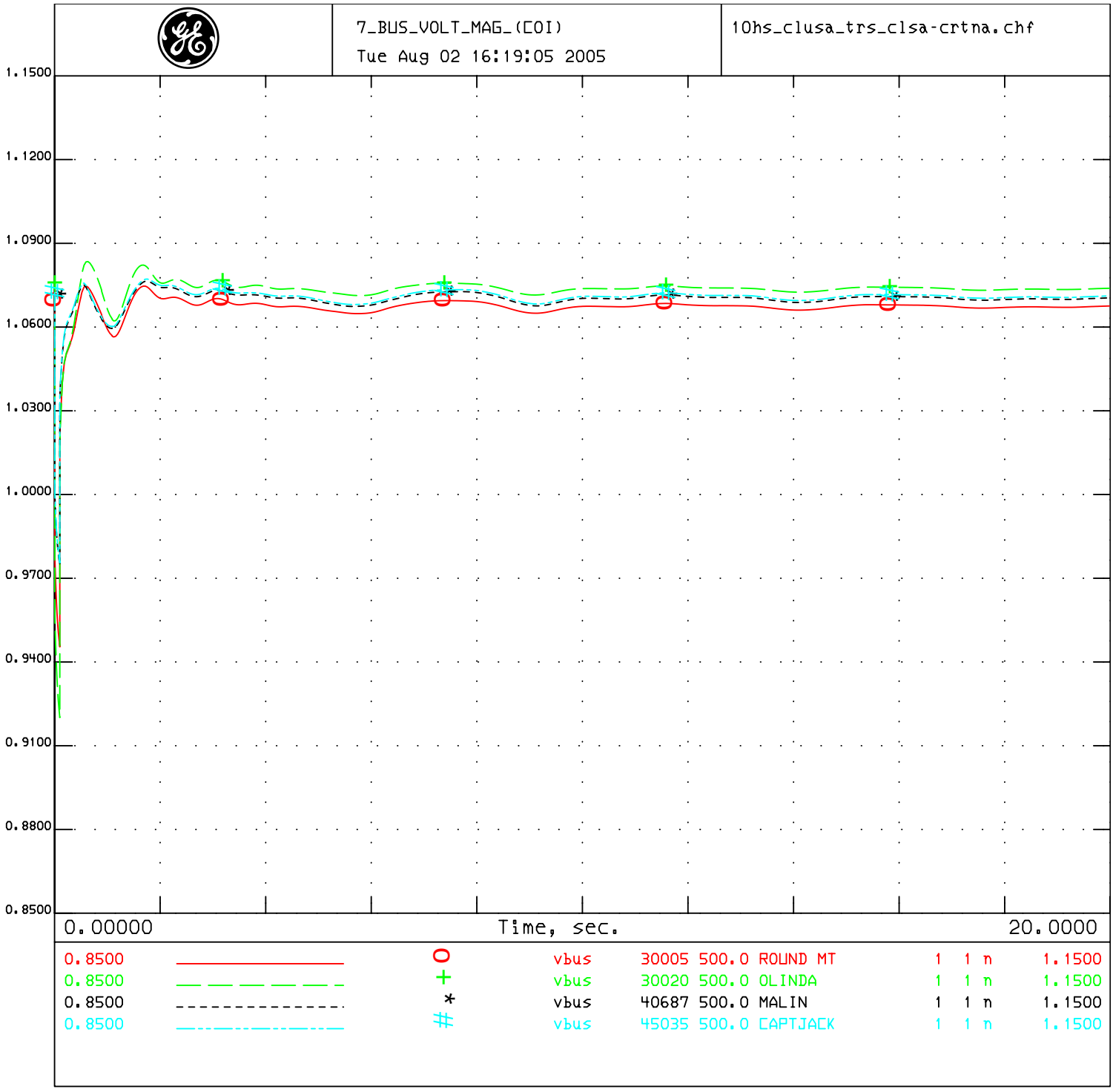

PG&E 2004 BASE CASE SERIES - 2010 North Valley Summer Peak Case
PATH15=-1127 MW(S-N) PATH26=3313 MW(N-S) PDCI=3105 MW(N-S) COI=4710 MW(N-S)
CPV Colusa - 2010 Summer Peak - after

Trip Colusa SWYD - Cortina 230 kV LINE

original case 3/26/2004 by SATS 2009 system summer peak
updated loads to 2010 system summer peak
added 2010 North Valley 1-in-10 loads and generation dispatch
Morro Bay 4 is the swing bus
Proposed new generation in queue added
CPV Colusa 97 MW looped onto:
Cottonwood - Cortina 230 kV Line (#1)
Cottonwood - Vaca Dixon 230 kV Line (#2)
Logan Creek - Vaca Dixon 230 kV Line (#3)
Glenn - Vaca Dixon 230 kV Line (#4)

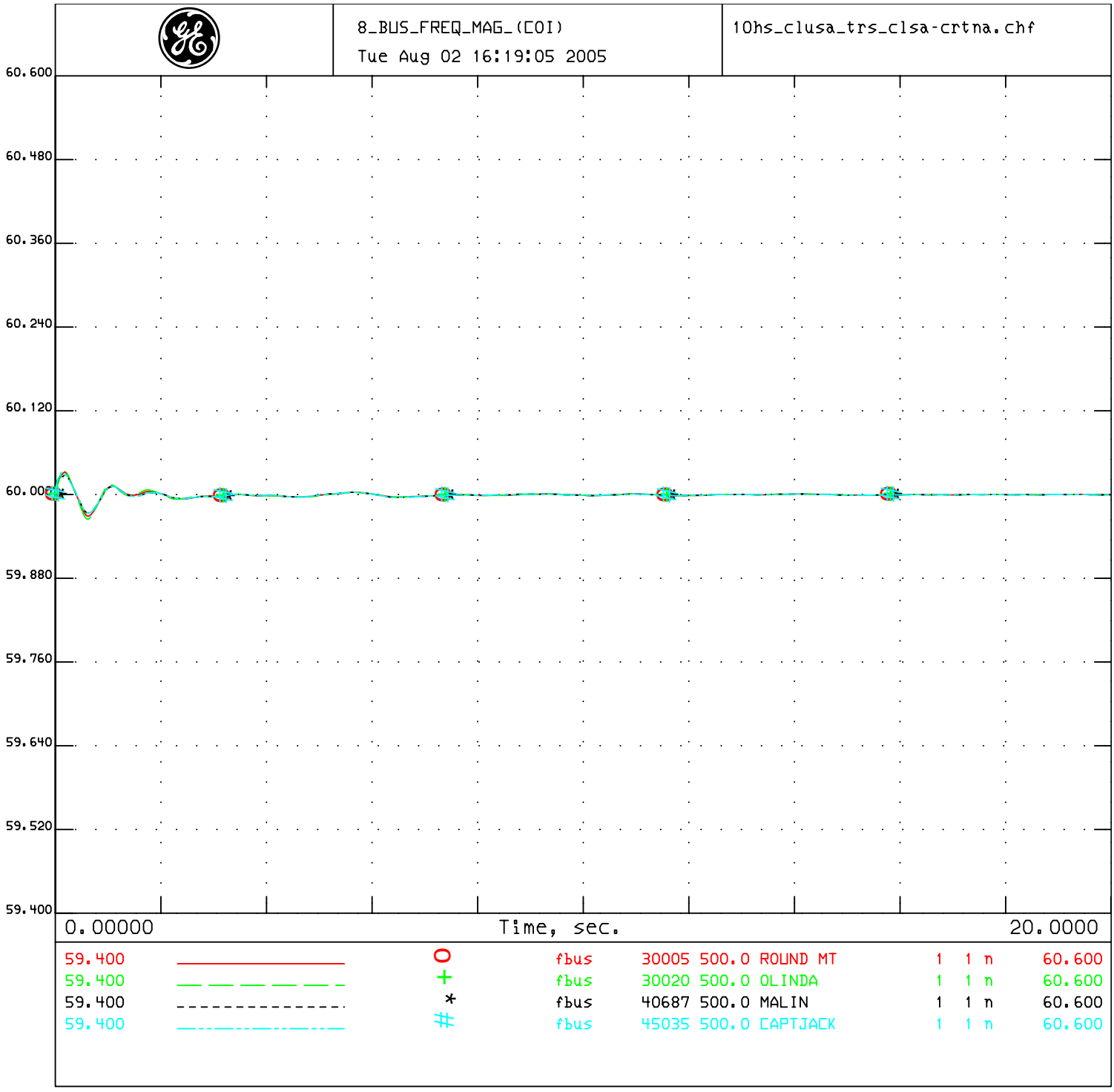

PG&E 2004 BASE CASE SERIES - 2010 North Valley Summer Peak Case
PATH15=-1127 MW(S-N) PATH26=3313 MW(N-S) PDCI=3105 MW(N-S) COI=4710 MW(N-S)
CPV Colusa - 2010 Summer Peak - after

Trip Colusa SWYD - Cortina 230 kV LINE

original case 3/26/2004 by SATS 2009 system summer peak
updated loads to 2010 system summer peak
added 2010 North Valley 1-in-10 loads and generation dispatch
Morro Bay 4 is the swing bus
Proposed new generation in queue added
CPV Colusa 97 MW looped onto:
Cottonwood - Cortina 230 kV Line (#1)
Cottonwood - Vaca Dixon 230 kV Line (#2)
Logan Creek - Vaca Dixon 230 kV Line (#3)
Glenn - Vaca Dixon 230 kV Line (#4)

1_COLUSA_vt_ang
Tue Aug 02 16:12:14 2005

10hs_clusa_trs_clsa-lgncrk.chf

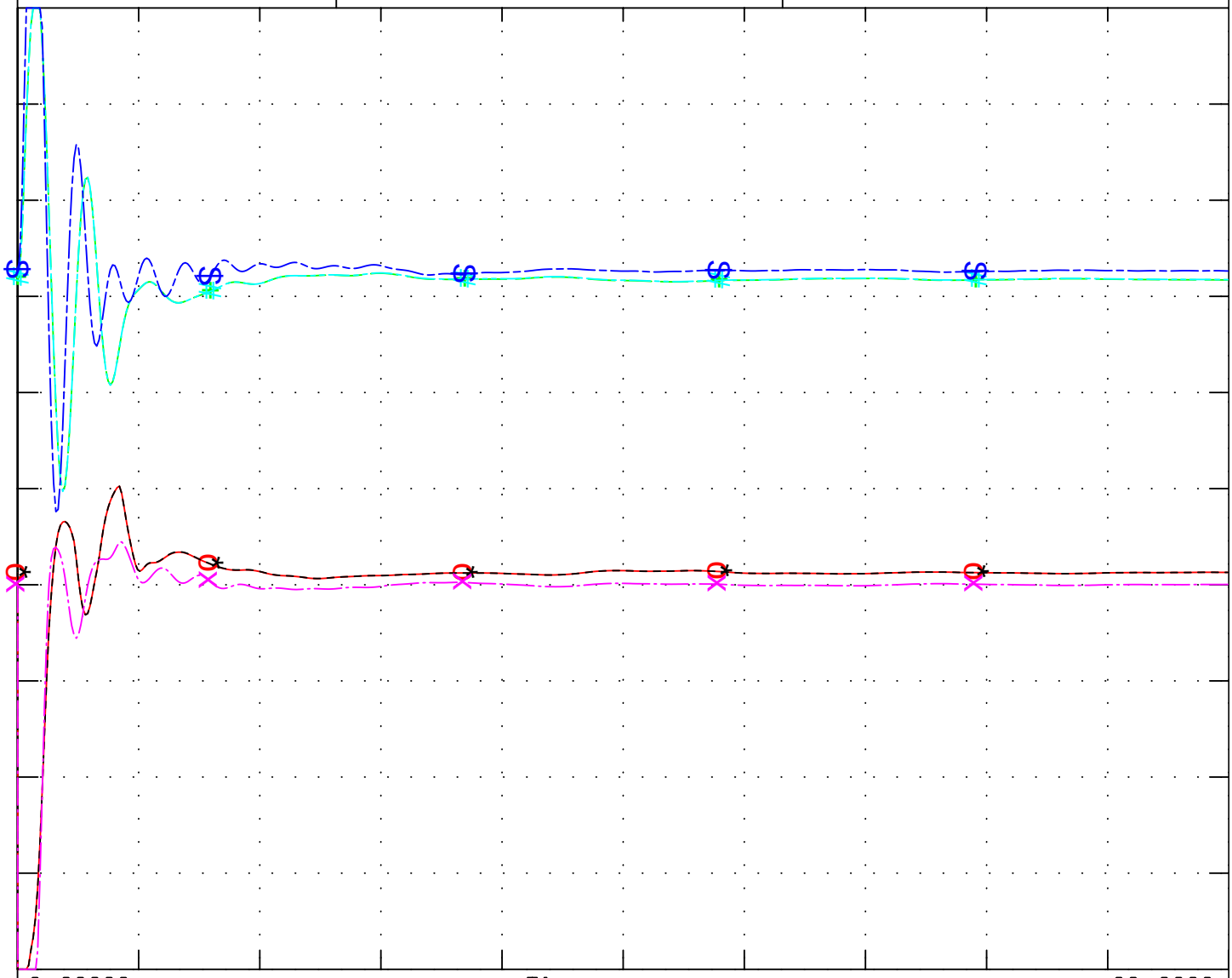

0.8000		O	vt	31923	18.0	P0506GT1	1	1	1.2000
0.0000		+	ang	31923	18.0	P0506GT1	1	1	100.00
0.8000		*	vt	31924	18.0	P0506GT2	2	1	1.2000
0.0000		#	ang	31924	18.0	P0506GT2	2	1	100.00
0.8000		X	vt	31925	18.0	P0506ST1	3	1	1.2000
0.0000		⊗	ang	31925	18.0	P0506ST1	3	1	100.00

PG&E 2004 BASE CASE SERIES - 2010 North Valley Summer Peak Case
PATH15=-1127 MW(S-N) PATH26=3313 MW(N-S) PDCI=3105 MW(N-S) COI=4710 MW(N-S)
CPV Colusa - 2010 Summer Peak - after

Trip Colusa SWYD - Logan Creek 230 kV LINE

original case 3/26/2004 by SATS 2009 system summer peak
updated loads to 2010 system summer peak
added 2010 North Valley 1-in-10 loads and generation dispatch
Morro Bay 4 is the swing bus
Proposed new generation in queue added
CPV Colusa 97 MW looped onto:
Cottonwood - Cortina 230 kV Line (#1)
Cottonwood - Vaca Dixon 230 kV Line (#2)
Logan Creek - Vaca Dixon 230 kV Line (#3)
Glenn - Vaca Dixon 230 kV Line (#4)

2_COLUSA_spd_pg
Tue Aug 02 16:12:14 2005

10hs_clusa_trs_clsa-lgncrk.chf

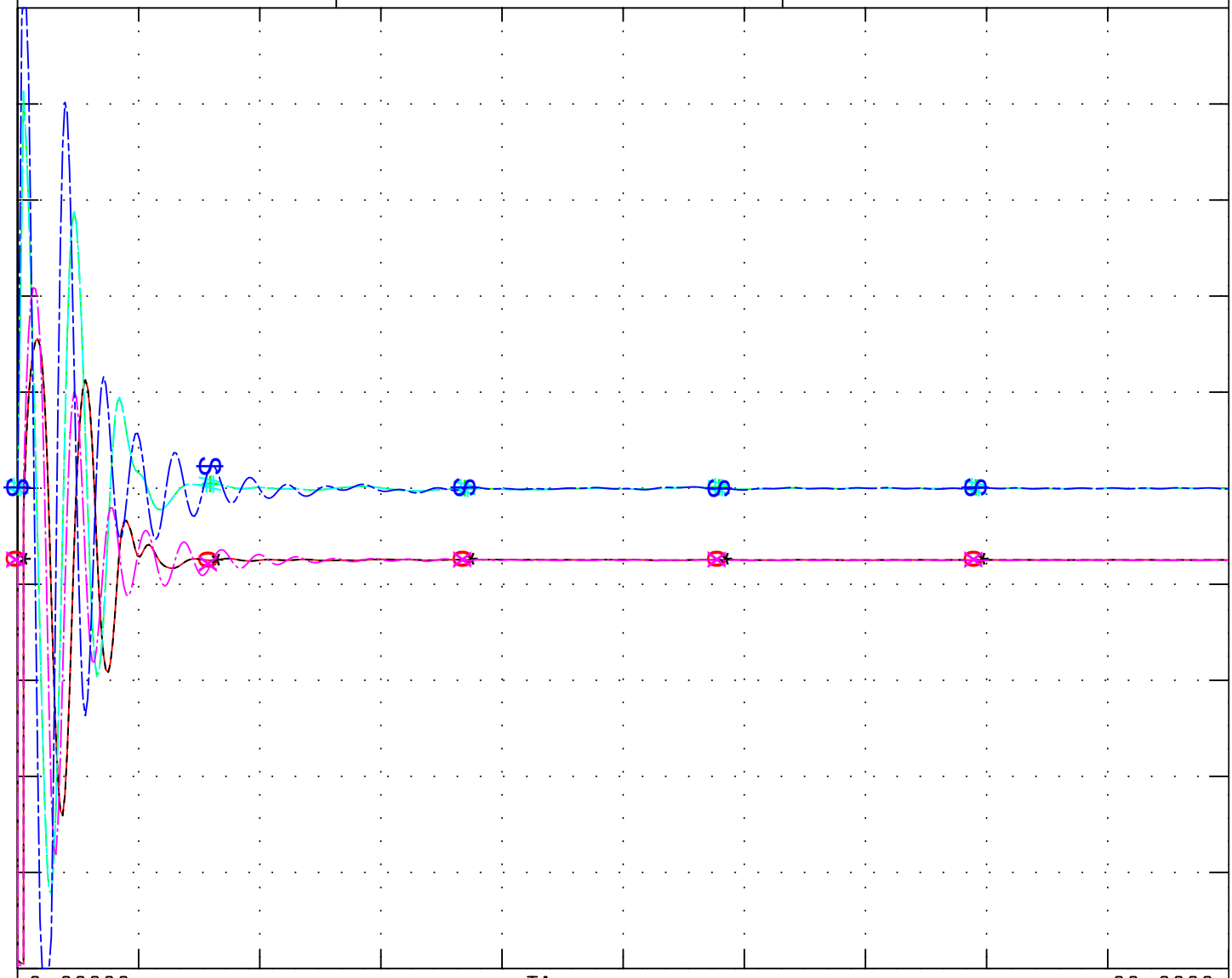

0.0000		O	pg	31923	18.0	P0506GT1	1	1	n	468.00
0.9900		+	spd	31923	18.0	P0506GT1	1	1	n	1.0100
0.0000		*	pg	31924	18.0	P0506GT2	2	1	n	468.00
0.9900		#	spd	31924	18.0	P0506GT2	2	1	n	1.0100
0.0000		X	pg	31925	18.0	P0506ST1	3	1	n	746.00
0.9900		$	spd	31925	18.0	P0506ST1	3	1	n	1.0100

PG&E 2004 BASE CASE SERIES - 2010 North Valley Summer Peak Case
PATH15=-1127 MW(S-N) PATH26=3313 MW(N-S) PDCI=3105 MW(N-S) COI=4710 MW(N-S)
CPV Colusa - 2010 Summer Peak - after

Trip Colusa SWYD - Logan Creek 230 kV LINE

original case 3/26/2004 by SATS 2009 system summer peak
updated loads to 2010 system summer peak
added 2010 North Valley 1-in-10 loads and generation dispatch
Morro Bay 4 is the swing bus
Proposed new generation in queue added
CPV Colusa 97 MW looped onto:
Cottonwood - Cortina 230 kV Line (#1)
Cottonwood - Vaca Dixon 230 kV Line (#2)
Logan Creek - Vaca Dixon 230 kV Line (#3)
Glenn - Vaca Dixon 230 kV Line (#4)

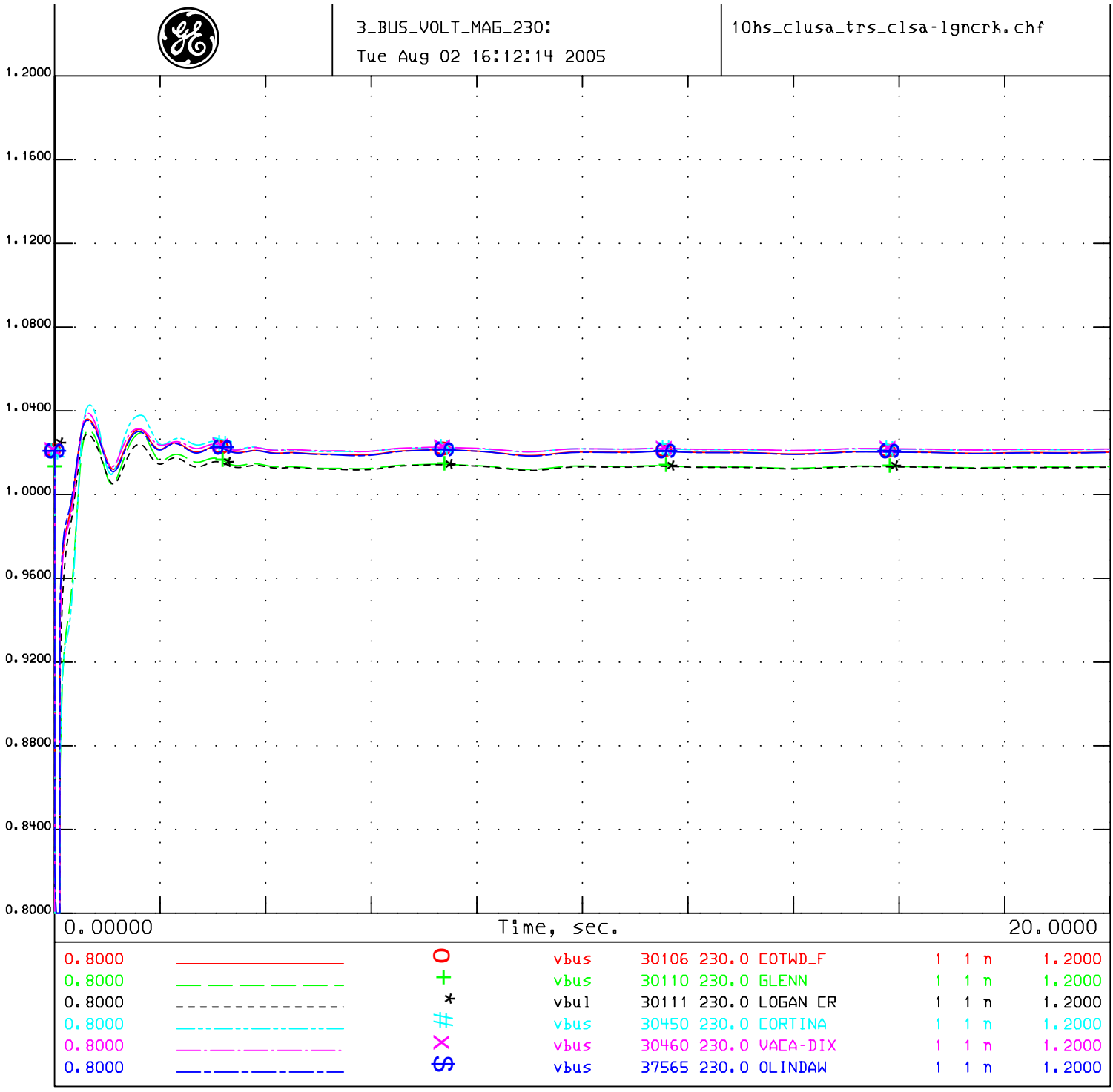

PG&E 2004 BASE CASE SERIES - 2010 North Valley Summer Peak Case
PATH15=-1127 MW(S-N) PATH26=3313 MW(N-S) PDCI=3105 MW(N-S) COI=4710 MW(N-S)
CPV Colusa - 2010 Summer Peak - after

Trip Colusa SWYD - Logan Creek 230 kV LINE

original case 3/26/2004 by SATS 2009 system summer peak
updated loads to 2010 system summer peak
added 2010 North Valley 1-in-10 loads and generation dispatch
Morro Bay 4 is the swing bus
Proposed new generation in queue added
CPV Colusa 97 MW looped onto:
Cottonwood - Cortina 230 kV Line (#1)
Cottonwood - Vaca Dixon 230 kV Line (#2)
Logan Creek - Vaca Dixon 230 kV Line (#3)
Glenn - Vaca Dixon 230 kV Line (#4)

4_BUS_VOLT_MAG_230:
Tue Aug 02 16:12:14 2005

10hs_clusa_trs_clsa-lgncrk.chf

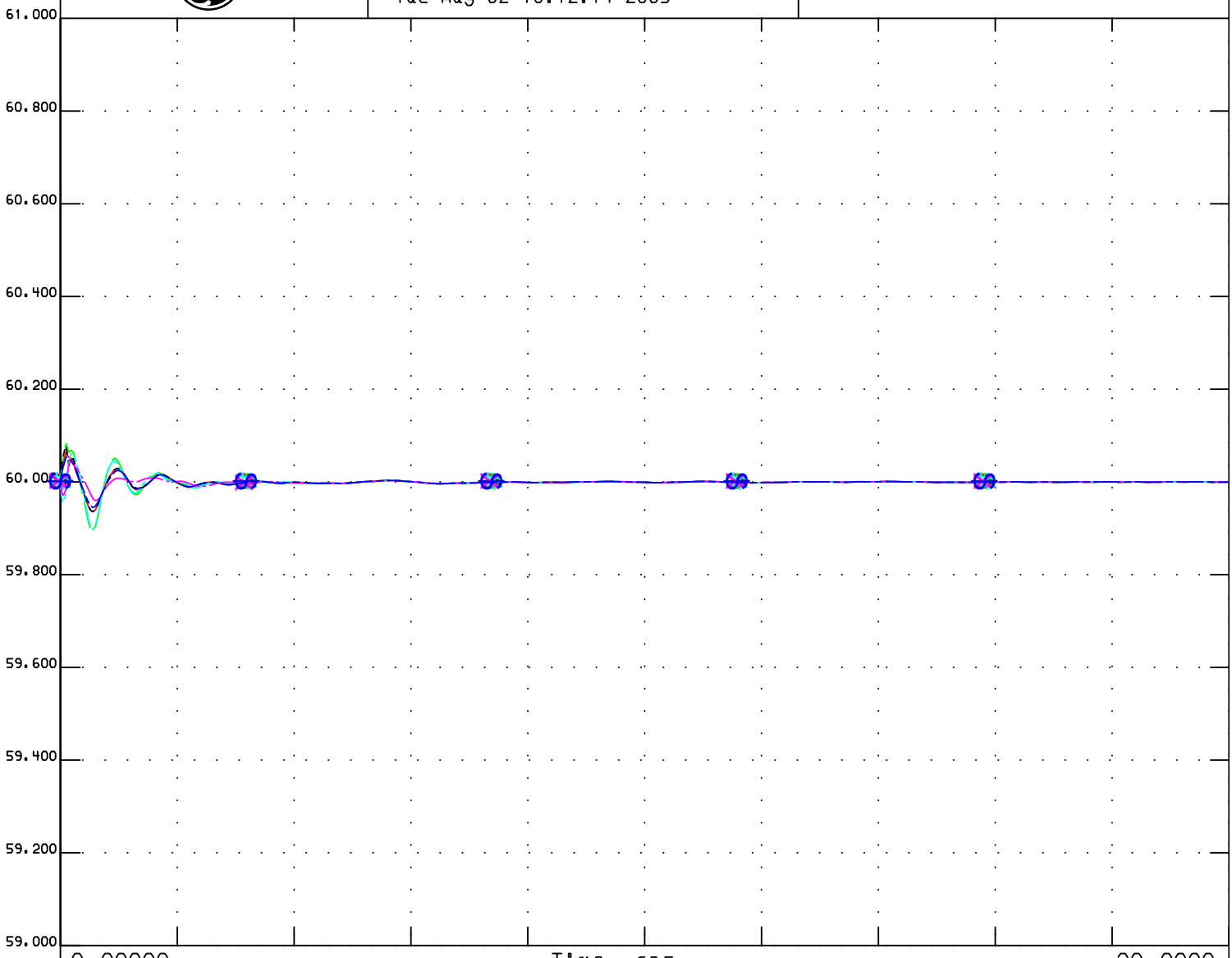

59.000		O	fbus	30106	230.0	COTWD_F	1	1 n	61.000
59.000		+	fbus	30110	230.0	GLENN	1	1 n	61.000
59.000		*	fbul	30111	230.0	LOGAN CR	1	1 n	61.000
59.000		#	fbus	30450	230.0	CORTINA	1	1 n	61.000
59.000		X	fbus	30460	230.0	VACA-DIX	1	1 n	61.000
59.000		$	fbus	37565	230.0	OLINDAW	1	1 n	61.000

PG&E 2004 BASE CASE SERIES - 2010 North Valley Summer Peak Case
PATH15=-1127 MW(S-N) PATH26=3313 MW(N-S) PDCI=3105 MW(N-S) COI=4710 MW(N-S)
CPV Colusa - 2010 Summer Peak - after

Trip Colusa SWYD - Logan Creek 230 kV LINE

original case 3/26/2004 by SATS 2009 system summer peak
updated loads to 2010 system summer peak
added 2010 North Valley 1-in-10 loads and generation dispatch
Morro Bay 4 is the swing bus
Proposed new generation in queue added
CPV Colusa 97 MW looped onto:
Cottonwood - Cortina 230 kV Line (#1)
Cottonwood - Vaca Dixon 230 kV Line (#2)
Logan Creek - Vaca Dixon 230 kV Line (#3)
Glenn - Vaca Dixon 230 kV Line (#4)

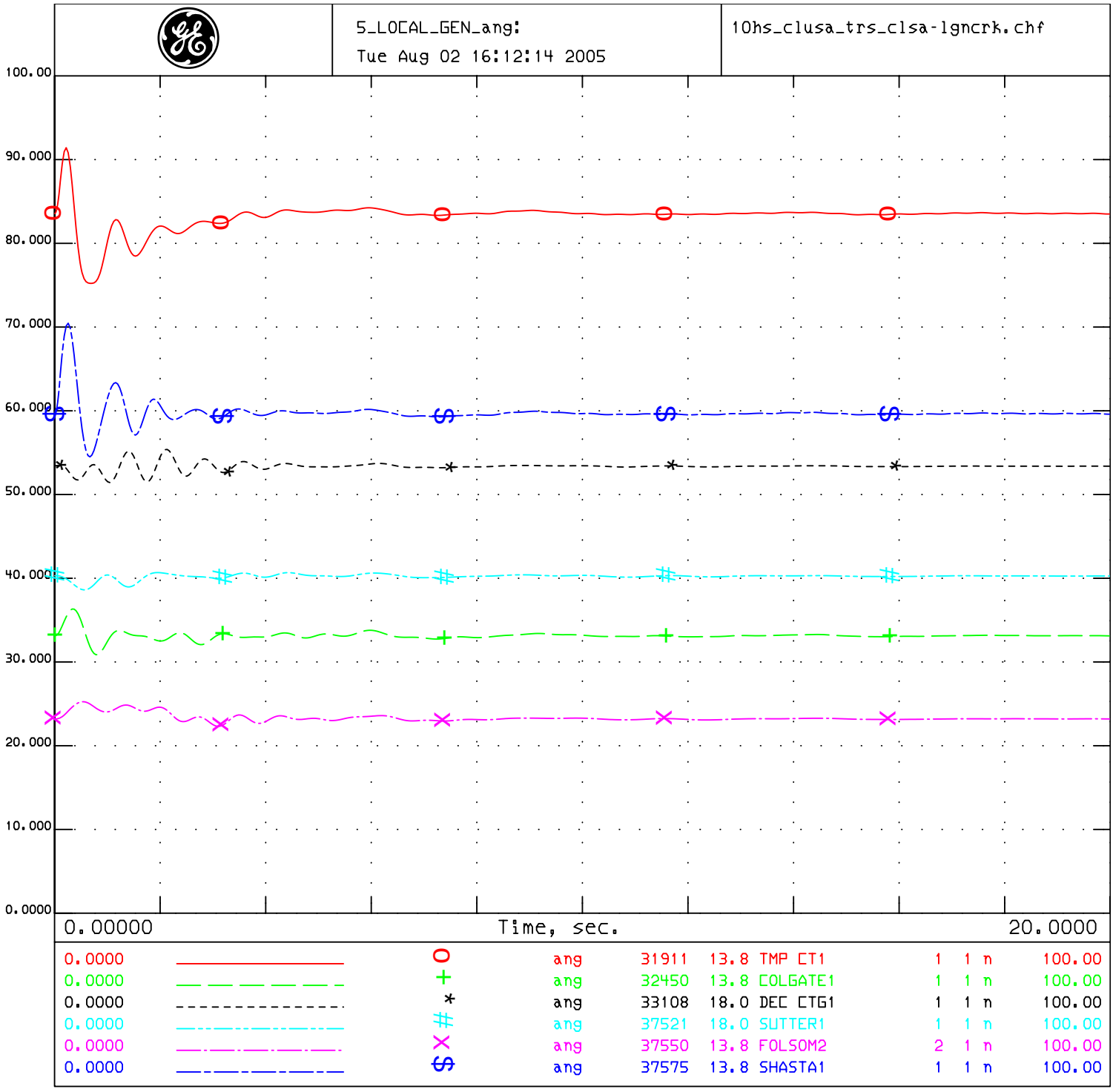

PG&E 2004 BASE CASE SERIES - 2010 North Valley Summer Peak Case
PATH15=-1127 MW(S-N) PATH26=3313 MW(N-S) PDCI=3105 MW(N-S) COI=4710 MW(N-S)
CPV Colusa - 2010 Summer Peak - after

Trip Colusa SWYD - Logan Creek 230 kV LINE

original case 3/26/2004 by SATS 2009 system summer peak
updated loads to 2010 system summer peak
added 2010 North Valley 1-in-10 loads and generation dispatch
Morro Bay 4 is the swing bus
Proposed new generation in queue added
CPV Colusa 97 MW looped onto:
Cottonwood - Cortina 230 kV Line (#1)
Cottonwood - Vaca Dixon 230 kV Line (#2)
Logan Creek - Vaca Dixon 230 kV Line (#3)
Glenn - Vaca Dixon 230 kV Line (#4)

6_LOCAL_GEN_vt:
Tue Aug 02 16:12:14 2005

10hs_clusa_trs_clsa-lgncrk.chf

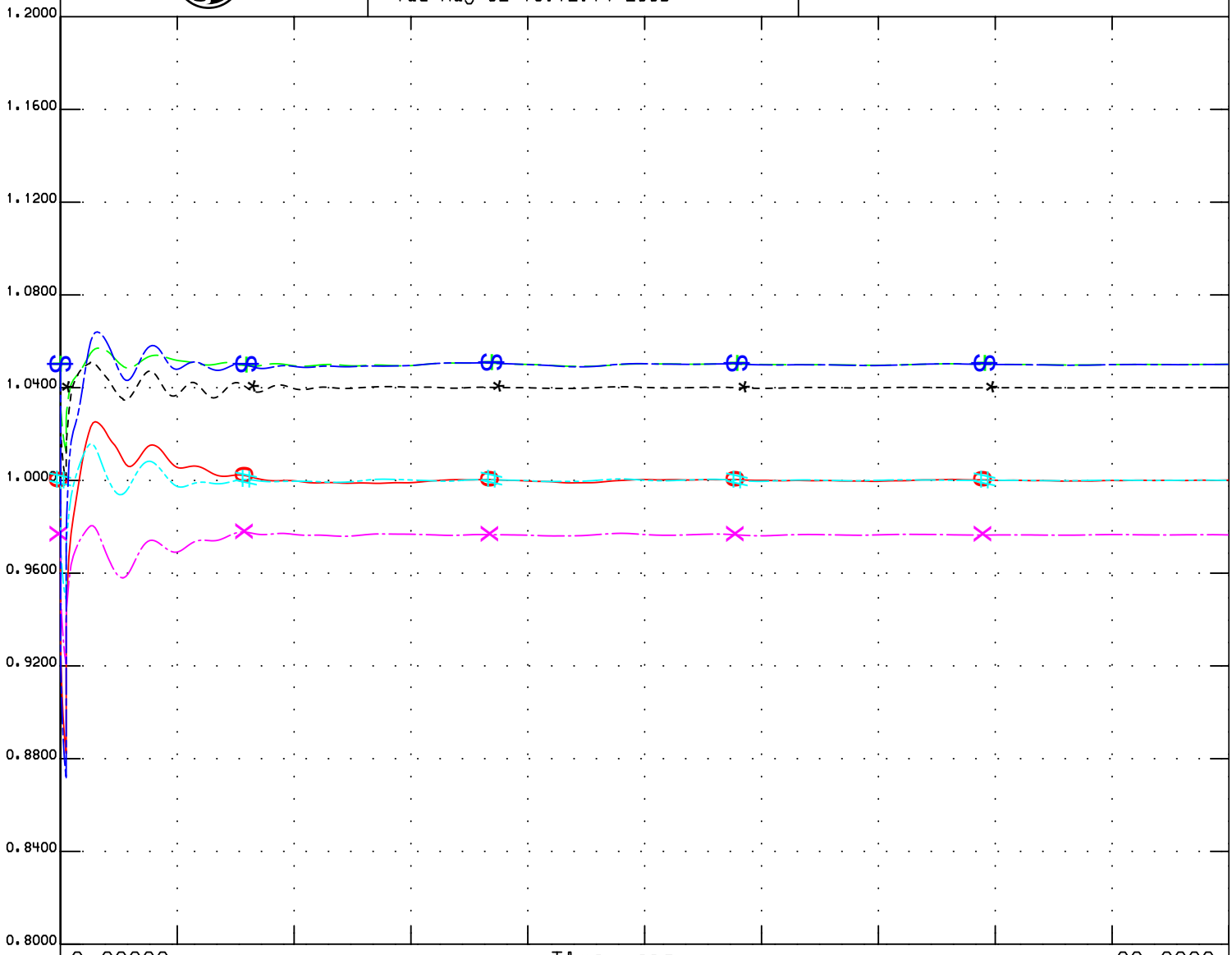

0.8000		O	vt	31911	13.8	TMP CT1	1	1	n	1.2000
0.8000		+	vt	32450	13.8	COLGATE1	1	1	n	1.2000
0.8000		*	vt	33108	18.0	DEC CTG1	1	1	n	1.2000
0.8000		#	vt	37521	18.0	SUTTER1	1	1	n	1.2000
0.8000		X	vt	37550	13.8	FOLSOM2	2	1	n	1.2000
0.8000		S	vt	37575	13.8	SHASTA1	1	1	n	1.2000

PG&E 2004 BASE CASE SERIES - 2010 North Valley Summer Peak Case
PATH15=-1127 MW(S-N) PATH26=3313 MW(N-S) PDCI=3105 MW(N-S) COI=4710 MW(N-S)
CPV Colusa - 2010 Summer Peak - after

Trip Colusa SWYD - Logan Creek 230 kV LINE

original case 3/26/2004 by SATS 2009 system summer peak
updated loads to 2010 system summer peak
added 2010 North Valley 1-in-10 loads and generation dispatch
Morro Bay 4 is the swing bus
Proposed new generation in queue added
CPV Colusa 97 MW looped onto:
Cottonwood - Cortina 230 kV Line (#1)
Cottonwood - Vaca Dixon 230 kV Line (#2)
Logan Creek - Vaca Dixon 230 kV Line (#3)
Glenn - Vaca Dixon 230 kV Line (#4)

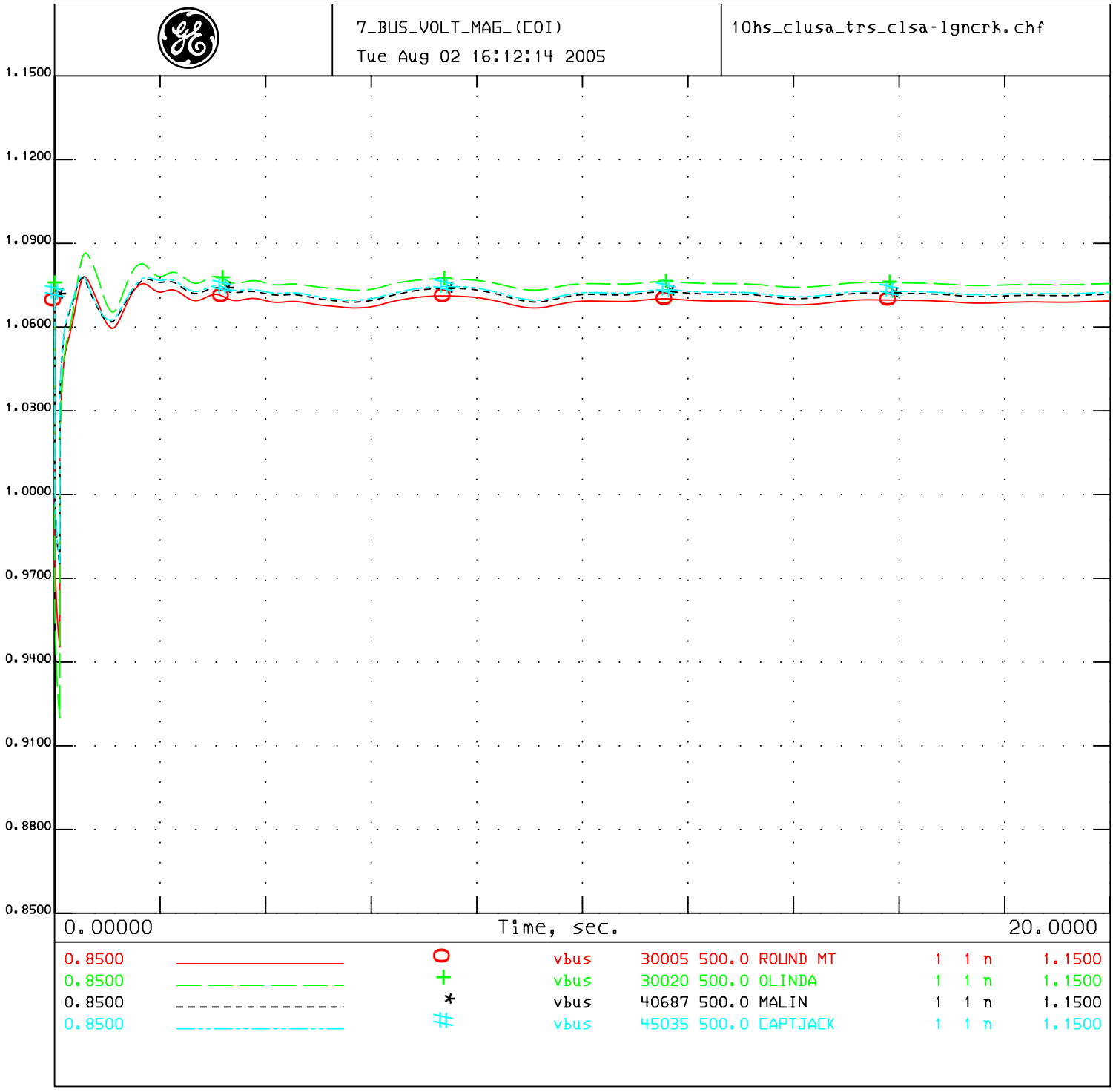

PG&E 2004 BASE CASE SERIES - 2010 North Valley Summer Peak Case
PATH15=-1127 MW(S-N) PATH26=3313 MW(N-S) PDCI=3105 MW(N-S) COI=4710 MW(N-S)
CPV Colusa - 2010 Summer Peak - after

Trip Colusa SWYD - Logan Creek 230 kV LINE

original case 3/26/2004 by SATS 2009 system summer peak
updated loads to 2010 system summer peak
added 2010 North Valley 1-in-10 loads and generation dispatch
Morro Bay 4 is the swing bus
Proposed new generation in queue added
CPV Colusa 97 MW looped onto:
Cottonwood - Cortina 230 kV Line (#1)
Cottonwood - Vaca Dixon 230 kV Line (#2)
Logan Creek - Vaca Dixon 230 kV Line (#3)
Glenn - Vaca Dixon 230 kV Line (#4)

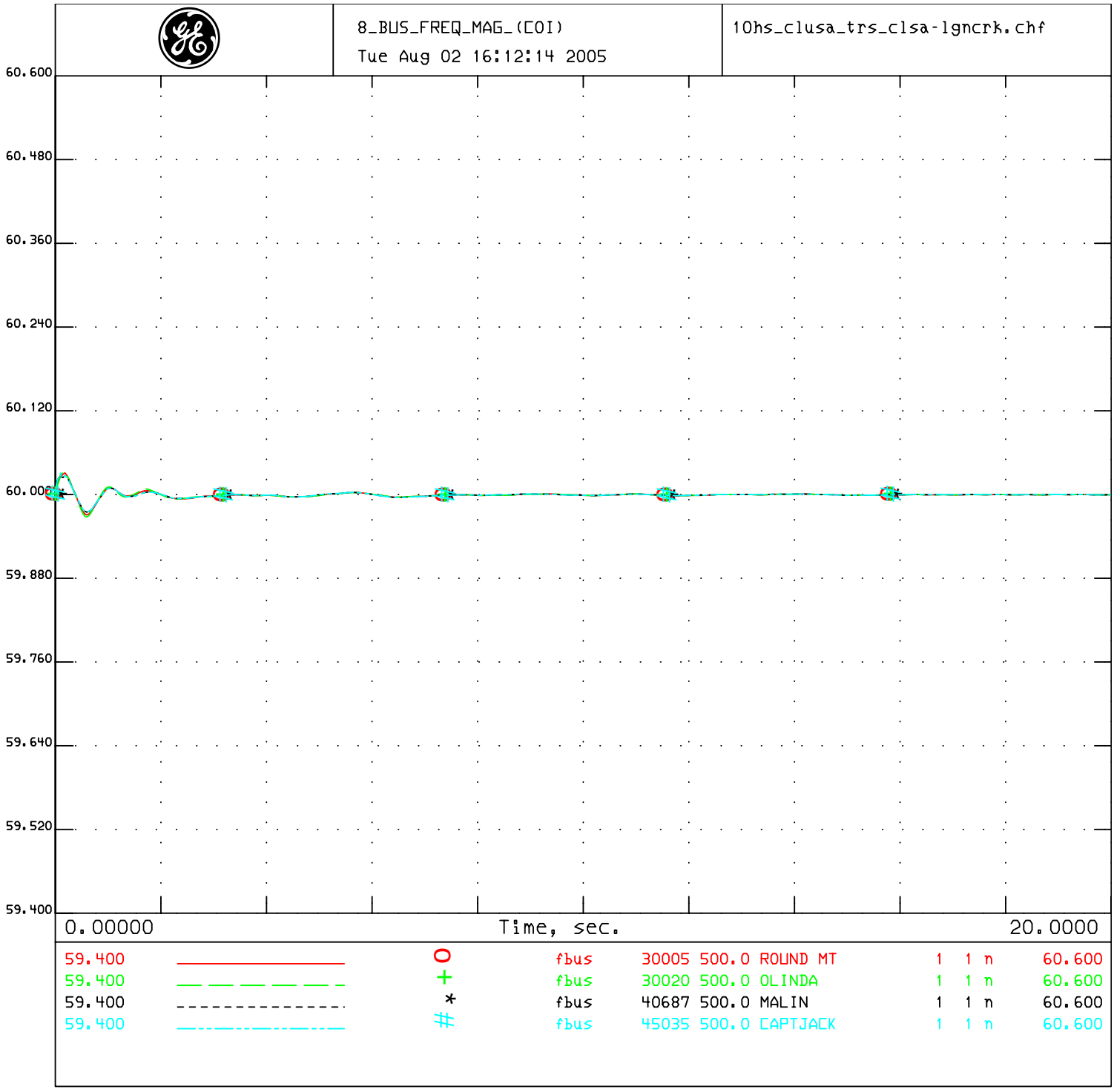

PG&E 2004 BASE CASE SERIES - 2010 North Valley Summer Peak Case
PATH15=-1127 MW(S-N) PATH26=3313 MW(N-S) PDCI=3105 MW(N-S) COI=4710 MW(N-S)
CPV Colusa - 2010 Summer Peak - after

Trip Colusa SWYD - Logan Creek 230 kV LINE

original case 3/26/2004 by SATS 2009 system summer peak
updated loads to 2010 system summer peak
added 2010 North Valley 1-in-10 loads and generation dispatch
Morro Bay 4 is the swing bus
Proposed new generation in queue added
CPV Colusa 97 MW looped onto:
Cottonwood - Cortina 230 kV Line (#1)
Cottonwood - Vaca Dixon 230 kV Line (#2)
Logan Creek - Vaca Dixon 230 kV Line (#3)
Glenn - Vaca Dixon 230 kV Line (#4)

1_COLUSA_vt_ang
Tue Aug 02 15:58:28 2005

10hs_clusa_trs_vca-clsa2.chf

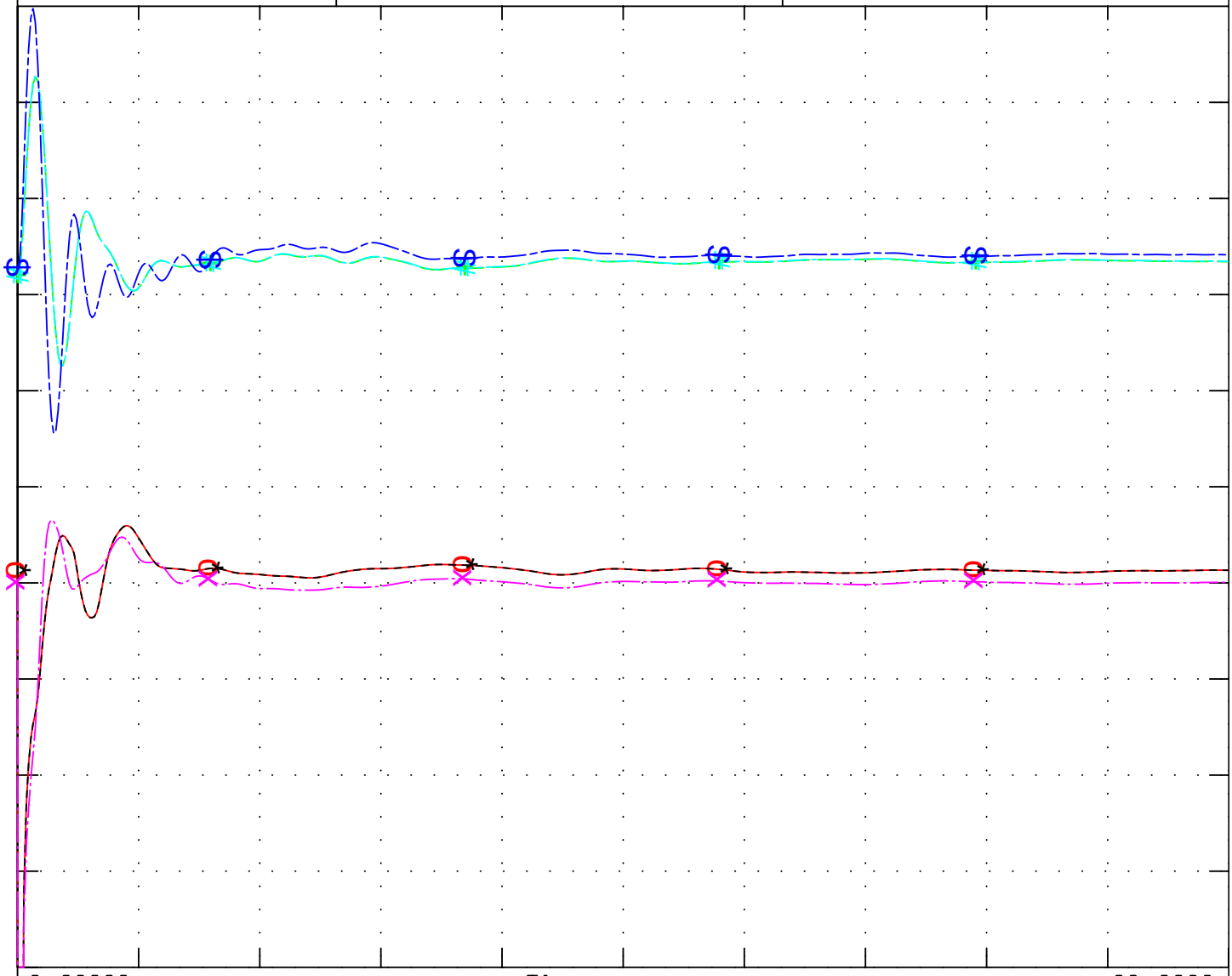

0.8000		O	vt	31923	18.0	P0506GT1	1	1	1.2000
0.0000		+	ang	31923	18.0	P0506GT1	1	1	100.00
0.8000		*	vt	31924	18.0	P0506GT2	2	1	1.2000
0.0000		#	ang	31924	18.0	P0506GT2	2	1	100.00
0.8000		X	vt	31925	18.0	P0506ST1	3	1	1.2000
0.0000		$	ang	31925	18.0	P0506ST1	3	1	100.00

PG&E 2004 BASE CASE SERIES - 2010 North Valley Summer Peak Case
PATH15=-1127 MW(S-N) PATH26=3313 MW(N-S) PDCI=3105 MW(N-S) COI=4710 MW(N-S)
CPV Colusa - 2010 Summer Peak - after

Trip Colusa SWYD - Vaca #2 230 kV LINE

original case 3/26/2004 by SATS 2009 system summer peak
updated loads to 2010 system summer peak
added 2010 North Valley 1-in-10 loads and generation dispatch
Morro Bay 4 is the swing bus
Proposed new generation in queue added
CPV Colusa 97 MW looped onto:
Cottonwood - Cortina 230 kV Line (#1)
Cottonwood - Vaca Dixon 230 kV Line (#2)
Logan Creek - Vaca Dixon 230 kV Line (#3)
Glenn - Vaca Dixon 230 kV Line (#4)

2_COLUSA_spd_pg
Tue Aug 02 15:58:28 2005

10hs_clusa_trs_vca-clsa2.chf

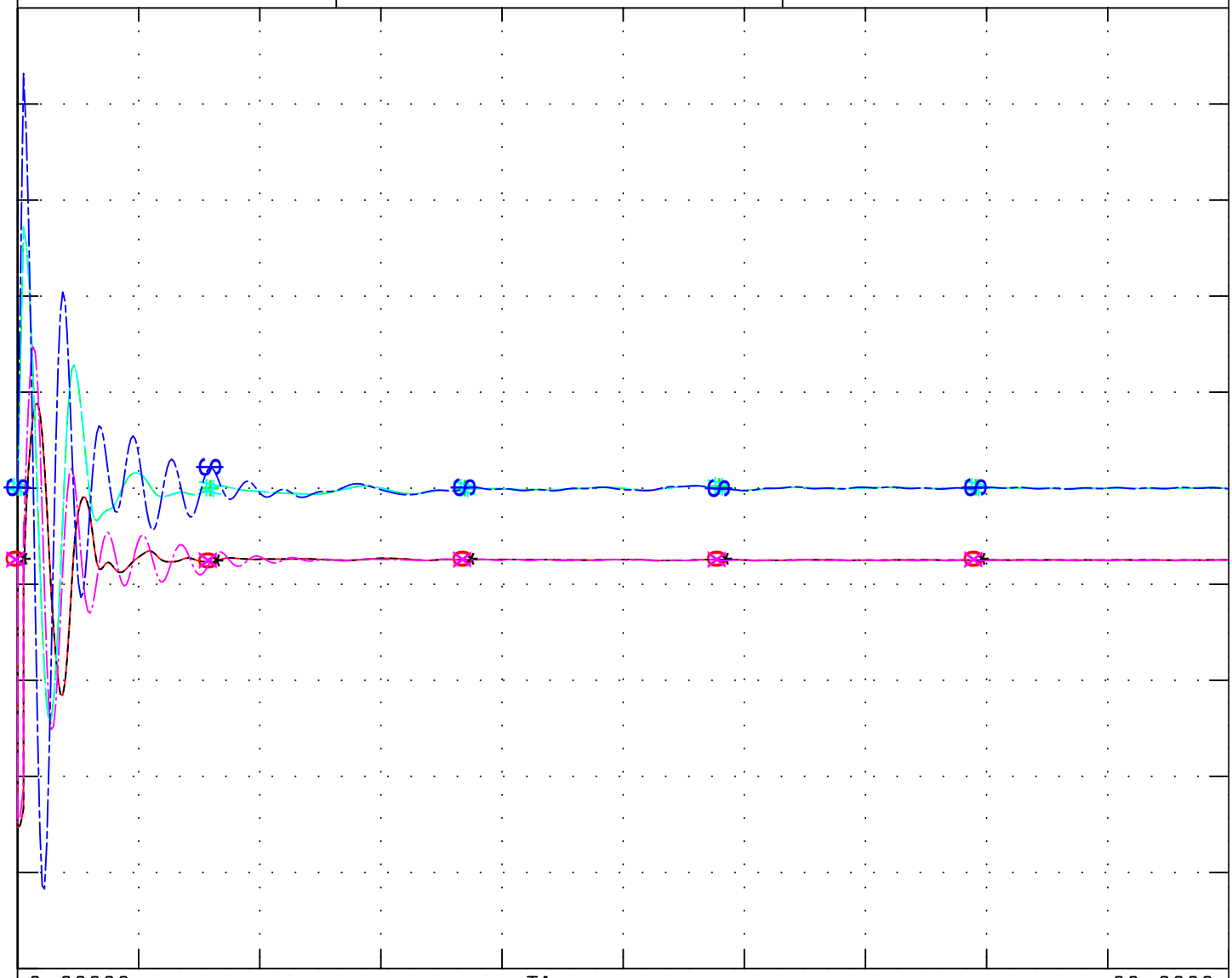

0.0000	O	pg	31923	18.0	P0506GT1	1	1	n	468.00
0.9900	+	spd	31923	18.0	P0506GT1	1	1	n	1.0100
0.0000	*	pg	31924	18.0	P0506GT2	2	1	n	468.00
0.9900	#	spd	31924	18.0	P0506GT2	2	1	n	1.0100
0.0000	X	pg	31925	18.0	P0506ST1	3	1	n	746.00
0.9900	$	spd	31925	18.0	P0506ST1	3	1	n	1.0100

PG&E 2004 BASE CASE SERIES - 2010 North Valley Summer Peak Case
PATH15=-1127 MW(S-N) PATH26=3313 MW(N-S) PDCI=3105 MW(N-S) COI=4710 MW(N-S)
CPV Colusa - 2010 Summer Peak - after

Trip Colusa SWYD - Vaca #2 230 kV LINE

original case 3/26/2004 by SATS 2009 system summer peak
updated loads to 2010 system summer peak
added 2010 North Valley 1-in-10 loads and generation dispatch
Morro Bay 4 is the swing bus
Proposed new generation in queue added
CPV Colusa 97 MW looped onto:
Cottonwood - Cortina 230 kV Line (#1)
Cottonwood - Vaca Dixon 230 kV Line (#2)
Logan Creek - Vaca Dixon 230 kV Line (#3)
Glenn - Vaca Dixon 230 kV Line (#4)

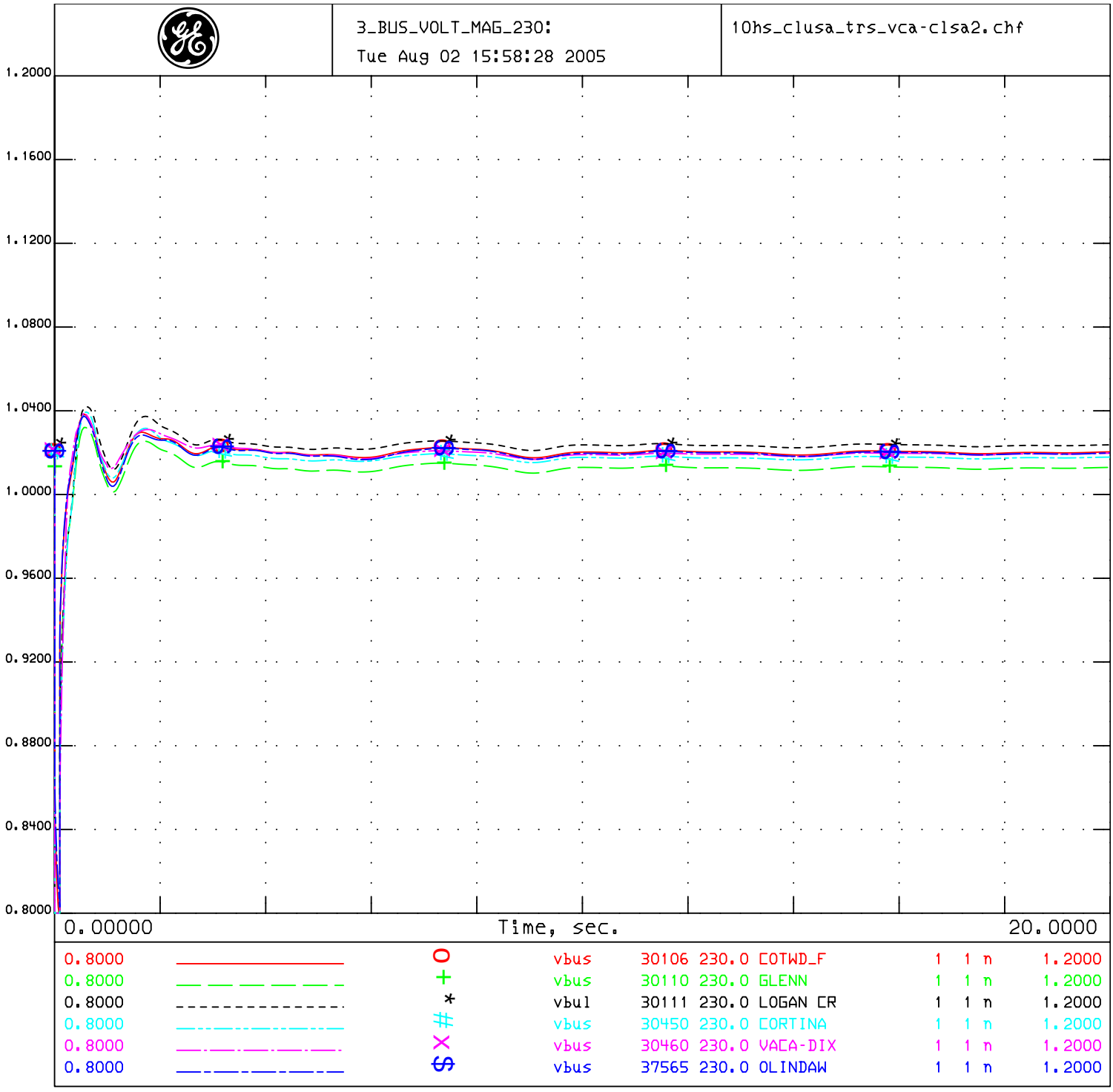

PG&E 2004 BASE CASE SERIES - 2010 North Valley Summer Peak Case
PATH15=-1127 MW(S-N) PATH26=3313 MW(N-S) PDCI=3105 MW(N-S) COI=4710 MW(N-S)
CPV Colusa - 2010 Summer Peak - after

Trip Colusa SWYD - Vaca #2 230 kV LINE

original case 3/26/2004 by SATS 2009 system summer peak
updated loads to 2010 system summer peak
added 2010 North Valley 1-in-10 loads and generation dispatch
Morro Bay 4 is the swing bus
Proposed new generation in queue added
CPV Colusa 97 MW looped onto:
Cottonwood - Cortina 230 kV Line (#1)
Cottonwood - Vaca Dixon 230 kV Line (#2)
Logan Creek - Vaca Dixon 230 kV Line (#3)
Glenn - Vaca Dixon 230 kV Line (#4)

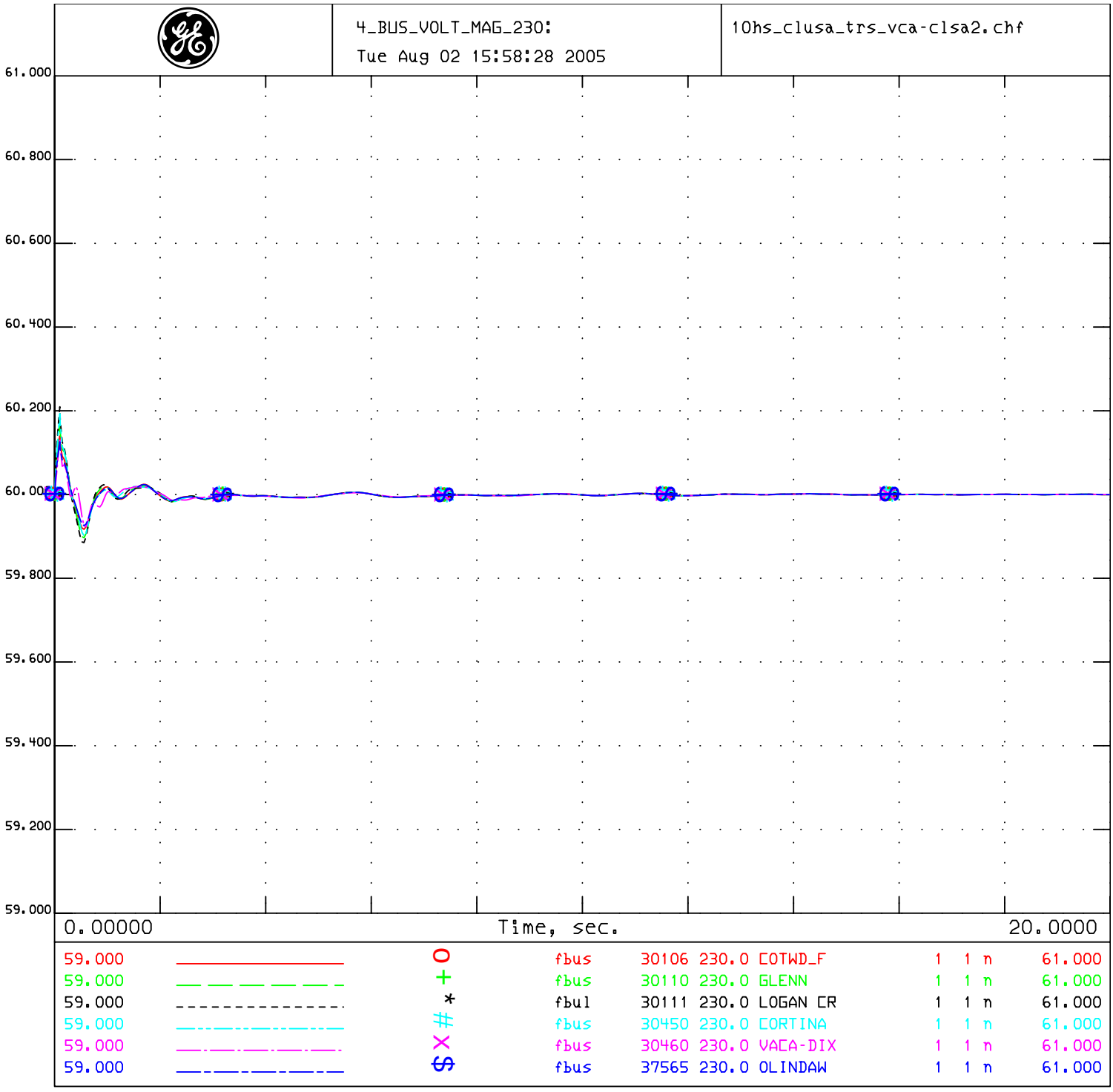

PG&E 2004 BASE CASE SERIES - 2010 North Valley Summer Peak Case
PATH15=-1127 MW(S-N) PATH26=3313 MW(N-S) PDCI=3105 MW(N-S) COI=4710 MW(N-S)
CPV Colusa - 2010 Summer Peak - after

Trip Colusa SWYD - Vaca #2 230 kV LINE

original case 3/26/2004 by SATS 2009 system summer peak
updated loads to 2010 system summer peak
added 2010 North Valley 1-in-10 loads and generation dispatch
Morro Bay 4 is the swing bus
Proposed new generation in queue added
CPV Colusa 97 MW looped onto:
Cottonwood - Cortina 230 kV Line (#1)
Cottonwood - Vaca Dixon 230 kV Line (#2)
Logan Creek - Vaca Dixon 230 kV Line (#3)
Glenn - Vaca Dixon 230 kV Line (#4)

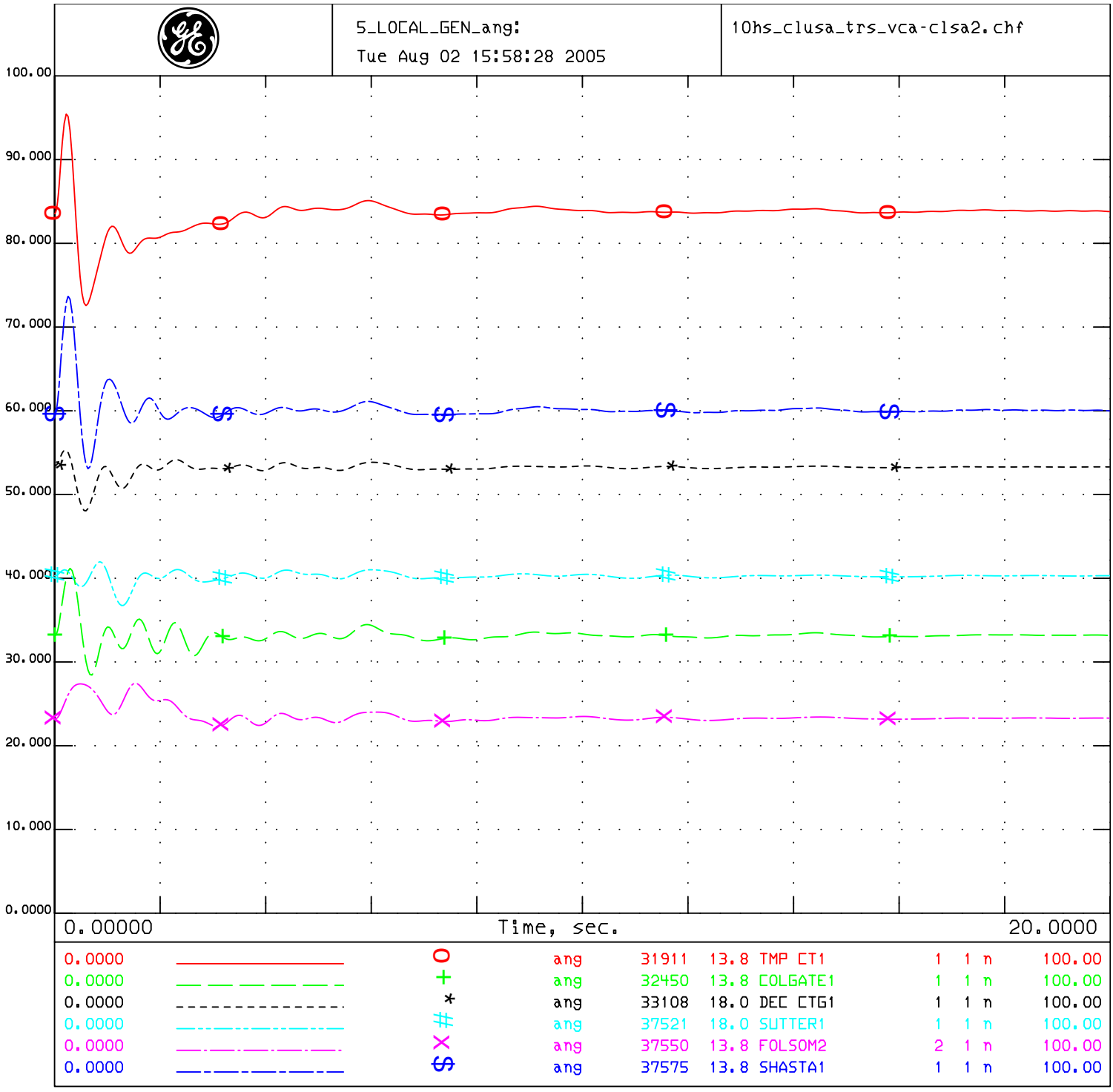

PG&E 2004 BASE CASE SERIES - 2010 North Valley Summer Peak Case
PATH15=-1127 MW(S-N) PATH26=3313 MW(N-S) PDCI=3105 MW(N-S) COI=4710 MW(N-S)
CPV Colusa - 2010 Summer Peak - after

Trip Colusa SWYD - Vaca #2 230 kV LINE

original case 3/26/2004 by SATS 2009 system summer peak
updated loads to 2010 system summer peak
added 2010 North Valley 1-in-10 loads and generation dispatch
Morro Bay 4 is the swing bus
Proposed new generation in queue added
CPV Colusa 97 MW looped onto:
Cottonwood - Cortina 230 kV Line (#1)
Cottonwood - Vaca Dixon 230 kV Line (#2)
Logan Creek - Vaca Dixon 230 kV Line (#3)
Glenn - Vaca Dixon 230 kV Line (#4)

6_LOCAL_GEN_vt:
Tue Aug 02 15:58:28 2005

10hs_clusa_trs_vca-clsa2.chf

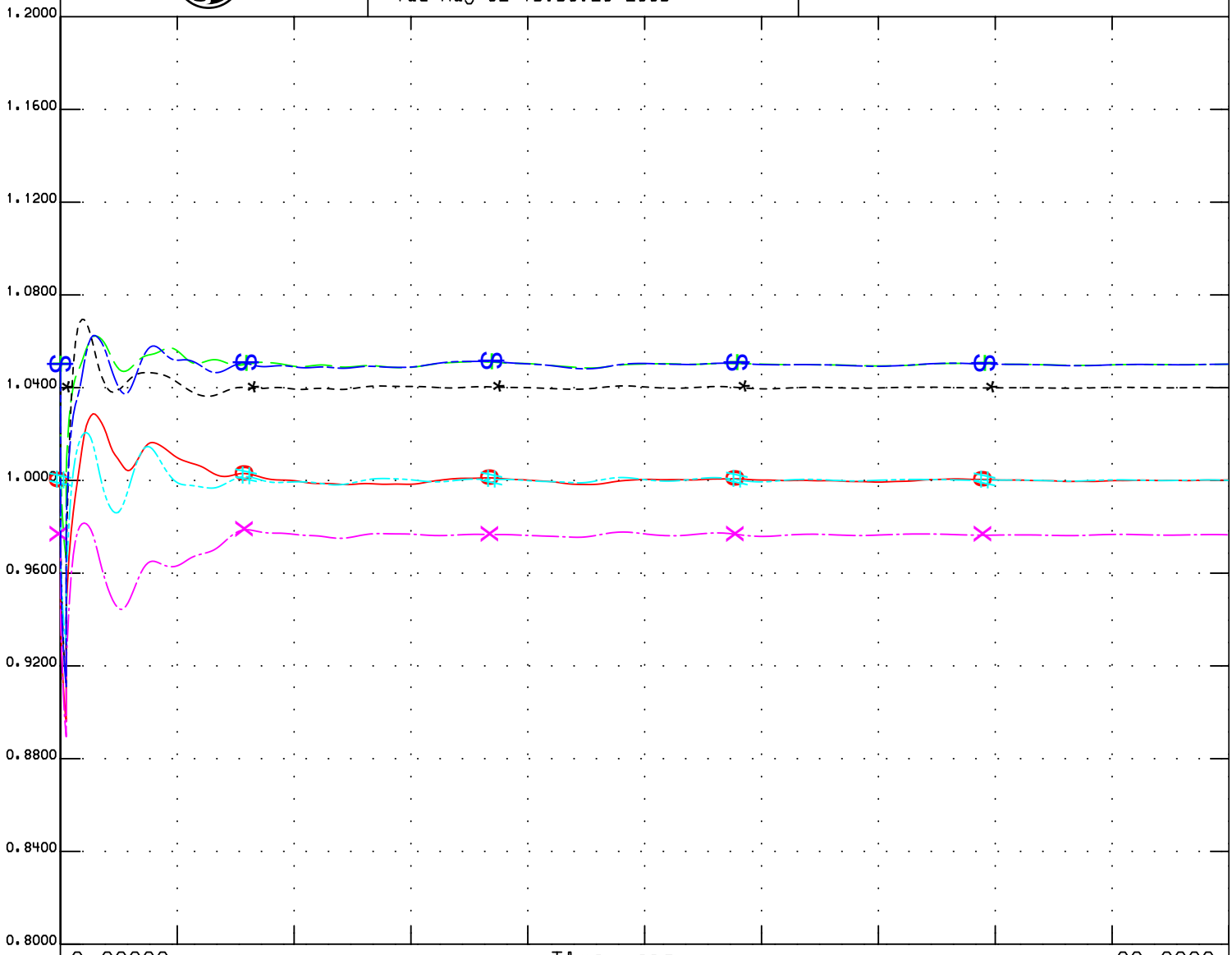

0.8000	O	vt	31911	13.8	TMP CT1	1	1	n	1.2000
0.8000	+	vt	32450	13.8	COLGATE1	1	1	n	1.2000
0.8000	*	vt	33108	18.0	DEC CTG1	1	1	n	1.2000
0.8000	#	vt	37521	18.0	SUTTER1	1	1	n	1.2000
0.8000	X	vt	37550	13.8	FOLSOM2	2	1	n	1.2000
0.8000	S	vt	37575	13.8	SHASTA1	1	1	n	1.2000

PG&E 2004 BASE CASE SERIES - 2010 North Valley Summer Peak Case
PATH15=-1127 MW(S-N) PATH26=3313 MW(N-S) PDCI=3105 MW(N-S) COI=4710 MW(N-S)
CPV Colusa - 2010 Summer Peak - after

Trip Colusa SWYD - Vaca #2 230 kV LINE

original case 3/26/2004 by SATS 2009 system summer peak
updated loads to 2010 system summer peak
added 2010 North Valley 1-in-10 loads and generation dispatch
Morro Bay 4 is the swing bus
Proposed new generation in queue added
CPV Colusa 97 MW looped onto:
Cottonwood - Cortina 230 kV Line (#1)
Cottonwood - Vaca Dixon 230 kV Line (#2)
Logan Creek - Vaca Dixon 230 kV Line (#3)
Glenn - Vaca Dixon 230 kV Line (#4)

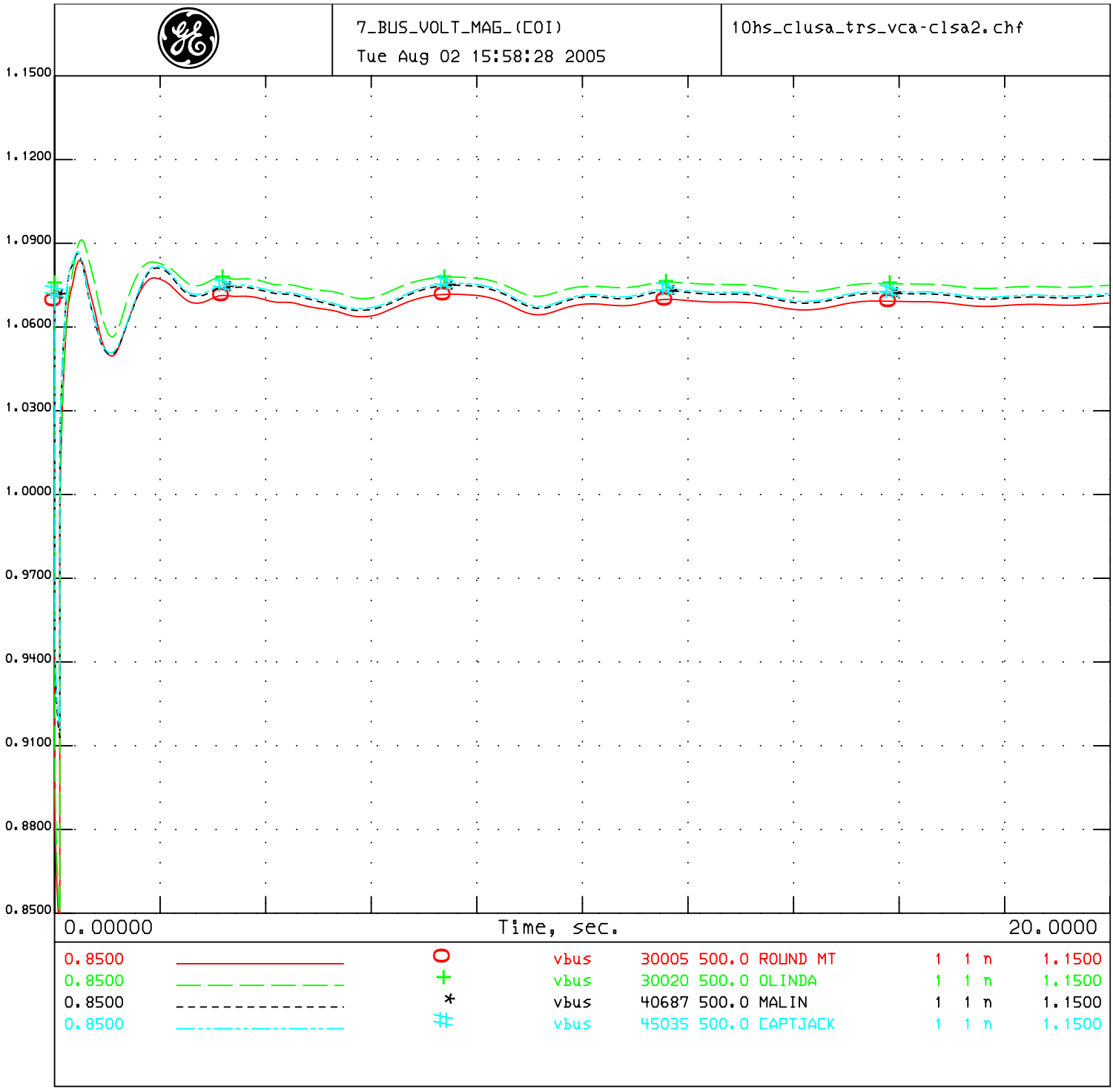

PG&E 2004 BASE CASE SERIES - 2010 North Valley Summer Peak Case
PATH15=-1127 MW(S-N) PATH26=3313 MW(N-S) PDCI=3105 MW(N-S) COI=4710 MW(N-S)
CPV Colusa - 2010 Summer Peak - after

Trip Colusa SWYD - Vaca #2 230 kV LINE

original case 3/26/2004 by SATS 2009 system summer peak
updated loads to 2010 system summer peak
added 2010 North Valley 1-in-10 loads and generation dispatch
Morro Bay 4 is the swing bus
Proposed new generation in queue added
CPV Colusa 97 MW looped onto:
Cottonwood - Cortina 230 kV Line (#1)
Cottonwood - Vaca Dixon 230 kV Line (#2)
Logan Creek - Vaca Dixon 230 kV Line (#3)
Glenn - Vaca Dixon 230 kV Line (#4)

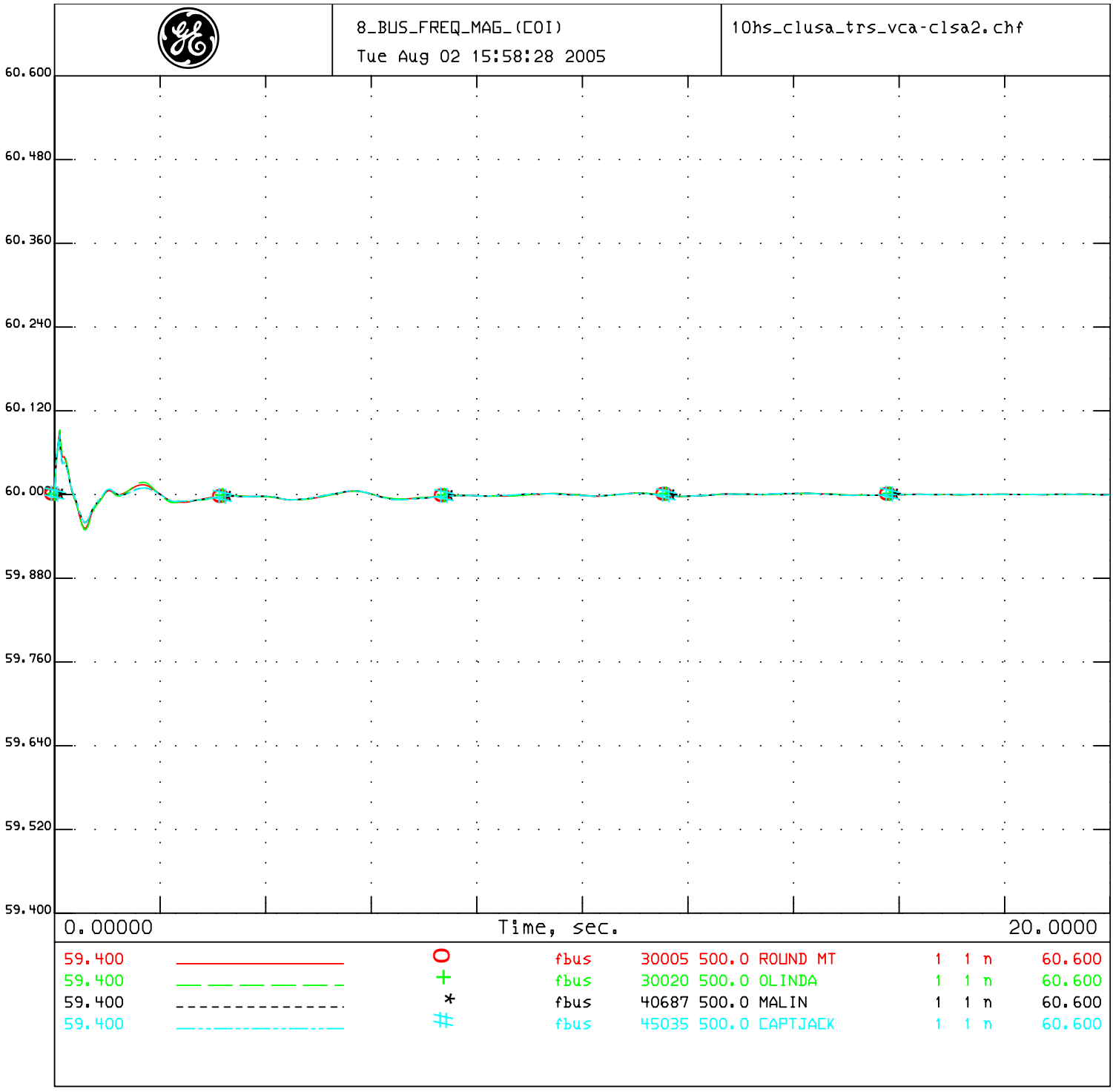

PG&E 2004 BASE CASE SERIES - 2010 North Valley Summer Peak Case
PATH15=-1127 MW(S-N) PATH26=3313 MW(N-S) PDCI=3105 MW(N-S) COI=4710 MW(N-S)
CPV Colusa - 2010 Summer Peak - after

Trip Colusa SWYD - Vaca #2 230 kV LINE

original case 3/26/2004 by SATS 2009 system summer peak
updated loads to 2010 system summer peak
added 2010 North Valley 1-in-10 loads and generation dispatch
Morro Bay 4 is the swing bus
Proposed new generation in queue added
CPV Colusa 97 MW looped onto:
Cottonwood - Cortina 230 kV Line (#1)
Cottonwood - Vaca Dixon 230 kV Line (#2)
Logan Creek - Vaca Dixon 230 kV Line (#3)
Glenn - Vaca Dixon 230 kV Line (#4)

1_COLUSA_vt_ang
Tue Aug 02 15:51:27 2005

10hs_clusa_trs_ctwd-clsa2.chf

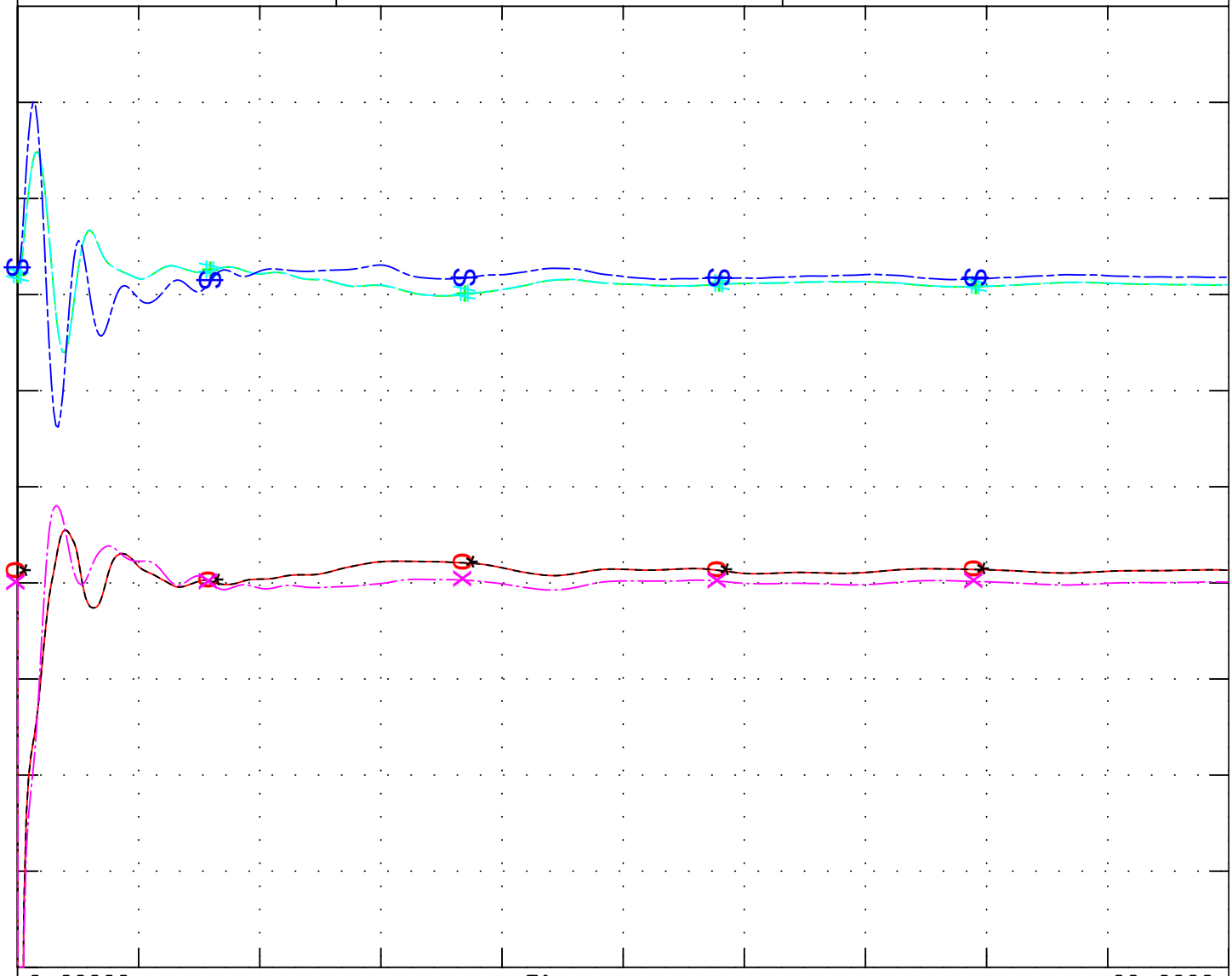

0.8000		vt	31923	18.0	P0506GT1	1	1	1.2000
0.0000		ang	31923	18.0	P0506GT1	1	1	100.00
0.8000		vt	31924	18.0	P0506GT2	2	1	1.2000
0.0000		ang	31924	18.0	P0506GT2	2	1	100.00
0.8000		vt	31925	18.0	P0506ST1	3	1	1.2000
0.0000		ang	31925	18.0	P0506ST1	3	1	100.00

PG&E 2004 BASE CASE SERIES - 2010 North Valley Summer Peak Case
PATH15=-1127 MW(S-N) PATH26=3313 MW(N-S) PDCI=3105 MW(N-S) COI=4710 MW(N-S)
CPV Colusa - 2010 Summer Peak - after

Trip Cottonwood - Colusa SWYD #2 230 kV LINE

original case 3/26/2004 by SATS 2009 system summer peak
updated loads to 2010 system summer peak
added 2010 North Valley 1-in-10 loads and generation dispatch
Morro Bay 4 is the swing bus
Proposed new generation in queue added
CPV Colusa 97 MW looped onto:
Cottonwood - Cortina 230 kV Line (#1)
Cottonwood - Vaca Dixon 230 kV Line (#2)
Logan Creek - Vaca Dixon 230 kV Line (#3)
Glenn - Vaca Dixon 230 kV Line (#4)

2_COLUSA_spd_pg
Tue Aug 02 15:51:27 2005

10hs_clusa_trs_ctwd-clsa2.chf

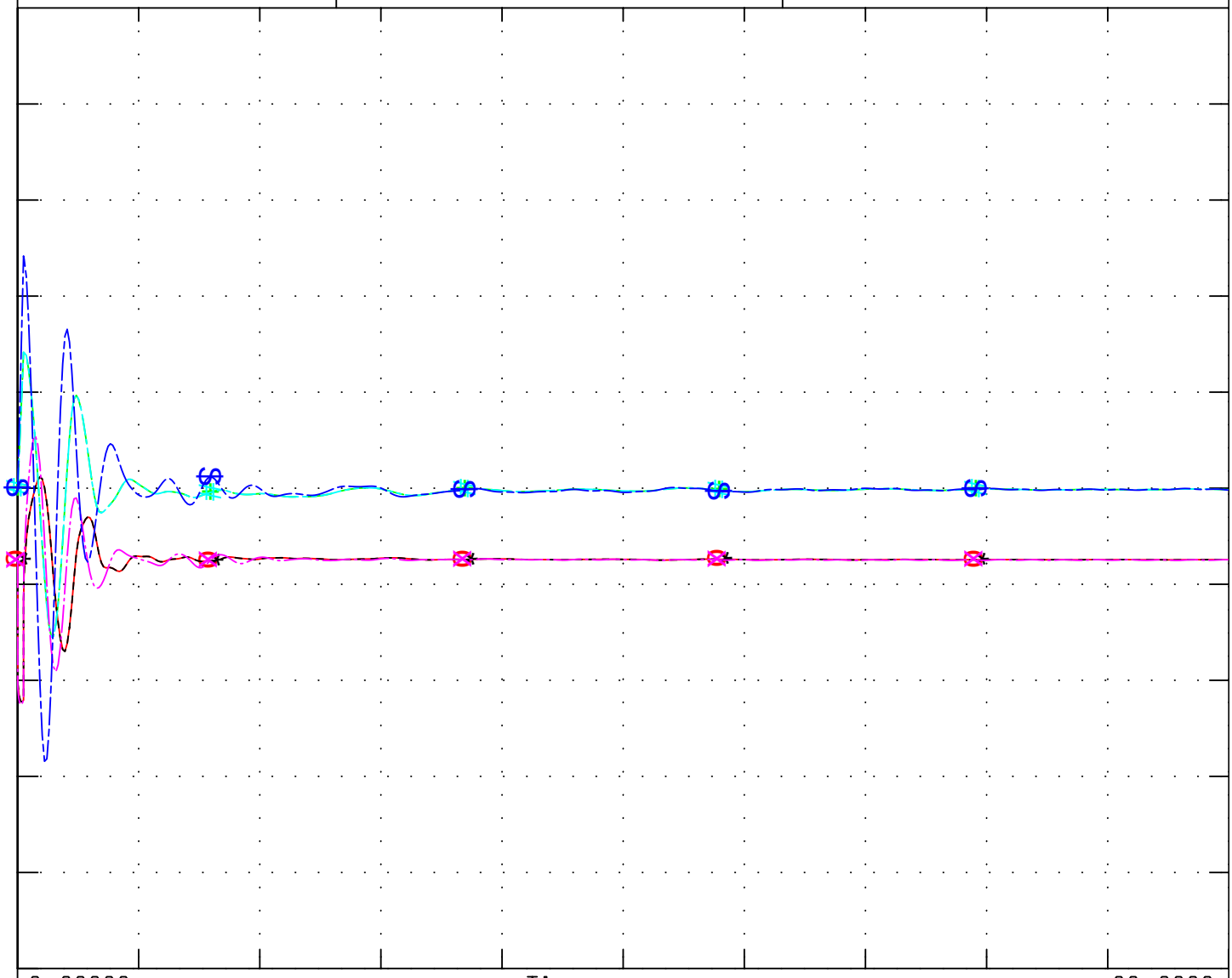

0.0000		O	pg	31923	18.0	P0506GT1	1	1	n	468.00
0.9900		+	spd	31923	18.0	P0506GT1	1	1	n	1.0100
0.0000		*	pg	31924	18.0	P0506GT2	2	1	n	468.00
0.9900		#	spd	31924	18.0	P0506GT2	2	1	n	1.0100
0.0000		X	pg	31925	18.0	P0506ST1	3	1	n	746.00
0.9900		$	spd	31925	18.0	P0506ST1	3	1	n	1.0100

PG&E 2004 BASE CASE SERIES - 2010 North Valley Summer Peak Case
PATH15=-1127 MW(S-N) PATH26=3313 MW(N-S) PDCI=3105 MW(N-S) COI=4710 MW(N-S)
CPV Colusa - 2010 Summer Peak - after

Trip Cottonwood - Colusa SWYD #2 230 kV LINE

original case 3/26/2004 by SATS 2009 system summer peak
updated loads to 2010 system summer peak
added 2010 North Valley 1-in-10 loads and generation dispatch
Morro Bay 4 is the swing bus
Proposed new generation in queue added
CPV Colusa 97 MW looped onto:
Cottonwood - Cortina 230 kV Line (#1)
Cottonwood - Vaca Dixon 230 kV Line (#2)
Logan Creek - Vaca Dixon 230 kV Line (#3)
Glenn - Vaca Dixon 230 kV Line (#4)

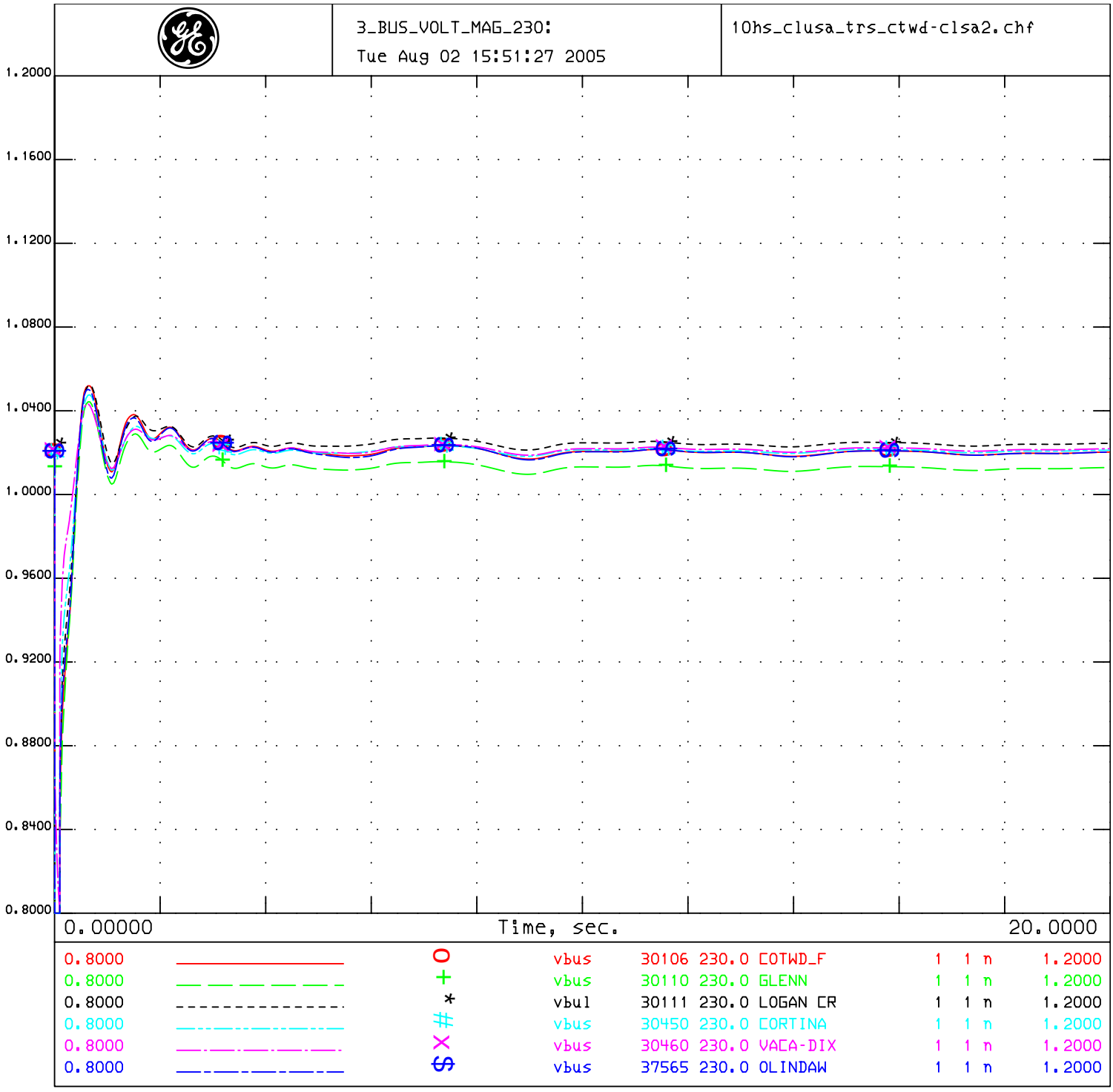

PG&E 2004 BASE CASE SERIES - 2010 North Valley Summer Peak Case
PATH15=-1127 MW(S-N) PATH26=3313 MW(N-S) PDCI=3105 MW(N-S) COI=4710 MW(N-S)
CPV Colusa - 2010 Summer Peak - after

Trip Cottonwood - Colusa SWYD #2 230 kV LINE

original case 3/26/2004 by SATS 2009 system summer peak
updated loads to 2010 system summer peak
added 2010 North Valley 1-in-10 loads and generation dispatch
Morro Bay 4 is the swing bus
Proposed new generation in queue added
CPV Colusa 97 MW looped onto:
Cottonwood - Cortina 230 kV Line (#1)
Cottonwood - Vaca Dixon 230 kV Line (#2)
Logan Creek - Vaca Dixon 230 kV Line (#3)
Glenn - Vaca Dixon 230 kV Line (#4)

4_BUS_VOLT_MAG_230:
Tue Aug 02 15:51:27 2005

10hs_clusa_trs_ctwd-clsa2.chf

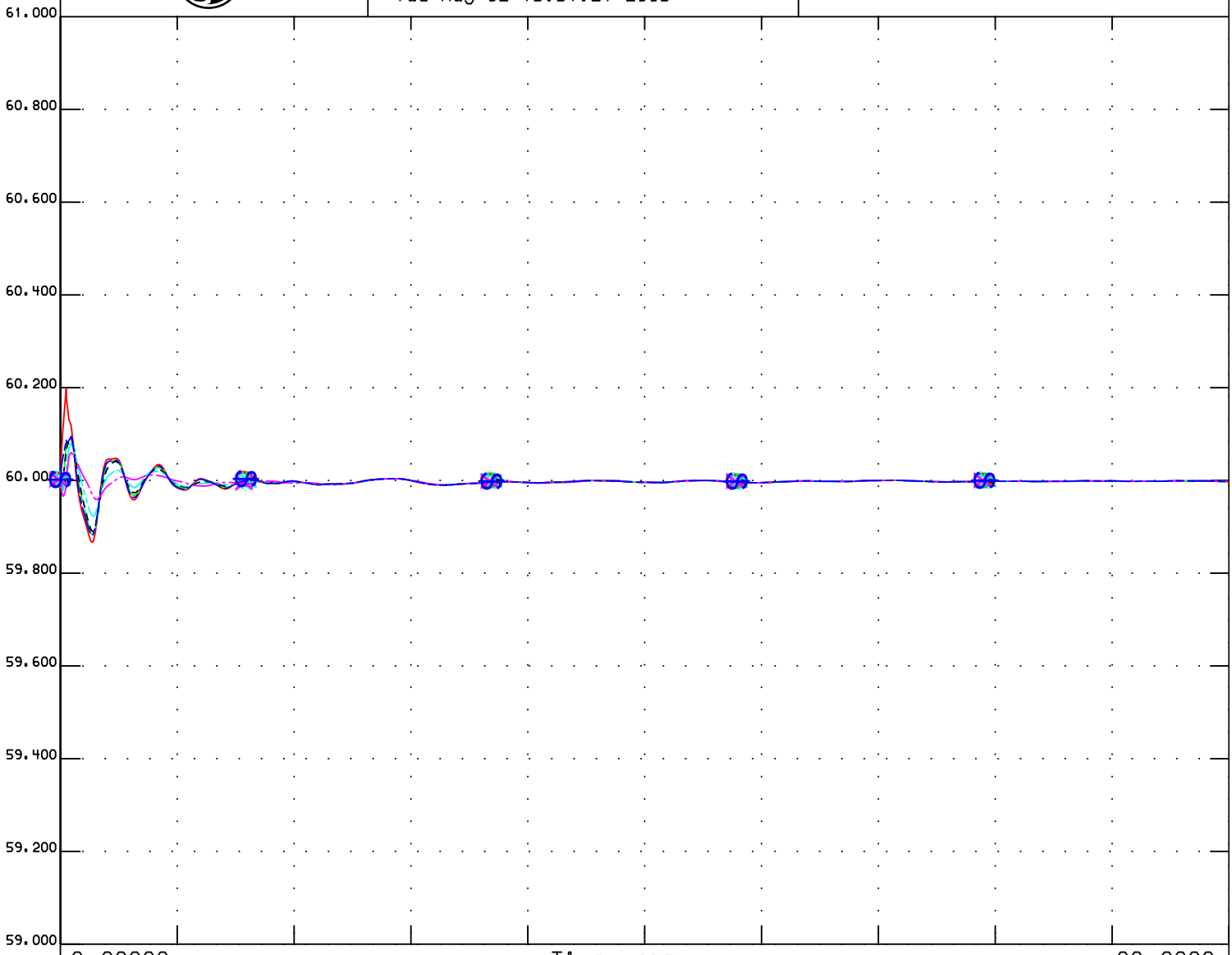

59.000	O	fbus	30106	230.0	COTWD_F	1	1	n	61.000
59.000	+	fbus	30110	230.0	GLENN	1	1	n	61.000
59.000	*	fbul	30111	230.0	LOGAN CR	1	1	n	61.000
59.000	#	fbus	30450	230.0	CORTINA	1	1	n	61.000
59.000	X	fbus	30460	230.0	VACA-DIX	1	1	n	61.000
59.000	$	fbus	37565	230.0	OLINDAW	1	1	n	61.000

PG&E 2004 BASE CASE SERIES - 2010 North Valley Summer Peak Case
PATH15=-1127 MW(S-N) PATH26=3313 MW(N-S) PDCI=3105 MW(N-S) COI=4710 MW(N-S)
CPV Colusa - 2010 Summer Peak - after

Trip Cottonwood - Colusa SWYD #2 230 kV LINE

original case 3/26/2004 by SATS 2009 system summer peak
updated loads to 2010 system summer peak
added 2010 North Valley 1-in-10 loads and generation dispatch
Morro Bay 4 is the swing bus
Proposed new generation in queue added
CPV Colusa 97 MW looped onto:
Cottonwood - Cortina 230 kV Line (#1)
Cottonwood - Vaca Dixon 230 kV Line (#2)
Logan Creek - Vaca Dixon 230 kV Line (#3)
Glenn - Vaca Dixon 230 kV Line (#4)

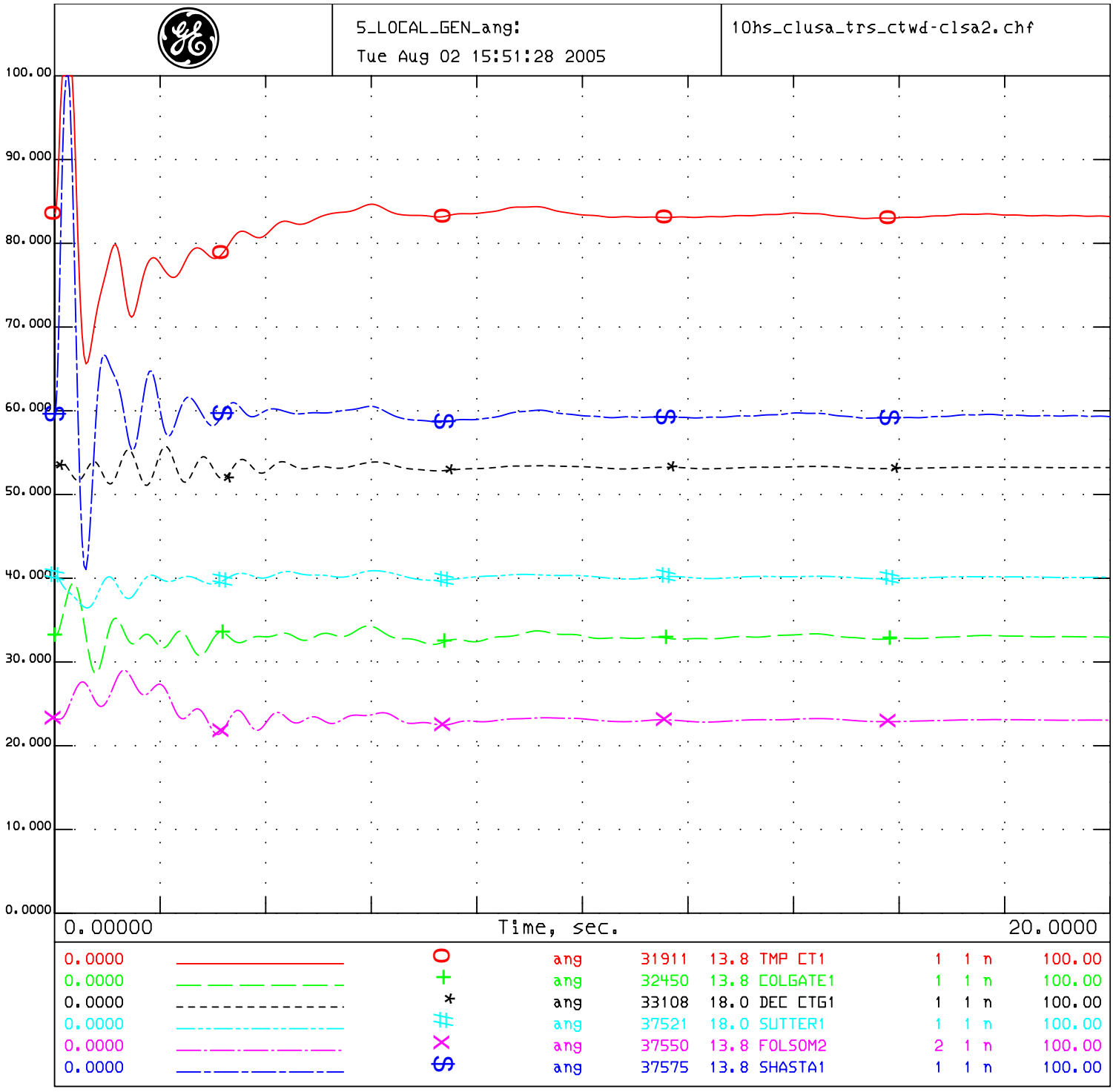

PG&E 2004 BASE CASE SERIES - 2010 North Valley Summer Peak Case
PATH15=-1127 MW(S-N) PATH26=3313 MW(N-S) PDCI=3105 MW(N-S) COI=4710 MW(N-S)
CPV Colusa - 2010 Summer Peak - after

Trip Cottonwood - Colusa SWYD #2 230 kV LINE

original case 3/26/2004 by SATS 2009 system summer peak
updated loads to 2010 system summer peak
added 2010 North Valley 1-in-10 loads and generation dispatch
Morro Bay 4 is the swing bus
Proposed new generation in queue added
CPV Colusa 97 MW looped onto:
Cottonwood - Cortina 230 kV Line (#1)
Cottonwood - Vaca Dixon 230 kV Line (#2)
Logan Creek - Vaca Dixon 230 kV Line (#3)
Glenn - Vaca Dixon 230 kV Line (#4)

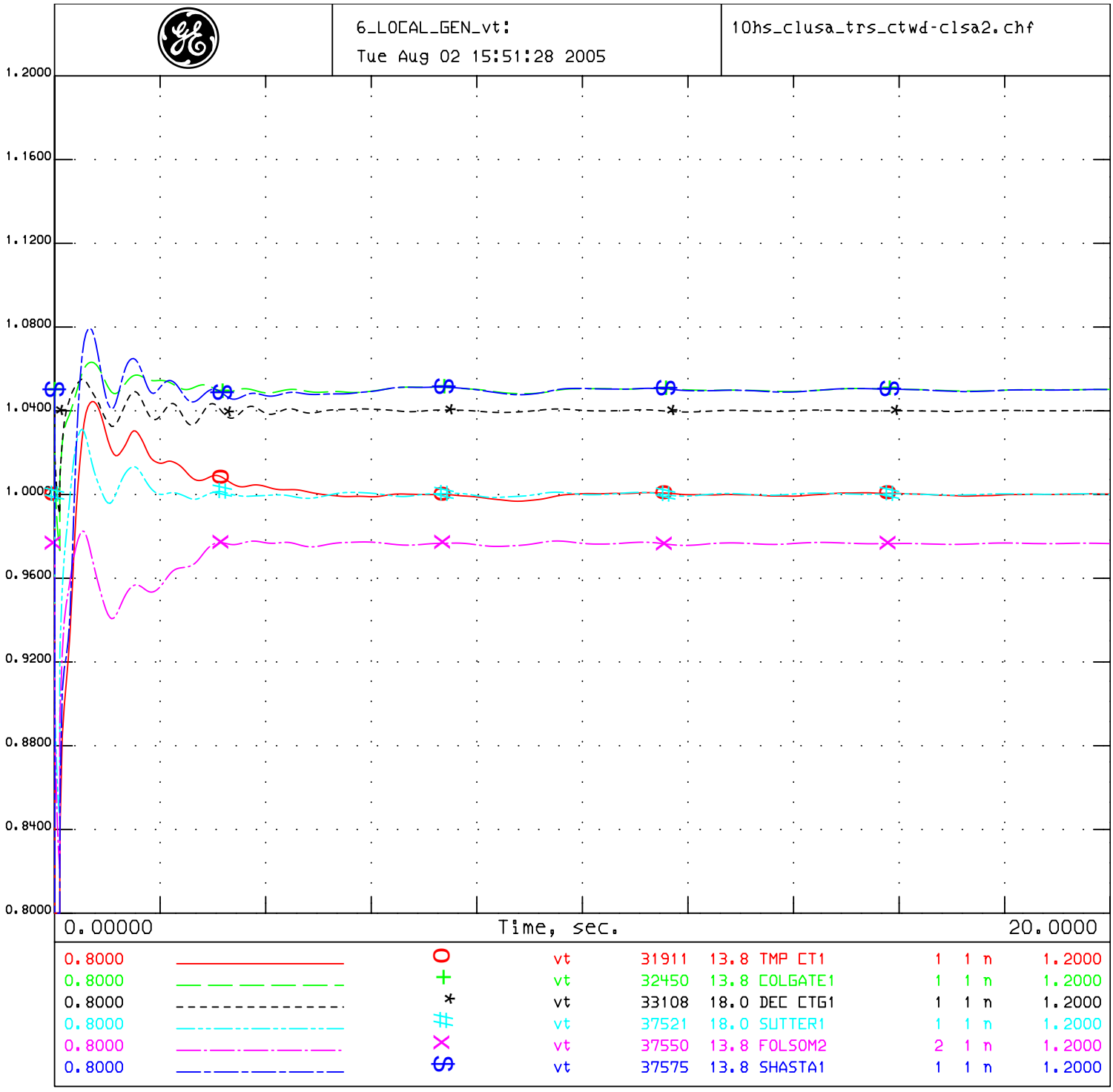

PG&E 2004 BASE CASE SERIES - 2010 North Valley Summer Peak Case
PATH15=-1127 MW(S-N) PATH26=3313 MW(N-S) PDCI=3105 MW(N-S) COI=4710 MW(N-S)
CPV Colusa - 2010 Summer Peak - after

Trip Cottonwood - Colusa SWYD #2 230 kV LINE

original case 3/26/2004 by SATS 2009 system summer peak
updated loads to 2010 system summer peak
added 2010 North Valley 1-in-10 loads and generation dispatch
Morro Bay 4 is the swing bus
Proposed new generation in queue added
CPV Colusa 97 MW looped onto:
Cottonwood - Cortina 230 kV Line (#1)
Cottonwood - Vaca Dixon 230 kV Line (#2)
Logan Creek - Vaca Dixon 230 kV Line (#3)
Glenn - Vaca Dixon 230 kV Line (#4)

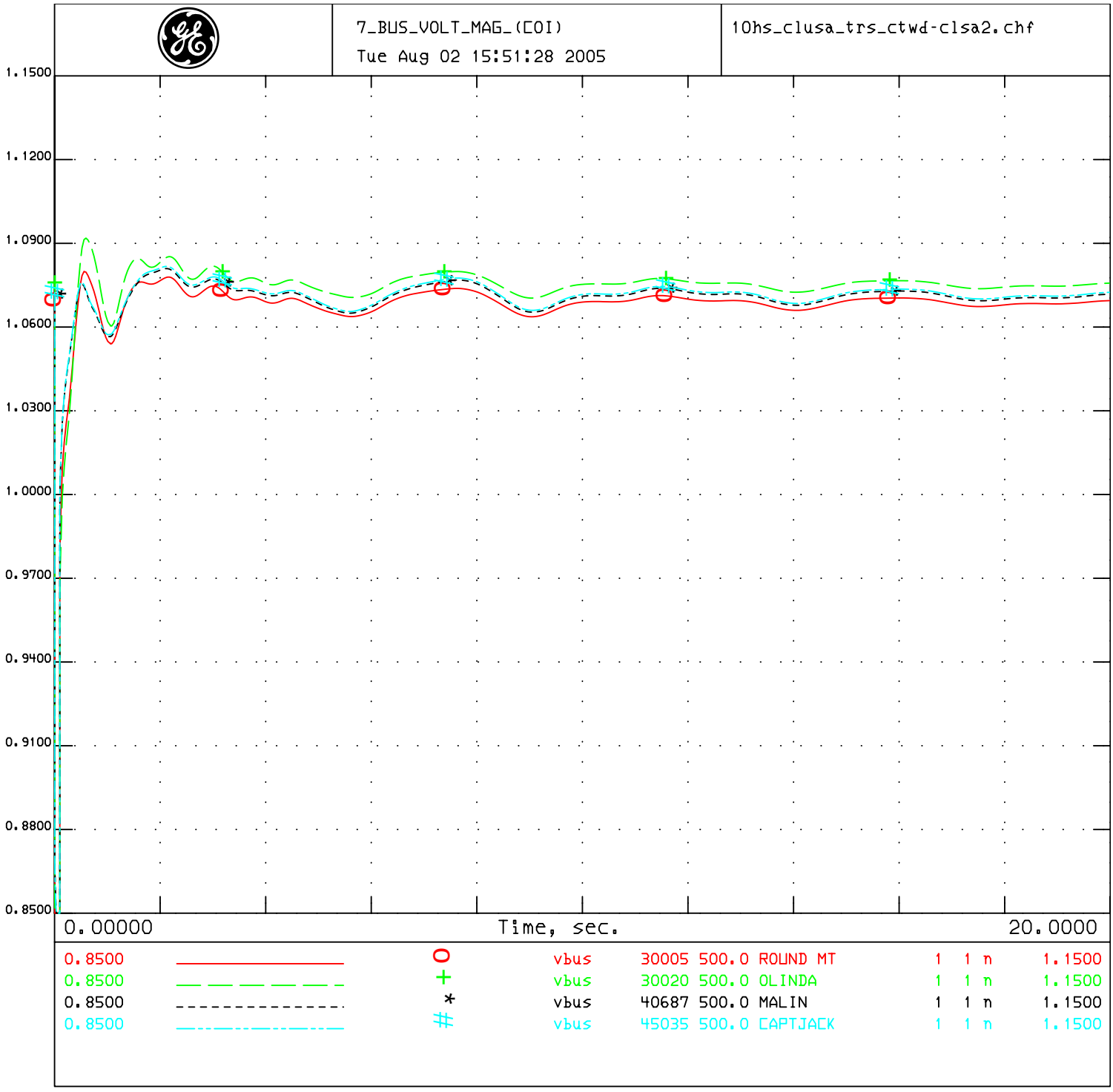

PG&E 2004 BASE CASE SERIES - 2010 North Valley Summer Peak Case
PATH15=-1127 MW(S-N) PATH26=3313 MW(N-S) PDCI=3105 MW(N-S) COI=4710 MW(N-S)
CPV Colusa - 2010 Summer Peak - after

Trip Cottonwood - Colusa SWYD #2 230 kV LINE

original case 3/26/2004 by SATS 2009 system summer peak
updated loads to 2010 system summer peak
added 2010 North Valley 1-in-10 loads and generation dispatch
Morro Bay 4 is the swing bus
Proposed new generation in queue added
CPV Colusa 97 MW looped onto:
Cottonwood - Cortina 230 kV Line (#1)
Cottonwood - Vaca Dixon 230 kV Line (#2)
Logan Creek - Vaca Dixon 230 kV Line (#3)
Glenn - Vaca Dixon 230 kV Line (#4)

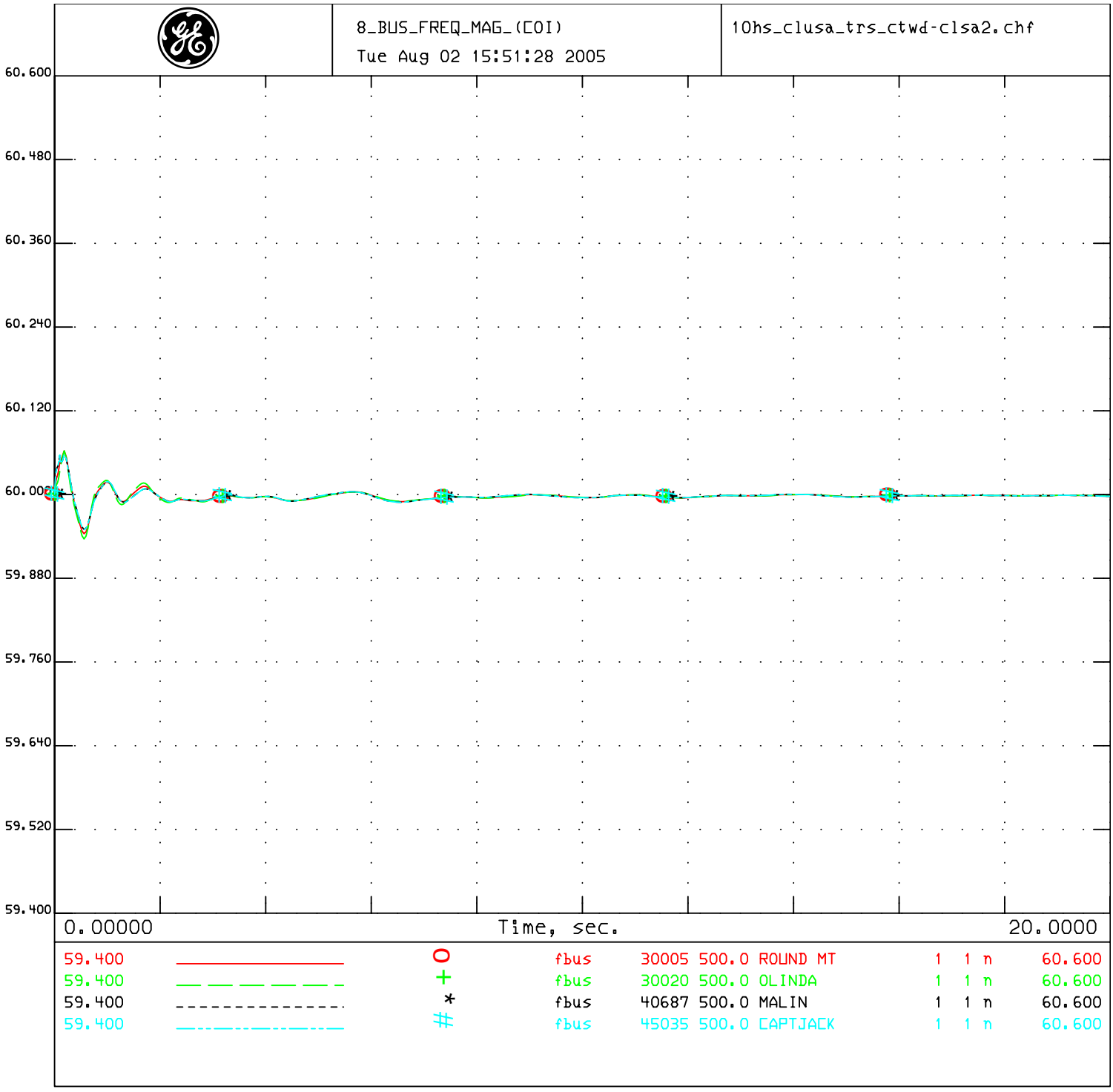

PG&E 2004 BASE CASE SERIES - 2010 North Valley Summer Peak Case
PATH15=-1127 MW(S-N) PATH26=3313 MW(N-S) PDCI=3105 MW(N-S) COI=4710 MW(N-S)
CPV Colusa - 2010 Summer Peak - after

Trip Cottonwood - Colusa SWYD #2 230 kV LINE

original case 3/26/2004 by SATS 2009 system summer peak
updated loads to 2010 system summer peak
added 2010 North Valley 1-in-10 loads and generation dispatch
Morro Bay 4 is the swing bus
Proposed new generation in queue added
CPV Colusa 97 MW looped onto:
Cottonwood - Cortina 230 kV Line (#1)
Cottonwood - Vaca Dixon 230 kV Line (#2)
Logan Creek - Vaca Dixon 230 kV Line (#3)
Glenn - Vaca Dixon 230 kV Line (#4)

1_COLUSA_vt_ang
Tue Aug 02 15:37:06 2005

10hs_clusa_trs_vca-clsa3.chf

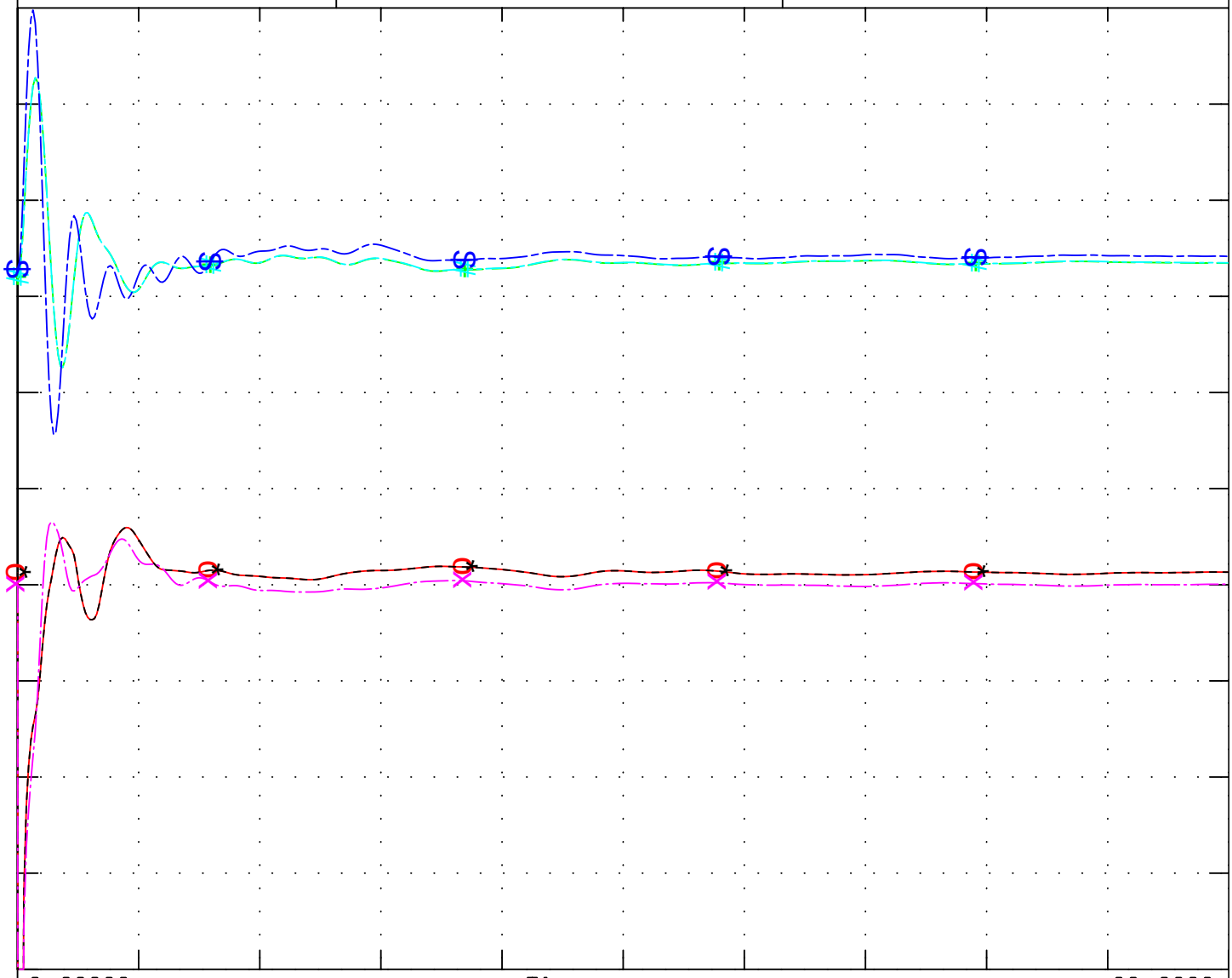

0.8000		O	vt	31923	18.0	P0506GT1	1	1	1.2000
0.0000		+	ang	31923	18.0	P0506GT1	1	1	100.00
0.8000		*	vt	31924	18.0	P0506GT2	2	1	1.2000
0.0000		#	ang	31924	18.0	P0506GT2	2	1	100.00
0.8000		X	vt	31925	18.0	P0506ST1	3	1	1.2000
0.0000		⊗	ang	31925	18.0	P0506ST1	3	1	100.00

PG&E 2004 BASE CASE SERIES - 2010 North Valley Summer Peak Case
PATH15=-1127 MW(S-N) PATH26=3313 MW(N-S) PDCI=3105 MW(N-S) COI=4710 MW(N-S)
CPV Colusa - 2010 Summer Peak - after

Trip Colusa SWYD - Vaca #3 230 kV LINE

original case 3/26/2004 by SATS 2009 system summer peak
updated loads to 2010 system summer peak
added 2010 North Valley 1-in-10 loads and generation dispatch
Morro Bay 4 is the swing bus
Proposed new generation in queue added
CPV Colusa 97 MW looped onto:
Cottonwood - Cortina 230 kV Line (#1)
Cottonwood - Vaca Dixon 230 kV Line (#2)
Logan Creek - Vaca Dixon 230 kV Line (#3)
Glenn - Vaca Dixon 230 kV Line (#4)

2_COLUSA_spd_pg
Tue Aug 02 15:37:06 2005

10hs_clusa_trs_vca-clsa3.chf

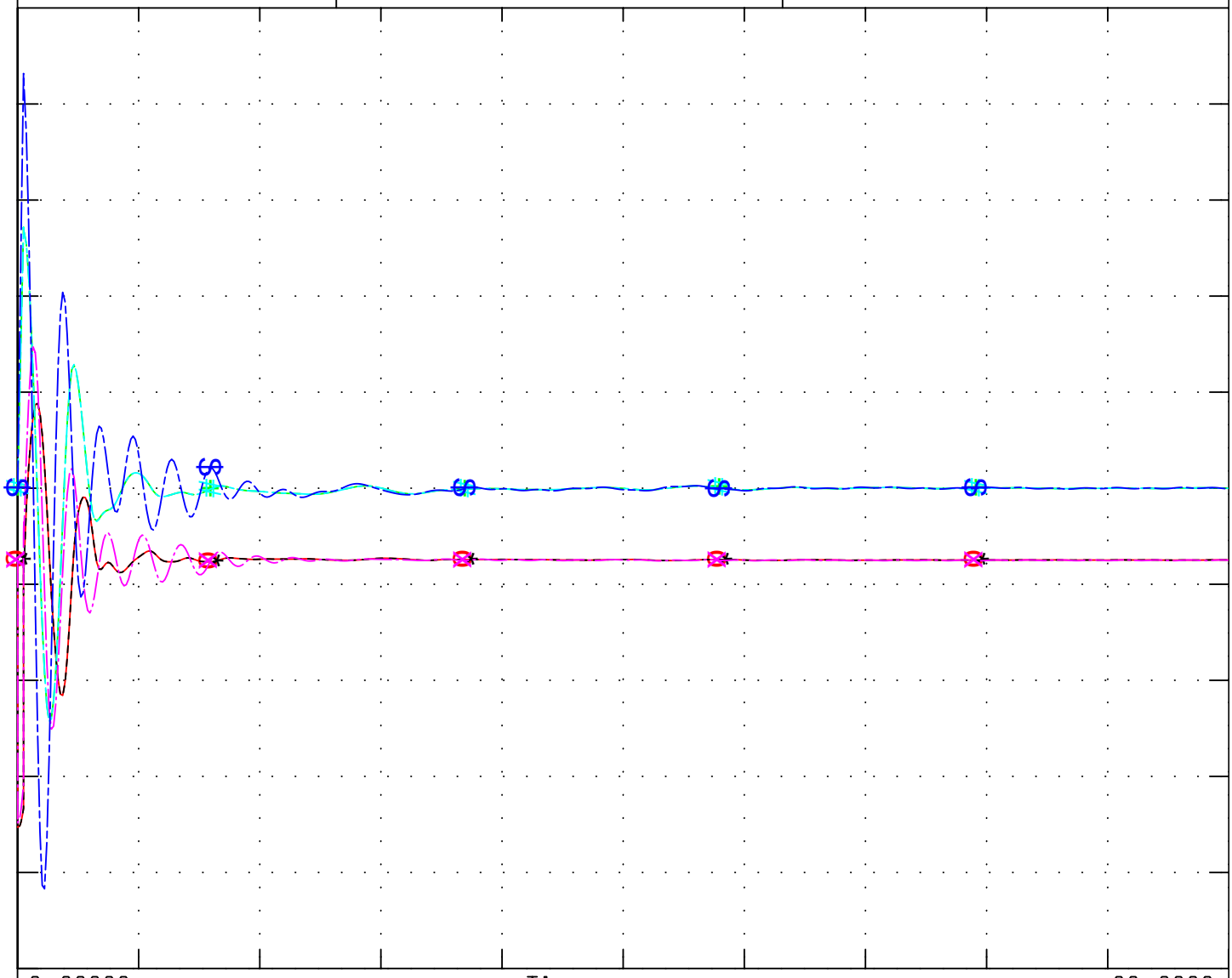

0.0000	O	pg	31923	18.0	P0506GT1	1	1	n	468.00
0.9900	+	spd	31923	18.0	P0506GT1	1	1	n	1.0100
0.0000	*	pg	31924	18.0	P0506GT2	2	1	n	468.00
0.9900	#	spd	31924	18.0	P0506GT2	2	1	n	1.0100
0.0000	X	pg	31925	18.0	P0506ST1	3	1	n	746.00
0.9900	$	spd	31925	18.0	P0506ST1	3	1	n	1.0100

PG&E 2004 BASE CASE SERIES - 2010 North Valley Summer Peak Case
PATH15=-1127 MW(S-N) PATH26=3313 MW(N-S) PDCI=3105 MW(N-S) COI=4710 MW(N-S)
CPV Colusa - 2010 Summer Peak - after

Trip Colusa SWYD - Vaca #3 230 kV LINE

original case 3/26/2004 by SATS 2009 system summer peak
updated loads to 2010 system summer peak
added 2010 North Valley 1-in-10 loads and generation dispatch
Morro Bay 4 is the swing bus
Proposed new generation in queue added
CPV Colusa 97 MW looped onto:
Cottonwood - Cortina 230 kV Line (#1)
Cottonwood - Vaca Dixon 230 kV Line (#2)
Logan Creek - Vaca Dixon 230 kV Line (#3)
Glenn - Vaca Dixon 230 kV Line (#4)

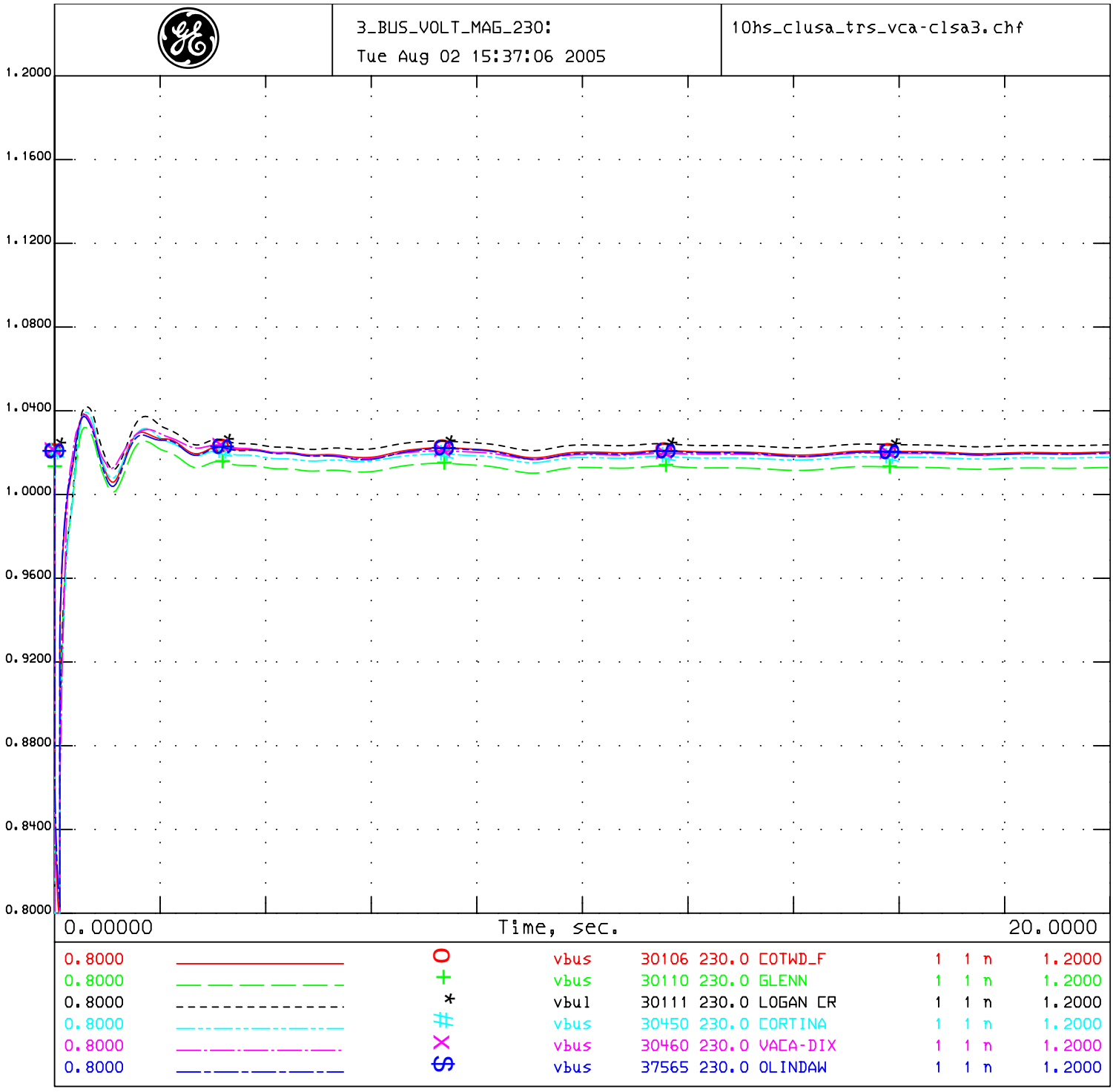

PG&E 2004 BASE CASE SERIES - 2010 North Valley Summer Peak Case
PATH15=-1127 MW(S-N) PATH26=3313 MW(N-S) PDCI=3105 MW(N-S) COI=4710 MW(N-S)
CPV Colusa - 2010 Summer Peak - after

Trip Colusa SWYD - Vaca #3 230 kV LINE

original case 3/26/2004 by SATS 2009 system summer peak
updated loads to 2010 system summer peak
added 2010 North Valley 1-in-10 loads and generation dispatch
Morro Bay 4 is the swing bus
Proposed new generation in queue added
CPV Colusa 97 MW looped onto:
Cottonwood - Cortina 230 kV Line (#1)
Cottonwood - Vaca Dixon 230 kV Line (#2)
Logan Creek - Vaca Dixon 230 kV Line (#3)
Glenn - Vaca Dixon 230 kV Line (#4)

4_BUS_VOLT_MAG_230:
Tue Aug 02 15:37:07 2005

10hs_clusa_trs_vca-clsa3.chf

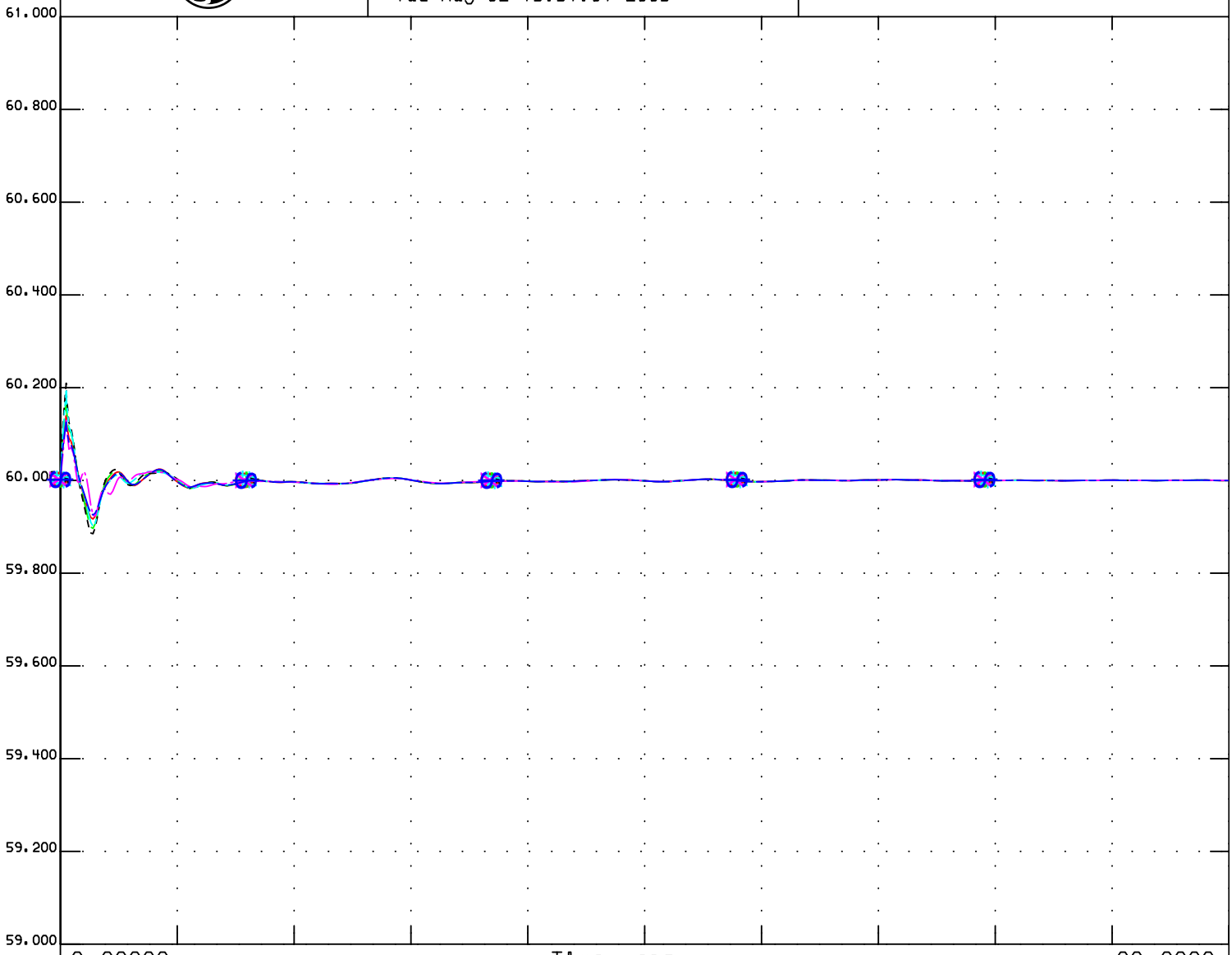

59.000		O	fbus	30106	230.0	COTWD_F	1	1 n	61.000
59.000		+	fbus	30110	230.0	GLENN	1	1 n	61.000
59.000		*	fbul	30111	230.0	LOGAN CR	1	1 n	61.000
59.000		#	fbus	30450	230.0	CORTINA	1	1 n	61.000
59.000		X	fbus	30460	230.0	VACA-DIX	1	1 n	61.000
59.000		$	fbus	37565	230.0	OLINDAW	1	1 n	61.000

PG&E 2004 BASE CASE SERIES - 2010 North Valley Summer Peak Case
PATH15=-1127 MW(S-N) PATH26=3313 MW(N-S) PDCI=3105 MW(N-S) COI=4710 MW(N-S)
CPV Colusa - 2010 Summer Peak - after

Trip Colusa SWYD - Vaca #3 230 kV LINE

original case 3/26/2004 by SATS 2009 system summer peak
updated loads to 2010 system summer peak
added 2010 North Valley 1-in-10 loads and generation dispatch
Morro Bay 4 is the swing bus
Proposed new generation in queue added
CPV Colusa 97 MW looped onto:
Cottonwood - Cortina 230 kV Line (#1)
Cottonwood - Vaca Dixon 230 kV Line (#2)
Logan Creek - Vaca Dixon 230 kV Line (#3)
Glenn - Vaca Dixon 230 kV Line (#4)

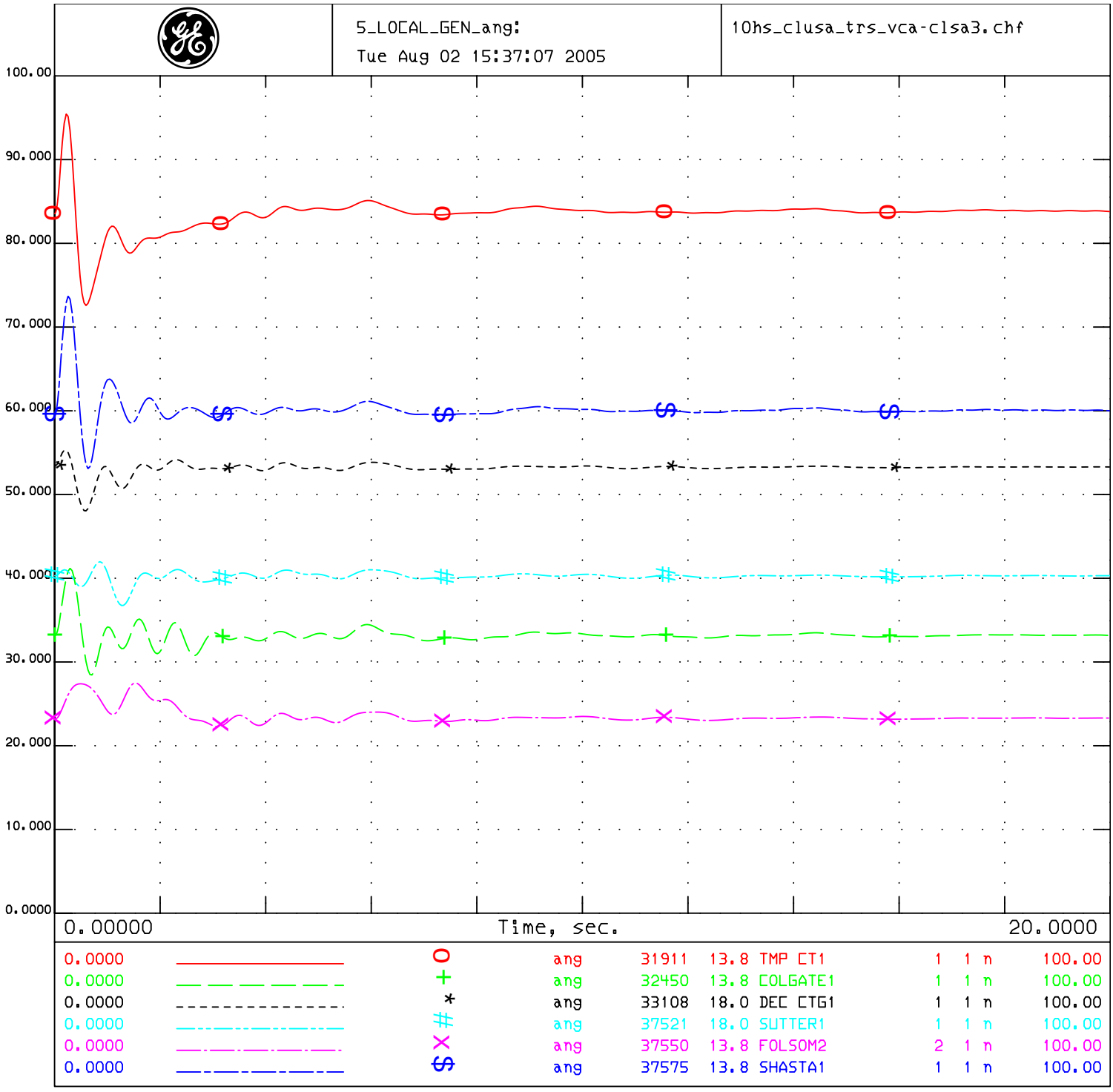

PG&E 2004 BASE CASE SERIES - 2010 North Valley Summer Peak Case
PATH15=-1127 MW(S-N) PATH26=3313 MW(N-S) PDCI=3105 MW(N-S) COI=4710 MW(N-S)
CPV Colusa - 2010 Summer Peak - after

Trip Colusa SWYD - Vaca #3 230 kV LINE

original case 3/26/2004 by SATS 2009 system summer peak
updated loads to 2010 system summer peak
added 2010 North Valley 1-in-10 loads and generation dispatch
Morro Bay 4 is the swing bus
Proposed new generation in queue added
CPV Colusa 97 MW looped onto:
Cottonwood - Cortina 230 kV Line (#1)
Cottonwood - Vaca Dixon 230 kV Line (#2)
Logan Creek - Vaca Dixon 230 kV Line (#3)
Glenn - Vaca Dixon 230 kV Line (#4)

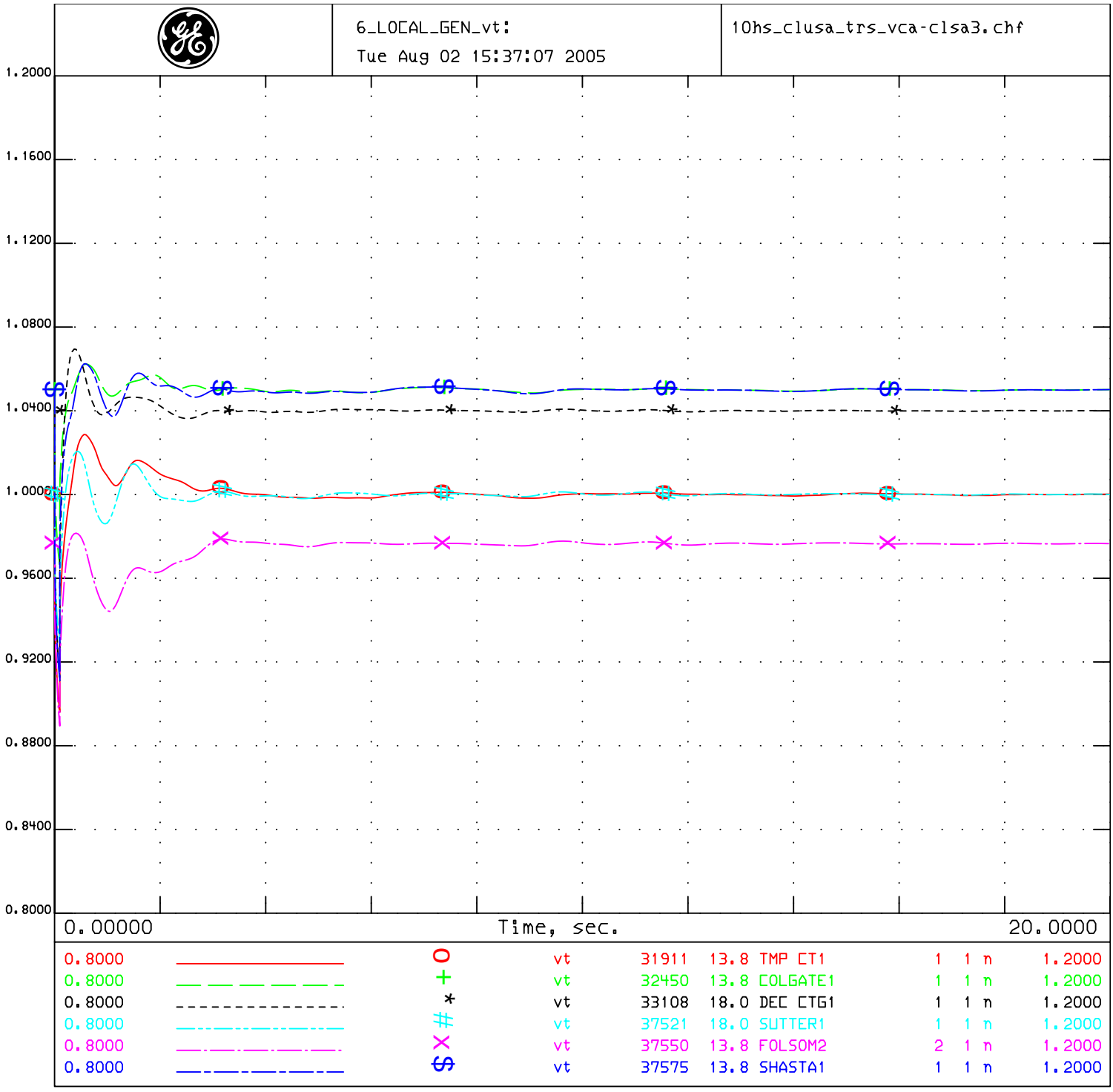

PG&E 2004 BASE CASE SERIES - 2010 North Valley Summer Peak Case
PATH15=-1127 MW(S-N) PATH26=3313 MW(N-S) PDCI=3105 MW(N-S) COI=4710 MW(N-S)
CPV Colusa - 2010 Summer Peak - after

Trip Colusa SWYD - Vaca #3 230 kV LINE

original case 3/26/2004 by SATS 2009 system summer peak
updated loads to 2010 system summer peak
added 2010 North Valley 1-in-10 loads and generation dispatch
Morro Bay 4 is the swing bus
Proposed new generation in queue added
CPV Colusa 97 MW looped onto:
Cottonwood - Cortina 230 kV Line (#1)
Cottonwood - Vaca Dixon 230 kV Line (#2)
Logan Creek - Vaca Dixon 230 kV Line (#3)
Glenn - Vaca Dixon 230 kV Line (#4)

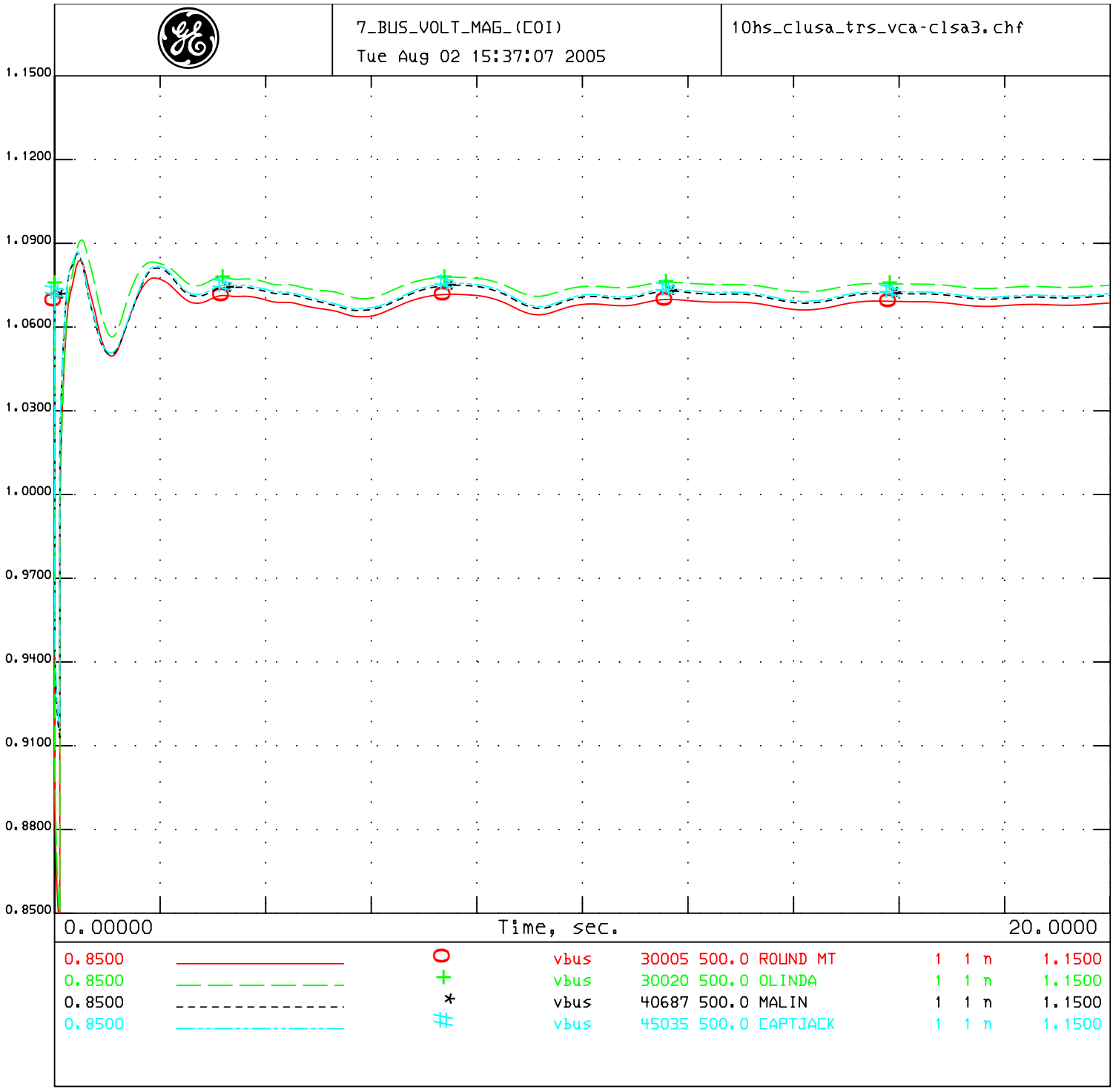

PG&E 2004 BASE CASE SERIES - 2010 North Valley Summer Peak Case
PATH15=-1127 MW(S-N) PATH26=3313 MW(N-S) PDCI=3105 MW(N-S) COI=4710 MW(N-S)
CPV Colusa - 2010 Summer Peak - after

Trip Colusa SWYD - Vaca #3 230 kV LINE

original case 3/26/2004 by SATS 2009 system summer peak
updated loads to 2010 system summer peak
added 2010 North Valley 1-in-10 loads and generation dispatch
Morro Bay 4 is the swing bus
Proposed new generation in queue added
CPV Colusa 97 MW looped onto:
Cottonwood - Cortina 230 kV Line (#1)
Cottonwood - Vaca Dixon 230 kV Line (#2)
Logan Creek - Vaca Dixon 230 kV Line (#3)
Glenn - Vaca Dixon 230 kV Line (#4)

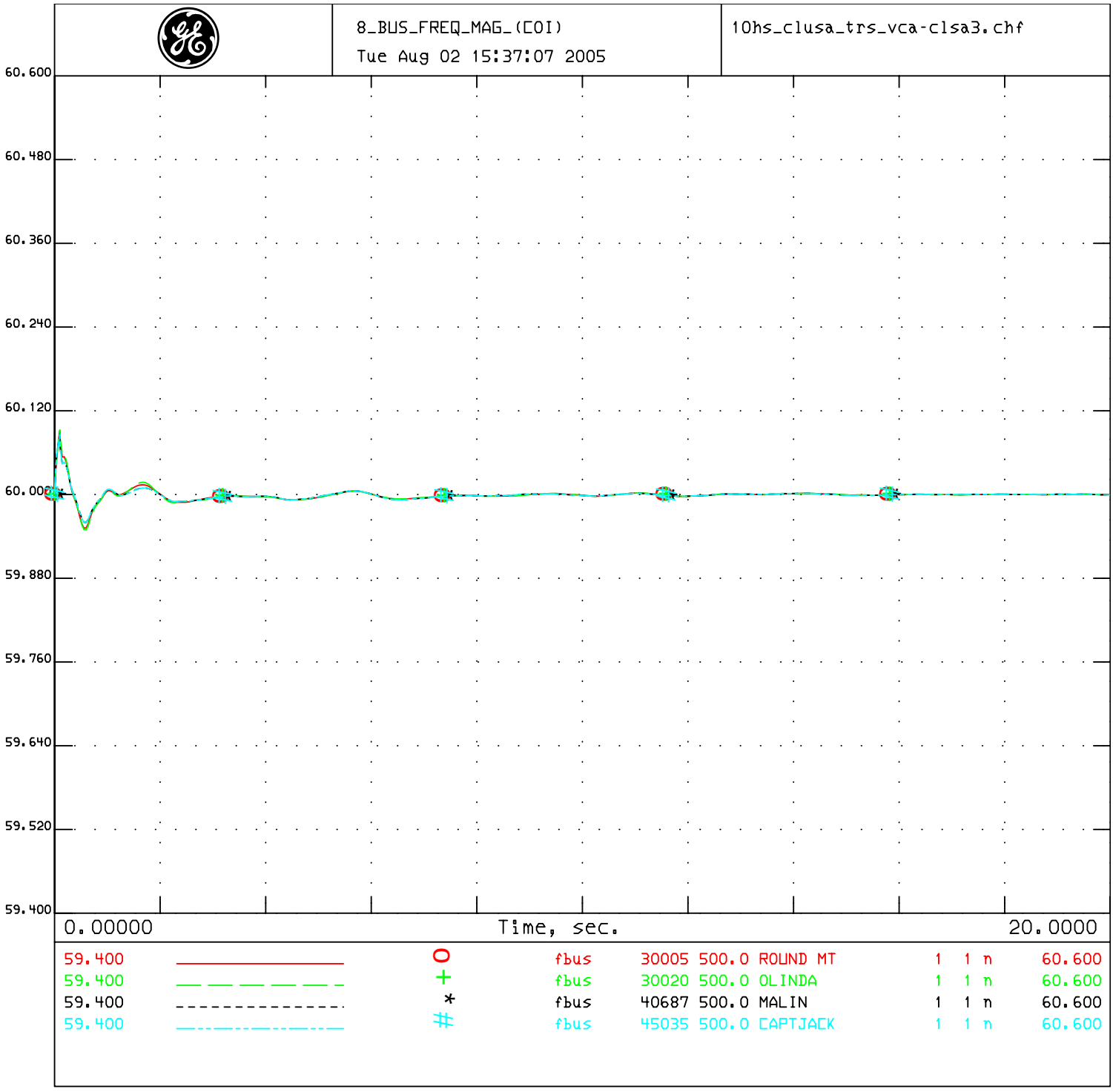

PG&E 2004 BASE CASE SERIES - 2010 North Valley Summer Peak Case
PATH15=-1127 MW(S-N) PATH26=3313 MW(N-S) PDCI=3105 MW(N-S) COI=4710 MW(N-S)
CPV Colusa - 2010 Summer Peak - after

Trip Colusa SWYD - Vaca #3 230 kV LINE

original case 3/26/2004 by SATS 2009 system summer peak
updated loads to 2010 system summer peak
added 2010 North Valley 1-in-10 loads and generation dispatch
Morro Bay 4 is the swing bus
Proposed new generation in queue added
CPV Colusa 97 MW looped onto:
Cottonwood - Cortina 230 kV Line (#1)
Cottonwood - Vaca Dixon 230 kV Line (#2)
Logan Creek - Vaca Dixon 230 kV Line (#3)
Glenn - Vaca Dixon 230 kV Line (#4)

1_COLUSA_vt_ang
Tue Aug 02 16:25:41 2005

10hs_clusa_trs_clsa-glenn.chf

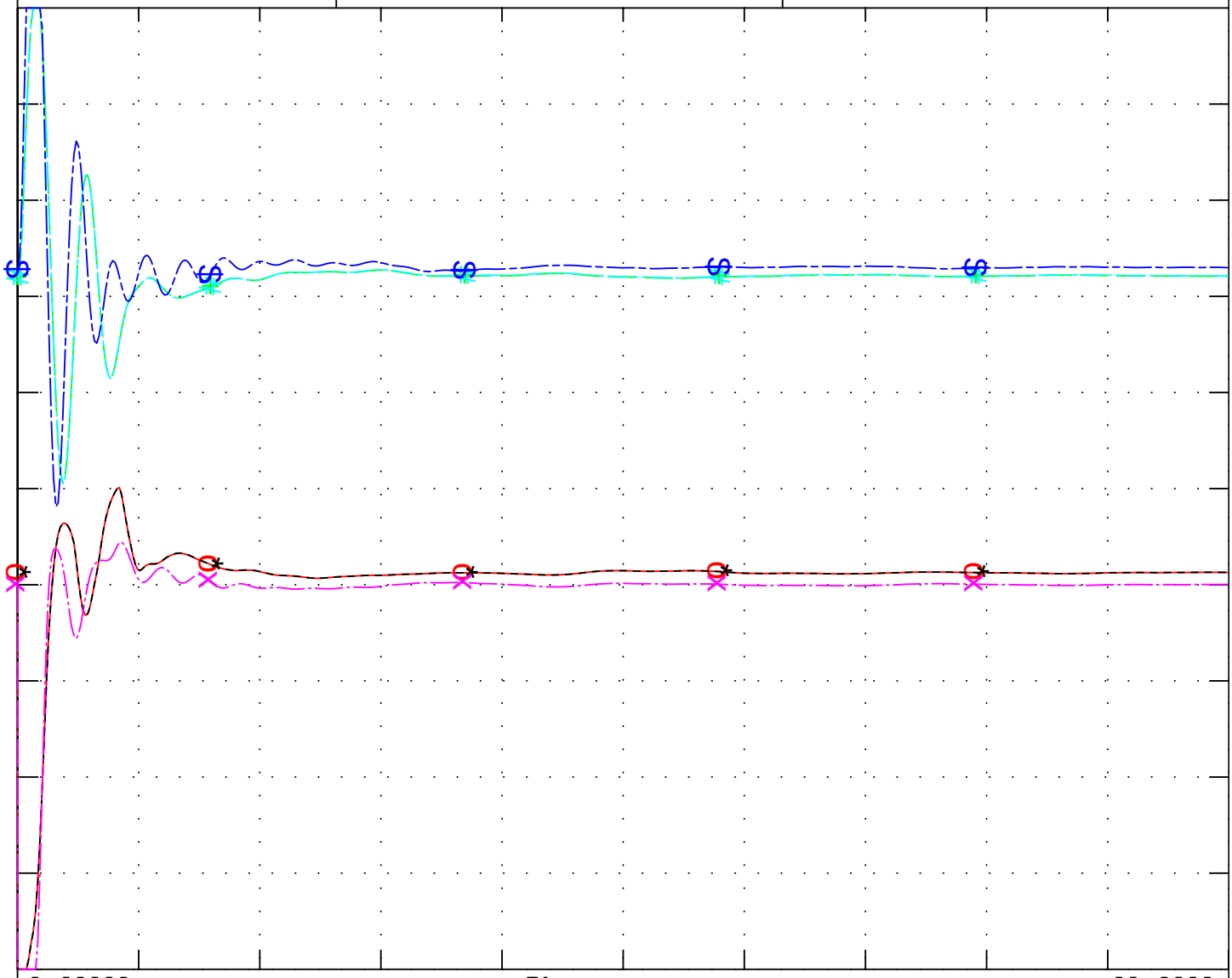

0.8000		O	vt	31923	18.0	P0506GT1	1	1	1.2000
0.0000		+	ang	31923	18.0	P0506GT1	1	1	100.00
0.8000		*	vt	31924	18.0	P0506GT2	2	1	1.2000
0.0000		#	ang	31924	18.0	P0506GT2	2	1	100.00
0.8000		X	vt	31925	18.0	P0506ST1	3	1	1.2000
0.0000		⊗	ang	31925	18.0	P0506ST1	3	1	100.00

PG&E 2004 BASE CASE SERIES - 2010 North Valley Summer Peak Case
PATH15=-1127 MW(S-N) PATH26=3313 MW(N-S) PDCI=3105 MW(N-S) COI=4710 MW(N-S)
CPV Colusa - 2010 Summer Peak - after

Trip Colusa SWYD - Glenn 230 kV LINE

original case 3/26/2004 by SATS 2009 system summer peak
updated loads to 2010 system summer peak
added 2010 North Valley 1-in-10 loads and generation dispatch
Morro Bay 4 is the swing bus
Proposed new generation in queue added
CPV Colusa 97 MW looped onto:
Cottonwood - Cortina 230 kV Line (#1)
Cottonwood - Vaca Dixon 230 kV Line (#2)
Logan Creek - Vaca Dixon 230 kV Line (#3)
Glenn - Vaca Dixon 230 kV Line (#4)

2_COLUSA_spd_pg
Tue Aug 02 16:25:42 2005

10hs_clusa_trs_clsa-glenn.chf

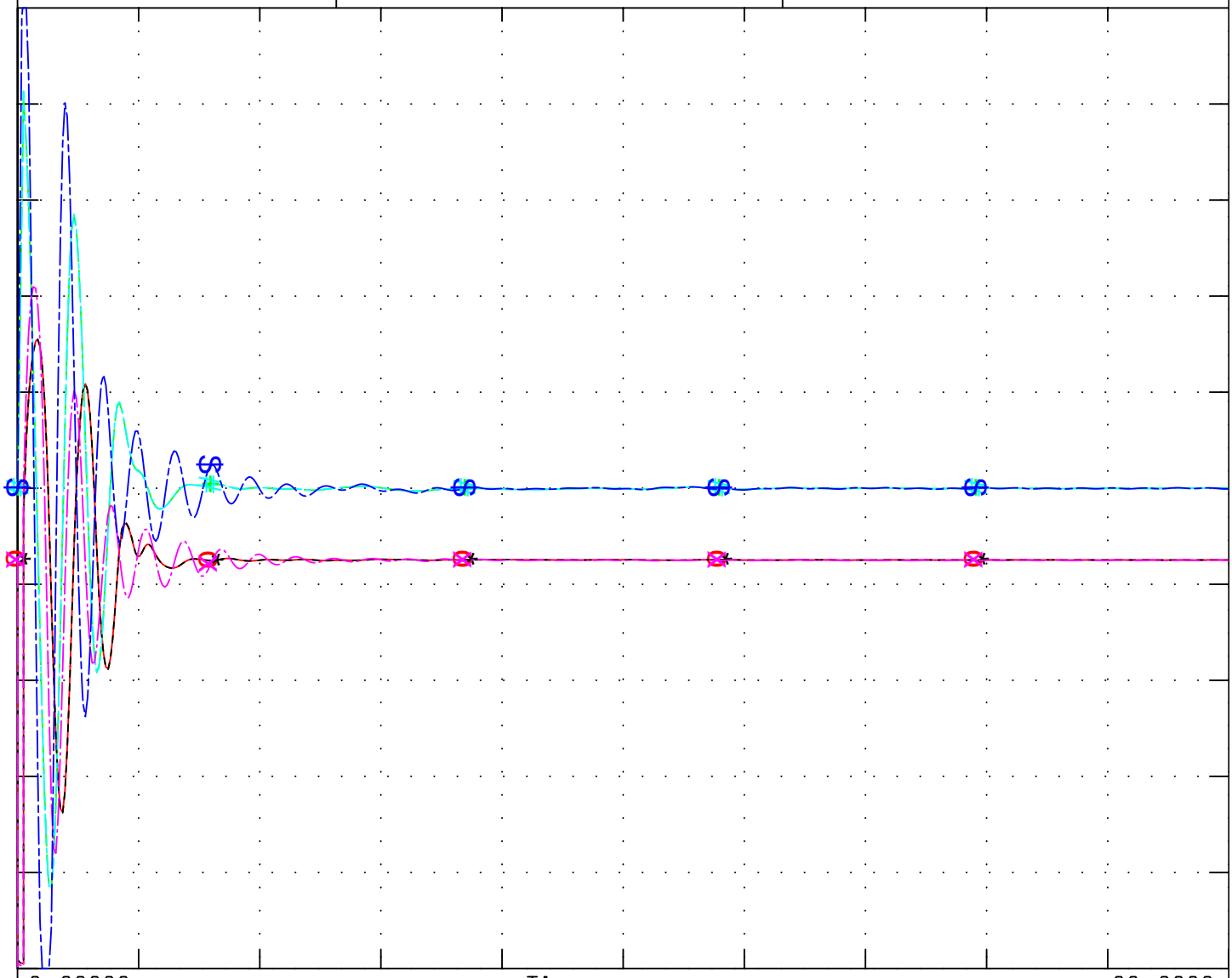

0.0000		O	pg	31923	18.0	P0506GT1	1	1	n	468.00
0.9900		+	spd	31923	18.0	P0506GT1	1	1	n	1.0100
0.0000		*	pg	31924	18.0	P0506GT2	2	1	n	468.00
0.9900		#	spd	31924	18.0	P0506GT2	2	1	n	1.0100
0.0000		X	pg	31925	18.0	P0506ST1	3	1	n	746.00
0.9900		S	spd	31925	18.0	P0506ST1	3	1	n	1.0100

PG&E 2004 BASE CASE SERIES - 2010 North Valley Summer Peak Case
PATH15=-1127 MW(S-N) PATH26=3313 MW(N-S) PDCI=3105 MW(N-S) COI=4710 MW(N-S)
CPV Colusa - 2010 Summer Peak - after

Trip Colusa SWYD - Glenn 230 kV LINE

original case 3/26/2004 by SATS 2009 system summer peak
updated loads to 2010 system summer peak
added 2010 North Valley 1-in-10 loads and generation dispatch
Morro Bay 4 is the swing bus
Proposed new generation in queue added
CPV Colusa 97 MW looped onto:
Cottonwood - Cortina 230 kV Line (#1)
Cottonwood - Vaca Dixon 230 kV Line (#2)
Logan Creek - Vaca Dixon 230 kV Line (#3)
Glenn - Vaca Dixon 230 kV Line (#4)

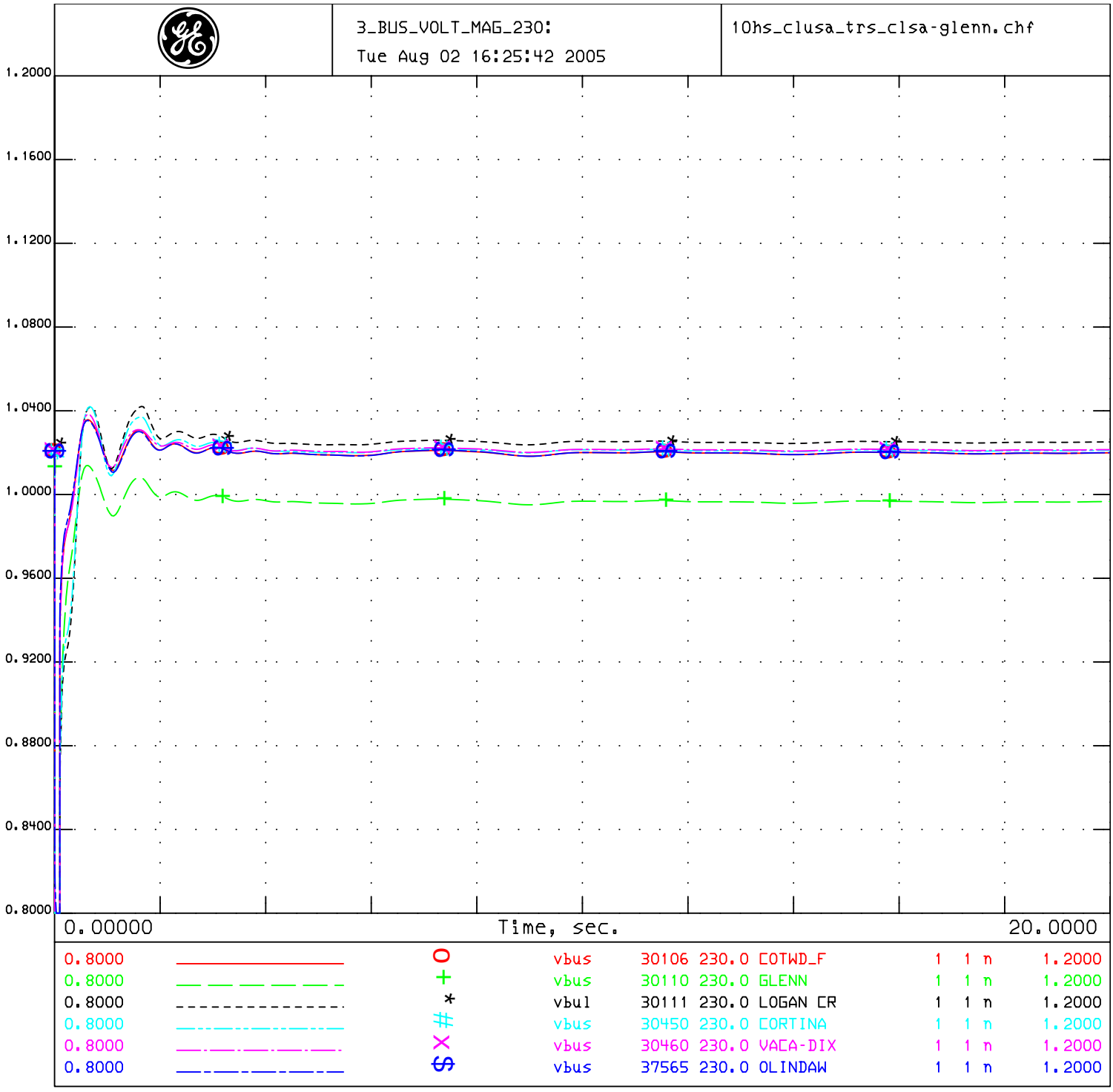

PG&E 2004 BASE CASE SERIES - 2010 North Valley Summer Peak Case
PATH15=-1127 MW(S-N) PATH26=3313 MW(N-S) PDCI=3105 MW(N-S) COI=4710 MW(N-S)
CPV Colusa - 2010 Summer Peak - after

Trip Colusa SWYD - Glenn 230 kV LINE

original case 3/26/2004 by SATS 2009 system summer peak
updated loads to 2010 system summer peak
added 2010 North Valley 1-in-10 loads and generation dispatch
Morro Bay 4 is the swing bus
Proposed new generation in queue added
CPV Colusa 97 MW looped onto:
Cottonwood - Cortina 230 kV Line (#1)
Cottonwood - Vaca Dixon 230 kV Line (#2)
Logan Creek - Vaca Dixon 230 kV Line (#3)
Glenn - Vaca Dixon 230 kV Line (#4)

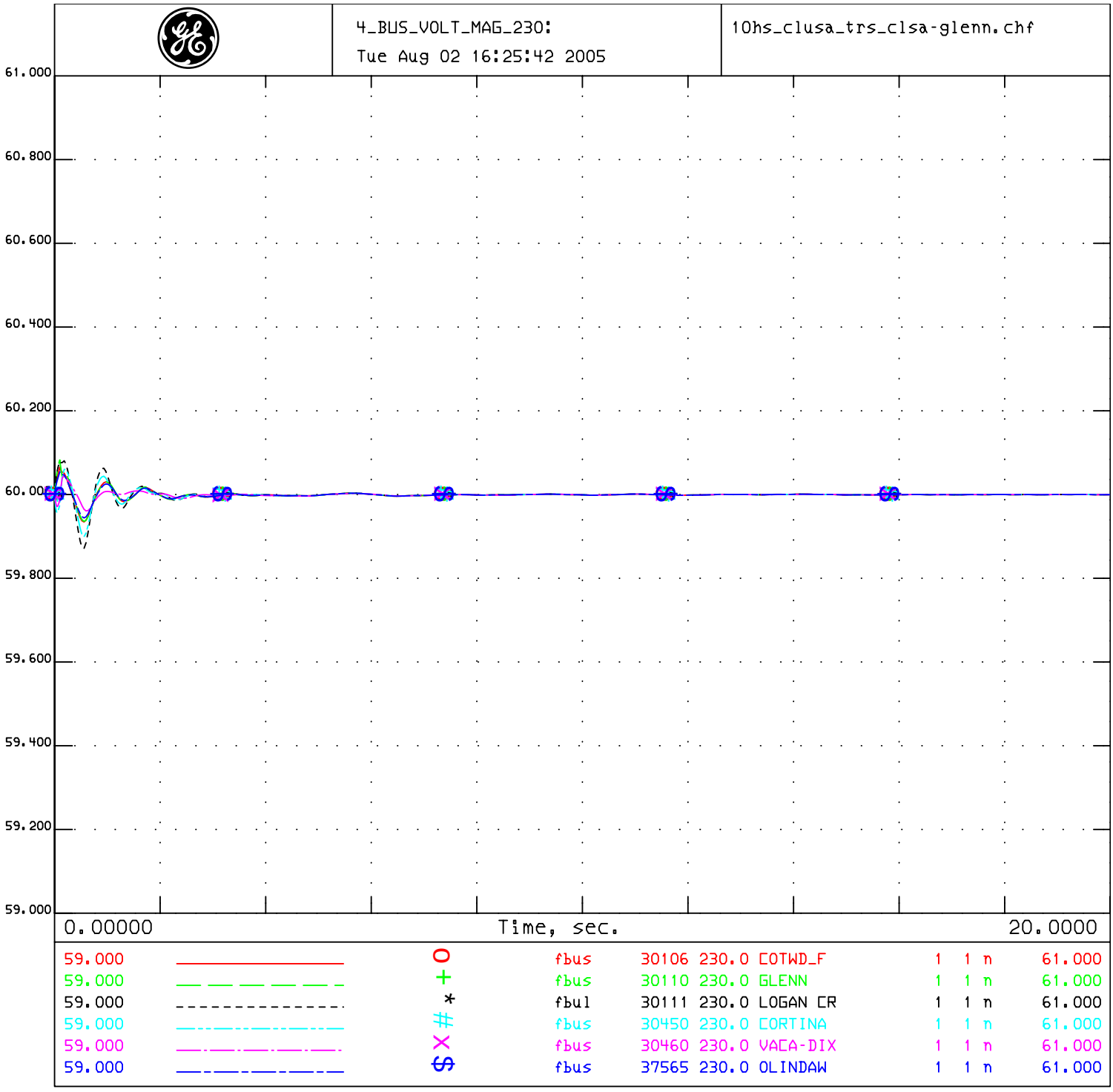

PG&E 2004 BASE CASE SERIES - 2010 North Valley Summer Peak Case
PATH15=-1127 MW(S-N) PATH26=3313 MW(N-S) PDCI=3105 MW(N-S) COI=4710 MW(N-S)
CPV Colusa - 2010 Summer Peak - after

Trip Colusa SWYD - Glenn 230 kV LINE

original case 3/26/2004 by SATS 2009 system summer peak
updated loads to 2010 system summer peak
added 2010 North Valley 1-in-10 loads and generation dispatch
Morro Bay 4 is the swing bus
Proposed new generation in queue added
CPV Colusa 97 MW looped onto:
Cottonwood - Cortina 230 kV Line (#1)
Cottonwood - Vaca Dixon 230 kV Line (#2)
Logan Creek - Vaca Dixon 230 kV Line (#3)
Glenn - Vaca Dixon 230 kV Line (#4)

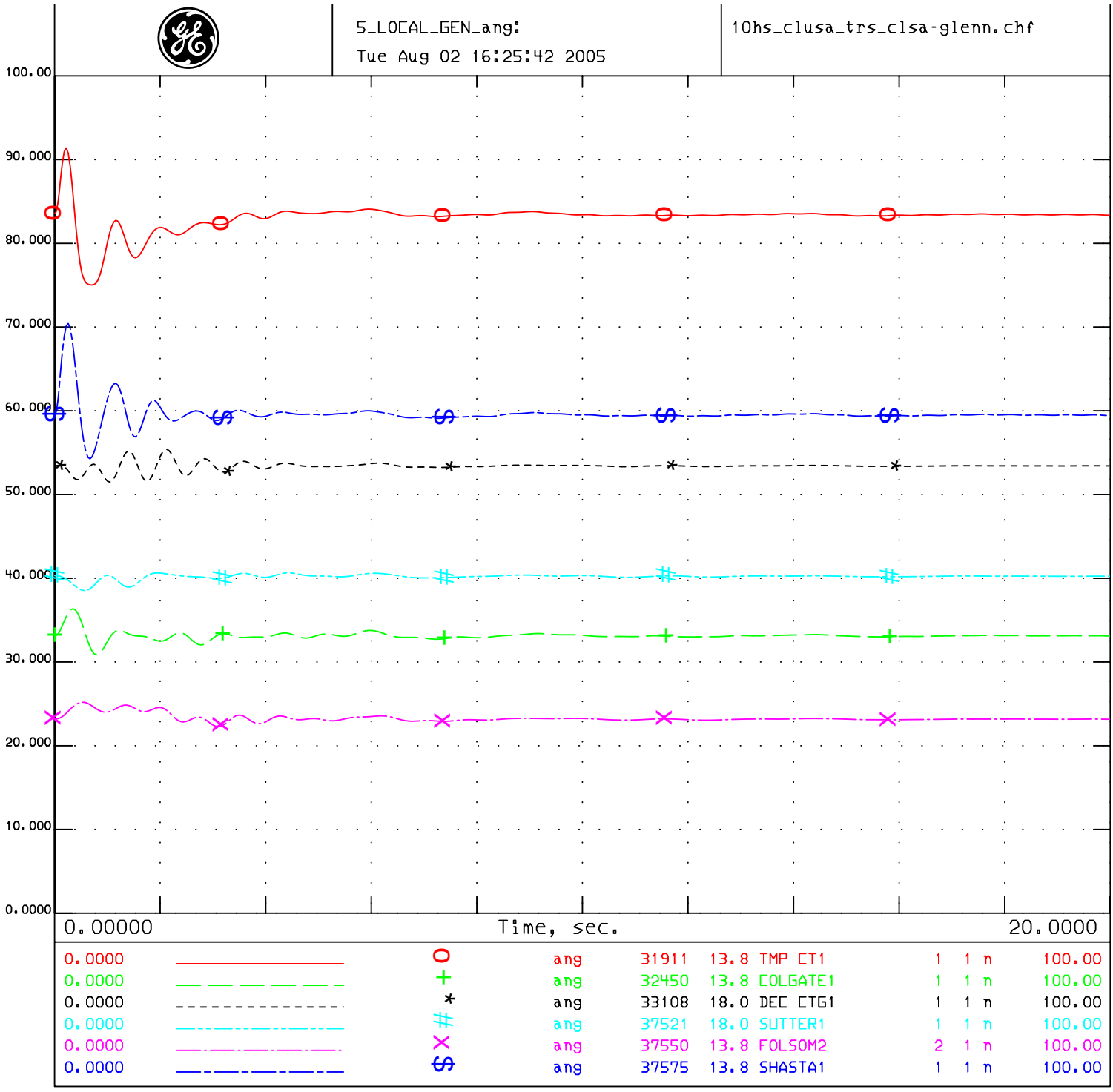

PG&E 2004 BASE CASE SERIES - 2010 North Valley Summer Peak Case
PATH15=-1127 MW(S-N) PATH26=3313 MW(N-S) PDCI=3105 MW(N-S) COI=4710 MW(N-S)
CPV Colusa - 2010 Summer Peak - after

Trip Colusa SWYD - Glenn 230 kV LINE

original case 3/26/2004 by SATS 2009 system summer peak
updated loads to 2010 system summer peak
added 2010 North Valley 1-in-10 loads and generation dispatch
Morro Bay 4 is the swing bus
Proposed new generation in queue added
CPV Colusa 97 MW looped onto:
Cottonwood - Cortina 230 kV Line (#1)
Cottonwood - Vaca Dixon 230 kV Line (#2)
Logan Creek - Vaca Dixon 230 kV Line (#3)
Glenn - Vaca Dixon 230 kV Line (#4)

6_LOCAL_GEN_vt:
Tue Aug 02 16:25:42 2005

10hs_clusa_trs_clsa-glenn.chf

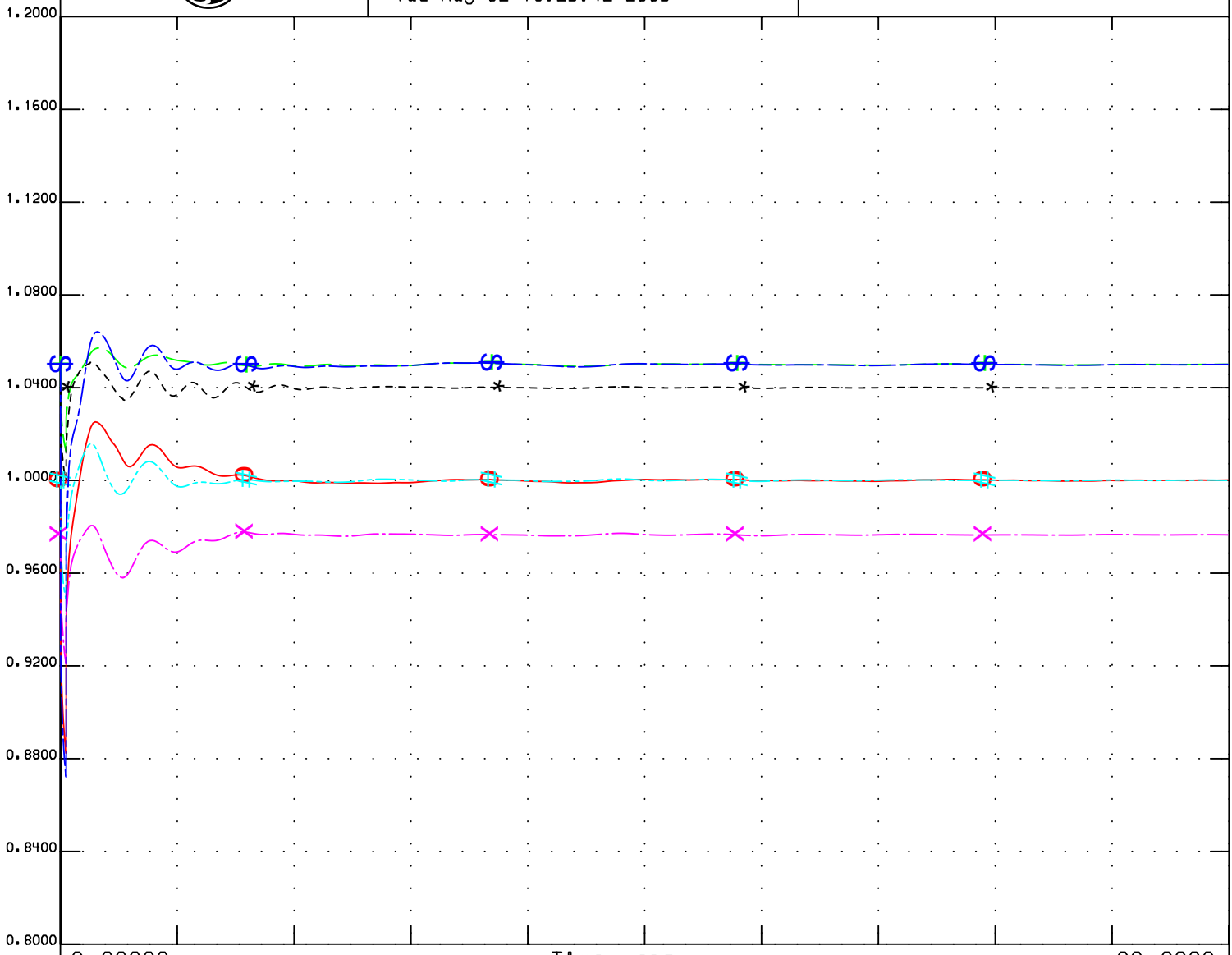

0.8000		O	vt	31911	13.8	TMP CT1	1	1	n	1.2000
0.8000		+	vt	32450	13.8	COLGATE1	1	1	n	1.2000
0.8000		*	vt	33108	18.0	DEC CTG1	1	1	n	1.2000
0.8000		#	vt	37521	18.0	SUTTER1	1	1	n	1.2000
0.8000		X	vt	37550	13.8	FOLSOM2	2	1	n	1.2000
0.8000		S	vt	37575	13.8	SHASTA1	1	1	n	1.2000

PG&E 2004 BASE CASE SERIES - 2010 North Valley Summer Peak Case
PATH15=-1127 MW(S-N) PATH26=3313 MW(N-S) PDCI=3105 MW(N-S) COI=4710 MW(N-S)
CPV Colusa - 2010 Summer Peak - after

Trip Colusa SWYD - Glenn 230 kV LINE

original case 3/26/2004 by SATS 2009 system summer peak
updated loads to 2010 system summer peak
added 2010 North Valley 1-in-10 loads and generation dispatch
Morro Bay 4 is the swing bus
Proposed new generation in queue added
CPV Colusa 97 MW looped onto:
Cottonwood - Cortina 230 kV Line (#1)
Cottonwood - Vaca Dixon 230 kV Line (#2)
Logan Creek - Vaca Dixon 230 kV Line (#3)
Glenn - Vaca Dixon 230 kV Line (#4)

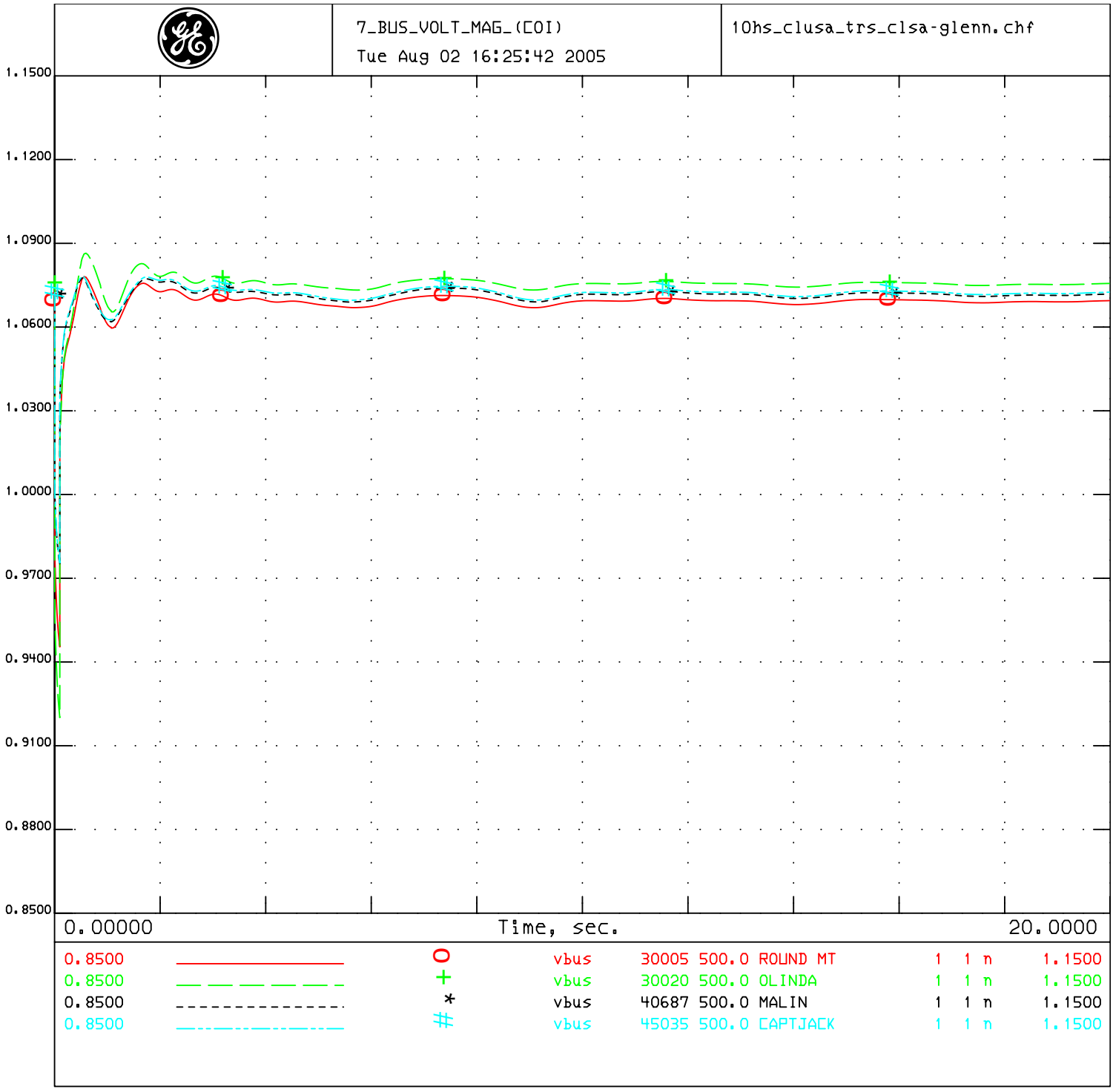

PG&E 2004 BASE CASE SERIES - 2010 North Valley Summer Peak Case
PATH15=-1127 MW(S-N) PATH26=3313 MW(N-S) PDCI=3105 MW(N-S) COI=4710 MW(N-S)
CPV Colusa - 2010 Summer Peak - after

Trip Colusa SWYD - Glenn 230 kV LINE

original case 3/26/2004 by SATS 2009 system summer peak
updated loads to 2010 system summer peak
added 2010 North Valley 1-in-10 loads and generation dispatch
Morro Bay 4 is the swing bus
Proposed new generation in queue added
CPV Colusa 97 MW looped onto:
Cottonwood - Cortina 230 kV Line (#1)
Cottonwood - Vaca Dixon 230 kV Line (#2)
Logan Creek - Vaca Dixon 230 kV Line (#3)
Glenn - Vaca Dixon 230 kV Line (#4)

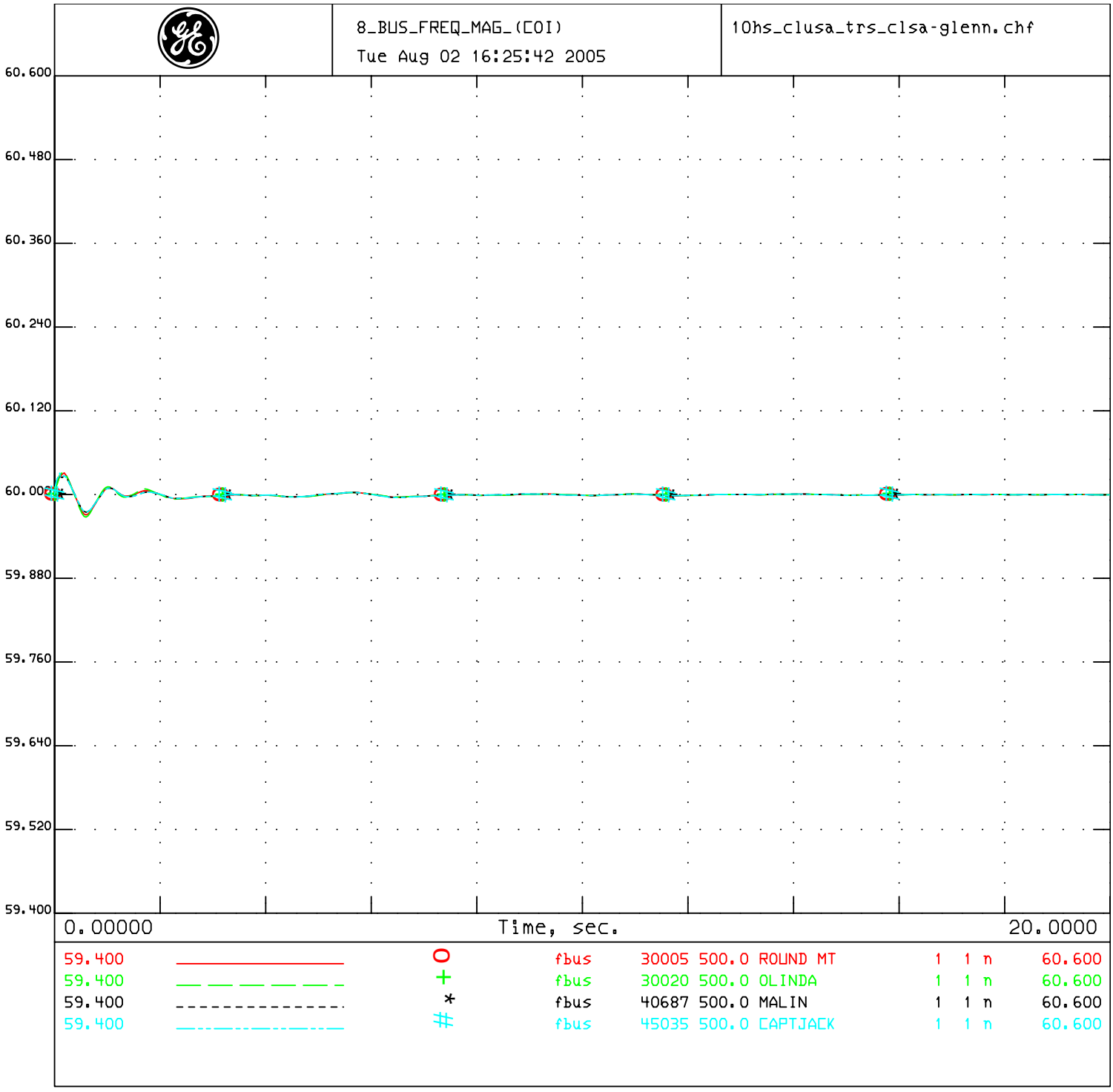

PG&E 2004 BASE CASE SERIES - 2010 North Valley Summer Peak Case
PATH15=-1127 MW(S-N) PATH26=3313 MW(N-S) PDCI=3105 MW(N-S) COI=4710 MW(N-S)
CPV Colusa - 2010 Summer Peak - after

Trip Colusa SWYD - Glenn 230 kV LINE

original case 3/26/2004 by SATS 2009 system summer peak
updated loads to 2010 system summer peak
added 2010 North Valley 1-in-10 loads and generation dispatch
Morro Bay 4 is the swing bus
Proposed new generation in queue added
CPV Colusa 97 MW looped onto:
Cottonwood - Cortina 230 kV Line (#1)
Cottonwood - Vaca Dixon 230 kV Line (#2)
Logan Creek - Vaca Dixon 230 kV Line (#3)
Glenn - Vaca Dixon 230 kV Line (#4)

1_COLUSA_vt_ang
Tue Aug 02 15:44:21 2005

10hs_clusa_trs_vca-clsa4.chf

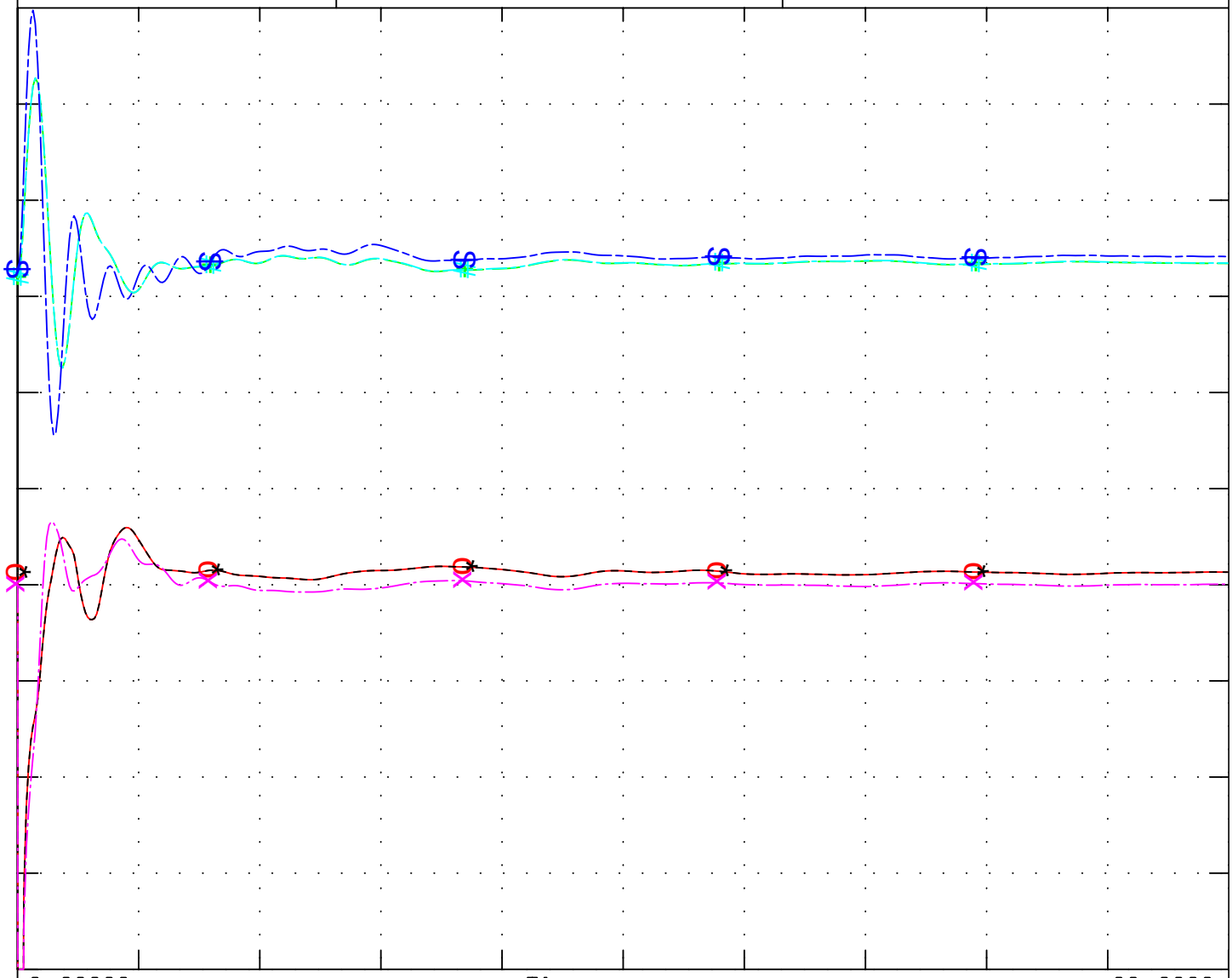

0.8000	————	O	vt	31923	18.0	P0506GT1	1	1	1.2000
0.0000	— — — — — —	+	ang	31923	18.0	P0506GT1	1	1	100.00
0.8000	- - - - - - - - - - - - -	*	vt	31924	18.0	P0506GT2	2	1	1.2000
0.0000	—-—-—-—-—	#	ang	31924	18.0	P0506GT2	2	1	100.00
0.8000	—.—.—.—.—	X	vt	31925	18.0	P0506ST1	3	1	1.2000
0.0000	—-—-—-—-—	⊗	ang	31925	18.0	P0506ST1	3	1	100.00

PG&E 2004 BASE CASE SERIES - 2010 North Valley Summer Peak Case
PATH15=-1127 MW(S-N) PATH26=3313 MW(N-S) PDCI=3105 MW(N-S) COI=4710 MW(N-S)
CPV Colusa - 2010 Summer Peak - after

Trip Colusa SWYD - Vaca #4 230 kV LINE

original case 3/26/2004 by SATS 2009 system summer peak
updated loads to 2010 system summer peak
added 2010 North Valley 1-in-10 loads and generation dispatch
Morro Bay 4 is the swing bus
Proposed new generation in queue added
CPV Colusa 97 MW looped onto:
Cottonwood - Cortina 230 kV Line (#1)
Cottonwood - Vaca Dixon 230 kV Line (#2)
Logan Creek - Vaca Dixon 230 kV Line (#3)
Glenn - Vaca Dixon 230 kV Line (#4)

2_COLUSA_spd_pg
Tue Aug 02 15:44:21 2005

10hs_clusa_trs_vca-clsa4.chf

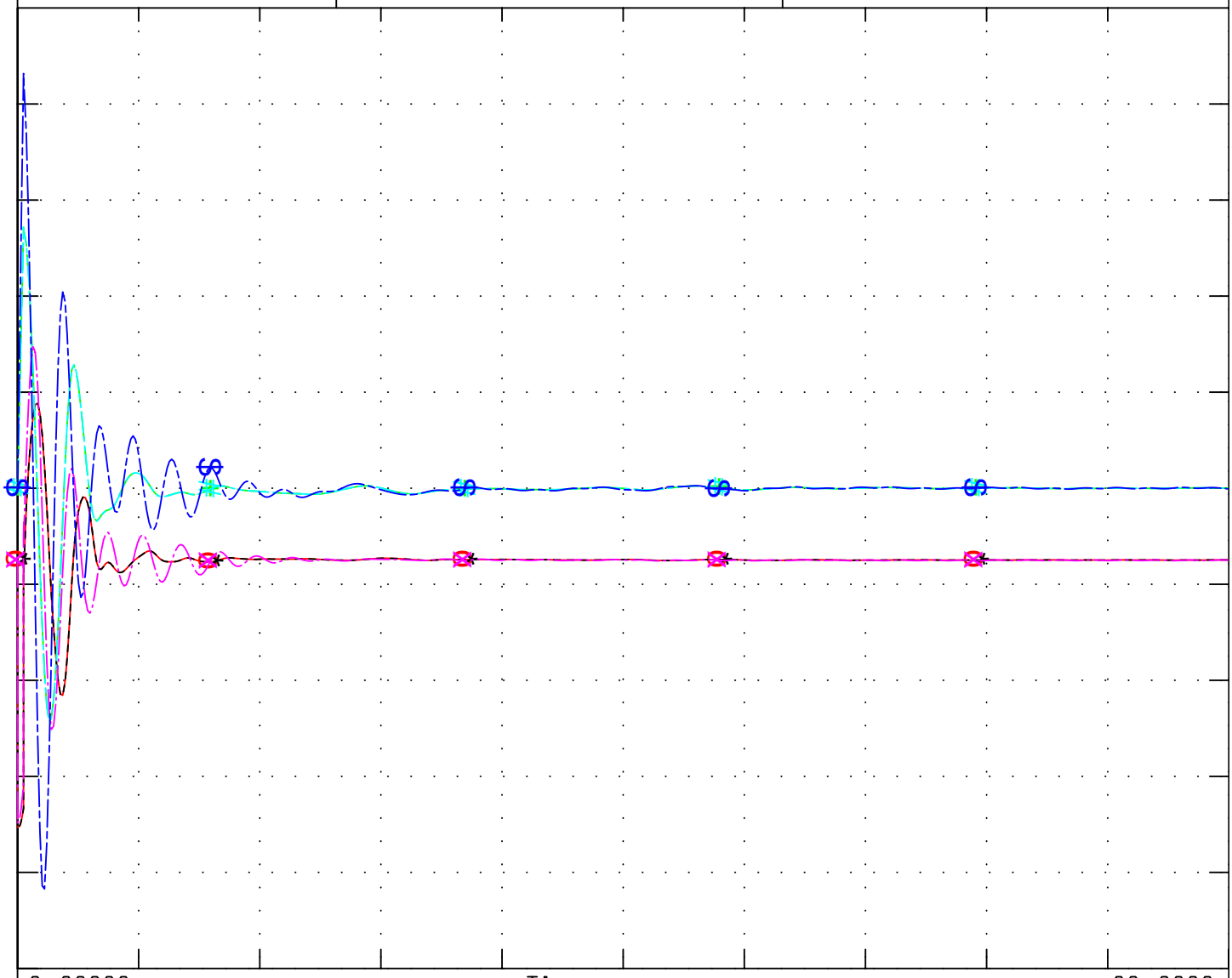

0.0000	————	O	pg	31923	18.0	P0506GT1	1	1	n	468.00
0.9900	— — — — — —	+	spd	31923	18.0	P0506GT1	1	1	n	1.0100
0.0000	- - - - - - - - - - - - - -	*	pg	31924	18.0	P0506GT2	2	1	n	468.00
0.9900	—-—-—-—-—-—	#	spd	31924	18.0	P0506GT2	2	1	n	1.0100
0.0000	—.—.—.—.—.	X	pg	31925	18.0	P0506ST1	3	1	n	746.00
0.9900	—-—-—-—-—-—	$	spd	31925	18.0	P0506ST1	3	1	n	1.0100

PG&E 2004 BASE CASE SERIES - 2010 North Valley Summer Peak Case
PATH15=-1127 MW(S-N) PATH26=3313 MW(N-S) PDCI=3105 MW(N-S) COI=4710 MW(N-S)
CPV Colusa - 2010 Summer Peak - after

Trip Colusa SWYD - Vaca #4 230 kV LINE

original case 3/26/2004 by SATS 2009 system summer peak
updated loads to 2010 system summer peak
added 2010 North Valley 1-in-10 loads and generation dispatch
Morro Bay 4 is the swing bus
Proposed new generation in queue added
CPV Colusa 97 MW looped onto:
Cottonwood - Cortina 230 kV Line (#1)
Cottonwood - Vaca Dixon 230 kV Line (#2)
Logan Creek - Vaca Dixon 230 kV Line (#3)
Glenn - Vaca Dixon 230 kV Line (#4)

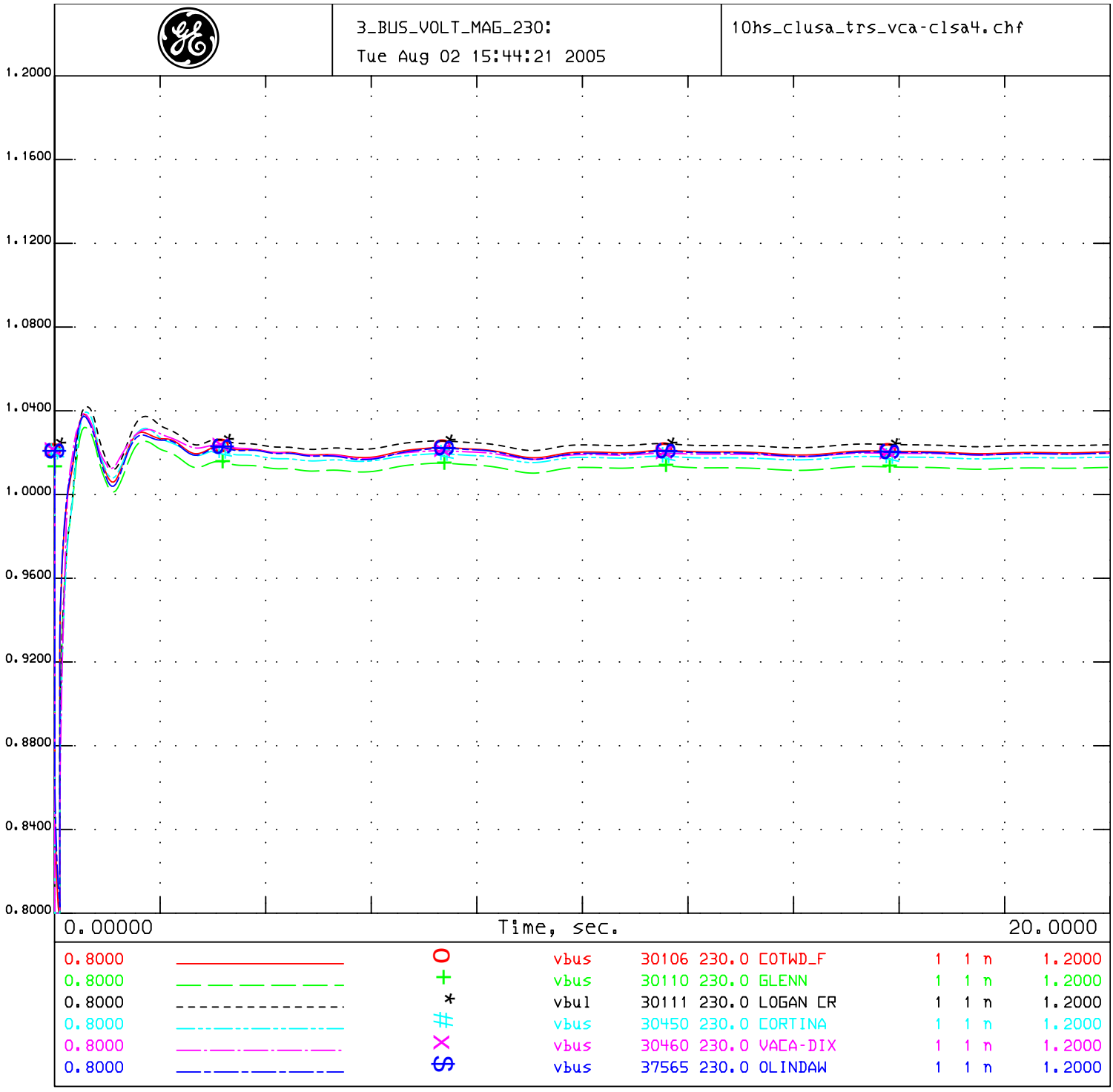

PG&E 2004 BASE CASE SERIES - 2010 North Valley Summer Peak Case
PATH15=-1127 MW(S-N) PATH26=3313 MW(N-S) PDCI=3105 MW(N-S) COI=4710 MW(N-S)
CPV Colusa - 2010 Summer Peak - after

Trip Colusa SWYD - Vaca #4 230 kV LINE

original case 3/26/2004 by SATS 2009 system summer peak
updated loads to 2010 system summer peak
added 2010 North Valley 1-in-10 loads and generation dispatch
Morro Bay 4 is the swing bus
Proposed new generation in queue added
CPV Colusa 97 MW looped onto:
Cottonwood - Cortina 230 kV Line (#1)
Cottonwood - Vaca Dixon 230 kV Line (#2)
Logan Creek - Vaca Dixon 230 kV Line (#3)
Glenn - Vaca Dixon 230 kV Line (#4)

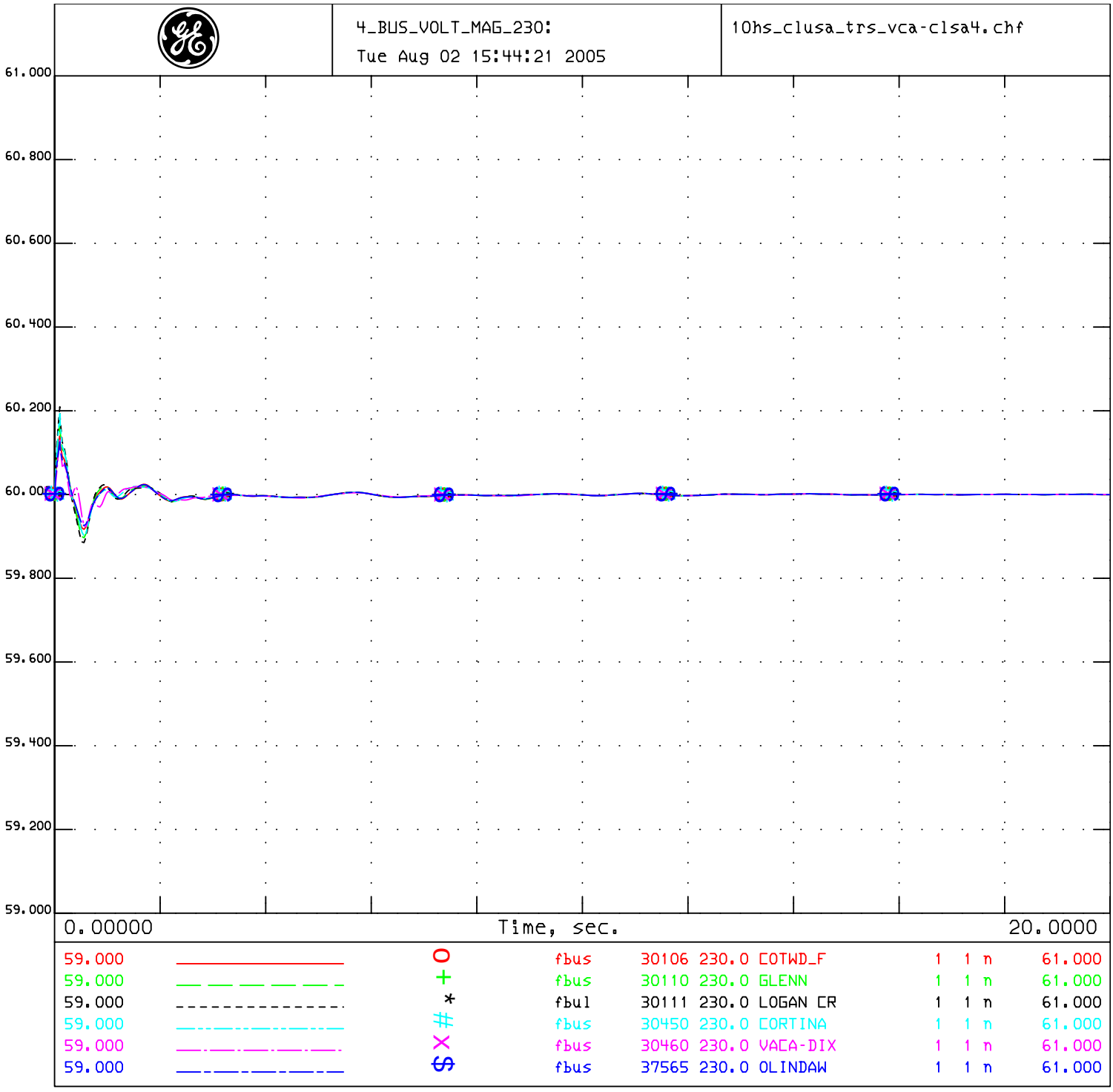

PG&E 2004 BASE CASE SERIES - 2010 North Valley Summer Peak Case
PATH15=-1127 MW(S-N) PATH26=3313 MW(N-S) PDCI=3105 MW(N-S) COI=4710 MW(N-S)
CPV Colusa - 2010 Summer Peak - after

Trip Colusa SWYD - Vaca #4 230 kV LINE

original case 3/26/2004 by SATS 2009 system summer peak
updated loads to 2010 system summer peak
added 2010 North Valley 1-in-10 loads and generation dispatch
Morro Bay 4 is the swing bus
Proposed new generation in queue added
CPV Colusa 97 MW looped onto:
Cottonwood - Cortina 230 kV Line (#1)
Cottonwood - Vaca Dixon 230 kV Line (#2)
Logan Creek - Vaca Dixon 230 kV Line (#3)
Glenn - Vaca Dixon 230 kV Line (#4)

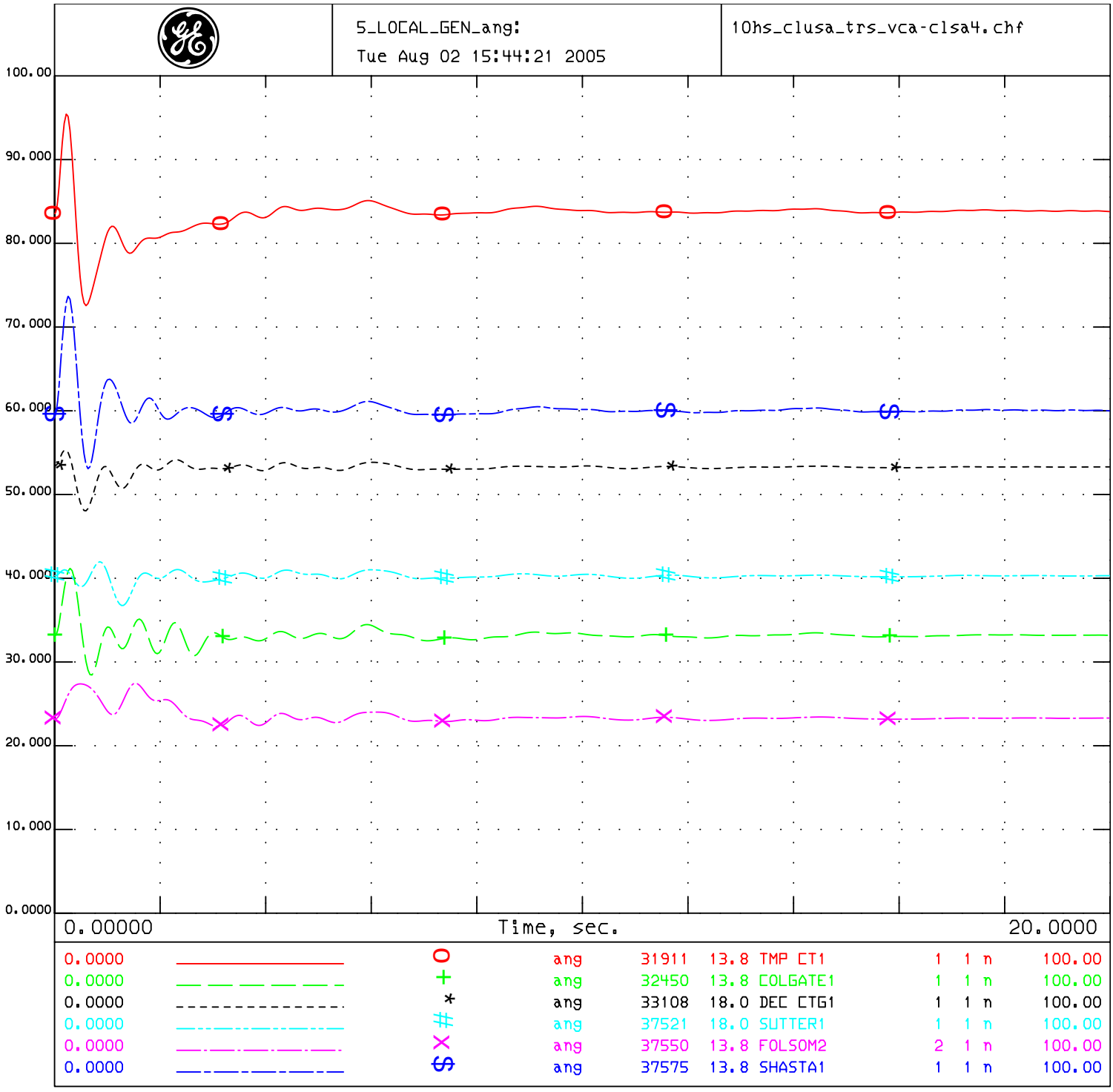

PG&E 2004 BASE CASE SERIES - 2010 North Valley Summer Peak Case
PATH15=-1127 MW(S-N) PATH26=3313 MW(N-S) PDCI=3105 MW(N-S) COI=4710 MW(N-S)
CPV Colusa - 2010 Summer Peak - after

Trip Colusa SWYD - Vaca #4 230 kV LINE

original case 3/26/2004 by SATS 2009 system summer peak
updated loads to 2010 system summer peak
added 2010 North Valley 1-in-10 loads and generation dispatch
Morro Bay 4 is the swing bus
Proposed new generation in queue added
CPV Colusa 97 MW looped onto:
Cottonwood - Cortina 230 kV Line (#1)
Cottonwood - Vaca Dixon 230 kV Line (#2)
Logan Creek - Vaca Dixon 230 kV Line (#3)
Glenn - Vaca Dixon 230 kV Line (#4)

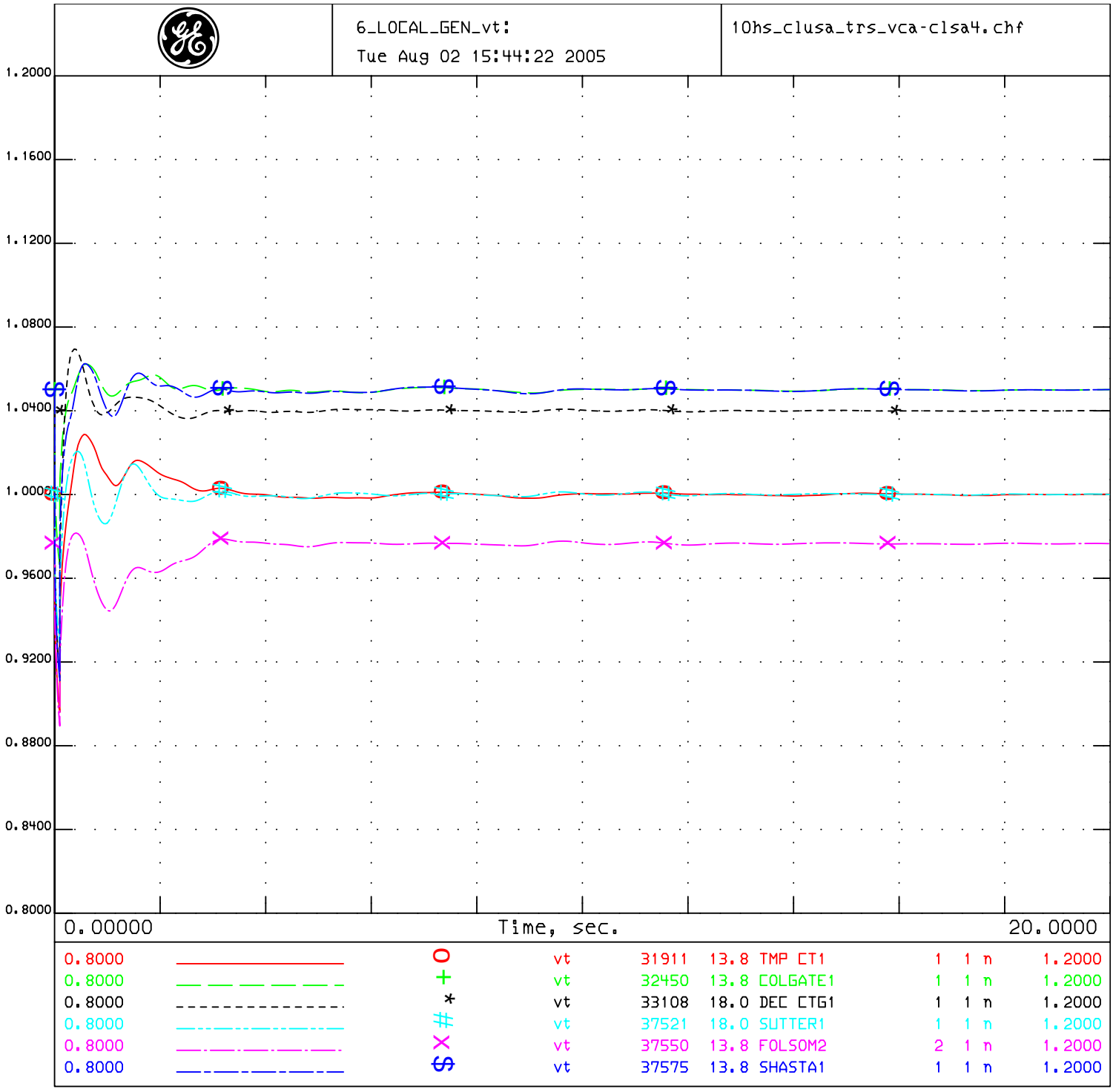

PG&E 2004 BASE CASE SERIES - 2010 North Valley Summer Peak Case
PATH15=-1127 MW(S-N) PATH26=3313 MW(N-S) PDCI=3105 MW(N-S) COI=4710 MW(N-S)
CPV Colusa - 2010 Summer Peak - after

Trip Colusa SWYD - Vaca #4 230 kV LINE

original case 3/26/2004 by SATS 2009 system summer peak
updated loads to 2010 system summer peak
added 2010 North Valley 1-in-10 loads and generation dispatch
Morro Bay 4 is the swing bus
Proposed new generation in queue added
CPV Colusa 97 MW looped onto:
Cottonwood - Cortina 230 kV Line (#1)
Cottonwood - Vaca Dixon 230 kV Line (#2)
Logan Creek - Vaca Dixon 230 kV Line (#3)
Glenn - Vaca Dixon 230 kV Line (#4)

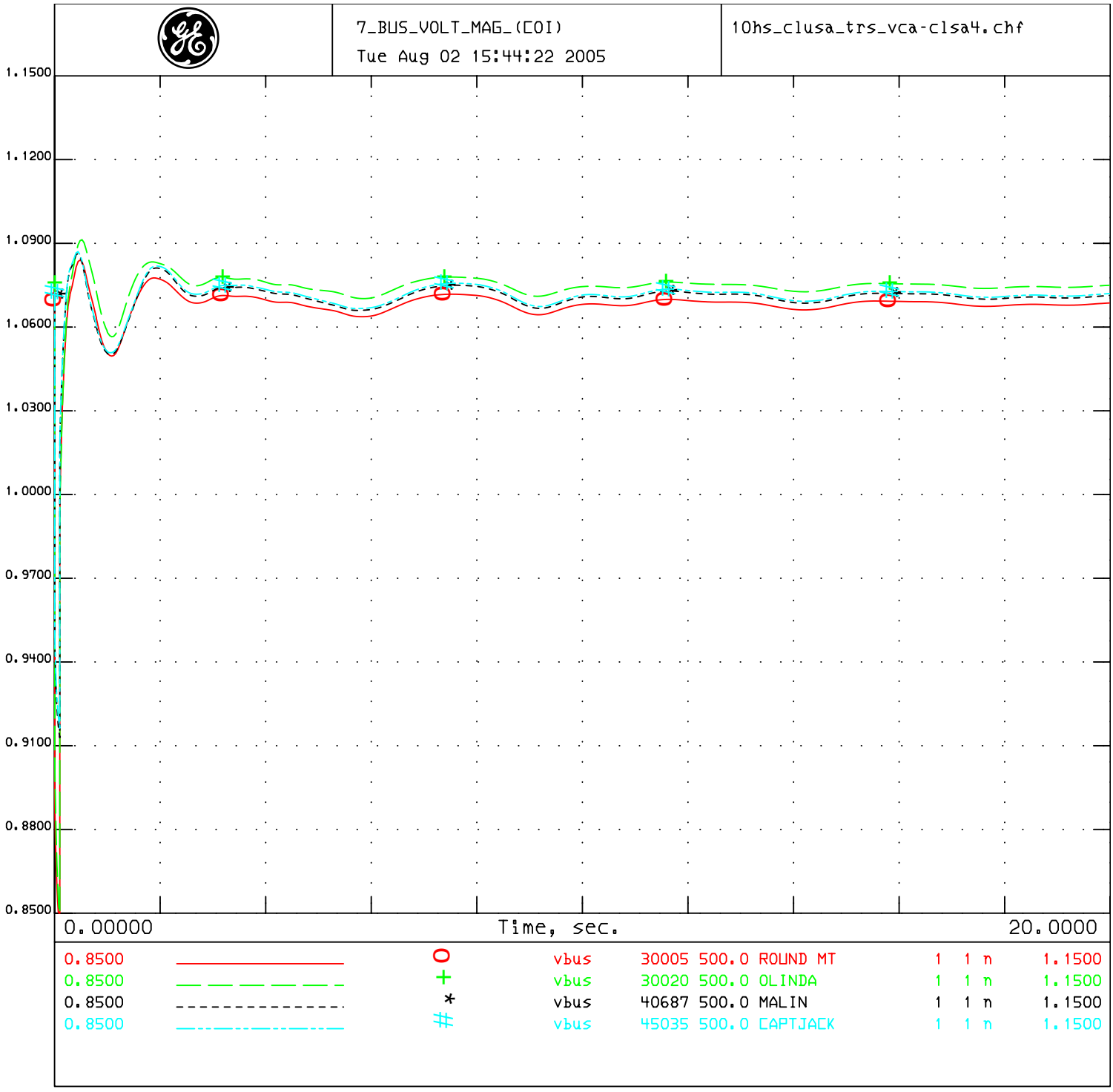

PG&E 2004 BASE CASE SERIES - 2010 North Valley Summer Peak Case
PATH15=-1127 MW(S-N) PATH26=3313 MW(N-S) PDCI=3105 MW(N-S) COI=4710 MW(N-S)
CPV Colusa - 2010 Summer Peak - after

Trip Colusa SWYD - Vaca #4 230 kV LINE

original case 3/26/2004 by SATS 2009 system summer peak
updated loads to 2010 system summer peak
added 2010 North Valley 1-in-10 loads and generation dispatch
Morro Bay 4 is the swing bus
Proposed new generation in queue added
CPV Colusa 97 MW looped onto:
Cottonwood - Cortina 230 kV Line (#1)
Cottonwood - Vaca Dixon 230 kV Line (#2)
Logan Creek - Vaca Dixon 230 kV Line (#3)
Glenn - Vaca Dixon 230 kV Line (#4)

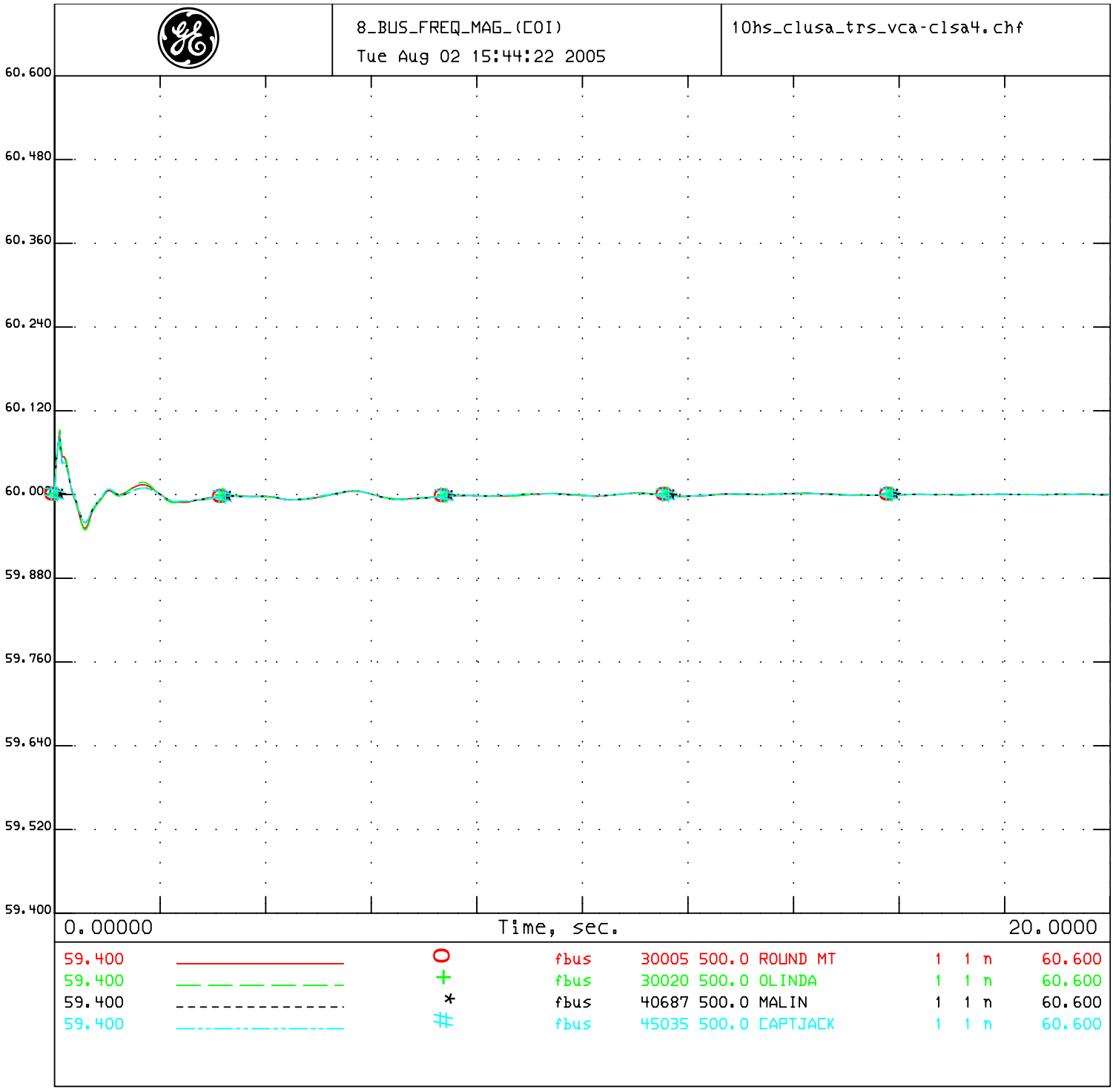

PG&E 2004 BASE CASE SERIES - 2010 North Valley Summer Peak Case
PATH15=-1127 MW(S-N) PATH26=3313 MW(N-S) PDCI=3105 MW(N-S) COI=4710 MW(N-S)
CPV Colusa - 2010 Summer Peak - after

Trip Colusa SWYD - Vaca #4 230 kV LINE

original case 3/26/2004 by SATS 2009 system summer peak
updated loads to 2010 system summer peak
added 2010 North Valley 1-in-10 loads and generation dispatch
Morro Bay 4 is the swing bus
Proposed new generation in queue added
CPV Colusa 97 MW looped onto:
Cottonwood - Cortina 230 kV Line (#1)
Cottonwood - Vaca Dixon 230 kV Line (#2)
Logan Creek - Vaca Dixon 230 kV Line (#3)
Glenn - Vaca Dixon 230 kV Line (#4)

1_COLUSA_vt_ang
Tue Aug 02 17:50:46 2005

10hs_clusa_trs_ctwd1e_bus.chf

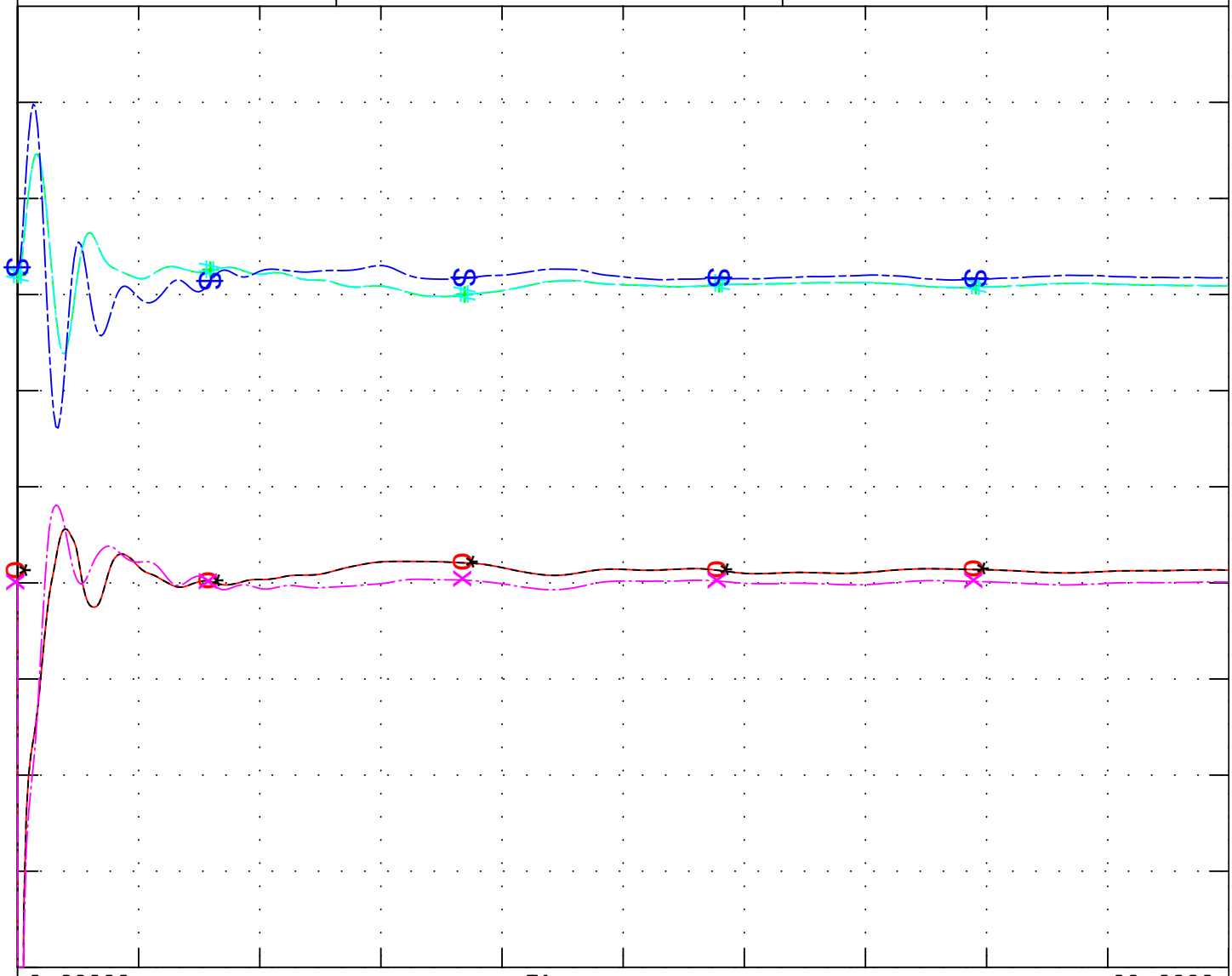

0.00000 Time, sec. 20.0000

0.8000		vt	31923	18.0	P0506GT1	1	1	1.2000
0.0000		ang	31923	18.0	P0506GT1	1	1	100.00
0.8000		vt	31924	18.0	P0506GT2	2	1	1.2000
0.0000		ang	31924	18.0	P0506GT2	2	1	100.00
0.8000		vt	31925	18.0	P0506ST1	3	1	1.2000
0.0000		ang	31925	18.0	P0506ST1	3	1	100.00

PG&E 2004 BASE CASE SERIES - 2010 North Valley Summer Peak Case
PATH15=-1127 MW(S-N) PATH26=3313 MW(N-S) PDCI=3105 MW(N-S) COI=4710 MW(N-S)
CPV Colusa - 2010 Summer Peak - after

COTTONWOOD BUS 1 SEC E Substation

original case 3/26/2004 by SATS 2009 system summer peak
updated loads to 2010 system summer peak
added 2010 North Valley 1-in-10 loads and generation dispatch
Morro Bay 4 is the swing bus
Proposed new generation in queue added
CPV Colusa 97 MW looped onto:
Cottonwood - Cortina 230 kV Line (#1)
Cottonwood - Vaca Dixon 230 kV Line (#2)
Logan Creek - Vaca Dixon 230 kV Line (#3)
Glenn - Vaca Dixon 230 kV Line (#4)

2_COLUSA_spd_pg
Tue Aug 02 17:50:46 2005

10hs_clusa_trs_ctwd1e_bus.chf

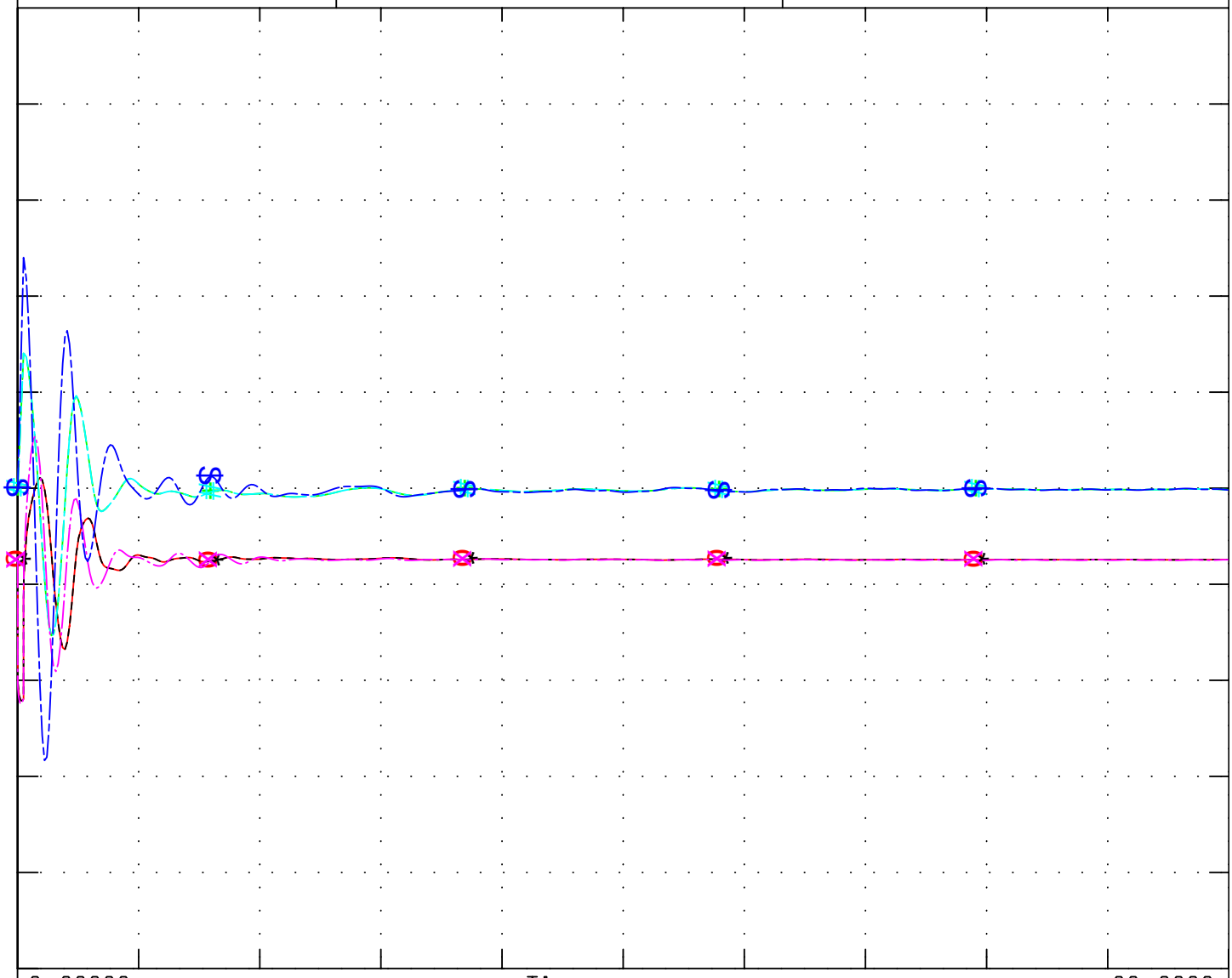

0.0000		O	pg	31923	18.0	P0506GT1	1	1	n	468.00
0.9900		+	spd	31923	18.0	P0506GT1	1	1	n	1.0100
0.0000		*	pg	31924	18.0	P0506GT2	2	1	n	468.00
0.9900		#	spd	31924	18.0	P0506GT2	2	1	n	1.0100
0.0000		X	pg	31925	18.0	P0506ST1	3	1	n	746.00
0.9900		$	spd	31925	18.0	P0506ST1	3	1	n	1.0100

PG&E 2004 BASE CASE SERIES - 2010 North Valley Summer Peak Case
PATH15=-1127 MW(S-N) PATH26=3313 MW(N-S) PDCI=3105 MW(N-S) COI=4710 MW(N-S)
CPV Colusa - 2010 Summer Peak - after

COTTONWOOD BUS 1 SEC E Substation

original case 3/26/2004 by SATS 2009 system summer peak
updated loads to 2010 system summer peak
added 2010 North Valley 1-in-10 loads and generation dispatch
Morro Bay 4 is the swing bus
Proposed new generation in queue added
CPV Colusa 97 MW looped onto:
Cottonwood - Cortina 230 kV Line (#1)
Cottonwood - Vaca Dixon 230 kV Line (#2)
Logan Creek - Vaca Dixon 230 kV Line (#3)
Glenn - Vaca Dixon 230 kV Line (#4)

3_BUS_VOLT_MAG_230:
Tue Aug 02 17:50:46 2005

10hs_clusa_trs_ctwd1e_bus.chf

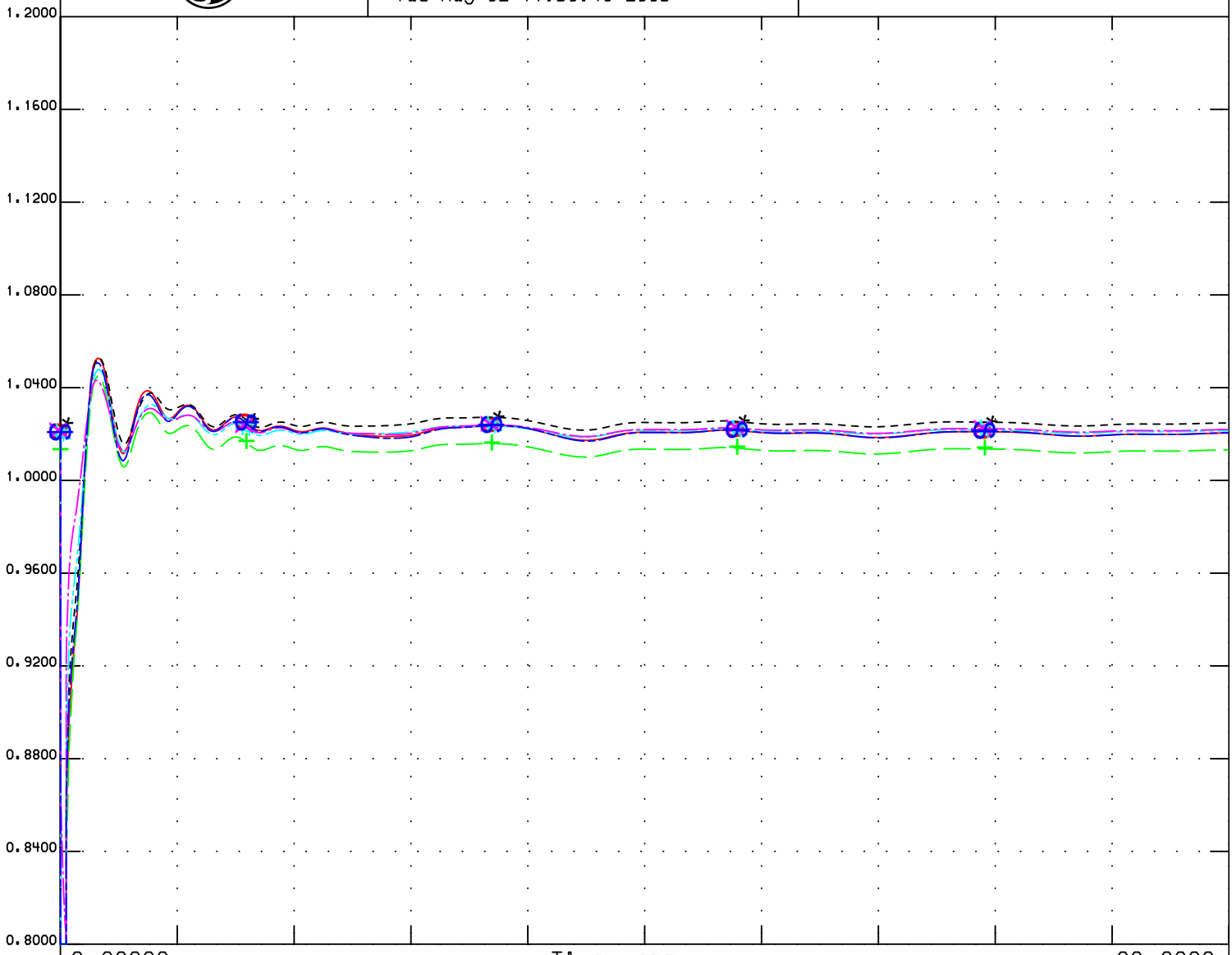

0.8000	————	O	vbus	30106	230.0	COTWD_F	1	1	n	1.2000
0.8000	— — — — — —	+	vbus	30110	230.0	GLENN	1	1	n	1.2000
0.8000	- - - - - - - - - - - - - -	*	vbul	30111	230.0	LOGAN CR	1	1	n	1.2000
0.8000	—-—-—-—-—-—	#	vbus	30450	230.0	CORTINA	1	1	n	1.2000
0.8000	—.—.—.—.—.—	X	vbus	30460	230.0	VACA-DIX	1	1	n	1.2000
0.8000	—-—-—-—-—-—	S	vbus	37565	230.0	OLINDAW	1	1	n	1.2000

PG&E 2004 BASE CASE SERIES - 2010 North Valley Summer Peak Case
PATH15=-1127 MW(S-N) PATH26=3313 MW(N-S) PDCI=3105 MW(N-S) COI=4710 MW(N-S)
CPV Colusa - 2010 Summer Peak - after

COTTONWOOD BUS 1 SEC E Substation

original case 3/26/2004 by SATS 2009 system summer peak
updated loads to 2010 system summer peak
added 2010 North Valley 1-in-10 loads and generation dispatch
Morro Bay 4 is the swing bus
Proposed new generation in queue added
CPV Colusa 97 MW looped onto:
Cottonwood - Cortina 230 kV Line (#1)
Cottonwood - Vaca Dixon 230 kV Line (#2)
Logan Creek - Vaca Dixon 230 kV Line (#3)
Glenn - Vaca Dixon 230 kV Line (#4)

4_BUS_VOLT_MAG_230:
Tue Aug 02 17:50:46 2005

10hs_clusa_trs_ctwd1e_bus.chf

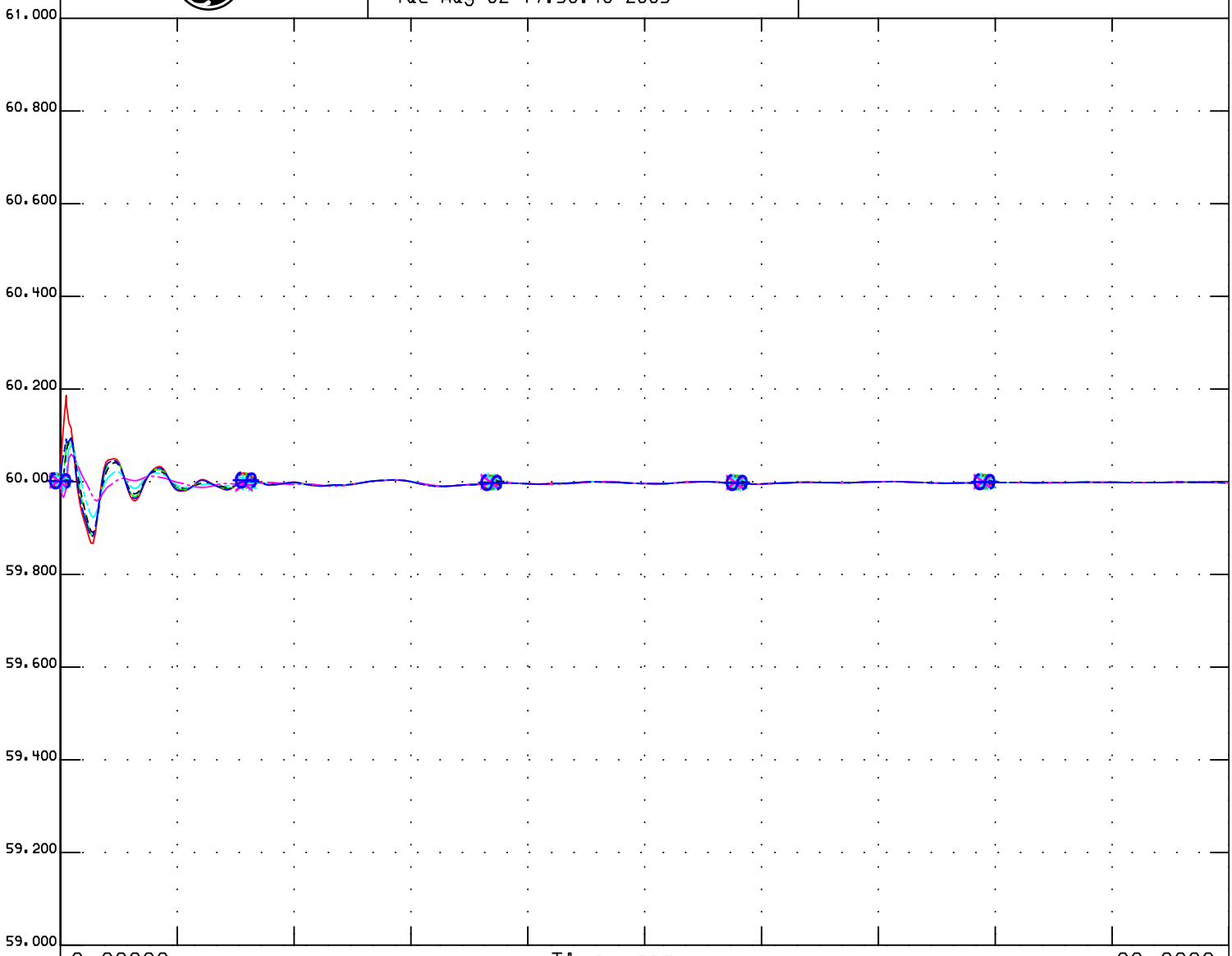

59.000		O	fbus	30106	230.0	COTWD_F	1	1 n	61.000
59.000		+	fbus	30110	230.0	GLENN	1	1 n	61.000
59.000		*	fbul	30111	230.0	LOGAN CR	1	1 n	61.000
59.000		#	fbus	30450	230.0	CORTINA	1	1 n	61.000
59.000		X	fbus	30460	230.0	VACA-DIX	1	1 n	61.000
59.000		$	fbus	37565	230.0	OLINDAW	1	1 n	61.000

PG&E 2004 BASE CASE SERIES - 2010 North Valley Summer Peak Case
PATH15=-1127 MW(S-N) PATH26=3313 MW(N-S) PDCI=3105 MW(N-S) COI=4710 MW(N-S)
CPV Colusa - 2010 Summer Peak - after

COTTONWOOD BUS 1 SEC E Substation

original case 3/26/2004 by SATS 2009 system summer peak
updated loads to 2010 system summer peak
added 2010 North Valley 1-in-10 loads and generation dispatch
Morro Bay 4 is the swing bus
Proposed new generation in queue added
CPV Colusa 97 MW looped onto:
Cottonwood - Cortina 230 kV Line (#1)
Cottonwood - Vaca Dixon 230 kV Line (#2)
Logan Creek - Vaca Dixon 230 kV Line (#3)
Glenn - Vaca Dixon 230 kV Line (#4)

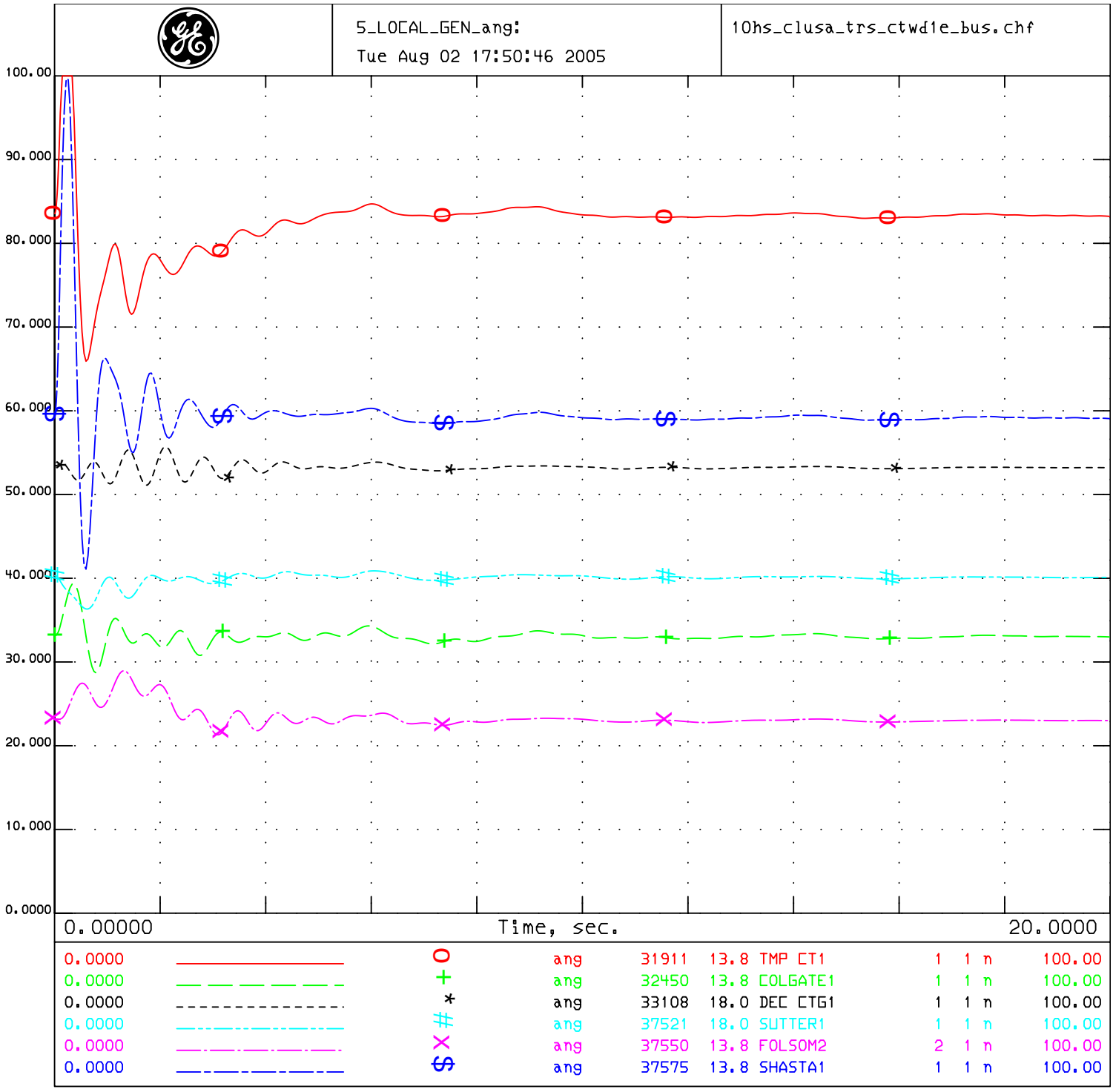

PG&E 2004 BASE CASE SERIES - 2010 North Valley Summer Peak Case
PATH15=-1127 MW(S-N) PATH26=3313 MW(N-S) PDCI=3105 MW(N-S) COI=4710 MW(N-S)
CPV Colusa - 2010 Summer Peak - after

COTTONWOOD BUS 1 SEC E Substation

original case 3/26/2004 by SATS 2009 system summer peak
updated loads to 2010 system summer peak
added 2010 North Valley 1-in-10 loads and generation dispatch
Morro Bay 4 is the swing bus
Proposed new generation in queue added
CPV Colusa 97 MW looped onto:
Cottonwood - Cortina 230 kV Line (#1)
Cottonwood - Vaca Dixon 230 kV Line (#2)
Logan Creek - Vaca Dixon 230 kV Line (#3)
Glenn - Vaca Dixon 230 kV Line (#4)

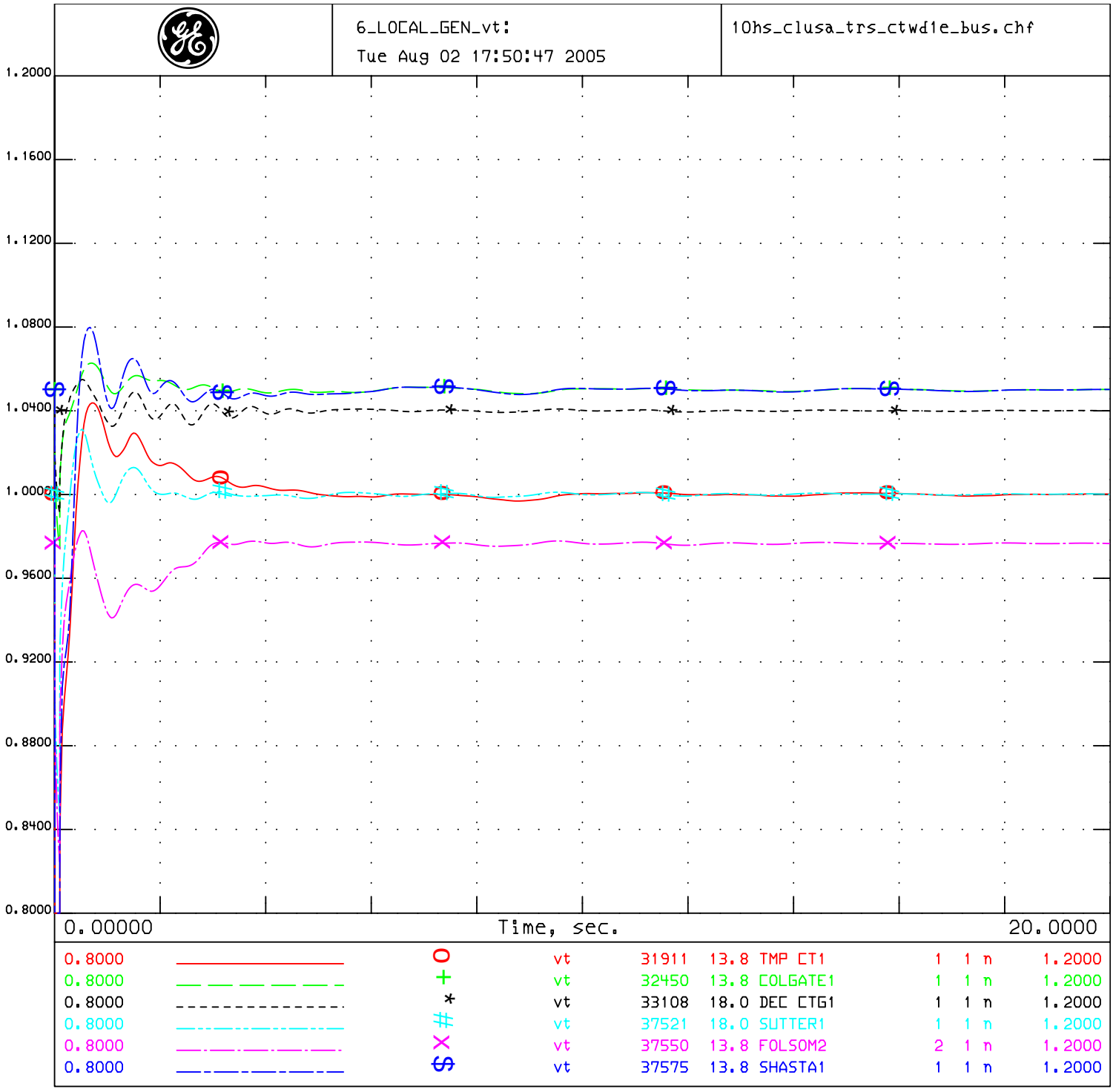

PG&E 2004 BASE CASE SERIES - 2010 North Valley Summer Peak Case
PATH15=-1127 MW(S-N) PATH26=3313 MW(N-S) PDCI=3105 MW(N-S) COI=4710 MW(N-S)
CPV Colusa - 2010 Summer Peak - after

COTTONWOOD BUS 1 SEC E Substation

original case 3/26/2004 by SATS 2009 system summer peak
updated loads to 2010 system summer peak
added 2010 North Valley 1-in-10 loads and generation dispatch
Morro Bay 4 is the swing bus
Proposed new generation in queue added
CPV Colusa 97 MW looped onto:
Cottonwood - Cortina 230 kV Line (#1)
Cottonwood - Vaca Dixon 230 kV Line (#2)
Logan Creek - Vaca Dixon 230 kV Line (#3)
Glenn - Vaca Dixon 230 kV Line (#4)

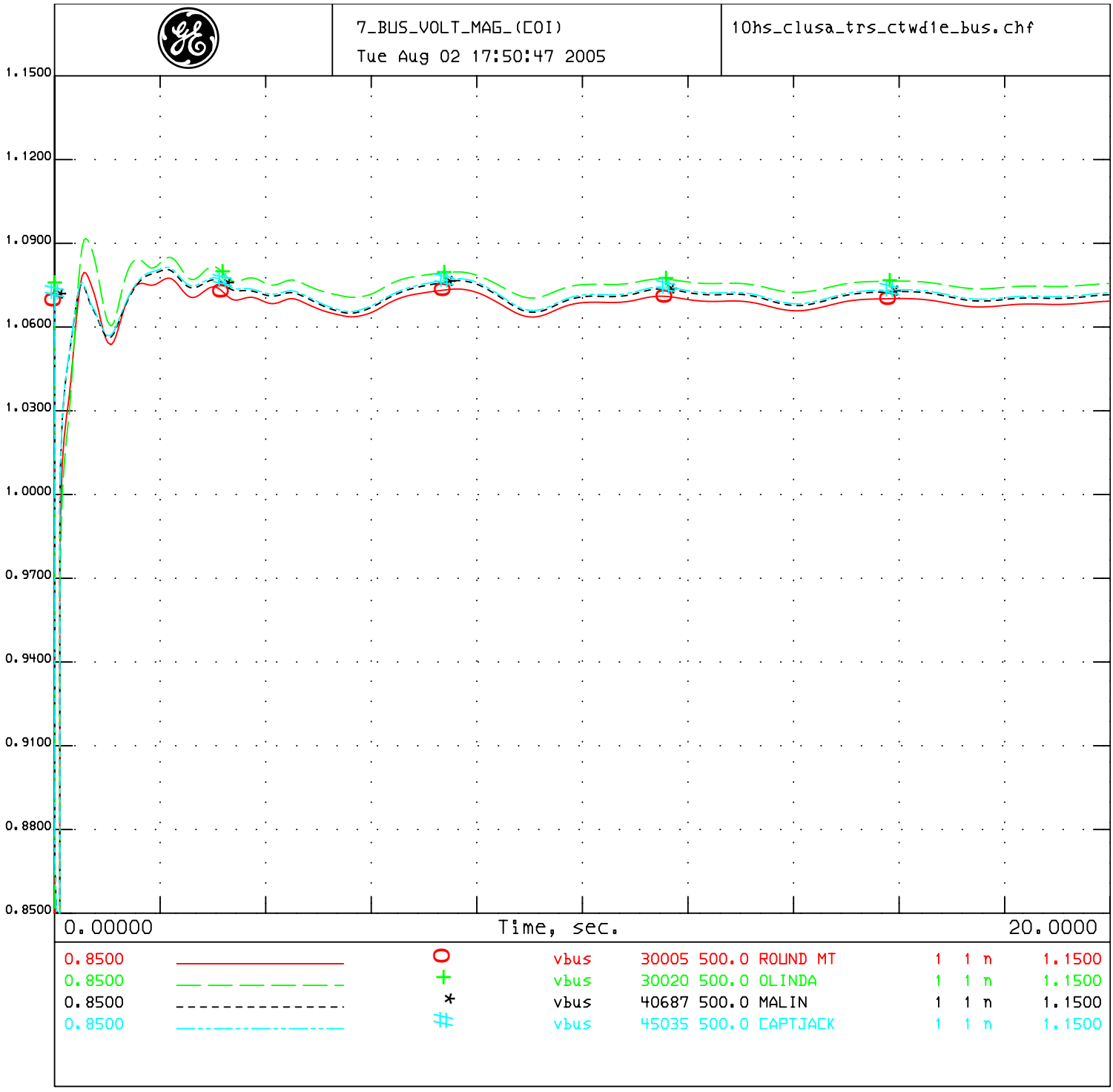

PG&E 2004 BASE CASE SERIES - 2010 North Valley Summer Peak Case
PATH15=-1127 MW(S-N) PATH26=3313 MW(N-S) PDCI=3105 MW(N-S) COI=4710 MW(N-S)
CPV Colusa - 2010 Summer Peak - after

COTTONWOOD BUS 1 SEC E Substation

original case 3/26/2004 by SATS 2009 system summer peak
updated loads to 2010 system summer peak
added 2010 North Valley 1-in-10 loads and generation dispatch
Morro Bay 4 is the swing bus
Proposed new generation in queue added
CPV Colusa 97 MW looped onto:
Cottonwood - Cortina 230 kV Line (#1)
Cottonwood - Vaca Dixon 230 kV Line (#2)
Logan Creek - Vaca Dixon 230 kV Line (#3)
Glenn - Vaca Dixon 230 kV Line (#4)

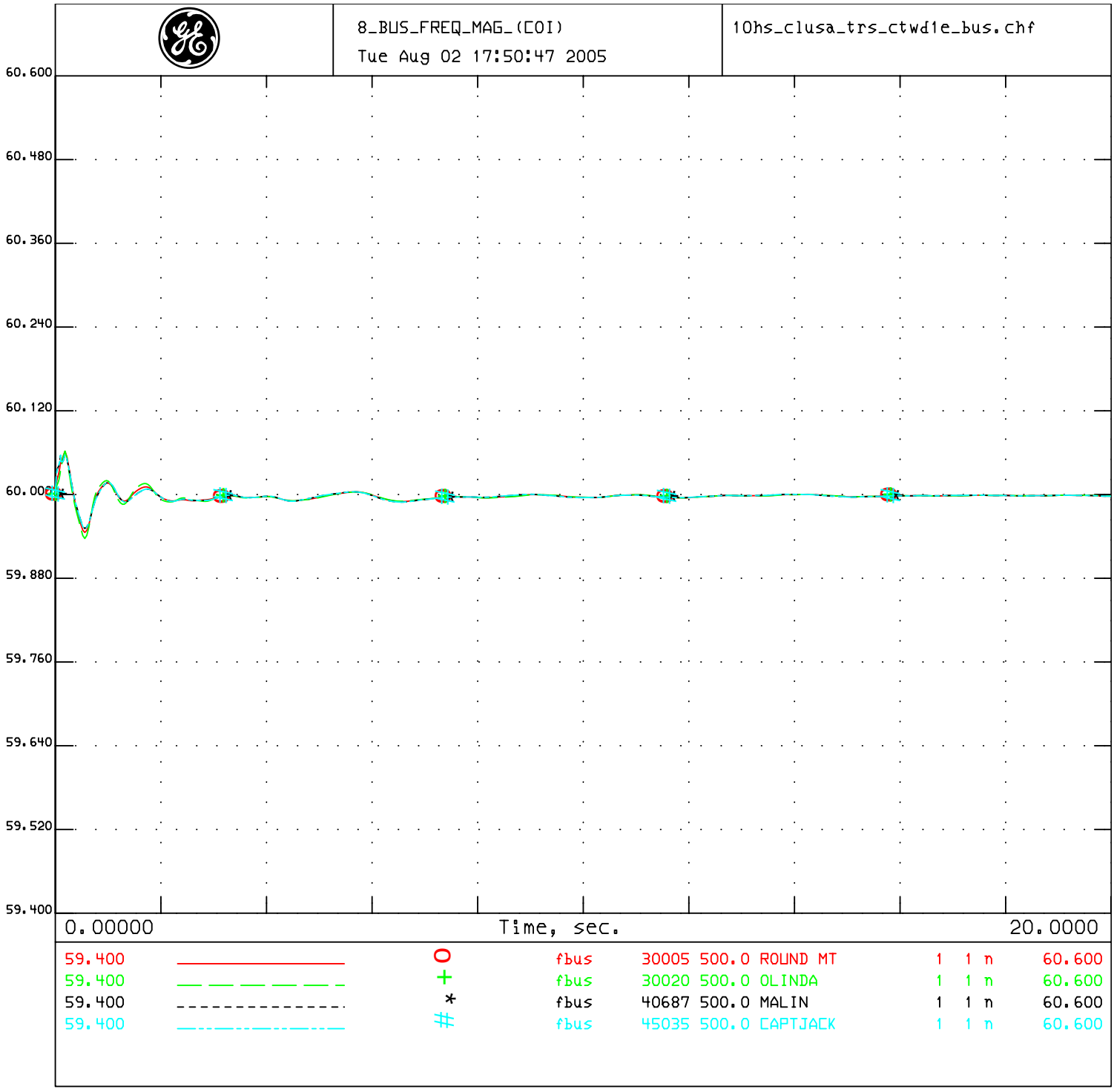

PG&E 2004 BASE CASE SERIES - 2010 North Valley Summer Peak Case
PATH15=-1127 MW(S-N) PATH26=3313 MW(N-S) PDCI=3105 MW(N-S) COI=4710 MW(N-S)
CPV Colusa - 2010 Summer Peak - after

COTTONWOOD BUS 1 SEC E Substation

original case 3/26/2004 by SATS 2009 system summer peak
updated loads to 2010 system summer peak
added 2010 North Valley 1-in-10 loads and generation dispatch
Morro Bay 4 is the swing bus
Proposed new generation in queue added
CPV Colusa 97 MW looped onto:
Cottonwood - Cortina 230 kV Line (#1)
Cottonwood - Vaca Dixon 230 kV Line (#2)
Logan Creek - Vaca Dixon 230 kV Line (#3)
Glenn - Vaca Dixon 230 kV Line (#4)

1_COLUSA_vt_ang
Tue Aug 02 15:08:36 2005

10hs_clusa_trs_ctwd1f_bus.chf

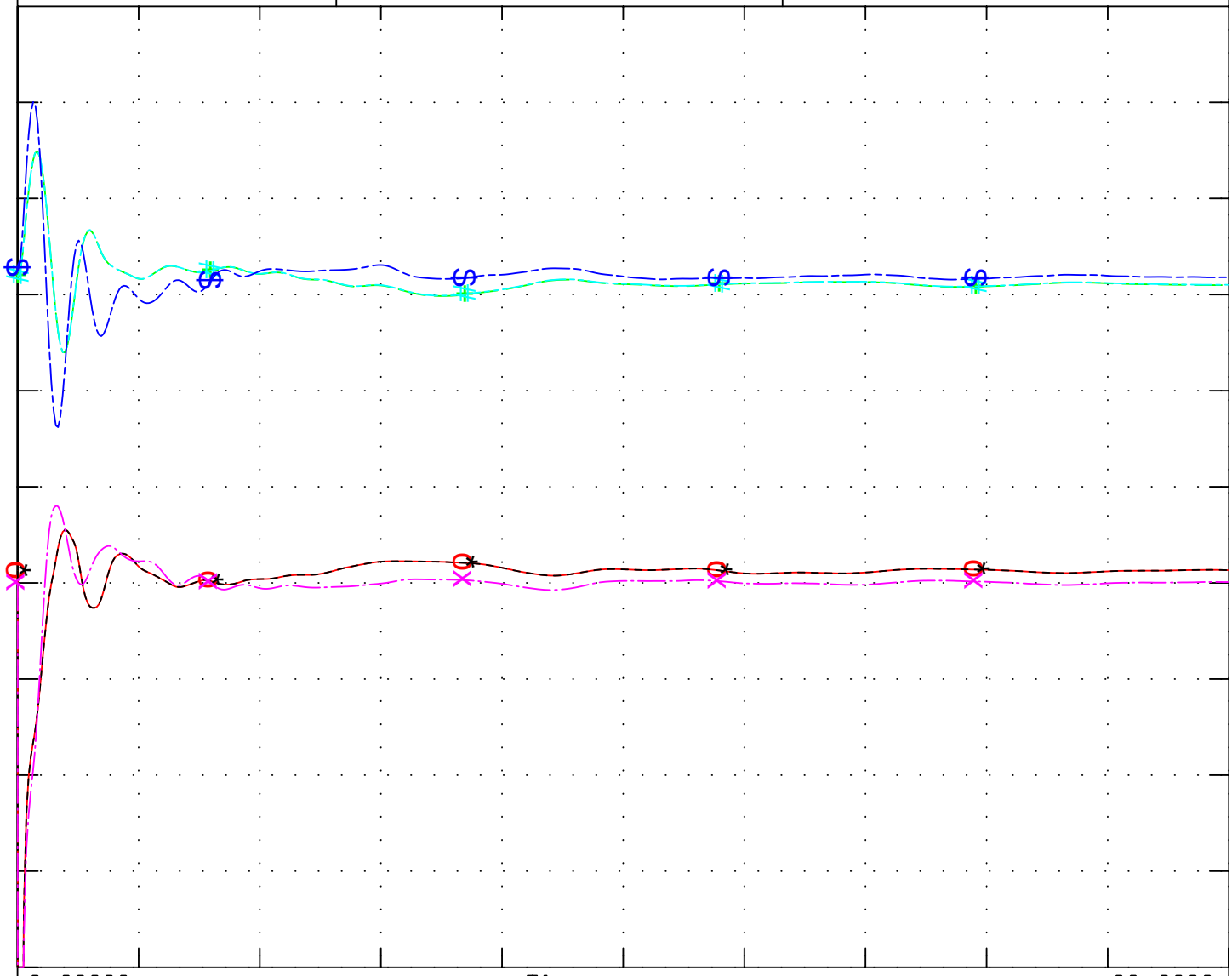

0.8000	————	O	vt	31923	18.0	P0506GT1	1	1	1.2000
0.0000	— — — — — —	+	ang	31923	18.0	P0506GT1	1	1	100.00
0.8000	- - - - - - - - - - - - -	*	vt	31924	18.0	P0506GT2	2	1	1.2000
0.0000	—-—-—-—-—-—	#	ang	31924	18.0	P0506GT2	2	1	100.00
0.8000	—.—.—.—.—.—	×	vt	31925	18.0	P0506ST1	3	1	1.2000
0.0000	—-—-—-—-—-—	⊗	ang	31925	18.0	P0506ST1	3	1	100.00

PG&E 2004 BASE CASE SERIES - 2010 North Valley Summer Peak Case
PATH15=-1127 MW(S-N) PATH26=3313 MW(N-S) PDCI=3105 MW(N-S) COI=4710 MW(N-S)
CPV Colusa - 2010 Summer Peak - after

Trip COTTONWOOD BUS 1 SEC F Substation

original case 3/26/2004 by SATS 2009 system summer peak
updated loads to 2010 system summer peak
added 2010 North Valley 1-in-10 loads and generation dispatch
Morro Bay 4 is the swing bus
Proposed new generation in queue added
CPV Colusa 97 MW looped onto:
Cottonwood - Cortina 230 kV Line (#1)
Cottonwood - Vaca Dixon 230 kV Line (#2)
Logan Creek - Vaca Dixon 230 kV Line (#3)
Glenn - Vaca Dixon 230 kV Line (#4)

2_COLUSA_spd_pg
Tue Aug 02 15:08:36 2005

10hs_clusa_trs_ctwd1f_bus.chf

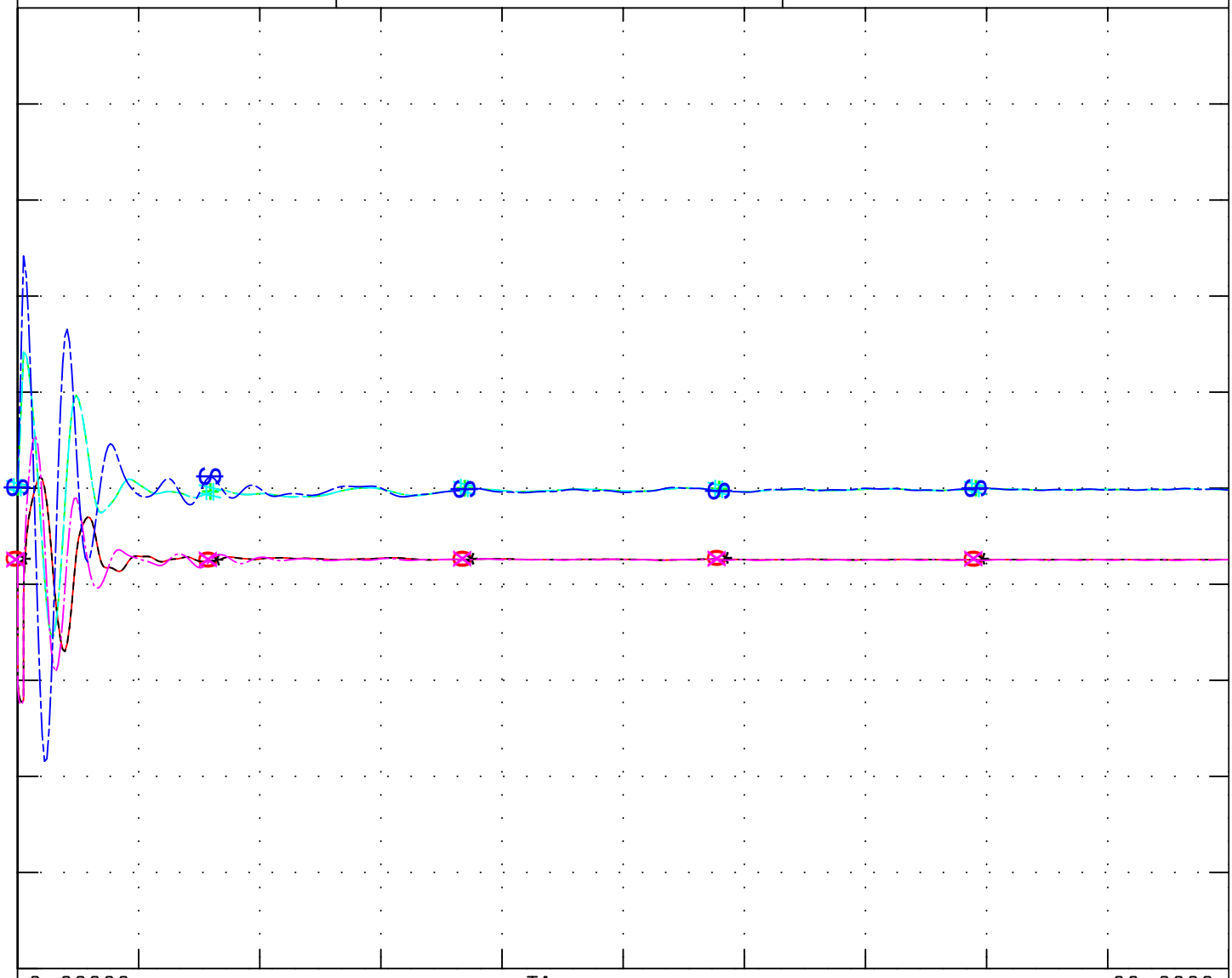

0.0000		O	pg	31923	18.0	P0506GT1	1	1	n	468.00
0.9900		+	spd	31923	18.0	P0506GT1	1	1	n	1.0100
0.0000		*	pg	31924	18.0	P0506GT2	2	1	n	468.00
0.9900		#	spd	31924	18.0	P0506GT2	2	1	n	1.0100
0.0000		X	pg	31925	18.0	P0506ST1	3	1	n	746.00
0.9900		$	spd	31925	18.0	P0506ST1	3	1	n	1.0100

PG&E 2004 BASE CASE SERIES - 2010 North Valley Summer Peak Case
PATH15=-1127 MW(S-N) PATH26=3313 MW(N-S) PDCI=3105 MW(N-S) COI=4710 MW(N-S)
CPV Colusa - 2010 Summer Peak - after

Trip COTTONWOOD BUS 1 SEC F Substation

original case 3/26/2004 by SATS 2009 system summer peak
updated loads to 2010 system summer peak
added 2010 North Valley 1-in-10 loads and generation dispatch
Morro Bay 4 is the swing bus
Proposed new generation in queue added
CPV Colusa 97 MW looped onto:
Cottonwood - Cortina 230 kV Line (#1)
Cottonwood - Vaca Dixon 230 kV Line (#2)
Logan Creek - Vaca Dixon 230 kV Line (#3)
Glenn - Vaca Dixon 230 kV Line (#4)

3_BUS_VOLT_MAG_230:
Tue Aug 02 15:08:36 2005

10hs_clusa_trs_ctwd1f_bus.chf

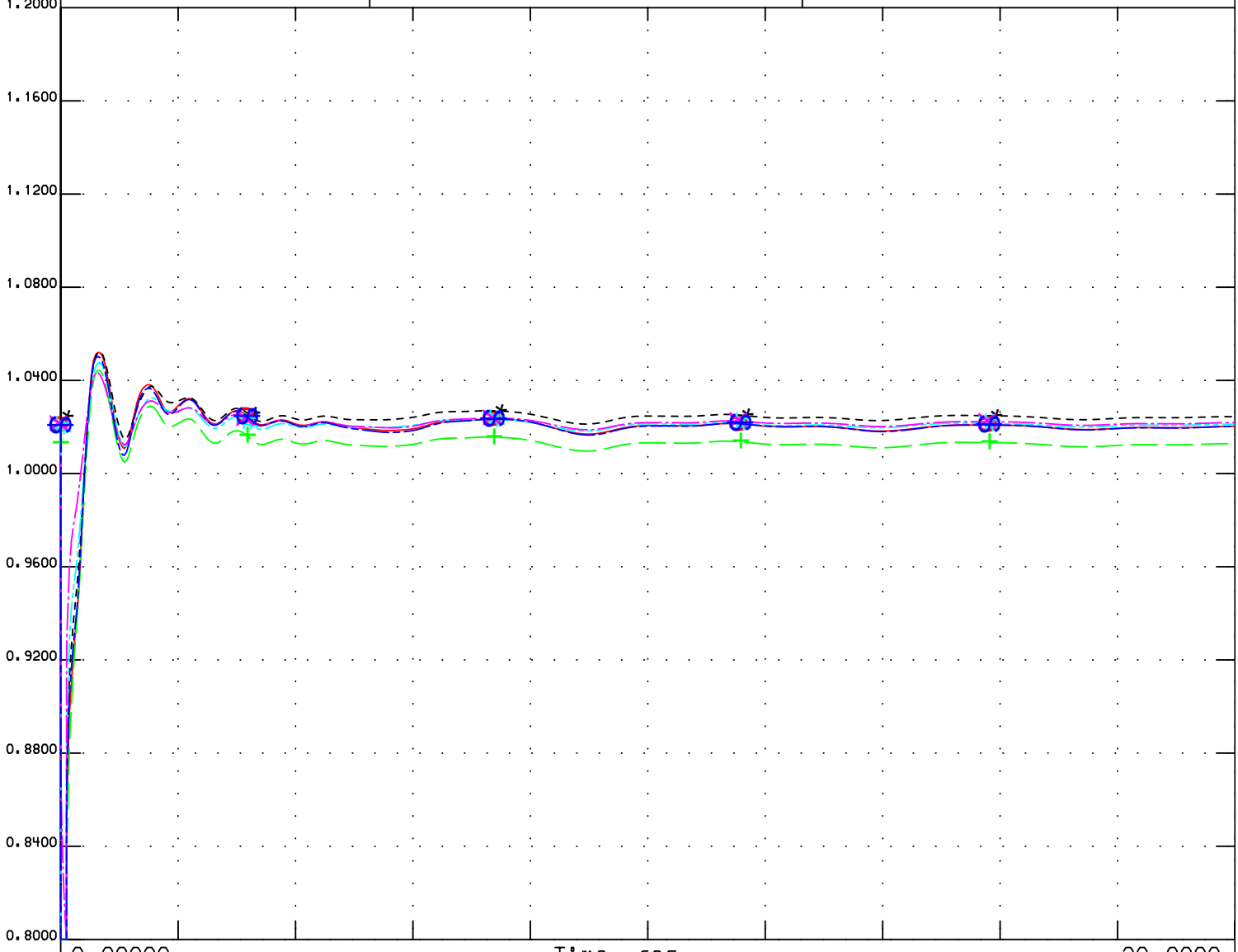

0.8000	————————	O	vbus	30106	230.0	COTWD_F	1	1	n	1.2000
0.8000	— — — — — —	+	vbus	30110	230.0	GLENN	1	1	n	1.2000
0.8000	- - - - - - - - - - - - - -	*	vbul	30111	230.0	LOGAN CR	1	1	n	1.2000
0.8000	—-—-—-—-—-—	#	vbus	30450	230.0	CORTINA	1	1	n	1.2000
0.8000	—.—.—.—.—.—	X	vbus	30460	230.0	VACA-DIX	1	1	n	1.2000
0.8000	—-—-—-—-—-—	S	vbus	37565	230.0	OLINDAW	1	1	n	1.2000

PG&E 2004 BASE CASE SERIES - 2010 North Valley Summer Peak Case
PATH15=-1127 MW(S-N) PATH26=3313 MW(N-S) PDCI=3105 MW(N-S) COI=4710 MW(N-S)
CPV Colusa - 2010 Summer Peak - after

Trip COTTONWOOD BUS 1 SEC F Substation

original case 3/26/2004 by SATS 2009 system summer peak
updated loads to 2010 system summer peak
added 2010 North Valley 1-in-10 loads and generation dispatch
Morro Bay 4 is the swing bus
Proposed new generation in queue added
CPV Colusa 97 MW looped onto:
Cottonwood - Cortina 230 kV Line (#1)
Cottonwood - Vaca Dixon 230 kV Line (#2)
Logan Creek - Vaca Dixon 230 kV Line (#3)
Glenn - Vaca Dixon 230 kV Line (#4)

4_BUS_VOLT_MAG_230:
Tue Aug 02 15:08:37 2005

10hs_clusa_trs_ctwd1f_bus.chf

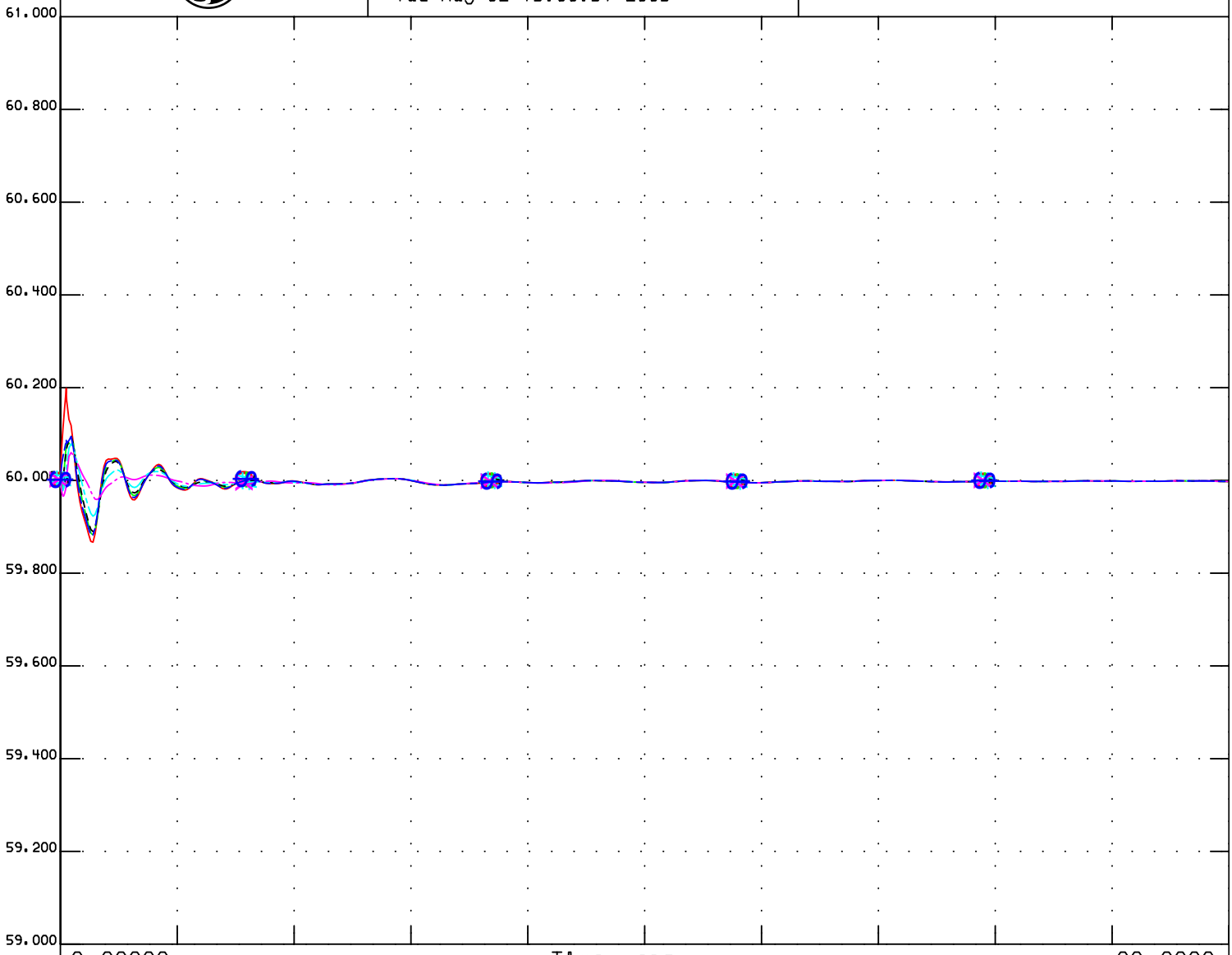

59.000		O	fbus	30106	230.0	COTWD_F	1	1	n	61.000
59.000		+	fbus	30110	230.0	GLENN	1	1	n	61.000
59.000		*	fbul	30111	230.0	LOGAN CR	1	1	n	61.000
59.000		#	fbus	30450	230.0	CORTINA	1	1	n	61.000
59.000		X	fbus	30460	230.0	VACA-DIX	1	1	n	61.000
59.000		$	fbus	37565	230.0	OLINDAW	1	1	n	61.000

PG&E 2004 BASE CASE SERIES - 2010 North Valley Summer Peak Case
PATH15=-1127 MW(S-N) PATH26=3313 MW(N-S) PDCI=3105 MW(N-S) COI=4710 MW(N-S)
CPV Colusa - 2010 Summer Peak - after

Trip COTTONWOOD BUS 1 SEC F Substation

original case 3/26/2004 by SATS 2009 system summer peak
updated loads to 2010 system summer peak
added 2010 North Valley 1-in-10 loads and generation dispatch
Morro Bay 4 is the swing bus
Proposed new generation in queue added
CPV Colusa 97 MW looped onto:
Cottonwood - Cortina 230 kV Line (#1)
Cottonwood - Vaca Dixon 230 kV Line (#2)
Logan Creek - Vaca Dixon 230 kV Line (#3)
Glenn - Vaca Dixon 230 kV Line (#4)

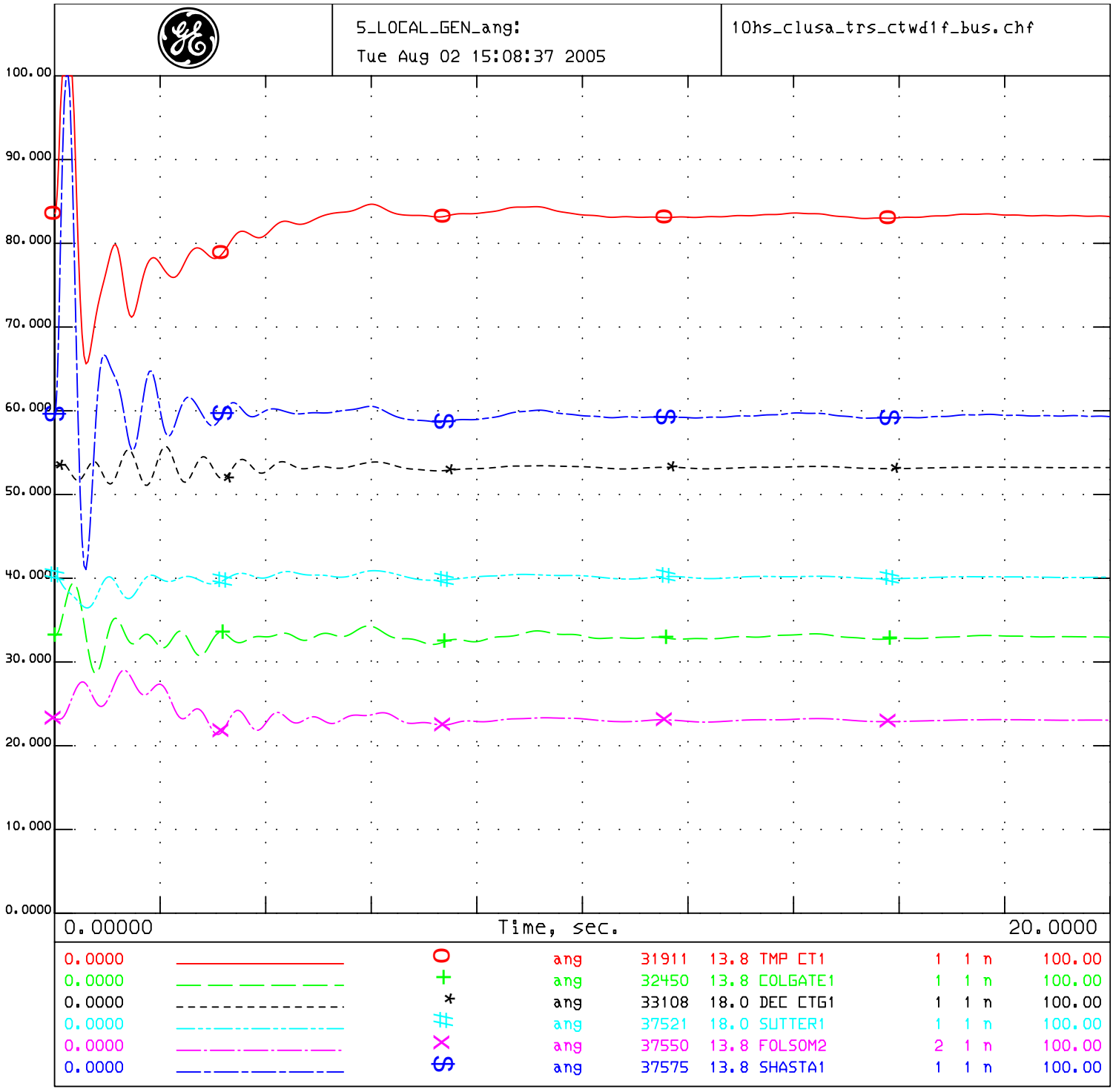

PG&E 2004 BASE CASE SERIES - 2010 North Valley Summer Peak Case
PATH15=-1127 MW(S-N) PATH26=3313 MW(N-S) PDCI=3105 MW(N-S) COI=4710 MW(N-S)
CPV Colusa - 2010 Summer Peak - after

Trip COTTONWOOD BUS 1 SEC F Substation

original case 3/26/2004 by SATS 2009 system summer peak
updated loads to 2010 system summer peak
added 2010 North Valley 1-in-10 loads and generation dispatch
Morro Bay 4 is the swing bus
Proposed new generation in queue added
CPV Colusa 97 MW looped onto:
Cottonwood - Cortina 230 kV Line (#1)
Cottonwood - Vaca Dixon 230 kV Line (#2)
Logan Creek - Vaca Dixon 230 kV Line (#3)
Glenn - Vaca Dixon 230 kV Line (#4)

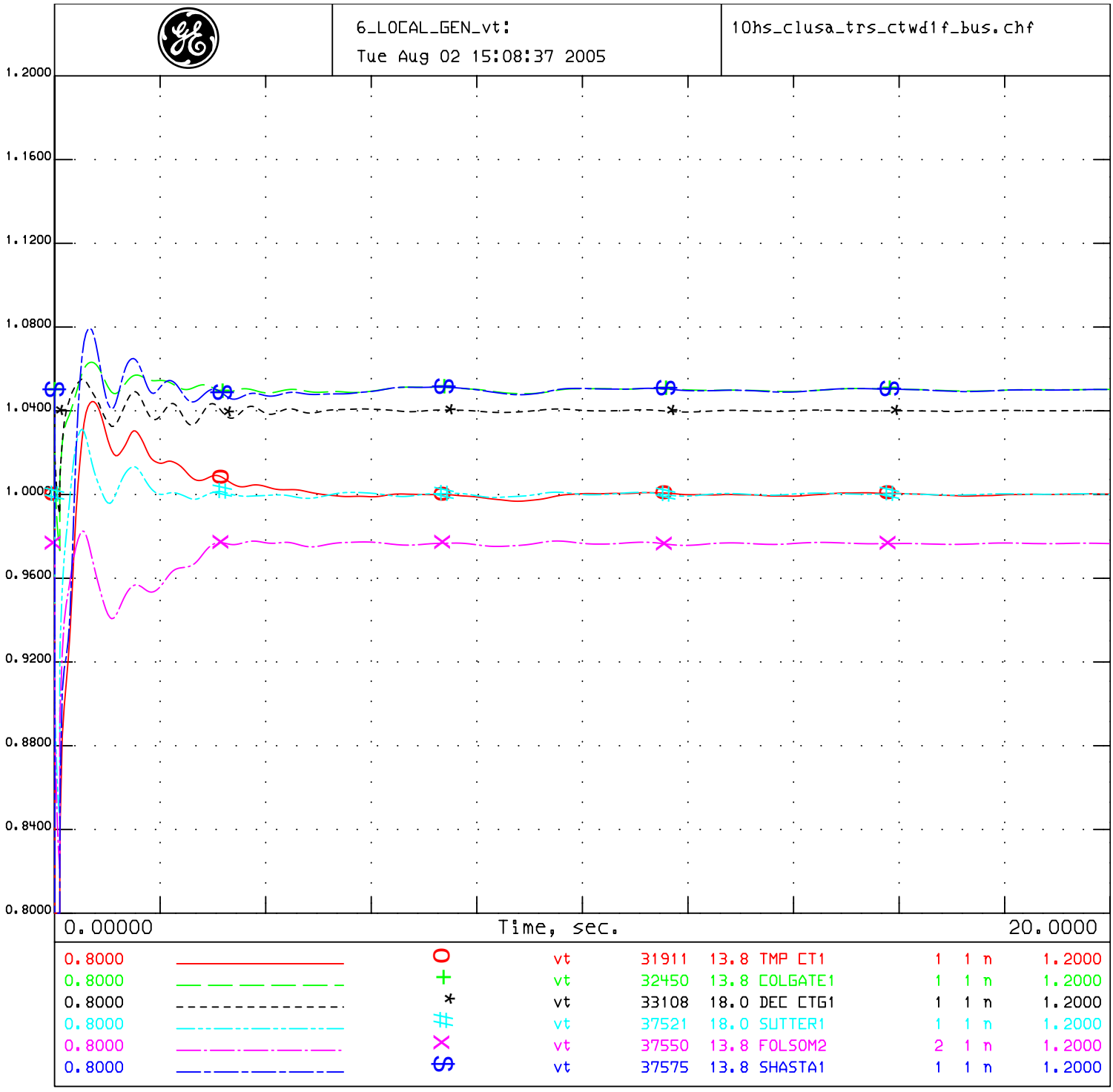

PG&E 2004 BASE CASE SERIES - 2010 North Valley Summer Peak Case
PATH15=-1127 MW(S-N) PATH26=3313 MW(N-S) PDCI=3105 MW(N-S) COI=4710 MW(N-S)
CPV Colusa - 2010 Summer Peak - after

Trip COTTONWOOD BUS 1 SEC F Substation

original case 3/26/2004 by SATS 2009 system summer peak
updated loads to 2010 system summer peak
added 2010 North Valley 1-in-10 loads and generation dispatch
Morro Bay 4 is the swing bus
Proposed new generation in queue added
CPV Colusa 97 MW looped onto:
Cottonwood - Cortina 230 kV Line (#1)
Cottonwood - Vaca Dixon 230 kV Line (#2)
Logan Creek - Vaca Dixon 230 kV Line (#3)
Glenn - Vaca Dixon 230 kV Line (#4)

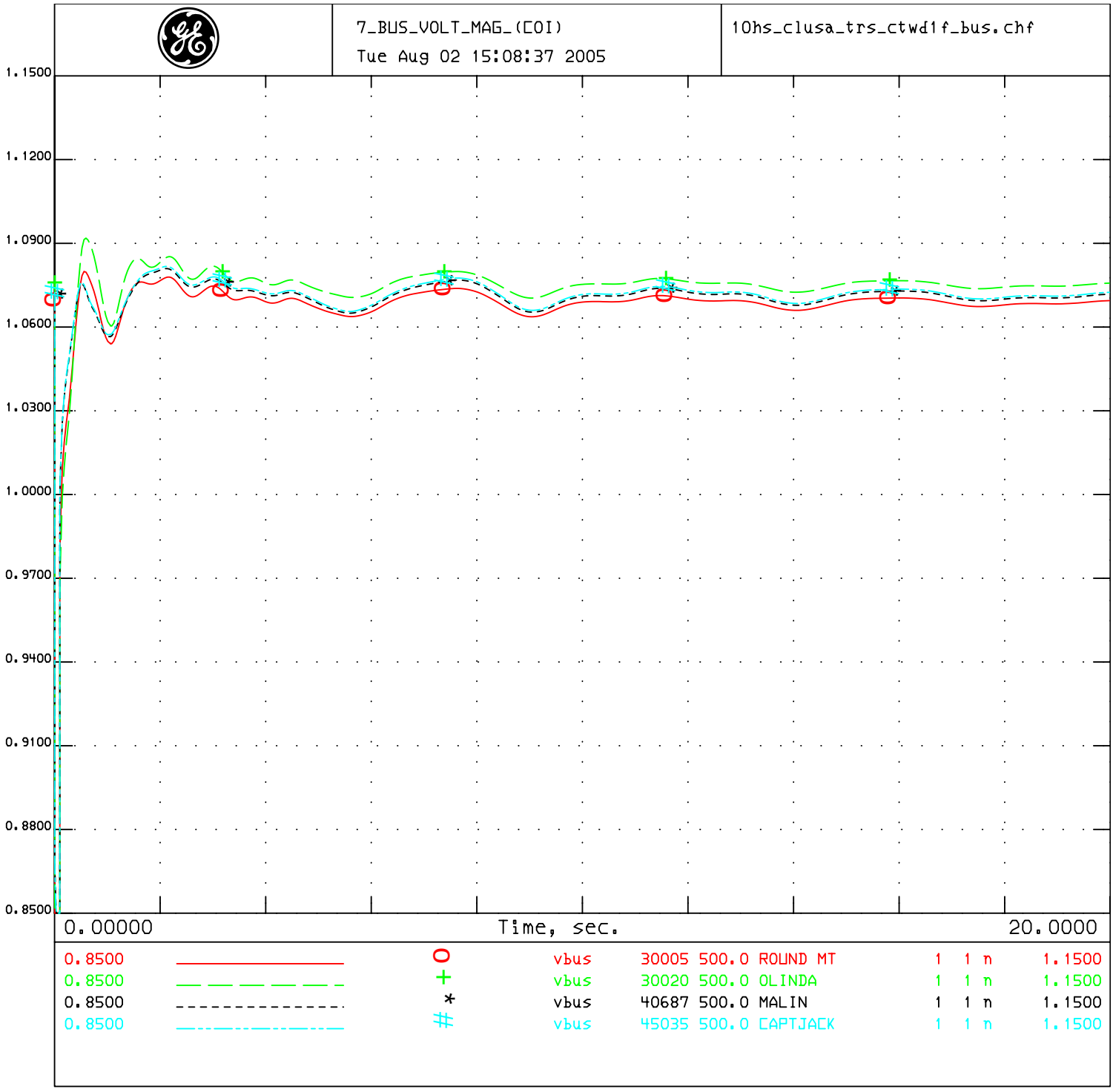

PG&E 2004 BASE CASE SERIES - 2010 North Valley Summer Peak Case
PATH15=-1127 MW(S-N) PATH26=3313 MW(N-S) PDCI=3105 MW(N-S) COI=4710 MW(N-S)
CPV Colusa - 2010 Summer Peak - after

Trip COTTONWOOD BUS 1 SEC F Substation

original case 3/26/2004 by SATS 2009 system summer peak
updated loads to 2010 system summer peak
added 2010 North Valley 1-in-10 loads and generation dispatch
Morro Bay 4 is the swing bus
Proposed new generation in queue added
CPV Colusa 97 MW looped onto:
Cottonwood - Cortina 230 kV Line (#1)
Cottonwood - Vaca Dixon 230 kV Line (#2)
Logan Creek - Vaca Dixon 230 kV Line (#3)
Glenn - Vaca Dixon 230 kV Line (#4)

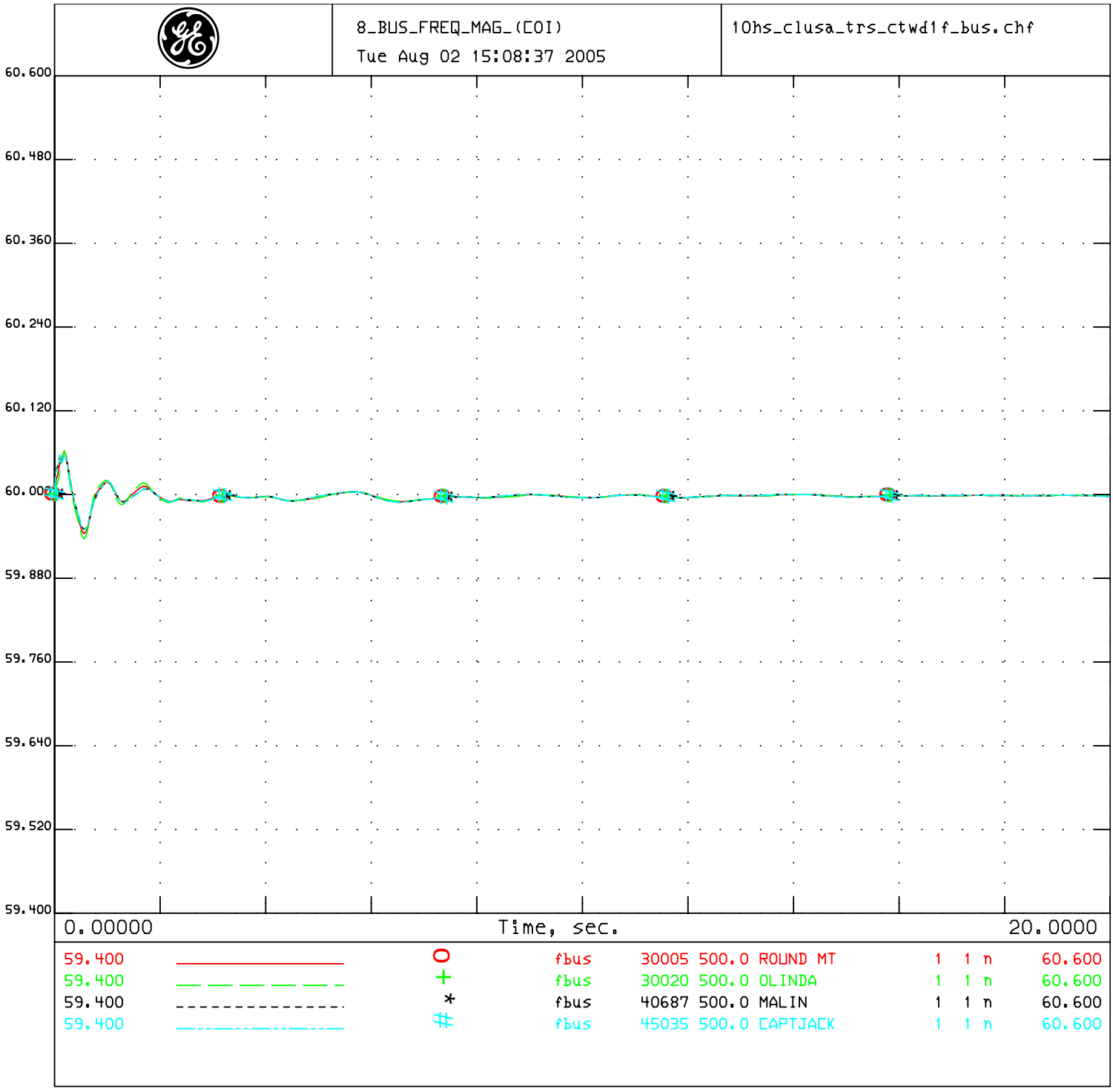

PG&E 2004 BASE CASE SERIES - 2010 North Valley Summer Peak Case
PATH15=-1127 MW(S-N) PATH26=3313 MW(N-S) PDCI=3105 MW(N-S) COI=4710 MW(N-S)
CPV Colusa - 2010 Summer Peak - after

Trip COTTONWOOD BUS 1 SEC F Substation

original case 3/26/2004 by SATS 2009 system summer peak
updated loads to 2010 system summer peak
added 2010 North Valley 1-in-10 loads and generation dispatch
Morro Bay 4 is the swing bus
Proposed new generation in queue added
CPV Colusa 97 MW looped onto:
Cottonwood - Cortina 230 kV Line (#1)
Cottonwood - Vaca Dixon 230 kV Line (#2)
Logan Creek - Vaca Dixon 230 kV Line (#3)
Glenn - Vaca Dixon 230 kV Line (#4)

1_COLUSA_vt_ang
Tue Aug 02 18:14:15 2005

10hs_clusa_trs_ctwd2e_bus.chf

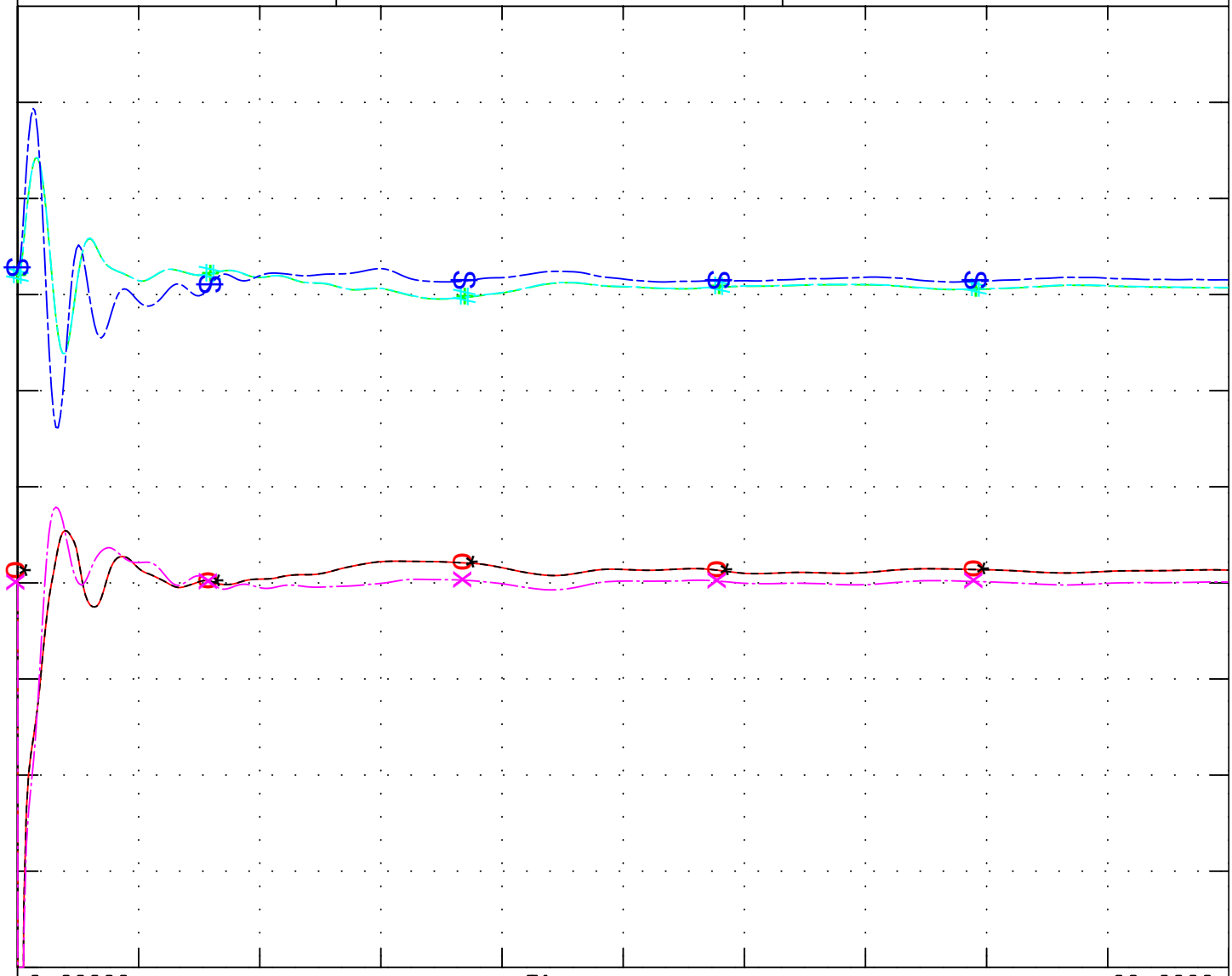

0.8000		O	vt	31923	18.0	P0506GT1	1	1	1.2000
0.0000		+	ang	31923	18.0	P0506GT1	1	1	100.00
0.8000		*	vt	31924	18.0	P0506GT2	2	1	1.2000
0.0000		#	ang	31924	18.0	P0506GT2	2	1	100.00
0.8000		X	vt	31925	18.0	P0506ST1	3	1	1.2000
0.0000		$	ang	31925	18.0	P0506ST1	3	1	100.00

PG&E 2004 BASE CASE SERIES - 2010 North Valley Summer Peak Case
PATH15=-1127 MW(S-N) PATH26=3313 MW(N-S) PDCI=3105 MW(N-S) COI=4710 MW(N-S)
CPV Colusa - 2010 Summer Peak - after

Trip COTTONWOOD BUS 2 SEC E Substation

original case 3/26/2004 by SATS 2009 system summer peak
updated loads to 2010 system summer peak
added 2010 North Valley 1-in-10 loads and generation dispatch
Morro Bay 4 is the swing bus
Proposed new generation in queue added
CPV Colusa 97 MW looped onto:
Cottonwood - Cortina 230 kV Line (#1)
Cottonwood - Vaca Dixon 230 kV Line (#2)
Logan Creek - Vaca Dixon 230 kV Line (#3)
Glenn - Vaca Dixon 230 kV Line (#4)

2_COLUSA_spd_pg
Tue Aug 02 18:14:15 2005

10hs_clusa_trs_ctwd2e_bus.chf

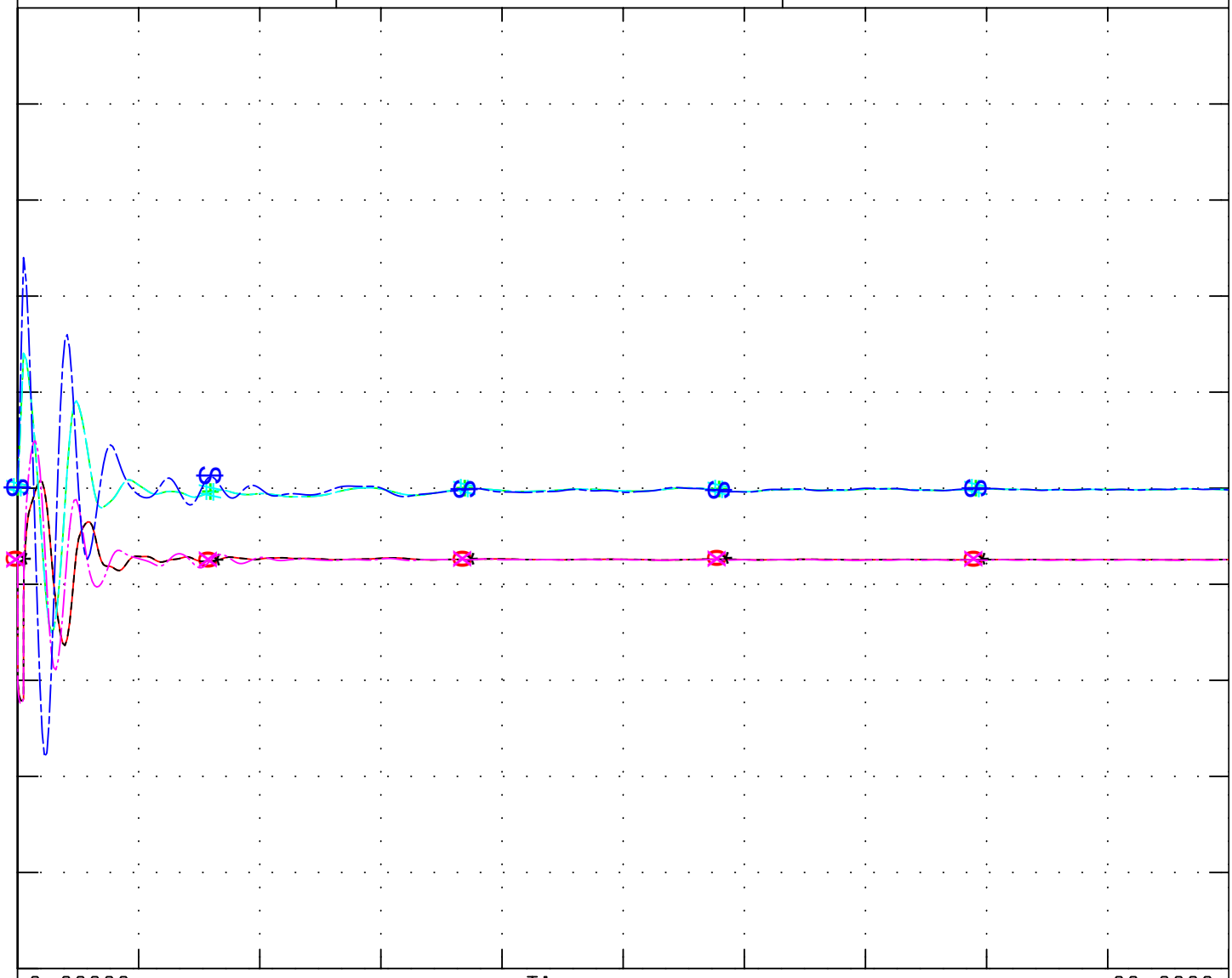

0.0000	————	O	pg	31923	18.0	P0506GT1	1	1	n	468.00
0.9900	— — — — — —	+	spd	31923	18.0	P0506GT1	1	1	n	1.0100
0.0000	- - - - - - - - - - - - - -	*	pg	31924	18.0	P0506GT2	2	1	n	468.00
0.9900	—-—-—-—-—-—	#	spd	31924	18.0	P0506GT2	2	1	n	1.0100
0.0000	—.—.—.—.—.	X	pg	31925	18.0	P0506ST1	3	1	n	746.00
0.9900	—-—-—-—-—-—	$	spd	31925	18.0	P0506ST1	3	1	n	1.0100

PG&E 2004 BASE CASE SERIES - 2010 North Valley Summer Peak Case
PATH15=-1127 MW(S-N) PATH26=3313 MW(N-S) PDCI=3105 MW(N-S) COI=4710 MW(N-S)
CPV Colusa - 2010 Summer Peak - after

Trip COTTONWOOD BUS 2 SEC E Substation

original case 3/26/2004 by SATS 2009 system summer peak
updated loads to 2010 system summer peak
added 2010 North Valley 1-in-10 loads and generation dispatch
Morro Bay 4 is the swing bus
Proposed new generation in queue added
CPV Colusa 97 MW looped onto:
Cottonwood - Cortina 230 kV Line (#1)
Cottonwood - Vaca Dixon 230 kV Line (#2)
Logan Creek - Vaca Dixon 230 kV Line (#3)
Glenn - Vaca Dixon 230 kV Line (#4)

3_BUS_VOLT_MAG_230:
Tue Aug 02 18:14:15 2005

10hs_clusa_trs_ctwd2e_bus.chf

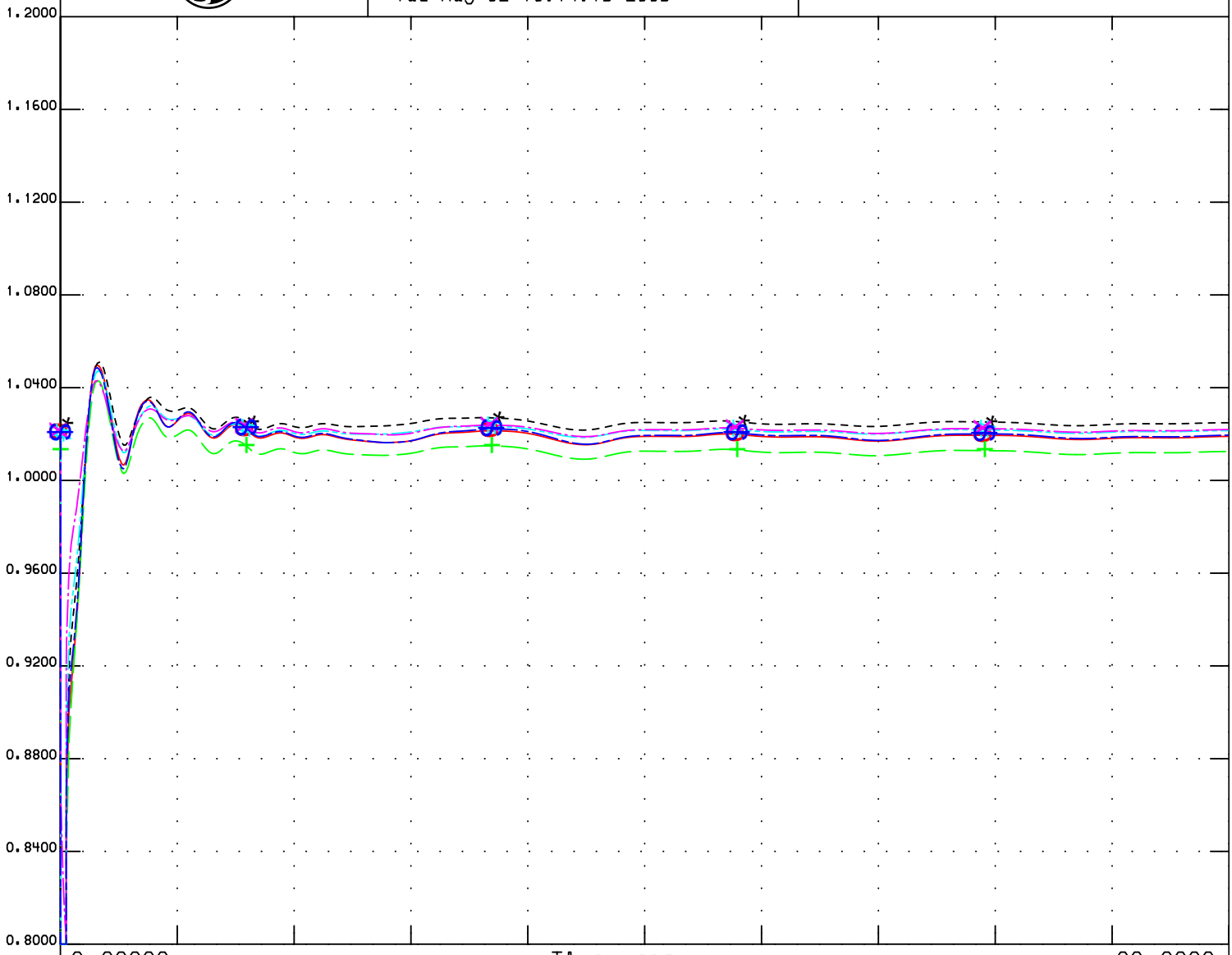

0.8000	————	O	vbus	30106	230.0	COTWD_F	1	1	n	1.2000
0.8000	— — — — — —	+	vbus	30110	230.0	GLENN	1	1	n	1.2000
0.8000	- - - - - - - - - - - - - -	*	vbul	30111	230.0	LOGAN CR	1	1	n	1.2000
0.8000	—-—-—-—-—-—	#	vbus	30450	230.0	CORTINA	1	1	n	1.2000
0.8000	—.—.—.—.—.—	X	vbus	30460	230.0	VACA-DIX	1	1	n	1.2000
0.8000	—-—-—-—-—-—	$	vbus	37565	230.0	OLINDAW	1	1	n	1.2000

PG&E 2004 BASE CASE SERIES - 2010 North Valley Summer Peak Case
PATH15=-1127 MW(S-N) PATH26=3313 MW(N-S) PDCI=3105 MW(N-S) COI=4710 MW(N-S)
CPV Colusa - 2010 Summer Peak - after

Trip COTTONWOOD BUS 2 SEC E Substation

original case 3/26/2004 by SATS 2009 system summer peak
updated loads to 2010 system summer peak
added 2010 North Valley 1-in-10 loads and generation dispatch
Morro Bay 4 is the swing bus
Proposed new generation in queue added
CPV Colusa 97 MW looped onto:
Cottonwood - Cortina 230 kV Line (#1)
Cottonwood - Vaca Dixon 230 kV Line (#2)
Logan Creek - Vaca Dixon 230 kV Line (#3)
Glenn - Vaca Dixon 230 kV Line (#4)

4_BUS_VOLT_MAG_230:
Tue Aug 02 18:14:16 2005

10hs_clusa_trs_ctwd2e_bus.chf

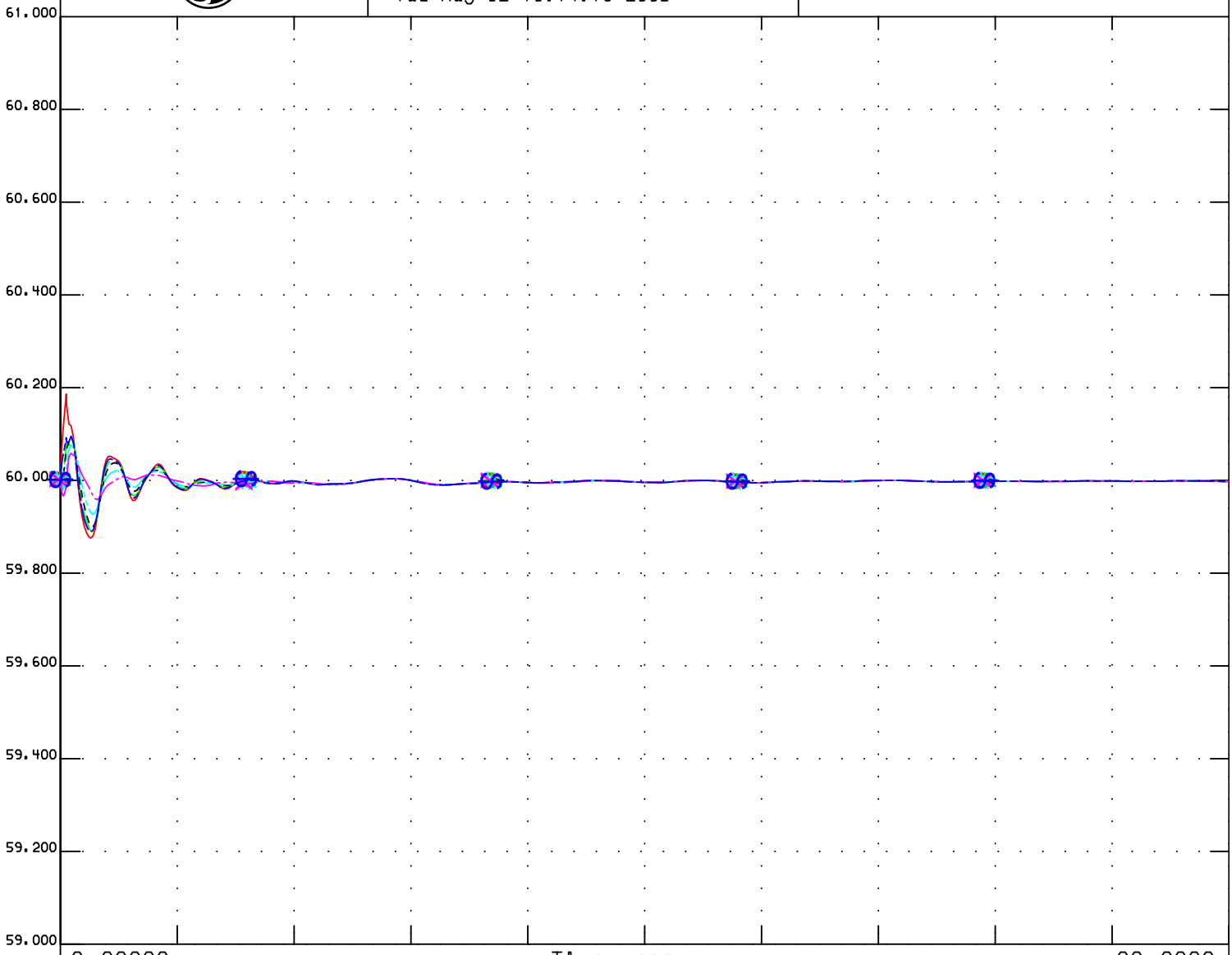

59.000		O	fbus	30106	230.0	COTWD_F	1	1 n	61.000
59.000		+	fbus	30110	230.0	GLENN	1	1 n	61.000
59.000		*	fbul	30111	230.0	LOGAN CR	1	1 n	61.000
59.000		#	fbus	30450	230.0	CORTINA	1	1 n	61.000
59.000		X	fbus	30460	230.0	VACA-DIX	1	1 n	61.000
59.000		$	fbus	37565	230.0	OLINDAW	1	1 n	61.000

PG&E 2004 BASE CASE SERIES - 2010 North Valley Summer Peak Case
PATH15=-1127 MW(S-N) PATH26=3313 MW(N-S) PDCI=3105 MW(N-S) COI=4710 MW(N-S)
CPV Colusa - 2010 Summer Peak - after

Trip COTTONWOOD BUS 2 SEC E Substation

original case 3/26/2004 by SATS 2009 system summer peak
updated loads to 2010 system summer peak
added 2010 North Valley 1-in-10 loads and generation dispatch
Morro Bay 4 is the swing bus
Proposed new generation in queue added
CPV Colusa 97 MW looped onto:
Cottonwood - Cortina 230 kV Line (#1)
Cottonwood - Vaca Dixon 230 kV Line (#2)
Logan Creek - Vaca Dixon 230 kV Line (#3)
Glenn - Vaca Dixon 230 kV Line (#4)

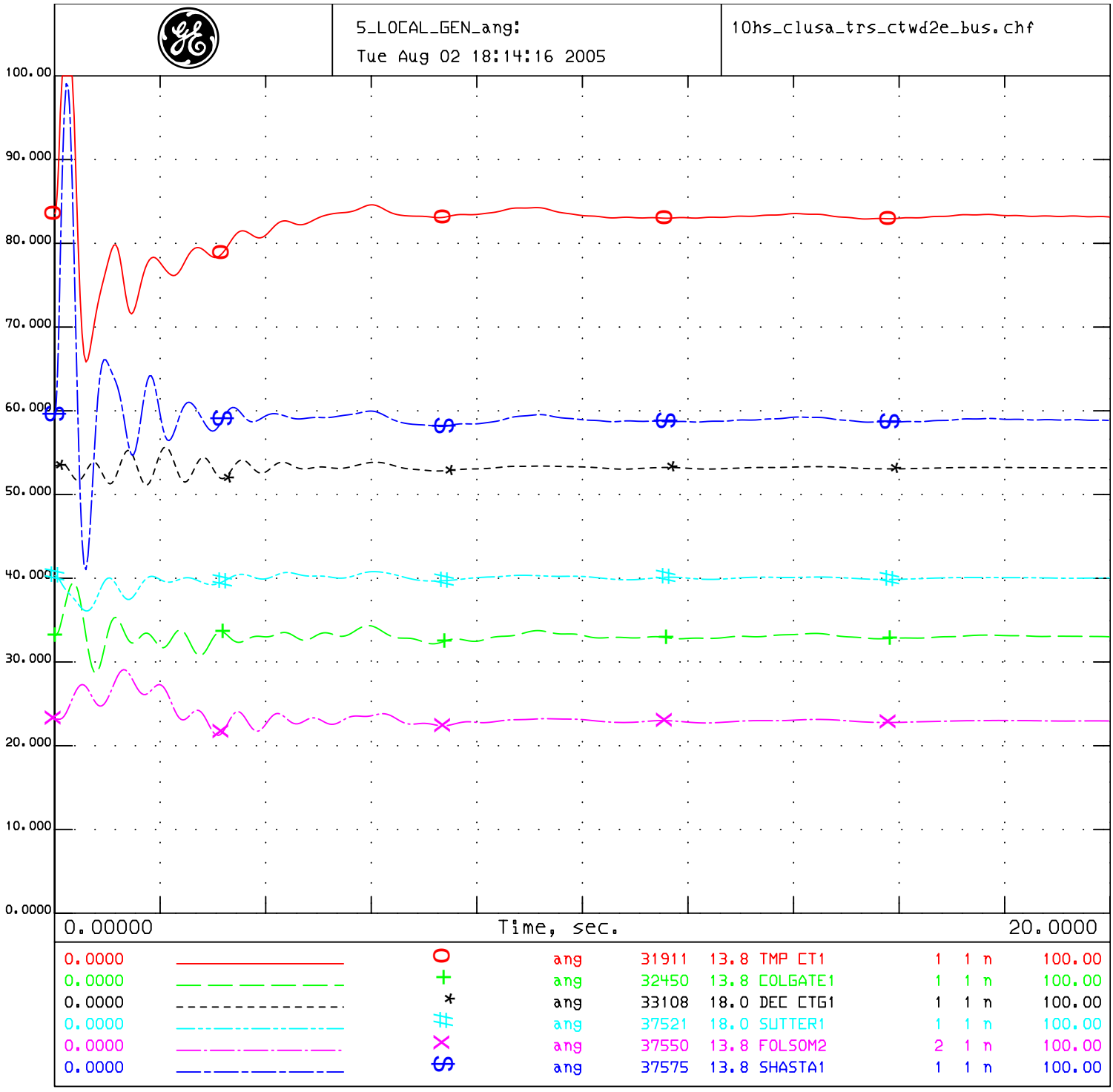

PG&E 2004 BASE CASE SERIES - 2010 North Valley Summer Peak Case
PATH15=-1127 MW(S-N) PATH26=3313 MW(N-S) PDCI=3105 MW(N-S) COI=4710 MW(N-S)
CPV Colusa - 2010 Summer Peak - after

Trip COTTONWOOD BUS 2 SEC E Substation

original case 3/26/2004 by SATS 2009 system summer peak
updated loads to 2010 system summer peak
added 2010 North Valley 1-in-10 loads and generation dispatch
Morro Bay 4 is the swing bus
Proposed new generation in queue added
CPV Colusa 97 MW looped onto:
Cottonwood - Cortina 230 kV Line (#1)
Cottonwood - Vaca Dixon 230 kV Line (#2)
Logan Creek - Vaca Dixon 230 kV Line (#3)
Glenn - Vaca Dixon 230 kV Line (#4)

6_LOCAL_GEN_vt:
Tue Aug 02 18:14:16 2005

10hs_clusa_trs_ctwd2e_bus.chf

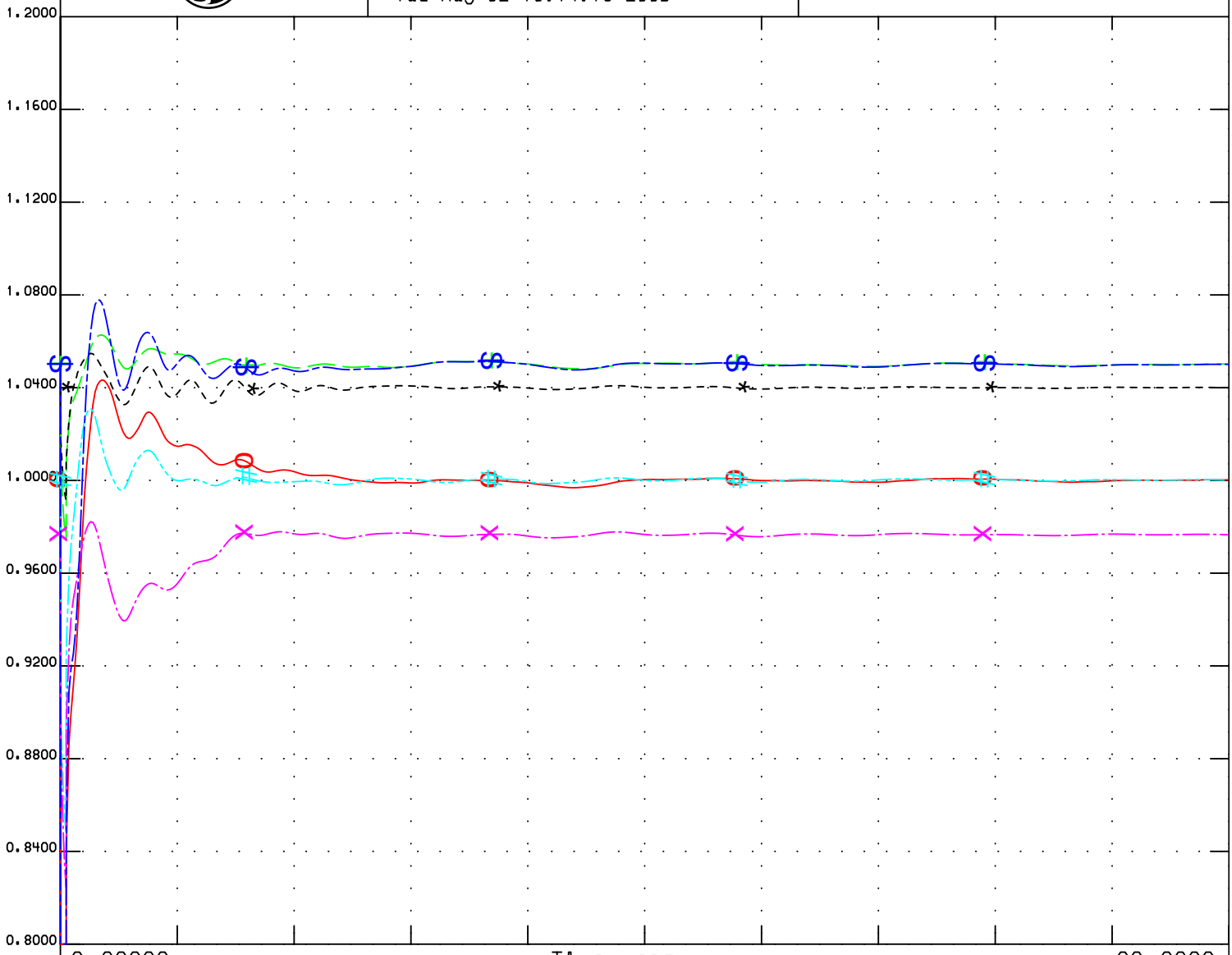

0.8000		O	vt	31911	13.8	TMP CT1	1	1	n	1.2000
0.8000		+	vt	32450	13.8	COLGATE1	1	1	n	1.2000
0.8000		*	vt	33108	18.0	DEC CTG1	1	1	n	1.2000
0.8000		#	vt	37521	18.0	SUTTER1	1	1	n	1.2000
0.8000		X	vt	37550	13.8	FOLSOM2	2	1	n	1.2000
0.8000		$	vt	37575	13.8	SHASTA1	1	1	n	1.2000

PG&E 2004 BASE CASE SERIES - 2010 North Valley Summer Peak Case
PATH15=-1127 MW(S-N) PATH26=3313 MW(N-S) PDCI=3105 MW(N-S) COI=4710 MW(N-S)
CPV Colusa - 2010 Summer Peak - after

Trip COTTONWOOD BUS 2 SEC E Substation

original case 3/26/2004 by SATS 2009 system summer peak
updated loads to 2010 system summer peak
added 2010 North Valley 1-in-10 loads and generation dispatch
Morro Bay 4 is the swing bus
Proposed new generation in queue added
CPV Colusa 97 MW looped onto:
Cottonwood - Cortina 230 kV Line (#1)
Cottonwood - Vaca Dixon 230 kV Line (#2)
Logan Creek - Vaca Dixon 230 kV Line (#3)
Glenn - Vaca Dixon 230 kV Line (#4)

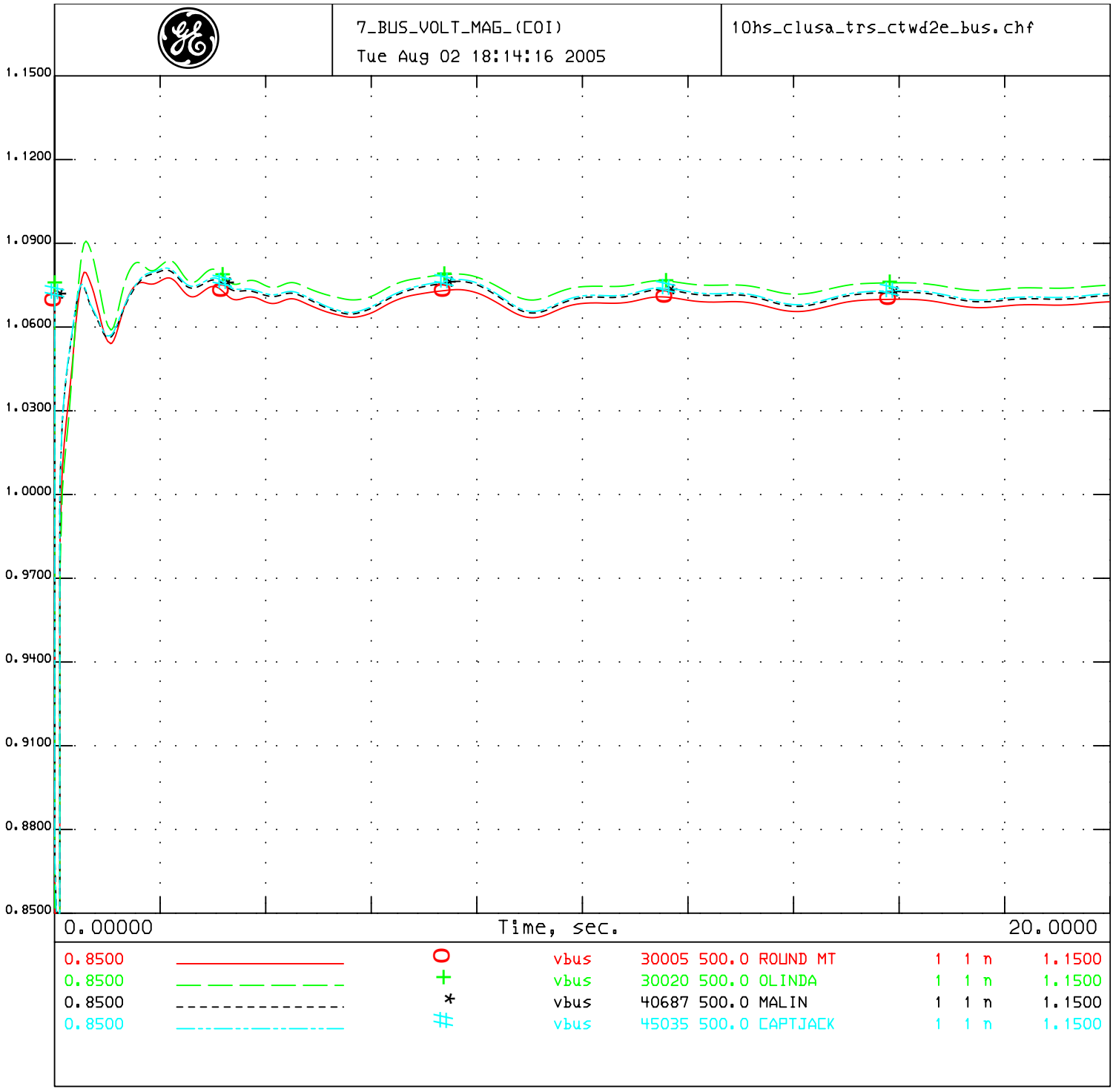

PG&E 2004 BASE CASE SERIES - 2010 North Valley Summer Peak Case
PATH15=-1127 MW(S-N) PATH26=3313 MW(N-S) PDCI=3105 MW(N-S) COI=4710 MW(N-S)
CPV Colusa - 2010 Summer Peak - after

Trip COTTONWOOD BUS 2 SEC E Substation

original case 3/26/2004 by SATS 2009 system summer peak
updated loads to 2010 system summer peak
added 2010 North Valley 1-in-10 loads and generation dispatch
Morro Bay 4 is the swing bus
Proposed new generation in queue added
CPV Colusa 97 MW looped onto:
Cottonwood - Cortina 230 kV Line (#1)
Cottonwood - Vaca Dixon 230 kV Line (#2)
Logan Creek - Vaca Dixon 230 kV Line (#3)
Glenn - Vaca Dixon 230 kV Line (#4)

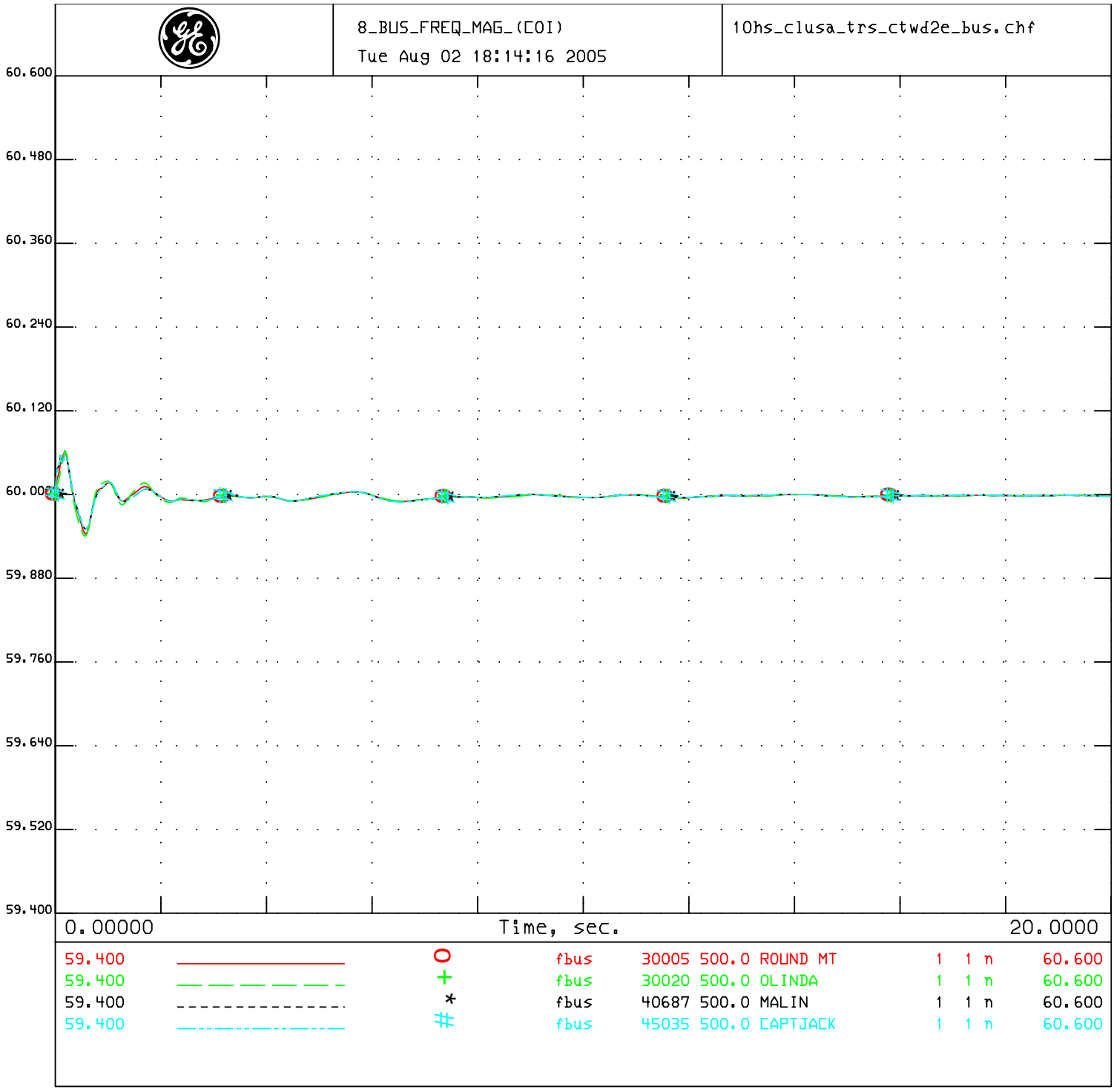

PG&E 2004 BASE CASE SERIES - 2010 North Valley Summer Peak Case
PATH15=-1127 MW(S-N) PATH26=3313 MW(N-S) PDCI=3105 MW(N-S) COI=4710 MW(N-S)
CPV Colusa - 2010 Summer Peak - after

Trip COTTONWOOD BUS 2 SEC E Substation

original case 3/26/2004 by SATS 2009 system summer peak
updated loads to 2010 system summer peak
added 2010 North Valley 1-in-10 loads and generation dispatch
Morro Bay 4 is the swing bus
Proposed new generation in queue added
CPV Colusa 97 MW looped onto:
Cottonwood - Cortina 230 kV Line (#1)
Cottonwood - Vaca Dixon 230 kV Line (#2)
Logan Creek - Vaca Dixon 230 kV Line (#3)
Glenn - Vaca Dixon 230 kV Line (#4)

1_COLUSA_vt_ang
Tue Aug 02 15:15:38 2005

10hs_clusa_trs_ctwd2f_bus.chf

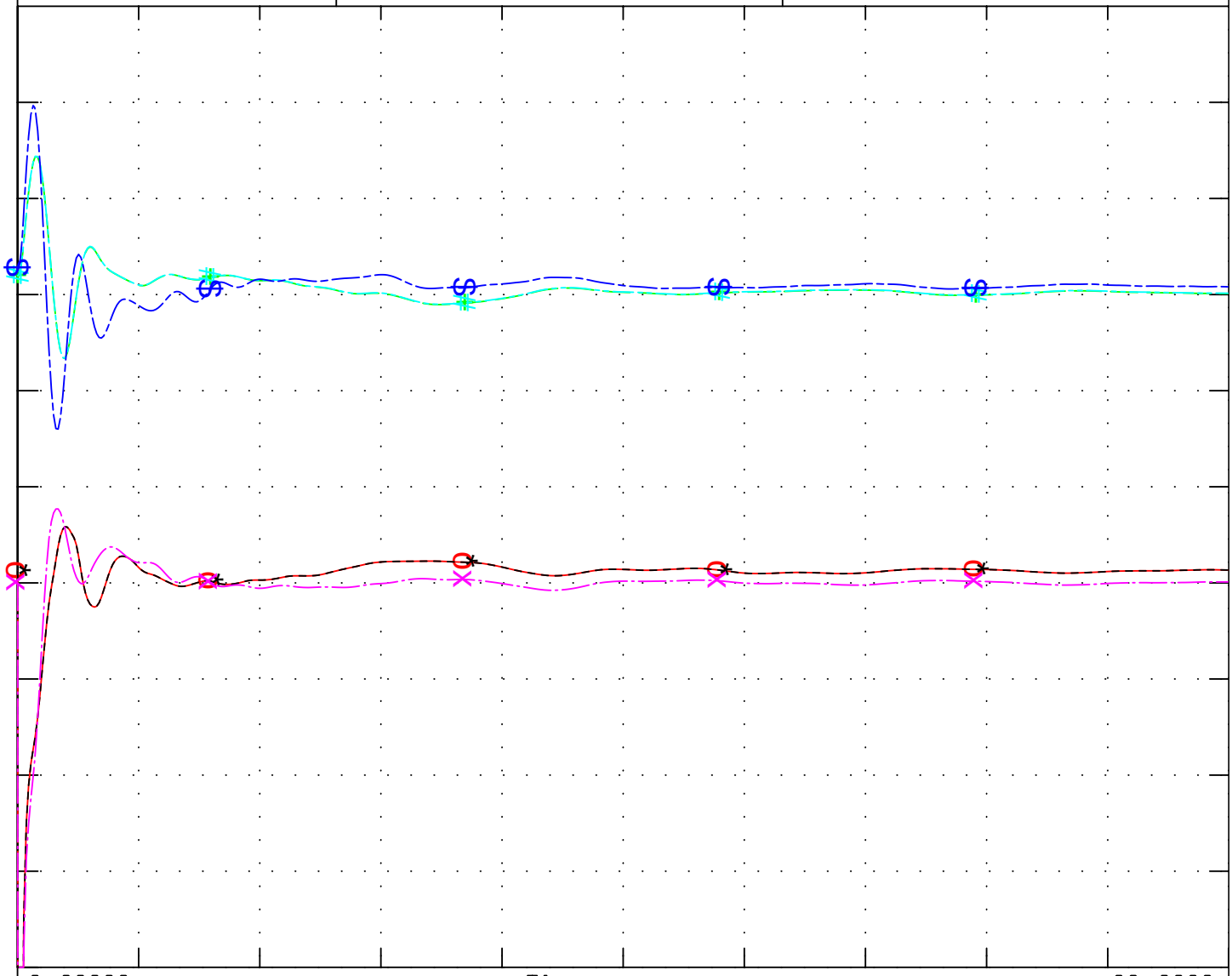

0.8000	————	O	vt	31923	18.0	P0506GT1	1	1	1.2000
0.0000	— — — — — —	+	ang	31923	18.0	P0506GT1	1	1	100.00
0.8000	- - - - - - - - - - - - - -	*	vt	31924	18.0	P0506GT2	2	1	1.2000
0.0000	—-—-—-—-—-—	#	ang	31924	18.0	P0506GT2	2	1	100.00
0.8000	—.—.—.—.—.—	×	vt	31925	18.0	P0506ST1	3	1	1.2000
0.0000	—-—-—-—-—-—	⊗	ang	31925	18.0	P0506ST1	3	1	100.00

PG&E 2004 BASE CASE SERIES - 2010 North Valley Summer Peak Case
PATH15=-1127 MW(S-N) PATH26=3313 MW(N-S) PDCI=3105 MW(N-S) COI=4710 MW(N-S)
CPV Colusa - 2010 Summer Peak - after

Trip COTTONWOOD BUS 2 SEC F Substation

original case 3/26/2004 by SATS 2009 system summer peak
updated loads to 2010 system summer peak
added 2010 North Valley 1-in-10 loads and generation dispatch
Morro Bay 4 is the swing bus
Proposed new generation in queue added
CPV Colusa 97 MW looped onto:
Cottonwood - Cortina 230 kV Line (#1)
Cottonwood - Vaca Dixon 230 kV Line (#2)
Logan Creek - Vaca Dixon 230 kV Line (#3)
Glenn - Vaca Dixon 230 kV Line (#4)

2_COLUSA_spd_pg
Tue Aug 02 15:15:38 2005

10hs_clusa_trs_ctwd2f_bus.chf

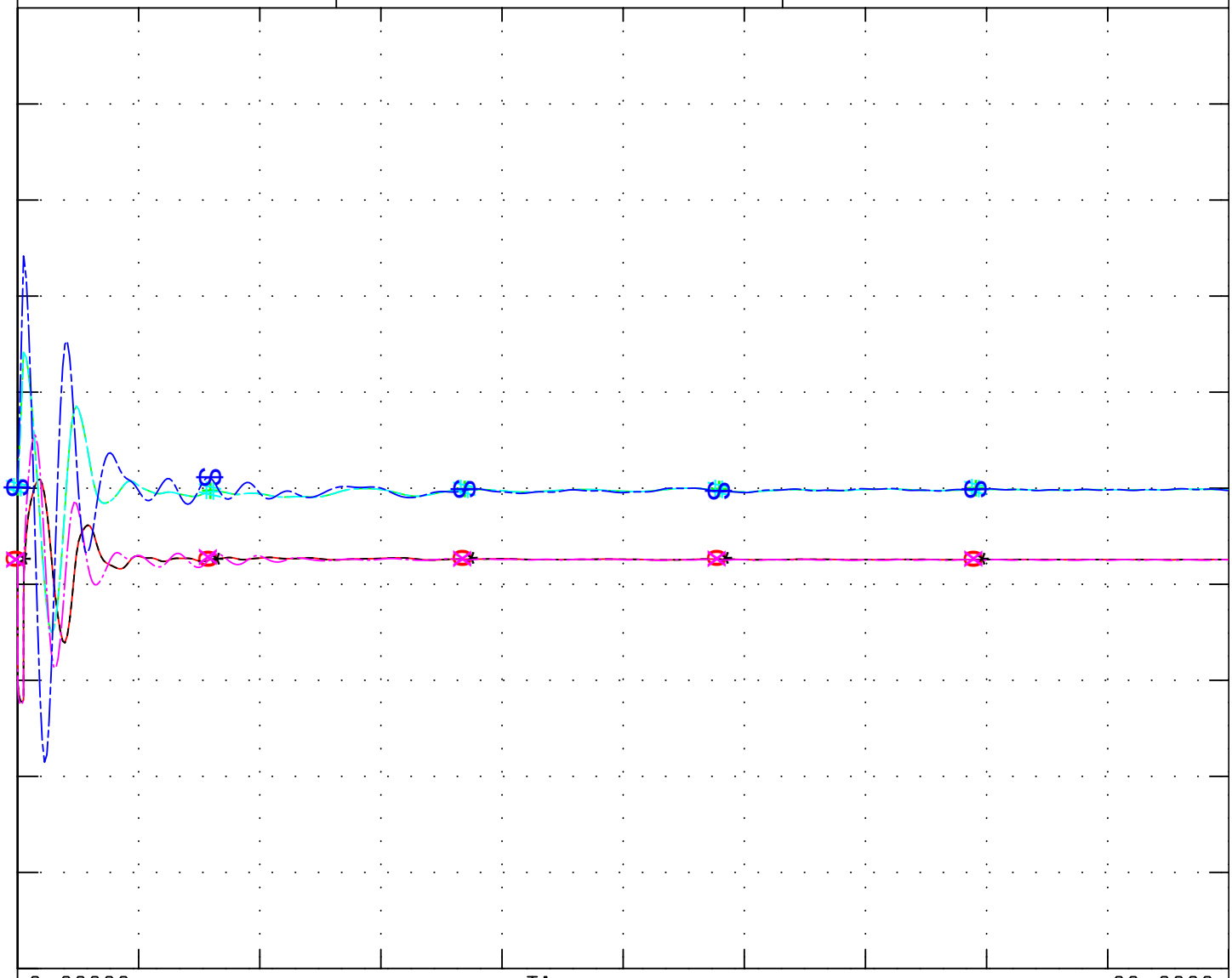

0.0000	————	O	pg	31923	18.0	P0506GT1	1	1	n	468.00
0.9900	— — — — — —	+	spd	31923	18.0	P0506GT1	1	1	n	1.0100
0.0000	- - - - - - - - - - - - - -	*	pg	31924	18.0	P0506GT2	2	1	n	468.00
0.9900	—-—-—-—-—-—	#	spd	31924	18.0	P0506GT2	2	1	n	1.0100
0.0000	—.—.—.—.—.	X	pg	31925	18.0	P0506ST1	3	1	n	746.00
0.9900	—-—-—-—-—-—	$	spd	31925	18.0	P0506ST1	3	1	n	1.0100

PG&E 2004 BASE CASE SERIES - 2010 North Valley Summer Peak Case
PATH15=-1127 MW(S-N) PATH26=3313 MW(N-S) PDCI=3105 MW(N-S) COI=4710 MW(N-S)
CPV Colusa - 2010 Summer Peak - after

Trip COTTONWOOD BUS 2 SEC F Substation

original case 3/26/2004 by SATS 2009 system summer peak
updated loads to 2010 system summer peak
added 2010 North Valley 1-in-10 loads and generation dispatch
Morro Bay 4 is the swing bus
Proposed new generation in queue added
CPV Colusa 97 MW looped onto:
Cottonwood - Cortina 230 kV Line (#1)
Cottonwood - Vaca Dixon 230 kV Line (#2)
Logan Creek - Vaca Dixon 230 kV Line (#3)
Glenn - Vaca Dixon 230 kV Line (#4)

3_BUS_VOLT_MAG_230:
Tue Aug 02 15:15:38 2005

10hs_clusa_trs_ctwd2f_bus.chf

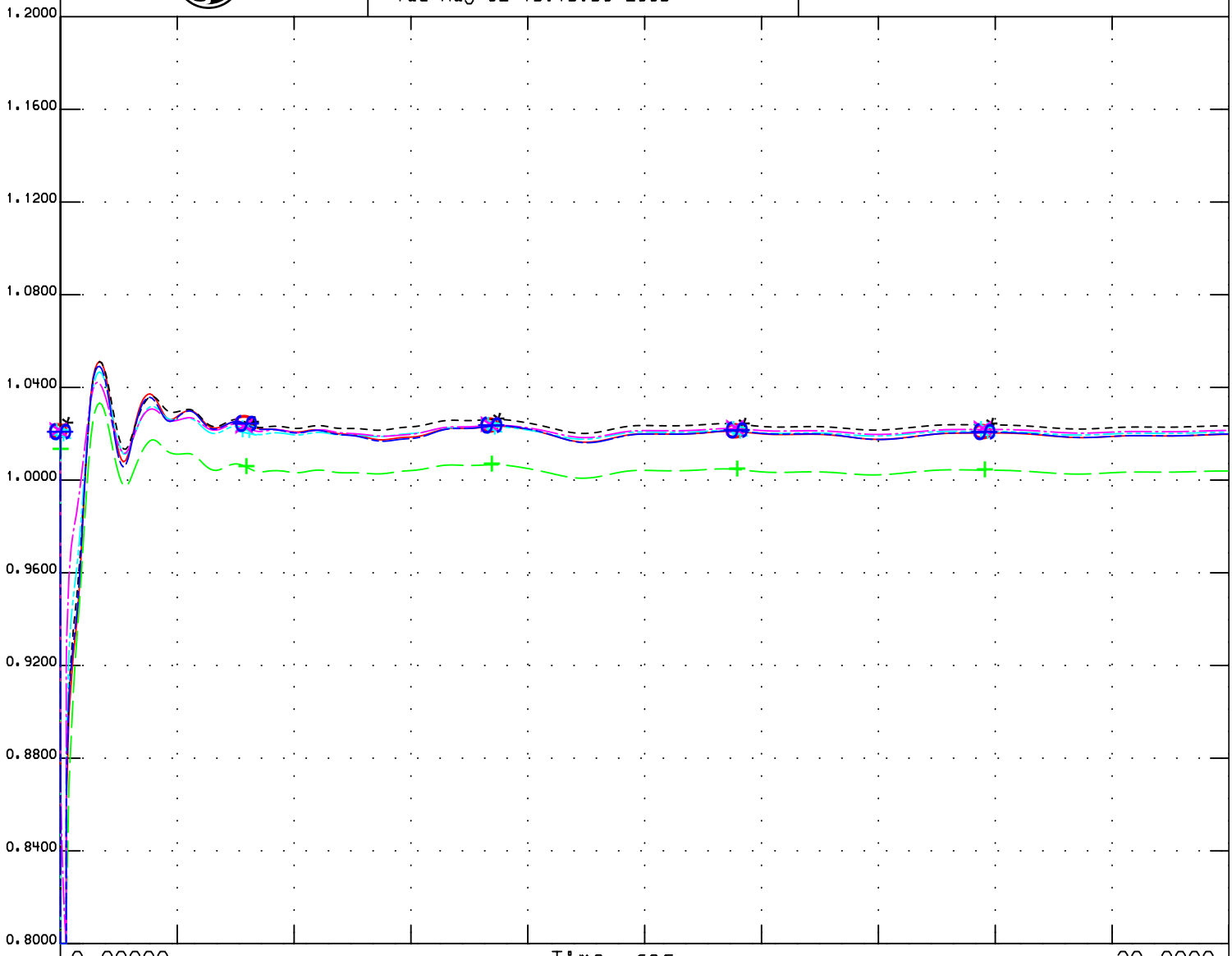

0.8000	————	O	vbus	30106	230.0	COTWD_F	1	1	n	1.2000
0.8000	— — — — — —	+	vbus	30110	230.0	GLENN	1	1	n	1.2000
0.8000	- - - - - - - - - - - - - -	*	vbul	30111	230.0	LOGAN CR	1	1	n	1.2000
0.8000	—-—-—-—-—-—	#	vbus	30450	230.0	CORTINA	1	1	n	1.2000
0.8000	—.—.—.—.—.—	X	vbus	30460	230.0	VACA-DIX	1	1	n	1.2000
0.8000	—-—-—-—-—-—	S	vbus	37565	230.0	OLINDAW	1	1	n	1.2000

PG&E 2004 BASE CASE SERIES - 2010 North Valley Summer Peak Case
PATH15=-1127 MW(S-N) PATH26=3313 MW(N-S) PDCI=3105 MW(N-S) COI=4710 MW(N-S)
CPV Colusa - 2010 Summer Peak - after

Trip COTTONWOOD BUS 2 SEC F Substation

original case 3/26/2004 by SATS 2009 system summer peak
updated loads to 2010 system summer peak
added 2010 North Valley 1-in-10 loads and generation dispatch
Morro Bay 4 is the swing bus
Proposed new generation in queue added
CPV Colusa 97 MW looped onto:
Cottonwood - Cortina 230 kV Line (#1)
Cottonwood - Vaca Dixon 230 kV Line (#2)
Logan Creek - Vaca Dixon 230 kV Line (#3)
Glenn - Vaca Dixon 230 kV Line (#4)

4_BUS_VOLT_MAG_230:
Tue Aug 02 15:15:38 2005

10hs_clusa_trs_ctwd2f_bus.chf

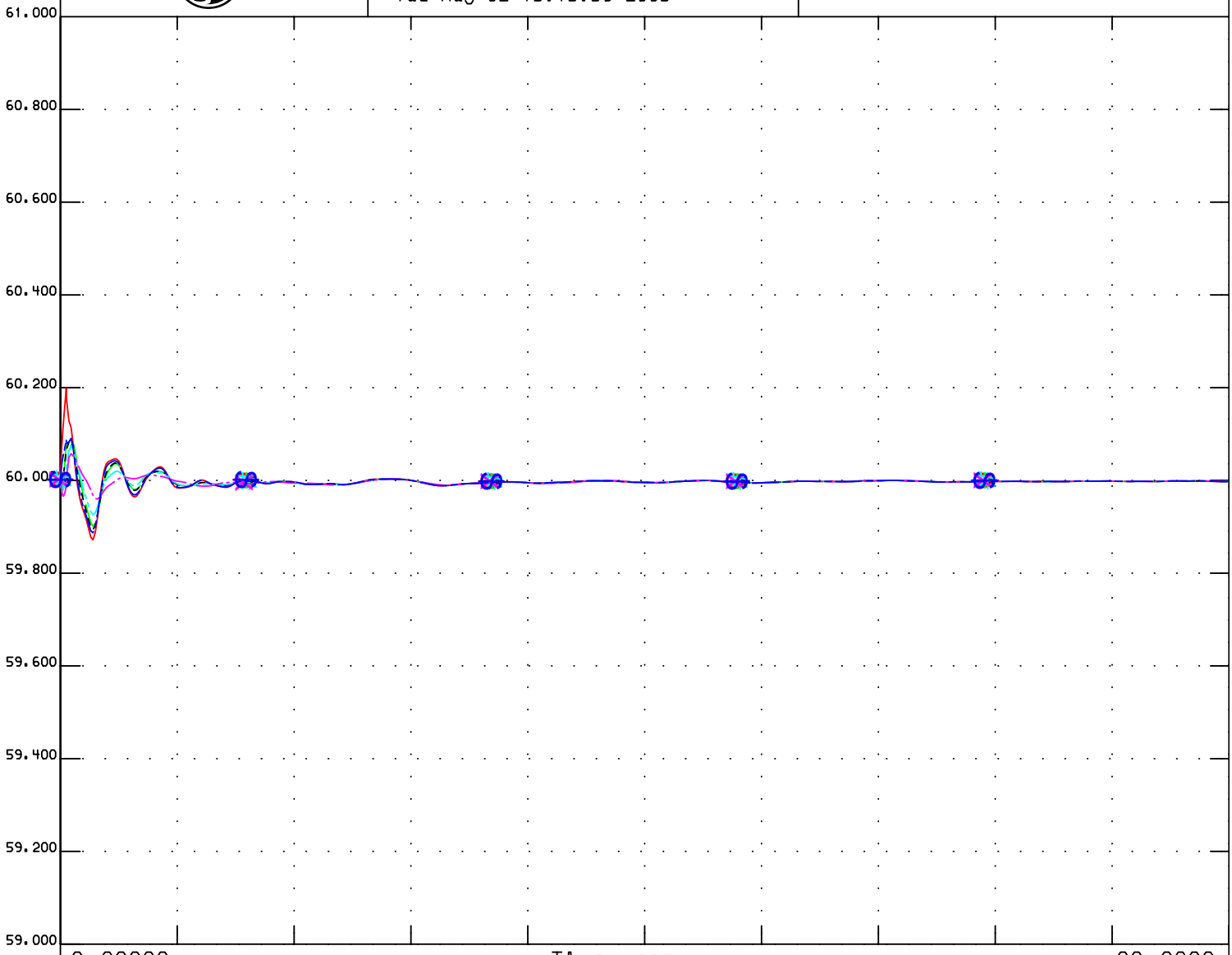

59.000		O	fbus	30106	230.0	COTWD_F	1	1	n	61.000
59.000		+	fbus	30110	230.0	GLENN	1	1	n	61.000
59.000		*	fbul	30111	230.0	LOGAN CR	1	1	n	61.000
59.000		#	fbus	30450	230.0	CORTINA	1	1	n	61.000
59.000		X	fbus	30460	230.0	VACA-DIX	1	1	n	61.000
59.000		$	fbus	37565	230.0	OLINDAW	1	1	n	61.000

PG&E 2004 BASE CASE SERIES - 2010 North Valley Summer Peak Case
PATH15=-1127 MW(S-N) PATH26=3313 MW(N-S) PDCI=3105 MW(N-S) COI=4710 MW(N-S)
CPV Colusa - 2010 Summer Peak - after

Trip COTTONWOOD BUS 2 SEC F Substation

original case 3/26/2004 by SATS 2009 system summer peak
updated loads to 2010 system summer peak
added 2010 North Valley 1-in-10 loads and generation dispatch
Morro Bay 4 is the swing bus
Proposed new generation in queue added
CPV Colusa 97 MW looped onto:
Cottonwood - Cortina 230 kV Line (#1)
Cottonwood - Vaca Dixon 230 kV Line (#2)
Logan Creek - Vaca Dixon 230 kV Line (#3)
Glenn - Vaca Dixon 230 kV Line (#4)

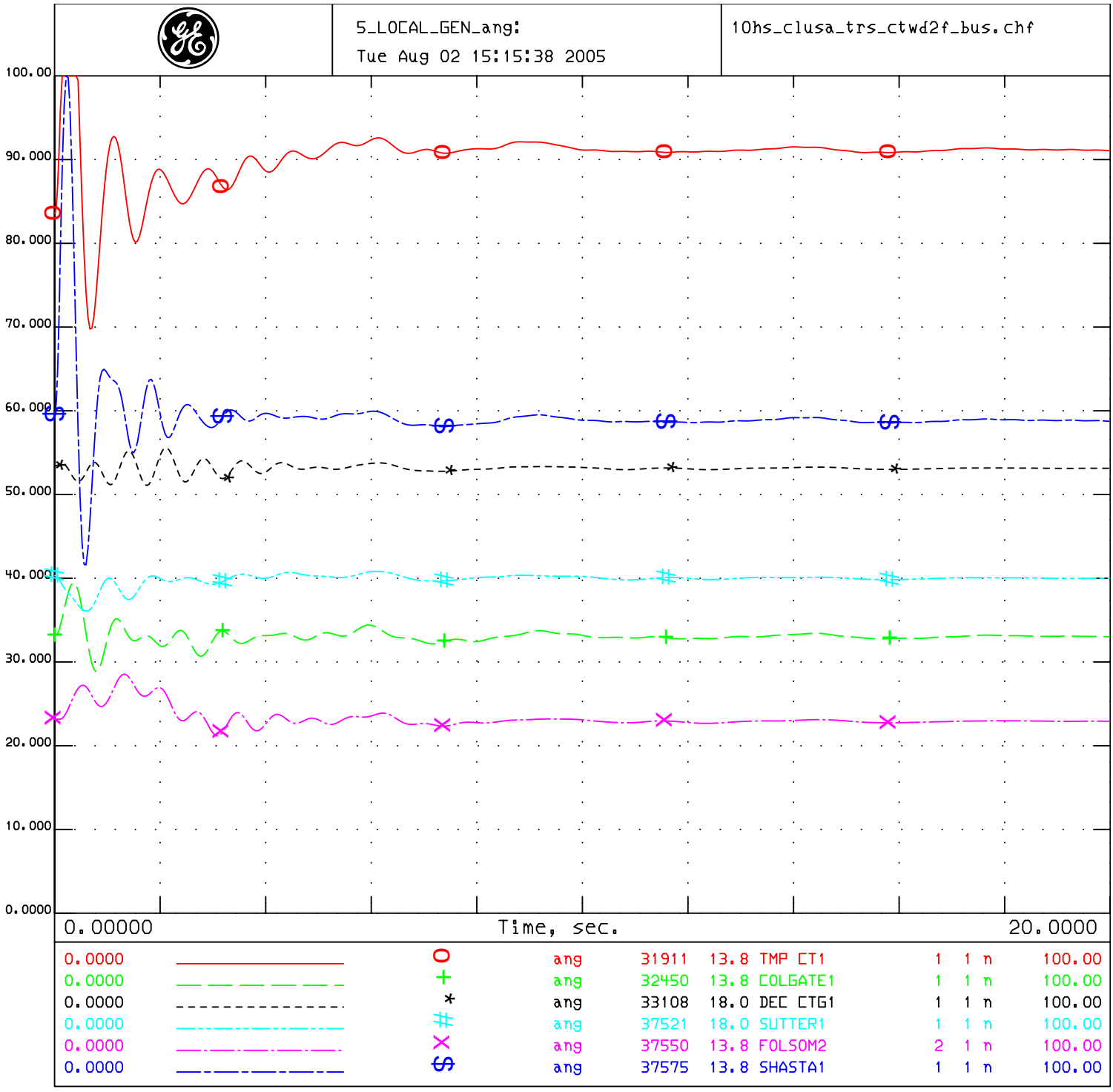

PG&E 2004 BASE CASE SERIES - 2010 North Valley Summer Peak Case
PATH15=-1127 MW(S-N) PATH26=3313 MW(N-S) PDCI=3105 MW(N-S) COI=4710 MW(N-S)
CPV Colusa - 2010 Summer Peak - after

Trip COTTONWOOD BUS 2 SEC F Substation

original case 3/26/2004 by SATS 2009 system summer peak
updated loads to 2010 system summer peak
added 2010 North Valley 1-in-10 loads and generation dispatch
Morro Bay 4 is the swing bus
Proposed new generation in queue added
CPV Colusa 97 MW looped onto:
Cottonwood - Cortina 230 kV Line (#1)
Cottonwood - Vaca Dixon 230 kV Line (#2)
Logan Creek - Vaca Dixon 230 kV Line (#3)
Glenn - Vaca Dixon 230 kV Line (#4)

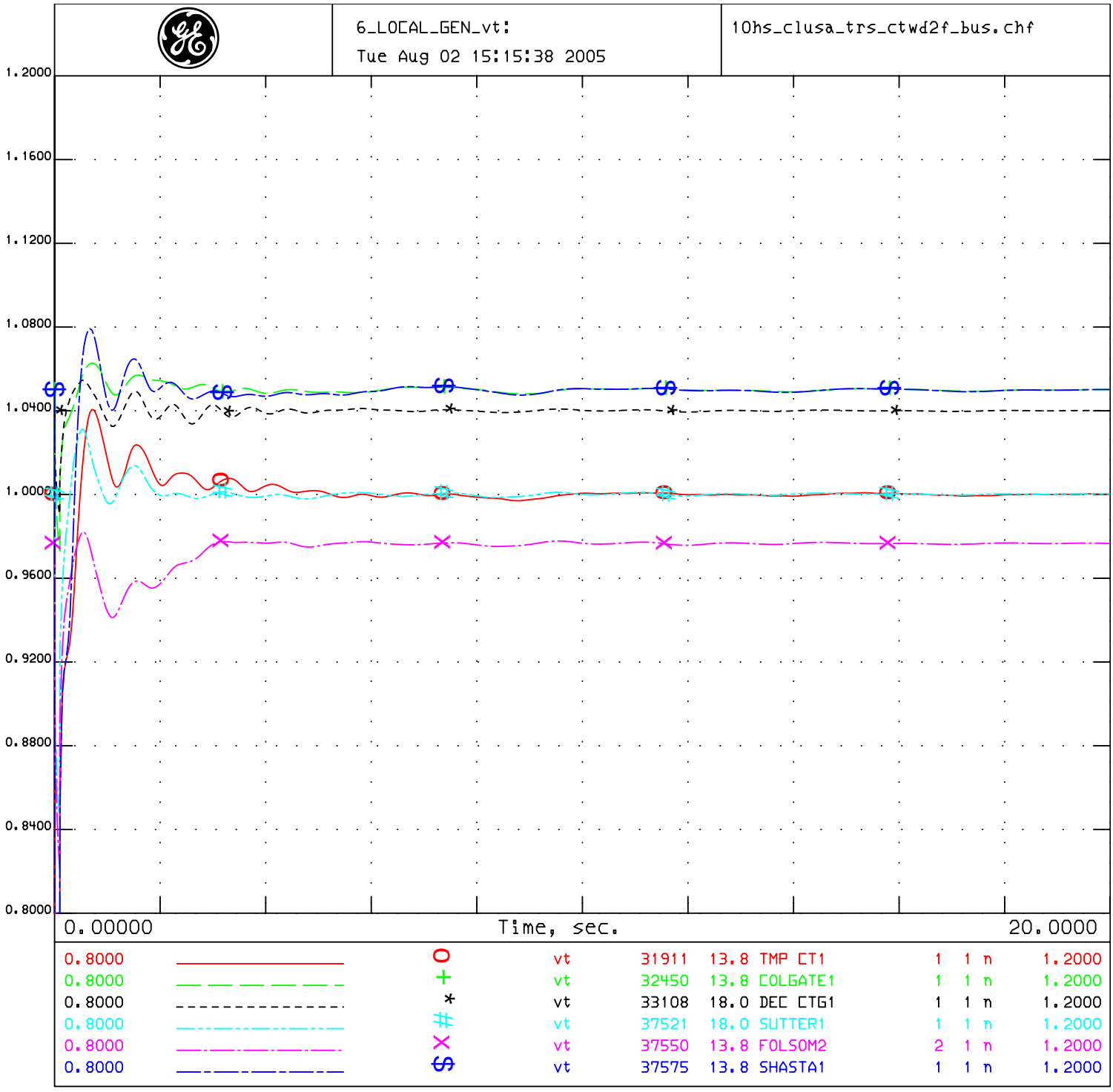

PG&E 2004 BASE CASE SERIES - 2010 North Valley Summer Peak Case
PATH15=-1127 MW(S-N) PATH26=3313 MW(N-S) PDCI=3105 MW(N-S) COI=4710 MW(N-S)
CPV Colusa - 2010 Summer Peak - after

Trip COTTONWOOD BUS 2 SEC F Substation

original case 3/26/2004 by SATS 2009 system summer peak
updated loads to 2010 system summer peak
added 2010 North Valley 1-in-10 loads and generation dispatch
Morro Bay 4 is the swing bus
Proposed new generation in queue added
CPV Colusa 97 MW looped onto:
Cottonwood - Cortina 230 kV Line (#1)
Cottonwood - Vaca Dixon 230 kV Line (#2)
Logan Creek - Vaca Dixon 230 kV Line (#3)
Glenn - Vaca Dixon 230 kV Line (#4)

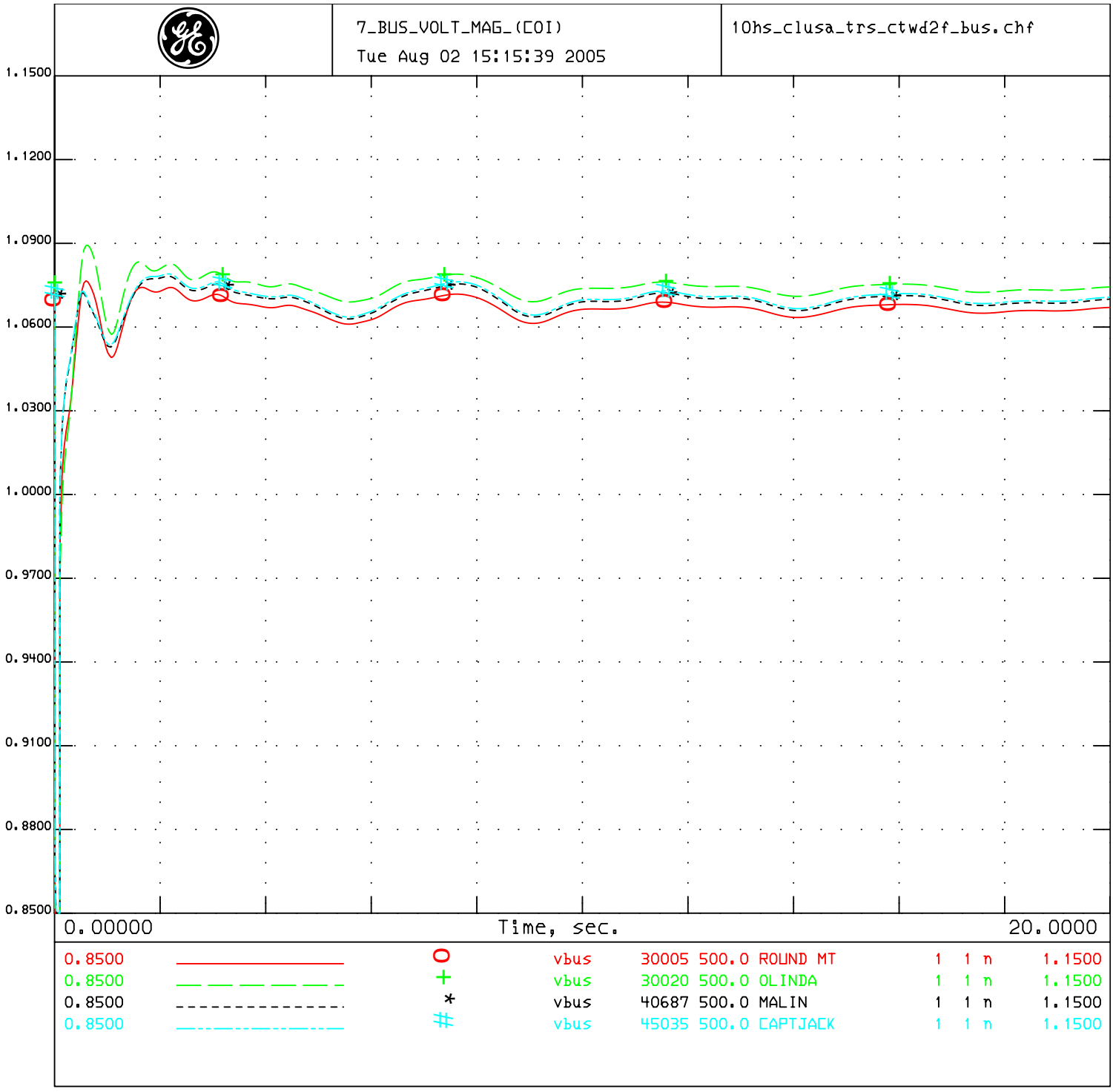

PG&E 2004 BASE CASE SERIES - 2010 North Valley Summer Peak Case
PATH15=-1127 MW(S-N) PATH26=3313 MW(N-S) PDCI=3105 MW(N-S) COI=4710 MW(N-S)
CPV Colusa - 2010 Summer Peak - after

Trip COTTONWOOD BUS 2 SEC F Substation

original case 3/26/2004 by SATS 2009 system summer peak
updated loads to 2010 system summer peak
added 2010 North Valley 1-in-10 loads and generation dispatch
Morro Bay 4 is the swing bus
Proposed new generation in queue added
CPV Colusa 97 MW looped onto:
Cottonwood - Cortina 230 kV Line (#1)
Cottonwood - Vaca Dixon 230 kV Line (#2)
Logan Creek - Vaca Dixon 230 kV Line (#3)
Glenn - Vaca Dixon 230 kV Line (#4)

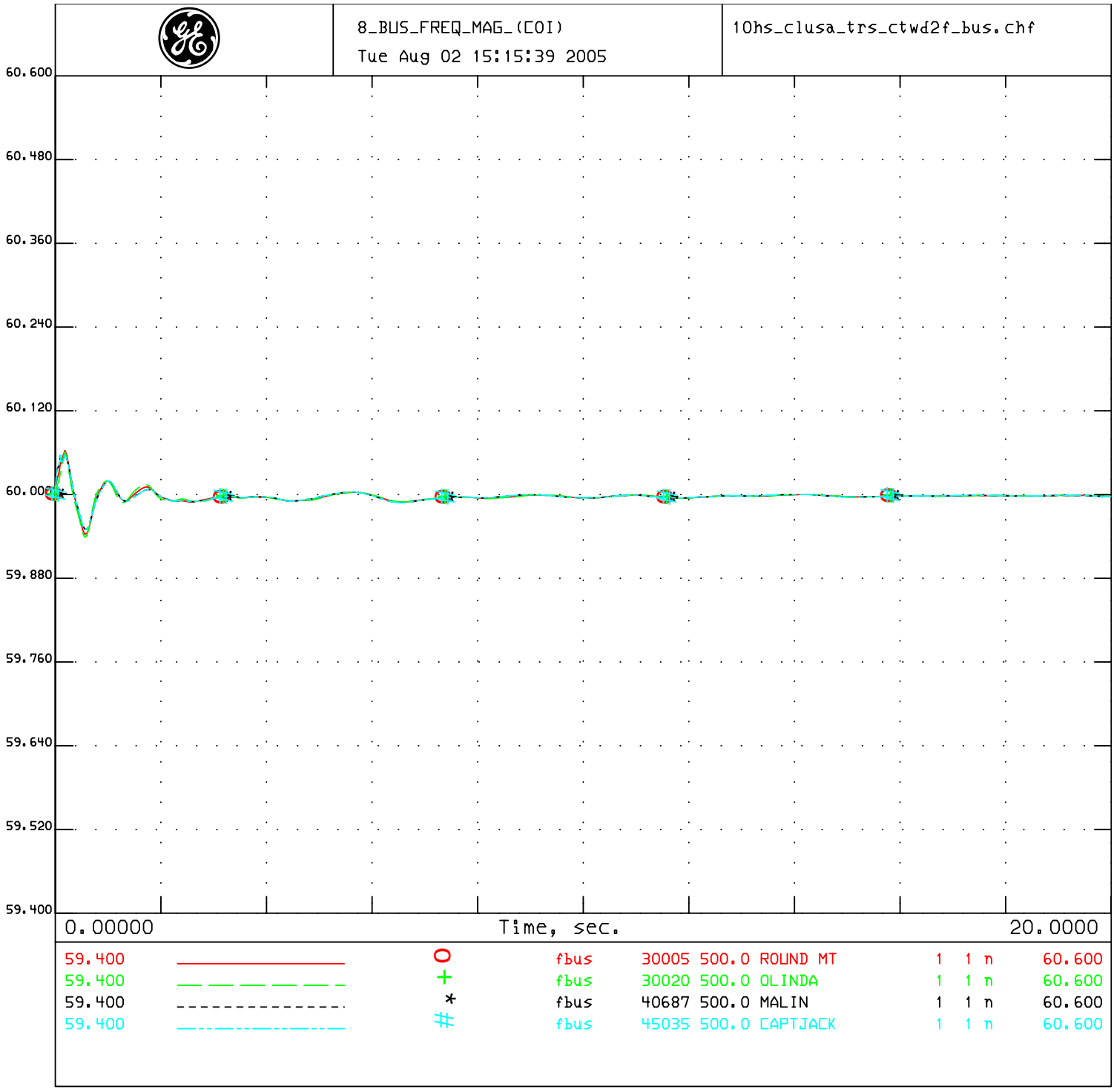

PG&E 2004 BASE CASE SERIES - 2010 North Valley Summer Peak Case
PATH15=-1127 MW(S-N) PATH26=3313 MW(N-S) PDCI=3105 MW(N-S) COI=4710 MW(N-S)
CPV Colusa - 2010 Summer Peak - after

Trip COTTONWOOD BUS 2 SEC F Substation

original case 3/26/2004 by SATS 2009 system summer peak
updated loads to 2010 system summer peak
added 2010 North Valley 1-in-10 loads and generation dispatch
Morro Bay 4 is the swing bus
Proposed new generation in queue added
CPV Colusa 97 MW looped onto:
Cottonwood - Cortina 230 kV Line (#1)
Cottonwood - Vaca Dixon 230 kV Line (#2)
Logan Creek - Vaca Dixon 230 kV Line (#3)
Glenn - Vaca Dixon 230 kV Line (#4)

1_COLUSA_vt_ang
Tue Aug 02 15:22:34 2005

10hs_clusa_trs_ctwd1w_bus.chf

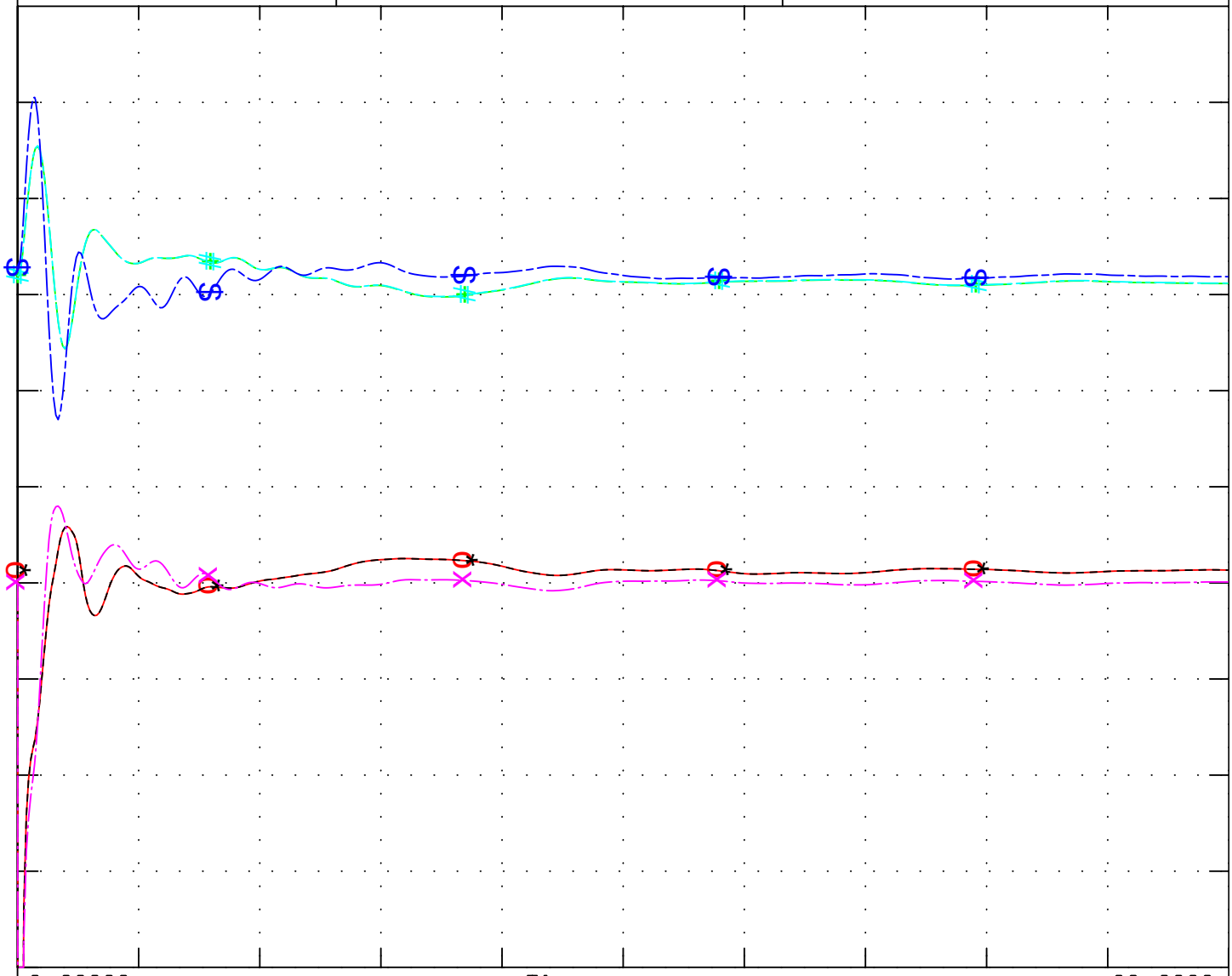

0.8000		O	vt	31923	18.0	P0506GT1	1	1	1.2000
0.0000		+	ang	31923	18.0	P0506GT1	1	1	100.00
0.8000		*	vt	31924	18.0	P0506GT2	2	1	1.2000
0.0000		#	ang	31924	18.0	P0506GT2	2	1	100.00
0.8000		X	vt	31925	18.0	P0506ST1	3	1	1.2000
0.0000		⊗	ang	31925	18.0	P0506ST1	3	1	100.00

PG&E 2004 BASE CASE SERIES - 2010 North Valley Summer Peak Case
PATH15=-1127 MW(S-N) PATH26=3313 MW(N-S) PDCI=3105 MW(N-S) COI=4710 MW(N-S)
CPV Colusa - 2010 Summer Peak - after

Trip COTTONWOOD BUS 1 SEC WAPA Substation

original case 3/26/2004 by SATS 2009 system summer peak
updated loads to 2010 system summer peak
added 2010 North Valley 1-in-10 loads and generation dispatch
Morro Bay 4 is the swing bus
Proposed new generation in queue added
CPV Colusa 97 MW looped onto:
Cottonwood - Cortina 230 kV Line (#1)
Cottonwood - Vaca Dixon 230 kV Line (#2)
Logan Creek - Vaca Dixon 230 kV Line (#3)
Glenn - Vaca Dixon 230 kV Line (#4)

2_COLUSA_spd_pg
Tue Aug 02 15:22:34 2005

10hs_clusa_trs_ctwd1w_bus.chf

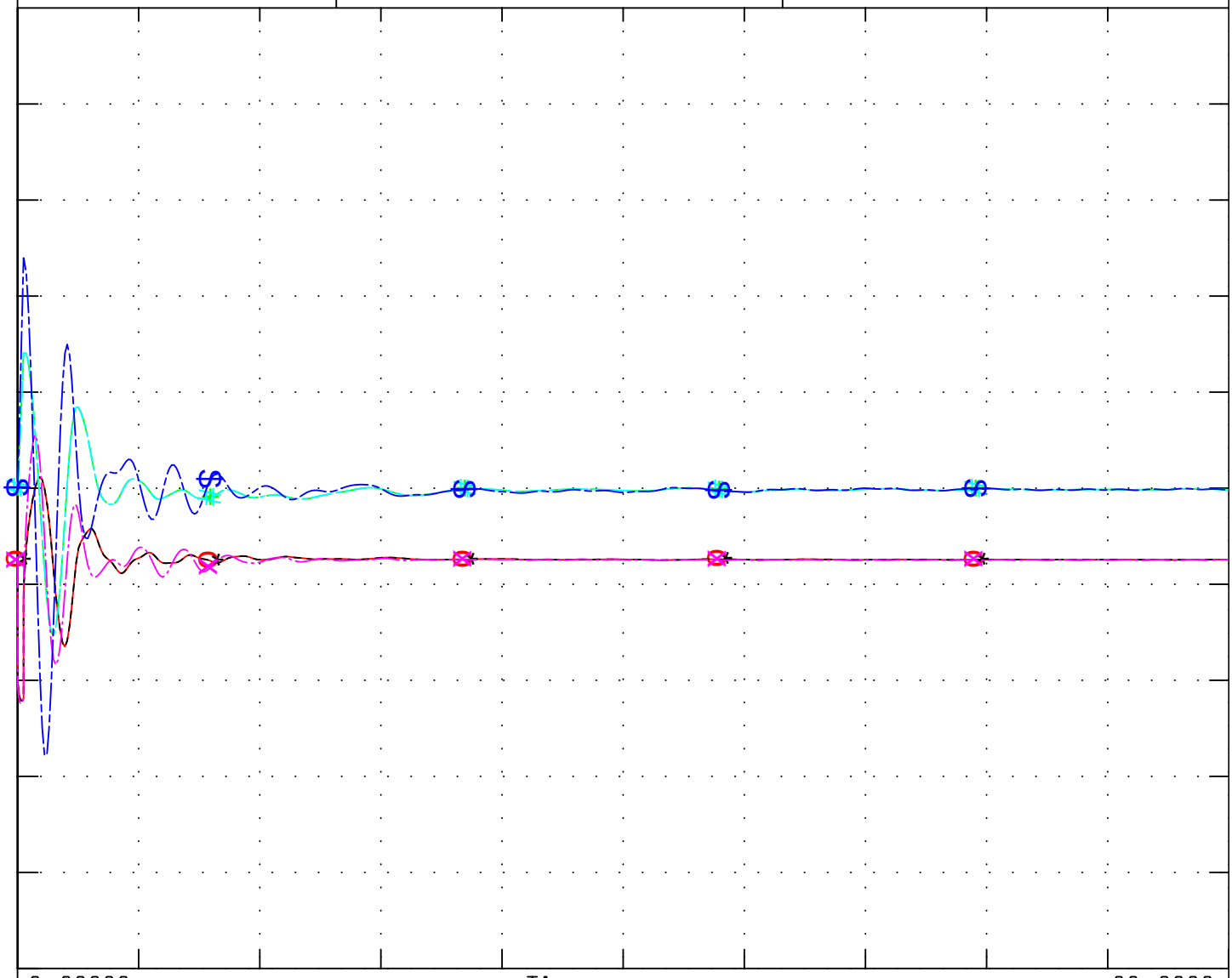

0.0000	O	pg	31923	18.0	P0506GT1	1	1	n	468.00
0.9900	+	spd	31923	18.0	P0506GT1	1	1	n	1.0100
0.0000	*	pg	31924	18.0	P0506GT2	2	1	n	468.00
0.9900	#	spd	31924	18.0	P0506GT2	2	1	n	1.0100
0.0000	X	pg	31925	18.0	P0506ST1	3	1	n	746.00
0.9900	$	spd	31925	18.0	P0506ST1	3	1	n	1.0100

PG&E 2004 BASE CASE SERIES - 2010 North Valley Summer Peak Case
PATH15=-1127 MW(S-N) PATH26=3313 MW(N-S) PDCI=3105 MW(N-S) COI=4710 MW(N-S)
CPV Colusa - 2010 Summer Peak - after

Trip COTTONWOOD BUS 1 SEC WAPA Substation

original case 3/26/2004 by SATS 2009 system summer peak
updated loads to 2010 system summer peak
added 2010 North Valley 1-in-10 loads and generation dispatch
Morro Bay 4 is the swing bus
Proposed new generation in queue added
CPV Colusa 97 MW looped onto:
Cottonwood - Cortina 230 kV Line (#1)
Cottonwood - Vaca Dixon 230 kV Line (#2)
Logan Creek - Vaca Dixon 230 kV Line (#3)
Glenn - Vaca Dixon 230 kV Line (#4)

3_BUS_VOLT_MAG_230:
Tue Aug 02 15:22:34 2005

10hs_clusa_trs_ctwd1w_bus.chf

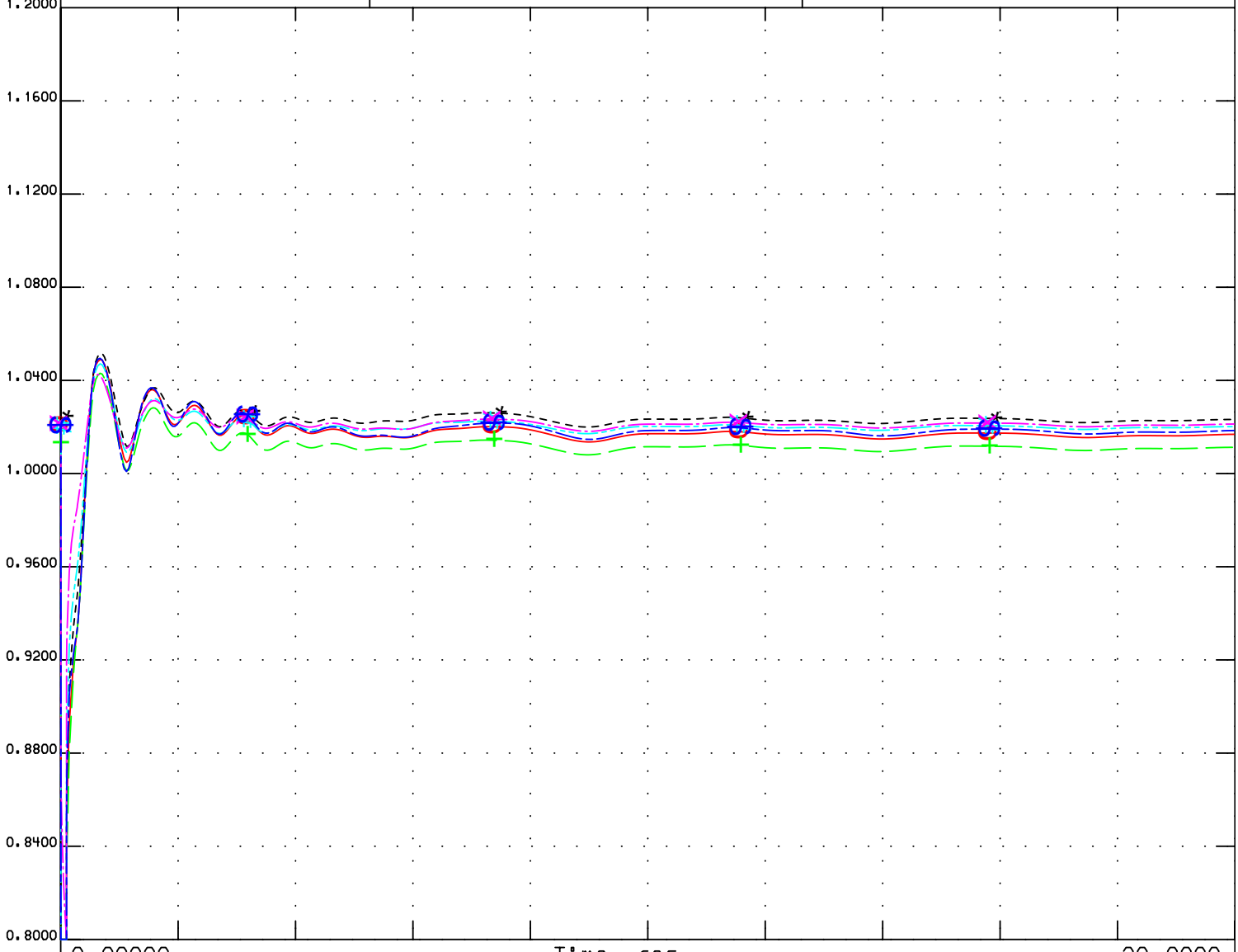

0.8000		O	vbus	30106	230.0	COTWD_F	1	1	n	1.2000
0.8000		+	vbus	30110	230.0	GLENN	1	1	n	1.2000
0.8000		*	vbul	30111	230.0	LOGAN CR	1	1	n	1.2000
0.8000		#	vbus	30450	230.0	CORTINA	1	1	n	1.2000
0.8000		X	vbus	30460	230.0	VACA-DIX	1	1	n	1.2000
0.8000		$	vbus	37565	230.0	OLINDAW	1	1	n	1.2000

PG&E 2004 BASE CASE SERIES - 2010 North Valley Summer Peak Case
PATH15=-1127 MW(S-N) PATH26=3313 MW(N-S) PDCI=3105 MW(N-S) COI=4710 MW(N-S)
CPV Colusa - 2010 Summer Peak - after

Trip COTTONWOOD BUS 1 SEC WAPA Substation

original case 3/26/2004 by SATS 2009 system summer peak
updated loads to 2010 system summer peak
added 2010 North Valley 1-in-10 loads and generation dispatch
Morro Bay 4 is the swing bus
Proposed new generation in queue added
CPV Colusa 97 MW looped onto:
Cottonwood - Cortina 230 kV Line (#1)
Cottonwood - Vaca Dixon 230 kV Line (#2)
Logan Creek - Vaca Dixon 230 kV Line (#3)
Glenn - Vaca Dixon 230 kV Line (#4)

4_BUS_VOLT_MAG_230:
Tue Aug 02 15:22:34 2005

10hs_clusa_trs_ctwd1w_bus.chf

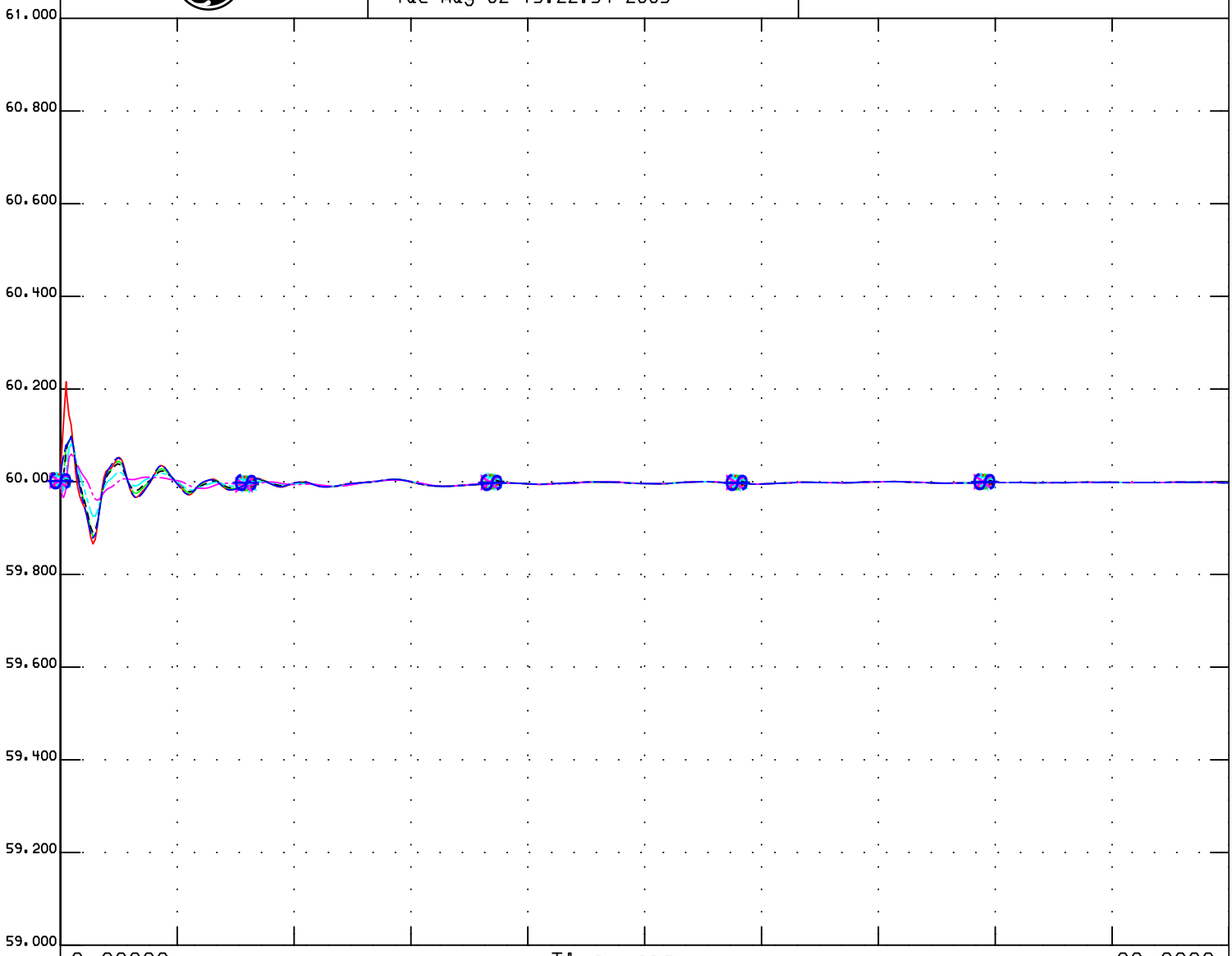

59.000		O	fbus	30106	230.0	COTWD_F	1	1	n	61.000
59.000		+	fbus	30110	230.0	GLENN	1	1	n	61.000
59.000		*	fbul	30111	230.0	LOGAN CR	1	1	n	61.000
59.000		#	fbus	30450	230.0	CORTINA	1	1	n	61.000
59.000		X	fbus	30460	230.0	VACA-DIX	1	1	n	61.000
59.000		$	fbus	37565	230.0	OLINDAW	1	1	n	61.000

PG&E 2004 BASE CASE SERIES - 2010 North Valley Summer Peak Case
PATH15=-1127 MW(S-N) PATH26=3313 MW(N-S) PDCI=3105 MW(N-S) COI=4710 MW(N-S)
CPV Colusa - 2010 Summer Peak - after

Trip COTTONWOOD BUS 1 SEC WAPA Substation

original case 3/26/2004 by SATS 2009 system summer peak
updated loads to 2010 system summer peak
added 2010 North Valley 1-in-10 loads and generation dispatch
Morro Bay 4 is the swing bus
Proposed new generation in queue added
CPV Colusa 97 MW looped onto:
Cottonwood - Cortina 230 kV Line (#1)
Cottonwood - Vaca Dixon 230 kV Line (#2)
Logan Creek - Vaca Dixon 230 kV Line (#3)
Glenn - Vaca Dixon 230 kV Line (#4)

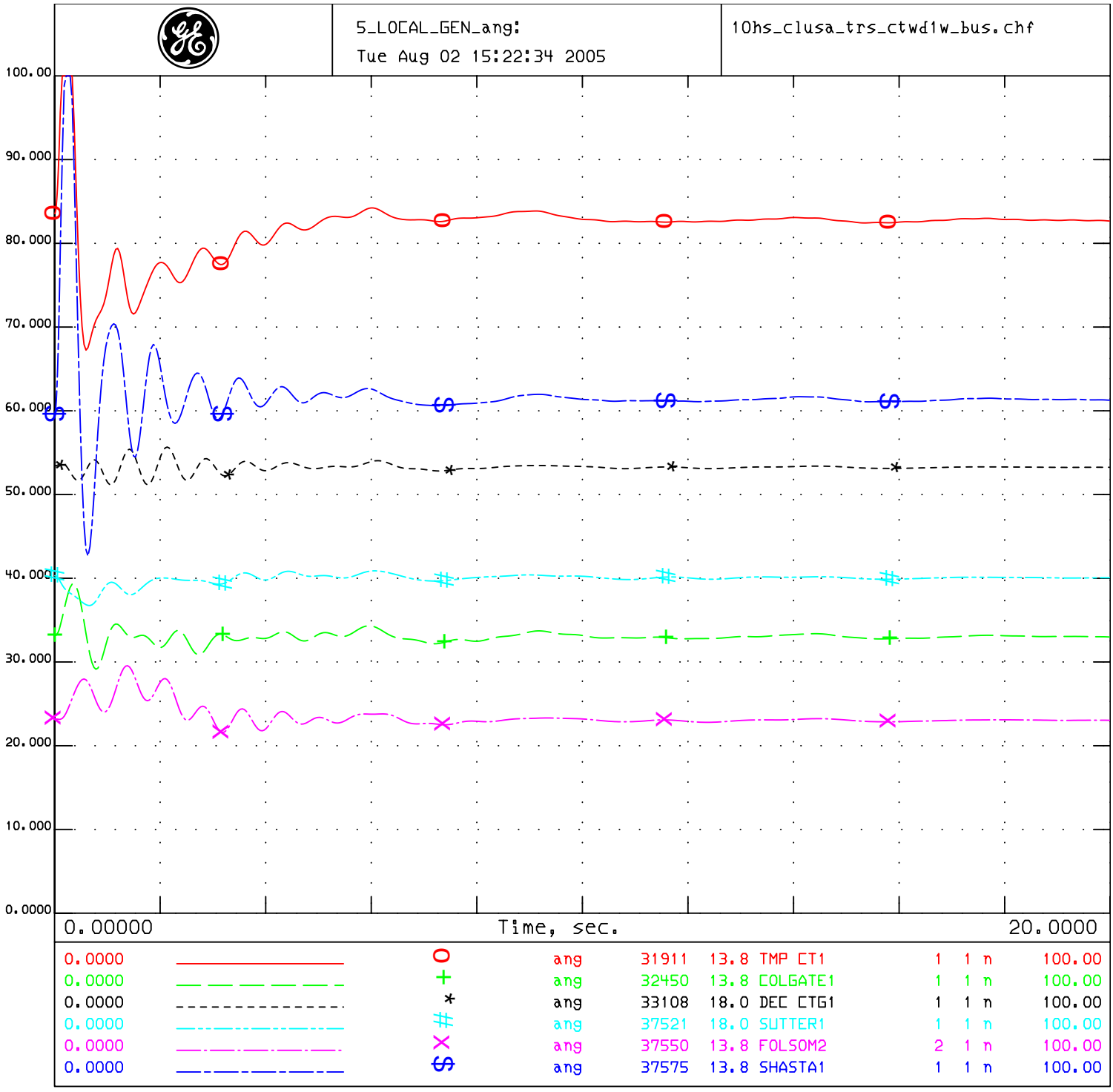

PG&E 2004 BASE CASE SERIES - 2010 North Valley Summer Peak Case
PATH15=-1127 MW(S-N) PATH26=3313 MW(N-S) PDCI=3105 MW(N-S) COI=4710 MW(N-S)
CPV Colusa - 2010 Summer Peak - after

Trip COTTONWOOD BUS 1 SEC WAPA Substation

original case 3/26/2004 by SATS 2009 system summer peak
updated loads to 2010 system summer peak
added 2010 North Valley 1-in-10 loads and generation dispatch
Morro Bay 4 is the swing bus
Proposed new generation in queue added
CPV Colusa 97 MW looped onto:
Cottonwood - Cortina 230 kV Line (#1)
Cottonwood - Vaca Dixon 230 kV Line (#2)
Logan Creek - Vaca Dixon 230 kV Line (#3)
Glenn - Vaca Dixon 230 kV Line (#4)

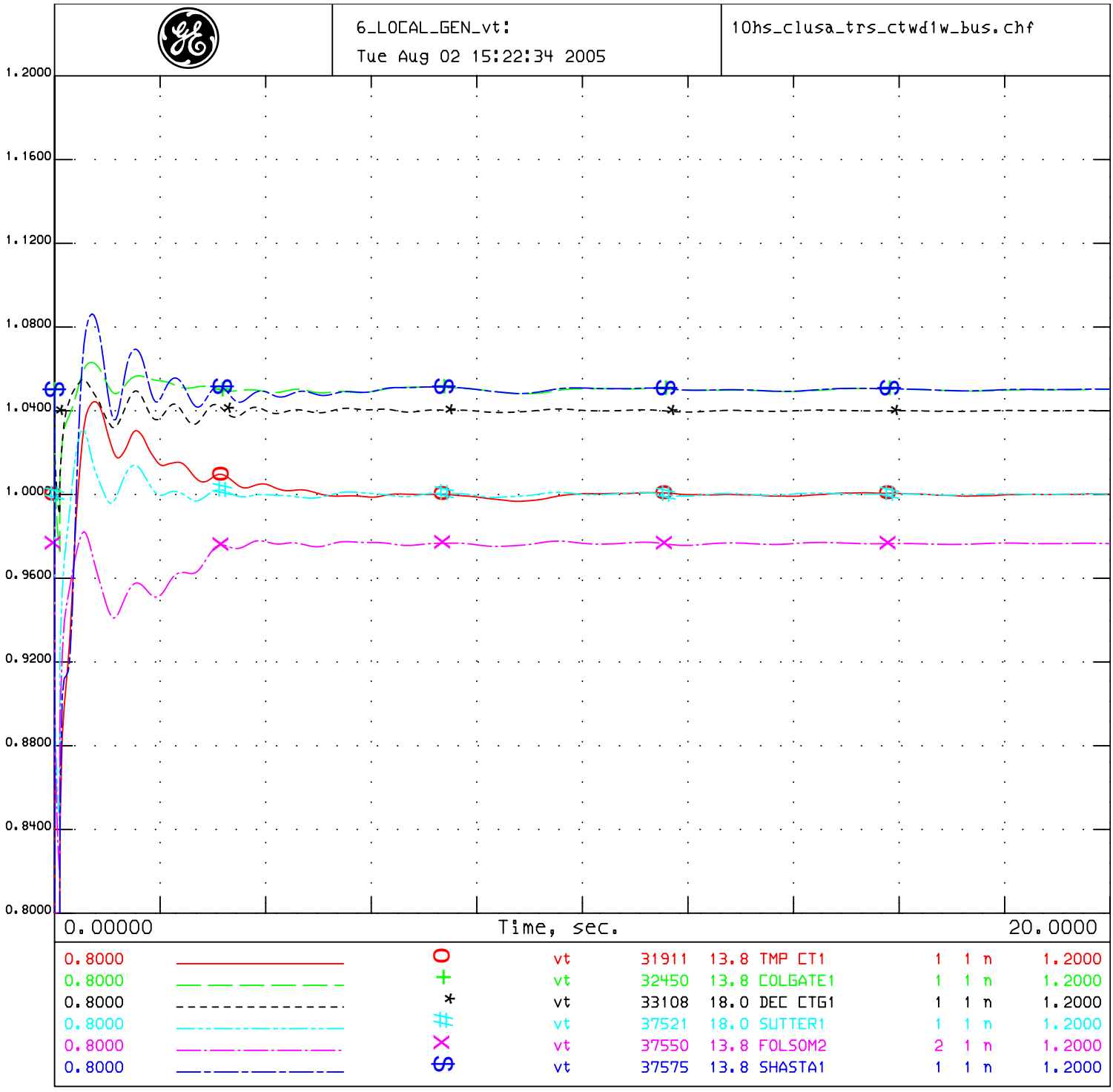

PG&E 2004 BASE CASE SERIES - 2010 North Valley Summer Peak Case
PATH15=-1127 MW(S-N) PATH26=3313 MW(N-S) PDCI=3105 MW(N-S) COI=4710 MW(N-S)
CPV Colusa - 2010 Summer Peak - after

Trip COTTONWOOD BUS 1 SEC WAPA Substation

original case 3/26/2004 by SATS 2009 system summer peak
updated loads to 2010 system summer peak
added 2010 North Valley 1-in-10 loads and generation dispatch
Morro Bay 4 is the swing bus
Proposed new generation in queue added
CPV Colusa 97 MW looped onto:
Cottonwood - Cortina 230 kV Line (#1)
Cottonwood - Vaca Dixon 230 kV Line (#2)
Logan Creek - Vaca Dixon 230 kV Line (#3)
Glenn - Vaca Dixon 230 kV Line (#4)

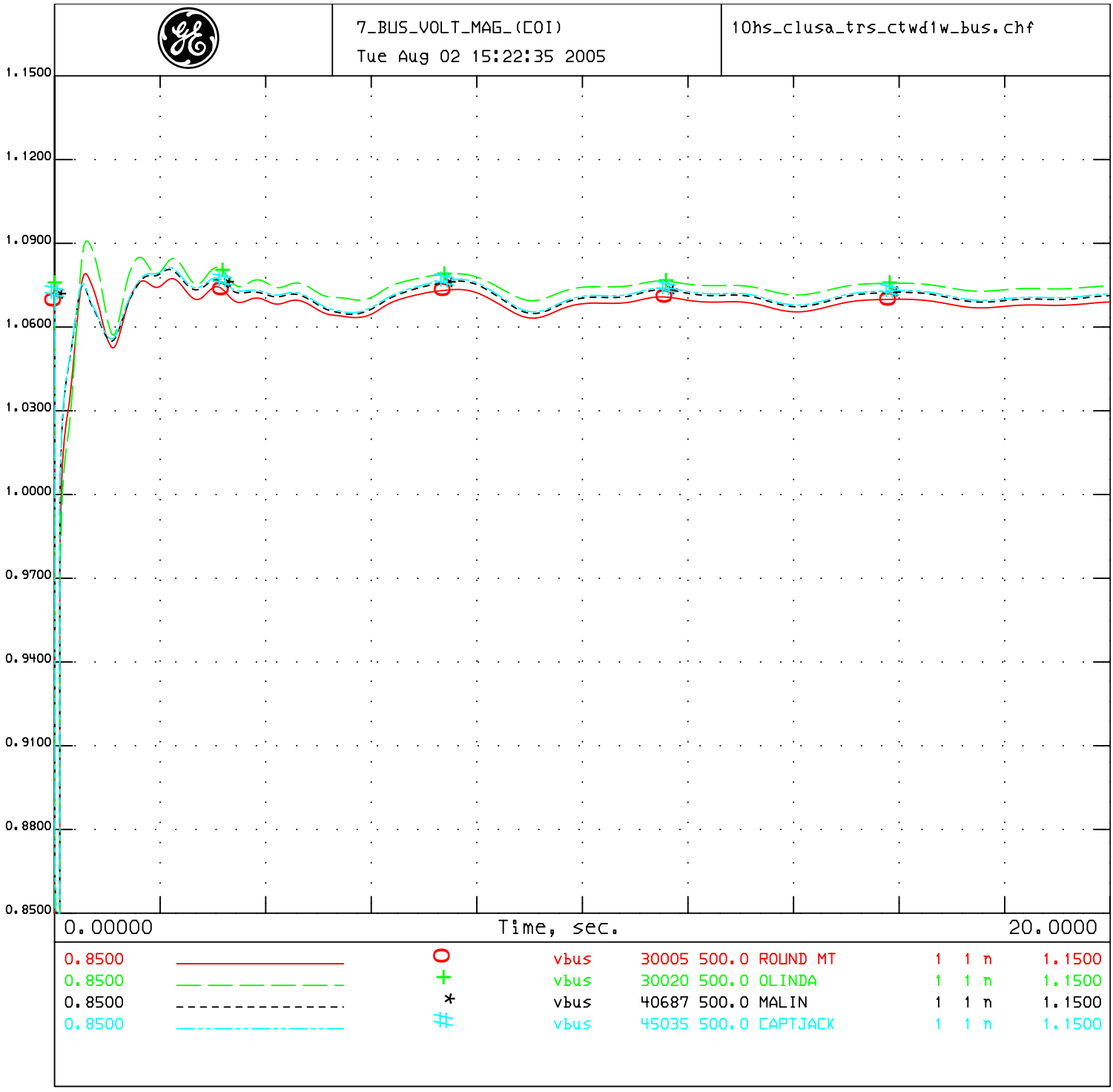

PG&E 2004 BASE CASE SERIES - 2010 North Valley Summer Peak Case
PATH15=-1127 MW(S-N) PATH26=3313 MW(N-S) PDCI=3105 MW(N-S) COI=4710 MW(N-S)
CPV Colusa - 2010 Summer Peak - after

Trip COTTONWOOD BUS 1 SEC WAPA Substation

original case 3/26/2004 by SATS 2009 system summer peak
updated loads to 2010 system summer peak
added 2010 North Valley 1-in-10 loads and generation dispatch
Morro Bay 4 is the swing bus
Proposed new generation in queue added
CPV Colusa 97 MW looped onto:
Cottonwood - Cortina 230 kV Line (#1)
Cottonwood - Vaca Dixon 230 kV Line (#2)
Logan Creek - Vaca Dixon 230 kV Line (#3)
Glenn - Vaca Dixon 230 kV Line (#4)

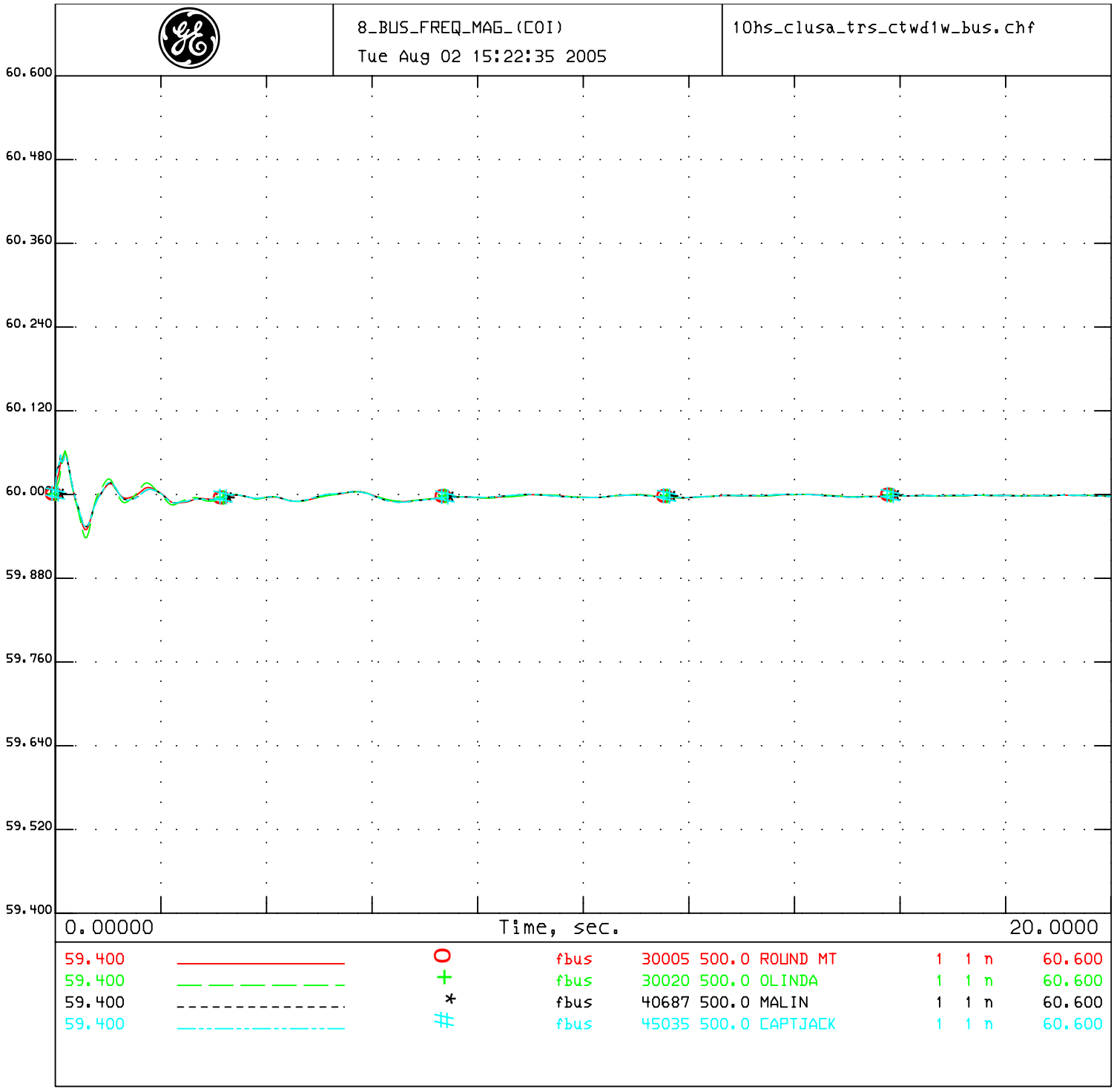

PG&E 2004 BASE CASE SERIES - 2010 North Valley Summer Peak Case
PATH15=-1127 MW(S-N) PATH26=3313 MW(N-S) PDCI=3105 MW(N-S) COI=4710 MW(N-S)
CPV Colusa - 2010 Summer Peak - after

Trip COTTONWOOD BUS 1 SEC WAPA Substation

original case 3/26/2004 by SATS 2009 system summer peak
updated loads to 2010 system summer peak
added 2010 North Valley 1-in-10 loads and generation dispatch
Morro Bay 4 is the swing bus
Proposed new generation in queue added
CPV Colusa 97 MW looped onto:
Cottonwood - Cortina 230 kV Line (#1)
Cottonwood - Vaca Dixon 230 kV Line (#2)
Logan Creek - Vaca Dixon 230 kV Line (#3)
Glenn - Vaca Dixon 230 kV Line (#4)

1_COLUSA_vt_ang
Tue Aug 02 15:29:36 2005

10hs_clusa_trs_ctwd2w_bus.chf

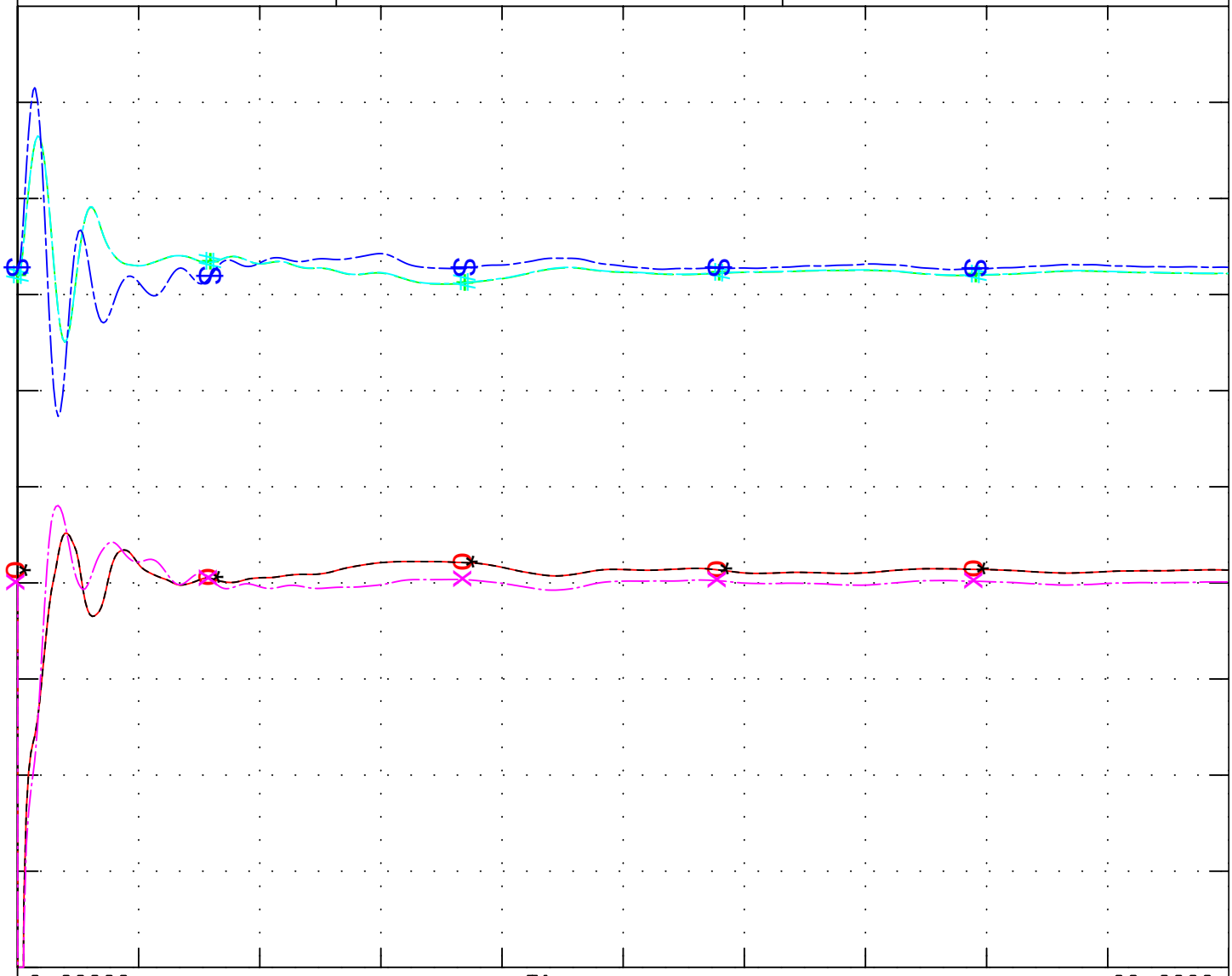

0.8000		O	vt	31923	18.0	P0506GT1	1	1	1.2000
0.0000		+	ang	31923	18.0	P0506GT1	1	1	100.00
0.8000		*	vt	31924	18.0	P0506GT2	2	1	1.2000
0.0000		#	ang	31924	18.0	P0506GT2	2	1	100.00
0.8000		X	vt	31925	18.0	P0506ST1	3	1	1.2000
0.0000		$	ang	31925	18.0	P0506ST1	3	1	100.00

PG&E 2004 BASE CASE SERIES - 2010 North Valley Summer Peak Case
PATH15=-1127 MW(S-N) PATH26=3313 MW(N-S) PDCI=3105 MW(N-S) COI=4710 MW(N-S)
CPV Colusa - 2010 Summer Peak - after

Trip COTTONWOOD BUS 2 SEC WAPA Substation

original case 3/26/2004 by SATS 2009 system summer peak
updated loads to 2010 system summer peak
added 2010 North Valley 1-in-10 loads and generation dispatch
Morro Bay 4 is the swing bus
Proposed new generation in queue added
CPV Colusa 97 MW looped onto:
Cottonwood - Cortina 230 kV Line (#1)
Cottonwood - Vaca Dixon 230 kV Line (#2)
Logan Creek - Vaca Dixon 230 kV Line (#3)
Glenn - Vaca Dixon 230 kV Line (#4)

2_COLUSA_spd_pg
Tue Aug 02 15:29:36 2005

10hs_clusa_trs_ctwd2w_bus.chf

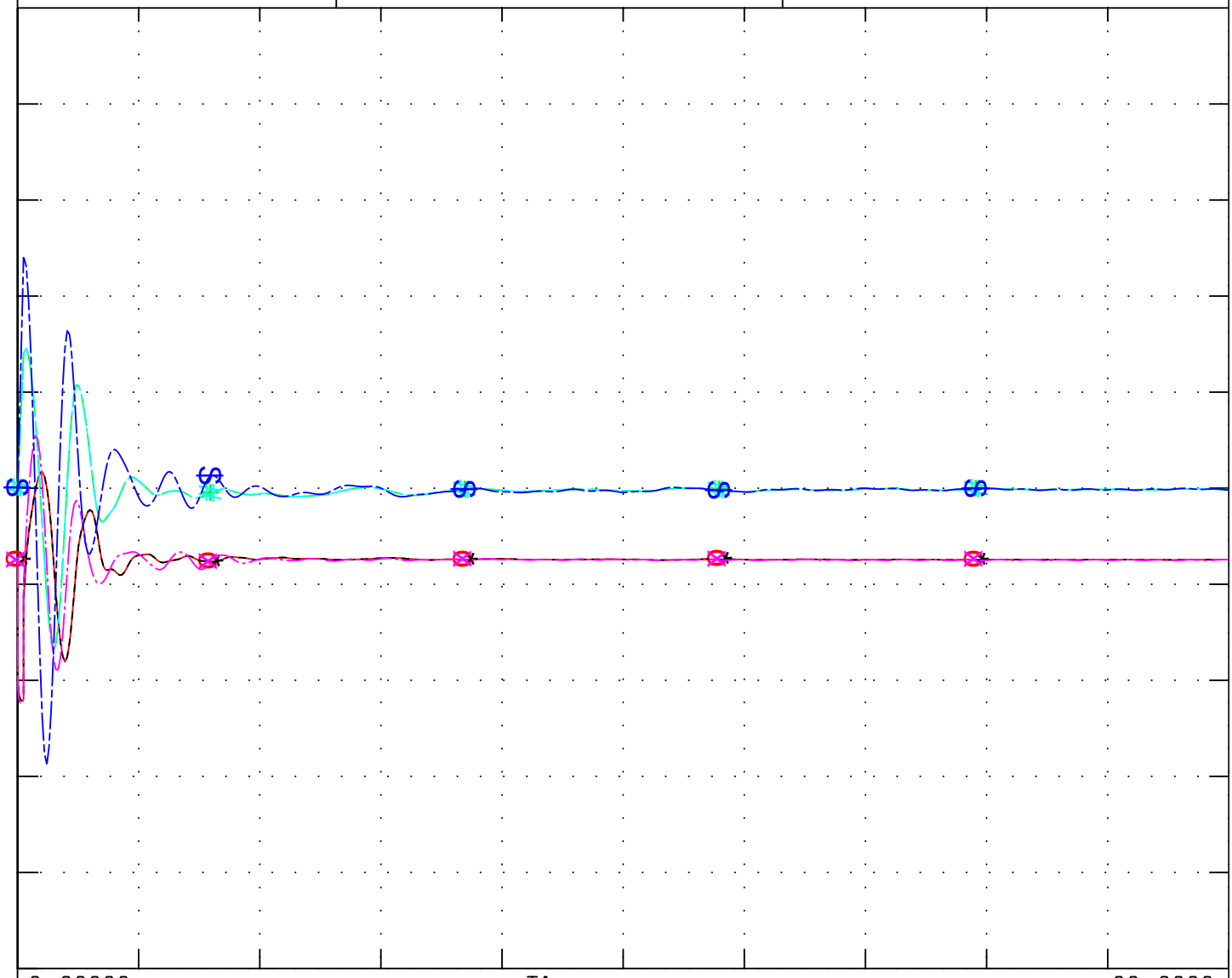

0.0000		O	pg	31923	18.0	P0506GT1	1	1	n	468.00
0.9900		+	spd	31923	18.0	P0506GT1	1	1	n	1.0100
0.0000		*	pg	31924	18.0	P0506GT2	2	1	n	468.00
0.9900		#	spd	31924	18.0	P0506GT2	2	1	n	1.0100
0.0000		X	pg	31925	18.0	P0506ST1	3	1	n	746.00
0.9900		S	spd	31925	18.0	P0506ST1	3	1	n	1.0100

PG&E 2004 BASE CASE SERIES - 2010 North Valley Summer Peak Case
PATH15=-1127 MW(S-N) PATH26=3313 MW(N-S) PDCI=3105 MW(N-S) COI=4710 MW(N-S)
CPV Colusa - 2010 Summer Peak - after

Trip COTTONWOOD BUS 2 SEC WAPA Substation

original case 3/26/2004 by SATS 2009 system summer peak
updated loads to 2010 system summer peak
added 2010 North Valley 1-in-10 loads and generation dispatch
Morro Bay 4 is the swing bus
Proposed new generation in queue added
CPV Colusa 97 MW looped onto:
Cottonwood - Cortina 230 kV Line (#1)
Cottonwood - Vaca Dixon 230 kV Line (#2)
Logan Creek - Vaca Dixon 230 kV Line (#3)
Glenn - Vaca Dixon 230 kV Line (#4)

3_BUS_VOLT_MAG_230:
Tue Aug 02 15:29:37 2005

10hs_clusa_trs_ctwd2w_bus.chf

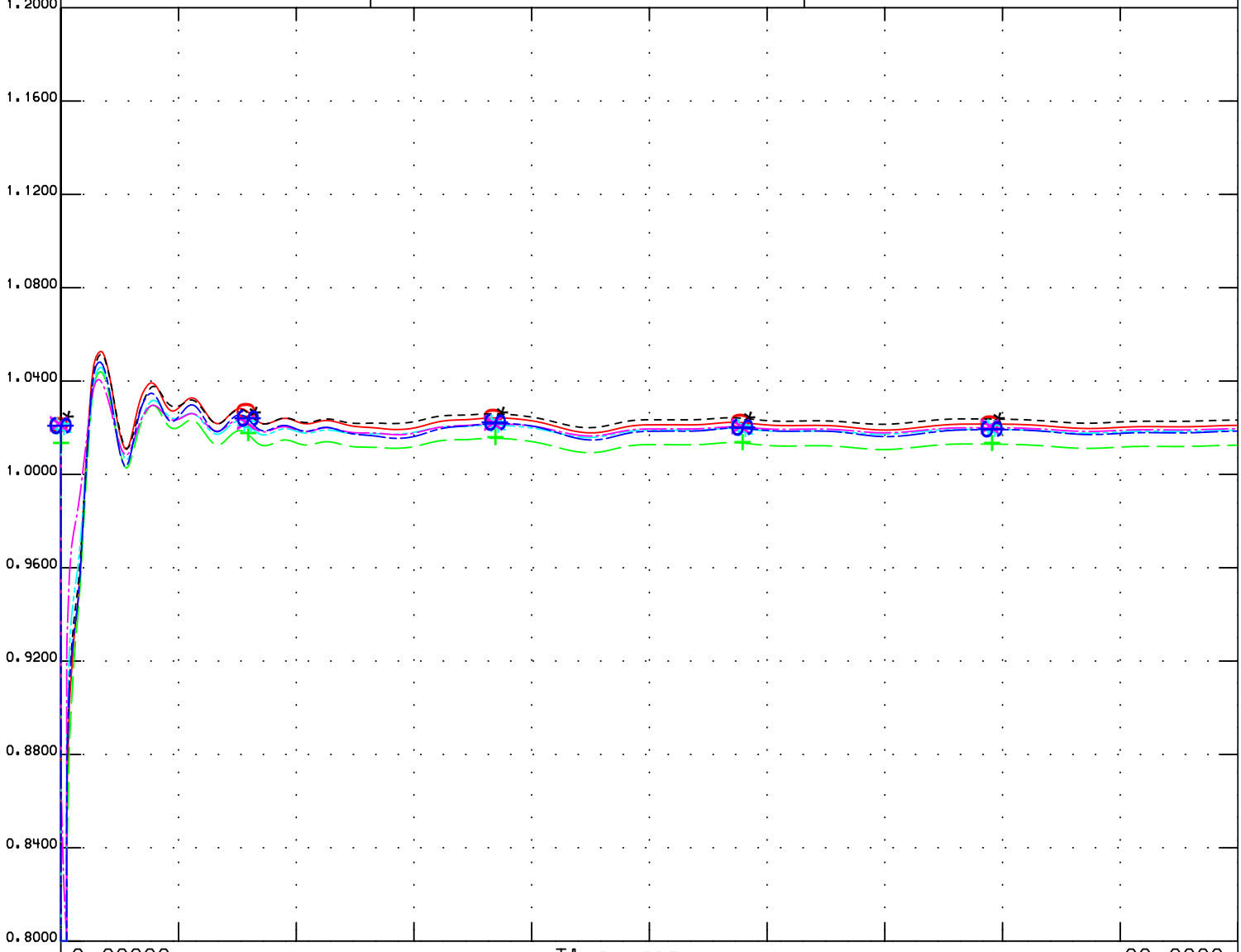

0.8000	————	O	vbus	30106	230.0	COTWD_F	1	1	n	1.2000
0.8000	— — — —	+	vbus	30110	230.0	GLENN	1	1	n	1.2000
0.8000	- - - - - -	*	vbul	30111	230.0	LOGAN CR	1	1	n	1.2000
0.8000	—-—-—	#	vbus	30450	230.0	CORTINA	1	1	n	1.2000
0.8000	—.—.—	X	vbus	30460	230.0	VACA-DIX	1	1	n	1.2000
0.8000	—-—-—	$	vbus	37565	230.0	OLINDAW	1	1	n	1.2000

PG&E 2004 BASE CASE SERIES - 2010 North Valley Summer Peak Case
PATH15=-1127 MW(S-N) PATH26=3313 MW(N-S) PDCI=3105 MW(N-S) COI=4710 MW(N-S)
CPV Colusa - 2010 Summer Peak - after

Trip COTTONWOOD BUS 2 SEC WAPA Substation

original case 3/26/2004 by SATS 2009 system summer peak
updated loads to 2010 system summer peak
added 2010 North Valley 1-in-10 loads and generation dispatch
Morro Bay 4 is the swing bus
Proposed new generation in queue added
CPV Colusa 97 MW looped onto:
Cottonwood - Cortina 230 kV Line (#1)
Cottonwood - Vaca Dixon 230 kV Line (#2)
Logan Creek - Vaca Dixon 230 kV Line (#3)
Glenn - Vaca Dixon 230 kV Line (#4)

4_BUS_VOLT_MAG_230:
Tue Aug 02 15:29:37 2005

10hs_clusa_trs_ctwd2w_bus.chf

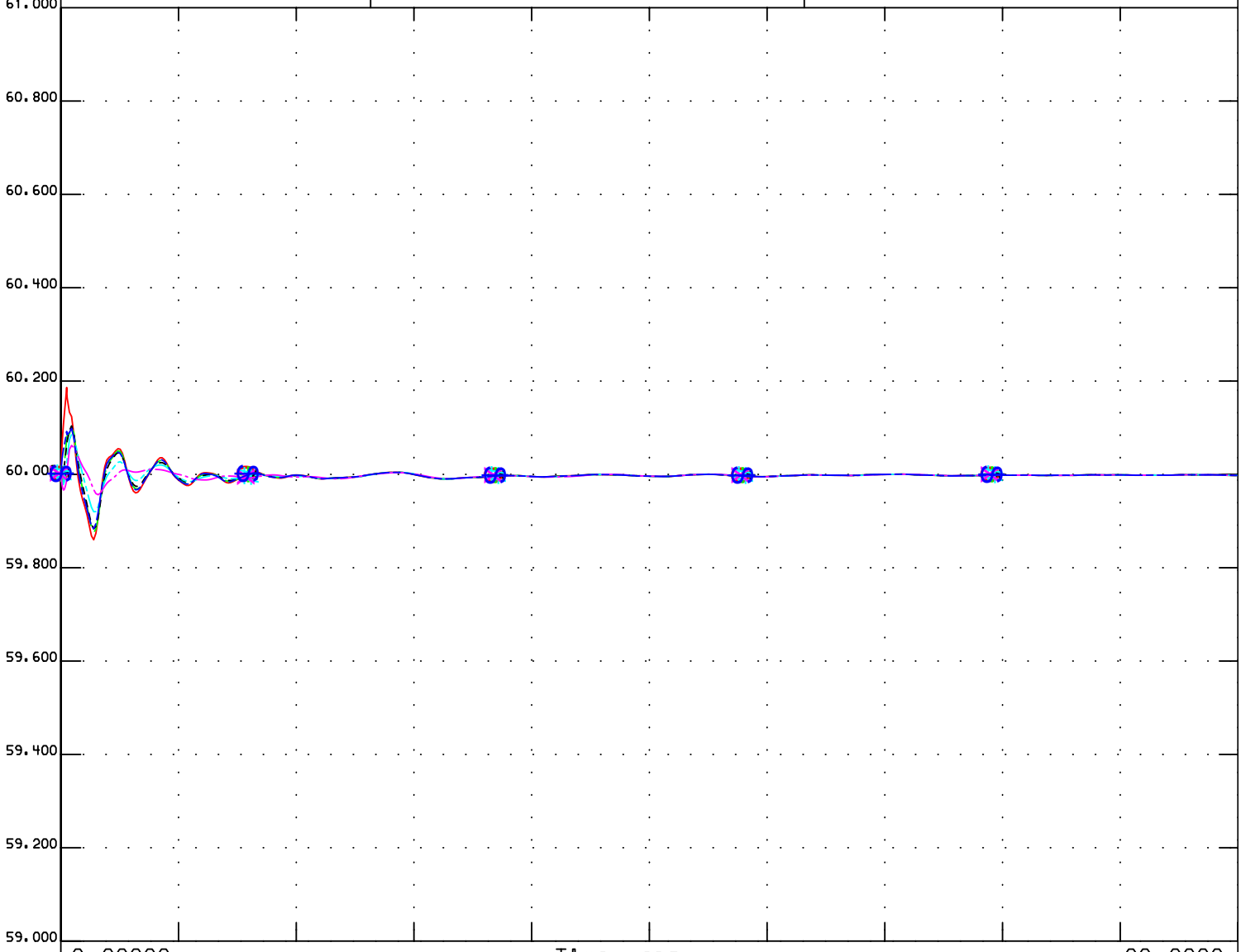

59.000		O	fbus	30106	230.0	COTWD_F	1	1	n	61.000
59.000		+	fbus	30110	230.0	GLENN	1	1	n	61.000
59.000		*	fbul	30111	230.0	LOGAN CR	1	1	n	61.000
59.000		#	fbus	30450	230.0	CORTINA	1	1	n	61.000
59.000		X	fbus	30460	230.0	VACA-DIX	1	1	n	61.000
59.000		S	fbus	37565	230.0	OLINDAW	1	1	n	61.000

PG&E 2004 BASE CASE SERIES - 2010 North Valley Summer Peak Case
PATH15=-1127 MW(S-N) PATH26=3313 MW(N-S) PDCI=3105 MW(N-S) COI=4710 MW(N-S)
CPV Colusa - 2010 Summer Peak - after

Trip COTTONWOOD BUS 2 SEC WAPA Substation

original case 3/26/2004 by SATS 2009 system summer peak
updated loads to 2010 system summer peak
added 2010 North Valley 1-in-10 loads and generation dispatch
Morro Bay 4 is the swing bus
Proposed new generation in queue added
CPV Colusa 97 MW looped onto:
Cottonwood - Cortina 230 kV Line (#1)
Cottonwood - Vaca Dixon 230 kV Line (#2)
Logan Creek - Vaca Dixon 230 kV Line (#3)
Glenn - Vaca Dixon 230 kV Line (#4)

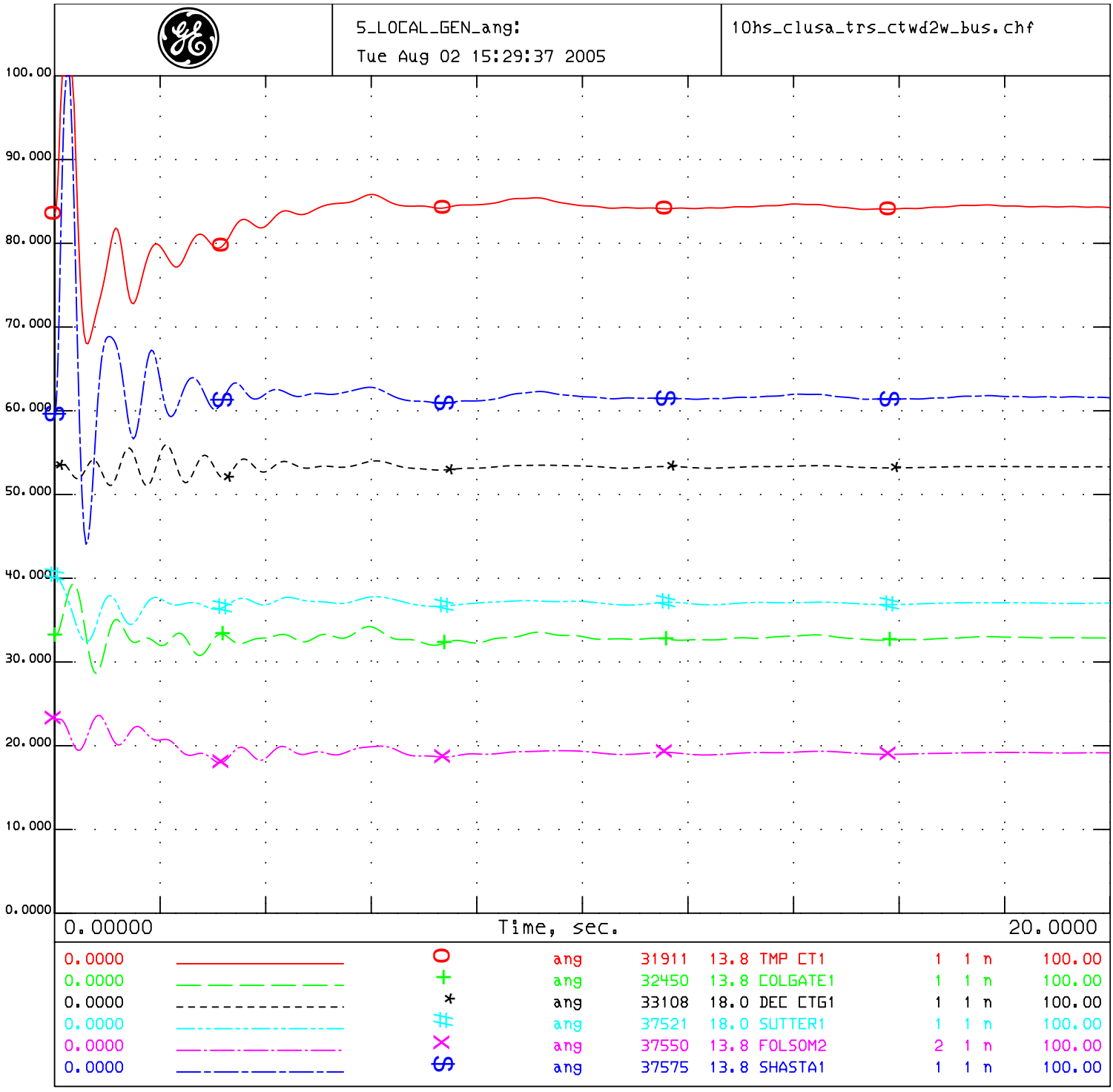

PG&E 2004 BASE CASE SERIES - 2010 North Valley Summer Peak Case
PATH15=-1127 MW(S-N) PATH26=3313 MW(N-S) PDCI=3105 MW(N-S) COI=4710 MW(N-S)
CPV Colusa - 2010 Summer Peak - after

Trip COTTONWOOD BUS 2 SEC WAPA Substation

original case 3/26/2004 by SATS 2009 system summer peak
updated loads to 2010 system summer peak
added 2010 North Valley 1-in-10 loads and generation dispatch
Morro Bay 4 is the swing bus
Proposed new generation in queue added
CPV Colusa 97 MW looped onto:
Cottonwood - Cortina 230 kV Line (#1)
Cottonwood - Vaca Dixon 230 kV Line (#2)
Logan Creek - Vaca Dixon 230 kV Line (#3)
Glenn - Vaca Dixon 230 kV Line (#4)

6_LOCAL_GEN_vt:
Tue Aug 02 15:29:37 2005

10hs_clusa_trs_ctwd2w_bus.chf

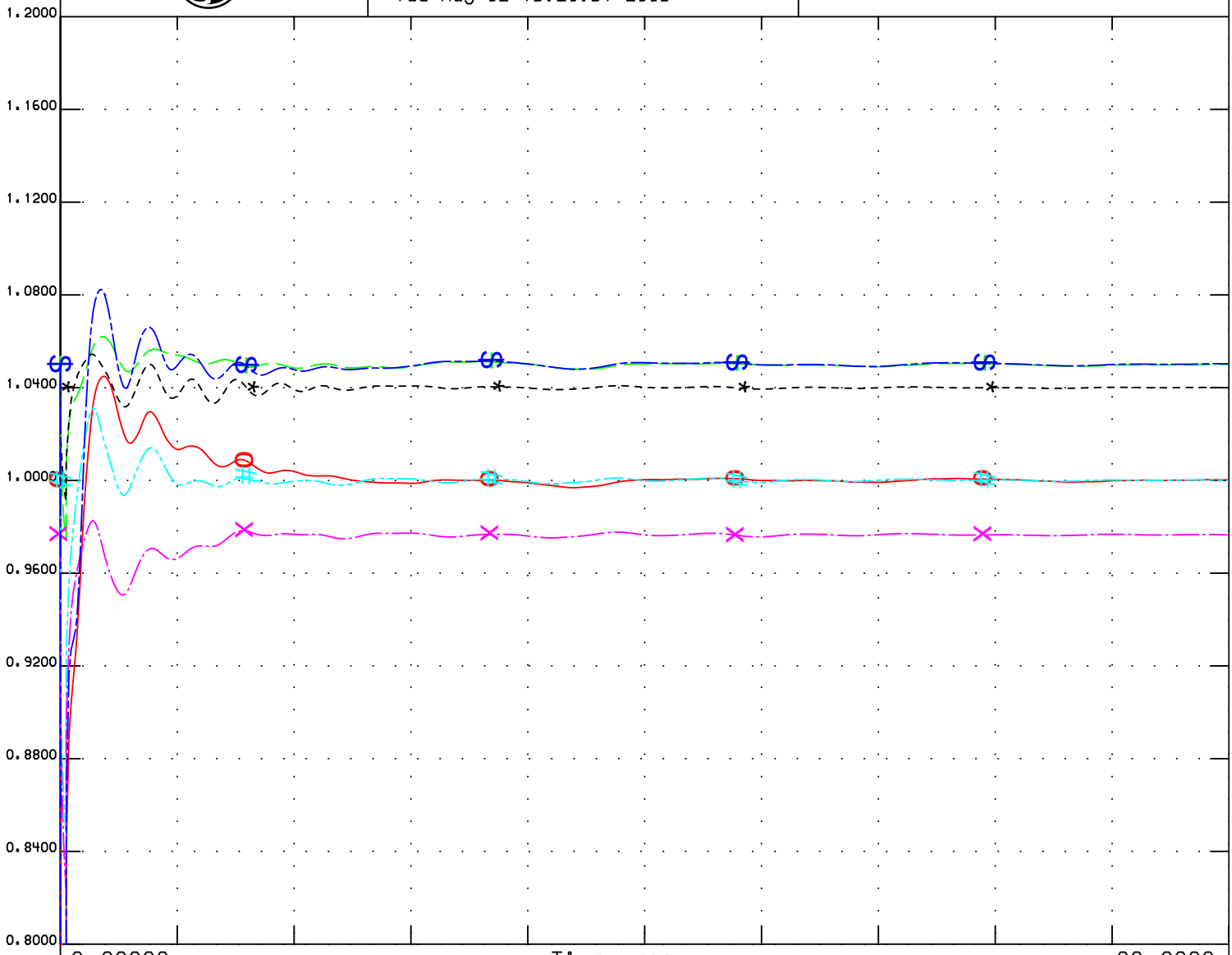

0.8000		O	vt	31911	13.8	TMP CT1	1	1	n	1.2000
0.8000		+	vt	32450	13.8	COLGATE1	1	1	n	1.2000
0.8000		*	vt	33108	18.0	DEC CTG1	1	1	n	1.2000
0.8000		#	vt	37521	18.0	SUTTER1	1	1	n	1.2000
0.8000		X	vt	37550	13.8	FOLSOM2	2	1	n	1.2000
0.8000		$	vt	37575	13.8	SHASTA1	1	1	n	1.2000

PG&E 2004 BASE CASE SERIES - 2010 North Valley Summer Peak Case
PATH15=-1127 MW(S-N) PATH26=3313 MW(N-S) PDCI=3105 MW(N-S) COI=4710 MW(N-S)
CPV Colusa - 2010 Summer Peak - after

Trip COTTONWOOD BUS 2 SEC WAPA Substation

original case 3/26/2004 by SATS 2009 system summer peak
updated loads to 2010 system summer peak
added 2010 North Valley 1-in-10 loads and generation dispatch
Morro Bay 4 is the swing bus
Proposed new generation in queue added
CPV Colusa 97 MW looped onto:
Cottonwood - Cortina 230 kV Line (#1)
Cottonwood - Vaca Dixon 230 kV Line (#2)
Logan Creek - Vaca Dixon 230 kV Line (#3)
Glenn - Vaca Dixon 230 kV Line (#4)

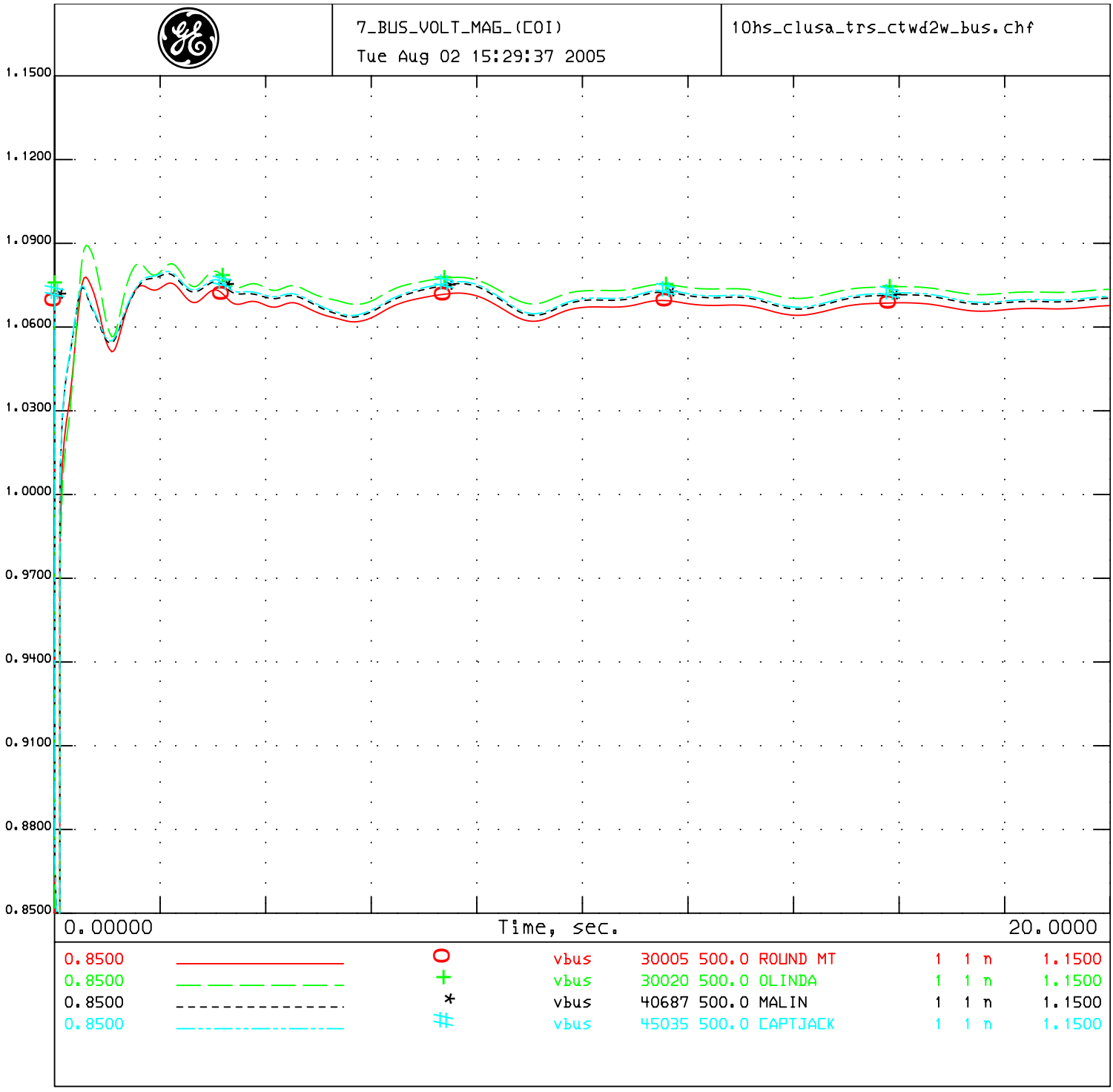

PG&E 2004 BASE CASE SERIES - 2010 North Valley Summer Peak Case
PATH15=-1127 MW(S-N) PATH26=3313 MW(N-S) PDCI=3105 MW(N-S) COI=4710 MW(N-S)
CPV Colusa - 2010 Summer Peak - after

Trip COTTONWOOD BUS 2 SEC WAPA Substation

original case 3/26/2004 by SATS 2009 system summer peak
updated loads to 2010 system summer peak
added 2010 North Valley 1-in-10 loads and generation dispatch
Morro Bay 4 is the swing bus
Proposed new generation in queue added
CPV Colusa 97 MW looped onto:
Cottonwood - Cortina 230 kV Line (#1)
Cottonwood - Vaca Dixon 230 kV Line (#2)
Logan Creek - Vaca Dixon 230 kV Line (#3)
Glenn - Vaca Dixon 230 kV Line (#4)

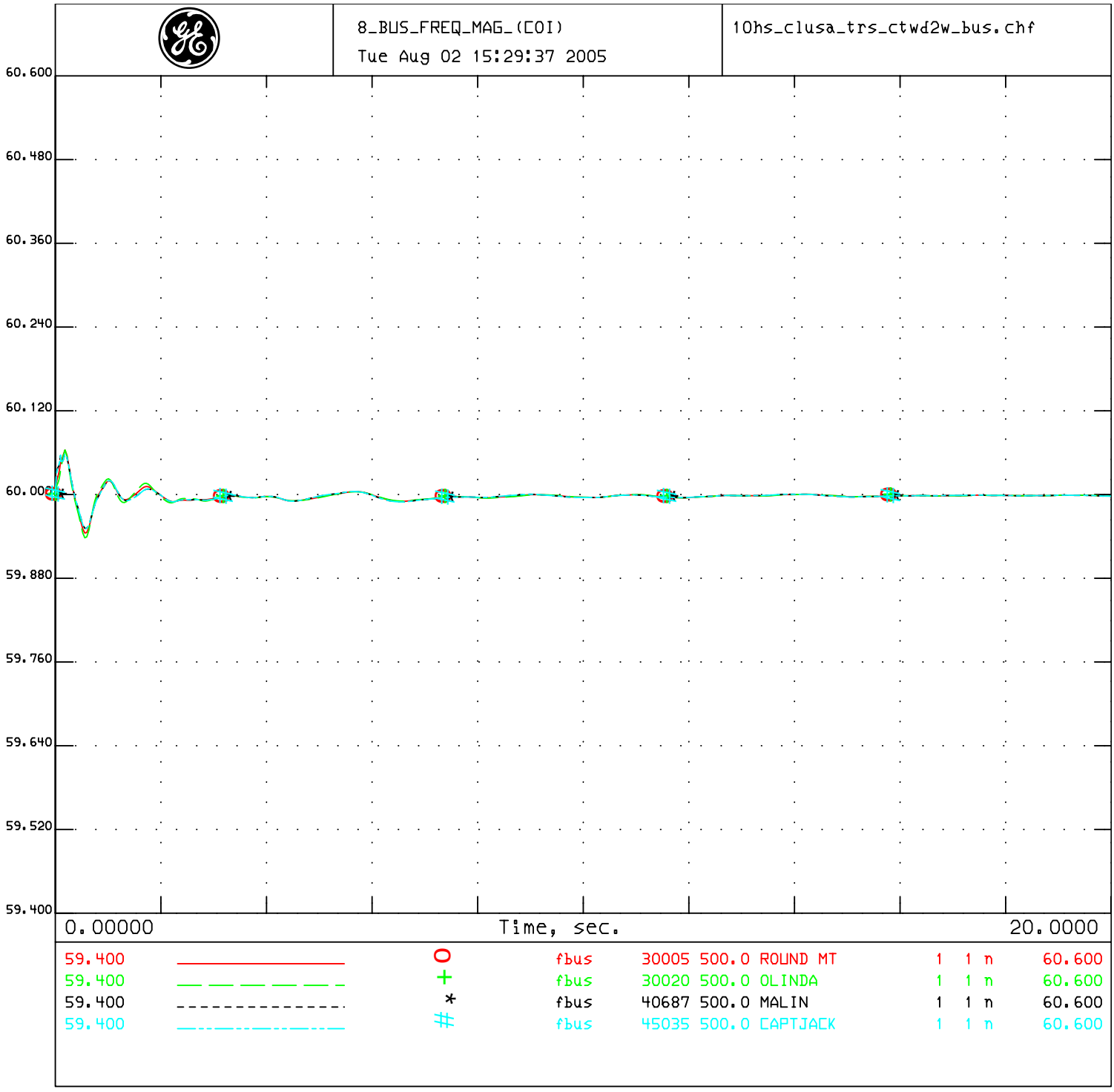

PG&E 2004 BASE CASE SERIES - 2010 North Valley Summer Peak Case
PATH15=-1127 MW(S-N) PATH26=3313 MW(N-S) PDCI=3105 MW(N-S) COI=4710 MW(N-S)
CPV Colusa - 2010 Summer Peak - after

Trip COTTONWOOD BUS 2 SEC WAPA Substation

original case 3/26/2004 by SATS 2009 system summer peak
updated loads to 2010 system summer peak
added 2010 North Valley 1-in-10 loads and generation dispatch
Morro Bay 4 is the swing bus
Proposed new generation in queue added
CPV Colusa 97 MW looped onto:
Cottonwood - Cortina 230 kV Line (#1)
Cottonwood - Vaca Dixon 230 kV Line (#2)
Logan Creek - Vaca Dixon 230 kV Line (#3)
Glenn - Vaca Dixon 230 kV Line (#4)

1_COLUSA_vt_ang
Tue Aug 02 17:36:13 2005

10hs_clusa_trs_vaca1d_bus.chf

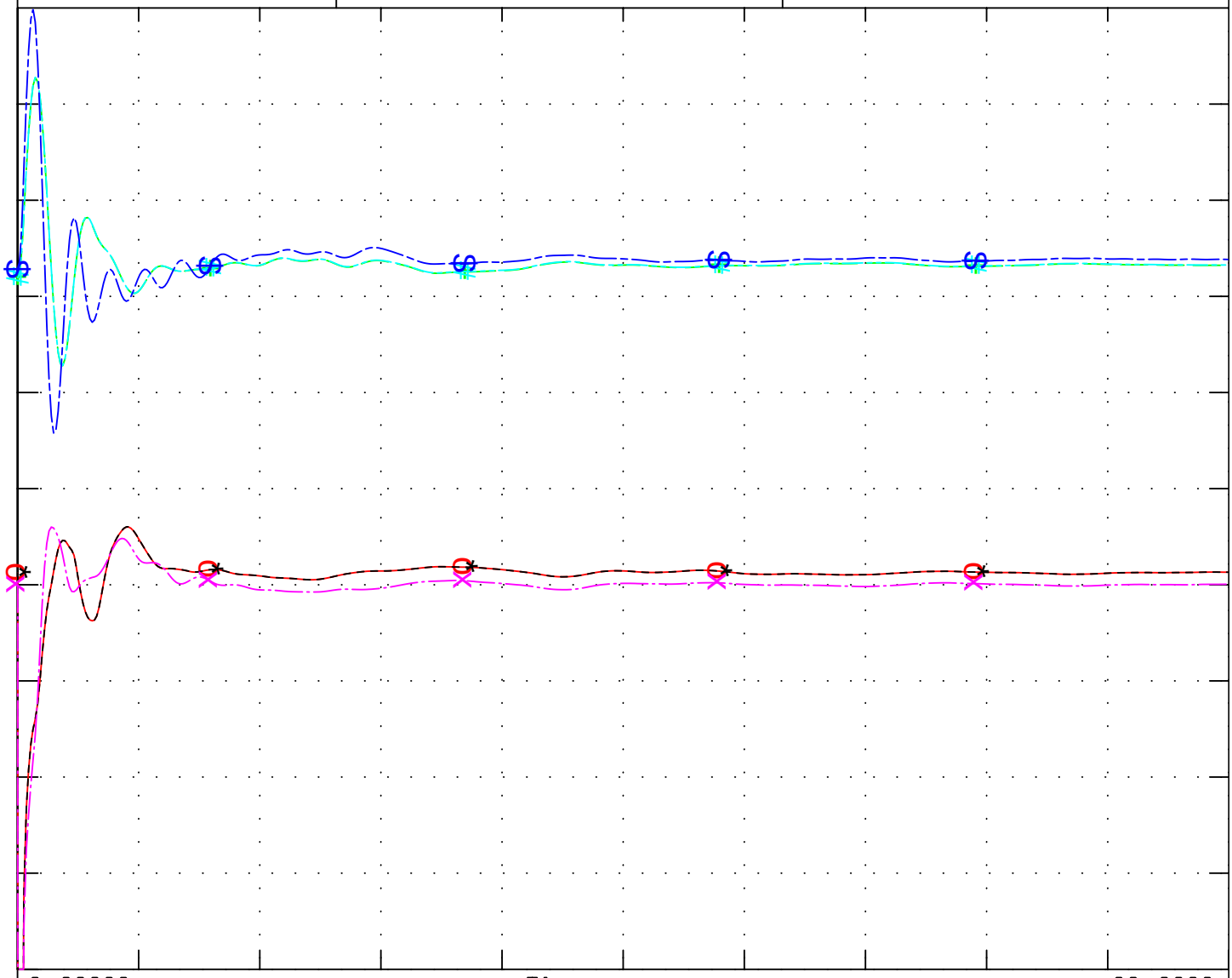

0.8000		O	vt	31923	18.0	P0506GT1	1	1	1.2000
0.0000		+	ang	31923	18.0	P0506GT1	1	1	100.00
0.8000		*	vt	31924	18.0	P0506GT2	2	1	1.2000
0.0000		#	ang	31924	18.0	P0506GT2	2	1	100.00
0.8000		X	vt	31925	18.0	P0506ST1	3	1	1.2000
0.0000		⊗	ang	31925	18.0	P0506ST1	3	1	100.00

PG&E 2004 BASE CASE SERIES - 2010 North Valley Summer Peak Case
PATH15=-1127 MW(S-N) PATH26=3313 MW(N-S) PDCI=3105 MW(N-S) COI=4710 MW(N-S)
CPV Colusa - 2010 Summer Peak - after

Trip VACA-DIXON BUS 1 SEC D Substation

original case 3/26/2004 by SATS 2009 system summer peak
updated loads to 2010 system summer peak
added 2010 North Valley 1-in-10 loads and generation dispatch
Morro Bay 4 is the swing bus
Proposed new generation in queue added
CPV Colusa 97 MW looped onto:
Cottonwood - Cortina 230 kV Line (#1)
Cottonwood - Vaca Dixon 230 kV Line (#2)
Logan Creek - Vaca Dixon 230 kV Line (#3)
Glenn - Vaca Dixon 230 kV Line (#4)

2_COLUSA_spd_pg
Tue Aug 02 17:36:13 2005

10hs_clusa_trs_vaca1d_bus.chf

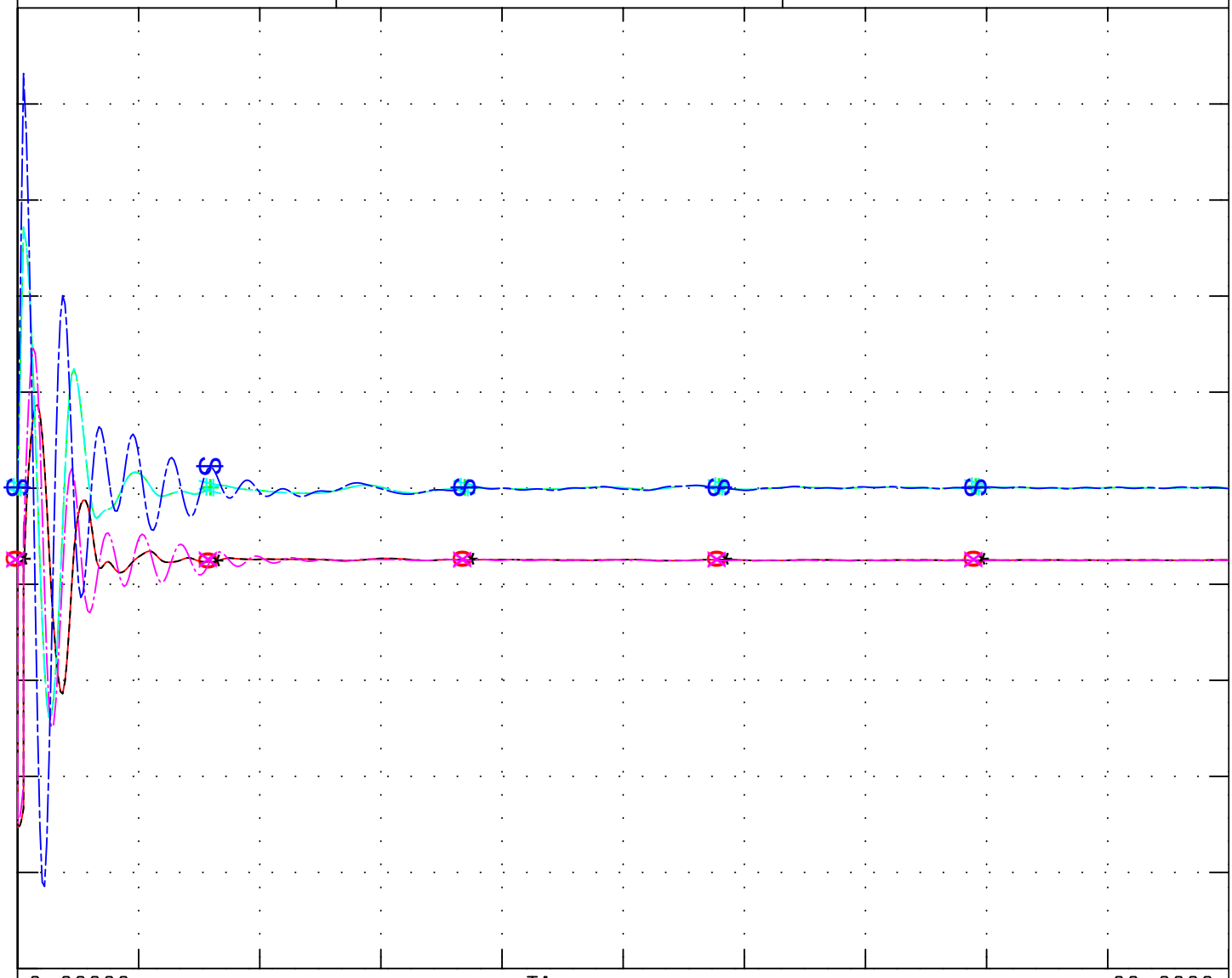

0.0000	————	O	pg	31923	18.0	P0506GT1	1	1	n	468.00
0.9900	— — — — — —	+	spd	31923	18.0	P0506GT1	1	1	n	1.0100
0.0000	- - - - - - - - - - - - - -	*	pg	31924	18.0	P0506GT2	2	1	n	468.00
0.9900	—-—-—-—-—-—	#	spd	31924	18.0	P0506GT2	2	1	n	1.0100
0.0000	—.—.—.—.—.	X	pg	31925	18.0	P0506ST1	3	1	n	746.00
0.9900	—-—-—-—-—-—	$	spd	31925	18.0	P0506ST1	3	1	n	1.0100

PG&E 2004 BASE CASE SERIES - 2010 North Valley Summer Peak Case
PATH15=-1127 MW(S-N) PATH26=3313 MW(N-S) PDCI=3105 MW(N-S) COI=4710 MW(N-S)
CPV Colusa - 2010 Summer Peak - after

Trip VACA-DIXON BUS 1 SEC D Substation

original case 3/26/2004 by SATS 2009 system summer peak
updated loads to 2010 system summer peak
added 2010 North Valley 1-in-10 loads and generation dispatch
Morro Bay 4 is the swing bus
Proposed new generation in queue added
CPV Colusa 97 MW looped onto:
Cottonwood - Cortina 230 kV Line (#1)
Cottonwood - Vaca Dixon 230 kV Line (#2)
Logan Creek - Vaca Dixon 230 kV Line (#3)
Glenn - Vaca Dixon 230 kV Line (#4)

3_BUS_VOLT_MAG_230:
Tue Aug 02 17:36:13 2005

10hs_clusa_trs_vaca1d_bus.chf

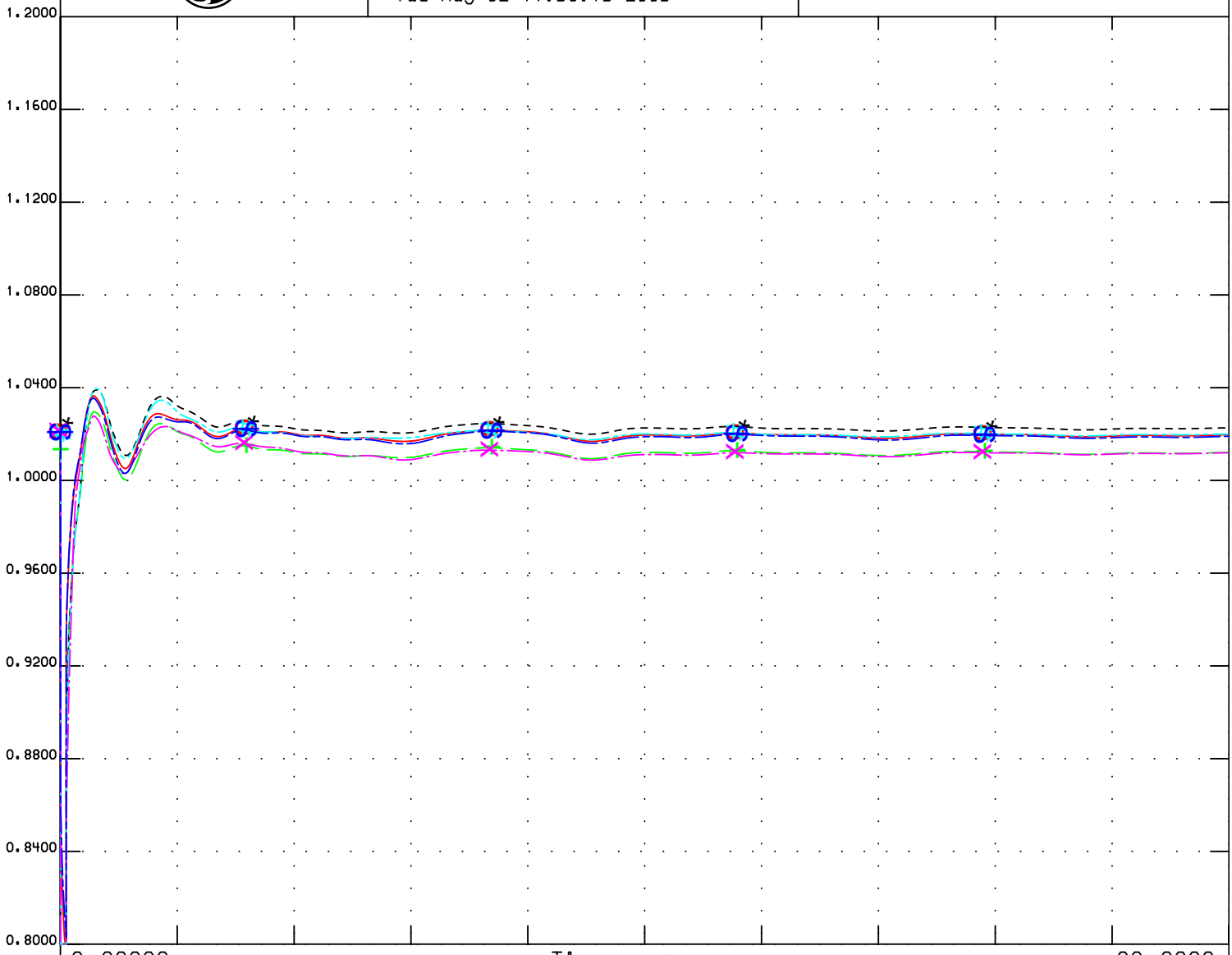

0.8000		O	vbus	30106	230.0	COTWD_F	1	1	n	1.2000
0.8000		+	vbus	30110	230.0	GLENN	1	1	n	1.2000
0.8000		*	vbul	30111	230.0	LOGAN CR	1	1	n	1.2000
0.8000		#	vbus	30450	230.0	CORTINA	1	1	n	1.2000
0.8000		X	vbus	30460	230.0	VACA-DIX	1	1	n	1.2000
0.8000		$	vbus	37565	230.0	OLINDAW	1	1	n	1.2000

PG&E 2004 BASE CASE SERIES - 2010 North Valley Summer Peak Case
PATH15=-1127 MW(S-N) PATH26=3313 MW(N-S) PDCI=3105 MW(N-S) COI=4710 MW(N-S)
CPV Colusa - 2010 Summer Peak - after

Trip VACA-DIXON BUS 1 SEC D Substation

original case 3/26/2004 by SATS 2009 system summer peak
updated loads to 2010 system summer peak
added 2010 North Valley 1-in-10 loads and generation dispatch
Morro Bay 4 is the swing bus
Proposed new generation in queue added
CPV Colusa 97 MW looped onto:
Cottonwood - Cortina 230 kV Line (#1)
Cottonwood - Vaca Dixon 230 kV Line (#2)
Logan Creek - Vaca Dixon 230 kV Line (#3)
Glenn - Vaca Dixon 230 kV Line (#4)

4_BUS_VOLT_MAG_230:
Tue Aug 02 17:36:13 2005

10hs_clusa_trs_vaca1d_bus.chf

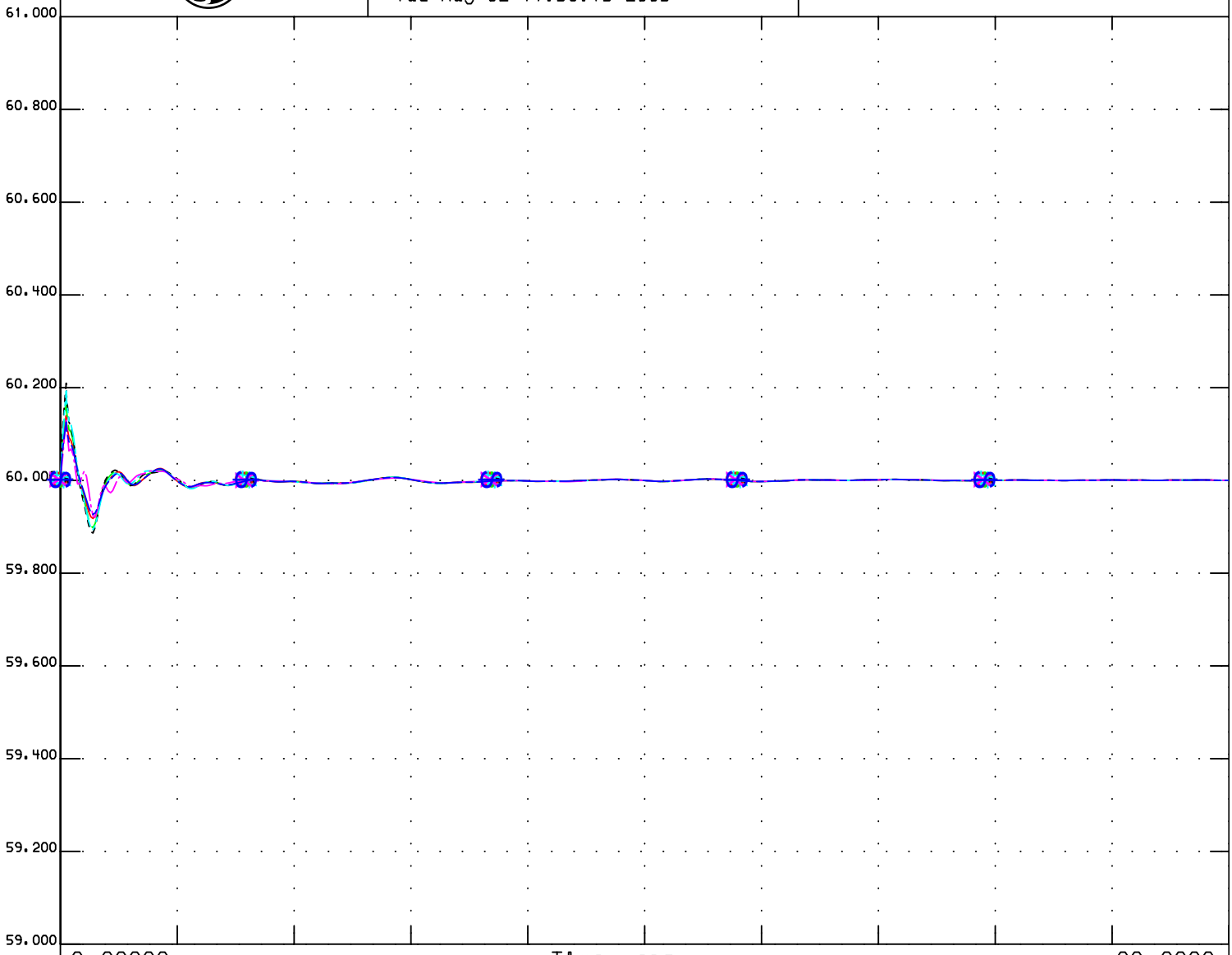

59.000		O	fbus	30106	230.0	COTWD_F	1	1 n	61.000
59.000		+	fbus	30110	230.0	GLENN	1	1 n	61.000
59.000		*	fbul	30111	230.0	LOGAN CR	1	1 n	61.000
59.000		#	fbus	30450	230.0	CORTINA	1	1 n	61.000
59.000		X	fbus	30460	230.0	VACA-DIX	1	1 n	61.000
59.000		$	fbus	37565	230.0	OLINDAW	1	1 n	61.000

PG&E 2004 BASE CASE SERIES - 2010 North Valley Summer Peak Case
PATH15=-1127 MW(S-N) PATH26=3313 MW(N-S) PDCI=3105 MW(N-S) COI=4710 MW(N-S)
CPV Colusa - 2010 Summer Peak - after

Trip VACA-DIXON BUS 1 SEC D Substation

original case 3/26/2004 by SATS 2009 system summer peak
updated loads to 2010 system summer peak
added 2010 North Valley 1-in-10 loads and generation dispatch
Morro Bay 4 is the swing bus
Proposed new generation in queue added
CPV Colusa 97 MW looped onto:
Cottonwood - Cortina 230 kV Line (#1)
Cottonwood - Vaca Dixon 230 kV Line (#2)
Logan Creek - Vaca Dixon 230 kV Line (#3)
Glenn - Vaca Dixon 230 kV Line (#4)

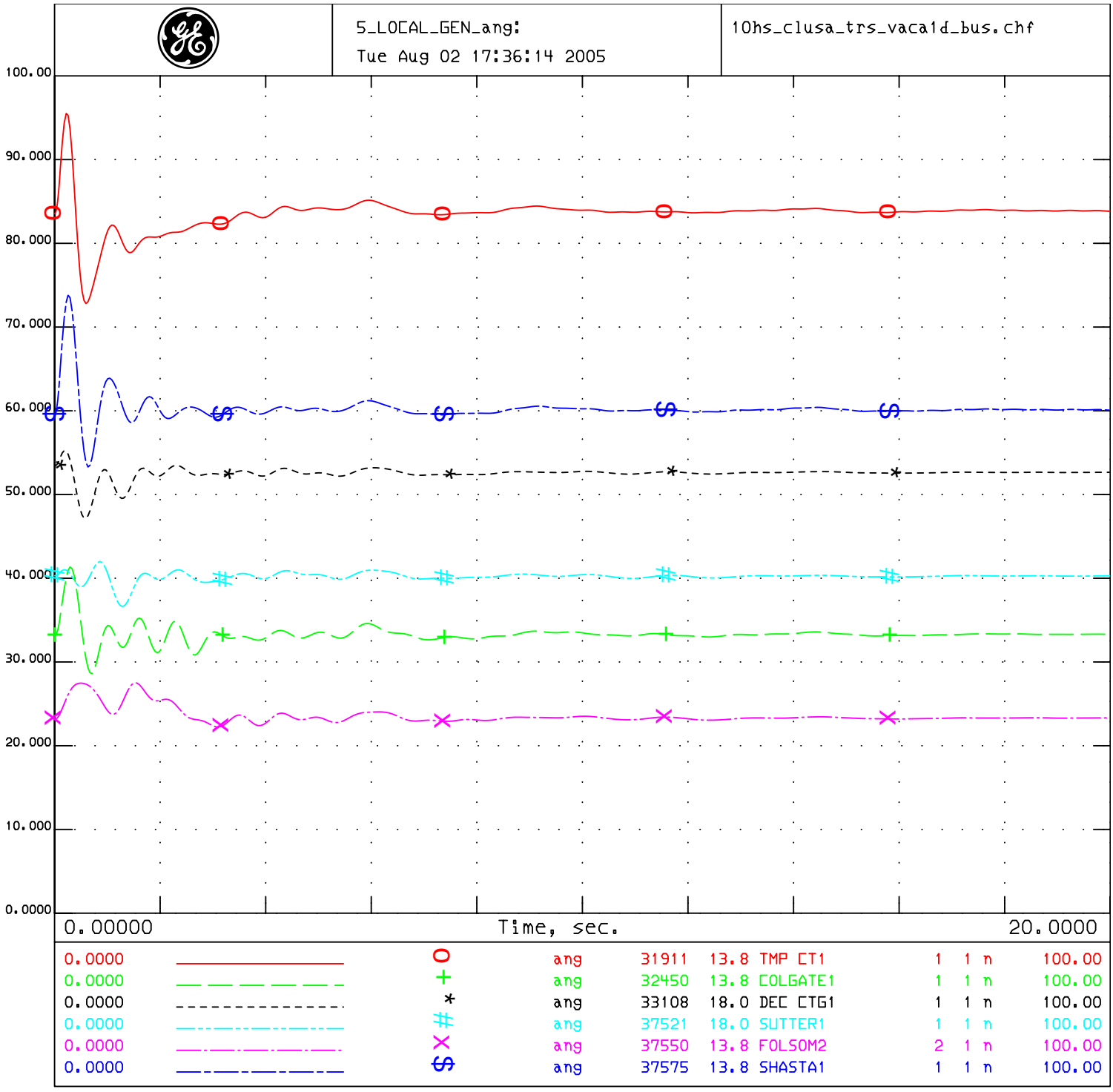

PG&E 2004 BASE CASE SERIES - 2010 North Valley Summer Peak Case
PATH15=-1127 MW(S-N) PATH26=3313 MW(N-S) PDCI=3105 MW(N-S) COI=4710 MW(N-S)
CPV Colusa - 2010 Summer Peak - after

Trip VACA-DIXON BUS 1 SEC D Substation

original case 3/26/2004 by SATS 2009 system summer peak
updated loads to 2010 system summer peak
added 2010 North Valley 1-in-10 loads and generation dispatch
Morro Bay 4 is the swing bus
Proposed new generation in queue added
CPV Colusa 97 MW looped onto:
Cottonwood - Cortina 230 kV Line (#1)
Cottonwood - Vaca Dixon 230 kV Line (#2)
Logan Creek - Vaca Dixon 230 kV Line (#3)
Glenn - Vaca Dixon 230 kV Line (#4)

6_LOCAL_GEN_vt:
Tue Aug 02 17:36:14 2005

10hs_clusa_trs_vaca1d_bus.chf

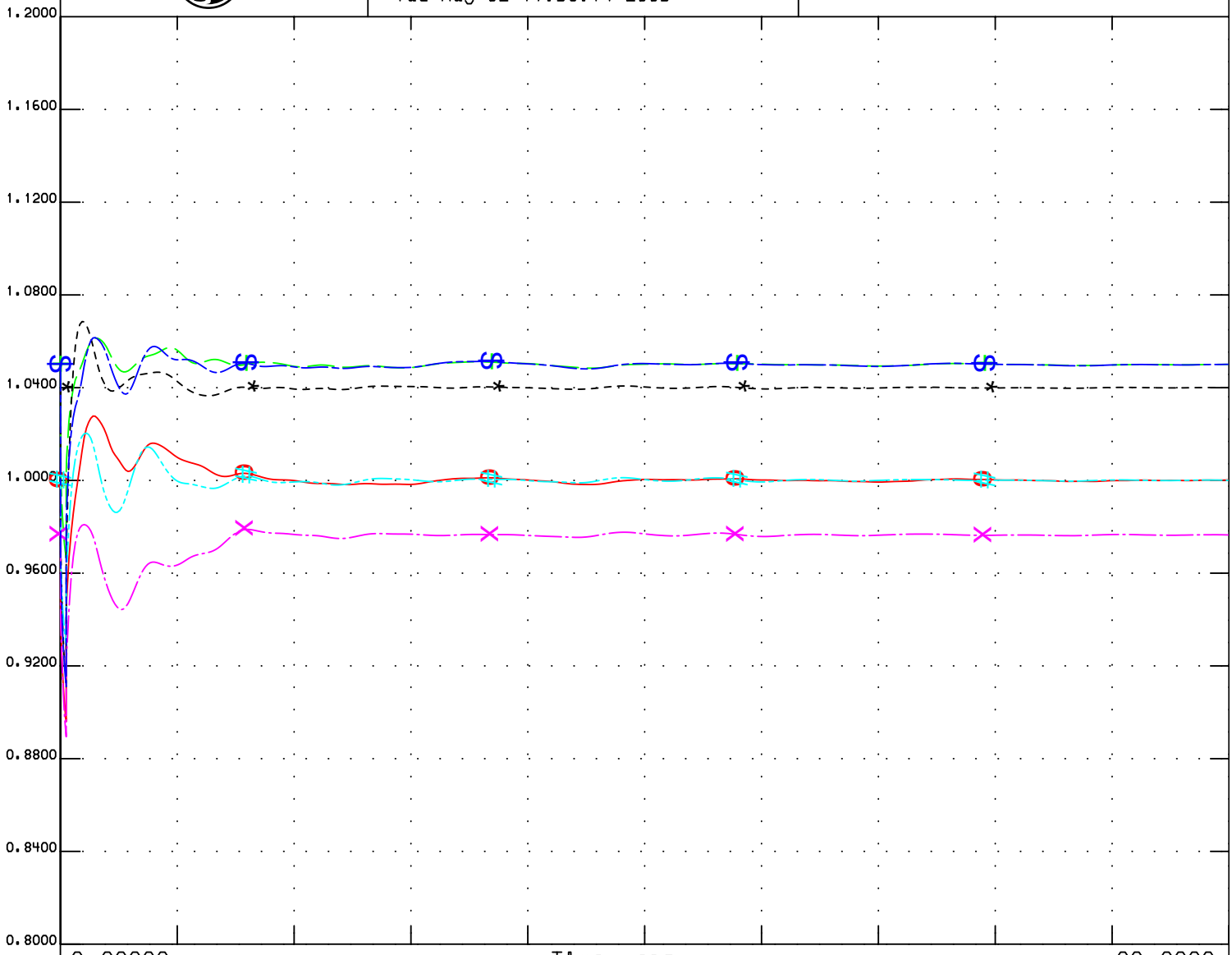

0.8000		O	vt	31911	13.8	TMP CT1	1	1	n	1.2000
0.8000		+	vt	32450	13.8	COLGATE1	1	1	n	1.2000
0.8000		*	vt	33108	18.0	DEC CTG1	1	1	n	1.2000
0.8000		#	vt	37521	18.0	SUTTER1	1	1	n	1.2000
0.8000		X	vt	37550	13.8	FOLSOM2	2	1	n	1.2000
0.8000		$	vt	37575	13.8	SHASTA1	1	1	n	1.2000

PG&E 2004 BASE CASE SERIES - 2010 North Valley Summer Peak Case
PATH15=-1127 MW(S-N) PATH26=3313 MW(N-S) PDCI=3105 MW(N-S) COI=4710 MW(N-S)
CPV Colusa - 2010 Summer Peak - after

Trip VACA-DIXON BUS 1 SEC D Substation

original case 3/26/2004 by SATS 2009 system summer peak
updated loads to 2010 system summer peak
added 2010 North Valley 1-in-10 loads and generation dispatch
Morro Bay 4 is the swing bus
Proposed new generation in queue added
CPV Colusa 97 MW looped onto:
Cottonwood - Cortina 230 kV Line (#1)
Cottonwood - Vaca Dixon 230 kV Line (#2)
Logan Creek - Vaca Dixon 230 kV Line (#3)
Glenn - Vaca Dixon 230 kV Line (#4)

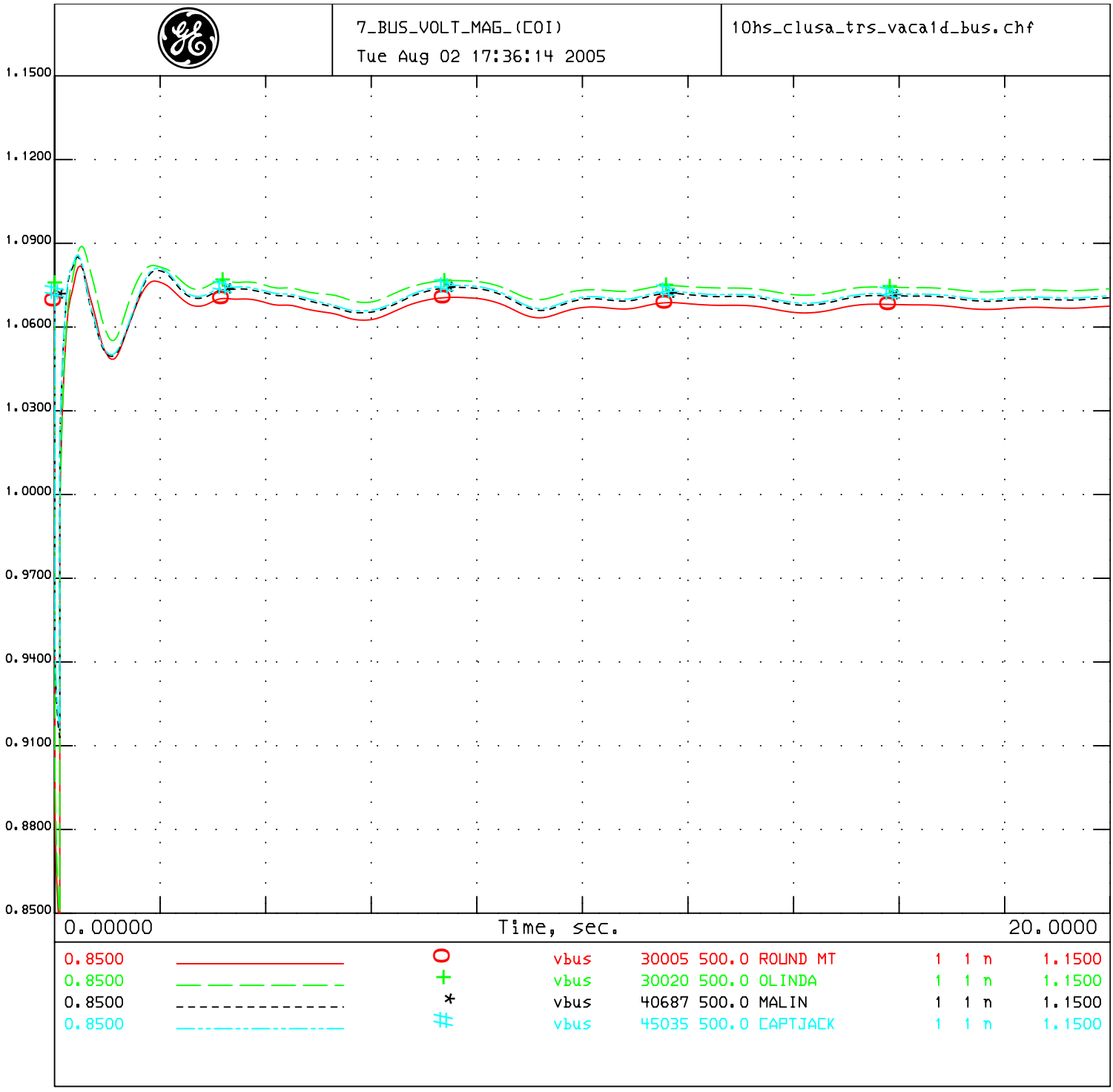

PG&E 2004 BASE CASE SERIES - 2010 North Valley Summer Peak Case
PATH15=-1127 MW(S-N) PATH26=3313 MW(N-S) PDCI=3105 MW(N-S) COI=4710 MW(N-S)
CPV Colusa - 2010 Summer Peak - after

Trip VACA-DIXON BUS 1 SEC D Substation

original case 3/26/2004 by SATS 2009 system summer peak
updated loads to 2010 system summer peak
added 2010 North Valley 1-in-10 loads and generation dispatch
Morro Bay 4 is the swing bus
Proposed new generation in queue added
CPV Colusa 97 MW looped onto:
Cottonwood - Cortina 230 kV Line (#1)
Cottonwood - Vaca Dixon 230 kV Line (#2)
Logan Creek - Vaca Dixon 230 kV Line (#3)
Glenn - Vaca Dixon 230 kV Line (#4)

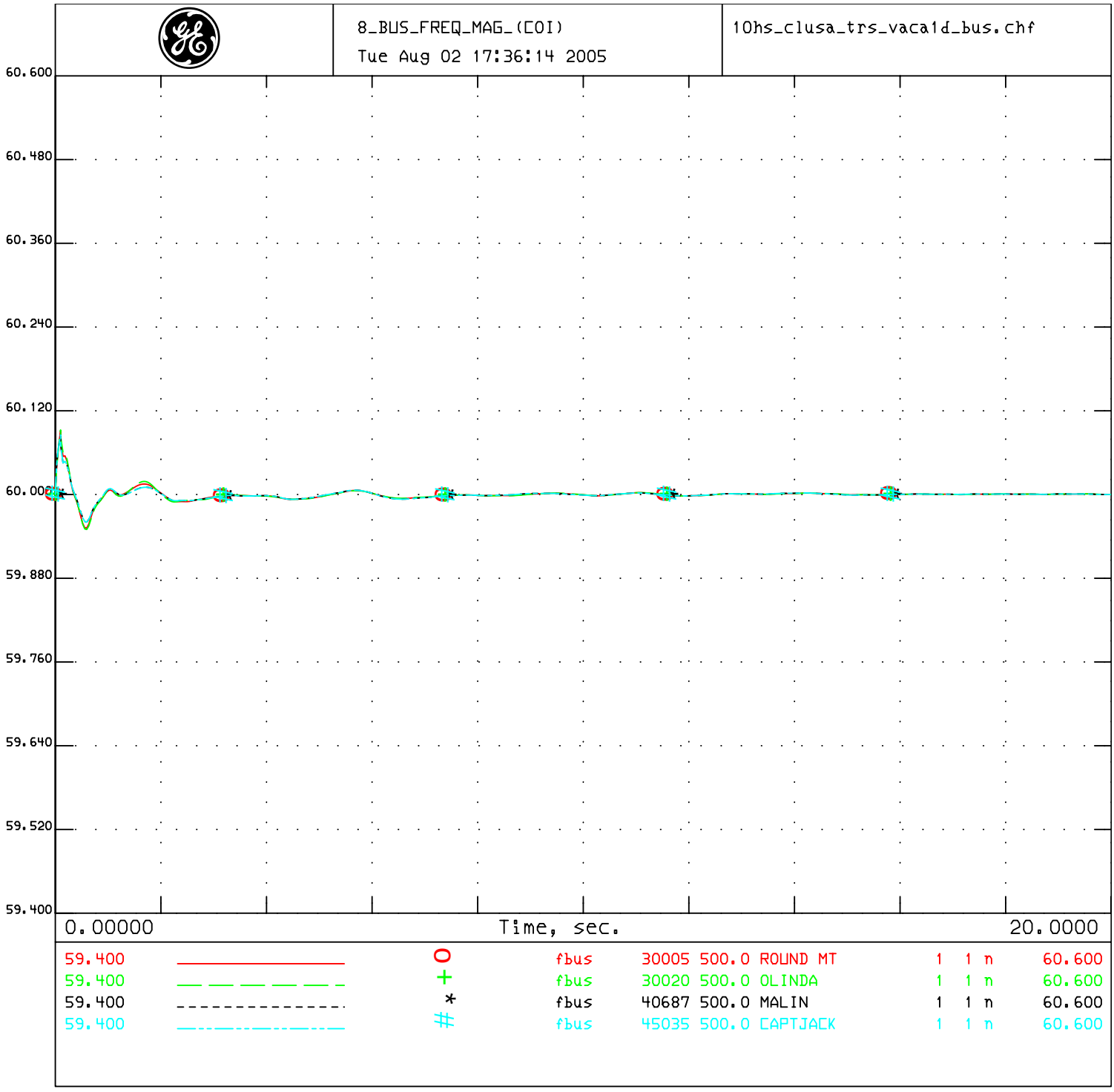

PG&E 2004 BASE CASE SERIES - 2010 North Valley Summer Peak Case
PATH15=-1127 MW(S-N) PATH26=3313 MW(N-S) PDCI=3105 MW(N-S) COI=4710 MW(N-S)
CPV Colusa - 2010 Summer Peak - after

Trip VACA-DIXON BUS 1 SEC D Substation

original case 3/26/2004 by SATS 2009 system summer peak
updated loads to 2010 system summer peak
added 2010 North Valley 1-in-10 loads and generation dispatch
Morro Bay 4 is the swing bus
Proposed new generation in queue added
CPV Colusa 97 MW looped onto:
Cottonwood - Cortina 230 kV Line (#1)
Cottonwood - Vaca Dixon 230 kV Line (#2)
Logan Creek - Vaca Dixon 230 kV Line (#3)
Glenn - Vaca Dixon 230 kV Line (#4)

1_COLUSA_vt_ang
Tue Aug 02 14:26:16 2005

10hs_clusa_trs_vaca1e_bus.chf

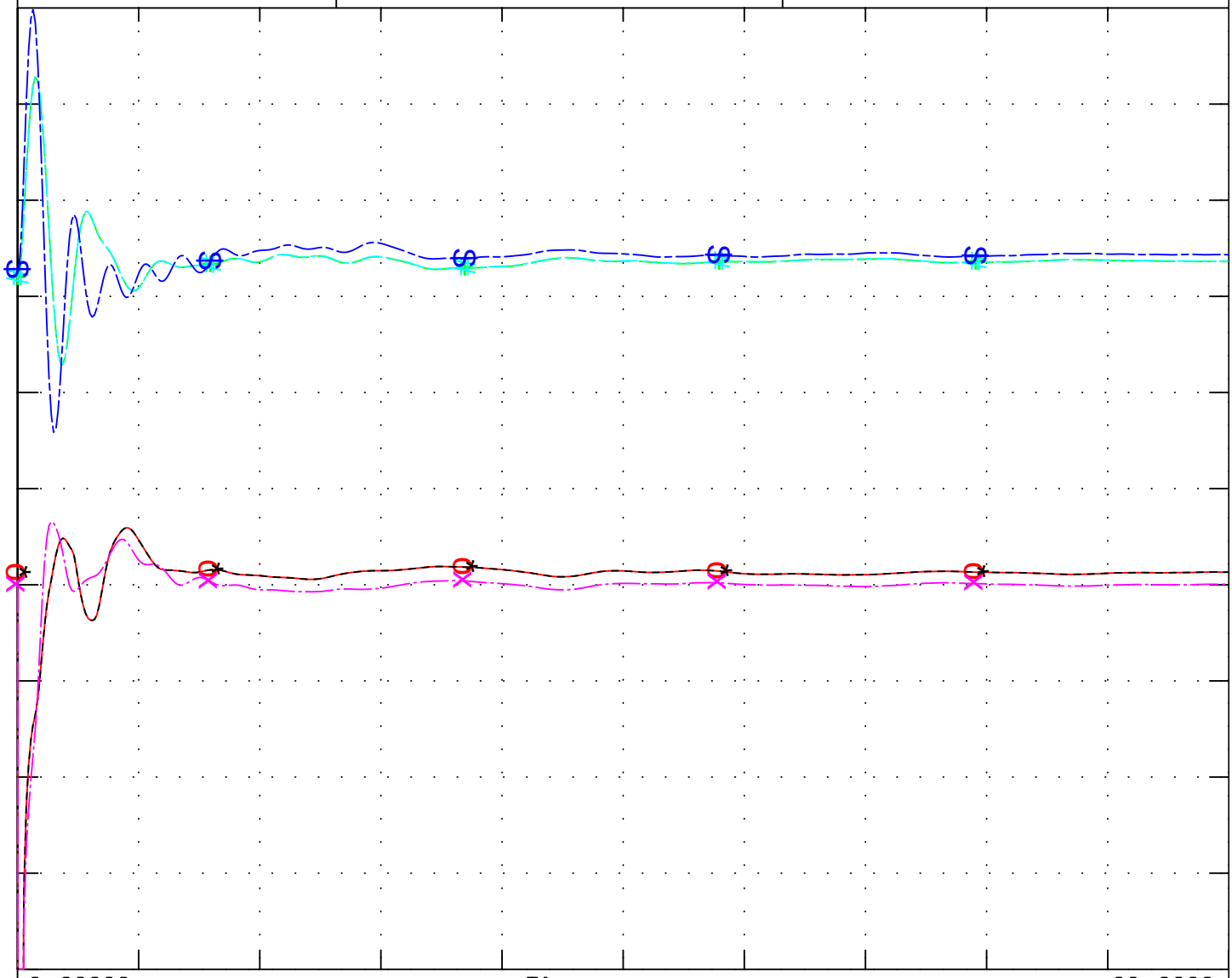

0.8000		O	vt	31923	18.0	P0506GT1	1	1	1.2000
0.0000		+	ang	31923	18.0	P0506GT1	1	1	100.00
0.8000		*	vt	31924	18.0	P0506GT2	2	1	1.2000
0.0000		#	ang	31924	18.0	P0506GT2	2	1	100.00
0.8000		X	vt	31925	18.0	P0506ST1	3	1	1.2000
0.0000		$	ang	31925	18.0	P0506ST1	3	1	100.00

PG&E 2004 BASE CASE SERIES - 2010 North Valley Summer Peak Case
PATH15=-1127 MW(S-N) PATH26=3313 MW(N-S) PDCI=3105 MW(N-S) COI=4710 MW(N-S)
CPV Colusa - 2010 Summer Peak - after

Trip VACA-DIXON BUS 1 SEC E Substation

original case 3/26/2004 by SATS 2009 system summer peak
updated loads to 2010 system summer peak
added 2010 North Valley 1-in-10 loads and generation dispatch
Morro Bay 4 is the swing bus
Proposed new generation in queue added
CPV Colusa 97 MW looped onto:
Cottonwood - Cortina 230 kV Line (#1)
Cottonwood - Vaca Dixon 230 kV Line (#2)
Logan Creek - Vaca Dixon 230 kV Line (#3)
Glenn - Vaca Dixon 230 kV Line (#4)

2_COLUSA_spd_pg
Tue Aug 02 14:26:16 2005

10hs_clusa_trs_vaca1e_bus.chf

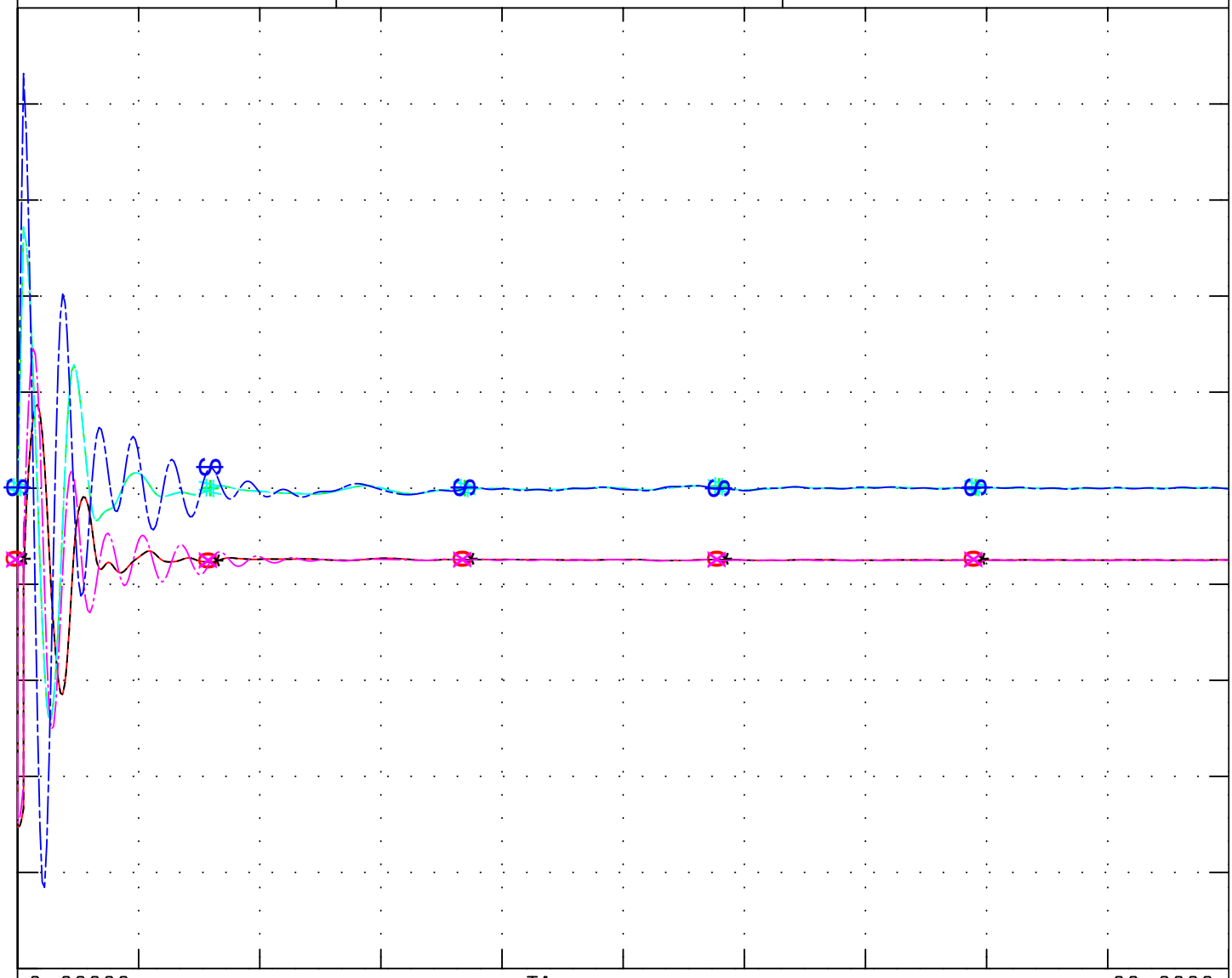

0.0000	————	O	pg	31923	18.0	P0506GT1	1	1	n	468.00
0.9900	— — — — — —	+	spd	31923	18.0	P0506GT1	1	1	n	1.0100
0.0000	- - - - - - - - - - - - - -	*	pg	31924	18.0	P0506GT2	2	1	n	468.00
0.9900	—-—-—-—-—-—	#	spd	31924	18.0	P0506GT2	2	1	n	1.0100
0.0000	—.—.—.—.—.	X	pg	31925	18.0	P0506ST1	3	1	n	746.00
0.9900	—-—-—-—-—-—	$	spd	31925	18.0	P0506ST1	3	1	n	1.0100

PG&E 2004 BASE CASE SERIES - 2010 North Valley Summer Peak Case
PATH15=-1127 MW(S-N) PATH26=3313 MW(N-S) PDCI=3105 MW(N-S) COI=4710 MW(N-S)
CPV Colusa - 2010 Summer Peak - after

Trip VACA-DIXON BUS 1 SEC E Substation

original case 3/26/2004 by SATS 2009 system summer peak
updated loads to 2010 system summer peak
added 2010 North Valley 1-in-10 loads and generation dispatch
Morro Bay 4 is the swing bus
Proposed new generation in queue added
CPV Colusa 97 MW looped onto:
Cottonwood - Cortina 230 kV Line (#1)
Cottonwood - Vaca Dixon 230 kV Line (#2)
Logan Creek - Vaca Dixon 230 kV Line (#3)
Glenn - Vaca Dixon 230 kV Line (#4)

3_BUS_VOLT_MAG_230:
Tue Aug 02 14:26:16 2005

10hs_clusa_trs_vaca1e_bus.chf

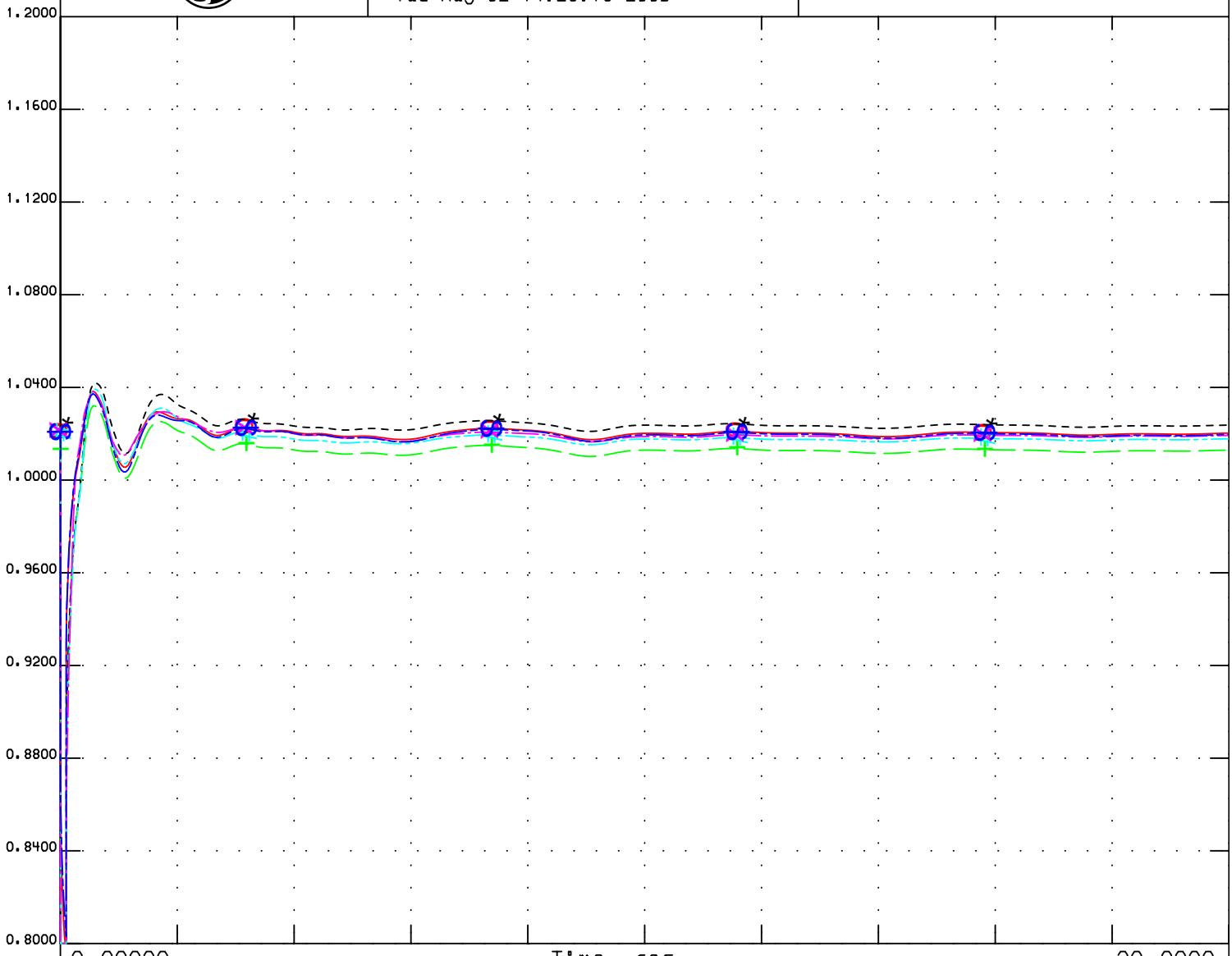

0.8000		O	vbus	30106	230.0	COTWD_F	1	1	n	1.2000
0.8000		+	vbus	30110	230.0	GLENN	1	1	n	1.2000
0.8000		*	vbul	30111	230.0	LOGAN CR	1	1	n	1.2000
0.8000		#	vbus	30450	230.0	CORTINA	1	1	n	1.2000
0.8000		X	vbus	30460	230.0	VACA-DIX	1	1	n	1.2000
0.8000		$	vbus	37565	230.0	OLINDAW	1	1	n	1.2000

PG&E 2004 BASE CASE SERIES - 2010 North Valley Summer Peak Case
PATH15=-1127 MW(S-N) PATH26=3313 MW(N-S) PDCI=3105 MW(N-S) COI=4710 MW(N-S)
CPV Colusa - 2010 Summer Peak - after

Trip VACA-DIXON BUS 1 SEC E Substation

original case 3/26/2004 by SATS 2009 system summer peak
updated loads to 2010 system summer peak
added 2010 North Valley 1-in-10 loads and generation dispatch
Morro Bay 4 is the swing bus
Proposed new generation in queue added
CPV Colusa 97 MW looped onto:
Cottonwood - Cortina 230 kV Line (#1)
Cottonwood - Vaca Dixon 230 kV Line (#2)
Logan Creek - Vaca Dixon 230 kV Line (#3)
Glenn - Vaca Dixon 230 kV Line (#4)

4_BUS_VOLT_MAG_230:
Tue Aug 02 14:26:16 2005

10hs_clusa_trs_vaca1e_bus.chf

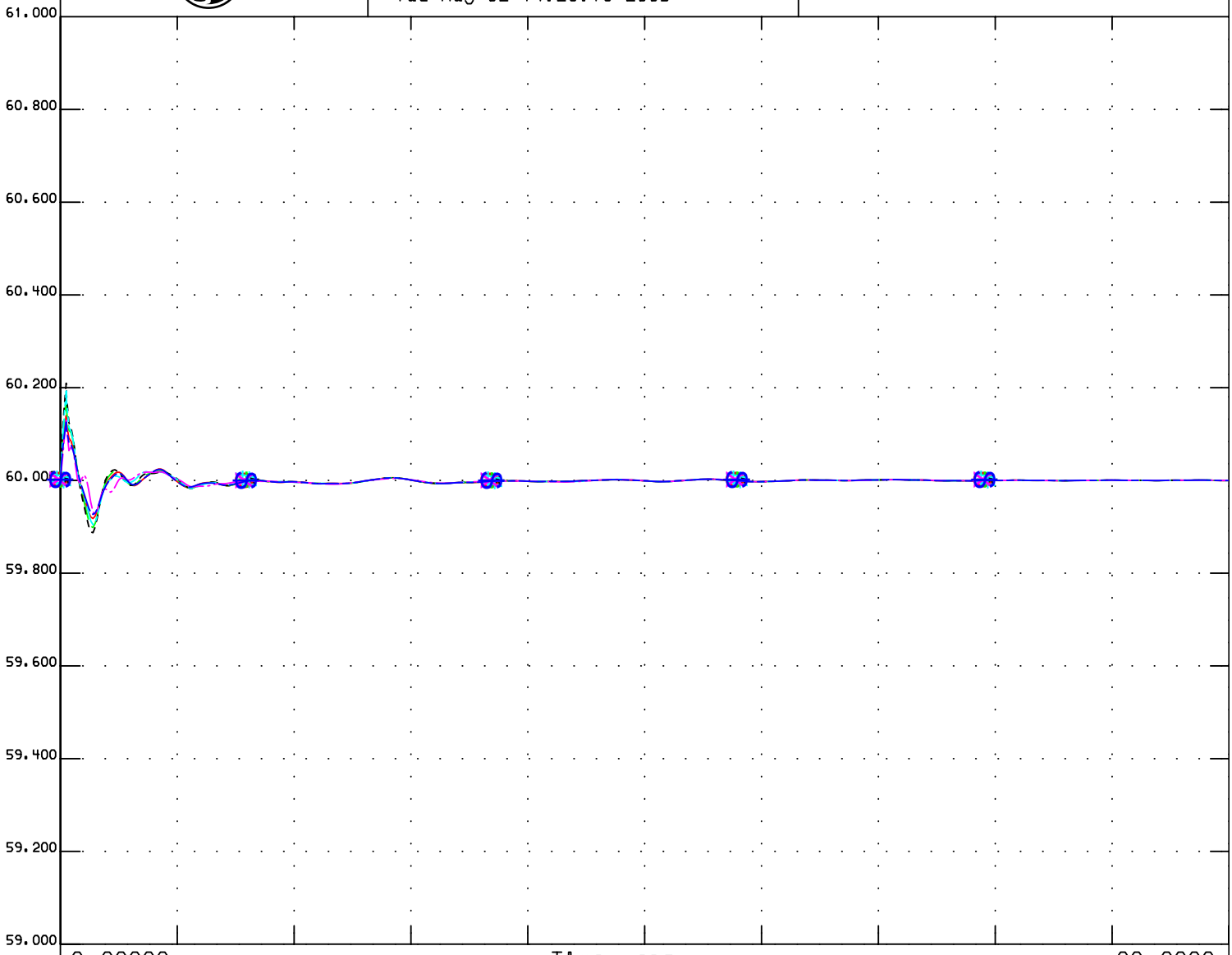

59.000		O	fbus	30106	230.0	COTWD_F	1	1	n	61.000
59.000		+	fbus	30110	230.0	GLENN	1	1	n	61.000
59.000		*	fbul	30111	230.0	LOGAN CR	1	1	n	61.000
59.000		#	fbus	30450	230.0	CORTINA	1	1	n	61.000
59.000		X	fbus	30460	230.0	VACA-DIX	1	1	n	61.000
59.000		$	fbus	37565	230.0	OLINDAW	1	1	n	61.000

PG&E 2004 BASE CASE SERIES - 2010 North Valley Summer Peak Case
PATH15=-1127 MW(S-N) PATH26=3313 MW(N-S) PDCI=3105 MW(N-S) COI=4710 MW(N-S)
CPV Colusa - 2010 Summer Peak - after

Trip VACA-DIXON BUS 1 SEC E Substation

original case 3/26/2004 by SATS 2009 system summer peak
updated loads to 2010 system summer peak
added 2010 North Valley 1-in-10 loads and generation dispatch
Morro Bay 4 is the swing bus
Proposed new generation in queue added
CPV Colusa 97 MW looped onto:
Cottonwood - Cortina 230 kV Line (#1)
Cottonwood - Vaca Dixon 230 kV Line (#2)
Logan Creek - Vaca Dixon 230 kV Line (#3)
Glenn - Vaca Dixon 230 kV Line (#4)

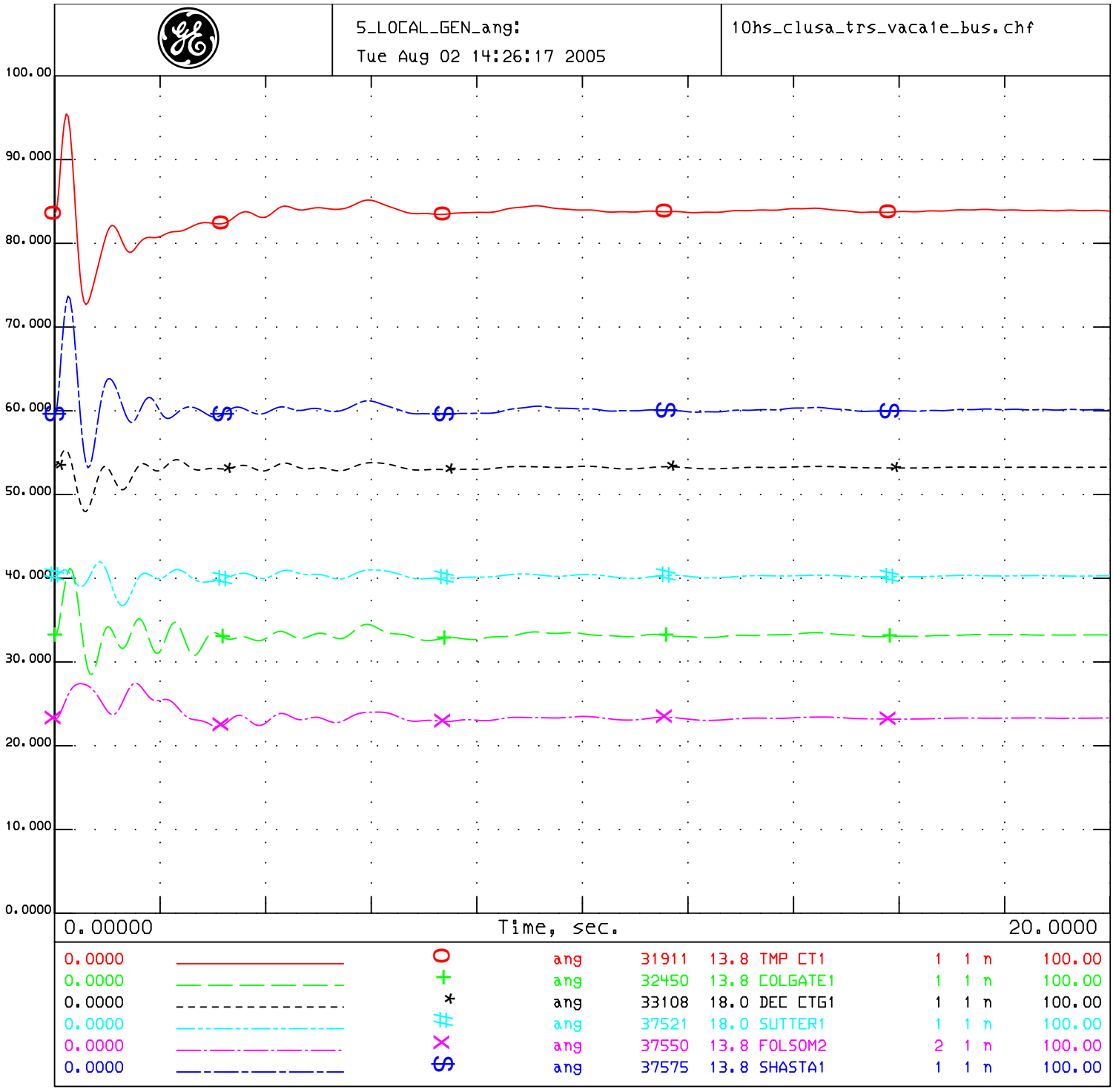

PG&E 2004 BASE CASE SERIES - 2010 North Valley Summer Peak Case
PATH15=-1127 MW(S-N) PATH26=3313 MW(N-S) PDCI=3105 MW(N-S) COI=4710 MW(N-S)
CPV Colusa - 2010 Summer Peak - after

Trip VACA-DIXON BUS 1 SEC E Substation

original case 3/26/2004 by SATS 2009 system summer peak
updated loads to 2010 system summer peak
added 2010 North Valley 1-in-10 loads and generation dispatch
Morro Bay 4 is the swing bus
Proposed new generation in queue added
CPV Colusa 97 MW looped onto:
Cottonwood - Cortina 230 kV Line (#1)
Cottonwood - Vaca Dixon 230 kV Line (#2)
Logan Creek - Vaca Dixon 230 kV Line (#3)
Glenn - Vaca Dixon 230 kV Line (#4)

6_LOCAL_GEN_vt:
Tue Aug 02 14:26:17 2005

10hs_clusa_trs_vaca1e_bus.chf

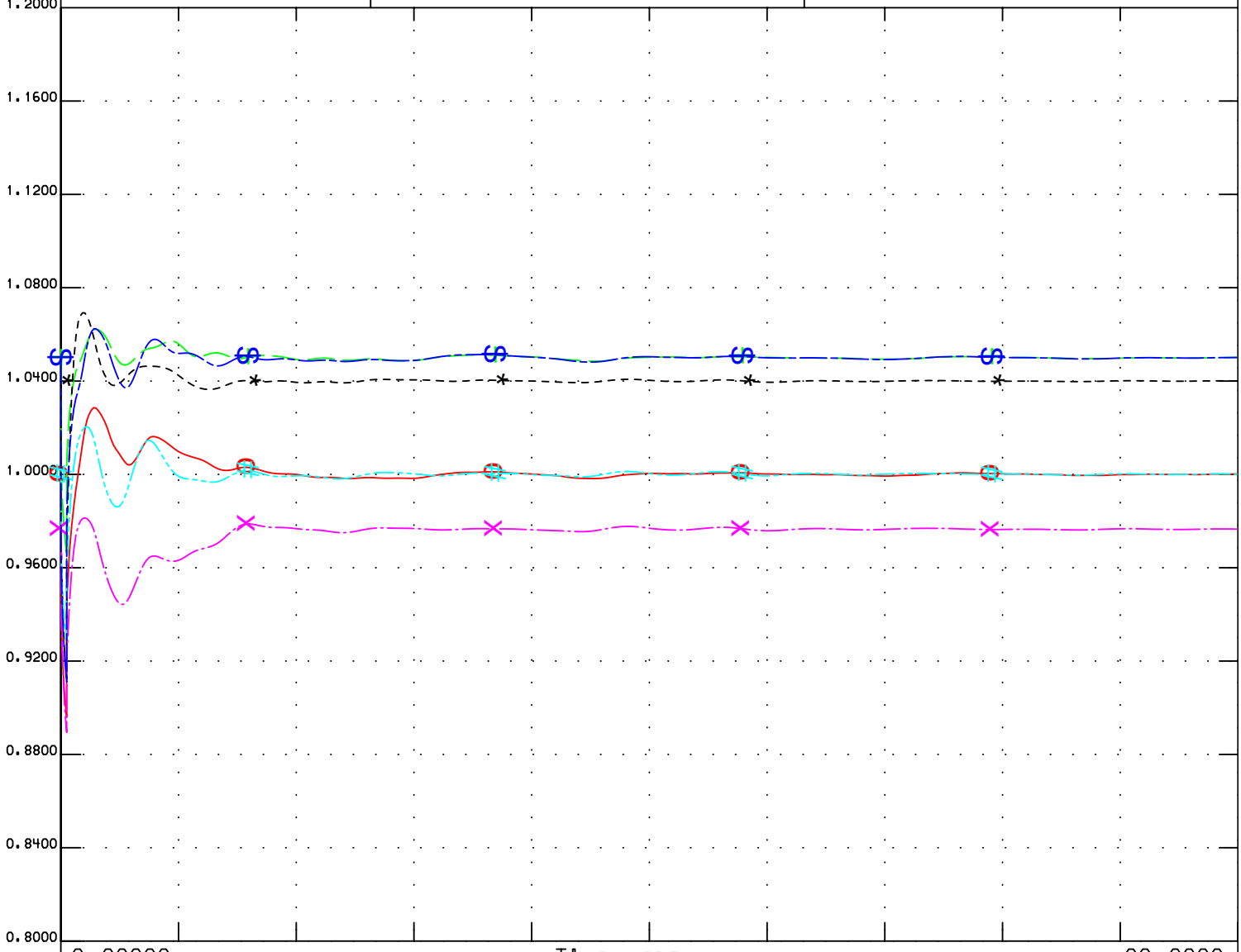

0.8000		O	vt	31911	13.8	TMP CT1	1	1	n	1.2000
0.8000		+	vt	32450	13.8	COLGATE1	1	1	n	1.2000
0.8000		*	vt	33108	18.0	DEC CTG1	1	1	n	1.2000
0.8000		#	vt	37521	18.0	SUTTER1	1	1	n	1.2000
0.8000		X	vt	37550	13.8	FOLSOM2	2	1	n	1.2000
0.8000		$	vt	37575	13.8	SHASTA1	1	1	n	1.2000

PG&E 2004 BASE CASE SERIES - 2010 North Valley Summer Peak Case
PATH15=-1127 MW(S-N) PATH26=3313 MW(N-S) PDCI=3105 MW(N-S) COI=4710 MW(N-S)
CPV Colusa - 2010 Summer Peak - after

Trip VACA-DIXON BUS 1 SEC E Substation

original case 3/26/2004 by SATS 2009 system summer peak
updated loads to 2010 system summer peak
added 2010 North Valley 1-in-10 loads and generation dispatch
Morro Bay 4 is the swing bus
Proposed new generation in queue added
CPV Colusa 97 MW looped onto:
Cottonwood - Cortina 230 kV Line (#1)
Cottonwood - Vaca Dixon 230 kV Line (#2)
Logan Creek - Vaca Dixon 230 kV Line (#3)
Glenn - Vaca Dixon 230 kV Line (#4)

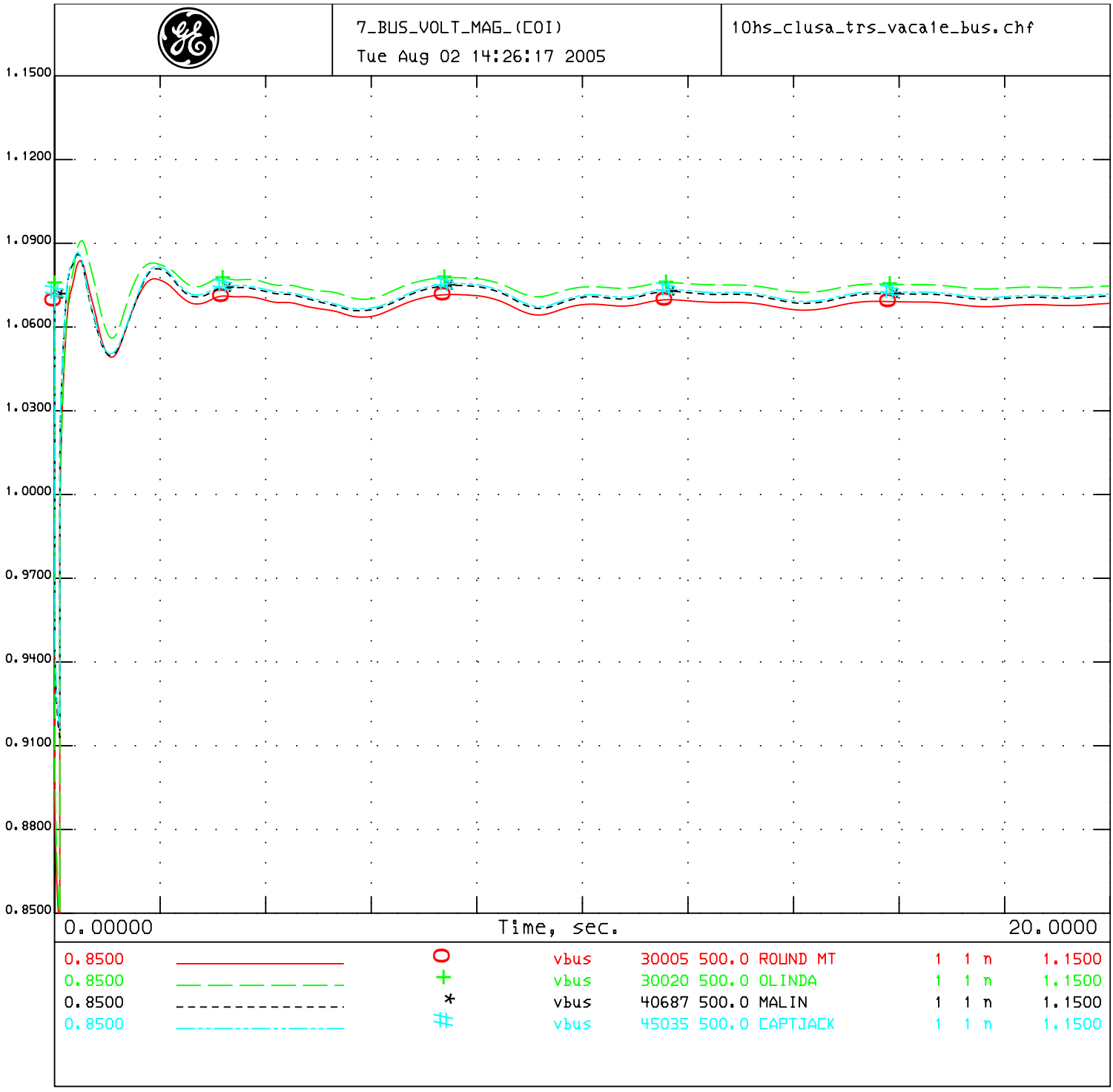

PG&E 2004 BASE CASE SERIES - 2010 North Valley Summer Peak Case
PATH15=-1127 MW(S-N) PATH26=3313 MW(N-S) PDCI=3105 MW(N-S) COI=4710 MW(N-S)
CPV Colusa - 2010 Summer Peak - after

Trip VACA-DIXON BUS 1 SEC E Substation

original case 3/26/2004 by SATS 2009 system summer peak
updated loads to 2010 system summer peak
added 2010 North Valley 1-in-10 loads and generation dispatch
Morro Bay 4 is the swing bus
Proposed new generation in queue added
CPV Colusa 97 MW looped onto:
Cottonwood - Cortina 230 kV Line (#1)
Cottonwood - Vaca Dixon 230 kV Line (#2)
Logan Creek - Vaca Dixon 230 kV Line (#3)
Glenn - Vaca Dixon 230 kV Line (#4)

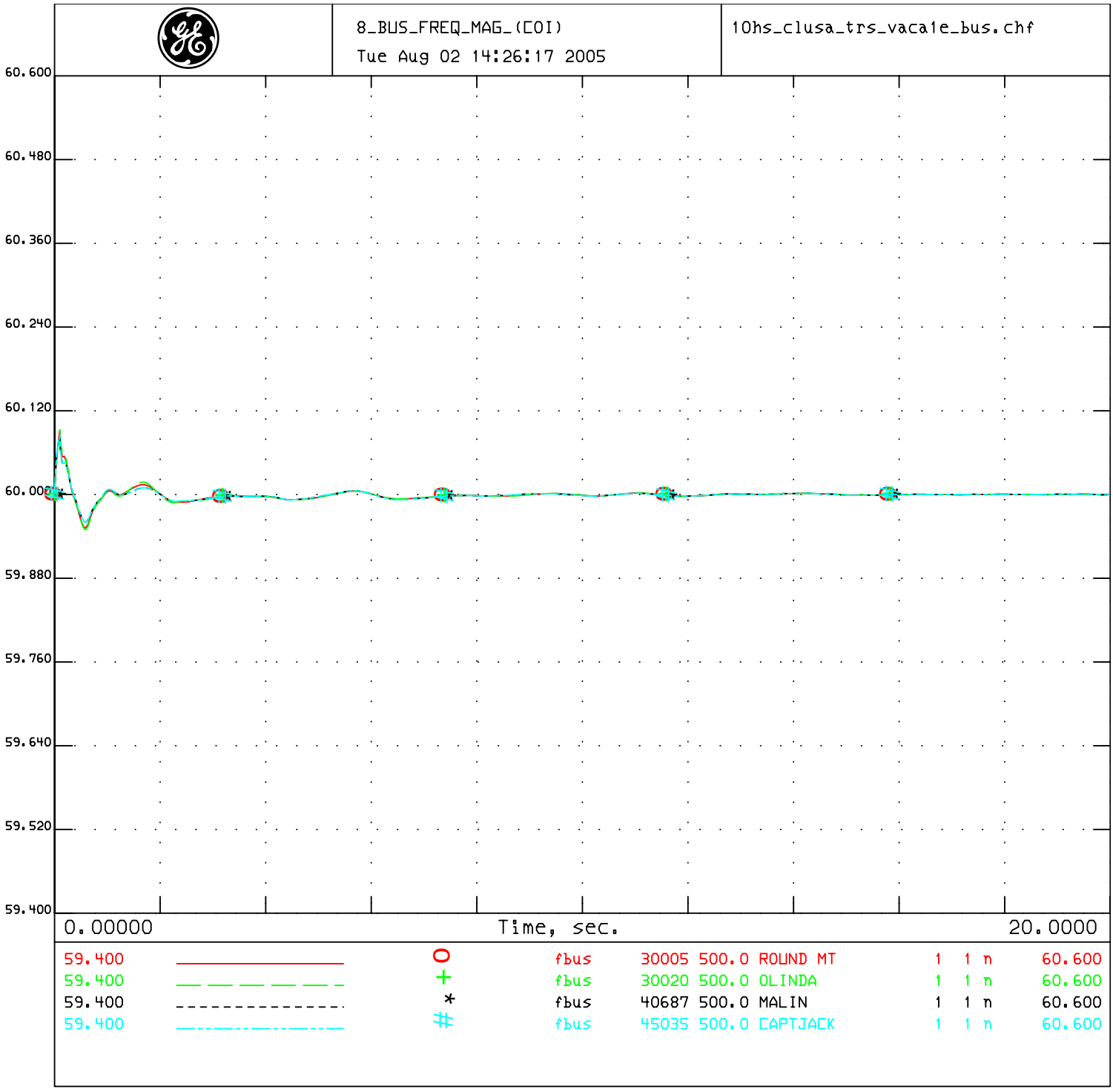

PG&E 2004 BASE CASE SERIES - 2010 North Valley Summer Peak Case
PATH15=-1127 MW(S-N) PATH26=3313 MW(N-S) PDCI=3105 MW(N-S) COI=4710 MW(N-S)
CPV Colusa - 2010 Summer Peak - after

Trip VACA-DIXON BUS 1 SEC E Substation

original case 3/26/2004 by SATS 2009 system summer peak
updated loads to 2010 system summer peak
added 2010 North Valley 1-in-10 loads and generation dispatch
Morro Bay 4 is the swing bus
Proposed new generation in queue added
CPV Colusa 97 MW looped onto:
Cottonwood - Cortina 230 kV Line (#1)
Cottonwood - Vaca Dixon 230 kV Line (#2)
Logan Creek - Vaca Dixon 230 kV Line (#3)
Glenn - Vaca Dixon 230 kV Line (#4)

1_COLUSA_vt_ang
Tue Aug 02 17:43:46 2005

10hs_clusa_trs_vaca2d_bus.chf

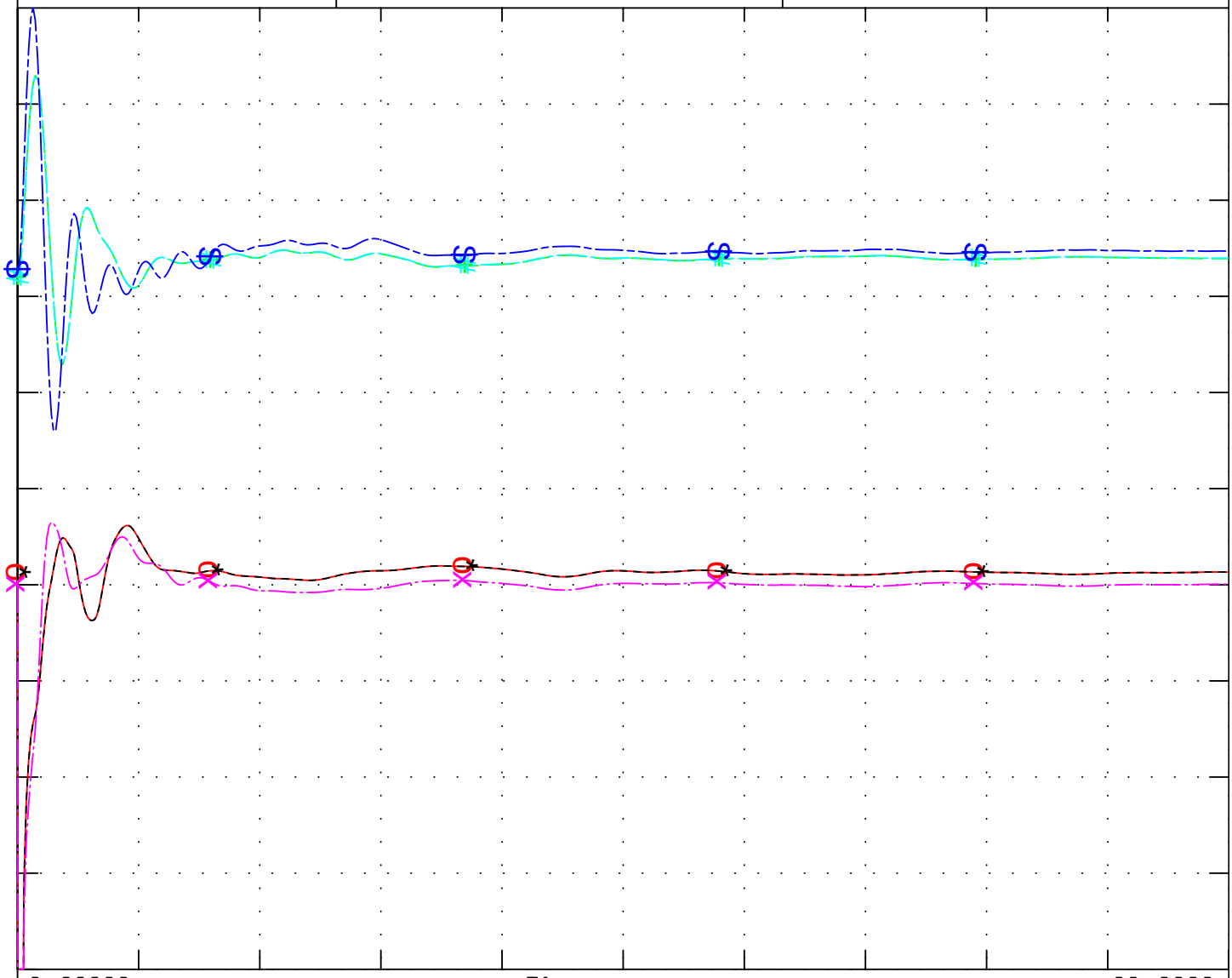

0.8000	————	O	vt	31923	18.0	P0506GT1	1	1	1.2000
0.0000	— — — — — —	+	ang	31923	18.0	P0506GT1	1	1	100.00
0.8000	- - - - - - - - - - - - - -	*	vt	31924	18.0	P0506GT2	2	1	1.2000
0.0000	—-—-—-—-—-—	#	ang	31924	18.0	P0506GT2	2	1	100.00
0.8000	—.—.—.—.—.—	×	vt	31925	18.0	P0506ST1	3	1	1.2000
0.0000	—-—-—-—-—-—	⊗	ang	31925	18.0	P0506ST1	3	1	100.00

PG&E 2004 BASE CASE SERIES - 2010 North Valley Summer Peak Case
PATH15=-1127 MW(S-N) PATH26=3313 MW(N-S) PDCI=3105 MW(N-S) COI=4710 MW(N-S)
CPV Colusa - 2010 Summer Peak - after

Trip VACA-DIXON BUS 2 SEC D Substation

original case 3/26/2004 by SATS 2009 system summer peak
updated loads to 2010 system summer peak
added 2010 North Valley 1-in-10 loads and generation dispatch
Morro Bay 4 is the swing bus
Proposed new generation in queue added
CPV Colusa 97 MW looped onto:
Cottonwood - Cortina 230 kV Line (#1)
Cottonwood - Vaca Dixon 230 kV Line (#2)
Logan Creek - Vaca Dixon 230 kV Line (#3)
Glenn - Vaca Dixon 230 kV Line (#4)

2_COLUSA_spd_pg
Tue Aug 02 17:43:47 2005

10hs_clusa_trs_vaca2d_bus.chf

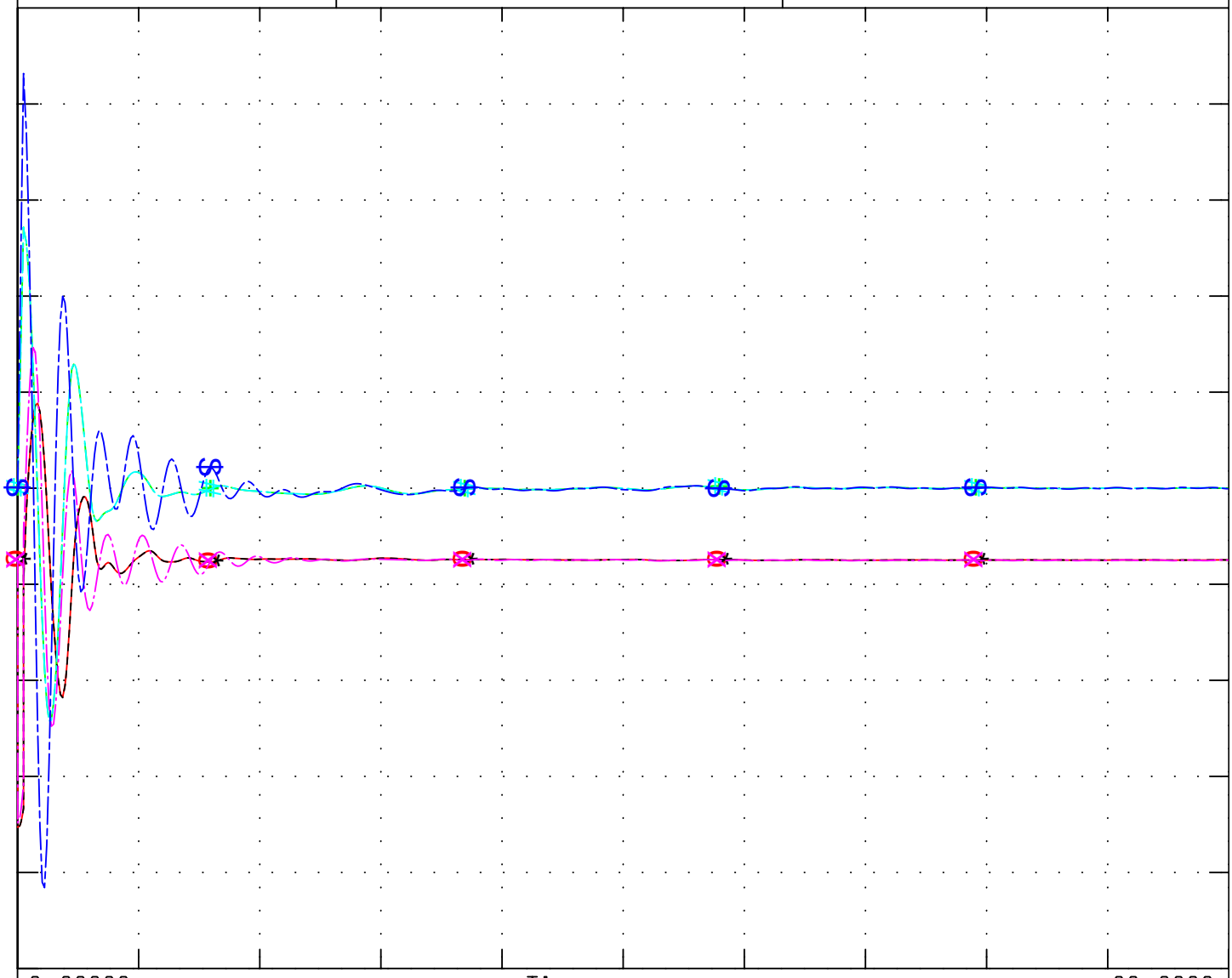

0.0000	O	pg	31923	18.0	P0506GT1	1	1	n	468.00
0.9900	+	spd	31923	18.0	P0506GT1	1	1	n	1.0100
0.0000	*	pg	31924	18.0	P0506GT2	2	1	n	468.00
0.9900	#	spd	31924	18.0	P0506GT2	2	1	n	1.0100
0.0000	X	pg	31925	18.0	P0506ST1	3	1	n	746.00
0.9900	$	spd	31925	18.0	P0506ST1	3	1	n	1.0100

PG&E 2004 BASE CASE SERIES - 2010 North Valley Summer Peak Case
PATH15=-1127 MW(S-N) PATH26=3313 MW(N-S) PDCI=3105 MW(N-S) COI=4710 MW(N-S)
CPV Colusa - 2010 Summer Peak - after

Trip VACA-DIXON BUS 2 SEC D Substation

original case 3/26/2004 by SATS 2009 system summer peak
updated loads to 2010 system summer peak
added 2010 North Valley 1-in-10 loads and generation dispatch
Morro Bay 4 is the swing bus
Proposed new generation in queue added
CPV Colusa 97 MW looped onto:
Cottonwood - Cortina 230 kV Line (#1)
Cottonwood - Vaca Dixon 230 kV Line (#2)
Logan Creek - Vaca Dixon 230 kV Line (#3)
Glenn - Vaca Dixon 230 kV Line (#4)

3_BUS_VOLT_MAG_230:
Tue Aug 02 17:43:47 2005

10hs_clusa_trs_vaca2d_bus.chf

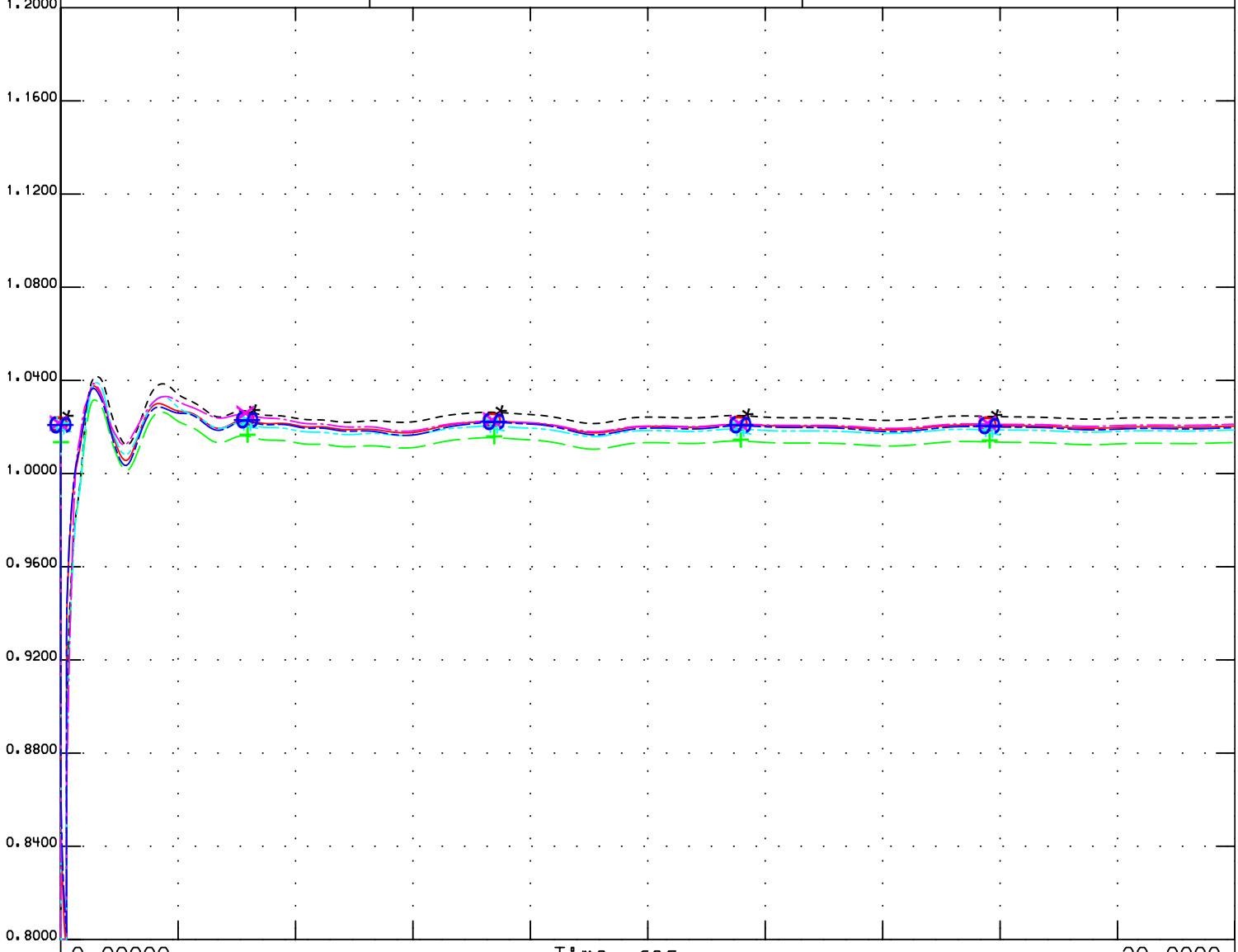

0.8000	————————	O	vbus	30106	230.0	COTWD_F	1	1	n	1.2000
0.8000	— — — — — —	+	vbus	30110	230.0	GLENN	1	1	n	1.2000
0.8000	- - - - - - - - - - - - - -	*	vbul	30111	230.0	LOGAN CR	1	1	n	1.2000
0.8000	—-—-—-—-—-—	#	vbus	30450	230.0	CORTINA	1	1	n	1.2000
0.8000	—.—.—.—.—.—	X	vbus	30460	230.0	VACA-DIX	1	1	n	1.2000
0.8000	—-—-—-—-—-—	$	vbus	37565	230.0	OLINDAW	1	1	n	1.2000

PG&E 2004 BASE CASE SERIES - 2010 North Valley Summer Peak Case
PATH15=-1127 MW(S-N) PATH26=3313 MW(N-S) PDCI=3105 MW(N-S) COI=4710 MW(N-S)
CPV Colusa - 2010 Summer Peak - after

Trip VACA-DIXON BUS 2 SEC D Substation

original case 3/26/2004 by SATS 2009 system summer peak
updated loads to 2010 system summer peak
added 2010 North Valley 1-in-10 loads and generation dispatch
Morro Bay 4 is the swing bus
Proposed new generation in queue added
CPV Colusa 97 MW looped onto:
Cottonwood - Cortina 230 kV Line (#1)
Cottonwood - Vaca Dixon 230 kV Line (#2)
Logan Creek - Vaca Dixon 230 kV Line (#3)
Glenn - Vaca Dixon 230 kV Line (#4)

4_BUS_VOLT_MAG_230:
Tue Aug 02 17:43:47 2005

10hs_clusa_trs_vaca2d_bus.chf

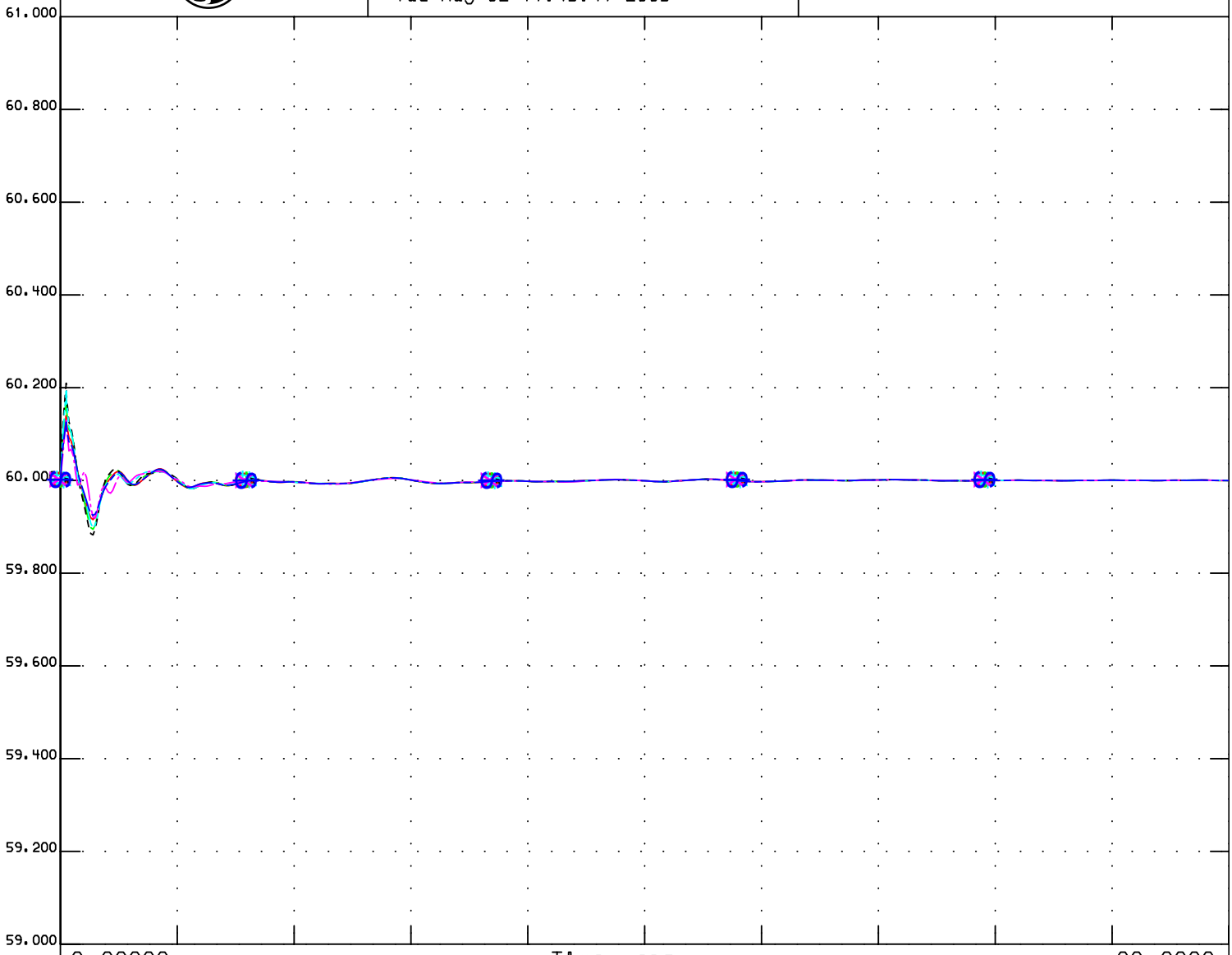

59.000	———	O	fbus	30106	230.0	COTWD_F	1	1	n	61.000
59.000	— — — — —	+	fbus	30110	230.0	GLENN	1	1	n	61.000
59.000	- - - - - - - - - - - - -	*	fbul	30111	230.0	LOGAN CR	1	1	n	61.000
59.000	—-—-—-—-—	#	fbus	30450	230.0	CORTINA	1	1	n	61.000
59.000	—.—.—.—.—	X	fbus	30460	230.0	VACA-DIX	1	1	n	61.000
59.000	—-—-—-—-—	$	fbus	37565	230.0	OLINDAW	1	1	n	61.000

PG&E 2004 BASE CASE SERIES - 2010 North Valley Summer Peak Case
PATH15=-1127 MW(S-N) PATH26=3313 MW(N-S) PDCI=3105 MW(N-S) COI=4710 MW(N-S)
CPV Colusa - 2010 Summer Peak - after

Trip VACA-DIXON BUS 2 SEC D Substation

original case 3/26/2004 by SATS 2009 system summer peak
updated loads to 2010 system summer peak
added 2010 North Valley 1-in-10 loads and generation dispatch
Morro Bay 4 is the swing bus
Proposed new generation in queue added
CPV Colusa 97 MW looped onto:
Cottonwood - Cortina 230 kV Line (#1)
Cottonwood - Vaca Dixon 230 kV Line (#2)
Logan Creek - Vaca Dixon 230 kV Line (#3)
Glenn - Vaca Dixon 230 kV Line (#4)

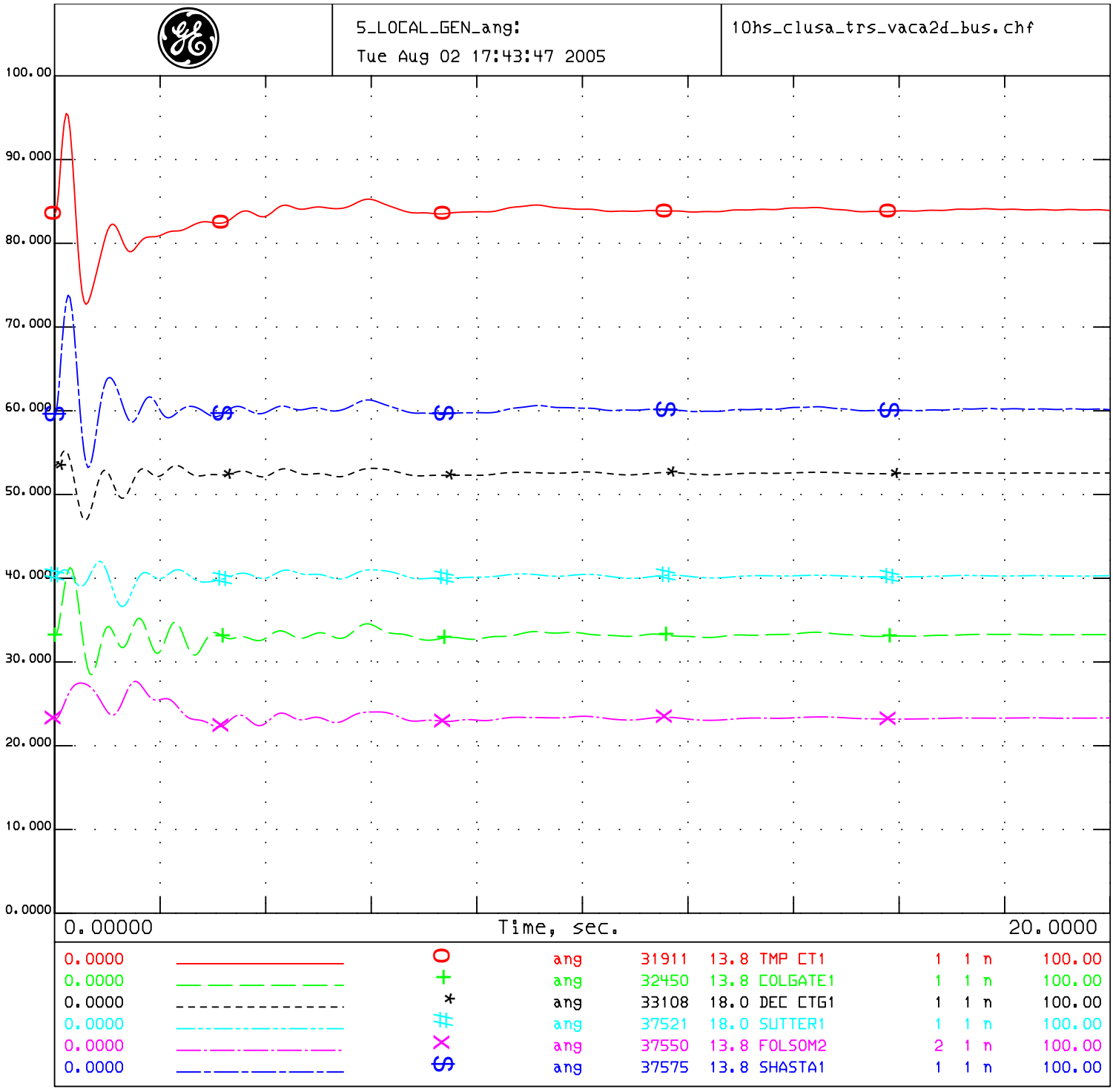

PG&E 2004 BASE CASE SERIES - 2010 North Valley Summer Peak Case
PATH15=-1127 MW(S-N) PATH26=3313 MW(N-S) PDCI=3105 MW(N-S) COI=4710 MW(N-S)
CPV Colusa - 2010 Summer Peak - after

Trip VACA-DIXON BUS 2 SEC D Substation

original case 3/26/2004 by SATS 2009 system summer peak
updated loads to 2010 system summer peak
added 2010 North Valley 1-in-10 loads and generation dispatch
Morro Bay 4 is the swing bus
Proposed new generation in queue added
CPV Colusa 97 MW looped onto:
Cottonwood - Cortina 230 kV Line (#1)
Cottonwood - Vaca Dixon 230 kV Line (#2)
Logan Creek - Vaca Dixon 230 kV Line (#3)
Glenn - Vaca Dixon 230 kV Line (#4)

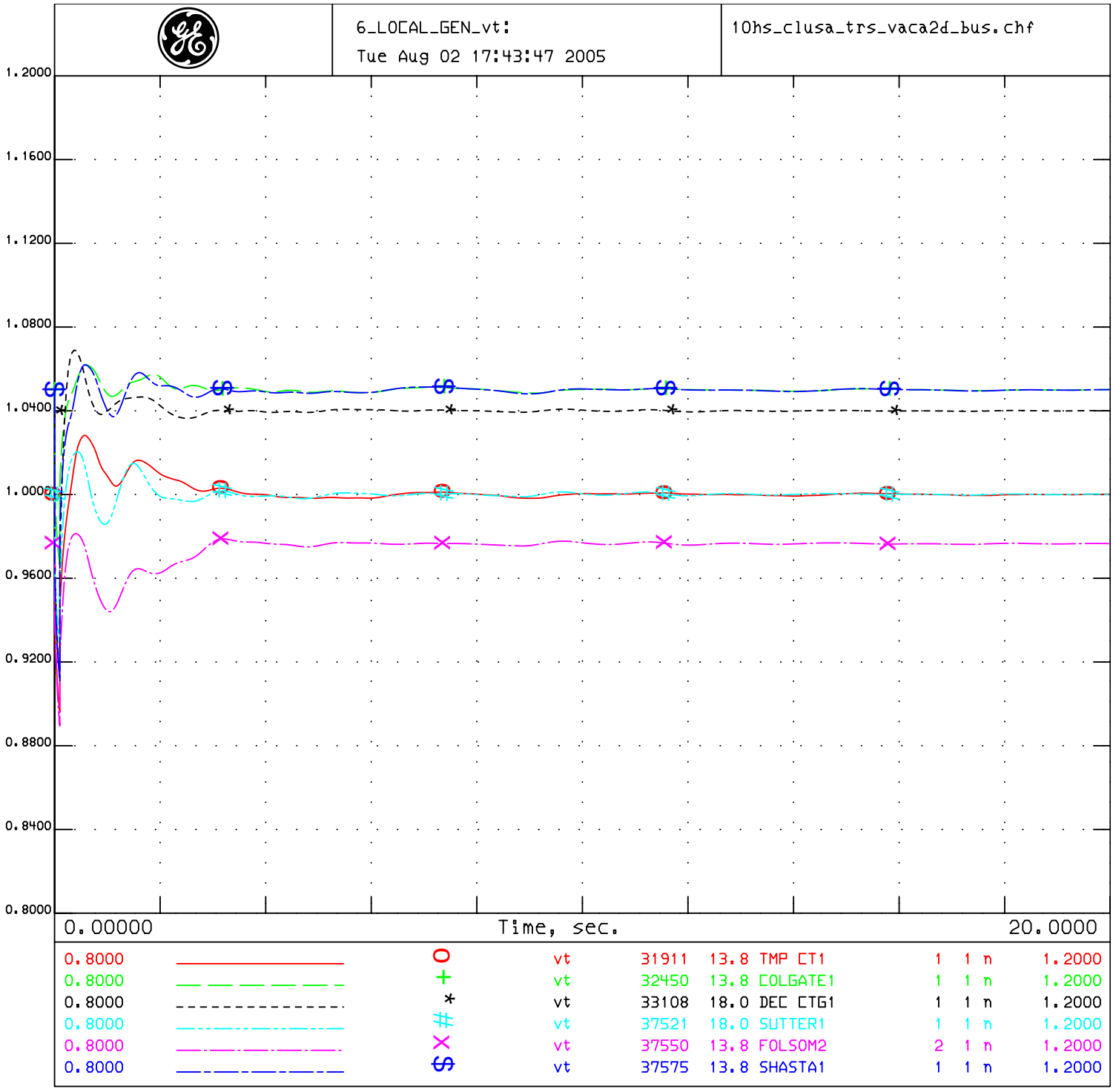

PG&E 2004 BASE CASE SERIES - 2010 North Valley Summer Peak Case
PATH15=-1127 MW(S-N) PATH26=3313 MW(N-S) PDCI=3105 MW(N-S) COI=4710 MW(N-S)
CPV Colusa - 2010 Summer Peak - after

Trip VACA-DIXON BUS 2 SEC D Substation

original case 3/26/2004 by SATS 2009 system summer peak
updated loads to 2010 system summer peak
added 2010 North Valley 1-in-10 loads and generation dispatch
Morro Bay 4 is the swing bus
Proposed new generation in queue added
CPV Colusa 97 MW looped onto:
Cottonwood - Cortina 230 kV Line (#1)
Cottonwood - Vaca Dixon 230 kV Line (#2)
Logan Creek - Vaca Dixon 230 kV Line (#3)
Glenn - Vaca Dixon 230 kV Line (#4)

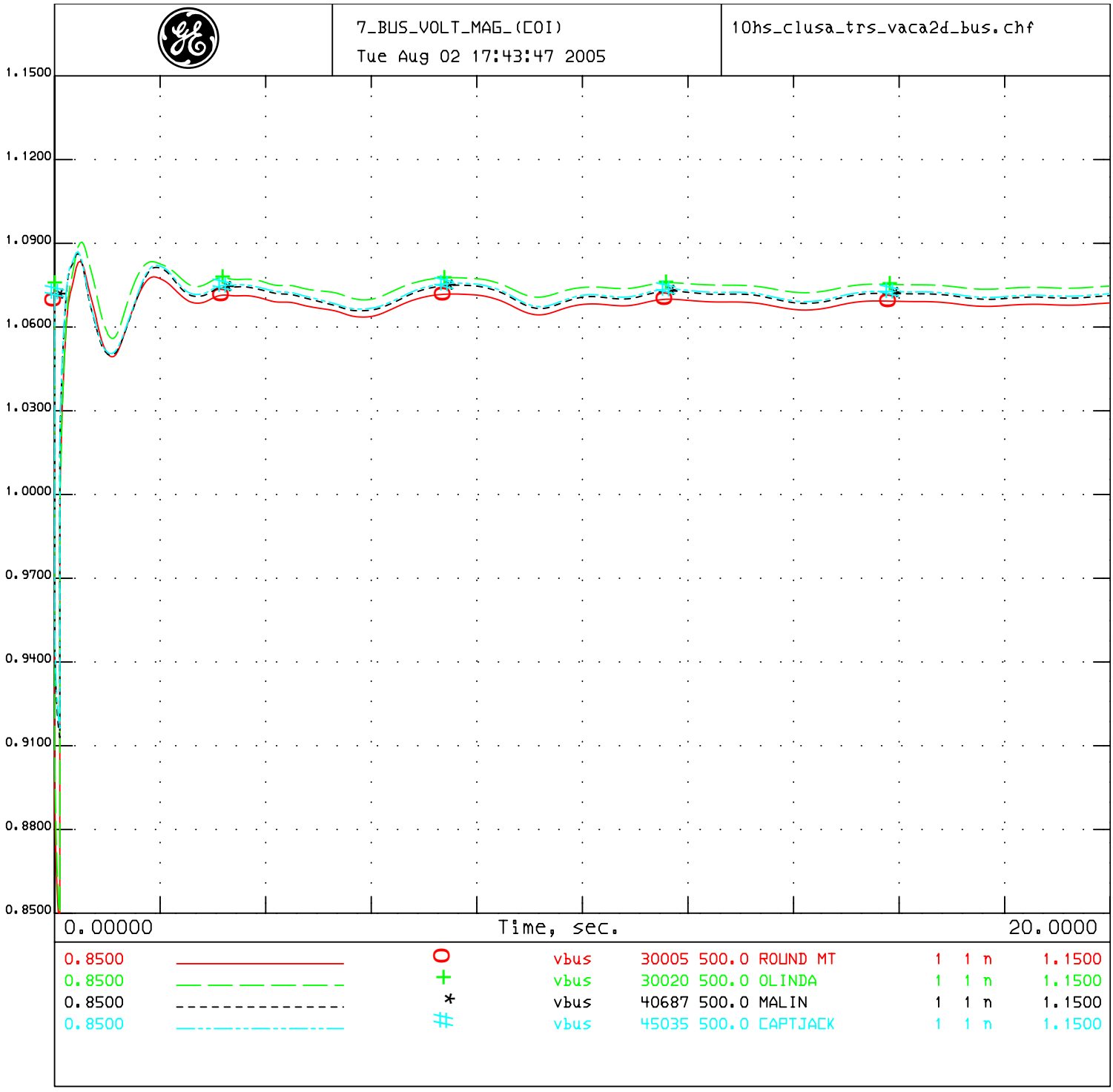

PG&E 2004 BASE CASE SERIES - 2010 North Valley Summer Peak Case
PATH15=-1127 MW(S-N) PATH26=3313 MW(N-S) PDCI=3105 MW(N-S) COI=4710 MW(N-S)
CPV Colusa - 2010 Summer Peak - after

Trip VACA-DIXON BUS 2 SEC D Substation

original case 3/26/2004 by SATS 2009 system summer peak
updated loads to 2010 system summer peak
added 2010 North Valley 1-in-10 loads and generation dispatch
Morro Bay 4 is the swing bus
Proposed new generation in queue added
CPV Colusa 97 MW looped onto:
Cottonwood - Cortina 230 kV Line (#1)
Cottonwood - Vaca Dixon 230 kV Line (#2)
Logan Creek - Vaca Dixon 230 kV Line (#3)
Glenn - Vaca Dixon 230 kV Line (#4)

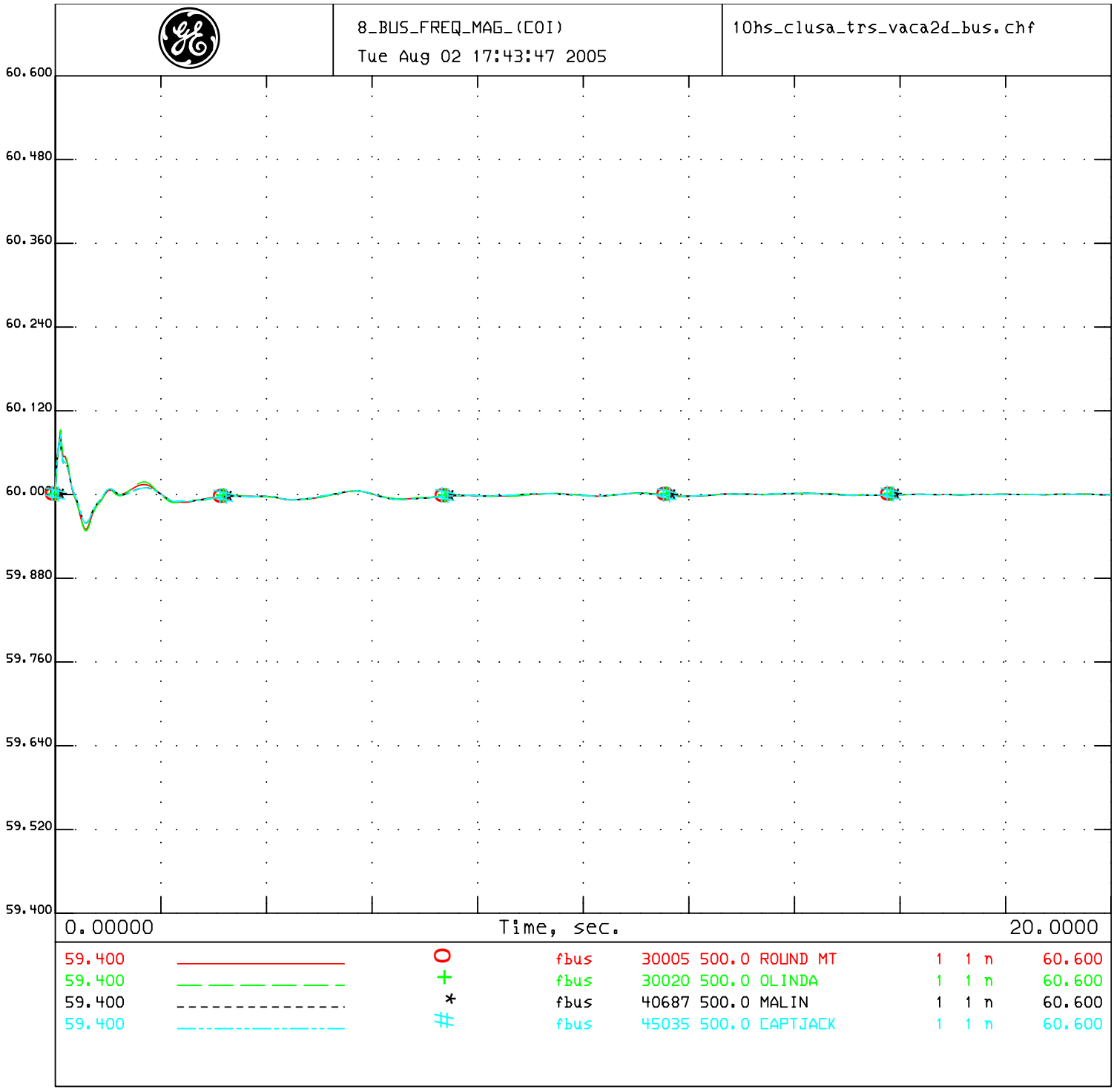

PG&E 2004 BASE CASE SERIES - 2010 North Valley Summer Peak Case
PATH15=-1127 MW(S-N) PATH26=3313 MW(N-S) PDCI=3105 MW(N-S) COI=4710 MW(N-S)
CPV Colusa - 2010 Summer Peak - after

Trip VACA-DIXON BUS 2 SEC D Substation

original case 3/26/2004 by SATS 2009 system summer peak
updated loads to 2010 system summer peak
added 2010 North Valley 1-in-10 loads and generation dispatch
Morro Bay 4 is the swing bus
Proposed new generation in queue added
CPV Colusa 97 MW looped onto:
Cottonwood - Cortina 230 kV Line (#1)
Cottonwood - Vaca Dixon 230 kV Line (#2)
Logan Creek - Vaca Dixon 230 kV Line (#3)
Glenn - Vaca Dixon 230 kV Line (#4)

1_COLUSA_vt_ang
Tue Aug 02 14:33:10 2005

10hs_clusa_trs_vaca2e_bus.chf

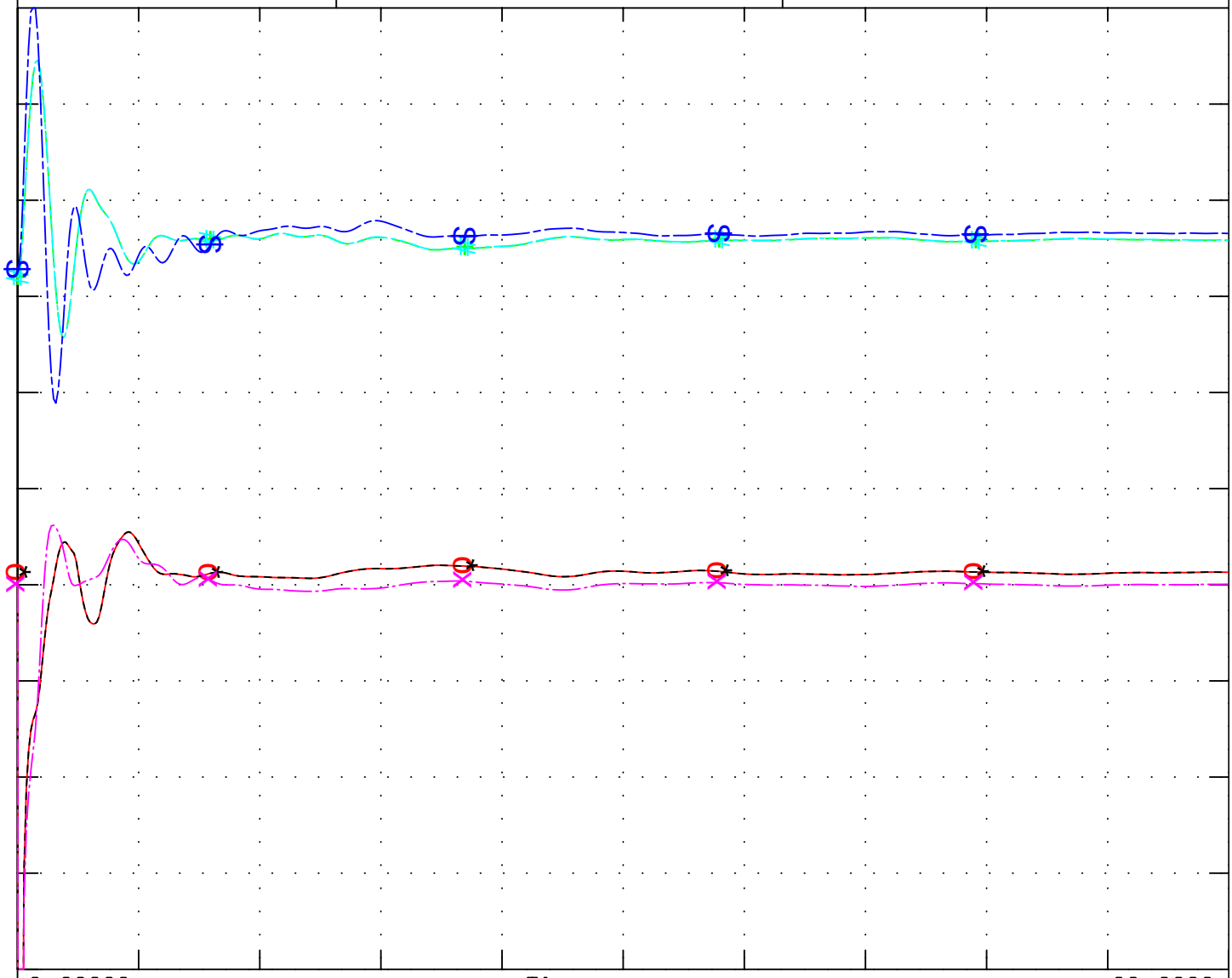

0.8000		O	vt	31923	18.0	P0506GT1	1	1	1.2000
0.0000		+	ang	31923	18.0	P0506GT1	1	1	100.00
0.8000		*	vt	31924	18.0	P0506GT2	2	1	1.2000
0.0000		#	ang	31924	18.0	P0506GT2	2	1	100.00
0.8000		X	vt	31925	18.0	P0506ST1	3	1	1.2000
0.0000		⊗	ang	31925	18.0	P0506ST1	3	1	100.00

PG&E 2004 BASE CASE SERIES - 2010 North Valley Summer Peak Case
PATH15=-1127 MW(S-N) PATH26=3313 MW(N-S) PDCI=3105 MW(N-S) COI=4710 MW(N-S)
CPV Colusa - 2010 Summer Peak - after

Trip VACA-DIXON BUS 2 SEC E Substationn

original case 3/26/2004 by SATS 2009 system summer peak
updated loads to 2010 system summer peak
added 2010 North Valley 1-in-10 loads and generation dispatch
Morro Bay 4 is the swing bus
Proposed new generation in queue added
CPV Colusa 97 MW looped onto:
Cottonwood - Cortina 230 kV Line (#1)
Cottonwood - Vaca Dixon 230 kV Line (#2)
Logan Creek - Vaca Dixon 230 kV Line (#3)
Glenn - Vaca Dixon 230 kV Line (#4)

2_COLUSA_spd_pg
Tue Aug 02 14:33:10 2005

10hs_clusa_trs_vaca2e_bus.chf

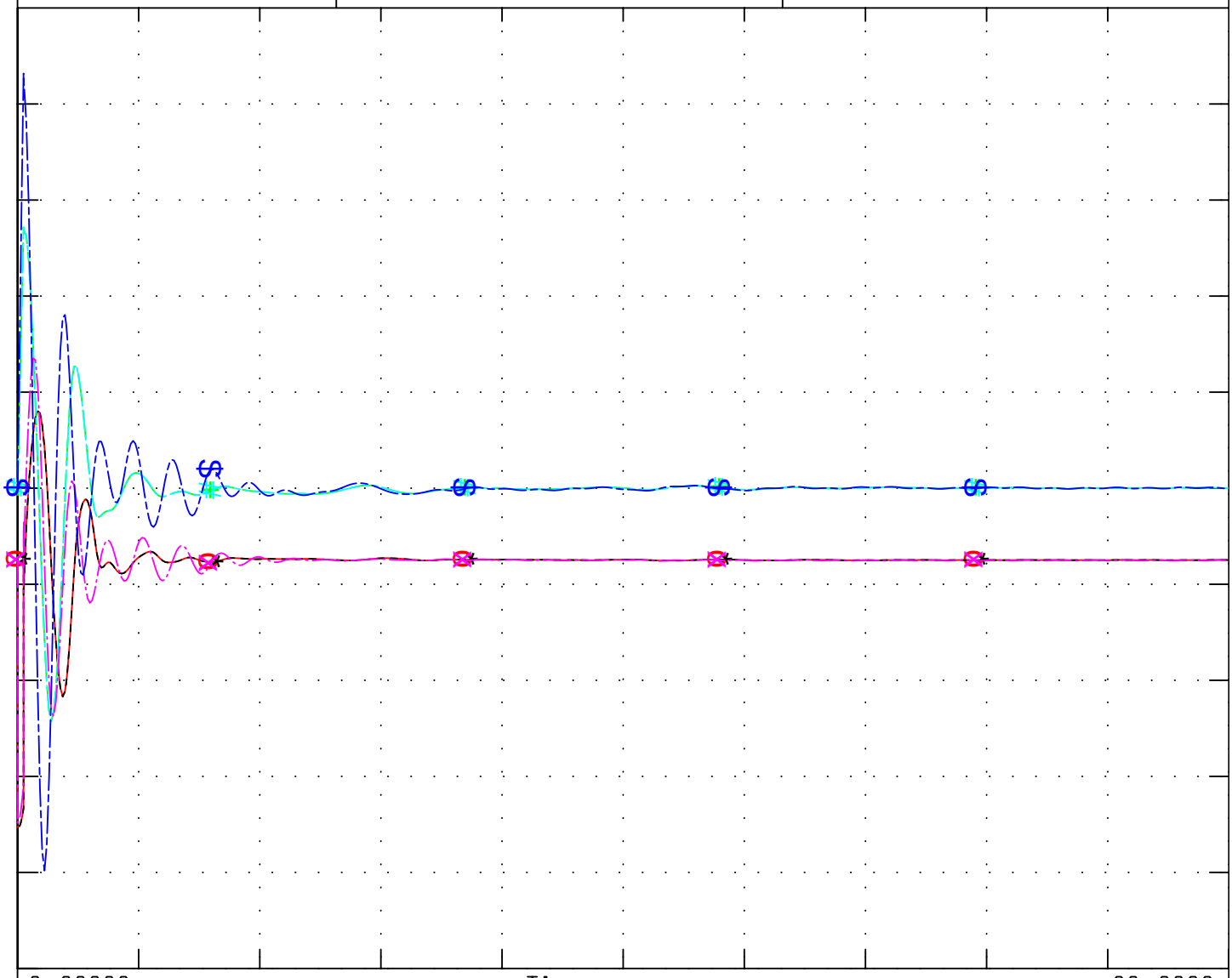

0.0000	O	pg	31923	18.0	P0506GT1	1	1	n	468.00
0.9900	+	spd	31923	18.0	P0506GT1	1	1	n	1.0100
0.0000	*	pg	31924	18.0	P0506GT2	2	1	n	468.00
0.9900	#	spd	31924	18.0	P0506GT2	2	1	n	1.0100
0.0000	X	pg	31925	18.0	P0506ST1	3	1	n	746.00
0.9900	S	spd	31925	18.0	P0506ST1	3	1	n	1.0100

PG&E 2004 BASE CASE SERIES - 2010 North Valley Summer Peak Case
PATH15=-1127 MW(S-N) PATH26=3313 MW(N-S) PDCI=3105 MW(N-S) COI=4710 MW(N-S)
CPV Colusa - 2010 Summer Peak - after

Trip VACA-DIXON BUS 2 SEC E Substationn

original case 3/26/2004 by SATS 2009 system summer peak
updated loads to 2010 system summer peak
added 2010 North Valley 1-in-10 loads and generation dispatch
Morro Bay 4 is the swing bus
Proposed new generation in queue added
CPV Colusa 97 MW looped onto:
Cottonwood - Cortina 230 kV Line (#1)
Cottonwood - Vaca Dixon 230 kV Line (#2)
Logan Creek - Vaca Dixon 230 kV Line (#3)
Glenn - Vaca Dixon 230 kV Line (#4)

3_BUS_VOLT_MAG_230:
Tue Aug 02 14:33:10 2005

10hs_clusa_trs_vaca2e_bus.chf

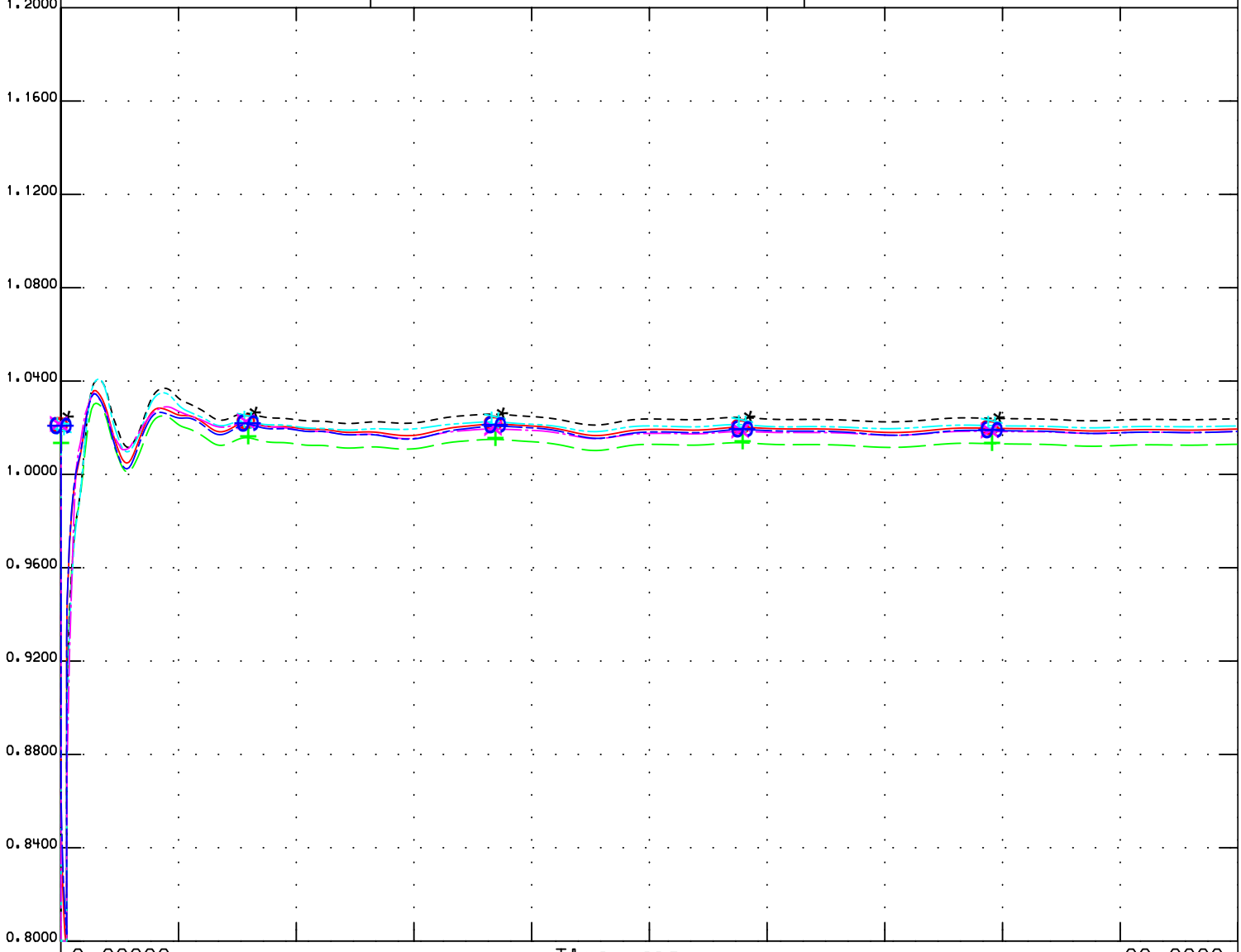

0.8000		O	vbus	30106	230.0	COTWD_F	1	1	n	1.2000
0.8000		+	vbus	30110	230.0	GLENN	1	1	n	1.2000
0.8000		*	vbul	30111	230.0	LOGAN CR	1	1	n	1.2000
0.8000		#	vbus	30450	230.0	CORTINA	1	1	n	1.2000
0.8000		X	vbus	30460	230.0	VACA-DIX	1	1	n	1.2000
0.8000		S	vbus	37565	230.0	OLINDAW	1	1	n	1.2000

PG&E 2004 BASE CASE SERIES - 2010 North Valley Summer Peak Case
PATH15=-1127 MW(S-N) PATH26=3313 MW(N-S) PDCI=3105 MW(N-S) COI=4710 MW(N-S)
CPV Colusa - 2010 Summer Peak - after

Trip VACA-DIXON BUS 2 SEC E Substationn

original case 3/26/2004 by SATS 2009 system summer peak
updated loads to 2010 system summer peak
added 2010 North Valley 1-in-10 loads and generation dispatch
Morro Bay 4 is the swing bus
Proposed new generation in queue added
CPV Colusa 97 MW looped onto:
Cottonwood - Cortina 230 kV Line (#1)
Cottonwood - Vaca Dixon 230 kV Line (#2)
Logan Creek - Vaca Dixon 230 kV Line (#3)
Glenn - Vaca Dixon 230 kV Line (#4)

4_BUS_VOLT_MAG_230:
Tue Aug 02 14:33:11 2005

10hs_clusa_trs_vaca2e_bus.chf

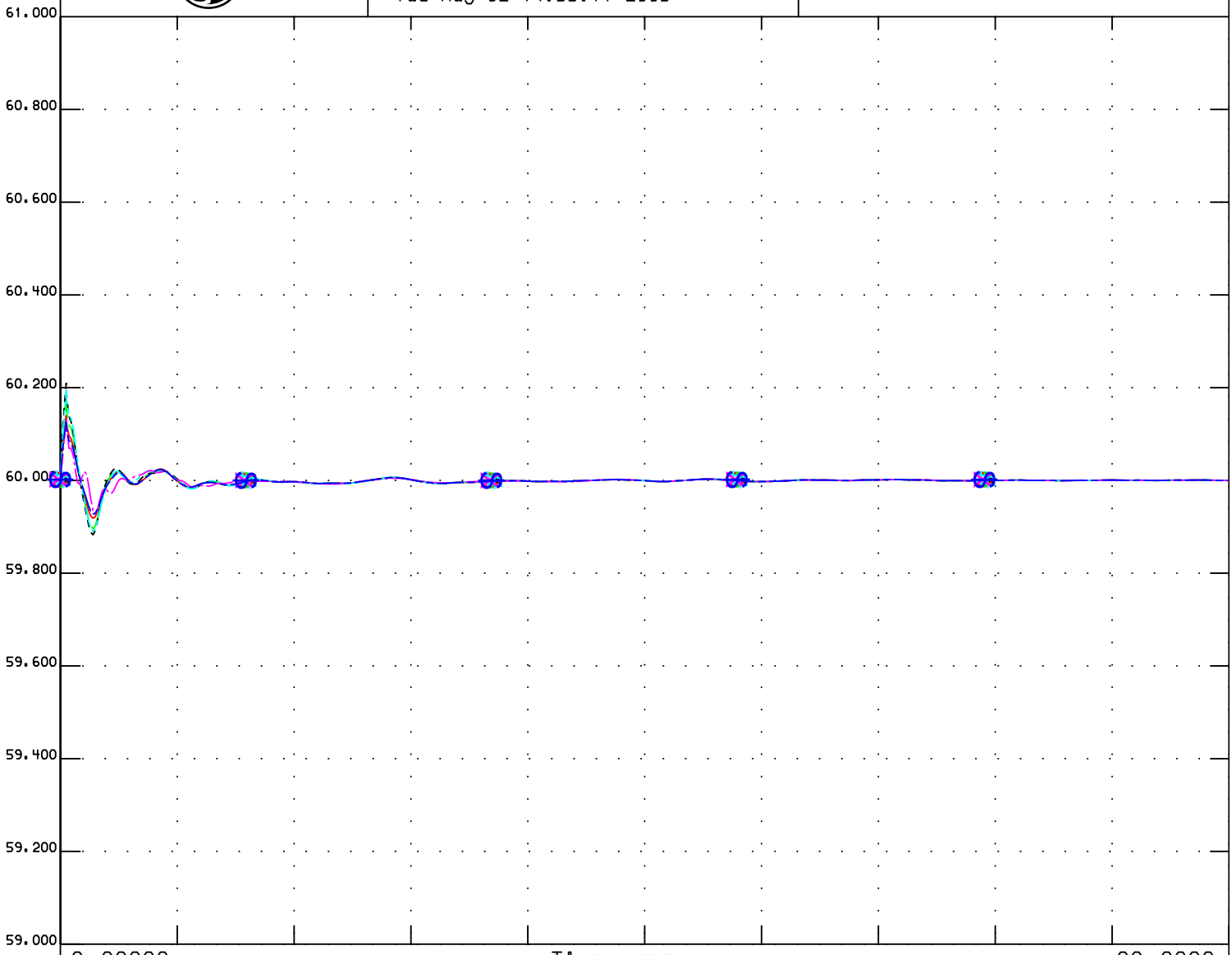

59.000	————————	O	fbus	30106	230.0	COTWD_F	1	1 n	61.000
59.000	— — — — — —	+	fbus	30110	230.0	GLENN	1	1 n	61.000
59.000	- - - - - - - - - - - - - -	*	fbul	30111	230.0	LOGAN CR	1	1 n	61.000
59.000	—·—·—·—·—·—	#	fbus	30450	230.0	CORTINA	1	1 n	61.000
59.000	—·—·—·—·—·—	X	fbus	30460	230.0	VACA-DIX	1	1 n	61.000
59.000	— — — — — —	S	fbus	37565	230.0	OLINDAW	1	1 n	61.000

PG&E 2004 BASE CASE SERIES - 2010 North Valley Summer Peak Case
PATH15=-1127 MW(S-N) PATH26=3313 MW(N-S) PDCI=3105 MW(N-S) COI=4710 MW(N-S)
CPV Colusa - 2010 Summer Peak - after

Trip VACA-DIXON BUS 2 SEC E Substationn

original case 3/26/2004 by SATS 2009 system summer peak
updated loads to 2010 system summer peak
added 2010 North Valley 1-in-10 loads and generation dispatch
Morro Bay 4 is the swing bus
Proposed new generation in queue added
CPV Colusa 97 MW looped onto:
Cottonwood - Cortina 230 kV Line (#1)
Cottonwood - Vaca Dixon 230 kV Line (#2)
Logan Creek - Vaca Dixon 230 kV Line (#3)
Glenn - Vaca Dixon 230 kV Line (#4)

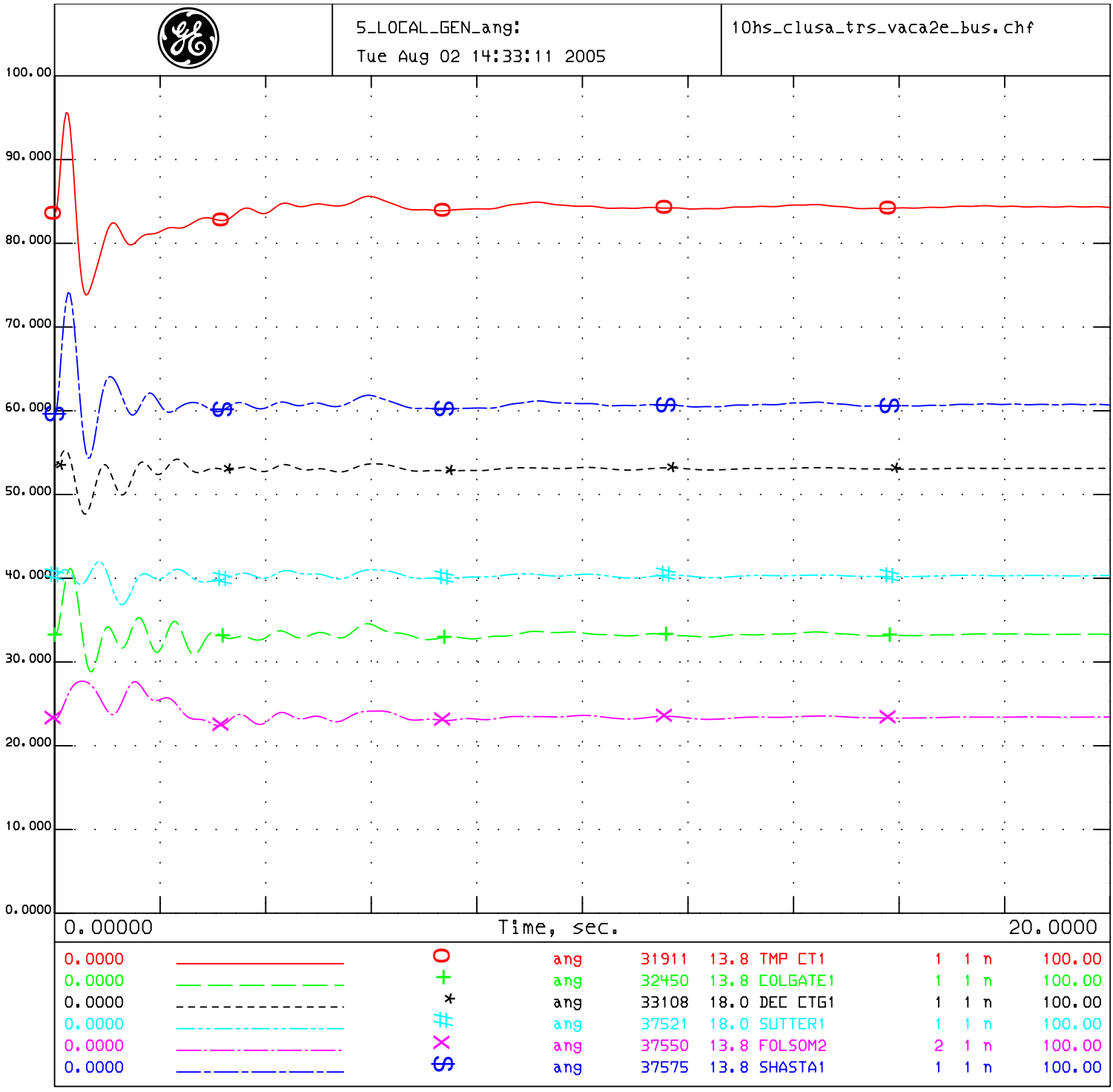

PG&E 2004 BASE CASE SERIES - 2010 North Valley Summer Peak Case
PATH15=-1127 MW(S-N) PATH26=3313 MW(N-S) PDCI=3105 MW(N-S) COI=4710 MW(N-S)
CPV Colusa - 2010 Summer Peak - after

Trip VACA-DIXON BUS 2 SEC E Substationn

original case 3/26/2004 by SATS 2009 system summer peak
updated loads to 2010 system summer peak
added 2010 North Valley 1-in-10 loads and generation dispatch
Morro Bay 4 is the swing bus
Proposed new generation in queue added
CPV Colusa 97 MW looped onto:
Cottonwood - Cortina 230 kV Line (#1)
Cottonwood - Vaca Dixon 230 kV Line (#2)
Logan Creek - Vaca Dixon 230 kV Line (#3)
Glenn - Vaca Dixon 230 kV Line (#4)

6_LOCAL_GEN_vt:
Tue Aug 02 14:33:11 2005

10hs_clusa_trs_vaca2e_bus.chf

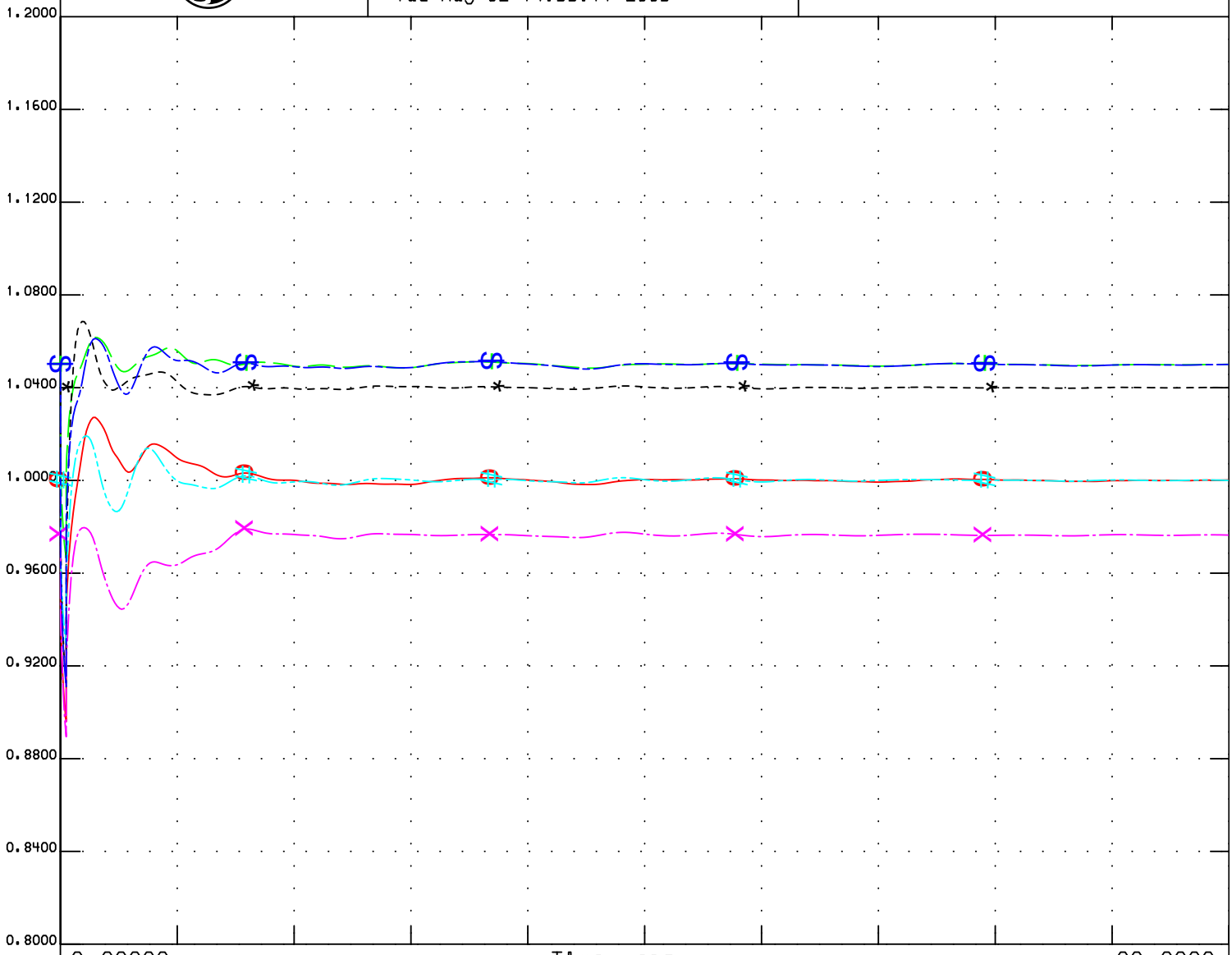

0.8000		O	vt	31911	13.8	TMP CT1	1	1	n	1.2000
0.8000		+	vt	32450	13.8	COLGATE1	1	1	n	1.2000
0.8000		*	vt	33108	18.0	DEC CTG1	1	1	n	1.2000
0.8000		#	vt	37521	18.0	SUTTER1	1	1	n	1.2000
0.8000		×	vt	37550	13.8	FOLSOM2	2	1	n	1.2000
0.8000		$	vt	37575	13.8	SHASTA1	1	1	n	1.2000

PG&E 2004 BASE CASE SERIES - 2010 North Valley Summer Peak Case
PATH15=-1127 MW(S-N) PATH26=3313 MW(N-S) PDCI=3105 MW(N-S) COI=4710 MW(N-S)
CPV Colusa - 2010 Summer Peak - after

Trip VACA-DIXON BUS 2 SEC E Substationn

original case 3/26/2004 by SATS 2009 system summer peak
updated loads to 2010 system summer peak
added 2010 North Valley 1-in-10 loads and generation dispatch
Morro Bay 4 is the swing bus
Proposed new generation in queue added
CPV Colusa 97 MW looped onto:
Cottonwood - Cortina 230 kV Line (#1)
Cottonwood - Vaca Dixon 230 kV Line (#2)
Logan Creek - Vaca Dixon 230 kV Line (#3)
Glenn - Vaca Dixon 230 kV Line (#4)

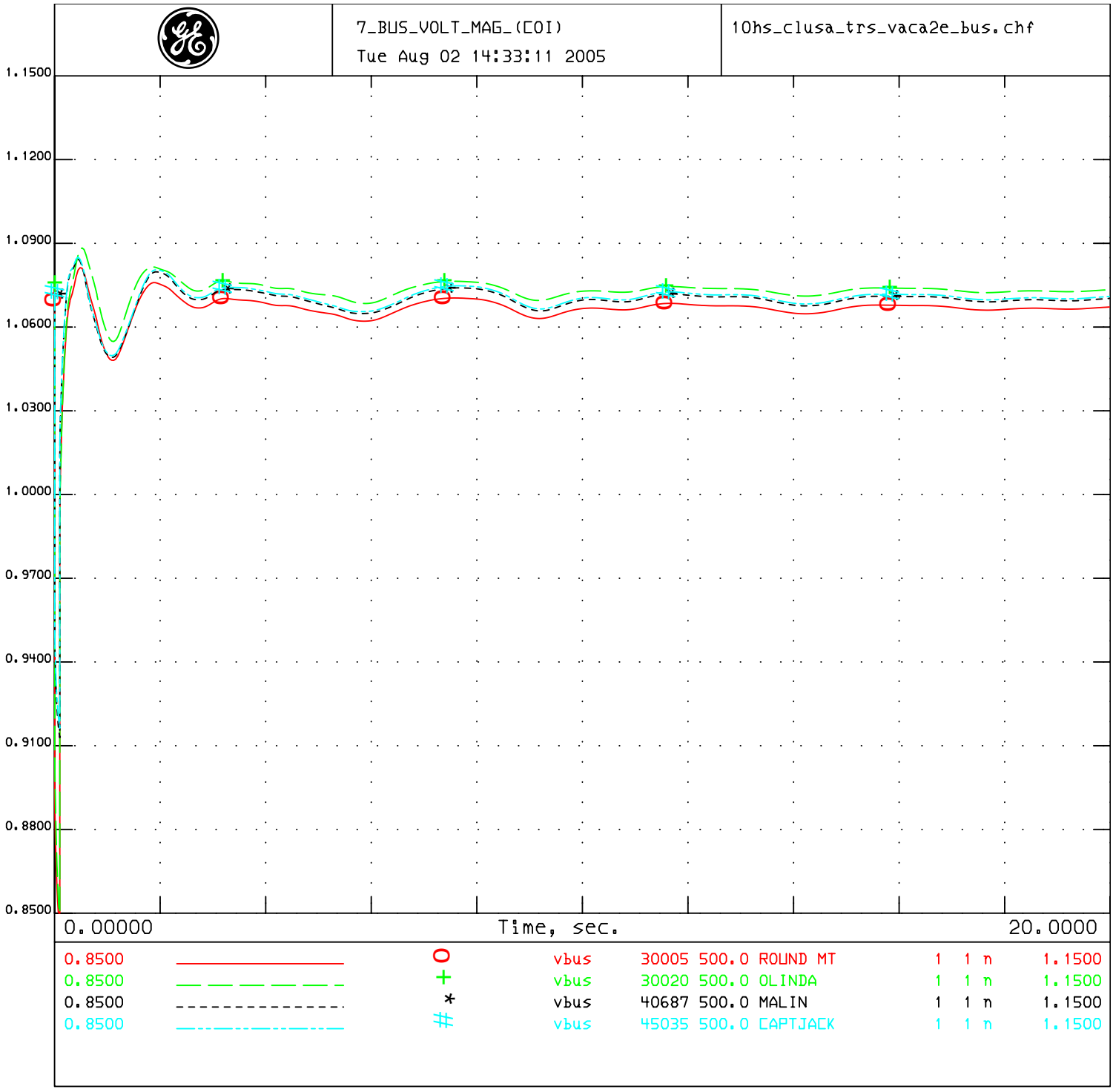

PG&E 2004 BASE CASE SERIES - 2010 North Valley Summer Peak Case
PATH15=-1127 MW(S-N) PATH26=3313 MW(N-S) PDCI=3105 MW(N-S) COI=4710 MW(N-S)
CPV Colusa - 2010 Summer Peak - after

Trip VACA-DIXON BUS 2 SEC E Substationn

original case 3/26/2004 by SATS 2009 system summer peak
updated loads to 2010 system summer peak
added 2010 North Valley 1-in-10 loads and generation dispatch
Morro Bay 4 is the swing bus
Proposed new generation in queue added
CPV Colusa 97 MW looped onto:
Cottonwood - Cortina 230 kV Line (#1)
Cottonwood - Vaca Dixon 230 kV Line (#2)
Logan Creek - Vaca Dixon 230 kV Line (#3)
Glenn - Vaca Dixon 230 kV Line (#4)

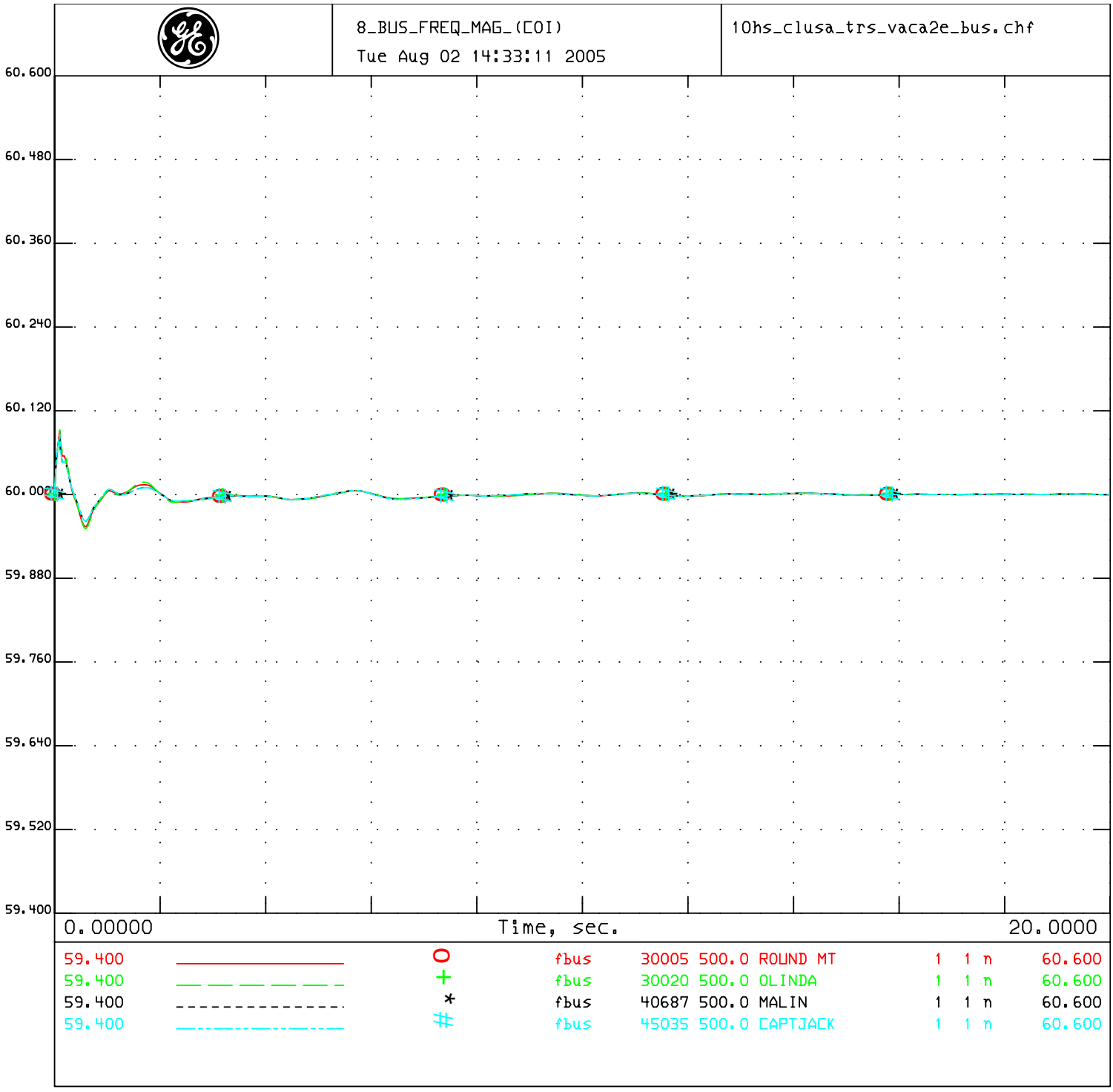

PG&E 2004 BASE CASE SERIES - 2010 North Valley Summer Peak Case
PATH15=-1127 MW(S-N) PATH26=3313 MW(N-S) PDCI=3105 MW(N-S) COI=4710 MW(N-S)
CPV Colusa - 2010 Summer Peak - after

Trip VACA-DIXON BUS 2 SEC E Substationn

original case 3/26/2004 by SATS 2009 system summer peak
updated loads to 2010 system summer peak
added 2010 North Valley 1-in-10 loads and generation dispatch
Morro Bay 4 is the swing bus
Proposed new generation in queue added
CPV Colusa 97 MW looped onto:
Cottonwood - Cortina 230 kV Line (#1)
Cottonwood - Vaca Dixon 230 kV Line (#2)
Logan Creek - Vaca Dixon 230 kV Line (#3)
Glenn - Vaca Dixon 230 kV Line (#4)

1_COLUSA_vt_ang
Tue Aug 02 16:53:47 2005

10hs_clusa_trs_lgncrk_bus.chf

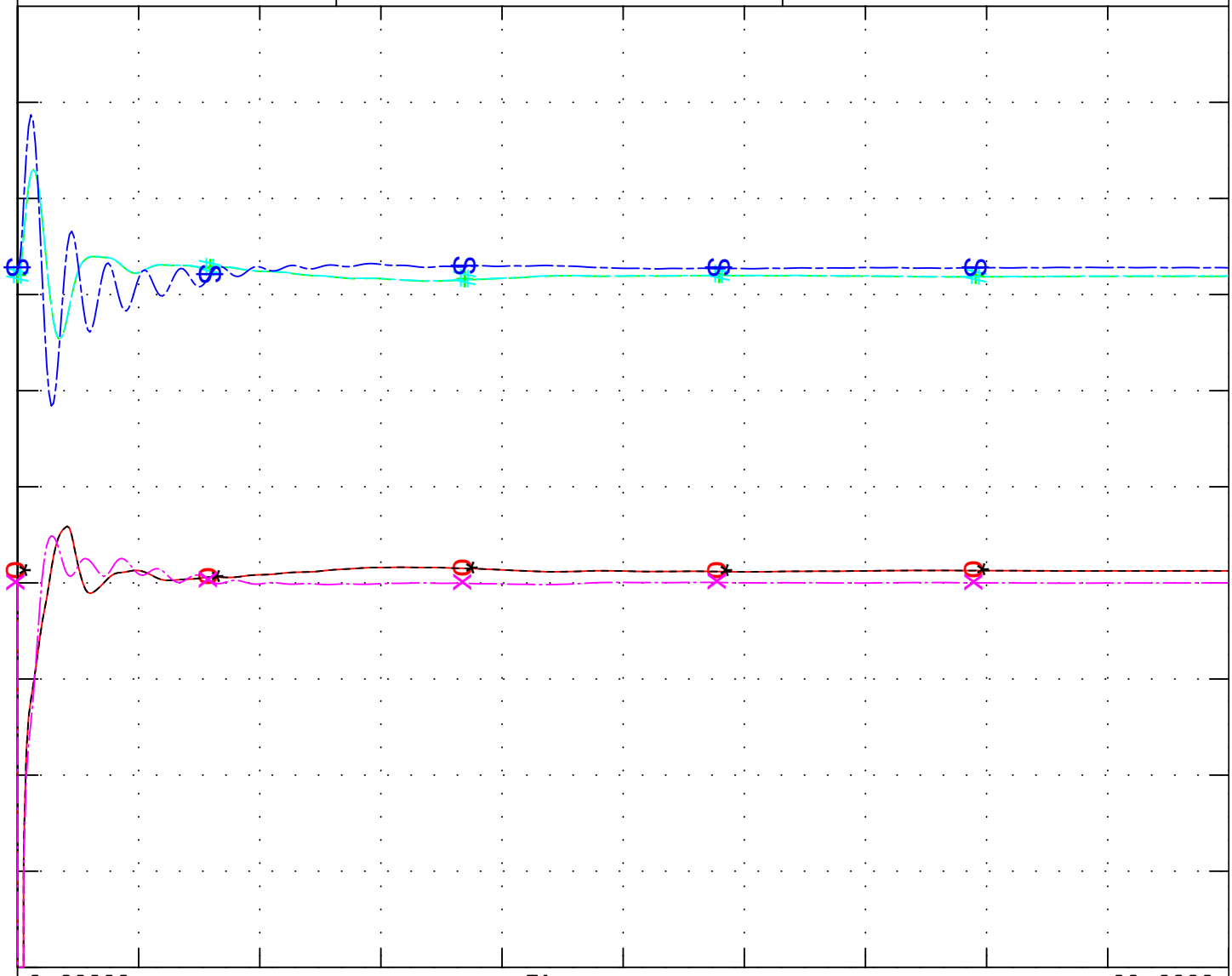

0.8000		O	vt	31923	18.0	P0506GT1	1	1	1.2000
0.0000		+	ang	31923	18.0	P0506GT1	1	1	100.00
0.8000		*	vt	31924	18.0	P0506GT2	2	1	1.2000
0.0000		#	ang	31924	18.0	P0506GT2	2	1	100.00
0.8000		X	vt	31925	18.0	P0506ST1	3	1	1.2000
0.0000		⊗	ang	31925	18.0	P0506ST1	3	1	100.00

PG&E 2004 BASE CASE SERIES - 2010 North Valley Summer Peak Case
PATH15=-1127 MW(S-N) PATH26=3313 MW(N-S) PDCI=3105 MW(N-S) COI=4710 MW(N-S)
CPV Colusa - 2010 Summer Peak - after

Trip Logan Creek Substation

original case 3/26/2004 by SATS 2009 system summer peak
updated loads to 2010 system summer peak
added 2010 North Valley 1-in-10 loads and generation dispatch
Morro Bay 4 is the swing bus
Proposed new generation in queue added
CPV Colusa 97 MW looped onto:
Cottonwood - Cortina 230 kV Line (#1)
Cottonwood - Vaca Dixon 230 kV Line (#2)
Logan Creek - Vaca Dixon 230 kV Line (#3)
Glenn - Vaca Dixon 230 kV Line (#4)

2_COLUSA_spd_pg
Tue Aug 02 16:53:47 2005

10hs_clusa_trs_lgncrk_bus.chf

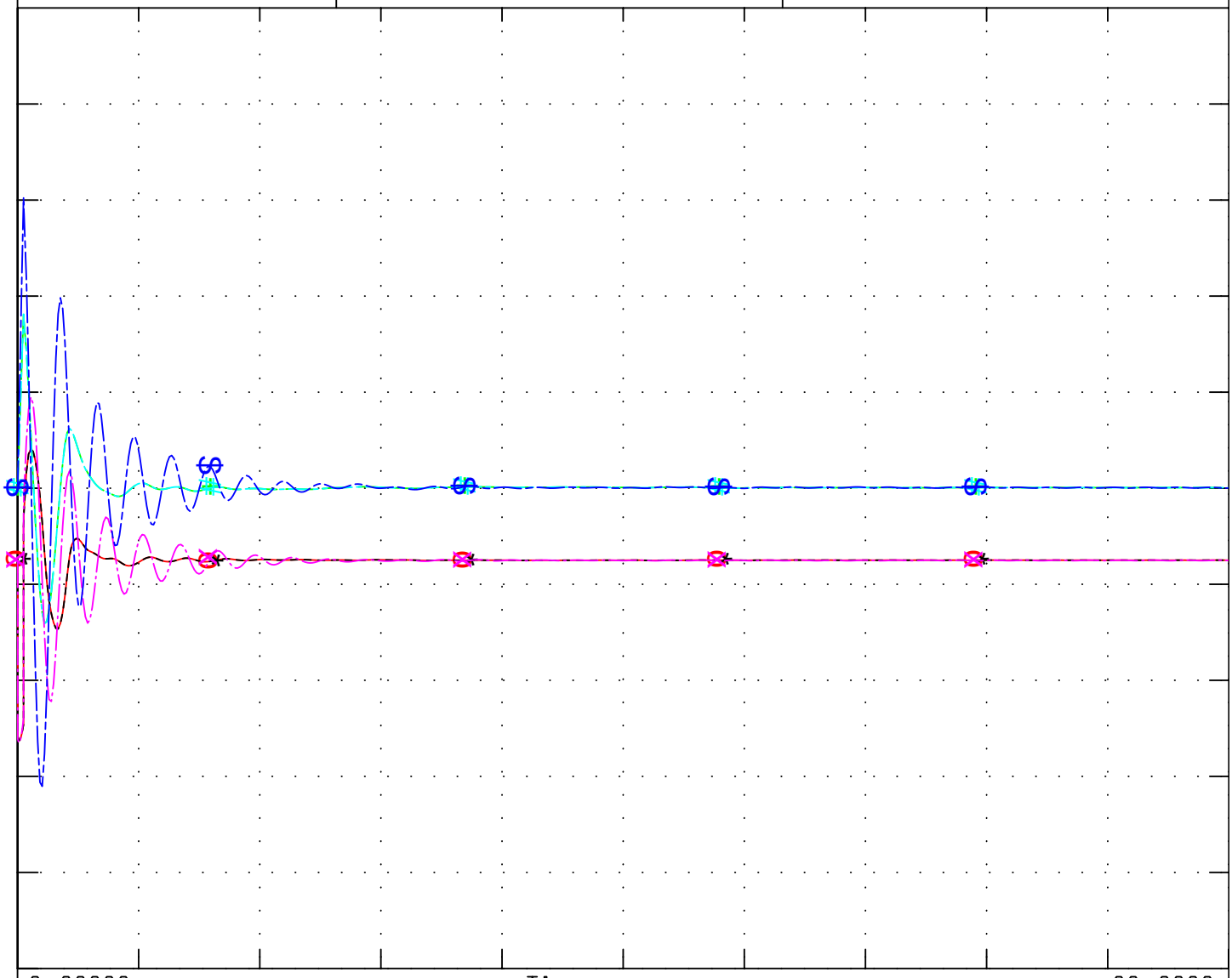

0.00000 Time, sec. 20.0000

0.0000		O	pg	31923	18.0	P0506GT1	1	1	n	468.00
0.9900		+	spd	31923	18.0	P0506GT1	1	1	n	1.0100
0.0000		*	pg	31924	18.0	P0506GT2	2	1	n	468.00
0.9900		#	spd	31924	18.0	P0506GT2	2	1	n	1.0100
0.0000		X	pg	31925	18.0	P0506ST1	3	1	n	746.00
0.9900		$	spd	31925	18.0	P0506ST1	3	1	n	1.0100

PG&E 2004 BASE CASE SERIES - 2010 North Valley Summer Peak Case
PATH15=-1127 MW(S-N) PATH26=3313 MW(N-S) PDCI=3105 MW(N-S) COI=4710 MW(N-S)
CPV Colusa - 2010 Summer Peak - after

Trip Logan Creek Substation

original case 3/26/2004 by SATS 2009 system summer peak
updated loads to 2010 system summer peak
added 2010 North Valley 1-in-10 loads and generation dispatch
Morro Bay 4 is the swing bus
Proposed new generation in queue added
CPV Colusa 97 MW looped onto:
Cottonwood - Cortina 230 kV Line (#1)
Cottonwood - Vaca Dixon 230 kV Line (#2)
Logan Creek - Vaca Dixon 230 kV Line (#3)
Glenn - Vaca Dixon 230 kV Line (#4)

3_BUS_VOLT_MAG_230:
Tue Aug 02 16:53:47 2005

10hs_clusa_trs_lgncrk_bus.chf

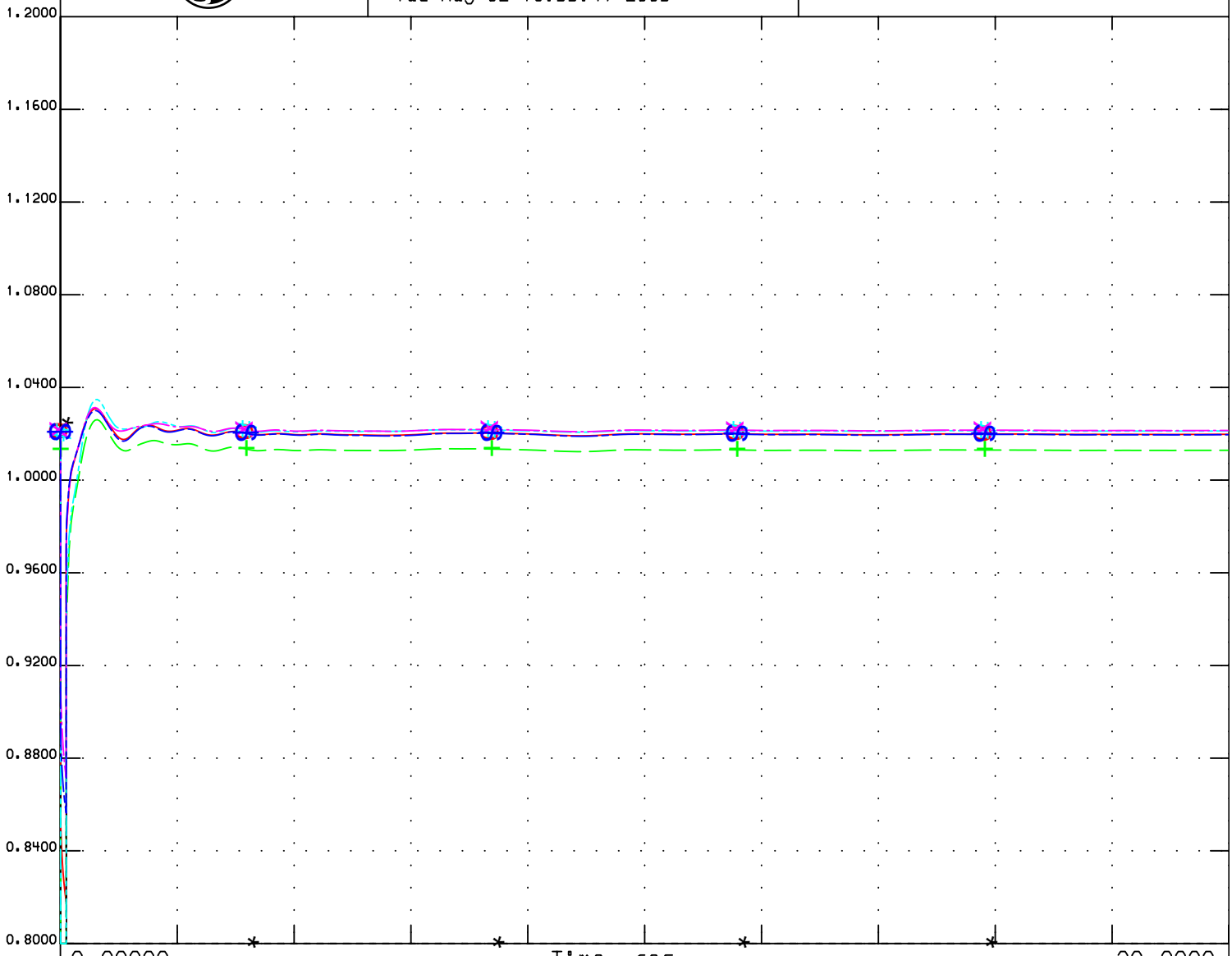

0.8000	————————	O	vbus	30106	230.0	COTWD_F	1	1	n	1.2000
0.8000	— — — — — —	+	vbus	30110	230.0	GLENN	1	1	n	1.2000
0.8000	- - - - - - - - - - - - - -	*	vbul	30111	230.0	LOGAN CR	1	1	n	1.2000
0.8000	—-—-—-—-—-—	#	vbus	30450	230.0	CORTINA	1	1	n	1.2000
0.8000	—.—.—.—.—.	X	vbus	30460	230.0	VACA-DIX	1	1	n	1.2000
0.8000	—-—-—-—-—-	S	vbus	37565	230.0	OLINDAW	1	1	n	1.2000

PG&E 2004 BASE CASE SERIES - 2010 North Valley Summer Peak Case
PATH15=-1127 MW(S-N) PATH26=3313 MW(N-S) PDCI=3105 MW(N-S) COI=4710 MW(N-S)
CPV Colusa - 2010 Summer Peak - after

Trip Logan Creek Substation

original case 3/26/2004 by SATS 2009 system summer peak
updated loads to 2010 system summer peak
added 2010 North Valley 1-in-10 loads and generation dispatch
Morro Bay 4 is the swing bus
Proposed new generation in queue added
CPV Colusa 97 MW looped onto:
Cottonwood - Cortina 230 kV Line (#1)
Cottonwood - Vaca Dixon 230 kV Line (#2)
Logan Creek - Vaca Dixon 230 kV Line (#3)
Glenn - Vaca Dixon 230 kV Line (#4)

4_BUS_VOLT_MAG_230:
Tue Aug 02 16:53:48 2005

10hs_clusa_trs_lgncrk_bus.chf

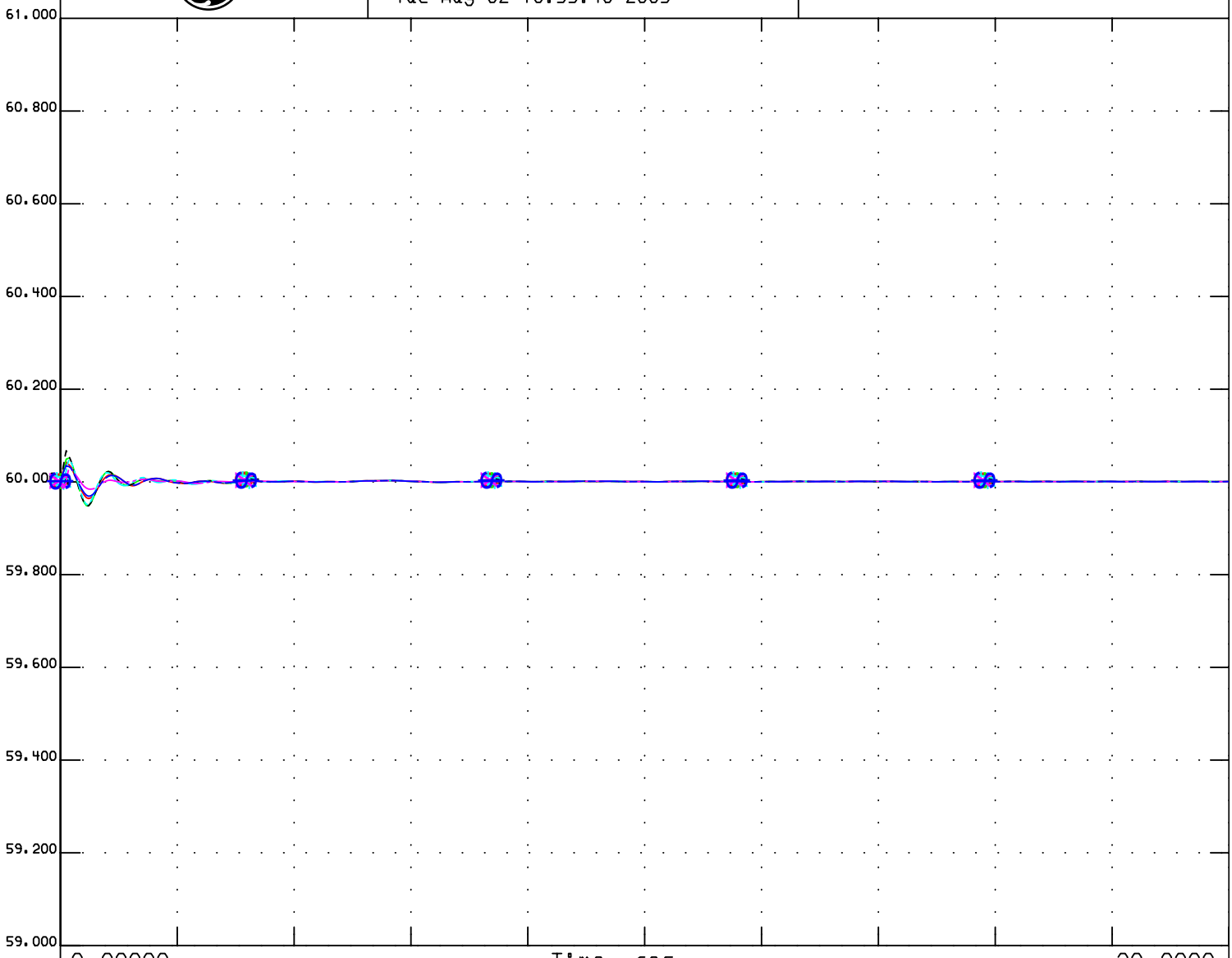

59.000		O	fbus	30106	230.0	COTWD_F	1	1	n	61.000
59.000		+	fbus	30110	230.0	GLENN	1	1	n	61.000
59.000		*	fbul	30111	230.0	LOGAN CR	1	1	n	61.000
59.000		#	fbus	30450	230.0	CORTINA	1	1	n	61.000
59.000		X	fbus	30460	230.0	VACA-DIX	1	1	n	61.000
59.000		$	fbus	37565	230.0	OLINDAW	1	1	n	61.000

PG&E 2004 BASE CASE SERIES - 2010 North Valley Summer Peak Case
PATH15=-1127 MW(S-N) PATH26=3313 MW(N-S) PDCI=3105 MW(N-S) COI=4710 MW(N-S)
CPV Colusa - 2010 Summer Peak - after

Trip Logan Creek Substation

original case 3/26/2004 by SATS 2009 system summer peak
updated loads to 2010 system summer peak
added 2010 North Valley 1-in-10 loads and generation dispatch
Morro Bay 4 is the swing bus
Proposed new generation in queue added
CPV Colusa 97 MW looped onto:
Cottonwood - Cortina 230 kV Line (#1)
Cottonwood - Vaca Dixon 230 kV Line (#2)
Logan Creek - Vaca Dixon 230 kV Line (#3)
Glenn - Vaca Dixon 230 kV Line (#4)

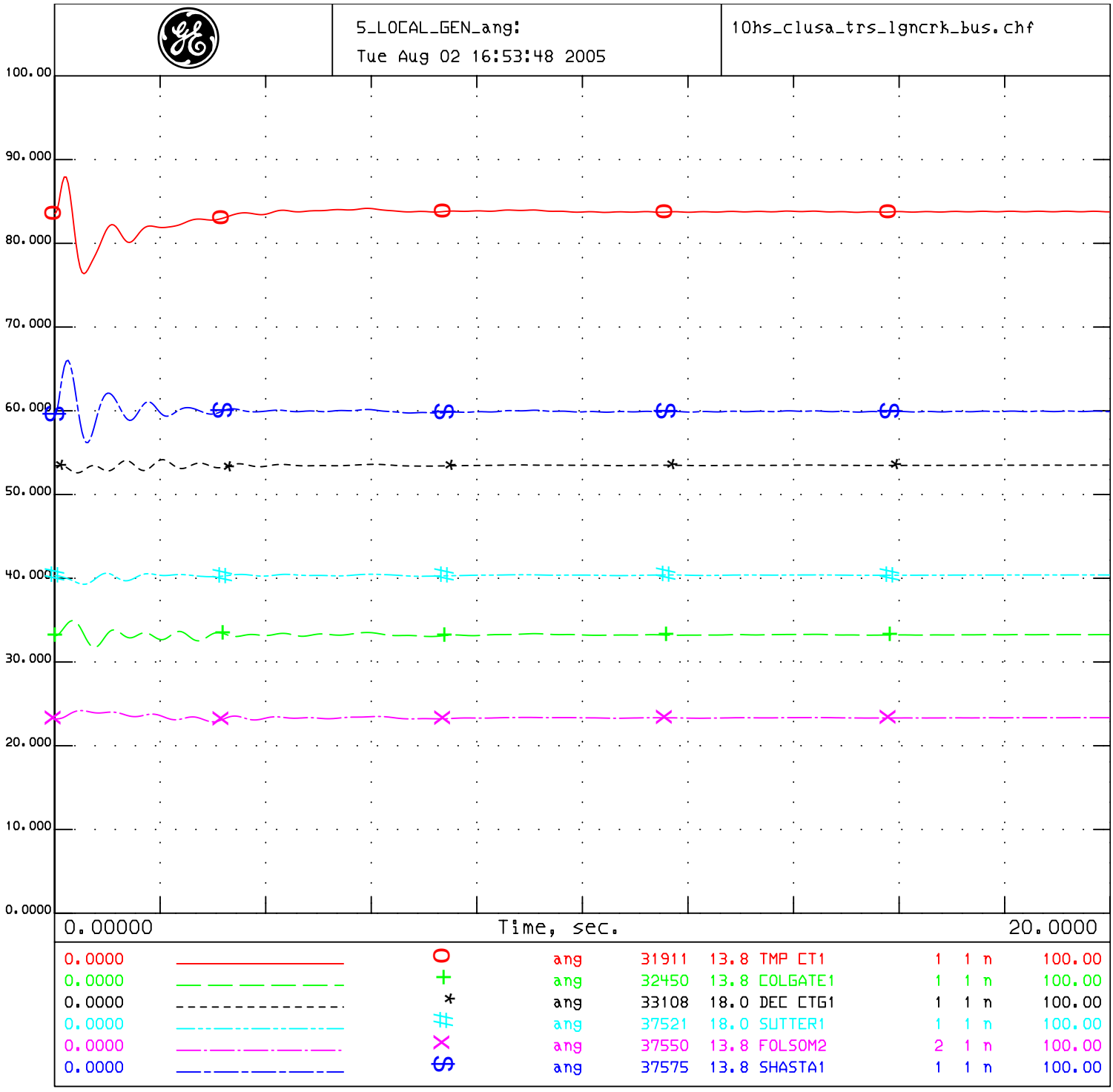

PG&E 2004 BASE CASE SERIES - 2010 North Valley Summer Peak Case
PATH15=-1127 MW(S-N) PATH26=3313 MW(N-S) PDCI=3105 MW(N-S) COI=4710 MW(N-S)
CPV Colusa - 2010 Summer Peak - after

Trip Logan Creek Substation

original case 3/26/2004 by SATS 2009 system summer peak
updated loads to 2010 system summer peak
added 2010 North Valley 1-in-10 loads and generation dispatch
Morro Bay 4 is the swing bus
Proposed new generation in queue added
CPV Colusa 97 MW looped onto:
Cottonwood - Cortina 230 kV Line (#1)
Cottonwood - Vaca Dixon 230 kV Line (#2)
Logan Creek - Vaca Dixon 230 kV Line (#3)
Glenn - Vaca Dixon 230 kV Line (#4)

6_LOCAL_GEN_vt:
Tue Aug 02 16:53:48 2005

10hs_clusa_trs_lgncrk_bus.chf

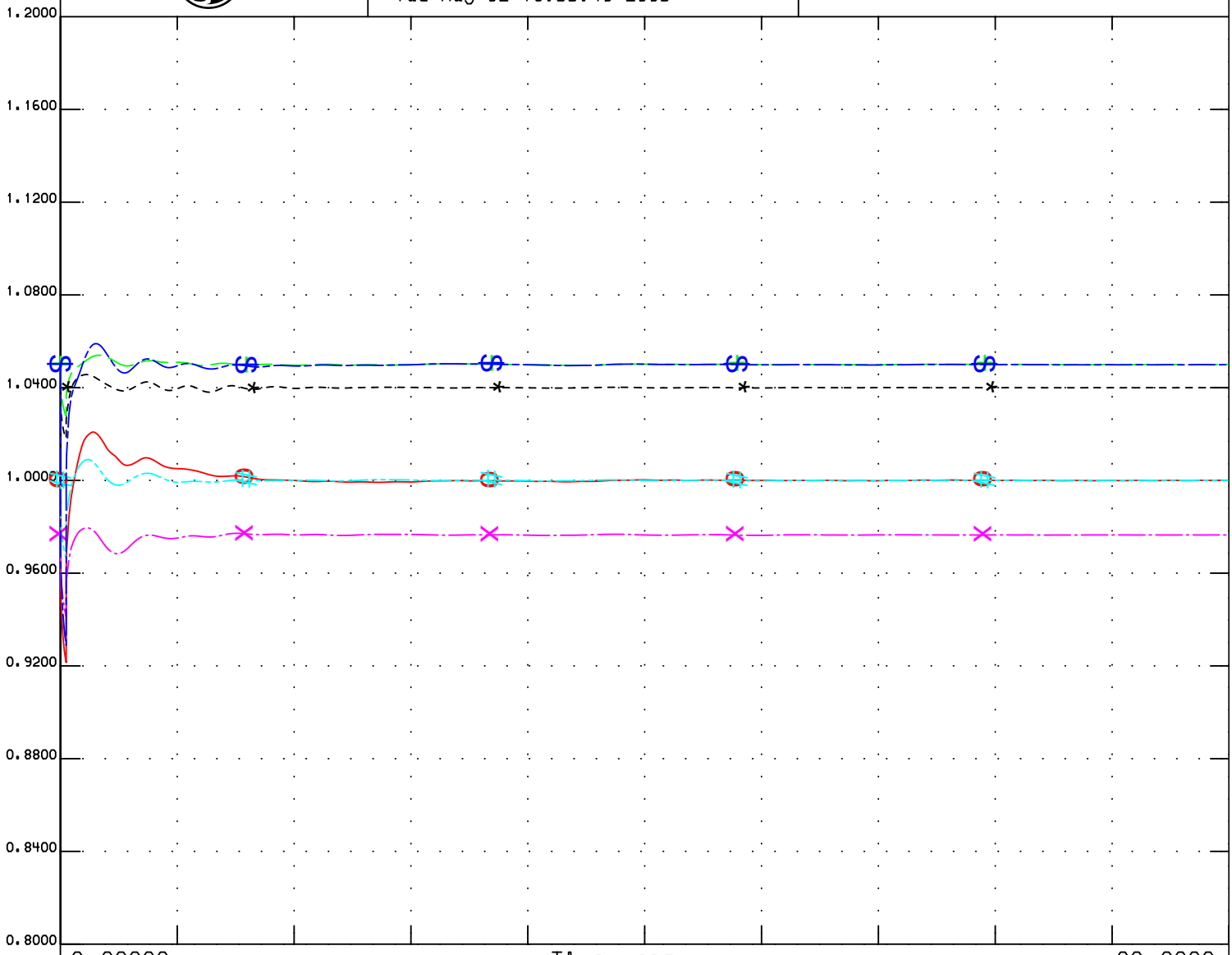

0.8000		O	vt	31911	13.8	TMP CT1	1	1	n	1.2000
0.8000		+	vt	32450	13.8	COLGATE1	1	1	n	1.2000
0.8000		*	vt	33108	18.0	DEC CTG1	1	1	n	1.2000
0.8000		#	vt	37521	18.0	SUTTER1	1	1	n	1.2000
0.8000		X	vt	37550	13.8	FOLSOM2	2	1	n	1.2000
0.8000		$	vt	37575	13.8	SHASTA1	1	1	n	1.2000

PG&E 2004 BASE CASE SERIES - 2010 North Valley Summer Peak Case
PATH15=-1127 MW(S-N) PATH26=3313 MW(N-S) PDCI=3105 MW(N-S) COI=4710 MW(N-S)
CPV Colusa - 2010 Summer Peak - after

Trip Logan Creek Substation

original case 3/26/2004 by SATS 2009 system summer peak
updated loads to 2010 system summer peak
added 2010 North Valley 1-in-10 loads and generation dispatch
Morro Bay 4 is the swing bus
Proposed new generation in queue added
CPV Colusa 97 MW looped onto:
Cottonwood - Cortina 230 kV Line (#1)
Cottonwood - Vaca Dixon 230 kV Line (#2)
Logan Creek - Vaca Dixon 230 kV Line (#3)
Glenn - Vaca Dixon 230 kV Line (#4)

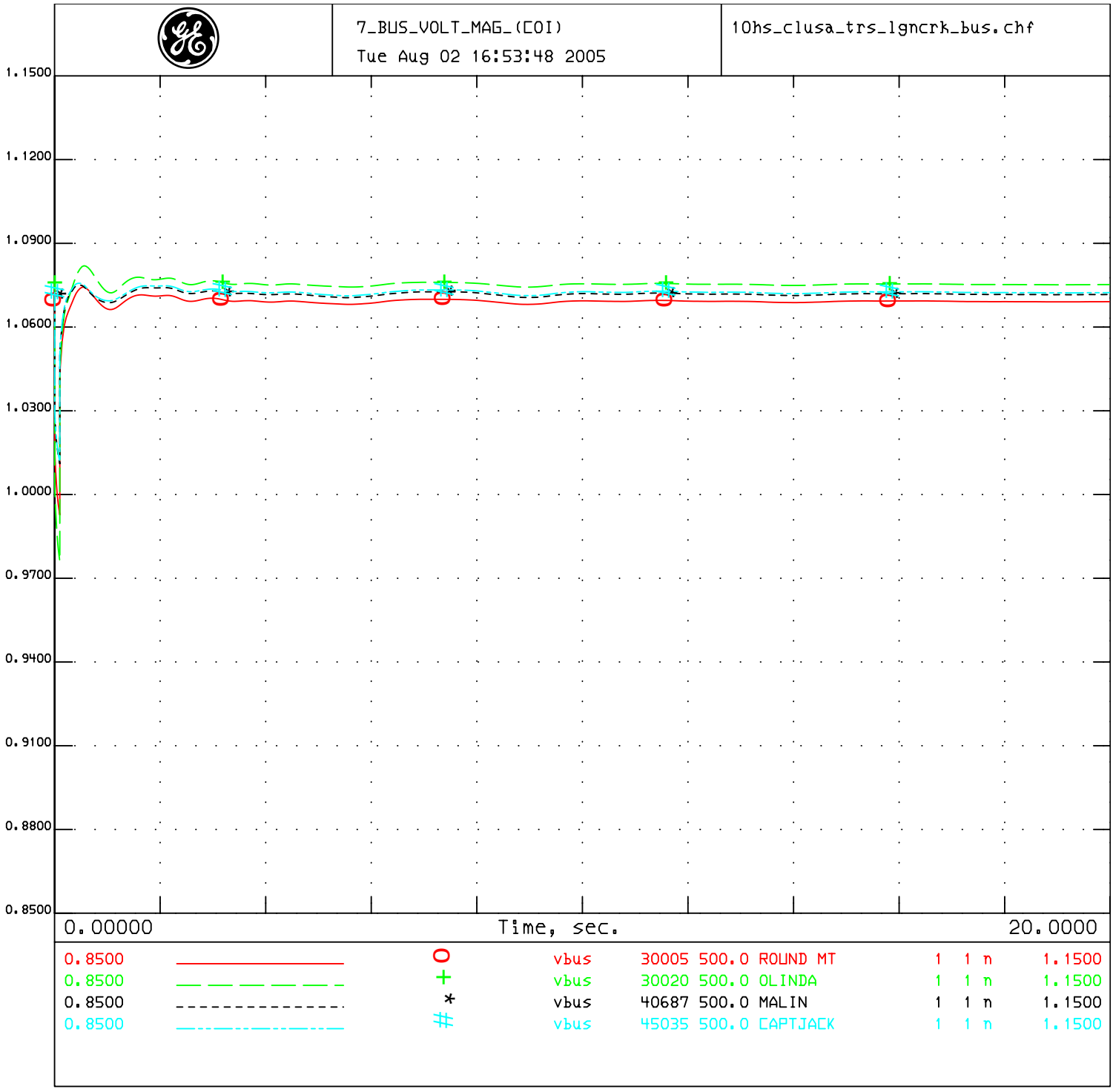

PG&E 2004 BASE CASE SERIES - 2010 North Valley Summer Peak Case
PATH15=-1127 MW(S-N) PATH26=3313 MW(N-S) PDCI=3105 MW(N-S) COI=4710 MW(N-S)
CPV Colusa - 2010 Summer Peak - after

Trip Logan Creek Substation

original case 3/26/2004 by SATS 2009 system summer peak
updated loads to 2010 system summer peak
added 2010 North Valley 1-in-10 loads and generation dispatch
Morro Bay 4 is the swing bus
Proposed new generation in queue added
CPV Colusa 97 MW looped onto:
Cottonwood - Cortina 230 kV Line (#1)
Cottonwood - Vaca Dixon 230 kV Line (#2)
Logan Creek - Vaca Dixon 230 kV Line (#3)
Glenn - Vaca Dixon 230 kV Line (#4)

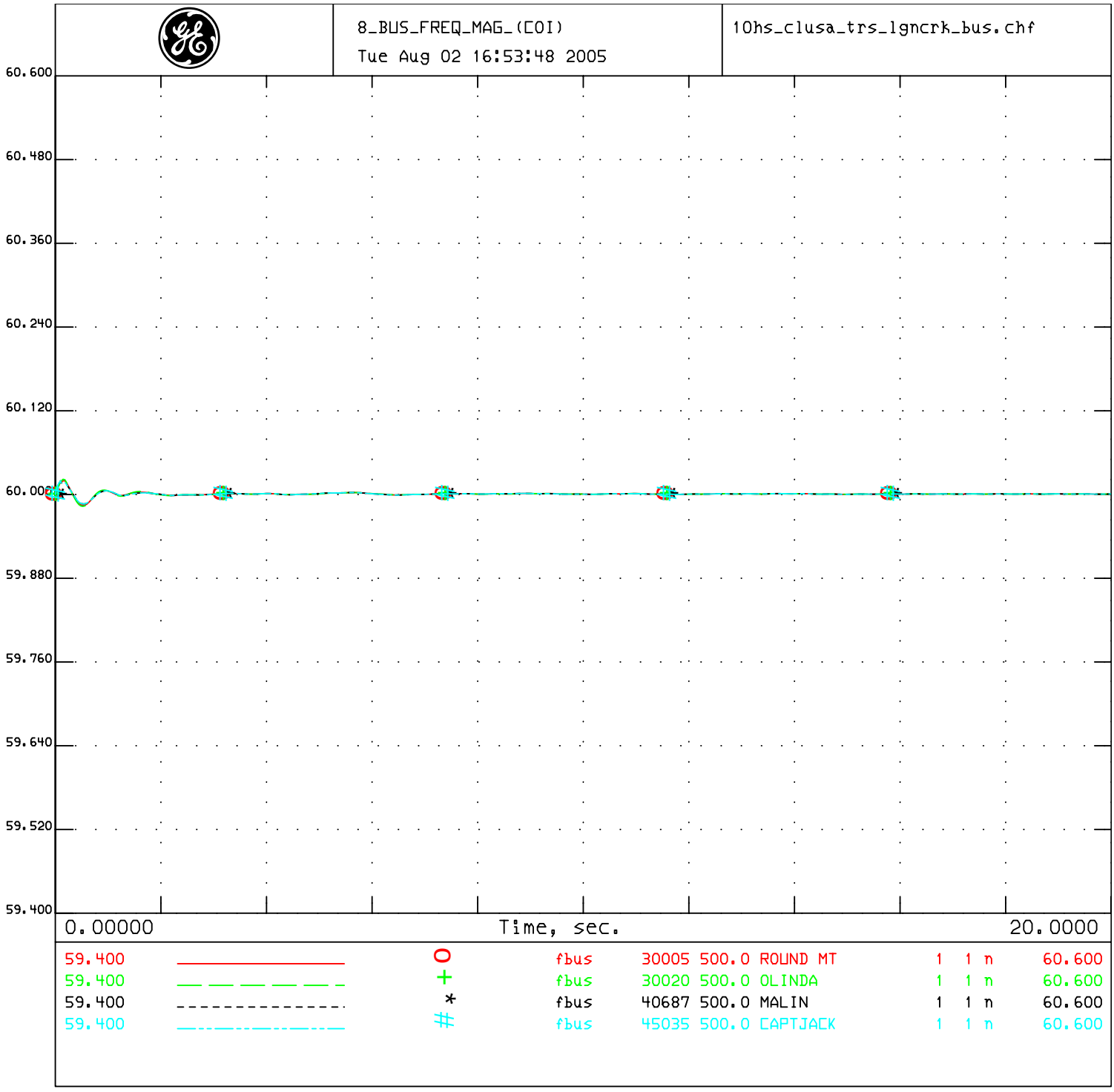

PG&E 2004 BASE CASE SERIES - 2010 North Valley Summer Peak Case
PATH15=-1127 MW(S-N) PATH26=3313 MW(N-S) PDCI=3105 MW(N-S) COI=4710 MW(N-S)
CPV Colusa - 2010 Summer Peak - after

Trip Logan Creek Substation

original case 3/26/2004 by SATS 2009 system summer peak
updated loads to 2010 system summer peak
added 2010 North Valley 1-in-10 loads and generation dispatch
Morro Bay 4 is the swing bus
Proposed new generation in queue added
CPV Colusa 97 MW looped onto:
Cottonwood - Cortina 230 kV Line (#1)
Cottonwood - Vaca Dixon 230 kV Line (#2)
Logan Creek - Vaca Dixon 230 kV Line (#3)
Glenn - Vaca Dixon 230 kV Line (#4)

1_COLUSA_vt_ang
Tue Aug 02 17:11:20 2005

10hs_clusa_trs_crtna_bus.chf

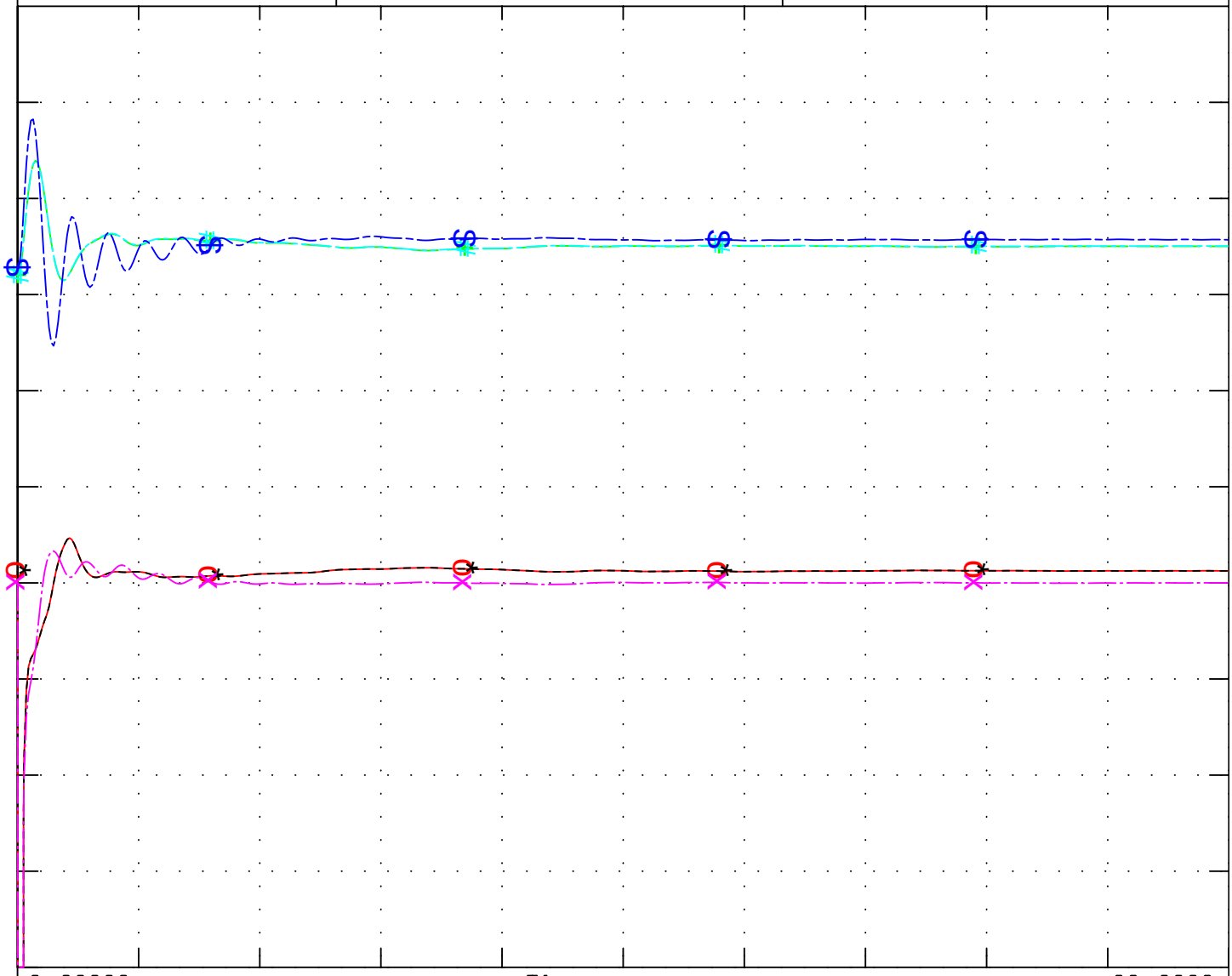

0.00000 Time, sec. 20.0000

0.8000		O	vt	31923	18.0	P0506GT1	1	1	1.2000
0.0000		+	ang	31923	18.0	P0506GT1	1	1	100.00
0.8000		*	vt	31924	18.0	P0506GT2	2	1	1.2000
0.0000		#	ang	31924	18.0	P0506GT2	2	1	100.00
0.8000		X	vt	31925	18.0	P0506ST1	3	1	1.2000
0.0000		⊕	ang	31925	18.0	P0506ST1	3	1	100.00

PG&E 2004 BASE CASE SERIES - 2010 North Valley Summer Peak Case
PATH15=-1127 MW(S-N) PATH26=3313 MW(N-S) PDCI=3105 MW(N-S) COI=4710 MW(N-S)
CPV Colusa - 2010 Summer Peak - after

Trip Cortina Substation

original case 3/26/2004 by SATS 2009 system summer peak
updated loads to 2010 system summer peak
added 2010 North Valley 1-in-10 loads and generation dispatch
Morro Bay 4 is the swing bus
Proposed new generation in queue added
CPV Colusa 97 MW looped onto:
Cottonwood - Cortina 230 kV Line (#1)
Cottonwood - Vaca Dixon 230 kV Line (#2)
Logan Creek - Vaca Dixon 230 kV Line (#3)
Glenn - Vaca Dixon 230 kV Line (#4)

2_COLUSA_spd_pg
Tue Aug 02 17:11:21 2005

10hs_clusa_trs_crtna_bus.chf

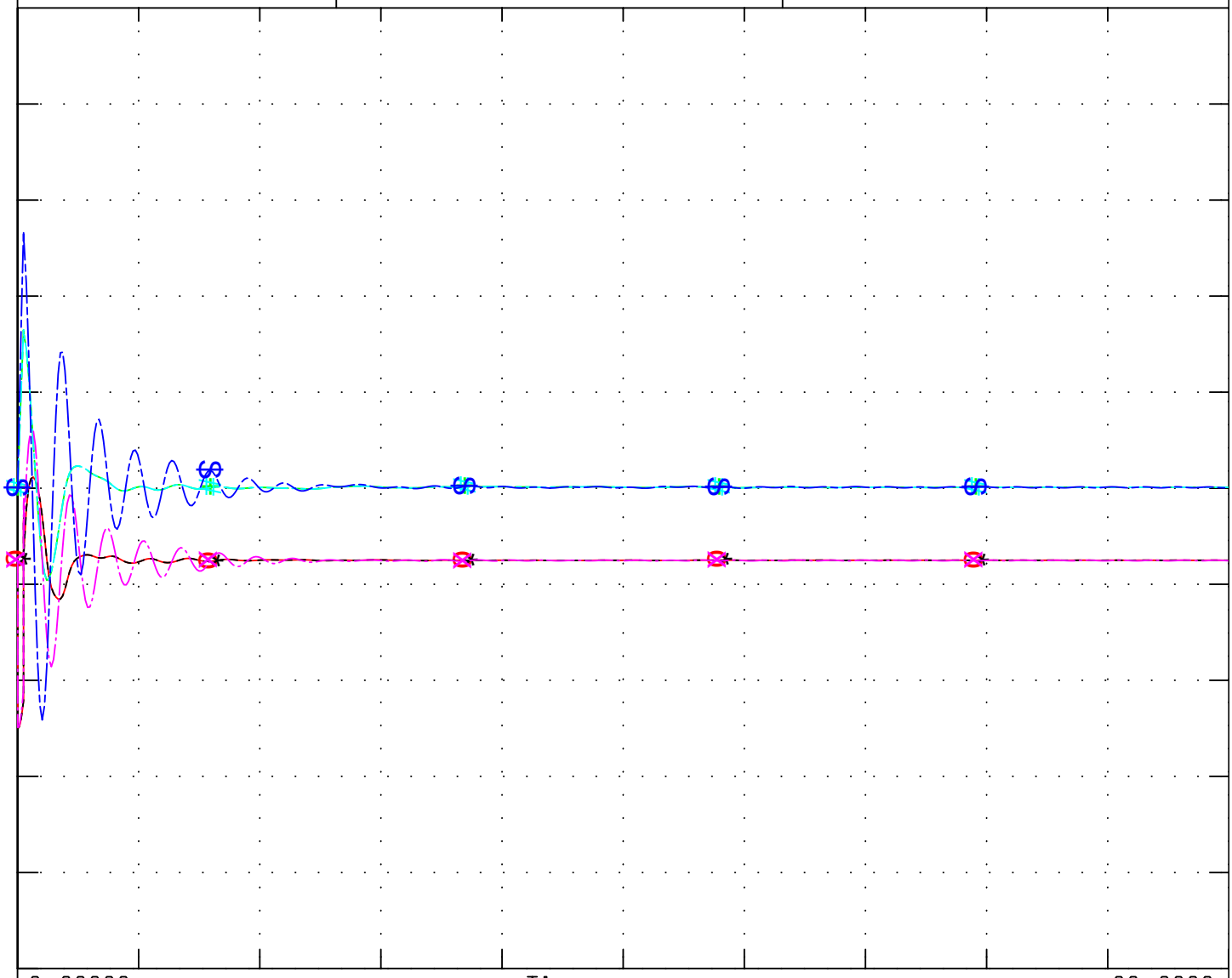

0.0000	————	O	pg	31923	18.0	P0506GT1	1	1	n	468.00
0.9900	— — — — — —	+	spd	31923	18.0	P0506GT1	1	1	n	1.0100
0.0000	- - - - - - - - - - - - -	*	pg	31924	18.0	P0506GT2	2	1	n	468.00
0.9900	—-—-—-—-—-—	#	spd	31924	18.0	P0506GT2	2	1	n	1.0100
0.0000	—.—.—.—.—.	X	pg	31925	18.0	P0506ST1	3	1	n	746.00
0.9900	—-—-—-—-—	$	spd	31925	18.0	P0506ST1	3	1	n	1.0100

PG&E 2004 BASE CASE SERIES - 2010 North Valley Summer Peak Case
PATH15=-1127 MW(S-N) PATH26=3313 MW(N-S) PDCI=3105 MW(N-S) COI=4710 MW(N-S)
CPV Colusa - 2010 Summer Peak - after

Trip Cortina Substation

original case 3/26/2004 by SATS 2009 system summer peak
updated loads to 2010 system summer peak
added 2010 North Valley 1-in-10 loads and generation dispatch
Morro Bay 4 is the swing bus
Proposed new generation in queue added
CPV Colusa 97 MW looped onto:
Cottonwood - Cortina 230 kV Line (#1)
Cottonwood - Vaca Dixon 230 kV Line (#2)
Logan Creek - Vaca Dixon 230 kV Line (#3)
Glenn - Vaca Dixon 230 kV Line (#4)

3_BUS_VOLT_MAG_230:
Tue Aug 02 17:11:21 2005

10hs_clusa_trs_crtna_bus.chf

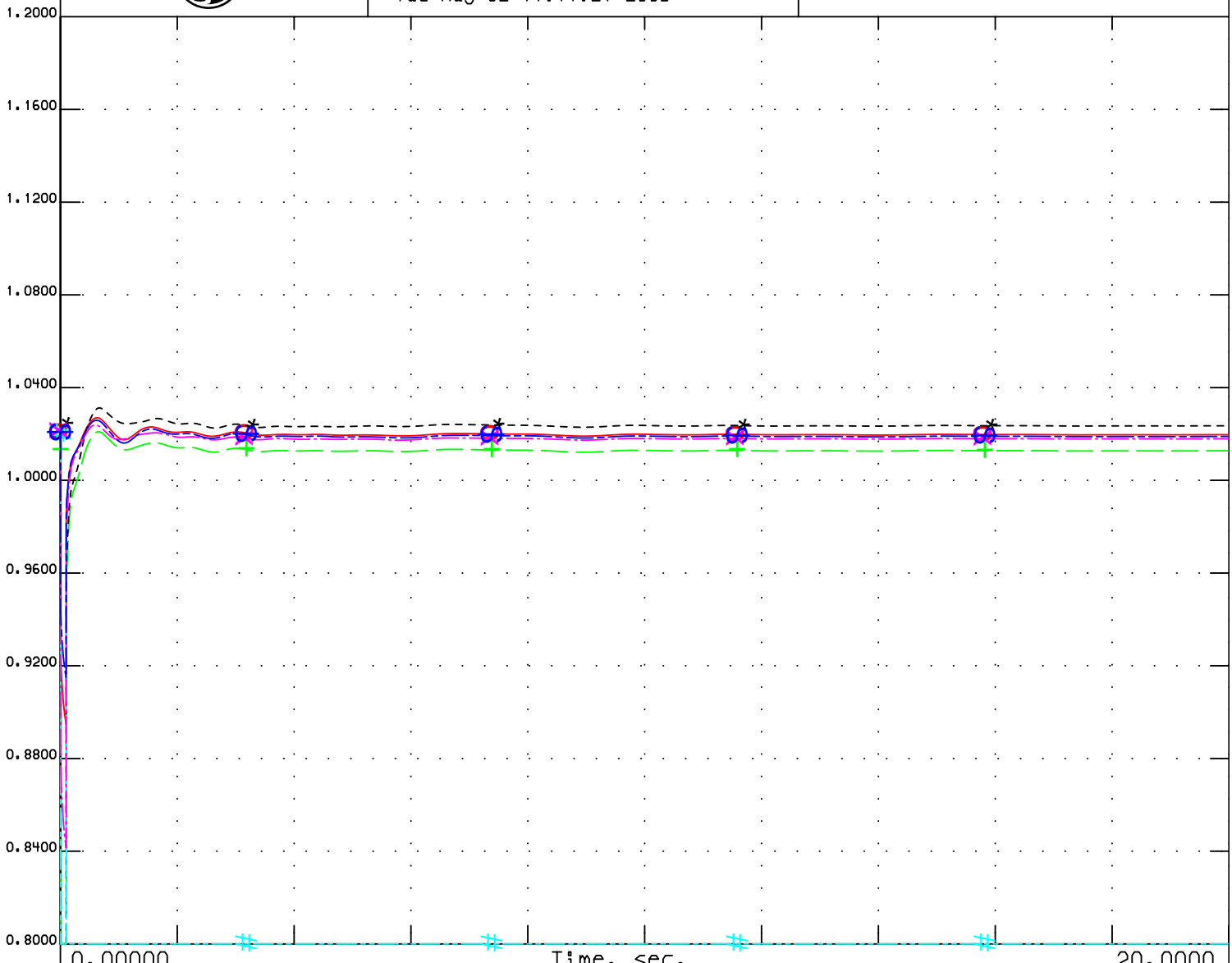

0.8000	————	O	vbus	30106	230.0	COTWD_F	1	1	n	1.2000
0.8000	— — — — — —	+	vbus	30110	230.0	GLENN	1	1	n	1.2000
0.8000	- - - - - - - - - - - - - -	*	vbul	30111	230.0	LOGAN CR	1	1	n	1.2000
0.8000	—-—-—-—-—-—	#	vbus	30450	230.0	CORTINA	1	1	n	1.2000
0.8000	—.—.—.—.—.—	X	vbus	30460	230.0	VACA-DIX	1	1	n	1.2000
0.8000	—-—-—-—-—-—	⊗	vbus	37565	230.0	OLINDAW	1	1	n	1.2000

PG&E 2004 BASE CASE SERIES - 2010 North Valley Summer Peak Case
PATH15=-1127 MW(S-N) PATH26=3313 MW(N-S) PDCI=3105 MW(N-S) COI=4710 MW(N-S)
CPV Colusa - 2010 Summer Peak - after

Trip Cortina Substation

original case 3/26/2004 by SATS 2009 system summer peak
updated loads to 2010 system summer peak
added 2010 North Valley 1-in-10 loads and generation dispatch
Morro Bay 4 is the swing bus
Proposed new generation in queue added
CPV Colusa 97 MW looped onto:
Cottonwood - Cortina 230 kV Line (#1)
Cottonwood - Vaca Dixon 230 kV Line (#2)
Logan Creek - Vaca Dixon 230 kV Line (#3)
Glenn - Vaca Dixon 230 kV Line (#4)

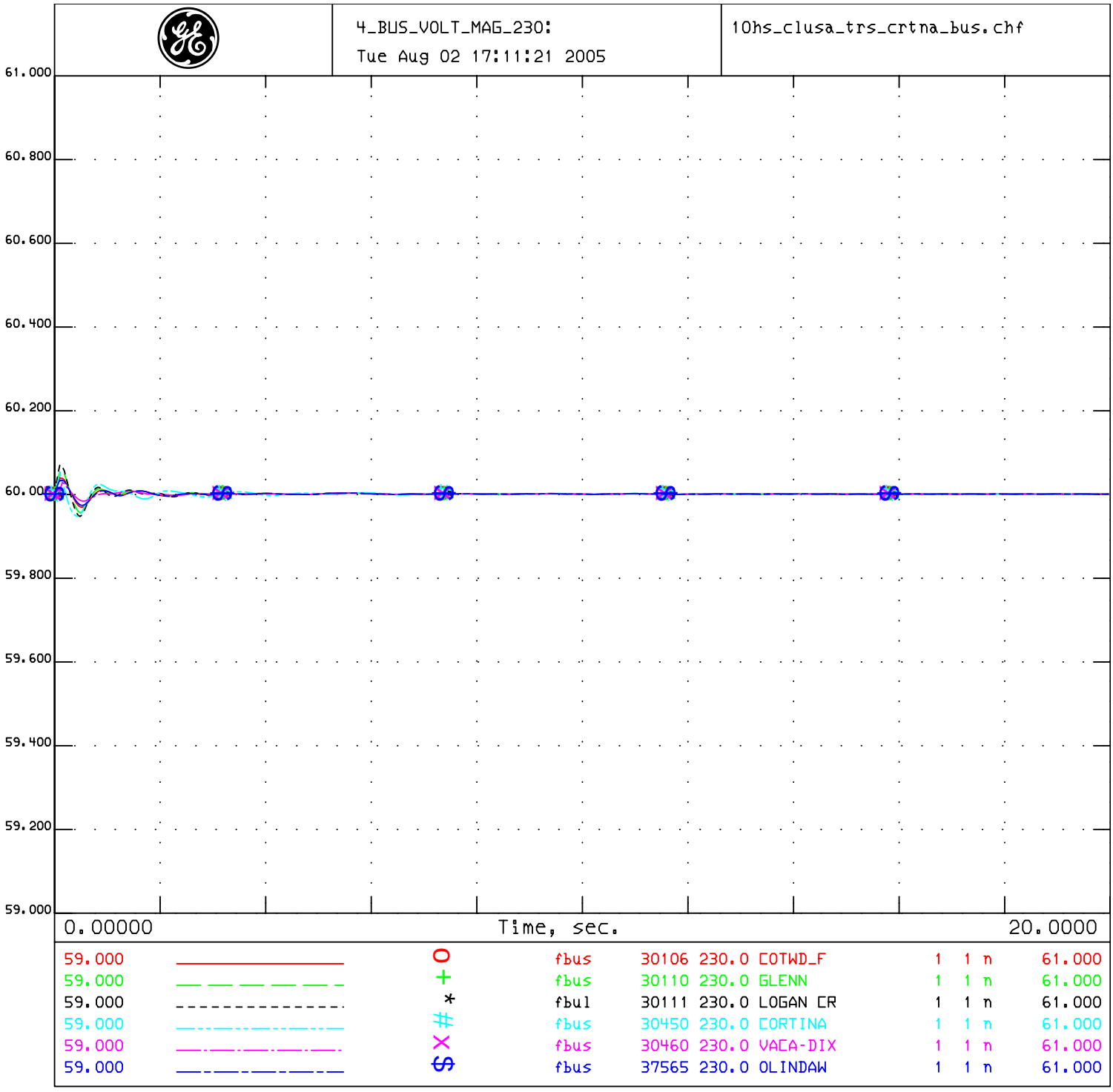

PG&E 2004 BASE CASE SERIES - 2010 North Valley Summer Peak Case
PATH15=-1127 MW(S-N) PATH26=3313 MW(N-S) PDCI=3105 MW(N-S) COI=4710 MW(N-S)
CPV Colusa - 2010 Summer Peak - after

Trip Cortina Substation

original case 3/26/2004 by SATS 2009 system summer peak
updated loads to 2010 system summer peak
added 2010 North Valley 1-in-10 loads and generation dispatch
Morro Bay 4 is the swing bus
Proposed new generation in queue added
CPV Colusa 97 MW looped onto:
Cottonwood - Cortina 230 kV Line (#1)
Cottonwood - Vaca Dixon 230 kV Line (#2)
Logan Creek - Vaca Dixon 230 kV Line (#3)
Glenn - Vaca Dixon 230 kV Line (#4)

5_LOCAL_GEN_ang:
Tue Aug 02 17:11:21 2005

10hs_clusa_trs_crtna_bus.chf

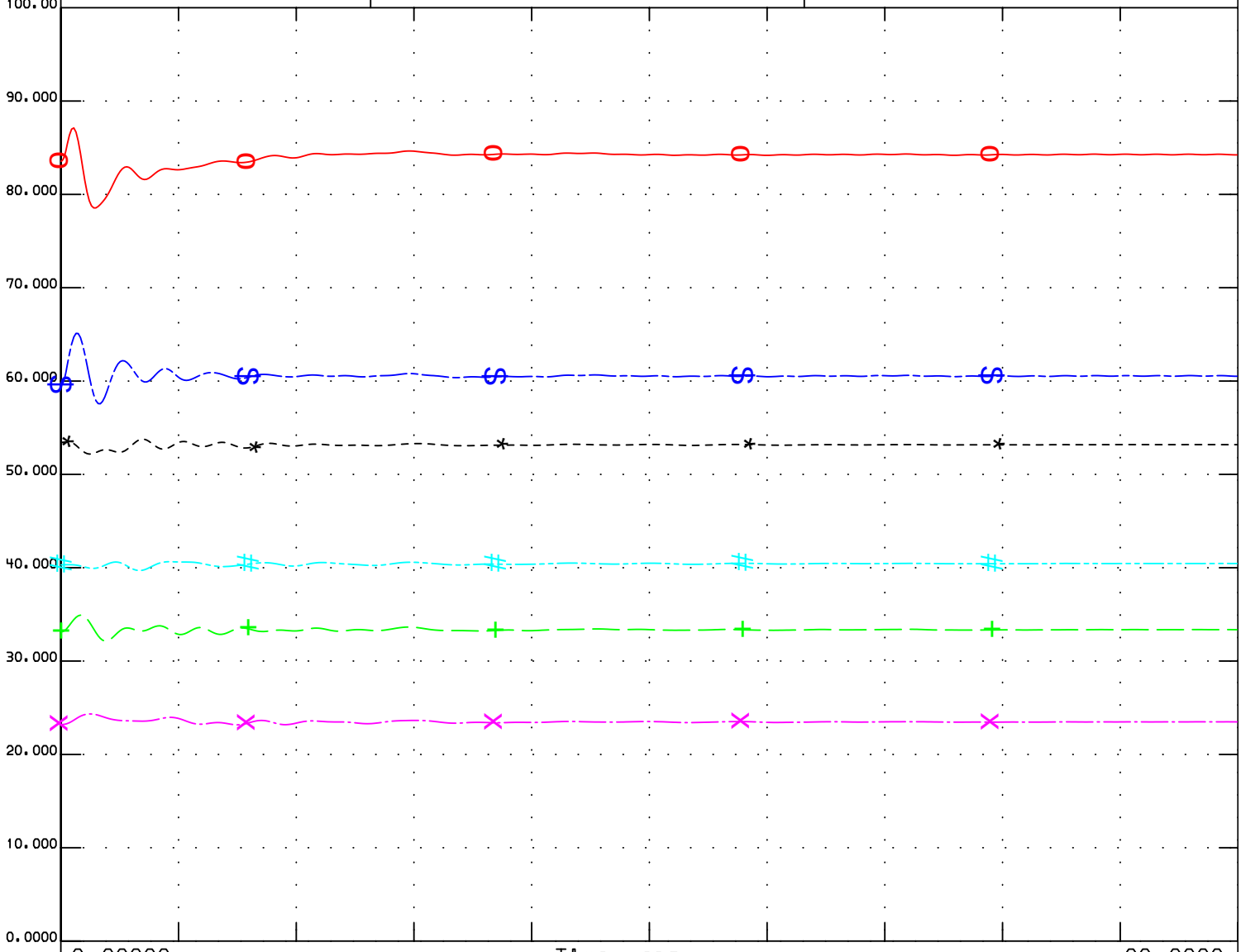

0.0000		O	ang	31911	13.8	TMP CT1	1	1	n	100.00
0.0000		+	ang	32450	13.8	COLGATE1	1	1	n	100.00
0.0000		*	ang	33108	18.0	DEC CTG1	1	1	n	100.00
0.0000		#	ang	37521	18.0	SUTTER1	1	1	n	100.00
0.0000		X	ang	37550	13.8	FOLSOM2	2	1	n	100.00
0.0000		S	ang	37575	13.8	SHASTA1	1	1	n	100.00

PG&E 2004 BASE CASE SERIES - 2010 North Valley Summer Peak Case
PATH15=-1127 MW(S-N) PATH26=3313 MW(N-S) PDCI=3105 MW(N-S) COI=4710 MW(N-S)
CPV Colusa - 2010 Summer Peak - after

Trip Cortina Substation

original case 3/26/2004 by SATS 2009 system summer peak
updated loads to 2010 system summer peak
added 2010 North Valley 1-in-10 loads and generation dispatch
Morro Bay 4 is the swing bus
Proposed new generation in queue added
CPV Colusa 97 MW looped onto:
Cottonwood - Cortina 230 kV Line (#1)
Cottonwood - Vaca Dixon 230 kV Line (#2)
Logan Creek - Vaca Dixon 230 kV Line (#3)
Glenn - Vaca Dixon 230 kV Line (#4)

6_LOCAL_GEN_vt:
Tue Aug 02 17:11:21 2005

10hs_clusa_trs_crtna_bus.chf

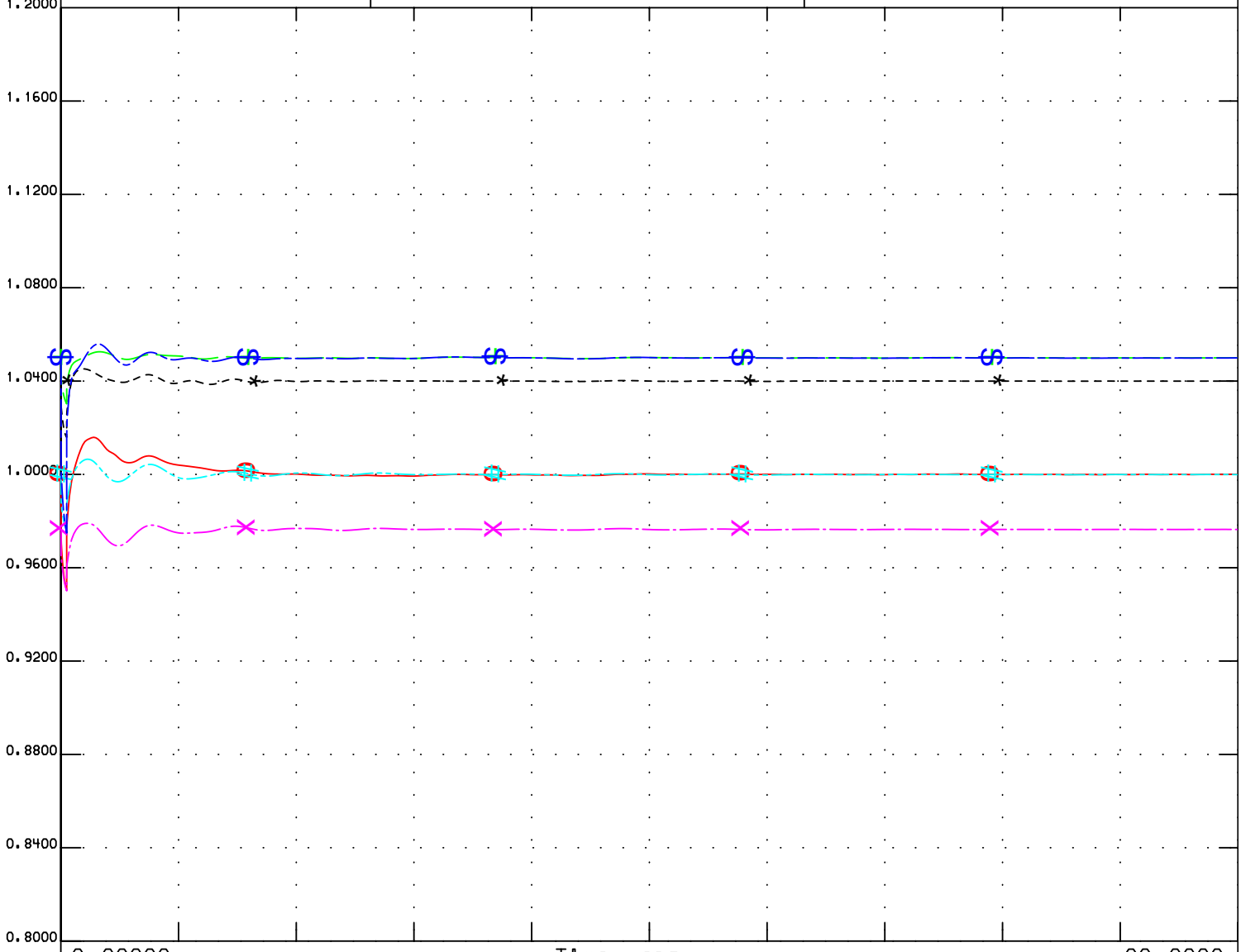

0.8000		O	vt	31911	13.8	TMP CT1	1	1	n	1.2000
0.8000		+	vt	32450	13.8	COLGATE1	1	1	n	1.2000
0.8000		*	vt	33108	18.0	DEC CTG1	1	1	n	1.2000
0.8000		#	vt	37521	18.0	SUTTER1	1	1	n	1.2000
0.8000		X	vt	37550	13.8	FOLSOM2	2	1	n	1.2000
0.8000		S	vt	37575	13.8	SHASTA1	1	1	n	1.2000

PG&E 2004 BASE CASE SERIES - 2010 North Valley Summer Peak Case
PATH15=-1127 MW(S-N) PATH26=3313 MW(N-S) PDCI=3105 MW(N-S) COI=4710 MW(N-S)
CPV Colusa - 2010 Summer Peak - after

Trip Cortina Substation

original case 3/26/2004 by SATS 2009 system summer peak
updated loads to 2010 system summer peak
added 2010 North Valley 1-in-10 loads and generation dispatch
Morro Bay 4 is the swing bus
Proposed new generation in queue added
CPV Colusa 97 MW looped onto:
Cottonwood - Cortina 230 kV Line (#1)
Cottonwood - Vaca Dixon 230 kV Line (#2)
Logan Creek - Vaca Dixon 230 kV Line (#3)
Glenn - Vaca Dixon 230 kV Line (#4)

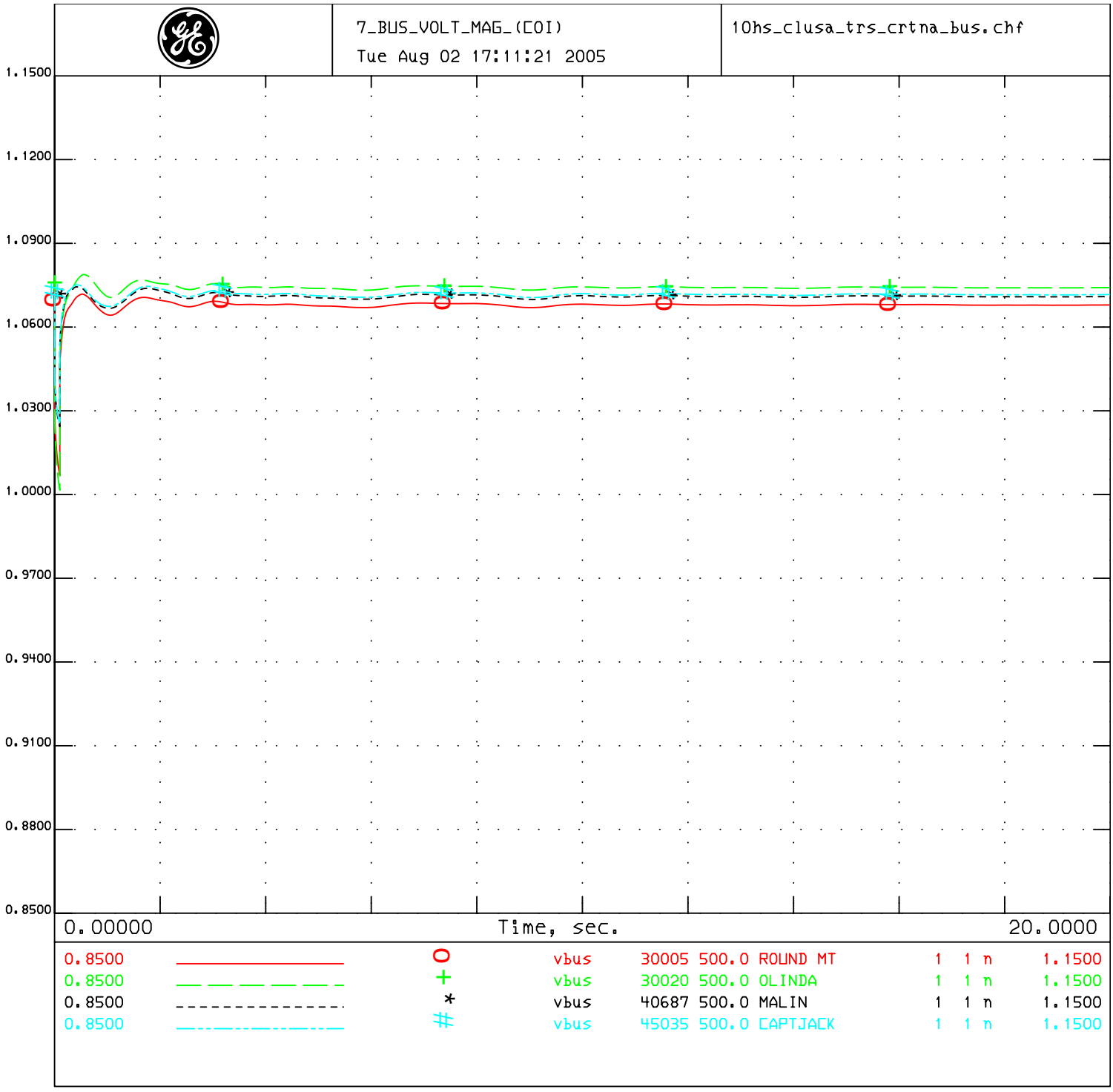

PG&E 2004 BASE CASE SERIES - 2010 North Valley Summer Peak Case
PATH15=-1127 MW(S-N) PATH26=3313 MW(N-S) PDCI=3105 MW(N-S) COI=4710 MW(N-S)
CPV Colusa - 2010 Summer Peak - after

Trip Cortina Substation

original case 3/26/2004 by SATS 2009 system summer peak
updated loads to 2010 system summer peak
added 2010 North Valley 1-in-10 loads and generation dispatch
Morro Bay 4 is the swing bus
Proposed new generation in queue added
CPV Colusa 97 MW looped onto:
Cottonwood - Cortina 230 kV Line (#1)
Cottonwood - Vaca Dixon 230 kV Line (#2)
Logan Creek - Vaca Dixon 230 kV Line (#3)
Glenn - Vaca Dixon 230 kV Line (#4)

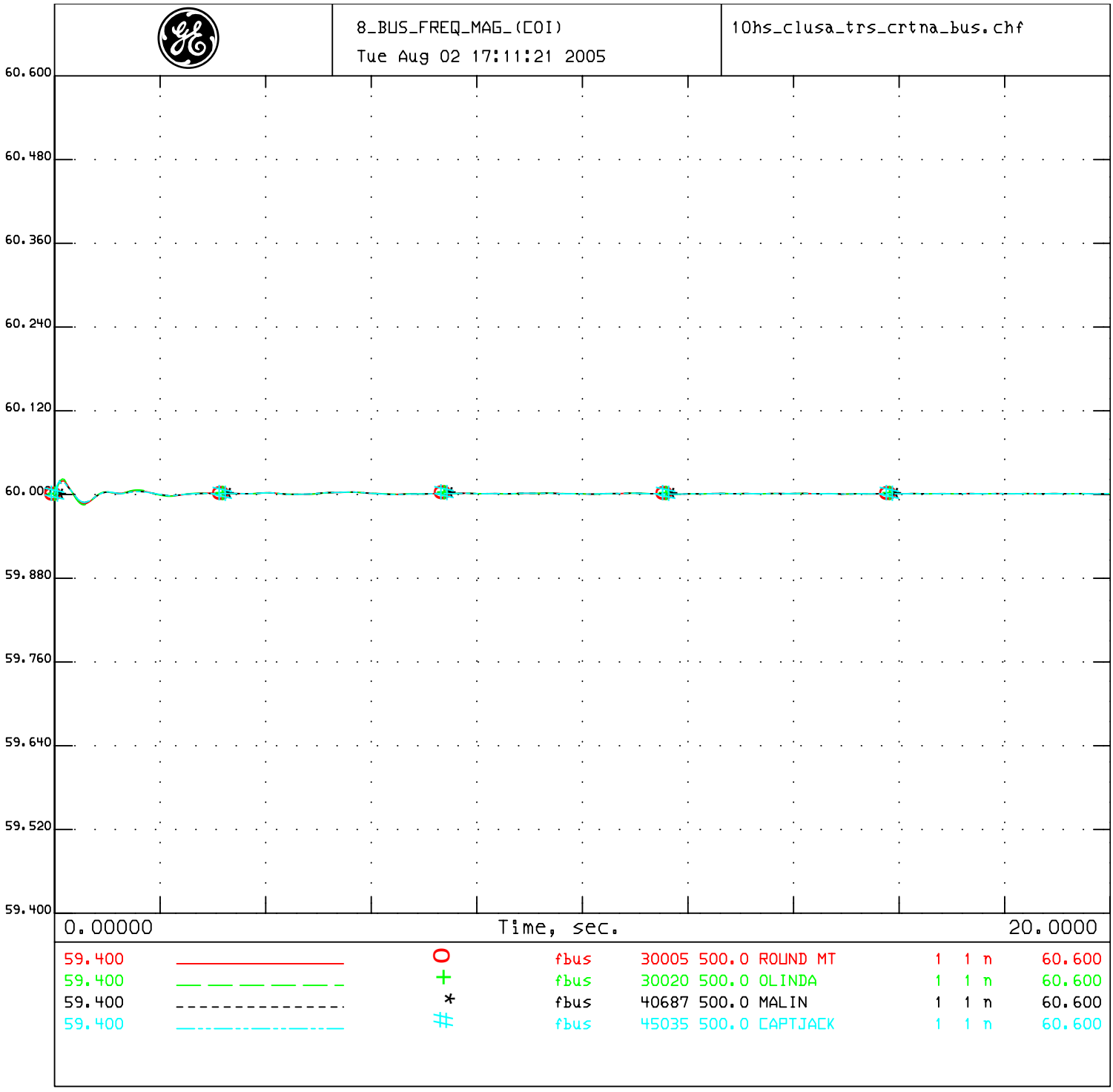

PG&E 2004 BASE CASE SERIES - 2010 North Valley Summer Peak Case
PATH15=-1127 MW(S-N) PATH26=3313 MW(N-S) PDCI=3105 MW(N-S) COI=4710 MW(N-S)
CPV Colusa - 2010 Summer Peak - after

Trip Cortina Substation

original case 3/26/2004 by SATS 2009 system summer peak
updated loads to 2010 system summer peak
added 2010 North Valley 1-in-10 loads and generation dispatch
Morro Bay 4 is the swing bus
Proposed new generation in queue added
CPV Colusa 97 MW looped onto:
Cottonwood - Cortina 230 kV Line (#1)
Cottonwood - Vaca Dixon 230 kV Line (#2)
Logan Creek - Vaca Dixon 230 kV Line (#3)
Glenn - Vaca Dixon 230 kV Line (#4)

1_COLUSA_vt_ang
Tue Aug 02 17:00:20 2005

10hs_clusa_trs_glenn2_bus.chf

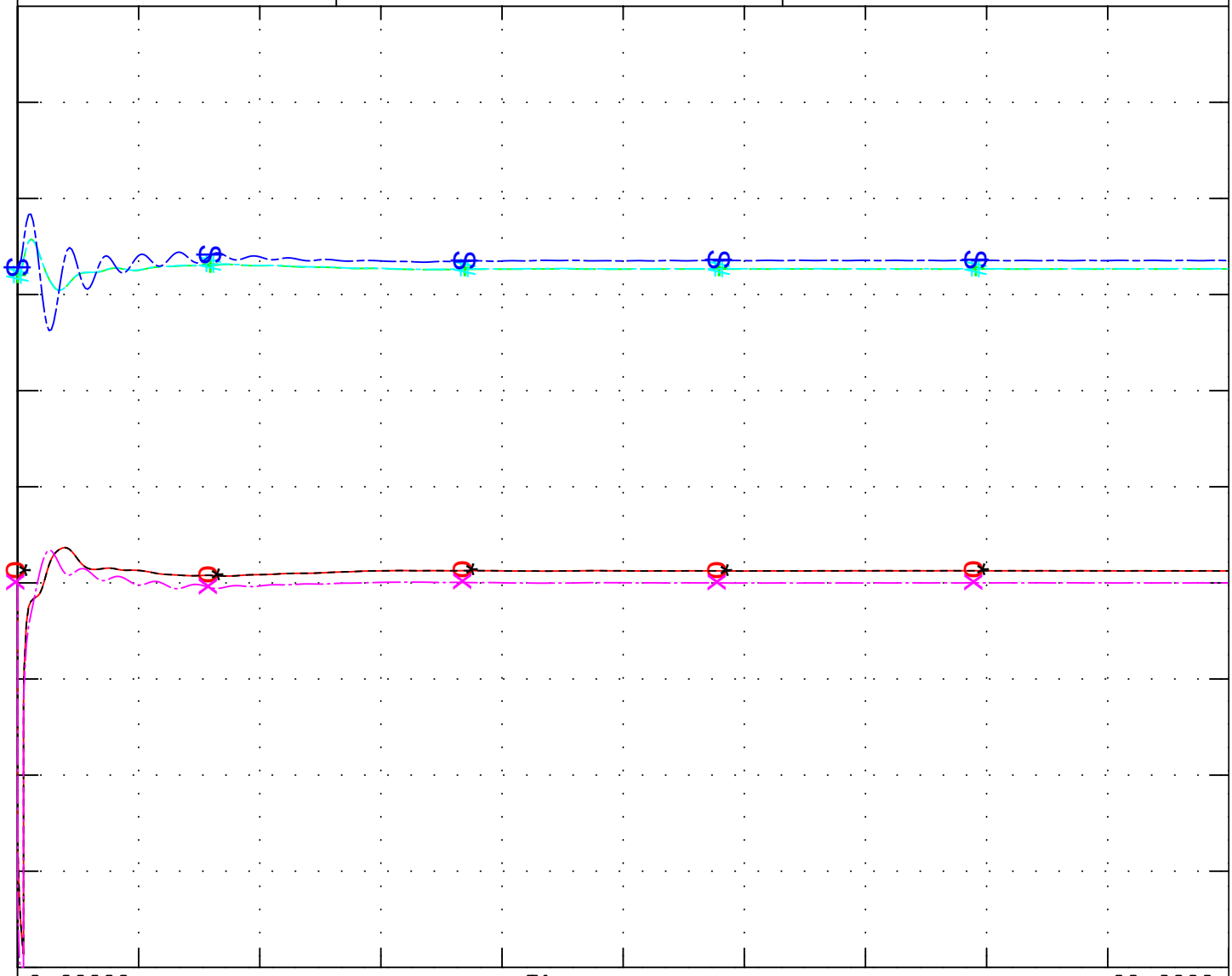

0.00000 Time, sec. 20.0000

0.8000		O	vt	31923	18.0	P0506GT1	1	1	1.2000
0.0000		+	ang	31923	18.0	P0506GT1	1	1	100.00
0.8000		*	vt	31924	18.0	P0506GT2	2	1	1.2000
0.0000		#	ang	31924	18.0	P0506GT2	2	1	100.00
0.8000		X	vt	31925	18.0	P0506ST1	3	1	1.2000
0.0000		⊗	ang	31925	18.0	P0506ST1	3	1	100.00

PG&E 2004 BASE CASE SERIES - 2010 North Valley Summer Peak Case
PATH15=-1127 MW(S-N) PATH26=3313 MW(N-S) PDCI=3105 MW(N-S) COI=4710 MW(N-S)
CPV Colusa - 2010 Summer Peak - after

Trip Glenn Substation

original case 3/26/2004 by SATS 2009 system summer peak
updated loads to 2010 system summer peak
added 2010 North Valley 1-in-10 loads and generation dispatch
Morro Bay 4 is the swing bus
Proposed new generation in queue added
CPV Colusa 97 MW looped onto:
Cottonwood - Cortina 230 kV Line (#1)
Cottonwood - Vaca Dixon 230 kV Line (#2)
Logan Creek - Vaca Dixon 230 kV Line (#3)
Glenn - Vaca Dixon 230 kV Line (#4)

2_COLUSA_spd_pg
Tue Aug 02 17:00:20 2005

10hs_clusa_trs_glenn2_bus.chf

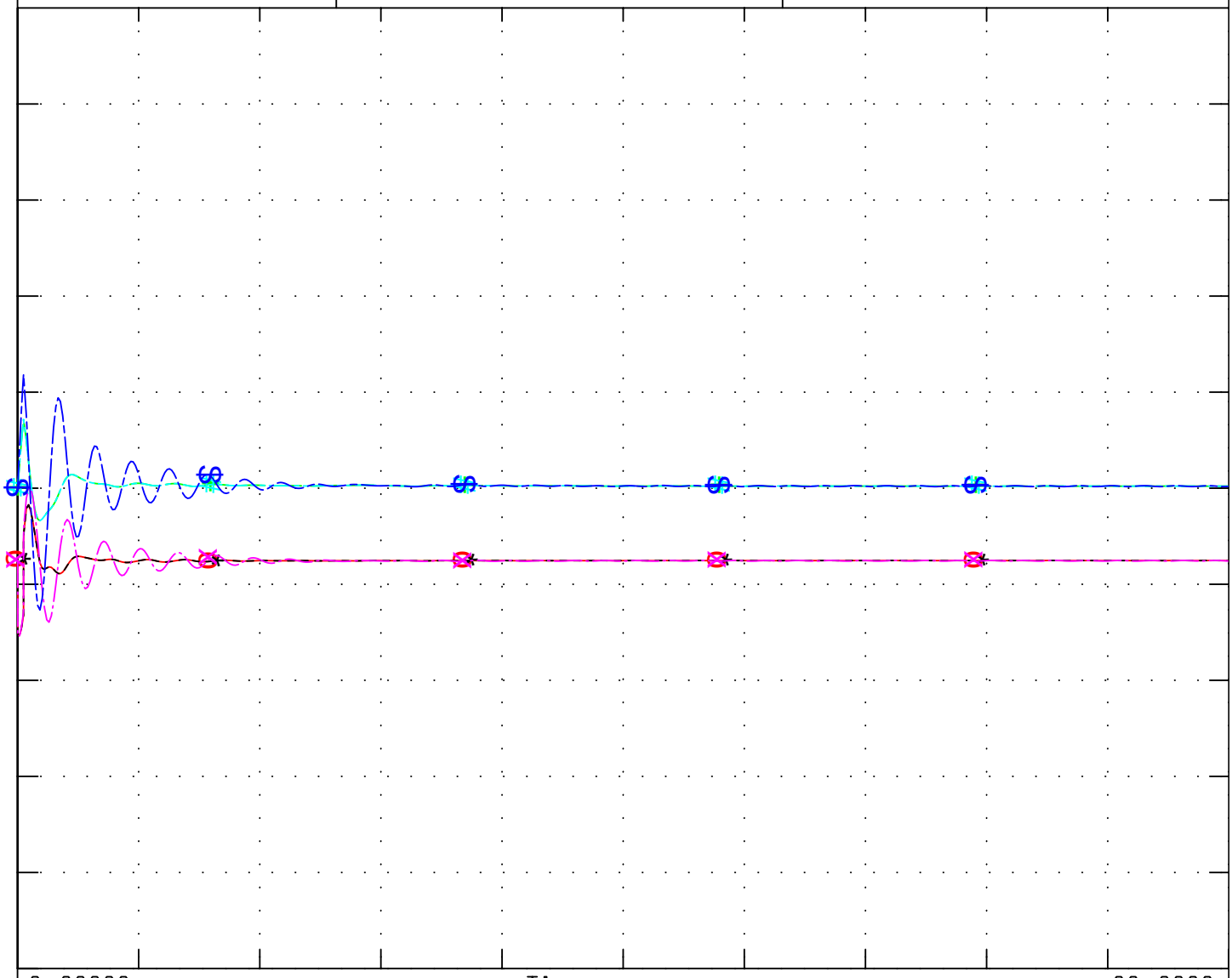

0.00000 Time, sec. 20.0000

0.0000		O	pg	31923	18.0	P0506GT1	1	1	n	468.00
0.9900		+	spd	31923	18.0	P0506GT1	1	1	n	1.0100
0.0000		*	pg	31924	18.0	P0506GT2	2	1	n	468.00
0.9900		#	spd	31924	18.0	P0506GT2	2	1	n	1.0100
0.0000		X	pg	31925	18.0	P0506ST1	3	1	n	746.00
0.9900		$	spd	31925	18.0	P0506ST1	3	1	n	1.0100

PG&E 2004 BASE CASE SERIES - 2010 North Valley Summer Peak Case
PATH15=-1127 MW(S-N) PATH26=3313 MW(N-S) PDCI=3105 MW(N-S) COI=4710 MW(N-S)
CPV Colusa - 2010 Summer Peak - after

Trip Glenn Substation

original case 3/26/2004 by SATS 2009 system summer peak
updated loads to 2010 system summer peak
added 2010 North Valley 1-in-10 loads and generation dispatch
Morro Bay 4 is the swing bus
Proposed new generation in queue added
CPV Colusa 97 MW looped onto:
Cottonwood - Cortina 230 kV Line (#1)
Cottonwood - Vaca Dixon 230 kV Line (#2)
Logan Creek - Vaca Dixon 230 kV Line (#3)
Glenn - Vaca Dixon 230 kV Line (#4)

3_BUS_VOLT_MAG_230:
Tue Aug 02 17:00:20 2005

10hs_clusa_trs_glenn2_bus.chf

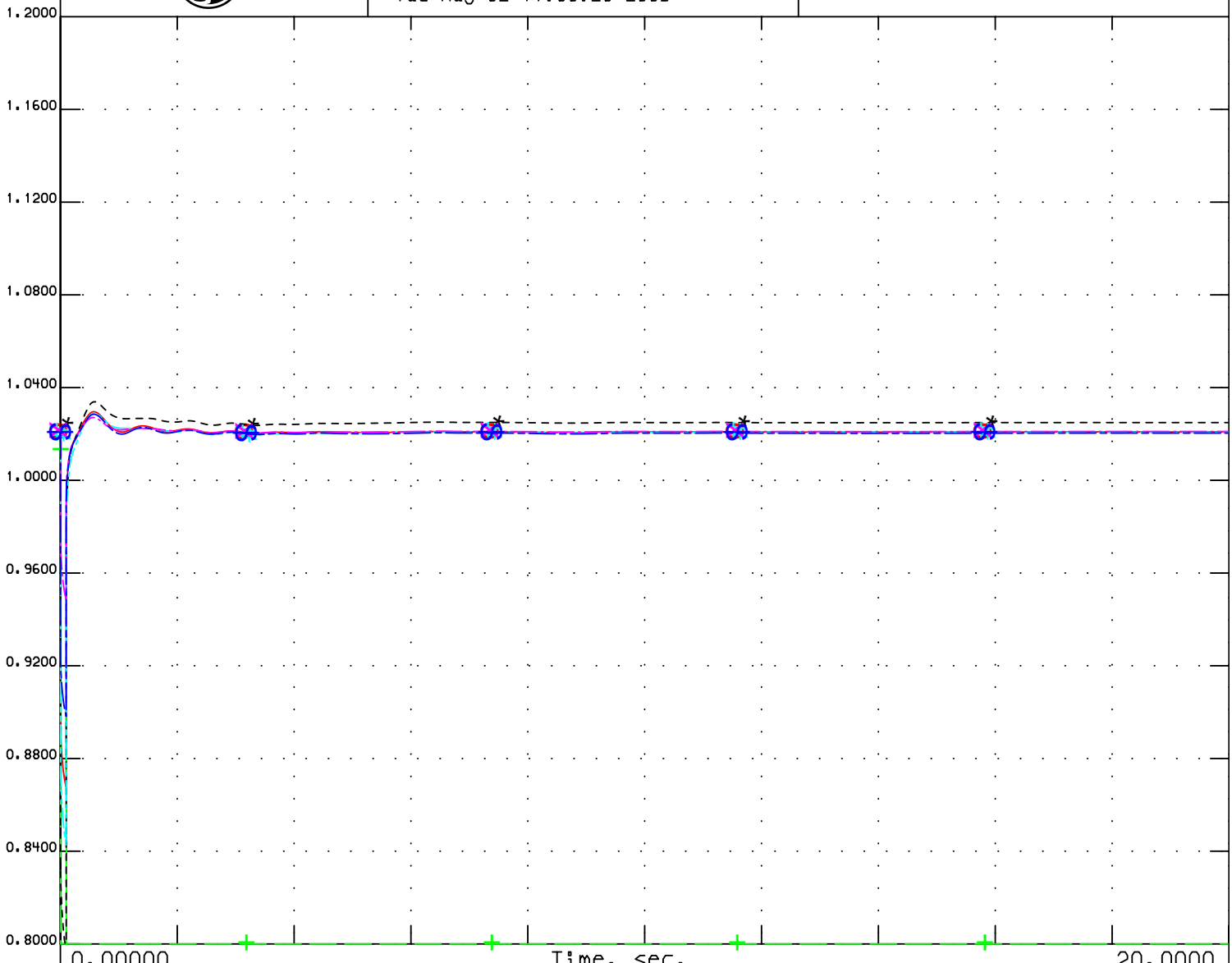

0.8000		O	vbus	30106	230.0	COTWD_F	1	1	n	1.2000
0.8000		+	vbus	30110	230.0	GLENN	1	1	n	1.2000
0.8000		*	vbul	30111	230.0	LOGAN CR	1	1	n	1.2000
0.8000		#	vbus	30450	230.0	CORTINA	1	1	n	1.2000
0.8000		X	vbus	30460	230.0	VACA-DIX	1	1	n	1.2000
0.8000		S	vbus	37565	230.0	OLINDAW	1	1	n	1.2000

PG&E 2004 BASE CASE SERIES - 2010 North Valley Summer Peak Case
PATH15=-1127 MW(S-N) PATH26=3313 MW(N-S) PDCI=3105 MW(N-S) COI=4710 MW(N-S)
CPV Colusa - 2010 Summer Peak - after

Trip Glenn Substation

original case 3/26/2004 by SATS 2009 system summer peak
updated loads to 2010 system summer peak
added 2010 North Valley 1-in-10 loads and generation dispatch
Morro Bay 4 is the swing bus
Proposed new generation in queue added
CPV Colusa 97 MW looped onto:
Cottonwood - Cortina 230 kV Line (#1)
Cottonwood - Vaca Dixon 230 kV Line (#2)
Logan Creek - Vaca Dixon 230 kV Line (#3)
Glenn - Vaca Dixon 230 kV Line (#4)

4_BUS_VOLT_MAG_230:
Tue Aug 02 17:00:20 2005

10hs_clusa_trs_glenn2_bus.chf

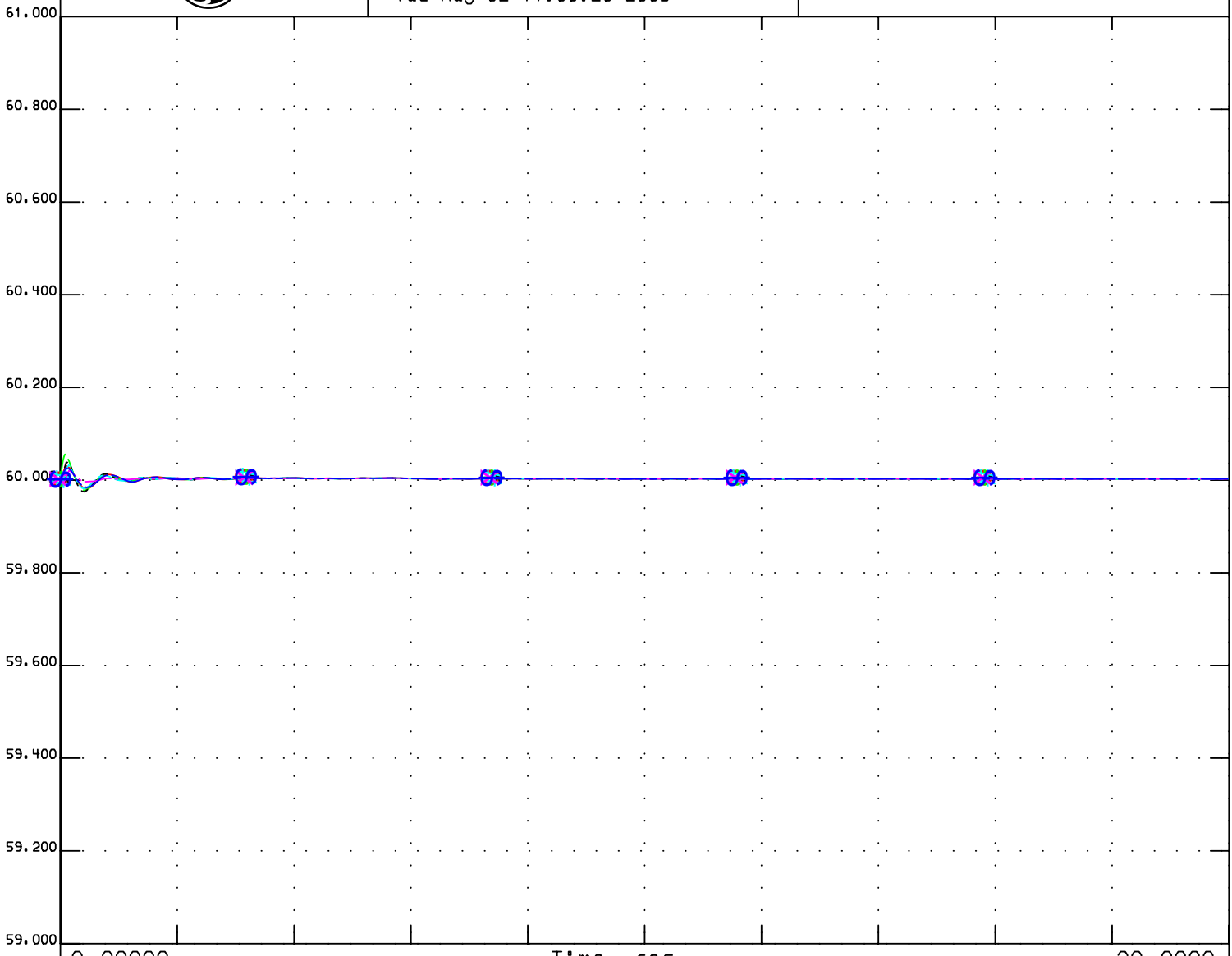

59.000		O	fbus	30106	230.0	COTWD_F	1	1	n	61.000
59.000		+	fbus	30110	230.0	GLENN	1	1	n	61.000
59.000		*	fbul	30111	230.0	LOGAN CR	1	1	n	61.000
59.000		#	fbus	30450	230.0	CORTINA	1	1	n	61.000
59.000		X	fbus	30460	230.0	VACA-DIX	1	1	n	61.000
59.000		$	fbus	37565	230.0	OLINDAW	1	1	n	61.000

PG&E 2004 BASE CASE SERIES - 2010 North Valley Summer Peak Case
PATH15=-1127 MW(S-N) PATH26=3313 MW(N-S) PDCI=3105 MW(N-S) COI=4710 MW(N-S)
CPV Colusa - 2010 Summer Peak - after

Trip Glenn Substation

original case 3/26/2004 by SATS 2009 system summer peak
updated loads to 2010 system summer peak
added 2010 North Valley 1-in-10 loads and generation dispatch
Morro Bay 4 is the swing bus
Proposed new generation in queue added
CPV Colusa 97 MW looped onto:
Cottonwood - Cortina 230 kV Line (#1)
Cottonwood - Vaca Dixon 230 kV Line (#2)
Logan Creek - Vaca Dixon 230 kV Line (#3)
Glenn - Vaca Dixon 230 kV Line (#4)

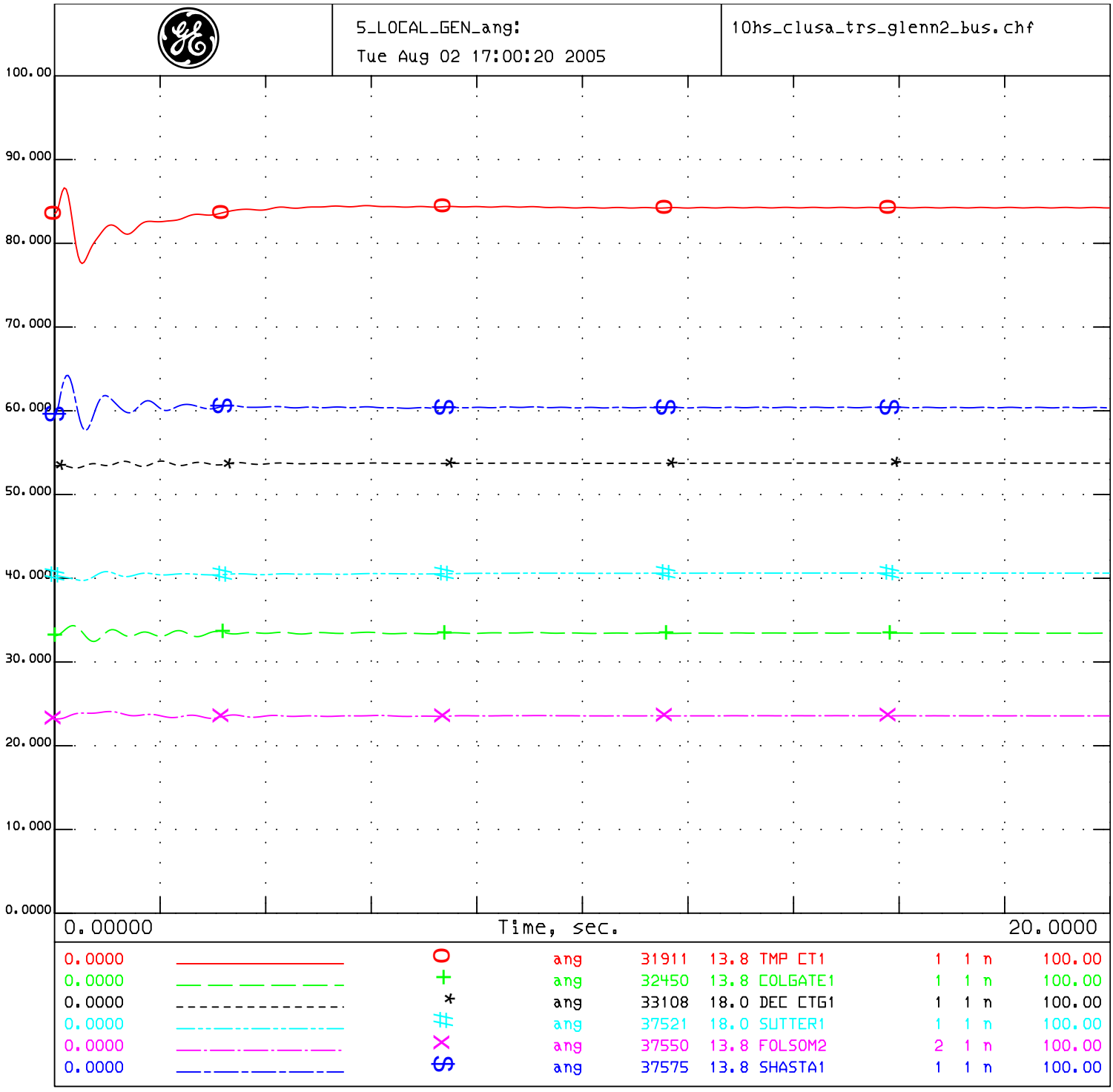

PG&E 2004 BASE CASE SERIES - 2010 North Valley Summer Peak Case
PATH15=-1127 MW(S-N) PATH26=3313 MW(N-S) PDCI=3105 MW(N-S) COI=4710 MW(N-S)
CPV Colusa - 2010 Summer Peak - after

Trip Glenn Substation

original case 3/26/2004 by SATS 2009 system summer peak
updated loads to 2010 system summer peak
added 2010 North Valley 1-in-10 loads and generation dispatch
Morro Bay 4 is the swing bus
Proposed new generation in queue added
CPV Colusa 97 MW looped onto:
Cottonwood - Cortina 230 kV Line (#1)
Cottonwood - Vaca Dixon 230 kV Line (#2)
Logan Creek - Vaca Dixon 230 kV Line (#3)
Glenn - Vaca Dixon 230 kV Line (#4)

6_LOCAL_GEN_vt:
Tue Aug 02 17:00:21 2005

10hs_clusa_trs_glenn2_bus.chf

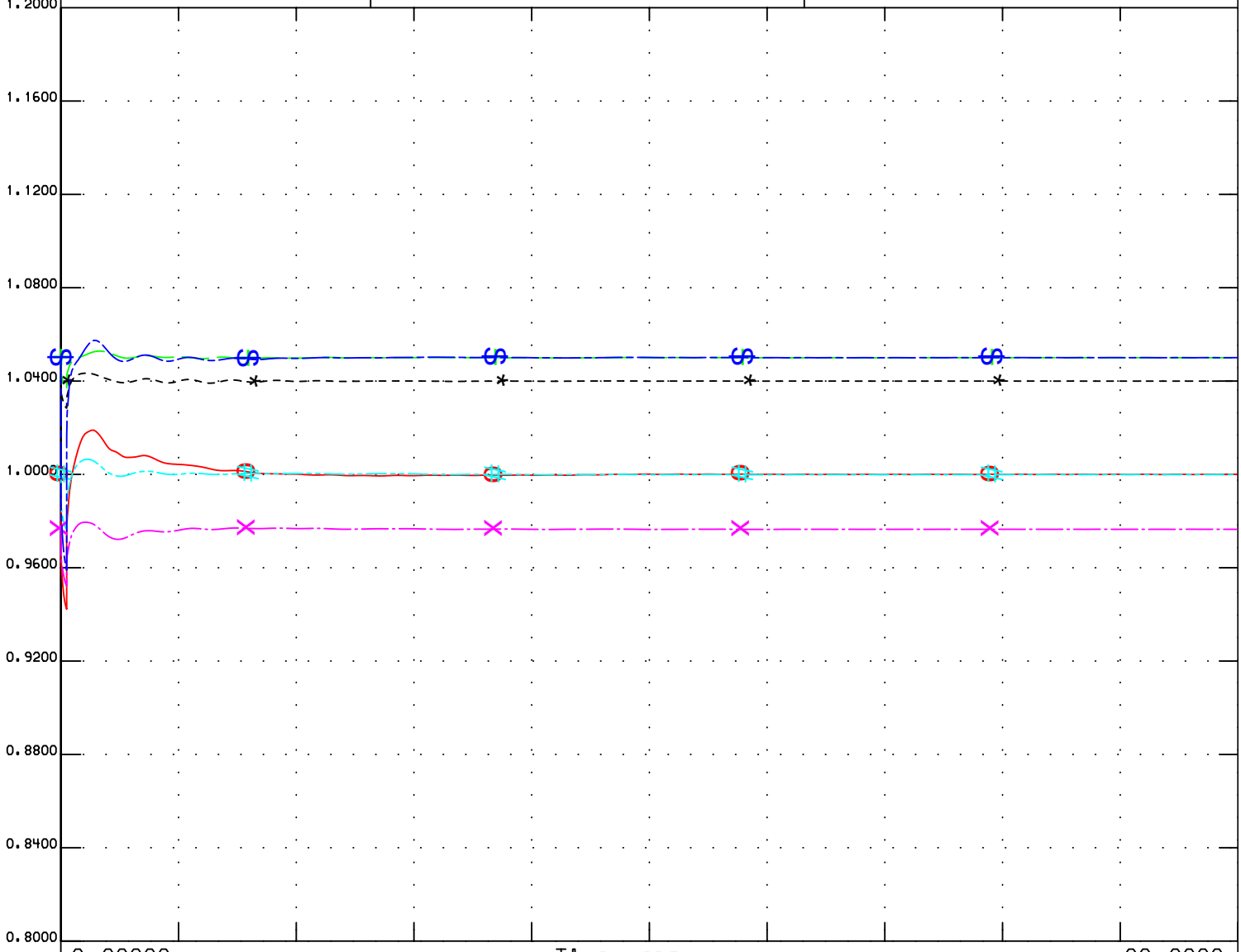

0.8000		O	vt	31911	13.8	TMP CT1	1	1	n	1.2000
0.8000		+	vt	32450	13.8	COLGATE1	1	1	n	1.2000
0.8000		*	vt	33108	18.0	DEC CTG1	1	1	n	1.2000
0.8000		#	vt	37521	18.0	SUTTER1	1	1	n	1.2000
0.8000		×	vt	37550	13.8	FOLSOM2	2	1	n	1.2000
0.8000		∽	vt	37575	13.8	SHASTA1	1	1	n	1.2000

PG&E 2004 BASE CASE SERIES - 2010 North Valley Summer Peak Case
PATH15=-1127 MW(S-N) PATH26=3313 MW(N-S) PDCI=3105 MW(N-S) COI=4710 MW(N-S)
CPV Colusa - 2010 Summer Peak - after

Trip Glenn Substation

original case 3/26/2004 by SATS 2009 system summer peak
updated loads to 2010 system summer peak
added 2010 North Valley 1-in-10 loads and generation dispatch
Morro Bay 4 is the swing bus
Proposed new generation in queue added
CPV Colusa 97 MW looped onto:
Cottonwood - Cortina 230 kV Line (#1)
Cottonwood - Vaca Dixon 230 kV Line (#2)
Logan Creek - Vaca Dixon 230 kV Line (#3)
Glenn - Vaca Dixon 230 kV Line (#4)

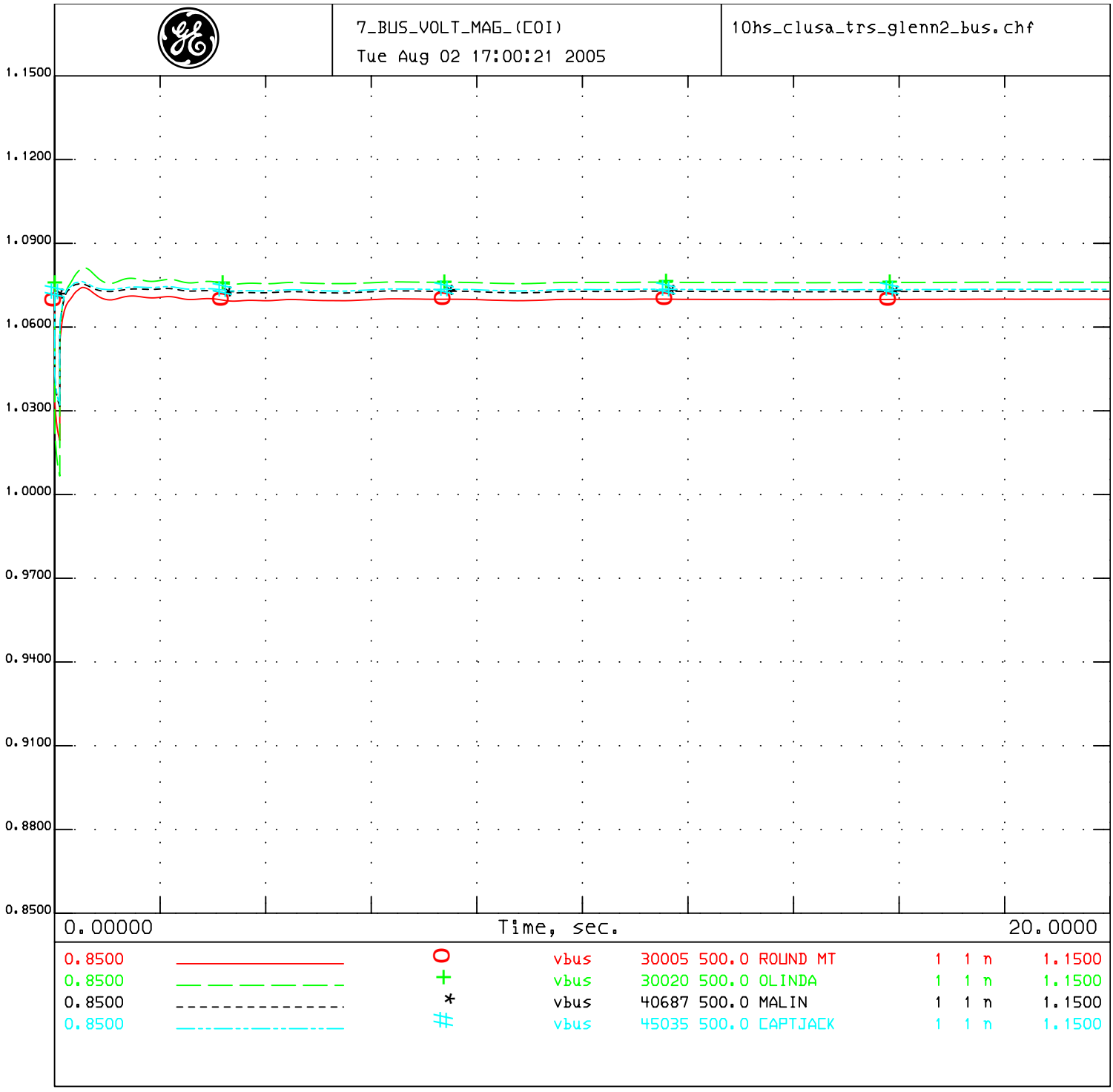

PG&E 2004 BASE CASE SERIES - 2010 North Valley Summer Peak Case
PATH15=-1127 MW(S-N) PATH26=3313 MW(N-S) PDCI=3105 MW(N-S) COI=4710 MW(N-S)
CPV Colusa - 2010 Summer Peak - after

Trip Glenn Substation

original case 3/26/2004 by SATS 2009 system summer peak
updated loads to 2010 system summer peak
added 2010 North Valley 1-in-10 loads and generation dispatch
Morro Bay 4 is the swing bus
Proposed new generation in queue added
CPV Colusa 97 MW looped onto:
Cottonwood - Cortina 230 kV Line (#1)
Cottonwood - Vaca Dixon 230 kV Line (#2)
Logan Creek - Vaca Dixon 230 kV Line (#3)
Glenn - Vaca Dixon 230 kV Line (#4)

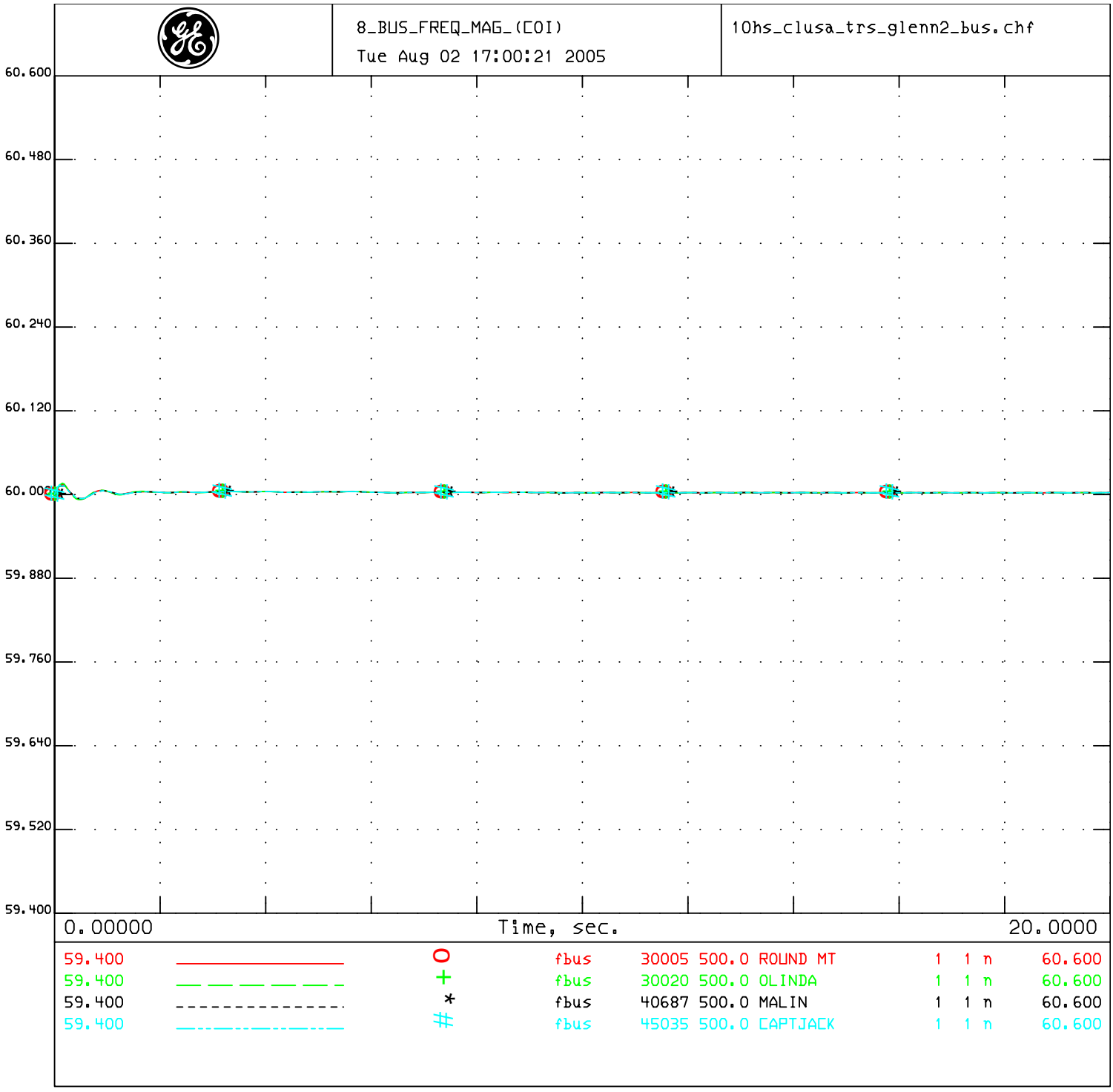

PG&E 2004 BASE CASE SERIES - 2010 North Valley Summer Peak Case
PATH15=-1127 MW(S-N) PATH26=3313 MW(N-S) PDCI=3105 MW(N-S) COI=4710 MW(N-S)
CPV Colusa - 2010 Summer Peak - after

Trip Glenn Substation

original case 3/26/2004 by SATS 2009 system summer peak
updated loads to 2010 system summer peak
added 2010 North Valley 1-in-10 loads and generation dispatch
Morro Bay 4 is the swing bus
Proposed new generation in queue added
CPV Colusa 97 MW looped onto:
Cottonwood - Cortina 230 kV Line (#1)
Cottonwood - Vaca Dixon 230 kV Line (#2)
Logan Creek - Vaca Dixon 230 kV Line (#3)
Glenn - Vaca Dixon 230 kV Line (#4)

APPENDIX F2
FACILITIES STUDY REPORT

Facilities Study Report

Generation Interconnection

E&L Westcoast, LLC

CPV Colusa Project

Pacific Gas and Electric Company

WE DELIVER ENERGY.

February 28, 2006

Table of Contents

1. Executive Summary 1

2. Affected Systems 1

3. Project and Interconnection Information 2

4. Cost Summary and Schedule 3

4.1 Direct Assignment Costs 4

4.2 Network Upgrade Costs 4

4.3 Tentative Construction Schedule 6

5. Study Assumptions 6

6. System Impact Study Results 7

7. Transmission Line Evaluation 7

7.1 Direct Assignment Work Scope 7

7.2 Network Upgrade Work Scope 7

8. Substation Evaluation 8

8.1 Direct Assignment Work Scope 8

8.2 Network Upgrade Work Scope 8

9. Land Services Evaluation 9

9.1 Direct Assignment Work Scope 9

9.2 Network Upgrade Work Scope 9

10. Environmental Evaluation/ Permitting 9

10.1 CPUC General Order 131-D 9

10.2 CPUC Section 851 10

11. Study Updates 11

12. Stand-by Power 11

Appendices

A. Study Plan
B. Work Scope
C. Protection Requirements

1. Executive Summary

E&L Westcoast, LLC (E&L) proposes to interconnect the 700 MW (net) CPV Colusa Project (Project) with the four Cottonwood-Vaca Dixon 230 kV lines owned by Pacific Gas & Electric (PG&E) at a site near Colusa, California. The Project will consist of two GE combustion turbine generators (each rated at 199 MW) and one GE steam turbine generator (rated at 317 MW) with a combined total rating of 715 MW. The generator auxiliary load will be 15 MW resulting in a maximum net total output of 700 MW. The planned commercial operational date of the proposed Project is January 2010. Navigant Consulting issued a System Impact Study (SIS) for this Project on September 19, 2005 that provided an analysis of the system impacts.

Per California Independent System Operator Corporation (CAISO) Amendment 39 Process and based on the issued SIS, the Facilities Study (FS) will provide:

1. Cost estimates and work scope for the Direct Assignment[1] facilities necessary to interconnect the Project to PG&E's grid.

2. Cost estimates and work scope for the Network Upgrade[2] facilities necessary to mitigate the impact of the Project under various system conditions.

The Direct Assignment facilities consist of installing communication equipment from the new PG&E Colusa Switching Station to the project facility, pre-parallel inspection, and protection modification.

The cost of Direct Assignment facilities to interconnect the project is approximately **$440,000** exclusive of ITCC[3].

The Network Upgrade facilities consist of installing a new PG&E Colusa Switching Station, looping the existing lines into the switching station, and any substation work beyond the Point of Interconnection at Colusa Switching Station.

The cost of Network Upgrade facilities to interconnect the project is approximately **$22.0 million**.

2. Affected Systems

The SIS for this project issued on September 19, 2005 identified that the Project would have impacts on transmission facilities that are not owned by PG&E. This FS has not determined the costs of transmission upgrades or modifications on these other systems. In accordance with paragraph 3.4.4 of the LGIP:

[1] The transmission facilities necessary to physically and electrically interconnect the Project to the ISO Controlled Grid at the point of interconnection.
[2] The transmission facilites, other than Direct Assignement Facilities, beyond the point of interconnection necessary to interconnect the Project safely and reliably to the ISO Controlled Grid.
[3] Income Tax Component of Contribution

- The Interconnection Customer shall enter into an agreement with the owner of the Affected System and/or other affected Participating TO(s), as applicable. The agreement shall specify the terms governing payments to be made by the Interconnection Customer to the owner of the Affected System and/or other affected Participating TO(s) as well as the repayment by the owner of the Affected System and/or other affected Participating TO(s).

In addition, the Affected Systems may have the right to require additional upgrades (including upgrades on both the Affected System and the PG&E system) not identified in the SIS and FS that PG&E has prepared for the Project. In accordance with applicable requirements, PG&E will not interconnect a generator to its system in a manner that causes adverse impacts on other systems.

3. Project and Interconnection Information

The Project will be a combined cycle project with a maximum output of 715 MW and will consist of two GE combustion turbine generators (each rated at 199 MW) and one GE steam turbine generator (rated at 317 MW). The generator auxiliary load will be 15 MW resulting in a maximum net output of 700 MW at an 85% power factor. The 18/242 kV step-up transformers for the combustion turbine generating units and for the steam turbine generating unit will be rated at, 205 MVA and 410 MVA, respectively. A conceptual one-line diagram of the Project is shown in Figure 2-1.

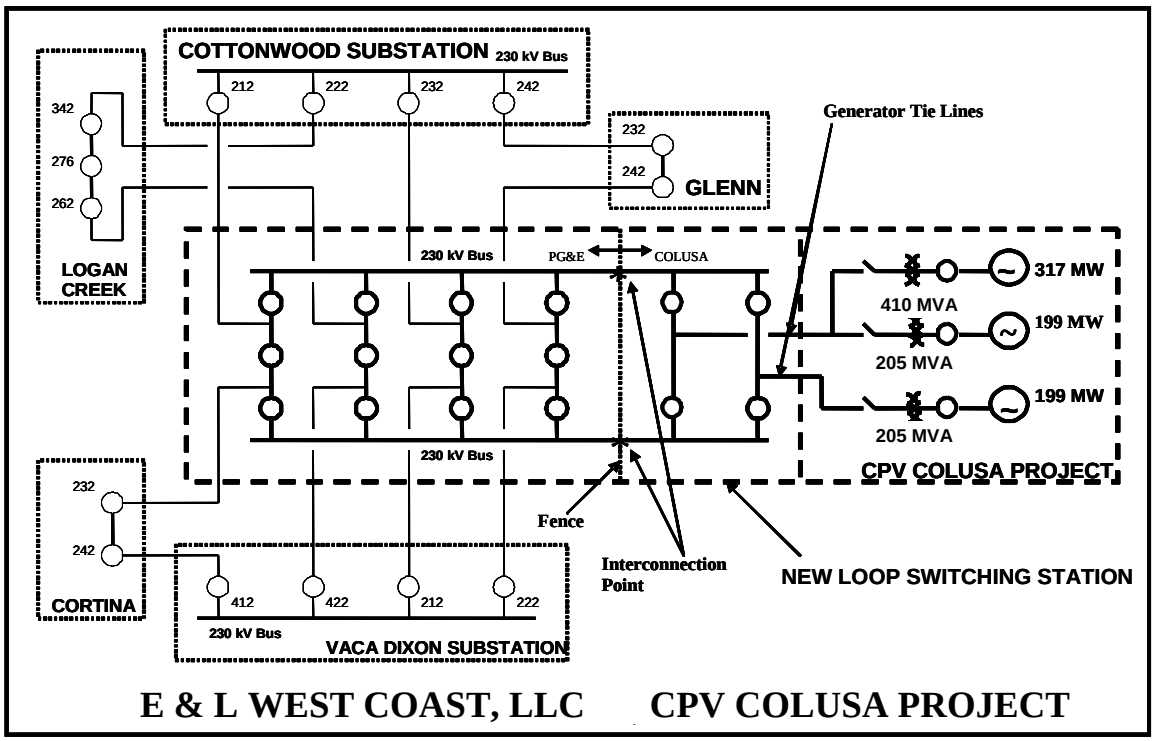

Figure 2-1: Conceptual One-Line Diagram

Figure 2-2 shows the approximate location of the Project and the transmission facilities in the area.

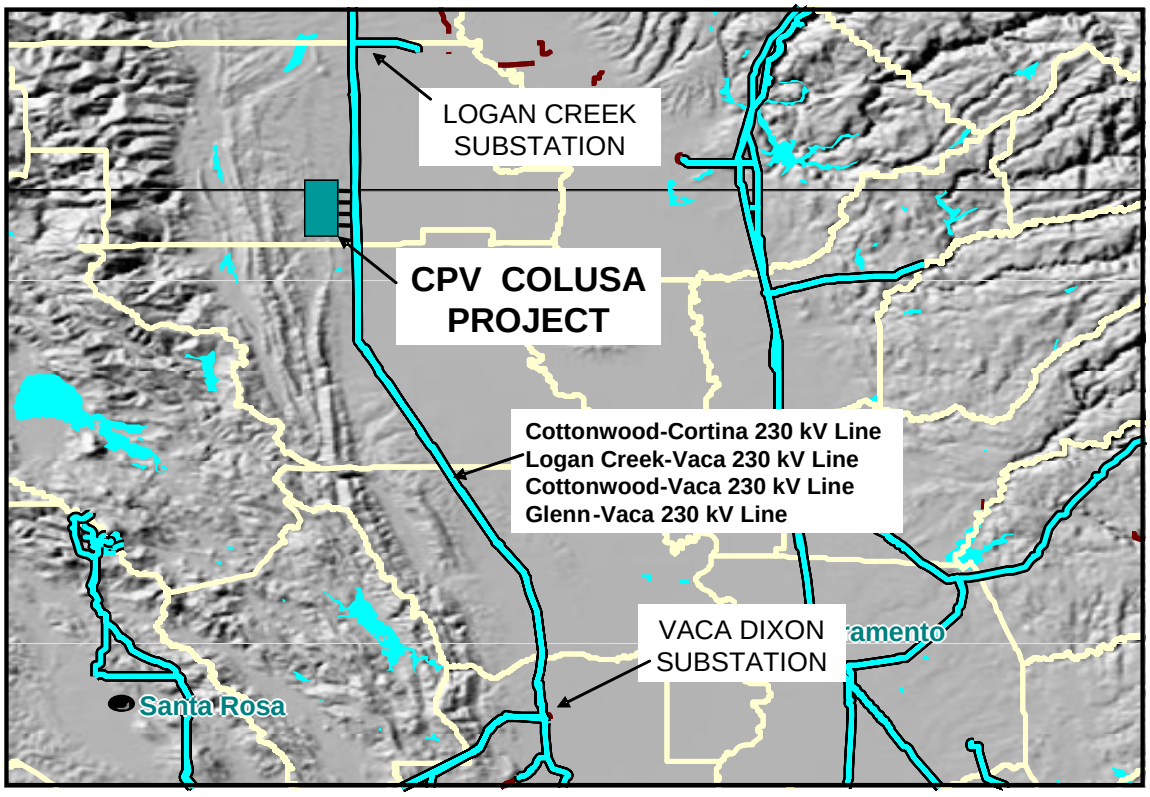

Figure2-3: Location Map

4. Cost Summary and Schedule

A cost summary is provided below in Table 3-1, with more detailed Direct Assignment costs provided in Subsection 3.1. Subsection 3.2 provides more detailed costs for Network Upgrades required to interconnect the project. Costs provided are not final and will need to be reconciled with actual costs upon completion of the project. Appendix B, Section 6, Section 7 and Section 8 provide the work scope of the required work.

Total Direct Assignment Cost	**$ 440,000**		
ITCC Tax @ 34 %	**$ 149,600**		
Total Direct Assignment Cost with ITCC		**$ 586,600**	
Total Network Upgrade Cost		**$ 21,840,000**	
Total Interconnection Cost			**$ 22,426,600**

Table 3-1 Cost Estimate Summary

4.1 Direct Assignment Costs

A summary of the Direct Assignment cost estimates for the facilities required to interconnect the Project with PG&E's transmission system is shown in Table 3-2. These facilities are necessary to physically and electrically interconnect the Project to the ISO Controlled Grid at the point of interconnection. These costs are not final and will need to be reconciled with actual costs upon completion of the project.

Substation Work			
CPV Colusa Project Facility			
Install associated equipment for Direct Transfer Trip to the Project Facility, pre-parallel inspection, protection equipment adjustment, communication testing.	$440,000		
Subtotal Substation Work		**$ 440,000**	
Total Direct Assignment Cost before ITCC			**$ 440,000**

Table 3-2 Direct Assignment Cost Estimates

4.2 Network Upgrade Costs

A summary of the Network Upgrade cost estimates for the facilities required to interconnect the Project with PG&E's transmission system is shown in Table 3-3. These facilities are necessary to physically and electrically interconnect the Project to the ISO Controlled Grid beyond the point of interconnection. These costs are not final and will need to be reconciled with actual costs upon completion of the project.

Substation Work			
PG&E's Colusa Substation			
Install a twelve breaker BAAH switching station, control building, communication and protection equipment, and associated equipment.	$15,490,000		
PG&E's Cottonwood Substation			
Replace Breakers 412, 522, 542; install communication and protection equipment, modify relay, CT settings, testing.	$1,810,000		
PG&E's Cortina Substation			
Install communication and protection equipment, modify relay, CT settings, testing.	$400,000		
PG&E's Glenn Substation			
Install communication and protection equipment, modify relay, CT settings, testing.	$370,000		
PG&E's Logan Creek Substation			
Install communication and protection equipment, modify relay, CT settings, testing.	$370,000		
PG&E's Vaca Dixon Substation			
Replace Breaker 412; install communication and protection equipment, modify relay, CT settings, testing.	$1,120,000		
Subtotal Substation Work		**$ 19,560,000**	
Transmission Line Work			
CPV Colusa looping Line			
Construct the looping line from PG&E's 230 kV Cottonwood – Cortina, Logan Creek – Vaca Dixon, Cottonwood – Vaca Dixon, Glenn – Vaca Dixon lines to the new Colusa Switching station	$2,000,000		
Subtotal Transmission Line Work		**$ 2,000,000**	
Land Services Work			
Land engineering support, survey, map, and land grand documents	$50,000		
Land acquisition, switching station and easement for looping line	$200,000		
Land planning, routing and permit	$30,000		
Subtotal Land Services Work		**$ 280,000**	
Total Network Upgrade Cost			**$ 21,840,000**

Table 3-3 Network Upgrade Cost Estimates

4.3 Tentative Construction Schedule

The tentative schedule to construct the Direct Assignment and Network Upgrade facilities based on the work scope outlined in this FS is approximately 18 to 36 months from the execution of the Large Generator Interconnection Agreement (LGIA) and payment of the estimated Direct Assignment and Network Upgrade costs. This schedule reflects only the time PG&E requires to engineer, design, schedule, procure materials and construct the necessary facilities.

The Construction Schedule includes only the time required to obtain permits anticipated in Section 9. Other permits that may be required by the CPUC, state, local, or federal agencies are described in Section 10. Additional permits required beyond those anticipated will impact the Project's schedule.

5. Study Assumptions

PG&E conducted the FS using the following assumptions:

1) The maximum net total output of the facilities is 700 MW; a 15 MW ancillary load was also modeled.

2) The expected on-line date of the CPV Colusa Project is January 2010.

3) The two step-up transformers for the Project's combustion turbine generating units will be 18/242 kV rated 205 MVA, and the step-up transformer for the steam turbine will be 18/242 kV rated 410 MVA.

4) PG&E's Cottonwood-Vaca Dixon 230 kV lines are located approximately 1,300 feet east of the Project site. The Project will be interconnected with these lines by looping the Cottonwood-Cortina, Logan Creek-Vaca Dixon, Cottonwood-Vaca Dixon, and Glenn-Vaca Dixon 230 kV lines into the new 230 kV switching station. The required tie lines will be approximately 2,000 feet in length.

5) E&L Westcoast, LLC will engineer, procure, construct, own, and maintain its project facility.

6) The study considered the planned generating facilities in PG&E's service territory whose schedules are concurrent with or precede the CPV Colusa Project's schedule and whose output would likely impact the same portions of the system as would that of the CPV Colusa Project.

7) The study considered all the approved PG&E transmission reliability projects that will be operational by January 2010.

8) The Substation Evaluation is based upon the Protection Requirements shown in Appendix C.

6. System Impact Study Results

The SIS issued on September 19, 2005 concluded that the Project would:

1) Cause no new Category "A" normal overloads on PG&E facilities that will require mitigation by the Project.

2) Cause no new Category "B" emergency overloads on PG&E facilities that will require mitigation by the Project. PG&E has two capacity projects: T686 plans to re-conductor the Palermo-Bogue and Palermo-East Nicolaus 115 kV lines by 2007; and T686B plans to install a second 230/115 kV transformer at Palermo Substation by 2007. These projects have not yet been approved by PG&E management and, in the event they are not completed by the in-service date of the CPV Colusa Project, the Project would be responsible for mitigating Project-related impacts on these lines and transformer.

3) Cause or exacerbate several Category "C" overloads. E&L may be required to participate in a special protection scheme(s) or face congestion.

4) Cause overstress of four PG&E circuit breakers: Cottonwood 230kV Breakers 412, 522, and 542, and Vaca Dixon 230 kV Breaker 412.

5) Cause minimal adverse transient performance impacts on the transmission system.

6) Require a new 4 bay (12 breaker) Breaker-and-a-Half PG&E-owned switching station. This new substation would be adjacent to the E&L project substation

7. Transmission Line Evaluation

7.1 Direct Assignment Work Scope

The Transmission Line Evaluation determined the Direct Assignment work scope for which the Project will be responsible. These activities include all transmission line engineering, design and construction activities from the Project facility up to the point of interconnection.

There is no Direct Assignment transmission line work scope or cost associated with the Project.

7.2 Network Upgrade Work Scope

The Transmission Line Evaluation determined the Network Upgrade work scope for which the Project will be responsible. These activities include all transmission line engineering, design and construction activities beyond the point of interconnection. The final Network Upgrade work scope will be determined after detailed design and engineering is completed.

The transmission line evaluation provided the cost estimates of the interconnection looping lines.

8. Substation Evaluation

8.1 Direct Assignment Work Scope

The Substation Evaluation determined the Direct Assignment work scope for which the Project will be responsible. These activities include all substation engineering, design and construction activities from the Project facility up to the point of interconnection. The final Direct Assignment work scope will be determined after detailed design and engineering is completed. The work scope includes:

- Pre-parallel inspection, communication and protection equipment installation, testing. These activities will include required relays, fiber optic, carrier, engineering, construction and other associated work at PG&E and the Project facilities.

- Other associated substation work as detailed in Appendix B.

8.2 Network Upgrade Work Scope

The Substation Evaluation determined the Network Upgrade work scope for which the Project will be responsible. These activities include all substation engineering, design and construction activities beyond the point of interconnection. The final Network Upgrades work scope will be determined after detailed design and engineering is completed. The work scope includes:

- Construct new switching station and associated equipment (control building, protection relays, communications, CTs, panels, conduits, etc.)

- Replace overstressed breakers located in PG&E's Cottonwood and Vaca Dixon substations.

- Substation equipment upgrades (protection relays, communications, CTs, panels, conduits, etc.).

- Other associated substation work as detailed in Appendix B.

9. Land Services Evaluation

9.1 Direct Assignment Work Scope

The Land Services Evaluation determined the Direct Assignment work scope for which the Project will be responsible. These activities include land engineering and real estate activities beyond the point of interconnection. The final Direct Assignment work scope will be determined after detailed design and engineering is completed.

The Land Services Evaluation identified no Direct Assignment land engineering or real estate work scope or costs associated with the Project.

9.2 Network Upgrade Work Scope

The Land Services Evaluation determined the Network Upgrade work scope for which the Project will be responsible. These activities include all land engineering and real estate activities beyond the point of interconnection. The final Network Upgrade work scope will be determined after detailed design and engineering is completed.

The Land Services Evaluation identified and provided land engineering or real estate work scope or costs associated with the new Colusa switching station and the easement for the looping lines. The work scope includes:

- Land Engineering: Survey, map and land grant documents.
- Land Acquisition: Acquire site for switching station and easement for the looping lines.
- Land planning and permit.

10. Environmental Evaluation/ Permitting

10.1 CPUC General Order 131-D

PG&E is subject to the jurisdiction of the California Public Utilities Commission (CPUC); and must comply with CPUC General Order 131-D (Order) on the construction, modification, alteration, or addition of all electric transmission facilities (i.e., lines, substations, switchyards, etc.). These facilities include all facilities to be constructed by others and deeded to PG&E. In most cases where PG&E's electric facilities are under 200 kV and are part of a larger project (i.e., electric generation plant), the Order exempts PG&E from obtaining an approval from the CPUC provided its planned facilities have been included in the larger project's California Environmental Quality Act (CEQA) review, the review has included circulation with the State Clearinghouse, and the project's lead agency (i.e., California Energy Commission) finds no significant unavoidable environmental impacts. PG&E

or the project developer may proceed with construction once PG&E has filed notice with the CPUC and the public on the project's exempt status, and the public has had a chance to protest PG&E's claim of exemption. If PG&E facilities are not included in the larger project's CEQA review, or if the project does not qualify for the exemption, PG&E may need to seek approval from the CPUC (i.e., Certificate of Public Convenience and Necessity or Permit to Construct) taking as much as 18 months or more since the CPUC would need to conduct its own environmental evaluation (i.e., Negative Declaration or Environmental Impact Report).

PG&E recommends that the project proponent includes PG&E facility work in its project description and application to the lead agency performing CEQA review on the project. The lead agency must consider the environmental impacts of the interconnection electric facility, whether built by the developer with the intent to transfer ownership to PG&E or to be built and owned by PG&E directly, and make a finding of no significant unavoidable environmental impacts from construction of those facilities. Once the project has completed the review process and the environmental document (i.e., Negative Declaration or Environmental Impact Report) finds no significant unavoidable environmental impacts from PG&E's work, PG&E would file an Advice Letter with the CPUC and publish public notice of the proposed construction of the facilities. The noticing process takes about 90 days if no protests are filed, but should be done as early as possible so that a protest does not delay construction. PG&E has no control over the time it takes the CPUC to respond when issues arise. If the protest is granted, PG&E may then need to apply for a formal permit to construct the project (i.e., Certificate of Public Convenience and Necessity or Permit to Construct). Facilities built under this procedure must also be designed to include consideration of electric and magnetic field (EMF) mitigation measures pursuant to PG&E "EMF Design Guidelines of New Electrical Facilities: Transmission, Substation and Distribution".

Please see Section III, in General Order 131-D. This document can be found in the CPUC's web page at:

http://www.cpuc.ca.gov/PUBLISHED/GENERAL_ORDER/589.htm

10.2 CPUC Section 851

Because PG&E is subject to the jurisdiction of the CPUC, it must also comply with Public Utilities Code Section 851. Among other things, this code provision requires PG&E to obtain CPUC approval of leases and licenses to use PG&E property, including rights-of-way granted to third parties for interconnection facilities. Obtaining CPUC approval for a Section 851 application can take several months, and requires compliance with the California Environmental Quality Act (CEQA). PG&E recommends that Section 851 issues be identified as early as possible so that the necessary application can be prepared and processed.

11. Study Updates

The FS was performed according to the assumptions shown in the Section titled "Study Assumptions." In the event that these assumptions are changed, updating the study may be required to re-evaluate the Project's impact on PG&E's transmission grid. E&L would be responsible for paying for any such study update. Some of the changes that might prompt a study update are:

- Change in Queue position
- Modifications to a superior Queue project
- Change in the FS assumptions

12. Stand-by Power

This study did not address any requirements for stand-by power that the Project may require. E&L should contact their Generation Interconnection Services representative regarding this service.

Note: E&L is urged to contact their Generation Interconnection Services representative promptly regarding stand-by service in order to ensure its availability for the Project's start-up date

Appendix A

Facilities Study Plan

Facilities Study Plan

Generation Interconnection

E&L Westcoast, LLC

CPV Colusa Project

Pacific Gas and Electric Company

WE DELIVER ENERGY.

October 13, 2005

Table of Contents

1. Introduction 1

2. Study Fee 1

3. Schedule 1

4. Cost Estimates 2

4.1 Direct Assignment Interconnection Costs 2

4.2 Network Upgrades Costs 2

5. Project and Interconnection Information 2

6. Study Assumptions 4

7. System Impact Study Results 5

8. Facilities Study Scope 5

8.1 Transmission Line Evaluation 6

8.2 Substation Evaluation 6

8.3 Land Evaluation 6

9. Environmental Evaluation/ Permitting 7

9.1 CPUC General Order 131-D 7

9.2 CPUC Section 851 8

10. Study Updates 8

11. Stand-by Power 8

Facilities Study Agreement

1. Introduction

E&L Westcoast, LLC (E&L) proposes to interconnect the 700 MW (net) CPV Colusa Project with the four Cottonwood-Vaca Dixon 230 kV lines owned by Pacific Gas & Electric (PG&E) at a site near Colusa, California. The will project consist of two GE combustion turbine generators (each rated at 199 MW) and one GE steam turbine generator (rated at 317 MW). The generator auxiliary load will be 15 MW resulting in a maximum net output of 700 MW. The planned commercial operational date of the proposed Project is January 2010. Navigant Consulting issued a System Impact Study (SIS) for this Project on September 19, 2005 that provided an analysis of the system impacts.

Per California Independent System Operator Corporation (CAISO) Amendment 39 Process and based on the issued SIS, the Facilities Study (FS) will provide:

1. Cost estimates and work scope for the Direct Assignment Interconnection Facilities necessary to interconnect the Project to PG&E's grid.

2. Cost estimates and work scope for the Network Upgrades necessary to mitigate the impact of the Project under various system conditions.

This FS Plan will form the basis for the Facilities Study Agreement (FSA) by defining the scope, content, assumptions, and terms of reference of the FS.

2. Study Fee

PG&E has estimated a study fee of $40,000 for performing the FS. The final cost to complete the FS will be based on actual cost.

PG&E will provide E&L a record of actual costs for performing the FS roughly two months after the study is completed. PG&E will bill E&L the remaining balance if the actual cost is higher than the estimated $40,000. If the actual cost is less than the estimated study fee, PG&E will refund the balance to E&L.

3. Schedule

Table 3-1 shows the tentative milestones/schedules associated with this FS.

Task	Milestone Description	Target Date
1	Establish study commencement date based on receipt of study fee with the FS Agreement	October 27, 2005
2	Issue Facilities Study Report	January 25, 2006

Table 3-1: Study Schedule

Because of the complexity of this study, the FS will require more than 60 calendar days to complete.

Per the CAISO Tariff, E&L must execute and return the attached FSA along with the study deposit of $40,000 by the tenth business day from the tendering of this study plan. If E&L fails to return an executed FSA with the estimated study fee by the tenth business day, the Project will be removed from the CAISO Interconnection Application Queue.

4. Cost Estimates

All costs provided will be estimates only. Charges for implementing the interconnection of the Project will be made based upon the actual costs incurred.

4.1 Direct Assignment Interconnection Costs

A cost estimate will be provided based upon a commercial operation date in January 2010. This cost estimate will include any substation and transmission line facilities required to interconnect the Project. The estimate will not include any facilities constructed, owned, and operated by E&L.

4.2 Network Upgrades Costs

A cost estimate will also be provided for any transmission facility additions or upgrades for mitigating any negative impacts on PG&E's existing facilities that are beyond the Point of Interconnection.

5. Project and Interconnection Information

The Project will be a combined cycle project with a maximum output of 715 MW and will consist of two GE combustion turbine generators (each rated at 199 MW) and one GE steam turbine generator (rated at 317 MW). The generator auxiliary load will be 15 MW resulting in a maximum net output of 700 MW at an 85% power factor. The step-up transformers for the combustion turbine generating units will rated at 18/242 kV and 205 MVA and while that for the steam turbine generating unit will be at rated 18/242 kV and 410 MVA. A conceptual one-line diagram for the Project interconnection is shown in Figure 5-1.

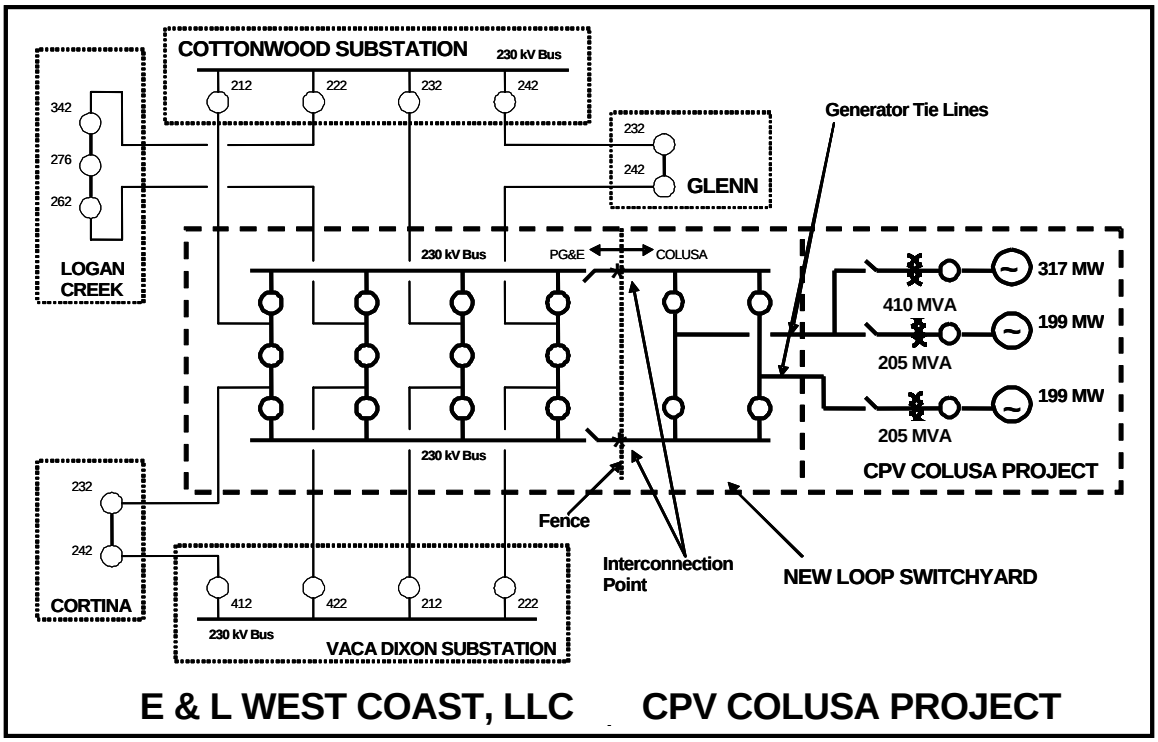

Figure 5-1: Conceptual one-line Diagram

Figure 5-2 shows the approximate location of the Project and the transmission facilities in the area.

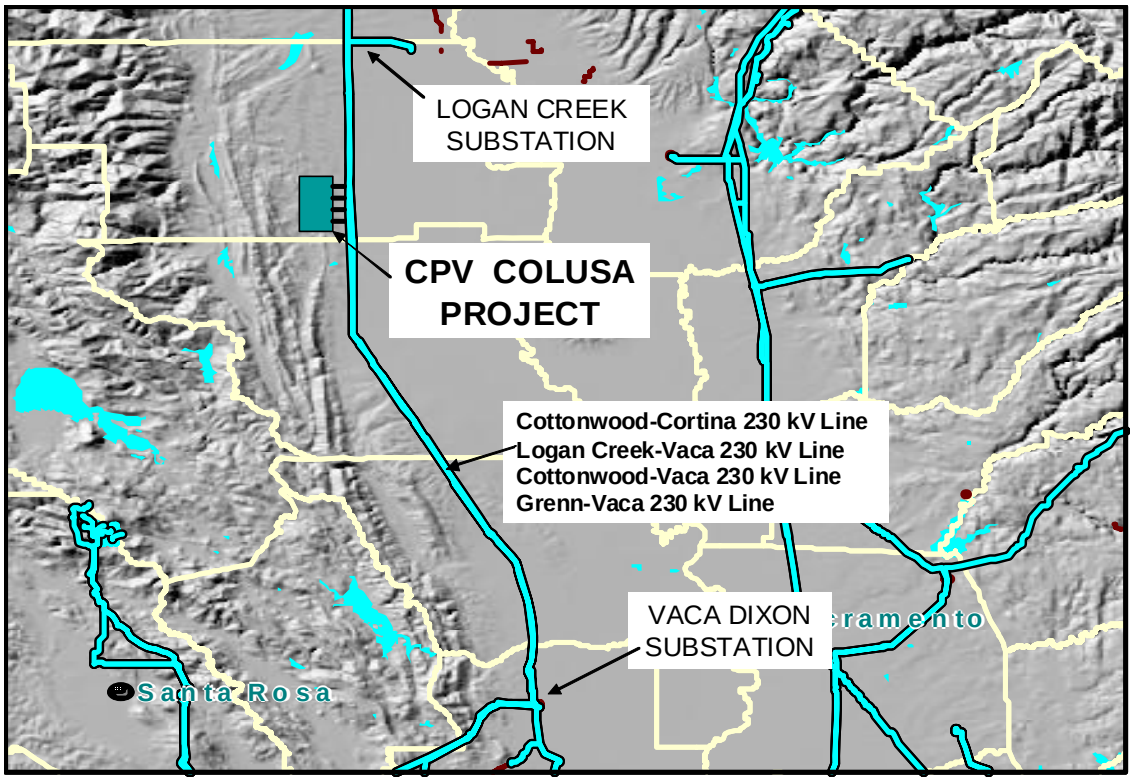

Figure 5-2: Location Map

6. Study Assumptions

PG&E conducted the SIS and will conduct the FS under the following assumptions:

1. The maximum net total output of the facilities is 700 MW; a 15 MW ancillary load was also modeled.

2. The expected on-line date of the CPV Colusa Project is January 2010.

3. The two step-up transformers for the Project's combustion turbine generating units will be 18/242 kV rated 205 MVA, and the step-up transformer for the steam turbine will be 18/242 kV rated 410 MVA.

4. PG&E's Cottonwood-Vaca Dixon 230 kV lines are located approximately 1,300 feet east of the Project site. The Project will be interconnected with these lines by looping the Cottonwood-Cortina, Logan Creek-Vaca Dixon, Cottonwood-Vaca Dixon, and Glenn-Vaca Dixon 230 kV lines into the Project 230 kV switchyard. The required tie lines will be approximately 2,000 feet in length.

5. The plant configuration is as shown in Figure 5-1. E&L Westcoast, LLC will engineer, procure, construct, own, and maintain its project facility.

6. The study considered the planned generating facilities in PG&E's service territory whose schedules are concurrent with or precede the CPV Colusa Project's schedule and whose output would likely impact the same portions of the system as would that of the CPV Colusa Project.

7. The study considered all the approved PG&E transmission reliability projects that will be operational by January 2010.

7. System Impact Study Results

The SIS issued on September 19, 2005 concluded that the Project would:

1) Cause no new Category "A" normal overloads on PG&E facilities that will require mitigation by the Project.

2) Cause no new Category "B" emergency overloads on PG&E facilities that will require mitigation by the Project. PG&E does have two capacity projects, # T686 to reconductor the Palermo-Bogue and Palermo-East Nicolaus 115 kV lines by 2007, and # T686B to install a second 230/115 kV transformer at Palermo by 2007. These projects have not yet been approved by PG&E management and, in the event they are not completed by the in-service date of the CPV Colusa Project, the Project would be responsible for mitigating Project-related impacts on this line and transformer.

3) Cause or exacerbate several Category "C" overloads. E&L may be required to participate in a special protection scheme(s) or face congestion.

4) Cause overstress of four PG&E circuit breakers: Cottonwood 230kV Breakers 412, 522, and 542, and Vaca Dixon 230 kV Breaker 412[1].

5) Cause minimal adverse transient performance impacts on the transmission system.

6) Require a new 4 bay (12 breaker) Breaker-and-a-Half PG&E-owned switching station. This new substation would be adjacent to the E&L project substation.

8. Facilities Study Scope

The FS will provide the cost estimates and work scope for: (1) Direct Assignment Facilities required to interconnect the Project to the PG&E grid and (2) Network Upgrades to PG&E transmission facilities required to mitigate system impacts and interconnect the Project. The specific studies conducted by the FS are:

[1] The SIS short circuit studies included the Three Mountain Power Project (TMPP) and Project ID# P0441; both of which have withdrawn from the ISO Generation Interconnection Queue since the short circuit studies were done. The CPV Project-related short circuit impacts without the TMPP and Project P0441will be reassessed during the Facilities Study.

8.1 Transmission Line Evaluation

8.1.1 Direct Assignment

The generator tie lines from the Project to the new PG&E Switching Station will be built and owned by E&L. Therefore, no cost estimates or work scope will be provided in the FS for this line.

8.1.2 Network Upgrades

The transmission line evaluation will provide work scope and cost estimates for:

- Any transmission structure relocation related to the Project.

8.2 Substation Evaluation

8.2.1 Direct Assignment

The Project's substation will be built and owned by E&L, therefore, no cost estimates or work scope will be provided in the FS for this substation. The substation shall incorporate the required relaying as specified in the PG&E interconnection handbook per Section G2.1. E&L should note that there is a redundancy requirement for the application of multifunction relays.

8.2.2 Network Upgrades

The substation evaluation will provide the work scope and cost estimates for any required substation work that is beyond the Interconnection Point of the Project. This includes but is not limited to:

- System protection equipment upgrades or additions at existing PG&E Substations.
- A new PG&E 230 kV Switching Station with twelve 230 kV circuit breakers, associated protective relays, bus-bays and structures, communication and control equipment up to the Interconnection Point.
- Appropriate Special Protection Schemes as identified in the System Impact Study.

8.3 Land Evaluation

8.3.1 Direct Assignment

PG&E's Corporate Real Estate Department will determine the new land rights required for the CPV Colusa Project Facility, and if any

new land rights and/or easements are needed to install new facilities that might be required for the interconnection of the Project. The work scope and cost estimates will be provided for new land rights and permit requirements.

8.3.2 Network Upgrades

PG&E's Corporate Real Estate Department will determine if any new land rights and/or easements are needed to upgrade existing PG&E facilities that are negatively impacted by the Project. The work scope and cost estimates will be provided for new land rights and permit requirements.

9. Environmental Evaluation/ Permitting

9.1 CPUC General Order 131-D

PG&E is subject to the jurisdiction of the California Public Utilities Commission (CPUC); and must comply with CPUC General Order 131-D (Order) on the construction, modification, alteration, or addition of all electric transmission facilities (i.e., lines, substations, switchyards, etc.). This includes facilities to be constructed by others and deeded to PG&E. In most cases where PG&E's electric facilities are under 200 kV and are part of a larger project (i.e., electric generation plant), the Order exempts PG&E from obtaining an approval from the CPUC provided its planned facilities have been included in the larger project's California Environmental Quality Act (CEQA) review, the review has included circulation with the State Clearinghouse, and the project's lead agency (i.e., California Energy Commission) finds no significant unavoidable environmental impacts. PG&E or the project developer may proceed with construction once PG&E has filed notice with the CPUC and the public on the project's exempt status, and the public has had a chance to protest PG&E's claim of exemption. If PG&E facilities are not included in the larger project's CEQA review, or if the project does not qualify for the exemption, PG&E may need to seek approval from the CPUC (i.e., Certificate of Public Convenience and Necessity or Permit to Construct) taking as much as 18 months or more since the CPUC would need to conduct its own environmental evaluation (i.e., Negative Declaration or Environmental Impact Report).

PG&E recommends that the project proponent include PG&E facility work in its project description and application to the lead agency performing CEQA review on the project. The lead agency must consider the environmental impacts of the interconnection electric facility, whether built by the developer with the intent to transfer ownership to PG&E or to be built and owned by PG&E directly, and make a finding of no significant unavoidable environmental impacts from construction of those facilities. Once the project has completed the review process and the environmental document (i.e., Negative Declaration or Environmental Impact Report) finds no significant unavoidable environmental impacts from PG&E's work, PG&E would file an Advice Letter with the CPUC and publish public notice of the

proposed construction of the facilities. The noticing process takes about 90 days if no protests are filed, but should be done as early as possible so that a protest does not delay construction. PG&E has no control over the time it takes the CPUC to respond when issues arise. If the protest is granted, PG&E may then need to apply for a formal permit to construct the project (i.e., Certificate of Public Convenience and Necessity or Permit to Construct). Facilities built under this procedure must also be designed to include consideration of electric and magnetic field (EMF) mitigation measures pursuant to PG&E "EMF Design Guidelines of New Electrical Facilities: Transmission, Substation and Distribution".

Please see Section III, in General Order 131-D. This document can be found in the CPUC's web page at:

http://www.cpuc.ca.gov/PUBLISHED/GENERAL_ORDER/589.htm

9.2 CPUC Section 851

Because PG&E is subject to the jurisdiction of the CPUC, it must also comply with Public Utilities Code Section 851. Among other things, this code provision requires PG&E to obtain CPUC approval of leases and licenses to use PG&E property, including rights-of-way granted to third parties for interconnection facilities. Obtaining CPUC approval for a Section 851 application can take several months, and requires compliance with the California Environmental Quality Act (CEQA). PG&E recommends that Section 851 issues be identified as early as possible so that the necessary application can be prepared and processed.

10. Study Updates

This FS will be performed according to the assumptions shown in the Section titled "Study Assumptions." In the event that these assumptions are changed, an updating study may be required to re-evaluate the Project's impact on PG&E's transmission grid. E&L would be responsible for paying for any such updating study. Some of the changes that might prompt an update study are:

- Change in Queue position
- Modifications to a higher Queue project
- Change in the SIS or FS assumptions

11. Stand-by Power

This study does not address any requirements for stand-by power that the Project may require. E&L should contact their Generation Interconnection Services representative regarding this service.

Note: E&L is urged to contact their Generation Interconnection Services representative promptly regarding stand-by service in order to ensure its availability for the Project's start-up date.

Pacific Gas and Electric Company™

WE DELIVER ENERGY.™

Facilities Study Agreement

E&L (Applicant) has reviewed the Facilities Study Plan for the interconnection of Applicant's CPV Colusa Project with PG&E's system in Glenn County, State of California, and agrees with the proposed study plan.

Applicant agrees to pay the proposed study fee.

Dated this _____ day of _____, 2005

APPLICANT:

BY: _____
(Signature)

_____
(Type or Print Name)

TITLE: _____

MAILING ADDRESS:

_____

_____

_____

Appendix B

Work Scope

Preliminary

Substation Job Scope

For
PG&E's Portion of CPV Colusa Project

Including work @Cottonwood, Vaca Dixon, Logan Creek, Glenn, Cortina, PG&E ECC, SFGO, TOC, Customer site

Notes:

1. This proposed preliminary substation scope is based on Protection Department's Protection Requirements Revision 1 dated 12/23/05.
2. Forecast COD (commercial operating date) is Jan., 2010 for this 700 MW project.
3. This project requires building a new 230kV switching station.

New PG&E 230kV (CPV Colusa) Switching Station

Install a 230kV switching station consisting of four breaker-and-a-half (BHHA) bays and two bus sectionalizing breakers. The four BAAH bays will be used to loop in and out of four existing 230kV transmission lines in the area. The 230kV main Bus 1 and Bus 2 will be extended to CPV Colusa power plant switchyard side through a pair of buss sectionalizing breakers. The substation scope includes but is not limited to:

OUTDOOR

Major equipment to be installed includes following:

- Fourteen (14) 230 kV SF6 gas filled high voltage circuit breakers. Twelve of these are each rated 2000 ACC, 40KAIC and are located within the four BAAH bays. The other two are bus sectionalizing breakers and are each rated 3000 ACC, 40kAIC.

- Thirty-six (36) 230kV disconnect switches. Four rated 3000 ACC are for disconnects for the bus sectionalizing breakers and are each mounted on a low-profile switch support structure. 26 are each rated 2000 ACC and are each mounted on a low-profile support structure. Of these 26, 24 are breaker disconnects inside BAAH bays and two are line disconnects. The remaining 6 are line disconnects mounted on full-tension 40ft H x 52 ft W dead-end and switch support structures (Modified CDS 442487).
- Two 55 ft H x 52 ft W dead-end/pull off structures for two lines (Modified 378269)

- Thirty (30) 230kV CCVT's with 2 having carrier on B-phase. 26 of these are for the eight power lines (3 per line) and six will be connected to the two busses (3 per bus). Each CCVT will be mounted on a single column steel support structure.

- Two 230kV line traps, each supported on a low-profile structure.

- Two 230kV/120-240V, 100kVA power voltage transformers for of AC Station Service. One connected to each 230kV Bus. Each power voltage transformer contains approximately 600 gallons of oil and requires a secondary containment

- About forty-eight (48) low-profile 2-leg 230kV bus support structures

- One outdoor manual transfer switch (400 Amp) to select between the two power voltage transformers for AC Station Service.

- One (1) outdoor 120/240 VAC circuit breaker panel to power yard equipment

.

- There will be no outdoor bus differential cabinets for Bus 1 and Bus 2 differential schemes. All CT wires will be brought into the MPAC building.

- About 44 yard lighting standards and lighting fixtures along with yard receptacle fixtures providing 120/240V one-phase power. Approximate 10 lighting fixtures are mounted on dead-end structures and 34 mounted on lighting standards. (Exact amount of lighting to be designed per PG&E standards)

- Drivable cable trenches (about 1000 ft) and/or duct banks, plus pull boxes for the whole station, including four separate 4-inch PVC conduits for telecom fiber for line protection requiring dual levels of current differential protection schemes

- Two secondary containments for power voltage transformers for source of AC station service power

- 230 kV main Bus #1 & #2 with aluminum tubular conductor. Conductor to be 5-inch Al tubing, schedule 40. 4-inch Al tubing and bundled 1113 KCMIL Al will be used for the BAAH bays (there are four bays total)

- About 172 230kV station post type insulators for bus work (excluding insulators on air disconnect switches) and about 18 230kv composite type string insulators for cable drops within the station.

- Concrete foundations for all above-ground structures, supports and equipment, including a battery building and an MPAC building.

- One main ground grid system, using 250 and/or 500 KCMIL bare copper wire.

- One MPAC building per PG&E standards and to be supplied by an PG&E-approved supplier, approx. 49ftx16ft in size, complete with AC, DC panels, lighting and HVAC, etc and containing all switchboard panels fully equipped for integrated metering, protection, automation and control.

- One separate, 20 ftx16 ft battery building containing a 125 VDC, approx. 540 AHR battery.

- Pull new control, signal and power wiring between 230kV HVCB's, CCVT's, and all other equipment to the MPAC building

- Entrance gates and personal emergency gates along fence line

- One chain-link fence system with isolated fence ground and isolated fence sections. (Note the divider fence between PG&E and CPV Colusa power plant switchyard may have to be tied to the main grid with isolation fence sections installed at both ends.

INDOOR

Install the following, in an MPAC (modular protection, automation and control) building:

- One line-up of switchboard panels for operation and control of eight 230kV line circuits and two 230kV bus differential schemes, plus two bus sectionalizing breakers, per PG&E Protection and Automation Requirements.

- 120/240 VAC circuit breaker panels

- 125 VDC breaker panels

- General lighting and receptacles.

- Fire detection system.

- SCADA for substation automation

- HMI for substation automation

- SCADA RTU for station automation

- Communication hardware, including fiber optic terminal equipment for fiber links, GE IP Server, Garretum Switches, etc.

- All instrumentation and control required

- Battery charger

Cottonwood Substation (Relay CB 212 and CB 232, Overstressed CB 412, CB 522, CB 542)

I. CB 212: Cottonwood – Colusa SW Sta #1 230kV Line (Line Length: **Approx 71 miles**)

- Remove existing line protection from Panel 2RR (already 19-rack)
- Install G.E. L90 SET A current differential relay as one terminal of a two-terminal Cottonwood – Colusa SW Sta #1 pilot scheme using dual fiber optic communication line.
- Install SEL 311 L SET B current differential relay as one terminal of a two-terminal Cottonwood – Colusa SW Sta #1 pilot scheme using dual fiber optic communication line

- Install SEL 2505 I/O module or MVAJ 21 aux relay

II. CB 232: Cottonwood – Colusa SW Sta #2 230kV Line (Line Length: **Approx 71 miles**)

- Remove existing line protection from Panel 7RR (already 19-inch rack)
- Install G.E. L90 SET A current differential relay as one terminal of a two-terminal Cottonwood – Colusa SW Sta #2 pilot scheme using dual fiber optic communication line.
- Install SEL 311 L SET B current differential relay as one terminal of a two-terminal Cottonwood – Colusa SW Sta #2 pilot scheme using dual fiber optic communication line.
- Install SEL 2505 I/O module or MVAJ 21 aux relays

III. Overstressed Breakers Replacement

- This project identified three overstressed breakers at this location to be replaced. They are CB 412, 522 and 542. The new replacement breakers will be rated 2000 ACC, 40kAIC or higher.

Cortina Substation (CB 232)

I. CB 232: Colusa SW Sta - Cortina 230kV Line (Line Length: **Approx 18.7 miles**)

Note: Cortina has the 230kV bus converted to a ring bus under Order 7040689 and this line now involves CB 232 and CB 312

- Remove existing line protection from Relay Cabinet No. 1 (19-inch rack mounting)
- Install G.E. L90 SET A current differential relay as one terminal of a two-terminal Colusa SW Sta - Cortina pilot scheme using dual fiber optic communication line.
- Install SEL 311 L SET B current differential relay as one terminal of a two-terminal Colusa SW Sta - Cortina pilot scheme using dual fiber optic communication line.
- Install SEL 2505 I/O module or MVAJ 21 aux relays
- Install Basler-BPR Breaker Failure Relay on CB 232.
- Install SEL-279 reclosing relay on CB 232
- Install Wave Trap with 200-400kHz tuning range.
- Install Pulsar TCF-10B power line carrier transceiver for frequency shift keying scheme.

Glenn Substation (CB 242)

I. CB 242: Glenn - Colusa SW Sta 230kV Line (Line Length: **Approx 42 miles**)

- Remove existing line protection from relay babinet
- Install G.E. D60 SET A relay as one terminal of a two-terminal carrier scheme on power line carrier.
- Install SEL 311 C SET B relay as one terminal of a two-terminal carrier scheme on power line carrier.
- Install SEL 2505 I/O Module or MVAJ 21 aux relays
- Install Basler-BPR Breaker Failure Relay on CB 242.
- Install SEL-279 reclosing relay on CB 242.
- Install Wave Trap with 200-400kHz tuning range.
- Install Pulsar TCF-10B power line carrier transceiver for frequency shift keying scheme**.**

Logan Creek Substation (CB 262)

I. CB 262: Logan Creek - Colusa SW Sta 230kV Line (Line Length: **Approx 11 miles**)

- Remove existing line protection from
- Install G.E. D60 SET A relay as one terminal of a two-terminal carrier scheme on power line carrier.
- Install SEL 311 C SET B relay as one terminal of a two-terminal carrier scheme on power line carrier. Install SEL 2505 I/O module or MVAJ21 aux relays
- Install Basler-BPR Breaker Failure Relay on CB 262.
- Install SEL-279 reclosing relay on CB 262.
- Install Wave Trap with 200-400kHz tuning range.
- Install Pulsar TCF-10B power line carrier transceiver for frequency shift keying scheme**.**

Vaca Dixon Substation (Relay CB 422, CB 222 & CB 212, Overstressed CB 412)

I. CB 422: Colusa Sw Sta – Vaca Dixon #1 230kV Line (Line Length**: Approx 72 miles**)

- Remove existing line protection from the old control building. All new relays for 230kV line will be located in the new 230kV MPAC building that was recently

installed under Order 7048565. This 230kV MPAC building is located out in the yard.

- Install new 19-inch racks in the 230kV MPAC building for this line
- Install G.E. L90 SET A current differential relay as one terminal of a two-terminal Colusa SW Sta – Vaca Dixon #1 pilot scheme using dual fiber optic communication line.
- Install SEL 311 L SET B current differential relay as one terminal of a two-terminal Colusa SW Sta – Vaca Dixon #1 pilot scheme using dual fiber optic communication line. Install SEL 2505 I/O module
- Install Basler-BPR Breaker Failure Relay on CB 422.
- Install SEL-279 reclosing relay on CB 422.

II. CB 212: Colusa Sw Sta – Vaca Dixon #2 230kV Line (Line Length: **Approx 72 miles**)

- Remove existing line protection from the relay panels in the old control building). Install all new relays inside the new 230kV MPAC building out in the yard.
- Install G.E. L90 SET A current differential relay as one terminal of a two-terminal Colusa SW Sta – Vaca Dixon #2 pilot scheme using dual fiber optic communication line.
- Install SEL 311 L SET B current differential relay as one terminal of a two-terminal Colusa SW Sta – Vaca Dixon #2 pilot scheme using dual fiber optic communication line. Install SEL 2505 I/O module.
- Install Basler-BPR Breaker Failure Relay on CB 212.
- Install SEL-279 reclosing relay on CB 212.

III. CB 222: Colusa Sw Sta – Vaca Dixon #3 230kV Line (Line Length: **Approx 72 miles**)

- Remove existing line protection. From the relay panels in the old control building. All new relays will be installed in the new 230kV MPAC building out in the yard.
- Install G.E. L90 SET A current differential relay as one terminal of a two-terminal Colusa SW Sta – Vaca Dixon #3 pilot scheme using dual fiber optic communication line.
- Install SEL 311 L SET B current differential relay as one terminal of a two-terminal Colusa SW Sta – Vaca Dixon #3 pilot scheme using dual fiber optic communication line.
- Install Basler-BPR Breaker Failure Relay on CB222.
- Install SEL-279 reclosing relay on CB 222.

IV. Overstressed Breaker CB 412

- This project has identified CB 412 to be replaced with a 2000 ACC, 230kV, 63kAIC breaker.

Customer's Switchyard or Substation

- Review protection and revenue metering design and install meter
- Provide pre-parallel inspection and witness testing
- Review SCADA and EMS design and provide telecom support for EMS telemetry and SCADA

PG&E's ECC and SFGO TOC

- Install telecom equipment to support EMS telemetry and SCADA

Appendix C

Protection Requirements

CPV COLUSA PROJECT

FACILITIES STUDY

PRELIMINARY PROTECTION REQUIREMENTS

EDRO: JANUARY 2010

The following Preliminary Protection Requirements are for estimating purposes only of the CPV Colusa Project. The actual relays specified in the final protection requirements may differ from those outlined in this document.

Per Section G2.1 of the PG&E Interconnection Handbook, PG&E protection requirements are designed and intended to protect PG&E's system only. Generation Entity is responsible for the protection of its own system and equipment and must meet the requirements in the PG&E Interconnection Handbook.

ASSUMPTIONS

1. The CPV Colusa Facility will consist of two gas turbine generators rated at 199 MW and one steam turbine generator rated at 317 MW (maximum net output will be 700 MW) with a plant auxiliary load of 15 MW.
2. A new substation with a Breaker-And-A-Half (BAAH) bus configuration with 4 bays owned by PG&E and 2 bays owned by CPV Colusa will be looped on to the Cottonwood - Cortina 230kV Line, Logan Creek – Vaca Dixon 230kV Line, Cottonwood - Vaca Dixon 230kV Line, and Glenn - Vaca Dixon 230kV Line.

   The Cottonwood – Colusa SW Sta #1 and #2 230kV Lines will be 71 miles. The Colusa SW Sta - Cortina 230kV Line will be 18.7. The Logan Creek – Colusa SW Sta 230kV Line will be 10.56. The Colusa SW Sta - Vaca Dixon #1, #2, and #3 230kV Lines will be 72 miles. The Glenn - Colusa SW Sta 230kV Line will be 42 miles.
3. The CPV Colusa generation facility will be connected to the new Colusa SW Substation.
4. These Protection Requirements utilize the integrated MPAC standard for Colusa SW Substation.
5. Regarding requirements for a second set of line protection CTs, refer to the "Recommended Design Information for CT and PT". If it is determined that a second set of CTs is required, then for line protection, Set A relay will be on one set, Set B relay and breaker failure relay will be on another set.
6. These protection requirements will not cover special protection set-ups for temporary transmission line shoo-fly configurations that may be necessary to complete this project.
7. Line relays specified are per existing System Protection list of relays approved for purchase. Existing Engineering Design Standards are associated with application of these relays.
8. Relay coordination was not reviewed for this study. Recoordination studies could result in the required replacement of relays that are determined to be out of range as a result of this interconnection.

9. Study is based upon existing information available, any changes to the interconnection queue, connection point, or project information will result in a restudy of the area.

PROTECTION REQUIREMENTS

The Protection Requirements will consist of replacing the existing line protection and carrier equipment at Cottonwood, Logan Creek, Glenn, Cortina, and Vaca Dixon. The Cottonwood – Colusa SW Sta #1 and #2 230kV Lines, the Colusa SW Sta – Vaca Dixon #1, #2, and #3 230kV Lines, and the Colusa SW Sta – Cotina 230kV Line will have a fully redundant, double-pilot current differential scheme utilizing dual fiber optic communications. The Logan Creek- Colusa SW Sta and Glenn – Colusa SW Sta 230kV Lines will utilize a two terminal carrier scheme. The details are as follows:

COLUSA SW SUBSTATION

I. <u>CB 1/2: Cottonwood – Colusa SW Sta #1 230kV Line</u>

A. Line Length: Approx 71 miles

B. CB 1: Install one-230kV SF6 circuit breakers with bushing CTs rated 3000/5 per PG&E specifications.

C. CB 2: Install one-230kV SF6 circuit breakers with bushing CTs rated 3000/5 per PG&E specifications.

D. All CTs to be pulled into the control room.

E. Install G.E. L90 SET A current differential relay as one terminal of a two-terminal Cottonwood – Colusa SW Sta #1 pilot scheme using dual fiber optic communication line.

1. Wire to outermost Bus-side CT of CB 1 and CB 2.

F. Install SEL 311 L SET B current differential relay as one terminal of a two-terminal Cottonwood – Colusa SW Sta #1 pilot scheme using dual fiber optic communication line.

1. Wire to innermost Bus-side CT of CB 1 and CB 2.

G. Install three (3) line-side CCVTs to provide polarizing potentials for line protection and station automatics.

H. Install on Colusa SW Sta 230kV Bus #1 one (1) bus-side CCVTs to provide synchronizing potential for station automatics.

II. <u>CB 2/3: Colusa SW Sta - Cortina 230kV Line</u>

A. Line Length: Approx 18.7 miles

B. CB 3: Install one-230kV SF6 circuit breakers with bushing CTs rated 3000/5 per PG&E specifications.

C. All CTs to be pulled into the control room.

D. Install G.E. L90 SET A current differential relay as one terminal of a two-terminal Colusa SW Sta - Cortina pilot scheme using dual fiber optic communication line.

1. Wire to outermost Bus-side CT of CB 2 and CB 3.

E. Install SEL 311 L SET B current differential relay as one terminal of a two-terminal Colusa SW Sta - Cortina pilot scheme using dual fiber optic communication line.

1. Wire to innermost Bus-side CT of CB 2 and CB 3.

F. Install three (3) line-side CCVTs to provide polarizing potentials for line protection and station automatics.

G. Install on Colusa SW 230kV Bus #2 one (1) bus-side CCVTs to provide synchronizing potential for station automatics.

III. <u>CB 4/5: Logan Creek- Colusa SW Sta 230kV Line</u>

A. Line Length: Approx 11 miles

B. CB 4: Install one-230kV SF6 circuit breakers with bushing CTs rated 3000/5 per PG&E specifications.

C. CB 5: Install one-230kV SF6 circuit breakers with bushing CTs rated 3000/5 per PG&E specifications.

D. All CTs to be pulled into the control room.

E. Install G.E. D60 SET A relay as one terminal of a two-terminal carrier scheme on power line carrier.

1. Wire to outermost Bus-side CT of CB 4 and CB 5.

F. Install SEL 311 C SET B relay as one terminal of a two-terminal carrier scheme on power line carrier.

1. Wire to innermost Bus-side CT of CB 4 and CB 5.

G. Install Wave Trap with 200-400kHz tuning range.

H. Install Pulsar TCF-10B power line carrier transceiver for frequency shift keying scheme.

I. Install three (3) line-side CCVTs to provide polarizing potentials for line protection and station automatics.

IV. <u>CB 5/6: Colusa Sw Sta – Vaca Dixon #1 230kV Line</u>

A. Line Length: Approx 72 miles

B. CB 6: Install one-230kV SF6 circuit breakers with bushing CTs rated 3000/5 per PG&E specifications.

C. All CTs to be pulled into the control room.

D. Install G.E. L90 SET A current differential relay as one terminal of a two-terminal Colusa SW Sta – Vaca Dixon #1 pilot scheme using dual fiber optic communication line.

1. Wire to outermost Bus-side CT of CB 5 and CB 6.

E. Install SEL 311 L SET B current differential relay as one terminal of a two-terminal Colusa SW Sta – Vaca Dixon #1 pilot scheme using dual fiber optic communication line.

1. Wire to innermost Bus-side CT of CB 5 and CB 6.

F. Install three (3) line-side CCVTs to provide polarizing potentials for line protection and station automatics.

V. <u>CB 7/8: Cottonwood – Colusa SW Sta #2 230kV Line</u>

A. Line Length: Approx 71 miles

B. CB 7: Install one-230kV SF6 circuit breakers with bushing CTs rated 3000/5 per PG&E specifications.

C. CB 8: Install one-230kV SF6 circuit breakers with bushing CTs rated 3000/5 per PG&E specifications.

D. All CTs to be pulled into the control room.

E. Install G.E. L90 SET A current differential relay as one terminal of a two-terminal Cottonwood – Colusa SW Sta #2 pilot scheme using dual fiber optic communication line.

1. Wire to outermost Bus-side CT of CB 7 and CB 8.

F. Install SEL 311 L SET B current differential relay as one terminal of a two-terminal Cottonwood – Colusa SW Sta #2 pilot scheme using dual fiber optic communication line.

1. Wire to innermost Bus-side CT of CB 7 and CB 8.

G. Install three (3) line-side CCVTs to provide polarizing potentials for line protection and station automatics.

VI. <u>CB 8/9: Colusa SW Sta – Vaca Dixon #2 230kV Line</u>

A. Line Length: Approx 72 miles

B. CB 9: Install one-230kV SF6 circuit breakers with bushing CTs rated 3000/5 per PG&E specifications.

C. All CTs to be pulled into the control room.

D. Install G.E. L90 SET A current differential relay as one terminal of a two-terminal Colusa SW Sta - Vaca Dixon #2 pilot scheme using dual fiber optic communication line.

1. Wire to outermost Bus-side CT of CB 8 and CB 9.

E. Install SEL 311 L SET B current differential relay as one terminal of a two-terminal Colusa SW Sta - Vaca Dixon #2 pilot scheme using dual fiber optic communication line.

1. Wire to innermost Bus-side CT of CB 8 and CB 9.

F. Install three (3) line-side CCVTs to provide polarizing potentials for line protection and station automatics.

VII. <u>CB 10/11: Glenn- Colusa SW Sta 230kV Line</u>

A. Line Length: Approx 42 miles

B. CB 10: Install one-230kV SF6 circuit breakers with bushing CTs rated 3000/5

per PG&E specifications.

C. CB 11: Install one-230kV SF6 circuit breakers with bushing CTs rated 3000/5 per PG&E specifications.

D. All CTs to be pulled into the control room.

E. Install G.E. D60 SET A relay as one terminal of a two-terminal carrier scheme on power line carrier.

1. Wire to outermost Bus-side CT of CB 10 and CB 11.

F. Install SEL 311 C SET B relay as one terminal of a two-terminal carrier scheme on power line carrier.

1. Wire to innermost Bus-side CT of CB 10 and CB 11.

G. Install Wave Trap with 200-400kHz tuning range.

H. Install Pulsar TCF-10B power line carrier transceiver for frequency shift keying scheme.

I. Install three (3) line-side CCVTs to provide polarizing potentials for line protection and station automatics.

VIII. CB 11/12: Colusa Sw Sta – Vaca Dixon #3 230kV Line

A. Line Length: Approx 72 miles

B. CB 12: Install one-230kV SF6 circuit breakers with bushing CTs rated 3000/5 per PG&E specifications.

C. All CTs to be pulled into the control room.

D. Install G.E. L90 SET A current differential relay as one terminal of a two-terminal Colusa SW Sta – Vaca Dixon #3 pilot scheme using dual fiber optic communication line.

1. Wire to outermost Bus-side CT of CB 11 and CB 12.

E. Install SEL 311 L SET B current differential relay as one terminal of a two-terminal Colusa SW Sta – Vaca Dixon #3 pilot scheme using dual fiber optic communication line.

1. Wire to innermost Bus-side CT of CB 11 and CB 12.

F. Install three (3) line-side CCVTs to provide polarizing potentials for line protection and station automatics.

IX. CB 13/14: Bus Sectionalizing Breakers for Bus # 1 and Bus #2

A. CB 13: Install one-230kV SF6 circuit breakers with bushing CTs rated 3000/5 per PG&E specifications.

B. CB 14: Install one-230kV SF6 circuit breakers with bushing CTs rated 3000/5 per PG&E specifications.

C. All CTs to be pulled into the control room.

D. Install GE F60 as a tripping and Breaker Failure relay.

E. Install SEL351-6 as a SCADA relay

X. 230kV Bus #1 and #2 (PGE Facility)

A. Install ABB Type KAB high-impedance bus differential protection per the latest PG&E Design Standards.

XI. 230kV Bus #1 and #2 (CPV Colusa Facility)

A. Install ABB Type KAB high-impedance bus differential protection per the latest PG&E Design Standards.

COTTONWOOD SUBSTATION

I. CB 212: Cottonwood – Colusa SW Sta #1 230kV Line

Note: Relay replacement required to insure identical Current Differential Relays are installed at both terminals.

A. Line Length: Approx 71 miles

B. Remove existing line protection.

C. Install G.E. L90 SET A current differential relay as one terminal of a two-terminal Cottonwood – Colusa SW Sta #1 pilot scheme using dual fiber optic communication line.

D. Install SEL 311 L SET B current differential relay as one terminal of a two-terminal Cottonwood – Colusa SW Sta #1 pilot scheme using dual fiber optic communication line.

II. CB 232: Cottonwood – Colusa SW Sta #2 230kV Line

A. Line Length: Approx 71 miles

B. Remove existing line protection.

C. Install G.E. L90 SET A current differential relay as one terminal of a two-terminal Cottonwood – Colusa SW Sta #2 pilot scheme using dual fiber optic communication line.

D. Install SEL 311 L SET B current differential relay as one terminal of a two-terminal Cottonwood – Colusa SW Sta #2 pilot scheme using dual fiber optic communication line.

CORTINA SUBSTATION

I. CB 232: Colusa SW Sta - Cortina 230kV Line

A. Line Length: Approx 18.7 miles

B. Remove existing line protection.

C. Install G.E. L90 SET A current differential relay as one terminal of a two-terminal Colusa SW Sta - Cortina pilot scheme using dual fiber optic communication line.

D. Install SEL 311 L SET B current differential relay as one terminal of a two-terminal Colusa SW Sta - Cortina pilot scheme using dual fiber optic communication line.

GLENN SUBSTATION

This terminal will be a non-integrated terminal reference EDS 4028706, 4028707, 4028708, 4028709 substituting the G.E. D60 for the REL 512 and SEL 311C for the SEL 321.

I. CB 242: Glenn - Colusa SW Sta 230kV Line

- A. Line Length: Approx 42 miles
- B. Remove existing line protection.
- C. Install G.E. D60 SET A relay as one terminal of a two-terminal carrier scheme on power line carrier.
- D. Install SEL 311 C SET B relay as one terminal of a two-terminal carrier scheme on power line carrier.
- E. Install Basler-BPR Breaker Failure Relay on CB 242.
- F. Install SEL-279 reclosing relay on CB 242.
- G. Install Wave Trap with 200-400kHz tuning range.
- H. Install Pulsar TCF-10B power line carrier transceiver for frequency shift keying scheme.

LOGAN CREEK SUBSTATION

This terminal will be a non-integrated terminal reference EDS 4028706, 4028707, 4028708, 4028709 substituting the G.E. D60 for the REL 512 and SEL 311C for the SEL 321.

I. CB 262: Logan Creek - Colusa SW Sta 230kV Line

- A. Line Length: Approx 11 miles
- B. Remove existing line protection.
- C. Install G.E. D60 SET A relay as one terminal of a two-terminal carrier scheme on power line carrier.
- D. Install SEL 311 C SET B relay as one terminal of a two-terminal carrier scheme on power line carrier.
- E. Install Basler-BPR Breaker Failure Relay on CB 262.
- F. Install SEL-279 reclosing relay on CB 262.
- G. Install Wave Trap with 200-400kHz tuning range.
- H. Install Pulsar TCF-10B power line carrier transceiver for frequency shift keying scheme.

VACA DIXON SUBSTATION

All new relays for 230kV lines will be located in the new 230kV MPAC building

I. CB 422: Colusa Sw Sta – Vaca Dixon #1 230kV Line

A. Line Length: Approx 72 miles

B. Remove existing line protection.

C. Install G.E. L90 SET A current differential relay as one terminal of a two-terminal Colusa SW Sta – Vaca Dixon #1 pilot scheme using dual fiber optic communication line.

D. Install SEL 311 L SET B current differential relay as one terminal of a two-terminal Colusa SW Sta – Vaca Dixon #1 pilot scheme using dual fiber optic communication line.

II. CB 212: Colusa Sw Sta – Vaca Dixon #2 230kV Line

A. Line Length: Approx 72 miles

B. Remove existing line protection.

C. Install G.E. L90 SET A current differential relay as one terminal of a two-terminal Colusa SW Sta – Vaca Dixon #2 pilot scheme using dual fiber optic communication line.

D. Install SEL 311 L SET B current differential relay as one terminal of a two-terminal Colusa SW Sta – Vaca Dixon #2 pilot scheme using dual fiber optic communication line.

III. CB 222: Colusa Sw Sta – Vaca Dixon #3 230kV Line

A. Line Length: Approx 72 miles

B. Remove existing line protection.

C. Install G.E. L90 SET A current differential relay as one terminal of a two-terminal Colusa SW Sta – Vaca Dixon #3 pilot scheme using dual fiber optic communication line

D. Install SEL 311 L SET B current differential relay as one terminal of a two-terminal Colusa SW Sta – Vaca Dixon #3 pilot scheme using dual fiber optic communication line.

APPENDIX F3
LARGE GENERATOR INTERCONNECTION AGREEMENT

STANDARD LARGE GENERATOR INTERCONNECTION AGREEMENT (LGIA)

E&L WESTCOAST, LLC – COLUSA GENERATING STATION

PACIFIC GAS AND ELECTRIC COMPANY

CALIFORNIA INDEPENDENT SYSTEM OPERATOR CORPORATION

TABLE OF CONTENTS

ARTICLE 1. DEFINITIONS 2

ARTICLE 2. EFFECTIVE DATE, TERM AND TERMINATION 9
2.1 Effective Date 9
2.2 Term of Agreement 10
2.3 Termination Procedures 10
2.3.1 Written Notice 10
2.3.2 Default 10
2.3.3 Suspension of Work 10
2.3.4 10
2.4 Termination Costs 10
2.4.1 10
2.4.2 11
2.4.3 11
2.5 Disconnection 11
2.6 Survival 11

ARTICLE 3. REGULATORY FILINGS AND ISO TARIFF COMPLIANCE 11
3.1 Filing 11
3.2 Agreement Subject to ISO Tariff 12
3.3 Relationship Between this LGIA and the ISO Tariff 12
3.4 Relationship Between this LGIA and the QF PGA 12

ARTICLE 4. SCOPE OF SERVICE 12
4.1 Interconnection Service 12
4.2 Provision of Service 12
4.3 Performance Standards 12
4.4 No Transmission Service 13
4.5 Interconnection Customer Provided Services 13

ARTICLE 5. INTERCONNECTION FACILITIES ENGINEERING, PROCUREMENT, AND CONSTRUCTION 13
5.1 Options 13
5.1.1 Standard Option 13
5.1.2 Alternate Option 14
5.1.3 Option to Build 14
5.1.4 Negotiated Option 14
5.2 General Conditions Applicable to Option to Build 15
5.3 Liquidated Damages 17
5.4 Power System Stabilizers 18
5.5 Equipment Procurement 18
5.5.1 18
5.5.2 18
5.5.3 18

5.6 Construction Commencement 18
5.6.1 18
5.6.2 19
5.6.3 19
5.6.4 19
5.7 Work Progress 19
5.8 Information Exchange 19
5.9 Limited Operation 19
5.10 Interconnection Customer's Interconnection Facilities 19
5.10.1 Large Generating Facility and Interconnection Customer's Interconnection Facilities Specifications 20
5.10.2 Participating TO's and ISO's Review 20
5.10.3 Interconnection Customer's Interconnection Facilities Construction 20
5.10.4 Interconnection Customer to Meet Requirements of the Participating TO's Interconnection Handbook 21
5.11 Participating TO's Interconnection Facilities Construction 21
5.12 Access Rights 21
5.13 Lands of Other Property Owners 22
5.14 Permits 22
5.15 Early Construction of Base Case Facilities 22
5.16 Suspension 22
5.17 Taxes 23
5.17.1 Interconnection Customer Payments Not Taxable 23
5.17.2 Representations And Covenants 23
5.17.3 Indemnification for the Cost Consequences of Current Tax Liability Imposed Upon the Participating TO 24
5.17.4 Tax Gross-Up Amount 24
5.17.5 Private Letter Ruling or Change or Clarification of Law 25
5.17.6 Subsequent Taxable Events 26
5.17.7 Contests 26
5.17.8 Refund 27
5.17.9 Taxes Other Than Income Taxes 28
5.18 Tax Status 28
5.19 Modification 29
5.19.1 General 29
5.19.2 Standards 29
5.19.3 Modification Costs 29

ARTICLE 6. TESTING AND INSPECTION 30
6.1 Pre-Commercial Operation Date Testing and Modifications 30
6.2 Post-Commercial Operation Date Testing and Modifications 30
6.3 Right to Observe Testing 30
6.4 Right to Inspect 30

ARTICLE 7. METERING 31
7.1 General 31
7.2 Check Meters 31
7.3 Participating TO Retail Metering 31

ARTICLE 8. COMMUNICATIONS 31
8.1 Interconnection Customer Obligations 31
8.2 Remote Terminal Unit 32
8.3 No Annexation 32

ARTICLE 9. OPERATIONS 32
9.1 General 32
9.2 Control Area Notification 33
9.3 ISO and Participating TO Obligations 33
9.4 Interconnection Customer Obligations 33
9.5 Start-Up and Synchronization 34
9.6 Reactive Power 34
9.6.1 Power Factor Design Criteria 34
9.6.2 Voltage Schedules 34
9.6.2.1 Governors and Regulators 34
9.6.3 Payment for Reactive Power 35
9.7 Outages and Interruptions 35
9.7.1 Outages 35
9.7.1.1 Outage Authority and Coordination 35
9.7.1.2 Outage Schedules 36
9.7.1.3 Outage Restoration 36
9.7.2 Interruption of Service 37
9.7.2.1 37
9.7.2.2 37
9.7.2.3 37
9.7.2.4 37
9.7.2.5 37
9.7.3 Under-Frequency and Over-Frequency Conditions 38
9.7.4 System Protection and Other Control Requirements 38
9.7.4.1 System Protection Facilities 38
9.7.4.2 38
9.7.4.3 38
9.7.4.4 38
9.7.4.5 39
9.7.4.6 39
9.7.5 Requirements for Protection 39
9.7.6 Power Quality 40
9.8 Switching and Tagging Rules 40
9.9 Use of Interconnection Facilities by Third Parties 40
9.9.1 Purpose of Interconnection Facilities 40
9.9.2 Third Party Users 40
9.10 Disturbance Analysis Data Exchange 41

ARTICLE 10. MAINTENANCE 41
10.1 Participating TO Obligations 41
10.2 Interconnection Customer Obligations 41
10.3 Coordination 41
10.4 Secondary Systems 41
10.5 Operating and Maintenance Expenses 41

ARTICLE 11. PERFORMANCE OBLIGATION 42
11.1 Interconnection Customer's Interconnection Facilities 42
11.2 Participating TO's Interconnection Facilities 42
11.3 Network Upgrades and Distribution Upgrades 42
11.4 Transmission Credits 42
11.4.1 Repayment of Amounts Advanced for Network Upgrades 42
11.4.2 Special Provisions for Affected Systems 43
11.4.3 43
11.5 Provision of Security 43
11.5.1 44
11.5.2 44
11.5.3 44
11.6 Interconnection Customer Compensation 44
11.6.1 Interconnection Customer Compensation for Actions During Emergency Condition 44

ARTICLE 12. INVOICE 44
12.1 General 44
12.2 Final Invoice 44
12.3 Payment 45
12.4 Disputes 45

ARTICLE 13. EMERGENCIES 45
13.1 [Reserved] 45
13.2 Obligations 46
13.3 Notice 46
13.4 Immediate Action 46
13.5 ISO and Participating TO Authority 46
13.5.1 General 46
13.5.2 Reduction and Disconnection 47
13.6 Interconnection Customer Authority 47
13.7 Limited Liability 48

ARTICLE 14. REGULATORY REQUIREMENTS AND GOVERNING LAWS 48
14.1 Regulatory Requirements 48
14.2 Governing Law 48
14.2.1 48
14.2.2 48
14.2.3 48

ARTICLE 15. NOTICES 48
15.1 General 48
15.2 Billings and Payments 49
15.3 Alternative Forms of Notice 49
15.4 Operations and Maintenance Notice 49

ARTICLE 16. FORCE MAJEURE 49
16.1 Force Majeure 49
16.1.1 49
16.1.2 49

ARTICLE 17. DEFAULT 50
17.1 Default 50
17.1.1 General 50
17.1.2 Right to Terminate 50

ARTICLE 18. INDEMNITY, CONSEQUENTIAL DAMAGES, AND INSURANCE 50
18.1 Indemnity 50
18.1.1 Indemnified Party 50
18.1.2 Indemnifying Party 50
18.1.3 Indemnity Procedures 51
18.2 Consequential Damages 51
18.3 Insurance 52
18.3.1 52
18.3.2 52
18.3.3 52
18.3.4 52
18.3.5 52
18.3.6 53
18.3.7 53
18.3.8 53
18.3.9 53
18.3.10 53
18.3.11 54

ARTICLE 19. ASSIGNMENT 54
19.1 Assignment 54

ARTICLE 20. SEVERABILITY 54
20.1 Severability 54

ARTICLE 21. COMPARABILITY 55
21.1 Comparability 55

ARTICLE 22. CONFIDENTIALITY 55
22.1 Confidentiality 55
22.1.1 Term 55
22.1.2 Scope 55
22.1.3 Release of Confidential Information 56
22.1.4 Rights 56
22.1.5 No Warranties 56
22.1.6 Standard of Care 56
22.1.7 Order of Disclosure 56
22.1.8 Termination of Agreement 57
22.1.9 Remedies 57
22.1.10 Disclosure to FERC, its Staff, or a State 57
22.1.11 58

ARTICLE 23. ENVIRONMENTAL RELEASES 58
23.1 58

ARTICLE 24. INFORMATION REQUIREMENTS 59
24.1 Information Acquisition 59
24.2 Information Submission by Participating TO 59
24.3 Updated Information Submission by Interconnection Customer 59
24.4 Information Supplementation 59

ARTICLE 25. INFORMATION ACCESS AND AUDIT RIGHTS 60
25.1 Information Access 60
25.2 Reporting of Non-Force Majeure Events 60
25.3 Audit Rights 61
25.3.1 61
25.3.2 61
25.4 Audit Rights Periods 61
25.4.1 Audit Rights Period for Construction-Related Accounts and Records 61
25.4.2 Audit Rights Period for All Other Accounts and Records 62
25.5 Audit Results 62
25.5.1 62

ARTICLE 26. SUBCONTRACTORS 62
26.1 General 62
26.2 Responsibility of Principal 62
26.3 No Limitation by Insurance 63

ARTICLE 27. DISPUTES 63
27.1 Submission 63
27.2 External Arbitration Procedures 63
27.3 Arbitration Decisions 64
27.4 Costs 64

ARTICLE 28. REPRESENTATIONS, WARRANTIES AND COVENANTS 64
28.1 General 64
28.1.1 Good Standing 64
28.1.2 Authority 64
28.1.3 No Conflict 65
28.1.4 Consent and Approval 65

ARTICLE 29. [RESERVED] 65

ARTICLE 30. MISCELLANEOUS 65
30.1 Binding Effect 65
30.2 Conflicts 65
30.3 Rules of Interpretation 65
30.4 Entire Agreement 66
30.5 No Third Party Beneficiaries 66
30.6 Waiver 66
30.7 Headings 66
30.8 Multiple Counterparts 66
30.9 Amendment 66
30.10 Modification by the Parties 67
30.11 Reservation of Rights 67
30.12 No Partnership 68
30.13 Joint and Several Obligations 68

Appendices 70

Appendix A Interconnection Facilities, Network Upgrades and Distribution Upgrades

Appendix B Milestones

Appendix C Interconnection Details

Appendix D Security Arrangements Details

Appendix E Commercial Operation Date

Appendix F Addresses for Delivery of Notices and Billings

Appendix G Reliability Management System Agreement

Appendix H Interconnection Requirements for a Wind Generating Plant

STANDARD LARGE GENERATOR INTERCONNECTION AGREEMENT

E&L WESTCOAST, LLC – COLUSA GENERATING STATION

PACIFIC GAS AND ELECTRIC CORPORATION]

CALIFORNIA INDEPENDENT SYSTEM OPERATOR CORPORATION

THIS STANDARD LARGE GENERATOR INTERCONNECTION AGREEMENT ("LGIA") is made and entered into this ____ day of _____ 2006, by and among **E&L Westcoast, LLC**, a limited liability company formed in the State of Delaware ("Interconnection Customer" with a Large Generating Facility), **Pacific Gas and Electric Company**, a corporation organized and existing under the laws of the State of California ("**Participating TO**"), and **California Independent System Operator Corporation**, a California nonprofit public benefit corporation organized and existing under the laws of the State of California ("ISO"). Interconnection Customer, Participating TO, and ISO each may be referred to as a "Party" or collectively as the "Parties."

RECITALS

WHEREAS, ISO exercises Operational Control over the ISO Controlled Grid; and

WHEREAS, the Participating TO owns, operates, and maintains the Participating TO's Transmission System; and

WHEREAS, Interconnection Customer intends to own, lease and/or control and operate the Generating Facility identified as a Large Generating Facility in Appendix C to this LGIA; and

WHEREAS, Interconnection Customer, Participating TO, and ISO have agreed to enter into this LGIA for the purpose of interconnecting the Large Generating Facility with the Participating TO's Transmission System;

NOW, THEREFORE, in consideration of and subject to the mutual covenants contained herein, it is agreed:

When used in this LGIA, terms with initial capitalization that are not defined in Article 1 shall have the meanings specified in the Article in which they are used.

ARTICLE 1. DEFINITIONS

Adverse System Impact shall mean the negative effects due to technical or operational limits on conductors or equipment being exceeded that may compromise the safety and reliability of the electric system.

Affected System shall mean an electric system other than the ISO Controlled Grid that may be affected by the proposed interconnection, including the Participating TO's electric system that is not part of the ISO Controlled Grid.

Affiliate shall mean, with respect to a corporation, partnership or other entity, each such other corporation, partnership or other entity that directly or indirectly, through one or more intermediaries, controls, is controlled by, or is under common control with, such corporation, partnership or other entity.

Applicable Laws and Regulations shall mean all duly promulgated applicable federal, state and local laws, regulations, rules, ordinances, codes, decrees, judgments, directives, or judicial or administrative orders, permits and other duly authorized actions of any Governmental Authority.

Applicable Reliability Council shall mean the Western Electricity Coordinating Council or its successor.

Applicable Reliability Standards shall mean the requirements and guidelines of NERC, the Applicable Reliability Council, and the Control Area of the Participating TO's Transmission System to which the Generating Facility is directly interconnected.

Base Case shall mean the base case power flow, short circuit, and stability data bases used for the Interconnection Studies.

Breach shall mean the failure of a Party to perform or observe any material term or condition of this LGIA.

Breaching Party shall mean a Party that is in Breach of this LGIA.

Business Day shall mean Monday through Friday, excluding federal holidays and the day after Thanksgiving Day.

Calendar Day shall mean any day including Saturday, Sunday or a federal holiday.

Commercial Operation shall mean the status of an Electric Generating Unit at a Generating Facility that has commenced generating electricity for sale, excluding electricity generated during Trial Operation.

Commercial Operation Date of an Electric Generating Unit shall mean the date on which the Electric Generating Unit at the Generating Facility commences Commercial Operation as agreed to by the applicable Participating TO and the Interconnection Customer pursuant to Appendix E to this LGIA.

Confidential Information shall mean any confidential, proprietary or trade secret information of a plan, specification, pattern, procedure, design, device, list, concept, policy or compilation relating to the present or planned business of a Party, which is designated as confidential by the Party supplying the information, whether conveyed orally, electronically, in writing, through inspection, or otherwise, subject to Article 22.1.2.

Control Area shall mean an electrical system or systems bounded by interconnection metering and telemetry, capable of controlling generation to maintain its interchange schedule with other Control Areas and contributing to frequency regulation of the interconnection. A Control Area must be certified by the Applicable Reliability Council.

Default shall mean the failure of a Breaching Party to cure its Breach in accordance with Article 17 of this LGIA.

Distribution System shall mean those non-ISO-controlled transmission and distribution facilities owned by the Participating TO.

Distribution Upgrades shall mean the additions, modifications, and upgrades to the Participating TO's Distribution System. Distribution Upgrades do not include Interconnection Facilities.

Effective Date shall mean the date on which this LGIA becomes effective upon execution by the Parties subject to acceptance by FERC, or if filed unexecuted, upon the date specified by FERC.

Electric Generating Unit shall mean an individual electric generator and its associated plant and apparatus whose electrical output is capable of being separately identified and metered.

Emergency Condition shall mean a condition or situation: (1) that in the judgment of the Party making the claim is imminently likely to endanger life or property; or (2) that, in the case of the ISO, is imminently likely (as determined in a non-discriminatory manner) to cause a material adverse effect on the security of, or damage to, the ISO Controlled Grid or the electric systems of others to which the ISO Controlled Grid is directly connected; (3) that, in the case of the Participating TO, is imminently likely (as determined in a non-discriminatory manner) to cause a material adverse effect on the security of, or damage to, the Participating TO's Transmission System, Participating TO's Interconnection Facilities, Distribution System, or the electric systems of others to which the Participating TO's electric system is directly connected; or (4)

that, in the case of the Interconnection Customer, is imminently likely (as determined in a non-discriminatory manner) to cause a material adverse effect on the security of, or damage to, the Generating Facility or Interconnection Customer's Interconnection Facilities. System restoration and black start shall be considered Emergency Conditions; provided, that Interconnection Customer is not obligated by this LGIA to possess black start capability.

Environmental Law shall mean Applicable Laws or Regulations relating to pollution or protection of the environment or natural resources.

Federal Power Act shall mean the Federal Power Act, as amended, 16 U.S.C. §§ 791a *et seq.*

FERC shall mean the Federal Energy Regulatory Commission or its successor.

Force Majeure shall mean any act of God, labor disturbance, act of the public enemy, war, insurrection, riot, fire, storm or flood, explosion, breakage or accident to machinery or equipment, any order, regulation or restriction imposed by governmental, military or lawfully established civilian authorities, or any other cause beyond a Party's control. A Force Majeure event does not include acts of negligence or intentional wrongdoing by the Party claiming Force Majeure.

Generating Facility shall mean the Interconnection Customer's Electric Generating Unit(s) used for the production of electricity identified in the Interconnection Customer's Interconnection Request, but shall not include the Interconnection Customer's Interconnection Facilities.

Generating Facility Capacity shall mean the net capacity of the Generating Facility and the aggregate net capacity of the Generating Facility where it includes multiple energy production devices.

Good Utility Practice shall mean any of the practices, methods and acts engaged in or approved by a significant portion of the electric utility industry during the relevant time period, or any of the practices, methods and acts which, in the exercise of reasonable judgment in light of the facts known at the time the decision was made, could have been expected to accomplish the desired result at a reasonable cost consistent with good business practices, reliability, safety and expedition. Good Utility Practice is not intended to be any one of a number of the optimum practices, methods, or acts to the exclusion of all others, but rather to be acceptable practices, methods, or acts generally accepted in the region.

Governmental Authority shall mean any federal, state, local or other governmental, regulatory or administrative agency, court, commission, department, board, or other governmental subdivision, legislature, rulemaking board, tribunal, or other governmental authority having jurisdiction over the Parties, their respective facilities, or the respective services they provide, and exercising or entitled to exercise

any administrative, executive, police, or taxing authority or power; provided, however, that such term does not include the Interconnection Customer, ISO, Participating TO, or any Affiliate thereof.

Hazardous Substances shall mean any chemicals, materials or substances defined as or included in the definition of "hazardous substances," "hazardous wastes," "hazardous materials," "hazardous constituents," "restricted hazardous materials," "extremely hazardous substances," "toxic substances," "radioactive substances," "contaminants," "pollutants," "toxic pollutants" or words of similar meaning and regulatory effect under any applicable Environmental Law, or any other chemical, material or substance, exposure to which is prohibited, limited or regulated by any applicable Environmental Law.

Initial Synchronization Date shall mean the date upon which an Electric Generating Unit is initially synchronized and upon which Trial Operation begins.

In-Service Date shall mean the date upon which the Interconnection Customer reasonably expects it will be ready to begin use of the Participating TO's Interconnection Facilities to obtain back feed power.

Interconnection Customer's Interconnection Facilities shall mean all facilities and equipment, as identified in Appendix A of this LGIA, that are located between the Generating Facility and the Point of Change of Ownership, including any modification, addition, or upgrades to such facilities and equipment necessary to physically and electrically interconnect the Generating Facility to the Participating TO's Transmission System. Interconnection Customer's Interconnection Facilities are sole use facilities.

Interconnection Facilities shall mean the Participating TO's Interconnection Facilities and the Interconnection Customer's Interconnection Facilities. Collectively, Interconnection Facilities include all facilities and equipment between the Generating Facility and the Point of Interconnection, including any modification, additions or upgrades that are necessary to physically and electrically interconnect the Generating Facility to the Participating TO's Transmission System. Interconnection Facilities are sole use facilities and shall not include Distribution Upgrades, Stand Alone Network Upgrades or Network Upgrades.

Interconnection Facilities Study shall mean the study conducted or caused to be performed by the ISO, in coordination with the applicable Participating TO(s), or a third party consultant for the Interconnection Customer to determine a list of facilities (including the Participating TO's Interconnection Facilities, Network Upgrades, and Distribution Upgrades), the cost of those facilities, and the time required to interconnect the Generating Facility with the Participating TO's Transmission System.

Interconnection Facilities Study Agreement shall mean the agreement between the Interconnection Customer and the ISO for conducting the Interconnection Facilities Study.

Interconnection Feasibility Study shall mean the preliminary evaluation conducted or caused to be performed by the ISO, in coordination with the applicable Participating TO(s), or a third party consultant for the Interconnection Customer of the system impact and cost of interconnecting the Generating Facility to the Participating TO's Transmission System, and, if reasonably practicable, an informational assessment, as needed, of other affected owners' portions of the ISO Controlled Grid.

Interconnection Handbook shall mean a handbook, developed by the Participating TO and posted on the Participating TO's web site or otherwise made available by the Participating TO, describing technical and operational requirements for wholesale generators and loads connected to the Participating TO's portion of the ISO Controlled Grid, as such handbook may be modified or superseded from time to time. Participating TO's standards contained in the Interconnection Handbook shall be deemed consistent with Good Utility Practice and Applicable Reliability Standards. In the event of a conflict between the terms of this LGIA and the terms of the Participating TO's Interconnection Handbook, the terms in this LGIA shall apply.

Interconnection Request shall mean a request, in the form of Appendix 1 to the Standard Large Generator Interconnection Procedures, in accordance with the ISO Tariff.

Interconnection Service shall mean the service provided by the Participating TO and ISO associated with interconnecting the Interconnection Customer's Generating Facility to the Participating TO's Transmission System and enabling the ISO Controlled Grid to receive electric energy and capacity from the Generating Facility at the Point of Interconnection, pursuant to the terms of this LGIA, the Participating TO's Transmission Owner Tariff, and the ISO Tariff.

Interconnection Study shall mean any of the following studies: the Interconnection Feasibility Study, the Interconnection System Impact Study, and the Interconnection Facilities Study conducted or caused to be performed by the ISO, in coordination with the applicable Participating TO(s), or a third party consultant for the Interconnection Customer pursuant to the Standard Large Generator Interconnection Procedures.

Interconnection System Impact Study shall mean the engineering study conducted or caused to be performed by the ISO, in coordination with the applicable Participating TO(s), or a third party consultant for the Interconnection Customer that evaluates the impact of the proposed interconnection on the safety and reliability of the Participating TO's Transmission System and, if applicable, an Affected System. The study shall identify and detail the system impacts that would result if the Generating Facility were interconnected without project modifications or system modifications, focusing on the Adverse System Impacts identified in the Interconnection Feasibility Study, or to study potential impacts, including but not limited to those identified in the

Scoping Meeting as described in the Standard Large Generator Interconnection Procedures.

IRS shall mean the Internal Revenue Service.

ISO Controlled Grid shall mean the system of transmission lines and associated facilities of the parties to the Transmission Control Agreement that have been placed under the ISO's Operational Control.

ISO Tariff shall mean the ISO's tariff, as filed with FERC, and as amended or supplemented from time to time, or any successor tariff.

Large Generating Facility shall mean a Generating Facility having a Generating Facility Capacity of more than 20 MW.

Loss shall mean any and all damages, losses, and claims, including claims and actions relating to injury to or death of any person or damage to property, demand, suits, recoveries, costs and expenses, court costs, attorney fees, and all other obligations by or to third parties.

Material Modification shall mean those modifications that have a material impact on the cost or timing of any Interconnection Request or any other valid interconnection request with a later queue priority date.

Metering Equipment shall mean all metering equipment installed or to be installed for measuring the output of the Generating Facility pursuant to this LGIA at the metering points, including but not limited to instrument transformers, MWh-meters, data acquisition equipment, transducers, remote terminal unit, communications equipment, phone lines, and fiber optics.

NERC shall mean the North American Electric Reliability Council or its successor organization.

Network Upgrades shall be Participating TO's Delivery Network Upgrades and Participating TO's Reliability Network Upgrades.

Operational Control shall mean the rights of the ISO under the Transmission Control Agreement and the ISO Tariff to direct the parties to the Transmission Control Agreement how to operate their transmission lines and facilities and other electric plant affecting the reliability of those lines and facilities for the purpose of affording comparable non-discriminatory transmission access and meeting applicable reliability criteria.

Participating TO's Delivery Network Upgrades shall mean the additions, modifications, and upgrades to the Participating TO's Transmission System at or beyond the Point of Interconnection, other than Reliability Network Upgrades, identified

in the Interconnection Studies, as identified in Appendix A, to relieve constraints on the ISO Controlled Grid.

Participating TO's Interconnection Facilities shall mean all facilities and equipment owned, controlled or operated by the Participating TO from the Point of Change of Ownership to the Point of Interconnection as identified in Appendix A to this LGIA, including any modifications, additions or upgrades to such facilities and equipment. Participating TO's Interconnection Facilities are sole use facilities and shall not include Distribution Upgrades, Stand Alone Network Upgrades or Network Upgrades.

Participating TO's Reliability Network Upgrades shall mean the additions, modifications, and upgrades to the Participating TO's Transmission System at or beyond the Point of Interconnection, identified in the Interconnection Studies, as identified in Appendix A, necessary to interconnect the Large Generating Facility safely and reliably to the Participating TO's Transmission System, which would not have been necessary but for the interconnection of the Large Generating Facility, including additions, modifications, and upgrades necessary to remedy short circuit or stability problems resulting from the interconnection of the Large Generating Facility to the Participating TO's Transmission System. Participating TO's Reliability Network Upgrades also include, consistent with Applicable Reliability Council practice, the Participating TO's facilities necessary to mitigate any adverse impact the Large Generating Facility's interconnection may have on a path's Applicable Reliability Council rating.

Participating TO's Transmission System shall mean the facilities owned and operated by the Participating TO and that have been placed under the ISO's Operational Control, which facilities form part of the ISO Controlled Grid.

Party or Parties shall mean the Participating TO, ISO, Interconnection Customer or the applicable combination of the above.

Point of Change of Ownership shall mean the point, as set forth in Appendix A to this LGIA, where the Interconnection Customer's Interconnection Facilities connect to the Participating TO's Interconnection Facilities.

Point of Interconnection shall mean the point, as set forth in Appendix A to this LGIA, where the Interconnection Facilities connect to the Participating TO's Transmission System.

Qualifying Facility shall mean a qualifying cogeneration facility or qualifying small power production facility, as defined in the Code of Federal Regulations, Title 18, Part 292 (18 C.F.R. §292).

QF PGA shall mean a Qualifying Facility Participating Generator Agreement specifying the special provisions for the operating relationship between a Qualifying

Facility and the ISO, a pro forma version of which is set forth in Appendix K of the ISO Tariff.

Reasonable Efforts shall mean, with respect to an action required to be attempted or taken by a Party under this LGIA, efforts that are timely and consistent with Good Utility Practice and are otherwise substantially equivalent to those a Party would use to protect its own interests.

Scoping Meeting shall mean the meeting among representatives of the Interconnection Customer, the Participating TO(s), other Affected Systems, and the ISO conducted for the purpose of discussing alternative interconnection options, to exchange information including any transmission data and earlier study evaluations that would be reasonably expected to impact such interconnection options, to analyze such information, and to determine the potential feasible Points of Interconnection.

Stand Alone Network Upgrades shall mean Network Upgrades that the Interconnection Customer may construct without affecting day-to-day operations of the ISO Controlled Grid or Affected Systems during their construction. The Participating TO, the ISO, and the Interconnection Customer must agree as to what constitutes Stand Alone Network Upgrades and identify them in Appendix A to this LGIA.

Standard Large Generator Interconnection Procedures (LGIP) shall mean the ISO protocol that sets forth the interconnection procedures applicable to an Interconnection Request pertaining to a Large Generating Facility that is included in the ISO Tariff.

System Protection Facilities shall mean the equipment, including necessary protection signal communications equipment, that protects (1) the Participating TO's Transmission System, Participating TO's Interconnection Facilities, ISO Controlled Grid, and Affected Systems from faults or other electrical disturbances occurring at the Generating Facility and (2) the Generating Facility from faults or other electrical system disturbances occurring on the ISO Controlled Grid, Participating TO's Interconnection Facilities, and Affected Systems or on other delivery systems or other generating systems to which the ISO Controlled Grid is directly connected.

Transmission Control Agreement shall mean ISO FERC Electric Tariff No. 7.

Trial Operation shall mean the period during which the Interconnection Customer is engaged in on-site test operations and commissioning of an Electric Generating Unit prior to Commercial Operation.

ARTICLE 2. EFFECTIVE DATE, TERM AND TERMINATION

2.1 Effective Date. This LGIA shall become effective upon execution by the Parties subject to acceptance by FERC (if applicable), or if filed unexecuted, upon the

date specified by FERC. The ISO and Participating TO shall promptly file this LGIA with FERC upon execution in accordance with Article 3.1, if required.

2.2 Term of Agreement. Subject to the provisions of Article 2.3, this LGIA shall remain in effect for a period of twenty (20) years from the Effective Date and shall be automatically renewed for each successive one-year period thereafter.

2.3 Termination Procedures.

2.3.1 Written Notice. This LGIA may be terminated by the Interconnection Customer after giving the ISO and the Participating TO ninety (90) Calendar Days advance written notice, or by the ISO and the Participating TO notifying FERC after the Generating Facility permanently ceases Commercial Operation.

2.3.2 Default. A Party may terminate this LGIA in accordance with Article 17.

2.3.3 Suspension of Work. This LGIA may be deemed terminated in accordance with Article 5.16.

2.3.4 Notwithstanding Articles 2.3.1, 2.3.2, and 2.3.3, no termination shall become effective until the Parties have complied with all Applicable Laws and Regulations applicable to such termination, including the filing with FERC of a notice of termination of this LGIA, which notice has been accepted for filing by FERC.

2.4 Termination Costs. If this LGIA terminates pursuant to Article 2.3 above, the Interconnection Customer shall pay all costs incurred or irrevocably committed to be incurred in association with the Interconnection Customer's interconnection (including any cancellation costs relating to orders or contracts for Interconnection Facilities and equipment) and other expenses, including any Network Upgrades and Distribution Upgrades for which the Participating TO or ISO has incurred expenses or has irrevocably committed to incur expenses and has not been reimbursed by the Interconnection Customer, as of the date of the other Parties' receipt of the notice of termination, subject to the limitations set forth in this Article 2.4. Nothing in this Article 2.4 shall limit the Parties' rights under Article 17.

2.4.1 Notwithstanding the foregoing, in the event of termination by a Party, all Parties shall use commercially Reasonable Efforts to mitigate the costs, damages and charges arising as a consequence of termination. With respect to any portion of the Participating TO's Interconnection Facilities that have not yet been constructed or installed, the Participating TO shall to the extent possible and with the Interconnection Customer's authorization cancel any pending orders of, or return, any materials or equipment for, or contracts for construction of, such facilities; provided

that in the event the Interconnection Customer elects not to authorize such cancellation, the Interconnection Customer shall assume all payment obligations with respect to such materials, equipment, and contracts, and the Participating TO shall deliver such material and equipment, and, if necessary, assign such contracts, to the Interconnection Customer as soon as practicable, at the Interconnection Customer's expense. To the extent that the Interconnection Customer has already paid the Participating TO for any or all such costs of materials or equipment not taken by the Interconnection Customer, the Participating TO shall promptly refund such amounts to the Interconnection Customer, less any costs, including penalties, incurred by the Participating TO to cancel any pending orders of or return such materials, equipment, or contracts.

2.4.2 The Participating TO may, at its option, retain any portion of such materials, equipment, or facilities that the Interconnection Customer chooses not to accept delivery of, in which case the Participating TO shall be responsible for all costs associated with procuring such materials, equipment, or facilities.

2.4.3 With respect to any portion of the Interconnection Facilities, and any other facilities already installed or constructed pursuant to the terms of this LGIA, Interconnection Customer shall be responsible for all costs associated with the removal, relocation or other disposition or retirement of such materials, equipment, or facilities.

2.5 **Disconnection**. Upon termination of this LGIA, the Parties will take all appropriate steps to disconnect the Large Generating Facility from the Participating TO's Transmission System. All costs required to effectuate such disconnection shall be borne by the terminating Party, unless such termination resulted from the non-terminating Party's Default of this LGIA or such non-terminating Party otherwise is responsible for these costs under this LGIA.

2.6 **Survival**. This LGIA shall continue in effect after termination to the extent necessary to provide for final billings and payments and for costs incurred hereunder, including billings and payments pursuant to this LGIA; to permit the determination and enforcement of liability and indemnification obligations arising from acts or events that occurred while this LGIA was in effect; and to permit each Party to have access to the lands of the other Parties pursuant to this LGIA or other applicable agreements, to disconnect, remove or salvage its own facilities and equipment.

ARTICLE 3. REGULATORY FILINGS AND ISO TARIFF COMPLIANCE

3.1 **Filing**. The Participating TO and the ISO shall file this LGIA (and any amendment hereto) with the appropriate Governmental Authority(ies), if required.

The Interconnection Customer may request that any information so provided be subject to the confidentiality provisions of Article 22. If the Interconnection Customer has executed this LGIA, or any amendment thereto, the Interconnection Customer shall reasonably cooperate with the Participating TO and ISO with respect to such filing and to provide any information reasonably requested by the Participating TO or ISO needed to comply with applicable regulatory requirements.

3.2 **Agreement Subject to ISO Tariff**. The Interconnection Customer will comply with all applicable provisions of the ISO Tariff, including the LGIP.

3.3 **Relationship Between this LGIA and the ISO Tariff.** With regard to rights and obligations between the Participating TO and the Interconnection Customer, if and to the extent a matter is specifically addressed by a provision of this LGIA (including any appendices, schedules or other attachments to this LGIA), the provisions of this LGIA shall govern. If and to the extent a provision of this LGIA is inconsistent with the ISO Tariff and dictates rights and obligations between the ISO and the Participating TO or the ISO and the Interconnection Customer, the ISO Tariff shall govern.

3.4 **Relationship Between this LGIA and the QF PGA.** With regard to the rights and obligations of a Qualifying Facility that has entered into a QF PGA with the ISO and has entered into this LGIA, if and to the extent a matter is specifically addressed by a provision of the QF PGA that is inconsistent with this LGIA, the terms of the QF PGA shall govern.

ARTICLE 4. SCOPE OF SERVICE

4.1 **Interconnection Service.** Interconnection Service allows the Interconnection Customer to connect the Large Generating Facility to the Participating TO's Transmission System and be eligible to deliver the Large Generating Facility's output using the available capacity of the ISO Controlled Grid. To the extent the Interconnection Customer wants to receive Interconnection Service, the Participating TO shall construct facilities identified in Appendices A and C that the Participating TO is responsible to construct.

Interconnection Service does not necessarily provide the Interconnection Customer with the capability to physically deliver the output of its Large Generating Facility to any particular load on the ISO Controlled Grid without incurring congestion costs. In the event of transmission constraints on the ISO Controlled Grid, the Interconnection Customer's Large Generating Facility shall be subject to the applicable congestion management procedures in the ISO Tariff in the same manner as all other resources.

4.2 Provision of Service. The Participating TO and the ISO shall provide Interconnection Service for the Large Generating Facility.

4.3 Performance Standards. Each Party shall perform all of its obligations under this LGIA in accordance with Applicable Laws and Regulations, Applicable Reliability Standards, and Good Utility Practice, and to the extent a Party is required or prevented or limited in taking any action by such regulations and standards, such Party shall not be deemed to be in Breach of this LGIA for its compliance therewith. If such Party is the ISO or Participating TO, then that Party shall amend the LGIA and submit the amendment to FERC for approval.

4.4 No Transmission Service. The execution of this LGIA does not constitute a request for, nor the provision of, any transmission service under the ISO Tariff, and does not convey any right to deliver electricity to any specific customer or point of delivery.

4.5 Interconnection Customer Provided Services. The services provided by Interconnection Customer under this LGIA are set forth in Article 9.6 and Article 13.5.1. Interconnection Customer shall be paid for such services in accordance with Article 11.6.

ARTICLE 5. INTERCONNECTION FACILITIES ENGINEERING, PROCUREMENT, AND CONSTRUCTION

Interconnection Facilities, Network Upgrades, and Distribution Upgrades shall be studied, designed, and constructed pursuant to Good Utility Practice. Such studies, design and construction shall be based on the assumed accuracy and completeness of all technical information received by the Participating TO and the ISO from the Interconnection Customer associated with interconnecting the Large Generating Facility.

5.1 Options. Unless otherwise mutually agreed among the Parties, the Interconnection Customer shall select the In-Service Date, Initial Synchronization Date, and Commercial Operation Date; and either Standard Option or Alternate Option set forth below for completion of the Participating TO's Interconnection Facilities and Network Upgrades as set forth in Appendix A, Interconnection Facilities, Network Upgrades, and Distribution Upgrades, and such dates and selected option shall be set forth in Appendix B, Milestones.

5.1.1 Standard Option. The Participating TO shall design, procure, and construct the Participating TO's Interconnection Facilities, Network Upgrades, and Distribution Upgrades, using Reasonable Efforts to complete the Participating TO's Interconnection Facilities, Network Upgrades, and Distribution Upgrades by the dates set forth in Appendix B, Milestones. The Participating TO shall not be required to undertake any

action which is inconsistent with its standard safety practices, its material and equipment specifications, its design criteria and construction procedures, its labor agreements, and Applicable Laws and Regulations. In the event the Participating TO reasonably expects that it will not be able to complete the Participating TO's Interconnection Facilities, Network Upgrades, and Distribution Upgrades by the specified dates, the Participating TO shall promptly provide written notice to the Interconnection Customer and the ISO and shall undertake Reasonable Efforts to meet the earliest dates thereafter.

5.1.2 Alternate Option. If the dates designated by the Interconnection Customer are acceptable to the Participating TO, the Participating TO shall so notify the Interconnection Customer within thirty (30) Calendar Days, and shall assume responsibility for the design, procurement and construction of the Participating TO's Interconnection Facilities by the designated dates.

If the Participating TO subsequently fails to complete the Participating TO's Interconnection Facilities by the In-Service Date, to the extent necessary to provide back feed power; or fails to complete Network Upgrades by the Initial Synchronization Date to the extent necessary to allow for Trial Operation at full power output, unless other arrangements are made by the Parties for such Trial Operation; or fails to complete the Network Upgrades by the Commercial Operation Date, as such dates are reflected in Appendix B, Milestones; the Participating TO shall pay the Interconnection Customer liquidated damages in accordance with Article 5.3, Liquidated Damages, provided, however, the dates designated by the Interconnection Customer shall be extended day for day for each day that the ISO refuses to grant clearances to install equipment.

5.1.3 Option to Build. If the dates designated by the Interconnection Customer are not acceptable to the Participating TO, the Participating TO shall so notify the Interconnection Customer within thirty (30) Calendar Days, and unless the Parties agree otherwise, the Interconnection Customer shall have the option to assume responsibility for the design, procurement and construction of the Participating TO's Interconnection Facilities and Stand Alone Network Upgrades. If the Interconnection Customer elects to exercise its option to assume responsibility for the design, procurement and construction of the Participating TO's Interconnection Facilities and Stand Alone Network Upgrades, it shall so notify the Participating TO within thirty (30) Calendar Days of receipt of the Participating TO's notification that the designated dates are not acceptable to the Participating TO. The Participating TO, ISO, and Interconnection Customer must agree as to what constitutes Stand Alone Network Upgrades and identify such Stand Alone Network Upgrades in Appendix A to this LGIA. Except for Stand Alone Network Upgrades, the

Interconnection Customer shall have no right to construct Network Upgrades under this option.

5.1.4 Negotiated Option. If the Interconnection Customer elects not to exercise its option under Article 5.1.3, Option to Build, the Interconnection Customer shall so notify the Participating TO within thirty (30) Calendar Days of receipt of the Participating TO's notification that the designated dates are not acceptable to the Participating TO, and the Parties shall in good faith attempt to negotiate terms and conditions (including revision of the specified dates and liquidated damages, the provision of incentives or the procurement and construction of a portion of the Participating TO's Interconnection Facilities and Stand Alone Network Upgrades by the Interconnection Customer) pursuant to which the Participating TO is responsible for the design, procurement and construction of the Participating TO's Interconnection Facilities and Network Upgrades. If the Parties are unable to reach agreement on such terms and conditions, the Participating TO shall assume responsibility for the design, procurement and construction of the Participating TO's Interconnection Facilities and Network Upgrades pursuant to Article 5.1.1, Standard Option.

5.2 General Conditions Applicable to Option to Build. If the Interconnection Customer assumes responsibility for the design, procurement and construction of the Participating TO's Interconnection Facilities and Stand Alone Network Upgrades,

(1) the Interconnection Customer shall engineer, procure equipment, and construct the Participating TO's Interconnection Facilities and Stand Alone Network Upgrades (or portions thereof) using Good Utility Practice and using standards and specifications provided in advance by the Participating TO;

(2) The Interconnection Customer's engineering, procurement and construction of the Participating TO's Interconnection Facilities and Stand Alone Network Upgrades shall comply with all requirements of law to which the Participating TO would be subject in the engineering, procurement or construction of the Participating TO's Interconnection Facilities and Stand Alone Network Upgrades;

(3) the Participating TO shall review, and the Interconnection Customer shall obtain the Participating TO's approval of, the engineering design, equipment acceptance tests, and the construction of the Participating TO's Interconnection Facilities and Stand Alone Network Upgrades, which approval shall not be unreasonably withheld, and the ISO may, at its option, review the engineering design, equipment acceptance tests, and the construction of the Participating TO's Interconnection Facilities and Stand Alone Network Upgrades;

(4) prior to commencement of construction, the Interconnection Customer shall provide to the Participating TO, with a copy to the ISO for informational purposes, a schedule for construction of the Participating TO's Interconnection Facilities and Stand Alone Network Upgrades, and shall promptly respond to requests for information from the Participating TO;

(5) at any time during construction, the Participating TO shall have the right to gain unrestricted access to the Participating TO's Interconnection Facilities and Stand Alone Network Upgrades and to conduct inspections of the same;

(6) at any time during construction, should any phase of the engineering, equipment procurement, or construction of the Participating TO's Interconnection Facilities and Stand Alone Network Upgrades not meet the standards and specifications provided by the Participating TO, the Interconnection Customer shall be obligated to remedy deficiencies in that portion of the Participating TO's Interconnection Facilities and Stand Alone Network Upgrades;

(7) the Interconnection Customer shall indemnify the ISO and Participating TO for claims arising from the Interconnection Customer's construction of the Participating TO's Interconnection Facilities and Stand Alone Network Upgrades under the terms and procedures applicable to Article 18.1 Indemnity;

(8) The Interconnection Customer shall transfer control of the Participating TO's Interconnection Facilities to the Participating TO and shall transfer Operational Control of Stand Alone Network Upgrades to the ISO;

(9) Unless the Parties otherwise agree, the Interconnection Customer shall transfer ownership of the Participating TO's Interconnection Facilities and Stand Alone Network Upgrades to the Participating TO. As soon as reasonably practicable, but within twelve months after completion of the construction of the Participating TO's Interconnection Facilities and Stand Alone Network Upgrades, the Interconnection Customer shall provide an invoice of the final cost of the construction of the Participating TO's Interconnection Facilities and Stand Alone Network Upgrades to the Participating TO, which invoice shall set forth such costs in sufficient detail to enable the Participating TO to reflect the proper costs of such facilities in its transmission rate base and to identify the investment upon which refunds will be provided;

(10) the Participating TO shall accept for operation and maintenance the Participating TO's Interconnection Facilities and Stand Alone Network

Upgrades to the extent engineered, procured, and constructed in accordance with this Article 5.2; and

(11) The Interconnection Customer's engineering, procurement and construction of the Participating TO's Interconnection Facilities and Stand Alone Network Upgrades shall comply with all requirements of the "Option to Build" conditions set forth in Appendix C. Interconnection Customer shall deliver to the Participating TO "as-built" drawings, information, and any other documents that are reasonably required by the Participating TO to assure that the Interconnection Facilities and Stand-Alone Network Upgrades are built to the standards and specifications required by the Participating TO.

5.3 Liquidated Damages. The actual damages to the Interconnection Customer, in the event the Participating TO's Interconnection Facilities or Network Upgrades are not completed by the dates designated by the Interconnection Customer and accepted by the Participating TO pursuant to subparagraphs 5.1.2 or 5.1.4, above, may include Interconnection Customer's fixed operation and maintenance costs and lost opportunity costs. Such actual damages are uncertain and impossible to determine at this time. Because of such uncertainty, any liquidated damages paid by the Participating TO to the Interconnection Customer in the event that the Participating TO does not complete any portion of the Participating TO's Interconnection Facilities or Network Upgrades by the applicable dates, shall be an amount equal to ½ of 1 percent per day of the actual cost of the Participating TO's Interconnection Facilities and Network Upgrades, in the aggregate, for which the Participating TO has assumed responsibility to design, procure and construct.

However, in no event shall the total liquidated damages exceed 20 percent of the actual cost of the Participating TO's Interconnection Facilities and Network Upgrades for which the Participating TO has assumed responsibility to design, procure, and construct. The foregoing payments will be made by the Participating TO to the Interconnection Customer as just compensation for the damages caused to the Interconnection Customer, which actual damages are uncertain and impossible to determine at this time, and as reasonable liquidated damages, but not as a penalty or a method to secure performance of this LGIA. Liquidated damages, when the Parties agree to them, are the exclusive remedy for the Participating TO's failure to meet its schedule.

No liquidated damages shall be paid to the Interconnection Customer if: (1) the Interconnection Customer is not ready to commence use of the Participating TO's Interconnection Facilities or Network Upgrades to take the delivery of power for the Electric Generating Unit's Trial Operation or to export power from the Electric Generating Unit on the specified dates, unless the Interconnection Customer would have been able to commence use of the Participating TO's Interconnection Facilities or Network Upgrades to take the delivery of power for

Electric Generating Unit's Trial Operation or to export power from the Electric Generating Unit, but for the Participating TO's delay; (2) the Participating TO's failure to meet the specified dates is the result of the action or inaction of the Interconnection Customer or any other interconnection customer who has entered into an interconnection agreement with the ISO and/or Participating TO, action or inaction by the ISO, or any cause beyond the Participating TO's reasonable control or reasonable ability to cure; (3) the Interconnection Customer has assumed responsibility for the design, procurement and construction of the Participating TO's Interconnection Facilities and Stand Alone Network Upgrades; or (4) the Parties have otherwise agreed.

In no event shall the ISO have any responsibility or liability to the Interconnection Customer for liquidated damages pursuant to the provisions of this Article 5.3.

5.4 **Power System Stabilizers**. The Interconnection Customer shall procure, install, maintain and operate Power System Stabilizers in accordance with the guidelines and procedures established by the Applicable Reliability Council and in accordance with the provisions of Section 5.4.1 of the ISO Tariff. The ISO reserves the right to establish reasonable minimum acceptable settings for any installed Power System Stabilizers, subject to the design and operating limitations of the Large Generating Facility. If the Large Generating Facility's Power System Stabilizers are removed from service or not capable of automatic operation, the Interconnection Customer shall immediately notify the ISO and the Participating TO and restore the Power System Stabilizers to operation as soon as possible and in accordance with the Reliability Management System Agreement in Appendix G. The ISO shall have the right to order the reduction in output or disconnection of the Large Generating Facility if the reliability of the ISO Controlled Grid would be adversely affected as a result of improperly tuned Power System Stabilizers. The requirements of this Article 5.4 shall not apply to wind generators of the induction type.

5.5 **Equipment Procurement**. If responsibility for construction of the Participating TO's Interconnection Facilities or Network Upgrades is to be borne by the Participating TO, then the Participating TO shall commence design of the Participating TO's Interconnection Facilities or Network Upgrades and procure necessary equipment as soon as practicable after all of the following conditions are satisfied, unless the Parties otherwise agree in writing:

5.5.1 The ISO, in coordination with the applicable Participating TO(s) has completed the Interconnection Facilities Study pursuant to the Interconnection Facilities Study Agreement;

5.5.2 The Participating TO has received written authorization to proceed with design and procurement from the Interconnection Customer by the date specified in Appendix B, Milestones; and

5.5.3 The Interconnection Customer has provided security to the Participating TO in accordance with Article 11.5 by the dates specified in Appendix B, Milestones.

5.6 **Construction Commencement**. The Participating TO shall commence construction of the Participating TO's Interconnection Facilities and Network Upgrades for which it is responsible as soon as practicable after the following additional conditions are satisfied:

5.6.1 Approval of the appropriate Governmental Authority has been obtained for any facilities requiring regulatory approval;

5.6.2 Necessary real property rights and rights-of-way have been obtained, to the extent required for the construction of a discrete aspect of the Participating TO's Interconnection Facilities and Network Upgrades;

5.6.3 The Participating TO has received written authorization to proceed with construction from the Interconnection Customer by the date specified in Appendix B, Milestones; and

5.6.4 The Interconnection Customer has provided payment and security to the Participating TO in accordance with Article 11.5 by the dates specified in Appendix B, Milestones.

5.7 **Work Progress**. The Parties will keep each other advised periodically as to the progress of their respective design, procurement and construction efforts. Any Party may, at any time, request a progress report from another Party. If, at any time, the Interconnection Customer determines that the completion of the Participating TO's Interconnection Facilities will not be required until after the specified in-service date, the Interconnection Customer will provide written notice to the Participating TO and ISO of such later date upon which the completion of the Participating TO's Interconnection Facilities will be required.

5.8 **Information Exchange**. As soon as reasonably practicable after the Effective Date, the Parties shall exchange information regarding the design and compatibility of the Interconnection Customer's Interconnection Facilities and Participating TO's Interconnection Facilities and compatibility of the Interconnection Facilities with the Participating TO's Transmission System, and shall work diligently and in good faith to make any necessary design changes.

5.9 **Limited Operation**. If any of the Participating TO's Interconnection Facilities or Network Upgrades are not reasonably expected to be completed prior to the Commercial Operation Date of the Electric Generating Unit, the Participating TO and/or ISO, as applicable, shall, upon the request and at the expense of the Interconnection Customer, perform operating studies on a timely basis to determine the extent to which the Electric Generating Unit and the

Interconnection Customer's Interconnection Facilities may operate prior to the completion of the Participating TO's Interconnection Facilities or Network Upgrades consistent with Applicable Laws and Regulations, Applicable Reliability Standards, Good Utility Practice, and this LGIA. The Participating TO and ISO shall permit Interconnection Customer to operate the Electric Generating Unit and the Interconnection Customer's Interconnection Facilities in accordance with the results of such studies.

5.10 Interconnection Customer's Interconnection Facilities. The Interconnection Customer shall, at its expense, design, procure, construct, own and install the Interconnection Customer's Interconnection Facilities, as set forth in Appendix A.

5.10.1 Large Generating Facility and Interconnection Customer's Interconnection Facilities Specifications. The Interconnection Customer shall submit initial specifications for the Interconnection Customer's Interconnection Facilities and Large Generating Facility, including System Protection Facilities, to the Participating TO and the ISO at least one hundred eighty (180) Calendar Days prior to the Initial Synchronization Date; and final specifications for review and comment at least ninety (90) Calendar Days prior to the Initial Synchronization Date. The Participating TO and the ISO shall review such specifications pursuant to this LGIA and the LGIP to ensure that the Interconnection Customer's Interconnection Facilities and Large Generating Facility are compatible with the technical specifications, operational control, safety requirements, and any other applicable requirements of the Participating TO and the ISO and comment on such specifications within thirty (30) Calendar Days of the Interconnection Customer's submission. All specifications provided hereunder shall be deemed confidential.

5.10.2 Participating TO's and ISO's Review. The Participating TO's and the ISO's review of the Interconnection Customer's final specifications shall not be construed as confirming, endorsing, or providing a warranty as to the design, fitness, safety, durability or reliability of the Large Generating Facility, or the Interconnection Customer's Interconnection Facilities. Interconnection Customer shall make such changes to the Interconnection Customer's Interconnection Facilities as may reasonably be required by the Participating TO or the ISO, in accordance with Good Utility Practice, to ensure that the Interconnection Customer's Interconnection Facilities are compatible with the technical specifications, Operational Control, and safety requirements of the Participating TO or the ISO.

5.10.3 Interconnection Customer's Interconnection Facilities Construction. The Interconnection Customer's Interconnection Facilities shall be designed and constructed in accordance with Good Utility Practice. Within one hundred twenty (120) Calendar Days after the Commercial Operation Date, unless the Participating TO and Interconnection

Customer agree on another mutually acceptable deadline, the Interconnection Customer shall deliver to the Participating TO and ISO "as-built" drawings, information and documents for the Interconnection Customer's Interconnection Facilities and the Electric Generating Unit(s), such as: a one-line diagram, a site plan showing the Large Generating Facility and the Interconnection Customer's Interconnection Facilities, plan and elevation drawings showing the layout of the Interconnection Customer's Interconnection Facilities, a relay functional diagram, relaying AC and DC schematic wiring diagrams and relay settings for all facilities associated with the Interconnection Customer's step-up transformers, the facilities connecting the Large Generating Facility to the step-up transformers and the Interconnection Customer's Interconnection Facilities, and the impedances (determined by factory tests) for the associated step-up transformers and the Electric Generating Units. The Interconnection Customer shall provide the Participating TO and the ISO specifications for the excitation system, automatic voltage regulator, Large Generating Facility control and protection settings, transformer tap settings, and communications, if applicable. Any deviations from the relay settings, machine specifications, and other specifications originally submitted by the Interconnection Customer shall be assessed by the Participating TO and the ISO pursuant to the appropriate provisions of this LGIA and the LGIP.

5.10.4 Interconnection Customer to Meet Requirements of the Participating TO's Interconnection Handbook. The Interconnection Customer shall comply with the Participating TO's Interconnection Handbook.

5.11 Participating TO's Interconnection Facilities Construction. The Participating TO's Interconnection Facilities shall be designed and constructed in accordance with Good Utility Practice. Upon request, within one hundred twenty (120) Calendar Days after the Commercial Operation Date, unless the Participating TO and Interconnection Customer agree on another mutually acceptable deadline, the Participating TO shall deliver to the Interconnection Customer and the ISO the following "as-built" drawings, information and documents for the Participating TO's Interconnection Facilities **[include appropriate drawings and relay diagrams]**.

The Participating TO will obtain control for operating and maintenance purposes of the Participating TO's Interconnection Facilities and Stand Alone Network Upgrades upon completion of such facilities. Pursuant to Article 5.2, the ISO will obtain Operational Control of the Stand Alone Network Upgrades prior to the Commercial Operation Date.

5.12 Access Rights. Upon reasonable notice and supervision by a Party, and subject to any required or necessary regulatory approvals, a Party ("Granting Party") shall furnish *at no cost* to the other Party ("Access Party") any rights of

use, licenses, rights of way and easements with respect to lands owned or controlled by the Granting Party, its agents (if allowed under the applicable agency agreement), or any Affiliate, that are necessary to enable the Access Party to obtain ingress and egress to construct, operate, maintain, repair, test (or witness testing), inspect, replace or remove facilities and equipment to: (i) interconnect the Large Generating Facility with the Participating TO's Transmission System; (ii) operate and maintain the Large Generating Facility, the Interconnection Facilities and the Participating TO's Transmission System; and (iii) disconnect or remove the Access Party's facilities and equipment upon termination of this LGIA. In exercising such licenses, rights of way and easements, the Access Party shall not unreasonably disrupt or interfere with normal operation of the Granting Party's business and shall adhere to the safety rules and procedures established in advance, as may be changed from time to time, by the Granting Party and provided to the Access Party.

5.13 Lands of Other Property Owners. If any part of the Participating TO's Interconnection Facilities and/or Network Upgrades are to be installed on property owned by persons other than the Interconnection Customer or Participating TO, the Participating TO shall at the Interconnection Customer's expense use efforts, similar in nature and extent to those that it typically undertakes on its own behalf or on behalf of its Affiliates, including use of its eminent domain authority, and to the extent consistent with state law, to procure from such persons any rights of use, licenses, rights of way and easements that are necessary to construct, operate, maintain, test, inspect, replace or remove the Participating TO's Interconnection Facilities and/or Network Upgrades upon such property.

5.14 Permits. Participating TO and Interconnection Customer shall cooperate with each other in good faith in obtaining all permits, licenses and authorization that are necessary to accomplish the interconnection in compliance with Applicable Laws and Regulations. With respect to this paragraph, the Participating TO shall provide permitting assistance to the Interconnection Customer comparable to that provided to the Participating TO's own, or an Affiliate's generation.

5.15 Early Construction of Base Case Facilities. The Interconnection Customer may request the Participating TO to construct, and the Participating TO shall construct, using Reasonable Efforts to accommodate Interconnection Customer's In-Service Date, all or any portion of any Network Upgrades required for Interconnection Customer to be interconnected to the Participating TO's Transmission System which are included in the Base Case of the Interconnection Studies for the Interconnection Customer, and which also are required to be constructed for another interconnection customer, but where such construction is not scheduled to be completed in time to achieve Interconnection Customer's In-Service Date.

5.16 Suspension. The Interconnection Customer reserves the right, upon written notice to the Participating TO and the ISO, to suspend at any time all work associated with the construction and installation of the Participating TO's Interconnection Facilities, Network Upgrades, and/or Distribution Upgrades required under this LGIA with the condition that the Participating TO's electrical system and the ISO Controlled Grid shall be left in a safe and reliable condition in accordance with Good Utility Practice and the Participating TO's safety and reliability criteria and the ISO's Applicable Reliability Standards. In such event, the Interconnection Customer shall be responsible for all reasonable and necessary costs which the Participating TO (i) has incurred pursuant to this LGIA prior to the suspension and (ii) incurs in suspending such work, including any costs incurred to perform such work as may be necessary to ensure the safety of persons and property and the integrity of the Participating TO's electric system during such suspension and, if applicable, any costs incurred in connection with the cancellation or suspension of material, equipment and labor contracts which the Participating TO cannot reasonably avoid; provided, however, that prior to canceling or suspending any such material, equipment or labor contract, the Participating TO shall obtain Interconnection Customer's authorization to do so.

The Participating TO shall invoice the Interconnection Customer for such costs pursuant to Article 12 and shall use due diligence to minimize its costs. In the event Interconnection Customer suspends work required under this LGIA pursuant to this Article 5.16, and has not requested the Participating TO to recommence the work or has not itself recommenced work required under this LGIA on or before the expiration of three (3) years following commencement of such suspension, this LGIA shall be deemed terminated. The three-year period shall begin on the date the suspension is requested, or the date of the written notice to the Participating TO and the ISO, if no effective date is specified.

5.17 Taxes.

5.17.1 Interconnection Customer Payments Not Taxable. The Parties intend that all payments or property transfers made by the Interconnection Customer to the Participating TO for the installation of the Participating TO's Interconnection Facilities and the Network Upgrades shall be non-taxable, either as contributions to capital, or as a refundable advance, in accordance with the Internal Revenue Code and any applicable state income tax laws and shall not be taxable as contributions in aid of construction or otherwise under the Internal Revenue Code and any applicable state income tax laws.

5.17.2 Representations And Covenants. In accordance with IRS Notice 2001-82 and IRS Notice 88-129, the Interconnection Customer represents and covenants that (i) ownership of the electricity generated at the Large Generating Facility will pass to another party prior to the transmission of the electricity on the ISO Controlled Grid, (ii) for income tax purposes, the

amount of any payments and the cost of any property transferred to the Participating TO for the Participating TO's Interconnection Facilities will be capitalized by the Interconnection Customer as an intangible asset and recovered using the straight-line method over a useful life of twenty (20) years, and (iii) any portion of the Participating TO's Interconnection Facilities that is a "dual-use intertie," within the meaning of IRS Notice 88-129, is reasonably expected to carry only a de minimis amount of electricity in the direction of the Large Generating Facility. For this purpose, "de minimis amount" means no more than 5 percent of the total power flows in both directions, calculated in accordance with the "5 percent test" set forth in IRS Notice 88-129. This is not intended to be an exclusive list of the relevant conditions that must be met to conform to IRS requirements for non-taxable treatment.

At the Participating TO's request, the Interconnection Customer shall provide the Participating TO with a report from an independent engineer confirming its representation in clause (iii), above. The Participating TO represents and covenants that the cost of the Participating TO's Interconnection Facilities paid for by the Interconnection Customer without the possibility of refund or credit will have no net effect on the base upon which rates are determined.

5.17.3 Indemnification for the Cost Consequence of Current Tax Liability Imposed Upon the Participating TO. Notwithstanding Article 5.17.1, the Interconnection Customer shall protect, indemnify and hold harmless the Participating TO from the cost consequences of any current tax liability imposed against the Participating TO as the result of payments or property transfers made by the Interconnection Customer to the Participating TO under this LGIA for Interconnection Facilities, as well as any interest and penalties, other than interest and penalties attributable to any delay caused by the Participating TO.

The Participating TO shall not include a gross-up for the cost consequences of any current tax liability in the amounts it charges the Interconnection Customer under this LGIA unless (i) the Participating TO has determined, in good faith, that the payments or property transfers made by the Interconnection Customer to the Participating TO should be reported as income subject to taxation or (ii) any Governmental Authority directs the Participating TO to report payments or property as income subject to taxation; provided, however, that the Participating TO may require the Interconnection Customer to provide security for Interconnection Facilities, in a form reasonably acceptable to the Participating TO (such as a parental guarantee or a letter of credit), in an amount equal to the cost consequences of any current tax liability under this Article 5.17. The Interconnection Customer shall reimburse the Participating TO for such costs on a fully grossed-up basis, in accordance

with Article 5.17.4, within thirty (30) Calendar Days of receiving written notification from the Participating TO of the amount due, including detail about how the amount was calculated.

The indemnification obligation shall terminate at the earlier of (1) the expiration of the ten year testing period and the applicable statute of limitation, as it may be extended by the Participating TO upon request of the IRS, to keep these years open for audit or adjustment, or (2) the occurrence of a subsequent taxable event and the payment of any related indemnification obligations as contemplated by this Article 5.17.

5.17.4 Tax Gross-Up Amount. The Interconnection Customer's liability for the cost consequences of any current tax liability under this Article 5.17 shall be calculated on a fully grossed-up basis. Except as may otherwise be agreed to by the parties, this means that the Interconnection Customer will pay the Participating TO, in addition to the amount paid for the Interconnection Facilities and Network Upgrades, an amount equal to (1) the current taxes imposed on the Participating TO ("Current Taxes") on the excess of (a) the gross income realized by the Participating TO as a result of payments or property transfers made by the Interconnection Customer to the Participating TO under this LGIA (without regard to any payments under this Article 5.17) (the "Gross Income Amount") over (b) the present value of future tax deductions for depreciation that will be available as a result of such payments or property transfers (the "Present Value Depreciation Amount"), plus (2) an additional amount sufficient to permit the Participating TO to receive and retain, after the payment of all Current Taxes, an amount equal to the net amount described in clause (1).

For this purpose, (i) Current Taxes shall be computed based on the Participating TO's composite federal and state tax rates at the time the payments or property transfers are received and the Participating TO will be treated as being subject to tax at the highest marginal rates in effect at that time (the "Current Tax Rate"), and (ii) the Present Value Depreciation Amount shall be computed by discounting the Participating TO's anticipated tax depreciation deductions as a result of such payments or property transfers by the Participating TO's current weighted average cost of capital. Thus, the formula for calculating the Interconnection Customer's liability to the Participating TO pursuant to this Article 5.17.4 can be expressed as follows: (Current Tax Rate x (Gross Income Amount – Present Value of Tax Depreciation))/(1-Current Tax Rate). Interconnection Customer's estimated tax liability in the event taxes are imposed shall be stated in Appendix A, Interconnection Facilities, Network Upgrades and Distribution Upgrades.

5.17.5 Private Letter Ruling or Change or Clarification of Law. At the Interconnection Customer's request and expense, the Participating TO shall file with the IRS a request for a private letter ruling as to whether any property transferred or sums paid, or to be paid, by the Interconnection Customer to the Participating TO under this LGIA are subject to federal income taxation. The Interconnection Customer will prepare the initial draft of the request for a private letter ruling, and will certify under penalties of perjury that all facts represented in such request are true and accurate to the best of the Interconnection Customer's knowledge. The Participating TO and Interconnection Customer shall cooperate in good faith with respect to the submission of such request, provided, however, the Interconnection Customer and the Participating TO explicitly acknowledge (and nothing herein is intended to alter) Participating TO's obligation under law to certify that the facts presented in the ruling request are true, correct and complete.

The Participating TO shall keep the Interconnection Customer fully informed of the status of such request for a private letter ruling and shall execute either a privacy act waiver or a limited power of attorney, in a form acceptable to the IRS, that authorizes the Interconnection Customer to participate in all discussions with the IRS regarding such request for a private letter ruling. The Participating TO shall allow the Interconnection Customer to attend all meetings with IRS officials about the request and shall permit the Interconnection Customer to prepare the initial drafts of any follow-up letters in connection with the request.

5.17.6 Subsequent Taxable Events. If, within 10 years from the date on which the relevant Participating TO's Interconnection Facilities are placed in service, (i) the Interconnection Customer Breaches the covenants contained in Article 5.17.2, (ii) a "disqualification event" occurs within the meaning of IRS Notice 88-129, or (iii) this LGIA terminates and the Participating TO retains ownership of the Interconnection Facilities and Network Upgrades, the Interconnection Customer shall pay a tax gross-up for the cost consequences of any current tax liability imposed on the Participating TO, calculated using the methodology described in Article 5.17.4 and in accordance with IRS Notice 90-60.

5.17.7 Contests. In the event any Governmental Authority determines that the Participating TO's receipt of payments or property constitutes income that is subject to taxation, the Participating TO shall notify the Interconnection Customer, in writing, within thirty (30) Calendar Days of receiving notification of such determination by a Governmental Authority. Upon the timely written request by the Interconnection Customer and at the Interconnection Customer's sole expense, the Participating TO may appeal, protest, seek abatement of, or otherwise oppose such determination. Upon the Interconnection Customer's written request and

sole expense, the Participating TO may file a claim for refund with respect to any taxes paid under this Article 5.17, whether or not it has received such a determination. The Participating TO reserve the right to make all decisions with regard to the prosecution of such appeal, protest, abatement or other contest, including the selection of counsel and compromise or settlement of the claim, but the Participating TO shall keep the Interconnection Customer informed, shall consider in good faith suggestions from the Interconnection Customer about the conduct of the contest, and shall reasonably permit the Interconnection Customer or an Interconnection Customer representative to attend contest proceedings.

The Interconnection Customer shall pay to the Participating TO on a periodic basis, as invoiced by the Participating TO, the Participating TO's documented reasonable costs of prosecuting such appeal, protest, abatement or other contest, including any costs associated with obtaining the opinion of independent tax counsel described in this Article 5.17.7. The Participating TO may abandon any contest if the Interconnection Customer fails to provide payment to the Participating TO within thirty (30) Calendar Days of receiving such invoice.

At any time during the contest, the Participating TO may agree to a settlement either with the Interconnection Customer's consent or, if such consent is refused, after obtaining written advice from independent nationally-recognized tax counsel, selected by the Participating TO, but reasonably acceptable to the Interconnection Customer, that the proposed settlement represents a reasonable settlement given the hazards of litigation. The Interconnection Customer's obligation shall be based on the amount of the settlement agreed to by the Interconnection Customer, or if a higher amount, so much of the settlement that is supported by the written advice from nationally-recognized tax counsel selected under the terms of the preceding paragraph. The settlement amount shall be calculated on a fully grossed-up basis to cover any related cost consequences of the current tax liability. The Participating TO may also settle any tax controversy without receiving the Interconnection Customer's consent or any such written advice; however, any such settlement will relieve the Interconnection Customer from any obligation to indemnify the Participating TO for the tax at issue in the contest (unless the failure to obtain written advice is attributable to the Interconnection Customer's unreasonable refusal to the appointment of independent tax counsel).

5.17.8 Refund. In the event that (a) a private letter ruling is issued to the Participating TO which holds that any amount paid or the value of any property transferred by the Interconnection Customer to the Participating TO under the terms of this LGIA is not subject to federal income taxation, (b) any legislative change or administrative announcement, notice, ruling

or other determination makes it reasonably clear to the Participating TO in good faith that any amount paid or the value of any property transferred by the Interconnection Customer to the Participating TO under the terms of this LGIA is not taxable to the Participating TO, (c) any abatement, appeal, protest, or other contest results in a determination that any payments or transfers made by the Interconnection Customer to the Participating TO are not subject to federal income tax, or (d) if the Participating TO receives a refund from any taxing authority for any overpayment of tax attributable to any payment or property transfer made by the Interconnection Customer to the Participating TO pursuant to this LGIA, the Participating TO shall promptly refund to the Interconnection Customer the following:

(i) any payment made by Interconnection Customer under this Article 5.17 for taxes that is attributable to the amount determined to be non-taxable, together with interest thereon,

(ii) interest on any amounts paid by the Interconnection Customer to the Participating TO for such taxes which the Participating TO did not submit to the taxing authority, calculated in accordance with the methodology set forth in FERC's regulations at 18 C.F.R. §35.19a(a)(2)(iii) from the date payment was made by the Interconnection Customer to the date the Participating TO refunds such payment to the Interconnection Customer, and

(iii) with respect to any such taxes paid by the Participating TO, any refund or credit the Participating TO receives or to which it may be entitled from any Governmental Authority, interest (or that portion thereof attributable to the payment described in clause (i), above) owed to the Participating TO for such overpayment of taxes (including any reduction in interest otherwise payable by the Participating TO to any Governmental Authority resulting from an offset or credit); provided, however, that the Participating TO will remit such amount promptly to the Interconnection Customer only after and to the extent that the Participating TO has received a tax refund, credit or offset from any Governmental Authority for any applicable overpayment of income tax related to the Participating TO's Interconnection Facilities.

The intent of this provision is to leave the Parties, to the extent practicable, in the event that no taxes are due with respect to any payment for Interconnection Facilities and Network Upgrades hereunder, in the same position they would have been in had no such tax payments been made.

5.17.9 Taxes Other Than Income Taxes. Upon the timely request by the Interconnection Customer, and at the Interconnection Customer's sole expense, the ISO or Participating TO may appeal, protest, seek abatement of, or otherwise contest any tax (other than federal or state income tax) asserted or assessed against the ISO or Participating TO for which the Interconnection Customer may be required to reimburse the ISO or Participating TO under the terms of this LGIA. The Interconnection Customer shall pay to the Participating TO on a periodic basis, as invoiced by the Participating TO, the Participating TO's documented reasonable costs of prosecuting such appeal, protest, abatement, or other contest. The Interconnection Customer, the ISO, and the Participating TO shall cooperate in good faith with respect to any such contest. Unless the payment of such taxes is a prerequisite to an appeal or abatement or cannot be deferred, no amount shall be payable by the Interconnection Customer to the ISO or Participating TO for such taxes until they are assessed by a final, non-appealable order by any court or agency of competent jurisdiction. In the event that a tax payment is withheld and ultimately due and payable after appeal, the Interconnection Customer will be responsible for all taxes, interest and penalties, other than penalties attributable to any delay caused by the Participating TO.

5.18 Tax Status. Each Party shall cooperate with the others to maintain the other Parties' tax status. Nothing in this LGIA is intended to adversely affect the ISO's or any Participating TO's tax exempt status with respect to the issuance of bonds including, but not limited to, Local Furnishing Bonds.

5.19 Modification.

5.19.1 General. The Interconnection Customer or the Participating TO may undertake modifications to its facilities, subject to the provisions of this LGIA and the ISO Tariff. If a Party plans to undertake a modification that reasonably may be expected to affect the other Parties' facilities, that Party shall provide to the other Parties sufficient information regarding such modification so that the other Parties may evaluate the potential impact of such modification prior to commencement of the work. Such information shall be deemed to be confidential hereunder and shall include information concerning the timing of such modifications and whether such modifications are expected to interrupt the flow of electricity from the Large Generating Facility. The Party desiring to perform such work shall provide the relevant drawings, plans, and specifications to the other Parties at least ninety (90) Calendar Days in advance of the commencement of the work or such shorter period upon which the Parties may agree, which agreement shall not unreasonably be withheld, conditioned or delayed.

In the case of Large Generating Facility modifications that do not require the Interconnection Customer to submit an Interconnection Request, the ISO or Participating TO shall provide, within thirty (30) Calendar Days (or such other time as the Parties may agree), an estimate of any additional modifications to the ISO Controlled Grid, Participating TO's Interconnection Facilities, Network Upgrades or Distribution Upgrades necessitated by such Interconnection Customer modification and a good faith estimate of the costs thereof. The Participating TO and the ISO shall determine if a Large Generating Facility modification is a Material Modification in accordance with the LGIP.

5.19.2 Standards. Any additions, modifications, or replacements made to a Party's facilities shall be designed, constructed and operated in accordance with this LGIA and Good Utility Practice.

5.19.3 Modification Costs. The Interconnection Customer shall not be directly assigned the costs of any additions, modifications, or replacements that the Participating TO makes to the Participating TO's Interconnection Facilities or the Participating TO's Transmission System to facilitate the interconnection of a third party to the Participating TO's Interconnection Facilities or the Participating TO's Transmission System, or to provide transmission service to a third party under the ISO Tariff. The Interconnection Customer shall be responsible for the costs of any additions, modifications, or replacements to the Interconnection Facilities that may be necessary to maintain or upgrade such Interconnection Facilities consistent with Applicable Laws and Regulations, Applicable Reliability Standards or Good Utility Practice.

ARTICLE 6. TESTING AND INSPECTION

6.1 **Pre-Commercial Operation Date Testing and Modifications**. Prior to the Commercial Operation Date, the Participating TO shall test the Participating TO's Interconnection Facilities, Network Upgrades, and Distribution Upgrades and the Interconnection Customer shall test the Large Generating Facility and the Interconnection Customer's Interconnection Facilities to ensure their safe and reliable operation. Similar testing may be required after initial operation. Each Party shall make any modifications to its facilities that are found to be necessary as a result of such testing. The Interconnection Customer shall bear the cost of all such testing and modifications. The Interconnection Customer shall not commence initial parallel operation of an Electric Generating Unit with the Participating TO's Transmission System until the Participating TO provides prior written approval, which approval shall not be unreasonably withheld, for operation of such Electric Generating Unit. The Interconnection Customer shall generate test energy at the Large Generating Facility only if it has arranged for the delivery of such test energy.

6.2 **Post-Commercial Operation Date Testing and Modifications**. Each Party shall at its own expense perform routine inspection and testing of its facilities and equipment in accordance with Good Utility Practice as may be necessary to ensure the continued interconnection of the Large Generating Facility with the Participating TO's Transmission System in a safe and reliable manner. Each Party shall have the right, upon advance written notice, to require reasonable additional testing of the other Party's facilities, at the requesting Party's expense, as may be in accordance with Good Utility Practice.

6.3 **Right to Observe Testing**. Each Party shall notify the other Parties at least fourteen (14) days in advance of its performance of tests of its Interconnection Facilities or Generating Facility. The other Parties have the right, at their own expense, to observe such testing.

6.4 **Right to Inspect**. Each Party shall have the right, but shall have no obligation to: (i) observe another Party's tests and/or inspection of any of its System Protection Facilities and other protective equipment, including Power System Stabilizers; (ii) review the settings of another Party's System Protection Facilities and other protective equipment; and (iii) review another Party's maintenance records relative to the Interconnection Facilities, the System Protection Facilities and other protective equipment. A Party may exercise these rights from time to time as it deems necessary upon reasonable notice to the other Party. The exercise or non-exercise by a Party of any such rights shall not be construed as an endorsement or confirmation of any element or condition of the Interconnection Facilities or the System Protection Facilities or other protective equipment or the operation thereof, or as a warranty as to the fitness, safety, desirability, or reliability of same. Any information that a Party obtains through

the exercise of any of its rights under this Article 6.4 shall be deemed to be Confidential Information and treated pursuant to Article 22 of this LGIA.

ARTICLE 7. METERING

7.1 **General.** Each Party shall comply with the Applicable Reliability Council requirements. The Interconnection Customer and ISO shall comply with the provisions of the ISO Tariff regarding metering, including Section 10 and the Metering Protocol of the ISO Tariff. Unless otherwise agreed by the Participating TO and the Interconnection Customer, the Participating TO may install additional Metering Equipment at the Point of Interconnection prior to any operation of any Electric Generating Unit and shall own, operate, test and maintain such Metering Equipment. Power flows to and from the Large Generating Facility shall be measured at or, at the ISO's or Participating TO's option for its respective Metering Equipment, compensated to, the Point of Interconnection. The ISO shall provide metering quantities to the Interconnection Customer upon request in accordance with the ISO Tariff by directly polling the ISO's meter data acquisition system. The Interconnection Customer shall bear all reasonable documented costs associated with the purchase, installation, operation, testing and maintenance of the Metering Equipment.

7.2 **Check Meters**. The Interconnection Customer, at its option and expense, may install and operate, on its premises and on its side of the Point of Interconnection, one or more check meters to check the ISO-polled meters or the Participating TO's meters. Such check meters shall be for check purposes only and shall not be used for the measurement of power flows for purposes of this LGIA, except in the case that no other means are available on a temporary basis at the option of the ISO or the Participating TO. The check meters shall be subject at all reasonable times to inspection and examination by the ISO or Participating TO or their designees. The installation, operation and maintenance thereof shall be performed entirely by the Interconnection Customer in accordance with Good Utility Practice.

7.3 **Participating TO Retail Metering**. The Participating TO may install retail revenue quality meters and associated equipment, pursuant to the Participating TO's applicable retail tariffs.

ARTICLE 8. COMMUNICATIONS

8.1 **Interconnection Customer Obligations**. The Interconnection Customer shall maintain satisfactory operating communications with the ISO in accordance with the provisions of the ISO Tariff and with the Participating TO's dispatcher or representative designated by the Participating TO. The Interconnection Customer shall provide standard voice line, dedicated voice line and facsimile communications at its Large Generating Facility control room or central dispatch

facility through use of either the public telephone system, or a voice communications system that does not rely on the public telephone system. The Interconnection Customer shall also provide the dedicated data circuit(s) necessary to provide Interconnection Customer data to the ISO and Participating TO as set forth in Appendix D, Security Arrangements Details. The data circuit(s) shall extend from the Large Generating Facility to the location(s) specified by the ISO and Participating TO. Any required maintenance of such communications equipment shall be performed by the Interconnection Customer. Operational communications shall be activated and maintained under, but not be limited to, the following events: system paralleling or separation, scheduled and unscheduled shutdowns, equipment clearances, and hourly and daily load data.

8.2 **Remote Terminal Unit**. Prior to the Initial Synchronization Date of each Electric Generating Unit, a Remote Terminal Unit, or equivalent data collection and transfer equipment acceptable to the Parties, shall be installed by the Interconnection Customer, or by the Participating TO at the Interconnection Customer's expense, to gather accumulated and instantaneous data to be telemetered to the location(s) designated by the ISO and by the Participating TO through use of a dedicated point-to-point data circuit(s) as indicated in Article 8.1.

Telemetry to the ISO shall be provided in accordance with the ISO's technical standards for direct telemetry. For telemetry to the Participating TO, the communication protocol for the data circuit(s) shall be specified by the Participating TO. Instantaneous bi-directional real power and reactive power flow and any other required information must be telemetered directly to the location(s) specified by the Participating TO.

Each Party will promptly advise the other Parties if it detects or otherwise learns of any metering, telemetry or communications equipment errors or malfunctions that require the attention and/or correction by another Party. The Party owning such equipment shall correct such error or malfunction as soon as reasonably feasible.

8.3 **No Annexation.** Any and all equipment placed on the premises of a Party shall be and remain the property of the Party providing such equipment regardless of the mode and manner of annexation or attachment to real property, unless otherwise mutually agreed by the Parties.

ARTICLE 9. OPERATIONS

9.1 **General.** Each Party shall comply with the Applicable Reliability Council requirements, and the Interconnection Customer shall execute the Reliability Management System Agreement of the Applicable Reliability Council attached

hereto as Appendix G. Each Party shall provide to the other Party all information that may reasonably be required by the other Party to comply with Applicable Laws and Regulations and Applicable Reliability Standards.

9.2 **Control Area Notification**. At least three months before Initial Synchronization Date, the Interconnection Customer shall notify the ISO and Participating TO in writing of the Control Area in which the Large Generating Facility intends to be located. If the Interconnection Customer intends to locate the Large Generating Facility in a Control Area other than the Control Area within whose electrically metered boundaries the Large Generating Facility is located, and if permitted to do so by the relevant transmission tariffs, all necessary arrangements, including but not limited to those set forth in Article 7 and Article 8 of this LGIA, and remote Control Area generator interchange agreements, if applicable, and the appropriate measures under such agreements, shall be executed and implemented prior to the placement of the Large Generating Facility in the other Control Area.

9.3 **ISO and Participating TO Obligations**. The ISO and Participating TO shall cause the Participating TO's Transmission System to be operated and controlled in a safe and reliable manner and in accordance with this LGIA. The Participating TO at the Interconnection Customer's expense shall cause the Participating TO's Interconnection Facilities to be operated, maintained and controlled in a safe and reliable manner and in accordance with this LGIA. The ISO and Participating TO may provide operating instructions to the Interconnection Customer consistent with this LGIA and Participating TO and ISO operating protocols and procedures as they may change from time to time. The Participating TO and ISO will consider changes to their operating protocols and procedures proposed by the Interconnection Customer.

9.4 **Interconnection Customer Obligations**. The Interconnection Customer shall at its own expense operate, maintain and control the Large Generating Facility and the Interconnection Customer's Interconnection Facilities in a safe and reliable manner and in accordance with this LGIA. The Interconnection Customer shall operate the Large Generating Facility and the Interconnection Customer's Interconnection Facilities in accordance with all applicable requirements of the Control Area of which it is part, including such requirements as set forth in Appendix C, Interconnection Details, of this LGIA. Appendix C, Interconnection Details, will be modified to reflect changes to the requirements as they may change from time to time. A Party may request that another Party provide copies of the requirements set forth in Appendix C, Interconnection Details, of this LGIA. The Interconnection Customer shall not commence Commercial Operation of an Electric Generating Unit with the Participating TO's Transmission System until the Participating TO provides prior written approval, which approval shall not be unreasonably withheld, for operation of such Electric Generating Unit.

9.5 Start-Up and Synchronization. Consistent with the Parties' mutually acceptable procedures, the Interconnection Customer is responsible for the proper synchronization of each Electric Generating Unit to the ISO Controlled Grid.

9.6 Reactive Power.

9.6.1 Power Factor Design Criteria. The Interconnection Customer shall design the Large Generating Facility to maintain a composite power delivery at continuous rated power output at the terminals of the Electric Generating Unit at a power factor within the range of 0.95 leading to 0.90 lagging, unless the ISO has established different requirements that apply to all generators in the Control Area on a comparable basis. Power factor design criteria for wind generators are provided in Appendix H of this LGIA.

9.6.2 Voltage Schedules. Once the Interconnection Customer has synchronized an Electric Generating Unit with the ISO Controlled Grid, the ISO or Participating TO shall require the Interconnection Customer to maintain a voltage schedule by operating the Electric Generating Unit to produce or absorb reactive power within the design limitations of the Electric Generating Unit set forth in Article 9.6.1 (Power Factor Design Criteria). ISO's voltage schedules shall treat all sources of reactive power in the Control Area in an equitable and not unduly discriminatory manner. The Participating TO shall exercise Reasonable Efforts to provide the Interconnection Customer with such schedules at least one (1) day in advance, and the ISO or Participating TO may make changes to such schedules as necessary to maintain the reliability of the ISO Controlled Grid or the Participating TO's electric system. The Interconnection Customer shall operate the Electric Generating Unit to maintain the specified output voltage or power factor within the design limitations of the Electric Generating Unit set forth in Article 9.6.1 (Power Factor Design Criteria), and as may be required by the ISO to operate the Electric Generating Unit at a specific voltage schedule within the design limitations set forth in Article 9.6.1. If the Interconnection Customer is unable to maintain the specified voltage or power factor, it shall promptly notify the ISO and the Participating TO.

9.6.2.1 Governors and Regulators. Whenever an Electric Generating Unit is operated in parallel with the ISO Controlled Grid and the speed governors (if installed on the Electric Generating Unit pursuant to Good Utility Practice) and voltage regulators are capable of operation, the Interconnection Customer shall operate the Electric Generating Unit with its speed governors and voltage regulators in automatic operation. If the Electric Generating

Unit's speed governors and voltage regulators are not capable of such automatic operation, the Interconnection Customer shall immediately notify the ISO and the Participating TO and ensure that the Electric Generating Unit operates as specified in Article 9.6.2 through manual operation and that such Electric Generating Unit's reactive power production or absorption (measured in MVARs) are within the design capability of the Electric Generating Unit(s) and steady state stability limits. The Interconnection Customer shall restore the speed governors and voltage regulators to automatic operation as soon as possible and in accordance with the Reliability Management System Agreement in Appendix G. If the Large Generating Facility's speed governors and voltage regulators are improperly tuned or malfunctioning, the ISO shall have the right to order the reduction in output or disconnection of the Large Generating Facility if the reliability of the ISO Controlled Grid would be adversely affected. The Interconnection Customer shall not cause its Large Generating Facility to disconnect automatically or instantaneously from the ISO Controlled Grid or trip any Electric Generating Unit comprising the Large Generating Facility for an under or over frequency condition unless the abnormal frequency condition persists for a time period beyond the limits set forth in ANSI/IEEE Standard C37.106, or such other standard as applied to other generators in the Control Area on a comparable basis.

9.6.3 Payment for Reactive Power. ISO is required to pay the Interconnection Customer for reactive power that Interconnection Customer provides or absorbs from an Electric Generating Unit when the ISO requests the Interconnection Customer to operate its Electric Generating Unit outside the range specified in Article 9.6.1, provided that if the ISO pays other generators for reactive power service within the specified range, it must also pay the Interconnection Customer. Payments shall be pursuant to Article 11.6 or such other agreement to which the ISO and Interconnection Customer have otherwise agreed.

9.7 Outages and Interruptions.

9.7.1 Outages.

9.7.1.1 Outage Authority and Coordination. Each Party may in accordance with Good Utility Practice in coordination with the other Parties remove from service any of its respective Interconnection Facilities or Network Upgrades that may impact another Party's facilities as necessary to perform

maintenance or testing or to install or replace equipment. Absent an Emergency Condition, the Party scheduling a removal of such facility(ies) from service will use Reasonable Efforts to schedule such removal on a date and time mutually acceptable to all Parties. In all circumstances any Party planning to remove such facility(ies) from service shall use Reasonable Efforts to minimize the effect on the other Parties of such removal.

9.7.1.2 **Outage Schedules.** The ISO shall post scheduled outages of ISO Controlled Grid facilities in accordance with the provisions of the ISO Tariff. The Interconnection Customer shall submit its planned maintenance schedules for the Large Generating Facility to the ISO in accordance with the ISO Tariff. The Interconnection Customer shall update its planned maintenance schedules in accordance with the ISO Tariff. The ISO may request the Interconnection Customer to reschedule its maintenance as necessary to maintain the reliability of the ISO Controlled Grid in accordance with the ISO Tariff. Such planned maintenance schedules and updates and changes to such schedules shall be provided by the Interconnection Customer to the Participating TO concurrently with their submittal to the ISO. The ISO shall compensate the Interconnection Customer for any additional direct costs that the Interconnection Customer incurs as a result of having to reschedule maintenance in accordance with the ISO Tariff. The Interconnection Customer will not be eligible to receive compensation, if during the twelve (12) months prior to the date of the scheduled maintenance, the Interconnection Customer had modified its schedule of maintenance activities.

9.7.1.3 **Outage Restoration**. If an outage on a Party's Interconnection Facilities or Network Upgrades adversely affects another Party's operations or facilities, the Party that owns or controls the facility that is out of service shall use Reasonable Efforts to promptly restore such facility(ies) to a normal operating condition consistent with the nature of the outage. The Party that owns or controls the facility that is out of service shall provide the other Parties, to the extent such information is known, information on the nature of the Emergency Condition, if the outage is caused by an Emergency Condition, an estimated time of restoration, and any corrective actions required. Initial verbal notice shall be followed up as soon as practicable with written notice

explaining the nature of the outage, if requested by a Party, which may be provided by e-mail or facsimile.

9.7.2 Interruption of Service. If required by Good Utility Practice to do so, the ISO or the Participating TO may require the Interconnection Customer to interrupt or reduce deliveries of electricity if such delivery of electricity could adversely affect the ISO's or the Participating TO's ability to perform such activities as are necessary to safely and reliably operate and maintain the Participating TO's electric system or the ISO Controlled Grid. The following provisions shall apply to any interruption or reduction permitted under this Article 9.7.2:

9.7.2.1 The interruption or reduction shall continue only for so long as reasonably necessary under Good Utility Practice;

9.7.2.2 Any such interruption or reduction shall be made on an equitable, non-discriminatory basis with respect to all generating facilities directly connected to the ISO Controlled Grid, subject to any conditions specified in this LGIA;

9.7.2.3 When the interruption or reduction must be made under circumstances which do not allow for advance notice, the ISO or Participating TO, as applicable, shall notify the Interconnection Customer by telephone as soon as practicable of the reasons for the curtailment, interruption, or reduction, and, if known, its expected duration. Telephone notification shall be followed by written notification, if requested by the Interconnection Customer, as soon as practicable;

9.7.2.4 Except during the existence of an Emergency Condition, the ISO or Participating TO shall notify the Interconnection Customer in advance regarding the timing of such interruption or reduction and further notify the Interconnection Customer of the expected duration. The ISO or Participating TO shall coordinate with the Interconnection Customer using Good Utility Practice to schedule the interruption or reduction during periods of least impact to the Interconnection Customer, the ISO, and the Participating TO;

9.7.2.5 The Parties shall cooperate and coordinate with each other to the extent necessary in order to restore the Large Generating Facility, Interconnection Facilities, the Participating TO's Transmission System, and the ISO

Controlled Grid to their normal operating state, consistent with system conditions and Good Utility Practice.

9.7.3 Under-Frequency and Over Frequency Conditions. The ISO Controlled Grid is designed to automatically activate a load-shed program as required by the Applicable Reliability Council in the event of an under-frequency system disturbance. The Interconnection Customer shall implement under-frequency and over-frequency protection set points for the Large Generating Facility as required by the Applicable Reliability Council to ensure "ride through" capability. Large Generating Facility response to frequency deviations of pre-determined magnitudes, both under-frequency and over-frequency deviations, shall be studied and coordinated with the Participating TO and ISO in accordance with Good Utility Practice. The term "ride through" as used herein shall mean the ability of a Generating Facility to stay connected to and synchronized with the ISO Controlled Grid during system disturbances within a range of under-frequency and over-frequency conditions, in accordance with Good Utility Practice.

9.7.4 System Protection and Other Control Requirements.

9.7.4.1 **System Protection Facilities**. The Interconnection Customer shall, at its expense, install, operate and maintain System Protection Facilities as a part of the Large Generating Facility or the Interconnection Customer's Interconnection Facilities. The Participating TO shall install at the Interconnection Customer's expense any System Protection Facilities that may be required on the Participating TO's Interconnection Facilities or the Participating TO's Transmission System as a result of the interconnection of the Large Generating Facility and the Interconnection Customer's Interconnection Facilities.

9.7.4.2 The Participating TO's and Interconnection Customer's protection facilities shall be designed and coordinated with other systems in accordance with Applicable Reliability Council criteria and Good Utility Practice.

9.7.4.3 The Participating TO and Interconnection Customer shall each be responsible for protection of its facilities consistent with Good Utility Practice.

9.7.4.4 The Participating TO's and Interconnection Customer's protective relay design shall incorporate the necessary test switches to perform the tests required in Article 6. The required test switches will be placed such that they allow

operation of lockout relays while preventing breaker failure schemes from operating and causing unnecessary breaker operations and/or the tripping of the Interconnection Customer's Electric Generating Units.

9.7.4.5 The Participating TO and Interconnection Customer will test, operate and maintain System Protection Facilities in accordance with Good Utility Practice and, if applicable, the requirements of the Participating TO's Interconnection Handbook.

9.7.4.6 Prior to the in-service date, and again prior to the Commercial Operation Date, the Participating TO and Interconnection Customer or their agents shall perform a complete calibration test and functional trip test of the System Protection Facilities. At intervals suggested by Good Utility Practice, the standards and procedures of the Participating TO, including, if applicable, the requirements of the Participating TO's Interconnection Handbook, and following any apparent malfunction of the System Protection Facilities, each Party shall perform both calibration and functional trip tests of its System Protection Facilities. These tests do not require the tripping of any in-service generation unit. These tests do, however, require that all protective relays and lockout contacts be activated.

9.7.5 Requirements for Protection. In compliance with Good Utility Practice and, if applicable, the requirements of the Participating TO's Interconnection Handbook, the Interconnection Customer shall provide, install, own, and maintain relays, circuit breakers and all other devices necessary to remove any fault contribution of the Large Generating Facility to any short circuit occurring on the Participating TO's Transmission System not otherwise isolated by the Participating TO's equipment, such that the removal of the fault contribution shall be coordinated with the protective requirements of the Participating TO's Transmission System. Such protective equipment shall include, without limitation, a disconnecting device with fault current-interrupting capability located between the Large Generating Facility and the Participating TO's Transmission System at a site selected upon mutual agreement (not to be unreasonably withheld, conditioned or delayed) of the Parties. The Interconnection Customer shall be responsible for protection of the Large Generating Facility and the Interconnection Customer's other equipment from such conditions as negative sequence currents, over- or under-frequency, sudden load rejection, over- or under-voltage, and generator loss-of-field. The Interconnection Customer shall be solely responsible to disconnect the Large Generating Facility and the Interconnection

Customer's other equipment if conditions on the ISO Controlled Grid could adversely affect the Large Generating Facility.

9.7.6 Power Quality. Neither the Participating TO's nor the Interconnection Customer's facilities shall cause excessive voltage flicker nor introduce excessive distortion to the sinusoidal voltage or current waves as defined by ANSI Standard C84.1-1989, in accordance with IEEE Standard 519, any applicable superseding electric industry standard, or any alternative Applicable Reliability Council standard. In the event of a conflict between ANSI Standard C84.1-1989, any applicable superseding electric industry standard, or any alternative Applicable Reliability Council standard, the alternative Applicable Reliability Council standard shall control.

9.8 Switching and Tagging Rules. Each Party shall provide the other Parties a copy of its switching and tagging rules that are applicable to the other Parties' activities. Such switching and tagging rules shall be developed on a non-discriminatory basis. The Parties shall comply with applicable switching and tagging rules, as amended from time to time, in obtaining clearances for work or for switching operations on equipment.

9.9 Use of Interconnection Facilities by Third Parties.

9.9.1 Purpose of Interconnection Facilities. Except as may be required by Applicable Laws and Regulations, or as otherwise agreed to among the Parties, the Interconnection Facilities shall be constructed for the sole purpose of interconnecting the Large Generating Facility to the Participating TO's Transmission System and shall be used for no other purpose.

9.9.2 Third Party Users. If required by Applicable Laws and Regulations or if the Parties mutually agree, such agreement not to be unreasonably withheld, to allow one or more third parties to use the Participating TO's Interconnection Facilities, or any part thereof, the Interconnection Customer will be entitled to compensation for the capital expenses it incurred in connection with the Interconnection Facilities based upon the pro rata use of the Interconnection Facilities by the Participating TO, all third party users, and the Interconnection Customer, in accordance with Applicable Laws and Regulations or upon some other mutually-agreed upon methodology. In addition, cost responsibility for ongoing costs, including operation and maintenance costs associated with the Interconnection Facilities, will be allocated between the Interconnection Customer and any third party users based upon the pro rata use of the Interconnection Facilities by the Participating TO, all third party users, and the Interconnection Customer, in accordance with Applicable Laws and Regulations or upon some other mutually agreed upon methodology. If

the issue of such compensation or allocation cannot be resolved through such negotiations, it shall be submitted to FERC for resolution.

9.10 Disturbance Analysis Data Exchange. The Parties will cooperate with one another in the analysis of disturbances to either the Large Generating Facility or the ISO Controlled Grid by gathering and providing access to any information relating to any disturbance, including information from oscillography, protective relay targets, breaker operations and sequence of events records, and any disturbance information required by Good Utility Practice.

ARTICLE 10. MAINTENANCE

10.1 Participating TO Obligations. The Participating TO shall maintain the Participating TO's Transmission System and the Participating TO's Interconnection Facilities in a safe and reliable manner and in accordance with this LGIA.

10.2 Interconnection Customer Obligations. The Interconnection Customer shall maintain the Large Generating Facility and the Interconnection Customer's Interconnection Facilities in a safe and reliable manner and in accordance with this LGIA.

10.3 Coordination. The Parties shall confer regularly to coordinate the planning, scheduling and performance of preventive and corrective maintenance on the Large Generating Facility and the Interconnection Facilities.

10.4 Secondary Systems. The Participating TO and Interconnection Customer shall cooperate with the other Parties in the inspection, maintenance, and testing of control or power circuits that operate below 600 volts, AC or DC, including, but not limited to, any hardware, control or protective devices, cables, conductors, electric raceways, secondary equipment panels, transducers, batteries, chargers, and voltage and current transformers that directly affect the operation of a Party's facilities and equipment which may reasonably be expected to impact the other Parties. Each Party shall provide advance notice to the other Parties before undertaking any work on such circuits, especially on electrical circuits involving circuit breaker trip and close contacts, current transformers, or potential transformers.

10.5 Operating and Maintenance Expenses. Subject to the provisions herein addressing the use of facilities by others, and except for operations and maintenance expenses associated with modifications made for providing interconnection or transmission service to a third party and such third party pays for such expenses, the Interconnection Customer shall be responsible for all reasonable expenses including overheads, associated with: (1) owning, operating, maintaining, repairing, and replacing the Interconnection Customer's

Interconnection Facilities; and (2) operation, maintenance, repair and replacement of the Participating TO's Interconnection Facilities.

ARTICLE 11. PERFORMANCE OBLIGATION

11.1 Interconnection Customer's Interconnection Facilities. The Interconnection Customer shall design, procure, construct, install, own and/or control the Interconnection Customer's Interconnection Facilities described in Appendix A at its sole expense.

11.2 Participating TO's Interconnection Facilities. The Participating TO shall design, procure, construct, install, own and/or control the Participating TO's Interconnection Facilities described in Appendix A at the sole expense of the Interconnection Customer. Unless the Participating TO elects to fund the capital for the Participating TO's Interconnection Facilities, they shall be solely funded by the Interconnection Customer.

11.3 Network Upgrades and Distribution Upgrades. The Participating TO shall design, procure, construct, install, and own the Network Upgrades and Distribution Upgrades described in Appendix A. The Interconnection Customer shall be responsible for all costs related to Distribution Upgrades. Unless the Participating TO elects to fund the capital for the Distribution Upgrades and Network Upgrades, they shall be solely funded by the Interconnection Customer.

11.4 Transmission Credits. No later than thirty (30) days prior to the Commercial Operation Date, the Interconnection Customer may make a one-time election by written notice to the ISO and the Participating TO to receive Firm Transmission Rights as defined in and as available under the ISO Tariff at the time of the election in accordance with the ISO Tariff, in lieu of a refund of the cost of Network Upgrades in accordance with Article 11.4.1.

11.4.1 Repayment of Amounts Advanced for Network Upgrades. Upon the Commercial Operation Date, the Interconnection Customer shall be entitled to a repayment, equal to the total amount paid to the Participating TO for the cost of Network Upgrades. Such amount shall include any tax gross-up or other tax-related payments associated with Network Upgrades not refunded to the Interconnection Customer pursuant to Article 5.17.8 or otherwise, and shall be paid to the Interconnection Customer by the Participating TO on a dollar-for-dollar basis either through (1) direct payments made on a levelized basis over the five-year period commencing on the Commercial Operation Date; or (2) any alternative payment schedule that is mutually agreeable to the Interconnection Customer and Participating TO, provided that such amount is paid within five (5) years from the Commercial Operation Date. Notwithstanding the foregoing, if this LGIA terminates within five (5) years from the

Commercial Operation Date, the Participating TO's obligation to pay refunds to the Interconnection Customer shall cease as of the date of termination. Any repayment shall include interest calculated in accordance with the methodology set forth in FERC's regulations at 18 C.F.R. §35.19a(a)(2)(iii) from the date of any payment for Network Upgrades through the date on which the Interconnection Customer receives a repayment of such payment. Interest shall continue to accrue on the repayment obligation so long as this LGIA is in effect. The Interconnection Customer may assign such repayment rights to any person.

If the Large Generating Facility fails to achieve commercial operation, but it or another Generating Facility is later constructed and makes use of the Network Upgrades, the Participating TO shall at that time reimburse Interconnection Customer for the amounts advanced for the Network Upgrades. Before any such reimbursement can occur, the Interconnection Customer, or the entity that ultimately constructs the Generating Facility, if different, is responsible for identifying the entity to which reimbursement must be made.

11.4.2 Special Provisions for Affected Systems. The Interconnection Customer shall enter into an agreement with the owner of the Affected System and/or other affected owners of portions of the ISO Controlled Grid, as applicable, in accordance with the LGIP. Such agreement shall specify the terms governing payments to be made by the Interconnection Customer to the owner of the Affected System and/or other affected owners of portions of the ISO Controlled Grid as well as the repayment by the owner of the Affected System and/or other affected owners of portions of the ISO Controlled Grid. In no event shall the Participating TO be responsible for the repayment for any facilities that are not part of the Participating TO's Transmission System.

11.4.3 Notwithstanding any other provision of this LGIA, nothing herein shall be construed as relinquishing or foreclosing any rights, including but not limited to firm transmission rights, capacity rights, transmission congestion rights, or transmission credits, that the Interconnection Customer shall be entitled to, now or in the future under any other agreement or tariff as a result of, or otherwise associated with, the transmission capacity, if any, created by the Network Upgrades, including the right to obtain cash reimbursements or transmission credits for transmission service that is not associated with the Large Generating Facility.

11.5 Provision of Security. At least thirty (30) Calendar Days prior to the commencement of the procurement, installation, or construction of a discrete portion of a Participating TO's Interconnection Facilities, Network Upgrades, or Distribution Upgrades, the Interconnection Customer shall provide the

Participating TO, at the Interconnection Customer's option, a guarantee, a surety bond, letter of credit or other form of security that is reasonably acceptable to the Participating TO and is consistent with the Uniform Commercial Code of the jurisdiction identified in Article 14.2.1. Such security for payment shall be in an amount sufficient to cover the costs for constructing, procuring and installing the applicable portion of the Participating TO's Interconnection Facilities, Network Upgrades, or Distribution Upgrades. Such security shall be reduced on a dollar-for-dollar basis for payments made to the Participating TO for these purposes.

In addition:

11.5.1 The guarantee must be made by an entity that meets the creditworthiness requirements of the Participating TO, and contain terms and conditions that guarantee payment of any amount that may be due from the Interconnection Customer, up to an agreed-to maximum amount.

11.5.2 The letter of credit must be issued by a financial institution reasonably acceptable to the Participating TO and must specify a reasonable expiration date.

11.5.3 The surety bond must be issued by an insurer reasonably acceptable to the Participating TO and must specify a reasonable expiration date.

11.6 Interconnection Customer Compensation. If the ISO requests or directs the Interconnection Customer to provide a service pursuant to Articles 9.6.3 (Payment for Reactive Power) or 13.5.1 of this LGIA, the ISO shall compensate the Interconnection Customer in accordance with the ISO Tariff.

11.6.1 Interconnection Customer Compensation for Actions During Emergency Condition. The ISO shall compensate the Interconnection Customer in accordance with the ISO Tariff for its provision of real and reactive power and other Emergency Condition services that the Interconnection Customer provides to support the ISO Controlled Grid during an Emergency Condition in accordance with Article 11.6.

ARTICLE 12. INVOICE

12.1 General. The Participating TO shall submit to the Interconnection Customer, on a monthly basis, invoices of amounts due pursuant to this LGIA for the preceding month. Each invoice shall state the month to which the invoice applies and fully describe the services and equipment provided. The Parties may discharge mutual debts and payment obligations due and owing to each other on the same date through netting, in which case all amounts a Party owes to the other Party under this LGIA, including interest payments or credits, shall be netted so that only the net amount remaining due shall be paid by the owing Party.

Notwithstanding the foregoing, any invoices between the ISO and another Party shall be submitted and paid in accordance with the ISO Tariff.

12.2 Final Invoice. As soon as reasonably practicable, but within twelve months after completion of the construction of the Participating TO's Interconnection Facilities, Network Upgrades, and Distribution Upgrades, the Participating TO shall provide an invoice of the final cost of the construction of the Participating TO's Interconnection Facilities, Network Upgrades, and Distribution Upgrades, and shall set forth such costs in sufficient detail to enable the Interconnection Customer to compare the actual costs with the estimates and to ascertain deviations, if any, from the cost estimates. The Participating TO shall refund to the Interconnection Customer any amount by which the actual payment by the Interconnection Customer for estimated costs exceeds the actual costs of construction within thirty (30) Calendar Days of the issuance of such final construction invoice; or, in the event the actual costs of construction exceed the Interconnection Customer's actual payment for estimated costs, then the Interconnection Customer shall pay to the Participating TO any amount by which the actual costs of construction exceed the actual payment by the Interconnection Customer for estimated costs within thirty (30) Calendar Days of the issuance of such final construction invoice.

12.3 Payment. Invoices shall be rendered to the Interconnection Customer at the address specified in Appendix F. The Interconnection Customer shall pay, or Participating TO shall refund, the amounts due within thirty (30) Calendar Days of the Interconnection Customer's receipt of the invoice. All payments shall be made in immediately available funds payable to the Interconnection Customer or Participating TO, or by wire transfer to a bank named and account designated by the invoicing Interconnection Customer or Participating TO. Payment of invoices by any Party will not constitute a waiver of any rights or claims any Party may have under this LGIA.

12.4 Disputes. In the event of a billing dispute between the Interconnection Customer and the Participating TO, the Participating TO and the ISO shall continue to provide Interconnection Service under this LGIA as long as the Interconnection Customer: (i) continues to make all payments not in dispute; and (ii) pays to the Participating TO or into an independent escrow account the portion of the invoice in dispute, pending resolution of such dispute. If the Interconnection Customer fails to meet these two requirements for continuation of service, then the Participating TO may provide notice to the Interconnection Customer of a Default pursuant to Article 17. Within thirty (30) Calendar Days after the resolution of the dispute, the Party that owes money to the other Party shall pay the amount due with interest calculated in accordance with the methodology set forth in FERC's Regulations at 18 C.F.R. § 35.19a(a)(2)(iii). Notwithstanding the foregoing, any billing dispute between the ISO and another Party shall be resolved in accordance with the provisions of Article 27 of this LGIA.

ARTICLE 13. EMERGENCIES

13.1 [Reserved]

13.2 Obligations. Each Party shall comply with the Emergency Condition procedures of the ISO, NERC, the Applicable Reliability Council, Applicable Laws and Regulations, and any emergency procedures set forth in this LGIA.

13.3 Notice. The Participating TO or the ISO shall notify the Interconnection Customer promptly when it becomes aware of an Emergency Condition that affects the Participating TO's Interconnection Facilities or Distribution System or the ISO Controlled Grid, respectively, that may reasonably be expected to affect the Interconnection Customer's operation of the Large Generating Facility or the Interconnection Customer's Interconnection Facilities. The Interconnection Customer shall notify the Participating TO and the ISO promptly when it becomes aware of an Emergency Condition that affects the Large Generating Facility or the Interconnection Customer's Interconnection Facilities that may reasonably be expected to affect the ISO Controlled Grid or the Participating TO's Interconnection Facilities. To the extent information is known, the notification shall describe the Emergency Condition, the extent of the damage or deficiency, the expected effect on the operation of the Interconnection Customer's or Participating TO's facilities and operations, its anticipated duration and the corrective action taken and/or to be taken. The initial notice shall be followed as soon as practicable with written notice, if requested by a Party, which may be provided by electronic mail or facsimile, or in the case of the ISO may be publicly posted on the ISO's internet web site.

13.4 Immediate Action. Unless, in the Interconnection Customer's reasonable judgment, immediate action is required, the Interconnection Customer shall obtain the consent of the ISO and the Participating TO, such consent to not be unreasonably withheld, prior to performing any manual switching operations at the Large Generating Facility or the Interconnection Customer's Interconnection Facilities in response to an Emergency Condition declared by the Participating TO or ISO or in response to any other emergency condition.

13.5 ISO and Participating TO Authority.

13.5.1 General. The ISO and Participating TO may take whatever actions or inactions, including issuance of dispatch instructions, with regard to the ISO Controlled Grid or the Participating TO's Interconnection Facilities or Distribution System they deem necessary during an Emergency Condition in order to (i) preserve public health and safety, (ii) preserve the reliability of the ISO Controlled Grid or the Participating TO's Interconnection

Facilities or Distribution System, and (iii) limit or prevent damage, and (iv) expedite restoration of service.

The Participating TO and the ISO shall use Reasonable Efforts to minimize the effect of such actions or inactions on the Large Generating Facility or the Interconnection Customer's Interconnection Facilities. The Participating TO or the ISO may, on the basis of technical considerations, require the Large Generating Facility to mitigate an Emergency Condition by taking actions necessary and limited in scope to remedy the Emergency Condition, including, but not limited to, directing the Interconnection Customer to shut-down, start-up, increase or decrease the real or reactive power output of the Large Generating Facility; implementing a reduction or disconnection pursuant to Article 13.5.2; directing the Interconnection Customer to assist with black start (if available) or restoration efforts; or altering the outage schedules of the Large Generating Facility and the Interconnection Customer's Interconnection Facilities. Interconnection Customer shall comply with all of the ISO's and Participating TO's operating instructions concerning Large Generating Facility real power and reactive power output within the manufacturer's design limitations of the Large Generating Facility's equipment that is in service and physically available for operation at the time, in compliance with Applicable Laws and Regulations.

13.5.2 Reduction and Disconnection. The Participating TO or the ISO may reduce Interconnection Service or disconnect the Large Generating Facility or the Interconnection Customer's Interconnection Facilities when such reduction or disconnection is necessary under Good Utility Practice due to Emergency Conditions. These rights are separate and distinct from any right of curtailment of the ISO pursuant to the ISO Tariff. When the ISO or Participating TO can schedule the reduction or disconnection in advance, the ISO or Participating TO shall notify the Interconnection Customer of the reasons, timing and expected duration of the reduction or disconnection. The ISO or Participating TO shall coordinate with the Interconnection Customer using Good Utility Practice to schedule the reduction or disconnection during periods of least impact to the Interconnection Customer and the ISO and Participating TO. Any reduction or disconnection shall continue only for so long as reasonably necessary under Good Utility Practice. The Parties shall cooperate with each other to restore the Large Generating Facility, the Interconnection Facilities, and the ISO Controlled Grid to their normal operating state as soon as practicable consistent with Good Utility Practice.

13.6 Interconnection Customer Authority. Consistent with Good Utility Practice, this LGIA, and the ISO Tariff, the Interconnection Customer may take actions or inactions with regard to the Large Generating Facility or the Interconnection Customer's Interconnection Facilities during an Emergency Condition in order to

(i) preserve public health and safety, (ii) preserve the reliability of the Large Generating Facility or the Interconnection Customer's Interconnection Facilities, (iii) limit or prevent damage, and (iv) expedite restoration of service. Interconnection Customer shall use Reasonable Efforts to minimize the effect of such actions or inactions on the ISO Controlled Grid and the Participating TO's Interconnection Facilities. The ISO and Participating TO shall use Reasonable Efforts to assist Interconnection Customer in such actions.

13.7 Limited Liability. Except as otherwise provided in Article 11.6.1 of this LGIA, no Party shall be liable to any other Party for any action it takes in responding to an Emergency Condition so long as such action is made in good faith and is consistent with Good Utility Practice.

ARTICLE 14. REGULATORY REQUIREMENTS AND GOVERNING LAW

14.1 Regulatory Requirements. Each Party's obligations under this LGIA shall be subject to its receipt of any required approval or certificate from one or more Governmental Authorities in the form and substance satisfactory to the applying Party, or the Party making any required filings with, or providing notice to, such Governmental Authorities, and the expiration of any time period associated therewith. Each Party shall in good faith seek and use its Reasonable Efforts to obtain such other approvals. Nothing in this LGIA shall require the Interconnection Customer to take any action that could result in its inability to obtain, or its loss of, status or exemption under the Federal Power Act or the Public Utility Holding Company Act of 1935, as amended, or the Public Utility Regulatory Policies Act of 1978.

14.2 Governing Law.

14.2.1 The validity, interpretation and performance of this LGIA and each of its provisions shall be governed by the laws of the state where the Point of Interconnection is located, without regard to its conflicts of law principles.

14.2.2 This LGIA is subject to all Applicable Laws and Regulations.

14.2.3 Each Party expressly reserves the right to seek changes in, appeal, or otherwise contest any laws, orders, rules, or regulations of a Governmental Authority.

ARTICLE 15. NOTICES

15.1 General. Unless otherwise provided in this LGIA, any notice, demand or request required or permitted to be given by a Party to another and any instrument required or permitted to be tendered or delivered by a Party in writing to another

shall be effective when delivered and may be so given, tendered or delivered, by recognized national courier, or by depositing the same with the United States Postal Service with postage prepaid, for delivery by certified or registered mail, addressed to the Party, or personally delivered to the Party, at the address set out in Appendix F, Addresses for Delivery of Notices and Billings.

A Party must update the information in Appendix F as information changes. A Party may change the notice information in this LGIA by giving five (5) Business Days written notice prior to the effective date of the change. Such changes shall not constitute an amendment to this LGIA.

15.2 Billings and Payments. Billings and payments shall be sent to the addresses set out in Appendix F.

15.3 Alternative Forms of Notice. Any notice or request required or permitted to be given by a Party to another and not required by this LGIA to be given in writing may be so given by telephone, facsimile or e-mail to the telephone numbers and e-mail addresses set out in Appendix F.

15.4 Operations and Maintenance Notice. Each Party shall notify the other Parties in writing of the identity of the person(s) that it designates as the point(s) of contact with respect to the implementation of Articles 9 and 10.

ARTICLE 16. FORCE MAJEURE

16.1 Force Majeure.

16.1.1 Economic hardship is not considered a Force Majeure event.

16.1.2 No Party shall be considered to be in Default with respect to any obligation hereunder, (including obligations under Article 4), other than the obligation to pay money when due, if prevented from fulfilling such obligation by Force Majeure. A Party unable to fulfill any obligation hereunder (other than an obligation to pay money when due) by reason of Force Majeure shall give notice and the full particulars of such Force Majeure to the other Party in writing or by telephone as soon as reasonably possible after the occurrence of the cause relied upon. Telephone notices given pursuant to this Article shall be confirmed in writing as soon as reasonably possible and shall specifically state full particulars of the Force Majeure, the time and date when the Force Majeure occurred and when the Force Majeure is reasonably expected to cease. The Party affected shall exercise due diligence to remove such disability with reasonable dispatch, but shall not be required to accede or agree to any provision not satisfactory to it in order to settle and terminate a strike or other labor disturbance.

ARTICLE 17. DEFAULT

17.1 Default

17.1.1 General. No Default shall exist where such failure to discharge an obligation (other than the payment of money) is the result of Force Majeure as defined in this LGIA or the result of an act or omission of the other Party. Upon a Breach, the affected non-Breaching Party(ies) shall give written notice of such Breach to the Breaching Party. Except as provided in Article 17.1.2, the Breaching Party shall have thirty (30) Calendar Days from receipt of the Default notice within which to cure such Breach; provided however, if such Breach is not capable of cure within thirty (30) Calendar Days, the Breaching Party shall commence such cure within thirty (30) Calendar Days after notice and continuously and diligently complete such cure within ninety (90) Calendar Days from receipt of the Default notice; and, if cured within such time, the Breach specified in such notice shall cease to exist.

17.1.2 Right to Terminate. If a Breach is not cured as provided in this Article, or if a Breach is not capable of being cured within the period provided for herein, the affected non-Breaching Party(ies) shall have the right to declare a Default and terminate this LGIA by written notice at any time until cure occurs, and be relieved of any further obligation hereunder and, whether or not such Party(ies) terminates this LGIA, to recover from the Breaching Party all amounts due hereunder, plus all other damages and remedies to which it is entitled at law or in equity. The provisions of this Article will survive termination of this LGIA.

ARTICLE 18. INDEMNITY, CONSEQUENTIAL DAMAGES AND INSURANCE

18.1 Indemnity. Each Party shall at all times indemnify, defend, and hold the other Parties harmless from, any and all Losses arising out of or resulting from another Party's action or inactions of its obligations under this LGIA on behalf of the indemnifying Party, except in cases of gross negligence or intentional wrongdoing by the Indemnified Party.

18.1.1 Indemnified Party. If an Indemnified Party is entitled to indemnification under this Article 18 as a result of a claim by a third party, and the Indemnifying Party fails, after notice and reasonable opportunity to proceed under Article 18.1, to assume the defense of such claim, such Indemnified Party may at the expense of the Indemnifying Party contest, settle or consent to the entry of any judgment with respect to, or pay in full, such claim.

18.1.2 Indemnifying Party. If an Indemnifying Party is obligated to indemnify and hold any Indemnified Party harmless under this Article 18, the amount owing to the Indemnified Party shall be the amount of such Indemnified Party's actual Loss, net of any insurance or other recovery.

18.1.3 Indemnity Procedures. Promptly after receipt by an Indemnified Party of any claim or notice of the commencement of any action or administrative or legal proceeding or investigation as to which the indemnity provided for in Article 18.1 may apply, the Indemnified Party shall notify the Indemnifying Party of such fact. Any failure of or delay in such notification shall not affect a Party's indemnification obligation unless such failure or delay is materially prejudicial to the indemnifying Party.

The Indemnifying Party shall have the right to assume the defense thereof with counsel designated by such Indemnifying Party and reasonably satisfactory to the Indemnified Party. If the defendants in any such action include one or more Indemnified Parties and the Indemnifying Party and if the Indemnified Party reasonably concludes that there may be legal defenses available to it and/or other Indemnified Parties which are different from or additional to those available to the Indemnifying Party, the Indemnified Party shall have the right to select separate counsel to assert such legal defenses and to otherwise participate in the defense of such action on its own behalf. In such instances, the Indemnifying Party shall only be required to pay the fees and expenses of one additional attorney to represent an Indemnified Party or Indemnified Parties having such differing or additional legal defenses.

The Indemnified Party shall be entitled, at its expense, to participate in any such action, suit or proceeding, the defense of which has been assumed by the Indemnifying Party. Notwithstanding the foregoing, the Indemnifying Party (i) shall not be entitled to assume and control the defense of any such action, suit or proceedings if and to the extent that, in the opinion of the Indemnified Party and its counsel, such action, suit or proceeding involves the potential imposition of criminal liability on the Indemnified Party, or there exists a conflict or adversity of interest between the Indemnified Party and the Indemnifying Party, in such event the Indemnifying Party shall pay the reasonable expenses of the Indemnified Party, and (ii) shall not settle or consent to the entry of any judgment in any action, suit or proceeding without the consent of the Indemnified Party, which shall not be unreasonably withheld, conditioned or delayed.

18.2 Consequential Damages. Other than the liquidated damages heretofore described in Article 5.3, in no event shall any Party be liable under any provision of this LGIA for any losses, damages, costs or expenses for any special, indirect, incidental, consequential, or punitive damages, including but not limited to loss of

profit or revenue, loss of the use of equipment, cost of capital, cost of temporary equipment or services, whether based in whole or in part in contract, in tort, including negligence, strict liability, or any other theory of liability; provided, however, that damages for which a Party may be liable to another Party under another agreement will not be considered to be special, indirect, incidental, or consequential damages hereunder.

18.3 Insurance. Each Party shall, at its own expense, maintain in force throughout the period of this LGIA, and until released by the other Parties, the following minimum insurance coverages, with insurers rated no less than A- (with a minimum size rating of VII) by Bests' Insurance Guide and Key Ratings and authorized to do business in the state where the Point of Interconnection is located, except in the case of the ISO, the State of California:

18.3.1 Employer's Liability and Workers' Compensation Insurance providing statutory benefits in accordance with the laws and regulations of the state in which the Point of Interconnection is located, except in the case of the ISO, the State of California.

18.3.2 Commercial General Liability Insurance including premises and operations, personal injury, broad form property damage, broad form blanket contractual liability coverage (including coverage for the contractual indemnification) products and completed operations coverage, coverage for explosion, collapse and underground hazards, independent contractors coverage, coverage for pollution to the extent normally available and punitive damages to the extent normally available and a cross liability endorsement, with minimum limits of One Million Dollars ($1,000,000) per occurrence/One Million Dollars ($1,000,000) aggregate combined single limit for personal injury, bodily injury, including death and property damage.

18.3.3 Business Automobile Liability Insurance for coverage of owned and non-owned and hired vehicles, trailers or semi-trailers designed for travel on public roads, with a minimum, combined single limit of One Million Dollars ($1,000,000) per occurrence for bodily injury, including death, and property damage.

18.3.4 Excess Public Liability Insurance over and above the Employer's Liability Commercial General Liability and Business Automobile Liability Insurance coverage, with a minimum combined single limit of Twenty Million Dollars ($20,000,000) per occurrence/Twenty Million Dollars ($20,000,000) aggregate.

18.3.5 The Commercial General Liability Insurance, Business Automobile Insurance and Excess Public Liability Insurance policies shall name the other Parties, their parents, associated and Affiliate companies and their

respective directors, officers, agents, servants and employees ("Other Party Group") as additional insured. All policies shall contain provisions whereby the insurers waive all rights of subrogation in accordance with the provisions of this LGIA against the Other Party Group and provide thirty (30) Calendar Days advance written notice to the Other Party Group prior to anniversary date of cancellation or any material change in coverage or condition.

18.3.6 The Commercial General Liability Insurance, Business Automobile Liability Insurance and Excess Public Liability Insurance policies shall contain provisions that specify that the policies are primary and shall apply to such extent without consideration for other policies separately carried and shall state that each insured is provided coverage as though a separate policy had been issued to each, except the insurer's liability shall not be increased beyond the amount for which the insurer would have been liable had only one insured been covered. Each Party shall be responsible for its respective deductibles or retentions.

18.3.7 The Commercial General Liability Insurance, Business Automobile Liability Insurance and Excess Public Liability Insurance policies, if written on a Claims First Made Basis, shall be maintained in full force and effect for two (2) years after termination of this LGIA, which coverage may be in the form of tail coverage or extended reporting period coverage if agreed by the Parties.

18.3.8 The requirements contained herein as to the types and limits of all insurance to be maintained by the Parties are not intended to and shall not in any manner, limit or qualify the liabilities and obligations assumed by the Parties under this LGIA.

18.3.9 Within ten (10) Calendar Days following execution of this LGIA, and as soon as practicable after the end of each fiscal year or at the renewal of the insurance policy and in any event within ninety (90) Calendar Days thereafter, each Party shall provide certification of all insurance required in this LGIA, executed by each insurer or by an authorized representative of each insurer.

18.3.10 Notwithstanding the foregoing, each Party may self-insure to meet the minimum insurance requirements of Articles 18.3.2 through 18.3.8 to the extent it maintains a self-insurance program; provided that, such Party's senior unsecured debt or issuer rating is BBB-, or better, as rated by Standard & Poor's and that its self-insurance program meets the minimum insurance requirements of Articles 18.3.2 through 18.3.8. For any period of time that a Party's senior unsecured debt rating and issuer rating are both unrated by Standard & Poor's or are both rated at less than BBB- by Standard & Poor's, such Party shall comply with the

insurance requirements applicable to it under Articles 18.3.2 through 18.3.9. In the event that a Party is permitted to self-insure pursuant to this Article 18.3.10, it shall notify the other Parties that it meets the requirements to self-insure and that its self-insurance program meets the minimum insurance requirements in a manner consistent with that specified in Article 18.3.9.

18.3.11 The Parties agree to report to each other in writing as soon as practical all accidents or occurrences resulting in injuries to any person, including death, and any property damage arising out of this LGIA.

ARTICLE 19. ASSIGNMENT

19.1 **Assignment**. This LGIA may be assigned by a Party only with the written consent of the other Parties; provided that a Party may assign this LGIA without the consent of the other Parties to any Affiliate of the assigning Party with an equal or greater credit rating and with the legal authority and operational ability to satisfy the obligations of the assigning Party under this LGIA; and provided further that the Interconnection Customer shall have the right to assign this LGIA, without the consent of the ISO or Participating TO, for collateral security purposes to aid in providing financing for the Large Generating Facility, provided that the Interconnection Customer will promptly notify the ISO and Participating TO of any such assignment. Any financing arrangement entered into by the Interconnection Customer pursuant to this Article will provide that prior to or upon the exercise of the secured party's, trustee's or mortgagee's assignment rights pursuant to said arrangement, the secured creditor, the trustee or mortgagee will notify the ISO and Participating TO of the date and particulars of any such exercise of assignment right(s), including providing the ISO and Participating TO with proof that it meets the requirements of Articles 11.5 and 18.3. Any attempted assignment that violates this Article is void and ineffective. Any assignment under this LGIA shall not relieve a Party of its obligations, nor shall a Party's obligations be enlarged, in whole or in part, by reason thereof. Where required, consent to assignment will not be unreasonably withheld, conditioned or delayed.

ARTICLE 20. SEVERABILITY

20.1 **Severability**. If any provision in this LGIA is finally determined to be invalid, void or unenforceable by any court or other Governmental Authority having jurisdiction, such determination shall not invalidate, void or make unenforceable any other provision, agreement or covenant of this LGIA; provided that if the Interconnection Customer (or any third party, but only if such third party is not acting at the direction of the Participating TO or ISO) seeks and obtains such a final determination with respect to any provision of the Alternate Option (Article

5.1.2), or the Negotiated Option (Article 5.1.4), then none of the provisions of Article 5.1.2 or 5.1.4 shall thereafter have any force or effect and the Parties' rights and obligations shall be governed solely by the Standard Option (Article 5.1.1).

ARTICLE 21. COMPARABILITY

21.1 Comparability. The Parties will comply with all applicable comparability and code of conduct laws, rules and regulations, as amended from time to time.

ARTICLE 22. CONFIDENTIALITY

22.1 Confidentiality. Confidential Information shall include, without limitation, all information relating to a Party's technology, research and development, business affairs, and pricing, and any information supplied by any of the Parties to the other Parties prior to the execution of this LGIA.

Information is Confidential Information only if it is clearly designated or marked in writing as confidential on the face of the document, or, if the information is conveyed orally or by inspection, if the Party providing the information orally informs the Parties receiving the information that the information is confidential.

If requested by any Party, the other Parties shall provide in writing, the basis for asserting that the information referred to in this Article 22 warrants confidential treatment, and the requesting Party may disclose such writing to the appropriate Governmental Authority. Each Party shall be responsible for the costs associated with affording confidential treatment to its information.

22.1.1 Term. During the term of this LGIA, and for a period of three (3) years after the expiration or termination of this LGIA, except as otherwise provided in this Article 22, each Party shall hold in confidence and shall not disclose to any person Confidential Information.

22.1.2 Scope. Confidential Information shall not include information that the receiving Party can demonstrate: (1) is generally available to the public other than as a result of a disclosure by the receiving Party; (2) was in the lawful possession of the receiving Party on a non-confidential basis before receiving it from the disclosing Party; (3) was supplied to the receiving Party without restriction by a third party, who, to the knowledge of the receiving Party after due inquiry, was under no obligation to the disclosing Party to keep such information confidential; (4) was independently developed by the receiving Party without reference to Confidential Information of the disclosing Party; (5) is, or becomes, publicly known, through no wrongful act or omission of the receiving Party or Breach of

this LGIA; or (6) is required, in accordance with Article 22.1.7 of this LGIA, Order of Disclosure, to be disclosed by any Governmental Authority or is otherwise required to be disclosed by law or subpoena, or is necessary in any legal proceeding establishing rights and obligations under this LGIA. Information designated as Confidential Information will no longer be deemed confidential if the Party that designated the information as confidential notifies the other Parties that it no longer is confidential.

22.1.3 **Release of Confidential Information**. No Party shall release or disclose Confidential Information to any other person, except to its employees, consultants, Affiliates (limited by the Standards of Conduct requirements set forth in Part 358 of FERC's Regulations, 18 C.F.R. 358), subcontractors, or to parties who may be or considering providing financing to or equity participation with the Interconnection Customer, or to potential purchasers or assignees of the Interconnection Customer, on a need-to-know basis in connection with this LGIA, unless such person has first been advised of the confidentiality provisions of this Article 22 and has agreed to comply with such provisions. Notwithstanding the foregoing, a Party providing Confidential Information to any person shall remain primarily responsible for any release of Confidential Information in contravention of this Article 22.

22.1.4 **Rights**. Each Party retains all rights, title, and interest in the Confidential Information that each Party discloses to the other Parties. The disclosure by each Party to the other Parties of Confidential Information shall not be deemed a waiver by a Party or any other person or entity of the right to protect the Confidential Information from public disclosure.

22.1.5 **No Warranties**. The mere fact that a Party has provided Confidential Information does not constitute a warranty or representation as to its accuracy or completeness. In addition, by supplying Confidential Information, no Party obligates itself to provide any particular information or Confidential Information to the other Parties nor to enter into any further agreements or proceed with any other relationship or joint venture.

22.1.6 **Standard of Care**. Each Party shall use at least the same standard of care to protect Confidential Information it receives as it uses to protect its own Confidential Information from unauthorized disclosure, publication or dissemination. Each Party may use Confidential Information solely to fulfill its obligations to the other Parties under this LGIA or its regulatory requirements.

22.1.7 **Order of Disclosure**. If a court or a Government Authority or entity with the right, power, and apparent authority to do so requests or requires any Party, by subpoena, oral deposition, interrogatories, requests for production of documents, administrative order, or otherwise, to disclose

Confidential Information, that Party shall provide the other Parties with prompt notice of such request(s) or requirement(s) so that the other Parties may seek an appropriate protective order or waive compliance with the terms of this LGIA. Notwithstanding the absence of a protective order or waiver, the Party may disclose such Confidential Information which, in the opinion of its counsel, the Party is legally compelled to disclose. Each Party will use Reasonable Efforts to obtain reliable assurance that confidential treatment will be accorded any Confidential Information so furnished.

22.1.8 Termination of Agreement. Upon termination of this LGIA for any reason, each Party shall, within ten (10) Calendar Days of receipt of a written request from another Party, use Reasonable Efforts to destroy, erase, or delete (with such destruction, erasure, and deletion certified in writing to the other Party) or return to the other Party, without retaining copies thereof, any and all written or electronic Confidential Information received from the other Party.

22.1.9 Remedies. The Parties agree that monetary damages would be inadequate to compensate a Party for another Party's Breach of its obligations under this Article 22. Each Party accordingly agrees that the other Parties shall be entitled to equitable relief, by way of injunction or otherwise, if the first Party Breaches or threatens to Breach its obligations under this Article 22, which equitable relief shall be granted without bond or proof of damages, and the receiving Party shall not plead in defense that there would be an adequate remedy at law. Such remedy shall not be deemed an exclusive remedy for the Breach of this Article 22, but shall be in addition to all other remedies available at law or in equity. The Parties further acknowledge and agree that the covenants contained herein are necessary for the protection of legitimate business interests and are reasonable in scope. No Party, however, shall be liable for indirect, incidental, or consequential or punitive damages of any nature or kind resulting from or arising in connection with this Article 22.

22.1.10 Disclosure to FERC, its Staff, or a State. Notwithstanding anything in this Article 22 to the contrary, and pursuant to 18 C.F.R. section 1b.20, if FERC or its staff, during the course of an investigation or otherwise, requests information from one of the Parties that is otherwise required to be maintained in confidence pursuant to this LGIA, the Party shall provide the requested information to FERC or its staff, within the time provided for in the request for information. In providing the information to FERC or its staff, the Party must, consistent with 18 C.F.R. section 388.112, request that the information be treated as confidential and non-public by FERC and its staff and that the information be withheld from public disclosure. Parties are prohibited from notifying the other Parties to this LGIA prior to the release of the Confidential Information to FERC or its staff. The Party

shall notify the other Parties to the LGIA when it is notified by FERC or its staff that a request to release Confidential Information has been received by FERC, at which time any of the Parties may respond before such information would be made public, pursuant to 18 C.F.R. section 388.112. Requests from a state regulatory body conducting a confidential investigation shall be treated in a similar manner if consistent with the applicable state rules and regulations.

22.1.11 Subject to the exception in Article 22.1.10, Confidential Information shall not be disclosed by the other Parties to any person not employed or retained by the other Parties, except to the extent disclosure is (i) required by law; (ii) reasonably deemed by the disclosing Party to be required to be disclosed in connection with a dispute between or among the Parties, or the defense of litigation or dispute; (iii) otherwise permitted by consent of the other Parties, such consent not to be unreasonably withheld; or (iv) necessary to fulfill its obligations under this LGIA or as a transmission service provider or a Control Area operator including disclosing the Confidential Information to an RTO or ISO or to a regional or national reliability organization. The Party asserting confidentiality shall notify the other Parties in writing of the information it claims is confidential. Prior to any disclosures of another Party's Confidential Information under this subparagraph, or if any third party or Governmental Authority makes any request or demand for any of the information described in this subparagraph, the disclosing Party agrees to promptly notify the other Party in writing and agrees to assert confidentiality and cooperate with the other Party in seeking to protect the Confidential Information from public disclosure by confidentiality agreement, protective order or other reasonable measures.

ARTICLE 23. ENVIRONMENTAL RELEASES

23.1 Each Party shall notify the other Parties, first orally and then in writing, of the release of any Hazardous Substances, any asbestos or lead abatement activities, or any type of remediation activities related to the Large Generating Facility or the Interconnection Facilities, each of which may reasonably be expected to affect the other Parties. The notifying Party shall: (i) provide the notice as soon as practicable, provided such Party makes a good faith effort to provide the notice no later than twenty-four hours after such Party becomes aware of the occurrence; and (ii) promptly furnish to the other Parties copies of any publicly available reports filed with any Governmental Authorities addressing such events.

ARTICLE 24. INFORMATION REQUIREMENTS

24.1 Information Acquisition. The Participating TO and the Interconnection Customer shall submit specific information regarding the electrical characteristics of their respective facilities to each other as described below and in accordance with Applicable Reliability Standards.

24.2 Information Submission by Participating TO. The initial information submission by the Participating TO shall occur no later than one hundred eighty (180) Calendar Days prior to Trial Operation and shall include the Participating TO's Transmission System information necessary to allow the Interconnection Customer to select equipment and meet any system protection and stability requirements, unless otherwise agreed to by the Participating TO and the Interconnection Customer. On a monthly basis the Participating TO shall provide the Interconnection Customer and the ISO a status report on the construction and installation of the Participating TO's Interconnection Facilities and Network Upgrades, including, but not limited to, the following information: (1) progress to date; (2) a description of the activities since the last report; (3) a description of the action items for the next period; and (4) the delivery status of equipment ordered.

24.3 Updated Information Submission by Interconnection Customer. The updated information submission by the Interconnection Customer, including manufacturer information, shall occur no later than one hundred eighty (180) Calendar Days prior to the Trial Operation. The Interconnection Customer shall submit a completed copy of the Electric Generating Unit data requirements contained in Appendix 1 to the LGIP. It shall also include any additional information provided to the Participating TO and the ISO for the Interconnection Studies. Information in this submission shall be the most current Electric Generating Unit design or expected performance data. Information submitted for stability models shall be compatible with the Participating TO and ISO standard models. If there is no compatible model, the Interconnection Customer will work with a consultant mutually agreed to by the Parties to develop and supply a standard model and associated information.

If the Interconnection Customer's data is materially different from what was originally provided to the Participating TO and the ISO for the Interconnection Studies, then the Participating TO and the ISO will conduct appropriate studies pursuant to the LGIP to determine the impact on the Participating TO's Transmission System and affected portions of the ISO Controlled Grid based on the actual data submitted pursuant to this Article 24.3. The Interconnection Customer shall not begin Trial Operation until such studies are completed and all other requirements of this LGIA are satisfied.

24.4 Information Supplementation. Prior to the Trial Operation date, the Parties shall supplement their information submissions described above in this Article 24

with any and all "as-built" Electric Generating Unit information or "as-tested" performance information that differs from the initial submissions or, alternatively, written confirmation that no such differences exist. The Interconnection Customer shall conduct tests on the Electric Generating Unit as required by Good Utility Practice such as an open circuit "step voltage" test on the Electric Generating Unit to verify proper operation of the Electric Generating Unit's automatic voltage regulator.

Unless otherwise agreed, the test conditions shall include: (1) Electric Generating Unit at synchronous speed; (2) automatic voltage regulator on and in voltage control mode; and (3) a five percent (5 percent) change in Electric Generating Unit terminal voltage initiated by a change in the voltage regulators reference voltage. The Interconnection Customer shall provide validated test recordings showing the responses of Electric Generating Unit terminal and field voltages. In the event that direct recordings of these voltages is impractical, recordings of other voltages or currents that mirror the response of the Electric Generating Unit's terminal or field voltage are acceptable if information necessary to translate these alternate quantities to actual Electric Generating Unit terminal or field voltages is provided. Electric Generating Unit testing shall be conducted and results provided to the Participating TO and the ISO for each individual Electric Generating Unit in a station.

Subsequent to the Commercial Operation Date, the Interconnection Customer shall provide the Participating TO and the ISO any information changes due to equipment replacement, repair, or adjustment. The Participating TO shall provide the Interconnection Customer any information changes due to equipment replacement, repair or adjustment in the directly connected substation or any adjacent Participating TO-owned substation that may affect the Interconnection Customer's Interconnection Facilities equipment ratings, protection or operating requirements. The Parties shall provide such information pursuant to Article 5.19.

ARTICLE 25. INFORMATION ACCESS AND AUDIT RIGHTS

25.1 Information Access. Each Party (the "disclosing Party") shall make available to the other Party information that is in the possession of the disclosing Party and is necessary in order for the other Party to: (i) verify the costs incurred by the disclosing Party for which the other Party is responsible under this LGIA; and (ii) carry out its obligations and responsibilities under this LGIA. The Parties shall not use such information for purposes other than those set forth in this Article 25.1 and to enforce their rights under this LGIA. Nothing in this Article 25 shall obligate the ISO to make available to a Party any third party information in its possession or control if making such third party information available would violate an ISO Tariff restriction on the use or disclosure of such third party information.

25.2 Reporting of Non-Force Majeure Events. Each Party (the "notifying Party") shall notify the other Parties when the notifying Party becomes aware of its inability to comply with the provisions of this LGIA for a reason other than a Force Majeure event. The Parties agree to cooperate with each other and provide necessary information regarding such inability to comply, including the date, duration, reason for the inability to comply, and corrective actions taken or planned to be taken with respect to such inability to comply. Notwithstanding the foregoing, notification, cooperation or information provided under this Article shall not entitle the Party receiving such notification to allege a cause for anticipatory breach of this LGIA.

25.3 Audit Rights. Subject to the requirements of confidentiality under Article 22 of this LGIA, the Parties' audit rights shall include audits of a Party's costs pertaining to such Party's performance or satisfaction of obligations owed to the other Party under this LGIA, calculation of invoiced amounts, the ISO's efforts to allocate responsibility for the provision of reactive support to the ISO Controlled Grid, the ISO's efforts to allocate responsibility for interruption or reduction of generation on the ISO Controlled Grid, and each such Party's actions in an Emergency Condition.

25.3.1 The Interconnection Customer and the Participating TO shall each have the right, during normal business hours, and upon prior reasonable notice to the other Party, to audit at its own expense the other Party's accounts and records pertaining to either such Party's performance or either such Party's satisfaction of obligations owed to the other Party under this LGIA. Subject to Article 25.3.2, any audit authorized by this Article shall be performed at the offices where such accounts and records are maintained and shall be limited to those portions of such accounts and records that relate to each such Party's performance and satisfaction of obligations under this LGIA. Each such Party shall keep such accounts and records for a period equivalent to the audit rights periods described in Article 25.4.

25.3.2 Notwithstanding anything to the contrary in Article 25.3, each Party's rights to audit the ISO's accounts and records shall be as set forth in Article 12 of the ISO Tariff.

25.4 Audit Rights Periods.

25.4.1 Audit Rights Period for Construction-Related Accounts and Records. Accounts and records related to the design, engineering, procurement, and construction of Participating TO's Interconnection Facilities, Network Upgrades, and Distribution Upgrades constructed by the Participating TO shall be subject to audit for a period of twenty-four months following the Participating TO's issuance of a final invoice in accordance with Article 12.2. Accounts and records related to the design, engineering, procurement, and construction of Participating TO's Interconnection

Facilities and/or Stand Alone Network Upgrades constructed by the Interconnection Customer shall be subject to audit and verification by the Participating TO and the ISO for a period of twenty-four months following the Interconnection Customer's issuance of a final invoice in accordance with Article 5.2(8).

25.4.2 Audit Rights Period for All Other Accounts and Records. Accounts and records related to a Party's performance or satisfaction of all obligations under this LGIA other than those described in Article 25.4.1 shall be subject to audit as follows: (i) for an audit relating to cost obligations, the applicable audit rights period shall be twenty-four months after the auditing Party's receipt of an invoice giving rise to such cost obligations; and (ii) for an audit relating to all other obligations, the applicable audit rights period shall be twenty-four months after the event for which the audit is sought; provided that each Party's rights to audit the ISO's accounts and records shall be as set forth in Article 12 of the ISO Tariff.

25.5 Audit Results. If an audit by the Interconnection Customer or the Participating TO determines that an overpayment or an underpayment has occurred with respect to the other Party, a notice of such overpayment or underpayment shall be given to the other Party together with those records from the audit which support such determination. The Party that is owed payment shall render an invoice to the other Party and such invoice shall be paid pursuant to Article 12 hereof.

25.5.1 Notwithstanding anything to the contrary in Article 25.5, the Interconnection Customer's and Participating TO's rights to audit the ISO's accounts and records shall be as set forth in Article 12 of the ISO Tariff, and the ISO's process for remedying an overpayment or underpayment shall be as set forth in the ISO Tariff.

ARTICLE 26. SUBCONTRACTORS

26.1 General. Nothing in this LGIA shall prevent a Party from utilizing the services of any subcontractor as it deems appropriate to perform its obligations under this LGIA; provided, however, that each Party shall require its subcontractors to comply with all applicable terms and conditions of this LGIA in providing such services and each Party shall remain primarily liable to the other Party for the performance of such subcontractor.

26.2 Responsibility of Principal. The creation of any subcontract relationship shall not relieve the hiring Party of any of its obligations under this LGIA. The hiring Party shall be fully responsible to the other Party for the acts or omissions of any subcontractor the hiring Party hires as if no subcontract had been made;

provided, however, that in no event shall the ISO or Participating TO be liable for the actions or inactions of the Interconnection Customer or its subcontractors with respect to obligations of the Interconnection Customer under Article 5 of this LGIA. Any applicable obligation imposed by this LGIA upon the hiring Party shall be equally binding upon, and shall be construed as having application to, any subcontractor of such Party.

26.3 No Limitation by Insurance. The obligations under this Article 26 will not be limited in any way by any limitation of subcontractor's insurance.

ARTICLE 27. DISPUTES

All disputes arising out of or in connection with this LGIA whereby relief is sought by or from the ISO shall be settled in accordance with the provisions of Article 13 of the ISO Tariff, except that references to the ISO Tariff in such Article 13 of the ISO Tariff shall be read as references to this LGIA. Disputes arising out of or in connection with this LGIA not subject to provisions of Article 13 of the ISO Tariff shall be resolved as follows:

27.1 Submission. In the event either Party has a dispute, or asserts a claim, that arises out of or in connection with this LGIA or its performance, such Party (the "disputing Party") shall provide the other Party with written notice of the dispute or claim ("Notice of Dispute"). Such dispute or claim shall be referred to a designated senior representative of each Party for resolution on an informal basis as promptly as practicable after receipt of the Notice of Dispute by the other Party. In the event the designated representatives are unable to resolve the claim or dispute through unassisted or assisted negotiations within thirty (30) Calendar Days of the other Party's receipt of the Notice of Dispute, such claim or dispute may, upon mutual agreement of the Parties, be submitted to arbitration and resolved in accordance with the arbitration procedures set forth below. In the event the Parties do not agree to submit such claim or dispute to arbitration, each Party may exercise whatever rights and remedies it may have in equity or at law consistent with the terms of this LGIA.

27.2 External Arbitration Procedures. Any arbitration initiated under this LGIA shall be conducted before a single neutral arbitrator appointed by the Parties. If the Parties fail to agree upon a single arbitrator within ten (10) Calendar Days of the submission of the dispute to arbitration, each Party shall choose one arbitrator who shall sit on a three-member arbitration panel. The two arbitrators so chosen shall within twenty (20) Calendar Days select a third arbitrator to chair the arbitration panel. In either case, the arbitrators shall be knowledgeable in electric utility matters, including electric transmission and bulk power issues, and shall not have any current or past substantial business or financial relationships with any party to the arbitration (except prior arbitration). The arbitrator(s) shall provide each of the Parties an opportunity to be heard and, except as otherwise

provided herein, shall conduct the arbitration in accordance with the Commercial Arbitration Rules of the American Arbitration Association ("Arbitration Rules") and any applicable FERC regulations; provided, however, in the event of a conflict between the Arbitration Rules and the terms of this Article 27, the terms of this Article 27 shall prevail.

27.3 Arbitration Decisions. Unless otherwise agreed by the Parties, the arbitrator(s) shall render a decision within ninety (90) Calendar Days of appointment and shall notify the Parties in writing of such decision and the reasons therefor. The arbitrator(s) shall be authorized only to interpret and apply the provisions of this LGIA and shall have no power to modify or change any provision of this Agreement in any manner. The decision of the arbitrator(s) shall be final and binding upon the Parties, and judgment on the award may be entered in any court having jurisdiction. The decision of the arbitrator(s) may be appealed solely on the grounds that the conduct of the arbitrator(s), or the decision itself, violated the standards set forth in the Federal Arbitration Act or the Administrative Dispute Resolution Act. The final decision of the arbitrator must also be filed with FERC if it affects jurisdictional rates, terms and conditions of service, Interconnection Facilities, or Network Upgrades.

27.4 Costs. Each Party shall be responsible for its own costs incurred during the arbitration process and for the following costs, if applicable: (1) the cost of the arbitrator chosen by the Party to sit on the three member panel and one half of the cost of the third arbitrator chosen; or (2) one half the cost of the single arbitrator jointly chosen by the Parties.

ARTICLE 28. REPRESENTATIONS, WARRANTIES AND COVENANTS

28.1 General. Each Party makes the following representations, warranties and covenants:

28.1.1 Good Standing. Such Party is duly organized, validly existing and in good standing under the laws of the state in which it is organized, formed, or incorporated, as applicable; that it is qualified to do business in the state or states in which the Large Generating Facility, Interconnection Facilities and Network Upgrades owned by such Party, as applicable, are located; and that it has the corporate power and authority to own its properties, to carry on its business as now being conducted and to enter into this LGIA and carry out the transactions contemplated hereby and perform and carry out all covenants and obligations on its part to be performed under and pursuant to this LGIA.

28.1.2 Authority. Such Party has the right, power and authority to enter into this LGIA, to become a Party hereto and to perform its obligations

hereunder. This LGIA is a legal, valid and binding obligation of such Party, enforceable against such Party in accordance with its terms, except as the enforceability thereof may be limited by applicable bankruptcy, insolvency, reorganization or other similar laws affecting creditors' rights generally and by general equitable principles (regardless of whether enforceability is sought in a proceeding in equity or at law).

28.1.3 **No Conflict**. The execution, delivery and performance of this LGIA does not violate or conflict with the organizational or formation documents, or bylaws or operating agreement, of such Party, or any judgment, license, permit, order, material agreement or instrument applicable to or binding upon such Party or any of its assets.

28.1.4 **Consent and Approval**. Such Party has sought or obtained, or, in accordance with this LGIA will seek or obtain, each consent, approval, authorization, order, or acceptance by any Governmental Authority in connection with the execution, delivery and performance of this LGIA, and it will provide to any Governmental Authority notice of any actions under this LGIA that are required by Applicable Laws and Regulations.

ARTICLE 29. [RESERVED]

ARTICLE 30. MISCELLANEOUS

30.1 **Binding Effect**. This LGIA and the rights and obligations hereof, shall be binding upon and shall inure to the benefit of the successors and assigns of the Parties hereto.

30.2 **Conflicts**. In the event of a conflict between the body of this LGIA and any attachment, appendices or exhibits hereto, the terms and provisions of the body of this LGIA shall prevail and be deemed the final intent of the Parties.

30.3 **Rules of Interpretation**. This LGIA, unless a clear contrary intention appears, shall be construed and interpreted as follows: (1) the singular number includes the plural number and vice versa; (2) reference to any person includes such person's successors and assigns but, in the case of a Party, only if such successors and assigns are permitted by this LGIA, and reference to a person in a particular capacity excludes such person in any other capacity or individually; (3) reference to any agreement (including this LGIA), document, instrument or tariff means such agreement, document, instrument, or tariff as amended or modified and in effect from time to time in accordance with the terms thereof and, if applicable, the terms hereof; (4) reference to any Applicable Laws and Regulations means such Applicable Laws and Regulations as amended,

modified, codified, or reenacted, in whole or in part, and in effect from time to time, including, if applicable, rules and regulations promulgated thereunder; (5) unless expressly stated otherwise, reference to any Article, Section or Appendix means such Article of this LGIA or such Appendix to this LGIA, or such Section to the LGIP or such Appendix to the LGIP, as the case may be; (6) "hereunder", "hereof", "herein", "hereto" and words of similar import shall be deemed references to this LGIA as a whole and not to any particular Article or other provision hereof or thereof; (7) "including" (and with correlative meaning "include") means including without limiting the generality of any description preceding such term; and (8) relative to the determination of any period of time, "from" means "from and including", "to" means "to but excluding" and "through" means "through and including".

30.4 Entire Agreement. This LGIA, including all Appendices and Schedules attached hereto, constitutes the entire agreement among the Parties with reference to the subject matter hereof, and supersedes all prior and contemporaneous understandings or agreements, oral or written, between or among the Parties with respect to the subject matter of this LGIA. There are no other agreements, representations, warranties, or covenants which constitute any part of the consideration for, or any condition to, any Party's compliance with its obligations under this LGIA.

30.5 No Third Party Beneficiaries. This LGIA is not intended to and does not create rights, remedies, or benefits of any character whatsoever in favor of any persons, corporations, associations, or entities other than the Parties, and the obligations herein assumed are solely for the use and benefit of the Parties, their successors in interest and, where permitted, their assigns.

30.6 Waiver. The failure of a Party to this LGIA to insist, on any occasion, upon strict performance of any provision of this LGIA will not be considered a waiver of any obligation, right, or duty of, or imposed upon, such Party.

Any waiver at any time by either Party of its rights with respect to this LGIA shall not be deemed a continuing waiver or a waiver with respect to any other failure to comply with any other obligation, right, duty of this LGIA. Termination or Default of this LGIA for any reason by the Interconnection Customer shall not constitute a waiver of the Interconnection Customer's legal rights to obtain an interconnection from the Participating TO. Any waiver of this LGIA shall, if requested, be provided in writing.

30.7 Headings. The descriptive headings of the various Articles of this LGIA have been inserted for convenience of reference only and are of no significance in the interpretation or construction of this LGIA.

30.8 Multiple Counterparts. This LGIA may be executed in two or more counterparts, each of which is deemed an original but all constitute one and the same instrument.

30.9 Amendment. The Parties may by mutual agreement amend this LGIA by a written instrument duly executed by all of the Parties. Such amendment shall become effective and a part of this LGIA upon satisfaction of all Applicable Laws and Regulations.

30.10 Modification by the Parties. The Parties may by mutual agreement amend the Appendices to this LGIA by a written instrument duly executed by all of the Parties. Such amendment shall become effective and a part of this LGIA upon satisfaction of all Applicable Laws and Regulations.

30.11 Reservation of Rights. The ISO and Participating TO shall each have the right to make a unilateral filing with FERC to modify this LGIA pursuant to section 205 or any other applicable provision of the Federal Power Act and FERC's rules and regulations thereunder with respect to the following Articles of this LGIA and with respect to any rates, terms and conditions, charges, classifications of service, rule or regulation covered by these Articles:

> Recitals, 1, 2.1, 2.2, 2.3, 2.4, 2.6, 3.1, 3.3, 4.1, 4.2, 4.4, 4.5, 5 preamble, 5.4, 5.7, 5.8, 5.9, 5.12, 5.13, 5.18, 5.19.1, 7.1, 7.2, 8, 9.1, 9.2, 9.3, 9.5, 9.6, 9.7, 9.8, 9.10, 10.3, 11.4, 12.1, 13, 14, 15, 16, 17, 18, 19, 20, 21, 22, 23, 24.3, 24.4, 25.1, 25.2, 25.3 (excluding subparts), 25.4.2, 26, 28, 29, 30, Appendix D, Appendix F, Appendix G, and any other Article not reserved exclusively to the Participating TO or the ISO below.

The Participating TO shall have the exclusive right to make a unilateral filing with FERC to modify this LGIA pursuant to section 205 or any other applicable provision of the Federal Power Act and FERC's rules and regulations thereunder with respect to the following Articles of this LGIA and with respect to any rates, terms and conditions, charges, classifications of service, rule or regulation covered by these Articles:

> 2.5, 5.1, 5.2, 5.3, 5.5, 5.6, 5.10, 5.11, 5.14, 5.15, 5.16, 5.17, 5.19 (excluding 5.19.1), 6, 7.3, 9.4, 9.9, 10.1, 10.2, 10.4, 10.5, 11.1, 11.2, 11.3, 11.5, 12.2, 12.3, 12.4, 24.1, 24.2, 25.3.1, 25.4.1, 25.5 (excluding 25.5.1), 27 (excluding preamble), Appendix A, Appendix B, Appendix C, and Appendix E.

The ISO shall have the exclusive right to make a unilateral filing with FERC to modify this LGIA pursuant to section 205 or any other applicable provision of the Federal Power Act and FERC's rules and regulations thereunder with respect to the following Articles of this LGIA and with respect to any rates, terms and

conditions, charges, classifications of service, rule or regulation covered by these Articles:

3.2, 4.3, 4.6, 11.6, 25.3.2, 25.5.1, and 27 preamble.

The Interconnection Customer, the ISO, and the Participating TO shall have the right to make a unilateral filing with FERC to modify this LGIA pursuant to section 206 or any other applicable provision of the Federal Power Act and FERC's rules and regulations thereunder; provided that each Party shall have the right to protest any such filing by another Party and to participate fully in any proceeding before FERC in which such modifications may be considered. Nothing in this LGIA shall limit the rights of the Parties or of FERC under sections 205 or 206 of the Federal Power Act and FERC's rules and regulations thereunder, except to the extent that the Parties otherwise mutually agree as provided herein.

30.12 No Partnership. This LGIA shall not be interpreted or construed to create an association, joint venture, agency relationship, or partnership among the Parties or to impose any partnership obligation or partnership liability upon any Party. No Party shall have any right, power or authority to enter into any agreement or undertaking for, or act on behalf of, or to act as or be an agent or representative of, or to otherwise bind, another Party.

30.13 Joint and Several Obligations. Except as otherwise provided in this LGIA, the obligations of the ISO, the Participating TO, and the Interconnection Customer are several, and are neither joint nor joint and several.

IN WITNESS WHEREOF, the Parties have executed this LGIA in multiple originals, each of which shall constitute and be an original effective agreement among the Parties.

PACIFIC GAS AND ELECTRIC COMPANY

By: _____

Name: Jeffrey D. Butler

Title: Senior V.P., Energy Delivery

Date: _____

CALIFORNIA INDEPENDENT SYSTEM OPERATOR CORPORATION

By: _____

Name: _____

Title: _____

Date: _____

E&L WESTCOAST, LLC – COLUSA GENERATING STATION

By: _____

Name: Douglas F Egan

Title: Authorized Member

Date: 10/6/06