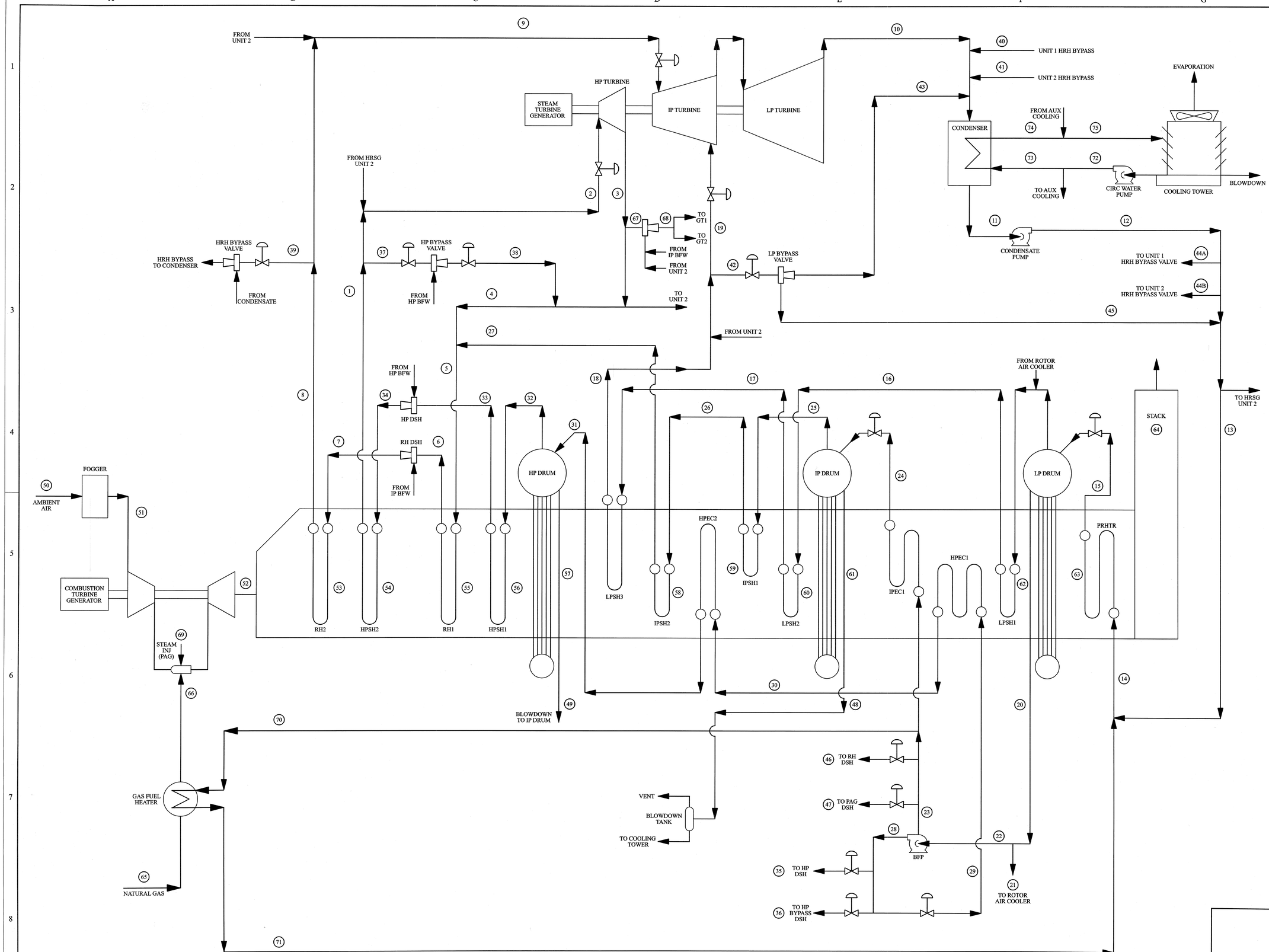

Figure 3.1 - Heat Balance Diagram

NO	REVISIONS	DATE	DSNR	CHK	ENGR	APPR
A	ISSUE FOR COMMENTS					

UTILITY ENGINEERING CORPORATION (UE) RETAINS ALL RIGHTS, TITLE AND INTEREST, IN AND TO ALL INFORMATION CONTAINED HEREIN DEVELOPED BY OR ON BEHALF OF UE. NEITHER THIS DRAWING NOR SUCH INFORMATION SHALL BE REPRODUCED, USED OR RELIED UPON FOR THE PREPARATION OF DRAWINGS, APPARATUS OR FOR ANY OTHER PURPOSE, EXCEPT AS EXPRESSLY AUTHORIZED IN WRITING BY UE.

KRCD COMMUNITY POWER PLANT

Energy for our Future

UTILITY ENGINEERING
HEADQUARTERS
1515 ARAPAHOE STREET, TOWER 1, SUITE 900, DENVER, CO 80202-4256
AMARILLO, TEXAS MINNEAPOLIS, MINNESOTA OMAHA, NEBRASKA

KINGS RIVER CONSERVATION DISTRICT
HEAT BALANCE SHEET 1
2 x 1

DRAWN: CHECKED: APPROVED: CADD DRAWING NUMBER: D012659-PFDM0001 SHEET: 01 REV: A