**Figure 4-1**
**Transmission Line to McCall Substation**
**KRCD CPP**

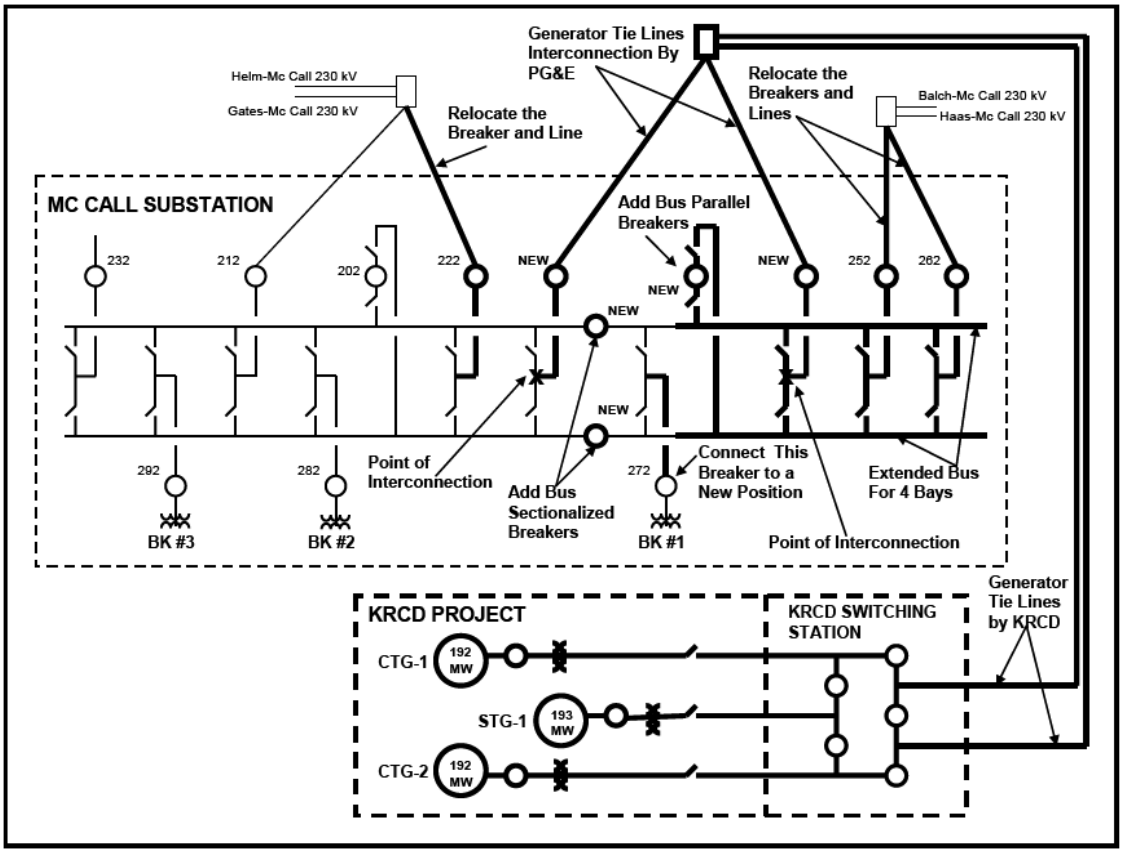

**Figure 4-3**
**Elevation View of Cross Section A**

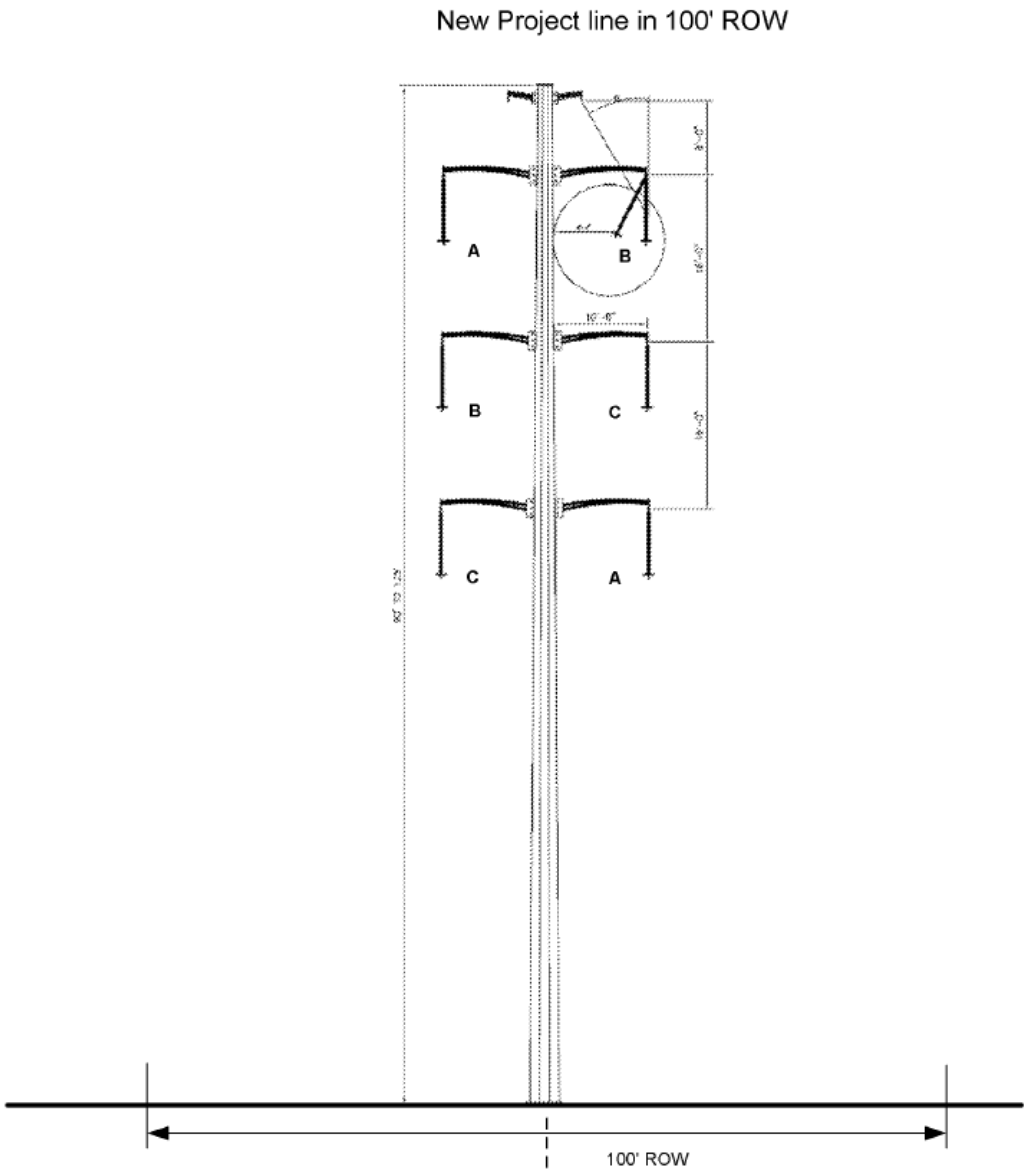

**Figure 4-4**
**Elevation View of Cross Section B**

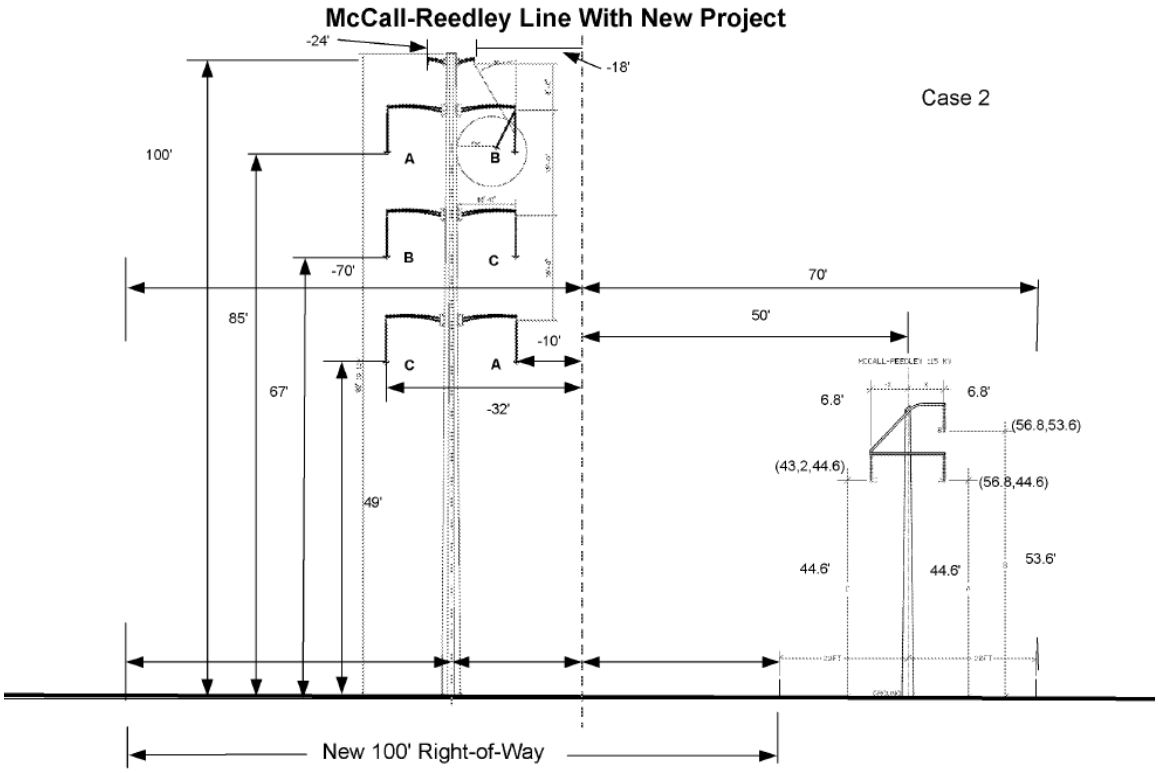

**Figure 4-5**
**Estimated Electric and Magnetic Fields at Cross Section A – Post Project**

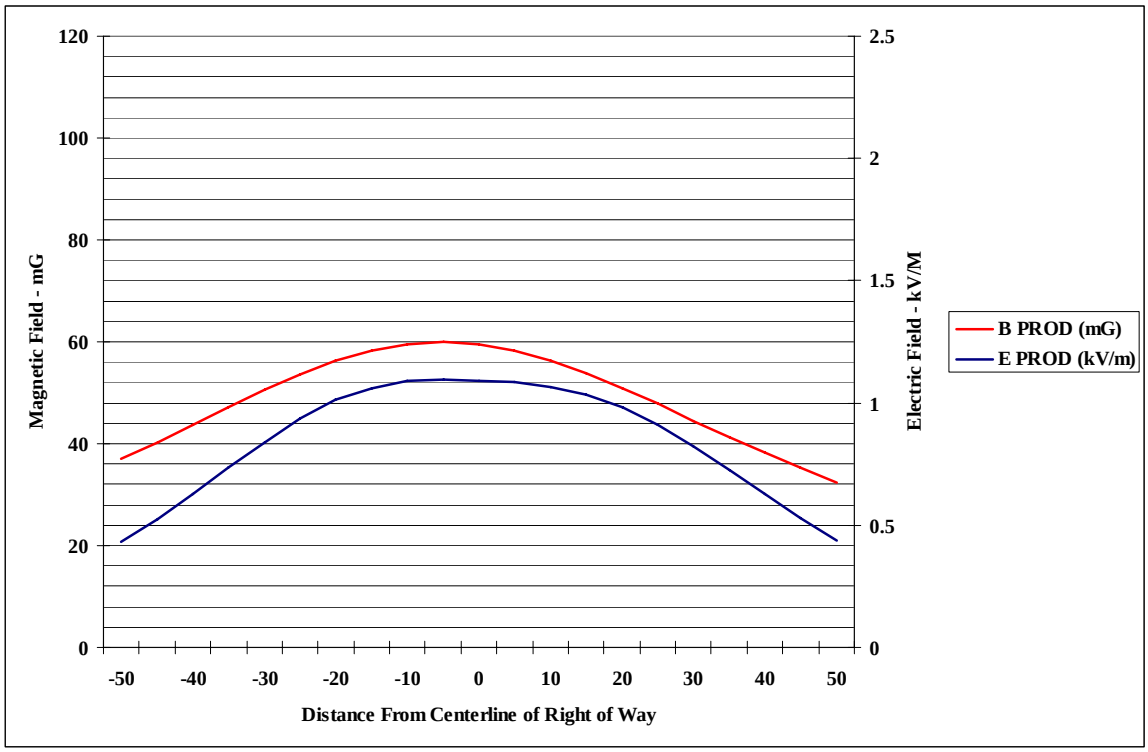

**Figure 4-6**
**Estimated Electric and Magnetic Fields at Cross Section B – Pre-Project**

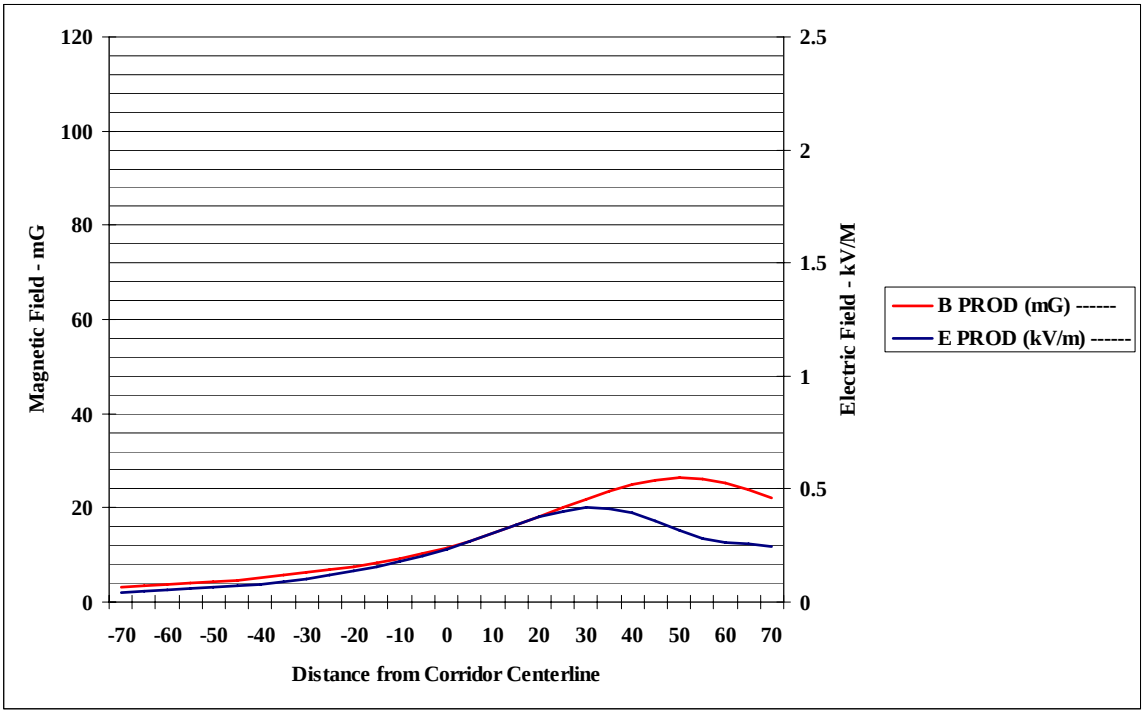
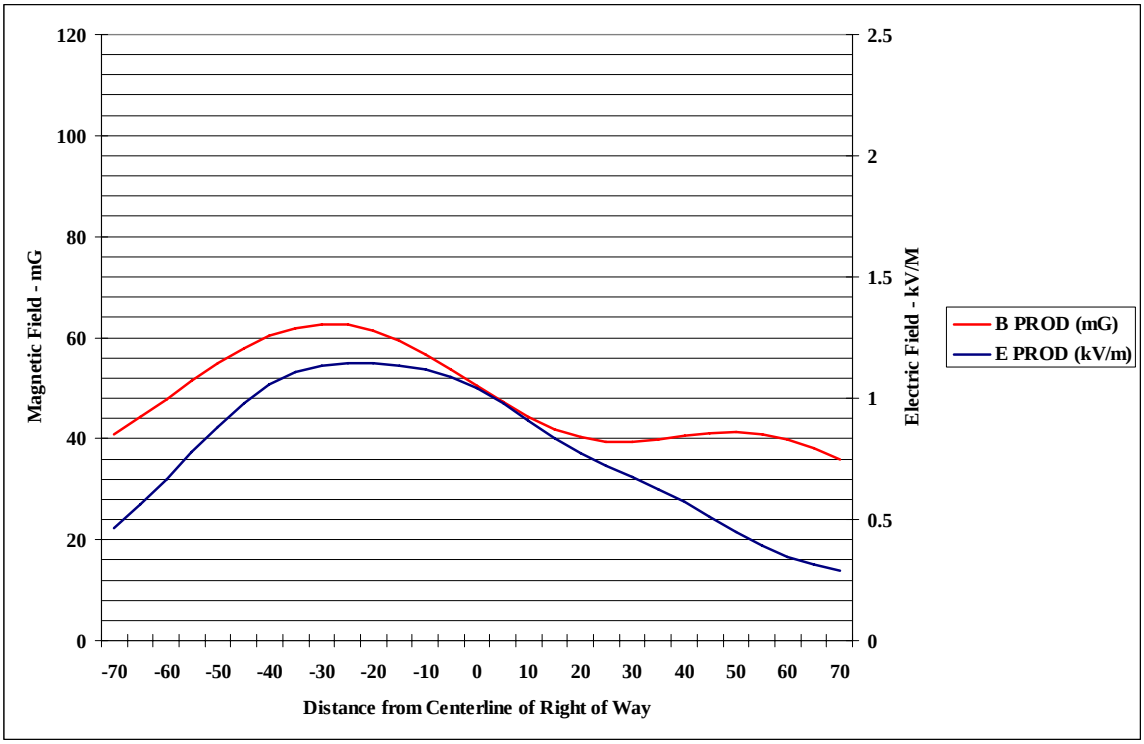
**Figure 4-7**
**Estimated Electric and Magnetic Fields at Cross Section B – Post Project**