eastshore energy

DOCKET 06-AFC-6	
DATE	OCT 31 2006
RECD.	OCT 31 2006

October 31, 2006

Mr. B.B. Blevins
Executive Director
California Energy Commission
1516 Ninth Street
Sacramento, CA 95814

SUBJECT: SUPPLEMENT IN RESPONSE TO DATA ADEQUACY COMMENTS ON THE APPLICATION FOR CERTIFICATION FOR THE EASTSHORE ENERGY CENTER (06-AFC-6)

Dear Mr. Blevins:

In accordance with the provisions of Title 20, California Code of Regulations, Eastshore Energy, LLC hereby submits this document titled *Supplement in Response to Data Adequacy Comments on the Application for Certification for the Eastshore Energy Center (06-AFC-6).* The Eastshore Energy Center is a nominal 118 megawatt gross, 115.5 megawatt net, natural gas-fired intermediate/peaking load power plant to be located at 25101 Clawiter Road in the City of Hayward, Alameda County, California.

As an officer of Eastshore Energy, LLC, I hereby attest, under penalty of perjury, that the contents of this application are truthful and accurate to the best of my knowledge.

Dated this 31st day of October 2006.

Sincerely,

EASTSHORE ENERGY, LLC

Greg Trewitt
Vice President of Development and Engineering

Plaza 7000 | 7000 North Mopac | Suite 475 | Austin, Texas | 78731 | 512.480.9119 | Fax 512.241.0507

Eastshore Energy Center
Data Adequacy Supplement
(06-AFC-06)

Submitted by:

Eastshore Energy, LLC

October 31, 2006

CH2MHILL

155 Grand Avenue, Suite 1000
Oakland, California 94612

Contents

Section 1.0 Introduction **1**
Section 2.0 Data Adequacy Responses **2**
Section 2.1 Air Quality 3
Section 2.2 Biological Resources 4
Section 2.3 Transmission System and Engineering 9
Section 2.4 Water Resources 15

Appendix A System Impact Study Report

Section 1.0 Introduction

Eastshore Energy, LLC, a wholly-owned subsidiary of Tierra Energy (Applicant) submitted an Application for Certification (AFC) for the Eastshore Energy Center (Eastshore) to the California Energy Commission (CEC) for a 115 megawatt (MW) natural-gas fired simple-cycle power plant on September 15, 2006. These responses are submitted based on the technical disciplines identified by the CEC and are in response to those items identified in the Data Adequacy Recommendation provided by the CEC Staff on October 19, 2006.

Section 2.0 Data Adequacy Responses

The Applicant is providing the data required for a data adequacy determination by the Commission in the same order as the Data Adequacy Recommendation issued by CEC Staff on October 19, 2006.

Section 2.1 Air Quality

Data Adequacy Deficiency – Stack height, diameter, exhaust velocity, and temperature of the natural gas fuel heater are needed.

Data Adequacy Response – The requested stack parameters for the natural gas-fired fuel heater are as follows:

Stack height = 17 feet 6 inches (ft/in.)

Stack diameter (inside) = 0.505 ft

Stack exhaust velocity = 6000 feet per minute (ft/min)

Stack temperature = 1015 F

The UTM location (NAD 27) is 577,735.056 meters (m) easting 4,165,756.291 m northing.

In addition, please be advised that upon further evaluation it has been determined that the fuel heater maximum heat input will be 2 million British thermal units per hour (MMBtu/hr) instead of the 7.15 MMBtu/hr originally proposed. The emissions shown for the fuel heater in Table 8.1A-10 of Appendix 8.1 should be scaled by the ratio of 2/7.15 to derive corrected emission rates for the fuel heater.

Section 2.2 Biological Resources

Data Adequacy Deficiency – Survey results, including list of species actually observed during surveys, are required for data adequacy.

Data Adequacy Response – Information regarding common species observed and recorded in field notes during the June 28, 2006 survey were inadvertently omitted from the AFC. Tables BIO-1, BIO-2 and BIO-3 summarize the plant, wildlife and special- status species observed during the survey.

ATTACHMENT BR-2.2A

Biological Resources Survey Results

The following tables provide plant, wildlife, and special-status wildlife species observations at the proposed Eastshore Energy project site and within a 5-mile radius.

TABLE BIO - 1
Plant Species Observed at the Proposed Eastshore Energy Project Site and within a 5-mile radius, June 2006

Scientific Name	Common Name	Occurrence
Anacardiaceae		
Schinus molle	California (or Brazilian) peppertree	PG & E substation within ruderal grassland
Araliaceae		
Hedera helix	English ivy	Industrial park areas, project parcel
Asteraceae		
Baccaris pilularis	coyote brush	Project parcel, ruderal grassland
Tragopogon porrifolius	salsify	Project parcel
Pseudognaphalium canesceus	Wright's cudweed	Project parcel
Picris echioides	bristly ox-tongue	Industrial parks, roadsides, project parcel
Chenopodiaceae		
Salicornia virginica	pickleweed	Hayward Interpretive Center, salt marsh, evaporation ponds
Cyperaceae		
Cyperus eragrostis	tall flatsedge	Hayward Interpretive Center, salt marsh, evaporation ponds
Fabaceae		
Desmodium sp.	lotus sp.	Hayward Interpretive Center, salt marsh, evaporation ponds, landscaped areas
Magnoliaceae		
Magnolia sp.	magnolia tree	Project parcel
Myrtaceae		
Eucalyptus sp.	Eucalyptus sp.	Commercial landscaped areas
Pinaceae		
Pinus radiata	Monterey pine	Landscaped areas, industrial parks
Poaceae		
Avena barbata	slender oatgrass	Hayward Interpretive Center, salt marsh, evaporation ponds, ruderal grassland, project parcel

TABLE BIO - 1
Plant Species Observed at the Proposed Eastshore Energy Project Site and within a 5-mile radius, June 2006

Scientific Name	Common Name	Occurrence
Bromus diandrus	ripgut brome	Hayward Interpretive Center, salt marsh, evaporation ponds, ruderal grassland, project parcel
Polypogon monspeliensis	rabbit's foot grass	Hayward Interpretive Center, salt marsh, evaporation ponds, ruderal grassland, project parcel
Spartina sp.	cordgrass	Hayward Interpretive Center, salt marsh, evaporation ponds
Polygonaceae		
Rumex crispus	curly dock	Hayward Interpretive Center, salt marsh, evaporation ponds, ruderal grassland
Rosaceae		
Pyrus calleryana	Bradford pear	Landscaped areas
Rubus discolor	Himalayan blackberry	Project parcel

TABLE BIO -2
Wildlife Species Observed at the Proposed Eastshore Energy Project Site and within a 5-mile radius, June 2006

Scientific Name	Common Name	Occurrence	Comments
Invertebrates			
Papilio zelicaon	anise swallowtail butterfly	Industrial park complex adjacent to salt evaporation ponds, west of project parcel	May use project site, landscaped areas, and ruderal grassland habitat for foraging
Birds			
Carpodacus mexicanus	house finch	Industrial park complex adjacent to project parcel; PG & E substation	May use project site and all areas within the 5-mile radius for foraging and nesting
Hirundo rustica	barn swallow	Hayward Shoreline Interpretive Center; salt evaporation ponds and salt marshes	May use salt evaporation ponds, salt marshes, ruderal grassland, habitats for foraging and nesting; may use man-made structures for nesting
Riparia riparia	bank swallow	Hayward Shoreline Interpretive Center; salt evaporation ponds and salt marshes	May use salt evaporation pond and, salt marsh areas for foraging and potential nesting. No suitable forage or nesting habitat in project impact areas.
Corvus brachyrhyncos	American crow	Industrial park complex adjacent to project parcel	May use project site and all areas within the 5-mile radius for foraging and nesting

TABLE BIO -2
Wildlife Species Observed at the Proposed Eastshore Energy Project Site and within a 5-mile radius, June 2006

Scientific Name	Common Name	Occurrence	Comments
Turdus migratorius	American robin	Industrial park complex adjacent to project parcel	May use project site and all areas within the 5-mile radius for foraging and nesting
Calypte sp.	hummingbird	Industrial park complex adjacent to project parcel and project parcel itself	May use project site and all areas within the 5-mile radius for foraging and nesting
Numenius americanus	long-billed curlew	Hayward Shoreline Interpretive Center; salt evaporation ponds and salt marshes	May use salt evaporation ponds, salt marshes, ruderal grassland areas for foraging and nesting
Larus sp.	gull sp.	Hayward Shoreline Interpretive Center; salt evaporation ponds and salt marshes	May use project site and all areas within the 5-mile radius for foraging and nesting
Egretta thula	snowy egret	Hayward Shoreline Interpretive Center; salt evaporation ponds and salt marshes	May use salt evaporation ponds, salt marshes, ruderal grassland areas for foraging; no suitable nest trees in industrial park or project impact areas
Agelaius phoeniceus	Red-winged blackbird	Hayward Shoreline Interpretive Center; salt evaporation ponds and salt marshes	May use salt evaporation ponds, salt marshes, ruderal grassland areas for foraging and nesting
Catoptrophorus semipalmatus	willet	Hayward Shoreline Interpretive Center; salt evaporation ponds and salt marshes	May use salt evaporation ponds, salt marshes, ruderal grassland areas for foraging and nesting
Aimophila sp.	sparrow	Project parcel; Hayward Shoreline Interpretive Center; salt evaporation ponds and salt marshes	May use project site and all areas within the 5-mile radius for foraging and nesting
Himantopus mexicanus	Black-necked stilt	Hayward Shoreline Interpretive Center; salt evaporation ponds and salt marshes	May use salt evaporation ponds and salt marshes, for foraging and nesting
Sayornis nigricans	black phoebe	Hayward Shoreline Interpretive Center; salt evaporation ponds and salt marshes	May use project site and all areas within the 5-mile radius for foraging and nesting

TABLE BIO - 3
Special-status Wildlife Species Observed at the Proposed Eastshore Energy Project Site and within a 5-mile radius

Scientific Name	Common Name	Status[a]	Season[b]	Primary Habitat[c]	Potential Occurrence in Project Area
Riparia riparia	bank swallow	ST	SPR/SUMR	Sandy, vertical bluffs or riverbanks; northern, north coastal, and central coastal regions of California.	Observed flock of swallows foraging in marsh habitat at the Hayward Shoreline Interpretive Center; salt evaporation ponds and salt marshes. Berms around salt ponds and marshes could provide potential nest habitat. No suitable nesting or forage habitat on project site or transmission corridor.

[a] ST-State listed as threatened [b] SPR- Spring; SUMR- Summer [c] Most likely habitat association

Sources: (San Leandro, Hayward, Redwood Point, Newark, Mountain View, Palo Alto, Woodside, San Mateo and Hunters Point Quads searched June 2006); California Department of Fish and Game, California Natural Diversity Database Program (June 2006) and Habitat Conservation Planning Branch, California's Plants and Animals website: http://www.dfg.ca.gov/hcpb/cgi-bin/read_one.asp?specy=birds&idNum=81

Section 2.3 Transmission System and Engineering

Data Adequacy Deficiency – The SIS submitted has an on-line date of May 2007. The AFC states that the Eastshore on-line date is the fourth quarter of 2008. A study of the first year of operation is required.

Provide a new or updated SIS which demonstrates conformance or nonconformance with the utility reliability and planning criteria at the time the facility is expected to be placed in operation and five years thereafter. Alternatively, Eastshore can provide confirmation from the CAISO and PG&E which indicate the current SIS is sufficient for demonstrating conformance with the utility reliability and planning criteria at the time the facility is expected to be placed in operation and five years thereafter.

Data Adequacy Response – An updated SIS has been provided by PG&E that reflects the correct on-line date in the fourth quarter of 2008 (refer to Appendix A). PG&E has indicated that the study attachments previously provided in the AFC and the conclusions of the study remain unchanged. The Eastshore project will not cause a significant impact to the transmission system. A copy of the updated SIS is attached.

Data Adequacy Deficiency – Provide CAISO Preliminary Approval Letter for interconnection of the proposed project to the CAISO control grid or the schedule for when the Preliminary Approval would be granted.

Data Adequacy Response – A copy of the CAISO Preliminary Approval Letter is attached.

ATTACHMENT TSE-A

CAISO Preliminary Approval Letter

California Independent
System Operator Corporation

October 26, 2006

Greg Trewitt
VP Development and Engineering
Tierra Energy
710 S. Pearl Street, Suite A
Denver, Colorado 80209

Re: Eastshore Energy Facility Project
Final Interconnection Approval

Dear Mr. Trewitt:

Eastshore Energy, LLC proposes to interconnect a 115 MW generating facility to Pacific Gas & Electric's (PG&E) 115 kV bus at Eastshore Substation in Hayward, California. The proposed project is called the Eastshore Energy Facility Project (Project). The Project consists of fourteen (14) reciprocating engine generators. The proposed commercial operation date of the Project is September 2008. This project had been granted final interconnection approval by the California ISO (CAISO) in a letter dated March 8, 2006 (when the project was being developed by Ramco) with an operation date of May 2007.

The CAISO has reviewed both revised System Impact and Facilities study reports (dated October 18, 2006) that were conducted by Pacific Gas and Electric Company (PG&E) for the Eastshore Energy Facility Project. The CAISO concurs with the results of the revised System Impact Study which is consistent with the previous study report (dated April 5, 2005). The CAISO also concurs with the revised Facilities Study Report which is consistent with the previous study report (dated February 28, 2006). The Facilities Study report outlines a technically feasible transmission plan for the interconnection of the project to the CAISO's Controlled Grid. Based on the accumulated results of the System Impact and the Facilities studies performed for this project, the CAISO reaffirms its final interconnection approval to connect the Eastshore Energy Facility Project to the CAISO Controlled Grid.

Should you have any questions about the CAISO's approval to interconnect the Eastshore Energy Facility Project to the CAISO Controlled Grid, please contact Larry Tobias at (916) 608-5763 (ltobias@caiso.com) or Gary DeShazo at (916) 608-5880 (GDeShazo@caiso.com).

Sincerely,

(Original signed by Larry Tobias on behalf of Gary DeShazo)

Gary DeShazo
Director, Regional Transmission - North

LT/GD:pjp
cc:

Greg Trewitt (Tierra Energy, Greg.Trewitt@Tierraenergy.com)
Theodore Matula (Tierra Energy, Theodore.Matula@tierraenergy.com)
Alex Takahashi (Alex.Takahashi@tierraenergy.com)

John Vardanian (PG&E, JAV7@pge.com)
Karen Grosse (PG&E, KRG6@pge.com)
Curt Irwin (CPI3@pge.com)
Darish Shirmohammadi (CAISO)
Dennis Peters (CAISO)
Judy Nickel (CAISO)
Stan Nishioka (PG&E)
Madeline Aldridge (PG&E)
Mark Esguerra (PG&E)
Nan Liu (CAISO)
Regional Transmission (CAISO)

Attachment

This attachment is a summary of the CAISO review of the project's Final System Impact Study.

Eastshore Energy, LLC proposes to interconnect a 115 MW generating facility to Pacific Gas & Electric's (PG&E) 115 kV bus at Eastshore Substation in Hayward, California. The proposed project is called the Eastshore Energy Facility Project (Project). The Project consists of fourteen (14) reciprocating engine generators. The proposed commercial operation date of the Project is May 2007. PG&E issued a System Impact Study (SIS) for this Project on April 5, 2005 that provided an analysis of the system impacts.

The Direct Assignment facilities consist of:

- Constructing a new generator tie line from the Project to PG&E's Eastshore Substation
- Installing one new 115 kV generator tie breaker and associated protective relays, as well as communication and control equipment related to the Project up to the Interconnection Point
- Surveying, mapping, land or land rights acquisition activities required for the generator tie line
- Preparing and filing of the Notice of Construction (NOC)
- Pre-parallel inspection, testing, SCADA, EMS setup, and engineering support at the Project facility

There are no Network Upgrade facilities required to interconnect the Project with PG&E's transmission system.

The Project consists of fourteen (14) reciprocating engine generators. Each generator will be rated at 8.43 MW for a total of 118 MW. The expected total plant load will be 3 MW. Therefore, the maximum net output to the grid will be 115 MW. The Project will have a 13.8/115 kV step-up transformer connecting to the 115 kV bus at PG&E's Eastshore Substation via a new 115 kV generator tie line.

Figure 2-1: Conceptual Single-Line Diagram

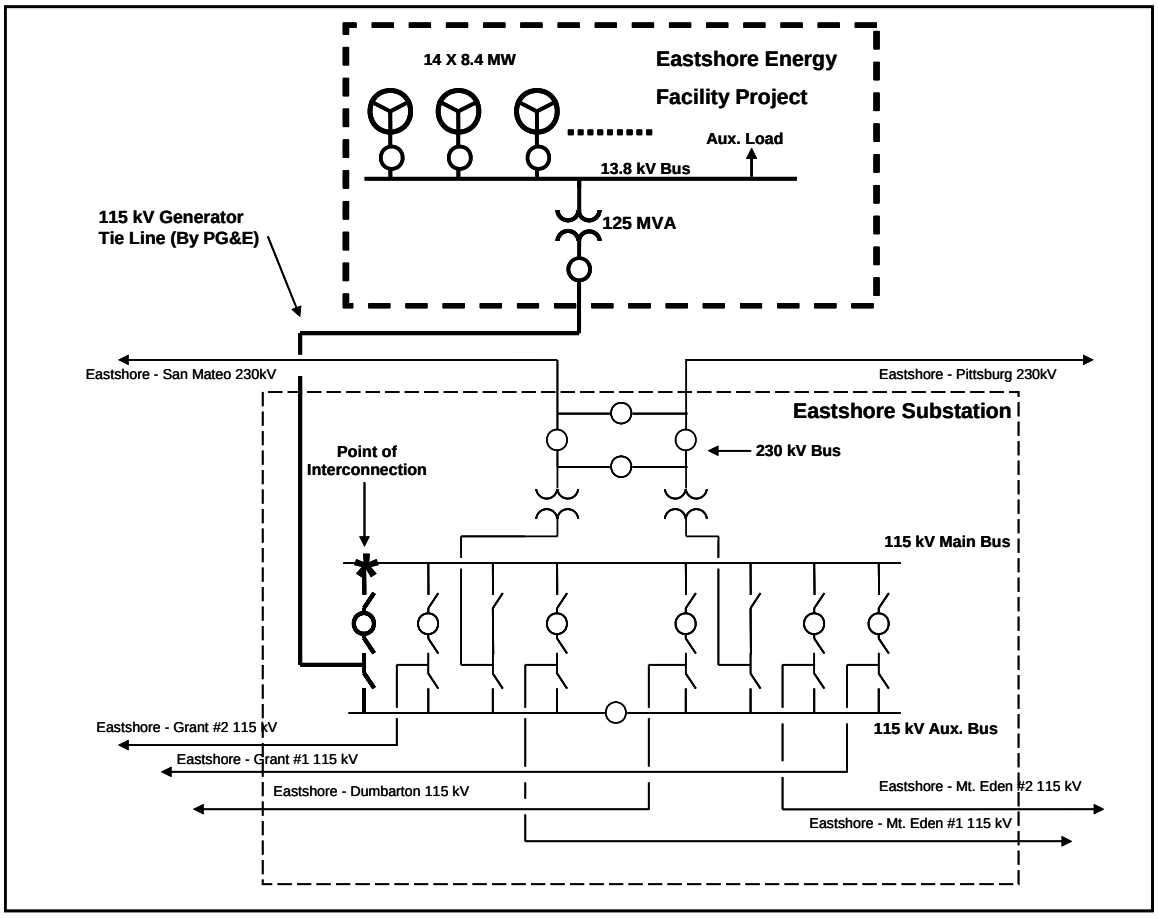

Section 2.4 Water Resources

Data Adequacy Deficiency – Provide the chemical characteristics of the industrial wastewater which is to be discharged to the City of Hayward's sanitary sewer system.

Data Adequacy Response – The Eastshore project is committed to meeting the requirements of Chapter 11, Article 3 of the City of Hayward Municipal Code regulating the discharge of industrial wastewater into the City's sewer system. (Note that most of the day-to-day discharges will be from sanitary sources [e.g., restroom facilities]). All industrial wastewater streams will be directed to an effluent collection tank for testing. If testing shows that the City's requirements cannot be met, the industrial wastewater will be trucked offsite by a licensed contractor. There are two sources of industrial wastewater: (1) miscellaneous service uses such as equipment washdown (occurring periodically during plant operation), and (2) discharge from the closed-loop cooling system (system to be flushed approximately once per year). Because of the infrequent discharge from the closed-loop cooling system, Table 8.14-3 in the AFC is a simplified averaging of the actual operation (e.g. industrial discharges on most operating days will be zero). The City of Hayward constituent limitations and potential concentration of these constituents in the industrial wastewater stream are summarized in Table WR-1.

TABLE WR-1
Summary of Wastewater Discharge Limitations and Potential Contributions

Constituent	Limit	Potential Contribution
Arsenic	1.0 mg/L	Discharge concentration would not be above potable water levels (constituent not reported, but likely very low given high-quality source).
Cadmium	0.2 mg/L	Discharge concentration would not be above potable water levels (constituent not reported, but likely very low given high-quality source).
Copper	2.0 mg/L	Discharge concentration would not be above potable water levels (range: 0.0013 mg/L to 0.126 mg/L).
Cyanide	0.6 mg/L	Discharge concentration would not be above potable water levels (constituent not reported, but likely very low given high-quality source).
Lead	1.0 mg/L	Discharge concentration would not be above potable water levels (range: <0.001 mg/L to 0.0118 mg/L).
Mercury	0.01 mg/L	Discharge concentration would not be above potable water levels (constituent not reported, but likely very low given high-quality source).
Nickel	1.0 mg/L	Discharge concentration would not be above potable water levels (constituent not reported, but likely very low given high-quality source).
Silver	0.5 mg/L	Discharge concentration would not be above potable water levels (constituent not reported, but likely very low given high-quality source).

TABLE WR-1
Summary of Wastewater Discharge Limitations and Potential Contributions

Constituent	Limit	Potential Contribution
Chromium (total)	2.0 mg/L	Discharge concentration would not be above potable water levels (constituent not reported, but likely very low given high-quality source).
Zinc	3.0 mg/L	Discharge concentration would not be above potable water levels (constituent not reported, but likely very low given high-quality source).
Temperature	150ºF	Discharge temperature would be elevated during maintenance of the closed-loop cooling system (once per year) but otherwise would be at ambient conditions. If the wastewater temperature in the effluent collection tank is higher than 150ºF, it will remain in the tank until it cools to less than 150ºF.
Oil and Grease	100 mg/L	Oil and grease would be present in the wastewater to be discharged as a result of equipment cleaning and other service uses. If oil and grease is present at concentrations above 100 mg/L, then removal devices (e.g., sorbents) will be used to reduce the concentration or the wastewater will be trucked offsite by a licensed contractor.
pH	6.0	Discharge pH would not be elevated above potable water levels (average: 8.9 pH units) under most conditions. Discharge pH is expected to be as high as 9.5 during discharge of water from the closed-loop cooling system (once per year); this is higher than the potable water source because of the addition of an anti-corrosion agent.
Total Toxic Organics	2.0 mg/L	Discharge concentration would not be above potable water levels (constituent not reported, but likely very low given high-quality source).
Phenol	5.0 mg/L	Discharge concentration would not be above potable water levels (constituent not reported, but likely very low given high-quality source).
Pesticides, PCBs, Dioxins	0.0 mg/L	Discharge concentration would not be above potable water levels (constituent not reported, but likely very low given high-quality source).
Total Petroleum Hydrocarbons (gasoline and diesel)	5.0 mg/L	Discharge concentration would not be above potable water levels (constituent not reported, but likely very low given high-quality source).
Benzene, Toluene, Ethylbenzene, Xylene (sum)	0.5 mg/L	Discharge concentration would not be above potable water levels (constituent not reported, but likely very low given high-quality source).

Sources: City of Hayward Municipal Code, Chapter 11, Article 3; City of Hayward Water Quality Report – 2005.

Data Adequacy Deficiency – Provide pre- and post-construction stormwater runoff patterns for the site and laydown area.

Data Adequacy Response – These calculations are provided as Attachment WR - 2.4A.

Data Adequacy Deficiency – Provide the design criteria and location of all pre-and post-construction drainage facilities for the site and laydown area. Figure 1.2-3 shows two catch basins without interconnection or discharge points. Please provide all drainage facilities and interconnections/discharge points.

Data Adequacy Response – The attached preliminary drawing 916-C-102, Rev A shows expected pre- and post -construction drainage for the portion of the laydown area Eastshore Energy, LLC will be using for the project. Only the indicated northern portion will be used; the southern portion will be retained for use by Berkeley Farms. Note that Eastshore Energy, LLC does not anticipate performing any grading on this property. However, Eastshore Energy, LLC will lay a base of about 2 inches of crushed rock on the northern portion of the parcel to improve its durability during project use; minimize the collection of dirt on tires; and minimize silt and contaminants runoff. Eastshore Energy, LLC will also employ best practices in order both to prevent collection of contaminants in the indicated catch basin, and to comply with City of Hayward quantity and quality requirements for storm water discharges.

The attached preliminary drawing 916-C-101, Rev C shows the locations of major site storm drains and the site storm drain discharge point. This drawing replaces Figure 8.14-4 which was inadvertently omitted from the AFC. As the design progresses, Eastshore Energy, LLC will update this to include all plant drain points, the design of which will be consistent with CEC and local requirements. Also shown is the location on Clawiter where Eastshore Energy, LLC expects the site's sewer discharge to terminate at the city's sewer main. The actual orientation and layout of the site sewer pipeline will be determined during final design.

ATTACHMENT WR-2.4A

Storm Drain Calculations – Laydown Area

EASTSHORE ENERGY CENTER

STORM DRAIN CALCULATIONS
LAYDOWN AREA

Stantec

370 NORTH WIGET LANE, SUITE 210
WALNUT CREEK, CA 94598
(925) 941-1400 FAX: (925) 941-1401

Job No. 2010091600

CALCULATION SHEET

Stantec

FILE _____ SHEET 1 OF 4

	PROCESS	JOB#	CALC#	PROJECT EAST SHORE ENERGY CENTER
	CIVIL			
	MECHAN.	MADE BY CS	DATE OCT. 06	SUBJECT STORM WATER RUN-OFF
	ELECT.			
	INSTR.	CHK BY	DATE	
	ARCH.			
		APP. BY	DATE	LAY DOWN AREA

DESIGN CRITERIA (TO BE VERIFIED IN FINAL DESIGN)

1. USE RATIONAL METHOD
2. RAINFALL INTENSITY 2.4"/HOUR FOR TIME OF CONCENTRATION = 10 MINUTES
3. RUN-OFF COEFF. = 0.4 (LIGHT VEGETATION, GRAVEL, SANDY SOIL)
4. FLOW NOMOGRAPH FOR MANNING FORMULAR FOR CIRCULAR PIPES FLOWING FULL.

CALCULATION SHEET

Stantec

FILE _____ SHEET 2 OF _____

	PROCESS	JOB#	CALC#	PROJECT EASTSHARE ENERGY CENTER
	CIVIL			
	MECHAN.	MADE BY LS	DATE OCT. 06	SUBJECT STORM WATER RUN-OFF
	ELECT.			
	INSTR.	CHK BY	DATE	
	ARCH.			
		APP. BY	DATE	LAYDOWN AREA

THE LAYDOWN AREA HAS NO FORMAL DRAINAGE. THE EXISTING SLOPES ARE TO THE NORTH WITH THE EAST SIDE DRAINING TO THE EAST. THE EAST SIDE RUN-OFF EXITS THE LAYDOWN AREA & APPEARS TO BE RETAINED IN AN UNDEVELOPED AREA.

THE WEST SIDE RUN-OFF EXITS TO THE NORTH TO AN EXISTING CATCHBASIN ON THE EAST SIDE OF CLAWITER ROAD.

NO CHANGES ARE ANTICIPATED TO THE DRAINAGE OF THE AREA BY ITS USE AS A LAY DOWN AREA.

<u>FLOW TO EXISTING CATCHBASIN</u>

USING RATIONAL METHOD

$Q = C \lambda A$

$C = 0.4$

Q = FLOW RATE IN $FT^3/SEC.$

λ = RAINFALL INTENSITY $= 2.4''/HOUR$

AREA $= 800' \times 370'$

$= 29{,}600$ SF

$= 0.68$ ACRES

303E - 09/06

CALCULATION SHEET

Stantec

FILE _____ SHEET 3 OF _____

	PROCESS	JOB#	CALC#	PROJECT EASTSHORE ENERGY CENTER
	CIVIL			
	MECHAN.	MADE BY	DATE	SUBJECT
	ELECT.			STORM WATER RUN-OFF
	INSTR.	CHK BY	DATE	
	ARCH.			
		APP. BY	DATE	LAYDOWN AREA

$Q = C i A$

$= 0.4 \times 2.4 \times 0.68$

$= 0.65$ CFS

ASSUMED EXISTING PIPE SIZES FROM CATCH BASIN

2" ϕ PIPE WITH SLOPE = 0.01

= 1.2 CFS > 0.65 CFS

6" ϕ PIPE WITH SLOPE = 0.02

= 0.8 CFS > 0.65 CFS

THE EXISTING PIPE SIZES & SLOPES NEED TO BE CONFIRMED BEFORE FINAL DESIGN.

WERAGE

sewage backing up and sur-
ıed to run full, the hydraulic
ıe junction, and surcharging
a drop is made.
ant consideration in sewer
Experience indicates that a
equired in sanitary sewers in
solids. The minimum allow-
give this velocity when the
ıuld be used if they are prac-
lations of state health depart-
le slopes for sewers of various
a ity in the pipes of 2 ft.
3. Under special conditions
slopes slightly less than those
but in this case the engineer
lepth of the sewage at design
neter.
be required than in sanitary
it which will be washed into
2.5 ft. per sec., and 3 ft. per
character of the solids, exces-
ft. per sec. being considered
ıat limit, large and important
tions with vitrified-tile blocks

ty in obtaining the minimum
pipes because they will pro-
des. It should be recognized,
per sec. will be reached only
ill be noted in Fig. 15-5, pipes
ies less than when full or half
ow flows may make matters
is anticipated should be con-
actual velocity that will be
es that are too low for cleaning
be made for convenient and
to remove them should they
w far toward preventing

15-3 are nomograms for the
ious ranges of quantities and
e of the diagrams can best be

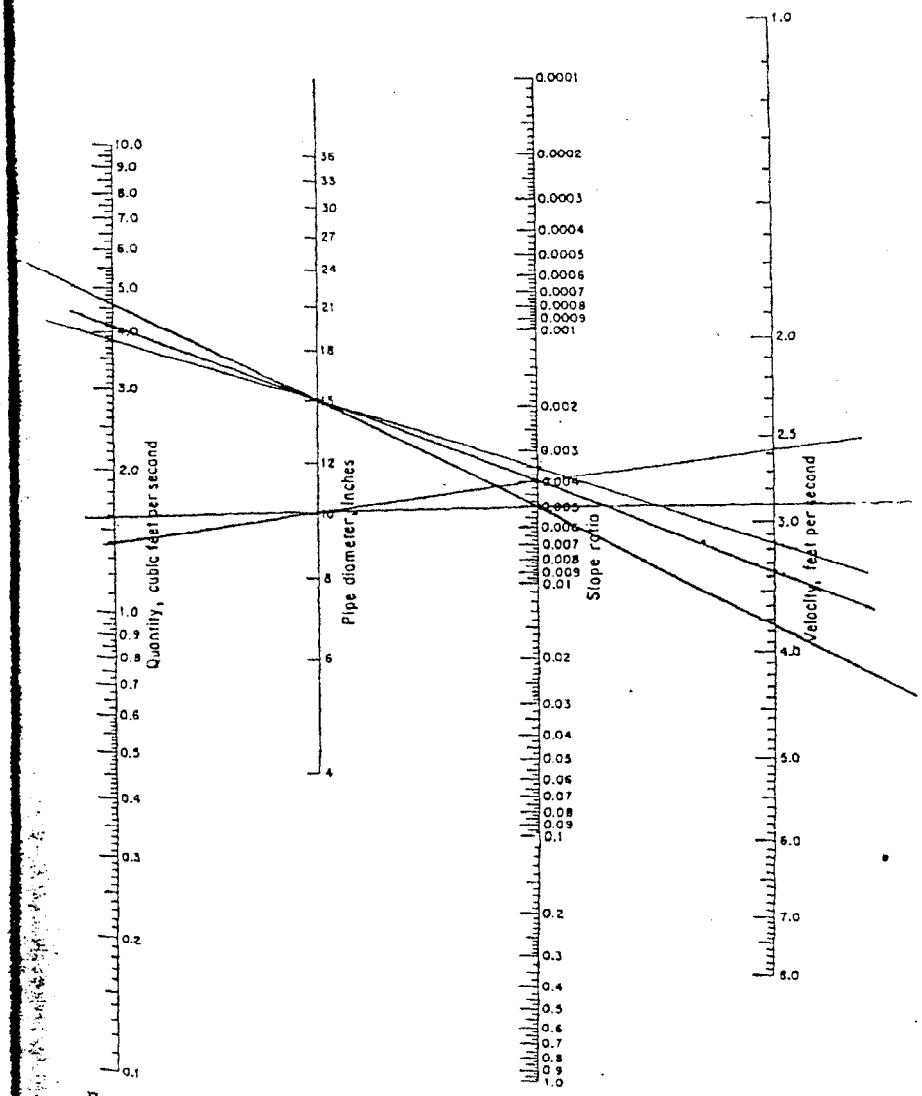

FIG. 15-1. Diagram for solution of Manning formula for circular pipes flowing full. $n = 0.013$.

ATTACHMENT WR-2.4B

916-C-102, Rev A

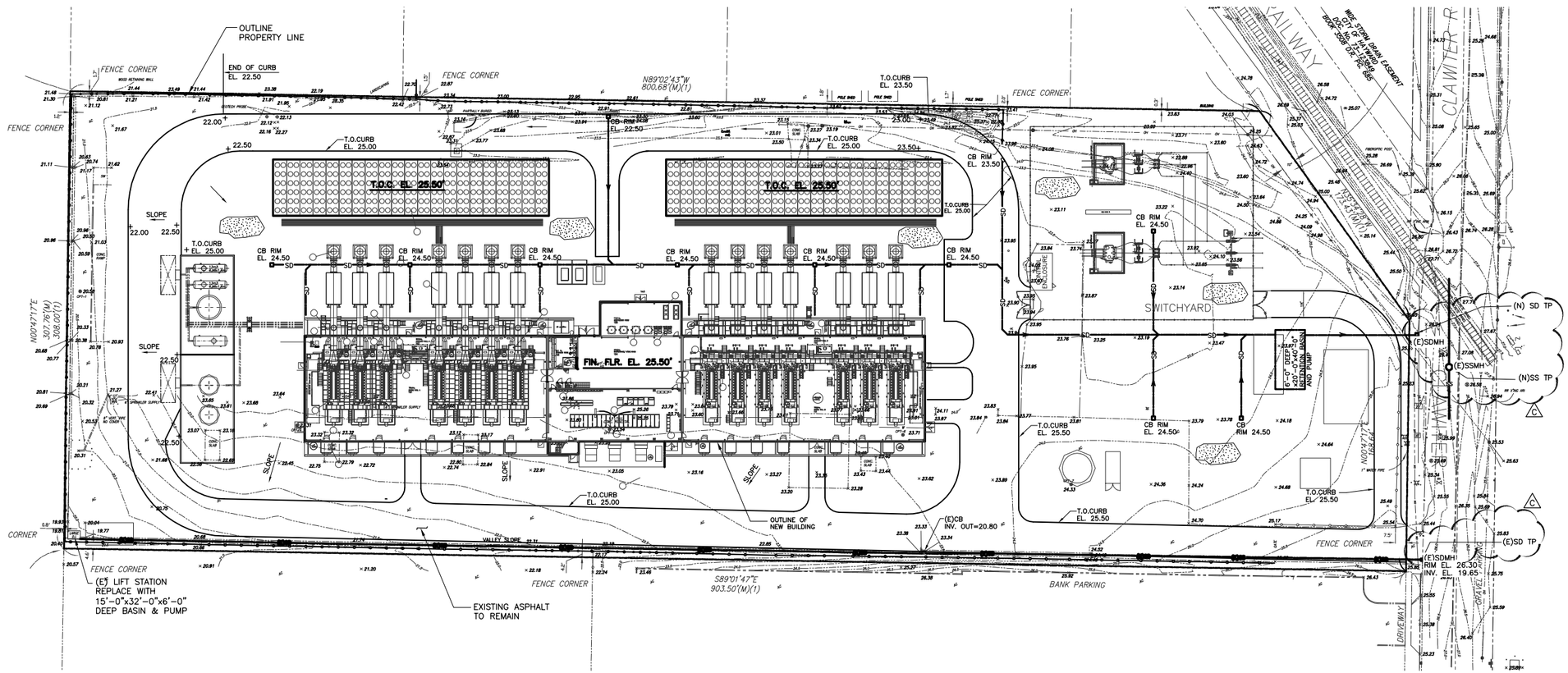

LEGEND

CB	CATCH BASIN
SD	STORM DRAIN
	SLOPE OF FIN. GRADE
×	EXISTING ELEVATION
+	NEW FINISHED ELEVATION
	6" YARD FINISH ROCK
SS	SANITARY SEWER
TP	TIE-IN POINT

NOTE:

PAVING AND DRAINAGE PIPING SHOWN IS CONCEPTUAL. SPECIFIC DETAILS AND LAYOUT WILL BE DETERMINED IN THE FINAL DESIGN.

1"=30' 30' 0' 30' 60'

REV	DATE	DESCRIPTION	DWN	DES	CHK	PE/PM	CLIENT APPV
C	10/25/06	REVISED AS NOTED	GC				
B	9/28/06	REVISED ELEVATIONS	DR				
A	9/11/06	ISSUED FOR APPLICATION	DR				

PREPARED BY: Stantec
WALNUT CREEK, CALIFORNIA (925) 941-1400

DWN | DES | PROJ MGR

PREPARED FOR: TIERRA ENERGY

PROJECT:

TITLE: EASTSHORE ENERGY CENTER
HAYWARD, CALIFORNIA
PAVING & DRAINAGE PLAN

SCALE	PROJECT NUMBER	DRAWING NUMBER	REV
1"=30'-0"	20100916	916-C-101	C

30 X 42 PLOT SCALE: XREF LIST:

I:\Tierra_Energy\20100916_tierra_ces_eng_sup_casisnare\C11\916-C-101rev.C.dwg, 10/25/2006 1:11:00 PM, gison

ATTACHMENT WR-2.4C

916-C-101, Rev C

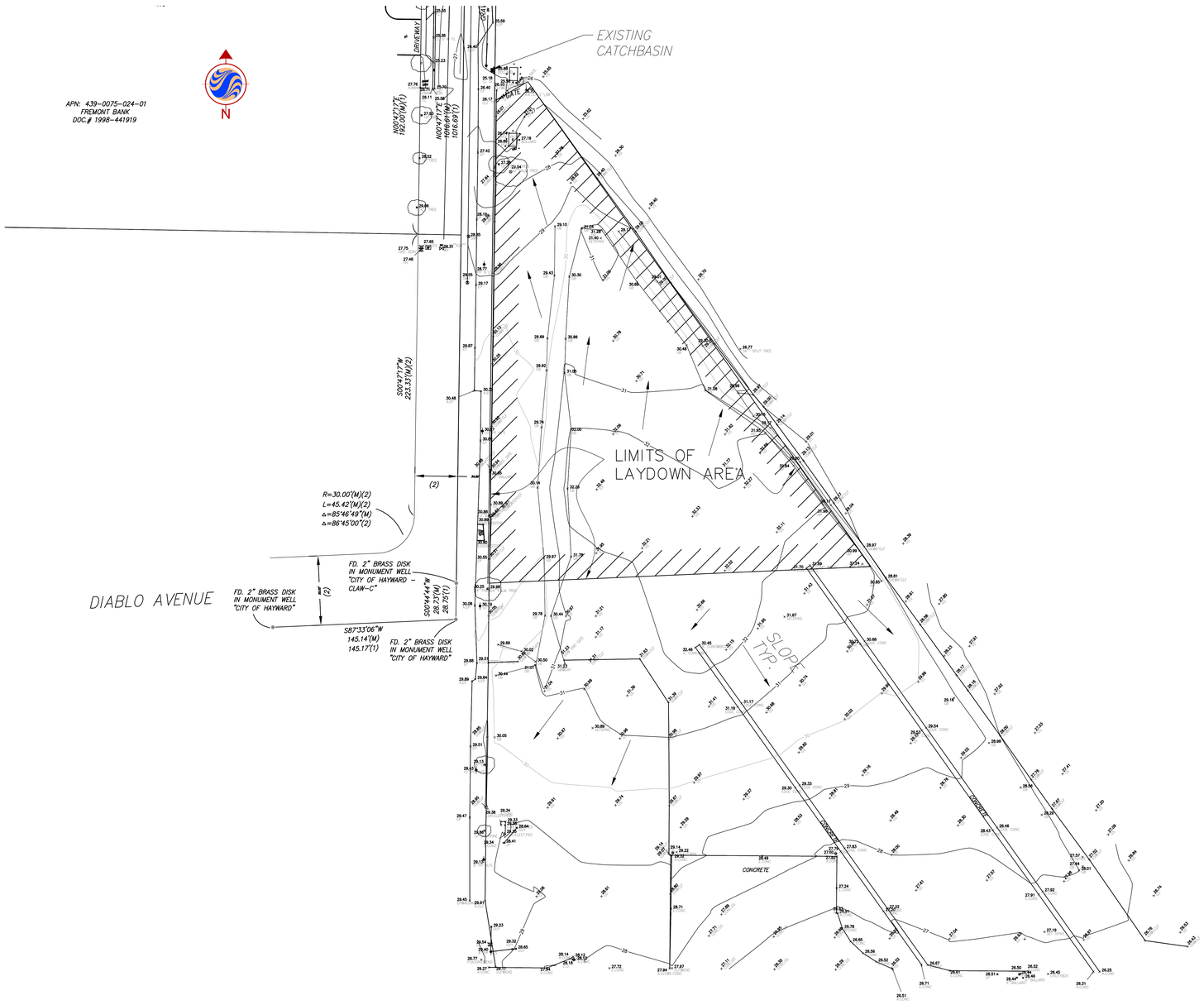

LEGEND:

- GAS VALVE
- UTILITY POLE
- COMMUNICATIONS MANHOLE
- SANITARY SEWER MANHOLE
- CP1-6 BORE HOLE & DESIGNATION
- DROP INLET (D.I.)
- ASPHALTIC CONCRETE
- FIRE HYDRANT
- (M) MEASURED DISTANCE
- TREE
- WATER METER
- IRRIGATION VALVE
- WATER VALVE
- FOUND MONUMENT IN WELL
- FOUND MONUMENT
- SW SIDEWALK
- CONC. CONCRETE
- LUMINAIRE
- W USA LOCATE – WATER
- CO USA LOCATE – COMMUNICATIONS
- G USA LOC ATE – GAS
- OH OVERHEAD LINE
- RETAINING WALL
- CHAINLINK FENCE

1"=40' 0 40' 60' 80'

REV	DATE	DESCRIPTION	DWN	DES	CHK	PE/PM	CLIENT APPV	REV	DATE	DESCRIPTION	DWN	DES	CHK	PE/PM	CLIENT APPV

PREPARED BY: Stantec
WALNUT CREEK, CALIFORNIA (925) 941-1400
DWN | DES | PROJ MGR

PREPARED FOR: TIERRA ENERGY

PROJECT:

TITLE: EASTSHORE ENERGY CENTER
HAYWARD, CALIFORNIA
LAYDOWN AREA–DRAINAGE PLAN

SCALE	PROJECT NUMBER	DRAWING NUMBER	REV
1"=40'-0"	20100916	916-C-102	A

ESIBD301

XREF LIST:

PLOT SCALE: 30 X 42

Appendix A
System Impact Study Report

System Impact Study Report

Generation Interconnection

Eastshore Energy, LLC

Eastshore Energy Facility Project

Revision 1

Pacific Gas and Electric Company

WE DELIVER ENERGY.

October 18, 2006

Table of Contents

1. Executive Summary 1

2. Project and Interconnection Information 2

3. Study Assumptions 3

4. Power Flow Study Base Case 4

5. Study Criteria Summary 5

6. Steady State Power Flow Study and Results 6

7. Dynamic Stability Study and Results 8

8. System Protection Study 10

9. Substation Evaluation 12

10. Reactive Power Deficiency Analysis 12

11. Mitigation 13

12. Environmental Evaluation/ Permitting 13

13. Study Updates 14

14. Stand-by Power 14

Appendices:

A. Study Plan
B. Contingency Lists for Outages - Autocon Input Files
C. Power Flow Results-Autocon Comparison Files
D. Power Flow Plots
E. Generator Machine Dynamic Data
F. Dynamic Stability Plots
G. Preliminary Protection Requirements

1. Executive Summary

Eastshore Energy, LLC (Eastshore Energy) proposes to interconnect a 115 MW generating facility to Pacific Gas & Electric's (PG&E's) Eastshore 115 kV Substation in Hayward, California. The project is called the Eastshore Energy Facility Project (Project). The project consists of fourteen (14) reciprocating engine generators rated at 8.43 MW each. The planned operational date of this project is September 2008[1].

CAISO and PG&E have agreed that a System Impact Study (SIS) is required to determine the impact of the Project on PG&E's transmission grid. The SIS determined:

- The transmission system impacts caused solely by the interconnection of the Project.
- The system reinforcement necessary to mitigate any adverse impact of the Project under various system conditions.

To determine the system impacts caused by the addition of the Project, studies were performed using the following full loop base cases:

- 2007 Summer Peak
- 2007 Summer Off Peak

The studies performed included:

- Steady State Power Flow
- Dynamic Stability Analysis
- System Protection

PG&E's evaluation has concluded that the addition of the Eastshore Energy Facility Project would cause no normal or Category B contingency overloads during conditions studied for 2007. The Project also did not cause any Category C contingency overloads during conditions studied for 2007.

The Substation Evaluation identifies no overstressed breakers due to the addition of Eastshore Energy Facility Project.

Dynamic Stability Study results indicated that the transmission system's transient performance, relative to the CAISO reliability guidelines, would not be impacted by the Project following selected disturbances.

[1] The original commercial operation date was May 2007, and has since been revised

2. Project and Interconnection Information

The Eastshore Energy Facility Project (Project) consists of fourteen (14) reciprocating engine generators. Each reciprocating engine generator is rated at 8.43 MW for a total of 118 MW. The expected total plant load is 3 MW. Therefore, the maximum net output to the grid is 115 MW. The proposed project will have a 13.8/115 kV step-up transformer and will connect to PG&E's Eastshore 115 kV Substation via a new short 115 kV transmission line to be built by Eastshore Energy.

The existing Eastshore 115 kV bus is a main and auxiliary configuration. This study assumed a direct interconnection as shown in the conceptual one-line diagram in Figure 2-1. The final configuration of the Eastshore 115 kV bus will be determined in the Facility Study (FS) process. The final configuration may be different in order to conform to PG&E's existing standards for bus design. Any additional interconnection costs resulting from a new bus configuration will be the responsibility of this project.

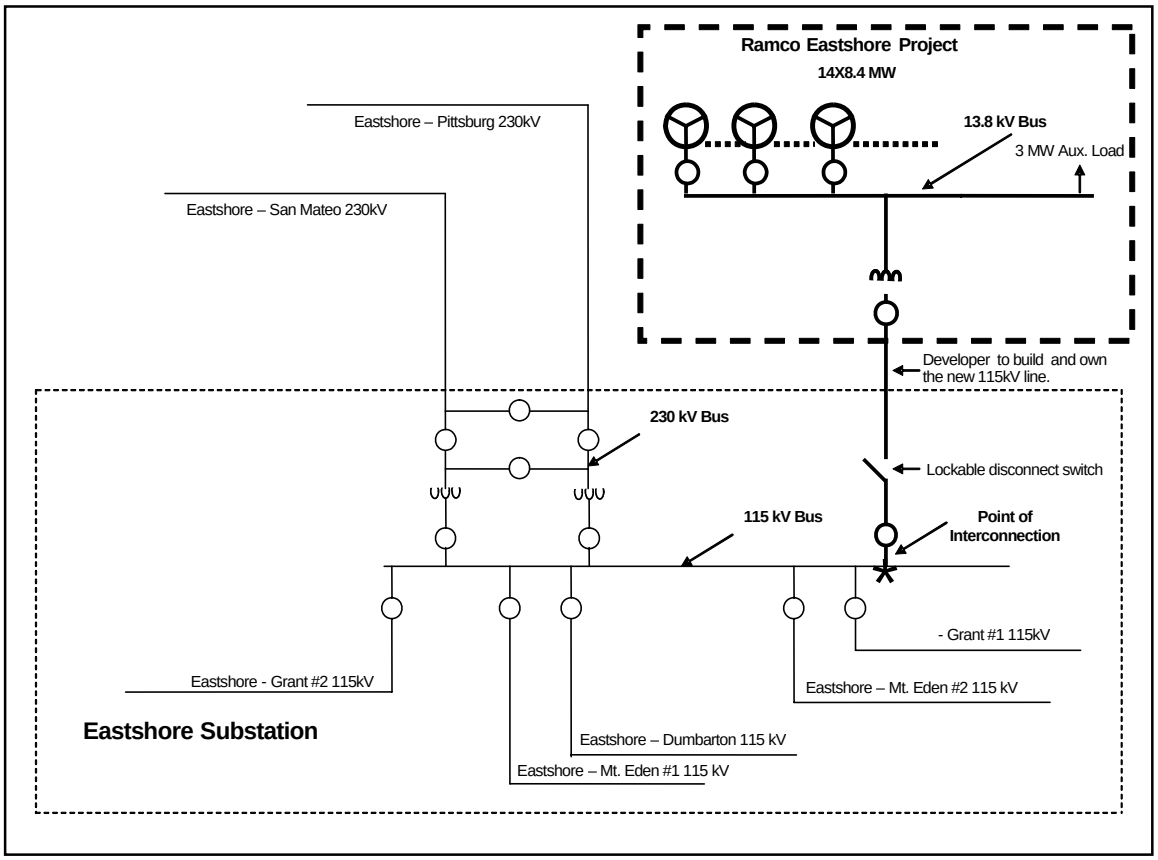

Figure 2-1: Conceptual One-Line Diagram

A map showing the approximate location of the proposed project site in relation to the Eastshore Substation and the transmission lines in the area is provided in Figure 2-2.

Figure 2-2: Vicinity Map

3. Study Assumptions

PG&E conducted the SIS using the following assumptions:

1) The maximum total output of the Eastshore Energy Facility Project will be 118 MW. The expected total plant load is 3 MW. The maximum net output to the grid is 115 MW.

2) The expected on-line date of the Project is September 2008.

3) All fourteen (14) reciprocating generator units will share a step-up transformer. The transformer is a three phase, 13.8/115 kV step-up transformer with a rating of 75/100/125 MVA @ 55 C rise and 140 MVA @ 65 MVA C rise (9% impedance at 75 MVA).

4) Eastshore Energy will engineer, procure, construct, own, and maintain its project facility and the 115 kV generator tie line.

5) The study took into account the planned generating facilities in PG&E's service territory whose schedules are concurrent with or precede the Project's schedule.

6) The study took into account all the approved PG&E transmission reliability projects that will be operational by May 2007.

4. Power Flow Study Base Case

Two power flow base cases were used to evaluate the transmission system impacts of the Eastshore Energy Facility Project. While it is impossible to study all combinations of system load and generation levels during all seasons and at all times of the day, these two base cases represent extreme loading and generation conditions for the study area.

PG&E cannot guarantee that the Project can operate at maximum rated output 24 hours a day, year round, without system impacts, nor can PG&E guarantee that the Project will not have system impacts during the times and seasons not studied in the SIS.

Power flow analysis was conducted using both base cases. The 2007 Summer Peak Full Loop Base Case was used for dynamic stability analysis.

- **2007 Summer Peak Full Loop Base Case:**

  The 2007 Summer Peak Full Loop Base Case models the PG&E transmission system and expected operating conditions during the summer peak. This base case was developed from PG&E's 2004 base case series and has a 1-in-10 year heat wave load forecast for the Bay Area. Path 66 (California-Oregon Inter-tie) and Path 26 (Northern-Southern California Inter-tie) did not exceed the north-to-south transfer capabilities of 4,800 MW and 3,400 MW respectively. The Path 15 Project was modeled with a south-to-north transfer capability of 822 MW.

- **2007 Summer Off-Peak Full Loop Base Case:**

  The 2007 Summer Off-Peak Full Loop Base Case models the PG&E transmission system when loads are at about 48% of summer peak load level for the Bay Area.

These two base cases modeled all the approved PG&E transmission reliability projects that will be operational by May 2007.

Base Case Key Generation Assumptions

These two base cases modeled all the proposed generation projects that will be operational by May 2007. However, the base cases did not include generation projects that are in the Generation Interconnection Queue but are scheduled to be on-line after May 2007. The major generation projects included are shown in Attachment 1 of the Study Plan in Appendix A.

Generation projects that would be on-line by May 2007 were modeled in the base cases used for the SIS. However, some generation projects that are electrically far from the proposed project were either turned off or modeled with reduced generation to balance the loads and resources in the power flow model.

5. Study Criteria Summary

The CAISO Controlled Grid Reliability Criteria, which incorporate the Western Electricity Coordinating Council (WECC) and the North American Electric Reliability Council (NERC) planning criteria, were used to evaluate the impact of the project on the PG&E transmission system.

5.1 Steady State Study Criteria – Normal Overloads

Normal overloads are those that exceed 100 percent of normal ratings. The CAISO Controlled Grid Reliability Criteria requires the loading of all transmission system facilities be within their normal summer ratings.

5.2 Steady State Study Criteria – Emergency Overloads

Emergency overloads are those that exceed 100 percent of emergency ratings. The emergency overloads refer to overloads that occur during single element contingencies (CAISO Category “B”) and multiple element contingencies (CAISO Category “C”).

5.3 Dynamic Stability Study Criteria

According to the WECC Disturbance-Performance Table of Allowable Effects on Other Systems[2], after a CAISO Category “B” disturbance, the transmission system performance should meet the following criteria:

- Transient voltage dip should not be below 25 percent at load buses or 30 percent at non-load buses at any time.
- The duration of the transient voltage dip greater than 20 percent should not exceed 20 cycles at load buses.
- The minimum transient frequency should not fall below 59.6 Hz for more than 6 cycles at load buses.

[2] Cited from Draft Western Electricity Coordinating Council (WECC) Planning Standards published in December 2, 1999.

After a CAISO Category "C" disturbance, the transmission system performance should meet the following criteria:

- Transient voltage dip should not be below 30 percent at any bus at any time.
- The duration of a transient voltage dip greater than 20 percent should not exceed 40 cycles at load buses.
- The minimum transient frequency should not fall below 59.0 Hz for more than 6 cycles at load buses.

6. Steady State Power Flow Study and Results

The SIS studied the impact of the Eastshore Energy Facility Project on the PG&E transmission system. Two base cases were used to simulate the impact of the new facility during normal operating conditions, as well as, single and multiple (ISO Categories "B" and "C") outages:

- 2007 Summer Peak
- 2007 Summer Off-Peak

These base cases are described in Section 4 ("Base Case Information"). The SIS covered the transmission facilities within PG&E's East Bay, Mission, Diablo, and Peninsula Divisions.

PG&E cannot guarantee that the Project can operate at maximum rated output 24 hours a day, year round, without system impacts, nor can PG&E guarantee that the Project would not have system impacts during the times and seasons not studied in the SIS.

6.1 Contingencies

The CAISO Category "B" and "C" contingencies used in this analysis are provided in Appendix B. The single (ISO Category "B") and selected multiple (ISO Category "C") contingencies include the following outages:

6.1.1 CAISO Category "B"

- All single (60 - 500 kV) generator outages within the study area.
- All single (60 - 500 kV) transmission circuit outages within the study area.
- All single (60 - 500 kV) transformer outages within the study area.
- Selected overlapping single generator and transmission circuit outages for the transmission lines and generators within the study area.

6.1.2 CAISO Category "C"

- Selected bus outages (60 - 230 kV) within the study area.
- Selected outages caused by breaker failures (excluding bus tie and sectionalizing breakers) at the same bus section above.
- Selected combination of any two-generator/transmission line/transformer outages (except ones included above in Category "B") within the study area.
- Selected outages of double circuit tower lines (60 - 230 kV) within the study area.

6.2 Results

Appendix B provides a list of the contingencies studied. Appendix C shows the steady state power flow analysis results. Appendix D includes selected power flow plots.

6.2.1 Normal Overloads (CAISO Category A)

The addition of the Eastshore Energy Facility Project causes no normal overloads in any of the 2007 base cases studied.

6.2.2 Emergency Overloads (CAISO Category B)

The addition of the Eastshore Energy Facility Project causes no Category B emergency overloads in any of the 2007 base cases studied. One (1) transmission line will load to 100% of its rated capacity for the 2007 Summer Off-Peak base case. The loading on the Sobrante-Grizzly-Claremont 115 kV Line #2 (Claremont-Grizzly Jct. 2) loaded to 100% during a Sobrante-Moraga 115 kV line outage. Table 6-1 summarizes the loading of this line.

Over Loaded Component	Contingency	Rating (Amps)	Pre- Project Loading (Amps |%Rating)		Post-Project Loading (Amps |%Rating)		% Change from Pre-Project Loading
2007 Summer Off-Peak							
Sobrante-Grizzly-Claremont #2 115 kV Line (Claremont-Grizzly Jct2)	Sobrante-Moraga 115 kV Line	803	797	99%	800	100%	+1%

Table 6-1: 2007 Summer Off-Peak – B Contingency Overloads

6.2.3 Emergency Overloads (Category C)

The addition of the Eastshore Energy Facility Project causes no Category C emergency overloads in any of the 2007 base cases studied. One (1) transmission facility will load to 100% of its rated capacity in the 2007 Summer Off-Peak base case. The loading on the Oakland D-Oakland L 115 kV Line loaded to 100% during Moraga 115 kV bus section 2D outage. This loading is summarized in Table 6-2 for information only.

Over Loaded Component	Contingency	Rating (Amps)	Pre- Project Loading (Amps |%Rating)		Post-Project Loading (Amps |%Rating)		% Change from Pre-Project Loading
2007 Summer Off-Peak							
Oakland D-Oakland L 115 kV Line	Moraga 115 kV Bus Section 2D Outage	790	786	99%	789	100%	+1%

Table 6-2: 2007 Summer Off-Peak – C Contingency Overloads

7. Dynamic Stability Study and Results

Dynamic stability studies were conducted using the 2007 Summer Peak Full Loop Base Case to ensure that the transmission system remains in operating equilibrium through abnormal operating conditions after the new facility begins operation. This full loop base case was developed from PG&E's 2004 base case series. The generator dynamic data used is shown in Appendix E.

7.1 Dynamic Stability Study Scenarios

Disturbance simulations were performed for a study period of up to 20 seconds to determine whether the new facility will create any system instability during the following line and generator outages:

7.1.1 NERC/CAISO Category "B" Contingencies:

1) Full load rejection of the proposed Project.

2) A three-phase fault with normal clearing time at Eastshore Substation 115 kV bus followed by the loss of the Eastshore-Dumbarton 115 kV Line.

3) A three-phase fault normal clearing time at Eastshore Substation 115 kV bus followed by the loss of the Eastshore-Grant 115 kV #1 Line.

7.1.2 NERC/CAISO Category "C" Contingencies:

1) A three-phase fault on one of the Eastshore Substation 115 kV bus.

2) A three-phase fault with normal clearing time at Eastshore Substation 115 kV bus followed by the loss of Eastshore-Grant 115 kV #1 & #2 Lines.

7.2 Parameters Monitored to Evaluate System Stability Performance

7.2.1 Rotor Angle

The rotor angle plots shown in Appendix F provide a measure for determining how the proposed generation units would swing with respect to one another. The plots also provide a measure of how the units would swing with respect to other generation units in the area.

7.2.2 Bus Voltage

The bus voltage plots, in conjunction with the relative rotor angle plots, also shown in Appendix F, provide a means of detecting out-of-step conditions. The bus voltage plots are useful in assessing the magnitude and the duration of post disturbance voltage dips and peak-to-peak voltage oscillations. The bus voltage plots also give an indication of system damping and the level to which voltages are expected to recover in steady state conditions.

7.2.3 Bus Frequency

The bus frequency plots, also shown in Appendix F, provide information on the magnitude and the duration of post fault frequency swings with the Eastshore Energy Facility Project in service. These plots indicate the extent of possible over-frequency or under-frequency, which can occur because of the imbalance between the generation and load within an area.

7.2.4 Other Parameters

- Generator Terminal Power
- Generator Terminal Voltage
- Generator Rotor Speed
- Generator Field Voltage
- Bus Angle
- Line Flow
- Voltage Spread
- Frequency Spread

7.3 Results

Dynamic stability studies were conducted using the 2007 Summer Peak Full Loop Base Case described in Section 4 and the generator models shown in Appendix E to determine whether the transmission system would attain operating equilibrium following selected outages.

The results indicated that the transmission system performed within the CAISO/WECC reliability guidelines following the disturbances outlined above. It was determined that the Eastshore Energy Facility Project would have no adverse impact on the stable operation of the transmission system.

The results of the study are provided in the form of plots in Appendix F. A switch-deck script describing the switching sequence is provided as a note on the first page of each group of plots.

8. System Protection Study

Short circuit studies were performed to determine the impact of adding the Eastshore Energy Facility Project to the transmission system. The fault duties were calculated before and after the project.

8.1 System Protection Study Input Data

The following input data provided by the Applicant was used in this study:

Reciprocating Generator

- Synchronous reactance (X_d) = 1.75 pu @ 10.5 MVA
- Transient reactance (X'_d) = 0.305 pu @ 10.5 MVA
- Sub-transient reactance (X''_d) = 0.178 pu @ 10.5 MVA
- Negative Sequence reactance (X_2) = 0.188 pu @ 10.5 MVA
- Zero Sequence reactance (X_0) = 0.101 pu @ 10.5 MVA

Step-up Transformers

- 13.8/115 kV, 75 MVA on OA, Z = 9%

8.2 Results

Table 8-1 lists the available short circuit duty at the buses electrically adjacent to the Eastshore Energy Facility Project. This data was used to determine if any equipment would be overstressed by the addition of the Project.

Fault Location	Pre-Project		Post-Project (Phase 1)			
	3∅	L-G	3∅	% Increase	L-G	% Increase
Dumbarton 115 kV Bus	18,004	14,746	19,063	6%	15,289	4%
Eastshore 115 kV Bus	15,262	16,877	17,324	14%	19,395	15%
Grant 115 kV Bus	11,084	10,069	12,125	9%	10,812	7%
Mt. Eden 115 kV Bus	14,077	14,471	15,808	12%	16,183	12%
Pittsburg D1 230 kV Bus	49,757	55,286	49,863	0%	55,370	0%
Pittsburg D2 230 kV Bus	49,742	55,247	49,848	0%	55,331	0%
Pittsburg E1 230 kV Bus	49,712	55,247	49,818	0%	55,331	0%
Pittsburg E2 230 kV Bus	49,665	55,129	49,771	0%	55,212	0%
Eastshore Energy 115 kV Bus	0	0	17,279	N/A	19,296	N/A
San Mateo 230 kV Bus	28,254	26,384	28,589	1%	26,608	1%

Table 8-1: Short circuit study results

8.3 Preliminary Protection Requirements

The following are the preliminary protection requirements for the Eastshore Energy Facility Project. These preliminary protection requirements are based on interconnection plan as shown in Figure 2-1.

PG&E protection requirements are designed and intended to protect PG&E's system only. Additional protection is typically needed to protect the Generation Entity's facility. It is the generation developer's responsibility to protect its own system and equipment and must meet the requirements in the PG&E Interconnection Handbook. This document can be found in the PG&E's web page at:

http://www.pge.com/biz/transmission_services/contracts_tariffs/interconnection_handbook_toc.html

Due to the very short length of the overhead 115 kV line interconnection between PG&E's Eastshore substation and Eastshore Energy Facility, a fully redundant, double-pilot current differential protection scheme dual fiber optic communication will be required to achieve coordination with all facilities connected to the Eastshore 115 kV Substation. PG&E does not recommend using overcurrent protection for this tie line. Appendix G provides detail of these preliminary protection requirements.

8.3.1 Eastshore Substation

- Install one (1) 115kV SF6 circuit breaker and associated relaying.

8.3.2 Bus Tie Breaker CB 302

- Modify relaying to allow for substitution for new circuit breaker described in Section 8.3.1.[3]

8.3.3 Eastshore Energy Facility Substation

- Install one (1) 115kV SF6 circuit breaker and associated relaying.

9. Substation Evaluation

9.1 Overstressed Breakers

Using the results of the System Protection Study in Section 8, the substation evaluation did not identify any overstressed breakers due to the addition of the Eastshore Energy Facility Project.

9.2 Bus Loading Evaluation

Bus loading analysis was performed on Eastshore Substation 115 kV bus to identify any overload that would occur with the addition of Project. During 2007 Summer Peak normal condition, the maximum current flowing through the bus is less than 800 Amps. Under the worst Category B contingency during 2007 summer peak (outage of the Eastshore-San Mateo 230 kV line), the maximum current flowing through the bus is less than 1,000 Amps.

The Eastshore 115 kV bus is made up of 2x1113 kcmil Al conductors which has a rating of 1,840 A (Normal) and 2,110 A (Emergency). Therefore, Eastshore 115 kV bus conductors are large enough to accommodate the addition of the Project.

10. Reactive Power Deficiency Analysis

The power flow studies of Category B and Category C contingencies indicated that the Eastshore Energy Facility Project did not cause voltage drops of 5% or more from the pre-project levels, or cause the PG&E system to fail to meet applicable voltage criteria.

[3] When CB 302 is being used as a substitute breaker for the generator tie line, the project's reliability will be reduced.

11. Mitigation

No mitigation is needed since Eastshore Energy Facility Project did not overload or overstress any transmission facility.

12. Environmental Evaluation/ Permitting

12.1 CPUC General Order 131-D

Pacific Gas and Electric Company (PG&E) is subject to the jurisdiction of the California Public Utilities Commission (CPUC); and must comply with CPUC General Order 131-D (Order) on the construction, modification, alteration, or addition of all electric transmission facilities (i.e., lines, substations, switchyards, etc.). This includes 230 kV facilities to be constructed by others and deeded to PG&E. The Order requires PG&E to obtain a Certificate of Public Convenience and Necessity (CPCN) from the CPUC if the PG&E facilities being constructed are designed for immediate or eventual operation at 200 kV or more. Projects with 230 kV facilities that are excepted from obtaining a CPCN are those involving the replacement of existing power line facilities or supporting structures with equivalent facilities or structures, the minor relocation of existing facilities, the conversion of existing overhead lines (greater than 200 kV) to underground, or the placing of new or additional conductors, insulators, or their accessories on or replacement of supporting structures already built. Obtaining a CPCN can take as much as 18 months or more if the CPUC needs to conduct its own environmental evaluation pursuant to the California Environmental Quality Act (CEQA). PG&E recommends including PG&E's interconnection facilities in the local or CEC's CEQA process, which may allow a shortened CPCN process should a CPCN be necessary.

Please see Section III, B.1.(f) in General Order 131-D. This document can be found in the CPUC's web page at:

http://www.cpuc.ca.gov/PUBLISHED/GENERAL_ORDER/589.htm

12.2 CPUC Section 851

Pacific Gas and Electric Company (PG&E) is subject to the jurisdiction of the California Public Utilities Commission (CPUC) and must comply with Public Utilities Code Section 851, which among other things requires CPUC approval of leases and licenses to use PG&E property. This includes rights-of-way granted to third parties for interconnection facilities. Obtaining CPUC approval for a Section 851 application can take several months, and requires compliance with the California Environmental Quality Act (CEQA). PG&E recommends that Section 851 issues be identified as early as possible so that the necessary application can be prepared and processed.

13. Study Updates

This System Impact Study is performed according to the assumptions shown in the Sections titled "Study Assumptions" and "Power Flow Study Base Case". In the event such that these assumptions are changed, an updating study may be required to re-evaluate Eastshore Energy Facility Project's impact on PG&E's transmission grid. Eastshore Energy would be responsible for paying for any such updating study. Examples of changes that might prompt such a study are:

- Change in interconnection date.
- Change in Interconnection Queue position.
- Change in project's MW size
- Change in interconnection plan

14. Stand-by Power

This study does not address any requirements for stand-by power that the project may require. The Applicant should contact their Generation Interconnection Services Representative regarding this service.

Note: The Applicant is urged to contact their Generation Interconnection Services Representative promptly regarding stand-by service in order to ensure its availability for the project's start-up date.