SECTION 2.0

Project Description

2.1 Introduction

The Eastshore Energy Center (Eastshore) will be a nominal 115.5-megawatt (MW) net intermediate/peaking load facility operating up to 4,000 hours per year using natural gas-fired reciprocating engine technology. The Eastshore facility will be located at 25101 Clawiter Road in the City of Hayward, Alameda County, California, on a 6.22 acre parcel owned by Eastshore Energy, LLC, the project owner. Major features of the Eastshore project include the following:

- Demolition of the existing site building, foundations and paved surface,
- Grading of site and installation of new foundations, piping and utility connections,
- Fourteen (14) nominal 8.4 MW (gross) Wartsila model 20V34SG natural gas-fired reciprocating engine – generator sets,
- Fourteen (14) state-of-the-art air pollution control systems representing Best Available Control Technology (BACT), one system per each of the 14 engines, consisting of a selective catalytic reduction (SCR) unit for oxides of nitrogen (NO_x) control and an oxidation catalyst unit for carbon monoxide (CO) and precursor organic compounds (POC) control,
- Fourteen (14) approximately 70-foot tall stacks, each with a separate continuous emissions monitoring system (CEMS),
- Acoustically-engineered main building enclosing all 14 engines,
- Closed loop cooling system consisting of multiple fan-cooled radiator assemblies outside of the main engine building,
- Two 10,000 gallon (each) aqueous (19% by weight) ammonia storage tanks and handling system serving the SCR units,
- One raw water storage tank, approximately 35,000 gallons,
- One nominal 225–kW diesel-fired emergency black start generator,
- One (1) either electric or 7.15 MMBtu/hr natural gas-fired heater (BAAQMD exempt), used for heating of the natural gas fuel to the reciprocating engines,
- Miscellaneous ancillary equipment,
- Pre-existing onsite water and wastewater service interconnections,
- Onsite 115 kV switchyard including switchgear and step-up voltage transformers,

- Approximately 1.1-mile 115 kV single-circuit transmission line interconnecting to PG&E's Eastshore Substation,
- Approximately 200-foot offsite natural gas line connection to PG&E Line 153,
- Chain-link security fencing enclosing the facility with a secured entrance on Clawiter Road, and
- 4.65-acre temporary construction laydown and parking area located immediately across Clawiter Road from the Eastshore site.

2.1.1 Project Site Overview

Eastshore will be located in an area zoned for industrial uses. The legal description of the project site is provided in Appendix 2A. It is located in Section 30, Township 3 South, Range 4 East. The County Assessor's parcel designation is Alameda County 439 0075 01800, APN 439-075 -180. A listing of current assessor's parcel numbers, owners' names and addresses for all parcels within 1,000 feet of the site boundaries or 500 feet of the other project linear facilities is provided in Appendix 1A. Figure 2.1-1 shows the project site plan and appurtenant facilities, including the electric transmission line.

The Eastshore parcel is currently covered by a large industrial building and asphalt paving. The site and building were previously used as a metal stamping facility for the manufacture of automobile parts until mid-2004. Currently, the site is being offered for lease by Eastshore Energy, LLC to third parties for general warehousing operations. Any such leases will be terminated in the fall of 2007, prior to the start of plant construction. The building, foundations and existing paved surfaces will be demolished as part of Eastshore construction.

Eastshore will connect to Pacific Gas & Electric Company's (PG&E) electric transmission system at the Eastshore Substation, approximately 1.1 mile south of the project site. The proposed route overcrosses Clawiter Road and runs south along the east side of Clawiter Road for approximately 3,400 feet before an approximate 200-foot overcrossing of State Route (SR) 92. This interconnection will consolidate PG&E's distribution line and the new circuit on one set of pole structures. The route continues west along Eden Landing Road, south along Production Avenue east along Investment Boulevard and south between existing buildings for approximately an additional 1,900 feet into the Eastshore Substation. The total distance that the new 115 kV line will run contiguous with the existing 12 kV distribution line is about 3,600 feet. A new overhead transmission line will be installed in an existing PG&E electric distribution line corridor which may require widening the existing right-of-way (ROW) and the replacement of 10 to 12 transmission pole structures with structures designed to accommodate both the existing 12 kV distribution lines and the new 115 kv transmission line. Interconnection at the Eastshore Substation 115 kV bus is expected to increase local transmission and distribution capabilities during peak demand hours and provide much needed voltage support for the existing 230 kV system, which also interconnects to the Eastshore Substation.

The project will connect with PG&E's natural gas pipeline 153 which is approximately 200 feet away from the project site on the opposite side of Clawiter Road. PG&E will interconnect the project by installing a 4½-inch outside diameter pipeline via an

underground bore originating at the project site, boring under Clawiter Road and the existing Union Pacific Railroad (UPRR) ROW, and connecting to PG&E's existing gas line.

Eastshore will use very little makeup water, since engine cooling is accomplished with a closed loop system. Since there will be no requirement for purified water, a demineralizing system will not be required. Site water usage will be primarily for potable water, largely for personal consumptive and sanitary purposes, and for landscape irrigation and wash-down cleaning. As a result, site consumption will average approximately 1.0 gpm during periods of plant operation. These water requirements will be served through an existing connection to the City of Hayward municipal water main in Clawiter Road immediately adjacent to the project site.

Sanitary waste water will be discharged to the City of Hayward sewer system. Process waste water or service water that has the potential for contamination will be discharged to a waste water holding tank for testing. Under normal conditions this waste water is expected to meet sewer discharge chemical composition limits and will be subsequently discharged to the sanitary sewer. In the unlikely event that the waste water composition exceeds the allowable sewer discharge limits, it will be conveyed off site by a licensed contractor for treatment and disposal.

Figure 2.2-3 shows an aerial photograph of the site delineating the settled area within one mile of the site and associated transmission line. To the immediate south of the site is a commercial office complex and parking lot. West and east of the site are existing light to medium industrial facilities. The UPRR corridor forms the northeast corner of the parcel. The eastern edge of the Eastshore property is bordered by Clawiter Road. A chiropractic college and Berkeley Farms' central milk products processing and distribution facility are located to the east of the site on Clawiter Road. The proposed temporary construction laydown and parking area is located on the northernmost portion of the Berkeley Farms property.

2.2 Generating Facility Description, Design, and Operation

This subsection describes the facility's conceptual design and proposed operation.

2.2.1 Site Arrangement and Layout

The site layout shown in Figure 2.2-1 and typical elevation views in Figures 2.2-2a and 2.2-2b illustrate the location and size of the proposed generating facility. Figure 2.2-3 is an aerial showing the setting of the project relative to neighboring industrial buildings, and the proposed new 115 kV transmission line to PG&E's Eastshore Substation.

The site address is 25101 Clawiter Road, just south of the intersection of Clawiter and Depot Road. Primary access to the site will be provided from Clawiter Road at the current site entrance used for the warehousing activities.

2.2.2 Process Description

The generating facility will consist of 14 Wartsila 20V34SG natural-gas fired reciprocating engine generator sets ("gen sets"). Total site generating capacity is approximately 118 MW gross, or 115.5 MW net. Each gen set will have a gross capacity of approximately 8.4 MW

based on a design temperature range of 32ºF to 100ºF. Eastshore will be permitted to operate up to 4,000 hours annually, equivalent to an annual capacity factor of 45.7 percent. The plant's actual operating profile will depend upon PG&E's dispatch pattern under the terms of Eastshore Energy, LLC's Power Purchase Agreement (PPA). The generating facility heat balance (gross) is shown in Figures 2.2-4. This balance depicts performance at the expected extreme operational design ambient dry bulb temperature range (32ºF and 100ºF). The gross and net heat rate (higher heating value basis) of the power plant is expected to be 8,544 Btu/kWh and 8,754 Btu/kWh, respectively, at steady-state, full load ISO conditions (59ºF).

In addition to the above, each gen set will be equipped with standard support auxiliaries (e.g. a fuel gas system, lube oil system, charge air systems, and an engine cooling system). Supporting the overall plant will be a start air system, an instrument/service air system, two 60 percent redundant main step-up transformers (GSUs), two 100 percent redundant auxiliary/station service transformers, clean and dirty lube oil storage tanks, a raw water tank, a waste water holding tank, and two 19 percent (by weight) aqueous ammonia tanks and associated support equipment.

Exhaust gases from each gen set will be treated by a dedicated selective catalytic reduction (SCR) system (one per engine) for reduction of NO_x emissions, and an oxidation catalyst for reduction carbon monoxide (CO) and precursor organic compound (POC) emissions. NO_x emissions will be controlled to 5 parts per million by volume, dry basis (ppmvd) corrected to 15 percent oxygen using an SCR system with injection of 19 percent aqueous ammonia. An oxidation catalyst will also be installed in the catalyst housing to limit CO emissions to 13 ppmvd at 15 percent oxygen. POC emissions will be limited to 25 ppmvd at 15 percent oxygen. Ammonia slip will be limited to 20 ppm at 15 percent O_2.

All of the technologies to be employed in the Eastshore project are proven technologies that have been commercially demonstrated in numerous installations and are considered mature from a development standpoint.

2.2.3 Generating Facility Cycle

A startup air system, operating at a nominal 450 psig, will provide direct injection of startup air into one main cylinder bank of each engine. Once started, gen set combustion air will be drawn from outside the power house, flow through a combustion air filter followed by an air silencer, and then be fed to the compressor side of the engine's turbocharger (driven by exhaust flow). The pressurized air (about 50 psig) will then be supplied to the engine to mix with the natural gas fuel. Natural gas (75 – 100 psig) will be fed to the gen set cylinders via header pipes that will supply the gen set main gas regulating valve train and then the individual feed pipes to the main gas admission valve on each cylinder head. An ignition module will be located on the top of each cylinder head, and will be connected to a spark plug for gas/air combustion. The hot combustion gases will exit the engine at approximately 700°F and enter the air pollution control system catalyst housing for reduction of NO_x and CO emissions. The air pollution control system will exhaust through an exhaust silencer to atmosphere via the engine's exhaust stack.

2.2.4 Reciprocating Engine Generators

2.2.4.1 Reciprocating Engine Generators

Electricity will be produced at the generating facility by 14 Wartsila model 20V34SG reciprocating engine/generator sets (gen sets). These gen sets are four-stroke, lean burn, pre-chamber, spark ignited, port injected, turbocharged and inter-cooled. This lean-burn spark ignition reciprocating engine technology has been commercially demonstrated in several hundred installations worldwide and is considered mature.

Thermal energy will be produced in the gen sets through the combustion of natural gas, which will be converted into mechanical energy when expanded gaseous products of combustion force a translational movement of the pistons that are connected to a rotating drive shaft. Each gen set drive shaft will be flexibly coupled to an associated electric generator to convert the rotational mechanical energy of the drive shaft into electricity. The fourteen gen sets will be housed in an acoustically treated engine hall structure, both for their general environmental protection and for abatement of engine noise. Transmission of vibration and structure borne noise will be minimized by having the gen sets flexibly mounted on their concrete foundations and connected to piping and exhaust systems through flexible bellows. As a result, each gen set will be isolated from the building, piping and steel structures.

The gen sets will be equipped with the following required accessories to provide safe and reliable operation:

- Auxiliary modules, including the engine pre-heating unit, a booster pump, various engine controls and indication, and piping;
- A fuel gas system;
- A charge air system, including filter, silencer, and pre-heater;
- An exhaust gas-driven turbocharger/charge air compressor and cooler;
- A lubricating oil system;
- A compressed air system;
- A cooling system;
- Fire detection and suppression; and
- An exhaust system.

2.2.4.2 Air Pollution Control System Catalyst Housing

The air pollution control system catalyst housings, one for each gen set, will be equipped with SCR catalyst modules to reduce emissions. The SCR emission control system will use vaporized aqueous ammonia in the presence of a catalyst to reduce NO_x in the exhaust gases of the gen sets. Diluted ammonia (NH_3) vapor will be injected into the exhaust gas stream via a grid of nozzles located upstream of the catalyst module. The subsequent chemical reaction will reduce NO_x to nitrogen gas and water vapor, resulting in a NO_x concentration in the exhaust gas no greater than 5 ppmvd at 15 percent oxygen. An excess of

ammonia must be injected to ensure an acceptable NO_x control efficiency. Unreacted ammonia ("slip") will be limited to 20 ppm.

An oxidation catalyst will also be installed within the housing to control the concentration of CO in the exhaust gas emitted to atmosphere to no greater than 13 ppmvd at 15 percent oxygen. The exhaust from each catalyst housing will be discharged through an exhaust silencer to an individual exhaust stack that is approximately 70-foot-tall (top of steel) and 48-inch outside diameter.

2.2.5 Major Electrical Equipment and Systems

The net electric power output of the facility will be transmitted to the power grid via a new 115 kV transmission line, which will terminate at the 115 kV bus inside of PG&E's Eastshore Substation. A small amount (about 3 percent) of the site's gross electric power generation will be used on-site to power balance-of-plant auxiliaries such as pumps, radiators, air compressors, control systems, and general facility loads including lighting, heating, and building ventilation/air conditioning (plant parasitics). Some electricity will also be converted from alternating current (AC) to direct current (DC) to be used as backup power for control systems and other uses.

Power will be generated by the 14 gen sets at 13.8 kV in two clusters of 7 gen sets each, and stepped up to 115 kV by one of two GSUs, each rated to accommodate 60 percent of the total plant generation capacity, or 160 percent of the power generated by 7 gen sets. Station service will be back-fed thru one of two GSUs and its respective auxiliary transformer when the plant is not operating. Once the gen sets are running, plant generation will serve the facility's auxiliary power needs. An overall single-line diagram of the facility's electrical system is shown on Figure 2.2-5.

Each cluster of 7 gen sets will be connected to the respective 13.8 kV switchgear by an isolated-phase bus, and then to the step-up transformers (GSU) located inside of the plant's switchyard via underground conduit and cable. Surge arresters will be provided at the high-voltage bushings to protect the transformers from surges on the 115-kV system caused by potential lightning strikes or other surge conditions that may occur on the 115 kV interconnection to Eastshore substation. The GSUs will be mounted on concrete pads within containment areas designed to contain the non-PCB transformer oil in the unlikely event of a leak, spill, or fire. Fire protection systems will be provided as required by applicable LORS. The high-voltage side of the step-up transformers will be connected to sulfur hexafluoride (SF6)-insulated circuit breakers and then to an overhead transmission line approximately 1.1 miles long to the 115 kV bus inside of PG&E's Eastshore Substation. This 115 kV interconnection transmission line will be built, owned, and operated by PG&E, as part of its local 115 kV network. Section 5.0, Electrical Transmission, contains additional information regarding the electrical transmission system as well as a summary of the System Impact Study results.

The interconnection protection system will be provided in accordance with PG&E Interconnection Standards, and the metering and remote monitoring and control functions will be provided in accordance with California Independent System Operator (CAISO) requirements.

2.2.6 Fuel System

The gen sets will be designed to burn natural gas only. Natural gas requirements for a single gen set at full load, over an ambient range of 32ºF to 100ºF, will be approximately 72 MMBtu/hr on a higher heating value (HHV) basis.

Natural gas will be delivered to the site via an underground lateral, owned by PG&E, that connects to their line 153. (Additional information about natural gas supply can be found in Section 6.0, Gas Supply.) The natural gas will flow through a custody transfer flow-metering station, gas moisture scrubber/filtering equipment, a gas heater, and a gas pressure control station prior to being distributed to the individual gen sets and their gas control equipment. PG&E's custody transfer meter station will be located on-site.

2.2.7 Water Supply and Use

This subsection describes the quantity of water required, the source of the water supply, and water treatment requirements.

2.2.7.1 Water Requirements

The estimated water usage for the plant is provided in Table 2.2-1. Figures 2.2-6a and 2.2-6b illustrate the annual and peak daily flows for the plant water distribution system. The water consumption for Eastshore is extremely low for three main reasons:

- Use of closed-loop engine cooling results in minimal water makeup
- Use of lean-burn reciprocating engines eliminates the need for water injection for NO_x control as typically used in conventional combustion turbine technology
- Elimination of a cooling tower, the major water consumer in typical combined cycle power plants

TABLE 2.2-1
Estimated Average Water Usage

All Uses	Expected Usage	
Average Annual Usage[a]	1.00 gpm	1.61 afy
Peak Usage (Maximum Summer Condition)[b]	1.25 gpm	2.02 afy
Makeup Water for Engine Cooling	**Expected Usage**	
Average Annual Usage[a]	0.17 gpm[c]	0.27 afy
Peak Usage (Maximum Summer Condition)[b]	0.21 gpm[b]	0.34 afy

Basis

[a] Usage is based on 4,000 annual operating hours, and 4,760 non-operational hours, exclusive of first fills.

[b] Assumes a 25% margin.

[c] Average between operational and non-operational/maintenance periods.

gpm = gallons per minute; afy = acre-feet per year (1 gpm = 1.613 afy).

2.2.7.2 Water Supply

Potable water will be provided by an existing service connection to the Hayward Water System. This water service will be used for all plant needs, and for domestic water uses, irrigation and fire protection. A raw water storage tank is proposed for fire water supply. Additional information on water supply and use is found in Section 7.0, Water Supply.

2.2.7.3 Water Quality and Treatment

Since potable water will be sufficient for all plant service needs, no treatment/ demineralized water system will be required. Water use will be divided into the following four areas: (1) water used for engine cooling system minor makeup and/or maintenance; (2) water for turbo-compressor cleaning; (3) general powerhouse and exterior service water; and (4) personal consumptive/sanitary water. The only water treatment required on site will be to add an anti-corrosion agent consistent with original equipment manufacturer (OEM) recommendations to the closed loop radiator system, and will result in a closed cooling loop pH in the range of 8.5 to 9.5. Anti-corrosion agent concentration will nominally be 1,500 mg/l. No additional treatment (such as glycol for anti-freeze) is anticipated. Addition of water ("make-up") and/or the anti-corrosion agent to a given engine's closed loop cooling system will only be performed during periods of engine maintenance as required to maintain proper water levels and agent concentration; two maintenance water tanks, one per group of seven engines, are provided for this purpose. Addition of water and/or the anti-corrosion agent will be a manual activity; no automatic addition systems or equipment are required. Water quality is described further in Subsection 8.14, Water Resources.

2.2.7.3.1 Service Water. As with plant operating system water systems, service water for plant functions in which operating personnel may have direct contact will be provided by the City of Hayward water supply. Runoff from any service water area(s) that has the potential for contamination will be directed to the waste water holding tank for analysis prior to either being dumped to a sewer or pumped to a licensed contractor's vehicle for off-site treatment and disposal.

2.2.8 Plant Cooling Systems

Forty two (42) twelve-fan radiators, three radiators per gen set, will be provided for engine cooling. As previously stated, engine cooling is closed loop. Gen set-driven pumps provide the motive force for cooling water circulation. Two primary loops are provided: an engine jacket water cooling loop; and an engine charge air cooling loop that will service both the engine's high and low temperature charge air cooling heat exchangers (two each), and the engine's lube oil cooling heat exchanger. Variable frequency drives for the radiator fans will be used to minimize parasitic losses (and reduce net plant heat rate and increase net output) during low load operation and/or operation on cooler days.

Cold water discharged from the radiators will flow to either the gen set's engine-driven jacket water cooling pump, or to the engine-driven charge air cooling pump. Cold water from the jacket water pump will be directed through the engine jacket and then to a three-way thermostatic valve for return either to the engine jacket and/or to the radiators. Water from the charge air pump is directed to the low temperature charge air heat exchangers. The discharge from these heat exchangers will then be directed to the lube oil

cooler, and then to the high temperature charge air heat exchangers. Water discharged from the high temperature charge air heat exchangers will then be directed back to either the radiators for cooling, and/or through a three-way thermostatic valve for return to the various engine cooling heat exchangers.

2.2.9 Waste Management

Waste management is the process whereby all wastes produced by the project are properly collected, treated if necessary, and disposed of. Wastes will include potentially contaminated service and/or process waste water, solid non-hazardous waste, and both liquid and solid hazardous waste. Waste management is discussed in more detail in Subsection 8.13, Waste Management.

2.2.9.1 Wastewater Collection, Treatment, and Disposal

The primary wastewater collection system will collect wastewater from all of the plant equipment maintenance areas where periodic maintenance/service functions can result in spillage, and from routine service water areas (including gen set turbo-compressor washing). Figures 2.2-6a and 2.2-6b show the expected wastewater streams and flow rates for the Eastshore Energy Center. The second wastewater collection system will collect sanitary wastewater from sinks, toilets, showers, and other sanitary facilities. The two wastewater systems are described below.

2.2.9.1.1 Plant Equipment Maintenance Areas. Areas where periodic and/or "routine" maintenance (e.g. engine overhauls) will require water drainage will be collected via a floor drain or comparable system and directed to the waste water holding tank for testing. Should the test results for this contained water indicate that it is suitable for discharge, the water will be directed to the City of Hayward sewer system via a manual (normally locked closed) valve. Should it not meet discharge criteria, the water will be pumped to a tanker truck for disposal by a properly-licensed contractor.

2.2.9.1.2 Sanitary and Consumptive System. All drains from personal uses (e.g. consumptive, showers, personal hygiene, etc) will be directed to a common collection system for direct discharge to the Hayward sewer system.

2.2.9.2 Solid Wastes

The Eastshore Energy Center will produce maintenance and plant wastes typical of natural gas-fueled power generation operations. Generation plant wastes include oily rags, broken and rusted metal and machine parts, defective or broken electrical materials, empty containers, and other solid wastes, including the typical refuse generated by workers. Recyclable materials will be taken offsite. Waste collection and disposal will be in accordance with applicable regulatory requirements to minimize health and safety effects.

2.2.9.3 Hazardous Wastes

Several methods will be used to properly manage and dispose of hazardous wastes generated by the Eastshore Energy Center. Waste lubricating oil will be recovered and reclaimed by a waste oil recycling contractor. Spent lubrication oil filters will be disposed of in a Class I landfill. Spent SCR and oxidation catalysts will be reclaimed by the supplier or

disposed of in accordance with regulatory requirements. Workers will be trained to handle hazardous wastes generated at the site.

Potentially contaminated waste water used during turbo-compressor washing and/or regular equipment maintenance, which may include high metal concentrations and/or oils, will be temporarily stored in the waste water holding tank. This waste water, if verified as contaminated, will be disposed of off-site by a properly licensed contractor; otherwise, it will be directed to the sanitary sewer.

2.2.10 Management of Hazardous Materials

There will be a variety of chemicals stored and used during the construction and operation of the Eastshore Energy Center. The storage, handling, and use of all chemicals will be conducted in accordance with applicable LORS. The limited number of chemicals (e.g. cooling water corrosion-inhibitors, ammonia, solvents, etc.) will be stored in appropriate chemical storage tanks or cabinets. Aqueous ammonia will be stored in two 10,000 gallon capacity aboveground storage tanks. Other chemicals will be stored in returnable delivery containers. Berm and drain piping design will allow a full-tank capacity spill without overflowing the berms. For multiple tanks located within the same bermed area, the capacity of the largest single tank will determine the volume of the bermed area and drain piping. Chemicals that may react with each other, if any, (e.g., acid and base) shall not use common containment.

The aqueous ammonia storage area will have spill containment and ammonia vapor detection equipment inside the containment area. Aqueous ammonia will be transported and stored onsite as a 19 percent solution by weight.

Safety showers and eyewashes will be provided in the vicinity of all chemical storage and use areas. Hose connections will be provided near the chemical storage areas to flush spills and leaks to the plant waste water holding tank. Approved personal protective equipment will be used, as required, by plant personnel during chemical spill containment and cleanup activities. Personnel will be properly trained in the handling of these chemicals and instructed in the procedures to follow in case of a chemical spill or accidental release. Adequate supplies of absorbent material will be stored onsite for spill cleanup.

A list of the chemicals anticipated to be used at the generating facility and their locations is provided in the Hazardous Materials Handling section (Subsection 8.12). This list identifies each chemical by type, intended use, and the estimated quantity to be stored onsite. Subsection 8.12 includes additional information on hazardous materials handling.

2.2.11 Emission Control and Continuous Emissions Monitoring

Air emissions from the combustion of natural gas in the gen sets will be controlled using state-of-the-art systems emission control systems. Emissions that will be controlled include NO_x, POC, CO, and particulates. To ensure that the systems perform correctly, continuous emissions monitoring systems (CEMS) will be used. Each stack will have a dedicated CEMS. Subsection 8.1, Air Quality, includes additional information on emission control and monitoring.

2.2.11.1 NO_x Emission Control.

SCR will be used to control NO_x concentrations in the exhaust gas emitted to the atmosphere to 5 ppmvd at 15 percent oxygen from the gen sets/SCRs. The SCR process will use aqueous ammonia. Ammonia slip, or the concentration of unreacted ammonia in the exiting exhaust gas, will be limited to 20 ppmvd at 15 percent oxygen from the catalyst housing. The SCR equipment will include a reactor chamber, catalyst modules, ammonia storage system, ammonia vaporization and injection system, and control and monitoring equipment and sensors.

2.2.11.2 Carbon Monoxide (CO) and Precursor Organic Compounds (POC)

An oxidation catalyst will be used to reduce the CO and POCs concentration in the exhaust gas emitted to the atmosphere from the gen sets at full load to 13 ppmvd and 25 ppmvd, respectively, at 15 percent oxygen at the stack.

2.2.11.3 Particulate Emission Control

Particulate emissions will be controlled by the use of natural gas as the sole fuel for the gen sets, resulting in low particulate emissions. The gen sets will also use filters on the charge air (combustion air) supplied to the gen sets, which will also serve to minimize particulates.

2.2.11.4 Continuous Emission Monitoring

Continuous emission monitors (CEMs) will sample, analyze, and record NO_x and CO concentrations, the percentage of O_2 in the exhaust gas from each engine's exhaust stack downstream of its catalyst housing and exhaust silencer, and record fuel gas flow rate as provided by PG&E. This system will generate reports of emissions data in accordance with permit requirements. The plant control system will alarm when emissions approach or exceed pre-selected limits.

2.2.12 Fire Protection

The fire protection system will be designed to protect personnel and limit property loss and plant downtime in the event of a fire. Fire water will be supplied via a new site service line, which will be extended from an existing main line service connection on the plant side of Clawiter Road. This connection will be sized in accordance with National Fire Protection Association (NFPA) guidelines to provide protection from the onsite worst-case single fire. Fire water will be provided to a dedicated underground fire loop piping system. Both the fire hydrants and the fixed suppression systems will be supplied from the fire water loop. Fixed fire suppression systems will be installed at determined fire risk areas. Sprinkler systems will also be installed in the engine hall as required by NFPA and/or local code requirements. For areas, such as the control room, in which water cannot be used, an FM-200 or comparable system will be used. Hand-held fire extinguishers of the appropriate size and rating will be located in accordance with NFPA 10 throughout the facility. Subsection 8.12, Hazardous Materials Handling, includes additional information for fire and explosion risk, and Subsection 8.8, Socioeconomics, provides information on local fire protection capability.

2.2.13 Plant Auxiliaries

The following systems will support, protect, and control the generating facility.

2.2.13.1 Lighting

The lighting system provides personnel with illumination for operation under normal conditions and for egress under emergency conditions, and includes emergency lighting to perform manual operations during an outage of the normal power source. Light standards will be shielded and directed downward and toward the plant property. In areas that do not require continuous lighting for safety reasons, lighting will be operated manually as required. The system also provides 120-volt convenience outlets for portable lamps and tools.

2.2.13.2 Grounding

The electrical system is susceptible to ground faults, lightning, and switching surges that result in high voltage that constitute a hazard to site personnel and electrical equipment. The station grounding system provides an adequate path to permit the dissipation of current created by these events.

The station grounding grid will be designed for adequate capacity to dissipate heat from ground current under the most severe conditions in areas of high ground fault current concentration. The grid spacing will maintain touch and step voltage potentials within acceptable limits.

Bare conductors will be installed below-grade in a grid pattern. Each junction of the grid will be bonded together by an exothermic weld or compression connection.

Ground resistivity readings will be used to determine the necessary numbers of ground rods and grid spacing to ensure safe step and touch potentials under severe fault conditions.

Grounding stingers will be brought from the ground grid and connected to all building steel and non-energized metallic parts of electrical equipment.

2.2.13.3 Plant Control System

The plant control system will provide modulating control, digital control, monitoring, and indicating functions for the plant power block systems.

The following functions will be provided:

- Controlling the gen sets and other systems in a coordinated manner.
- Controlling the balance-of-plant systems in response to plant demands.
- Monitoring controlled plant equipment and process parameters and delivery of this information to plant operators.
- Monitoring the stack CEM units for critical alarms, and collecting data for historical logging.
- Data acquisition, annunciation, and historical storage of gen set operating information.

- Providing control displays (printed logs, operator interface) for signals generated within the system or received from input/output (I/O).
- Providing consolidated plant process status information through displays presented in a timely and meaningful manner.
- Providing alarms for out-of-limit parameters or parameter trends, displaying on operator interface units and recording on an alarm log printer.

The plant control system, provided by the gen set supplier, Wartsila NA, will provide an interface with additional control equipment to be provided by Eastshore Energy so as to allow remote (from site) control and dispatch capabilities on a per-engine basis, and limited data monitoring, as required by CAISO.

The system will be designed with sufficient redundancy to preclude a single device failure from significantly affecting overall plant control and operation. This also will allow critical control and safety systems to have redundancy of controls where needed, as well as an uninterruptible power source.

2.2.13.4 Cathodic Protection

The cathodic protection system will be designed to control the electrochemical corrosion of designated metal piping (primarily natural gas lines) buried in the soil. Depending upon the corrosion potential and the site soils, either passive or impressed current cathodic protection will be provided.

2.2.13.5 Freeze Protection

A freeze protection system will not be required for this installation.

2.2.13.6 Service Air

The service air system will supply compressed air to hose connections for general plant use. Service air headers will be routed to hose connections located at various points throughout the facility.

2.2.13.7 Instrument Air

The instrument air system provides dry, oil-free air to pneumatic operators and devices. An instrument air header will be routed to locations within the facility equipment areas and within the water treatment facility where pneumatic operators and devices will be located.

2.2.13.8 Black Start Emergency Generator

A nominal 225 kW emergency engine/generator set will be provided for black start capability. This emergency unit will generate 480V power sufficient to allow starting of a single Wartsila 20V34SG gen set when back feed power is not available from PG&E. Once the first Wartsila engine is operating, the emergency black start engine will be shut down.

The black start generator will fire CARB ultra low sulfur diesel fuel, and will be limited to operating only for either periodic testing purposes or to allow black start of the facility.

2.2.14 Interconnection to Electrical Grid

The 14 gen sets will be connected in 2 banks of 7 gen sets each to 1 of 2 GSUs. The GSUs will in turn feed a new 1.1 mile 115 kV transmission interconnect line, which itself will connect to PG&E's transmission system via an existing 115 kV bus at PG&E's Eastshore Substation. Refer to Section 5.0, Transmission, for additional discussion about the interconnection.

2.2.15 Project Construction

Construction of the generating facility, from demolition, through site preparation and grading, to commercial operation, is expected to take place from fourth quarter 2007 to the second quarter 2009. Major milestones are listed in Table 2.2-2.

TABLE 2.2-2
Project Schedule Major Milestones

Activity	Date
Demolition	Q4 2007
Startup and Test	Q4 2008
Commercial Operation	Q2 2009

There will be an expected average and peak workforce of approximately 124 and 235, respectively, of construction craft people, supervisory, support, and construction management personnel onsite during construction (see Table 8.8-8 in the Socioeconomics section). An approximate indication of the occurrence of project construction activities by phase is shown in Table 2.2-3.

TABLE 2.2-3
Project Activities By Month

Project Phase	1	2	3	4	5	6	7	8	9	10	11	12	13	14	15	16	17	18
Mobilize	■																	
Site Boundary Works	■																	
Demolition	■	■																
Civil Rough Grade Works	■	■																
Civil Foundation/Concrete Works		■	■															
Steel Works			■	■	■													
Gas Line Installation			■	■	■	■	■											
Building Erection				■	■	■	■	■	■									
Genset Delivery							■	■	■	■	■							
BoP delivery							■	■	■	■	■	■						
Mechanical Installation						■	■	■	■	■	■	■						
Electrical Installation							■	■	■	■	■	■	■					
Interior Finishing and landscaping						■	■	■	■	■	■	■	■					
HV Interconnection works					■	■	■	■	■	■	■	■	■					
Pre Commissioning											■	■	■	■				
Training On-Site and O&M Team														■	■	■	■	■
1st start & Commissioning														■	■	■		
Performance Testing																■	■	
Commercial Operations																	■	■
Final Grading																		■
Demobilization																		■

Construction will be scheduled to occur between 7 a.m. and 7 p.m., Monday through Friday. Additional hours may be necessary to make up schedule deficiencies, or to complete critical construction activities. During some construction periods and during the startup phase of the project, some activities will continue 24 hours per day, 7 days per week. The peak construction site workforce is expected to occur in months 10 and 11 of the construction period, however peak heavy truck traffic, related to demolition efforts, will occur during months 1 and 2.

Table 2.2-4 provides an estimate of the average and peak construction traffic during the appropriate 18-month construction and startup period. Additional discussion on traffic volumes is presented in Section 8.10.

TABLE 2.2-4
Average and Peak Construction Traffic

Vehicle Type	Average Daily Trips	Peak Daily Trips (Occurs in Month 11)
Construction Workers	114	212
Delivery	9	18
Heavy Trucks	5	6
Total	**128**	**236**

Construction laydown and parking areas will either be within the project site and/or a leased parcel across Clawiter Road and just to the south of the project site as shown in Figure 2.1-1. Construction access will be from Clawiter Road, as shown on Figure 2.2-1. Materials and equipment will be delivered by truck.

Construction of the interconnection facilities will be managed and controlled by PG&E in a manner that will be supportive of the construction and initial operation schedule for the Eastshore Energy Center.

As a part of overall site demolition, removal of the existing buildings will leave approximately 16,730 cubic yards of select material above the adjacent existing finished grade. Eastshore will make use of this dirt in order to minimize area truck traffic and associated transportation impacts. In doing so, Eastshore will design the new perimeter site access road to generally match existing site elevations. The center portion of the main plant area, however, will be raised using the fill under the old buildings, with this re-graded and engineered fill contained by a curb that will follow the inside perimeter of the access road as it circumnavigates the power block. This engineered fill in the power block area will require about 11,630 cubic yards of fill material. In addition, the east end of the site will also be raised to be compatible with the existing finished elevations on Clawiter. This area will require about 1,830 cubic yards of fill material. A preliminary site grading, drainage and erosion control plan are presented in Section 8.14.

2.2.16 Generating Facility Operation

The Eastshore Energy Center will be designed as an intermediate/peaking and load-shaping facility to serve PG&E load during periods of high demand, which generally occur during daytime hours, and more frequently during the summer than other periods. Because the high efficiency of the 20V34SG engines, the plant's flat, high efficiency profile across its load range, and because of the support this plant will provide both to PG&E's local 115 and 230 kV transmission systems, the project is being permitted to operate up to 4,000 hours/year. Eastshore retained an independent power market analysis to predicy expected hours of operation over the 30 year design life of the facility. The analysis predicts the actual annual average operations of the plant will be 1,739 hours/year. Actual operation will of course depend upon actual PG&E system demand, ISO dispatch requirements and NP-15 market conditions.

The proposed Eastshore facility is expected to employ up to 13 full-time employees. Anticipated job classifications are shown in Table 2.2-5.

TABLE 2.2-5
Typical Plant Operation Workforce

Department	Personnel	Shift	Workdays
Operations	8 Operating Technicians	3 rotating 8-hour shifts, 1 shift supervisor and 1 operator per shift	7 days a week
Maintenance	2 Maintenance Technicians (1 mechanical and 1 electrical/controls)	Standard 8-hour days	5 days a week (maintenance technicians will also work unscheduled days and hours as required [weekends])
Administration	3 Administrators (1 Plant Manager, 1 Commercial Manager, 1 Administrative Assistant)	Standard 8-hour days	5 days a week, with additional coverage as required

All of the plant's capacity will be sold to PG&E under the terms of a PPA between Eastshore Energy, LLC and PG&E. The exact operational profile of the plant will be dependent on PG&E's needs and requirements.

While the capacity will be sold under the PPA, the exact mode of operation cannot be described. It is conceivable, however, that the facility could be operated in one or all of the following modes:

- **Peak Operations**. PG&E will dispatch the facility, up to maximum continuous output, more often in the summer than during other seasons. As the facility is designed to be an intermediate/peaking plant, it is likely that the plant will primarily operate only during high ambient temperature (e.g. high load) periods. It is also quite possible that the plant will operate more in the summer to help support the local 230 kV system that ties in to the 230 kV bus at PG&E's Eastshore substation.
- **Load Following**. The facility will be operated to meet PPA requirements up to the maximum available output at high load times of the day. The output of the unit will therefore be adjusted periodically either to meet PG&E's load or, if under direct control of the ISO (e.g. "DDC" operation), to meet the ISO's real time market needs.
- **Partial and Stand-by Operation**. This mode of operation can be expected to occur during late evening and early morning hours and on weekends when PG&E only requires a portion of the plant's maximum output; on those occasions only a few of the gen sets may be in operation. If the gen sets not in operation are not undergoing maintenance, they will in most cases be available to PG&E for non-spinning (capacity) reserve.

Non-operational Periods. This mode will occur if forced by equipment malfunction, fuel supply interruption, transmission line disconnect, or scheduled maintenance. Because the Eastshore facility is an intermediate load/peaking unit, full shutdown would be expected for a majority of the off-peak hours of the year and in the winter, although non-spinning reserve capability would still be available for gen sets that are off-line, but not in maintenance.

In the unlikely event of a situation that causes a long-term cessation of operations, security of the facility will be maintained on a 24-hour basis, and the California Energy Commission (CEC) will be notified. Depending on the length of shutdown, a contingency plan for the temporary cessation of operations may be implemented. Such a contingency plan will be in conformance with all applicable LORS and protection of public health, safety, and the environment. The plan, depending on the expected duration of the shutdown, could include the draining of all chemicals from storage tanks and other equipment and the safe shutdown of all equipment. All wastes from equipment shutdown will be disposed of according to applicable LORS. If the cessation of operations becomes permanent, the plant will be decommissioned (see Section 4.0, Facility Closure).

2.3 Facility Safety Design

The Eastshore facility will be designed to support safe operation. Potential hazards that could affect the facility include earthquake, flood, and fire. Facility operators will be trained in safe operation, maintenance, and emergency response procedures to minimize the risk of personal injury and damage to the plant.

2.3.1 Natural Hazards

The principal natural hazard associated with the Eastshore site is earthquakes. The site is located in Seismic Risk Zone 4. Structures will be designed to meet the seismic requirements of the latest edition of the California Building Code (CBC) (See Subsection 8.15, Geologic Hazards and Resources). This subsection includes a review of potential geologic hazards, seismic ground motion, and potential for soil liquefaction due to ground-shaking.

Flooding is not a hazard of concern. According to the Federal Emergency Management Agency (FEMA), the site is not within either the 100- or 500-year flood plain. Subsection 8.14, Water Resources, includes additional information on the potential for flooding.

2.3.2 Emergency Systems and Safety Precautions

This subsection discusses the fire protection systems, emergency medical services, and safety precautions to be used by project personnel. Subsection 8.8, Socioeconomics, includes additional information on area medical services, and Subsection 8.7, Worker Safety, includes additional information on safety for workers. Appendixes 10A through 10G contain the design practices and codes applicable to safety design for the project. Compliance with these requirements will minimize project effects on public and employee safety.

2.3.2.1 Fire Protection Systems

The project will rely on both on-site fire protection systems and local fire protection services.

2.3.2.1.1 On-site Fire Protection Systems. The fire protection systems are designed to protect personnel and limit property loss and plant downtime from fire or explosion. The project will have the following fire protection systems.

Wet Pipe Sprinkler Fire Protection System. This system will protect the gen sets and their accessory equipment from fire. The system will have fire detection sensors and gas

detectors. Actuation of any one local sensor will trip the associated gen set, turn off ventilation and charge air to the gen set, and automatically actuate the sprinkler system.

Electrical/Controls Fire Protection. For those systems where the use of fire sprinklers are not recommended, an FM-200 or comparable fire protection system will be employed. Fire detection sensors will be used; actuation of any one sensor will result in release of the active agent and, as appropriate, tripping of equipment controlled by the device(s) subject to the fire situation.

Transformer Fire Wall. A fire wall will be installed to separate the two 60 percent main switchyard transformers (GSUs).

Fire Hydrants/Hose Stations. This system will supplement the plant fire protection system. Water will be supplied from the plant underground fire water/domestic water system and a proposed fire water pump and associated storage tank.

Fire Extinguisher. The plant control room/maintenance area, and other operational areas will be equipped with portable fire extinguishers as required by the local Fire Marshall.

2.3.2.1.2 Local Fire Protection Services. In the event of a major fire, the plant personnel will be able to call upon the local Fire Department for assistance. The Hazardous Materials Risk Management Plan (see Subsection 8.12, Hazardous Materials Handling) for the plant will include all information necessary to permit all firefighting and other emergency response agencies to plan and implement safe responses to fires, spills, and other emergencies.

2.3.2.2 Personnel Safety Program

The Eastshore Energy Center will operate in compliance with federal and state occupational safety and health program requirements. Compliance with these programs will minimize project effects on employee safety. These programs are described in Subsection 8.7, Worker Safety.

2.4 Facility Reliability

This subsection discusses the expected facility availability, equipment redundancy, fuel availability, water availability, and project quality control measures.

2.4.1 Facility Availability

The project is being permitted to operate up to 4,000 hours annually. The facility will be designed to operate over an unusually wide dispatch range of about 3.5 percent (one gen set at half of its full load rating) to 100 percent of plant base load to provide a flexible dispatch capability in response to PG&E demands for electricity.

The Eastshore Energy Center will initially operate under a 20-year PPA. However, the project is being designed for an operational life of 30 years. Reliability and availability projections are based on this 30 year design life. Operation and maintenance procedures will be consistent with industry standard practices and equipment supplier recommendations to maintain the useful life status of plant components.

The percent of time that the power plant is projected to be operated is defined as the "service factor." The service factor considers the amount of time that a unit is operating and generating power, whether at full or partial load. The projected service factor, which considers the projected percent of time of operation, differs from the "equivalent availability factor" (EAF), which considers the projected percent of energy production capacity achievable.

The EAF is defined for a given month as the ratio of the total energy that was actually available for dispatch that month, taking into account downtime for forced outages, divided by the total energy that could have been produced during the month absent forced outages. Under the terms of PG&E's PPA with Eastshore Energy, LLC, the equivalent availability factor for the Eastshore facility is expected to be 98 percent in the summer months (June through September), and 94 percent in the non-summer months.

2.4.2 Redundancy of Critical Components

The following subsections identify equipment redundancy as it applies to project availability. A summary of equipment redundancy is shown in Table 2.4-1 (final plant design could differ based upon design optimization).

TABLE 2.4-1
Major Equipment Redundancy

Description	Number	Note
Gen Sets	14 trains	Each has its own engine auxiliaries and exhaust gas treatment system.
Air Start System	Two x100%	Electrical compressors or tanks can be used for start-up
Emissions Systems and Monitoring	14 trains	Each gen set supplied with own emission abatement and monitoring system.
Closed loop cooling radiators	One system per gen set	Cooling system is mechanical draft.
Main Transformers (GSUs)	Two x 60%	Each GSU normally services a bank of 7 gen sets; a cross-tie will be provided to allow any group of 7 engines to deliver their output to either GSU.
Auxiliary/Service Transformers	Two x 100%	One auxiliary/service transformer for each of 7 gen set auxiliary equipment.
Operator Information System (OIS)	Five x 100%	5 operator control stations available.

2.4.2.1 Simple-cycle Power Block

Fourteen separate gen set trains will operate in parallel within the main power block. Each gen set will provide slightly over 7 percent of the total power block output. The major components of the power block consist of the following subsystems.

2.4.2.1.1 Reciprocating Engine Generator Subsystems. The reciprocating engine generator subsystems (gen sets) will include the reciprocating engine, charge (combustion) air filtration including silencer and pre-heater, generator and excitation systems, and gen set controls and instrumentation. Each engine will be four-stroke, lean burn, pre-chamber, spark ignited, port injected, turbocharged and inter-cooled. Exhaust gas from the engine

will be directed into its SCR to control NO_x emissions, and an oxidation catalyst to control CO emissions. The generator will be air cooled. The generator excitation system will be a brushless type, with a rotating armature/rectifier assembled on the same shaft as the main generator rotating armature. Gen set control and instrumentation, a part of the overall plant control system to be provided by Wartsila, will cover the gen set governing and protective systems.

2.4.2.2 Plant Control System

Because main engine speed/load fuel controls are engine-specific, the plant control system provided by Wartsila will have certain inherent load loss limitation features that will confine the impact of a critical failure of an engine controller to the loss of at most the one affected engine. The PLC-based supervisory master system, together with the engine-specific controls, will provide the following functions:

- Control the gen set, and other systems in response to unit load demands (coordinated control)
- Provide control room operator interface
- Monitor plant equipment and process parameters and provide this information to the plant operators in a meaningful format
- Provide visual and audible alarms for abnormal events based on field signals or software-generated signals from plant systems, processes, or equipment

Plant operation will be controlled from the operator panel(s) located in the control room. The operator panel(s) will consist of five individual CRT/keyboard combinations and associated PCs, and one engineering workstation/PC. Each CRT/keyboard console will be an independent electronic package so that failure of a single package does not disable more than one CRT/keyboard. The engineering workstation will allow for control system operator interface and for plant logs to be viewed by authorized personnel.

2.4.2.3 Engine Cooling Water System

The engine cooling water system will provide cooling water to the engine jacket, charge air, and gen set lube oil. A separate cooling water system will be provided for each of the 14 gen sets. Each system consists of three closed-loop "fin fan" type forced draft heat exchangers (radiators), engine-driven pumps, and interconnecting piping, valves, and heat exchangers/coolers.

2.4.2.4 Charge Air System

2.4.2.4.1 Start Air System. A single plant start air system will be provided that will be sized to allow three starts for each engine before re-pressurization of the start air receivers is required. A total of four receivers and two start air compressor units will be provided.

2.4.2.4.2 Compressed Air. The compressed air system will comprise the instrument air and service air subsystems. Two instrument/service air compressors, and two receivers, will be provided. Service air will be distributed via service air headers and distribution piping to various hose connections throughout the plant. The instrument air system will supply dry,

oil-free air at the required pressure and capacity for all plant control air demands, including pneumatic controls, transmitters, instruments, and valve operators. The instrument air system will include two 100 percent capacity air dryers with prefilters and after filters, an air receiver, instrument air headers, and distribution piping.

2.4.3 Fuel Availability

Under the terms of the PPA, PG&E will be responsible for providing fuel for the facility. PG&E will install a new natural gas interconnect, approximately 200 feet in length, to connect to their existing line 153. Sufficient capacity exists in the existing transmission system to supply gas to the Eastshore Energy Center. See Section 6.0, Natural Gas Supply for a more detailed description.

2.4.4 Water Availability

The water requirements of the Eastshore Energy Center will be provided by the existing site service from the City of Hayward. The availability of water to meet the needs of the project is discussed in more detail in Section 7.0, Water Supply.

2.4.5 Project Quality Control

The Quality Control Program for the Eastshore Energy Center is summarized in this subsection. The objective of the Quality Control Program is to ensure that all systems and components have the appropriate quality measures applied; whether it be during design, procurement, fabrication, construction, or operation. The goal of the Quality Control Program is to achieve the desired levels of safety, reliability, availability, operability, constructability, and maintainability for the generation of electricity.

The required quality assurance for a system will be obtained by applying controls to various activities, according to the activity being performed. For example, the appropriate controls for design work will be checking and review, and the appropriate controls for manufacturing and construction will be inspection and testing. Appropriate controls will be applied to each of the various activities for the project.

2.4.5.1 Project Stages

For quality assurance planning purposes, the project activities will be divided into the following ten stages that apply to specific periods of time during the project.

2.4.5.1.1 Conceptual Design Criteria. Design criteria will include such activities as definition of requirements, applicable codes and standards, and engineering analyses.

2.4.5.1.2 Preliminary Design. Preliminary design arrangements and calculations will be prepared, consistent with the conceptual design criteria.

2.4.5.1.3 Detailed Design. Activities such as refining detailed calculations, preparing detailed drawings and lists needed to describe, illustrate, or define systems, structures, or components. This phase will incorporate the dimensioned equipment drawings provided for major equipment and expected details for long lead time items. Cut sheet data and final vendor drawings from the procurement phase will be incorporated into the final and as-built drawings for the plant.

2.4.5.1.4 Procurement. Activities necessary to compile and document the contractual, technical and quality provisions for procurement specifications for plant systems, components, or services will be conducted. This also will include actual procurement, and the provision of final dimensioned equipment drawings required to complete detailed design (section 2.4.5.1.3).

2.4.5.1.5 Manufacturer's Control and Surveillance. Activities necessary to ensure that the manufacturers conform to the provisions of the procurement specifications will be conducted.

2.4.5.1.6 Manufacturer Data Review. Activities required to review manufacturers' drawings, data, instructions, procedures, plans, and other documents to ensure coordination of plant systems and components, and conformance to procurement specifications.

2.4.5.1.7 Receipt Inspection. Inspection, review, and storage of products at the time of delivery to the construction site will be conducted.

2.4.5.1.8 Construction/Installation. Inspection and review of storage, installation, cleaning, and initial testing of systems or components at the facility will be conducted.

2.4.5.1.9 System/Component Testing. Actual operation of generating facility components in a system in a controlled manner to ensure that the performance of systems and components conform to specified requirements.

2.4.5.1.10 Plant Operation. As the project progresses, the design, procurement, fabrication, erection, and checkout of each generating facility system will progress through the nine stages defined above, culminating in plant commercial operation.

2.4.5.2 Quality Control Records

The following quality control records will be maintained for review and reference:

- Project instruction manuals
- Design calculations
- Project design criteria, drawings, and calculations
- Quality assurance audit reports
- Conformance to construction record drawings
- Procurement specifications (contract issue and change orders)
- Purchase orders and change orders

A list of qualified suppliers and subcontractors will be developed for equipment purchase orders. Before contracts are awarded, the subcontractors' capabilities will be evaluated by the entity making the purchase.

Construction activities will encompass the last four stages of the project: receipt inspection, construction/installation, system/component testing, and plant operations. The construction contractor will be contractually obligated for performing the work in accordance with the quality requirements specified in its contract with Eastshore Energy, LLC.

The contractor's subcontractors' quality compliance will be surveyed, as appropriate, through either inspections, audits, and/or administration of independent testing contracts.

A plant operation and maintenance program, typical of a project this size, will be implemented by Eastshore Energy, LLC and/or its plant O&M contractor to assure that

proper operation and maintenance procedures and methods are employed. A specific program for this project will be defined and implemented prior to and/or during initial plant startup.

2.5 Laws, Ordinances, Regulations, and Standards

The applicable LORS for each engineering discipline are included as part of the Engineering Appendixes 10A through 10G.

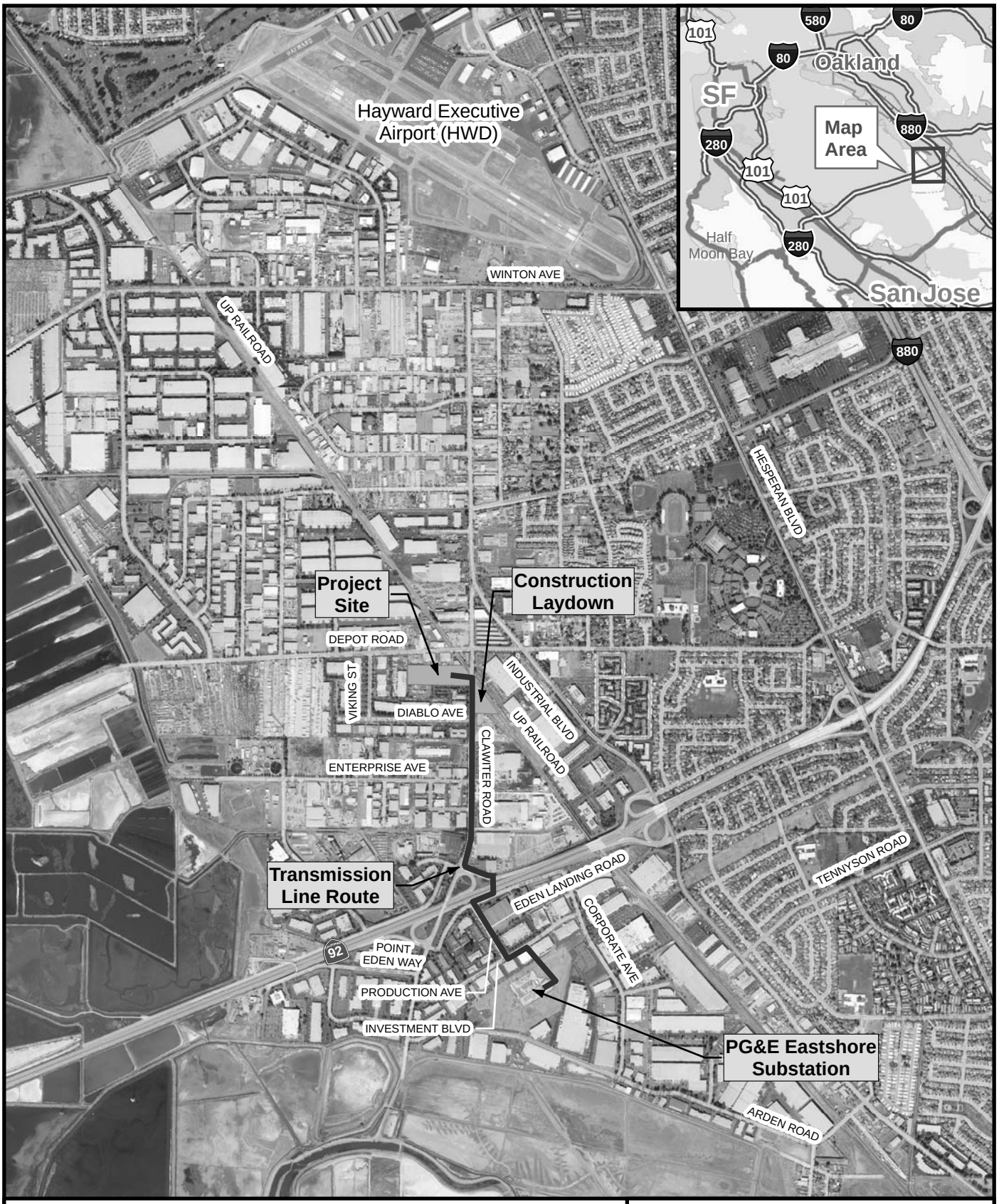

LEGEND

Site Location

Transmission Line Route

N

0 500 1,000 2,000 Feet

SCALE IS APPROXIMATE

FIGURE 2.1-1
SITE AND LINEAR FACILITIES LOCATION MAP
EASTSHORE ENERGY CENTER
HAYWARD, CALIFORNIA

CH2MHILL

BAO \\ZINFANDEL\GIS\PROJECTS\EASTSHORE\MAPFILES\FIG_2_1_1_SITE_LINEARS.MXD FIG_2_1_1_SITE_LINEARS.PDF 8/24/2006 13:26:24

N

0' 25' 50' 75'

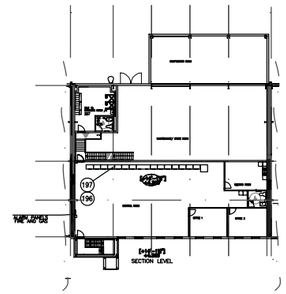

BUILDING SECOND FLOOR PLAN

ENGINE HALL & UTILITY BLOCK

ITEM NO	PCS.	CODE (FIRST)	DESCRIPTION	WEIGHT INCL. LIQUIDS KG	LB	MOUNTING LEVEL MILLIM.	(FLR LEVEL) INCH.
1	14	SQA	ENGINE GENERATOR SET	134700	296952	+0.000	0'– 0"
4	14	QEA	AUXILIARY MODULE	4200	9259	+0.000	0'– 0"
37	14	ZBB	GAS REGULATING UNIT	200	440	+0.000	0'– 0"
60	2	TCA	WORKING AIR UNIT	670	1477	+0.000	0'– 0"
62	2	TSA	STARTING AIR UNIT	710	1565	+0.000	0'– 0"
63	4	TSB	STARTING AIR BOTTLE 9.4M3/2500 GAL	4335	9555	+0.000	0'– 0"
70	2	VBA	MAINTENANCE WATER TANK 4M3/1060GAL	4940	10890	+0.000	0'– 0"
72	14	VEA	EXPANSION VESSEL 600L/160GAL	775	1708	+4.940	16'– 2"
80	14	NGA	CHARGE AIR FILTER	960	2116	+3.100	10'– 2"
82	14	–	CHARGE AIR & EXHAUST GAS MODULE	3000	6613	+3.240	11'– 2"
93	14	NHA	EXHAUST GAS VENTILATION UNIT	55	121	+4.940	16'– 2"
104	14	SEN	DOSING BOX	–	–	+0.000	0'– 0"
108	14	SNC	NOX CONTROLLER	–	–	+0.000	0'– 0"
182	18	–	MV SWITCHGEAR	–	–	+0.000	0'– 0"
183	14	BAN	NEUTRAL GROUNDING RESISTOR	–	–	+0.000	0'– 0"
185	–	BEY	DC–SYSTEM	–	–	+0.000	0'– 0"
186	–	BFA	LV SWITCHGEAR	–	–	+0.000	0'– 0"
189	2	BFB	STATION SERVICE TRANSFORMER	–	–	+0.000	0'– 0"
196	4	CFA	CONTROL PANEL, COMMON	–	–	+0.000	0'– 0"
197	14	CFC	CONTROL PANEL, ENGINE WISE	–	–	+0.000	0'– 0"
210	14	–	VENTILATION UNIT (ENGINEHALL)	2000	4409	–	–
215	14	–	FREQUENCY CONVERTER	–	–	–	–
230			225 KW BLACK START GEN.SET				

MECHANICAL UTILITY AREA

ITEM NO	PCS.	CODE (FIRST)	DESCRIPTION	WEIGHT INCL. LIQUIDS KG	LBS	MOUNTING LEVEL MILLIM.	INCH.
71	42	–	RADIATORS LOW–LOW NOISE RADIATORS	–	–	–	–
90	14	NHA	EXHAUST GAS SILENCER	5200	11454	+5.560	+22'– 5"
94	34	NGA	RUPTURE DISC	–	–	–	–
103	14	–	DENOX (SCR)	14000	30864	+5.560	+22'– 5"
170	1	–	RAW WATER TANK 35,000 GAL	–	–	–	–
172	1	–	FIRE FIGHTING CONTAINER	–	–	–	–
181	2	AET	STEP–UP TRANSFORMER	–	–	–	–
				–	–	–	–

DAY / STORAGE TANK / UNLOADING AREA

ITEM NO	PCS.	CODE (FIRST)	DESCRIPTION	WEIGHT INCL. LIQUIDS KG	LBS	MOUNTING LEVEL MILLIM.	INCH.
40	1	QAA	LO UNLOADING PUMP UNIT (CLEAN)	–	–	–	–
42	1	QAC	CLEAN LO TANK 55M3/14531GAL	–	–	–	–
43	2	QAD	USED/SERVICE LO TANK 13M3/3434GAL	–	–	–	–
44	2	QAE	LO TRANSFER PUMP UNIT	–	–	–	–
105	2	–	SCR REGENT TANK 10,000 GAL	–	–	–	–
145	1	DDB	DIRTY WATER HOLDING TANK 20M3/5284 GAL	–	–	–	–

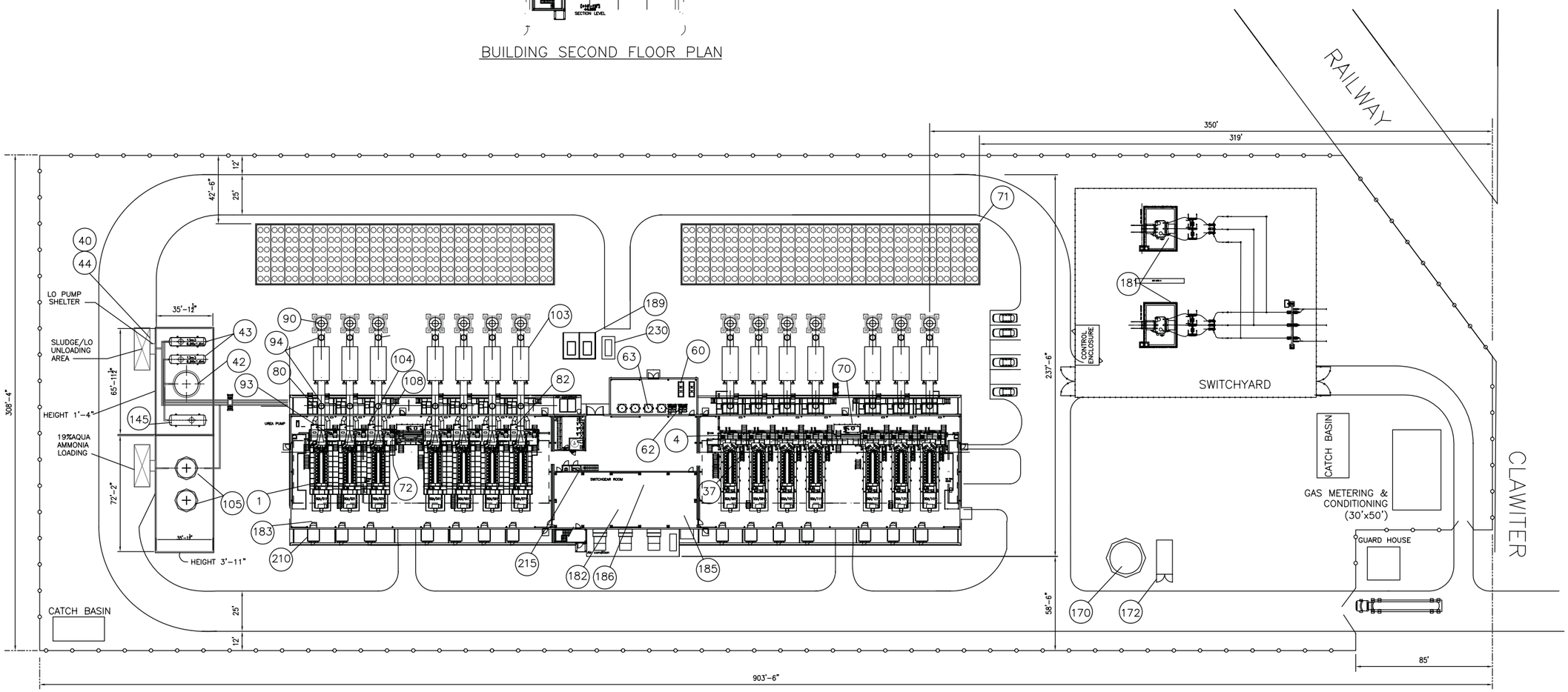

FIGURE 2.2-1
SITE GENERAL ARRANGEMENT
EASTSHORE ENERGY CENTER
HAYWARD, CALIFORNIA
ALAMEDA COUNTY

Stantec

CH2MHILL

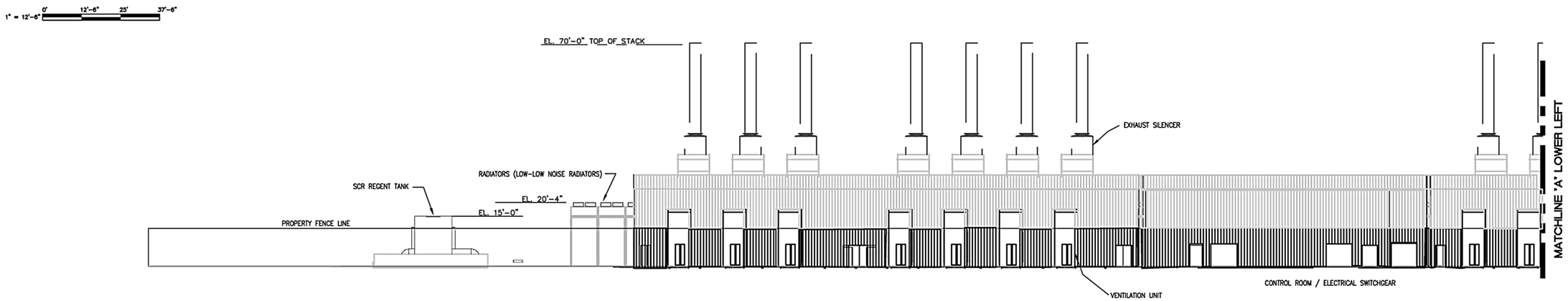

PLANT ELEVATION LOOKING NORTH

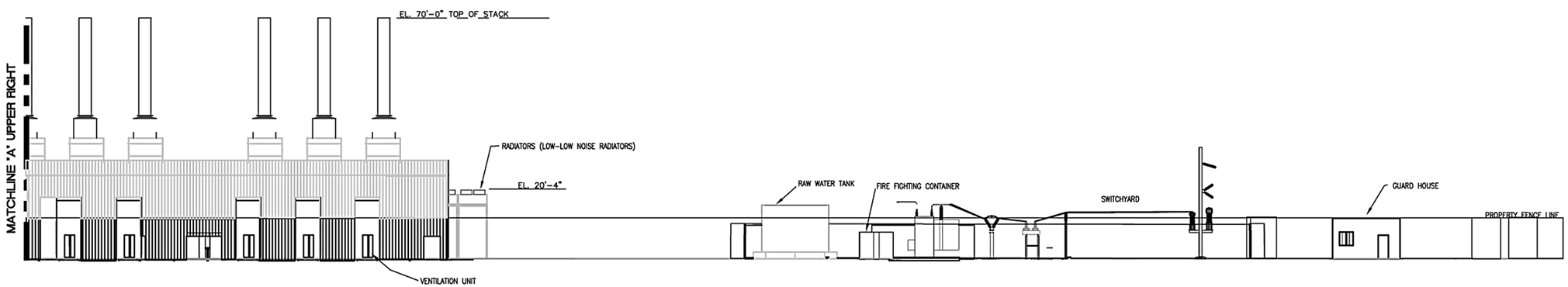

PLANT ELEVATION LOOKING NORTH - CONTINUE

FIGURE 2.2-2A
SITE ELEVATION DRAWING - VIEW LOOKING NORTH
EASTSHORE ENERGY CENTER
HAYWARD, CALIFORNIA
ALAMEDA COUNTY

Stantec

CH2MHILL

ES072006008BAO_Fig 2.2-2a Site Elevation Drawing_08/17/06_dash

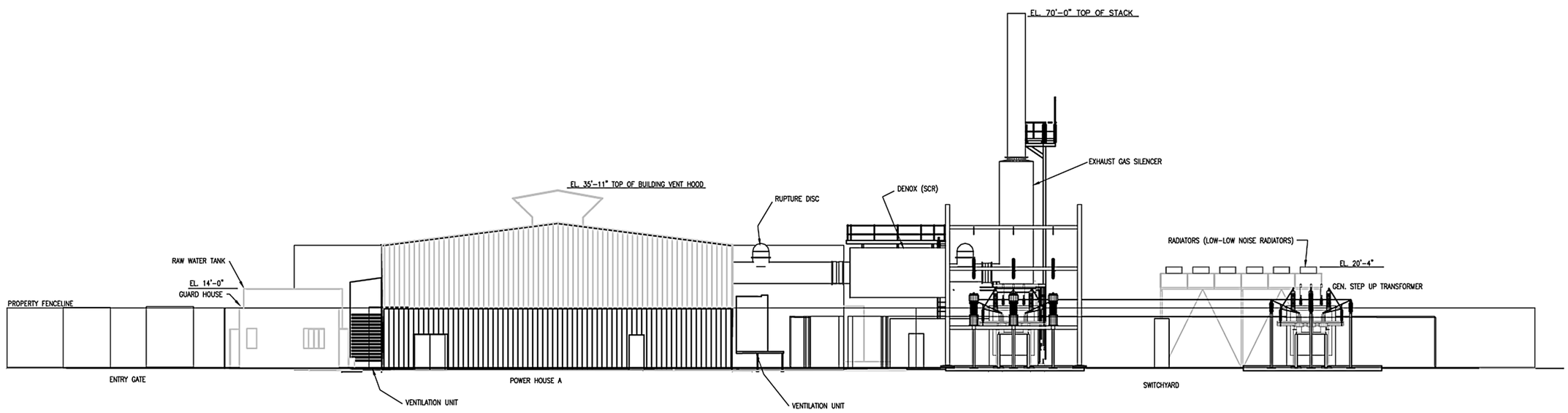

PLANT ELEVATION LOOKING WEST

FIGURE 2.2-2B
SITE ELEVATION DRAWING - VIEW LOOKING WEST
EASTSHORE ENERGY CENTER
HAYWARD, CALIFORNIA
ALAMEDA COUNTY

Stantec

CH2MHILL

ES072006008BAO_Fig 2.2-2b Site Elevation Drawing West 08-25-06 dash

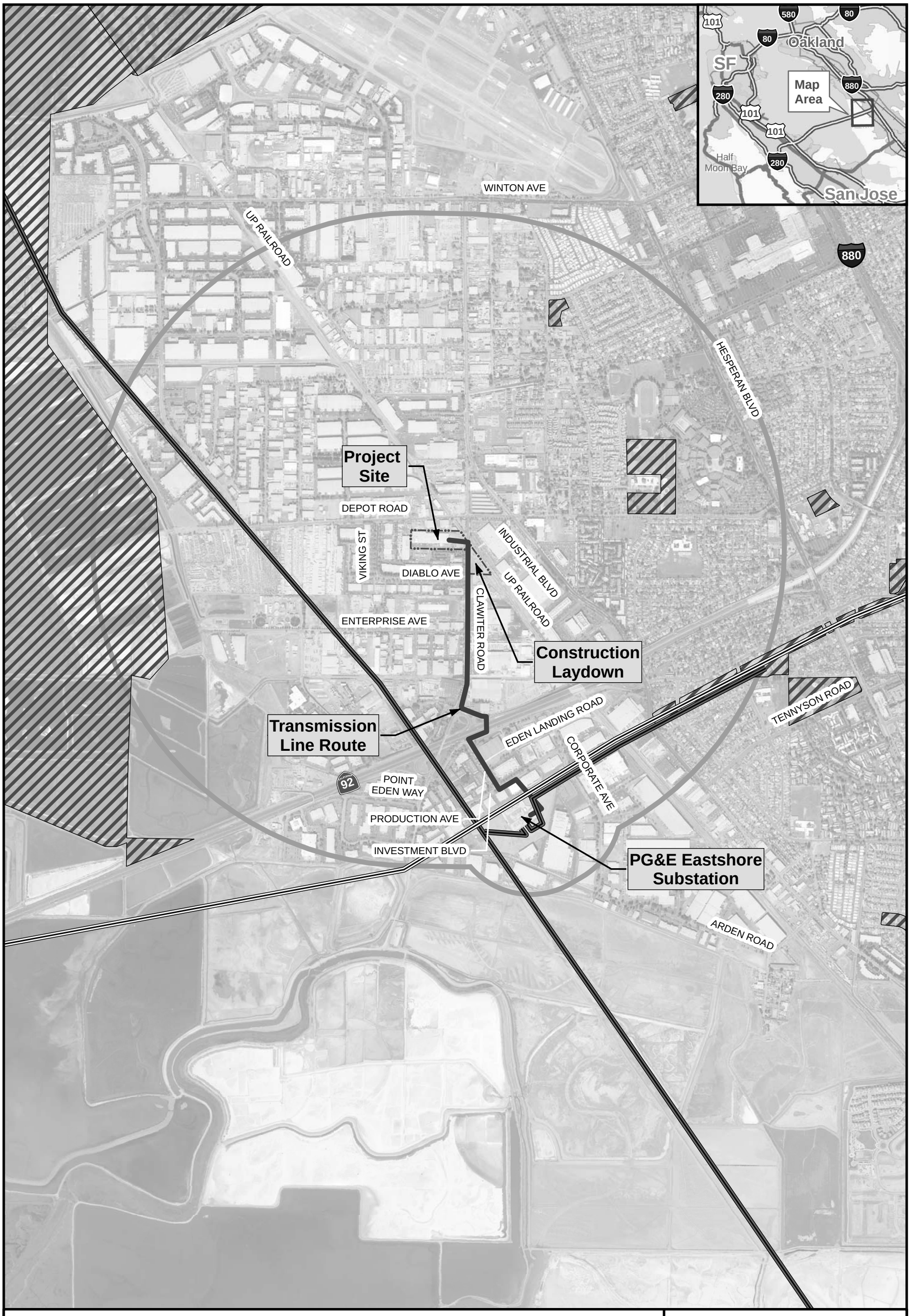

LEGEND

- Site Location
- 1 Mile Buffer
- Parks/Recreation
- Proposed Transmission Line Route
- Existing 115 kV Transmission Line
- Existing 230 kV Transmission Line

N

0 375 750 1,500 Feet

SCALE IS APPROXIMATE

FIGURE 2.2-3
SETTLED AREAS WITHIN 1 MILE OF SITE
EASTSHORE ENERGY CENTER
HAYWARD, CALIFORNIA

CH2MHILL

BAO \\ZINFANDEL\GIS\PROJECTS\EASTSHORE\MAPFILES\FIG_2_2_3_SETTLED_AREAS.MXD FIG_2_2_3_SETTLED_AREAS.PDF 8/29/2006 14:57:53

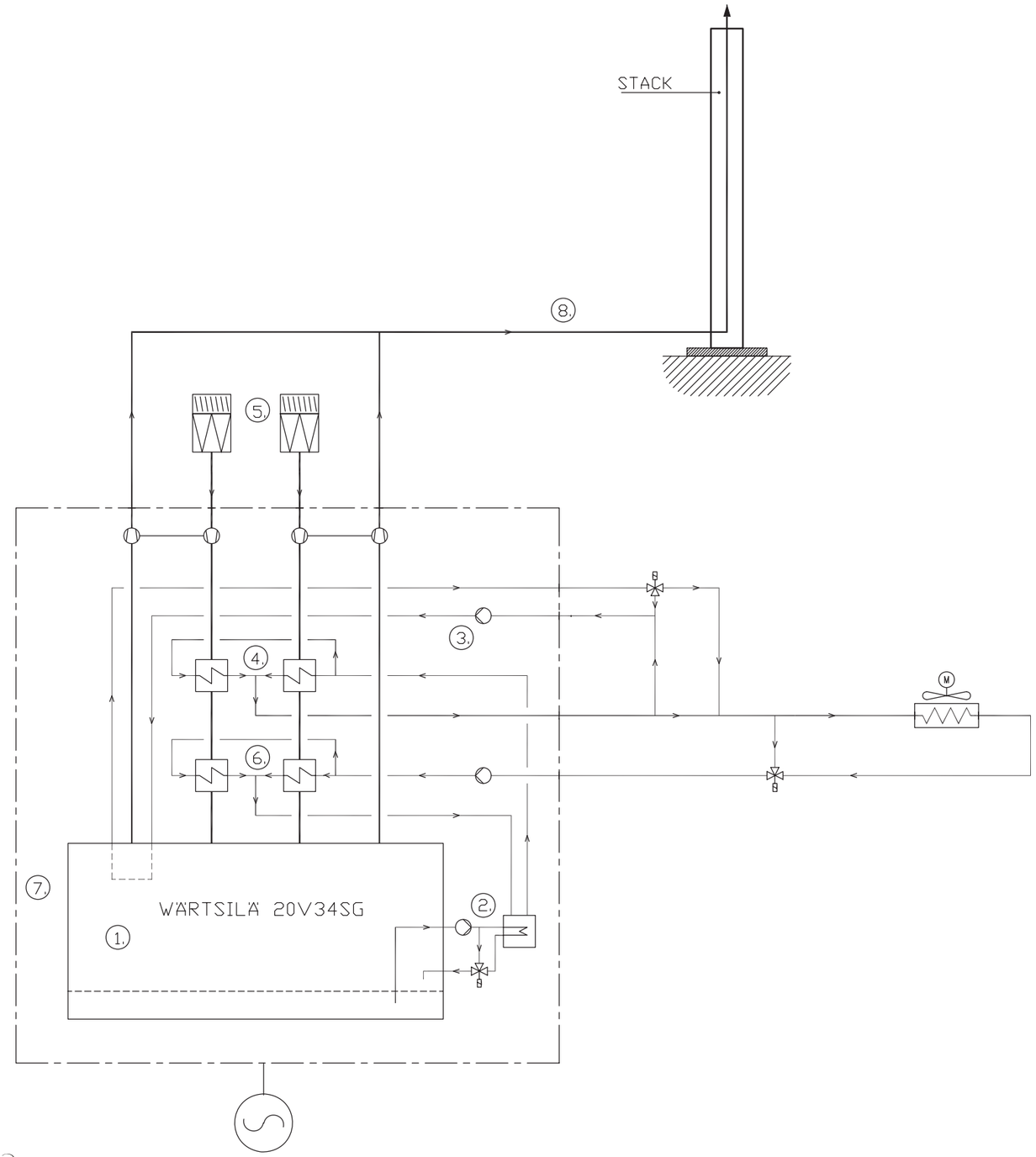

			Heat balance at 100F and 66%RH				Heat balance at 32F and 70%RH			
Ref.	Load	%	100	90	75	50	100	90	75	50
	Engine output	kW	8700	7830	6252	4350	8700	7830	6252	4350
	Gas flow	lb/h	3157	2870	2452	1763	3157	2870	2452	1763
2	Lube oil	MBtu/h	3100	2800	2480	1870	3070	2800	2460	1840
	Lube oil flow	lb/h	332600	332600	332600	332600	332600	332600	332600	332600
3	Jacket water	MBtu/h	3850	3520	3120	2380	3750	3450	3040	2290
	Jacket water flow	lb/h	351000	351000	351000	351000	351000	351000	351000	351000
4	Charge air HT	MBtu/h	6360	5490	4150	2210	4500	3790	2730	1150
5	Air flow	lb/h	111000	104000	90000	69000	109800	102400	89600	68700
6	Charge air LT	MBtu/h	1650	1170	917	305	972	776	512	205
5	Air flow	lb/h	111000	104000	90000	69000	109800	102400	89600	68700
1	Radiation engine	MBtu/h	785	784	717	682	785	785	717	683
	Radiation generator	MBtu/h	890	801	668	520	890	801	668	520
8	Exhaust gas flow	lb/h	114000	106000	93000	71000	113000	105000	92000	70000
	Exhaust gas temperature after TC	F	715	718	731	762	741	741	750	777

Based on 1012 Btu/ft^3 at 60F and 14.73 psi higher heating value for natural gas. Lube oil pressure 80 psia, cooling water pressure 65 psia.

Tolerances

Lube oil	+- 10%
Jacket water	+- 10%
Charge air	+- 10%
Radiation	+- 10%
Exhaust gas flow	+- 5%
Exhaust gas temperature after TC	+- 20 F

Source: Wärtsilä Finalnd, 2006

WÄRTSILÄ

FIGURE 2.2-4
HEAT BALANCE FLOW DIAGRAM
EASTSHORE ENERGY CENTER
HAYWARD, CALIFORNIA
ALAMEDA COUNTY

CH2MHILL

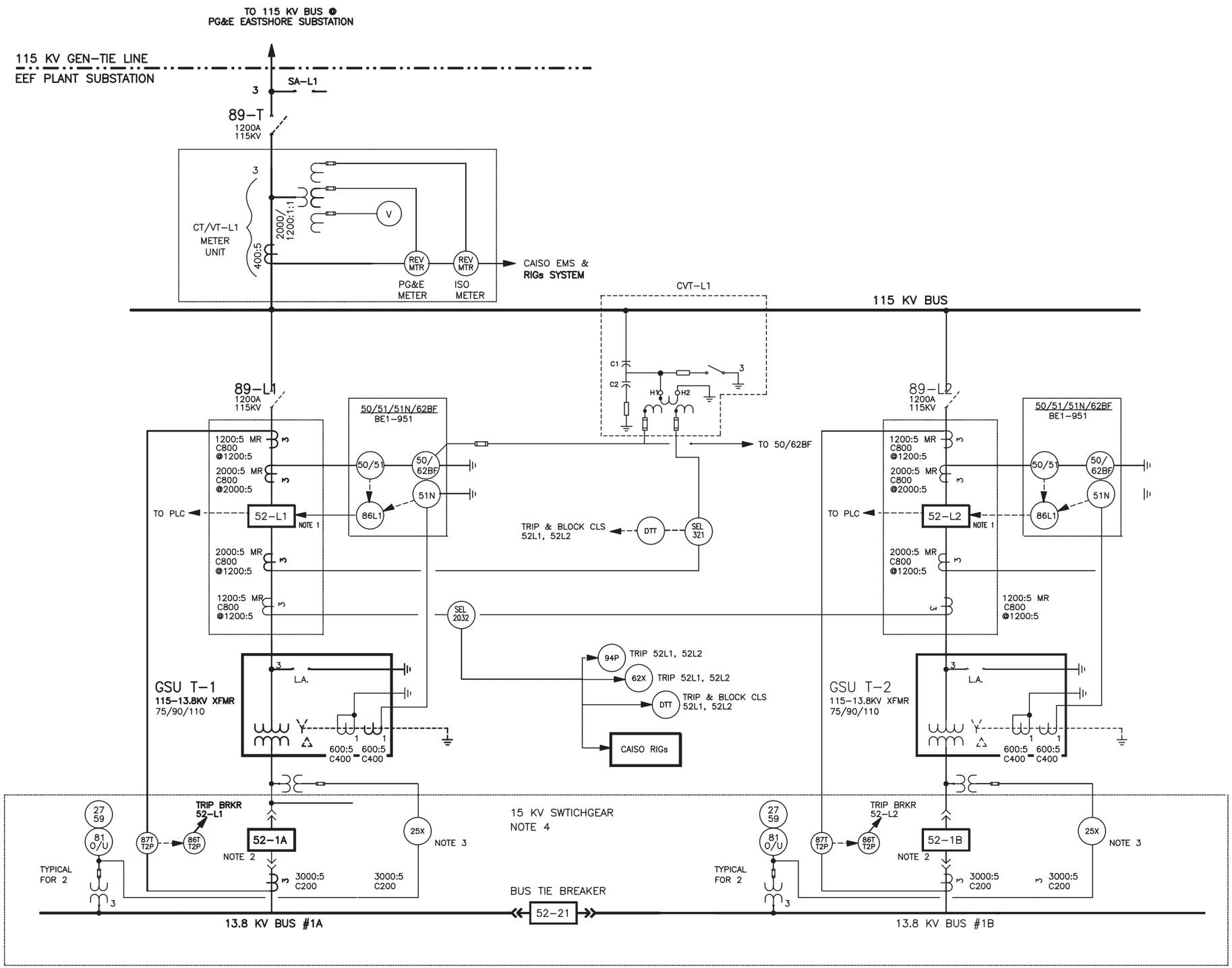

FIGURE 2.2-5
115 KV SUBSTATION
SINGLE LINE DIAGRAM
EASTSHORE ENERGY CENTER
HAYWARD, CALIFORNIA
ALAMEDA COUNTY

CH2MHILL

ES072006008BAO_Fig 2.2-5 Substation Diagram_07/21/06_ez

PROJECT: EASTSHORE 14X20V34SG

WATER USAGE/BALANCE
ANNUALIZED EST. USAGE: 1.00 gpm

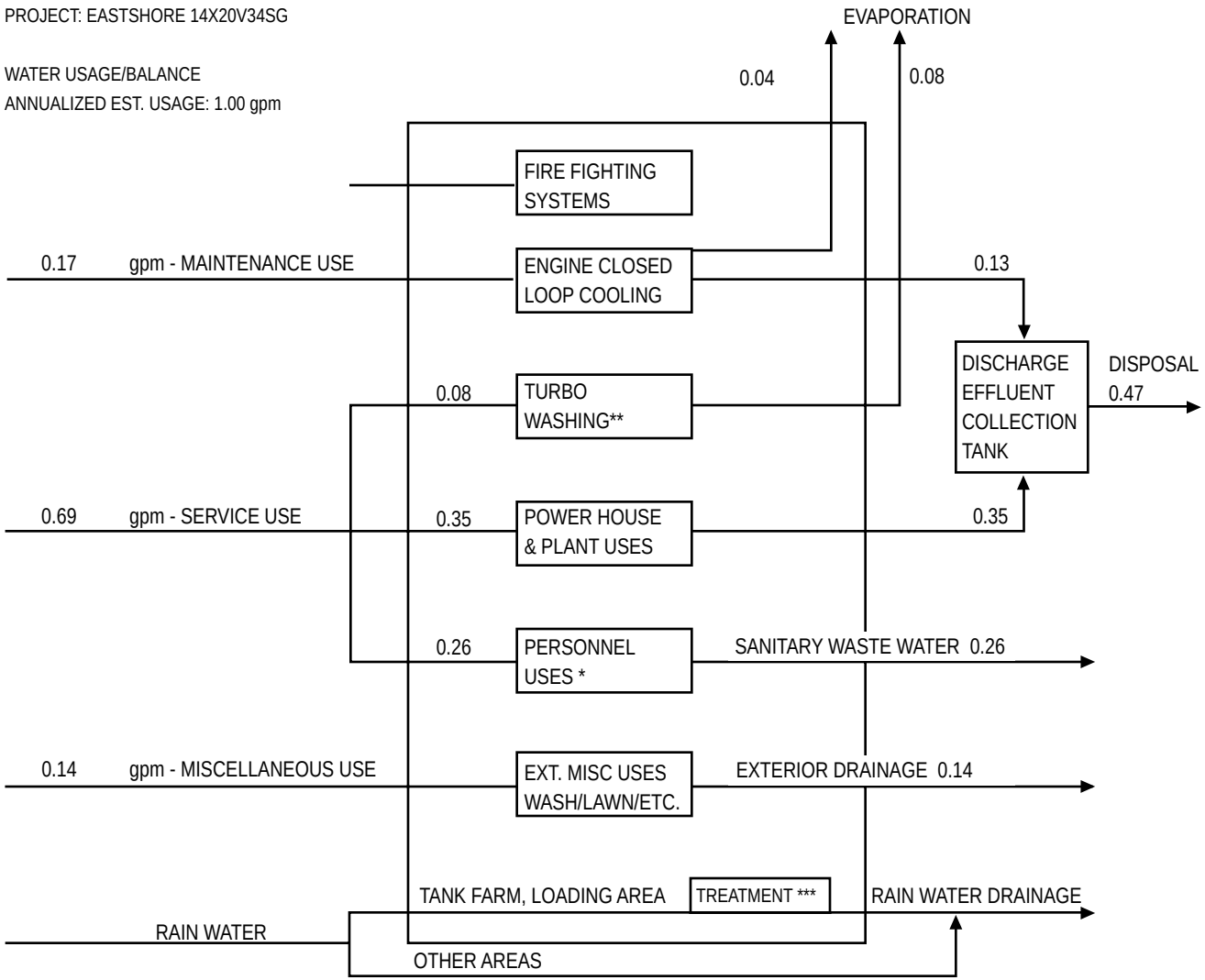

REMARKS:

*	Annual average value, discharge mainly during engine service operations.
**	During operating hours and expected maximum value.
***	Runoff water, possible contamination water to be collected in holding or separation tank.

FIGURE 2.2-6A
WATER BALANCE DIAGRAM
ANNUAL AVERAGE
EASTSHORE ENERGY CENTER
HAYWARD, CALIFORNIA
ALAMEDA COUNTY

CH2MHILL

ES072006008BAO_Fig 2.2-6A_ WaterBalanceDiagram_AnnualAverage_07/21/06_ll

PROJECT: EASTSHORE 14X20V34SG

WATER USAGE/BALANCE
ANNUALIZED EST. USAGE: 1.24 gpm

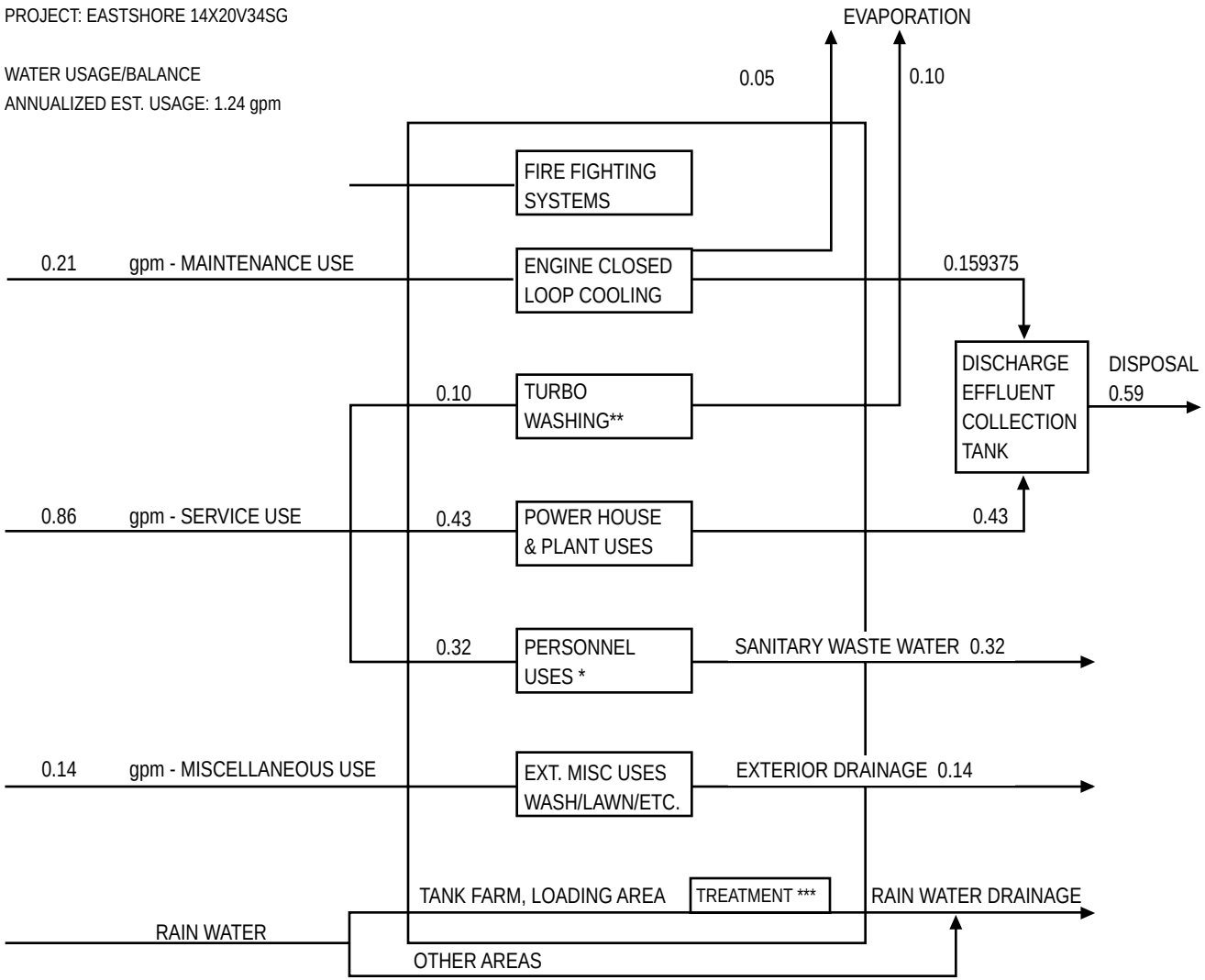

REMARKS:

*	Annual average value, discharge mainly during engine service operations.
**	During operating hours and expected maximum value.
***	Runoff water, possible contamination water to be collected in holding or separation tank.

FIGURE 2.2-6B
WATER BALANCE DIAGRAM
PEAK DAILY
EASTSHORE ENERGY CENTER
HAYWARD, CALIFORNIA
ALAMEDA COUNTY

CH2MHILL

ES072006008BAO_Fig 2.2-6B_ WaterBalanceDiagram_PeakDaily _07/21/06_ll

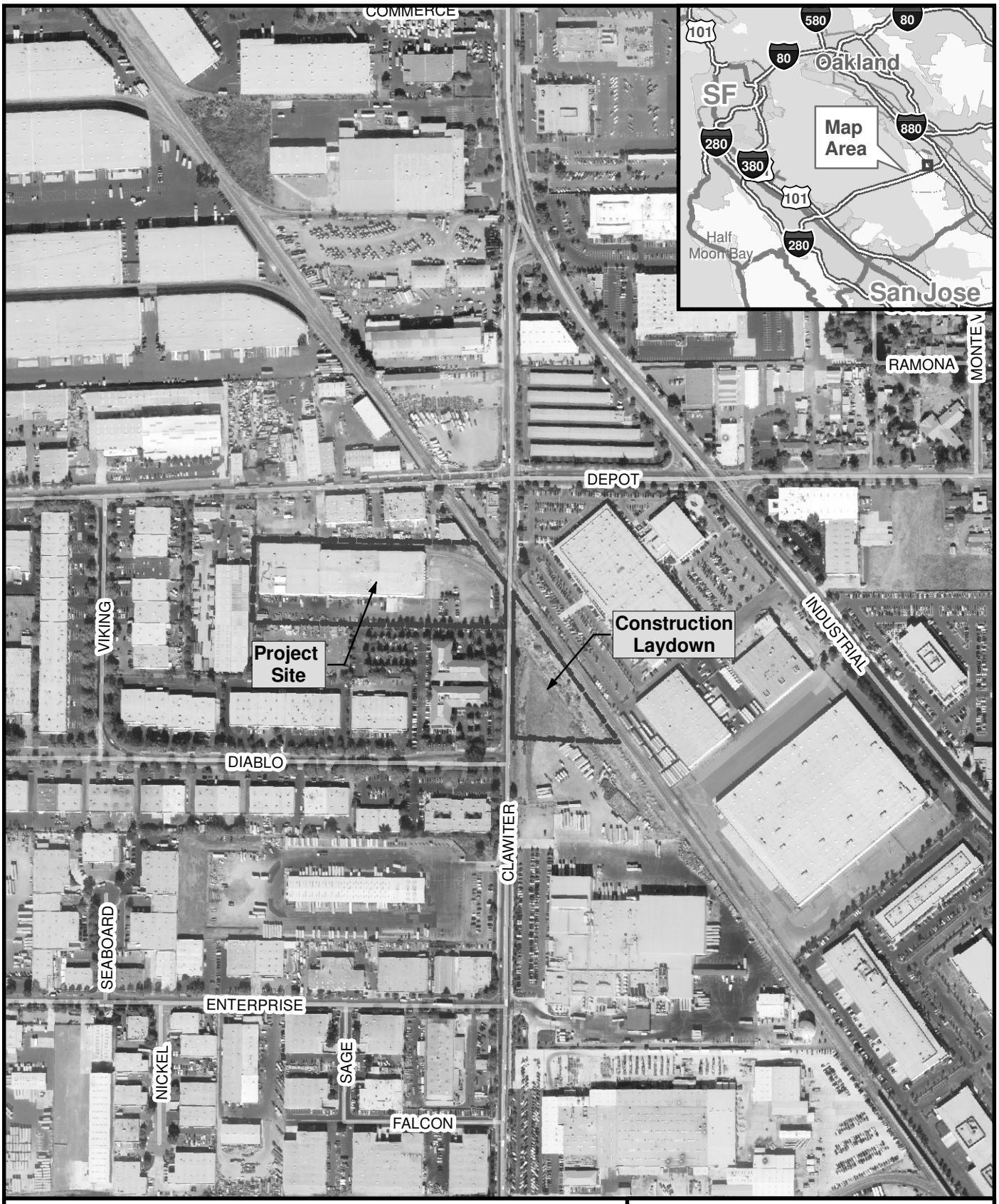

LEGEND

Site Location

N

0 250 500 Feet

SCALE IS APPROXIMATE

FIGURE 2.2-7
SITE AND LAYDOWN AREA
EASTSHORE ENERGY CENTER
HAYWARD, CALIFORNIA

CH2MHILL

BAO \\ZINFANDEL\GIS\PROJECTS\EASTSHORE\MAPFILES\FIG_2_2_7_LAYDOWN.MXD FIG_2_2_7_LAYDOWN.PDF 8/24/2006 16:00:00