System Impact Study

Generation Interconnection

Ramco Generating Two

Eastshore Energy Facility Project

April 5, 2005

Table of Contents

1. Executive Summary 1

2. Project and Interconnection Information 1

3. Study Assumptions 3

4. Power Flow Study Base Case 4

5. Study Criteria Summary 5

5.1 Steady State Study Criteria – Normal Overloads 5

5.2 Steady State Study Criteria – Emergency Overloads 5

5.3 Dynamic Stability Study Criteria 5

6. Steady State Power Flow Study and Results 6

6.1 Contingencies 6

6.2 Results 7

7. Dynamic Stability Study and Results 8

7.1 Dynamic Stability Study Scenarios 8

7.2 Parameters Monitored to Evaluate System Stability Performance 9

7.3 Results 9

8. System Protection Study 10

8.1 System Protection Study Input Data 10

8.2 Results 10

8.3 Preliminary Protection Requirements 11

9. Substation Evaluation 12

9.1 Overstressed Breakers 12

9.2 Bus Loading Evaluation 12

10. Reactive Power Deficiency Analysis 12

11. Mitigation 12

12. Environmental Evaluation/ Permitting 12

12.1 CPUC General Order 131-D 12

12.2 CPUC Section 851 13

13. Study Updates 13

14. Stand-by Power 14

Appendices:

A. Study Plan
B. Contingency Lists for Outages - Autocon Input Files
C. Power Flow Results-Autocon Comparison Files
D. Power Flow Plots
E. Generator Machine Dynamic Data
F. Dynamic Stability Plots
G. Preliminary Protection Requirements

1. Executive Summary

Ramco Generating Two (Ramco) proposes to interconnect a 115 MW generating facility to Pacific Gas & Electric's (PG&E's) Eastshore 115 kV Substation in Hayward, California. The project is called the Eastshore Energy Facility Project (EEFP). The project consists of fourteen (14) reciprocating engine generators rated at 8.43 MW each. The planned operational date of this project is May 2007.

CAISO and PG&E have agreed that a System Impact Study (SIS) is required to determine the impact of the EEFP on PG&E's transmission grid. The SIS determined:

- The transmission system impacts caused solely by the interconnection of the EEFP.
- The system reinforcement necessary to mitigate any adverse impact of the EEFP under various system conditions.

To determine the system impacts caused by the addition of the EEFP, studies were performed using the following full loop base cases:

- 2007 Summer Peak
- 2007 Summer Off Peak

The studies performed included:

- Steady State Power Flow
- Dynamic Stability Analysis
- System Protection

PG&E's evaluation has concluded that the addition of the Eastshore Energy Facility Project would cause no normal or Category B contingency overloads during conditions studied for 2007. The EEFP also did not cause any Category C contingency overloads during conditions studied for 2007.

The Substation Evaluation identifies no overstressed breakers due to the addition of Eastshore Energy Facility Project.

Dynamic Stability Study results indicated that the transmission system's transient performance, relative to the CAISO reliability guidelines, would not be impacted by the EEFP following selected disturbances.

2. Project and Interconnection Information

The Eastshore Energy Facility Project (EEFP) consists of fourteen (14) reciprocating engine generators. Each reciprocating engine generator is rated at

8.43 MW for a total of 118 MW. The expected total plant load is 3 MW. Therefore, the maximum net output to the grid is 115 MW. The proposed project will have a 13.8/115 kV step-up transformer and will connect to PG&E's Eastshore 115 kV Substation via a new short 115 kV transmission line to be built by Ramco Generating Two (Ramco).

The existing Eastshore 115 kV bus is a main and auxiliary configuration. This study assumed a direct interconnection as shown in the conceptual one-line diagram in Figure 2-1. The final configuration of the Eastshore 115 kV bus will be determined in the Facility Study (FS) process. The final configuration may be different in order to conform to PG&E's existing standards for bus design. Any additional interconnection costs resulting from a new bus configuration will be the responsibility of this project.

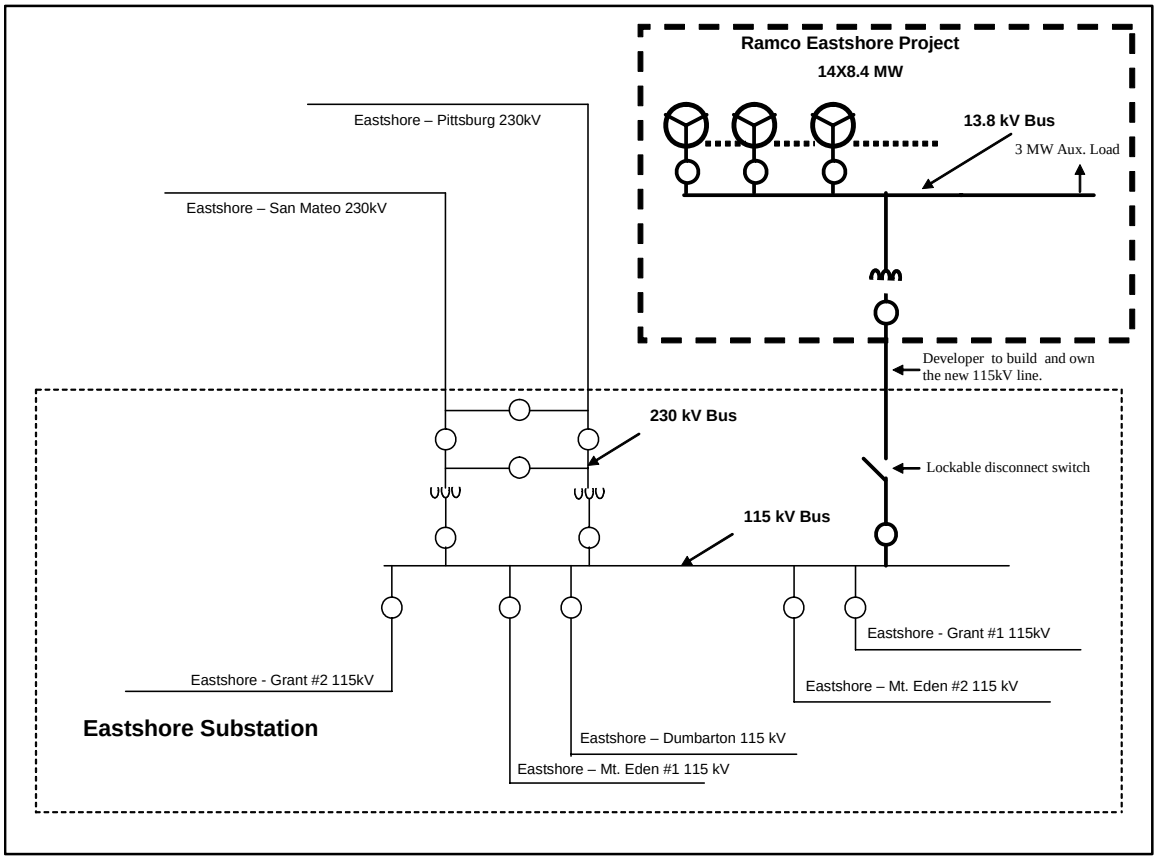

Figure 2-1: Conceptual One-Line Diagram

A map showing the approximate location of the proposed project site in relation to the Eastshore Substation and the transmission lines in the area is provided in Figure 2-2.

Figure 2-2: Vicinity Map

3. Study Assumptions

PG&E conducted the SIS using the following assumptions:

1) The maximum total output of the Eastshore Energy Facility Project will be 118 MW. The expected total plant load is 3 MW. The maximum net output to the grid is 115 MW.

2) The expected on-line date of the EEFP is May 2007.

3) All fourteen (14) reciprocating generator units will share a step-up transformer. The transformer is a three phase, 13.8/115 kV step-up

transformer with a rating of 75/100/125 MVA @ 55 C rise and 140 MVA @ 65 MVA C rise (9% impedance at 75 MVA).

4) Ramco will engineer, procure, construct, own, and maintain its project facility and the 115 kV generator tie line.

5) The study took into account the planned generating facilities in PG&E's service territory whose schedules are concurrent with or precede the EEFP's schedule.

6) The study took into account all the approved PG&E transmission reliability projects that will be operational by May 2007.

4. Power Flow Study Base Case

Two power flow base cases were used to evaluate the transmission system impacts of the Eastshore Energy Facility Project. While it is impossible to study all combinations of system load and generation levels during all seasons and at all times of the day, these two base cases represent extreme loading and generation conditions for the study area.

PG&E cannot guarantee that the EEFP can operate at maximum rated output 24 hours a day, year round, without system impacts, nor can PG&E guarantee that the EEFP will not have system impacts during the times and seasons not studied in the SIS.

Power flow analysis was conducted using both base cases. The 2007 Summer Peak Full Loop Base Case was used for dynamic stability analysis.

- **2007 Summer Peak Full Loop Base Case:**

  The 2007 Summer Peak Full Loop Base Case models the PG&E transmission system and expected operating conditions during the summer peak. This base case was developed from PG&E's 2004 base case series and has a 1-in-10 year heat wave load forecast for the Bay Area. Path 66 (California-Oregon Inter-tie) and Path 26 (Northern-Southern California Inter-tie) did not exceed the north-to-south transfer capabilities of 4,800 MW and 3,400 MW respectively. The Path 15 Project was modeled with a south-to-north transfer capability of 822 MW.

- **2007 Summer Off-Peak Full Loop Base Case:**

  The 2007 Summer Off-Peak Full Loop Base Case models the PG&E transmission system when loads are at about 48% of summer peak load level for the Bay Area.

These two base cases modeled all the approved PG&E transmission reliability projects that will be operational by May 2007.

Base Case Key Generation Assumptions

These two base cases modeled all the proposed generation projects that will be operational by May 2007. However, the base cases did not include generation projects that are in the Generation Interconnection Queue but are scheduled to be on-line after May 2007. The major generation projects included are shown in Attachment 1 of the Study Plan in Appendix A.

Generation projects that would be on-line by May 2007 were modeled in the base cases used for the SIS. However, some generation projects that are electrically far from the proposed project were either turned off or modeled with reduced generation to balance the loads and resources in the power flow model.

5. Study Criteria Summary

The CAISO Controlled Grid Reliability Criteria, which incorporate the Western Electricity Coordinating Council (WECC) and the North American Electric Reliability Council (NERC) planning criteria, were used to evaluate the impact of the project on the PG&E transmission system.

5.1 Steady State Study Criteria – Normal Overloads

Normal overloads are those that exceed 100 percent of normal ratings. The CAISO Controlled Grid Reliability Criteria requires the loading of all transmission system facilities be within their normal summer ratings.

5.2 Steady State Study Criteria – Emergency Overloads

Emergency overloads are those that exceed 100 percent of emergency ratings. The emergency overloads refer to overloads that occur during single element contingencies (CAISO Category “B”) and multiple element contingencies (CAISO Category “C”).

5.3 Dynamic Stability Study Criteria

According to the WECC Disturbance-Performance Table of Allowable Effects on Other Systems[1], after a CAISO Category “B” disturbance, the transmission system performance should meet the following criteria:

- Transient voltage dip should not be below 25 percent at load buses or 30 percent at non-load buses at any time.
- The duration of the transient voltage dip greater than 20 percent should not exceed 20 cycles at load buses.
- The minimum transient frequency should not fall below 59.6 Hz for more than 6 cycles at load buses.

[1] Cited from Draft Western Electricity Coordinating Council (WECC) Planning Standards published in December 2, 1999.

After a CAISO Category "C" disturbance, the transmission system performance should meet the following criteria:

- Transient voltage dip should not be below 30 percent at any bus at any time.
- The duration of a transient voltage dip greater than 20 percent should not exceed 40 cycles at load buses.
- The minimum transient frequency should not fall below 59.0 Hz for more than 6 cycles at load buses.

6. Steady State Power Flow Study and Results

The SIS studied the impact of the Eastshore Energy Facility Project on the PG&E transmission system. Two base cases were used to simulate the impact of the new facility during normal operating conditions, as well as, single and multiple (ISO Categories "B" and "C") outages:

- 2007 Summer Peak
- 2007 Summer Off-Peak

These base cases are described in Section 4 ("Base Case Information"). The SIS covered the transmission facilities within PG&E's East Bay, Mission, Diablo, and Peninsula Divisions.

PG&E cannot guarantee that the EEFP can operate at maximum rated output 24 hours a day, year round, without system impacts, nor can PG&E guarantee that the EEFP would not have system impacts during the times and seasons not studied in the SIS.

6.1 Contingencies

The CAISO Category "B" and "C" contingencies used in this analysis are provided in Appendix B. The single (ISO Category "B") and selected multiple (ISO Category "C") contingencies include the following outages:

6.1.1 CAISO Category "B"

- All single (60 - 500 kV) generator outages within the study area.
- All single (60 - 500 kV) transmission circuit outages within the study area.
- All single (60 - 500 kV) transformer outages within the study area.
- Selected overlapping single generator and transmission circuit outages for the transmission lines and generators within the study area.

6.1.2 CAISO Category "C"

- Selected bus outages (60 - 230 kV) within the study area.
- Selected outages caused by breaker failures (excluding bus tie and sectionalizing breakers) at the same bus section above.
- Selected combination of any two-generator/transmission line/transformer outages (except ones included above in Category "B") within the study area.
- Selected outages of double circuit tower lines (60 - 230 kV) within the study area.

6.2 Results

Appendix B provides a list of the contingencies studied. Appendix C shows the steady state power flow analysis results. Appendix D includes selected power flow plots.

6.2.1 Normal Overloads (CAISO Category A)

The addition of the Eastshore Energy Facility Project causes no normal overloads in any of the 2007 base cases studied.

6.2.2 Emergency Overloads (CAISO Category B)

The addition of the Eastshore Energy Facility Project causes no Category B emergency overloads in any of the 2007 base cases studied. One (1) transmission line will load to 100% of its rated capacity for the 2007 Summer Off-Peak base case. The loading on the Sobrante-Grizzly-Claremont 115 kV Line #2 (Claremont-Grizzly Jct. 2) loaded to 100% during a Sobrante-Moraga 115 kV line outage. Table 6-1 summarizes the loading of this line.

Over Loaded Component	Contingency	Rating (Amps)	Pre- Project Loading (Amps |%Rating)		Post-Project Loading (Amps |%Rating)		% Change from Pre-Project Loading
2007 Summer Off-Peak							
Sobrante-Grizzly-Claremont #2 115 kV Line (Claremont-Grizzly Jct2)	Sobrante-Moraga 115 kV Line	803	797	99%	800	100%	+1%

Table 6-1: 2007 Summer Off-Peak – B Contingency Overloads

6.2.3 Emergency Overloads (Category C)

The addition of the Eastshore Energy Facility Project causes no Category C emergency overloads in any of the 2007 base cases studied. One (1) transmission facility will load to 100% of its rated

capacity in the 2007 Summer Off-Peak base case. The loading on the Oakland D-Oakland L 115 kV Line loaded to 100% during Moraga 115 kV bus section 2D outage. This loading is summarized in Table 6-2 for information only.

Over Loaded Component	Contingency	Rating (Amps)	Pre- Project Loading (Amps |%Rating)		Post-Project Loading (Amps |%Rating)		% Change from Pre-Project Loading
2007 Summer Off-Peak							
Oakland D-Oakland L 115 kV Line	Moraga 115 kV Bus Section 2D Outage	790	786	99%	789	100%	+1%

Table 6-2: 2007 Summer Off-Peak – C Contingency Overloads

7. Dynamic Stability Study and Results

Dynamic stability studies were conducted using the 2007 Summer Peak Full Loop Base Case to ensure that the transmission system remains in operating equilibrium through abnormal operating conditions after the new facility begins operation. This full loop base case was developed from PG&E's 2004 base case series. The generator dynamic data used is shown in Appendix E.

7.1 Dynamic Stability Study Scenarios

Disturbance simulations were performed for a study period of up to 20 seconds to determine whether the new facility will create any system instability during the following line and generator outages:

7.1.1 NERC/CAISO Category "B" Contingencies:

1) Full load rejection of the proposed EEFP.

2) A three-phase fault with normal clearing time at Eastshore Substation 115 kV bus followed by the loss of the Eastshore-Dumbarton 115 kV Line.

3) A three-phase fault normal clearing time at Eastshore Substation 115 kV bus followed by the loss of the Eastshore-Grant 115 kV #1 Line.

7.1.2 NERC/CAISO Category "C" Contingencies:

1) A three-phase fault on one of the Eastshore Substation 115 kV bus.

2) A three-phase fault with normal clearing time at Eastshore Substation 115 kV bus followed by the loss of Eastshore-Grant 115 kV #1 & #2 Lines.

7.2 Parameters Monitored to Evaluate System Stability Performance

7.2.1 Rotor Angle

The rotor angle plots shown in Appendix F provide a measure for determining how the proposed generation units would swing with respect to one another. The plots also provide a measure of how the units would swing with respect to other generation units in the area.

7.2.2 Bus Voltage

The bus voltage plots, in conjunction with the relative rotor angle plots, also shown in Appendix F, provide a means of detecting out-of-step conditions. The bus voltage plots are useful in assessing the magnitude and the duration of post disturbance voltage dips and peak-to-peak voltage oscillations. The bus voltage plots also give an indication of system damping and the level to which voltages are expected to recover in steady state conditions.

7.2.3 Bus Frequency

The bus frequency plots, also shown in Appendix F, provide information on the magnitude and the duration of post fault frequency swings with the Eastshore Energy Facility Project in service. These plots indicate the extent of possible over-frequency or under-frequency, which can occur because of the imbalance between the generation and load within an area.

7.2.4 Other Parameters

- Generator Terminal Power
- Generator Terminal Voltage
- Generator Rotor Speed
- Generator Field Voltage
- Bus Angle
- Line Flow
- Voltage Spread
- Frequency Spread

7.3 Results

Dynamic stability studies were conducted using the 2007 Summer Peak Full Loop Base Case described in Section 4 and the generator models shown in

Appendix E to determine whether the transmission system would attain operating equilibrium following selected outages.

The results indicated that the transmission system performed within the CAISO/WECC reliability guidelines following the disturbances outlined above. It was determined that the Eastshore Energy Facility Project would have no adverse impact on the stable operation of the transmission system.

The results of the study are provided in the form of plots in Appendix F. A switch-deck script describing the switching sequence is provided as a note on the first page of each group of plots.

8. System Protection Study

Short circuit studies were performed to determine the impact of adding the Eastshore Energy Facility Project to the transmission system. The fault duties were calculated before and after the project.

8.1 System Protection Study Input Data

The following input data provided by the Applicant was used in this study:

Reciprocating Generator

- Synchronous reactance (X_d) = 1.75 pu @ 10.5 MVA
- Transient reactance (X'_d) = 0.305 pu @ 10.5 MVA
- Sub-transient reactance (X''_d) = 0.178 pu @ 10.5 MVA
- Negative Sequence reactance (X_2) = 0.188 pu @ 10.5 MVA
- Zero Sequence reactance (X_0) = 0.101 pu @ 10.5 MVA

Step-up Transformers

- 13.8/115 kV, 75 MVA on OA, Z = 9%

8.2 Results

Table 8-1 lists the available short circuit duty at the buses electrically adjacent to the Eastshore Energy Facility Project. This data was used to determine if any equipment would be overstressed by the addition of the EEFP.

Fault Location	Pre-Project		Post-Project (Phase 1)			
	3∅	L-G	3∅	% Increase	L-G	% Increase
Dumbarton 115 kV Bus	18,004	14,746	19,063	6%	15,289	4%
Eastshore 115 kV Bus	15,262	16,877	17,324	14%	19,395	15%
Grant 115 kV Bus	11,084	10,069	12,125	9%	10,812	7%

Fault Location	Pre-Project		Post-Project (Phase 1)			
	3∅	L-G	3∅	% Increase	L-G	% Increase
Mt. Eden 115 kV Bus	14,077	14,471	15,808	12%	16,183	12%
Pittsburg D1 230 kV Bus	49,757	55,286	49,863	0%	55,370	0%
Pittsburg D2 230 kV Bus	49,742	55,247	49,848	0%	55,331	0%
Pittsburg E1 230 kV Bus	49,712	55,247	49,818	0%	55,331	0%
Pittsburg E2 230 kV Bus	49,665	55,129	49,771	0%	55,212	0%
Ramco 115 kV Bus	0	0	17,279	N/A	19,296	N/A
San Mateo 230 kV Bus	28,254	26,384	28,589	1%	26,608	1%

Table 8-1: Short circuit study results

8.3 Preliminary Protection Requirements

The following are the preliminary protection requirements for the Eastshore Energy Facility Project. These preliminary protection requirements are based on interconnection plan as shown in Figure 2-1.

PG&E protection requirements are designed and intended to protect PG&E's system only. Additional protection is typically needed to protect the Generation Entity's facility. It is the generation developer's responsibility to protect its own system and equipment and must meet the requirements in the PG&E Interconnection Handbook. This document can be found in the PG&E's web page at:

http://www.pge.com/biz/transmission_services/contracts_tariffs/interconnection_handbook_toc.html

Due to the very short length of the overhead 115 kV line interconnection between PG&E's Eastshore substation and Eastshore Energy Facility, a fully redundant, double-pilot current differential protection scheme dual fiber optic communication will be required to achieve coordination with all facilities connected to the Eastshore 115 kV Substation. PG&E does not recommend using overcurrent protection for this tie line. Appendix G provides detail of these preliminary protection requirements.

8.3.1 Eastshore Substation

- Install one (1) 115kV SF6 circuit breaker and associated relaying.

8.3.2 Bus Tie Breaker CB 302

- Modify relaying to allow for substitution for new circuit breaker described in Section 8.3.1.[2]

[2] When CB 302 is being used as a substitute breaker for the generator tie line, the project's reliability will be reduced.

8.3.3 Eastshore Energy Facility Substation

- Install one (1) 115kV SF6 circuit breaker and associated relaying.

9. Substation Evaluation

9.1 Overstressed Breakers

Using the results of the System Protection Study in Section 8, the substation evaluation did not identify any overstressed breakers due to the addition of the Eastshore Energy Facility Project.

9.2 Bus Loading Evaluation

Bus loading analysis was performed on Eastshore Substation 115 kV bus to identify any overload that would occur with the addition of EEFP. During 2007 Summer Peak normal condition, the maximum current flowing through the bus is less than 800 Amps. Under the worst Category B contingency during 2007 summer peak (outage of the Eastshore-San Mateo 230 kV line), the maximum current flowing through the bus is less than 1,000 Amps.

The Eastshore 115 kV bus is made up of 2x1113 kcmil Al conductors which has a rating of 1,840 A (Normal) and 2,110 A (Emergency). Therefore, Eastshore 115 kV bus conductors are large enough to accommodate the addition of the EEFP.

10. Reactive Power Deficiency Analysis

The power flow studies of Category B and Category C contingencies indicated that the Eastshore Energy Facility Project did not cause voltage drops of 5% or more from the pre-project levels, or cause the PG&E system to fail to meet applicable voltage criteria.

11. Mitigation

No mitigation is needed since Eastshore Energy Facility Project did not overload or overstress any transmission facility.

12. Environmental Evaluation/ Permitting

12.1 CPUC General Order 131-D

Pacific Gas and Electric Company (PG&E) is subject to the jurisdiction of the California Public Utilities Commission (CPUC); and must comply with CPUC General Order 131-D (Order) on the construction, modification, alteration, or

addition of all electric transmission facilities (i.e., lines, substations, switchyards, etc.). This includes 230 kV facilities to be constructed by others and deeded to PG&E. The Order requires PG&E to obtain a Certificate of Public Convenience and Necessity (CPCN) from the CPUC if the PG&E facilities being constructed are designed for immediate or eventual operation at 200 kV or more. Projects with 230 kV facilities that are excepted from obtaining a CPCN are those involving the replacement of existing power line facilities or supporting structures with equivalent facilities or structures, the minor relocation of existing facilities, the conversion of existing overhead lines (greater than 200 kV) to underground, or the placing of new or additional conductors, insulators, or their accessories on or replacement of supporting structures already built. Obtaining a CPCN can take as much as 18 months or more if the CPUC needs to conduct its own environmental evaluation pursuant to the California Environmental Quality Act (CEQA). PG&E recommends including PG&E's interconnection facilities in the local or CEC's CEQA process, which may allow a shortened CPCN process should a CPCN be necessary.

Please see Section III, B.1.(f) in General Order 131-D. This document can be found in the CPUC's web page at:

http://www.cpuc.ca.gov/PUBLISHED/GENERAL_ORDER/589.htm

12.2 CPUC Section 851

Pacific Gas and Electric Company (PG&E) is subject to the jurisdiction of the California Public Utilities Commission (CPUC) and must comply with Public Utilities Code Section 851, which among other things requires CPUC approval of leases and licenses to use PG&E property. This includes rights-of-way granted to third parties for interconnection facilities. Obtaining CPUC approval for a Section 851 application can take several months, and requires compliance with the California Environmental Quality Act (CEQA). PG&E recommends that Section 851 issues be identified as early as possible so that the necessary application can be prepared and processed.

13. Study Updates

This System Impact Study is performed according to the assumptions shown in the Sections titled "Study Assumptions" and "Power Flow Study Base Case". In the event such that these assumptions are changed, an updating study may be required to re-evaluate Eastshore Energy Facility Project's impact on PG&E's transmission grid. Ramco Generating Two would be responsible for paying for any such updating study. Examples of changes that might prompt such a study are:

- Change in interconnection date.
- Change in Interconnection Queue position.
- Change in project's MW size

- Change in interconnection plan

14. Stand-by Power

This study does not address any requirements for stand-by power that the project may require. The Applicant should contact their Generation Interconnection Services Representative regarding this service.

Note: The Applicant is urged to contact their Generation Interconnection Services Representative promptly regarding stand-by service in order to ensure its availability for the project's start-up date.

Appendix A

Eastshore Energy Facility Project System Impact Study Plan

System Impact Study

Study Plan

Ramco Generating Two

Eastshore Energy Facility Project

Revision 1

Pacific Gas and Electric Company

WE DELIVER ENERGY.

Pacific Gas and Electric Company

February 15, 2005

Table of Contents

1. Introduction 1

2. Study Fee 1

3. Schedule 1

4. Cost Estimates 2

5. Project and Interconnection Information 2

6. Study Assumptions 4

7. Power Flow Study Base Case 5

8. Study Scope 6

- **8.1** Steady State Power Flow Analysis 6
- **8.2** System Protection Analysis 6
- **8.3** Dynamic Stability Analysis 7
- **8.4** Reactive Power Deficiency Analysis 7
- **8.5** Transmission Line Evaluation 8
- **8.6** Substation Evaluation 8
- **8.7** Interconnection Feasibility Evaluation 8
- **8.8** Land Evaluation 8

9. Environmental Evaluation/ Permitting 8

10. Study Updates 9

11. Stand-by Power 10

Attachment 1 - Generation Projects

1. Introduction

Ramco Generating Two (Ramco) has submitted a completed Interconnection Application (IA) to the California Independent System Operator Corporation (CAISO) for the Eastshore Energy Facility Project (Project). The proposed project will consist of fourteen (14) reciprocating engine generators rated for 8.214 MW. The maximum net output to the grid will be 115 MW. The commercial operation date of the proposed project is May 2007. The proposed project will be directly connected to PG&E's Eastshore Substation 115 kV bus in Hayward, California.

CAISO and PG&E have agreed that a System Impact Study (SIS) is required to determine the impact of the Eastshore Energy Facility Project on PG&E's transmission grid. This study plan will form the basis for the System Impact Study Agreement (SISA) by defining the scope, content, assumptions, and terms of reference of this SIS. This SIS will:

- Identify transmission system impacts caused solely by the additional of the proposed project, and
- Identify the system reinforcement, if any, necessary to mitigate the adverse impact of the proposed project under various system conditions.

The planned operational date of this project is May 2007. PG&E cannot guarantee that such interconnection can be completed by 2007 due to the potential work required for this interconnection. However, PG&E will work with the Applicant to achieve that interconnection as quickly as possible.

2. Study Fee

PG&E has estimated a study fee of $50,000 for performing this SIS. The final cost to complete this SIS will be based on actual cost. PG&E will provide Ramco a record of actual costs for performing this SIS roughly two months after the study is completed. PG&E will bill Ramco the remaining balance if the actual cost is higher than the estimated $50,000. If the actual cost is less than the estimated study fee, PG&E will refund the balance to Ramco.

3. Schedule

The following Table 3-1 shows the milestones/schedules associated with the study.

Task	Milestone Description	Target Date
1	Establish study commencement date based on receipt of study fee with the SIS Study Agreement	2/1/2005
2	Issue SIS final report	4/15/2005

Table 3-1: Study Schedule

Per the CAISO Tariff, the Applicant must execute and return the attached System Impact Study Agreement (SISA) including the estimated study fee of $50,000 by the tenth business day from the tendering of this study plan. If the Applicant fails to return an executed SISA with the estimated study fee within 10 business days, the Eastshore Project will be removed from the Interconnection queue.

4. Cost Estimates

No cost estimates will be provided in this SIS. Cost estimates will be provided when the project progresses to the Facilities Study.

5. Project and Interconnection Information

The Eastshore Project consists of fourteen (14) reciprocating engine generators with a total gross output of 115 MW. The generators produce power at 13,800 volts. The reciprocating/generator units will have a 13.8/115 kV step-up transformer with a rating of 75/100/125 MVA @ 55 C rise and 140 MVA @ 65 C rise(9% impedance at 75 MVA).

The Project will be interconnect to the PG&E grid through a 115 kV line into PG&E's Eastshore Substation 115 kV bus. A conceptual one-line diagram of the project is shown in Figure 5-1.

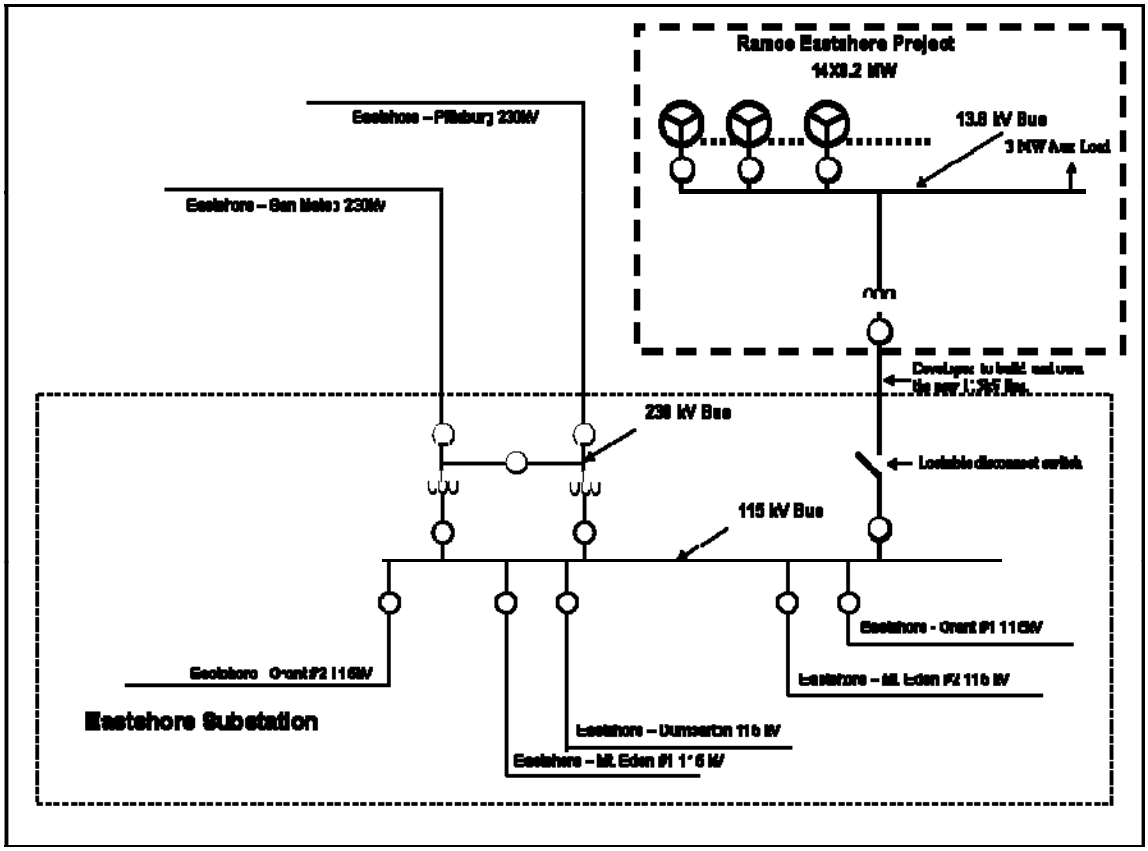

Figure 5-1: Conceptual one-line Diagram

Figure 5-2 shows the approximate location of the proposed Project site in relation to the Eastshore Substation and the transmission lines in the area.

Figure 5-2: Project Location

6. Study Assumptions

PG&E will conduct the SIS using the following assumptions:

1) The maximum total output to the grid from the facilities is 115 MW. The ancillary load is 3 MW.

2) The expected on-line date of the Project is May 1, 2007.

3) The new step-up transformer is three phase transformer, 13.8/115 kV delta/wye grounded transformer. The transformer is rated for 75/100/125 MVA @ 55 C rise and 140 MVA @ 65 C rise. The impedance is 9% @ 75 MVA base.

4) The plant configuration is as shown in Figures 5-1. The Applicant will engineer, procure, construct, own, and maintain its project facility.

5) The study will take into account the planned generating facilities in PG&E's service territory whose schedules are concurrent with or precede the Project's schedule.

The study will take into account all the approved PG&E transmission reliability projects that will be operational by summer 2007.

7. Power Flow Study Base Case

Two power flow base cases will be used to evaluate the transmission system impacts of the Project. While it is impossible to study all combinations of system load and generation levels during all seasons and at all times of the day, these two base cases represent extreme loading and generation conditions for the study area.

PG&E cannot guarantee that the Project can operate at maximum rated output 24 hours a day, year round, without system impacts, nor can PG&E guarantee that the Project will not have system impacts during the times and seasons not studied in the SIS.

- **2007 Summer Peak Full Loop Base Case:**

  Power flow analysis will be performed using PG&E's 2007 Summer Peak Area Full Loop Base Case (in General Electric Power Flow format). This base case was developed from PG&E's 2004 base case series and has a 1-in-10 year extreme weather load level for the Bay Area.

- **2007 Summer Off Peak Full Loop Base Case:**

  Power flow analysis will be performed using PG&E's 2007 Summer Off Peak Full Loop Base Case to evaluate potential congestion on transmission facilities when the system load is low and the area generators are being turned on.

These two base cases will model all the approved PG&E transmission reliability projects that will be operational by Summer 2007.

<u>Base Case Key Generation Assumptions</u>

These two base cases will model all the proposed generation projects that will be operational in 2007. However, the base cases will not include generation projects that are in the PG&E Generation Interconnection Queue but are scheduled to be on-line after Summer 2007. The major generation projects included are shown in Attachment 1.

Generation projects that are on-line in Summer 2007 will be modeled in the base cases used for the SIS. However, some generation projects that are electrically far

from the proposed project will be either turned off or modeled with reduced generation to balance the loads and resources in the power flow model.

8. Study Scope

The SIS will determine the impact of the project on PG&E's transmission system. The specific studies conducted are outlined below:

8.1 Steady State Power Flow Analysis

Power Flow analysis will be performed using the two base cases described in Section 7. These base cases will be used to simulate the impact of the project during normal operating conditions and with all single (CAISO Categories "B") and selected multiple (CAISO Category "C") contingencies include the following outages in the PG&E's East Bay, Mission, and Diablo planning areas. Selected single and multiple (CAISO Categories "B" and "C") contingencies in the Peninsula planning area will also be included.

8.1.1 CAISO Category "B"

- All single generator outages within the study area.
- All single (60 - 230 kV) transmission circuit outages within the study area.
- All single transformer outages within the study area.
- Overlapping single generator and transmission circuit outages for the transmission lines and generators within the study area.

8.1.2 CAISO Category "C"

- Selected bus outages (60 - 230 kV) within the study area.
- Outages caused by breaker failures (excluding bus tie and sectionalizing breakers) at the same bus section above.
- Combination of any two-generator/transmission line/transformer outages (except ones included above in Category "B") within the study area.
- Outages of double circuit tower lines (60 - 230 kV) within the study area.

8.2 System Protection Analysis

Short circuit studies will be performed to determine the impact of increased fault duty resulting from the added generation. The study will determine the

maximum fault currents in the vicinity of the Project and it will identify equipment that becomes overstressed as a result of the added generation.

8.3 Dynamic Stability Analysis

Dynamic stability studies will be conducted using the 2007 Summer Peak base case to ensure that the transmission system remains in operating equilibrium through abnormal operating conditions after the Project begins operation. The full loop base case was developed from PG&E's 2004 base case series.

Disturbance simulations will be performed for a study period up to 20 seconds to determine whether the project will create any system instability during the following line and generator outage:

8.3.1 NERC/CAISO Category "B" Contingencies:

6) Full load rejection of the Project's proposed 115 MW generation.

7) Three phase fault with normal clearing time at Eastshore Substation 115 kV bus followed by the loss of Eastshore – Dumbarton 115 kV Circuit.

8) Three phase fault with normal clearing time at Eastshore Substation 115 kV bus followed by the loss of Eastshore – Grant 115 kV #1 line.

8.3.2 NERC/CAISO Category "C" Contingencies:

9) Three-phase fault on one of the Eastshore Substation 115 kV bus section.

10) Three phase fault with normal clearing time at Eastshore Substation 115 kV bus followed by the loss of Eastshore – Grant 115 kV #1 & #2 Lines.

8.4 Reactive Power Deficiency Analysis

With the generation project included in the system model, Category "B" and Category "C" contingencies will be analyzed to identify any reactive power deficiency;

- If they result in voltage drops of 5% or more from the pre-project levels, or
- If they fail to meet applicable voltage criteria.

A post-transient power flow analysis will be performed, if deemed necessary, after considering the network topology or power transfer paths involved when a significant amount of power transfer occurs.

8.5 Transmission Line Evaluation

PG&E's transmission line evaluation will identify any existing equipment requiring upgrades to mitigate overloading due to the new generation, if any. However, the work scope and costs for these potential system impact upgrades are not included in the transmission line evaluation for the SIS. Cost estimates and work scope for the transmission line evaluation will be provided if the project progresses to the Facilities Study.

8.6 Substation Evaluation

The substation evaluation will identify any existing equipment requiring upgrades to mitigate problems caused by overstress or overload.

The substation evaluation for the System Impact Study will not include the work scope and cost estimates of the new equipment at existing PG&E substations needed to accommodate the proposed Project.

Cost estimates and work scope for the substation evaluation will be provided if the project progresses to the Facilities Study.

8.7 Interconnection Feasibility Evaluation

The feasibility of the proposed interconnection to the Eastshore 115 kV Bus will be reviewed by the following PG&E Transmission Departments:

- System Protection
- Operations Engineering
- Asset Management

If the interconnection is determined to be unfeasible, a new interconnection point must be selected before the study can proceed.

8.8 Land Evaluation

For the SIS, PG&E's Corporate Real Estate Department will not perform an evaluation to determine if any new land rights are necessary to upgrade PG&E facilities that may be impacted by the additional generation of the Project, such as re-conductoring of existing PG&E transmission lines.

A land rights evaluation will be provided if the project progresses to the Facilities Study.

9. Environmental Evaluation/ Permitting

Pacific Gas and Electric Company (PG&E) is subject to the jurisdiction of the California Public Utilities Commission (CPUC); and must comply with CPUC

General Order 131-D (Order) on the construction, modification, alteration, or addition of all electric transmission facilities (i.e., lines, substations, switchyards, etc.). This includes facilities to be constructed by others and deeded to PG&E. In cases where PG&E's electric facilities are part of a larger project (i.e., electric generation plant), the Order exempts PG&E from obtaining an approval from the CPUC provided it's planned facilities have been included in the larger project's California Environmental Quality Act (CEQA) review and the project's lead agency (i.e., California Energy Commission) finds no significant unavoidable environmental impacts. PG&E or the project developer may proceed with construction once PG&E has filed notice with the CPUC and the public on the project exempt status and the public has had a chance to protest PG&E's claim of exemption. The absence of evaluating PG&E facilities could require PG&E to seek approval from the CPUC (i.e., Certificate of Public Convenience and Necessity or Permit to Construct) taking as much as 18 months since the CPUC would need to conduct it's own environmental evaluation (i.e., Negative Declaration or Environmental Impact Report).

PG&E recommends that the project proponent include PG&E facility work in its project description and application to the lead agency performing CEQA review on the project. The lead agency must consider the environmental impacts of the interconnection electric facility, whether built by the developer with the intent to transfer ownership to PG&E or to be built and owned by PG&E directly, and make a finding of no significant unavoidable environmental impacts. Once the project has completed the review process and the environmental document (i.e., Negative Declaration or Environmental Impact Report) finds no significant unavoidable environmental impacts on PG&E's work, PG&E would file an Advice Letter with the CPUC and publish public notice on proposed construction of the facilities. Facilities built under this procedure must also be designed to include consideration of electric and magnetic field (EMF) mitigation measures pursuant to PG&E "EMF Design Guidelines of New Electrical Facilities: Transmission, Substation and Distribution".

Please see Section III, B.1.(f) in General Order 131-D. This document can be found in the CPUC's web page at:

http://www.cpuc.ca.gov/PUBLISHED/GENERAL_ORDER/589.htm

10. Study Updates

This System Impact Study is performed according the assumptions shown in the Sections titled "Study Assumptions" and "Power Flow Study Base Case". In the event such that these assumptions are changed, an updating study may be required to re-evaluate the Project's impact on PG&E's transmission grid. The Applicant would be responsible for paying for any such updating study. Examples of changes that might prompt such a study are:

- Change in interconnection date.
- Change in Interconnection Queue position.
- Change in project's MW size

- Change in interconnection plan

11. Stand-by Power

This study does not address any requirements for stand-by power that the project may require. The Applicant should contact their Generation Interconnection Services Representative regarding this service.

Note: The Applicant is urged to contact their Generation Interconnection Services Representative promptly regarding stand-by service in order to ensure its availability for the project's start-up date.

ATTACHMENT 1 – GENERATION PROJECTS

PG&E Generation Projects						
PG&E Queue Position	Applicant Name	Project Name	Nearest Substation	Capacity (MW)	Latest Expected On-Line Date	Modeled In Study Cases
1	Calpine	Metcalf Energy Center	Metcalf	600	2005	Yes
2	Mirant	Contra Costa Power Plant Unit 8 Power Project	Contra Costa	590	2006	Yes
3	Midway Power, LLC	Tesla Power Project	Tesla	1156	2008	No
4	Duke Energy Morro Bay LLC	Morro Bay Modernization Project	Morro Bay	1200	2008	No
5	Mirant Potrero LLC	Potrero Power Plant Unit 7	Potrero	640	2008	No
6	Federal Power Avenal, LLC	Avenal Energy Project	Gates	620	2009	No
7	Calpine	Los Esteros Critical Energy Facility Phase II	Los Esteros	140	2008	No
8	Sacramento Municipal Utility District	Solano Wind Project	Russell	77	2006	Yes
9	Calpine	Los Esteros Critical Energy Facility Phase II	Los Esteros	335	2008	No
10	Sacramento Municipal Utility District	Solano Wind Project	Russell	15	2007	Yes

Non-PG&E Generation Projects to Be Modeled in Base Case per On-line Year						
	Applicant Name	Project Name	Nearest Substation	Capacity (MW)	Latest Expected On-Line Date	Modeled In Study Cases
SMUD	Sacramento Municipal Utility District	Consumes Power Plant	Rancho Seco (SMUD)	500	2005	Yes
SVP	Silicon Valley Power	Pico Power Project	Kifer Receiving Station (SVP)	147	2005	Yes
TID	Turlock Irrigation District	Walnut Energy Center	Walnut (TID)	250	2006	Yes

ATTACHMENT 1 – GENERATION PROJECTS

PG&E Generation Projects - ISO Generation Interconnection Queue						
Project ID #	**Applicant Name**	**Project Name**	**Nearest Facility**	**Capacity (MW)**	**Latest Expected On-Line Date**	**Modeled In Study Cases**
P0301	Confidential	Confidential	Birds' Landing Switchyard	150	2006	Yes
P0302	Gaviota Energy / Global Renewable	Lompoc Wind Power Project	Cabrillo	120	2006	Yes
P0303	Kings River Conservation District	KRCD Peaking Project	Malaga	97	2005	Yes
P0304	FPL Energy, LLC	High Winds III	Birds' Landing Switchyard	38	2007	Yes
P0401	Confidential	Confidential	Birds' Landing Switchyard	150	2006	Yes
P0402	City and County of San Francisco	San Francisco Electric Reliability Power Project	Potrero	145.1	2007	Yes
P0403	Confidential	Confidential	Collector Station at Geysers #17 & Fulton Line	201	2007	Yes
P0404	City and County of San Francisco	San Francisco Airport Electric Reliability Project	San Francisco Airport	48.7	2007	Yes
P0405	NRG Energy Center San Francisco, LLC	San Francisco Cogeneration	Mission	14.26	2006	Yes
P0406	Confidential	Confidential	Panoche	99.9	2006	Yes
P0408	Confidential	Confidential	Tesla-Stockton 115 kV Line	99.9	2006	Yes
P0409	D. Milne Associated, LLC	Ripon Generation	Tesla	96.9	2007	Yes
P0410	Duke Energy North America, LLC	Duke Energy Oakland	Oakland C	320	2009	No
P0411	Confidential	Confidential	Humboldt Power Plant Substation	166	2008	No
P0412	Confidential	Confidential	Birds' Landing Switchyard	200	2008	No

Pacific Gas and Electric Company™

WE DELIVER ENERGY.™

System Impact Study Agreement

_____ (Applicant) has reviewed the study plan for the interconnection of Applicant's electric generating plant with PG&E's system at _____[1], State of California and agrees with the proposed plan.

Applicant agrees to pay the proposed study fee.

Dated this _____ day of _____, 2005

APPLICANT:

BY: _____
(Signature)

_____
(Type or Print Name)

MAILING ADDRESS:

_____

_____

_____

_____

[1] Enter city and county location of proposed facility.

Appendix B

Contingency Lists for Outages

Autocon Input Files

APPENDIX B – ISO CATEGORY B AUTOCON INPUT FILE

```
 # East Shore Energy Facility - 2007 category b contingency list
 # East Bay, Diablo and Mission divisions with selected peninsula outages
 # Zones 307, 308, 316 and 310
 #
 # (1)  B2 LINE OUTAGE (BREAKER-TO-BREAKER)
 #
1  30437 30438  "1 "    0     # line from  CROCKETT 230.00   (3) to (2)   C&H      230.00
1  30437 30445  "1 "    0     # line from  CROCKETT 230.00   (3) to BRKR  IGNACIO  230.00
1  30437 30540  "1 "    0     # line from  CROCKETT 230.00   (3) to BRKR  SOBRANTE 230.00
2  30438 32900  "1 "    0     # TRAN from  C&H      230.00  BRKR to (1)   CRCKTCOG  18.00
4  30438     0  "1 "    0     # LOAD-DROP    C&H      230.00  LOAD==3.55(0.81)
3  32900     0  "1 "    0     # GEN-DROP    CRCKTCOG  18.00  GEN==240.00(27.73)
0
 #
 #
 # (2)  B2 LINE OUTAGE (BREAKER-TO-BREAKER)
 #
1  32620 32778  "1 "    0     # line from  NTWRJCT2 115.00   (2) to (3)   MRTNZJCT 115.00
1  32620 32602  "1 "    0     # line from  NTWRJCT2 115.00   (2) to BRKR  NRTH TWR 115.00
1  32778 32754  "1 "    0     # line from  MRTNZJCT 115.00   (3) to BRKR  OLEUM    115.00
1  32778 32756  "1 "    0     # line from  MRTNZJCT 115.00   (3) to BRKR  CHRISTIE 115.00
4  32602     0  "1 "    0     # LOAD-DROP    NRTH TWR 115.00  LOAD==13.65(2.77)
4  32602     0  "2 "    0     # LOAD-DROP    NRTH TWR 115.00  LOAD==8.82(1.79)
4  32602     0  "3 "    0     # LOAD-DROP    NRTH TWR 115.00  LOAD==5.41(1.09)
4  32602     0  "4 "    0     # LOAD-DROP    NRTH TWR 115.00  LOAD==4.96(1.01)
1  32602 32618  "1 "    1     # LINE-TRANSFER NTWRJCT2 115.00 to NTWRJCT1 115.00
4  32602     0  "**"    1     # RESTORE NORTH TOWER load
0
 #
 #
 # (3)  B2 LINE OUTAGE (BREAKER-TO-BREAKER)
 #
1  32740 32742  "1 "    0     # line from  UCB SUB  115.00  BRKR to (3)   UCB JCT1 115.00
1  32742 33006  "1 "    0     # line from  UCB JCT1 115.00   (3) to (3)   GRIZLYJ1 115.00
1  32742 32770  "1 "    0     # line from  UCB JCT1 115.00   (3) to BRKR  GRIZZLY2 115.00
1  33006 33010  "1 "    0     # line from  GRIZLYJ1 115.00   (3) to BRKR  SOBRANTE 115.00
1  33006 33012  "1 "    0     # line from  GRIZLYJ1 115.00   (3) to BRKR  EST PRTL 115.00
0
 #
 #
 # (4)  B2 LINE OUTAGE (BREAKER-TO-BREAKER)
 #
1  32740 32744  "1 "    0     # line from  UCB SUB  115.00  BRKR to (3)   UCB JCT2 115.00
1  32744 33008  "2 "    0     # line from  UCB JCT2 115.00   (3) to (3)   GRIZLYJ2 115.00
1  32744 32770  "2 "    0     # line from  UCB JCT2 115.00   (3) to BRKR  GRIZZLY2 115.00
1  33008 32780  "1 "    0     # line from  GRIZLYJ2 115.00   (3) to BRKR  CLARMNT  115.00
1  33008 33010  "1 "    0     # line from  GRIZLYJ2 115.00   (3) to BRKR  SOBRANTE 115.00
0
 #
 #
 # (5)  B2 LINE OUTAGE (BREAKER-TO-BREAKER)
 #
1  32748 32750  "1 "    0     # line from  PP STEEL 115.00  BRKR to (3)   PPSTLTAP 115.00
1  32750 32774  "1 "    0     # line from  PPSTLTAP 115.00   (3) to (3)   PTPNLTAP 115.00
1  32750 32760  "1 "    0     # line from  PPSTLTAP 115.00   (3) to (1)   PT PINLE 115.00
1  32774 32762  "1 "    0     # line from  PTPNLTAP 115.00   (3) to BRKR  STD. OIL 115.00
1  32774 32808  "1 "    0     # line from  PTPNLTAP 115.00   (3) to (2)   SNPBLTP2 115.00
1  32808 33010  "1 "    0     # line from  SNPBLTP2 115.00   (2) to BRKR  SOBRANTE 115.00
4  32748     0  "1 "    0     # LOAD-DROP    PP STEEL 115.00  LOAD==5.05(5.90)
4  32760     0  "1 "    0     # LOAD-DROP    PT PINLE 115.00  LOAD==13.29(2.70)
0
 #
 #
 # (6)  B2 LINE OUTAGE (BREAKER-TO-BREAKER)
 #
1  32754 32802  "1 "    0     # line from  OLEUM    115.00  BRKR to (3)   VLYVWTP1 115.00
1  32802 32764  "1 "    0     # line from  VLYVWTP1 115.00   (3) to BRKR  VALLY VW 115.00
1  32802 32766  "1 "    0     # line from  VLYVWTP1 115.00   (3) to BRKR  EL CRRTO 115.00
4  32764     0  "1 "    0     # LOAD-DROP    VALLY VW 115.00  LOAD==7.98(1.62)
4  32764     0  "2 "    0     # LOAD-DROP    VALLY VW 115.00  LOAD==14.40(2.92)
1  32764 32804  "2 "    1     # LINE-TRANSFER VLYVWTP1 to VLYVWTP2
4  32764     0  "**"    1     # RESTORE VALLEY VIEW load
0
 #
 #
 # (7)  B2 LINE OUTAGE (BREAKER-TO-BREAKER)
 #
```

```
1  32754 32804  "2 "    0     # line from  OLEUM    115.00  BRKR to (2)   VLYVWTP2 115.00
1  32804 32766  "2 "    0     # line from  VLYVWTP2 115.00   (2) to BRKR  EL CRRTO 115.00
0
 #
 #
 # (8)  B2 LINE OUTAGE (BREAKER-TO-BREAKER)
 #
1  32756 33010  "1 "    0     # line from  CHRISTIE 115.00  BRKR to BRKR  SOBRANTE 115.00
0
 #
 #
 # (9)  B2 LINE OUTAGE (BREAKER-TO-BREAKER)
 #
1  32766 33010  "1 "    0     # line from  EL CRRTO 115.00  BRKR to BRKR  SOBRANTE 115.00
0
 #
 #
 # (10)  B2 LINE OUTAGE (BREAKER-TO-BREAKER)
 #
1  32766 33010  "2 "    0     # line from  EL CRRTO 115.00  BRKR to BRKR  SOBRANTE 115.00
0
 #
 #
 # (11)  B2 LINE OUTAGE (BREAKER-TO-BREAKER)
 #
1  32768 33010  "1 "    0     # line from  RICHMOND 115.00  BRKR to BRKR  SOBRANTE 115.00
0
 #
 #
 # (12)  B2 LINE OUTAGE (BREAKER-TO-BREAKER)
 #
1  32768 33010  "2 "    0     # line from  RICHMOND 115.00  BRKR to BRKR  SOBRANTE 115.00
0
 #
 #
 # (13)  B2 LINE OUTAGE (BREAKER-TO-BREAKER)
 #
1  32780 32782  "1 "    0     # line from  CLARMNT  115.00  BRKR to BRKR  STATIN D 115.00
0
 #
 #
 # (14)  B2 LINE OUTAGE (BREAKER-TO-BREAKER)
 #
1  32780 32782  "2 "    0     # line from  CLARMNT  115.00  BRKR to BRKR  STATIN D 115.00
0
 #
 #
 # (15)  B2 LINE OUTAGE (BREAKER-TO-BREAKER)
 #
1  32782 32788  "1 "    0     # line from  STATIN D 115.00  BRKR to BRKR  STATIN L 115.00
0
 #
 #
 # (16)  B2 LINE OUTAGE (BREAKER-TO-BREAKER)
 #
1  32786 32788  "1 "    0     # line from  OAK C115 115.00  BRKR to BRKR  STATIN L 115.00
0
 #
 #
 # (17)  B2 LINE OUTAGE (BREAKER-TO-BREAKER)
 #
1  32786 32790  "1 "    0     # line from  OAK C115 115.00  BRKR to BRKR  STATIN X 115.00
0
 #
 #
 # (18)  B2 LINE OUTAGE (BREAKER-TO-BREAKER)
 #
1  32786 32794  "1 "    0     # line from  OAK C115 115.00  BRKR to BRKR  MARITIME 115.00
4  32794     0  "1 "    0     # LOAD-DROP    MARITIME 115.00  LOAD==1.02(1.19)
0
 #
 #
 # (19)  B2 LINE OUTAGE (BREAKER-TO-BREAKER)
 #
1  32786 32904  "1 "    0     # line from  OAK C115 115.00  BRKR to (3)   OAKLND23 115.00
2  32904 32902  "8 "    0     # TRAN from  OAKLND23 115.00   (3) to (1)   OAKLND 2  13.80
2  32904 32903  "9 "    0     # TRAN from  OAKLND23 115.00   (3) to (1)   OAKLND 3  13.80
3  32902     0  "1 "    0     # GEN-DROP    OAKLND 2  13.80  GEN==50.00(2.94)
```

```
3  32903     0  "1 "    0     # GEN-DROP    OAKLND 3  13.80  GEN==50.00(2.61)
0
 #
 #
 # (20)  B2 LINE OUTAGE (BREAKER-TO-BREAKER)
 #
1  32786 38026  "1 "    0     # line from  OAK C115 115.00  BRKR to (4)   ALAMEDCT 115.00
1  38026 38022  "1 "    0     # line from  ALAMEDCT 115.00   (4) to BRKR  CARTWRT  115.00
2  38026 38118  "1 "    0     # TRAN from  ALAMEDCT 115.00   (4) to (1)   ALMDACT1  13.80
2  38026 38119  "1 "    0     # TRAN from  ALAMEDCT 115.00   (4) to (1)   ALMDACT2  13.80
4  38022     0  "1 "    0     # LOAD-DROP    CARTWRT  115.00  LOAD==17.86(4.23)
4  38022     0  "2 "    0     # LOAD-DROP    CARTWRT  115.00  LOAD==17.86(4.23)
3  38118     0  "1 "    0     # GEN-DROP    ALMDACT1  13.80  GEN==22.60(12.40)
3  38119     0  "1 "    0     # GEN-DROP    ALMDACT2  13.80  GEN==22.60(12.40)
0
 #
 #
 # (21)  B2 LINE OUTAGE (BREAKER-TO-BREAKER)
 #
1  32792 32798  "1 "    0     # line from  STATIN J 115.00  BRKR to (2)   OWENSTAP 115.00
1  32798 32800  "1 "    0     # line from  OWENSTAP 115.00   (2) to BRKR  OWNBRKWY 115.00
4  32800     0  "1 "    0     # LOAD-DROP    OWNBRKWY 115.00  LOAD==8.75(5.19)
0
 #
 #
 # (22)  B2 LINE OUTAGE (BREAKER-TO-BREAKER)
 #
1  32792 32814  "1 "    0     # line from  STATIN J 115.00  BRKR to (3)   EDESTAP1 115.00
1  32814 32810  "1 "    0     # line from  EDESTAP1 115.00   (3) to BRKR  EDES     115.00
1  32814 35113  "1 "    0     # line from  EDESTAP1 115.00   (3) to (2)   DMTAR_SL 115.00
1  35113 35101  "1 "    0     # line from  DMTAR_SL 115.00   (2) to BRKR  SN LNDRO 115.00
4  32810     0  "2 "    0     # LOAD-DROP    EDES     115.00  LOAD==17.29(3.51)
4  32810     0  "3 "    0     # LOAD-DROP    EDES     115.00  LOAD==35.57(7.22)
4  35113     0  "1 "    0     # LOAD-DROP    DMTAR_SL 115.00  LOAD==3.75(2.32)
1  32810 32812  "1 "    1     # LINE-TRANSFER EDESTAP1 to EDS GRNT
4  32810     0  "**"    1     # RESTORE EDES load
0
 #
 #
 # (23)  B2 LINE OUTAGE (BREAKER-TO-BREAKER)
 #
1  32792 38024  "1 "    0     # line from  STATIN J 115.00  BRKR to BRKR  JENNY    115.00
4  38024     0  "1 "    0     # LOAD-DROP    JENNY    115.00  LOAD==25.87(6.12)
1  38024 38022  "1 "    1     # LINE-TRANSFER ALAMDA J to ALAMDA C
4  38024     0  "**"    1     # RESTORE ALAMDA J load
0
 #
 #
 # (24)  B2 LINE OUTAGE (BREAKER-TO-BREAKER)
 #
1  32806 32758  "1 "    0     # line from  SNPBLTP1 115.00   (3) to BRKR  SAN PBLO 115.00
1  32806 32762  "1 "    0     # line from  SNPBLTP1 115.00   (3) to BRKR  STD. OIL 115.00
1  32806 33010  "1 "    0     # line from  SNPBLTP1 115.00   (3) to BRKR  SOBRANTE 115.00
4  32758     0  "1 "    0     # LOAD-DROP    SAN PBLO 115.00  LOAD==21.60(4.39)
1  32758 32808  "1 "    1     # LINE-TRANSFER SNPBLTP1 to SNPBLTP2
4  32758     0  "**"    1     # RESTORE SAN PABLO load
0
 #
 #
 # (25)  B2 LINE OUTAGE (BREAKER-TO-BREAKER)
 #
1  32812 35104  "1 "    0     # line from  EDS GRNT 115.00   (1) to BRKR  GRANT    115.00
0
 #
 #
 # (26)  B2 LINE OUTAGE (BREAKER-TO-BREAKER)
 #
1  32850 32852  "1 "    0     # line from  UNIN CHM  60.00   (3) to BRKR  CHRISTIE  60.00
1  32850 32860  "1 "    0     # line from  UNIN CHM  60.00   (3) to BRKR  FRKLNALT  60.00
2  32850 32920  "1 "    0     # TRAN from  UNIN CHM  60.00   (3) to (1)   UNION CH   9.11
4  32920     0  "SG"    0     # LOAD-DROP    UNION CH   9.11  LOAD==1.56(0.36)
3  32920     0  "1 "    0     # GEN-DROP    UNION CH   9.11  GEN==20.40(-9.00)
0
 #
 #
 # (27)  B2 LINE OUTAGE (BREAKER-TO-BREAKER)
 #
1  32852 32856  "1 "    0     # line from  CHRISTIE  60.00  BRKR to (2)   FRANKLIN  60.00
```

```
1  32856 32858  "1 "    0     # line from  FRANKLIN  60.00   (2) to (1)   SEQUOIA   60.00
4  32856     0  "1 "    0     # LOAD-DROP    FRANKLIN  60.00  LOAD==16.50(3.35)
4  32856     0  "2 "    0     # LOAD-DROP    FRANKLIN  60.00  LOAD==16.29(3.30)
1  32856 32860  "1 "    1     # LINE-TRANSFER FRANKLIN to FRKLNALT
4  32856     0  "**"    1     # RESTORE FRANKLIN load
0
 #
 #
 # (28)  B2 LINE OUTAGE (BREAKER-TO-BREAKER)
 #
1  32852 33067  "1 "    0     # line from  CHRISTIE  60.00  BRKR to (3)   PCBRICK   60.00
1  33067 32854  "1 "    0     # line from  PCBRICK   60.00   (3) to (1)   PRT CSTA  60.00
1  33067 33066  "1 "    0     # line from  PCBRICK   60.00   (3) to (3)   STAUFFER  60.00
1  33066 33065  "1 "    0     # line from  STAUFFER  60.00   (3) to (2)   URICH     60.00
2  33066 33139  "1 "    0     # TRAN from  STAUFFER  60.00   (3) to (1)   STAUFER    9.11
1  33065 33064  "1 "    0     # line from  URICH     60.00   (2) to (2)   SFPP CNC  60.00
1  33064 33091  "1 "    0     # line from  SFPP CNC  60.00   (2) to (2)   TAP GWF5  60.00
2  33091 33135  "1 "    0     # TRAN from  TAP GWF5  60.00   (2) to (1)   GWF #5    13.80
4  32854     0  "1 "    0     # LOAD-DROP    PRT CSTA  60.00  LOAD==0.33(0.30)
4  33065     0  "1 "    0     # LOAD-DROP    URICH     60.00  LOAD==2.06(1.28)
4  33139     0  "SG"    0     # LOAD-DROP    STAUFER    9.11  LOAD==2.23(0.32)
4  33064     0  "1 "    0     # LOAD-DROP    SFPP CNC  60.00  LOAD==7.94(4.71)
4  33135     0  "SG"    0     # LOAD-DROP    GWF #5    13.80  LOAD==2.93(0.67)
3  33139     0  "1 "    0     # GEN-DROP    STAUFER    9.11  GEN==2.00(-1.00)
3  33135     0  "1 "    0     # GEN-DROP    GWF #5    13.80  GEN==18.90(1.55)
0
 #
 #
 # (29)  B2 LINE OUTAGE (BREAKER-TO-BREAKER)
 #
1  32911 32754  "1 "    0     # line from  UNOCAL2  115.00   (3) to BRKR  OLEUM    115.00
1  32911 32754  "2 "    0     # line from  UNOCAL2  115.00   (3) to BRKR  OLEUM    115.00
2  32911 32910  "1 "    0     # TRAN from  UNOCAL2  115.00   (3) to BRKR  UNOCAL    12.00
4  32910     0  "SG"    0     # LOAD-DROP    UNOCAL    12.00  LOAD==18.79(11.65)
3  32910     0  "1 "    0     # GEN-DROP    UNOCAL    12.00  GEN==15.70(1.69)
3  32910     0  "2 "    0     # GEN-DROP    UNOCAL    12.00  GEN==15.70(1.69)
3  32910     0  "3 "    0     # GEN-DROP    UNOCAL    12.00  GEN==15.70(1.69)
0
 #
 #
 # (30)  B2 LINE OUTAGE (BREAKER-TO-BREAKER)
 #
1  33012 32780  "1 "    0     # line from  EST PRTL 115.00  BRKR to BRKR  CLARMNT  115.00
0
 #
 #
 # (31)  B2 LINE OUTAGE (BREAKER-TO-BREAKER)
 #
1  33016 32754  "1 "    0     # line from  ALHAMTP2 115.00   (2) to BRKR  OLEUM    115.00
1  33016 32990  "1 "    0     # line from  ALHAMTP2 115.00   (2) to BRKR  MARTNZ D 115.00
0
 #
 #
 # (32)  B2 LINE OUTAGE (BREAKER-TO-BREAKER)
 #
1  33020 32780  "1 "    0     # line from  MORAGA   115.00  BRKR to BRKR  CLARMNT  115.00
0
 #
 #
 # (33)  B2 LINE OUTAGE (BREAKER-TO-BREAKER)
 #
1  33020 32780  "2 "    0     # line from  MORAGA   115.00  BRKR to BRKR  CLARMNT  115.00
0
 #
 #
 # (34)  B2 LINE OUTAGE (BREAKER-TO-BREAKER)
 #
1  33020 32790  "1 "    0     # line from  MORAGA   115.00  BRKR to BRKR  STATIN X 115.00
0
 #
 #
 # (35)  B2 LINE OUTAGE (BREAKER-TO-BREAKER)
 #
1  33020 32790  "2 "    0     # line from  MORAGA   115.00  BRKR to BRKR  STATIN X 115.00
0
 #
 #
 # (36)  B2 LINE OUTAGE (BREAKER-TO-BREAKER)
```

```
 #
1  33020 32790  "3 "    0     # line from  MORAGA   115.00  BRKR to BRKR  STATIN X 115.00
0
 #
 #
 # (37)  B2 LINE OUTAGE (BREAKER-TO-BREAKER)
 #
1  33020 32790  "4 "    0     # line from  MORAGA   115.00  BRKR to BRKR  STATIN X 115.00
0
 #
 #
 # (38)  B2 LINE OUTAGE (BREAKER-TO-BREAKER)
 #
1  33020 32792  "1 "    0     # line from  MORAGA   115.00  BRKR to BRKR  STATIN J 115.00
0
 #
 #
 # (39)  B3 TRANSFORMER OUTAGE (BREAKER-TO-BREAKER)
 #
2  32852 32756  "1 "    0     # TRAN from  CHRISTIE  60.00  BRKR to BRKR  CHRISTIE 115.00
0
 #
 #
 # (40)  B3 TRANSFORMER OUTAGE (BREAKER-TO-BREAKER)
 #
2  32786 32908  "1 "    0     # TRAN from  OAK C115 115.00  BRKR to BRKR  OAK C12   12.00
0
 #
 #
 # (41)  B3 TRANSFORMER OUTAGE (BREAKER-TO-BREAKER)
 #
2  32786 32908  "2 "    0     # TRAN from  OAK C115 115.00  BRKR to BRKR  OAK C12   12.00
0
 #
 #
 # (42)  B3 TRANSFORMER OUTAGE (BREAKER-TO-BREAKER)
 #
2  32786 32908  "3 "    0     # TRAN from  OAK C115 115.00  BRKR to BRKR  OAK C12   12.00
0
 #
 #
 # (43)  B1 GENERATOR OUTAGE
 #
3  32903     0  "1"     0     # OAKLND 3  13.80       PGEN=50.00  QGEN=-16.70
0
 #
 #
 # (44)  B1 GENERATOR OUTAGE
 #
3  32902     0  "1"     0     # OAKLND 2  13.80       PGEN=50.00  QGEN=-8.83
0
 #
 #
 # (45)  B1 GENERATOR OUTAGE
 #
3  32901     0  "1"     0     # OAKLND 1  13.80       PGEN=50.00  QGEN=-7.88
0
 #
 #
 # (46)  B1 GENERATOR OUTAGE
 #
3  32922     0  "1"     0     # ChevGen2  13.80       PGEN=54.00  QGEN=34.20
0
 #
 #
 # (47)  B1 GENERATOR OUTAGE
 #
3  32921     0  "1"     0     # ChevGen1  13.80       PGEN=54.00  QGEN=34.20
0
 #
 #
 # (48)  B1 GENERATOR OUTAGE
 #
3  32900     0  "1"     0     # CRCKTCOG  18.00       PGEN=240.00  QGEN=32.83
0
 #
 #
 # (49)  B1 GENERATOR OUTAGE
```

```
 #
3  32910     0  "1"     0     # UNOCAL    12.00       PGEN=15.70  QGEN=2.44
0
 #
 #
 # (50)  B1 GENERATOR OUTAGE
 #
3  32910     0  "2"     0     # UNOCAL    12.00       PGEN=15.70  QGEN=2.44
0
 #
 #
 # (51)  B1 GENERATOR OUTAGE
 #
3  32910     0  "3"     0     # UNOCAL    12.00       PGEN=15.70  QGEN=2.44
0
 #
 #
 # (52)  B1 GENERATOR OUTAGE
 #
3  32740     0  "1"     0     # UCB SUB  115.00       PGEN=26.00  QGEN=-8.70
0
 #
 #
 # (53)  B1 GENERATOR OUTAGE
 #
3  32920     0  "1"     0     # UNION CH   9.11       PGEN=20.37  QGEN=-9.00
0
 #
 #
 # (54)  L-1/G-1 OVERLAPPING OUTAGE
 # Claremont - Oakland D #1 115 kV Line and Oakland CT1
1  32780 32782  "1 "    0     # line from  CLARMNT  115.00  BRKR to BRKR  STATIN D 115.00
 #
3  32901     0  "1"     0     # OAKLND 1  13.80       PGEN=50.00  QGEN=-7.88
0
 #
 #
 # (55)  L-1/G-1 OVERLAPPING OUTAGE
 # Claremont - Oakland D #2 115 kV Line and Oakland CT1
1  32780 32782  "2 "    0     # line from  CLARMNT  115.00  BRKR to BRKR  STATIN D 115.00
 #
3  32901     0  "1"     0     # OAKLND 1  13.80       PGEN=50.00  QGEN=-7.88
0
 #
 #
 # (56)  L-1/G-1 OVERLAPPING OUTAGE
 # Oakland D - Oakland L 115 kV Line and Oakland CT1
1  32782 32788  "1 "    0     # line from  STATIN D 115.00  BRKR to BRKR  STATIN L 115.00
 #
3  32901     0  "1"     0     # OAKLND 1  13.80       PGEN=50.00  QGEN=-7.88
0
 #
 #
 # (57)  L-1/G-1 OVERLAPPING OUTAGE
 # Oakland C - Oakland L 115 kV Line and Oakland CT1
1  32786 32788  "1 "    0     # line from  OAK C115 115.00  BRKR to BRKR  STATIN L 115.00
 #
3  32901     0  "1"     0     # OAKLND 1  13.80       PGEN=50.00  QGEN=-7.88
0
 #
 #
 # (58)  L-1/G-1 OVERLAPPING OUTAGE
 # Oakland C - Oakland X 115 kV Line and Oakland CT1
1  32786 32790  "1 "    0     # line from  OAK C115 115.00  BRKR to BRKR  STATIN X 115.00
 #
3  32901     0  "1"     0     # OAKLND 1  13.80       PGEN=50.00  QGEN=-7.88
0
 #
 #
 # (59)  L-1/G-1 OVERLAPPING OUTAGE
 # Oakland C - Maritime 115 kV Line and Oakland CT1
1  32786 32794  "1 "    0     # line from  OAK C115 115.00  BRKR to BRKR  MARITIME 115.00
4  32794     0  "1 "    0     # LOAD-DROP    MARITIME 115.00  LOAD==1.02(1.19)
 #
3  32901     0  "1"     0     # OAKLND 1  13.80       PGEN=50.00  QGEN=-7.88
0
 #
 #
```

```
 # (60)  L-1/G-1 OVERLAPPING OUTAGE
 # Oakland C - Oakland PP 115 kV Line and Oakland CT1
1  32786 32904  "1 "    0     # line from  OAK C115 115.00  BRKR to (3)   OAKLND23 115.00
2  32904 32902  "8 "    0     # TRAN from  OAKLND23 115.00   (3) to (1)   OAKLND 2  13.80
2  32904 32903  "9 "    0     # TRAN from  OAKLND23 115.00   (3) to (1)   OAKLND 3  13.80
3  32902     0  "1 "    0     # GEN-DROP    OAKLND 2  13.80  GEN==50.00(2.94)
3  32903     0  "1 "    0     # GEN-DROP    OAKLND 3  13.80  GEN==50.00(2.61)
 #
3  32901     0  "1"     0     # OAKLND 1  13.80       PGEN=50.00  QGEN=-7.88
0
 #
 #
 # (61)  L-1/G-1 OVERLAPPING OUTAGE
 # Oakland C - Cartwright 115 kV Line and Oakland CT1
1  32786 38026  "1 "    0     # line from  OAK C115 115.00  BRKR to (4)   ALAMEDCT 115.00
1  38026 38022  "1 "    0     # line from  ALAMEDCT 115.00   (4) to BRKR  CARTWRT  115.00
2  38026 38118  "1 "    0     # TRAN from  ALAMEDCT 115.00   (4) to (1)   ALMDACT1  13.80
2  38026 38119  "1 "    0     # TRAN from  ALAMEDCT 115.00   (4) to (1)   ALMDACT2  13.80
4  38022     0  "1 "    0     # LOAD-DROP    CARTWRT  115.00  LOAD==17.86(4.23)
4  38022     0  "2 "    0     # LOAD-DROP    CARTWRT  115.00  LOAD==17.86(4.23)
3  38118     0  "1 "    0     # GEN-DROP    ALMDACT1  13.80  GEN==22.60(12.40)
3  38119     0  "1 "    0     # GEN-DROP    ALMDACT2  13.80  GEN==22.60(12.40)
 #
3  32901     0  "1"     0     # OAKLND 1  13.80       PGEN=50.00  QGEN=-7.88
0
 #
 #
 # (62)  L-1/G-1 OVERLAPPING OUTAGE
 # Contra Costa - Moraga #1 230 kV Line and Oakland CT1
1  30525 30543  "1 "    0     # line from  C.COSTA  230.00  BRKR to (3)   ROSSTAP1 230.00
1  30543 30545  "1 "    0     # line from  ROSSTAP1 230.00   (3) to BRKR  ROSSMOOR 230.00
1  30543 30550  "1 "    0     # line from  ROSSTAP1 230.00   (3) to BRKR  MORAGA   230.00
4  30545     0  "1 "    0     # LOAD-DROP    ROSSMOOR 230.00  LOAD==38.39(7.80)
4  30545     0  "2 "    0     # LOAD-DROP    ROSSMOOR 230.00  LOAD==35.63(7.24)
1  30544 30545  "1 "    1     # LINE-TRANSFER  ROSSTAP1  230.00  TO  ROSSTAP2  230.00
4  30545     0  "**"    1     # RESTORE ROSSMOOR load
 #
3  32901     0  "1"     0     # OAKLND 1  13.80       PGEN=50.00  QGEN=-7.88
0
 #
 #
 # (63)  L-1/G-1 OVERLAPPING OUTAGE
 # Contra Costa - Moraga #2 230 kV Line and Oakland CT1
1  30525 30544  "1 "    0     # line from  C.COSTA  230.00  BRKR to (2)   ROSSTAP2 230.00
1  30544 30550  "1 "    0     # line from  ROSSTAP2 230.00   (2) to BRKR  MORAGA   230.00
 #
3  32901     0  "1"     0     # OAKLND 1  13.80       PGEN=50.00  QGEN=-7.88
0
 #
 #
 # (64)  L-1/G-1 OVERLAPPING OUTAGE
 # Lakeville - Sobrante 230 kV Line and Crockett Cogen
1  30435 30540  "2 "    0     # line from  LAKEVILE 230.00  BRKR to BRKR  SOBRANTE 230.00
 #
3  32900     0  "1"     0     # CRCKTCOG  18.00       PGEN=240.00  QGEN=32.83
0
 #
 #
 # (65)  L-1/G-1 OVERLAPPING OUTAGE
 # Pittsburg - Sobrante 230 kV Line and Crockett Cogen
1  30527 30540  "1 "    0     # line from  PITSBG E 230.00  BRKR to BRKR  SOBRANTE 230.00
 #
3  32900     0  "1"     0     # CRCKTCOG  18.00       PGEN=240.00  QGEN=32.83
0
 #
 #
 # (66)  L-1/G-1 OVERLAPPING OUTAGE
 # Tidewater - Sobrante 230 kV Line and Crockett Cogen
1  30535 30540  "1 "    0     # line from  TIDEWATR 230.00  BRKR to BRKR  SOBRANTE 230.00
 #
3  32900     0  "1"     0     # CRCKTCOG  18.00       PGEN=240.00  QGEN=32.83
0
 #
 #
 # (67)  B2 LINE OUTAGE (BREAKER-TO-BREAKER)
 #
1  30435 30540  "2 "    0     # line from  LAKEVILE 230.00  BRKR to BRKR  SOBRANTE 230.00
0
```

```
 #
 #
 # (68)  B2 LINE OUTAGE (BREAKER-TO-BREAKER)
 #
1  30437 30540  "1 "    0     # line from  CROCKETT 230.00   (3) to BRKR  SOBRANTE 230.00
1  30437 30438  "1 "    0     # line from  CROCKETT 230.00   (3) to (2)   C&H      230.00
1  30437 30445  "1 "    0     # line from  CROCKETT 230.00   (3) to BRKR  IGNACIO  230.00
2  30438 32900  "1 "    0     # TRAN from  C&H      230.00  BRKR to (1)   CRCKTCOG  18.00
4  30438     0  "1 "    0     # LOAD-DROP    C&H      230.00  LOAD==3.55(0.81)
3  32900     0  "1 "    0     # GEN-DROP    CRCKTCOG  18.00  GEN==240.00(27.73)
0
 #
 #
 # (69)  B2 LINE OUTAGE (BREAKER-TO-BREAKER)
 #
1  30465 30550  "1 "    0     # line from  BAHIA    230.00  BRKR to BRKR  MORAGA   230.00
0
 #
 #
 # (70)  B2 LINE OUTAGE (BREAKER-TO-BREAKER)
 #
1  30467 30550  "1 "    0     # line from  PARKWAY  230.00  BRKR to BRKR  MORAGA   230.00
0
 #
 #
 # (71)  B2 LINE OUTAGE (BREAKER-TO-BREAKER)
 #
1  30479 30523  "1 "    0     # line from  BDLSWSTA 230.00  BRKR to BRKR  CC SUB   230.00
0
 #
 #
 # (72)  B2 LINE OUTAGE (BREAKER-TO-BREAKER)
 #
1  30520 30525  "1 "    0     # line from  SECAL    230.00   (4) to BRKR  C.COSTA  230.00
2  30520 33118  "1 "    0     # TRAN from  SECAL    230.00   (4) to (1)   SECAL_1   18.00
2  30520 33119  "1 "    0     # TRAN from  SECAL    230.00   (4) to (1)   SECAL_2   18.00
2  30520 33120  "1 "    0     # TRAN from  SECAL    230.00   (4) to (1)   SECAL_3   18.00
3  33118     0  "1 "    0     # GEN-DROP    SECAL_1   18.00  GEN==200.00(14.78)
3  33119     0  "1 "    0     # GEN-DROP    SECAL_2   18.00  GEN==195.00(14.60)
3  33120     0  "1 "    0     # GEN-DROP    SECAL_3   18.00  GEN==195.00(14.60)
0
 #
 #
 # (73)  B2 LINE OUTAGE (BREAKER-TO-BREAKER)
 #
1  30523 30525  "1 "    0     # line from  CC SUB   230.00  BRKR to BRKR  C.COSTA  230.00
0
 #
 #
 # (74)  B2 LINE OUTAGE (BREAKER-TO-BREAKER)
 #
1  30525 30479  "1 "    0     # line from  C.COSTA  230.00  BRKR to BRKR  BDLSWSTA 230.00
0
 #
 #
 # (75)  B2 LINE OUTAGE (BREAKER-TO-BREAKER)
 #
1  30525 30543  "1 "    0     # line from  C.COSTA  230.00  BRKR to (3)   ROSSTAP1 230.00
1  30543 30545  "1 "    0     # line from  ROSSTAP1 230.00   (3) to BRKR  ROSSMOOR 230.00
1  30543 30550  "1 "    0     # line from  ROSSTAP1 230.00   (3) to BRKR  MORAGA   230.00
4  30545     0  "1 "    0     # LOAD-DROP    ROSSMOOR 230.00  LOAD==38.39(7.80)
4  30545     0  "2 "    0     # LOAD-DROP    ROSSMOOR 230.00  LOAD==35.63(7.24)
1  30544 30545  "1 "    1     # LINE-TRANSFER  ROSSTAP1  230.00  TO  ROSSTAP2  230.00
4  30545     0  "**"    1     # RESTORE ROSSMOOR load
0
 #
 #
 # (76)  B2 LINE OUTAGE (BREAKER-TO-BREAKER)
 #
1  30525 30544  "1 "    0     # line from  C.COSTA  230.00  BRKR to (2)   ROSSTAP2 230.00
1  30544 30550  "1 "    0     # line from  ROSSTAP2 230.00   (2) to BRKR  MORAGA   230.00
0
 #
 #
 # (77)  B2 LINE OUTAGE (BREAKER-TO-BREAKER)
 #
1  30525 30565  "1 "    0     # line from  C.COSTA  230.00  BRKR to BRKR  BRENTWOD 230.00
0
```

```
 #
 #
 # (78)  B2 LINE OUTAGE (BREAKER-TO-BREAKER)
 #
1  30525 30575  "1 "    0     # line from  C.COSTA  230.00  BRKR to (3)   WND MSTR 230.00
1  30575 38610  "1 "    0     # line from  WND MSTR 230.00   (3) to BRKR  DELTAPMP 230.00
2  30575 33170  "1 "    0     # TRAN from  WND MSTR 230.00   (3) to (1)   WINDMSTR   9.11
3  33170     0  "1 "    0     # GEN-DROP    WINDMSTR   9.11  GEN==38.00(0.00)
0
 #
 #
 # (79)  B2 LINE OUTAGE (BREAKER-TO-BREAKER)
 #
1  30525 30585  "1 "    0     # line from  C.COSTA  230.00  BRKR to BRKR  LS PSTAS 230.00
0
 #
 #
 # (80)  B2 LINE OUTAGE (BREAKER-TO-BREAKER)
 #
1  30525 30590  "1 "    0     # line from  C.COSTA  230.00  BRKR to (3)   USWP-JRW 230.00
1  30590 30530  "1 "    0     # line from  USWP-JRW 230.00   (3) to BRKR  CAYETANO 230.00
2  30590 33838  "1 "    0     # TRAN from  USWP-JRW 230.00   (3) to (1)   USWP_#3    9.11
4  33838     0  "SG"    0     # LOAD-DROP    USWP_#3    9.11  LOAD==0.50(0.20)
0
 #
 #
 # (81)  B2 LINE OUTAGE (BREAKER-TO-BREAKER)
 #
1  30526 30528  "1 "    0     # line from  PITSBG D 230.00  BRKR to BRKR  DEC PTSG 230.00
0
 #
 #
 # (82)  B2 LINE OUTAGE (BREAKER-TO-BREAKER)
 #
1  30526 30528  "2 "    0     # line from  PITSBG D 230.00  BRKR to BRKR  DEC PTSG 230.00
0
 #
 #
 # (83)  B2 LINE OUTAGE (BREAKER-TO-BREAKER)
 #
1  30526 30555  "1 "    0     # line from  PITSBG D 230.00  BRKR to BRKR  SANRAMON 230.00
0
 #
 #
 # (84)  B2 LINE OUTAGE (BREAKER-TO-BREAKER)
 #
1  30526 30561  "1 "    0     # line from  PITSBG D 230.00  BRKR to BRKR  TASSAJAR 230.00
0
 #
 #
 # (85)  B2 LINE OUTAGE (BREAKER-TO-BREAKER)
 #
1  30527 30535  "1 "    0     # line from  PITSBG E 230.00  BRKR to BRKR  TIDEWATR 230.00
0
 #
 #
 # (86)  B2 LINE OUTAGE (BREAKER-TO-BREAKER)
 #
1  30527 30540  "1 "    0     # line from  PITSBG E 230.00  BRKR to BRKR  SOBRANTE 230.00
0
 #
 #
 # (87)  B2 LINE OUTAGE (BREAKER-TO-BREAKER)
 #
1  30527 30560  "1 "    0     # line from  PITSBG E 230.00  BRKR to BRKR  E. SHORE 230.00
0
 #
 #
 # (88)  B2 LINE OUTAGE (BREAKER-TO-BREAKER)
 #
1  30527 30595  "1 "    0     # line from  PITSBG E 230.00  BRKR to (3)   FLOWIND2 230.00
1  30595 30640  "1 "    0     # line from  FLOWIND2 230.00   (3) to BRKR  TESLA C  230.00
2  30595 33840  "1 "    0     # TRAN from  FLOWIND2 230.00   (3) to (1)   FLOWD3-6   9.11
4  33840     0  "SG"    0     # LOAD-DROP    FLOWD3-6   9.11  LOAD==0.72(0.35)
3  33840     0  "1 "    0     # GEN-DROP    FLOWD3-6   9.11  GEN==17.60(0.00)
0
 #
 #
```

```
 # (89)  B2 LINE OUTAGE (BREAKER-TO-BREAKER)
 #
1  30527 30600  "1 "    0     # line from  PITSBG E 230.00  BRKR to (3)   TRES VAQ 230.00
1  30600 30640  "1 "    0     # line from  TRES VAQ 230.00   (3) to BRKR  TESLA C  230.00
2  30600 33171  "1 "    0     # TRAN from  TRES VAQ 230.00   (3) to (1)   TRSVQ+NW   9.11
0
 #
 #
 # (90)  B2 LINE OUTAGE
 #
1  30569 30570  "1 "    0     # line from  KELSO    230.00  BRKR to (4)   USWP-RLF 230.00
1  30570 30571  "1 "    0     # line from  USWP-RLF 230.00   (4) to (2)   ALTALAND 230.00
1  30570 30625  "1 "    0     # line from  USWP-RLF 230.00   (4) to BRKR  TESLA D  230.00
2  30570 33836  "1 "    0     # TRAN from  USWP-RLF 230.00   (4) to (1)   USWP_#4    9.11
2  30571 33832  "1 "    0     # TRAN from  ALTALAND 230.00   (2) to (1)   COG.CAPT   9.11
4  33836     0  "SG"    0     # LOAD-DROP    USWP_#4    9.11  LOAD==0.40(0.20)
3  33836     0  "3 "    0     # GEN-DROP    USWP_#4    9.11  GEN==4.50(0.00)
3  33832     0  "1 "    0     # GEN-DROP    COG.CAPT   9.11  GEN==4.30(3.93)
0
 #
 #
 # (91)  B2 LINE OUTAGE (BREAKER-TO-BREAKER)
 #
1  30527 30700  "1 "    0     # line from  PITSBG E 230.00  BRKR to BRKR  SANMATEO 230.00
0
 #
 #
 # (92)  B2 LINE OUTAGE (BREAKER-TO-BREAKER)
 #
1  30535 30540  "1 "    0     # line from  TIDEWATR 230.00  BRKR to BRKR  SOBRANTE 230.00
0
 #
 #
 # (93)  B2 LINE OUTAGE (BREAKER-TO-BREAKER)
 #
1  30550 30554  "1 "    0     # line from  MORAGA   230.00  BRKR to BRKR  CASTROVL 230.00
0
 #
 #
 # (94)  B2 LINE OUTAGE (BREAKER-TO-BREAKER)
 #
1  30550 30555  "1 "    0     # line from  MORAGA   230.00  BRKR to BRKR  SANRAMON 230.00
0
 #
 #
 # (95)  B2 LINE OUTAGE (BREAKER-TO-BREAKER)
 #
1  30561 30562  "1 "    0     # line from  TASSAJAR 230.00  BRKR to (3)   TES JCT  230.00
1  30562 30563  "1 "    0     # line from  TES JCT  230.00   (3) to BRKR  RESEARCH 230.00
1  30562 30631  "1 "    0     # line from  TES JCT  230.00   (3) to BRKR  NEWARK E 230.00
4  30563     0  "1 "    0     # LOAD-DROP    RESEARCH 230.00  LOAD==36.74(7.45)
0
 #
 #
 # (96)  B2 LINE OUTAGE (BREAKER-TO-BREAKER)
 #
1  30565 30569  "1 "    0     # line from  BRENTWOD 230.00  BRKR to BRKR  KELSO    230.00
0
 #
 #
 # (97)  B2 LINE OUTAGE (BREAKER-TO-BREAKER)
 #
1  32950 32970  "1 "    0     # line from  PITSBURG 115.00  BRKR to BRKR  CLAYTN   115.00
0
 #
 #
 # (98)  B2 LINE OUTAGE (BREAKER-TO-BREAKER)
 #
1  32950 32970  "4 "    0     # line from  PITSBURG 115.00  BRKR to BRKR  CLAYTN   115.00
0
 #
 #
 # (99)  B2 LINE OUTAGE (BREAKER-TO-BREAKER)
 #
1  32950 32978  "1 "    0     # line from  PITSBURG 115.00  BRKR to BRKR  LMEC     115.00
0
 #
 #
```

```
 # (100)  B2 LINE OUTAGE (BREAKER-TO-BREAKER)
 #
1  32950 32978  "2 "    0     # line from  PITSBURG 115.00  BRKR to BRKR  LMEC     115.00
0
 #
 #
 # (101)  B2 LINE OUTAGE (BREAKER-TO-BREAKER)
 #
1  32950 32992  "1 "    0     # line from  PITSBURG 115.00  BRKR to (2)   BOLLMAN2 115.00
1  32992 33043  "1 "    0     # line from  BOLLMAN2 115.00   (2) to (3)   IMHOFF_2 115.00
1  33043 32991  "1 "    0     # line from  IMHOFF_2 115.00   (3) to BRKR  MARTNZ E 115.00
1  33043 33041  "2 "    0     # line from  IMHOFF_2 115.00   (3) to (2)   IMHOFF   115.00
2  33041 33136  "1 "    0     # TRAN from  IMHOFF   115.00   (2) to (1)   CCCSD     12.47
4  33136     0  "SG"    0     # LOAD-DROP    CCCSD     12.47  LOAD==1.38(0.31)
3  33136     0  "1 "    0     # GEN-DROP    CCCSD     12.47  GEN==4.40(-0.12)
0
 #
 #
 # (102)  B2 LINE OUTAGE (BREAKER-TO-BREAKER)
 #
1  32950 32993  "1 "    0     # line from  PITSBURG 115.00  BRKR to (2)   W.P.BART 115.00
1  32993 33040  "1 "    0     # line from  W.P.BART 115.00   (2) to (3)   BOLLMAN1 115.00
1  33040 32994  "1 "    0     # line from  BOLLMAN1 115.00   (3) to (1)   BOLLMAN  115.00
1  33040 33042  "1 "    0     # line from  BOLLMAN1 115.00   (3) to (2)   IMHOFF_1 115.00
1  33042 32991  "1 "    0     # line from  IMHOFF_1 115.00   (2) to BRKR  MARTNZ E 115.00
4  32993     0  "1 "    0     # LOAD-DROP    W.P.BART 115.00  LOAD==8.80(1.79)
4  32994     0  "1 "    0     # LOAD-DROP    BOLLMAN  115.00  LOAD==2.13(1.12)
4  32994     0  "2 "    0     # LOAD-DROP    BOLLMAN  115.00  LOAD==2.13(1.12)
0
 #
 #
 # (103)  B2 LINE OUTAGE (BREAKER-TO-BREAKER)
 #
1  32950 33030  "1 "    0     # line from  PITSBURG 115.00  BRKR to (2)   COLSTJT1 115.00
1  33030 33036  "1 "    0     # line from  COLSTJT1 115.00   (2) to (3)   LINDETP1 115.00
1  33036 32954  "1 "    0     # line from  LINDETP1 115.00   (3) to (2)   DOW TAP1 115.00
1  33036 32961  "1 "    0     # line from  LINDETP1 115.00   (3) to (3)   GWF2 TAP 115.00
1  32954 32956  "1 "    0     # line from  DOW TAP1 115.00   (2) to (2)   DOW MTR  115.00
2  32956 33160  "1 "    0     # TRAN from  DOW MTR  115.00   (2) to (4)   DOW CHEM  13.80
1  33160 33161  "1 "    0     # line from  DOW CHEM  13.80   (4) to (1)   DOWCHEM1  13.80
1  33160 33162  "1 "    0     # line from  DOW CHEM  13.80   (4) to (1)   DOWCHEM2  13.80
1  33160 33163  "1 "    0     # line from  DOW CHEM  13.80   (4) to (1)   DOWCHEM3  13.80
1  32961 32960  "1 "    0     # line from  GWF2 TAP 115.00   (3) to (2)   GWF#2 HS 115.00
1  32961 33038  "1 "    0     # line from  GWF2 TAP 115.00   (3) to (2)   LINDEJCT 115.00
2  32960 33132  "1 "    0     # TRAN from  GWF#2 HS 115.00   (2) to (1)   GWF #2    13.80
1  33038 32957  "1 "    0     # line from  LINDEJCT 115.00   (2) to BRKR  PRAXAIR  115.00
4  33160     0  "SG"    0     # LOAD-DROP    DOW CHEM  13.80  LOAD==15.00(9.30)
4  33132     0  "SG"    0     # LOAD-DROP    GWF #2    13.80  LOAD==2.81(0.64)
4  32957     0  "1 "    0     # LOAD-DROP    PRAXAIR  115.00  LOAD==19.71(4.40)
3  33161     0  "1 "    0     # GEN-DROP    DOWCHEM1  13.80  GEN==15.30(5.84)
3  33162     0  "1 "    0     # GEN-DROP    DOWCHEM2  13.80  GEN==22.00(5.84)
3  33163     0  "1 "    0     # GEN-DROP    DOWCHEM3  13.80  GEN==22.00(5.84)
3  33132     0  "1 "    0     # GEN-DROP    GWF #2    13.80  GEN==12.30(3.97)
0
 #
 #
 # (104)  B2 LINE OUTAGE (BREAKER-TO-BREAKER)
 #
1  32950 33032  "3 "    0     # line from  PITSBURG 115.00  BRKR to (2)   KIRKTAP1 115.00
1  33032 32970  "3 "    0     # line from  KIRKTAP1 115.00   (2) to BRKR  CLAYTN   115.00
0
 #
 #
 # (105)  B2 LINE OUTAGE (BREAKER-TO-BREAKER)
 #
1  32950 33033  "1 "    0     # line from  PITSBURG 115.00  BRKR to (3)   KIRKTAP2 115.00
1  33033 32951  "1 "    0     # line from  KIRKTAP2 115.00   (3) to BRKR  KIRKER   115.00
1  33033 33031  "1 "    0     # line from  KIRKTAP2 115.00   (3) to (2)   COLSTJT2 115.00
1  33031 33037  "1 "    0     # line from  COLSTJT2 115.00   (2) to (2)   LINDETP2 115.00
1  33037 32955  "1 "    0     # line from  LINDETP2 115.00   (2) to (1)   DOW TAP2 115.00
4  32951     0  "1 "    0     # LOAD-DROP    KIRKER   115.00  LOAD==50.93(10.34)
4  32951     0  "2 "    0     # LOAD-DROP    KIRKER   115.00  LOAD==35.76(7.26)
4  32951     0  "3 "    0     # LOAD-DROP    KIRKER   115.00  LOAD==58.49(11.88)
1  33032 32951  "1 "    1     # LINE-TRANSFER  KIRKTAP2  115.00  TO KIRKTAP1
4  32951 0      "**"    1     # RESTORE KIRKER load
0
 #
 #
```

```
 # (106)  B2 LINE OUTAGE (BREAKER-TO-BREAKER)
 #
1  32970 32971  "1 "    0     # line from  CLAYTN   115.00  BRKR to BRKR  MEDW LNE 115.00
0
 #
 #
 # (107)  B2 LINE OUTAGE (BREAKER-TO-BREAKER)
 #
1  32970 32974  "2 "    0     # line from  CLAYTN   115.00  BRKR to BRKR  LAKEWD-M 115.00
0
 #
 #
 # (108)  B2 LINE OUTAGE (BREAKER-TO-BREAKER)
 #
1  32970 33035  "1 "    0     # line from  CLAYTN   115.00  BRKR to (3)   LKWD_JCT 115.00
1  33035 32972  "1 "    0     # line from  LKWD_JCT 115.00   (3) to (2)   EBMUDGRY 115.00
1  33035 32973  "1 "    0     # line from  LKWD_JCT 115.00   (3) to BRKR  LAKEWD-C 115.00
1  32972 32971  "1 "    0     # line from  EBMUDGRY 115.00   (2) to BRKR  MEDW LNE 115.00
4  32972     0  "1 "    0     # LOAD-DROP    EBMUDGRY 115.00  LOAD==5.62(1.85)
0
 #
 #
 # (109)  B2 LINE OUTAGE (BREAKER-TO-BREAKER)
 #
1  32974 32976  "9 "    0     # line from  LAKEWD-M 115.00  BRKR to (2)   LK_REACT 115.00
1  32976 33020  "1 "    0     # line from  LK_REACT 115.00   (2) to BRKR  MORAGA   115.00
0
 #
 #
 # (110)  B2 LINE OUTAGE (BREAKER-TO-BREAKER)
 #
1  32990 33014  "1 "    0     # line from  MARTNZ D 115.00  BRKR to (3)   ALHAMTP1 115.00
1  33014 33010  "1 "    0     # line from  ALHAMTP1 115.00   (3) to BRKR  SOBRANTE 115.00
1  33014 33011  "1 "    0     # line from  ALHAMTP1 115.00   (3) to BRKR  ALHAMBRA 115.00
4  33011     0  "1 "    0     # LOAD-DROP    ALHAMBRA 115.00  LOAD==13.87(2.82)
4  33011     0  "2 "    0     # LOAD-DROP    ALHAMBRA 115.00  LOAD==7.93(1.61)
1  33016 33011  "1 "    1     # LINE-TRANSFER  ALHAMTP1  115.00  TO  ALHAMTP2  115.00
4  33011     0  "**"    1     # RESTORE ALHAMBRA load
0
 #
 #
 #
 # (111)  B2 LINE OUTAGE (BREAKER-TO-BREAKER)
 #
1  32996 32990  "1 "    0     # line from  SHELLJ1  115.00   (3) to BRKR  MARTNZ D 115.00
2  32996 33141  "7 "    0     # TRAN from  SHELLJ1  115.00   (3) to BRKR  SHELL 1   12.47
2  32996 33143  "6 "    0     # TRAN from  SHELLJ1  115.00   (3) to BRKR  SHELL 3   12.47
0
 #
 #
 # (112)  B2 LINE OUTAGE (BREAKER-TO-BREAKER)
 #
1  32997 32991  "1 "    0     # line from  SHELLJ2  115.00   (3) to BRKR  MARTNZ E 115.00
2  32997 33141  "6 "    0     # TRAN from  SHELLJ2  115.00   (3) to BRKR  SHELL 1   12.47
2  32997 33143  "7 "    0     # TRAN from  SHELLJ2  115.00   (3) to BRKR  SHELL 3   12.47
0
 #
 #
 # (113)  B2 LINE OUTAGE (BREAKER-TO-BREAKER)
 #
1  33000 33046  "1 "    0     # line from  CC SUB   115.00  BRKR to (3)   FIBRJCT2 115.00
1  33046 33001  "1 "    0     # line from  FIBRJCT2 115.00   (3) to BRKR  DOMTAR   115.00
1  33046 33044  "1 "    0     # line from  FIBRJCT2 115.00   (3) to (2)   FIBRBJCT 115.00
1  33044 33002  "1 "    0     # line from  FIBRBJCT 115.00   (2) to (3)   CROWN Z  115.00
2  33002 33133  "1 "    0     # TRAN from  CROWN Z  115.00   (3) to (1)   GWF #3    13.80
2  33002 33145  "1 "    0     # TRAN from  CROWN Z  115.00   (3) to (1)   CROWN.Z.  13.80
4  33001     0  "1 "    0     # LOAD-DROP    DOMTAR   115.00  LOAD==2.38(2.10)
4  33133     0  "SG"    0     # LOAD-DROP    GWF #3    13.80  LOAD==2.63(0.60)
4  33145     0  "SG"    0     # LOAD-DROP    CROWN.Z.  13.80  LOAD==20.70(6.80)
3  33133     0  "1 "    0     # GEN-DROP    GWF #3    13.80  GEN==19.00(2.77)
3  33145     0  "1 "    0     # GEN-DROP    CROWN.Z.  13.80  GEN==40.00(-7.80)
3  33145     0  "2 "    0     # GEN-DROP    CROWN.Z.  13.80  GEN==5.40(-1.05)
0
 #
 #
 # (114)  B2 LINE OUTAGE (BREAKER-TO-BREAKER)
 #
1  33000 33047  "1 "    0     # line from  CC SUB   115.00  BRKR to (2)   CC JCT   115.00
```

```
1  33047 33045  "1 "    0     # line from  CC JCT   115.00   (2) to (2)   FIBRJCT1 115.00
1  33045 33048  "1 "    0     # line from  FIBRJCT1 115.00   (2) to (2)   RVECTP   115.00
1  33048 33049  "1 "    0     # line from  RVECTP   115.00   (2) to BRKR  RVEC     115.00
0
 #
 #
 # (115)  B2 LINE OUTAGE (BREAKER-TO-BREAKER)
 #
1  33020 33010  "1 "    0     # line from  MORAGA   115.00  BRKR to BRKR  SOBRANTE 115.00
0
 #
 #
 # (116)  B2 LINE OUTAGE (BREAKER-TO-BREAKER)
 #
1  33020 35101  "1 "    0     # line from  MORAGA   115.00  BRKR to BRKR  SN LNDRO 115.00
0
 #
 #
 # (117)  B2 LINE OUTAGE (BREAKER-TO-BREAKER)
 #
1  33020 35101  "2 "    0     # line from  MORAGA   115.00  BRKR to BRKR  SN LNDRO 115.00
0
 #
 #
 # (118)  B2 LINE OUTAGE (BREAKER-TO-BREAKER)
 #
1  33020 35101  "3 "    0     # line from  MORAGA   115.00  BRKR to BRKR  SN LNDRO 115.00
0
 #
 #
 # (119)  B2 LINE OUTAGE (BREAKER-TO-BREAKER)
 #
1  33050 33080  "1 "    0     # line from  CC SUB    60.00  BRKR to (3)   WILBRTAP  60.00
1  33080 33051  "1 "    0     # line from  WILBRTAP  60.00   (3) to BRKR  DU PONT   60.00
2  33080 33134  "1 "    0     # TRAN from  WILBRTAP  60.00   (3) to (1)   GWF #4    13.80
4  33051     0  "1 "    0     # LOAD-DROP    DU PONT   60.00  LOAD==2.00(2.16)
4  33134     0  "SG"    0     # LOAD-DROP    GWF #4    13.80  LOAD==3.02(0.69)
3  33134     0  "1 "    0     # GEN-DROP    GWF #4    13.80  GEN==18.60(2.40)
1  33051 33081  "1 "    1     # LINE-TRANSFER  WILBRTAP  60.00  TO  DUPNTJCT  60.00
4  33051     0  "**"    1     # RESTORE DU PONT load
0
 #
 #
 # (120)  B2 LINE OUTAGE (BREAKER-TO-BREAKER)
 #
1  33050 33081  "1 "    0     # line from  CC SUB    60.00  BRKR to (2)   DUPNTJCT  60.00
1  33081 33082  "1 "    0     # line from  DUPNTJCT  60.00   (2) to (3)   BALFRJCT  60.00
1  33082 33052  "1 "    0     # line from  BALFRJCT  60.00   (3) to (2)   MARSH     60.00
1  33082 33054  "1 "    0     # line from  BALFRJCT  60.00   (3) to BRKR  BALFOUR   60.00
1  33052 33053  "1 "    0     # line from  MARSH     60.00   (2) to (1)   BRIONES   60.00
4  33054     0  "1 "    0     # LOAD-DROP    BALFOUR   60.00  LOAD==4.00(0.91)
4  33053     0  "1 "    0     # LOAD-DROP    BRIONES   60.00  LOAD==3.65(1.73)
1  33083 33054  "1 "    1     # LINE-TRANSFER  BALFRJCT  60.00  TO  MDLRVRJT  60.00
4  33054     0  "**"    1     # RESTORE BALFOUR load
0
 #
 #
 # (121)  B2 LINE OUTAGE (BREAKER-TO-BREAKER)
 #
1  33055 33084  "1 "    0     # line from  BIXLER    60.00   (1) to (3)   BXLR_TAP  60.00
1  33084 33083  "1 "    0     # line from  BXLR_TAP  60.00   (3) to (2)   MDLRVRJT  60.00
1  33084 33778  "1 "    0     # line from  BXLR_TAP  60.00   (3) to (2)   MDL_RIVR  60.00
1  33083 33774  "1 "    0     # line from  MDLRVRJT  60.00   (2) to (3)   HRDLNJCT  60.00
1  33774 33770  "1 "    0     # line from  HRDLNJCT  60.00   (3) to BRKR  HERDLYN   60.00
1  33774 33782  "1 "    0     # line from  HRDLNJCT  60.00   (3) to (1)   WEST SDE  60.00
1  33778 33780  "1 "    0     # line from  MDL_RIVR  60.00   (2) to (1)   MCD_ISLE  60.00
4  33055     0  "1 "    0     # LOAD-DROP    BIXLER    60.00  LOAD==2.00(0.97)
4  33778     0  "1 "    0     # LOAD-DROP    MDL_RIVR  60.00  LOAD==3.38(0.00)
4  33782     0  "1 "    0     # LOAD-DROP    WEST SDE  60.00  LOAD==1.90(0.40)
4  33780     0  "1 "    0     # LOAD-DROP    MCD_ISLE  60.00  LOAD==6.56(1.46)
0
 #
 #
 # (122)  B2 LINE OUTAGE (BREAKER-TO-BREAKER)
 #
1  33060 33050  "1 "    0     # line from  ANTIOCH   60.00   (1) to BRKR  CC SUB    60.00
4  33060     0  "1 "    0     # LOAD-DROP    ANTIOCH   60.00  LOAD==4.40(1.00)
0
```

```
 #
 #
 # (123)  B2 LINE OUTAGE (BREAKER-TO-BREAKER)
 #
1  33062 33090  "1 "    0     # line from  SHLL CHM  60.00   (2) to (3)   SHLLCHMT  60.00
1  33062 33063  "1 "    0     # line from  SHLL CHM  60.00   (2) to BRKR  WLLW PSS  60.00
1  33090 33050  "1 "    0     # line from  SHLLCHMT  60.00   (3) to BRKR  CC SUB    60.00
1  33090 33061  "1 "    0     # line from  SHLLCHMT  60.00   (3) to (2)   PITTSBRG  60.00
2  33061 33131  "1 "    0     # TRAN from  PITTSBRG  60.00   (2) to (1)   GWF #1     9.11
4  33062     0  "1 "    0     # LOAD-DROP    SHLL CHM  60.00  LOAD==2.48(1.54)
4  33063     0  "1 "    0     # LOAD-DROP    WLLW PSS  60.00  LOAD==8.28(1.68)
4  33061     0  "1 "    0     # LOAD-DROP    PITTSBRG  60.00  LOAD==1.20(0.27)
4  33131     0  "SG"    0     # LOAD-DROP    GWF #1     9.11  LOAD==2.43(0.55)
3  33131     0  "1 "    0     # GEN-DROP    GWF #1     9.11  GEN==12.70(-4.66)
1  33091 33063  "1 "    1     # LINE-TRANSFER  SHLL CHM  60.00  TO  TAP GWF5  60.00
4  33063     0  "**"    1     # RESTORE WILLOW PASS load
0
 #
 #
 # (124)  B3 TRANSFORMER OUTAGE (BREAKER-TO-BREAKER)
 #
2  33000 30523  "3 "    0     # TRAN from  CC SUB   115.00  BRKR to BRKR  CC SUB   230.00
0
 #
 #
 # (125)  B3 TRANSFORMER OUTAGE (BREAKER-TO-BREAKER)
 #
2  32950 30526  "12"    0     # TRAN from  PITSBURG 115.00  BRKR to BRKR  PITSBG D 230.00
0
 #
 #
 # (126)  B3 TRANSFORMER OUTAGE (BREAKER-TO-BREAKER)
 #
2  32950 30526  "13"    0     # TRAN from  PITSBURG 115.00  BRKR to BRKR  PITSBG D 230.00
0
 #
 #
 # (127)  B3 TRANSFORMER OUTAGE (BREAKER-TO-BREAKER)
 #
2  33010 30540  "1 "    0     # TRAN from  SOBRANTE 115.00  BRKR to BRKR  SOBRANTE 230.00
0
 #
 #
 # (128)  B3 TRANSFORMER OUTAGE (BREAKER-TO-BREAKER)
 #
2  33010 30540  "2 "    0     # TRAN from  SOBRANTE 115.00  BRKR to BRKR  SOBRANTE 230.00
0
 #
 #
 # (129)  B3 TRANSFORMER OUTAGE (BREAKER-TO-BREAKER)
 #
2  30550 30551  "1 "    0     # TRAN from  MORAGA   230.00  BRKR to (3)   MRAGA 1M 230.00
2  30551 33020  "1 "    0     # TRAN from  MRAGA 1M 230.00   (3) to BRKR  MORAGA   115.00
2  30551 33121  "1 "    0     # TRAN from  MRAGA 1M 230.00   (3) to (1)   MRAGA 1T  13.20
0
 #
 #
 # (130)  B3 TRANSFORMER OUTAGE (BREAKER-TO-BREAKER)
 #
2  30550 30552  "2 "    0     # TRAN from  MORAGA   230.00  BRKR to (3)   MRAGA 2M 230.00
2  30552 33020  "2 "    0     # TRAN from  MRAGA 2M 230.00   (3) to BRKR  MORAGA   115.00
2  30552 33122  "2 "    0     # TRAN from  MRAGA 2M 230.00   (3) to (1)   MRAGA 2T  13.20
0
 #
 #
 # (131)  B3 TRANSFORMER OUTAGE (BREAKER-TO-BREAKER)
 #
2  30550 30553  "3 "    0     # TRAN from  MORAGA   230.00  BRKR to (3)   MRAGA 3M 230.00
2  30553 33020  "3 "    0     # TRAN from  MRAGA 3M 230.00   (3) to BRKR  MORAGA   115.00
2  30553 33123  "3 "    0     # TRAN from  MRAGA 3M 230.00   (3) to (1)   MRAGA 3T  13.20
0
 #
 #
 # (132)  B3 TRANSFORMER OUTAGE (BREAKER-TO-BREAKER)
 #
2  33050 33000  "1 "    0     # TRAN from  CC SUB    60.00  BRKR to BRKR  CC SUB   115.00
0
 #
```

```
 #
 # (133)  B3 TRANSFORMER OUTAGE (BREAKER-TO-BREAKER)
 #
2  32990 33142  "2 "    0     # TRAN from  MARTNZ D 115.00  BRKR to BRKR  SHELL 2   12.47
0
 #
 #
 # (134)  B3 TRANSFORMER OUTAGE (BREAKER-TO-BREAKER)
 #
2  32991 33142  "1 "    0     # TRAN from  MARTNZ E 115.00  BRKR to BRKR  SHELL 2   12.47
0
 #
 #
 # (135)  B1 GENERATOR OUTAGE
 #
3  33118     0  "1"     0     # SECAL_1   18.00       PGEN=200.00  QGEN=14.78
0
 #
 #
 # (136)  B1 GENERATOR OUTAGE
 #
3  33119     0  "1"     0     # SECAL_2   18.00       PGEN=195.00  QGEN=14.60
0
 #
 #
 # (137)  B1 GENERATOR OUTAGE
 #
3  33120     0  "1"     0     # SECAL_3   18.00       PGEN=195.00  QGEN=14.60
0
 #
 #
 # (138)  B1 GENERATOR OUTAGE
 #
3  38820     0  "3"     0     # DELTA A   13.20       PGEN=-26.00  QGEN=0.00
0
 #
 #
 # (139)  B1 GENERATOR OUTAGE
 #
3  38815     0  "4"     0     # DELTA B   13.20       PGEN=-26.00  QGEN=0.00
0
 #
 #
 # (140)  B1 GENERATOR OUTAGE
 #
3  38815     0  "5"     0     # DELTA B   13.20       PGEN=-26.00  QGEN=0.00
0
 #
 #
 # (141)  B1 GENERATOR OUTAGE
 #
3  38770     0  "7"     0     # DELTA C   13.20       PGEN=-18.00  QGEN=0.00
0
 #
 #
 # (142)  B1 GENERATOR OUTAGE
 #
3  33178     0  "1"     0     # RVEC_GEN  13.80       PGEN=50.00  QGEN=-2.05
0
 #
 #
 # (143)  B1 GENERATOR OUTAGE
 #
3  33110     0  "1"     0     # DEC CTG3  18.00       PGEN=200.00  QGEN=45.37
0
 #
 #
 # (144)  B1 GENERATOR OUTAGE
 #
3  33109     0  "1"     0     # DEC CTG2  18.00       PGEN=200.00  QGEN=45.37
0
 #
 #
 # (145)  B1 GENERATOR OUTAGE
 #
3  33108     0  "1"     0     # DEC CTG1  18.00       PGEN=200.00  QGEN=45.37
0
 #
```

```
 #
 # (146)  B1 GENERATOR OUTAGE
 # steam turbine outage takes out entire plant
3  33108     0  "1"     0     # DEC CTG1  18.00       PGEN=200.00  QGEN=45.37
3  33109     0  "1"     0     # DEC CTG2  18.00       PGEN=200.00  QGEN=45.37
3  33110     0  "1"     0     # DEC CTG3  18.00       PGEN=200.00  QGEN=45.37
3  33107     0  "1"     0     # DEC STG1  24.00       PGEN=280.00  QGEN=63.67
0
 #
 #
 # (147)  B1 GENERATOR OUTAGE
 #
3  33113     0  "1"     0     # LMECST1   18.00       PGEN=200.00  QGEN=-0.43
0
 #
 #
 # (148)  B1 GENERATOR OUTAGE
 #
3  33112     0  "1"     0     # LMECCT1   18.00       PGEN=150.00  QGEN=-4.54
0
 #
 #
 # (149)  B1 GENERATOR OUTAGE
 #
3  33111     0  "1"     0     # LMECCT2   18.00       PGEN=150.00  QGEN=-4.54
0
 #
 #
 # (150)  B1 GENERATOR OUTAGE
 #
3  33134     0  "1"     0     # GWF #4    13.80       PGEN=18.58  QGEN=2.57
0
 #
 #
 # (151)  B1 GENERATOR OUTAGE
 #
3  33141     0  "1"     0     # SHELL 1   12.47       PGEN=20.00  QGEN=-1.40
0
 #
 #
 # (152)  B1 GENERATOR OUTAGE
 #
3  33122     0  "1"     0     # MRAGA 2T  13.20       PGEN=0.00  QGEN=48.00
0
 #
 #
 # (153)  B1 GENERATOR OUTAGE
 #
3  33123     0  "1"     0     # MRAGA 3T  13.20       PGEN=0.00  QGEN=48.00
0
 #
 #
 # (154)  B1 GENERATOR OUTAGE
 #
3  33143     0  "1"     0     # SHELL 3   12.47       PGEN=40.00  QGEN=-1.48
0
 #
 #
 # (155)  B1 GENERATOR OUTAGE
 #
3  33121     0  "1"     0     # MRAGA 1T  13.20       PGEN=0.00  QGEN=48.00
0
 #
 #
 # (156)  B1 GENERATOR OUTAGE
 #
3  33142     0  "1"     0     # SHELL 2   12.47       PGEN=40.00  QGEN=-2.08
0
 #
 #
 # (157)  B1 GENERATOR OUTAGE
 #
3  33132     0  "1"     0     # GWF #2    13.80       PGEN=12.33  QGEN=3.00
0
 #
 #
 # (158)  B1 GENERATOR OUTAGE
 #
```

```
3  33114     0  "1"     0     # C.COS 4   13.80       PGEN=0.00  QGEN=26.88
0
 #
 #
 # (159)  B1 GENERATOR OUTAGE
 #
3  33115     0  "1"     0     # C.COS 5   13.80       PGEN=0.00  QGEN=36.29
0
 #
 #
 # (160)  B1 GENERATOR OUTAGE
 #
3  33116     0  "1"     0     # C.COS 6   18.00       PGEN=330.00  QGEN=99.38
0
 #
 #
 # (161)  B1 GENERATOR OUTAGE
 #
3  33117     0  "1"     0     # C.COS 7   18.00       PGEN=330.00  QGEN=99.38
0
 #
 #
 # (162)  B1 GENERATOR OUTAGE
 #
3  33105     0  "1"     0     # PTSB  5   18.00       PGEN=310.00  QGEN=93.63
0
 #
 #
 # (163)  B1 GENERATOR OUTAGE
 #
3  33106     0  "1"     0     # PTSB  6   18.00       PGEN=310.00  QGEN=86.91
0
 #
 #
 # (164)  B1 GENERATOR OUTAGE
 #
3  30000     0  "1"     0     # PTSB  7   20.00       PGEN=710.00  QGEN=147.94
0
 #
 #
 # (165)  B1 GENERATOR OUTAGE
 #
3  33151     0  "1"     0     # FOSTER W  12.47       PGEN=45.40  QGEN=23.62
0
 #
 #
 # (166)  B1 GENERATOR OUTAGE
 #
3  33151     0  "2"     0     # FOSTER W  12.47       PGEN=45.40  QGEN=23.62
0
 #
 #
 # (167)  B1 GENERATOR OUTAGE
 #
3  33151     0  "3"     0     # FOSTER W  12.47       PGEN=35.00  QGEN=18.21
0
 #
 #
 # (168)  B1 GENERATOR OUTAGE
 #
3  33161     0  "1"     0     # DOWCHEM1  13.80       PGEN=15.30  QGEN=5.51
0
 #
 #
 # (169)  B1 GENERATOR OUTAGE
 #
3  33133     0  "1"     0     # GWF #3    13.80       PGEN=19.03  QGEN=3.02
0
 #
 #
 # (170)  B1 GENERATOR OUTAGE
 #
3  33145     0  "1"     0     # CROWN.Z.  13.80       PGEN=40.00  QGEN=-7.16
0
 #
 #
 # (171)  B1 GENERATOR OUTAGE
 #
```

```
3  33145     0  "2"     0     # CROWN.Z.  13.80       PGEN=5.40  QGEN=-0.97
0
 #
 #
 # (172)  B1 GENERATOR OUTAGE
 #
3  33139     0  "1"     0     # STAUFER    9.11       PGEN=1.95  QGEN=-1.00
0
 #
 #
 # (173)  B1 GENERATOR OUTAGE
 #
3  33131     0  "1"     0     # GWF #1     9.11       PGEN=12.74  QGEN=-4.38
0
 #
 #
 # (174)  B1 GENERATOR OUTAGE
 #
3  33135     0  "1"     0     # GWF #5    13.80       PGEN=18.94  QGEN=1.96
0
 #
 #
 # (175)  B1 GENERATOR OUTAGE
 #
3  33162     0  "1"     0     # DOWCHEM2  13.80       PGEN=22.00  QGEN=5.51
0
 #
 #
 # (176)  B1 GENERATOR OUTAGE
 #
3  33163     0  "1"     0     # DOWCHEM3  13.80       PGEN=22.00  QGEN=5.51
0
 #
 #
 # (177)  B1 GENERATOR OUTAGE
 #
3  33136     0  "1"     0     # CCCSD     12.47       PGEN=4.40  QGEN=-0.20
0
 #
 #
 # (178)  L-1/G-1 OVERLAPPING OUTAGE
 # Lakeville - Sobrante 230 kV Line and DEC outage
1  30435 30540  "2 "    0     # line from  LAKEVILE 230.00  BRKR to BRKR  SOBRANTE 230.00
 # steam turbine outage takes out entire plant
3  33108     0  "1"     0     # DEC CTG1  18.00       PGEN=200.00  QGEN=45.37
3  33109     0  "1"     0     # DEC CTG2  18.00       PGEN=200.00  QGEN=45.37
3  33110     0  "1"     0     # DEC CTG3  18.00       PGEN=200.00  QGEN=45.37
3  33107     0  "1"     0     # DEC STG1  24.00       PGEN=280.00  QGEN=63.67
0
 #
 #
 # (179)  L-1/G-1 OVERLAPPING OUTAGE
 # Ignacio - Sobrante 230 kV Line and DEC outage
1  30437 30540  "1 "    0     # line from  CROCKETT 230.00   (3) to BRKR  SOBRANTE 230.00
1  30437 30438  "1 "    0     # line from  CROCKETT 230.00   (3) to (2)   C&H      230.00
1  30437 30445  "1 "    0     # line from  CROCKETT 230.00   (3) to BRKR  IGNACIO  230.00
2  30438 32900  "1 "    0     # TRAN from  C&H      230.00  BRKR to (1)   CRCKTCOG  18.00
4  30438     0  "1 "    0     # LOAD-DROP    C&H      230.00  LOAD==3.55(0.81)
3  32900     0  "1 "    0     # GEN-DROP    CRCKTCOG  18.00  GEN==240.00(27.73)
 # steam turbine outage takes out entire plant
3  33108     0  "1"     0     # DEC CTG1  18.00       PGEN=200.00  QGEN=45.37
3  33109     0  "1"     0     # DEC CTG2  18.00       PGEN=200.00  QGEN=45.37
3  33110     0  "1"     0     # DEC CTG3  18.00       PGEN=200.00  QGEN=45.37
3  33107     0  "1"     0     # DEC STG1  24.00       PGEN=280.00  QGEN=63.67
0
 #
 #
 # (180)  L-1/G-1 OVERLAPPING OUTAGE
 # Pittsburg - San Ramon 230 kV Line and DEC outage
1  30526 30555  "1 "    0     # line from  PITSBG D 230.00  BRKR to BRKR  SANRAMON 230.00
 # steam turbine outage takes out entire plant
3  33108     0  "1"     0     # DEC CTG1  18.00       PGEN=200.00  QGEN=45.37
3  33109     0  "1"     0     # DEC CTG2  18.00       PGEN=200.00  QGEN=45.37
3  33110     0  "1"     0     # DEC CTG3  18.00       PGEN=200.00  QGEN=45.37
3  33107     0  "1"     0     # DEC STG1  24.00       PGEN=280.00  QGEN=63.67
0
 #
 #
```

```
 # (181)  L-1/G-1 OVERLAPPING OUTAGE
 # Pittsburg - Tassajara 230 kV Line and DEC outage
1  30526 30561  "1 "    0     # line from  PITSBG D 230.00  BRKR to BRKR  TASSAJAR 230.00
 # steam turbine outage takes out entire plant
3  33108     0  "1"     0     # DEC CTG1  18.00       PGEN=200.00  QGEN=45.37
3  33109     0  "1"     0     # DEC CTG2  18.00       PGEN=200.00  QGEN=45.37
3  33110     0  "1"     0     # DEC CTG3  18.00       PGEN=200.00  QGEN=45.37
3  33107     0  "1"     0     # DEC STG1  24.00       PGEN=280.00  QGEN=63.67
0
 #
 #
 # (182)  L-1/G-1 OVERLAPPING OUTAGE
 # Pittsburg - Tidewater 230 kV Line and DEC outage
1  30527 30535  "1 "    0     # line from  PITSBG E 230.00  BRKR to BRKR  TIDEWATR 230.00
 # steam turbine outage takes out entire plant
3  33108     0  "1"     0     # DEC CTG1  18.00       PGEN=200.00  QGEN=45.37
3  33109     0  "1"     0     # DEC CTG2  18.00       PGEN=200.00  QGEN=45.37
3  33110     0  "1"     0     # DEC CTG3  18.00       PGEN=200.00  QGEN=45.37
3  33107     0  "1"     0     # DEC STG1  24.00       PGEN=280.00  QGEN=63.67
0
 #
 #
 # (183)  L-1/G-1 OVERLAPPING OUTAGE
 # Pittsburg - Sobrante 230 kV Line and DEC outage
1  30527 30540  "1 "    0     # line from  PITSBG E 230.00  BRKR to BRKR  SOBRANTE 230.00
 # steam turbine outage takes out entire plant
3  33108     0  "1"     0     # DEC CTG1  18.00       PGEN=200.00  QGEN=45.37
3  33109     0  "1"     0     # DEC CTG2  18.00       PGEN=200.00  QGEN=45.37
3  33110     0  "1"     0     # DEC CTG3  18.00       PGEN=200.00  QGEN=45.37
3  33107     0  "1"     0     # DEC STG1  24.00       PGEN=280.00  QGEN=63.67
0
 #
 #
 # (184)  L-1/G-1 OVERLAPPING OUTAGE
 # Pittsburg - East Shore 230 kV Line and DEC outage
1  30527 30560  "1 "    0     # line from  PITSBG E 230.00  BRKR to BRKR  E. SHORE 230.00
 # steam turbine outage takes out entire plant
3  33108     0  "1"     0     # DEC CTG1  18.00       PGEN=200.00  QGEN=45.37
3  33109     0  "1"     0     # DEC CTG2  18.00       PGEN=200.00  QGEN=45.37
3  33110     0  "1"     0     # DEC CTG3  18.00       PGEN=200.00  QGEN=45.37
3  33107     0  "1"     0     # DEC STG1  24.00       PGEN=280.00  QGEN=63.67
0
 #
 #
 # (185)  L-1/G-1 OVERLAPPING OUTAGE
 # Pittsburg - Tesla #1 230 kV Line and DEC outage
1  30527 30595  "1 "    0     # line from  PITSBG E 230.00  BRKR to (3)   FLOWIND2 230.00
1  30595 30640  "1 "    0     # line from  FLOWIND2 230.00   (3) to BRKR  TESLA C  230.00
2  30595 33840  "1 "    0     # TRAN from  FLOWIND2 230.00   (3) to (1)   FLOWD3-6   9.11
4  33840     0  "SG"    0     # LOAD-DROP    FLOWD3-6   9.11  LOAD==0.72(0.35)
3  33840     0  "1 "    0     # GEN-DROP    FLOWD3-6   9.11  GEN==17.60(0.00)
 # steam turbine outage takes out entire plant
3  33108     0  "1"     0     # DEC CTG1  18.00       PGEN=200.00  QGEN=45.37
3  33109     0  "1"     0     # DEC CTG2  18.00       PGEN=200.00  QGEN=45.37
3  33110     0  "1"     0     # DEC CTG3  18.00       PGEN=200.00  QGEN=45.37
3  33107     0  "1"     0     # DEC STG1  24.00       PGEN=280.00  QGEN=63.67
0
 #
 #
 # (186)  L-1/G-1 OVERLAPPING OUTAGE
 # Pittsburg - Tesla #2 230 kV Line and DEC outage
1  30527 30600  "1 "    0     # line from  PITSBG E 230.00  BRKR to (3)   TRES VAQ 230.00
1  30600 30640  "1 "    0     # line from  TRES VAQ 230.00   (3) to BRKR  TESLA C  230.00
2  30600 33171  "1 "    0     # TRAN from  TRES VAQ 230.00   (3) to (1)   TRSVQ+NW   9.11
 # steam turbine outage takes out entire plant
3  33108     0  "1"     0     # DEC CTG1  18.00       PGEN=200.00  QGEN=45.37
3  33109     0  "1"     0     # DEC CTG2  18.00       PGEN=200.00  QGEN=45.37
3  33110     0  "1"     0     # DEC CTG3  18.00       PGEN=200.00  QGEN=45.37
3  33107     0  "1"     0     # DEC STG1  24.00       PGEN=280.00  QGEN=63.67
0
 #
 #
 # (187)  L-1/G-1 OVERLAPPING OUTAGE
 # Pittsburg - San Mateo 230 kV Line and DEC outage
1  30527 30700  "1 "    0     # line from  PITSBG E 230.00  BRKR to BRKR  SANMATEO 230.00
 # steam turbine outage takes out entire plant
3  33108     0  "1"     0     # DEC CTG1  18.00       PGEN=200.00  QGEN=45.37
3  33109     0  "1"     0     # DEC CTG2  18.00       PGEN=200.00  QGEN=45.37
```

```
3  33110     0  "1"     0     # DEC CTG3  18.00       PGEN=200.00  QGEN=45.37
3  33107     0  "1"     0     # DEC STG1  24.00       PGEN=280.00  QGEN=63.67
0
 #
 #
 # (188)  L-1/G-1 OVERLAPPING OUTAGE
 # Tidewater - Sobrante 230 kV Line and DEC outage
1  30535 30540  "1 "    0     # line from  TIDEWATR 230.00  BRKR to BRKR  SOBRANTE 230.00
 # steam turbine outage takes out entire plant
3  33108     0  "1"     0     # DEC CTG1  18.00       PGEN=200.00  QGEN=45.37
3  33109     0  "1"     0     # DEC CTG2  18.00       PGEN=200.00  QGEN=45.37
3  33110     0  "1"     0     # DEC CTG3  18.00       PGEN=200.00  QGEN=45.37
3  33107     0  "1"     0     # DEC STG1  24.00       PGEN=280.00  QGEN=63.67
0
 #
 #
 # (189)  L-1/G-1 OVERLAPPING OUTAGE
 # Tassajara - Newark 230 kV Line and DEC outage
1  30561 30562  "1 "    0     # line from  TASSAJAR 230.00  BRKR to (3)   TES JCT  230.00
1  30562 30563  "1 "    0     # line from  TES JCT  230.00   (3) to BRKR  RESEARCH 230.00
1  30562 30631  "1 "    0     # line from  TES JCT  230.00   (3) to BRKR  NEWARK E 230.00
4  30563     0  "1 "    0     # LOAD-DROP    RESEARCH 230.00  LOAD==36.74(7.45)
 # steam turbine outage takes out entire plant
3  33108     0  "1"     0     # DEC CTG1  18.00       PGEN=200.00  QGEN=45.37
3  33109     0  "1"     0     # DEC CTG2  18.00       PGEN=200.00  QGEN=45.37
3  33110     0  "1"     0     # DEC CTG3  18.00       PGEN=200.00  QGEN=45.37
3  33107     0  "1"     0     # DEC STG1  24.00       PGEN=280.00  QGEN=63.67
0
 #
 #
 # (190)  L-1/G-1 OVERLAPPING OUTAGE
 # Bahia - Moraga 230 kV Line and Contra Costa 6
1  30465 30550  "1 "    0     # line from  BAHIA    230.00  BRKR to BRKR  MORAGA   230.00
 #
3  33116     0  "1"     0     # C.COS 6   18.00       PGEN=330.00  QGEN=99.38
0
 #
 #
 # (191)  L-1/G-1 OVERLAPPING OUTAGE
 # Parkway - Moraga 230 kV Line and Contra Costa 6
1  30467 30550  "1 "    0     # line from  PARKWAY  230.00  BRKR to BRKR  MORAGA   230.00
 #
3  33116     0  "1"     0     # C.COS 6   18.00       PGEN=330.00  QGEN=99.38
0
 #
 #
 # (192)  L-1/G-1 OVERLAPPING OUTAGE
 # Birds Landing - Contra Costa Sub 230 kV Line and Contra Costa 6
1  30479 30523  "1 "    0     # line from  BDLSWSTA 230.00  BRKR to BRKR  CC SUB   230.00
 #
3  33116     0  "1"     0     # C.COS 6   18.00       PGEN=330.00  QGEN=99.38
0
 #
 #
 # (193)  L-1/G-1 OVERLAPPING OUTAGE
 # Contra Costa 8 - Contra Costa 230 kV Line and Contra Costa 6
1  30520 30525  "1 "    0     # line from  SECAL    230.00   (4) to BRKR  C.COSTA  230.00
2  30520 33118  "1 "    0     # TRAN from  SECAL    230.00   (4) to (1)   SECAL_1   18.00
2  30520 33119  "1 "    0     # TRAN from  SECAL    230.00   (4) to (1)   SECAL_2   18.00
2  30520 33120  "1 "    0     # TRAN from  SECAL    230.00   (4) to (1)   SECAL_3   18.00
3  33118     0  "1 "    0     # GEN-DROP    SECAL_1   18.00  GEN==200.00(14.78)
3  33119     0  "1 "    0     # GEN-DROP    SECAL_2   18.00  GEN==195.00(14.60)
3  33120     0  "1 "    0     # GEN-DROP    SECAL_3   18.00  GEN==195.00(14.60)
 #
3  33116     0  "1"     0     # C.COS 6   18.00       PGEN=330.00  QGEN=99.38
0
 #
 #
 # (194)  L-1/G-1 OVERLAPPING OUTAGE
 # Contra Costa Sub - Contra Costa 230 kV Line and Contra Costa 6
1  30523 30525  "1 "    0     # line from  CC SUB   230.00  BRKR to BRKR  C.COSTA  230.00
 #
3  33116     0  "1"     0     # C.COS 6   18.00       PGEN=330.00  QGEN=99.38
0
 #
 #
 # (195)  L-1/G-1 OVERLAPPING OUTAGE
 # Contra Costa - Birds Landing 230 kV Line and Contra Costa 6
```

```
1  30525 30479  "1 "    0     # line from  C.COSTA  230.00  BRKR to BRKR  BDLSWSTA 230.00
 #
3  33116     0  "1"     0     # C.COS 6   18.00       PGEN=330.00  QGEN=99.38
0
 #
 #
 # (196)  L-1/G-1 OVERLAPPING OUTAGE
 # Contra Costa - Moraga #1 230 kV Line and Contra Costa 6
1  30525 30543  "1 "    0     # line from  C.COSTA  230.00  BRKR to (3)   ROSSTAP1 230.00
1  30543 30545  "1 "    0     # line from  ROSSTAP1 230.00   (3) to BRKR  ROSSMOOR 230.00
1  30543 30550  "1 "    0     # line from  ROSSTAP1 230.00   (3) to BRKR  MORAGA   230.00
4  30545     0  "1 "    0     # LOAD-DROP    ROSSMOOR 230.00  LOAD==38.39(7.80)
4  30545     0  "2 "    0     # LOAD-DROP    ROSSMOOR 230.00  LOAD==35.63(7.24)
1  30544 30545  "1 "    1     # LINE-TRANSFER  ROSSTAP1  230.00  TO  ROSSTAP2  230.00
4  30545     0  "**"    1     # RESTORE ROSSMOOR load
 #
3  33116     0  "1"     0     # C.COS 6   18.00       PGEN=330.00  QGEN=99.38
0
 #
 #
 # (197)  L-1/G-1 OVERLAPPING OUTAGE
 # Contra Costa - Moraga #1 230 kV Line and Contra Costa 6
1  30525 30544  "1 "    0     # line from  C.COSTA  230.00  BRKR to (2)   ROSSTAP2 230.00
1  30544 30550  "1 "    0     # line from  ROSSTAP2 230.00   (2) to BRKR  MORAGA   230.00
 #
3  33116     0  "1"     0     # C.COS 6   18.00       PGEN=330.00  QGEN=99.38
0
 #
 #
 # (198)  L-1/G-1 OVERLAPPING OUTAGE
 # Contra Costa - Brentwood 230 kV Line and Contra Costa 6
1  30525 30565  "1 "    0     # line from  C.COSTA  230.00  BRKR to BRKR  BRENTWOD 230.00
 #
3  33116     0  "1"     0     # C.COS 6   18.00       PGEN=330.00  QGEN=99.38
0
 #
 #
 # (199)  L-1/G-1 OVERLAPPING OUTAGE
 # Contra Costa - Delta Pumps 230 kV Line and Contra Costa 6
1  30525 30575  "1 "    0     # line from  C.COSTA  230.00  BRKR to (3)   WND MSTR 230.00
1  30575 38610  "1 "    0     # line from  WND MSTR 230.00   (3) to BRKR  DELTAPMP 230.00
2  30575 33170  "1 "    0     # TRAN from  WND MSTR 230.00   (3) to (1)   WINDMSTR   9.11
3  33170     0  "1 "    0     # GEN-DROP    WINDMSTR   9.11  GEN==38.00(0.00)
 #
3  33116     0  "1"     0     # C.COS 6   18.00       PGEN=330.00  QGEN=99.38
0
 #
 #
 # (200)  L-1/G-1 OVERLAPPING OUTAGE
 # Contra Costa - Las Positas 230 kV Line and Contra Costa 6
1  30525 30585  "1 "    0     # line from  C.COSTA  230.00  BRKR to BRKR  LS PSTAS 230.00
 #
3  33116     0  "1"     0     # C.COS 6   18.00       PGEN=330.00  QGEN=99.38
0
 #
 #
 # (201)  L-1/G-1 OVERLAPPING OUTAGE
 # Contra Costa - Cayetano 230 kV Line and Contra Costa 6
1  30525 30590  "1 "    0     # line from  C.COSTA  230.00  BRKR to (3)   USWP-JRW 230.00
1  30590 30530  "1 "    0     # line from  USWP-JRW 230.00   (3) to BRKR  CAYETANO 230.00
2  30590 33838  "1 "    0     # TRAN from  USWP-JRW 230.00   (3) to (1)   USWP_#3    9.11
4  33838     0  "SG"    0     # LOAD-DROP    USWP_#3    9.11  LOAD==0.50(0.20)
 #
3  33116     0  "1"     0     # C.COS 6   18.00       PGEN=330.00  QGEN=99.38
0
 #
 #
 # (202)  L-1/G-1 OVERLAPPING OUTAGE
 # Lakeville - Sobrante 230 kV Line and MEC outage
1  30435 30540  "2 "    0     # line from  LAKEVILE 230.00  BRKR to BRKR  SOBRANTE 230.00
 # steam turbine outage takes out entire plant
3  35881     0  "1"     0     # MEC CTG1  18.00       PGEN=200.00  QGEN=64.03
3  35882     0  "1"     0     # MEC CTG2  18.00       PGEN=200.00  QGEN=64.03
3  35883     0  "1"     0     # MEC STG1  18.00       PGEN=200.00  QGEN=64.03
0
 #
 #
 # (203)  L-1/G-1 OVERLAPPING OUTAGE
```

```
 # Ignacio - Sobrante 230 kV Line and MEC outage
1  30437 30540  "1 "    0     # line from  CROCKETT 230.00   (3) to BRKR  SOBRANTE 230.00
1  30437 30438  "1 "    0     # line from  CROCKETT 230.00   (3) to (2)   C&H      230.00
1  30437 30445  "1 "    0     # line from  CROCKETT 230.00   (3) to BRKR  IGNACIO  230.00
2  30438 32900  "1 "    0     # TRAN from  C&H      230.00  BRKR to (1)   CRCKTCOG  18.00
4  30438     0  "1 "    0     # LOAD-DROP    C&H      230.00  LOAD==3.55(0.81)
3  32900     0  "1 "    0     # GEN-DROP    CRCKTCOG  18.00  GEN==240.00(27.73)
 # steam turbine outage takes out entire plant
3  35881     0  "1"     0     # MEC CTG1  18.00       PGEN=200.00  QGEN=64.03
3  35882     0  "1"     0     # MEC CTG2  18.00       PGEN=200.00  QGEN=64.03
3  35883     0  "1"     0     # MEC STG1  18.00       PGEN=200.00  QGEN=64.03
0
 #
 #
 # (204)  L-1/G-1 OVERLAPPING OUTAGE
 # Pittsburg - San Ramon 230 kV Line and MEC outage
1  30526 30555  "1 "    0     # line from  PITSBG D 230.00  BRKR to BRKR  SANRAMON 230.00
 # steam turbine outage takes out entire plant
3  35881     0  "1"     0     # MEC CTG1  18.00       PGEN=200.00  QGEN=64.03
3  35882     0  "1"     0     # MEC CTG2  18.00       PGEN=200.00  QGEN=64.03
3  35883     0  "1"     0     # MEC STG1  18.00       PGEN=200.00  QGEN=64.03
0
 #
 #
 # (205)  L-1/G-1 OVERLAPPING OUTAGE
 # Pittsburg - Tassajara 230 kV Line and MEC outage
1  30526 30561  "1 "    0     # line from  PITSBG D 230.00  BRKR to BRKR  TASSAJAR 230.00
 # steam turbine outage takes out entire plant
3  35881     0  "1"     0     # MEC CTG1  18.00       PGEN=200.00  QGEN=64.03
3  35882     0  "1"     0     # MEC CTG2  18.00       PGEN=200.00  QGEN=64.03
3  35883     0  "1"     0     # MEC STG1  18.00       PGEN=200.00  QGEN=64.03
0
 #
 #
 # (206)  L-1/G-1 OVERLAPPING OUTAGE
 # Pittsburg - Tidewater 230 kV Line and MEC outage
1  30527 30535  "1 "    0     # line from  PITSBG E 230.00  BRKR to BRKR  TIDEWATR 230.00
 # steam turbine outage takes out entire plant
3  35881     0  "1"     0     # MEC CTG1  18.00       PGEN=200.00  QGEN=64.03
3  35882     0  "1"     0     # MEC CTG2  18.00       PGEN=200.00  QGEN=64.03
3  35883     0  "1"     0     # MEC STG1  18.00       PGEN=200.00  QGEN=64.03
0
 #
 #
 # (207)  L-1/G-1 OVERLAPPING OUTAGE
 # Pittsburg - Sobrante 230 kV Line and MEC outage
1  30527 30540  "1 "    0     # line from  PITSBG E 230.00  BRKR to BRKR  SOBRANTE 230.00
 # steam turbine outage takes out entire plant
3  35881     0  "1"     0     # MEC CTG1  18.00       PGEN=200.00  QGEN=64.03
3  35882     0  "1"     0     # MEC CTG2  18.00       PGEN=200.00  QGEN=64.03
3  35883     0  "1"     0     # MEC STG1  18.00       PGEN=200.00  QGEN=64.03
0
 #
 #
 # (208)  L-1/G-1 OVERLAPPING OUTAGE
 # Pittsburg - East Shore 230 kV Line and MEC outage
1  30527 30560  "1 "    0     # line from  PITSBG E 230.00  BRKR to BRKR  E. SHORE 230.00
 # steam turbine outage takes out entire plant
3  35881     0  "1"     0     # MEC CTG1  18.00       PGEN=200.00  QGEN=64.03
3  35882     0  "1"     0     # MEC CTG2  18.00       PGEN=200.00  QGEN=64.03
3  35883     0  "1"     0     # MEC STG1  18.00       PGEN=200.00  QGEN=64.03
0
 #
 #
 # (209)  L-1/G-1 OVERLAPPING OUTAGE
 # Pittsburg - Tesla #1 230 kV Line and MEC outage
1  30527 30595  "1 "    0     # line from  PITSBG E 230.00  BRKR to (3)   FLOWIND2 230.00
1  30595 30640  "1 "    0     # line from  FLOWIND2 230.00   (3) to BRKR  TESLA C  230.00
2  30595 33840  "1 "    0     # TRAN from  FLOWIND2 230.00   (3) to (1)   FLOWD3-6   9.11
4  33840     0  "SG"    0     # LOAD-DROP    FLOWD3-6   9.11  LOAD==0.72(0.35)
3  33840     0  "1 "    0     # GEN-DROP    FLOWD3-6   9.11  GEN==17.60(0.00)
 # steam turbine outage takes out entire plant
3  35881     0  "1"     0     # MEC CTG1  18.00       PGEN=200.00  QGEN=64.03
3  35882     0  "1"     0     # MEC CTG2  18.00       PGEN=200.00  QGEN=64.03
3  35883     0  "1"     0     # MEC STG1  18.00       PGEN=200.00  QGEN=64.03
0
 #
 #
```

```
 # (210)  L-1/G-1 OVERLAPPING OUTAGE
 # Pittsburg - Tesla #2 230 kV Line and MEC outage
1  30527 30600  "1 "    0     # line from  PITSBG E 230.00  BRKR to (3)   TRES VAQ 230.00
1  30600 30640  "1 "    0     # line from  TRES VAQ 230.00   (3) to BRKR  TESLA C  230.00
2  30600 33171  "1 "    0     # TRAN from  TRES VAQ 230.00   (3) to (1)   TRSVQ+NW   9.11
 # steam turbine outage takes out entire plant
3  35881     0  "1"     0     # MEC CTG1  18.00       PGEN=200.00  QGEN=64.03
3  35882     0  "1"     0     # MEC CTG2  18.00       PGEN=200.00  QGEN=64.03
3  35883     0  "1"     0     # MEC STG1  18.00       PGEN=200.00  QGEN=64.03
0
 #
 #
 # (211)  L-1/G-1 OVERLAPPING OUTAGE
 # Pittsburg - San Mateo 230 kV Line and MEC outage
1  30527 30700  "1 "    0     # line from  PITSBG E 230.00  BRKR to BRKR  SANMATEO 230.00
 # steam turbine outage takes out entire plant
3  35881     0  "1"     0     # MEC CTG1  18.00       PGEN=200.00  QGEN=64.03
3  35882     0  "1"     0     # MEC CTG2  18.00       PGEN=200.00  QGEN=64.03
3  35883     0  "1"     0     # MEC STG1  18.00       PGEN=200.00  QGEN=64.03
0
 #
 #
 # (212)  L-1/G-1 OVERLAPPING OUTAGE
 # Tidewater - Sobrante 230 kV Line and MEC outage
1  30535 30540  "1 "    0     # line from  TIDEWATR 230.00  BRKR to BRKR  SOBRANTE 230.00
 # steam turbine outage takes out entire plant
3  35881     0  "1"     0     # MEC CTG1  18.00       PGEN=200.00  QGEN=64.03
3  35882     0  "1"     0     # MEC CTG2  18.00       PGEN=200.00  QGEN=64.03
3  35883     0  "1"     0     # MEC STG1  18.00       PGEN=200.00  QGEN=64.03
0
 #
 #
 # (213)  L-1/G-1 OVERLAPPING OUTAGE
 # Tassajara - Newark 230 kV Line and MEC outage
1  30561 30562  "1 "    0     # line from  TASSAJAR 230.00  BRKR to (3)   TES JCT  230.00
1  30562 30563  "1 "    0     # line from  TES JCT  230.00   (3) to BRKR  RESEARCH 230.00
1  30562 30631  "1 "    0     # line from  TES JCT  230.00   (3) to BRKR  NEWARK E 230.00
4  30563     0  "1 "    0     # LOAD-DROP    RESEARCH 230.00  LOAD==36.74(7.45)
 # steam turbine outage takes out entire plant
3  35881     0  "1"     0     # MEC CTG1  18.00       PGEN=200.00  QGEN=64.03
3  35882     0  "1"     0     # MEC CTG2  18.00       PGEN=200.00  QGEN=64.03
3  35883     0  "1"     0     # MEC STG1  18.00       PGEN=200.00  QGEN=64.03
0
 #
 #
 # (214)  L-1/G-1 OVERLAPPING OUTAGE
 # Bahia - Moraga 230 kV Line and MEC
1  30465 30550  "1 "    0     # line from  BAHIA    230.00  BRKR to BRKR  MORAGA   230.00
 # steam turbine outage takes out entire plant
3  35881     0  "1"     0     # MEC CTG1  18.00       PGEN=200.00  QGEN=64.03
3  35882     0  "1"     0     # MEC CTG2  18.00       PGEN=200.00  QGEN=64.03
3  35883     0  "1"     0     # MEC STG1  18.00       PGEN=200.00  QGEN=64.03
0
 #
 #
 # (215)  L-1/G-1 OVERLAPPING OUTAGE
 # Parkway - Moraga 230 kV Line and MEC
1  30467 30550  "1 "    0     # line from  PARKWAY  230.00  BRKR to BRKR  MORAGA   230.00
 # steam turbine outage takes out entire plant
3  35881     0  "1"     0     # MEC CTG1  18.00       PGEN=200.00  QGEN=64.03
3  35882     0  "1"     0     # MEC CTG2  18.00       PGEN=200.00  QGEN=64.03
3  35883     0  "1"     0     # MEC STG1  18.00       PGEN=200.00  QGEN=64.03
0
 #
 #
 # (216)  L-1/G-1 OVERLAPPING OUTAGE
 # Birds Landing - Contra Costa Sub 230 kV Line and MEC
1  30479 30523  "1 "    0     # line from  BDLSWSTA 230.00  BRKR to BRKR  CC SUB   230.00
 # steam turbine outage takes out entire plant
3  35881     0  "1"     0     # MEC CTG1  18.00       PGEN=200.00  QGEN=64.03
3  35882     0  "1"     0     # MEC CTG2  18.00       PGEN=200.00  QGEN=64.03
3  35883     0  "1"     0     # MEC STG1  18.00       PGEN=200.00  QGEN=64.03
0
 #
 #
 # (217)  L-1/G-1 OVERLAPPING OUTAGE
 # Contra Costa 8 - Contra Costa 230 kV Line and MEC
1  30520 30525  "1 "    0     # line from  SECAL    230.00   (4) to BRKR  C.COSTA  230.00
```

```
2  30520 33118  "1 "    0     # TRAN from  SECAL    230.00   (4) to (1)   SECAL_1   18.00
2  30520 33119  "1 "    0     # TRAN from  SECAL    230.00   (4) to (1)   SECAL_2   18.00
2  30520 33120  "1 "    0     # TRAN from  SECAL    230.00   (4) to (1)   SECAL_3   18.00
3  33118     0  "1 "    0     # GEN-DROP    SECAL_1   18.00  GEN==200.00(14.78)
3  33119     0  "1 "    0     # GEN-DROP    SECAL_2   18.00  GEN==195.00(14.60)
3  33120     0  "1 "    0     # GEN-DROP    SECAL_3   18.00  GEN==195.00(14.60)
 # steam turbine outage takes out entire plant
3  35881     0  "1"     0     # MEC CTG1  18.00       PGEN=200.00  QGEN=64.03
3  35882     0  "1"     0     # MEC CTG2  18.00       PGEN=200.00  QGEN=64.03
3  35883     0  "1"     0     # MEC STG1  18.00       PGEN=200.00  QGEN=64.03
0
 #
 #
 # (218)  L-1/G-1 OVERLAPPING OUTAGE
 # Contra Costa Sub - Contra Costa 230 kV Line and MEC
1  30523 30525  "1 "    0     # line from  CC SUB   230.00  BRKR to BRKR  C.COSTA  230.00
 # steam turbine outage takes out entire plant
3  35881     0  "1"     0     # MEC CTG1  18.00       PGEN=200.00  QGEN=64.03
3  35882     0  "1"     0     # MEC CTG2  18.00       PGEN=200.00  QGEN=64.03
3  35883     0  "1"     0     # MEC STG1  18.00       PGEN=200.00  QGEN=64.03
0
 #
 #
 # (219)  L-1/G-1 OVERLAPPING OUTAGE
 # Contra Costa - Birds Landing 230 kV Line and MEC
1  30525 30479  "1 "    0     # line from  C.COSTA  230.00  BRKR to BRKR  BDLSWSTA 230.00
 # steam turbine outage takes out entire plant
3  35881     0  "1"     0     # MEC CTG1  18.00       PGEN=200.00  QGEN=64.03
3  35882     0  "1"     0     # MEC CTG2  18.00       PGEN=200.00  QGEN=64.03
3  35883     0  "1"     0     # MEC STG1  18.00       PGEN=200.00  QGEN=64.03
0
 #
 #
 # (220)  L-1/G-1 OVERLAPPING OUTAGE
 # Contra Costa - Moraga #1 230 kV Line and MEC
1  30525 30543  "1 "    0     # line from  C.COSTA  230.00  BRKR to (3)   ROSSTAP1 230.00
1  30543 30545  "1 "    0     # line from  ROSSTAP1 230.00   (3) to BRKR  ROSSMOOR 230.00
1  30543 30550  "1 "    0     # line from  ROSSTAP1 230.00   (3) to BRKR  MORAGA   230.00
4  30545     0  "1 "    0     # LOAD-DROP    ROSSMOOR 230.00  LOAD==38.39(7.80)
4  30545     0  "2 "    0     # LOAD-DROP    ROSSMOOR 230.00  LOAD==35.63(7.24)
1  30544 30545  "1 "    1     # LINE-TRANSFER  ROSSTAP1  230.00  TO  ROSSTAP2  230.00
4  30545     0  "**"    1     # RESTORE ROSSMOOR load
 # steam turbine outage takes out entire plant
3  35881     0  "1"     0     # MEC CTG1  18.00       PGEN=200.00  QGEN=64.03
3  35882     0  "1"     0     # MEC CTG2  18.00       PGEN=200.00  QGEN=64.03
3  35883     0  "1"     0     # MEC STG1  18.00       PGEN=200.00  QGEN=64.03
0
 #
 #
 # (221)  L-1/G-1 OVERLAPPING OUTAGE
 # Contra Costa - Moraga #1 230 kV Line and MEC
1  30525 30544  "1 "    0     # line from  C.COSTA  230.00  BRKR to (2)   ROSSTAP2 230.00
1  30544 30550  "1 "    0     # line from  ROSSTAP2 230.00   (2) to BRKR  MORAGA   230.00
 # steam turbine outage takes out entire plant
3  35881     0  "1"     0     # MEC CTG1  18.00       PGEN=200.00  QGEN=64.03
3  35882     0  "1"     0     # MEC CTG2  18.00       PGEN=200.00  QGEN=64.03
3  35883     0  "1"     0     # MEC STG1  18.00       PGEN=200.00  QGEN=64.03
0
 #
 #
 # (222)  L-1/G-1 OVERLAPPING OUTAGE
 # Contra Costa - Brentwood 230 kV Line and MEC
1  30525 30565  "1 "    0     # line from  C.COSTA  230.00  BRKR to BRKR  BRENTWOD 230.00
 # steam turbine outage takes out entire plant
3  35881     0  "1"     0     # MEC CTG1  18.00       PGEN=200.00  QGEN=64.03
3  35882     0  "1"     0     # MEC CTG2  18.00       PGEN=200.00  QGEN=64.03
3  35883     0  "1"     0     # MEC STG1  18.00       PGEN=200.00  QGEN=64.03
0
 #
 #
 # (223)  L-1/G-1 OVERLAPPING OUTAGE
 # Contra Costa - Delta Pumps 230 kV Line and MEC
1  30525 30575  "1 "    0     # line from  C.COSTA  230.00  BRKR to (3)   WND MSTR 230.00
1  30575 38610  "1 "    0     # line from  WND MSTR 230.00   (3) to BRKR  DELTAPMP 230.00
2  30575 33170  "1 "    0     # TRAN from  WND MSTR 230.00   (3) to (1)   WINDMSTR   9.11
3  33170     0  "1 "    0     # GEN-DROP    WINDMSTR   9.11  GEN==38.00(0.00)
 # steam turbine outage takes out entire plant
3  35881     0  "1"     0     # MEC CTG1  18.00       PGEN=200.00  QGEN=64.03
```

```
3  35882     0  "1"     0     # MEC CTG2  18.00       PGEN=200.00  QGEN=64.03
3  35883     0  "1"     0     # MEC STG1  18.00       PGEN=200.00  QGEN=64.03
0
 #
 #
 # (224)  L-1/G-1 OVERLAPPING OUTAGE
 # Contra Costa - Las Positas 230 kV Line and MEC
1  30525 30585  "1 "    0     # line from  C.COSTA  230.00  BRKR to BRKR  LS PSTAS 230.00
 # steam turbine outage takes out entire plant
3  35881     0  "1"     0     # MEC CTG1  18.00       PGEN=200.00  QGEN=64.03
3  35882     0  "1"     0     # MEC CTG2  18.00       PGEN=200.00  QGEN=64.03
3  35883     0  "1"     0     # MEC STG1  18.00       PGEN=200.00  QGEN=64.03
0
 #
 #
 # (225)  L-1/G-1 OVERLAPPING OUTAGE
 # Contra Costa - Cayetano 230 kV Line and MEC
1  30525 30590  "1 "    0     # line from  C.COSTA  230.00  BRKR to (3)   USWP-JRW 230.00
1  30590 30530  "1 "    0     # line from  USWP-JRW 230.00   (3) to BRKR  CAYETANO 230.00
2  30590 33838  "1 "    0     # TRAN from  USWP-JRW 230.00   (3) to (1)   USWP_#3    9.11
4  33838     0  "SG"    0     # LOAD-DROP    USWP_#3    9.11  LOAD==0.50(0.20)
 # steam turbine outage takes out entire plant
3  35881     0  "1"     0     # MEC CTG1  18.00       PGEN=200.00  QGEN=64.03
3  35882     0  "1"     0     # MEC CTG2  18.00       PGEN=200.00  QGEN=64.03
3  35883     0  "1"     0     # MEC STG1  18.00       PGEN=200.00  QGEN=64.03
0
 #
 #
 # (226)  B2 LINE OUTAGE (BREAKER-TO-BREAKER)
 #
1  30530 30537  "1 "    0     # line from  CAYETANO 230.00  BRKR to BRKR  NDUBLIN  230.00
0
 #
 #
 # (227)  B2 LINE OUTAGE (BREAKER-TO-BREAKER)
 #
1  30537 35224  "1 "    0     # line from  NDUBLIN  230.00  BRKR to BRKR  VINEYD_D 230.00
0
 #
 #
 # (228)  B2 LINE OUTAGE (BREAKER-TO-BREAKER)
 #
1  35219 35224  "1 "    0     # line from  VINEYARD 230.00  BRKR to BRKR  VINEYD_D 230.00
0
 #
 #
 # (229)  B2 LINE OUTAGE (BREAKER-TO-BREAKER)
 #
1  30554 30631  "1 "    0     # line from  CASTROVL 230.00  BRKR to BRKR  NEWARK E 230.00
0
 #
 #
 # (230)  B2 LINE OUTAGE (BREAKER-TO-BREAKER)
 #
1  30560 30700  "1 "    0     # line from  E. SHORE 230.00  BRKR to BRKR  SANMATEO 230.00
0
 #
 #
 # (231)  B2 LINE OUTAGE (BREAKER-TO-BREAKER)
 #
1  30562 30631  "1 "    0     # line from  TES JCT  230.00   (3) to BRKR  NEWARK E 230.00
1  30562 30561  "1 "    0     # line from  TES JCT  230.00   (3) to BRKR  TASSAJAR 230.00
1  30562 30563  "1 "    0     # line from  TES JCT  230.00   (3) to BRKR  RESEARCH 230.00
4  30563     0  "1 "    0     # LOAD-DROP    RESEARCH 230.00  LOAD==36.74(7.45)
0
 #
 #
 # (232)  B2 LINE OUTAGE (BREAKER-TO-BREAKER)
 #
1  30585 30630  "1 "    0     # line from  LS PSTAS 230.00  BRKR to BRKR  NEWARK D 230.00
0
 #
 #
 # (233)  B2 LINE OUTAGE (BREAKER-TO-BREAKER)
 #
1  30624 30630  "1 "    0     # line from  TESLA E  230.00  BRKR to BRKR  NEWARK D 230.00
0
 #
```

```
 #
 # (234)  B2 LINE OUTAGE (BREAKER-TO-BREAKER)
 #
1  30630 30703  "1 "    0     # line from  NEWARK D 230.00  BRKR to BRKR  RAVENSWD 230.00
0
 #
 #
 # (235)  B2 LINE OUTAGE (BREAKER-TO-BREAKER)
 #
1  30631 30635  "1 "    0     # line from  NEWARK E 230.00  BRKR to BRKR  NWK DIST 230.00
0
 #
 #
 # (236)  B2 LINE OUTAGE (BREAKER-TO-BREAKER)
 #
1  30635 30731  "1 "    0     # line from  NWK DIST 230.00  BRKR to BRKR  LS ESTRS 230.00
0
 #
 #
 # (237)  B2 LINE OUTAGE (BREAKER-TO-BREAKER)
 #
1  30655 30631  "1 "    0     # line from  ADCC     230.00   (3) to BRKR  NEWARK E 230.00
1  30655 30640  "1 "    0     # line from  ADCC     230.00   (3) to BRKR  TESLA C  230.00
2  30655 35310  "1 "    0     # TRAN from  ADCC     230.00   (3) to (1)   LFC FIN+   9.11
0
 #
 #
 # (238)  B2 LINE OUTAGE (BREAKER-TO-BREAKER)
 #
1  35104 35105  "1 "    0     # line from  GRANT    115.00  BRKR to BRKR  EASTSHRE 115.00
0
 #
 #
 # (239)  B2 LINE OUTAGE (BREAKER-TO-BREAKER)
 #
1  35104 35105  "2 "    0     # line from  GRANT    115.00  BRKR to BRKR  EASTSHRE 115.00
0
 #
 #
 # (240)  B2 LINE OUTAGE (BREAKER-TO-BREAKER)
 #
1  35105 35106  "1 "    0     # line from  EASTSHRE 115.00  BRKR to BRKR  MT EDEN  115.00
0
 #
 #
 # (241)  B2 LINE OUTAGE (BREAKER-TO-BREAKER)
 #
1  35105 35106  "2 "    0     # line from  EASTSHRE 115.00  BRKR to BRKR  MT EDEN  115.00
0
 #
 #
 # (242)  B2 LINE OUTAGE (BREAKER-TO-BREAKER)
 #
1  35105 35107  "1 "    0     # line from  EASTSHRE 115.00  BRKR to BRKR  DUMBARTN 115.00
0
 #
 #
 # (243)  B2 LINE OUTAGE (BREAKER-TO-BREAKER)
 #
1  35105 35108  "1 "    0     # line from  EASTSHRE 115.00  BRKR to (2)   P0413    115.00
2  35108 35300  "1 "    0     # TRAN from  P0413    115.00   (2) to (1)   P0413     13.80
4  35300     0  "SG"    0     # LOAD-DROP    P0413     13.80  LOAD==3.00(1.66)
3  35300     0  "1 "    0     # GEN-DROP    P0413     13.80  GEN==8.43(1.24)
3  35300     0  "10"    0     # GEN-DROP    P0413     13.80  GEN==8.43(1.24)
3  35300     0  "11"    0     # GEN-DROP    P0413     13.80  GEN==8.43(1.24)
3  35300     0  "12"    0     # GEN-DROP    P0413     13.80  GEN==8.43(1.24)
3  35300     0  "13"    0     # GEN-DROP    P0413     13.80  GEN==8.43(1.24)
3  35300     0  "14"    0     # GEN-DROP    P0413     13.80  GEN==8.43(1.24)
3  35300     0  "2 "    0     # GEN-DROP    P0413     13.80  GEN==8.43(1.24)
3  35300     0  "3 "    0     # GEN-DROP    P0413     13.80  GEN==8.43(1.24)
3  35300     0  "4 "    0     # GEN-DROP    P0413     13.80  GEN==8.43(1.24)
3  35300     0  "5 "    0     # GEN-DROP    P0413     13.80  GEN==8.43(1.24)
3  35300     0  "6 "    0     # GEN-DROP    P0413     13.80  GEN==8.43(1.24)
3  35300     0  "7 "    0     # GEN-DROP    P0413     13.80  GEN==8.43(1.24)
3  35300     0  "8 "    0     # GEN-DROP    P0413     13.80  GEN==8.43(1.24)
3  35300     0  "9 "    0     # GEN-DROP    P0413     13.80  GEN==8.43(1.24)
0
 #
```

```
 #
 # (244)  B2 LINE OUTAGE (BREAKER-TO-BREAKER)
 #
1  35107 35120  "1 "    0     # line from  DUMBARTN 115.00  BRKR to BRKR  NEWARK D 115.00
0
 #
 #
 # (245)  B2 LINE OUTAGE (BREAKER-TO-BREAKER)
 #
1  35120 35111  "1 "    0     # line from  NEWARK D 115.00  BRKR to BRKR  JARVIS   115.00
0
 #
 #
 # (246)  B2 LINE OUTAGE (BREAKER-TO-BREAKER)
 #
1  35120 35124  "2 "    0     # line from  NEWARK D 115.00  BRKR to (2)   NUMI JCT 115.00
1  35124 35111  "2 "    0     # line from  NUMI JCT 115.00   (2) to BRKR  JARVIS   115.00
0
 #
 #
 # (247)  B2 LINE OUTAGE (BREAKER-TO-BREAKER)
 #
1  35120 36851  "1 "    0     # line from  NEWARK D 115.00  BRKR to BRKR  NORTHERN 115.00
0
 #
 #
 # (248)  B2 LINE OUTAGE (BREAKER-TO-BREAKER)
 #
1  35120 38432  "1 "    0     # line from  NEWARK D 115.00  BRKR to BRKR  OAKDLTID 115.00
0
 #
 #
 # (249)  B2 LINE OUTAGE (BREAKER-TO-BREAKER)
 #
1  35120 38432  "2 "    0     # line from  NEWARK D 115.00  BRKR to BRKR  OAKDLTID 115.00
0
 #
 #
 # (250)  B2 LINE OUTAGE (BREAKER-TO-BREAKER)
 #
1  35121 35110  "1 "    0     # line from  NEWARK E 115.00  BRKR to BRKR  FREMNT   115.00
0
 #
 #
 # (251)  B2 LINE OUTAGE (BREAKER-TO-BREAKER)
 #
1  35121 35110  "2 "    0     # line from  NEWARK E 115.00  BRKR to BRKR  FREMNT   115.00
0
 #
 #
 # (252)  B2 LINE OUTAGE (BREAKER-TO-BREAKER)
 #
1  35121 35350  "1 "    0     # line from  NEWARK E 115.00  BRKR to BRKR  AMES BS1 115.00
0
 #
 #
 # (253)  B2 LINE OUTAGE (BREAKER-TO-BREAKER)
 #
1  35121 35350  "3 "    0     # line from  NEWARK E 115.00  BRKR to BRKR  AMES BS1 115.00
0
 #
 #
 # (254)  B2 LINE OUTAGE (BREAKER-TO-BREAKER)
 #
1  35121 35351  "2 "    0     # line from  NEWARK E 115.00  BRKR to BRKR  AMES BS2 115.00
0
 #
 #
 # (255)  B2 LINE OUTAGE (BREAKER-TO-BREAKER)
 #
1  35122 35126  "1 "    0     # line from  NEWARK F 115.00  BRKR to (2)   NUMI TAP 115.00
1  35126 35112  "1 "    0     # line from  NUMI TAP 115.00   (2) to BRKR  NUMMI    115.00
4  35112     0  "1 "    0     # LOAD-DROP    NUMMI    115.00  LOAD==34.16(9.00)
0
 #
 #
 # (256)  B2 LINE OUTAGE (BREAKER-TO-BREAKER)
 #
```

```
1  35122 35357  "1 "    0     # line from  NEWARK F 115.00  BRKR to (3)   LCKHD J1 115.00
1  35357 35358  "1 "    0     # line from  LCKHD J1 115.00   (3) to (3)   MFT.FD J 115.00
1  35357 35363  "1 "    0     # line from  LCKHD J1 115.00   (3) to BRKR  LAWRENCE 115.00
1  35358 35359  "1 "    0     # line from  MFT.FD J 115.00   (3) to (1)   MOFT.FLD 115.00
1  35358 35361  "1 "    0     # line from  MFT.FD J 115.00   (3) to BRKR  LOCKHD 1 115.00
4  35359     0  "1 "    0     # LOAD-DROP    MOFT.FLD 115.00  LOAD==4.46(1.12)
4  35361     0  "1 "    0     # LOAD-DROP    LOCKHD 1 115.00  LOAD==17.33(14.36)
1  35361 35362  "1 "    1     # close LOCKHD 1 115.00  LOCKHD 2  115.00
4  35361 0      "**"    1     # restore all loads to LOCKHD 1
0
 #
 #
 # (257)  B2 LINE OUTAGE (BREAKER-TO-BREAKER)
 #
1  35122 35360  "1 "    0     # line from  NEWARK F 115.00  BRKR to (3)   LCKHD J2 115.00
1  35360 35362  "1 "    0     # line from  LCKHD J2 115.00   (3) to BRKR  LOCKHD 2 115.00
1  35360 35365  "1 "    0     # line from  LCKHD J2 115.00   (3) to (3)   AMD JCT  115.00
1  35365 35364  "1 "    0     # line from  AMD JCT  115.00   (3) to BRKR  A.M.D    115.00
1  35365 35369  "1 "    0     # line from  AMD JCT  115.00   (3) to BRKR  APP MAT  115.00
4  35362     0  "1 "    0     # LOAD-DROP    LOCKHD 2 115.00  LOAD==13.28(10.31)
4  35364     0  "1 "    0     # LOAD-DROP    A.M.D    115.00  LOAD==7.82(5.46)
1  35361 35362  "1 "    1     # close LOCKHD 1 115.00  LOCKHD 2  115.00
4  35362 0      "**"    1     # restore all loads to LOCKHD 2
0
 #
 #
 # (258)  B2 LINE OUTAGE (BREAKER-TO-BREAKER)
 #
1  35122 35600  "1 "    0     # line from  NEWARK F 115.00  BRKR to BRKR  DIXON LD 115.00
0
 #
 #
 # (259)  B2 LINE OUTAGE (BREAKER-TO-BREAKER)
 #
1  35122 35602  "1 "    0     # line from  NEWARK F 115.00  BRKR to (3)   ZNKER J2 115.00
1  35602 35604  "1 "    0     # line from  ZNKER J2 115.00   (3) to (3)   ZANKER   115.00
1  35602 36850  "1 "    0     # line from  ZNKER J2 115.00   (3) to BRKR  KIFER    115.00
2  35604 35861  "1 "    0     # TRAN from  ZANKER   115.00   (3) to (2)   SJ-SCL W   9.11
2  35604 35861  "2 "    0     # TRAN from  ZANKER   115.00   (3) to (2)   SJ-SCL W   9.11
4  35861     0  "SG"    0     # LOAD-DROP    SJ-SCL W   9.11  LOAD==5.54(1.88)
3  35861     0  "1 "    0     # GEN-DROP    SJ-SCL W   9.11  GEN==5.00(0.00)
0
 #
 #
 # (260)  B2 LINE OUTAGE (BREAKER-TO-BREAKER)
 #
1  35122 35603  "1 "    0     # line from  NEWARK F 115.00  BRKR to (3)   ZNKER J1 115.00
1  35603 35605  "1 "    0     # line from  ZNKER J1 115.00   (3) to (1)   AGNEW J  115.00
1  35603 35612  "1 "    0     # line from  ZNKER J1 115.00   (3) to BRKR  TRIMBLE  115.00
0
 #
 #
 # (261)  B2 LINE OUTAGE (BREAKER-TO-BREAKER)
 #
1  35122 35624  "1 "    0     # line from  NEWARK F 115.00  BRKR to BRKR  MILPITAS 115.00
0
 #
 #
 # (262)  B2 LINE OUTAGE (BREAKER-TO-BREAKER)
 #
1  35122 35624  "2 "    0     # line from  NEWARK F 115.00  BRKR to BRKR  MILPITAS 115.00
0
 #
 #
 # (263)  B2 LINE OUTAGE (BREAKER-TO-BREAKER)
 #
1  35122 36851  "2 "    0     # line from  NEWARK F 115.00  BRKR to BRKR  NORTHERN 115.00
0
 #
 #
 # (264)  B2 LINE OUTAGE (BREAKER-TO-BREAKER)
 #
1  35200 35204  "1 "    0     # line from  SEAWEST   60.00   (3) to (3)   ZONDWD    60.00
1  35200 35218  "1 "    0     # line from  SEAWEST   60.00   (3) to (2)   FLOWIND1  60.00
2  35200 35312  "1 "    0     # TRAN from  SEAWEST   60.00   (3) to (1)   SEAWESTF   9.11
1  35204 35208  "1 "    0     # line from  ZONDWD    60.00   (3) to (3)   USWP-FRK  60.00
2  35204 35316  "1 "    0     # TRAN from  ZONDWD    60.00   (3) to (1)   ZOND SYS   9.11
2  35218 35318  "1 "    0     # TRAN from  FLOWIND1  60.00   (2) to (1)   FLOWDPTR   9.11
```

```
1  35208 35210  "1 "    0     # line from  USWP-FRK  60.00   (3) to (3)   VASCJCT.  60.00
2  35208 35320  "1 "    0     # TRAN from  USWP-FRK  60.00   (3) to (1)   USW FRIC  12.00
1  35210 35201  "1 "    0     # line from  VASCJCT.  60.00   (3) to BRKR  VASCO     60.00
1  35210 35220  "1 "    0     # line from  VASCJCT.  60.00   (3) to BRKR  LPOSTAS   60.00
4  35201     0  "1 "    0     # LOAD-DROP    VASCO     60.00  LOAD==5.42(1.10)
4  35201     0  "2 "    0     # LOAD-DROP    VASCO     60.00  LOAD==8.68(1.76)
3  35312     0  "1 "    0     # GEN-DROP    SEAWESTF   9.11  GEN==0.10(0.00)
3  35320     0  "1 "    0     # GEN-DROP    USW FRIC  12.00  GEN==2.60(0.00)
1  35211 35201  "1 "    1     # LINE-TRANSFER  VASCJCT.  60.00  TO  ALTAMONT  60.00
4  35201     0  "**"    1     # RESTORE VASCO load
0
 #
 #
 # (265)  B2 LINE OUTAGE (BREAKER-TO-BREAKER)
 #
1  35202 33776  "1 "    0     # line from  USWP-WKR  60.00   (3) to (2)   SOUTH BY  60.00
1  35202 35211  "1 "    0     # line from  USWP-WKR  60.00   (3) to (1)   ALTAMONT  60.00
2  35202 35314  "1 "    0     # TRAN from  USWP-WKR  60.00   (3) to (1)   WALKER+    9.11
1  33776 33775  "1 "    0     # line from  SOUTH BY  60.00   (2) to (2)   TOSCO-PP  60.00
1  33775 33773  "1 "    0     # line from  TOSCO-PP  60.00   (2) to (2)   ALTA-CGE  60.00
1  33773 33772  "1 "    0     # line from  ALTA-CGE  60.00   (2) to (2)   B.BTHNY-  60.00
1  33772 33770  "1 "    0     # line from  B.BTHNY-  60.00   (2) to BRKR  HERDLYN   60.00
4  33776     0  "1 "    0     # LOAD-DROP    SOUTH BY  60.00  LOAD==23.00(0.00)
4  33775     0  "1 "    0     # LOAD-DROP    TOSCO-PP  60.00  LOAD==1.04(0.92)
4  33772     0  "1 "    0     # LOAD-DROP    B.BTHNY-  60.00  LOAD==1.94(0.44)
0
 #
 #
 # (266)  B2 LINE OUTAGE (BREAKER-TO-BREAKER)
 #
1  35203 35220  "1 "    0     # line from  LIVERMRE  60.00  BRKR to BRKR  LPOSTAS   60.00
0
 #
 #
 # (267)  B2 LINE OUTAGE (BREAKER-TO-BREAKER)
 #
1  35203 35222  "1 "    0     # line from  LIVERMRE  60.00  BRKR to (2)   CALMAT60  60.00
1  35222 35206  "1 "    0     # line from  CALMAT60  60.00   (2) to (2)   KAISER    60.00
1  35206 35205  "1 "    0     # line from  KAISER    60.00   (2) to BRKR  RADUM     60.00
4  35222     0  "1 "    0     # LOAD-DROP    CALMAT60  60.00  LOAD==5.00(3.10)
4  35206     0  "1 "    0     # LOAD-DROP    KAISER    60.00  LOAD==2.94(5.83)
0
 #
 #
 # (268)  B2 LINE OUTAGE (BREAKER-TO-BREAKER)
 #
1  35205 35227  "1 "    0     # line from  RADUM     60.00  BRKR to (2)   VINEYARD  60.00
1  35227 35212  "1 "    0     # line from  VINEYARD  60.00   (2) to (2)   IUKA      60.00
1  35212 35213  "1 "    0     # line from  IUKA      60.00   (2) to BRKR  VALLECTS  60.00
4  35212     0  "1 "    0     # LOAD-DROP    IUKA      60.00  LOAD==0.32(0.28)
0
 #
 #
 # (269)  B2 LINE OUTAGE (BREAKER-TO-BREAKER)
 #
1  35209 35221  "1 "    0     # line from  SAN RAMN  60.00  BRKR to (2)   E DUBLIN  60.00
1  35221 35223  "1 "    0     # line from  E DUBLIN  60.00   (2) to (3)   PARKS TP  60.00
1  35223 35205  "1 "    0     # line from  PARKS TP  60.00   (3) to BRKR  RADUM     60.00
1  35223 35207  "1 "    0     # line from  PARKS TP  60.00   (3) to (1)   PARKS     60.00
4  35221     0  "1 "    0     # LOAD-DROP    E DUBLIN  60.00  LOAD==8.00(1.62)
0
 #
 #
 # (270)  B2 LINE OUTAGE (BREAKER-TO-BREAKER)
 #
1  35213 35214  "1 "    0     # line from  VALLECTS  60.00  BRKR to (2)   SUNOL     60.00
1  35214 35216  "1 "    0     # line from  SUNOL     60.00   (2) to (2)   DCTO JCT  60.00
1  35216 35217  "1 "    0     # line from  DCTO JCT  60.00   (2) to BRKR  NEWARK    60.00
4  35214     0  "1 "    0     # LOAD-DROP    SUNOL     60.00  LOAD==6.70(1.36)
0
 #
 #
 # (271)  B2 LINE OUTAGE (BREAKER-TO-BREAKER)
 #
1  35219 30630  "1 "    0     # line from  VINEYARD 230.00  BRKR to BRKR  NEWARK D 230.00
0
 #
 #
```

```
 # (272)  B2 LINE OUTAGE (BREAKER-TO-BREAKER)
 #
1  35225 35217  "1 "    0     # line from  LIVRMR_2  60.00  BRKR to BRKR  NEWARK    60.00
0
 #
 #
 # (273)  B2 LINE OUTAGE (BREAKER-TO-BREAKER)
 #
1  35349 35121  "1 "    0     # line from  AMES DST 115.00  BRKR to BRKR  NEWARK E 115.00
0
 #
 #
 # (274)  B3 TRANSFORMER OUTAGE (BREAKER-TO-BREAKER)
 #
2  35209 30555  "1 "    0     # TRAN from  SAN RAMN  60.00  BRKR to BRKR  SANRAMON 230.00
0
 #
 #
 # (275)  B3 TRANSFORMER OUTAGE (BREAKER-TO-BREAKER)
 #
2  35105 30560  "1 "    0     # TRAN from  EASTSHRE 115.00  BRKR to BRKR  E. SHORE 230.00
0
 #
 #
 # (276)  B3 TRANSFORMER OUTAGE (BREAKER-TO-BREAKER)
 #
2  35105 30560  "2 "    0     # TRAN from  EASTSHRE 115.00  BRKR to BRKR  E. SHORE 230.00
0
 #
 #
 # (277)  B3 TRANSFORMER OUTAGE (BREAKER-TO-BREAKER)
 #
2  35220 30585  "4 "    0     # TRAN from  LPOSTAS   60.00  BRKR to BRKR  LS PSTAS 230.00
0
 #
 #
 # (278)  B3 TRANSFORMER OUTAGE (BREAKER-TO-BREAKER)
 #
2  35120 35109  "1 "    0     # TRAN from  NEWARK D 115.00  BRKR to (2)   NWRK 2 M 115.00
2  35109 35217  "1 "    0     # TRAN from  NWRK 2 M 115.00   (2) to BRKR  NEWARK    60.00
0
 #
 #
 # (279)  B3 TRANSFORMER OUTAGE (BREAKER-TO-BREAKER)
 #
2  30630 35120  "9 "    0     # TRAN from  NEWARK D 230.00  BRKR to BRKR  NEWARK D 115.00
0
 #
 #
 # (280)  B3 TRANSFORMER OUTAGE (BREAKER-TO-BREAKER)
 #
2  30630 35121  "7 "    0     # TRAN from  NEWARK D 230.00  BRKR to BRKR  NEWARK E 115.00
0
 #
 #
 # (281)  B3 TRANSFORMER OUTAGE (BREAKER-TO-BREAKER)
 #
2  30631 35122  "11"    0     # TRAN from  NEWARK E 230.00  BRKR to BRKR  NEWARK F 115.00
0
 #
 #
 # (282)  B1 GENERATOR OUTAGE
 #
3  35300     0  "1"     0     # P0413     13.80       PGEN=8.43  QGEN=1.24
0
 #
 #
 # (283)  B1 GENERATOR OUTAGE
 #
3  35300     0  "10"     0     # P0413     13.80       PGEN=8.43  QGEN=1.24
0
 #
 #
 # (284)  B1 GENERATOR OUTAGE
 #
3  35300     0  "11"     0     # P0413     13.80       PGEN=8.43  QGEN=1.24
0
 #
```

```
 #
 # (285)  B1 GENERATOR OUTAGE
 #
3  35300     0  "12"     0     # P0413     13.80       PGEN=8.43  QGEN=1.24
0
 #
 #
 # (286)  B1 GENERATOR OUTAGE
 #
3  35300     0  "13"     0     # P0413     13.80       PGEN=8.43  QGEN=1.24
0
 #
 #
 # (287)  B1 GENERATOR OUTAGE
 #
3  35300     0  "14"     0     # P0413     13.80       PGEN=8.43  QGEN=1.24
0
 #
 #
 # (288)  B1 GENERATOR OUTAGE
 #
3  35300     0  "2"     0     # P0413     13.80       PGEN=8.43  QGEN=1.24
0
 #
 #
 # (289)  B1 GENERATOR OUTAGE
 #
3  35300     0  "3"     0     # P0413     13.80       PGEN=8.43  QGEN=1.24
0
 #
 #
 # (290)  B1 GENERATOR OUTAGE
 #
3  35300     0  "4"     0     # P0413     13.80       PGEN=8.43  QGEN=1.24
0
 #
 #
 # (291)  B1 GENERATOR OUTAGE
 #
3  35300     0  "5"     0     # P0413     13.80       PGEN=8.43  QGEN=1.24
0
 #
 #
 # (292)  B1 GENERATOR OUTAGE
 #
3  35300     0  "6"     0     # P0413     13.80       PGEN=8.43  QGEN=1.24
0
 #
 #
 # (293)  B1 GENERATOR OUTAGE
 #
3  35300     0  "7"     0     # P0413     13.80       PGEN=8.43  QGEN=1.24
0
 #
 #
 # (294)  B1 GENERATOR OUTAGE
 #
3  35300     0  "8"     0     # P0413     13.80       PGEN=8.43  QGEN=1.24
0
 #
 #
 # (295)  B1 GENERATOR OUTAGE
 #
3  35300     0  "9"     0     # P0413     13.80       PGEN=8.43  QGEN=1.24
0
 #
 #
 # (296)  B1 GENERATOR OUTAGE
 #
3  35312     0  "1"     0     # SEAWESTF   9.11       PGEN=0.08  QGEN=0.00
0
 #
 #
 # (297)  B1 GENERATOR OUTAGE
 #
3  35320     0  "1"     0     # USW FRIC  12.00       PGEN=2.64  QGEN=0.00
0
 #
```

```
 #
 # (298)  L-1/G-1 OVERLAPPING OUTAGE
 # Contra Costa - Las Positas 230 kV Line and DEC
1  30525 30585  "1 "    0     # line from  C.COSTA  230.00  BRKR to BRKR  LS PSTAS 230.00
 # steam turbine outage takes out entire plant
3  33108     0  "1"     0     # DEC CTG1  18.00       PGEN=200.00  QGEN=45.37
3  33109     0  "1"     0     # DEC CTG2  18.00       PGEN=200.00  QGEN=45.37
3  33110     0  "1"     0     # DEC CTG3  18.00       PGEN=200.00  QGEN=45.37
3  33107     0  "1"     0     # DEC STG1  24.00       PGEN=280.00  QGEN=63.67
0
 #
 #
 # (299)  L-1/G-1 OVERLAPPING OUTAGE
 # Contra Costa - Cayetano 230 kV Line and DEC
1  30525 30590  "1 "    0     # line from  C.COSTA  230.00  BRKR to (3)   USWP-JRW 230.00
1  30590 30530  "1 "    0     # line from  USWP-JRW 230.00   (3) to BRKR  CAYETANO 230.00
2  30590 33838  "1 "    0     # TRAN from  USWP-JRW 230.00   (3) to (1)   USWP_#3    9.11
4  33838     0  "SG"    0     # LOAD-DROP    USWP_#3    9.11  LOAD==0.50(0.20)
 # steam turbine outage takes out entire plant
3  33108     0  "1"     0     # DEC CTG1  18.00       PGEN=200.00  QGEN=45.37
3  33109     0  "1"     0     # DEC CTG2  18.00       PGEN=200.00  QGEN=45.37
3  33110     0  "1"     0     # DEC CTG3  18.00       PGEN=200.00  QGEN=45.37
3  33107     0  "1"     0     # DEC STG1  24.00       PGEN=280.00  QGEN=63.67
0
 #
 #
 # (300)  L-1/G-1 OVERLAPPING OUTAGE
 # Cayetano - North Dublin 230 kV Line and DEC
1  30530 30537  "1 "    0     # line from  CAYETANO 230.00  BRKR to BRKR  NDUBLIN  230.00
 # steam turbine outage takes out entire plant
3  33108     0  "1"     0     # DEC CTG1  18.00       PGEN=200.00  QGEN=45.37
3  33109     0  "1"     0     # DEC CTG2  18.00       PGEN=200.00  QGEN=45.37
3  33110     0  "1"     0     # DEC CTG3  18.00       PGEN=200.00  QGEN=45.37
3  33107     0  "1"     0     # DEC STG1  24.00       PGEN=280.00  QGEN=63.67
0
 #
 #
 # (301)  L-1/G-1 OVERLAPPING OUTAGE
 # North Dublin - Vineyard 230 kV Line and DEC
1  30537 35224  "1 "    0     # line from  NDUBLIN  230.00  BRKR to BRKR  VINEYD_D 230.00
 # steam turbine outage takes out entire plant
3  33108     0  "1"     0     # DEC CTG1  18.00       PGEN=200.00  QGEN=45.37
3  33109     0  "1"     0     # DEC CTG2  18.00       PGEN=200.00  QGEN=45.37
3  33110     0  "1"     0     # DEC CTG3  18.00       PGEN=200.00  QGEN=45.37
3  33107     0  "1"     0     # DEC STG1  24.00       PGEN=280.00  QGEN=63.67
0
 #
 #
 # (302)  L-1/G-1 OVERLAPPING OUTAGE
 # Moraga - Castro Valley 230 kV Line and DEC
1  30550 30554  "1 "    0     # line from  MORAGA   230.00  BRKR to BRKR  CASTROVL 230.00
 # steam turbine outage takes out entire plant
3  33108     0  "1"     0     # DEC CTG1  18.00       PGEN=200.00  QGEN=45.37
3  33109     0  "1"     0     # DEC CTG2  18.00       PGEN=200.00  QGEN=45.37
3  33110     0  "1"     0     # DEC CTG3  18.00       PGEN=200.00  QGEN=45.37
3  33107     0  "1"     0     # DEC STG1  24.00       PGEN=280.00  QGEN=63.67
0
 #
 #
 # (303)  L-1/G-1 OVERLAPPING OUTAGE
 # Moraga - San Ramon 230 kV Line and DEC
1  30550 30555  "1 "    0     # line from  MORAGA   230.00  BRKR to BRKR  SANRAMON 230.00
 # steam turbine outage takes out entire plant
3  33108     0  "1"     0     # DEC CTG1  18.00       PGEN=200.00  QGEN=45.37
3  33109     0  "1"     0     # DEC CTG2  18.00       PGEN=200.00  QGEN=45.37
3  33110     0  "1"     0     # DEC CTG3  18.00       PGEN=200.00  QGEN=45.37
3  33107     0  "1"     0     # DEC STG1  24.00       PGEN=280.00  QGEN=63.67
0
 #
 #
 # (304)  L-1/G-1 OVERLAPPING OUTAGE
 # Newark - Castro Valley 230 kV Line and DEC
1  30554 30631  "1 "    0     # line from  CASTROVL 230.00  BRKR to BRKR  NEWARK E 230.00
 # steam turbine outage takes out entire plant
3  33108     0  "1"     0     # DEC CTG1  18.00       PGEN=200.00  QGEN=45.37
3  33109     0  "1"     0     # DEC CTG2  18.00       PGEN=200.00  QGEN=45.37
3  33110     0  "1"     0     # DEC CTG3  18.00       PGEN=200.00  QGEN=45.37
3  33107     0  "1"     0     # DEC STG1  24.00       PGEN=280.00  QGEN=63.67
```

```
0
 #
 #
 # (305)  L-1/G-1 OVERLAPPING OUTAGE
 # East Shore - San Mateo 230 kV Line and DEC
1  30560 30700  "1 "    0     # line from  E. SHORE 230.00  BRKR to BRKR  SANMATEO 230.00
 # steam turbine outage takes out entire plant
3  33108     0  "1"     0     # DEC CTG1  18.00       PGEN=200.00  QGEN=45.37
3  33109     0  "1"     0     # DEC CTG2  18.00       PGEN=200.00  QGEN=45.37
3  33110     0  "1"     0     # DEC CTG3  18.00       PGEN=200.00  QGEN=45.37
3  33107     0  "1"     0     # DEC STG1  24.00       PGEN=280.00  QGEN=63.67
0
 #
 #
 # (306)  L-1/G-1 OVERLAPPING OUTAGE
 # Tassajara - Newark 230 kV Line and DEC
1  30562 30631  "1 "    0     # line from  TES JCT  230.00   (3) to BRKR  NEWARK E 230.00
1  30562 30561  "1 "    0     # line from  TES JCT  230.00   (3) to BRKR  TASSAJAR 230.00
1  30562 30563  "1 "    0     # line from  TES JCT  230.00   (3) to BRKR  RESEARCH 230.00
4  30563     0  "1 "    0     # LOAD-DROP    RESEARCH 230.00  LOAD==36.74(7.45)
 # steam turbine outage takes out entire plant
3  33108     0  "1"     0     # DEC CTG1  18.00       PGEN=200.00  QGEN=45.37
3  33109     0  "1"     0     # DEC CTG2  18.00       PGEN=200.00  QGEN=45.37
3  33110     0  "1"     0     # DEC CTG3  18.00       PGEN=200.00  QGEN=45.37
3  33107     0  "1"     0     # DEC STG1  24.00       PGEN=280.00  QGEN=63.67
0
 #
 #
 # (307)  L-1/G-1 OVERLAPPING OUTAGE
 # Newark - Las Positas 230 kV Line and DEC
1  30585 30630  "1 "    0     # line from  LS PSTAS 230.00  BRKR to BRKR  NEWARK D 230.00
 # steam turbine outage takes out entire plant
3  33108     0  "1"     0     # DEC CTG1  18.00       PGEN=200.00  QGEN=45.37
3  33109     0  "1"     0     # DEC CTG2  18.00       PGEN=200.00  QGEN=45.37
3  33110     0  "1"     0     # DEC CTG3  18.00       PGEN=200.00  QGEN=45.37
3  33107     0  "1"     0     # DEC STG1  24.00       PGEN=280.00  QGEN=63.67
0
 #
 #
 # (308)  L-1/G-1 OVERLAPPING OUTAGE
 # Tesla - Newark #1 230 kV Line and DEC
1  30624 30630  "1 "    0     # line from  TESLA E  230.00  BRKR to BRKR  NEWARK D 230.00
 # steam turbine outage takes out entire plant
3  33108     0  "1"     0     # DEC CTG1  18.00       PGEN=200.00  QGEN=45.37
3  33109     0  "1"     0     # DEC CTG2  18.00       PGEN=200.00  QGEN=45.37
3  33110     0  "1"     0     # DEC CTG3  18.00       PGEN=200.00  QGEN=45.37
3  33107     0  "1"     0     # DEC STG1  24.00       PGEN=280.00  QGEN=63.67
0
 #
 #
 # (309)  L-1/G-1 OVERLAPPING OUTAGE
 # Newark - Ravenswood 230 kV Line and DEC
1  30630 30703  "1 "    0     # line from  NEWARK D 230.00  BRKR to BRKR  RAVENSWD 230.00
 # steam turbine outage takes out entire plant
3  33108     0  "1"     0     # DEC CTG1  18.00       PGEN=200.00  QGEN=45.37
3  33109     0  "1"     0     # DEC CTG2  18.00       PGEN=200.00  QGEN=45.37
3  33110     0  "1"     0     # DEC CTG3  18.00       PGEN=200.00  QGEN=45.37
3  33107     0  "1"     0     # DEC STG1  24.00       PGEN=280.00  QGEN=63.67
0
 #
 #
 # (310)  L-1/G-1 OVERLAPPING OUTAGE
 # Newark - Newark Distribution 230 kV Line and DEC
1  30631 30635  "1 "    0     # line from  NEWARK E 230.00  BRKR to BRKR  NWK DIST 230.00
 # steam turbine outage takes out entire plant
3  33108     0  "1"     0     # DEC CTG1  18.00       PGEN=200.00  QGEN=45.37
3  33109     0  "1"     0     # DEC CTG2  18.00       PGEN=200.00  QGEN=45.37
3  33110     0  "1"     0     # DEC CTG3  18.00       PGEN=200.00  QGEN=45.37
3  33107     0  "1"     0     # DEC STG1  24.00       PGEN=280.00  QGEN=63.67
0
 #
 #
 # (311)  L-1/G-1 OVERLAPPING OUTAGE
 # Newark Distribution - Los Esteros 230 kV Line and DEC
1  30635 30731  "1 "    0     # line from  NWK DIST 230.00  BRKR to BRKR  LS ESTRS 230.00
 # steam turbine outage takes out entire plant
3  33108     0  "1"     0     # DEC CTG1  18.00       PGEN=200.00  QGEN=45.37
3  33109     0  "1"     0     # DEC CTG2  18.00       PGEN=200.00  QGEN=45.37
```

```
3  33110     0  "1"     0     # DEC CTG3  18.00       PGEN=200.00  QGEN=45.37
3  33107     0  "1"     0     # DEC STG1  24.00       PGEN=280.00  QGEN=63.67
0
 #
 #
 # (312)  L-1/G-1 OVERLAPPING OUTAGE
 # Tesla - Newark #2 230 kV Line and DEC
1  30655 30631  "1 "    0     # line from  ADCC     230.00   (3) to BRKR  NEWARK E 230.00
1  30655 30640  "1 "    0     # line from  ADCC     230.00   (3) to BRKR  TESLA C  230.00
2  30655 35310  "1 "    0     # TRAN from  ADCC     230.00   (3) to (1)   LFC FIN+   9.11
 # steam turbine outage takes out entire plant
3  33108     0  "1"     0     # DEC CTG1  18.00       PGEN=200.00  QGEN=45.37
3  33109     0  "1"     0     # DEC CTG2  18.00       PGEN=200.00  QGEN=45.37
3  33110     0  "1"     0     # DEC CTG3  18.00       PGEN=200.00  QGEN=45.37
3  33107     0  "1"     0     # DEC STG1  24.00       PGEN=280.00  QGEN=63.67
0
 #
 #
 # (313)  L-1/G-1 OVERLAPPING OUTAGE
 # Cayetano - North Dublin 230 kV Line and MEC
1  30530 30537  "1 "    0     # line from  CAYETANO 230.00  BRKR to BRKR  NDUBLIN  230.00
 # steam turbine outage takes out entire plant
3  35881     0  "1"     0     # MEC CTG1  18.00       PGEN=200.00  QGEN=64.03
3  35882     0  "1"     0     # MEC CTG2  18.00       PGEN=200.00  QGEN=64.03
3  35883     0  "1"     0     # MEC STG1  18.00       PGEN=200.00  QGEN=64.03
0
 #
 #
 # (314)  L-1/G-1 OVERLAPPING OUTAGE
 # North Dublin - Vineyard 230 kV Line and MEC
1  30537 35224  "1 "    0     # line from  NDUBLIN  230.00  BRKR to BRKR  VINEYD_D 230.00
 # steam turbine outage takes out entire plant
3  35881     0  "1"     0     # MEC CTG1  18.00       PGEN=200.00  QGEN=64.03
3  35882     0  "1"     0     # MEC CTG2  18.00       PGEN=200.00  QGEN=64.03
3  35883     0  "1"     0     # MEC STG1  18.00       PGEN=200.00  QGEN=64.03
0
 #
 #
 # (315)  L-1/G-1 OVERLAPPING OUTAGE
 # Moraga - Castro Valley 230 kV Line and MEC
1  30550 30554  "1 "    0     # line from  MORAGA   230.00  BRKR to BRKR  CASTROVL 230.00
 # steam turbine outage takes out entire plant
3  35881     0  "1"     0     # MEC CTG1  18.00       PGEN=200.00  QGEN=64.03
3  35882     0  "1"     0     # MEC CTG2  18.00       PGEN=200.00  QGEN=64.03
3  35883     0  "1"     0     # MEC STG1  18.00       PGEN=200.00  QGEN=64.03
0
 #
 #
 # (316)  L-1/G-1 OVERLAPPING OUTAGE
 # Moraga - San Ramon 230 kV Line and MEC
1  30550 30555  "1 "    0     # line from  MORAGA   230.00  BRKR to BRKR  SANRAMON 230.00
 # steam turbine outage takes out entire plant
3  35881     0  "1"     0     # MEC CTG1  18.00       PGEN=200.00  QGEN=64.03
3  35882     0  "1"     0     # MEC CTG2  18.00       PGEN=200.00  QGEN=64.03
3  35883     0  "1"     0     # MEC STG1  18.00       PGEN=200.00  QGEN=64.03
0
 #
 #
 # (317)  L-1/G-1 OVERLAPPING OUTAGE
 # Newark - Castro Valley 230 kV Line and MEC
1  30554 30631  "1 "    0     # line from  CASTROVL 230.00  BRKR to BRKR  NEWARK E 230.00
 # steam turbine outage takes out entire plant
3  35881     0  "1"     0     # MEC CTG1  18.00       PGEN=200.00  QGEN=64.03
3  35882     0  "1"     0     # MEC CTG2  18.00       PGEN=200.00  QGEN=64.03
3  35883     0  "1"     0     # MEC STG1  18.00       PGEN=200.00  QGEN=64.03
0
 #
 #
 # (318)  L-1/G-1 OVERLAPPING OUTAGE
 # East Shore - San Mateo 230 kV Line and MEC
1  30560 30700  "1 "    0     # line from  E. SHORE 230.00  BRKR to BRKR  SANMATEO 230.00
 # steam turbine outage takes out entire plant
3  35881     0  "1"     0     # MEC CTG1  18.00       PGEN=200.00  QGEN=64.03
3  35882     0  "1"     0     # MEC CTG2  18.00       PGEN=200.00  QGEN=64.03
3  35883     0  "1"     0     # MEC STG1  18.00       PGEN=200.00  QGEN=64.03
0
 #
 #
```

```
 # (319)  L-1/G-1 OVERLAPPING OUTAGE
 # Tassajara - Newark 230 kV Line and MEC
1  30562 30631  "1 "    0     # line from  TES JCT  230.00   (3) to BRKR  NEWARK E 230.00
1  30562 30561  "1 "    0     # line from  TES JCT  230.00   (3) to BRKR  TASSAJAR 230.00
1  30562 30563  "1 "    0     # line from  TES JCT  230.00   (3) to BRKR  RESEARCH 230.00
4  30563     0  "1 "    0     # LOAD-DROP    RESEARCH 230.00  LOAD==36.74(7.45)
 # steam turbine outage takes out entire plant
3  35881     0  "1"     0     # MEC CTG1  18.00       PGEN=200.00  QGEN=64.03
3  35882     0  "1"     0     # MEC CTG2  18.00       PGEN=200.00  QGEN=64.03
3  35883     0  "1"     0     # MEC STG1  18.00       PGEN=200.00  QGEN=64.03
0
 #
 #
 # (320)  L-1/G-1 OVERLAPPING OUTAGE
 # Newark - Las Positas 230 kV Line and MEC
1  30585 30630  "1 "    0     # line from  LS PSTAS 230.00  BRKR to BRKR  NEWARK D 230.00
 # steam turbine outage takes out entire plant
3  35881     0  "1"     0     # MEC CTG1  18.00       PGEN=200.00  QGEN=64.03
3  35882     0  "1"     0     # MEC CTG2  18.00       PGEN=200.00  QGEN=64.03
3  35883     0  "1"     0     # MEC STG1  18.00       PGEN=200.00  QGEN=64.03
0
 #
 #
 # (321)  L-1/G-1 OVERLAPPING OUTAGE
 # Tesla - Newark #1 230 kV Line and MEC
1  30624 30630  "1 "    0     # line from  TESLA E  230.00  BRKR to BRKR  NEWARK D 230.00
 # steam turbine outage takes out entire plant
3  35881     0  "1"     0     # MEC CTG1  18.00       PGEN=200.00  QGEN=64.03
3  35882     0  "1"     0     # MEC CTG2  18.00       PGEN=200.00  QGEN=64.03
3  35883     0  "1"     0     # MEC STG1  18.00       PGEN=200.00  QGEN=64.03
0
 #
 #
 # (322)  L-1/G-1 OVERLAPPING OUTAGE
 # Newark - Ravenswood 230 kV Line and MEC
1  30630 30703  "1 "    0     # line from  NEWARK D 230.00  BRKR to BRKR  RAVENSWD 230.00
 # steam turbine outage takes out entire plant
3  35881     0  "1"     0     # MEC CTG1  18.00       PGEN=200.00  QGEN=64.03
3  35882     0  "1"     0     # MEC CTG2  18.00       PGEN=200.00  QGEN=64.03
3  35883     0  "1"     0     # MEC STG1  18.00       PGEN=200.00  QGEN=64.03
0
 #
 #
 # (323)  L-1/G-1 OVERLAPPING OUTAGE
 # Newark - Newark Distribution 230 kV Line and MEC
1  30631 30635  "1 "    0     # line from  NEWARK E 230.00  BRKR to BRKR  NWK DIST 230.00
 # steam turbine outage takes out entire plant
3  35881     0  "1"     0     # MEC CTG1  18.00       PGEN=200.00  QGEN=64.03
3  35882     0  "1"     0     # MEC CTG2  18.00       PGEN=200.00  QGEN=64.03
3  35883     0  "1"     0     # MEC STG1  18.00       PGEN=200.00  QGEN=64.03
0
 #
 #
 # (324)  L-1/G-1 OVERLAPPING OUTAGE
 # Newark Distribution - Los Esteros 230 kV Line and MEC
1  30635 30731  "1 "    0     # line from  NWK DIST 230.00  BRKR to BRKR  LS ESTRS 230.00
 # steam turbine outage takes out entire plant
3  35881     0  "1"     0     # MEC CTG1  18.00       PGEN=200.00  QGEN=64.03
3  35882     0  "1"     0     # MEC CTG2  18.00       PGEN=200.00  QGEN=64.03
3  35883     0  "1"     0     # MEC STG1  18.00       PGEN=200.00  QGEN=64.03
0
 #
 #
 # (325)  L-1/G-1 OVERLAPPING OUTAGE
 # Tesla - Newark #2 230 kV Line and MEC
1  30655 30631  "1 "    0     # line from  ADCC     230.00   (3) to BRKR  NEWARK E 230.00
1  30655 30640  "1 "    0     # line from  ADCC     230.00   (3) to BRKR  TESLA C  230.00
2  30655 35310  "1 "    0     # TRAN from  ADCC     230.00   (3) to (1)   LFC FIN+   9.11
 # steam turbine outage takes out entire plant
3  35881     0  "1"     0     # MEC CTG1  18.00       PGEN=200.00  QGEN=64.03
3  35882     0  "1"     0     # MEC CTG2  18.00       PGEN=200.00  QGEN=64.03
3  35883     0  "1"     0     # MEC STG1  18.00       PGEN=200.00  QGEN=64.03
0
 #
 #
 # (326)  L-1/G-1 OVERLAPPING OUTAGE
 # Newark - Northern #1 115 kV Line and DVRPP
1  35120 36851  "1 "    0     # line from  NEWARK D 115.00  BRKR to BRKR  NORTHERN 115.00
```

```
 #
3  36863     0  "1"     0     # DVRPPCT1   13.80       PGEN=40.00  QGEN=5.00
3  36865     0  "1"     0     # DVRPPST1A  13.80       PGEN=40.00  QGEN=5.00
3  36864     0  "1"     0     # DVRPPCT2   13.80       PGEN=40.00  QGEN=5.00
0
 #
 #
 # (327)  L-1/G-1 OVERLAPPING OUTAGE
 # Newark - Northern #2 115 kV Line and DVRPP
1  35122 36851  "2 "    0     # line from  NEWARK F 115.00  BRKR to BRKR  NORTHERN 115.00
 #
3  36863     0  "1"     0     # DVRPPCT1   13.80       PGEN=40.00  QGEN=5.00
3  36865     0  "1"     0     # DVRPPST1A  13.80       PGEN=40.00  QGEN=5.00
3  36864     0  "1"     0     # DVRPPCT2   13.80       PGEN=40.00  QGEN=5.00
0
 #
 #
 # (328)  L-1/G-1 OVERLAPPING OUTAGE
 # Newark - Ames #1 115 kV Line  and DVRPP
1  35121 35350  "1 "    0     # line from  NEWARK E 115.00  BRKR to BRKR  AMES BS1 115.00
 #
3  36863     0  "1"     0     # DVRPPCT1   13.80       PGEN=40.00  QGEN=5.00
3  36865     0  "1"     0     # DVRPPST1A  13.80       PGEN=40.00  QGEN=5.00
3  36864     0  "1"     0     # DVRPPCT2   13.80       PGEN=40.00  QGEN=5.00
0
 #
 #
 # (329)  L-1/G-1 OVERLAPPING OUTAGE
 # Newark - Ames #3 115 kV Line and DVRPP
1  35121 35350  "3 "    0     # line from  NEWARK E 115.00  BRKR to BRKR  AMES BS1 115.00
 #
3  36863     0  "1"     0     # DVRPPCT1   13.80       PGEN=40.00  QGEN=5.00
3  36865     0  "1"     0     # DVRPPST1A  13.80       PGEN=40.00  QGEN=5.00
3  36864     0  "1"     0     # DVRPPCT2   13.80       PGEN=40.00  QGEN=5.00
0
 #
 #
 # (330)  L-1/G-1 OVERLAPPING OUTAGE
 # Newark - Ames #2 115 kV Line and DVRPP
1  35121 35351  "2 "    0     # line from  NEWARK E 115.00  BRKR to BRKR  AMES BS2 115.00
 #
3  36863     0  "1"     0     # DVRPPCT1   13.80       PGEN=40.00  QGEN=5.00
3  36865     0  "1"     0     # DVRPPST1A  13.80       PGEN=40.00  QGEN=5.00
3  36864     0  "1"     0     # DVRPPCT2   13.80       PGEN=40.00  QGEN=5.00
0
 #
 #
 # (331)  L-1/G-1 OVERLAPPING OUTAGE
 # Newark - Ames Distribution 115 kV Line and DVRPP
1  35349 35121  "1 "    0     # line from  AMES DST 115.00  BRKR to BRKR  NEWARK E 115.00
 #
3  36863     0  "1"     0     # DVRPPCT1   13.80       PGEN=40.00  QGEN=5.00
3  36865     0  "1"     0     # DVRPPST1A  13.80       PGEN=40.00  QGEN=5.00
3  36864     0  "1"     0     # DVRPPCT2   13.80       PGEN=40.00  QGEN=5.00
0
 #
 #
 # (332)  L-1/G-1 OVERLAPPING OUTAGE
 # Newark - Lawrence 115 kV Line and DVRPP
1  35122 35357  "1 "    0     # line from  NEWARK F 115.00  BRKR to (3)   LCKHD J1 115.00
1  35357 35358  "1 "    0     # line from  LCKHD J1 115.00   (3) to (3)   MFT.FD J 115.00
1  35357 35363  "1 "    0     # line from  LCKHD J1 115.00   (3) to BRKR  LAWRENCE 115.00
1  35358 35359  "1 "    0     # line from  MFT.FD J 115.00   (3) to (1)   MOFT.FLD 115.00
1  35358 35361  "1 "    0     # line from  MFT.FD J 115.00   (3) to BRKR  LOCKHD 1 115.00
4  35359     0  "1 "    0     # LOAD-DROP    MOFT.FLD 115.00  LOAD==4.46(1.12)
4  35361     0  "1 "    0     # LOAD-DROP    LOCKHD 1 115.00  LOAD==17.33(14.36)
1  35361 35362  "1 "    1     # close LOCKHD 1 115.00  LOCKHD 2  115.00
4  35361 0      "**"    1     # restore all loads to LOCKHD 1
 #
3  36863     0  "1"     0     # DVRPPCT1   13.80       PGEN=40.00  QGEN=5.00
3  36865     0  "1"     0     # DVRPPST1A  13.80       PGEN=40.00  QGEN=5.00
3  36864     0  "1"     0     # DVRPPCT2   13.80       PGEN=40.00  QGEN=5.00
0
 #
 #
 # (333)  L-1/G-1 OVERLAPPING OUTAGE
 # Newark - Applied Materials 115 kV Line and DVRPP
1  35122 35360  "1 "    0     # line from  NEWARK F 115.00  BRKR to (3)   LCKHD J2 115.00
```

```
1  35360 35362  "1 "    0     # line from  LCKHD J2 115.00   (3) to BRKR  LOCKHD 2 115.00
1  35360 35365  "1 "    0     # line from  LCKHD J2 115.00   (3) to (3)   AMD JCT  115.00
1  35365 35364  "1 "    0     # line from  AMD JCT  115.00   (3) to BRKR  A.M.D    115.00
1  35365 35369  "1 "    0     # line from  AMD JCT  115.00   (3) to BRKR  APP MAT  115.00
4  35362     0  "1 "    0     # LOAD-DROP    LOCKHD 2 115.00  LOAD==13.28(10.31)
4  35364     0  "1 "    0     # LOAD-DROP    A.M.D    115.00  LOAD==7.82(5.46)
1  35361 35362  "1 "    1     # close LOCKHD 1 115.00  LOCKHD 2  115.00
4  35362 0      "**"    1     # restore all loads to LOCKHD 2
 #
3  36863     0  "1"     0     # DVRPPCT1   13.80       PGEN=40.00  QGEN=5.00
3  36865     0  "1"     0     # DVRPPST1A  13.80       PGEN=40.00  QGEN=5.00
3  36864     0  "1"     0     # DVRPPCT2   13.80       PGEN=40.00  QGEN=5.00
0
 #
 #
 # (334)  L-1/G-1 OVERLAPPING OUTAGE
 # Newark - Dixon Landing and DVRPP
1  35122 35600  "1 "    0     # line from  NEWARK F 115.00  BRKR to BRKR  DIXON LD 115.00
 #
3  36863     0  "1"     0     # DVRPPCT1   13.80       PGEN=40.00  QGEN=5.00
3  36865     0  "1"     0     # DVRPPST1A  13.80       PGEN=40.00  QGEN=5.00
3  36864     0  "1"     0     # DVRPPCT2   13.80       PGEN=40.00  QGEN=5.00
0
 #
 #
 # (335)  L-1/G-1 OVERLAPPING OUTAGE
 # Newark - Kifer 115 kV Line and DVRPP
1  35122 35602  "1 "    0     # line from  NEWARK F 115.00  BRKR to (3)   ZNKER J2 115.00
1  35602 35604  "1 "    0     # line from  ZNKER J2 115.00   (3) to (3)   ZANKER   115.00
1  35602 36850  "1 "    0     # line from  ZNKER J2 115.00   (3) to BRKR  KIFER    115.00
2  35604 35861  "1 "    0     # TRAN from  ZANKER   115.00   (3) to (2)   SJ-SCL W   9.11
2  35604 35861  "2 "    0     # TRAN from  ZANKER   115.00   (3) to (2)   SJ-SCL W   9.11
4  35861     0  "SG"    0     # LOAD-DROP    SJ-SCL W   9.11  LOAD==5.54(1.88)
3  35861     0  "1 "    0     # GEN-DROP    SJ-SCL W   9.11  GEN==5.00(0.00)
 #
3  36863     0  "1"     0     # DVRPPCT1   13.80       PGEN=40.00  QGEN=5.00
3  36865     0  "1"     0     # DVRPPST1A  13.80       PGEN=40.00  QGEN=5.00
3  36864     0  "1"     0     # DVRPPCT2   13.80       PGEN=40.00  QGEN=5.00
0
 #
 #
 # (336)  L-1/G-1 OVERLAPPING OUTAGE
 # Newark - Trimble 115 kV Line and DVRPP
1  35122 35603  "1 "    0     # line from  NEWARK F 115.00  BRKR to (3)   ZNKER J1 115.00
1  35603 35605  "1 "    0     # line from  ZNKER J1 115.00   (3) to (1)   AGNEW J  115.00
1  35603 35612  "1 "    0     # line from  ZNKER J1 115.00   (3) to BRKR  TRIMBLE  115.00
 #
3  36863     0  "1"     0     # DVRPPCT1   13.80       PGEN=40.00  QGEN=5.00
3  36865     0  "1"     0     # DVRPPST1A  13.80       PGEN=40.00  QGEN=5.00
3  36864     0  "1"     0     # DVRPPCT2   13.80       PGEN=40.00  QGEN=5.00
0
 #
 #
 # (337)  L-1/G-1 OVERLAPPING OUTAGE
 # Newark - Milpitas #1 115 kV Line and DVRPP
1  35122 35624  "1 "    0     # line from  NEWARK F 115.00  BRKR to BRKR  MILPITAS 115.00
 #
3  36863     0  "1"     0     # DVRPPCT1   13.80       PGEN=40.00  QGEN=5.00
3  36865     0  "1"     0     # DVRPPST1A  13.80       PGEN=40.00  QGEN=5.00
3  36864     0  "1"     0     # DVRPPCT2   13.80       PGEN=40.00  QGEN=5.00
0
 #
 #
 # (338)  L-1/G-1 OVERLAPPING OUTAGE
 # Newark - Milpitas #1 115 kV Line and DVRPP
1  35122 35624  "2 "    0     # line from  NEWARK F 115.00  BRKR to BRKR  MILPITAS 115.00
 #
3  36863     0  "1"     0     # DVRPPCT1   13.80       PGEN=40.00  QGEN=5.00
3  36865     0  "1"     0     # DVRPPST1A  13.80       PGEN=40.00  QGEN=5.00
3  36864     0  "1"     0     # DVRPPCT2   13.80       PGEN=40.00  QGEN=5.00
0
 #
 #
 # (339)  L-1/G-1 OVERLAPPING OUTAGE
 # Newark - Northern #1 115 kV Line and LECEF CT1
1  35120 36851  "1 "    0     # line from  NEWARK D 115.00  BRKR to BRKR  NORTHERN 115.00
 #
3  35854     0  "1"     0     # LECEFGT1  13.80       PGEN=50.00  QGEN=33.49
```

```
0
 #
 #
 # (340)  L-1/G-1 OVERLAPPING OUTAGE
 # Newark - Northern #2 115 kV Line and LECEF CT1
1  35122 36851  "2 "    0     # line from  NEWARK F 115.00  BRKR to BRKR  NORTHERN 115.00
 #
3  35854     0  "1"     0     # LECEFGT1  13.80       PGEN=50.00  QGEN=33.49
0
 #
 #
 # (341)  L-1/G-1 OVERLAPPING OUTAGE
 # Newark - Ames #1 115 kV Line  and LECEF CT1
1  35121 35350  "1 "    0     # line from  NEWARK E 115.00  BRKR to BRKR  AMES BS1 115.00
 #
3  35854     0  "1"     0     # LECEFGT1  13.80       PGEN=50.00  QGEN=33.49
0
 #
 #
 # (342)  L-1/G-1 OVERLAPPING OUTAGE
 # Newark - Ames #3 115 kV Line and LECEF CT1
1  35121 35350  "3 "    0     # line from  NEWARK E 115.00  BRKR to BRKR  AMES BS1 115.00
 #
3  35854     0  "1"     0     # LECEFGT1  13.80       PGEN=50.00  QGEN=33.49
0
 #
 #
 # (343)  L-1/G-1 OVERLAPPING OUTAGE
 # Newark - Ames #2 115 kV Line and LECEF CT1
1  35121 35351  "2 "    0     # line from  NEWARK E 115.00  BRKR to BRKR  AMES BS2 115.00
 #
3  35854     0  "1"     0     # LECEFGT1  13.80       PGEN=50.00  QGEN=33.49
0
 #
 #
 # (344)  L-1/G-1 OVERLAPPING OUTAGE
 # Newark - Ames Distribution 115 kV Line and LECEF CT1
1  35349 35121  "1 "    0     # line from  AMES DST 115.00  BRKR to BRKR  NEWARK E 115.00
 #
3  35854     0  "1"     0     # LECEFGT1  13.80       PGEN=50.00  QGEN=33.49
0
 #
 #
 # (345)  L-1/G-1 OVERLAPPING OUTAGE
 # Newark - Lawrence 115 kV Line and LECEF CT1
1  35122 35357  "1 "    0     # line from  NEWARK F 115.00  BRKR to (3)   LCKHD J1 115.00
1  35357 35358  "1 "    0     # line from  LCKHD J1 115.00   (3) to (3)   MFT.FD J 115.00
1  35357 35363  "1 "    0     # line from  LCKHD J1 115.00   (3) to BRKR  LAWRENCE 115.00
1  35358 35359  "1 "    0     # line from  MFT.FD J 115.00   (3) to (1)   MOFT.FLD 115.00
1  35358 35361  "1 "    0     # line from  MFT.FD J 115.00   (3) to BRKR  LOCKHD 1 115.00
4  35359     0  "1 "    0     # LOAD-DROP    MOFT.FLD 115.00  LOAD==4.46(1.12)
4  35361     0  "1 "    0     # LOAD-DROP    LOCKHD 1 115.00  LOAD==17.33(14.36)
1  35361 35362  "1 "    1     # close LOCKHD 1 115.00  LOCKHD 2  115.00
4  35361 0      "**"    1     # restore all loads to LOCKHD 1
 #
3  35854     0  "1"     0     # LECEFGT1  13.80       PGEN=50.00  QGEN=33.49
0
 #
 #
 # (346)  L-1/G-1 OVERLAPPING OUTAGE
 # Newark - Applied Materials 115 kV Line and LECEF CT1
1  35122 35360  "1 "    0     # line from  NEWARK F 115.00  BRKR to (3)   LCKHD J2 115.00
1  35360 35362  "1 "    0     # line from  LCKHD J2 115.00   (3) to BRKR  LOCKHD 2 115.00
1  35360 35365  "1 "    0     # line from  LCKHD J2 115.00   (3) to (3)   AMD JCT  115.00
1  35365 35364  "1 "    0     # line from  AMD JCT  115.00   (3) to BRKR  A.M.D    115.00
1  35365 35369  "1 "    0     # line from  AMD JCT  115.00   (3) to BRKR  APP MAT  115.00
4  35362     0  "1 "    0     # LOAD-DROP    LOCKHD 2 115.00  LOAD==13.28(10.31)
4  35364     0  "1 "    0     # LOAD-DROP    A.M.D    115.00  LOAD==7.82(5.46)
1  35361 35362  "1 "    1     # close LOCKHD 1 115.00  LOCKHD 2  115.00
4  35362 0      "**"    1     # restore all loads to LOCKHD 2
 #
3  35854     0  "1"     0     # LECEFGT1  13.80       PGEN=50.00  QGEN=33.49
0
 #
 #
 # (347)  L-1/G-1 OVERLAPPING OUTAGE
 # Newark - Dixon Landing and LECEF CT1
1  35122 35600  "1 "    0     # line from  NEWARK F 115.00  BRKR to BRKR  DIXON LD 115.00
```

```
 #
3  35854     0  "1"     0     # LECEFGT1  13.80       PGEN=50.00  QGEN=33.49
0
 #
 #
 # (348)  L-1/G-1 OVERLAPPING OUTAGE
 # Newark - Kifer 115 kV Line and LECEF CT1
1  35122 35602  "1 "    0     # line from  NEWARK F 115.00  BRKR to (3)   ZNKER J2 115.00
1  35602 35604  "1 "    0     # line from  ZNKER J2 115.00   (3) to (3)   ZANKER   115.00
1  35602 36850  "1 "    0     # line from  ZNKER J2 115.00   (3) to BRKR  KIFER    115.00
2  35604 35861  "1 "    0     # TRAN from  ZANKER   115.00   (3) to (2)   SJ-SCL W   9.11
2  35604 35861  "2 "    0     # TRAN from  ZANKER   115.00   (3) to (2)   SJ-SCL W   9.11
4  35861     0  "SG"    0     # LOAD-DROP    SJ-SCL W   9.11  LOAD==5.54(1.88)
3  35861     0  "1 "    0     # GEN-DROP    SJ-SCL W   9.11  GEN==5.00(0.00)
 #
3  35854     0  "1"     0     # LECEFGT1  13.80       PGEN=50.00  QGEN=33.49
0
 #
 #
 # (349)  L-1/G-1 OVERLAPPING OUTAGE
 # Newark - Trimble 115 kV Line and LECEF CT1
1  35122 35603  "1 "    0     # line from  NEWARK F 115.00  BRKR to (3)   ZNKER J1 115.00
1  35603 35605  "1 "    0     # line from  ZNKER J1 115.00   (3) to (1)   AGNEW J  115.00
1  35603 35612  "1 "    0     # line from  ZNKER J1 115.00   (3) to BRKR  TRIMBLE  115.00
 #
3  35854     0  "1"     0     # LECEFGT1  13.80       PGEN=50.00  QGEN=33.49
0
 #
 #
 # (350)  L-1/G-1 OVERLAPPING OUTAGE
 # Newark - Milpitas #1 115 kV Line and LECEF CT1
1  35122 35624  "1 "    0     # line from  NEWARK F 115.00  BRKR to BRKR  MILPITAS 115.00
 #
3  35854     0  "1"     0     # LECEFGT1  13.80       PGEN=50.00  QGEN=33.49
0
 #
 #
 # (351)  L-1/G-1 OVERLAPPING OUTAGE
 # Newark - Milpitas #1 115 kV Line and LECEF CT1
1  35122 35624  "2 "    0     # line from  NEWARK F 115.00  BRKR to BRKR  MILPITAS 115.00
 #
3  35854     0  "1"     0     # LECEFGT1  13.80       PGEN=50.00  QGEN=33.49
0
 #
 #
 # (352)  B2 LINE OUTAGE (BREAKER-TO-BREAKER)
 #
1  30700 30695  "1 "    0     # line from  SANMATEO 230.00  BRKR to BRKR  MARTIN C 230.00
0
 #
 #
 # (353)  B2 LINE OUTAGE (BREAKER-TO-BREAKER)
 #
1  30703 30700  "1 "    0     # line from  RAVENSWD 230.00  BRKR to BRKR  SANMATEO 230.00
0
 #
 #
 # (354)  B2 LINE OUTAGE (BREAKER-TO-BREAKER)
 #
1  30703 30700  "2 "    0     # line from  RAVENSWD 230.00  BRKR to BRKR  SANMATEO 230.00
0
 #
 #
 # (355)  B2 LINE OUTAGE (BREAKER-TO-BREAKER)
 #
1  33310 33315  "1 "    0     # line from  SANMATEO 115.00  BRKR to BRKR  RAVENSWD 115.00
0
 #
 #
 # (356)  B2 LINE OUTAGE (BREAKER-TO-BREAKER)
 #
1  30624 30703  "1 "    0     # line from  TESLA E  230.00  BRKR to BRKR  RAVENSWD 230.00
0
 #
 #
 # (357)  B2 LINE OUTAGE (BREAKER-TO-BREAKER)
 #
1  30705 30710  "1 "    0     # line from  MONTAVIS 230.00  BRKR to (3)   SLACTAP1 230.00
```

```
1  30710 30711  "1 "    0     # line from  SLACTAP1 230.00   (3) to BRKR  S.L.A.C. 230.00
1  30710 30715  "1 "    0     # line from  SLACTAP1 230.00   (3) to BRKR  JEFFERSN 230.00
4  30711     0  "1 "    0     # LOAD-DROP    S.L.A.C. 230.00  LOAD==61.00(12.39)
1  30711 30712  "1 "    1     # LINE-TRANSFER SLACTAP1 to SLACTAP2
4  30711     0  "**"    1     # RESTORE S.L.A.C. load
0
 #
 #
 # (358)  B2 LINE OUTAGE (BREAKER-TO-BREAKER)
 #
1  30705 30712  "1 "    0     # line from  MONTAVIS 230.00  BRKR to (2)   SLACTAP2 230.00
1  30712 30715  "1 "    0     # line from  SLACTAP2 230.00   (2) to BRKR  JEFFERSN 230.00
0
 #
 #
 # (359)  B2 LINE OUTAGE (BREAKER-TO-BREAKER)
 #
1  30715 30696  "1 "    0     # line from  JEFFERSN 230.00  BRKR to (2)   MRT RCTR 230.00
1  30696 30695  "1 "    0     # line from  MRT RCTR 230.00   (2) to BRKR  MARTIN C 230.00
0
 #
 #
 # (360)  B2 LINE OUTAGE (BREAKER-TO-BREAKER)
 #
1  33312 33313  "1 "    0     # line from  BELMONT  115.00  BRKR to BRKR  BAIR     115.00
0
 #
 #
 # (361)  B2 LINE OUTAGE (BREAKER-TO-BREAKER)
 #
1  33313 33319  "1 "    0     # line from  BAIR     115.00  BRKR to (3)   SHREDJCT 115.00
1  33319 33314  "1 "    0     # line from  SHREDJCT 115.00   (3) to (2)   SHREDDER 115.00
1  33319 33315  "1 "    0     # line from  SHREDJCT 115.00   (3) to BRKR  RAVENSWD 115.00
1  33314 33320  "1 "    0     # line from  SHREDDER 115.00   (2) to (1)   LONESTAR 115.00
4  33314     0  "1 "    0     # LOAD-DROP    SHREDDER 115.00  LOAD==4.89(5.57)
4  33320     0  "1 "    0     # LOAD-DROP    LONESTAR 115.00  LOAD==2.75(3.67)
0
 #
 #
 # (362)  B2 LINE OUTAGE (BREAKER-TO-BREAKER)
 #
1  33315 33313  "1 "    0     # line from  RAVENSWD 115.00  BRKR to BRKR  BAIR     115.00
0
 #
 #
 # (363)  B2 LINE OUTAGE (BREAKER-TO-BREAKER)
 #
1  33315 33316  "2 "    0     # line from  RAVENSWD 115.00  BRKR to BRKR  CLY LND2 115.00
1  33317 33316  "1 "    1     # CLOSE CLY LNDG2 115.00  TO CLY LNDG 115.00
0
 #
 #
 # (364)  B2 LINE OUTAGE (BREAKER-TO-BREAKER)
 #
1  33315 33317  "1 "    0     # line from  RAVENSWD 115.00  BRKR to BRKR  CLY LND  115.00
1  33317 33316  "1 "    1     # CLOSE CLY LNDG2 115.00  TO CLY LNDG 115.00
0
 #
 #
 # (365)  B2 LINE OUTAGE (BREAKER-TO-BREAKER)
 #
1  33315 35350  "1 "    0     # line from  RAVENSWD 115.00  BRKR to BRKR  AMES BS1 115.00
0
 #
 #
 # (366)  B2 LINE OUTAGE (BREAKER-TO-BREAKER)
 #
1  33315 35351  "1 "    0     # line from  RAVENSWD 115.00  BRKR to BRKR  AMES BS2 115.00
0
 #
 #
 # (367)  B2 LINE OUTAGE (BREAKER-TO-BREAKER)
 #
1  33315 38028  "1 "    0     # line from  RAVENSWD 115.00  BRKR to BRKR  PLO ALTO 115.00
0
 #
 #
 # (368)  B2 LINE OUTAGE (BREAKER-TO-BREAKER)
```

```
 #
1  33315 38028  "2 "    0     # line from  RAVENSWD 115.00  BRKR to BRKR  PLO ALTO 115.00
0
 #
 #
 # (369)  B3 TRANSFORMER OUTAGE (BREAKER-TO-BREAKER)
 #
2  33175 30580  "1 "    0     # TRAN from  ALTAMONT   9.11   (1) to (3)   ALTM MDW 230.00
1  30580 30625  "1 "    0     # line from  ALTM MDW 230.00   (3) to BRKR  TESLA D  230.00
1  30580 38610  "1 "    0     # line from  ALTM MDW 230.00   (3) to BRKR  DELTAPMP 230.00
0
 #
 #
 # (370)  B3 TRANSFORMER OUTAGE (BREAKER-TO-BREAKER)
 #
2  33310 30700  "5 "    0     # TRAN from  SANMATEO 115.00  BRKR to (1)   SANMATEO 230.00
0
 #
 #
 # (371)  B3 TRANSFORMER OUTAGE (BREAKER-TO-BREAKER)
 #
2  33310 30700  "6 "    0     # TRAN from  SANMATEO 115.00  BRKR to (1)   SANMATEO 230.00
0
 #
 #
 # (372)  B3 TRANSFORMER OUTAGE (BREAKER-TO-BREAKER)
 #
2  33310 30700  "7 "    0     # TRAN from  SANMATEO 115.00  BRKR to (1)   SANMATEO 230.00
0
 #
 #
 # (373)  B3 TRANSFORMER OUTAGE (BREAKER-TO-BREAKER)
 #
2  33315 30703  "1 "    0     # TRAN from  RAVENSWD 115.00  BRKR to BRKR  RAVENSWD 230.00
0
 #
 #
 # (374)  B3 TRANSFORMER OUTAGE (BREAKER-TO-BREAKER)
 #
2  33315 30703  "2 "    0     # TRAN from  RAVENSWD 115.00  BRKR to BRKR  RAVENSWD 230.00
0
 #
 #
 # (375)  B3 TRANSFORMER OUTAGE (BREAKER-TO-BREAKER)
 #
2  33380 30715  "1 "    0     # TRAN from  JEFFERSN  60.00  BRKR to BRKR  JEFFERSN 230.00
0
 #
 #
 # (376)  B2 LINE OUTAGE (BREAKER-TO-BREAKER)
 #
1  30700 30695  "1 "    0     # line from  SANMATEO 230.00  BRKR to BRKR  MARTIN C 230.00
 # steam turbine outage takes out entire plant
3  35881     0  "1"     0     # MEC CTG1  18.00       PGEN=200.00  QGEN=64.03
3  35882     0  "1"     0     # MEC CTG2  18.00       PGEN=200.00  QGEN=64.03
3  35883     0  "1"     0     # MEC STG1  18.00       PGEN=200.00  QGEN=64.03
0
 #
 #
 # (377)  B2 LINE OUTAGE (BREAKER-TO-BREAKER)
 #
1  30703 30700  "1 "    0     # line from  RAVENSWD 230.00  BRKR to BRKR  SANMATEO 230.00
 # steam turbine outage takes out entire plant
3  35881     0  "1"     0     # MEC CTG1  18.00       PGEN=200.00  QGEN=64.03
3  35882     0  "1"     0     # MEC CTG2  18.00       PGEN=200.00  QGEN=64.03
3  35883     0  "1"     0     # MEC STG1  18.00       PGEN=200.00  QGEN=64.03
0
 #
 #
 # (378)  B2 LINE OUTAGE (BREAKER-TO-BREAKER)
 #
1  30703 30700  "2 "    0     # line from  RAVENSWD 230.00  BRKR to BRKR  SANMATEO 230.00
 # steam turbine outage takes out entire plant
3  35881     0  "1"     0     # MEC CTG1  18.00       PGEN=200.00  QGEN=64.03
3  35882     0  "1"     0     # MEC CTG2  18.00       PGEN=200.00  QGEN=64.03
3  35883     0  "1"     0     # MEC STG1  18.00       PGEN=200.00  QGEN=64.03
0
 #
```

```
 #
 # (379)  B2 LINE OUTAGE (BREAKER-TO-BREAKER)
 #
1  30705 30710  "1 "    0     # line from  MONTAVIS 230.00  BRKR to (3)   SLACTAP1 230.00
1  30710 30711  "1 "    0     # line from  SLACTAP1 230.00   (3) to BRKR  S.L.A.C. 230.00
1  30710 30715  "1 "    0     # line from  SLACTAP1 230.00   (3) to BRKR  JEFFERSN 230.00
4  30711     0  "1 "    0     # LOAD-DROP    S.L.A.C. 230.00  LOAD==61.00(12.39)
1  30711 30712  "1 "    1     # LINE-TRANSFER SLACTAP1 to SLACTAP2
4  30711     0  "**"    1     # RESTORE S.L.A.C. load
 # steam turbine outage takes out entire plant
3  35881     0  "1"     0     # MEC CTG1  18.00       PGEN=200.00  QGEN=64.03
3  35882     0  "1"     0     # MEC CTG2  18.00       PGEN=200.00  QGEN=64.03
3  35883     0  "1"     0     # MEC STG1  18.00       PGEN=200.00  QGEN=64.03
0
 #
 #
 # (380)  B2 LINE OUTAGE (BREAKER-TO-BREAKER)
 #
1  30705 30712  "1 "    0     # line from  MONTAVIS 230.00  BRKR to (2)   SLACTAP2 230.00
1  30712 30715  "1 "    0     # line from  SLACTAP2 230.00   (2) to BRKR  JEFFERSN 230.00
 # steam turbine outage takes out entire plant
3  35881     0  "1"     0     # MEC CTG1  18.00       PGEN=200.00  QGEN=64.03
3  35882     0  "1"     0     # MEC CTG2  18.00       PGEN=200.00  QGEN=64.03
3  35883     0  "1"     0     # MEC STG1  18.00       PGEN=200.00  QGEN=64.03
0
 #
 #
 # (381)  B2 LINE OUTAGE (BREAKER-TO-BREAKER)
 #
1  30715 30696  "1 "    0     # line from  JEFFERSN 230.00  BRKR to (2)   MRT RCTR 230.00
1  30696 30695  "1 "    0     # line from  MRT RCTR 230.00   (2) to BRKR  MARTIN C 230.00
 # steam turbine outage takes out entire plant
3  35881     0  "1"     0     # MEC CTG1  18.00       PGEN=200.00  QGEN=64.03
3  35882     0  "1"     0     # MEC CTG2  18.00       PGEN=200.00  QGEN=64.03
3  35883     0  "1"     0     # MEC STG1  18.00       PGEN=200.00  QGEN=64.03
0
 #
-1
 # EOF
```

```
# Ramco EEF SIS - category c contingency lists
# Zones 307, 308, 316 and selected 310
# East Bay, Diablo Mission and selected Peninsula divisions
  #
  #
  # Zone 307 East Bay Division - category c contingencies
  # 2007 summer
  #
  #
  # (1) BUS FAULT  32740  "UCB SUB"
 1  32740  32742  "1"    0     # LINE from  UCB SUB  115.00  to  UCB JCT1 115.00
 1  32740  32744  "1"    0     # LINE from  UCB SUB  115.00  to  UCB JCT2 115.00
 4  32740     0  "SG"    0     # LOAD-DROP    UCB SUB  115.00  LOAD==28.45(17.63)
 3  32740     0  "1 "    0     # GEN-DROP    UCB SUB  115.00  GEN==26.00(-8.71)
 0
  #
  #
  # (2) BUS FAULT  32748  "PP STEEL"
  #
 1  32748  32750  "1"    0     # LINE from  PP STEEL 115.00  to  PPSTLTAP 115.00
 4  32748     0  "1 "    0     # LOAD-DROP    PP STEEL 115.00  LOAD==5.05(5.90)
 0
  #
  #
  # (3) BUS FAULT  32754  "OLEUM"
  #
 1  32754  32778  "1"    0     # LINE from  OLEUM    115.00  to  MRTNZJCT 115.00
 1  32754  32802  "1"    0     # LINE from  OLEUM    115.00  to  VLYVWTP1 115.00
 1  32754  32804  "2"    0     # LINE from  OLEUM    115.00  to  VLYVWTP2 115.00
 1  32754  32911  "1"    0     # LINE from  OLEUM    115.00  to  UNOCAL2  115.00
 1  32754  32911  "2"    0     # LINE from  OLEUM    115.00  to  UNOCAL2  115.00
 1  32754  33016  "1"    0     # LINE from  OLEUM    115.00  to  ALHAMTP2 115.00
 0
  #
  #
  # (4) BUS FAULT  32756  "CHRISTIE"
  #
 1  32756  32778  "1"    0     # LINE from  CHRISTIE 115.00  to  MRTNZJCT 115.00
 1  32756  33010  "1"    0     # LINE from  CHRISTIE 115.00  to  SOBRANTE 115.00
 2  32756  32852  "1"    0     # TRAN from  CHRISTIE 115.00  to  CHRISTIE  60.00
 0
  #
  #
  # (5) BUS FAULT  32758  "SAN PBLO"
  #
 1  32758  32806  "1"    0     # LINE from  SAN PBLO 115.00  to  SNPBLTP1 115.00
 1  32758  32808  "1"    0     # LINE from  SAN PBLO 115.00  to  SNPBLTP2 115.00
 4  32758     0  "1 "    0     # LOAD-DROP    SAN PBLO 115.00  LOAD==21.60(4.39)
 0
  #
  #
  # (6) BUS FAULT  32764  "VALLY VW"
  #
 1  32764  32802  "1"    0     # LINE from  VALLY VW 115.00  to  VLYVWTP1 115.00
 1  32764  32804  "2"    0     # LINE from  VALLY VW 115.00  to  VLYVWTP2 115.00
 4  32764     0  "1 "    0     # LOAD-DROP    VALLY VW 115.00  LOAD==7.98(1.62)
 4  32764     0  "2 "    0     # LOAD-DROP    VALLY VW 115.00  LOAD==14.40(2.92)
 0
  #
  #
  # (7) BUS FAULT  32766  "EL CRRTO"
  #
 1  32766  33010  "1"    0     # LINE from  EL CRRTO 115.00  to  SOBRANTE 115.00
 1  32766  33010  "2"    0     # LINE from  EL CRRTO 115.00  to  SOBRANTE 115.00
 1  32766  32802  "1"    0     # LINE from  EL CRRTO 115.00  to  VLYVWTP1 115.00
 1  32766  32804  "2"    0     # LINE from  EL CRRTO 115.00  to  VLYVWTP2 115.00
 4  32766     0  "1 "    0     # LOAD-DROP    EL CRRTO 115.00  LOAD==29.26(5.94)
 4  32766     0  "2 "    0     # LOAD-DROP    EL CRRTO 115.00  LOAD==31.92(6.48)
 4  32766     0  "4 "    0     # LOAD-DROP    EL CRRTO 115.00  LOAD==62.73(12.74)
 4  32766     0  "5 "    0     # LOAD-DROP    EL CRRTO 115.00  LOAD==5.00(1.01)
 4  32766     0  "6 "    0     # LOAD-DROP    EL CRRTO 115.00  LOAD==4.10(0.83)
 0
  #
  #
  # (8) BUS FAULT  32768  "RICHMOND"
  #
```

```
1  32768  33010  "1"    0     # LINE from  RICHMOND 115.00  to  SOBRANTE 115.00
1  32768  33010  "2"    0     # LINE from  RICHMOND 115.00  to  SOBRANTE 115.00
4  32768     0  "1 "    0     # LOAD-DROP    RICHMOND 115.00  LOAD==46.77(9.50)
4  32768     0  "2 "    0     # LOAD-DROP    RICHMOND 115.00  LOAD==20.83(4.23)
0
 #
 #
 # (9) BUS FAULT  32770  "GRIZZLY2"
 #
1  32770  32742  "1"    0     # LINE from  GRIZZLY2 115.00  to  UCB JCT1 115.00
1  32770  32744  "2"    0     # LINE from  GRIZZLY2 115.00  to  UCB JCT2 115.00
4  32770     0  "1 "    0     # LOAD-DROP    GRIZZLY2 115.00  LOAD==1.58(0.28)
0
 #
 #
 # (10) BUS FAULT  32780  "CLARMNT" bus section 1
 #
1  32780  33012  "1"    0     # LINE from  CLARMNT  115.00  to  EST PRTL 115.00
1  32780  33020  "1"    0     # LINE from  CLARMNT  115.00  to  MORAGA   115.00
1  32780  32782  "1"    0     # LINE from  CLARMNT  115.00  to  STATIN D 115.00
0
 #
 #
 # (11) BUS FAULT  32780  "CLARMNT" bus section 2
 #
1  32780  32782  "2"    0     # LINE from  CLARMNT  115.00  to  STATIN D 115.00
1  32780  33008  "1"    0     # LINE from  CLARMNT  115.00  to  GRIZLYJ2 115.00
1  32780  33020  "2"    0     # LINE from  CLARMNT  115.00  to  MORAGA   115.00
4  32780     0  "2 "    0     # LOAD-DROP    CLARMNT  115.00  LOAD==19.40(3.94)
0
 #
 #
 # (12) BUS FAULT  32782  "STATIN D"
 #
1  32782  32780  "1"    0     # LINE from  STATIN D 115.00  to  CLARMNT  115.00
1  32782  32780  "2"    0     # LINE from  STATIN D 115.00  to  CLARMNT  115.00
1  32782  32788  "1"    0     # LINE from  STATIN D 115.00  to  STATIN L 115.00
4  32782     0  "3 "    0     # LOAD-DROP    STATIN D 115.00  LOAD==27.49(5.58)
4  32782     0  "4 "    0     # LOAD-DROP    STATIN D 115.00  LOAD==48.55(9.86)
4  32782     0  "5 "    0     # LOAD-DROP    STATIN D 115.00  LOAD==46.78(9.50)
0
 #
 #
 # (13) BUS FAULT  32786  "OAK C115"
 #
1  32786  32788  "1"    0     # LINE from  OAK C115 115.00  to  STATIN L 115.00
1  32786  32790  "1"    0     # LINE from  OAK C115 115.00  to  STATIN X 115.00
1  32786  32794  "1"    0     # LINE from  OAK C115 115.00  to  MARITIME 115.00
1  32786  32904  "1"    0     # LINE from  OAK C115 115.00  to  OAKLND23 115.00
1  32786  38026  "1"    0     # LINE from  OAK C115 115.00  to  ALAMEDCT 115.00
2  32786  32908  "1"    0     # TRAN from  OAK C115 115.00  to  OAK C12   12.00
2  32786  32908  "2"    0     # TRAN from  OAK C115 115.00  to  OAK C12   12.00
2  32786  32908  "3"    0     # TRAN from  OAK C115 115.00  to  OAK C12   12.00
4  32786     0  "5 "    0     # LOAD-DROP    OAK C115 115.00  LOAD==12.70(2.58)
4  32786     0  "6 "    0     # LOAD-DROP    OAK C115 115.00  LOAD==10.60(2.15)
0
 #
 #
 # (14) BUS FAULT  32788  "STATIN L"
 #
1  32788  32782  "1"    0     # LINE from  STATIN L 115.00  to  STATIN D 115.00
1  32788  32786  "1"    0     # LINE from  STATIN L 115.00  to  OAK C115 115.00
4  32788     0  "1 "    0     # LOAD-DROP    STATIN L 115.00  LOAD==19.73(4.01)
4  32788     0  "3 "    0     # LOAD-DROP    STATIN L 115.00  LOAD==19.73(4.01)
4  32788     0  "5 "    0     # LOAD-DROP    STATIN L 115.00  LOAD==20.18(4.09)
0
 #
 #
 # (15) BUS FAULT  32790  "STATIN X"
 #
1  32790  32786  "1"    0     # LINE from  STATIN X 115.00  to  OAK C115 115.00
1  32790  33020  "1"    0     # LINE from  STATIN X 115.00  to  MORAGA   115.00
1  32790  33020  "2"    0     # LINE from  STATIN X 115.00  to  MORAGA   115.00
1  32790  33020  "3"    0     # LINE from  STATIN X 115.00  to  MORAGA   115.00
1  32790  33020  "4"    0     # LINE from  STATIN X 115.00  to  MORAGA   115.00
4  32790     0  "2 "    0     # LOAD-DROP    STATIN X 115.00  LOAD==19.74(4.01)
4  32790     0  "3 "    0     # LOAD-DROP    STATIN X 115.00  LOAD==18.84(3.83)
4  32790     0  "4 "    0     # LOAD-DROP    STATIN X 115.00  LOAD==20.18(4.09)
```

```
0
 #
 #
 # (16) BUS FAULT  32792  "STATIN J" bus section d
 #
1  32792  38024  "1"    0     # LINE from  STATIN J 115.00  to  JENNY    115.00
1  32792  32798  "1"    0     # LINE from  STATIN J 115.00  to  OWENSTAP 115.00
4  32792     0  "1 "    0     # LOAD-DROP    STATIN J 115.00  LOAD==35.91(7.29)
0
 #
 #
 # (17) BUS FAULT  32792  "STATIN J" bus section e
 #
1  32792  32814  "1"    0     # LINE from  STATIN J 115.00  to  EDESTAP1 115.00
1  32792  33020  "1"    0     # LINE from  STATIN J 115.00  to  MORAGA   115.00
4  32792     0  "2 "    0     # LOAD-DROP    STATIN J 115.00  LOAD==48.99(9.95)
0
 #
 #
 # (18) BUS FAULT  32794  "MARITIME"
 #
1  32794  32786  "1"    0     # LINE from  MARITIME 115.00  to  OAK C115 115.00
4  32794     0  "1 "    0     # LOAD-DROP    MARITIME 115.00  LOAD==1.02(1.19)
0
 #
 #
 # (19) BUS FAULT  32800  "OWNBRKWY"
 #
1  32800  32798  "1"    0     # LINE from  OWNBRKWY 115.00  to  OWENSTAP 115.00
4  32800     0  "1 "    0     # LOAD-DROP    OWNBRKWY 115.00  LOAD==8.75(5.19)
0
 #
 #
 # (20) BUS FAULT  32810  "EDES"
 #
1  32810  32812  "1"    0     # LINE from  EDES     115.00  to  EDS GRNT 115.00
1  32810  32814  "1"    0     # LINE from  EDES     115.00  to  EDESTAP1 115.00
4  32810     0  "2 "    0     # LOAD-DROP    EDES     115.00  LOAD==17.29(3.51)
4  32810     0  "3 "    0     # LOAD-DROP    EDES     115.00  LOAD==35.57(7.22)
0
 #
 #
 # (21) BUS FAULT  32852  "CHRISTIE"
 #
1  32852  32850  "1"    0     # LINE from  CHRISTIE  60.00  to  UNIN CHM  60.00
1  32852  32856  "1"    0     # LINE from  CHRISTIE  60.00  to  FRANKLIN  60.00
1  32852  33067  "1"    0     # LINE from  CHRISTIE  60.00  to  PCBRICK   60.00
2  32852  32756  "1"    0     # TRAN from  CHRISTIE  60.00  to  CHRISTIE 115.00
0
 #
 #
 # (22) BUS FAULT  32860  "FRKLNALT"
 #
1  32860  32850  "1"    0     # LINE from  FRKLNALT  60.00  to  UNIN CHM  60.00
1  32860  32856  "1"    0     # LINE from  FRKLNALT  60.00  to  FRANKLIN  60.00
0
 #
 #
 # (23)   C5 DOUBLE CIRCUIT TOWERLINE OUTAGE
 # Ignacio - Sobrante 230 kV and Lakeville - Sobrante # 2 230 kV Lines
1  30437 30438  "1 "    0     # line from  CROCKETT 230.00   (3) to (2)   C&H      230.00
1  30437 30445  "1 "    0     # line from  CROCKETT 230.00   (3) to BRKR  IGNACIO  230.00
1  30437 30540  "1 "    0     # line from  CROCKETT 230.00   (3) to BRKR  SOBRANTE 230.00
2  30438 32900  "1 "    0     # TRAN from  C&H      230.00  BRKR to (1)   CRCKTCOG  18.00
4  30438     0  "1 "    0     # LOAD-DROP    C&H      230.00  LOAD==3.55(0.81)
3  32900     0  "1 "    0     # GEN-DROP    CRCKTCOG  18.00  GEN==240.00(27.73)
 #
1  30435 30540  "2 "    0     # line from  LAKEVILE 230.00  BRKR to BRKR  SOBRANTE 230.00
0
 #
 #
 # (24)   C5 DOUBLE CIRCUIT TOWERLINE OUTAGE
 # Christie - Sobrante 115 kV and Martinez - Sobrante 115 kV Lines
1  32756 33010  "1 "    0     # line from  CHRISTIE 115.00  BRKR to BRKR  SOBRANTE 115.00
 #
1  32990 33014  "1 "    0     # line from  MARTNZ D 115.00  BRKR to (3)   ALHAMTP1 115.00
1  33014 33010  "1 "    0     # line from  ALHAMTP1 115.00   (3) to BRKR  SOBRANTE 115.00
1  33014 33011  "1 "    0     # line from  ALHAMTP1 115.00   (3) to BRKR  ALHAMBRA 115.00
```

```
4  33011     0  "1 "    0     # LOAD-DROP    ALHAMBRA 115.00  LOAD==13.87(2.82)
4  33011     0  "2 "    0     # LOAD-DROP    ALHAMBRA 115.00  LOAD==7.93(1.61)
1  33016 33011  "1 "    1     # LINE-TRANSFER  ALHAMTP1  115.00  TO  ALHAMTP2  115.00
4  33011     0  "**"    1     # RESTORE ALHAMBRA load
0
 #
 #
 # (25)   C5 DOUBLE CIRCUIT TOWERLINE OUTAGE
 # Sobrante - El Cerrito #1 and #2 115 kV Lines
1  32766 33010  "1 "    0     # line from  EL CRRTO 115.00  BRKR to BRKR  SOBRANTE 115.00
 #
1  32766 33010  "2 "    0     # line from  EL CRRTO 115.00  BRKR to BRKR  SOBRANTE 115.00
0
 #
 #
 # (26)   C5 DOUBLE CIRCUIT TOWERLINE OUTAGE
 # Sobrante - Richmond #1 and #2 115 kV Lines
1  32768 33010  "1 "    0     # line from  RICHMOND 115.00  BRKR to BRKR  SOBRANTE 115.00
 #
1  32768 33010  "2 "    0     # line from  RICHMOND 115.00  BRKR to BRKR  SOBRANTE 115.00
0
 #
 #
 # (27)   C5 DOUBLE CIRCUIT TOWERLINE OUTAGE
 # Sobrante - Standard Oil #1 and #2 115 kV Lines
1  32748 32750  "1 "    0     # line from  PP STEEL 115.00  BRKR to (3)   PPSTLTAP 115.00
1  32750 32774  "1 "    0     # line from  PPSTLTAP 115.00   (3) to (3)   PTPNLTAP 115.00
1  32750 32760  "1 "    0     # line from  PPSTLTAP 115.00   (3) to (1)   PT PINLE 115.00
1  32774 32762  "1 "    0     # line from  PTPNLTAP 115.00   (3) to BRKR  STD. OIL 115.00
1  32774 32808  "1 "    0     # line from  PTPNLTAP 115.00   (3) to (2)   SNPBLTP2 115.00
1  32808 33010  "1 "    0     # line from  SNPBLTP2 115.00   (2) to BRKR  SOBRANTE 115.00
4  32748     0  "1 "    0     # LOAD-DROP    PP STEEL 115.00  LOAD==5.05(5.90)
4  32760     0  "1 "    0     # LOAD-DROP    PT PINLE 115.00  LOAD==13.29(2.70)
 #
1  32806 32758  "1 "    0     # line from  SNPBLTP1 115.00   (3) to BRKR  SAN PBLO 115.00
1  32806 32762  "1 "    0     # line from  SNPBLTP1 115.00   (3) to BRKR  STD. OIL 115.00
1  32806 33010  "1 "    0     # line from  SNPBLTP1 115.00   (3) to BRKR  SOBRANTE 115.00
4  32758     0  "1 "    0     # LOAD-DROP    SAN PBLO 115.00  LOAD==21.60(4.39)
0
 #
 #
 # (28)   C5 DOUBLE CIRCUIT TOWERLINE OUTAGE
 # Sobrante - East Portal 115 kV Line and Sobrante - Grizzly - Claremont #2 115 kV lines
1  32740 32742  "1 "    0     # line from  UCB SUB  115.00  BRKR to (3)   UCB JCT1 115.00
1  32742 33006  "1 "    0     # line from  UCB JCT1 115.00   (3) to (3)   GRIZLYJ1 115.00
1  32742 32770  "1 "    0     # line from  UCB JCT1 115.00   (3) to BRKR  GRIZZLY2 115.00
1  33006 33010  "1 "    0     # line from  GRIZLYJ1 115.00   (3) to BRKR  SOBRANTE 115.00
1  33006 33012  "1 "    0     # line from  GRIZLYJ1 115.00   (3) to BRKR  EST PRTL 115.00
 #
1  32740 32744  "1 "    0     # line from  UCB SUB  115.00  BRKR to (3)   UCB JCT2 115.00
1  32744 33008  "2 "    0     # line from  UCB JCT2 115.00   (3) to (3)   GRIZLYJ2 115.00
1  32744 32770  "2 "    0     # line from  UCB JCT2 115.00   (3) to BRKR  GRIZZLY2 115.00
1  33008 32780  "1 "    0     # line from  GRIZLYJ2 115.00   (3) to BRKR  CLARMNT  115.00
1  33008 33010  "1 "    0     # line from  GRIZLYJ2 115.00   (3) to BRKR  SOBRANTE 115.00
0
 #
 #
 # (29)   C5 DOUBLE CIRCUIT TOWERLINE OUTAGE
 # Oleum - North Tower - Christie 115 kV and Martinez - Sobrante 115 kV Lines
1  32620 32778  "1 "    0     # line from  NTWRJCT2 115.00   (2) to (3)   MRTNZJCT 115.00
1  32620 32602  "1 "    0     # line from  NTWRJCT2 115.00   (2) to BRKR  NRTH TWR 115.00
1  32778 32754  "1 "    0     # line from  MRTNZJCT 115.00   (3) to BRKR  OLEUM    115.00
1  32778 32756  "1 "    0     # line from  MRTNZJCT 115.00   (3) to BRKR  CHRISTIE 115.00
4  32602     0  "1 "    0     # LOAD-DROP    NRTH TWR 115.00  LOAD==13.65(2.77)
4  32602     0  "2 "    0     # LOAD-DROP    NRTH TWR 115.00  LOAD==8.82(1.79)
4  32602     0  "3 "    0     # LOAD-DROP    NRTH TWR 115.00  LOAD==5.41(1.09)
4  32602     0  "4 "    0     # LOAD-DROP    NRTH TWR 115.00  LOAD==4.96(1.01)
1  32602 32618  "1 "    1     # LINE-TRANSFER NTWRJCT2 115.00 to NTWRJCT1 115.00
4  32602     0  "**"    1     # RESTORE NORTH TOWER load
 #
1  32990 33014  "1 "    0     # line from  MARTNZ D 115.00  BRKR to (3)   ALHAMTP1 115.00
1  33014 33010  "1 "    0     # line from  ALHAMTP1 115.00   (3) to BRKR  SOBRANTE 115.00
1  33014 33011  "1 "    0     # line from  ALHAMTP1 115.00   (3) to BRKR  ALHAMBRA 115.00
4  33011     0  "1 "    0     # LOAD-DROP    ALHAMBRA 115.00  LOAD==13.87(2.82)
4  33011     0  "2 "    0     # LOAD-DROP    ALHAMBRA 115.00  LOAD==7.93(1.61)
1  33016 33011  "1 "    1     # LINE-TRANSFER  ALHAMTP1  115.00  TO  ALHAMTP2  115.00
4  33011     0  "**"    1     # RESTORE ALHAMBRA load
0
```

```
 #
 #
 # (30)   C5 DOUBLE CIRCUIT TOWERLINE OUTAGE
 # Oleum - Martinez 115 kV and Martinez - Sobrante 115 kV Lines
1  33016 32754  "1 "    0     # line from  ALHAMTP2 115.00   (2) to BRKR  OLEUM    115.00
1  33016 32990  "1 "    0     # line from  ALHAMTP2 115.00   (2) to BRKR  MARTNZ D 115.00
 #
1  32990 33014  "1 "    0     # line from  MARTNZ D 115.00  BRKR to (3)   ALHAMTP1 115.00
1  33014 33010  "1 "    0     # line from  ALHAMTP1 115.00   (3) to BRKR  SOBRANTE 115.00
1  33014 33011  "1 "    0     # line from  ALHAMTP1 115.00   (3) to BRKR  ALHAMBRA 115.00
4  33011     0  "1 "    0     # LOAD-DROP    ALHAMBRA 115.00  LOAD==13.87(2.82)
4  33011     0  "2 "    0     # LOAD-DROP    ALHAMBRA 115.00  LOAD==7.93(1.61)
0
 #
 #
 # (31)   C5 DOUBLE CIRCUIT TOWERLINE OUTAGE
 # Oleum - North Tower - Christie 115 kV and Oleum - Martinez 115 kV Lines
1  32620 32778  "1 "    0     # line from  NTWRJCT2 115.00   (2) to (3)   MRTNZJCT 115.00
1  32620 32602  "1 "    0     # line from  NTWRJCT2 115.00   (2) to BRKR  NRTH TWR 115.00
1  32778 32754  "1 "    0     # line from  MRTNZJCT 115.00   (3) to BRKR  OLEUM    115.00
1  32778 32756  "1 "    0     # line from  MRTNZJCT 115.00   (3) to BRKR  CHRISTIE 115.00
4  32602     0  "1 "    0     # LOAD-DROP    NRTH TWR 115.00  LOAD==13.65(2.77)
4  32602     0  "2 "    0     # LOAD-DROP    NRTH TWR 115.00  LOAD==8.82(1.79)
4  32602     0  "3 "    0     # LOAD-DROP    NRTH TWR 115.00  LOAD==5.41(1.09)
4  32602     0  "4 "    0     # LOAD-DROP    NRTH TWR 115.00  LOAD==4.96(1.01)
1  32602 32618  "1 "    1     # LINE-TRANSFER NTWRJCT2 115.00 to NTWRJCT1 115.00
4  32602     0  "**"    1     # RESTORE NORTH TOWER load
 #
1  33016 32754  "1 "    0     # line from  ALHAMTP2 115.00   (2) to BRKR  OLEUM    115.00
1  33016 32990  "1 "    0     # line from  ALHAMTP2 115.00   (2) to BRKR  MARTNZ D 115.00
0
 #
 #
 # (32)  C5 DOUBLE CIRCUIT TOWERLINE OUTAGE
 # Oleum - El Cerrito #1 and #2 115 kV Lines
1  32754 32802  "1 "    0     # line from  OLEUM    115.00  BRKR to (3)   VLYVWTP1 115.00
1  32802 32764  "1 "    0     # line from  VLYVWTP1 115.00   (3) to BRKR  VALLY VW 115.00
1  32802 32766  "1 "    0     # line from  VLYVWTP1 115.00   (3) to BRKR  EL CRRTO 115.00
4  32764     0  "1 "    0     # LOAD-DROP    VALLY VW 115.00  LOAD==7.98(1.62)
4  32764     0  "2 "    0     # LOAD-DROP    VALLY VW 115.00  LOAD==14.40(2.92)
 #
1  32754 32804  "2 "    0     # line from  OLEUM    115.00  BRKR to (2)   VLYVWTP2 115.00
1  32804 32766  "2 "    0     # line from  VLYVWTP2 115.00   (2) to BRKR  EL CRRTO 115.00
0
 #
 #
 # (33)  C5 DOUBLE CIRCUIT TOWERLINE OUTAGE
 # Moraga - Claremont #1 and #2 115 kV Lines
1  33020 32780  "1 "    0     # line from  MORAGA   115.00  BRKR to BRKR  CLARMNT  115.00
 #
1  33020 32780  "2 "    0     # line from  MORAGA   115.00  BRKR to BRKR  CLARMNT  115.00
0
 #
 #
 # (34)  C5 DOUBLE CIRCUIT TOWERLINE OUTAGE
 # Moraga - Oakland X #1 and #2 115 kV Lines
1  33020 32790  "1 "    0     # line from  MORAGA   115.00  BRKR to BRKR  STATIN X 115.00
 #
1  33020 32790  "2 "    0     # line from  MORAGA   115.00  BRKR to BRKR  STATIN X 115.00
0
 #
 #
 # (35)  C5 DOUBLE CIRCUIT TOWERLINE OUTAGE
 # Moraga - Oakland X #3 and #4 115 kV Lines
1  33020 32790  "3 "    0     # line from  MORAGA   115.00  BRKR to BRKR  STATIN X 115.00
 #
1  33020 32790  "4 "    0     # line from  MORAGA   115.00  BRKR to BRKR  STATIN X 115.00
0
 #
 #
 # (36)  C5 DOUBLE CIRCUIT TOWERLINE OUTAGE
 # Moraga - Oakland J 115 kV and Moraga - San Leandro #3 115 kV Lines
1  33020 32792  "1 "    0     # line from  MORAGA   115.00  BRKR to BRKR  STATIN J 115.00
 #
1  33020 35101  "3 "    0     # line from  MORAGA   115.00  BRKR to BRKR  SN LNDRO 115.00
0
 #
 #
```

```
 # (37)  C5 DOUBLE CIRCUIT TOWERLINE OUTAGE
 # Moraga - Oakland J 115 kV and San Leandro - Oakland J 115 kV Lines
1  33020 32792  "1 "    0     # line from  MORAGA   115.00  BRKR to BRKR  STATIN J 115.00
 #
1  32792 32814  "1 "    0     # line from  STATIN J 115.00  BRKR to (3)   EDESTAP1 115.00
1  32814 32810  "1 "    0     # line from  EDESTAP1 115.00   (3) to BRKR  EDES     115.00
1  32814 35113  "1 "    0     # line from  EDESTAP1 115.00   (3) to (2)   DMTAR_SL 115.00
1  35113 35101  "1 "    0     # line from  DMTAR_SL 115.00   (2) to BRKR  SN LNDRO 115.00
4  32810     0  "2 "    0     # LOAD-DROP    EDES     115.00  LOAD==17.29(3.51)
4  32810     0  "3 "    0     # LOAD-DROP    EDES     115.00  LOAD==35.57(7.22)
4  35113     0  "1 "    0     # LOAD-DROP    DMTAR_SL 115.00  LOAD==3.75(2.32)
1  32810 32812  "1 "    1     # LINE-TRANSFER EDESTAP1 to EDS GRNT
4  32810     0  "**"    1     # RESTORE EDES load
0
 #
 #
 # (38) BUS FAULT  30523  "CC SUB" bus section 1
 #
1  30523  30479  "1"    0     # LINE from  CC SUB   230.00  to  BDLSWSTA 230.00
2  30523  33000  "3"    0     # TRAN from  CC SUB   230.00  to  CC SUB   115.00
4  30523     0   "9"    0     # LOAD-DROP    CC SUB   230.00  LOAD==89.73(18.22)
0
 #
 #
 # (39) BUS FAULT  30523  "CC SUB" bus section 2
 #
1  30523  30525  "1"    0     # LINE from  CC SUB   230.00  to  C.COSTA  230.00
4  30523     0   "8"    0     # LOAD-DROP    CC SUB   230.00  LOAD==81.18(16.48)
0
 #
 #
 # (40) BUS FAULT  30525  "C.COSTA" bus section 1d
 # SECAL connection is unknown so it is not taken out of service
1  30525  30523  "1"    0     # LINE from  C.COSTA  230.00  to  CC SUB   230.00
0
 #
 #
 # (41) BUS FAULT  30525  "C.COSTA" bus section 2d
 #
1  30525  30479  "1"    0     # LINE from  C.COSTA  230.00  to  BDLSWSTA 230.00
0
 #
 #
 # (42) BUS FAULT  30525  "C.COSTA" bus section 1e
 #
1  30525  30585  "1"    0     # LINE from  C.COSTA  230.00  to  LS PSTAS 230.00
2  30525  33115  "1"    0     # TRAN from  C.COSTA  230.00  to  C.COS 5   13.80
0
 #
 #
 # (43) BUS FAULT  30525  "C.COSTA" bus section 2e
 #
1  30525  30590  "1"    0     # LINE from  C.COSTA  230.00  to  USWP-JRW 230.00
2  30525  33114  "1"    0     # TRAN from  C.COSTA  230.00  to  C.COS 4   13.80
0
 #
 #
 # (44) BUS FAULT  30525  "C.COSTA" bus section 1f
 #
1  30525  30543  "1"    0     # LINE from  C.COSTA  230.00  to  ROSSTAP1 230.00
1  30525  30565  "1"    0     # LINE from  C.COSTA  230.00  to  BRENTWOD 230.00
2  30525  33117  "1"    0     # TRAN from  C.COSTA  230.00  to  C.COS 7   18.00
0
 #
 #
 # (45) BUS FAULT  30525  "C.COSTA" bus section 2f
 #
1  30525  30544  "1"    0     # LINE from  C.COSTA  230.00  to  ROSSTAP2 230.00
1  30525  30575  "1"    0     # LINE from  C.COSTA  230.00  to  WND MSTR 230.00
2  30525  33116  "1"    0     # TRAN from  C.COSTA  230.00  to  C.COS 6   18.00
0
 #
 #
 # (46) BUS FAULT  30526  "PITSBG D" bus section 1d
 #
1  30526  30561  "1"    0     # LINE from  PITSBG D 230.00  to  TASSAJAR 230.00
1  30526  30528  "1"    0     # LINE from  PITSBG D 230.00  to  DEC PTSG 230.00
2  30526  32950  "13"   0     # TRAN from  PITSBG D 230.00  to  PITSBURG 115.00
```

```
0
 #
 #
 # (47) BUS FAULT  30526  "PITSBG D" bus section 2d
 #
1  30526  30528  "2"    0     # LINE from  PITSBG D 230.00  to  DEC PTSG 230.00
1  30526  30555  "1"    0     # LINE from  PITSBG D 230.00  to  SANRAMON 230.00
2  30526  32950  "12"   0     # TRAN from  PITSBG D 230.00  to  PITSBURG 115.00
0
 #
 #
 # (48) BUS FAULT  30527  "PITSBG E" bus section 1e
 #
1  30527  30535  "1"    0     # LINE from  PITSBG E 230.00  to  TIDEWATR 230.00
1  30527  30560  "1"    0     # LINE from  PITSBG E 230.00  to  E. SHORE 230.00
1  30527  30595  "1"    0     # LINE from  PITSBG E 230.00  to  FLOWIND2 230.00
2  30527  30000  "1"    0     # TRAN from  PITSBG E 230.00  to  PTSB  7   20.00
0
 #
 #
 # (49) BUS FAULT  30527  "PITSBG E" bus section 2e
 #
1  30527  30540  "1"    0     # LINE from  PITSBG E 230.00  to  SOBRANTE 230.00
1  30527  30600  "1"    0     # LINE from  PITSBG E 230.00  to  TRES VAQ 230.00
1  30527  30700  "1"    0     # LINE from  PITSBG E 230.00  to  SANMATEO 230.00
2  30527  33105  "1"    0     # TRAN from  PITSBG E 230.00  to  PTSB  5   18.00
2  30527  33105  "2"    0     # TRAN from  PITSBG E 230.00  to  PTSB  5   18.00
2  30527  33106  "1"    0     # TRAN from  PITSBG E 230.00  to  PTSB  6   18.00
2  30527  33106  "2"    0     # TRAN from  PITSBG E 230.00  to  PTSB  6   18.00
0
 #
 #
 # (50) BUS FAULT  30535  "TIDEWATR"
 #
1  30535  30527  "1"    0     # LINE from  TIDEWATR 230.00  to  PITSBG E 230.00
1  30535  30540  "1"    0     # LINE from  TIDEWATR 230.00  to  SOBRANTE 230.00
2  30535  33151  "1"    0     # TRAN from  TIDEWATR 230.00  to  FOSTER W  12.47
2  30535  33151  "2"    0     # TRAN from  TIDEWATR 230.00  to  FOSTER W  12.47
4  30535     0  "1 "    0     # LOAD-DROP    TIDEWATR 230.00  LOAD==71.57(14.53)
4  30535     0  "2 "    0     # LOAD-DROP    TIDEWATR 230.00  LOAD==56.63(11.50)
0
 #
 #
 # (51) BUS FAULT  30540  "SOBRANTE" bus section 1
 #
1  30540  30437  "1"    0     # LINE from  SOBRANTE 230.00  to  CROCKETT 230.00
1  30540  30535  "1"    0     # LINE from  SOBRANTE 230.00  to  TIDEWATR 230.00
2  30540  33010  "1"    0     # TRAN from  SOBRANTE 230.00  to  SOBRANTE 115.00
0
 #
 #
 # (52) BUS FAULT  30540  "SOBRANTE" bus section 2
 #
1  30540  30435  "2"    0     # LINE from  SOBRANTE 230.00  to  LAKEVILE 230.00
1  30540  30527  "1"    0     # LINE from  SOBRANTE 230.00  to  PITSBG E 230.00
2  30540  33010  "2"    0     # TRAN from  SOBRANTE 230.00  to  SOBRANTE 115.00
0
 #
 #
 # (53) BUS FAULT  30545  "ROSSMOOR"
 #
1  30545  30543  "1"    0     # LINE from  ROSSMOOR 230.00  to  ROSSTAP1 230.00
1  30545  30544  "1"    0     # LINE from  ROSSMOOR 230.00  to  ROSSTAP2 230.00
4  30545     0  "1 "    0     # LOAD-DROP    ROSSMOOR 230.00  LOAD==38.39(7.80)
4  30545     0  "2 "    0     # LOAD-DROP    ROSSMOOR 230.00  LOAD==35.63(7.24)
0
 #
 #
 # (54) BUS FAULT  30550  "MORAGA" bus section 1
 #
1  30550  30467  "1"    0     # LINE from  MORAGA   230.00  to  PARKWAY  230.00
1  30550  30543  "1"    0     # LINE from  MORAGA   230.00  to  ROSSTAP1 230.00
2  30550  30553  "3"    0     # TRAN from  MORAGA   230.00  to  MRAGA 3M 230.00
1  30550  30555  "1"    0     # LINE from  MORAGA   230.00  to  SANRAMON 230.00
0
 #
 #
 # (55) BUS FAULT  30550  "MORAGA" bus section 2
```

```
 #
1  30550  30465  "1"    0     # LINE from  MORAGA   230.00  to  BAHIA    230.00
1  30550  30544  "1"    0     # LINE from  MORAGA   230.00  to  ROSSTAP2 230.00
1  30550  30554  "1"    0     # LINE from  MORAGA   230.00  to  CASTROVL 230.00
2  30550  30551  "1"    0     # TRAN from  MORAGA   230.00  to  MRAGA 1M 230.00
2  30550  30552  "2"    0     # TRAN from  MORAGA   230.00  to  MRAGA 2M 230.00
0
 #
 #
 # (56) BUS FAULT  30561  "TASSAJAR"
 #
1  30561  30526  "1"    0     # LINE from  TASSAJAR 230.00  to  PITSBG D 230.00
1  30561  30562  "1"    0     # LINE from  TASSAJAR 230.00  to  TES JCT  230.00
4  30561     0  "1 "    0     # LOAD-DROP    TASSAJAR 230.00  LOAD==46.12(9.37)
4  30561     0  "2 "    0     # LOAD-DROP    TASSAJAR 230.00  LOAD==77.22(15.69)
0
 #
 #
 # (57) BUS FAULT  30563  "RESEARCH"
 #
1  30563  30562  "1"    0     # LINE from  RESEARCH 230.00  to  TES JCT  230.00
4  30563     0  "1 "    0     # LOAD-DROP    RESEARCH 230.00  LOAD==36.74(7.45)
0
 #
 #
 # (58) BUS FAULT  30565  "BRENTWOD"
 #
1  30565  30525  "1"    0     # LINE from  BRENTWOD 230.00  to  C.COSTA  230.00
1  30565  30569  "1"    0     # LINE from  BRENTWOD 230.00  to  KELSO    230.00
4  30565     0  "2 "    0     # LOAD-DROP    BRENTWOD 230.00  LOAD==49.99(10.16)
4  30565     0  "3 "    0     # LOAD-DROP    BRENTWOD 230.00  LOAD==52.77(10.72)
0
 #
 #
 # (59) BUS FAULT  32950  "PITSBURG" bus section 1
 #
1  32950  32993  "1"    0     # LINE from  PITSBURG 115.00  to  W.P.BART 115.00
1  32950  33030  "1"    0     # LINE from  PITSBURG 115.00  to  COLSTJT1 115.00
1  32950  32978  "1"    0     # LINE from  PITSBURG 115.00  to  LMEC     115.00
1  32950  33032  "3"    0     # LINE from  PITSBURG 115.00  to  KIRKTAP1 115.00
0
 #
 #
 # (60) BUS FAULT  32950  "PITSBURG" bus section 2
 #
1  32950  32970  "1"    0     # LINE from  PITSBURG 115.00  to  CLAYTN   115.00
1  32950  32970  "4"    0     # LINE from  PITSBURG 115.00  to  CLAYTN   115.00
1  32950  32978  "2"    0     # LINE from  PITSBURG 115.00  to  LMEC     115.00
1  32950  32992  "1"    0     # LINE from  PITSBURG 115.00  to  BOLLMAN2 115.00
1  32950  33033  "1"    0     # LINE from  PITSBURG 115.00  to  KIRKTAP2 115.00
2  32950  30526  "12"    0     # TRAN from  PITSBURG 115.00  to  PITSBG D 230.00
0
 #
 #
 # (61) BUS FAULT  32951  "KIRKER"
 #
1  32951  33032  "1"    0     # LINE from  KIRKER   115.00  to  KIRKTAP1 115.00
1  32951  33033  "1"    0     # LINE from  KIRKER   115.00  to  KIRKTAP2 115.00
4  32951     0  "1 "    0     # LOAD-DROP    KIRKER   115.00  LOAD==50.93(10.34)
4  32951     0  "2 "    0     # LOAD-DROP    KIRKER   115.00  LOAD==35.76(7.26)
4  32951     0  "3 "    0     # LOAD-DROP    KIRKER   115.00  LOAD==58.49(11.88)
0
 #
 #
 # (62) BUS FAULT  32953  "CLMBA_ST"
 #
1  32953  32954  "1"    0     # LINE from  CLMBA_ST 115.00  to  DOW TAP1 115.00
1  32953  32955  "1"    0     # LINE from  CLMBA_ST 115.00  to  DOW TAP2 115.00
0
 #
 #
 # (63) BUS FAULT  32957  "PRAXAIR"
 #
1  32957  33038  "1"    0     # LINE from  PRAXAIR  115.00  to  LINDEJCT 115.00
4  32957     0  "1 "    0     # LOAD-DROP    PRAXAIR  115.00  LOAD==19.71(4.40)
0
 #
 #
```

```
 # (64) BUS FAULT  32970  "CLAYTN"
 #
1  32970  32950  "1"    0     # LINE from  CLAYTN   115.00  to  PITSBURG 115.00
1  32970  32950  "4"    0     # LINE from  CLAYTN   115.00  to  PITSBURG 115.00
1  32970  32971  "1"    0     # LINE from  CLAYTN   115.00  to  MEDW LNE 115.00
1  32970  32974  "2"    0     # LINE from  CLAYTN   115.00  to  LAKEWD-M 115.00
1  32970  33032  "3"    0     # LINE from  CLAYTN   115.00  to  KIRKTAP1 115.00
1  32970  33035  "1"    0     # LINE from  CLAYTN   115.00  to  LKWD_JCT 115.00
4  32970     0  "1 "    0     # LOAD-DROP    CLAYTN   115.00  LOAD==28.97(5.89)
4  32970     0  "2 "    0     # LOAD-DROP    CLAYTN   115.00  LOAD==36.06(7.32)
4  32970     0  "3 "    0     # LOAD-DROP    CLAYTN   115.00  LOAD==43.36(8.80)
4  32970     0  "5 "    0     # LOAD-DROP    CLAYTN   115.00  LOAD==9.74(1.98)
0
 #
 #
 # (65) BUS FAULT  32971  "MEDW LNE"
 #
1  32971  32970  "1"    0     # LINE from  MEDW LNE 115.00  to  CLAYTN   115.00
1  32971  32972  "1"    0     # LINE from  MEDW LNE 115.00  to  EBMUDGRY 115.00
4  32971     0  "1 "    0     # LOAD-DROP    MEDW LNE 115.00  LOAD==41.04(8.33)
4  32971     0  "2 "    0     # LOAD-DROP    MEDW LNE 115.00  LOAD==44.35(9.01)
4  32971     0  "3 "    0     # LOAD-DROP    MEDW LNE 115.00  LOAD==48.11(9.77)
0
 #
 #
 # (66) BUS FAULT  32973  "LAKEWD-C"
 #
1  32973  33035  "1"    0     # LINE from  LAKEWD-C 115.00  to  LKWD_JCT 115.00
1  32973  32974  "1"    0     # LINE from  LAKEWD-C 115.00  to  LAKEWD-M 115.00
4  32973     0  "5 "    0     # LOAD-DROP    LAKEWD-C 115.00  LOAD==28.33(5.75)
4  32973     0  "6 "    0     # LOAD-DROP    LAKEWD-C 115.00  LOAD==42.37(8.60)
0
 #
 #
 # (67) BUS FAULT  32974  "LAKEWD-M"
 #
1  32974  32970  "2"    0     # LINE from  LAKEWD-M 115.00  to  CLAYTN   115.00
1  32974  32973  "1"    0     # LINE from  LAKEWD-M 115.00  to  LAKEWD-C 115.00
1  32974  32976  "0"    0     # LINE from  LAKEWD-M 115.00  to  LK_REACT 115.00
1  32974  32976  "2"    0     # LINE from  LAKEWD-M 115.00  to  LK_REACT 115.00
1  32974  32976  "4"    0     # LINE from  LAKEWD-M 115.00  to  LK_REACT 115.00
1  32974  32976  "7"    0     # LINE from  LAKEWD-M 115.00  to  LK_REACT 115.00
1  32974  32976  "9"    0     # LINE from  LAKEWD-M 115.00  to  LK_REACT 115.00
4  32974     0  "1 "    0     # LOAD-DROP    LAKEWD-M 115.00  LOAD==37.72(7.66)
4  32974     0  "2 "    0     # LOAD-DROP    LAKEWD-M 115.00  LOAD==30.53(6.20)
4  32974     0  "4 "    0     # LOAD-DROP    LAKEWD-M 115.00  LOAD==46.90(9.52)
4  32974     0  "LW"    0     # LOAD-DROP    LAKEWD-M 115.00  LOAD==8.80(1.79)
0
 #
 #
 # (68) BUS FAULT  32990  "MARTNZ D"
 #
1  32990  33014  "1"    0     # LINE from  MARTNZ D 115.00  to  ALHAMTP1 115.00
1  32990  33016  "1"    0     # LINE from  MARTNZ D 115.00  to  ALHAMTP2 115.00
1  32990  32991  "1"    0     # LINE from  MARTNZ D 115.00  to  MARTNZ E 115.00
1  32990  32996  "1"    0     # LINE from  MARTNZ D 115.00  to  SHELLJ1  115.00
2  32990  33142  "2"    0     # TRAN from  MARTNZ D 115.00  to  SHELL 2   12.47
4  32990     0  "5 "    0     # LOAD-DROP    MARTNZ D 115.00  LOAD==46.90(9.52)
0
 #
 #
 # (69) BUS FAULT  32991  "MARTNZ E"
 #
1  32991  32990  "1"    0     # LINE from  MARTNZ E 115.00  to  MARTNZ D 115.00
1  32991  33042  "1"    0     # LINE from  MARTNZ E 115.00  to  IMHOFF_1 115.00
1  32991  33043  "1"    0     # LINE from  MARTNZ E 115.00  to  IMHOFF_2 115.00
1  32991  32997  "1"    0     # LINE from  MARTNZ E 115.00  to  SHELLJ2  115.00
2  32991  33142  "1"    0     # TRAN from  MARTNZ E 115.00  to  SHELL 2   12.47
0
 #
 #
 # (70) BUS FAULT  33000  "CC SUB" bus section 1
 #
1  33000  33047  "1"    0     # LINE from  CC SUB   115.00  to  CC JCT   115.00
2  33000  30523  "3"    0     # TRAN from  CC SUB   115.00  to  CC SUB   230.00
2  33000  33050  "1"    0     # TRAN from  CC SUB   115.00  to  CC SUB    60.00
4  33000     0  "4 "    0     # LOAD-DROP    CC SUB   115.00  LOAD==45.72(9.29)
0
```

```
 #
 #
 # (71) BUS FAULT  33000  "CC SUB" bus section 2
 #
1  33000  33046  "1"    0     # LINE from  CC SUB   115.00  to  FIBRJCT2 115.00
2  33000  33050  "2"    0     # TRAN from  CC SUB   115.00  to  CC SUB    60.00
0
 #
 #
 # (72) BUS FAULT  33001  "DOMTAR"
 #
1  33001  33046  "1"    0     # LINE from  DOMTAR   115.00  to  FIBRJCT2 115.00
4  33001     0  "1 "    0     # LOAD-DROP    DOMTAR   115.00  LOAD==2.38(2.10)
0
 #
 #
 # (73) BUS FAULT  33010  "SOBRANTE" bus section 1
 #
1  33010  32756  "1"    0     # LINE from  SOBRANTE 115.00  to  CHRISTIE 115.00
1  33010  32766  "1"    0     # LINE from  SOBRANTE 115.00  to  EL CRRTO 115.00
1  33010  32768  "1"    0     # LINE from  SOBRANTE 115.00  to  RICHMOND 115.00
1  33010  32808  "1"    0     # LINE from  SOBRANTE 115.00  to  SNPBLTP2 115.00
1  33010  33006  "1"    0     # LINE from  SOBRANTE 115.00  to  GRIZLYJ1 115.00
1  33010  33020  "1"    0     # LINE from  SOBRANTE 115.00  to  MORAGA   115.00
2  33010  30540  "1"    0     # TRAN from  SOBRANTE 115.00  to  SOBRANTE 230.00
2  33010  30540  "2"    0     # TRAN from  SOBRANTE 115.00  to  SOBRANTE 230.00
4  33010     0  "3 "    0     # LOAD-DROP    SOBRANTE 115.00  LOAD==25.89(5.26)
0
 #
 #
 # (74) BUS FAULT  33010  "SOBRANTE" bus section 2
 #
1  33010  32766  "2"    0     # LINE from  SOBRANTE 115.00  to  EL CRRTO 115.00
1  33010  32768  "2"    0     # LINE from  SOBRANTE 115.00  to  RICHMOND 115.00
1  33010  32806  "1"    0     # LINE from  SOBRANTE 115.00  to  SNPBLTP1 115.00
1  33010  33008  "1"    0     # LINE from  SOBRANTE 115.00  to  GRIZLYJ2 115.00
1  33010  33014  "1"    0     # LINE from  SOBRANTE 115.00  to  ALHAMTP1 115.00
2  33010  30540  "1"    0     # TRAN from  SOBRANTE 115.00  to  SOBRANTE 230.00
2  33010  30540  "2"    0     # TRAN from  SOBRANTE 115.00  to  SOBRANTE 230.00
0
 #
 #
 # (75) BUS FAULT  33011  "ALHAMBRA"
 #
1  33011  33014  "1"    0     # LINE from  ALHAMBRA 115.00  to  ALHAMTP1 115.00
1  33011  33016  "1"    0     # LINE from  ALHAMBRA 115.00  to  ALHAMTP2 115.00
4  33011     0  "1 "    0     # LOAD-DROP    ALHAMBRA 115.00  LOAD==13.87(2.82)
4  33011     0  "2 "    0     # LOAD-DROP    ALHAMBRA 115.00  LOAD==7.93(1.61)
0
 #
 #
 # (76) BUS FAULT  33012  "EST PRTL"
 #
1  33012  33006  "1"    0     # LINE from  EST PRTL 115.00  to  GRIZLYJ1 115.00
1  33012  32780  "1"    0     # LINE from  EST PRTL 115.00  to  CLARMNT  115.00
4  33012     0  "1 "    0     # LOAD-DROP    EST PRTL 115.00  LOAD==8.80(1.79)
0
 #
 #
 # (77) BUS FAULT  33020  "MORAGA" bus section 1d
 #
1  33020  32976  "1"    0     # LINE from  MORAGA   115.00  to  LK_REACT 115.00
1  33020  32780  "1"    0     # LINE from  MORAGA   115.00  to  CLARMNT  115.00
1  33020  32790  "1"    0     # LINE from  MORAGA   115.00  to  STATIN X 115.00
2  33020  30551  "1"    0     # TRAN from  MORAGA   115.00  to  MRAGA 1M 230.00
4  33020     0  "5 "    0     # LOAD-DROP    MORAGA   115.00  LOAD==26.56(5.40)
0
 #
 #
 # (78) BUS FAULT  33020  "MORAGA" bus section 2d
 #
1  33020  33010  "1"    0     # LINE from  MORAGA   115.00  to  SOBRANTE 115.00
1  33020  32780  "2"    0     # LINE from  MORAGA   115.00  to  CLARMNT  115.00
1  33020  32790  "2"    0     # LINE from  MORAGA   115.00  to  STATIN X 115.00
2  33020  30552  "2"    0     # TRAN from  MORAGA   115.00  to  MRAGA 2M 230.00
0
 #
 #
```

```
 # (79) BUS FAULT  33020  "MORAGA" bus section 1e
 #
1  33020  32790  "3"    0     # LINE from  MORAGA   115.00  to  STATIN X 115.00
1  33020  35101  "1"    0     # LINE from  MORAGA   115.00  to  SN LNDRO 115.00
1  33020  35101  "3"    0     # LINE from  MORAGA   115.00  to  SN LNDRO 115.00
0
 #
 #
 # (80) BUS FAULT  33020  "MORAGA" bus section 2e
 #
1  33020  32790  "4"    0     # LINE from  MORAGA   115.00  to  STATIN X 115.00
1  33020  32792  "1"    0     # LINE from  MORAGA   115.00  to  STATIN J 115.00
1  33020  35101  "2"    0     # LINE from  MORAGA   115.00  to  SN LNDRO 115.00
0
 #
 #
 # (81) BUS FAULT  33049  "RVEC"
 #
1  33049  33048  "1"    0     # LINE from  RVEC     115.00  to  RVECTP   115.00
2  33049  33178  "1"    0     # TRAN from  RVEC     115.00  to  RVEC_GEN  13.80
0
 #
 #
 # (82) BUS FAULT  33050  "CC SUB"
 #
1  33050  33080  "1"    0     # LINE from  CC SUB    60.00  to  WILBRTAP  60.00
1  33050  33081  "1"    0     # LINE from  CC SUB    60.00  to  DUPNTJCT  60.00
1  33050  33060  "1"    0     # LINE from  CC SUB    60.00  to  ANTIOCH   60.00
1  33050  33090  "1"    0     # LINE from  CC SUB    60.00  to  SHLLCHMT  60.00
2  33050  33000  "1"    0     # TRAN from  CC SUB    60.00  to  CC SUB   115.00
2  33050  33000  "2"    0     # TRAN from  CC SUB    60.00  to  CC SUB   115.00
0
 #
 #
 # (83) BUS FAULT  33051  "DU PONT"
 #
1  33051  33080  "1"    0     # LINE from  DU PONT   60.00  to  WILBRTAP  60.00
1  33051  33081  "1"    0     # LINE from  DU PONT   60.00  to  DUPNTJCT  60.00
4  33051     0  "1 "    0     # LOAD-DROP    DU PONT   60.00  LOAD==2.00(2.16)
0
 #
 #
 # (84) BUS FAULT  33054  "BALFOUR"
 #
1  33054  33082  "1"    0     # LINE from  BALFOUR   60.00  to  BALFRJCT  60.00
1  33054  33083  "1"    0     # LINE from  BALFOUR   60.00  to  MDLRVRJT  60.00
4  33054     0  "1 "    0     # LOAD-DROP    BALFOUR   60.00  LOAD==4.00(0.91)
0
 #
 #
 # (85) BUS FAULT  33063  "WLLW PSS"
 #
1  33063  33062  "1"    0     # LINE from  WLLW PSS  60.00  to  SHLL CHM  60.00
1  33063  33091  "1"    0     # LINE from  WLLW PSS  60.00  to  TAP GWF5  60.00
4  33063     0  "1 "    0     # LOAD-DROP    WLLW PSS  60.00  LOAD==8.28(1.68)
0
 #
 #
 # (86)   C5 DOUBLE CIRCUIT TOWERLINE OUTAGE
 # Contra Costa #1 and #2 115 kV Lines
1  33000 33047  "1 "    0     # line from  CC SUB   115.00  BRKR to (2)   CC JCT   115.00
1  33047 33045  "1 "    0     # line from  CC JCT   115.00   (2) to (2)   FIBRJCT1 115.00
1  33045 33048  "1 "    0     # line from  FIBRJCT1 115.00   (2) to (2)   RVECTP   115.00
1  33048 33049  "1 "    0     # line from  RVECTP   115.00   (2) to BRKR  RVEC     115.00
 #
1  33000 33046  "1 "    0     # line from  CC SUB   115.00  BRKR to (3)   FIBRJCT2 115.00
1  33046 33001  "1 "    0     # line from  FIBRJCT2 115.00   (3) to BRKR  DOMTAR   115.00
1  33046 33044  "1 "    0     # line from  FIBRJCT2 115.00   (3) to (2)   FIBRBJCT 115.00
1  33044 33002  "1 "    0     # line from  FIBRBJCT 115.00   (2) to (3)   CROWN Z  115.00
2  33002 33133  "1 "    0     # TRAN from  CROWN Z  115.00   (3) to (1)   GWF #3    13.80
2  33002 33145  "1 "    0     # TRAN from  CROWN Z  115.00   (3) to (1)   CROWN.Z.  13.80
4  33001     0  "1 "    0     # LOAD-DROP    DOMTAR   115.00  LOAD==2.38(2.10)
4  33133     0  "SG"    0     # LOAD-DROP    GWF #3    13.80  LOAD==2.63(0.60)
4  33145     0  "SG"    0     # LOAD-DROP    CROWN.Z.  13.80  LOAD==20.70(6.80)
3  33133     0  "1 "    0     # GEN-DROP    GWF #3    13.80  GEN==19.00(2.77)
3  33145     0  "1 "    0     # GEN-DROP    CROWN.Z.  13.80  GEN==40.00(-7.80)
3  33145     0  "2 "    0     # GEN-DROP    CROWN.Z.  13.80  GEN==5.40(-1.05)
0
```

```
 #
 #
 # (87)   C5 DOUBLE CIRCUIT TOWERLINE OUTAGE
 # Birds Landing - Contra Costa 230 kV and Birds Landing - Contra Costa Sub 230 kV Lines
1  30525 30479  "1 "    0     # line from  C.COSTA  230.00  BRKR to BRKR  BDLSWSTA 230.00
 #
1  30479 30523  "1 "    0     # line from  BDLSWSTA 230.00  BRKR to BRKR  CC SUB   230.00
0
 #
 #
 # (88)   C5 DOUBLE CIRCUIT TOWERLINE OUTAGE
 # Birds Landing - Contra Costa 230 kV and Contra Costa - Contra Costa Sub 230 kV Lines
1  30525 30479  "1 "    0     # line from  C.COSTA  230.00  BRKR to BRKR  BDLSWSTA 230.00
 #
1  30523 30525  "1 "    0     # line from  CC SUB   230.00  BRKR to BRKR  C.COSTA  230.00
0
 #
 #
 # (89)   C5 DOUBLE CIRCUIT TOWERLINE OUTAGE
 # Contra Costa - Moraga #1 and #2 230 kV Lines
1  30525 30543  "1 "    0     # line from  C.COSTA  230.00  BRKR to (3)   ROSSTAP1 230.00
1  30543 30545  "1 "    0     # line from  ROSSTAP1 230.00   (3) to BRKR  ROSSMOOR 230.00
1  30543 30550  "1 "    0     # line from  ROSSTAP1 230.00   (3) to BRKR  MORAGA   230.00
4  30545     0  "1 "    0     # LOAD-DROP    ROSSMOOR 230.00  LOAD==38.39(7.80)
4  30545     0  "2 "    0     # LOAD-DROP    ROSSMOOR 230.00  LOAD==35.63(7.24)
 #
1  30525 30544  "1 "    0     # line from  C.COSTA  230.00  BRKR to (2)   ROSSTAP2 230.00
1  30544 30550  "1 "    0     # line from  ROSSTAP2 230.00   (2) to BRKR  MORAGA   230.00
0
 #
 #
 # (90)   C5 DOUBLE CIRCUIT TOWERLINE OUTAGE
 # Contra Costa - Brentwood 230 kV and Contra Costa - Delta Pumps 230 kV Lines
1  30525 30565  "1 "    0     # line from  C.COSTA  230.00  BRKR to BRKR  BRENTWOD 230.00
 #
1  30525 30575  "1 "    0     # line from  C.COSTA  230.00  BRKR to (3)   WND MSTR 230.00
1  30575 38610  "1 "    0     # line from  WND MSTR 230.00   (3) to BRKR  DELTAPMP 230.00
2  30575 33170  "1 "    0     # TRAN from  WND MSTR 230.00   (3) to (1)   WINDMSTR   9.11
3  33170     0  "1 "    0     # GEN-DROP    WINDMSTR   9.11  GEN==38.00(0.00)
0
 #
 #
 # (91)   C5 DOUBLE CIRCUIT TOWERLINE OUTAGE
 # Brentwood - Kelso 230 kV and Contra Costa - Delta Pumps 230 kV Lines
1  30565 30569  "1 "    0     # line from  BRENTWOD 230.00  BRKR to BRKR  KELSO    230.00
 #
1  30525 30575  "1 "    0     # line from  C.COSTA  230.00  BRKR to (3)   WND MSTR 230.00
1  30575 38610  "1 "    0     # line from  WND MSTR 230.00   (3) to BRKR  DELTAPMP 230.00
2  30575 33170  "1 "    0     # TRAN from  WND MSTR 230.00   (3) to (1)   WINDMSTR   9.11
3  33170     0  "1 "    0     # GEN-DROP    WINDMSTR   9.11  GEN==38.00(0.00)
0
 #
 #
 # (92)   C5 DOUBLE CIRCUIT TOWERLINE OUTAGE
 # Contra Costa - Las Positas 230 kV and Contra Costa - Cayetano 230 kV Lines
1  30525 30585  "1 "    0     # line from  C.COSTA  230.00  BRKR to BRKR  LS PSTAS 230.00
 #
1  30525 30590  "1 "    0     # line from  C.COSTA  230.00  BRKR to (3)   USWP-JRW 230.00
1  30590 30530  "1 "    0     # line from  USWP-JRW 230.00   (3) to BRKR  CAYETANO 230.00
2  30590 33838  "1 "    0     # TRAN from  USWP-JRW 230.00   (3) to (1)   USWP_#3    9.11
4  33838     0  "SG"    0     # LOAD-DROP    USWP_#3    9.11  LOAD==0.50(0.20)
0
 #
 #
 # (93)   C5 DOUBLE CIRCUIT TOWERLINE OUTAGE
 # Contra Costa - Cayetano 230 kV and Cayetano - North Dublin 230 kV Lines
1  30525 30590  "1 "    0     # line from  C.COSTA  230.00  BRKR to (3)   USWP-JRW 230.00
1  30590 30530  "1 "    0     # line from  USWP-JRW 230.00   (3) to BRKR  CAYETANO 230.00
2  30590 33838  "1 "    0     # TRAN from  USWP-JRW 230.00   (3) to (1)   USWP_#3    9.11
4  33838     0  "SG"    0     # LOAD-DROP    USWP_#3    9.11  LOAD==0.50(0.20)
 #
1  30530 30537  "1 "    0     # line from  CAYETANO 230.00  BRKR to BRKR  NDUBLIN  230.00
0
 #
 #
 # (94)   C5 DOUBLE CIRCUIT TOWERLINE OUTAGE
 # Pittsburg - Tidewater 230 kV and Pittsburg - Sobrante #2 230 kV Lines
1  30527 30535  "1 "    0     # line from  PITSBG E 230.00  BRKR to BRKR  TIDEWATR 230.00
```

```
 #
1  30527 30540  "1 "    0     # line from  PITSBG E 230.00  BRKR to BRKR  SOBRANTE 230.00
0
 #
 #
 # (95)   C5 DOUBLE CIRCUIT TOWERLINE OUTAGE
 # Tidewater - Sobrante 230 kV and Pittsburg - Sobrante 230 kV Lines
1  30535 30540  "1 "    0     # line from  TIDEWATR 230.00  BRKR to BRKR  SOBRANTE 230.00
 #
1  30527 30540  "1 "    0     # line from  PITSBG E 230.00  BRKR to BRKR  SOBRANTE 230.00
0
 #
 #
 # (96)   C5 DOUBLE CIRCUIT TOWERLINE OUTAGE
 # Pittsburg - San Mateo 230 kV and Pittsburg - East Shore 230 kV Lines
1  30527 30700  "1 "    0     # line from  PITSBG E 230.00  BRKR to BRKR  SANMATEO 230.00
 #
1  30527 30560  "1 "    0     # line from  PITSBG E 230.00  BRKR to BRKR  E. SHORE 230.00
0
 #
 #
 # (97)   C5 DOUBLE CIRCUIT TOWERLINE OUTAGE
 # Pittsburg - Tesla #1 230 kV and Pittsburg - Tesla #2 230 kV Lines
1  30527 30595  "1 "    0     # line from  PITSBG E 230.00  BRKR to (3)   FLOWIND2 230.00
1  30595 30640  "1 "    0     # line from  FLOWIND2 230.00   (3) to BRKR  TESLA C  230.00
2  30595 33840  "1 "    0     # TRAN from  FLOWIND2 230.00   (3) to (1)   FLOWD3-6   9.11
4  33840     0  "SG"    0     # LOAD-DROP    FLOWD3-6   9.11  LOAD==0.72(0.35)
3  33840     0  "1 "    0     # GEN-DROP    FLOWD3-6   9.11  GEN==17.60(0.00)
 #
1  30527 30600  "1 "    0     # line from  PITSBG E 230.00  BRKR to (3)   TRES VAQ 230.00
1  30600 30640  "1 "    0     # line from  TRES VAQ 230.00   (3) to BRKR  TESLA C  230.00
2  30600 33171  "1 "    0     # TRAN from  TRES VAQ 230.00   (3) to (1)   TRSVQ+NW   9.11
0
 #
 #
 # (98)   C5 DOUBLE CIRCUIT TOWERLINE OUTAGE
 # Pittsburg - San Ramon 230 kV and Pittsburg - Tassajara 230 kV Lines
1  30526 30555  "1 "    0     # line from  PITSBG D 230.00  BRKR to BRKR  SANRAMON 230.00
 #
1  30526 30561  "1 "    0     # line from  PITSBG D 230.00  BRKR to BRKR  TASSAJAR 230.00
0
 #
 #
 # (99)   C5 DOUBLE CIRCUIT TOWERLINE OUTAGE
 # Pittsburg - Martinez #1 and #2 lines 115 kV Lines
1  32950 32993  "1 "    0     # line from  PITSBURG 115.00  BRKR to (2)   W.P.BART 115.00
1  32993 33040  "1 "    0     # line from  W.P.BART 115.00   (2) to (3)   BOLLMAN1 115.00
1  33040 32994  "1 "    0     # line from  BOLLMAN1 115.00   (3) to (1)   BOLLMAN  115.00
1  33040 33042  "1 "    0     # line from  BOLLMAN1 115.00   (3) to (2)   IMHOFF_1 115.00
1  33042 32991  "1 "    0     # line from  IMHOFF_1 115.00   (2) to BRKR  MARTNZ E 115.00
4  32993     0  "1 "    0     # LOAD-DROP    W.P.BART 115.00  LOAD==8.80(1.79)
4  32994     0  "1 "    0     # LOAD-DROP    BOLLMAN  115.00  LOAD==2.13(1.12)
4  32994     0  "2 "    0     # LOAD-DROP    BOLLMAN  115.00  LOAD==2.13(1.12)
 #
1  32950 32992  "1 "    0     # line from  PITSBURG 115.00  BRKR to (2)   BOLLMAN2 115.00
1  32992 33043  "1 "    0     # line from  BOLLMAN2 115.00   (2) to (3)   IMHOFF_2 115.00
1  33043 32991  "1 "    0     # line from  IMHOFF_2 115.00   (3) to BRKR  MARTNZ E 115.00
1  33043 33041  "2 "    0     # line from  IMHOFF_2 115.00   (3) to (2)   IMHOFF   115.00
2  33041 33136  "1 "    0     # TRAN from  IMHOFF   115.00   (2) to (1)   CCCSD     12.47
4  33136     0  "SG"    0     # LOAD-DROP    CCCSD     12.47  LOAD==1.38(0.31)
3  33136     0  "1 "    0     # GEN-DROP    CCCSD     12.47  GEN==4.40(-0.12)
0
 #
 #
 # (100)   C5 DOUBLE CIRCUIT TOWERLINE OUTAGE
 # Pittsburg - Clayton #3 and #4 115 kV Lines
1  32950 33032  "3 "    0     # line from  PITSBURG 115.00  BRKR to (2)   KIRKTAP1 115.00
1  33032 32970  "3 "    0     # line from  KIRKTAP1 115.00   (2) to BRKR  CLAYTN   115.00
 #
1  32950 32970  "4 "    0     # line from  PITSBURG 115.00  BRKR to BRKR  CLAYTN   115.00
0
 #
 #
 # (101)   C5 DOUBLE CIRCUIT TOWERLINE OUTAGE
 # Pittsburg - Columbia Steel 115 kV Lines and Pittsburg - Kirker - Columbia Steel 115 kV Lines
1  32950 33030  "1 "    0     # line from  PITSBURG 115.00  BRKR to (2)   COLSTJT1 115.00
1  33030 33036  "1 "    0     # line from  COLSTJT1 115.00   (2) to (3)   LINDETP1 115.00
1  33036 32954  "1 "    0     # line from  LINDETP1 115.00   (3) to (2)   DOW TAP1 115.00
```

```
1  33036 32961  "1 "    0     # line from  LINDETP1 115.00   (3) to (3)   GWF2 TAP 115.00
1  32954 32956  "1 "    0     # line from  DOW TAP1 115.00   (2) to (2)   DOW MTR  115.00
2  32956 33160  "1 "    0     # TRAN from  DOW MTR  115.00   (2) to (4)   DOW CHEM  13.80
1  33160 33161  "1 "    0     # line from  DOW CHEM  13.80   (4) to (1)   DOWCHEM1  13.80
1  33160 33162  "1 "    0     # line from  DOW CHEM  13.80   (4) to (1)   DOWCHEM2  13.80
1  33160 33163  "1 "    0     # line from  DOW CHEM  13.80   (4) to (1)   DOWCHEM3  13.80
1  32961 32960  "1 "    0     # line from  GWF2 TAP 115.00   (3) to (2)   GWF#2 HS 115.00
1  32961 33038  "1 "    0     # line from  GWF2 TAP 115.00   (3) to (2)   LINDEJCT 115.00
2  32960 33132  "1 "    0     # TRAN from  GWF#2 HS 115.00   (2) to (1)   GWF #2    13.80
1  33038 32957  "1 "    0     # line from  LINDEJCT 115.00   (2) to BRKR  PRAXAIR  115.00
4  33160     0  "SG"    0     # LOAD-DROP    DOW CHEM  13.80  LOAD==15.00(9.30)
4  33132     0  "SG"    0     # LOAD-DROP    GWF #2    13.80  LOAD==2.81(0.64)
4  32957     0  "1 "    0     # LOAD-DROP    PRAXAIR  115.00  LOAD==19.71(4.40)
3  33161     0  "1 "    0     # GEN-DROP    DOWCHEM1  13.80  GEN==15.30(5.84)
3  33162     0  "1 "    0     # GEN-DROP    DOWCHEM2  13.80  GEN==22.00(5.84)
3  33163     0  "1 "    0     # GEN-DROP    DOWCHEM3  13.80  GEN==22.00(5.84)
3  33132     0  "1 "    0     # GEN-DROP    GWF #2    13.80  GEN==12.30(3.97)
 #
1  32950 33033  "1 "    0     # line from  PITSBURG 115.00  BRKR to (3)   KIRKTAP2 115.00
1  33033 32951  "1 "    0     # line from  KIRKTAP2 115.00   (3) to BRKR  KIRKER   115.00
1  33033 33031  "1 "    0     # line from  KIRKTAP2 115.00   (3) to (2)   COLSTJT2 115.00
1  33031 33037  "1 "    0     # line from  COLSTJT2 115.00   (2) to (2)   LINDETP2 115.00
1  33037 32955  "1 "    0     # line from  LINDETP2 115.00   (2) to (1)   DOW TAP2 115.00
4  32951     0  "1 "    0     # LOAD-DROP    KIRKER   115.00  LOAD==50.93(10.34)
4  32951     0  "2 "    0     # LOAD-DROP    KIRKER   115.00  LOAD==35.76(7.26)
4  32951     0  "3 "    0     # LOAD-DROP    KIRKER   115.00  LOAD==58.49(11.88)
1  33032 32951  "1 "    1     # LINE-TRANSFER  KIRKTAP2  115.00  TO KIRKTAP1
4  32951 0      "**"    1     # RESTORE KIRKER load
0
 #
 #
 # (102)   C5 DOUBLE CIRCUIT TOWERLINE OUTAGE
 # Lakewood - Clayton and Lakewood - Meadow Lane - Clayton 115 kV Lines
1  32970 32974  "2 "    0     # line from  CLAYTN   115.00  BRKR to BRKR  LAKEWD-M 115.00
 #
1  32970 33035  "1 "    0     # line from  CLAYTN   115.00  BRKR to (3)   LKWD_JCT 115.00
1  33035 32972  "1 "    0     # line from  LKWD_JCT 115.00   (3) to (2)   EBMUDGRY 115.00
1  33035 32973  "1 "    0     # line from  LKWD_JCT 115.00   (3) to BRKR  LAKEWD-C 115.00
1  32972 32971  "1 "    0     # line from  EBMUDGRY 115.00   (2) to BRKR  MEDW LNE 115.00
4  32972     0  "1 "    0     # LOAD-DROP    EBMUDGRY 115.00  LOAD==5.62(1.85)
0
 #
 #
 # (103)   C5 DOUBLE CIRCUIT TOWERLINE OUTAGE
 # Vaca Dixon - Bahia 230 kV and Parkway - Moraga 230 kV Lines
1  30460 30465  "1 "    0     # line from  VACA-DIX 230.00  BRKR to BRKR  BAHIA    230.00
 #
1  30467 30550  "1 "    0     # line from  PARKWAY  230.00  BRKR to BRKR  MORAGA   230.00
0
 #
 #
 # (104)   C5 DOUBLE CIRCUIT TOWERLINE OUTAGE
 # Bahia - Moraga 230 kV and Parkway - Moraga 230 kV Lines
1  30465 30550  "1 "    0     # line from  BAHIA    230.00  BRKR to BRKR  MORAGA   230.00
 #
1  30467 30550  "1 "    0     # line from  PARKWAY  230.00  BRKR to BRKR  MORAGA   230.00
0
 #
 #
 # (105)   C5 DOUBLE CIRCUIT TOWERLINE OUTAGE
 # Moraga - Castro Valley 230 kV and San Ramon - Moraga 230 kV Lines
1  30550 30554  "1 "    0     # line from  MORAGA   230.00  BRKR to BRKR  CASTROVL 230.00
 #
1  30550 30555  "1 "    0     # line from  MORAGA   230.00  BRKR to BRKR  SANRAMON 230.00
0
 #
 #
 # (106)   C5 DOUBLE CIRCUIT TOWERLINE OUTAGE
 # Castro Valley - Newark 230 kV and San Ramon - Moraga 230 kV Lines
1  30554 30631  "1 "    0     # line from  CASTROVL 230.00  BRKR to BRKR  NEWARK E 230.00
 #
1  30550 30555  "1 "    0     # line from  MORAGA   230.00  BRKR to BRKR  SANRAMON 230.00
0
 #
 #
 # (107)   C5 DOUBLE CIRCUIT TOWERLINE OUTAGE
 # Moraga - San Leandro #1 and #2 115 kV Lines
1  33020 35101  "1 "    0     # line from  MORAGA   115.00  BRKR to BRKR  SN LNDRO 115.00
```

```
 #
1  33020 35101  "2 "    0     # line from  MORAGA   115.00  BRKR to BRKR  SN LNDRO 115.00
0
 #
 #
 # (108)   C5 DOUBLE CIRCUIT TOWERLINE OUTAGE
 # Contra Costa - DuPont 60 kV and Contra Costa - Balfour 60 kV Lines
1  33050 33080  "1 "    0     # line from  CC SUB    60.00  BRKR to (3)   WILBRTAP  60.00
1  33080 33051  "1 "    0     # line from  WILBRTAP  60.00   (3) to BRKR  DU PONT   60.00
2  33080 33134  "1 "    0     # TRAN from  WILBRTAP  60.00   (3) to (1)   GWF #4    13.80
4  33051     0  "1 "    0     # LOAD-DROP    DU PONT   60.00  LOAD==2.00(2.16)
4  33134     0  "SG"    0     # LOAD-DROP    GWF #4    13.80  LOAD==3.02(0.69)
3  33134     0  "1 "    0     # GEN-DROP    GWF #4    13.80  GEN==18.60(2.40)
 #
1  33050 33081  "1 "    0     # line from  CC SUB    60.00  BRKR to (2)   DUPNTJCT  60.00
1  33081 33082  "1 "    0     # line from  DUPNTJCT  60.00   (2) to (3)   BALFRJCT  60.00
1  33082 33052  "1 "    0     # line from  BALFRJCT  60.00   (3) to (2)   MARSH     60.00
1  33082 33054  "1 "    0     # line from  BALFRJCT  60.00   (3) to BRKR  BALFOUR   60.00
1  33052 33053  "1 "    0     # line from  MARSH     60.00   (2) to (1)   BRIONES   60.00
4  33054     0  "1 "    0     # LOAD-DROP    BALFOUR   60.00  LOAD==4.00(0.91)
4  33053     0  "1 "    0     # LOAD-DROP    BRIONES   60.00  LOAD==3.65(1.73)
1  33083 33054  "1 "    1     # LINE-TRANSFER  BALFRJCT  60.00  TO  MDLRVRJT  60.00
4  33054     0  "**"    1     # RESTORE BALFOUR load
0
 #
 #
 # (109) BUS FAULT  30530  "CAYETANO"
 #
1  30530  30537  "1"    0     # LINE from  CAYETANO 230.00  to  NDUBLIN  230.00
1  30530  30590  "1"    0     # LINE from  CAYETANO 230.00  to  USWP-JRW 230.00
4  30530     0  "3 "    0     # LOAD-DROP    CAYETANO 230.00  LOAD==2.55(0.52)
0
 #
 #
 # (110) BUS FAULT  30537  "NDUBLIN"
 #
1  30537  30530  "1"    0     # LINE from  NDUBLIN  230.00  to  CAYETANO 230.00
1  30537  35224  "1"    0     # LINE from  NDUBLIN  230.00  to  VINEYD_D 230.00
4  30537     0  "2 "    0     # LOAD-DROP    NDUBLIN  230.00  LOAD==16.79(3.41)
0
 #
 #
 # (111) BUS FAULT  30554  "CASTROVL"
 #
1  30554  30550  "1"    0     # LINE from  CASTROVL 230.00  to  MORAGA   230.00
1  30554  30556  "1"    0     # LINE from  CASTROVL 230.00  to  CV BART  230.00
1  30554  30631  "1"    0     # LINE from  CASTROVL 230.00  to  NEWARK E 230.00
4  30554     0  "1 "    0     # LOAD-DROP    CASTROVL 230.00  LOAD==40.57(8.24)
4  30554     0  "2 "    0     # LOAD-DROP    CASTROVL 230.00  LOAD==34.72(7.05)
0
 #
 #
 # (112) BUS FAULT  30555  "SANRAMON"
 #
1  30555  30526  "1"    0     # LINE from  SANRAMON 230.00  to  PITSBG D 230.00
1  30555  30550  "1"    0     # LINE from  SANRAMON 230.00  to  MORAGA   230.00
2  30555  35209  "1"    0     # TRAN from  SANRAMON 230.00  to  SAN RAMN  60.00
4  30555     0  "3 "    0     # LOAD-DROP    SANRAMON 230.00  LOAD==60.50(12.29)
4  30555     0  "4 "    0     # LOAD-DROP    SANRAMON 230.00  LOAD==68.59(13.93)
4  30555     0  "5 "    0     # LOAD-DROP    SANRAMON 230.00  LOAD==54.64(11.09)
4  30555     0  "6 "    0     # LOAD-DROP    SANRAMON 230.00  LOAD==63.93(12.98)
0
 #
 #
 # (113) BUS FAULT  30585  "LS PSTAS"
 #
1  30585  30525  "1"    0     # LINE from  LS PSTAS 230.00  to  C.COSTA  230.00
1  30585  30630  "1"    0     # LINE from  LS PSTAS 230.00  to  NEWARK D 230.00
2  30585  35220  "4"    0     # TRAN from  LS PSTAS 230.00  to  LPOSTAS   60.00
4  30585     0  "1 "    0     # LOAD-DROP    LS PSTAS 230.00  LOAD==31.14(6.32)
4  30585     0  "2 "    0     # LOAD-DROP    LS PSTAS 230.00  LOAD==54.39(11.05)
4  30585     0  "3 "    0     # LOAD-DROP    LS PSTAS 230.00  LOAD==29.96(6.09)
0
 #
 #
 # (114) BUS FAULT  30630  "NEWARK D" bus section 1d
 #
1  30630  30703  "1"    0     # LINE from  NEWARK D 230.00  to  RAVENSWD 230.00
```

```
1  30630  30585  "1"    0     # LINE from  NEWARK D 230.00  to  LS PSTAS 230.00
1  30630  30624  "1"    0     # LINE from  NEWARK D 230.00  to  TESLA E  230.00
2  30630  35121  "7"    0     # TRAN from  NEWARK D 230.00  to  NEWARK E 115.00
0
 #
 #
 # (115) BUS FAULT  30630  "NEWARK D" bus section 2d
 #
1  30630  35219  "1"    0     # LINE from  NEWARK D 230.00  to  VINEYARD 230.00
2  30630  35120  "9"    0     # TRAN from  NEWARK D 230.00  to  NEWARK D 115.00
6  30630  0      "v"    0     # SVD-DROP   NEWARK D 230.00
0
 #
 #
 # (116) BUS FAULT  30631  "NEWARK E" bus section 1e
 #
1  30631  30554  "1"    0     # LINE from  NEWARK E 230.00  to  CASTROVL 230.00
1  30631  30635  "1"    0     # LINE from  NEWARK E 230.00  to  NWK DIST 230.00
0
 #
 #
 # (117) BUS FAULT  30631  "NEWARK E" bus section 2e
 #
1  30631  30562  "1"    0     # LINE from  NEWARK E 230.00  to  TES JCT  230.00
1  30631  30655  "1"    0     # LINE from  NEWARK E 230.00  to  ADCC     230.00
2  30631  35122  "11"   0     # TRAN from  NEWARK E 230.00  to  NEWARK F 115.00
6  30631  0      "v"    0     # SVD-DROP   NEWARK D 230.00
0
 #
 #
 # (118) BUS FAULT  35101  "SN LNDRO"
 #
1  35101  33020  "1"    0     # LINE from  SN LNDRO 115.00  to  MORAGA   115.00
1  35101  33020  "2"    0     # LINE from  SN LNDRO 115.00  to  MORAGA   115.00
1  35101  33020  "3"    0     # LINE from  SN LNDRO 115.00  to  MORAGA   115.00
1  35101  35113  "1"    0     # LINE from  SN LNDRO 115.00  to  DMTAR_SL 115.00
4  35101     0  "1 "    0     # LOAD-DROP    SN LNDRO 115.00  LOAD==30.26(6.14)
4  35101     0  "2 "    0     # LOAD-DROP    SN LNDRO 115.00  LOAD==39.18(7.96)
4  35101     0  "3 "    0     # LOAD-DROP    SN LNDRO 115.00  LOAD==28.27(5.74)
4  35101     0  "SL"    0     # LOAD-DROP    SN LNDRO 115.00  LOAD==8.00(1.62)
0
 #
 #
 # (119) BUS FAULT  35104  "GRANT"
 #
1  35104  32812  "1"    0     # LINE from  GRANT    115.00  to  EDS GRNT 115.00
1  35104  35105  "1"    0     # LINE from  GRANT    115.00  to  EASTSHRE 115.00
1  35104  35105  "2"    0     # LINE from  GRANT    115.00  to  EASTSHRE 115.00
4  35104     0  "1 "    0     # LOAD-DROP    GRANT    115.00  LOAD==24.01(4.87)
4  35104     0  "2 "    0     # LOAD-DROP    GRANT    115.00  LOAD==24.20(4.92)
0
 #
 #
 # (120) BUS FAULT  35105  "EASTSHRE" bus section d
 #
1  35105  35104  "1"    0     # LINE from  EASTSHRE 115.00  to  GRANT    115.00
1  35105  35106  "1"    0     # LINE from  EASTSHRE 115.00  to  MT EDEN  115.00
2  35105  30560  "1"    0     # TRAN from  EASTSHRE 115.00  to  E. SHORE 230.00
0
 #
 #
 # (121) BUS FAULT  35105  "EASTSHRE" bus section e
 #
1  35105  35104  "2"    0     # LINE from  EASTSHRE 115.00  to  GRANT    115.00
1  35105  35106  "2"    0     # LINE from  EASTSHRE 115.00  to  MT EDEN  115.00
1  35105  35107  "1"    0     # LINE from  EASTSHRE 115.00  to  DUMBARTN 115.00
2  35105  30560  "2"    0     # TRAN from  EASTSHRE 115.00  to  E. SHORE 230.00
0
 #
 #
 # (122) BUS FAULT  35106  "MT EDEN"
 #
1  35106  35105  "1"    0     # LINE from  MT EDEN  115.00  to  EASTSHRE 115.00
1  35106  35105  "2"    0     # LINE from  MT EDEN  115.00  to  EASTSHRE 115.00
4  35106     0  "1 "    0     # LOAD-DROP    MT EDEN  115.00  LOAD==36.61(7.44)
4  35106     0  "2 "    0     # LOAD-DROP    MT EDEN  115.00  LOAD==42.46(8.62)
4  35106     0  "3 "    0     # LOAD-DROP    MT EDEN  115.00  LOAD==39.08(7.94)
0
```

```
 #
 #
 # (123) BUS FAULT  35107  "DUMBARTN"
 #
1  35107  35105  "1"    0     # LINE from  DUMBARTN 115.00  to  EASTSHRE 115.00
1  35107  35120  "1"    0     # LINE from  DUMBARTN 115.00  to  NEWARK D 115.00
4  35107     0  "1 "    0     # LOAD-DROP    DUMBARTN 115.00  LOAD==28.59(5.80)
4  35107     0  "2 "    0     # LOAD-DROP    DUMBARTN 115.00  LOAD==32.73(6.64)
4  35107     0  "3 "    0     # LOAD-DROP    DUMBARTN 115.00  LOAD==34.21(6.94)
0
 #
 #
 # (124) BUS FAULT  35110  "FREMNT"
 #
1  35110  35121  "1"    0     # LINE from  FREMNT   115.00  to  NEWARK E 115.00
1  35110  35121  "2"    0     # LINE from  FREMNT   115.00  to  NEWARK E 115.00
4  35110     0  "1 "    0     # LOAD-DROP    FREMNT   115.00  LOAD==29.08(5.90)
4  35110     0  "2 "    0     # LOAD-DROP    FREMNT   115.00  LOAD==21.39(4.34)
4  35110     0  "3 "    0     # LOAD-DROP    FREMNT   115.00  LOAD==29.97(6.09)
0
 #
 #
 # (125) BUS FAULT  35111  "JARVIS"
 #
1  35111  35115  "1"    0     # LINE from  JARVIS   115.00  to  JV BART  115.00
1  35111  35116  "1"    0     # LINE from  JARVIS   115.00  to  CRYOGEN  115.00
1  35111  35120  "1"    0     # LINE from  JARVIS   115.00  to  NEWARK D 115.00
1  35111  35124  "2"    0     # LINE from  JARVIS   115.00  to  NUMI JCT 115.00
4  35111     0  "1 "    0     # LOAD-DROP    JARVIS   115.00  LOAD==21.59(4.39)
4  35111     0  "2 "    0     # LOAD-DROP    JARVIS   115.00  LOAD==27.20(5.53)
4  35111     0  "3 "    0     # LOAD-DROP    JARVIS   115.00  LOAD==35.20(7.14)
0
 #
 #
 # (126) BUS FAULT  35112  "NUMMI"
 #
1  35112  35126  "1"    0     # LINE from  NUMMI    115.00  to  NUMI TAP 115.00
4  35112     0  "1 "    0     # LOAD-DROP    NUMMI    115.00  LOAD==34.16(9.00)
0
 #
 #
 # (127) BUS FAULT  35120  "NEWARK D" bus section 1d
 #
1  35120  36851  "1"    0     # LINE from  NEWARK D 115.00  to  NORTHERN 115.00
1  35120  35124  "2"    0     # LINE from  NEWARK D 115.00  to  NUMI JCT 115.00
1  35120  38432  "1"    0     # LINE from  NEWARK D 115.00  to  OAKDLTID 115.00
4  35120     0  "3 "    0     # LOAD-DROP    NEWARK D 115.00  LOAD==25.63(5.21)
6  35120  0      "v"    0     # SVD-DROP   NEWARK D 115.00
0
 #
 #
 # (128) BUS FAULT  35120  "NEWARK D" bus section 2d
 #
1  35120  35107  "1"    0     # LINE from  NEWARK D 115.00  to  DUMBARTN 115.00
1  35120  35111  "1"    0     # LINE from  NEWARK D 115.00  to  JARVIS   115.00
1  35120  38432  "2"    0     # LINE from  NEWARK D 115.00  to  OAKDLTID 115.00
2  35120  35109  "1"    0     # TRAN from  NEWARK D 115.00  to  NWRK 2 M 115.00
4  35120     0  "4 "    0     # LOAD-DROP    NEWARK D 115.00  LOAD==25.04(5.08)
0
 #
 #
 # (129) BUS FAULT  35121  "NEWARK E" bus section 1e
 #
1  35121  35110  "1"    0     # LINE from  NEWARK E 115.00  to  FREMNT   115.00
1  35121  35350  "1"    0     # LINE from  NEWARK E 115.00  to  AMES BS1 115.00
1  35121  35350  "3"    0     # LINE from  NEWARK E 115.00  to  AMES BS1 115.00
0
 #
 #
 # (130) BUS FAULT  35121  "NEWARK E" bus section 2e
 #
1  35121  35110  "2"    0     # LINE from  NEWARK E 115.00  to  FREMNT   115.00
1  35121  35351  "2"    0     # LINE from  NEWARK E 115.00  to  AMES BS2 115.00
1  35121  35349  "1"    0     # LINE from  NEWARK E 115.00  to  AMES DST 115.00
0
 #
 #
 # (131) BUS FAULT  35122  "NEWARK F" bus section 1f
```

```
 #
1  35122  35602  "1"    0     # LINE from  NEWARK F 115.00  to  ZNKER J2 115.00
1  35122  35357  "1"    0     # LINE from  NEWARK F 115.00  to  LCKHD J1 115.00
1  35122  35624  "1"    0     # LINE from  NEWARK F 115.00  to  MILPITAS 115.00
0
 #
 #
 # (132) BUS FAULT  35122  "NEWARK F" bus section 2f
 #
1  35122  35126  "1"    0     # LINE from  NEWARK F 115.00  to  NUMI TAP 115.00
1  35122  35360  "1"    0     # LINE from  NEWARK F 115.00  to  LCKHD J2 115.00
1  35122  35600  "1"    0     # LINE from  NEWARK F 115.00  to  DIXON LD 115.00
1  35122  35603  "1"    0     # LINE from  NEWARK F 115.00  to  ZNKER J1 115.00
1  35122  35624  "2"    0     # LINE from  NEWARK F 115.00  to  MILPITAS 115.00
1  35122  36851  "2"    0     # LINE from  NEWARK F 115.00  to  NORTHERN 115.00
0
 #
 #
 # (133) BUS FAULT  35201  "VASCO"
 #
1  35201  35210  "1"    0     # LINE from  VASCO     60.00  to  VASCJCT.  60.00
1  35201  35211  "1"    0     # LINE from  VASCO     60.00  to  ALTAMONT  60.00
4  35201     0  "1 "    0     # LOAD-DROP    VASCO     60.00  LOAD==5.42(1.10)
4  35201     0  "2 "    0     # LOAD-DROP    VASCO     60.00  LOAD==8.68(1.76)
0
 #
 #
 # (134) BUS FAULT  35203  "LIVERMRE"
 #
1  35203  35220  "1"    0     # LINE from  LIVERMRE  60.00  to  LPOSTAS   60.00
1  35203  35222  "1"    0     # LINE from  LIVERMRE  60.00  to  CALMAT60  60.00
1  35203  35225  "1"    0     # LINE from  LIVERMRE  60.00  to  LIVRMR_2  60.00
4  35203     0  "1 "    0     # LOAD-DROP    LIVERMRE  60.00  LOAD==11.53(2.34)
0
 #
 #
 # (135) BUS FAULT  35205  "RADUM"
 #
1  35205  35206  "1"    0     # LINE from  RADUM     60.00  to  KAISER    60.00
1  35205  35227  "1"    0     # LINE from  RADUM     60.00  to  VINEYARD  60.00
1  35205  35223  "1"    0     # LINE from  RADUM     60.00  to  PARKS TP  60.00
4  35205     0  "1 "    0     # LOAD-DROP    RADUM     60.00  LOAD==12.62(2.56)
4  35205     0  "2 "    0     # LOAD-DROP    RADUM     60.00  LOAD==9.27(1.88)
0
 #
 #
 # (136) BUS FAULT  35209  "SAN RAMN"
 #
1  35209  35221  "1"    0     # LINE from  SAN RAMN  60.00  to  E DUBLIN  60.00
2  35209  30555  "1"    0     # TRAN from  SAN RAMN  60.00  to  SANRAMON 230.00
0
 #
 #
 # (137) BUS FAULT  35213  "VALLECTS"
 #
1  35213  35212  "1"    0     # LINE from  VALLECTS  60.00  to  IUKA      60.00
1  35213  35214  "1"    0     # LINE from  VALLECTS  60.00  to  SUNOL     60.00
4  35213     0  "1 "    0     # LOAD-DROP    VALLECTS  60.00  LOAD==1.16(0.20)
0
 #
 #
 # (138) BUS FAULT  35217  "NEWARK"
 #
1  35217  35216  "1"    0     # LINE from  NEWARK    60.00  to  DCTO JCT  60.00
1  35217  35225  "1"    0     # LINE from  NEWARK    60.00  to  LIVRMR_2  60.00
2  35217  35109  "1"    0     # TRAN from  NEWARK    60.00  to  NWRK 2 M 115.00
0
 #
 #
 # (139) BUS FAULT  35219  "VINEYARD"
 #
1  35219  30630  "1"    0     # LINE from  VINEYARD 230.00  to  NEWARK D 230.00
1  35219  35224  "1"    0     # LINE from  VINEYARD 230.00  to  VINEYD_D 230.00
4  35219     0  "2 "    0     # LOAD-DROP    VINEYARD 230.00  LOAD==33.64(6.83)
0
 #
 #
 # (140) BUS FAULT  35220  "LPOSTAS"
```

```
 #
1  35220  35203  "1"    0     # LINE from  LPOSTAS   60.00  to  LIVERMRE  60.00
1  35220  35210  "1"    0     # LINE from  LPOSTAS   60.00  to  VASCJCT.  60.00
2  35220  30585  "4"    0     # TRAN from  LPOSTAS   60.00  to  LS PSTAS 230.00
0
 #
 #
 # (141) BUS FAULT  35224  "VINEYD_D"
 #
1  35224  30537  "1"    0     # LINE from  VINEYD_D 230.00  to  NDUBLIN  230.00
1  35224  35219  "1"    0     # LINE from  VINEYD_D 230.00  to  VINEYARD 230.00
4  35224     0  "1 "    0     # LOAD-DROP    VINEYD_D 230.00  LOAD==37.44(7.60)
0
 #
 #
 # (142) BUS FAULT  35225  "LIVRMR_2"
 #
1  35225  35203  "1"    0     # LINE from  LIVRMR_2  60.00  to  LIVERMRE  60.00
1  35225  35217  "1"    0     # LINE from  LIVRMR_2  60.00  to  NEWARK    60.00
4  35225     0  "2 "    0     # LOAD-DROP    LIVRMR_2  60.00  LOAD==10.75(2.18)
0
 #
 #
 # (143)   C5 DOUBLE CIRCUIT TOWERLINE OUTAGE
 # Contra Costa - Las Positas 230 kV and Cayetano - North Dublin 230 kV Lines
1  30525 30585  "1 "    0     # line from  C.COSTA  230.00  BRKR to BRKR  LS PSTAS 230.00
 #
1  30530 30537  "1 "    0     # line from  CAYETANO 230.00  BRKR to BRKR  NDUBLIN  230.00
0
 #
 #
 # (144)   C5 DOUBLE CIRCUIT TOWERLINE OUTAGE
 # Las Positas - Newark 230 kV and Cayetano - North Dublin 230 kV Lines
1  30585 30630  "1 "    0     # line from  LS PSTAS 230.00  BRKR to BRKR  NEWARK D 230.00
 #
1  30530 30537  "1 "    0     # line from  CAYETANO 230.00  BRKR to BRKR  NDUBLIN  230.00
0
 #
 #
 # (145)   C5 DOUBLE CIRCUIT TOWERLINE OUTAGE
 # Pittsburg - San Mateo 230 kV and Eastshore - San Mateo 230 kV Lines
1  30527 30700  "1 "    0     # line from  PITSBG E 230.00  BRKR to BRKR  SANMATEO 230.00
 #
1  30560 30700  "1 "    0     # line from  E. SHORE 230.00  BRKR to BRKR  SANMATEO 230.00
0
 #
 #
 # (146)   C5 DOUBLE CIRCUIT TOWERLINE OUTAGE
 # Grant - Eastshore #1 and #2 115 kV Lines
1  35104 35105  "1 "    0     # line from  GRANT    115.00  BRKR to BRKR  EASTSHRE 115.00
 #
1  35104 35105  "2 "    0     # line from  GRANT    115.00  BRKR to BRKR  EASTSHRE 115.00
0
 #
 #
 # (147)   C5 DOUBLE CIRCUIT TOWERLINE OUTAGE
 # Eastshore - Mt Eden Nos. 1 & 2 115 kV Lines
1  35105 35106  "1 "    0     # line from  EASTSHRE 115.00  BRKR to BRKR  MT EDEN  115.00
 #
1  35105 35106  "2 "    0     # line from  EASTSHRE 115.00  BRKR to BRKR  MT EDEN  115.00
0
 #
 #
 # (148)   C5 DOUBLE CIRCUIT TOWERLINE OUTAGE
 # Tesla - Newark #1 and Tesla - Ravenswood 230 kV Lines
1  30624 30630  "1 "    0     # line from  TESLA E  230.00  BRKR to BRKR  NEWARK D 230.00
 #
1  30624 30703  "1 "    0     # line from  TESLA E  230.00  BRKR to BRKR  RAVENSWD 230.00
0
 #
 #
 # (149)   C5 DOUBLE CIRCUIT TOWERLINE OUTAGE
 # Newark - Ravenswood 230 kV and Tesla - Ravenswood 230 kV Lines
1  30630 30703  "1 "    0     # line from  NEWARK D 230.00  BRKR to BRKR  RAVENSWD 230.00
 #
1  30624 30703  "1 "    0     # line from  TESLA E  230.00  BRKR to BRKR  RAVENSWD 230.00
0
 #
```

```
 #
 # (150)   C5 DOUBLE CIRCUIT TOWERLINE OUTAGE
 # Tesla  -  Newark #2 and Newark  -  Los Esteros 230 kV Lines
1  30655 30631  "1 "    0     # line from  ADCC     230.00   (3) to BRKR  NEWARK E 230.00
1  30655 30640  "1 "    0     # line from  ADCC     230.00   (3) to BRKR  TESLA C  230.00
2  30655 35310  "1 "    0     # TRAN from  ADCC     230.00   (3) to (1)   LFC FIN+   9.11
 #
1  30635 30731  "1 "    0     # line from  NWK DIST 230.00  BRKR to BRKR  LS ESTRS 230.00
0
 #
 #
 # (151)   C5 DOUBLE CIRCUIT TOWERLINE OUTAGE
 # Newark - Jarvis #1 and #2 115 kV Lines
1  35120 35111  "1 "    0     # line from  NEWARK D 115.00  BRKR to BRKR  JARVIS   115.00
 #
1  35120 35124  "2 "    0     # line from  NEWARK D 115.00  BRKR to (2)   NUMI JCT 115.00
1  35124 35111  "2 "    0     # line from  NUMI JCT 115.00   (2) to BRKR  JARVIS   115.00
0
 #
 #
 # (152)   C5 DOUBLE CIRCUIT TOWERLINE OUTAGE
 # Newark - Northern #1 and #2 115 kV Lines
1  35120 36851  "1 "    0     # line from  NEWARK D 115.00  BRKR to BRKR  NORTHERN 115.00
 #
1  35122 36851  "2 "    0     # line from  NEWARK F 115.00  BRKR to BRKR  NORTHERN 115.00
0
 #
 #
 # (153)   C5 DOUBLE CIRCUIT TOWERLINE OUTAGE
 # Newark - Fremont #1 and #2 115 kV Lines
1  35121 35110  "1 "    0     # line from  NEWARK E 115.00  BRKR to BRKR  FREMNT   115.00
 #
1  35121 35110  "2 "    0     # line from  NEWARK E 115.00  BRKR to BRKR  FREMNT   115.00
0
 #
 #
 # (154)   C5 DOUBLE CIRCUIT TOWERLINE OUTAGE
 # Newark - Ames #1 and #2 115 kV Lines
1  35121 35350  "1 "    0     # line from  NEWARK E 115.00  BRKR to BRKR  AMES BS1 115.00
 #
1  35121 35351  "2 "    0     # line from  NEWARK E 115.00  BRKR to BRKR  AMES BS2 115.00
0
 #
 #
 # (155)   C5 DOUBLE CIRCUIT TOWERLINE OUTAGE
 # Newark - Ames #3 115 kV and Newark  -  Ames Distribution 115 kV Lines
1  35121 35350  "3 "    0     # line from  NEWARK E 115.00  BRKR to BRKR  AMES BS1 115.00
 #
1  35349 35121  "1 "    0     # line from  AMES DST 115.00  BRKR to BRKR  NEWARK E 115.00
0
 #
 #
 # (156)   C5 DOUBLE CIRCUIT TOWERLINE OUTAGE
 # Newark - Nummi 115 kV and Newark - Livermore 60 kV Lines
1  35122 35126  "1 "    0     # line from  NEWARK F 115.00  BRKR to (2)   NUMI TAP 115.00
1  35126 35112  "1 "    0     # line from  NUMI TAP 115.00   (2) to BRKR  NUMMI    115.00
4  35112     0  "1 "    0     # LOAD-DROP    NUMMI    115.00  LOAD==34.16(9.00)
 #
1  35225 35217  "1 "    0     # line from  LIVRMR_2  60.00  BRKR to BRKR  NEWARK    60.00
0
 #
 # (157)   C5 DOUBLE CIRCUIT TOWERLINE OUTAGE
 # Newark - Lawrence 115 kV and Newark - Applied Materials 115 kV Lines
1  35122 35357  "1 "    0     # line from  NEWARK F 115.00  BRKR to (3)   LCKHD J1 115.00
1  35357 35358  "1 "    0     # line from  LCKHD J1 115.00   (3) to (3)   MFT.FD J 115.00
1  35357 35363  "1 "    0     # line from  LCKHD J1 115.00   (3) to BRKR  LAWRENCE 115.00
1  35358 35359  "1 "    0     # line from  MFT.FD J 115.00   (3) to (1)   MOFT.FLD 115.00
1  35358 35361  "1 "    0     # line from  MFT.FD J 115.00   (3) to BRKR  LOCKHD 1 115.00
4  35359     0  "1 "    0     # LOAD-DROP    MOFT.FLD 115.00  LOAD==4.46(1.12)
4  35361     0  "1 "    0     # LOAD-DROP    LOCKHD 1 115.00  LOAD==17.33(14.36)
 #
1  35122 35360  "1 "    0     # line from  NEWARK F 115.00  BRKR to (3)   LCKHD J2 115.00
1  35360 35362  "1 "    0     # line from  LCKHD J2 115.00   (3) to BRKR  LOCKHD 2 115.00
1  35360 35365  "1 "    0     # line from  LCKHD J2 115.00   (3) to (3)   AMD JCT  115.00
1  35365 35364  "1 "    0     # line from  AMD JCT  115.00   (3) to BRKR  A.M.D    115.00
1  35365 35369  "1 "    0     # line from  AMD JCT  115.00   (3) to BRKR  APP MAT  115.00
4  35362     0  "1 "    0     # LOAD-DROP    LOCKHD 2 115.00  LOAD==13.28(10.31)
4  35364     0  "1 "    0     # LOAD-DROP    A.M.D    115.00  LOAD==7.82(5.46)
```

```
0
 #
 #
 # (158)   C5 DOUBLE CIRCUIT TOWERLINE OUTAGE
 # Newark - Dixon Landing 115 kV and Newark - Milpitas #1 115 kV Lines
1  35122 35600  "1 "    0     # line from  NEWARK F 115.00  BRKR to BRKR  DIXON LD 115.00
 #
1  35122 35624  "1 "    0     # line from  NEWARK F 115.00  BRKR to BRKR  MILPITAS 115.00
0
 #
 #
 # (159)   C5 DOUBLE CIRCUIT TOWERLINE OUTAGE
 # Newark - Kifer 115 kV and Newark - Trimble 115 kV Lines
1  35122 35602  "1 "    0     # line from  NEWARK F 115.00  BRKR to (3)   ZNKER J2 115.00
1  35602 35604  "1 "    0     # line from  ZNKER J2 115.00   (3) to (3)   ZANKER   115.00
1  35602 36850  "1 "    0     # line from  ZNKER J2 115.00   (3) to BRKR  KIFER    115.00
2  35604 35861  "1 "    0     # TRAN from  ZANKER   115.00   (3) to (2)   SJ-SCL W   9.11
2  35604 35861  "2 "    0     # TRAN from  ZANKER   115.00   (3) to (2)   SJ-SCL W   9.11
4  35861     0  "SG"    0     # LOAD-DROP    SJ-SCL W   9.11  LOAD==5.54(1.88)
3  35861     0  "1 "    0     # GEN-DROP    SJ-SCL W   9.11  GEN==5.00(0.00)
 #
1  35122 35603  "1 "    0     # line from  NEWARK F 115.00  BRKR to (3)   ZNKER J1 115.00
1  35603 35605  "1 "    0     # line from  ZNKER J1 115.00   (3) to (1)   AGNEW J  115.00
1  35603 35612  "1 "    0     # line from  ZNKER J1 115.00   (3) to BRKR  TRIMBLE  115.00
0
 #
 #
 # (160) BUS FAULT  30700  "SANMATEO" bus setion 1d
1  30700  30527  "1"    0     # LINE from  SANMATEO 230.00  to  PITSBG E 230.00
2  30700  30701  "5"    0     # TRAN from  SANMATEO 230.00  to  SMATEO5M  13.20
0
 #
 #
 # (161) BUS FAULT  30700  "SANMATEO" bus setion 2d
1  30700  30560  "1"    0     # LINE from  SANMATEO 230.00  to  E. SHORE 230.00
2  30700  30702  "6"    0     # TRAN from  SANMATEO 230.00  to  SMATEO6M  13.20
0
 #
 #
 # (162) BUS FAULT  30700  "SANMATEO" bus setion 1e
1  30700  30703  "1"    0     # LINE from  SANMATEO 230.00  to  RAVENSWD 230.00
1  30700  30695  "1"    0     # LINE from  SANMATEO 230.00  to  MARTIN C 230.00
0
 #
 #
 # (163) BUS FAULT  30700  "SANMATEO" bus setion 2e
1  30700  30703  "2"    0     # LINE from  SANMATEO 230.00  to  RAVENSWD 230.00
6  30700  0      "v"    0     # SVD-DROP   SANMATEO 230.00
0
 #
 #
 # (164) BUS FAULT  30711  "S.L.A.C."
 #
1  30711  30710  "1"    0     # LINE from  S.L.A.C. 230.00  to  SLACTAP1 230.00
1  30711  30712  "1"    0     # LINE from  S.L.A.C. 230.00  to  SLACTAP2 230.00
4  30711     0  "1 "    0     # LOAD-DROP    S.L.A.C. 230.00  LOAD==61.00(12.39)
0
 #
 #
 # (165) BUS FAULT  30715  "JEFFERSN"
 #
1  30715  30710  "1"    0     # LINE from  JEFFERSN 230.00  to  SLACTAP1 230.00
1  30715  30712  "1"    0     # LINE from  JEFFERSN 230.00  to  SLACTAP2 230.00
1  30715  30696  "1"    0     # LINE from  JEFFERSN 230.00  to  MRT RCTR 230.00
2  30715  33380  "1"    0     # TRAN from  JEFFERSN 230.00  to  JEFFERSN  60.00
0
 #
 #
 # (166) BUS FAULT  33315  "RAVENSWD" bus section 1
 #
1  33315  33310  "1"    0     # LINE from  RAVENSWD 115.00  to  SANMATEO 115.00
1  33315  35350  "1"    0     # LINE from  RAVENSWD 115.00  to  AMES BS1 115.00
1  33315  33313  "1"    0     # LINE from  RAVENSWD 115.00  to  BAIR     115.00
1  33315  33317  "1"    0     # LINE from  RAVENSWD 115.00  to  CLY LND  115.00
1  33315  38028  "1"    0     # LINE from  RAVENSWD 115.00  to  PLO ALTO 115.00
0
 #
 #
```

```
 # (167) BUS FAULT  33315  "RAVENSWD" bus section 2
 #
1  33315  33316  "2"    0     # LINE from  RAVENSWD 115.00  to  CLY LND2 115.00
1  33315  35351  "1"    0     # LINE from  RAVENSWD 115.00  to  AMES BS2 115.00
1  33315  38028  "2"    0     # LINE from  RAVENSWD 115.00  to  PLO ALTO 115.00
1  33315  33319  "1"    0     # LINE from  RAVENSWD 115.00  to  SHREDJCT 115.00
0
 #
 #
 # (168)   C5 DOUBLE CIRCUIT TOWERLINE OUTAGE
 # Ravenswood - San Mateo #1 and #2 230 kV Lines
1  30703 30700  "1 "    0     # line from  RAVENSWD 230.00  BRKR to BRKR  SANMATEO 230.00
 #
1  30703 30700  "2 "    0     # line from  RAVENSWD 230.00  BRKR to BRKR  SANMATEO 230.00
0
 #
 #
 # (169)   C5 DOUBLE CIRCUIT TOWERLINE OUTAGE
 # Monta Vista - Jefferson #1 and #2 230 kV Lines
1  30705 30710  "1 "    0     # line from  MONTAVIS 230.00  BRKR to (3)   SLACTAP1 230.00
1  30710 30711  "1 "    0     # line from  SLACTAP1 230.00   (3) to BRKR  S.L.A.C. 230.00
1  30710 30715  "1 "    0     # line from  SLACTAP1 230.00   (3) to BRKR  JEFFERSN 230.00
4  30711     0  "1 "    0     # LOAD-DROP    S.L.A.C. 230.00  LOAD==61.00(12.39)
 #
1  30705 30712  "1 "    0     # line from  MONTAVIS 230.00  BRKR to (2)   SLACTAP2 230.00
1  30712 30715  "1 "    0     # line from  SLACTAP2 230.00   (2) to BRKR  JEFFERSN 230.00
0
 #
 #
 # (170)   C5 DOUBLE CIRCUIT TOWERLINE OUTAGE
 # Tassajara - Newark 230 kV and San Ramon - Moraga 230 kV Lines
1  30562 30631  "1 "    0     # line from  TES JCT  230.00   (3) to BRKR  NEWARK E 230.00
1  30562 30561  "1 "    0     # line from  TES JCT  230.00   (3) to BRKR  TASSAJAR 230.00
1  30562 30563  "1 "    0     # line from  TES JCT  230.00   (3) to BRKR  TES SUB  230.00
4  30563     0  "1 "    0     # LOAD-DROP    TES SUB  230.00  LOAD==33.39(7.61)
 #
1  30550 30555  "1 "    0     # line from  MORAGA   230.00  BRKR to BRKR  SANRAMON 230.00
0
 #
 #
 # (171)   C5 DOUBLE CIRCUIT TOWERLINE OUTAGE
 # Castro Valley - Newark 230 kV and Tassajara - Newark 230 kV Lines
1  30554 30631  "1 "    0     # line from  CASTROVL 230.00  BRKR to BRKR  NEWARK E 230.00
 #
1  30562 30631  "1 "    0     # line from  TES JCT  230.00   (3) to BRKR  NEWARK E 230.00
1  30562 30561  "1 "    0     # line from  TES JCT  230.00   (3) to BRKR  TASSAJAR 230.00
1  30562 30563  "1 "    0     # line from  TES JCT  230.00   (3) to BRKR  TES SUB  230.00
4  30563     0  "1 "    0     # LOAD-DROP    TES SUB  230.00  LOAD==33.39(7.61)
0
 #
 #
 # (172)   C5 DOUBLE CIRCUIT TOWERLINE OUTAGE
 # Tesla - Newark 230 kV and Metcalf - Los Esteros 230 kV Lines
1  30655 30631  "1 "    0     # line from  ADCC     230.00   (3) to BRKR  NEWARK E 230.00
1  30655 30640  "1 "    0     # line from  ADCC     230.00   (3) to BRKR  TESLA C  230.00
2  30655 35310  "1 "    0     # TRAN from  ADCC     230.00   (3) to (1)   LFC FIN+   9.11
 #
1  30735 30731  "1 "    0     # line from  METCALF  230.00  BRKR to BRKR  LS ESTRS 230.00
0
 #
 #
 # (173)   C5 DOUBLE CIRCUIT TOWERLINE OUTAGE
 # San Mateo - Belmont 115 kV and Ravenswood - San Mateo 115 kV Lines
1  33310 33312  "1 "    0     # line from  SANMATEO 115.00  BRKR to BRKR  BELMONT  115.00
 #
1  33310 33315  "1 "    0     # line from  SANMATEO 115.00  BRKR to BRKR  RAVENSWD 115.00
0
 #
 #
 # (174)   C5 DOUBLE CIRCUIT TOWERLINE OUTAGE
 # Ravenswood - San Mateo 115 kV and Ravenswood - Bair #1 115 kV Lines
1  33310 33315  "1 "    0     # line from  SANMATEO 115.00  BRKR to BRKR  RAVENSWD 115.00
 #
1  33313 33319  "1 "    0     # line from  BAIR     115.00  BRKR to (3)   SHREDJCT 115.00
1  33319 33314  "1 "    0     # line from  SHREDJCT 115.00   (3) to (2)   SHREDDER 115.00
1  33319 33315  "1 "    0     # line from  SHREDJCT 115.00   (3) to BRKR  RAVENSWD 115.00
1  33314 33320  "1 "    0     # line from  SHREDDER 115.00   (2) to (1)   LONESTAR 115.00
4  33314     0  "1 "    0     # LOAD-DROP    SHREDDER 115.00  LOAD==4.00(0.91)
```

```
4  33320     0  "1 "    0     # LOAD-DROP    LONESTAR 115.00  LOAD==1.80(1.64)
0
 #
 #
 # (175)   C5 DOUBLE CIRCUIT TOWERLINE OUTAGE
 # Ravenswood - Bair #1 and #2 115 kV Lines
1  33313 33319  "1 "    0     # line from  BAIR     115.00  BRKR to (3)   SHREDJCT 115.00
1  33319 33314  "1 "    0     # line from  SHREDJCT 115.00   (3) to (2)   SHREDDER 115.00
1  33319 33315  "1 "    0     # line from  SHREDJCT 115.00   (3) to BRKR  RAVENSWD 115.00
1  33314 33320  "1 "    0     # line from  SHREDDER 115.00   (2) to (1)   LONESTAR 115.00
4  33314     0  "1 "    0     # LOAD-DROP    SHREDDER 115.00  LOAD==4.00(0.91)
4  33320     0  "1 "    0     # LOAD-DROP    LONESTAR 115.00  LOAD==1.80(1.64)
 #
1  33315 33313  "1 "    0     # line from  RAVENSWD 115.00  BRKR to BRKR  BAIR     115.00
0
 #
 #
 # (176)   C5 DOUBLE CIRCUIT TOWERLINE OUTAGE
 #  Ravenswood - Cooley Landing #1 and #2 115 kV Lines
1  33315 33317  "1 "    0     # line from  RAVENSWD 115.00  BRKR to BRKR  CLY LNG2 115.00
1  33317 33316  "1"    1     # CLOSE CLY LNDG2 115.00  TO CLY LNDG 115.00
 #
1  33315 33317  "1 "    0     # line from  RAVENSWD 115.00  BRKR to BRKR  CLY LNG2 115.00
1  33317 33316  "1"    1     # CLOSE CLY LNDG2 115.00  TO CLY LNDG 115.00
0
 #
 #
 # (177)   C5 DOUBLE CIRCUIT TOWERLINE OUTAGE
 #  Ravenswood-Ames #1 and #2 115 kV Lines
1  33315 35350  "1 "    0     # line from  RAVENSWD 115.00  BRKR to BRKR  AMES BS1 115.00
 #
1  33315 35351  "1 "    0     # line from  RAVENSWD 115.00  BRKR to BRKR  AMES BS2 115.00
0
 #
 #
 # (178)   C5 DOUBLE CIRCUIT TOWERLINE OUTAGE
 # Ravenswood - Palo Alto #1 and #2 115 kV Lines
1  33315 38028  "1 "    0     # line from  RAVENSWD 115.00  BRKR to BRKR  PLO ALTO 115.00
 #
1  33315 38028  "2 "    0     # line from  RAVENSWD 115.00  BRKR to BRKR  PLO ALTO 115.00
0
 #
 #
 # (179)   C5 DOUBLE CIRCUIT TOWERLINE OUTAGE
 # Ravenswood - Palo Alto #1 115 kV and Cooley Landing - Palo Alto 115 kV Lines
1  33315 38028  "1 "    0     # line from  RAVENSWD 115.00  BRKR to BRKR  PLO ALTO 115.00
 #
1  33316 38028  "1 "    0     # line from  CLY LNDG 115.00  BRKR to BRKR  PLO ALTO 115.00
0
 #
-1
 # EOF
```

Appendix C

Steady State Power Flow Results

Autocon Comparison Files

APPENDIX C - STEADY STATE POWER FLOW RESULTS
AUTCON OUTPUT FILES FOR 2007 SUMMER PEAK **NORMAL** OPERATING CONDITIONS

--------FROM BUS--------				----------TO BUS----------					---BASE---		LOADING			
Bus #	NAME	KV	AREA	Bus #	NAME	KV	AREA	ID	MW	MVAR	P.U.	FLOW	RATING	------CASE------
30005	"ROUND MT"	500	30	40687	"MALIN "	500	40	"2 "	1534	-207	0.92	1661 AMPS	1800.18 AMPS	07sumpk_ramcoeef_before_catb
30005	"ROUND MT"	500	30	40687	"MALIN "	500	40	"2 "	1532	-207	0.92	1658 AMPS	1800.18 AMPS	07sumpk_ramcoeef_after_catb
30335	"ATLANTC "	230	30	32412	"ATLANTIC"	60	30	"1 "	135	11	0.97	135 MVA	139.50 MVA	07sumpk_ramcoeef_before_catb
30335	"ATLANTC "	230	30	32412	"ATLANTIC"	60	30	"1 "	135	11	0.97	135 MVA	139.50 MVA	07sumpk_ramcoeef_after_catb
30435	"LAKEVILE"	230	30	31392	"LAKEVLLE"	60	30	"3 "	74	22	0.97	77 MVA	80.00 MVA	07sumpk_ramcoeef_before_catb
30435	"LAKEVILE"	230	30	31392	"LAKEVLLE"	60	30	"3 "	74	22	0.97	77 MVA	80.00 MVA	07sumpk_ramcoeef_after_catb
30525	"C.COSTA "	230	30	30585	"LS PSTAS"	230	30	"1 "	369	16	1.02**	903 AMPS	886.11 AMPS	07sumpk_ramcoeef_before_catb
30525	"C.COSTA "	230	30	30585	"LS PSTAS"	230	30	"1 "	364	16	1.01	892 AMPS	886.11 AMPS	07sumpk_ramcoeef_after_catb
30705	"MONTAVIS"	230	30	35455	"MNTA VSA"	60	30	"5 "	122	62	1.02	137 MVA	134.40 MVA	07sumpk_ramcoeef_before_catb
30705	"MONTAVIS"	230	30	35455	"MNTA VSA"	60	30	"5 "	122	62	1.02	137 MVA	134.40 MVA	07sumpk_ramcoeef_after_catb
30881	"HENRIETA"	230	30	34540	"HENRITTA"	70	30	"2 "	77	54	0.94	94 MVA	100.00 MVA	07sumpk_ramcoeef_before_catb
30881	"HENRIETA"	230	30	34540	"HENRITTA"	70	30	"2 "	77	54	0.94	94 MVA	100.00 MVA	07sumpk_ramcoeef_after_catb
31386	"MCDWLLSW"	60	30	31388	"PETLMA C"	60	30	"1 "	45	7	1.02	424 AMPS	413.77 AMPS	07sumpk_ramcoeef_before_catb
31386	"MCDWLLSW"	60	30	31388	"PETLMA C"	60	30	"1 "	45	7	1.02	424 AMPS	413.77 AMPS	07sumpk_ramcoeef_after_catb
31386	"MCDWLLSW"	60	30	31392	"LAKEVLLE"	60	30	"1 "	-45	-7	0.96	424 AMPS	442.64 AMPS	07sumpk_ramcoeef_before_catb
31386	"MCDWLLSW"	60	30	31392	"LAKEVLLE"	60	30	"1 "	-45	-7	0.96	424 AMPS	442.64 AMPS	07sumpk_ramcoeef_after_catb
31468	"CASCADE "	115	30	45087	"DELTA "	115	40	"1 "	82	-25	1.01	419 AMPS	416.70 AMPS	07sumpk_ramcoeef_before_catb
31468	"CASCADE "	115	30	45087	"DELTA "	115	40	"1 "	82	-25	1.01	419 AMPS	416.70 AMPS	07sumpk_ramcoeef_after_catb
33600	"HERDLYN "	70	30	33770	"HERDLYN "	60	30	"2 "	46	1	0.93	46 MVA	50.00 MVA	07sumpk_ramcoeef_before_catb
33600	"HERDLYN "	70	30	33770	"HERDLYN "	60	30	"2 "	46	1	0.93	46 MVA	50.00 MVA	07sumpk_ramcoeef_after_catb
33912	"SPRNG GJ"	115	30	33914	"MI-WUK "	115	30	"1 "	97	9	0.91	449 AMPS	491.00 AMPS	07sumpk_ramcoeef_before_catb
33912	"SPRNG GJ"	115	30	33914	"MI-WUK "	115	30	"1 "	97	9	0.91	449 AMPS	491.00 AMPS	07sumpk_ramcoeef_after_catb
35647	"GILROY "	115	30	35660	"GILROYTP"	115	30	"1 "	-118	-20	0.92	582 AMPS	632.58 AMPS	07sumpk_ramcoeef_before_catb
35647	"GILROY "	115	30	35660	"GILROYTP"	115	30	"1 "	-118	-20	0.92	582 AMPS	632.58 AMPS	07sumpk_ramcoeef_after_catb

APPENDIX C - STEADY STATE POWER FLOW RESULTS
AUTCON OUTPUT FILES FOR 2007 SUMMER OFF PEAK **NORMAL** OPERATING CONDITIONS

--------FROM BUS--------				----------TO BUS----------					---BASE---		LOADING			
Bus #	NAME	KV	AREA	Bus #	NAME	KV	AREA	ID	MW	MVAR	P.U.	FLOW	RATING	------CASE------
31468	"CASCADE "	115	30	45087	"DELTA "	115	40	"1 "	71	-33	0.90	376 AMPS	416.70 AMPS	07sumop_ramcoeef_before_catb
31468	"CASCADE "	115	30	45087	"DELTA "	115	40	"1 "	71	-33	0.90	376 AMPS	416.70 AMPS	07sumop_ramcoeef_after_catb
31636	"BURNEY "	60	30	31638	"BURNEYQF"	60	30	"1 "	-10	3	0.92**	93 AMPS	101.04 AMPS	07sumop_ramcoeef_before_catb
31636	"BURNEY "	60	30	31638	"BURNEYQF"	60	30	"1 "	-10	3	0.92**	93 AMPS	101.04 AMPS	07sumop_ramcoeef_after_catb
35918	"SALINAS2"	115	30	36025	"SALINAS2"	60	30	"5 "	16	59	0.93	61 MVA	66.00 MVA	07sumop_ramcoeef_before_catb
35918	"SALINAS2"	115	30	36025	"SALINAS2"	60	30	"5 "	16	59	0.93	61 MVA	66.00 MVA	07sumop_ramcoeef_after_catb

APPENDIX C - STEADY STATE POWER FLOW RESULTS

AUTCON OUTPUT FILES FOR **ISO CATEGORY B** 2007 SUMMER PEAK OPERATING CONDITIONS

--------FROM BUS--------				----------TO BUS-----------					(RATE 1)	(RATE 2)	---------OUTAGE------------			(RATE 2)		
Bus #	NAME	KV	AREA	Bus #	NAME	KV	AREA	ID	BASE	OUTAGE	MW	MVAR	FLOW	RATING	FILE	OUTAGE #
30525	"C.COSTA "	230	30	30543	"ROSSTAP1"	230	30	"1 "	0.77	0.92	356.72	49.35	880.80 AMPS	953.88 AMPS	sumpk_before_catb	221
30525	"C.COSTA "	230	30	30543	"ROSSTAP1"	230	30	"1 "	0.77	0.92	354.39	49.14	874.90 AMPS	953.88 AMPS	sumpk_after_catb	221
30525	"C.COSTA "	230	30	30543	"ROSSTAP1"	230	30	"1 "	0.77	0.93	358.08	42.80	882.68 AMPS	953.88 AMPS	sumpk_before_catb	298
30525	"C.COSTA "	230	30	30543	"ROSSTAP1"	230	30	"1 "	0.77	0.92	355.70	42.48	876.57 AMPS	953.88 AMPS	sumpk_after_catb	298
30525	"C.COSTA "	230	30	30543	"ROSSTAP1"	230	30	"1 "	0.77	0.94	361.77	50.44	892.85 AMPS	953.88 AMPS	sumpk_before_catb	63
30525	"C.COSTA "	230	30	30543	"ROSSTAP1"	230	30	"1 "	0.77	0.93	359.45	50.20	887.04 AMPS	953.88 AMPS	sumpk_after_catb	63
30525	"C.COSTA "	230	30	30543	"ROSSTAP1"	230	30	"1 "	0.77	0.91	353.59	49.18	872.55 AMPS	953.88 AMPS	sumpk_before_catb	76
30525	"C.COSTA "	230	30	30543	"ROSSTAP1"	230	30	"1 "	0.77	0.91	351.28	48.96	866.76 AMPS	953.88 AMPS	sumpk_after_catb	76
30525	"C.COSTA "	230	30	30544	"ROSSTAP2"	230	30	"1 "	0.73	0.92	356.72	49.35	880.80 AMPS	953.88 AMPS	sumpk_before_catb	220
30525	"C.COSTA "	230	30	30544	"ROSSTAP2"	230	30	"1 "	0.72	0.92	354.39	49.13	874.89 AMPS	953.88 AMPS	sumpk_after_catb	220
30525	"C.COSTA "	230	30	30544	"ROSSTAP2"	230	30	"1 "	0.73	0.94	361.77	50.43	892.85 AMPS	953.88 AMPS	sumpk_before_catb	62
30525	"C.COSTA "	230	30	30544	"ROSSTAP2"	230	30	"1 "	0.72	0.93	359.45	50.19	887.04 AMPS	953.88 AMPS	sumpk_after_catb	62
30525	"C.COSTA "	230	30	30544	"ROSSTAP2"	230	30	"1 "	0.73	0.91	353.59	49.18	872.55 AMPS	953.88 AMPS	sumpk_before_catb	75
30525	"C.COSTA "	230	30	30544	"ROSSTAP2"	230	30	"1 "	0.72	0.91	351.28	48.95	866.75 AMPS	953.88 AMPS	sumpk_after_catb	75
=1=1=1=1=1=1=1=1=1=1=1=1=1=1=1=1=1=1=1=1=1=1=1=1=1=1=1=1=1=1=1=1=1=1=1=1=1=1=1=1=1=1=																
30525	"C.COSTA "	230	30	30585	"LS PSTAS"	230	30	"1 "	1.01	0.90	368.50	17.37	901.63 AMPS	999.07 AMPS	sumpk_after_catb	131
=1=1=1=1=1=1=1=1=1=1=1=1=1=1=1=1=1=1=1=1=1=1=1=1=1=1=1=1=1=1=1=1=1=1=1=1=1=1=1=1=1=1=																
30525	"C.COSTA "	230	30	30585	"LS PSTAS"	230	30	"1 "	1.01	0.92	376.93	15.07	923.84 AMPS	999.07 AMPS	sumpk_after_catb	181
=1=1=1=1=1=1=1=1=1=1=1=1=1=1=1=1=1=1=1=1=1=1=1=1=1=1=1=1=1=1=1=1=1=1=1=1=1=1=1=1=1=1=																
30525	"C.COSTA "	230	30	30585	"LS PSTAS"	230	30	"1 "	1.01	0.91	371.63	14.81	910.86 AMPS	999.07 AMPS	sumpk_after_catb	184
=1=1=1=1=1=1=1=1=1=1=1=1=1=1=1=1=1=1=1=1=1=1=1=1=1=1=1=1=1=1=1=1=1=1=1=1=1=1=1=1=1=1=																
30525	"C.COSTA "	230	30	30585	"LS PSTAS"	230	30	"1 "	1.01	0.91	370.51	14.80	908.13 AMPS	999.07 AMPS	sumpk_after_catb	187
=1=1=1=1=1=1=1=1=1=1=1=1=1=1=1=1=1=1=1=1=1=1=1=1=1=1=1=1=1=1=1=1=1=1=1=1=1=1=1=1=1=1=																
30525	"C.COSTA "	230	30	30585	"LS PSTAS"	230	30	"1 "	1.01	0.91	369.51	7.61	908.91 AMPS	999.07 AMPS	sumpk_after_catb	201
=1=1=1=1=1=1=1=1=1=1=1=1=1=1=1=1=1=1=1=1=1=1=1=1=1=1=1=1=1=1=1=1=1=1=1=1=1=1=1=1=1=1=																
30525	"C.COSTA "	230	30	30585	"LS PSTAS"	230	30	"1 "	1.01	0.92	374.20	15.52	916.73 AMPS	999.07 AMPS	sumpk_after_catb	202
=1=1=1=1=1=1=1=1=1=1=1=1=1=1=1=1=1=1=1=1=1=1=1=1=1=1=1=1=1=1=1=1=1=1=1=1=1=1=1=1=1=1=																
30525	"C.COSTA "	230	30	30585	"LS PSTAS"	230	30	"1 "	1.01	0.91	369.16	14.73	904.73 AMPS	999.07 AMPS	sumpk_after_catb	203
=1=1=1=1=1=1=1=1=1=1=1=1=1=1=1=1=1=1=1=1=1=1=1=1=1=1=1=1=1=1=1=1=1=1=1=1=1=1=1=1=1=1=																
30525	"C.COSTA "	230	30	30585	"LS PSTAS"	230	30	"1 "	1.01	0.91	369.67	15.54	907.14 AMPS	999.07 AMPS	sumpk_after_catb	204
30525	"C.COSTA "	230	30	30585	"LS PSTAS"	230	30	"1 "	1.02	0.99	403.23	16.28	988.42 AMPS	999.07 AMPS	sumpk_before_catb	205

```
--------FROM BUS--------  ----------TO BUS-----------     (RATE 1) (RATE 2)   ---------OUTAGE------------   (RATE 2)
Bus #    NAME     KV AREA  Bus #   NAME     KV AREA ID      BASE   OUTAGE     MW      MVAR      FLOW         RATING            FILE        OUTAGE #

30525 "C.COSTA "  230 30  30585 "LS PSTAS"  230 30  "1 "    1.01    0.98    398.57    16.24   976.80 AMPS  999.07 AMPS   sumpk_after_catb 205

=1=1=1=1=1=1=1=1=1=1=1=1=1=1=1=1=1=1=1=1=1=1=1=1=1=1=1=1=1=1=1=1=1=1=1=1=1=1=1=1=1=1=1=1=1=1=1=1=1=1=1=
30525 "C.COSTA "  230 30  30585 "LS PSTAS"  230 30  "1 "    1.01    0.91    370.18    15.02   907.08 AMPS  999.07 AMPS   sumpk_after_catb 206

=1=1=1=1=1=1=1=1=1=1=1=1=1=1=1=1=1=1=1=1=1=1=1=1=1=1=1=1=1=1=1=1=1=1=1=1=1=1=1=1=1=1=1=1=1=1=1=1=1=1=1=
30525 "C.COSTA "  230 30  30585 "LS PSTAS"  230 30  "1 "    1.01    0.91    371.49    15.18   910.24 AMPS  999.07 AMPS   sumpk_after_catb 207

30525 "C.COSTA "  230 30  30585 "LS PSTAS"  230 30  "1 "    1.02    0.97    395.75    15.94   969.98 AMPS  999.07 AMPS   sumpk_before_catb 208
30525 "C.COSTA "  230 30  30585 "LS PSTAS"  230 30  "1 "    1.01    0.96    390.33    15.84   956.46 AMPS  999.07 AMPS   sumpk_after_catb 208

=1=1=1=1=1=1=1=1=1=1=1=1=1=1=1=1=1=1=1=1=1=1=1=1=1=1=1=1=1=1=1=1=1=1=1=1=1=1=1=1=1=1=1=1=1=1=1=1=1=1=1=
30525 "C.COSTA "  230 30  30585 "LS PSTAS"  230 30  "1 "    1.01    0.92    374.93    15.77   918.42 AMPS  999.07 AMPS   sumpk_after_catb 209

=1=1=1=1=1=1=1=1=1=1=1=1=1=1=1=1=1=1=1=1=1=1=1=1=1=1=1=1=1=1=1=1=1=1=1=1=1=1=1=1=1=1=1=1=1=1=1=1=1=1=1=
30525 "C.COSTA "  230 30  30585 "LS PSTAS"  230 30  "1 "    1.01    0.92    375.02    15.80   918.65 AMPS  999.07 AMPS   sumpk_after_catb 210

30525 "C.COSTA "  230 30  30585 "LS PSTAS"  230 30  "1 "    1.02    0.97    393.58    15.87   964.65 AMPS  999.07 AMPS   sumpk_before_catb 211
30525 "C.COSTA "  230 30  30585 "LS PSTAS"  230 30  "1 "    1.01    0.95    388.79    15.84   952.69 AMPS  999.07 AMPS   sumpk_after_catb 211

=1=1=1=1=1=1=1=1=1=1=1=1=1=1=1=1=1=1=1=1=1=1=1=1=1=1=1=1=1=1=1=1=1=1=1=1=1=1=1=1=1=1=1=1=1=1=1=1=1=1=1=
30525 "C.COSTA "  230 30  30585 "LS PSTAS"  230 30  "1 "    1.01    0.91    371.91    15.28   911.23 AMPS  999.07 AMPS   sumpk_after_catb 212

30525 "C.COSTA "  230 30  30585 "LS PSTAS"  230 30  "1 "    1.02    0.96    392.58    15.96   962.13 AMPS  999.07 AMPS   sumpk_before_catb 213
30525 "C.COSTA "  230 30  30585 "LS PSTAS"  230 30  "1 "    1.01    0.95    387.95    15.93   950.58 AMPS  999.07 AMPS   sumpk_after_catb 213

=1=1=1=1=1=1=1=1=1=1=1=1=1=1=1=1=1=1=1=1=1=1=1=1=1=1=1=1=1=1=1=1=1=1=1=1=1=1=1=1=1=1=1=1=1=1=1=1=1=1=1=
30525 "C.COSTA "  230 30  30585 "LS PSTAS"  230 30  "1 "    1.01    0.92    374.88    15.46   918.47 AMPS  999.07 AMPS   sumpk_after_catb 214

=1=1=1=1=1=1=1=1=1=1=1=1=1=1=1=1=1=1=1=1=1=1=1=1=1=1=1=1=1=1=1=1=1=1=1=1=1=1=1=1=1=1=1=1=1=1=1=1=1=1=1=
30525 "C.COSTA "  230 30  30585 "LS PSTAS"  230 30  "1 "    1.01    0.92    374.49    15.08   917.74 AMPS  999.07 AMPS   sumpk_after_catb 215

=1=1=1=1=1=1=1=1=1=1=1=1=1=1=1=1=1=1=1=1=1=1=1=1=1=1=1=1=1=1=1=1=1=1=1=1=1=1=1=1=1=1=1=1=1=1=1=1=1=1=1=
30525 "C.COSTA "  230 30  30585 "LS PSTAS"  230 30  "1 "    1.01    0.90    367.82    14.63   901.42 AMPS  999.07 AMPS   sumpk_after_catb 216

=1=1=1=1=1=1=1=1=1=1=1=1=1=1=1=1=1=1=1=1=1=1=1=1=1=1=1=1=1=1=1=1=1=1=1=1=1=1=1=1=1=1=1=1=1=1=1=1=1=1=1=
30525 "C.COSTA "  230 30  30585 "LS PSTAS"  230 30  "1 "    1.01    0.91    373.04    17.89   912.78 AMPS  999.07 AMPS   sumpk_after_catb 218

=1=1=1=1=1=1=1=1=1=1=1=1=1=1=1=1=1=1=1=1=1=1=1=1=1=1=1=1=1=1=1=1=1=1=1=1=1=1=1=1=1=1=1=1=1=1=1=1=1=1=1=
30525 "C.COSTA "  230 30  30585 "LS PSTAS"  230 30  "1 "    1.01    0.90    367.48    14.99   900.40 AMPS  999.07 AMPS   sumpk_after_catb 219

=1=1=1=1=1=1=1=1=1=1=1=1=1=1=1=1=1=1=1=1=1=1=1=1=1=1=1=1=1=1=1=1=1=1=1=1=1=1=1=1=1=1=1=1=1=1=1=1=1=1=1=
30525 "C.COSTA "  230 30  30585 "LS PSTAS"  230 30  "1 "    1.01    0.90    368.29    16.52   901.57 AMPS  999.07 AMPS   sumpk_after_catb  22

30525 "C.COSTA "  230 30  30585 "LS PSTAS"  230 30  "1 "    1.02    0.99    403.42    18.65   987.76 AMPS  999.07 AMPS   sumpk_before_catb 220
30525 "C.COSTA "  230 30  30585 "LS PSTAS"  230 30  "1 "    1.01    0.98    398.71    18.60   976.04 AMPS  999.07 AMPS   sumpk_after_catb 220
```

APPENDIX C - STEADY STATE POWER FLOW RESULTS
AUTCON OUTPUT FILES FOR **ISO CATEGORY B** 2007 SUMMER PEAK OPERATING CONDITIONS

--------FROM BUS--------				----------TO BUS-----------					(RATE 1)	(RATE 2)	---------OUTAGE------------			(RATE 2)		
Bus #	NAME	KV	AREA	Bus #	NAME	KV	AREA	ID	BASE	OUTAGE	MW	MVAR	FLOW	RATING	FILE	OUTAGE #
30525	"C.COSTA "	230	30	30585	"LS PSTAS"	230	30	"1 "	1.02	0.99	403.42	18.68	987.77 AMPS	999.07 AMPS	sumpk_before_catb	221
30525	"C.COSTA "	230	30	30585	"LS PSTAS"	230	30	"1 "	1.01	0.98	398.71	18.62	976.04 AMPS	999.07 AMPS	sumpk_after_catb	221
30525	"C.COSTA "	230	30	30585	"LS PSTAS"	230	30	"1 "	1.02	0.99	403.04	17.43	987.27 AMPS	999.07 AMPS	sumpk_before_catb	222
30525	"C.COSTA "	230	30	30585	"LS PSTAS"	230	30	"1 "	1.01	0.98	398.85	17.39	976.83 AMPS	999.07 AMPS	sumpk_after_catb	222
30525	"C.COSTA "	230	30	30585	"LS PSTAS"	230	30	"1 "	1.02	0.98	400.17	16.33	980.74 AMPS	999.07 AMPS	sumpk_before_catb	223
30525	"C.COSTA "	230	30	30585	"LS PSTAS"	230	30	"1 "	1.01	0.97	396.11	16.28	970.60 AMPS	999.07 AMPS	sumpk_after_catb	223
30525	"C.COSTA "	230	30	30585	"LS PSTAS"	230	30	"1 "	1.02	1.05	429.40	15.83	1053.75 AMPS	999.07 AMPS	sumpk_before_catb	225
30525	"C.COSTA "	230	30	30585	"LS PSTAS"	230	30	"1 "	1.01	1.04	424.23	15.66	1040.84 AMPS	999.07 AMPS	sumpk_after_catb	225
30525	"C.COSTA "	230	30	30585	"LS PSTAS"	230	30	"1 "	1.02	1.02	416.49	17.06	1020.70 AMPS	999.07 AMPS	sumpk_before_catb	226
30525	"C.COSTA "	230	30	30585	"LS PSTAS"	230	30	"1 "	1.01	1.01	411.41	16.86	1008.10 AMPS	999.07 AMPS	sumpk_after_catb	226
30525	"C.COSTA "	230	30	30585	"LS PSTAS"	230	30	"1 "	1.02	1.01	413.41	18.06	1012.66 AMPS	999.07 AMPS	sumpk_before_catb	227
30525	"C.COSTA "	230	30	30585	"LS PSTAS"	230	30	"1 "	1.01	1.00	408.33	17.86	1000.07 AMPS	999.07 AMPS	sumpk_after_catb	227
30525	"C.COSTA "	230	30	30585	"LS PSTAS"	230	30	"1 "	1.02	1.00	406.78	21.55	994.33 AMPS	999.07 AMPS	sumpk_before_catb	228
30525	"C.COSTA "	230	30	30585	"LS PSTAS"	230	30	"1 "	1.01	0.98	401.69	21.38	981.77 AMPS	999.07 AMPS	sumpk_after_catb	228
=1=1=1=1=1=1=1=1=1=1=1=1=1=1=1=1=1=1=1=1=1=1=1=1=1=1=1=1=1=1=1=1=1=1=1=1=1=1=1=1=1=																
30525	"C.COSTA "	230	30	30585	"LS PSTAS"	230	30	"1 "	1.01	0.94	382.91	16.06	937.91 AMPS	999.07 AMPS	sumpk_after_catb	229
=1=1=1=1=1=1=1=1=1=1=1=1=1=1=1=1=1=1=1=1=1=1=1=1=1=1=1=1=1=1=1=1=1=1=1=1=1=1=1=1=1=																
30525	"C.COSTA "	230	30	30585	"LS PSTAS"	230	30	"1 "	1.01	0.90	368.38	16.17	902.06 AMPS	999.07 AMPS	sumpk_after_catb	230
=1=1=1=1=1=1=1=1=1=1=1=1=1=1=1=1=1=1=1=1=1=1=1=1=1=1=1=1=1=1=1=1=1=1=1=1=1=1=1=1=1=																
30525	"C.COSTA "	230	30	30585	"LS PSTAS"	230	30	"1 "	1.01	0.92	376.60	16.19	922.25 AMPS	999.07 AMPS	sumpk_after_catb	231
30525	"C.COSTA "	230	30	30585	"LS PSTAS"	230	30	"1 "	1.02	0.96	389.99	16.91	955.10 AMPS	999.07 AMPS	sumpk_before_catb	233
30525	"C.COSTA "	230	30	30585	"LS PSTAS"	230	30	"1 "	1.01	0.94	384.54	16.83	941.60 AMPS	999.07 AMPS	sumpk_after_catb	233
30525	"C.COSTA "	230	30	30585	"LS PSTAS"	230	30	"1 "	1.02	1.00	407.48	17.48	998.26 AMPS	999.07 AMPS	sumpk_before_catb	237
30525	"C.COSTA "	230	30	30585	"LS PSTAS"	230	30	"1 "	1.01	0.99	401.81	17.32	984.20 AMPS	999.07 AMPS	sumpk_after_catb	237
=1=1=1=1=1=1=1=1=1=1=1=1=1=1=1=1=1=1=1=1=1=1=1=1=1=1=1=1=1=1=1=1=1=1=1=1=1=1=1=1=1=																
30525	"C.COSTA "	230	30	30585	"LS PSTAS"	230	30	"1 "	1.01	0.90	368.89	16.04	903.33 AMPS	999.07 AMPS	sumpk_after_catb	243
=1=1=1=1=1=1=1=1=1=1=1=1=1=1=1=1=1=1=1=1=1=1=1=1=1=1=1=1=1=1=1=1=1=1=1=1=1=1=1=1=1=																
30525	"C.COSTA "	230	30	30585	"LS PSTAS"	230	30	"1 "	1.01	0.92	374.61	20.44	917.75 AMPS	999.07 AMPS	sumpk_after_catb	269
30525	"C.COSTA "	230	30	30585	"LS PSTAS"	230	30	"1 "	1.02	0.98	400.27	20.64	978.76 AMPS	999.07 AMPS	sumpk_before_catb	271
30525	"C.COSTA "	230	30	30585	"LS PSTAS"	230	30	"1 "	1.01	0.97	395.19	20.49	966.20 AMPS	999.07 AMPS	sumpk_after_catb	271
=1=1=1=1=1=1=1=1=1=1=1=1=1=1=1=1=1=1=1=1=1=1=1=1=1=1=1=1=1=1=1=1=1=1=1=1=1=1=1=1=1=																
30525	"C.COSTA "	230	30	30585	"LS PSTAS"	230	30	"1 "	1.01	0.92	376.73	21.99	923.21 AMPS	999.07 AMPS	sumpk_after_catb	274

--------FROM BUS--------			----------TO BUS----------				(RATE 1)	(RATE 2)	---------OUTAGE----------			(RATE 2)		
Bus #	NAME	KV AREA	Bus #	NAME	KV AREA	ID	BASE	OUTAGE	MW	MVAR	FLOW	RATING	FILE	OUTAGE #
30525	"C.COSTA "	230 30	30585	"LS PSTAS"	230 30	"1 "	1.02	1.01	412.28	13.94	1012.21 AMPS	999.07 AMPS	sumpk_before_catb 299	
30525	"C.COSTA "	230 30	30585	"LS PSTAS"	230 30	"1 "	1.01	1.00	407.12	13.96	999.29 AMPS	999.07 AMPS	sumpk_after_catb 299	
30525	"C.COSTA "	230 30	30585	"LS PSTAS"	230 30	"1 "	1.02	1.01	411.89	15.18	1010.58 AMPS	999.07 AMPS	sumpk_before_catb 300	
30525	"C.COSTA "	230 30	30585	"LS PSTAS"	230 30	"1 "	1.01	1.00	406.73	15.20	997.66 AMPS	999.07 AMPS	sumpk_after_catb 300	
30525	"C.COSTA "	230 30	30585	"LS PSTAS"	230 30	"1 "	1.02	1.00	408.80	16.19	1002.50 AMPS	999.07 AMPS	sumpk_before_catb 301	
30525	"C.COSTA "	230 30	30585	"LS PSTAS"	230 30	"1 "	1.01	0.99	403.64	16.21	989.60 AMPS	999.07 AMPS	sumpk_after_catb 301	
30525	"C.COSTA "	230 30	30585	"LS PSTAS"	230 30	"1 "	1.02	0.96	389.76	15.31	955.56 AMPS	999.07 AMPS	sumpk_before_catb 302	
30525	"C.COSTA "	230 30	30585	"LS PSTAS"	230 30	"1 "	1.01	0.94	384.76	15.39	943.07 AMPS	999.07 AMPS	sumpk_after_catb 302	
=1=1=1=1=1=1=1=1=1=1=1=1=1=1=1=1=1=1=1=1=1=1=1=1=1=1=1=1=1=1=1=1=1=1=1=1=1=1=1=1=1=1=1=1=1=1=1=1=1=1=1=														
30525	"C.COSTA "	230 30	30585	"LS PSTAS"	230 30	"1 "	1.01	0.90	367.62	16.72	900.82 AMPS	999.07 AMPS	sumpk_after_catb 303	
=1=1=1=1=1=1=1=1=1=1=1=1=1=1=1=1=1=1=1=1=1=1=1=1=1=1=1=1=1=1=1=1=1=1=1=1=1=1=1=1=1=1=1=1=1=1=1=1=1=1=1=														
30525	"C.COSTA "	230 30	30585	"LS PSTAS"	230 30	"1 "	1.01	0.92	374.23	14.29	917.63 AMPS	999.07 AMPS	sumpk_after_catb 304	
30525	"C.COSTA "	230 30	30585	"LS PSTAS"	230 30	"1 "	1.02	0.96	389.72	15.16	955.56 AMPS	999.07 AMPS	sumpk_before_catb 308	
30525	"C.COSTA "	230 30	30585	"LS PSTAS"	230 30	"1 "	1.01	0.94	384.22	15.28	941.84 AMPS	999.07 AMPS	sumpk_after_catb 308	
30525	"C.COSTA "	230 30	30585	"LS PSTAS"	230 30	"1 "	1.02	1.00	406.26	15.69	996.49 AMPS	999.07 AMPS	sumpk_before_catb 312	
30525	"C.COSTA "	230 30	30585	"LS PSTAS"	230 30	"1 "	1.01	0.98	400.53	15.74	982.15 AMPS	999.07 AMPS	sumpk_after_catb 312	
30525	"C.COSTA "	230 30	30585	"LS PSTAS"	230 30	"1 "	1.02	1.05	429.01	17.05	1052.11 AMPS	999.07 AMPS	sumpk_before_catb 313	
30525	"C.COSTA "	230 30	30585	"LS PSTAS"	230 30	"1 "	1.01	1.04	423.84	16.89	1039.21 AMPS	999.07 AMPS	sumpk_after_catb 313	
30525	"C.COSTA "	230 30	30585	"LS PSTAS"	230 30	"1 "	1.02	1.04	425.92	18.01	1044.02 AMPS	999.07 AMPS	sumpk_before_catb 314	
30525	"C.COSTA "	230 30	30585	"LS PSTAS"	230 30	"1 "	1.01	1.03	420.76	17.87	1031.13 AMPS	999.07 AMPS	sumpk_after_catb 314	
30525	"C.COSTA "	230 30	30585	"LS PSTAS"	230 30	"1 "	1.02	1.01	410.81	17.13	1006.74 AMPS	999.07 AMPS	sumpk_before_catb 315	
30525	"C.COSTA "	230 30	30585	"LS PSTAS"	230 30	"1 "	1.01	1.00	405.77	17.03	994.17 AMPS	999.07 AMPS	sumpk_after_catb 315	
=1=1=1=1=1=1=1=1=1=1=1=1=1=1=1=1=1=1=1=1=1=1=1=1=1=1=1=1=1=1=1=1=1=1=1=1=1=1=1=1=1=1=1=1=1=1=1=1=1=1=1=														
30525	"C.COSTA "	230 30	30585	"LS PSTAS"	230 30	"1 "	1.01	0.93	377.35	17.31	924.18 AMPS	999.07 AMPS	sumpk_after_catb 316	
30525	"C.COSTA "	230 30	30585	"LS PSTAS"	230 30	"1 "	1.02	0.98	400.23	15.93	981.11 AMPS	999.07 AMPS	sumpk_before_catb 317	
30525	"C.COSTA "	230 30	30585	"LS PSTAS"	230 30	"1 "	1.01	0.97	395.20	15.88	968.58 AMPS	999.07 AMPS	sumpk_after_catb 317	
=1=1=1=1=1=1=1=1=1=1=1=1=1=1=1=1=1=1=1=1=1=1=1=1=1=1=1=1=1=1=1=1=1=1=1=1=1=1=1=1=1=1=1=1=1=1=1=1=1=1=1=														
30525	"C.COSTA "	230 30	30585	"LS PSTAS"	230 30	"1 "	1.01	0.93	379.29	15.83	929.28 AMPS	999.07 AMPS	sumpk_after_catb 318	
30525	"C.COSTA "	230 30	30585	"LS PSTAS"	230 30	"1 "	1.02	0.96	392.58	15.96	962.13 AMPS	999.07 AMPS	sumpk_before_catb 319	
30525	"C.COSTA "	230 30	30585	"LS PSTAS"	230 30	"1 "	1.01	0.95	387.95	15.93	950.58 AMPS	999.07 AMPS	sumpk_after_catb 319	
30525	"C.COSTA "	230 30	30585	"LS PSTAS"	230 30	"1 "	1.02	0.99	403.39	16.59	988.62 AMPS	999.07 AMPS	sumpk_before_catb 321	

--------FROM BUS--------				----------TO BUS-----------					(RATE 1)	(RATE 2)	---------OUTAGE------------			(RATE 2)		
Bus #	NAME	KV	AREA	Bus #	NAME	KV	AREA	ID	BASE	OUTAGE	MW	MVAR	FLOW	RATING	FILE	OUTAGE #
30525	"C.COSTA "	230	30	30585	"LS PSTAS"	230	30	"1 "	1.01	0.98	397.86	16.56	974.84 AMPS	999.07 AMPS	sumpk_after_catb	321
=1=1=1=1=1=1=1=1=1=1=1=1=1=1=1=1=1=1=1=1=1=1=1=1=1=1=1=1=1=1=1=1=1=1=1=1=1=1=1=1=1=																
30525	"C.COSTA "	230	30	30585	"LS PSTAS"	230	30	"1 "	1.01	0.90	368.12	18.46	902.35 AMPS	999.07 AMPS	sumpk_after_catb	324
30525	"C.COSTA "	230	30	30585	"LS PSTAS"	230	30	"1 "	1.02	1.03	421.41	17.31	1033.23 AMPS	999.07 AMPS	sumpk_before_catb	325
30525	"C.COSTA "	230	30	30585	"LS PSTAS"	230	30	"1 "	1.01	1.02	415.65	17.21	1018.84 AMPS	999.07 AMPS	sumpk_after_catb	325
=1=1=1=1=1=1=1=1=1=1=1=1=1=1=1=1=1=1=1=1=1=1=1=1=1=1=1=1=1=1=1=1=1=1=1=1=1=1=1=1=1=																
30525	"C.COSTA "	230	30	30585	"LS PSTAS"	230	30	"1 "	1.01	0.91	369.54	15.90	904.89 AMPS	999.07 AMPS	sumpk_after_catb	326
=1=1=1=1=1=1=1=1=1=1=1=1=1=1=1=1=1=1=1=1=1=1=1=1=1=1=1=1=1=1=1=1=1=1=1=1=1=1=1=1=1=																
30525	"C.COSTA "	230	30	30585	"LS PSTAS"	230	30	"1 "	1.01	0.91	369.67	16.08	905.24 AMPS	999.07 AMPS	sumpk_after_catb	327
=1=1=1=1=1=1=1=1=1=1=1=1=1=1=1=1=1=1=1=1=1=1=1=1=1=1=1=1=1=1=1=1=1=1=1=1=1=1=1=1=1=																
30525	"C.COSTA "	230	30	30585	"LS PSTAS"	230	30	"1 "	1.01	0.91	369.59	16.08	905.04 AMPS	999.07 AMPS	sumpk_after_catb	328
=1=1=1=1=1=1=1=1=1=1=1=1=1=1=1=1=1=1=1=1=1=1=1=1=1=1=1=1=1=1=1=1=1=1=1=1=1=1=1=1=1=																
30525	"C.COSTA "	230	30	30585	"LS PSTAS"	230	30	"1 "	1.01	0.91	369.59	16.08	905.03 AMPS	999.07 AMPS	sumpk_after_catb	329
=1=1=1=1=1=1=1=1=1=1=1=1=1=1=1=1=1=1=1=1=1=1=1=1=1=1=1=1=1=1=1=1=1=1=1=1=1=1=1=1=1=																
30525	"C.COSTA "	230	30	30585	"LS PSTAS"	230	30	"1 "	1.01	0.91	369.59	16.08	905.04 AMPS	999.07 AMPS	sumpk_after_catb	330
=1=1=1=1=1=1=1=1=1=1=1=1=1=1=1=1=1=1=1=1=1=1=1=1=1=1=1=1=1=1=1=1=1=1=1=1=1=1=1=1=1=																
30525	"C.COSTA "	230	30	30585	"LS PSTAS"	230	30	"1 "	1.01	0.91	369.59	16.08	905.03 AMPS	999.07 AMPS	sumpk_after_catb	331
=1=1=1=1=1=1=1=1=1=1=1=1=1=1=1=1=1=1=1=1=1=1=1=1=1=1=1=1=1=1=1=1=1=1=1=1=1=1=1=1=1=																
30525	"C.COSTA "	230	30	30585	"LS PSTAS"	230	30	"1 "	1.01	0.90	369.02	16.12	903.62 AMPS	999.07 AMPS	sumpk_after_catb	332
=1=1=1=1=1=1=1=1=1=1=1=1=1=1=1=1=1=1=1=1=1=1=1=1=1=1=1=1=1=1=1=1=1=1=1=1=1=1=1=1=1=																
30525	"C.COSTA "	230	30	30585	"LS PSTAS"	230	30	"1 "	1.01	0.90	369.09	16.15	903.79 AMPS	999.07 AMPS	sumpk_after_catb	333
=1=1=1=1=1=1=1=1=1=1=1=1=1=1=1=1=1=1=1=1=1=1=1=1=1=1=1=1=1=1=1=1=1=1=1=1=1=1=1=1=1=																
30525	"C.COSTA "	230	30	30585	"LS PSTAS"	230	30	"1 "	1.01	0.90	368.90	15.91	903.36 AMPS	999.07 AMPS	sumpk_after_catb	334
=1=1=1=1=1=1=1=1=1=1=1=1=1=1=1=1=1=1=1=1=1=1=1=1=1=1=1=1=1=1=1=1=1=1=1=1=1=1=1=1=1=																
30525	"C.COSTA "	230	30	30585	"LS PSTAS"	230	30	"1 "	1.01	0.91	369.63	16.07	905.13 AMPS	999.07 AMPS	sumpk_after_catb	335
=1=1=1=1=1=1=1=1=1=1=1=1=1=1=1=1=1=1=1=1=1=1=1=1=1=1=1=1=1=1=1=1=1=1=1=1=1=1=1=1=1=																
30525	"C.COSTA "	230	30	30585	"LS PSTAS"	230	30	"1 "	1.01	0.91	369.64	16.02	905.15 AMPS	999.07 AMPS	sumpk_after_catb	336
=1=1=1=1=1=1=1=1=1=1=1=1=1=1=1=1=1=1=1=1=1=1=1=1=1=1=1=1=1=1=1=1=1=1=1=1=1=1=1=1=1=																
30525	"C.COSTA "	230	30	30585	"LS PSTAS"	230	30	"1 "	1.01	0.91	369.45	16.07	904.71 AMPS	999.07 AMPS	sumpk_after_catb	337
=1=1=1=1=1=1=1=1=1=1=1=1=1=1=1=1=1=1=1=1=1=1=1=1=1=1=1=1=1=1=1=1=1=1=1=1=1=1=1=1=1=																
30525	"C.COSTA "	230	30	30585	"LS PSTAS"	230	30	"1 "	1.01	0.91	369.54	16.06	904.92 AMPS	999.07 AMPS	sumpk_after_catb	338

--------FROM BUS--------			----------TO BUS----------				(RATE 1)	(RATE 2)	---------OUTAGE----------			(RATE 2)		
Bus #	NAME	KV AREA	Bus #	NAME	KV AREA	ID	BASE	OUTAGE	MW	MVAR	FLOW	RATING	FILE	OUTAGE #
=1=1=1=1=1=1=1=1=1=1=1=1=1=1=1=1=1=1=1=1=1=1=1=1=1=1=1=1=1=1=1=1=1=1=1=1=1=1=1=1=1=1=1=1=1=1=														
30525	"C.COSTA "	230 30	30585	"LS PSTAS"	230 30	"1 "	1.01	0.93	381.04	16.74	933.04 AMPS	999.07 AMPS	sumpk_after_catb	356
=1=1=1=1=1=1=1=1=1=1=1=1=1=1=1=1=1=1=1=1=1=1=1=1=1=1=1=1=1=1=1=1=1=1=1=1=1=1=1=1=1=1=1=1=1=1=														
30525	"C.COSTA "	230 30	30585	"LS PSTAS"	230 30	"1 "	1.01	0.90	368.05	16.01	901.32 AMPS	999.07 AMPS	sumpk_after_catb	359
=1=1=1=1=1=1=1=1=1=1=1=1=1=1=1=1=1=1=1=1=1=1=1=1=1=1=1=1=1=1=1=1=1=1=1=1=1=1=1=1=1=1=1=1=1=1=														
30525	"C.COSTA "	230 30	30585	"LS PSTAS"	230 30	"1 "	1.01	0.93	378.55	15.52	927.37 AMPS	999.07 AMPS	sumpk_after_catb	369
=1=1=1=1=1=1=1=1=1=1=1=1=1=1=1=1=1=1=1=1=1=1=1=1=1=1=1=1=1=1=1=1=1=1=1=1=1=1=1=1=1=1=1=1=1=1=														
30525	"C.COSTA "	230 30	30585	"LS PSTAS"	230 30	"1 "	1.01	0.92	374.70	13.91	917.48 AMPS	999.07 AMPS	sumpk_after_catb	376
=1=1=1=1=1=1=1=1=1=1=1=1=1=1=1=1=1=1=1=1=1=1=1=1=1=1=1=1=1=1=1=1=1=1=1=1=1=1=1=1=1=1=1=1=1=1=														
30525	"C.COSTA "	230 30	30585	"LS PSTAS"	230 30	"1 "	1.01	0.92	373.63	15.68	915.31 AMPS	999.07 AMPS	sumpk_after_catb	377
=1=1=1=1=1=1=1=1=1=1=1=1=1=1=1=1=1=1=1=1=1=1=1=1=1=1=1=1=1=1=1=1=1=1=1=1=1=1=1=1=1=1=1=1=1=1=														
30525	"C.COSTA "	230 30	30585	"LS PSTAS"	230 30	"1 "	1.01	0.92	373.63	15.68	915.31 AMPS	999.07 AMPS	sumpk_after_catb	378
=1=1=1=1=1=1=1=1=1=1=1=1=1=1=1=1=1=1=1=1=1=1=1=1=1=1=1=1=1=1=1=1=1=1=1=1=1=1=1=1=1=1=1=1=1=1=														
30525	"C.COSTA "	230 30	30585	"LS PSTAS"	230 30	"1 "	1.01	0.92	376.17	15.63	921.57 AMPS	999.07 AMPS	sumpk_after_catb	379
=1=1=1=1=1=1=1=1=1=1=1=1=1=1=1=1=1=1=1=1=1=1=1=1=1=1=1=1=1=1=1=1=1=1=1=1=1=1=1=1=1=1=1=1=1=1=														
30525	"C.COSTA "	230 30	30585	"LS PSTAS"	230 30	"1 "	1.01	0.92	376.18	15.64	921.58 AMPS	999.07 AMPS	sumpk_after_catb	380
=1=1=1=1=1=1=1=1=1=1=1=1=1=1=1=1=1=1=1=1=1=1=1=1=1=1=1=1=1=1=1=1=1=1=1=1=1=1=1=1=1=1=1=1=1=1=														
30525	"C.COSTA "	230 30	30585	"LS PSTAS"	230 30	"1 "	1.01	0.93	378.56	15.63	927.58 AMPS	999.07 AMPS	sumpk_after_catb	381
30525	"C.COSTA "	230 30	30585	"LS PSTAS"	230 30	"1 "	1.02	0.96	391.44	18.75	957.91 AMPS	999.07 AMPS	sumpk_before_catb	62
30525	"C.COSTA "	230 30	30585	"LS PSTAS"	230 30	"1 "	1.01	0.95	386.80	18.65	946.45 AMPS	999.07 AMPS	sumpk_after_catb	62
30525	"C.COSTA "	230 30	30585	"LS PSTAS"	230 30	"1 "	1.02	0.96	391.44	18.77	957.92 AMPS	999.07 AMPS	sumpk_before_catb	63
30525	"C.COSTA "	230 30	30585	"LS PSTAS"	230 30	"1 "	1.01	0.95	386.80	18.67	946.45 AMPS	999.07 AMPS	sumpk_after_catb	63
30525	"C.COSTA "	230 30	30585	"LS PSTAS"	230 30	"1 "	1.02	0.96	392.31	18.91	959.97 AMPS	999.07 AMPS	sumpk_before_catb	75
30525	"C.COSTA "	230 30	30585	"LS PSTAS"	230 30	"1 "	1.01	0.95	387.67	18.80	948.50 AMPS	999.07 AMPS	sumpk_after_catb	75
30525	"C.COSTA "	230 30	30585	"LS PSTAS"	230 30	"1 "	1.02	0.96	392.31	18.93	959.97 AMPS	999.07 AMPS	sumpk_before_catb	76
30525	"C.COSTA "	230 30	30585	"LS PSTAS"	230 30	"1 "	1.01	0.95	387.67	18.82	948.50 AMPS	999.07 AMPS	sumpk_after_catb	76
30525	"C.COSTA "	230 30	30585	"LS PSTAS"	230 30	"1 "	1.02	0.96	392.91	17.62	961.93 AMPS	999.07 AMPS	sumpk_before_catb	77
30525	"C.COSTA "	230 30	30585	"LS PSTAS"	230 30	"1 "	1.01	0.95	388.79	17.52	951.73 AMPS	999.07 AMPS	sumpk_after_catb	77
30525	"C.COSTA "	230 30	30585	"LS PSTAS"	230 30	"1 "	1.02	0.96	390.32	16.50	956.08 AMPS	999.07 AMPS	sumpk_before_catb	78
30525	"C.COSTA "	230 30	30585	"LS PSTAS"	230 30	"1 "	1.01	0.95	386.33	16.41	946.18 AMPS	999.07 AMPS	sumpk_after_catb	78
30525	"C.COSTA "	230 30	30585	"LS PSTAS"	230 30	"1 "	1.02	1.02	416.88	15.82	1022.32 AMPS	999.07 AMPS	sumpk_before_catb	80
30525	"C.COSTA "	230 30	30585	"LS PSTAS"	230 30	"1 "	1.01	1.01	411.80	15.62	1009.71 AMPS	999.07 AMPS	sumpk_after_catb	80

```
--------FROM BUS--------  ----------TO BUS-----------     (RATE 1) (RATE 2)   ---------OUTAGE------------   (RATE 2)
Bus #    NAME     KV AREA  Bus #   NAME     KV AREA ID      BASE   OUTAGE     MW      MVAR      FLOW         RATING            FILE        OUTAGE #


30525 "C.COSTA "  230 30  30585 "LS PSTAS"  230 30  "1 "    1.02    0.96    391.74    16.56   959.62 AMPS  999.07 AMPS   sumpk_before_catb  84
30525 "C.COSTA "  230 30  30585 "LS PSTAS"  230 30  "1 "    1.01    0.95    387.16    16.46   948.27 AMPS  999.07 AMPS   sumpk_after_catb  84

=1=1=1=1=1=1=1=1=1=1=1=1=1=1=1=1=1=1=1=1=1=1=1=1=1=1=1=1=1=1=1=1=1=1=1=1=1=1=1=1=1=1=1=1=1=1=1=1=1=1=
30525 "C.COSTA "  230 30  30585 "LS PSTAS"  230 30  "1 "    1.01    0.93    379.06    16.12   928.31 AMPS  999.07 AMPS   sumpk_after_catb  87

=1=1=1=1=1=1=1=1=1=1=1=1=1=1=1=1=1=1=1=1=1=1=1=1=1=1=1=1=1=1=1=1=1=1=1=1=1=1=1=1=1=1=1=1=1=1=1=1=1=1=
30525 "C.COSTA "  230 30  30585 "LS PSTAS"  230 30  "1 "    1.01    0.92    373.88    15.34   915.92 AMPS  999.07 AMPS   sumpk_after_catb  90

=1=1=1=1=1=1=1=1=1=1=1=1=1=1=1=1=1=1=1=1=1=1=1=1=1=1=1=1=1=1=1=1=1=1=1=1=1=1=1=1=1=1=1=1=1=1=1=1=1=1=
30525 "C.COSTA "  230 30  30585 "LS PSTAS"  230 30  "1 "    1.01    0.93    377.57    16.12   924.67 AMPS  999.07 AMPS   sumpk_after_catb  91

30525 "C.COSTA "  230 30  30585 "LS PSTAS"  230 30  "1 "    1.02    0.98    398.40    17.28   975.67 AMPS  999.07 AMPS   sumpk_before_catb  93
30525 "C.COSTA "  230 30  30585 "LS PSTAS"  230 30  "1 "    1.01    0.96    393.45    17.15   963.39 AMPS  999.07 AMPS   sumpk_after_catb  93

=1=1=1=1=1=1=1=1=1=1=1=1=1=1=1=1=1=1=1=1=1=1=1=1=1=1=1=1=1=1=1=1=1=1=1=1=1=1=1=1=1=1=1=1=1=1=1=1=1=1=
30525 "C.COSTA "  230 30  30585 "LS PSTAS"  230 30  "1 "    1.01    0.92    376.60    16.19   922.25 AMPS  999.07 AMPS   sumpk_after_catb  95

=1=1=1=1=1=1=1=1=1=1=1=1=1=1=1=1=1=1=1=1=1=1=1=1=1=1=1=1=1=1=1=1=1=1=1=1=1=1=1=1=1=1=1=1=1=1=1=1=1=1=
30525 "C.COSTA "  230 30  30585 "LS PSTAS"  230 30  "1 "    1.01    0.92    375.61    15.63   920.05 AMPS  999.07 AMPS   sumpk_after_catb  96

30526 "PITSBG D"  230 30  30528 "DEC PTSG"  230 30  "1 "    0.65    1.30   -876.86   -59.61  2168.56 AMPS 1669.30 AMPS   sumpk_before_catb  82
30526 "PITSBG D"  230 30  30528 "DEC PTSG"  230 30  "1 "    0.65    1.30   -876.86   -57.86  2167.67 AMPS 1669.30 AMPS   sumpk_after_catb  82

30526 "PITSBG D"  230 30  30528 "DEC PTSG"  230 30  "2 "    0.65    1.30   -876.86   -59.61  2168.56 AMPS 1669.30 AMPS   sumpk_before_catb  81
30526 "PITSBG D"  230 30  30528 "DEC PTSG"  230 30  "2 "    0.65    1.30   -876.86   -57.86  2167.67 AMPS 1669.30 AMPS   sumpk_after_catb  81

30900 "GATES   "  230 30  30915 "MORROBAY"  230 30  "1 "    0.09    0.91   -326.96   144.69   890.42 AMPS  974.97 AMPS   sumpk_before_catb 217
=2=2=2=2=2=2=2=2=2=2=2=2=2=2=2=2=2=2=2=2=2=2=2=2=2=2=2=2=2=2=2=2=2=2=2=2=2=2=2=2=2=2=2=2=2=2=2=2=2=2=

30905 "TEMPLETN"  230 30  30915 "MORROBAY"  230 30  "1 "    0.37    0.92   -351.28    44.00   897.93 AMPS  974.97 AMPS   sumpk_before_catb 146
=2=2=2=2=2=2=2=2=2=2=2=2=2=2=2=2=2=2=2=2=2=2=2=2=2=2=2=2=2=2=2=2=2=2=2=2=2=2=2=2=2=2=2=2=2=2=2=2=2=2=

30905 "TEMPLETN"  230 30  30915 "MORROBAY"  230 30  "1 "    0.37    0.93   -303.63    34.85   766.03 AMPS  825.11 AMPS   sumpk_before_catb 164
=2=2=2=2=2=2=2=2=2=2=2=2=2=2=2=2=2=2=2=2=2=2=2=2=2=2=2=2=2=2=2=2=2=2=2=2=2=2=2=2=2=2=2=2=2=2=2=2=2=2=

30905 "TEMPLETN"  230 30  30915 "MORROBAY"  230 30  "1 "    0.37    0.92   -351.34    44.00   898.10 AMPS  974.97 AMPS   sumpk_before_catb 178
=2=2=2=2=2=2=2=2=2=2=2=2=2=2=2=2=2=2=2=2=2=2=2=2=2=2=2=2=2=2=2=2=2=2=2=2=2=2=2=2=2=2=2=2=2=2=2=2=2=2=

30905 "TEMPLETN"  230 30  30915 "MORROBAY"  230 30  "1 "    0.37    1.12   -416.97    52.30  1088.39 AMPS  974.97 AMPS   sumpk_before_catb 179
30905 "TEMPLETN"  230 30  30915 "MORROBAY"  230 30  "1 "    0.28    1.01   -383.87    46.73   986.05 AMPS  974.97 AMPS   sumpk_after_catb 179

30905 "TEMPLETN"  230 30  30915 "MORROBAY"  230 30  "1 "    0.37    0.92   -352.24    41.98   897.74 AMPS  974.97 AMPS   sumpk_before_catb 180
=2=2=2=2=2=2=2=2=2=2=2=2=2=2=2=2=2=2=2=2=2=2=2=2=2=2=2=2=2=2=2=2=2=2=2=2=2=2=2=2=2=2=2=2=2=2=2=2=2=2=

30905 "TEMPLETN"  230 30  30915 "MORROBAY"  230 30  "1 "    0.37    0.92   -352.40    41.96   898.19 AMPS  974.97 AMPS   sumpk_before_catb 181
```

```
--------FROM BUS--------  ----------TO BUS-----------     (RATE 1) (RATE 2)   ---------OUTAGE------------   (RATE 2)
Bus #    NAME     KV AREA  Bus #   NAME     KV AREA ID      BASE   OUTAGE     MW      MVAR      FLOW         RATING            FILE        OUTAGE #

=2=2=2=2=2=2=2=2=2=2=2=2=2=2=2=2=2=2=2=2=2=2=2=2=2=2=2=2=2=2=2=2=2=2=2=2=2=2=2=2=2=2=2=2=2=2=2=2=2=2=2=2=

30905 "TEMPLETN"  230 30  30915 "MORROBAY"  230 30  "1 "    0.37    0.92   -351.81    44.10   899.43 AMPS  974.97 AMPS   sumpk_before_catb 182
=2=2=2=2=2=2=2=2=2=2=2=2=2=2=2=2=2=2=2=2=2=2=2=2=2=2=2=2=2=2=2=2=2=2=2=2=2=2=2=2=2=2=2=2=2=2=2=2=2=2=2=2=

30905 "TEMPLETN"  230 30  30915 "MORROBAY"  230 30  "1 "    0.37    0.92   -351.62    44.06   898.87 AMPS  974.97 AMPS   sumpk_before_catb 183
=2=2=2=2=2=2=2=2=2=2=2=2=2=2=2=2=2=2=2=2=2=2=2=2=2=2=2=2=2=2=2=2=2=2=2=2=2=2=2=2=2=2=2=2=2=2=2=2=2=2=2=2=

30905 "TEMPLETN"  230 30  30915 "MORROBAY"  230 30  "1 "    0.37    0.92   -353.37    42.20   900.97 AMPS  974.97 AMPS   sumpk_before_catb 184
=2=2=2=2=2=2=2=2=2=2=2=2=2=2=2=2=2=2=2=2=2=2=2=2=2=2=2=2=2=2=2=2=2=2=2=2=2=2=2=2=2=2=2=2=2=2=2=2=2=2=2=2=

30905 "TEMPLETN"  230 30  30915 "MORROBAY"  230 30  "1 "    0.37    0.93   -355.70    42.76   907.57 AMPS  974.97 AMPS   sumpk_before_catb 185
=2=2=2=2=2=2=2=2=2=2=2=2=2=2=2=2=2=2=2=2=2=2=2=2=2=2=2=2=2=2=2=2=2=2=2=2=2=2=2=2=2=2=2=2=2=2=2=2=2=2=2=2=

30905 "TEMPLETN"  230 30  30915 "MORROBAY"  230 30  "1 "    0.37    0.92   -351.31    44.03   897.99 AMPS  974.97 AMPS   sumpk_before_catb 186
=2=2=2=2=2=2=2=2=2=2=2=2=2=2=2=2=2=2=2=2=2=2=2=2=2=2=2=2=2=2=2=2=2=2=2=2=2=2=2=2=2=2=2=2=2=2=2=2=2=2=2=2=

30905 "TEMPLETN"  230 30  30915 "MORROBAY"  230 30  "1 "    0.37    0.92   -352.64    41.99   898.87 AMPS  974.97 AMPS   sumpk_before_catb 187
=2=2=2=2=2=2=2=2=2=2=2=2=2=2=2=2=2=2=2=2=2=2=2=2=2=2=2=2=2=2=2=2=2=2=2=2=2=2=2=2=2=2=2=2=2=2=2=2=2=2=2=2=

30905 "TEMPLETN"  230 30  30915 "MORROBAY"  230 30  "1 "    0.37    0.92   -351.52    44.04   898.59 AMPS  974.97 AMPS   sumpk_before_catb 188
=2=2=2=2=2=2=2=2=2=2=2=2=2=2=2=2=2=2=2=2=2=2=2=2=2=2=2=2=2=2=2=2=2=2=2=2=2=2=2=2=2=2=2=2=2=2=2=2=2=2=2=2=

30905 "TEMPLETN"  230 30  30915 "MORROBAY"  230 30  "1 "    0.37    0.95   -360.56    43.85   921.47 AMPS  974.97 AMPS   sumpk_before_catb 193
=2=2=2=2=2=2=2=2=2=2=2=2=2=2=2=2=2=2=2=2=2=2=2=2=2=2=2=2=2=2=2=2=2=2=2=2=2=2=2=2=2=2=2=2=2=2=2=2=2=2=2=2=

30905 "TEMPLETN"  230 30  30915 "MORROBAY"  230 30  "1 "    0.37    1.19   -436.34    58.76  1157.41 AMPS  974.97 AMPS   sumpk_before_catb 217
30905 "TEMPLETN"  230 30  30915 "MORROBAY"  230 30  "1 "    0.28    1.07   -402.79    49.07  1042.53 AMPS  974.97 AMPS   sumpk_after_catb 217

30905 "TEMPLETN"  230 30  30915 "MORROBAY"  230 30  "1 "    0.37    0.93   -353.91    42.19   902.53 AMPS  974.97 AMPS   sumpk_before_catb 298
=2=2=2=2=2=2=2=2=2=2=2=2=2=2=2=2=2=2=2=2=2=2=2=2=2=2=2=2=2=2=2=2=2=2=2=2=2=2=2=2=2=2=2=2=2=2=2=2=2=2=2=2=

30905 "TEMPLETN"  230 30  30915 "MORROBAY"  230 30  "1 "    0.37    0.92   -353.03    42.04   900.03 AMPS  974.97 AMPS   sumpk_before_catb 299
=2=2=2=2=2=2=2=2=2=2=2=2=2=2=2=2=2=2=2=2=2=2=2=2=2=2=2=2=2=2=2=2=2=2=2=2=2=2=2=2=2=2=2=2=2=2=2=2=2=2=2=2=

30905 "TEMPLETN"  230 30  30915 "MORROBAY"  230 30  "1 "    0.37    0.92   -353.07    41.99   900.11 AMPS  974.97 AMPS   sumpk_before_catb 300
=2=2=2=2=2=2=2=2=2=2=2=2=2=2=2=2=2=2=2=2=2=2=2=2=2=2=2=2=2=2=2=2=2=2=2=2=2=2=2=2=2=2=2=2=2=2=2=2=2=2=2=2=

30905 "TEMPLETN"  230 30  30915 "MORROBAY"  230 30  "1 "    0.37    0.92   -352.73    41.95   899.15 AMPS  974.97 AMPS   sumpk_before_catb 301
=2=2=2=2=2=2=2=2=2=2=2=2=2=2=2=2=2=2=2=2=2=2=2=2=2=2=2=2=2=2=2=2=2=2=2=2=2=2=2=2=2=2=2=2=2=2=2=2=2=2=2=2=

30905 "TEMPLETN"  230 30  30915 "MORROBAY"  230 30  "1 "    0.37    0.92   -351.76    41.82   896.38 AMPS  974.97 AMPS   sumpk_before_catb 302
=2=2=2=2=2=2=2=2=2=2=2=2=2=2=2=2=2=2=2=2=2=2=2=2=2=2=2=2=2=2=2=2=2=2=2=2=2=2=2=2=2=2=2=2=2=2=2=2=2=2=2=2=

30905 "TEMPLETN"  230 30  30915 "MORROBAY"  230 30  "1 "    0.37    0.92   -351.55    44.03   898.69 AMPS  974.97 AMPS   sumpk_before_catb 303
=2=2=2=2=2=2=2=2=2=2=2=2=2=2=2=2=2=2=2=2=2=2=2=2=2=2=2=2=2=2=2=2=2=2=2=2=2=2=2=2=2=2=2=2=2=2=2=2=2=2=2=2=
```

```
--------FROM BUS--------  ----------TO BUS-----------     (RATE 1) (RATE 2)   ---------OUTAGE------------   (RATE 2)
Bus #    NAME     KV AREA  Bus #   NAME     KV AREA ID      BASE   OUTAGE     MW      MVAR      FLOW         RATING            FILE        OUTAGE #

30905 "TEMPLETN"  230 30  30915 "MORROBAY"  230 30  "1 "    0.37    0.92   -351.46    43.95   898.44 AMPS  974.97 AMPS   sumpk_before_catb 304
=2=2=2=2=2=2=2=2=2=2=2=2=2=2=2=2=2=2=2=2=2=2=2=2=2=2=2=2=2=2=2=2=2=2=2=2=2=2=2=2=2=2=2=2=2=2=2=2=2=2=2=2=

30905 "TEMPLETN"  230 30  30915 "MORROBAY"  230 30  "1 "    0.37    0.92   -351.37    43.98   898.17 AMPS  974.97 AMPS   sumpk_before_catb 305
=2=2=2=2=2=2=2=2=2=2=2=2=2=2=2=2=2=2=2=2=2=2=2=2=2=2=2=2=2=2=2=2=2=2=2=2=2=2=2=2=2=2=2=2=2=2=2=2=2=2=2=2=

30905 "TEMPLETN"  230 30  30915 "MORROBAY"  230 30  "1 "    0.37    0.92   -351.82    43.98   899.49 AMPS  974.97 AMPS   sumpk_before_catb 307
=2=2=2=2=2=2=2=2=2=2=2=2=2=2=2=2=2=2=2=2=2=2=2=2=2=2=2=2=2=2=2=2=2=2=2=2=2=2=2=2=2=2=2=2=2=2=2=2=2=2=2=2=

30905 "TEMPLETN"  230 30  30915 "MORROBAY"  230 30  "1 "    0.37    0.92   -353.57    42.49   901.52 AMPS  974.97 AMPS   sumpk_before_catb 308
=2=2=2=2=2=2=2=2=2=2=2=2=2=2=2=2=2=2=2=2=2=2=2=2=2=2=2=2=2=2=2=2=2=2=2=2=2=2=2=2=2=2=2=2=2=2=2=2=2=2=2=2=

30905 "TEMPLETN"  230 30  30915 "MORROBAY"  230 30  "1 "    0.37    0.92   -353.45    42.09   901.22 AMPS  974.97 AMPS   sumpk_before_catb 309
=2=2=2=2=2=2=2=2=2=2=2=2=2=2=2=2=2=2=2=2=2=2=2=2=2=2=2=2=2=2=2=2=2=2=2=2=2=2=2=2=2=2=2=2=2=2=2=2=2=2=2=2=

30905 "TEMPLETN"  230 30  30915 "MORROBAY"  230 30  "1 "    0.37    0.92   -350.92    44.08   896.85 AMPS  974.97 AMPS   sumpk_before_catb 310
=2=2=2=2=2=2=2=2=2=2=2=2=2=2=2=2=2=2=2=2=2=2=2=2=2=2=2=2=2=2=2=2=2=2=2=2=2=2=2=2=2=2=2=2=2=2=2=2=2=2=2=2=

30905 "TEMPLETN"  230 30  30915 "MORROBAY"  230 30  "1 "    0.37    0.92   -350.92    44.03   896.86 AMPS  974.97 AMPS   sumpk_before_catb 311
=2=2=2=2=2=2=2=2=2=2=2=2=2=2=2=2=2=2=2=2=2=2=2=2=2=2=2=2=2=2=2=2=2=2=2=2=2=2=2=2=2=2=2=2=2=2=2=2=2=2=2=2=

30905 "TEMPLETN"  230 30  30915 "MORROBAY"  230 30  "1 "    0.37    0.93   -354.22    42.40   903.37 AMPS  974.97 AMPS   sumpk_before_catb 312
=2=2=2=2=2=2=2=2=2=2=2=2=2=2=2=2=2=2=2=2=2=2=2=2=2=2=2=2=2=2=2=2=2=2=2=2=2=2=2=2=2=2=2=2=2=2=2=2=2=2=2=2=

32814 "EDESTAP1"  115 30  35113 "DMTAR_SL"  115 30  "1 "    0.58    0.93   -172.79    -6.77   879.32 AMPS  947.86 AMPS   sumpk_before_catb  38
32814 "EDESTAP1"  115 30  35113 "DMTAR_SL"  115 30  "1 "    0.58    0.93   -172.79    -6.76   879.14 AMPS  947.86 AMPS   sumpk_after_catb  38

33020 "MORAGA  "  115 30  35101 "SN LNDRO"  115 30  "2 "    0.71    0.90     98.86    16.74   487.83 AMPS  540.20 AMPS   sumpk_before_catb 118
33020 "MORAGA  "  115 30  35101 "SN LNDRO"  115 30  "2 "    0.71    0.90     98.86    16.73   487.74 AMPS  540.20 AMPS   sumpk_after_catb 118

33317 "CLY LND "  115 30  33375 "CLY LNDG"   60 30  "1 "    0.89    0.94     89.69    27.67    93.87 MVA   100.00 MVA    sumpk_before_catb 375
33317 "CLY LND "  115 30  33375 "CLY LNDG"   60 30  "1 "    0.89    0.94     89.50    27.69    93.68 MVA   100.00 MVA    sumpk_after_catb 375

33357 "SAN MATO"   60 30  33358 "BERESFRD"   60 30  "1 "    0.41    1.03     64.06    11.52   613.66 AMPS  596.60 AMPS   sumpk_before_catb 375
33357 "SAN MATO"   60 30  33358 "BERESFRD"   60 30  "1 "    0.42    1.03     64.20    11.53   614.53 AMPS  596.60 AMPS   sumpk_after_catb 375

33384 "MNLO JCT"   60 30  33390 "MENLO G "   60 30  "1 "    0.24    0.93     54.99    15.53   547.18 AMPS  586.97 AMPS   sumpk_before_catb 375
33384 "MNLO JCT"   60 30  33390 "MENLO G "   60 30  "1 "    0.25    0.93     54.85    15.60   545.65 AMPS  586.97 AMPS   sumpk_after_catb 375

33600 "HERDLYN "   70 30  33770 "HERDLYN "   60 30  "2 "    0.93    1.01     60.70     4.71    60.88 MVA    60.00 MVA    sumpk_before_catb 264
33600 "HERDLYN "   70 30  33770 "HERDLYN "   60 30  "2 "    0.93    1.01     60.70     4.71    60.88 MVA    60.00 MVA    sumpk_after_catb 264

35101 "SN LNDRO"  115 30  35113 "DMTAR_SL"  115 30  "1 "    0.60    0.95    178.10    16.51   898.91 AMPS  947.86 AMPS   sumpk_before_catb  38
35101 "SN LNDRO"  115 30  35113 "DMTAR_SL"  115 30  "1 "    0.60    0.95    178.10    16.50   898.73 AMPS  947.86 AMPS   sumpk_after_catb  38

35107 "DUMBARTN"  115 30  35120 "NEWARK D"  115 30  "1 "    0.75    0.99   -192.39   -24.54   943.26 AMPS  948.86 AMPS   sumpk_before_catb 184
=2=2=2=2=2=2=2=2=2=2=2=2=2=2=2=2=2=2=2=2=2=2=2=2=2=2=2=2=2=2=2=2=2=2=2=2=2=2=2=2=2=2=2=2=2=2=2=2=2=2=2=2=
```

APPENDIX C - STEADY STATE POWER FLOW RESULTS
AUTCON OUTPUT FILES FOR **ISO CATEGORY B** 2007 SUMMER PEAK OPERATING CONDITIONS

--------FROM BUS--------				----------TO BUS-----------					(RATE 1)	(RATE 2)	---------OUTAGE------------			(RATE 2)		
Bus #	NAME	KV	AREA	Bus #	NAME	KV	AREA	ID	BASE	OUTAGE	MW	MVAR	FLOW	RATING	FILE	OUTAGE #
35107	"DUMBARTN"	115	30	35120	"NEWARK D"	115	30	"1 "	0.75	0.96	-186.20	-26.99	915.50 AMPS	948.86 AMPS	sumpk_before_catb	208
=2=2=2=2=2=2=2=2=2=2=2=2=2=2=2=2=2=2=2=2=2=2=2=2=2=2=2=2=2=2=2=2=2=2=2=2=2=2=2=2=2=																
35107	"DUMBARTN"	115	30	35120	"NEWARK D"	115	30	"1 "	0.75	0.99	-190.90	-29.88	941.13 AMPS	948.86 AMPS	sumpk_before_catb	309
=2=2=2=2=2=2=2=2=2=2=2=2=2=2=2=2=2=2=2=2=2=2=2=2=2=2=2=2=2=2=2=2=2=2=2=2=2=2=2=2=2=																
35107	"DUMBARTN"	115	30	35120	"NEWARK D"	115	30	"1 "	0.75	0.97	-187.44	-26.78	920.36 AMPS	948.86 AMPS	sumpk_before_catb	87
=2=2=2=2=2=2=2=2=2=2=2=2=2=2=2=2=2=2=2=2=2=2=2=2=2=2=2=2=2=2=2=2=2=2=2=2=2=2=2=2=2=																
35110	"FREMNT "	115	30	35121	"NEWARK E"	115	30	"1 "	0.56	0.96	81.95	18.23	400.14 AMPS	416.70 AMPS	sumpk_before_catb	251
35110	"FREMNT "	115	30	35121	"NEWARK E"	115	30	"1 "	0.56	0.96	81.94	18.23	399.95 AMPS	416.70 AMPS	sumpk_after_catb	251
35110	"FREMNT "	115	30	35121	"NEWARK E"	115	30	"2 "	0.56	0.96	81.95	18.23	400.14 AMPS	416.70 AMPS	sumpk_before_catb	250
35110	"FREMNT "	115	30	35121	"NEWARK E"	115	30	"2 "	0.56	0.96	81.94	18.23	399.95 AMPS	416.70 AMPS	sumpk_after_catb	250

```
--------FROM BUS--------  ----------TO BUS-----------     (RATE 1) (RATE 2)   ---------OUTAGE------------   (RATE 2)
Bus #    NAME     KV AREA  Bus #   NAME     KV AREA ID      BASE   OUTAGE     MW      MVAR      FLOW         RATING            FILE        OUTAGE #


30526 "PITSBG D"  230 30  30528 "DEC PTSG"  230 30  "1 "    0.64    1.29   -876.92    -6.72  2145.63 AMPS 1669.30 AMPS   sumop_before_catb  82
30526 "PITSBG D"  230 30  30528 "DEC PTSG"  230 30  "1 "    0.64    1.28   -876.92    -4.99  2145.02 AMPS 1669.30 AMPS   sumop_after_catb  82

30526 "PITSBG D"  230 30  30528 "DEC PTSG"  230 30  "2 "    0.64    1.29   -876.92    -6.72  2145.63 AMPS 1669.30 AMPS   sumop_before_catb  81
30526 "PITSBG D"  230 30  30528 "DEC PTSG"  230 30  "2 "    0.64    1.28   -876.92    -4.99  2145.02 AMPS 1669.30 AMPS   sumop_after_catb  81

30875 "MC CALL "  230 30  30880 "HENTAP2 "  230 30  "1 "    0.88    0.90   -295.09    45.60   743.61 AMPS  825.11 AMPS   sumop_before_catb 135
=2=2=2=2=2=2=2=2=2=2=2=2=2=2=2=2=2=2=2=2=2=2=2=2=2=2=2=2=2=2=2=2=2=2=2=2=2=2=2=2=2=2=2=2=2=2=2=2=2=2=2=2=2=

30875 "MC CALL "  230 30  30880 "HENTAP2 "  230 30  "1 "    0.88    0.90   -294.92    45.46   743.09 AMPS  825.11 AMPS   sumop_before_catb 136
=2=2=2=2=2=2=2=2=2=2=2=2=2=2=2=2=2=2=2=2=2=2=2=2=2=2=2=2=2=2=2=2=2=2=2=2=2=2=2=2=2=2=2=2=2=2=2=2=2=2=2=2=2=

30875 "MC CALL "  230 30  30880 "HENTAP2 "  230 30  "1 "    0.88    0.90   -294.92    45.46   743.09 AMPS  825.11 AMPS   sumop_before_catb 137
=2=2=2=2=2=2=2=2=2=2=2=2=2=2=2=2=2=2=2=2=2=2=2=2=2=2=2=2=2=2=2=2=2=2=2=2=2=2=2=2=2=2=2=2=2=2=2=2=2=2=2=2=2=

30875 "MC CALL "  230 30  30880 "HENTAP2 "  230 30  "1 "    0.88    0.90   -295.00    45.52   743.33 AMPS  825.11 AMPS   sumop_before_catb 143
=2=2=2=2=2=2=2=2=2=2=2=2=2=2=2=2=2=2=2=2=2=2=2=2=2=2=2=2=2=2=2=2=2=2=2=2=2=2=2=2=2=2=2=2=2=2=2=2=2=2=2=2=2=

30875 "MC CALL "  230 30  30880 "HENTAP2 "  230 30  "1 "    0.88    0.90   -295.00    45.52   743.33 AMPS  825.11 AMPS   sumop_before_catb 144
=2=2=2=2=2=2=2=2=2=2=2=2=2=2=2=2=2=2=2=2=2=2=2=2=2=2=2=2=2=2=2=2=2=2=2=2=2=2=2=2=2=2=2=2=2=2=2=2=2=2=2=2=2=

30875 "MC CALL "  230 30  30880 "HENTAP2 "  230 30  "1 "    0.88    0.90   -295.00    45.52   743.33 AMPS  825.11 AMPS   sumop_before_catb 145
=2=2=2=2=2=2=2=2=2=2=2=2=2=2=2=2=2=2=2=2=2=2=2=2=2=2=2=2=2=2=2=2=2=2=2=2=2=2=2=2=2=2=2=2=2=2=2=2=2=2=2=2=2=

30875 "MC CALL "  230 30  30880 "HENTAP2 "  230 30  "1 "    0.88    0.90   -294.98    45.49   743.23 AMPS  825.11 AMPS   sumop_before_catb 147
=2=2=2=2=2=2=2=2=2=2=2=2=2=2=2=2=2=2=2=2=2=2=2=2=2=2=2=2=2=2=2=2=2=2=2=2=2=2=2=2=2=2=2=2=2=2=2=2=2=2=2=2=2=

30875 "MC CALL "  230 30  30880 "HENTAP2 "  230 30  "1 "    0.88    0.93   -301.43    51.77   764.23 AMPS  825.11 AMPS   sumop_before_catb 164
30875 "MC CALL "  230 30  30880 "HENTAP2 "  230 30  "1 "    0.86    0.91   -297.66    47.94   751.79 AMPS  825.11 AMPS   sumop_after_catb 164

30875 "MC CALL "  230 30  30880 "HENTAP2 "  230 30  "1 "    0.88    0.91   -296.32    46.70   747.48 AMPS  825.11 AMPS   sumop_before_catb  48
=2=2=2=2=2=2=2=2=2=2=2=2=2=2=2=2=2=2=2=2=2=2=2=2=2=2=2=2=2=2=2=2=2=2=2=2=2=2=2=2=2=2=2=2=2=2=2=2=2=2=2=2=2=

30879 "HENTAP1 "  230 30  30900 "GATES   "  230 30  "1 "    0.84    0.94   -587.87    37.36  1499.88 AMPS 1600.01 AMPS   sumop_before_catb 146
30879 "HENTAP1 "  230 30  30900 "GATES   "  230 30  "1 "    0.83    0.92   -582.05    31.69  1475.45 AMPS 1600.01 AMPS   sumop_after_catb 146

30879 "HENTAP1 "  230 30  30900 "GATES   "  230 30  "1 "    0.84    0.94   -587.91    37.38  1500.05 AMPS 1600.01 AMPS   sumop_before_catb 178
30879 "HENTAP1 "  230 30  30900 "GATES   "  230 30  "1 "    0.83    0.92   -582.07    31.68  1475.52 AMPS 1600.01 AMPS   sumop_after_catb 178

30879 "HENTAP1 "  230 30  30900 "GATES   "  230 30  "1 "    0.84    0.97   -600.06    64.15  1555.92 AMPS 1600.01 AMPS   sumop_before_catb 179
30879 "HENTAP1 "  230 30  30900 "GATES   "  230 30  "1 "    0.83    0.95   -595.50    54.76  1526.82 AMPS 1600.01 AMPS   sumop_after_catb 179

30879 "HENTAP1 "  230 30  30900 "GATES   "  230 30  "1 "    0.84    0.94   -587.91    37.47  1500.19 AMPS 1600.01 AMPS   sumop_before_catb 180
30879 "HENTAP1 "  230 30  30900 "GATES   "  230 30  "1 "    0.83    0.92   -582.10    31.79  1475.75 AMPS 1600.01 AMPS   sumop_after_catb 180

30879 "HENTAP1 "  230 30  30900 "GATES   "  230 30  "1 "    0.84    0.94   -588.03    37.46  1500.52 AMPS 1600.01 AMPS   sumop_before_catb 181
```

--------FROM BUS--------			----------TO BUS----------					(RATE 1)	(RATE 2)	---------OUTAGE----------			(RATE 2)		
Bus #	NAME	KV AREA	Bus #	NAME	KV AREA	ID		BASE	OUTAGE	MW	MVAR	FLOW	RATING	FILE	OUTAGE #
30879	"HENTAP1 "	230 30	30900	"GATES "	230 30	"1 "		0.83	0.92	-582.16	31.80	1475.95 AMPS	1600.01 AMPS	sumop_after_catb 181	
30879	"HENTAP1 "	230 30	30900	"GATES "	230 30	"1 "		0.84	0.94	-587.87	37.36	1499.90 AMPS	1600.01 AMPS	sumop_before_catb 182	
30879	"HENTAP1 "	230 30	30900	"GATES "	230 30	"1 "		0.83	0.92	-582.05	31.69	1475.46 AMPS	1600.01 AMPS	sumop_after_catb 182	
30879	"HENTAP1 "	230 30	30900	"GATES "	230 30	"1 "		0.84	0.94	-587.87	37.37	1499.92 AMPS	1600.01 AMPS	sumop_before_catb 183	
30879	"HENTAP1 "	230 30	30900	"GATES "	230 30	"1 "		0.83	0.92	-582.03	31.66	1475.34 AMPS	1600.01 AMPS	sumop_after_catb 183	
30879	"HENTAP1 "	230 30	30900	"GATES "	230 30	"1 "		0.84	0.94	-588.02	37.54	1500.59 AMPS	1600.01 AMPS	sumop_before_catb 184	
30879	"HENTAP1 "	230 30	30900	"GATES "	230 30	"1 "		0.83	0.92	-582.15	31.79	1475.90 AMPS	1600.01 AMPS	sumop_after_catb 184	
30879	"HENTAP1 "	230 30	30900	"GATES "	230 30	"1 "		0.84	0.94	-588.87	37.39	1502.67 AMPS	1600.01 AMPS	sumop_before_catb 185	
30879	"HENTAP1 "	230 30	30900	"GATES "	230 30	"1 "		0.83	0.92	-582.85	32.51	1478.79 AMPS	1600.01 AMPS	sumop_after_catb 185	
30879	"HENTAP1 "	230 30	30900	"GATES "	230 30	"1 "		0.84	0.94	-587.86	37.32	1499.75 AMPS	1600.01 AMPS	sumop_before_catb 186	
30879	"HENTAP1 "	230 30	30900	"GATES "	230 30	"1 "		0.83	0.92	-582.05	31.65	1475.33 AMPS	1600.01 AMPS	sumop_after_catb 186	
30879	"HENTAP1 "	230 30	30900	"GATES "	230 30	"1 "		0.84	0.94	-587.99	37.50	1500.46 AMPS	1600.01 AMPS	sumop_before_catb 187	
30879	"HENTAP1 "	230 30	30900	"GATES "	230 30	"1 "		0.83	0.92	-582.16	31.80	1475.97 AMPS	1600.01 AMPS	sumop_after_catb 187	
30879	"HENTAP1 "	230 30	30900	"GATES "	230 30	"1 "		0.84	0.94	-587.85	37.33	1499.75 AMPS	1600.01 AMPS	sumop_before_catb 188	
30879	"HENTAP1 "	230 30	30900	"GATES "	230 30	"1 "		0.83	0.92	-582.05	31.70	1475.48 AMPS	1600.01 AMPS	sumop_after_catb 188	
30879	"HENTAP1 "	230 30	30900	"GATES "	230 30	"1 "		0.84	0.94	-587.34	36.66	1497.40 AMPS	1600.01 AMPS	sumop_before_catb 189	
30879	"HENTAP1 "	230 30	30900	"GATES "	230 30	"1 "		0.83	0.92	-581.49	31.10	1473.12 AMPS	1600.01 AMPS	sumop_after_catb 189	
30879	"HENTAP1 "	230 30	30900	"GATES "	230 30	"1 "		0.84	0.91	-572.64	31.79	1448.75 AMPS	1600.01 AMPS	sumop_before_catb 193	
=2=2=2=2=2=2=2=2=2=2=2=2=2=2=2=2=2=2=2=2=2=2=2=2=2=2=2=2=2=2=2=2=2=2=2=2=2=2=2=2=2=2=2=2=2=2=2=2=2=2=															
30879	"HENTAP1 "	230 30	30900	"GATES "	230 30	"1 "		0.84	0.93	-583.62	33.16	1482.05 AMPS	1600.01 AMPS	sumop_before_catb 217	
30879	"HENTAP1 "	230 30	30900	"GATES "	230 30	"1 "		0.83	0.91	-577.72	28.47	1458.71 AMPS	1600.01 AMPS	sumop_after_catb 217	
30879	"HENTAP1 "	230 30	30900	"GATES "	230 30	"1 "		0.84	0.94	-588.04	37.42	1500.48 AMPS	1600.01 AMPS	sumop_before_catb 298	
30879	"HENTAP1 "	230 30	30900	"GATES "	230 30	"1 "		0.83	0.92	-582.18	31.78	1475.97 AMPS	1600.01 AMPS	sumop_after_catb 298	
30879	"HENTAP1 "	230 30	30900	"GATES "	230 30	"1 "		0.84	0.94	-588.03	37.45	1500.53 AMPS	1600.01 AMPS	sumop_before_catb 299	
30879	"HENTAP1 "	230 30	30900	"GATES "	230 30	"1 "		0.83	0.92	-582.18	31.82	1476.09 AMPS	1600.01 AMPS	sumop_after_catb 299	
30879	"HENTAP1 "	230 30	30900	"GATES "	230 30	"1 "		0.84	0.94	-588.02	37.43	1500.44 AMPS	1600.01 AMPS	sumop_before_catb 300	
30879	"HENTAP1 "	230 30	30900	"GATES "	230 30	"1 "		0.83	0.92	-582.17	31.80	1476.00 AMPS	1600.01 AMPS	sumop_after_catb 300	
30879	"HENTAP1 "	230 30	30900	"GATES "	230 30	"1 "		0.84	0.94	-588.01	37.41	1500.40 AMPS	1600.01 AMPS	sumop_before_catb 301	
30879	"HENTAP1 "	230 30	30900	"GATES "	230 30	"1 "		0.83	0.92	-582.13	31.75	1475.82 AMPS	1600.01 AMPS	sumop_after_catb 301	
30879	"HENTAP1 "	230 30	30900	"GATES "	230 30	"1 "		0.84	0.94	-587.98	37.36	1500.20 AMPS	1600.01 AMPS	sumop_before_catb 302	
30879	"HENTAP1 "	230 30	30900	"GATES "	230 30	"1 "		0.83	0.92	-582.10	31.71	1475.64 AMPS	1600.01 AMPS	sumop_after_catb 302	

--------FROM BUS--------				----------TO BUS-----------					(RATE 1)	(RATE 2)	---------OUTAGE------------			(RATE 2)		
Bus #	NAME	KV	AREA	Bus #	NAME	KV	AREA	ID	BASE	OUTAGE	MW	MVAR	FLOW	RATING	FILE	OUTAGE #
30879	"HENTAP1 "	230	30	30900	"GATES "	230	30	"1 "	0.84	0.94	-587.87	37.35	1499.87 AMPS	1600.01 AMPS	sumop_before_catb	303
30879	"HENTAP1 "	230	30	30900	"GATES "	230	30	"1 "	0.83	0.92	-582.04	31.68	1475.43 AMPS	1600.01 AMPS	sumop_after_catb	303
30879	"HENTAP1 "	230	30	30900	"GATES "	230	30	"1 "	0.84	0.94	-587.90	37.37	1499.99 AMPS	1600.01 AMPS	sumop_before_catb	304
30879	"HENTAP1 "	230	30	30900	"GATES "	230	30	"1 "	0.83	0.92	-582.07	31.70	1475.55 AMPS	1600.01 AMPS	sumop_after_catb	304
30879	"HENTAP1 "	230	30	30900	"GATES "	230	30	"1 "	0.84	0.94	-587.91	37.39	1500.04 AMPS	1600.01 AMPS	sumop_before_catb	305
30879	"HENTAP1 "	230	30	30900	"GATES "	230	30	"1 "	0.83	0.92	-582.16	31.79	1475.94 AMPS	1600.01 AMPS	sumop_after_catb	305
30879	"HENTAP1 "	230	30	30900	"GATES "	230	30	"1 "	0.84	0.94	-587.34	36.66	1497.40 AMPS	1600.01 AMPS	sumop_before_catb	306
30879	"HENTAP1 "	230	30	30900	"GATES "	230	30	"1 "	0.83	0.92	-581.49	31.10	1473.12 AMPS	1600.01 AMPS	sumop_after_catb	306
30879	"HENTAP1 "	230	30	30900	"GATES "	230	30	"1 "	0.84	0.94	-587.97	37.37	1500.21 AMPS	1600.01 AMPS	sumop_before_catb	307
30879	"HENTAP1 "	230	30	30900	"GATES "	230	30	"1 "	0.83	0.92	-582.09	31.71	1475.64 AMPS	1600.01 AMPS	sumop_after_catb	307
30879	"HENTAP1 "	230	30	30900	"GATES "	230	30	"1 "	0.84	0.94	-587.22	37.45	1498.18 AMPS	1600.01 AMPS	sumop_before_catb	308
30879	"HENTAP1 "	230	30	30900	"GATES "	230	30	"1 "	0.83	0.92	-581.44	31.74	1473.80 AMPS	1600.01 AMPS	sumop_after_catb	308
30879	"HENTAP1 "	230	30	30900	"GATES "	230	30	"1 "	0.84	0.94	-588.19	37.48	1501.08 AMPS	1600.01 AMPS	sumop_before_catb	309
30879	"HENTAP1 "	230	30	30900	"GATES "	230	30	"1 "	0.83	0.92	-582.28	31.78	1476.34 AMPS	1600.01 AMPS	sumop_after_catb	309
30879	"HENTAP1 "	230	30	30900	"GATES "	230	30	"1 "	0.84	0.94	-587.56	36.99	1498.12 AMPS	1600.01 AMPS	sumop_before_catb	310
30879	"HENTAP1 "	230	30	30900	"GATES "	230	30	"1 "	0.83	0.92	-581.75	31.58	1473.64 AMPS	1600.01 AMPS	sumop_after_catb	310
30879	"HENTAP1 "	230	30	30900	"GATES "	230	30	"1 "	0.84	0.94	-587.80	37.22	1499.36 AMPS	1600.01 AMPS	sumop_before_catb	311
30879	"HENTAP1 "	230	30	30900	"GATES "	230	30	"1 "	0.83	0.92	-581.96	31.54	1474.90 AMPS	1600.01 AMPS	sumop_after_catb	311
30879	"HENTAP1 "	230	30	30900	"GATES "	230	30	"1 "	0.84	0.94	-587.96	37.52	1500.44 AMPS	1600.01 AMPS	sumop_before_catb	312
30879	"HENTAP1 "	230	30	30900	"GATES "	230	30	"1 "	0.83	0.92	-582.07	31.81	1475.74 AMPS	1600.01 AMPS	sumop_after_catb	312
30879	"HENTAP1 "	230	30	30900	"GATES "	230	30	"1 "	0.84	0.91	-572.64	31.79	1448.75 AMPS	1600.01 AMPS	sumop_before_catb	72
=2=2=2=2=2=2=2=2=2=2=2=2=2=2=2=2=2=2=2=2=2=2=2=2=2=2=2=2=2=2=2=2=2=2=2=2=2=2=2=2=2=2=2=2=2=2=2=2=																
30900	"GATES "	230	30	30905	"TEMPLETN"	230	30	"1 "	0.38	0.96	-350.49	124.41	932.89 AMPS	974.97 AMPS	sumop_before_catb	146
=2=2=2=2=2=2=2=2=2=2=2=2=2=2=2=2=2=2=2=2=2=2=2=2=2=2=2=2=2=2=2=2=2=2=2=2=2=2=2=2=2=2=2=2=2=2=2=2=																
30900	"GATES "	230	30	30905	"TEMPLETN"	230	30	"1 "	0.38	0.96	-350.54	124.45	933.08 AMPS	974.97 AMPS	sumop_before_catb	178
=2=2=2=2=2=2=2=2=2=2=2=2=2=2=2=2=2=2=2=2=2=2=2=2=2=2=2=2=2=2=2=2=2=2=2=2=2=2=2=2=2=2=2=2=2=2=2=2=																
30900	"GATES "	230	30	30905	"TEMPLETN"	230	30	"1 "	0.38	1.17	-406.63	186.10	1140.67 AMPS	974.97 AMPS	sumop_before_catb	179
30900	"GATES "	230	30	30905	"TEMPLETN"	230	30	"1 "	0.30	1.06	-380.07	150.40	1031.14 AMPS	974.97 AMPS	sumop_after_catb	179
30900	"GATES "	230	30	30905	"TEMPLETN"	230	30	"1 "	0.38	0.96	-350.88	124.74	934.22 AMPS	974.97 AMPS	sumop_before_catb	180
=2=2=2=2=2=2=2=2=2=2=2=2=2=2=2=2=2=2=2=2=2=2=2=2=2=2=2=2=2=2=2=2=2=2=2=2=2=2=2=2=2=2=2=2=2=2=2=2=																
30900	"GATES "	230	30	30905	"TEMPLETN"	230	30	"1 "	0.38	0.96	-350.74	124.58	933.76 AMPS	974.97 AMPS	sumop_before_catb	181
=2=2=2=2=2=2=2=2=2=2=2=2=2=2=2=2=2=2=2=2=2=2=2=2=2=2=2=2=2=2=2=2=2=2=2=2=2=2=2=2=2=2=2=2=2=2=2=2=																

```
--------FROM BUS--------  ----------TO BUS-----------     (RATE 1) (RATE 2)   ---------OUTAGE------------   (RATE 2)
Bus #    NAME     KV AREA  Bus #   NAME     KV AREA ID      BASE   OUTAGE     MW      MVAR      FLOW         RATING            FILE        OUTAGE #


30900 "GATES   "  230 30  30905 "TEMPLETN"  230 30  "1 "    0.38    0.96   -350.50   124.42   932.93 AMPS  974.97 AMPS   sumop_before_catb 182
=2=2=2=2=2=2=2=2=2=2=2=2=2=2=2=2=2=2=2=2=2=2=2=2=2=2=2=2=2=2=2=2=2=2=2=2=2=2=2=2=2=2=2=2=2=2=2=2=2=2=2=2=2=2=2=2=

30900 "GATES   "  230 30  30905 "TEMPLETN"  230 30  "1 "    0.38    0.96   -350.50   124.42   932.94 AMPS  974.97 AMPS   sumop_before_catb 183
=2=2=2=2=2=2=2=2=2=2=2=2=2=2=2=2=2=2=2=2=2=2=2=2=2=2=2=2=2=2=2=2=2=2=2=2=2=2=2=2=2=2=2=2=2=2=2=2=2=2=2=2=2=2=2=2=

30900 "GATES   "  230 30  30905 "TEMPLETN"  230 30  "1 "    0.38    0.96   -351.13   124.93   935.05 AMPS  974.97 AMPS   sumop_before_catb 184
=2=2=2=2=2=2=2=2=2=2=2=2=2=2=2=2=2=2=2=2=2=2=2=2=2=2=2=2=2=2=2=2=2=2=2=2=2=2=2=2=2=2=2=2=2=2=2=2=2=2=2=2=2=2=2=2=

30900 "GATES   "  230 30  30905 "TEMPLETN"  230 30  "1 "    0.38    0.97   -354.85   124.48   943.37 AMPS  974.97 AMPS   sumop_before_catb 185
=2=2=2=2=2=2=2=2=2=2=2=2=2=2=2=2=2=2=2=2=2=2=2=2=2=2=2=2=2=2=2=2=2=2=2=2=2=2=2=2=2=2=2=2=2=2=2=2=2=2=2=2=2=2=2=2=

30900 "GATES   "  230 30  30905 "TEMPLETN"  230 30  "1 "    0.38    0.96   -350.51   124.47   932.91 AMPS  974.97 AMPS   sumop_before_catb 186
=2=2=2=2=2=2=2=2=2=2=2=2=2=2=2=2=2=2=2=2=2=2=2=2=2=2=2=2=2=2=2=2=2=2=2=2=2=2=2=2=2=2=2=2=2=2=2=2=2=2=2=2=2=2=2=2=

30900 "GATES   "  230 30  30905 "TEMPLETN"  230 30  "1 "    0.38    0.96   -350.95   124.78   934.46 AMPS  974.97 AMPS   sumop_before_catb 187
=2=2=2=2=2=2=2=2=2=2=2=2=2=2=2=2=2=2=2=2=2=2=2=2=2=2=2=2=2=2=2=2=2=2=2=2=2=2=2=2=2=2=2=2=2=2=2=2=2=2=2=2=2=2=2=2=

30900 "GATES   "  230 30  30905 "TEMPLETN"  230 30  "1 "    0.38    0.96   -350.46   124.41   932.79 AMPS  974.97 AMPS   sumop_before_catb 188
=2=2=2=2=2=2=2=2=2=2=2=2=2=2=2=2=2=2=2=2=2=2=2=2=2=2=2=2=2=2=2=2=2=2=2=2=2=2=2=2=2=2=2=2=2=2=2=2=2=2=2=2=2=2=2=2=

30900 "GATES   "  230 30  30905 "TEMPLETN"  230 30  "1 "    0.38    0.95   -347.40   121.79   922.71 AMPS  974.97 AMPS   sumop_before_catb 189
=2=2=2=2=2=2=2=2=2=2=2=2=2=2=2=2=2=2=2=2=2=2=2=2=2=2=2=2=2=2=2=2=2=2=2=2=2=2=2=2=2=2=2=2=2=2=2=2=2=2=2=2=2=2=2=2=

30900 "GATES   "  230 30  30905 "TEMPLETN"  230 30  "1 "    0.38    0.96   -350.53   124.39   933.05 AMPS  974.97 AMPS   sumop_before_catb 298
=2=2=2=2=2=2=2=2=2=2=2=2=2=2=2=2=2=2=2=2=2=2=2=2=2=2=2=2=2=2=2=2=2=2=2=2=2=2=2=2=2=2=2=2=2=2=2=2=2=2=2=2=2=2=2=2=

30900 "GATES   "  230 30  30905 "TEMPLETN"  230 30  "1 "    0.38    0.96   -350.57   124.41   933.23 AMPS  974.97 AMPS   sumop_before_catb 299
=2=2=2=2=2=2=2=2=2=2=2=2=2=2=2=2=2=2=2=2=2=2=2=2=2=2=2=2=2=2=2=2=2=2=2=2=2=2=2=2=2=2=2=2=2=2=2=2=2=2=2=2=2=2=2=2=

30900 "GATES   "  230 30  30905 "TEMPLETN"  230 30  "1 "    0.38    0.96   -350.59   124.45   933.27 AMPS  974.97 AMPS   sumop_before_catb 300
=2=2=2=2=2=2=2=2=2=2=2=2=2=2=2=2=2=2=2=2=2=2=2=2=2=2=2=2=2=2=2=2=2=2=2=2=2=2=2=2=2=2=2=2=2=2=2=2=2=2=2=2=2=2=2=2=

30900 "GATES   "  230 30  30905 "TEMPLETN"  230 30  "1 "    0.38    0.96   -350.51   124.37   933.00 AMPS  974.97 AMPS   sumop_before_catb 301
=2=2=2=2=2=2=2=2=2=2=2=2=2=2=2=2=2=2=2=2=2=2=2=2=2=2=2=2=2=2=2=2=2=2=2=2=2=2=2=2=2=2=2=2=2=2=2=2=2=2=2=2=2=2=2=2=

30900 "GATES   "  230 30  30905 "TEMPLETN"  230 30  "1 "    0.38    0.96   -350.44   124.34   932.73 AMPS  974.97 AMPS   sumop_before_catb 302
=2=2=2=2=2=2=2=2=2=2=2=2=2=2=2=2=2=2=2=2=2=2=2=2=2=2=2=2=2=2=2=2=2=2=2=2=2=2=2=2=2=2=2=2=2=2=2=2=2=2=2=2=2=2=2=2=

30900 "GATES   "  230 30  30905 "TEMPLETN"  230 30  "1 "    0.38    0.96   -350.50   124.43   932.92 AMPS  974.97 AMPS   sumop_before_catb 303
=2=2=2=2=2=2=2=2=2=2=2=2=2=2=2=2=2=2=2=2=2=2=2=2=2=2=2=2=2=2=2=2=2=2=2=2=2=2=2=2=2=2=2=2=2=2=2=2=2=2=2=2=2=2=2=2=

30900 "GATES   "  230 30  30905 "TEMPLETN"  230 30  "1 "    0.38    0.96   -350.51   124.41   932.96 AMPS  974.97 AMPS   sumop_before_catb 304
=2=2=2=2=2=2=2=2=2=2=2=2=2=2=2=2=2=2=2=2=2=2=2=2=2=2=2=2=2=2=2=2=2=2=2=2=2=2=2=2=2=2=2=2=2=2=2=2=2=2=2=2=2=2=2=2=

30900 "GATES   "  230 30  30905 "TEMPLETN"  230 30  "1 "    0.38    0.96   -350.57   124.47   933.17 AMPS  974.97 AMPS   sumop_before_catb 305
```

```
--------FROM BUS--------  ----------TO BUS-----------     (RATE 1) (RATE 2)   ---------OUTAGE------------   (RATE 2)
Bus #    NAME     KV AREA  Bus #   NAME     KV AREA ID      BASE   OUTAGE     MW      MVAR      FLOW         RATING            FILE        OUTAGE #

=2=2=2=2=2=2=2=2=2=2=2=2=2=2=2=2=2=2=2=2=2=2=2=2=2=2=2=2=2=2=2=2=2=2=2=2=2=2=2=2=2=2=2=2=2=2=2=2=2=2=2=2=

30900 "GATES   "  230 30  30905 "TEMPLETN"  230 30  "1 "    0.38    0.95   -347.40   121.79   922.71 AMPS  974.97 AMPS   sumop_before_catb 306
=2=2=2=2=2=2=2=2=2=2=2=2=2=2=2=2=2=2=2=2=2=2=2=2=2=2=2=2=2=2=2=2=2=2=2=2=2=2=2=2=2=2=2=2=2=2=2=2=2=2=2=2=

30900 "GATES   "  230 30  30905 "TEMPLETN"  230 30  "1 "    0.38    0.96   -350.42   124.32   932.69 AMPS  974.97 AMPS   sumop_before_catb 307
=2=2=2=2=2=2=2=2=2=2=2=2=2=2=2=2=2=2=2=2=2=2=2=2=2=2=2=2=2=2=2=2=2=2=2=2=2=2=2=2=2=2=2=2=2=2=2=2=2=2=2=2=

30900 "GATES   "  230 30  30905 "TEMPLETN"  230 30  "1 "    0.38    0.96   -350.78   124.72   933.84 AMPS  974.97 AMPS   sumop_before_catb 308
=2=2=2=2=2=2=2=2=2=2=2=2=2=2=2=2=2=2=2=2=2=2=2=2=2=2=2=2=2=2=2=2=2=2=2=2=2=2=2=2=2=2=2=2=2=2=2=2=2=2=2=2=

30900 "GATES   "  230 30  30905 "TEMPLETN"  230 30  "1 "    0.38    0.96   -350.74   124.53   933.81 AMPS  974.97 AMPS   sumop_before_catb 309
=2=2=2=2=2=2=2=2=2=2=2=2=2=2=2=2=2=2=2=2=2=2=2=2=2=2=2=2=2=2=2=2=2=2=2=2=2=2=2=2=2=2=2=2=2=2=2=2=2=2=2=2=

30900 "GATES   "  230 30  30905 "TEMPLETN"  230 30  "1 "    0.38    0.96   -350.48   124.74   932.55 AMPS  974.97 AMPS   sumop_before_catb 310
=2=2=2=2=2=2=2=2=2=2=2=2=2=2=2=2=2=2=2=2=2=2=2=2=2=2=2=2=2=2=2=2=2=2=2=2=2=2=2=2=2=2=2=2=2=2=2=2=2=2=2=2=

30900 "GATES   "  230 30  30905 "TEMPLETN"  230 30  "1 "    0.38    0.96   -350.46   124.50   932.67 AMPS  974.97 AMPS   sumop_before_catb 311
=2=2=2=2=2=2=2=2=2=2=2=2=2=2=2=2=2=2=2=2=2=2=2=2=2=2=2=2=2=2=2=2=2=2=2=2=2=2=2=2=2=2=2=2=2=2=2=2=2=2=2=2=

30900 "GATES   "  230 30  30905 "TEMPLETN"  230 30  "1 "    0.38    0.96   -350.83   124.63   934.08 AMPS  974.97 AMPS   sumop_before_catb 312
=2=2=2=2=2=2=2=2=2=2=2=2=2=2=2=2=2=2=2=2=2=2=2=2=2=2=2=2=2=2=2=2=2=2=2=2=2=2=2=2=2=2=2=2=2=2=2=2=2=2=2=2=

30900 "GATES   "  230 30  30915 "MORROBAY"  230 30  "1 "    0.43    1.00   -365.47   129.92   972.93 AMPS  974.97 AMPS   sumop_before_catb 146
30900 "GATES   "  230 30  30915 "MORROBAY"  230 30  "1 "    0.34    0.90   -336.10   110.03   881.34 AMPS  974.97 AMPS   sumop_after_catb 146

30900 "GATES   "  230 30  30915 "MORROBAY"  230 30  "1 "    0.43    1.00   -365.53   129.96   973.13 AMPS  974.97 AMPS   sumop_before_catb 178
30900 "GATES   "  230 30  30915 "MORROBAY"  230 30  "1 "    0.34    0.90   -336.12   110.05   881.39 AMPS  974.97 AMPS   sumop_after_catb 178

30900 "GATES   "  230 30  30915 "MORROBAY"  230 30  "1 "    0.43    1.21   -423.13   191.28  1184.46 AMPS  974.97 AMPS   sumop_before_catb 179
30900 "GATES   "  230 30  30915 "MORROBAY"  230 30  "1 "    0.34    1.10   -395.29   156.29  1072.30 AMPS  974.97 AMPS   sumop_after_catb 179

30900 "GATES   "  230 30  30915 "MORROBAY"  230 30  "1 "    0.43    1.00   -365.87   130.26   974.28 AMPS  974.97 AMPS   sumop_before_catb 180
30900 "GATES   "  230 30  30915 "MORROBAY"  230 30  "1 "    0.34    0.91   -336.52   110.32   882.66 AMPS  974.97 AMPS   sumop_after_catb 180

30900 "GATES   "  230 30  30915 "MORROBAY"  230 30  "1 "    0.43    1.00   -365.72   130.09   973.81 AMPS  974.97 AMPS   sumop_before_catb 181
30900 "GATES   "  230 30  30915 "MORROBAY"  230 30  "1 "    0.34    0.91   -336.50   110.29   882.62 AMPS  974.97 AMPS   sumop_after_catb 181

30900 "GATES   "  230 30  30915 "MORROBAY"  230 30  "1 "    0.43    1.00   -365.48   129.93   972.97 AMPS  974.97 AMPS   sumop_before_catb 182
30900 "GATES   "  230 30  30915 "MORROBAY"  230 30  "1 "    0.34    0.90   -336.11   110.03   881.36 AMPS  974.97 AMPS   sumop_after_catb 182

30900 "GATES   "  230 30  30915 "MORROBAY"  230 30  "1 "    0.43    1.00   -365.48   129.93   972.98 AMPS  974.97 AMPS   sumop_before_catb 183
30900 "GATES   "  230 30  30915 "MORROBAY"  230 30  "1 "    0.34    0.90   -336.08   110.04   881.26 AMPS  974.97 AMPS   sumop_after_catb 183

30900 "GATES   "  230 30  30915 "MORROBAY"  230 30  "1 "    0.43    1.00   -366.11   130.46   975.11 AMPS  974.97 AMPS   sumop_before_catb 184
30900 "GATES   "  230 30  30915 "MORROBAY"  230 30  "1 "    0.34    0.91   -336.49   110.29   882.59 AMPS  974.97 AMPS   sumop_after_catb 184
```

--------FROM BUS--------				----------TO BUS-----------					(RATE 1)	(RATE 2)	---------OUTAGE------------			(RATE 2)		
Bus #	NAME	KV	AREA	Bus #	NAME	KV	AREA	ID	BASE	OUTAGE	MW	MVAR	FLOW	RATING	FILE	OUTAGE #
30900	"GATES "	230	30	30915	"MORROBAY"	230	30	"1 "	0.43	1.01	-369.77	130.10	983.36 AMPS	974.97 AMPS	sumop_before_catb	185
30900	"GATES "	230	30	30915	"MORROBAY"	230	30	"1 "	0.34	0.92	-340.41	113.27	894.85 AMPS	974.97 AMPS	sumop_after_catb	185
30900	"GATES "	230	30	30915	"MORROBAY"	230	30	"1 "	0.43	1.00	-365.49	129.98	972.95 AMPS	974.97 AMPS	sumop_before_catb	186
30900	"GATES "	230	30	30915	"MORROBAY"	230	30	"1 "	0.34	0.90	-336.14	110.11	881.42 AMPS	974.97 AMPS	sumop_after_catb	186
30900	"GATES "	230	30	30915	"MORROBAY"	230	30	"1 "	0.43	1.00	-365.94	130.30	974.53 AMPS	974.97 AMPS	sumop_before_catb	187
30900	"GATES "	230	30	30915	"MORROBAY"	230	30	"1 "	0.34	0.91	-336.53	110.32	882.72 AMPS	974.97 AMPS	sumop_after_catb	187
30900	"GATES "	230	30	30915	"MORROBAY"	230	30	"1 "	0.43	1.00	-365.45	129.92	972.83 AMPS	974.97 AMPS	sumop_before_catb	188
30900	"GATES "	230	30	30915	"MORROBAY"	230	30	"1 "	0.34	0.90	-336.14	110.06	881.46 AMPS	974.97 AMPS	sumop_after_catb	188
30900	"GATES "	230	30	30915	"MORROBAY"	230	30	"1 "	0.43	0.99	-362.40	127.21	962.67 AMPS	974.97 AMPS	sumop_before_catb	189
=2=2=2=2=2=2=2=2=2=2=2=2=2=2=2=2=2=2=2=2=2=2=2=2=2=2=2=2=2=2=2=2=2=2=2=2=2=2=2=2=2=2=2=2=2=2=																
30900	"GATES "	230	30	30915	"MORROBAY"	230	30	"1 "	0.43	0.93	-345.90	113.71	909.01 AMPS	974.97 AMPS	sumop_before_catb	217
=2=2=2=2=2=2=2=2=2=2=2=2=2=2=2=2=2=2=2=2=2=2=2=2=2=2=2=2=2=2=2=2=2=2=2=2=2=2=2=2=2=2=2=2=2=2=																
30900	"GATES "	230	30	30915	"MORROBAY"	230	30	"1 "	0.43	1.00	-365.51	129.90	973.09 AMPS	974.97 AMPS	sumop_before_catb	298
30900	"GATES "	230	30	30915	"MORROBAY"	230	30	"1 "	0.34	0.91	-336.48	110.28	882.53 AMPS	974.97 AMPS	sumop_after_catb	298
30900	"GATES "	230	30	30915	"MORROBAY"	230	30	"1 "	0.43	1.00	-365.56	129.92	973.28 AMPS	974.97 AMPS	sumop_before_catb	299
30900	"GATES "	230	30	30915	"MORROBAY"	230	30	"1 "	0.34	0.90	-336.35	110.13	882.19 AMPS	974.97 AMPS	sumop_after_catb	299
30900	"GATES "	230	30	30915	"MORROBAY"	230	30	"1 "	0.43	1.00	-365.58	129.96	973.32 AMPS	974.97 AMPS	sumop_before_catb	300
30900	"GATES "	230	30	30915	"MORROBAY"	230	30	"1 "	0.34	0.90	-336.37	110.17	882.23 AMPS	974.97 AMPS	sumop_after_catb	300
30900	"GATES "	230	30	30915	"MORROBAY"	230	30	"1 "	0.43	1.00	-365.49	129.88	973.05 AMPS	974.97 AMPS	sumop_before_catb	301
30900	"GATES "	230	30	30915	"MORROBAY"	230	30	"1 "	0.34	0.90	-336.25	110.10	881.85 AMPS	974.97 AMPS	sumop_after_catb	301
30900	"GATES "	230	30	30915	"MORROBAY"	230	30	"1 "	0.43	1.00	-365.42	129.85	972.77 AMPS	974.97 AMPS	sumop_before_catb	302
30900	"GATES "	230	30	30915	"MORROBAY"	230	30	"1 "	0.34	0.90	-336.19	110.09	881.63 AMPS	974.97 AMPS	sumop_after_catb	302
30900	"GATES "	230	30	30915	"MORROBAY"	230	30	"1 "	0.43	1.00	-365.48	129.94	972.96 AMPS	974.97 AMPS	sumop_before_catb	303
30900	"GATES "	230	30	30915	"MORROBAY"	230	30	"1 "	0.34	0.90	-336.10	110.04	881.34 AMPS	974.97 AMPS	sumop_after_catb	303
30900	"GATES "	230	30	30915	"MORROBAY"	230	30	"1 "	0.43	1.00	-365.49	129.92	973.00 AMPS	974.97 AMPS	sumop_before_catb	304
30900	"GATES "	230	30	30915	"MORROBAY"	230	30	"1 "	0.34	0.90	-336.12	110.03	881.40 AMPS	974.97 AMPS	sumop_after_catb	304
30900	"GATES "	230	30	30915	"MORROBAY"	230	30	"1 "	0.43	1.00	-365.55	129.98	973.22 AMPS	974.97 AMPS	sumop_before_catb	305
30900	"GATES "	230	30	30915	"MORROBAY"	230	30	"1 "	0.34	0.91	-336.54	110.33	882.73 AMPS	974.97 AMPS	sumop_after_catb	305
30900	"GATES "	230	30	30915	"MORROBAY"	230	30	"1 "	0.43	0.99	-362.40	127.21	962.67 AMPS	974.97 AMPS	sumop_before_catb	306
=2=2=2=2=2=2=2=2=2=2=2=2=2=2=2=2=2=2=2=2=2=2=2=2=2=2=2=2=2=2=2=2=2=2=2=2=2=2=2=2=2=2=2=2=2=2=																
30900	"GATES "	230	30	30915	"MORROBAY"	230	30	"1 "	0.43	1.00	-365.41	129.83	972.73 AMPS	974.97 AMPS	sumop_before_catb	307
30900	"GATES "	230	30	30915	"MORROBAY"	230	30	"1 "	0.34	0.90	-336.17	110.06	881.57 AMPS	974.97 AMPS	sumop_after_catb	307

--------FROM BUS--------				----------TO BUS----------					(RATE 1)	(RATE 2)	---------OUTAGE----------			(RATE 2)		
Bus #	NAME	KV	AREA	Bus #	NAME	KV	AREA	ID	BASE	OUTAGE	MW	MVAR	FLOW	RATING	FILE	OUTAGE #
30900	"GATES "	230	30	30915	"MORROBAY"	230	30	"1 "	0.43	1.00	-365.76	130.24	973.89 AMPS	974.97 AMPS	sumop_before_catb 308	
30900	"GATES "	230	30	30915	"MORROBAY"	230	30	"1 "	0.34	0.90	-336.33	110.28	882.04 AMPS	974.97 AMPS	sumop_after_catb 308	
30900	"GATES "	230	30	30915	"MORROBAY"	230	30	"1 "	0.43	1.00	-365.73	130.05	973.87 AMPS	974.97 AMPS	sumop_before_catb 309	
30900	"GATES "	230	30	30915	"MORROBAY"	230	30	"1 "	0.34	0.90	-336.38	110.16	882.28 AMPS	974.97 AMPS	sumop_after_catb 309	
30900	"GATES "	230	30	30915	"MORROBAY"	230	30	"1 "	0.43	1.00	-365.47	130.25	972.58 AMPS	974.97 AMPS	sumop_before_catb 310	
30900	"GATES "	230	30	30915	"MORROBAY"	230	30	"1 "	0.34	0.90	-336.11	110.44	881.07 AMPS	974.97 AMPS	sumop_after_catb 310	
30900	"GATES "	230	30	30915	"MORROBAY"	230	30	"1 "	0.43	1.00	-365.44	130.01	972.70 AMPS	974.97 AMPS	sumop_before_catb 311	
30900	"GATES "	230	30	30915	"MORROBAY"	230	30	"1 "	0.34	0.90	-336.06	110.14	881.13 AMPS	974.97 AMPS	sumop_after_catb 311	
30900	"GATES "	230	30	30915	"MORROBAY"	230	30	"1 "	0.43	1.00	-365.81	130.15	974.14 AMPS	974.97 AMPS	sumop_before_catb 312	
30900	"GATES "	230	30	30915	"MORROBAY"	230	30	"1 "	0.34	0.91	-336.52	110.29	882.67 AMPS	974.97 AMPS	sumop_after_catb 312	
30905	"TEMPLETN"	230	30	30915	"MORROBAY"	230	30	"1 "	0.58	1.15	-433.16	42.83	1120.32 AMPS	974.97 AMPS	sumop_before_catb 146	
30905	"TEMPLETN"	230	30	30915	"MORROBAY"	230	30	"1 "	0.49	1.05	-400.63	41.87	1025.36 AMPS	974.97 AMPS	sumop_after_catb 146	
30905	"TEMPLETN"	230	30	30915	"MORROBAY"	230	30	"1 "	0.58	0.91	-301.42	28.90	752.12 AMPS	825.11 AMPS	sumop_before_catb 164	
=2=2=2=2=2=2=2=2=2=2=2=2=2=2=2=2=2=2=2=2=2=2=2=2=2=2=2=2=2=2=2=2=2=2=2=2=2=2=2=2=2=2=2=2=2=2=2=2=2=2=2=																
30905	"TEMPLETN"	230	30	30915	"MORROBAY"	230	30	"1 "	0.58	1.15	-433.22	42.82	1120.53 AMPS	974.97 AMPS	sumop_before_catb 178	
30905	"TEMPLETN"	230	30	30915	"MORROBAY"	230	30	"1 "	0.49	1.05	-400.65	41.88	1025.42 AMPS	974.97 AMPS	sumop_after_catb 178	
30905	"TEMPLETN"	230	30	30915	"MORROBAY"	230	30	"1 "	0.58	1.38	-500.37	45.14	1346.82 AMPS	974.97 AMPS	sumop_before_catb 179	
30905	"TEMPLETN"	230	30	30915	"MORROBAY"	230	30	"1 "	0.49	1.26	-466.93	44.95	1224.65 AMPS	974.97 AMPS	sumop_after_catb 179	
30905	"TEMPLETN"	230	30	30915	"MORROBAY"	230	30	"1 "	0.58	1.15	-433.61	42.86	1121.74 AMPS	974.97 AMPS	sumop_before_catb 180	
30905	"TEMPLETN"	230	30	30915	"MORROBAY"	230	30	"1 "	0.49	1.05	-401.09	41.90	1026.74 AMPS	974.97 AMPS	sumop_after_catb 180	
30905	"TEMPLETN"	230	30	30915	"MORROBAY"	230	30	"1 "	0.58	1.15	-433.45	42.79	1121.25 AMPS	974.97 AMPS	sumop_before_catb 181	
30905	"TEMPLETN"	230	30	30915	"MORROBAY"	230	30	"1 "	0.49	1.05	-401.08	41.87	1026.71 AMPS	974.97 AMPS	sumop_after_catb 181	
30905	"TEMPLETN"	230	30	30915	"MORROBAY"	230	30	"1 "	0.58	1.15	-433.17	42.82	1120.36 AMPS	974.97 AMPS	sumop_before_catb 182	
30905	"TEMPLETN"	230	30	30915	"MORROBAY"	230	30	"1 "	0.49	1.05	-400.64	41.87	1025.39 AMPS	974.97 AMPS	sumop_after_catb 182	
30905	"TEMPLETN"	230	30	30915	"MORROBAY"	230	30	"1 "	0.58	1.15	-433.18	42.82	1120.38 AMPS	974.97 AMPS	sumop_before_catb 183	
30905	"TEMPLETN"	230	30	30915	"MORROBAY"	230	30	"1 "	0.49	1.05	-400.61	41.90	1025.28 AMPS	974.97 AMPS	sumop_after_catb 183	
30905	"TEMPLETN"	230	30	30915	"MORROBAY"	230	30	"1 "	0.58	1.15	-433.89	42.86	1122.62 AMPS	974.97 AMPS	sumop_before_catb 184	
30905	"TEMPLETN"	230	30	30915	"MORROBAY"	230	30	"1 "	0.49	1.05	-401.07	41.88	1026.67 AMPS	974.97 AMPS	sumop_after_catb 184	
30905	"TEMPLETN"	230	30	30915	"MORROBAY"	230	30	"1 "	0.58	1.16	-437.84	40.94	1130.55 AMPS	974.97 AMPS	sumop_before_catb 185	
30905	"TEMPLETN"	230	30	30915	"MORROBAY"	230	30	"1 "	0.49	1.07	-405.37	42.47	1039.39 AMPS	974.97 AMPS	sumop_after_catb 185	
30905	"TEMPLETN"	230	30	30915	"MORROBAY"	230	30	"1 "	0.58	1.15	-433.18	42.89	1120.34 AMPS	974.97 AMPS	sumop_before_catb 186	

--------FROM BUS--------			----------TO BUS----------				(RATE 1)	(RATE 2)	---------OUTAGE----------			(RATE 2)	
Bus #	NAME	KV AREA	Bus #	NAME	KV AREA	ID	BASE	OUTAGE	MW	MVAR	FLOW	RATING	FILE OUTAGE #
30905	"TEMPLETN"	230 30	30915	"MORROBAY"	230 30	"1 "	0.49	1.05	-400.67	41.94	1025.44 AMPS	974.97 AMPS	sumop_after_catb 186
30905	"TEMPLETN"	230 30	30915	"MORROBAY"	230 30	"1 "	0.58	1.15	-433.69	42.84	1122.00 AMPS	974.97 AMPS	sumop_before_catb 187
30905	"TEMPLETN"	230 30	30915	"MORROBAY"	230 30	"1 "	0.49	1.05	-401.12	41.88	1026.81 AMPS	974.97 AMPS	sumop_after_catb 187
30905	"TEMPLETN"	230 30	30915	"MORROBAY"	230 30	"1 "	0.58	1.15	-433.13	42.85	1120.22 AMPS	974.97 AMPS	sumop_before_catb 188
30905	"TEMPLETN"	230 30	30915	"MORROBAY"	230 30	"1 "	0.49	1.05	-400.69	41.81	1025.54 AMPS	974.97 AMPS	sumop_after_catb 188
30905	"TEMPLETN"	230 30	30915	"MORROBAY"	230 30	"1 "	0.58	1.14	-429.75	42.31	1109.65 AMPS	974.97 AMPS	sumop_before_catb 189
30905	"TEMPLETN"	230 30	30915	"MORROBAY"	230 30	"1 "	0.49	1.04	-397.21	41.48	1015.28 AMPS	974.97 AMPS	sumop_after_catb 189
30905	"TEMPLETN"	230 30	30915	"MORROBAY"	230 30	"1 "	0.58	0.92	-355.53	32.56	898.31 AMPS	974.97 AMPS	sumop_before_catb 193
=2=2=2=2=2=2=2=2=2=2=2=2=2=2=2=2=2=2=2=2=2=2=2=2=2=2=2=2=2=2=2=2=2=2=2=2=2=2=2=2=2=2=2=2=2=2=													
30905	"TEMPLETN"	230 30	30915	"MORROBAY"	230 30	"1 "	0.58	1.08	-411.38	40.17	1053.57 AMPS	974.97 AMPS	sumop_before_catb 217
30905	"TEMPLETN"	230 30	30915	"MORROBAY"	230 30	"1 "	0.49	0.99	-379.16	39.64	963.03 AMPS	974.97 AMPS	sumop_after_catb 217
30905	"TEMPLETN"	230 30	30915	"MORROBAY"	230 30	"1 "	0.58	1.15	-433.21	42.76	1120.50 AMPS	974.97 AMPS	sumop_before_catb 298
30905	"TEMPLETN"	230 30	30915	"MORROBAY"	230 30	"1 "	0.49	1.05	-401.05	41.88	1026.61 AMPS	974.97 AMPS	sumop_after_catb 298
30905	"TEMPLETN"	230 30	30915	"MORROBAY"	230 30	"1 "	0.58	1.15	-433.26	42.74	1120.69 AMPS	974.97 AMPS	sumop_before_catb 299
30905	"TEMPLETN"	230 30	30915	"MORROBAY"	230 30	"1 "	0.49	1.05	-400.92	41.79	1026.26 AMPS	974.97 AMPS	sumop_after_catb 299
30905	"TEMPLETN"	230 30	30915	"MORROBAY"	230 30	"1 "	0.58	1.15	-433.28	42.78	1120.73 AMPS	974.97 AMPS	sumop_before_catb 300
30905	"TEMPLETN"	230 30	30915	"MORROBAY"	230 30	"1 "	0.49	1.05	-400.94	41.83	1026.30 AMPS	974.97 AMPS	sumop_after_catb 300
30905	"TEMPLETN"	230 30	30915	"MORROBAY"	230 30	"1 "	0.58	1.15	-433.19	42.76	1120.45 AMPS	974.97 AMPS	sumop_before_catb 301
30905	"TEMPLETN"	230 30	30915	"MORROBAY"	230 30	"1 "	0.49	1.05	-400.80	41.84	1025.90 AMPS	974.97 AMPS	sumop_after_catb 301
30905	"TEMPLETN"	230 30	30915	"MORROBAY"	230 30	"1 "	0.58	1.15	-433.11	42.79	1120.15 AMPS	974.97 AMPS	sumop_before_catb 302
30905	"TEMPLETN"	230 30	30915	"MORROBAY"	230 30	"1 "	0.49	1.05	-400.74	41.87	1025.67 AMPS	974.97 AMPS	sumop_after_catb 302
30905	"TEMPLETN"	230 30	30915	"MORROBAY"	230 30	"1 "	0.58	1.15	-433.17	42.83	1120.36 AMPS	974.97 AMPS	sumop_before_catb 303
30905	"TEMPLETN"	230 30	30915	"MORROBAY"	230 30	"1 "	0.49	1.05	-400.63	41.88	1025.37 AMPS	974.97 AMPS	sumop_after_catb 303
30905	"TEMPLETN"	230 30	30915	"MORROBAY"	230 30	"1 "	0.58	1.15	-433.18	42.81	1120.40 AMPS	974.97 AMPS	sumop_before_catb 304
30905	"TEMPLETN"	230 30	30915	"MORROBAY"	230 30	"1 "	0.49	1.05	-400.65	41.86	1025.43 AMPS	974.97 AMPS	sumop_after_catb 304
30905	"TEMPLETN"	230 30	30915	"MORROBAY"	230 30	"1 "	0.58	1.15	-433.25	42.82	1120.63 AMPS	974.97 AMPS	sumop_before_catb 305
30905	"TEMPLETN"	230 30	30915	"MORROBAY"	230 30	"1 "	0.49	1.05	-401.12	41.89	1026.82 AMPS	974.97 AMPS	sumop_after_catb 305
30905	"TEMPLETN"	230 30	30915	"MORROBAY"	230 30	"1 "	0.58	1.14	-429.75	42.31	1109.65 AMPS	974.97 AMPS	sumop_before_catb 306
30905	"TEMPLETN"	230 30	30915	"MORROBAY"	230 30	"1 "	0.49	1.04	-397.21	41.48	1015.28 AMPS	974.97 AMPS	sumop_after_catb 306
30905	"TEMPLETN"	230 30	30915	"MORROBAY"	230 30	"1 "	0.58	1.15	-433.09	42.77	1120.12 AMPS	974.97 AMPS	sumop_before_catb 307
30905	"TEMPLETN"	230 30	30915	"MORROBAY"	230 30	"1 "	0.49	1.05	-400.71	41.86	1025.60 AMPS	974.97 AMPS	sumop_after_catb 307

--------FROM BUS--------			----------TO BUS----------				(RATE 1)	(RATE 2)	---------OUTAGE----------			(RATE 2)	
Bus #	NAME	KV AREA	Bus #	NAME	KV AREA	ID	BASE	OUTAGE	MW	MVAR	FLOW	RATING	FILE OUTAGE #
30905	"TEMPLETN"	230 30	30915	"MORROBAY"	230 30	"1 "	0.58	1.15	-433.49	42.93	1121.33 AMPS	974.97 AMPS	sumop_before_catb 308
30905	"TEMPLETN"	230 30	30915	"MORROBAY"	230 30	"1 "	0.49	1.05	-400.89	41.98	1026.09 AMPS	974.97 AMPS	sumop_after_catb 308
30905	"TEMPLETN"	230 30	30915	"MORROBAY"	230 30	"1 "	0.58	1.15	-433.45	42.73	1121.31 AMPS	974.97 AMPS	sumop_before_catb 309
30905	"TEMPLETN"	230 30	30915	"MORROBAY"	230 30	"1 "	0.49	1.05	-400.95	41.81	1026.35 AMPS	974.97 AMPS	sumop_after_catb 309
30905	"TEMPLETN"	230 30	30915	"MORROBAY"	230 30	"1 "	0.58	1.15	-433.14	43.27	1119.94 AMPS	974.97 AMPS	sumop_before_catb 310
30905	"TEMPLETN"	230 30	30915	"MORROBAY"	230 30	"1 "	0.49	1.05	-400.63	42.36	1025.08 AMPS	974.97 AMPS	sumop_after_catb 310
30905	"TEMPLETN"	230 30	30915	"MORROBAY"	230 30	"1 "	0.58	1.15	-433.12	42.97	1120.08 AMPS	974.97 AMPS	sumop_before_catb 311
30905	"TEMPLETN"	230 30	30915	"MORROBAY"	230 30	"1 "	0.49	1.05	-400.59	42.03	1025.14 AMPS	974.97 AMPS	sumop_after_catb 311
30905	"TEMPLETN"	230 30	30915	"MORROBAY"	230 30	"1 "	0.58	1.15	-433.55	42.77	1121.60 AMPS	974.97 AMPS	sumop_before_catb 312
30905	"TEMPLETN"	230 30	30915	"MORROBAY"	230 30	"1 "	0.49	1.05	-401.10	41.87	1026.75 AMPS	974.97 AMPS	sumop_after_catb 312
30905	"TEMPLETN"	230 30	30915	"MORROBAY"	230 30	"1 "	0.58	0.92	-355.53	32.56	898.31 AMPS	974.97 AMPS	sumop_before_catb 72
=2=2=2=2=2=2=2=2=2=2=2=2=2=2=2=2=2=2=2=2=2=2=2=2=2=2=2=2=2=2=2=2=2=2=2=2=2=2=2=2=2=2=2=2=2=2=2=2=2=2=2=2=2=2=													
32780	"CLARMNT "	115 30	33008	"GRIZLYJ2"	115 30	"1 "	0.78	0.99	163.63	-19.62	796.64 AMPS	803.27 AMPS	sumop_before_catb 115
32780	"CLARMNT "	115 30	33008	"GRIZLYJ2"	115 30	"1 "	0.78	1.00	164.27	-19.75	799.68 AMPS	803.27 AMPS	sumop_after_catb 115
32780	"CLARMNT "	115 30	33008	"GRIZLYJ2"	115 30	"1 "	0.78	0.99	163.33	-19.83	796.37 AMPS	803.27 AMPS	sumop_before_catb 3
32780	"CLARMNT "	115 30	33008	"GRIZLYJ2"	115 30	"1 "	0.78	0.99	163.87	-19.97	798.89 AMPS	803.27 AMPS	sumop_after_catb 3
32780	"CLARMNT "	115 30	33008	"GRIZLYJ2"	115 30	"1 "	0.78	0.97	160.15	-20.30	781.33 AMPS	803.27 AMPS	sumop_before_catb 30
32780	"CLARMNT "	115 30	33008	"GRIZLYJ2"	115 30	"1 "	0.78	0.98	160.68	-20.44	783.85 AMPS	803.27 AMPS	sumop_after_catb 30
32780	"CLARMNT "	115 30	33012	"EST PRTL"	115 30	"1 "	0.68	0.92	148.89	-22.55	731.54 AMPS	798.25 AMPS	sumop_before_catb 4
32780	"CLARMNT "	115 30	33012	"EST PRTL"	115 30	"1 "	0.69	0.92	149.39	-22.70	733.93 AMPS	798.25 AMPS	sumop_after_catb 4
33006	"GRIZLYJ1"	115 30	33012	"EST PRTL"	115 30	"1 "	0.72	0.91	150.34	-17.86	731.85 AMPS	803.27 AMPS	sumop_before_catb 115
33006	"GRIZLYJ1"	115 30	33012	"EST PRTL"	115 30	"1 "	0.72	0.91	150.92	-17.98	734.57 AMPS	803.27 AMPS	sumop_after_catb 115
33006	"GRIZLYJ1"	115 30	33012	"EST PRTL"	115 30	"1 "	0.72	0.95	156.23	-19.00	761.74 AMPS	803.27 AMPS	sumop_before_catb 4
33006	"GRIZLYJ1"	115 30	33012	"EST PRTL"	115 30	"1 "	0.72	0.95	156.73	-19.13	764.12 AMPS	803.27 AMPS	sumop_after_catb 4
=1=1=1=1=1=1=1=1=1=1=1=1=1=1=1=1=1=1=1=1=1=1=1=1=1=1=1=1=1=1=1=1=1=1=1=1=1=1=1=1=1=1=1=1=1=1=1=1=1=1=1=1=1=1=													
33010	"SOBRANTE"	115 30	33020	"MORAGA "	115 30	"1 "	0.79	0.90	-188.07	19.64	919.04 AMPS	1021.16 AMPS	sumop_after_catb 4
34570	"COLNGA 2"	70 30	34572	"TORNADO "	70 30	"1 "	0.78	0.95	-37.39	27.52	357.30 AMPS	377.75 AMPS	sumop_before_catb 179
34570	"COLNGA 2"	70 30	34572	"TORNADO "	70 30	"1 "	0.75	0.93	-35.86	28.44	349.86 AMPS	377.75 AMPS	sumop_after_catb 179

--------FROM BUS--------				----------TO BUS-----------					(RATE 1)	(RATE 2)	---------OUTAGE------------			(RATE 2)		
Bus #	NAME	KV	AREA	Bus #	NAME	KV	AREA	ID	BASE	OUTAGE	MW	MVAR	FLOW	RATING	FILE	OUTAGE #
30460	"VACA-DIX"	230	30	30478	"LAMBIE "	230	30	"1 "	0.48	0.99	-378.82	81.44	948.76 AMPS	953.88 AMPS	sumpk_before_catc	87
30460	"VACA-DIX"	230	30	30478	"LAMBIE "	230	30	"1 "	0.49	0.99	-378.82	81.62	948.60 AMPS	953.88 AMPS	sumpk_after_catc	87
30525	"C.COSTA "	230	30	30543	"ROSSTAP1"	230	30	"1 "	0.77	0.94	363.73	40.84	895.62 AMPS	953.88 AMPS	sumpk_before_catc	143
30525	"C.COSTA "	230	30	30543	"ROSSTAP1"	230	30	"1 "	0.77	0.93	360.78	40.44	888.20 AMPS	953.88 AMPS	sumpk_after_catc	143
30525	"C.COSTA "	230	30	30543	"ROSSTAP1"	230	30	"1 "	0.77	0.94	364.14	39.55	897.02 AMPS	953.88 AMPS	sumpk_before_catc	92
30525	"C.COSTA "	230	30	30543	"ROSSTAP1"	230	30	"1 "	0.77	0.93	361.19	39.15	889.60 AMPS	953.88 AMPS	sumpk_after_catc	92
30525	"C.COSTA "	230	30	30544	"ROSSTAP2"	230	30	"1 "	0.73	0.90	349.09	34.92	859.17 AMPS	953.88 AMPS	sumpk_before_catc	92
=2=2=2=2=2=2=2=2=2=2=2=2=2=2=2=2=2=2=2=2=2=2=2=2=2=2=2=2=2=2=2=2=2=2=2=2=2=2=2=2=2=2=																
30525	"C.COSTA "	230	30	30585	"LS PSTAS"	230	30	"1 "	1.02	0.99	404.42	19.48	990.11 AMPS	999.07 AMPS	sumpk_before_catc	105
30525	"C.COSTA "	230	30	30585	"LS PSTAS"	230	30	"1 "	1.01	0.98	399.23	19.30	977.26 AMPS	999.07 AMPS	sumpk_after_catc	105
30525	"C.COSTA "	230	30	30585	"LS PSTAS"	230	30	"1 "	1.02	0.96	392.78	18.10	961.95 AMPS	999.07 AMPS	sumpk_before_catc	106
30525	"C.COSTA "	230	30	30585	"LS PSTAS"	230	30	"1 "	1.01	0.95	387.60	17.95	949.13 AMPS	999.07 AMPS	sumpk_after_catc	106
30525	"C.COSTA "	230	30	30585	"LS PSTAS"	230	30	"1 "	1.02	1.02	416.69	16.20	1021.67 AMPS	999.07 AMPS	sumpk_before_catc	109
30525	"C.COSTA "	230	30	30585	"LS PSTAS"	230	30	"1 "	1.01	1.01	411.61	15.99	1009.07 AMPS	999.07 AMPS	sumpk_after_catc	109
30525	"C.COSTA "	230	30	30585	"LS PSTAS"	230	30	"1 "	1.02	1.02	415.40	17.27	1018.04 AMPS	999.07 AMPS	sumpk_before_catc	110
30525	"C.COSTA "	230	30	30585	"LS PSTAS"	230	30	"1 "	1.01	1.01	410.32	17.07	1005.45 AMPS	999.07 AMPS	sumpk_after_catc	110
30525	"C.COSTA "	230	30	30585	"LS PSTAS"	230	30	"1 "	1.02	0.96	393.28	17.13	963.04 AMPS	999.07 AMPS	sumpk_before_catc	111
30525	"C.COSTA "	230	30	30585	"LS PSTAS"	230	30	"1 "	1.01	0.95	388.34	16.99	950.80 AMPS	999.07 AMPS	sumpk_after_catc	111
=1=1=1=1=1=1=1=1=1=1=1=1=1=1=1=1=1=1=1=1=1=1=1=1=1=1=1=1=1=1=1=1=1=1=1=1=1=1=1=1=1=1=																
30525	"C.COSTA "	230	30	30585	"LS PSTAS"	230	30	"1 "	1.01	0.93	378.05	22.84	926.08 AMPS	999.07 AMPS	sumpk_after_catc	112
30525	"C.COSTA "	230	30	30585	"LS PSTAS"	230	30	"1 "	1.02	0.97	397.17	21.62	971.42 AMPS	999.07 AMPS	sumpk_before_catc	115
30525	"C.COSTA "	230	30	30585	"LS PSTAS"	230	30	"1 "	1.01	0.96	392.33	21.40	959.45 AMPS	999.07 AMPS	sumpk_after_catc	115
=1=1=1=1=1=1=1=1=1=1=1=1=1=1=1=1=1=1=1=1=1=1=1=1=1=1=1=1=1=1=1=1=1=1=1=1=1=1=1=1=1=1=																
30525	"C.COSTA "	230	30	30585	"LS PSTAS"	230	30	"1 "	1.01	0.92	373.87	15.67	915.49 AMPS	999.07 AMPS	sumpk_after_catc	116
30525	"C.COSTA "	230	30	30585	"LS PSTAS"	230	30	"1 "	1.02	1.03	421.52	22.40	1034.03 AMPS	999.07 AMPS	sumpk_before_catc	117
30525	"C.COSTA "	230	30	30585	"LS PSTAS"	230	30	"1 "	1.01	1.02	415.73	20.16	1019.09 AMPS	999.07 AMPS	sumpk_after_catc	117
=1=1=1=1=1=1=1=1=1=1=1=1=1=1=1=1=1=1=1=1=1=1=1=1=1=1=1=1=1=1=1=1=1=1=1=1=1=1=1=1=1=1=																
30525	"C.COSTA "	230	30	30585	"LS PSTAS"	230	30	"1 "	1.01	0.90	367.52	16.50	899.63 AMPS	999.07 AMPS	sumpk_after_catc	118
=1=1=1=1=1=1=1=1=1=1=1=1=1=1=1=1=1=1=1=1=1=1=1=1=1=1=1=1=1=1=1=1=1=1=1=1=1=1=1=1=1=1=																
30525	"C.COSTA "	230	30	30585	"LS PSTAS"	230	30	"1 "	1.01	0.90	367.61	16.47	899.86 AMPS	999.07 AMPS	sumpk_after_catc	12
=1=1=1=1=1=1=1=1=1=1=1=1=1=1=1=1=1=1=1=1=1=1=1=1=1=1=1=1=1=1=1=1=1=1=1=1=1=1=1=1=1=1=																

--------FROM BUS--------			----------TO BUS----------				(RATE 1)	(RATE 2)	---------OUTAGE----------			(RATE 2)	
Bus #	NAME	KV AREA	Bus #	NAME	KV AREA	ID	BASE	OUTAGE	MW	MVAR	FLOW	RATING	FILE OUTAGE #
30525	"C.COSTA "	230 30	30585	"LS PSTAS"	230 30	"1 "	1.01	0.92	376.73	22.01	923.20 AMPS	999.07 AMPS	sumpk_after_catc 136
30525	"C.COSTA "	230 30	30585	"LS PSTAS"	230 30	"1 "	1.02	0.99	404.64	21.60	989.09 AMPS	999.07 AMPS	sumpk_before_catc 139
30525	"C.COSTA "	230 30	30585	"LS PSTAS"	230 30	"1 "	1.01	0.98	399.56	21.43	976.54 AMPS	999.07 AMPS	sumpk_after_catc 139
30525	"C.COSTA "	230 30	30585	"LS PSTAS"	230 30	"1 "	1.02	1.01	411.03	17.93	1006.78 AMPS	999.07 AMPS	sumpk_before_catc 141
30525	"C.COSTA "	230 30	30585	"LS PSTAS"	230 30	"1 "	1.01	1.00	405.96	17.73	994.21 AMPS	999.07 AMPS	sumpk_after_catc 141
=1=1=1=1=1=1=1=1=1=1=1=1=1=1=1=1=1=1=1=1=1=1=1=1=1=1=1=1=1=1=1=1=1=1=1=1=1=1=1=1=1=1=1=1=1=1=1=1=1=1=1=1=													
30525	"C.COSTA "	230 30	30585	"LS PSTAS"	230 30	"1 "	1.01	0.94	384.94	16.40	942.90 AMPS	999.07 AMPS	sumpk_after_catc 145
30525	"C.COSTA "	230 30	30585	"LS PSTAS"	230 30	"1 "	1.02	1.03	419.86	18.57	1028.53 AMPS	999.07 AMPS	sumpk_before_catc 148
30525	"C.COSTA "	230 30	30585	"LS PSTAS"	230 30	"1 "	1.01	1.01	413.16	18.31	1011.91 AMPS	999.07 AMPS	sumpk_after_catc 148
30525	"C.COSTA "	230 30	30585	"LS PSTAS"	230 30	"1 "	1.02	0.99	403.35	23.35	989.50 AMPS	999.07 AMPS	sumpk_before_catc 150
30525	"C.COSTA "	230 30	30585	"LS PSTAS"	230 30	"1 "	1.01	0.98	397.57	21.15	974.62 AMPS	999.07 AMPS	sumpk_after_catc 150
=1=1=1=1=1=1=1=1=1=1=1=1=1=1=1=1=1=1=1=1=1=1=1=1=1=1=1=1=1=1=1=1=1=1=1=1=1=1=1=1=1=1=1=1=1=1=1=1=1=1=1=1=													
30525	"C.COSTA "	230 30	30585	"LS PSTAS"	230 30	"1 "	1.01	0.93	377.51	16.16	924.54 AMPS	999.07 AMPS	sumpk_after_catc 160
=1=1=1=1=1=1=1=1=1=1=1=1=1=1=1=1=1=1=1=1=1=1=1=1=1=1=1=1=1=1=1=1=1=1=1=1=1=1=1=1=1=1=1=1=1=1=1=1=1=1=1=1=													
30525	"C.COSTA "	230 30	30585	"LS PSTAS"	230 30	"1 "	1.01	0.90	368.36	16.21	902.02 AMPS	999.07 AMPS	sumpk_after_catc 161
=1=1=1=1=1=1=1=1=1=1=1=1=1=1=1=1=1=1=1=1=1=1=1=1=1=1=1=1=1=1=1=1=1=1=1=1=1=1=1=1=1=1=1=1=1=1=1=1=1=1=1=1=													
30525	"C.COSTA "	230 30	30585	"LS PSTAS"	230 30	"1 "	1.01	0.91	370.64	14.31	907.22 AMPS	999.07 AMPS	sumpk_after_catc 165
=1=1=1=1=1=1=1=1=1=1=1=1=1=1=1=1=1=1=1=1=1=1=1=1=1=1=1=1=1=1=1=1=1=1=1=1=1=1=1=1=1=1=1=1=1=1=1=1=1=1=1=1=													
30525	"C.COSTA "	230 30	30585	"LS PSTAS"	230 30	"1 "	1.01	0.91	369.36	16.05	904.35 AMPS	999.07 AMPS	sumpk_after_catc 169
=1=1=1=1=1=1=1=1=1=1=1=1=1=1=1=1=1=1=1=1=1=1=1=1=1=1=1=1=1=1=1=1=1=1=1=1=1=1=1=1=1=1=1=1=1=1=1=1=1=1=1=1=													
30525	"C.COSTA "	230 30	30585	"LS PSTAS"	230 30	"1 "	1.01	0.90	368.17	16.64	901.15 AMPS	999.07 AMPS	sumpk_after_catc 17
=1=1=1=1=1=1=1=1=1=1=1=1=1=1=1=1=1=1=1=1=1=1=1=1=1=1=1=1=1=1=1=1=1=1=1=1=1=1=1=1=1=1=1=1=1=1=1=1=1=1=1=1=													
30525	"C.COSTA "	230 30	30585	"LS PSTAS"	230 30	"1 "	1.01	0.92	377.22	17.82	923.53 AMPS	999.07 AMPS	sumpk_after_catc 170
30525	"C.COSTA "	230 30	30585	"LS PSTAS"	230 30	"1 "	1.02	0.99	404.66	16.79	991.58 AMPS	999.07 AMPS	sumpk_before_catc 171
30525	"C.COSTA "	230 30	30585	"LS PSTAS"	230 30	"1 "	1.01	0.98	399.56	16.61	978.93 AMPS	999.07 AMPS	sumpk_after_catc 171
30525	"C.COSTA "	230 30	30585	"LS PSTAS"	230 30	"1 "	1.02	1.04	423.97	18.13	1039.09 AMPS	999.07 AMPS	sumpk_before_catc 172
30525	"C.COSTA "	230 30	30585	"LS PSTAS"	230 30	"1 "	1.01	1.02	417.67	17.90	1023.43 AMPS	999.07 AMPS	sumpk_after_catc 172
=1=1=1=1=1=1=1=1=1=1=1=1=1=1=1=1=1=1=1=1=1=1=1=1=1=1=1=1=1=1=1=1=1=1=1=1=1=1=1=1=1=1=1=1=1=1=1=1=1=1=1=1=													
30525	"C.COSTA "	230 30	30585	"LS PSTAS"	230 30	"1 "	1.01	0.91	372.05	17.21	910.48 AMPS	999.07 AMPS	sumpk_after_catc 37
=1=1=1=1=1=1=1=1=1=1=1=1=1=1=1=1=1=1=1=1=1=1=1=1=1=1=1=1=1=1=1=1=1=1=1=1=1=1=1=1=1=1=1=1=1=1=1=1=1=1=1=1=													
30525	"C.COSTA "	230 30	30585	"LS PSTAS"	230 30	"1 "	1.01	0.90	368.72	18.89	901.55 AMPS	999.07 AMPS	sumpk_after_catc 39

--------FROM BUS--------				----------TO BUS-----------					(RATE 1)	(RATE 2)	---------OUTAGE------------			(RATE 2)		
Bus #	NAME	KV	AREA	Bus #	NAME	KV	AREA	ID	BASE	OUTAGE	MW	MVAR	FLOW	RATING	FILE	OUTAGE #
30525	"C.COSTA "	230	30	30585	"LS PSTAS"	230	30	"1 "	1.02	1.02	416.70	14.17	1022.78 AMPS	999.07 AMPS	sumpk_before_catc	43
30525	"C.COSTA "	230	30	30585	"LS PSTAS"	230	30	"1 "	1.01	1.01	411.63	13.97	1010.17 AMPS	999.07 AMPS	sumpk_after_catc	43
=1=1=1=1=1=1=1=1=1=1=1=1=1=1=1=1=1=1=1=1=1=1=1=1=1=1=1=1=1=1=1=1=1=1=1=1=1=1=1=1=1=																
30525	"C.COSTA "	230	30	30585	"LS PSTAS"	230	30	"1 "	1.01	0.91	372.54	13.95	913.49 AMPS	999.07 AMPS	sumpk_after_catc	44
=1=1=1=1=1=1=1=1=1=1=1=1=1=1=1=1=1=1=1=1=1=1=1=1=1=1=1=1=1=1=1=1=1=1=1=1=1=1=1=1=1=																
30525	"C.COSTA "	230	30	30585	"LS PSTAS"	230	30	"1 "	1.01	0.90	366.82	12.20	900.19 AMPS	999.07 AMPS	sumpk_after_catc	45
30525	"C.COSTA "	230	30	30585	"LS PSTAS"	230	30	"1 "	1.02	0.96	390.87	16.47	957.48 AMPS	999.07 AMPS	sumpk_before_catc	46
30525	"C.COSTA "	230	30	30585	"LS PSTAS"	230	30	"1 "	1.01	0.95	386.29	16.37	946.13 AMPS	999.07 AMPS	sumpk_after_catc	46
=1=1=1=1=1=1=1=1=1=1=1=1=1=1=1=1=1=1=1=1=1=1=1=1=1=1=1=1=1=1=1=1=1=1=1=1=1=1=1=1=1=																
30525	"C.COSTA "	230	30	30585	"LS PSTAS"	230	30	"1 "	1.01	0.91	369.29	14.84	905.01 AMPS	999.07 AMPS	sumpk_after_catc	48
=1=1=1=1=1=1=1=1=1=1=1=1=1=1=1=1=1=1=1=1=1=1=1=1=1=1=1=1=1=1=1=1=1=1=1=1=1=1=1=1=1=																
30525	"C.COSTA "	230	30	30585	"LS PSTAS"	230	30	"1 "	1.01	0.91	369.69	15.05	905.95 AMPS	999.07 AMPS	sumpk_after_catc	49
=1=1=1=1=1=1=1=1=1=1=1=1=1=1=1=1=1=1=1=1=1=1=1=1=1=1=1=1=1=1=1=1=1=1=1=1=1=1=1=1=1=																
30525	"C.COSTA "	230	30	30585	"LS PSTAS"	230	30	"1 "	1.01	0.90	368.67	16.91	902.28 AMPS	999.07 AMPS	sumpk_after_catc	53
30525	"C.COSTA "	230	30	30585	"LS PSTAS"	230	30	"1 "	1.02	0.96	391.21	21.05	956.69 AMPS	999.07 AMPS	sumpk_before_catc	54
30525	"C.COSTA "	230	30	30585	"LS PSTAS"	230	30	"1 "	1.01	0.95	386.43	20.93	944.89 AMPS	999.07 AMPS	sumpk_after_catc	54
30525	"C.COSTA "	230	30	30585	"LS PSTAS"	230	30	"1 "	1.02	1.02	416.09	19.54	1018.71 AMPS	999.07 AMPS	sumpk_before_catc	55
30525	"C.COSTA "	230	30	30585	"LS PSTAS"	230	30	"1 "	1.01	1.01	411.05	19.33	1006.23 AMPS	999.07 AMPS	sumpk_after_catc	55
=1=1=1=1=1=1=1=1=1=1=1=1=1=1=1=1=1=1=1=1=1=1=1=1=1=1=1=1=1=1=1=1=1=1=1=1=1=1=1=1=1=																
30525	"C.COSTA "	230	30	30585	"LS PSTAS"	230	30	"1 "	1.01	0.93	380.14	16.31	930.94 AMPS	999.07 AMPS	sumpk_after_catc	56
30525	"C.COSTA "	230	30	30585	"LS PSTAS"	230	30	"1 "	1.02	0.96	393.29	17.82	962.76 AMPS	999.07 AMPS	sumpk_before_catc	58
30525	"C.COSTA "	230	30	30585	"LS PSTAS"	230	30	"1 "	1.01	0.95	389.18	17.72	952.57 AMPS	999.07 AMPS	sumpk_after_catc	58
=1=1=1=1=1=1=1=1=1=1=1=1=1=1=1=1=1=1=1=1=1=1=1=1=1=1=1=1=1=1=1=1=1=1=1=1=1=1=1=1=1=																
30525	"C.COSTA "	230	30	30585	"LS PSTAS"	230	30	"1 "	1.01	0.90	367.47	16.72	899.39 AMPS	999.07 AMPS	sumpk_after_catc	7
30525	"C.COSTA "	230	30	30585	"LS PSTAS"	230	30	"1 "	1.02	1.09	445.98	26.76	1089.50 AMPS	999.07 AMPS	sumpk_before_catc	89
30525	"C.COSTA "	230	30	30585	"LS PSTAS"	230	30	"1 "	1.01	1.08	440.97	26.43	1077.13 AMPS	999.07 AMPS	sumpk_after_catc	89
30525	"C.COSTA "	230	30	30585	"LS PSTAS"	230	30	"1 "	1.02	1.06	430.32	19.23	1054.09 AMPS	999.07 AMPS	sumpk_before_catc	90
30525	"C.COSTA "	230	30	30585	"LS PSTAS"	230	30	"1 "	1.01	1.05	426.96	19.07	1045.73 AMPS	999.07 AMPS	sumpk_after_catc	90
30525	"C.COSTA "	230	30	30585	"LS PSTAS"	230	30	"1 "	1.02	1.01	412.09	16.58	1010.09 AMPS	999.07 AMPS	sumpk_before_catc	91
30525	"C.COSTA "	230	30	30585	"LS PSTAS"	230	30	"1 "	1.01	1.00	408.73	16.46	1001.74 AMPS	999.07 AMPS	sumpk_after_catc	91
30525	"C.COSTA "	230	30	30585	"LS PSTAS"	230	30	"1 "	1.02	1.02	416.70	15.89	1021.90 AMPS	999.07 AMPS	sumpk_before_catc	93
30525	"C.COSTA "	230	30	30585	"LS PSTAS"	230	30	"1 "	1.01	1.01	411.63	15.68	1009.29 AMPS	999.07 AMPS	sumpk_after_catc	93

```
--------FROM BUS--------  ----------TO BUS-----------     (RATE 1) (RATE 2)   ---------OUTAGE------------   (RATE 2)
Bus #    NAME     KV AREA  Bus #   NAME     KV AREA ID      BASE   OUTAGE     MW      MVAR      FLOW         RATING            FILE        OUTAGE #


30525 "C.COSTA "  230 30  30585 "LS PSTAS"  230 30  "1 "    1.02    0.99    404.55    16.68   991.34 AMPS  999.07 AMPS   sumpk_before_catc  96
30525 "C.COSTA "  230 30  30585 "LS PSTAS"  230 30  "1 "    1.01    0.98    398.71    16.42   976.86 AMPS  999.07 AMPS   sumpk_after_catc  96

=1=1=1=1=1=1=1=1=1=1=1=1=1=1=1=1=1=1=1=1=1=1=1=1=1=1=1=1=1=1=1=1=1=1=1=1=1=1=1=1=1=1=1=1=1=1=1=1=1=1=
30525 "C.COSTA "  230 30  30585 "LS PSTAS"  230 30  "1 "    1.01    0.94    382.82    16.25   939.26 AMPS  999.07 AMPS   sumpk_after_catc  98

30526 "PITSBG D"  230 30  30528 "DEC PTSG"  230 30  "1 "    0.65    1.29   -876.88   -45.72  2161.72 AMPS 1669.30 AMPS   sumpk_before_catc  47
30526 "PITSBG D"  230 30  30528 "DEC PTSG"  230 30  "1 "    0.65    1.29   -876.88   -43.92  2160.88 AMPS 1669.30 AMPS   sumpk_after_catc  47

30526 "PITSBG D"  230 30  30528 "DEC PTSG"  230 30  "2 "    0.65    1.30   -876.87   -50.75  2164.13 AMPS 1669.30 AMPS   sumpk_before_catc  46
30526 "PITSBG D"  230 30  30528 "DEC PTSG"  230 30  "2 "    0.65    1.30   -876.87   -48.83  2163.20 AMPS 1669.30 AMPS   sumpk_after_catc  46

30544 "ROSSTAP2"  230 30  30550 "MORAGA  "  230 30  "1 "    0.73    0.90    343.71     9.34   858.81 AMPS  953.88 AMPS   sumpk_before_catc 143
=2=2=2=2=2=2=2=2=2=2=2=2=2=2=2=2=2=2=2=2=2=2=2=2=2=2=2=2=2=2=2=2=2=2=2=2=2=2=2=2=2=2=2=2=2=2=2=2=2=2=

30544 "ROSSTAP2"  230 30  30550 "MORAGA  "  230 30  "1 "    0.73    0.90    344.11     7.93   860.16 AMPS  953.88 AMPS   sumpk_before_catc  92
=2=2=2=2=2=2=2=2=2=2=2=2=2=2=2=2=2=2=2=2=2=2=2=2=2=2=2=2=2=2=2=2=2=2=2=2=2=2=2=2=2=2=2=2=2=2=2=2=2=2=

=1=1=1=1=1=1=1=1=1=1=1=1=1=1=1=1=1=1=1=1=1=1=1=1=1=1=1=1=1=1=1=1=1=1=1=1=1=1=1=1=1=1=1=1=1=1=1=1=1=1=
30560 "E. SHORE"  230 30  30700 "SANMATEO"  230 30  "1 "    0.53    0.94    412.77   -83.67  1052.17 AMPS 1119.56 AMPS   sumpk_after_catc 149

30560 "E. SHORE"  230 30  35105 "EASTSHRE"  115 30  "1 "    0.53    1.10    167.72    56.97   177.13 MVA   161.00 MVA    sumpk_before_catc 121
=2=2=2=2=2=2=2=2=2=2=2=2=2=2=2=2=2=2=2=2=2=2=2=2=2=2=2=2=2=2=2=2=2=2=2=2=2=2=2=2=2=2=2=2=2=2=2=2=2=2=

32754 "OLEUM   "  115 30  32802 "VLYVWTP1"  115 30  "1 "    0.31    0.94     85.15    19.45   442.64 AMPS  471.92 AMPS   sumpk_before_catc  25
32754 "OLEUM   "  115 30  32802 "VLYVWTP1"  115 30  "1 "    0.31    0.94     85.15    19.45   442.58 AMPS  471.92 AMPS   sumpk_after_catc  25

32754 "OLEUM   "  115 30  33016 "ALHAMTP2"  115 30  "1 "    0.39    1.11    116.07    -9.76   579.35 AMPS  522.13 AMPS   sumpk_before_catc  74
32754 "OLEUM   "  115 30  33016 "ALHAMTP2"  115 30  "1 "    0.40    1.11    116.57    -9.91   581.83 AMPS  522.13 AMPS   sumpk_after_catc  74

32756 "CHRISTIE"  115 30  33010 "SOBRANTE"  115 30  "1 "    0.34    0.91    -85.76   -40.10   474.67 AMPS  523.13 AMPS   sumpk_before_catc  25
32756 "CHRISTIE"  115 30  33010 "SOBRANTE"  115 30  "1 "    0.34    0.91    -85.58   -40.28   474.15 AMPS  523.13 AMPS   sumpk_after_catc  25

32792 "STATIN J"  115 30  33020 "MORAGA  "  115 30  "1 "    0.59    1.31    186.01    42.05   925.74 AMPS  708.89 AMPS   sumpk_before_catc 118
32792 "STATIN J"  115 30  33020 "MORAGA  "  115 30  "1 "    0.59    1.31    186.01    42.02   925.54 AMPS  708.89 AMPS   sumpk_after_catc 118

32814 "EDESTAP1"  115 30  35113 "DMTAR_SL"  115 30  "1 "    0.58    0.95   -172.81    -8.59   902.27 AMPS  947.86 AMPS   sumpk_before_catc  36
32814 "EDESTAP1"  115 30  35113 "DMTAR_SL"  115 30  "1 "    0.58    0.95   -172.81    -8.57   902.08 AMPS  947.86 AMPS   sumpk_after_catc  36

32814 "EDESTAP1"  115 30  35113 "DMTAR_SL"  115 30  "1 "    0.58    0.95   -172.80    -8.26   897.96 AMPS  947.86 AMPS   sumpk_before_catc  80
32814 "EDESTAP1"  115 30  35113 "DMTAR_SL"  115 30  "1 "    0.58    0.95   -172.80    -8.24   897.77 AMPS  947.86 AMPS   sumpk_after_catc  80

32950 "PITSBURG"  115 30  32970 "CLAYTN  "  115 30  "1 "    0.60    1.32    425.11   102.84  2114.49 AMPS 1600.01 AMPS   sumpk_before_catc 100
32950 "PITSBURG"  115 30  32970 "CLAYTN  "  115 30  "1 "    0.60    1.32    425.65   102.85  2116.71 AMPS 1600.01 AMPS   sumpk_after_catc 100

32950 "PITSBURG"  115 30  33032 "KIRKTAP1"  115 30  "3 "    0.35    1.05    416.49   108.35  2090.54 AMPS 2000.14 AMPS   sumpk_before_catc  60
```

--------FROM BUS--------				----------TO BUS----------				(RATE 1)	(RATE 2)	---------OUTAGE----------			(RATE 2)		
Bus #	NAME	KV	AREA	Bus #	NAME	KV	AREA	ID	BASE	OUTAGE	MW	MVAR	FLOW	RATING	FILE	OUTAGE #
32950	"PITSBURG"	115	30	33032	"KIRKTAP1"	115	30	"3 "	0.35	1.05	416.96	108.36	2092.52 AMPS	2000.14 AMPS	sumpk_after_catc	60
32970	"CLAYTN "	115	30	33032	"KIRKTAP1"	115	30	"3 "	0.46	1.19	-408.74	-53.80	2091.51 AMPS	1762.17 AMPS	sumpk_before_catc	60
32970	"CLAYTN "	115	30	33032	"KIRKTAP1"	115	30	"3 "	0.46	1.19	-409.19	-53.71	2093.50 AMPS	1762.17 AMPS	sumpk_after_catc	60
32971	"MEDW LNE"	115	30	32972	"EBMUDGRY"	115	30	"1 "	0.17	1.00	-133.50	-27.11	877.94 AMPS	881.09 AMPS	sumpk_before_catc	64
32971	"MEDW LNE"	115	30	32972	"EBMUDGRY"	115	30	"1 "	0.17	1.00	-133.50	-27.11	877.58 AMPS	881.09 AMPS	sumpk_after_catc	64
32972	"EBMUDGRY"	115	30	33035	"LKWD_JCT"	115	30	"1 "	0.21	1.04	-140.04	-33.23	915.23 AMPS	881.09 AMPS	sumpk_before_catc	64
32972	"EBMUDGRY"	115	30	33035	"LKWD_JCT"	115	30	"1 "	0.21	1.04	-140.04	-33.23	914.86 AMPS	881.09 AMPS	sumpk_after_catc	64
32974	"LAKEWD-M"	115	30	32976	"LK_REACT"	115	30	"9 "	0.17	1.32	-194.65	-39.54	1054.04 AMPS	798.25 AMPS	sumpk_before_catc	102
32974	"LAKEWD-M"	115	30	32976	"LK_REACT"	115	30	"9 "	0.17	1.32	-194.65	-39.54	1053.83 AMPS	798.25 AMPS	sumpk_after_catc	102
32974	"LAKEWD-M"	115	30	32976	"LK_REACT"	115	30	"9 "	0.17	2.72	-335.13	-75.23	2168.74 AMPS	798.25 AMPS	sumpk_before_catc	64
32974	"LAKEWD-M"	115	30	32976	"LK_REACT"	115	30	"9 "	0.17	2.72	-335.13	-75.23	2167.88 AMPS	798.25 AMPS	sumpk_after_catc	64
32976	"LK_REACT"	115	30	33020	"MORAGA "	115	30	"1 "	0.17	1.18	199.06	79.04	1052.30 AMPS	894.14 AMPS	sumpk_before_catc	102
32976	"LK_REACT"	115	30	33020	"MORAGA "	115	30	"1 "	0.17	1.18	199.06	79.03	1052.08 AMPS	894.14 AMPS	sumpk_after_catc	102
32976	"LK_REACT"	115	30	33020	"MORAGA "	115	30	"1 "	0.17	2.42	353.81	245.79	2166.18 AMPS	894.14 AMPS	sumpk_before_catc	64
32976	"LK_REACT"	115	30	33020	"MORAGA "	115	30	"1 "	0.17	2.42	353.80	245.64	2165.32 AMPS	894.14 AMPS	sumpk_after_catc	64
32990	"MARTNZ D"	115	30	33016	"ALHAMTP2"	115	30	"1 "	0.44	0.91	88.43	14.51	443.01 AMPS	486.98 AMPS	sumpk_before_catc	25
32990	"MARTNZ D"	115	30	33016	"ALHAMTP2"	115	30	"1 "	0.44	0.91	88.62	14.46	443.84 AMPS	486.98 AMPS	sumpk_after_catc	25
32990	"MARTNZ D"	115	30	33016	"ALHAMTP2"	115	30	"1 "	0.44	0.96	93.33	4.64	465.09 AMPS	486.98 AMPS	sumpk_before_catc	73
32990	"MARTNZ D"	115	30	33016	"ALHAMTP2"	115	30	"1 "	0.44	0.96	93.59	4.61	466.35 AMPS	486.98 AMPS	sumpk_after_catc	73
32990	"MARTNZ D"	115	30	33016	"ALHAMTP2"	115	30	"1 "	0.44	1.19	116.65	-7.92	579.42 AMPS	486.98 AMPS	sumpk_before_catc	74
32990	"MARTNZ D"	115	30	33016	"ALHAMTP2"	115	30	"1 "	0.44	1.19	117.15	-8.05	581.90 AMPS	486.98 AMPS	sumpk_after_catc	74
33010	"SOBRANTE"	115	30	33020	"MORAGA "	115	30	"1 "	0.50	0.94	-185.97	66.54	958.73 AMPS	1021.16 AMPS	sumpk_before_catc	28
33010	"SOBRANTE"	115	30	33020	"MORAGA "	115	30	"1 "	0.50	0.94	-187.16	66.85	964.51 AMPS	1021.16 AMPS	sumpk_after_catc	28
33010	"SOBRANTE"	115	30	33020	"MORAGA "	115	30	"1 "	0.50	0.96	-193.97	-8.12	976.16 AMPS	1021.16 AMPS	sumpk_before_catc	64
33010	"SOBRANTE"	115	30	33020	"MORAGA "	115	30	"1 "	0.50	0.96	-194.84	-7.87	980.31 AMPS	1021.16 AMPS	sumpk_after_catc	64
33020	"MORAGA "	115	30	35101	"SN LNDRO"	115	30	"1 "	0.70	1.36	146.63	33.84	733.67 AMPS	540.20 AMPS	sumpk_before_catc	36
33020	"MORAGA "	115	30	35101	"SN LNDRO"	115	30	"1 "	0.70	1.36	146.62	33.83	733.51 AMPS	540.20 AMPS	sumpk_after_catc	36
33020	"MORAGA "	115	30	35101	"SN LNDRO"	115	30	"1 "	0.70	1.30	140.47	29.56	699.64 AMPS	540.20 AMPS	sumpk_before_catc	80
33020	"MORAGA "	115	30	35101	"SN LNDRO"	115	30	"1 "	0.70	1.29	140.46	29.54	699.50 AMPS	540.20 AMPS	sumpk_after_catc	80
33020	"MORAGA "	115	30	35101	"SN LNDRO"	115	30	"2 "	0.71	1.37	148.13	34.08	741.09 AMPS	540.20 AMPS	sumpk_before_catc	36
33020	"MORAGA "	115	30	35101	"SN LNDRO"	115	30	"2 "	0.71	1.37	148.13	34.06	740.93 AMPS	540.20 AMPS	sumpk_after_catc	36

--------FROM BUS--------			----------TO BUS----------				(RATE 1)	(RATE 2)	---------OUTAGE----------			(RATE 2)		
Bus #	NAME	KV AREA	Bus #	NAME	KV AREA	ID	BASE	OUTAGE	MW	MVAR	FLOW	RATING	FILE	OUTAGE #
33020	"MORAGA "	115 30	35101	"SN LNDRO"	115 30	"2 "	0.71	1.53	166.49	33.93	827.84 AMPS	540.20 AMPS	sumpk_before_catc	79
33020	"MORAGA "	115 30	35101	"SN LNDRO"	115 30	"2 "	0.71	1.53	166.49	33.91	827.67 AMPS	540.20 AMPS	sumpk_after_catc	79
33020	"MORAGA "	115 30	35101	"SN LNDRO"	115 30	"3 "	0.57	1.19	170.01	35.42	845.98 AMPS	708.89 AMPS	sumpk_before_catc	107
33020	"MORAGA "	115 30	35101	"SN LNDRO"	115 30	"3 "	0.57	1.19	170.01	35.41	845.81 AMPS	708.89 AMPS	sumpk_after_catc	107
33020	"MORAGA "	115 30	35101	"SN LNDRO"	115 30	"3 "	0.57	1.08	153.33	36.54	768.26 AMPS	708.89 AMPS	sumpk_before_catc	80
33020	"MORAGA "	115 30	35101	"SN LNDRO"	115 30	"3 "	0.57	1.08	153.32	36.52	768.10 AMPS	708.89 AMPS	sumpk_after_catc	80
33310	"SANMATEO"	115 30	33315	"RAVENSWD"	115 30	"1 "	0.45	1.02	-121.29	45.92	630.62 AMPS	617.51 AMPS	sumpk_before_catc	168
33310	"SANMATEO"	115 30	33315	"RAVENSWD"	115 30	"1 "	0.43	0.96	-114.25	44.13	594.80 AMPS	617.51 AMPS	sumpk_after_catc	168
33312	"BELMONT "	115 30	33313	"BAIR "	115 30	"1 "	0.51	1.04	-112.97	33.92	581.30 AMPS	556.77 AMPS	sumpk_before_catc	168
33312	"BELMONT "	115 30	33313	"BAIR "	115 30	"1 "	0.50	0.99	-107.28	32.69	552.18 AMPS	556.77 AMPS	sumpk_after_catc	168
33315	"RAVENSWD"	115 30	33316	"CLY LND2"	115 30	"2 "	0.68	1.01	185.16	65.93	953.77 AMPS	948.86 AMPS	sumpk_before_catc	166
33315	"RAVENSWD"	115 30	33316	"CLY LND2"	115 30	"2 "	0.68	1.00	185.18	65.99	953.31 AMPS	948.86 AMPS	sumpk_after_catc	166
33315	"RAVENSWD"	115 30	33316	"CLY LND2"	115 30	"2 "	0.68	1.42	258.66	98.79	1343.84 AMPS	948.86 AMPS	sumpk_before_catc	178
33315	"RAVENSWD"	115 30	33316	"CLY LND2"	115 30	"2 "	0.68	1.42	258.73	98.88	1343.53 AMPS	948.86 AMPS	sumpk_after_catc	178
33315	"RAVENSWD"	115 30	38028	"PLO ALTO"	115 30	"1 "	0.48	1.30	237.78	87.98	1230.78 AMPS	948.86 AMPS	sumpk_before_catc	167
33315	"RAVENSWD"	115 30	38028	"PLO ALTO"	115 30	"1 "	0.48	1.30	237.83	88.06	1230.34 AMPS	948.86 AMPS	sumpk_after_catc	167
33315	"RAVENSWD"	115 30	38028	"PLO ALTO"	115 30	"2 "	0.48	1.11	200.05	82.70	1050.59 AMPS	948.86 AMPS	sumpk_before_catc	179
33315	"RAVENSWD"	115 30	38028	"PLO ALTO"	115 30	"2 "	0.48	1.11	200.05	82.69	1049.90 AMPS	948.86 AMPS	sumpk_after_catc	179
33316	"CLY LND2"	115 30	33375	"CLY LNDG"	60 30	"2 "	0.73	1.09	112.10	33.88	117.11 MVA	107.00 MVA	sumpk_before_catc	166
33316	"CLY LND2"	115 30	33375	"CLY LNDG"	60 30	"2 "	0.73	1.09	112.12	33.96	117.15 MVA	107.00 MVA	sumpk_after_catc	166
33316	"CLY LND2"	115 30	38028	"PLO ALTO"	115 30	"1 "	0.28	1.11	199.60	80.41	1055.90 AMPS	948.86 AMPS	sumpk_before_catc	178
33316	"CLY LND2"	115 30	38028	"PLO ALTO"	115 30	"1 "	0.28	1.11	199.60	80.40	1055.22 AMPS	948.86 AMPS	sumpk_after_catc	178
33317	"CLY LND "	115 30	33375	"CLY LNDG"	60 30	"1 "	0.89	0.97	93.33	26.95	97.14 MVA	100.00 MVA	sumpk_before_catc	165
33317	"CLY LND "	115 30	33375	"CLY LNDG"	60 30	"1 "	0.89	0.97	93.02	26.98	96.86 MVA	100.00 MVA	sumpk_after_catc	165
33317	"CLY LND "	115 30	33375	"CLY LNDG"	60 30	"1 "	0.89	0.99	93.45	32.98	99.09 MVA	100.00 MVA	sumpk_before_catc	167
33317	"CLY LND "	115 30	33375	"CLY LNDG"	60 30	"1 "	0.89	0.99	93.50	33.10	99.18 MVA	100.00 MVA	sumpk_after_catc	167
33317	"CLY LND "	115 30	33375	"CLY LNDG"	60 30	"1 "	0.89	0.92	89.27	20.32	91.56 MVA	100.00 MVA	sumpk_before_catc	169
33317	"CLY LND "	115 30	33375	"CLY LNDG"	60 30	"1 "	0.89	0.91	88.80	20.23	91.08 MVA	100.00 MVA	sumpk_after_catc	169
33317	"CLY LND "	115 30	33375	"CLY LNDG"	60 30	"1 "	0.89	0.92	87.37	28.34	91.85 MVA	100.00 MVA	sumpk_before_catc	175
33317	"CLY LND "	115 30	33375	"CLY LNDG"	60 30	"1 "	0.89	0.92	87.30	28.38	91.80 MVA	100.00 MVA	sumpk_after_catc	175
33357	"SAN MATO"	60 30	33358	"BERESFRD"	60 30	"1 "	0.41	1.02	63.36	11.53	606.77 AMPS	596.60 AMPS	sumpk_before_catc	165
33357	"SAN MATO"	60 30	33358	"BERESFRD"	60 30	"1 "	0.42	1.02	63.53	11.53	607.81 AMPS	596.60 AMPS	sumpk_after_catc	165

--------FROM BUS--------			----------TO BUS----------				(RATE 1)	(RATE 2)	---------OUTAGE----------			(RATE 2)		
Bus #	NAME	KV AREA	Bus #	NAME	KV AREA	ID	BASE	OUTAGE	MW	MVAR	FLOW	RATING	FILE	OUTAGE #
33383	"MENLO "	60 30	33390	"MENLO G "	60 30	"1 "	0.19	0.92	-43.78	-10.95	433.31 AMPS	471.50 AMPS	sumpk_before_catc	165
33383	"MENLO "	60 30	33390	"MENLO G "	60 30	"1 "	0.20	0.91	-43.54	-11.05	430.90 AMPS	471.50 AMPS	sumpk_after_catc	165
33384	"MNLO JCT"	60 30	33390	"MENLO G "	60 30	"1 "	0.24	0.99	58.74	14.24	578.51 AMPS	586.97 AMPS	sumpk_before_catc	165
33384	"MNLO JCT"	60 30	33390	"MENLO G "	60 30	"1 "	0.25	0.98	58.48	14.34	575.91 AMPS	586.97 AMPS	sumpk_after_catc	165
35101	"SN LNDRO"	115 30	35113	"DMTAR_SL"	115 30	"1 "	0.60	0.97	178.20	18.75	922.46 AMPS	947.86 AMPS	sumpk_before_catc	36
35101	"SN LNDRO"	115 30	35113	"DMTAR_SL"	115 30	"1 "	0.60	0.97	178.20	18.74	922.26 AMPS	947.86 AMPS	sumpk_after_catc	36
35101	"SN LNDRO"	115 30	35113	"DMTAR_SL"	115 30	"1 "	0.60	0.97	178.18	18.34	918.04 AMPS	947.86 AMPS	sumpk_before_catc	80
35101	"SN LNDRO"	115 30	35113	"DMTAR_SL"	115 30	"1 "	0.60	0.97	178.18	18.33	917.85 AMPS	947.86 AMPS	sumpk_after_catc	80
35107	"DUMBARTN"	115 30	35120	"NEWARK D"	115 30	"1 "	0.75	1.18	-225.73	-32.95	1116.95 AMPS	948.86 AMPS	sumpk_before_catc	149
=2=2=2=2=2=2=2=2=2=2=2=2=2=2=2=2=2=2=2=2=2=2=2=2=2=2=2=2=2=2=2=2=2=2=2=2=2=2=2=2=2=2=2=2=2=2=2=														
35107	"DUMBARTN"	115 30	35120	"NEWARK D"	115 30	"1 "	0.75	0.93	-179.44	-23.71	877.99 AMPS	948.86 AMPS	sumpk_before_catc	168
=2=2=2=2=2=2=2=2=2=2=2=2=2=2=2=2=2=2=2=2=2=2=2=2=2=2=2=2=2=2=2=2=2=2=2=2=2=2=2=2=2=2=2=2=2=2=2=														
35107	"DUMBARTN"	115 30	35120	"NEWARK D"	115 30	"1 "	0.75	0.99	-190.57	-25.34	934.84 AMPS	948.86 AMPS	sumpk_before_catc	48
=2=2=2=2=2=2=2=2=2=2=2=2=2=2=2=2=2=2=2=2=2=2=2=2=2=2=2=2=2=2=2=2=2=2=2=2=2=2=2=2=2=2=2=2=2=2=2=														
35107	"DUMBARTN"	115 30	35120	"NEWARK D"	115 30	"1 "	0.75	1.10	-213.97	-19.40	1045.70 AMPS	948.86 AMPS	sumpk_before_catc	96
=2=2=2=2=2=2=2=2=2=2=2=2=2=2=2=2=2=2=2=2=2=2=2=2=2=2=2=2=2=2=2=2=2=2=2=2=2=2=2=2=2=2=2=2=2=2=2=														
35110	"FREMNT "	115 30	35121	"NEWARK E"	115 30	"1 "	0.56	0.96	81.94	18.23	399.85 AMPS	416.70 AMPS	sumpk_before_catc	130
35110	"FREMNT "	115 30	35121	"NEWARK E"	115 30	"1 "	0.56	0.96	81.94	18.22	399.66 AMPS	416.70 AMPS	sumpk_after_catc	130
35110	"FREMNT "	115 30	35121	"NEWARK E"	115 30	"2 "	0.56	0.96	81.94	18.23	399.86 AMPS	416.70 AMPS	sumpk_before_catc	129
35110	"FREMNT "	115 30	35121	"NEWARK E"	115 30	"2 "	0.56	0.96	81.94	18.22	399.67 AMPS	416.70 AMPS	sumpk_after_catc	129
35121	"NEWARK E"	115 30	35349	"AMES DST"	115 30	"1 "	0.50	1.14	-130.43	9.83	636.42 AMPS	557.27 AMPS	sumpk_before_catc	149
35121	"NEWARK E"	115 30	35349	"AMES DST"	115 30	"1 "	0.50	1.11	-127.06	9.71	618.95 AMPS	557.27 AMPS	sumpk_after_catc	149
35121	"NEWARK E"	115 30	35350	"AMES BS1"	115 30	"1 "	0.45	1.04	134.54	2.80	642.32 AMPS	617.51 AMPS	sumpk_before_catc	149
35121	"NEWARK E"	115 30	35350	"AMES BS1"	115 30	"1 "	0.45	1.01	130.99	2.36	624.67 AMPS	617.51 AMPS	sumpk_after_catc	149
35121	"NEWARK E"	115 30	35350	"AMES BS1"	115 30	"3 "	0.49	1.13	131.73	-3.51	628.98 AMPS	557.27 AMPS	sumpk_before_catc	149
35121	"NEWARK E"	115 30	35350	"AMES BS1"	115 30	"3 "	0.49	1.10	128.24	-3.78	611.70 AMPS	557.27 AMPS	sumpk_after_catc	149
35121	"NEWARK E"	115 30	35351	"AMES BS2"	115 30	"2 "	0.45	1.04	134.58	2.80	642.50 AMPS	617.51 AMPS	sumpk_before_catc	149
35121	"NEWARK E"	115 30	35351	"AMES BS2"	115 30	"2 "	0.45	1.01	131.03	2.36	624.85 AMPS	617.51 AMPS	sumpk_after_catc	149

FROM BUS Bus #	FROM BUS NAME	FROM BUS KV	FROM BUS AREA	TO BUS Bus #	TO BUS NAME	TO BUS KV	TO BUS AREA	ID	(RATE 1) BASE	(RATE 2) OUTAGE	OUTAGE MW	OUTAGE MVAR	OUTAGE FLOW	(RATE 2) RATING	FILE	OUTAGE #
30526	"PITSBG D"	230	30	30528	"DEC PTSG"	230	30	"1 "	0.64	1.28	-876.93	0.48	2143.17 AMPS	1669.30 AMPS	sumop_before_catc	47
30526	"PITSBG D"	230	30	30528	"DEC PTSG"	230	30	"1 "	0.64	1.28	-876.93	2.29	2142.56 AMPS	1669.30 AMPS	sumop_after_catc	47
30526	"PITSBG D"	230	30	30528	"DEC PTSG"	230	30	"2 "	0.64	1.28	-876.93	-1.58	2143.85 AMPS	1669.30 AMPS	sumop_before_catc	46
30526	"PITSBG D"	230	30	30528	"DEC PTSG"	230	30	"2 "	0.64	1.28	-876.93	0.35	2143.20 AMPS	1669.30 AMPS	sumop_after_catc	46
32754	"OLEUM "	115	30	33016	"ALHAMTP2"	115	30	"1 "	0.49	1.14	120.91	-8.87	594.66 AMPS	522.13 AMPS	sumop_before_catc	74
32754	"OLEUM "	115	30	33016	"ALHAMTP2"	115	30	"1 "	0.49	1.14	121.44	-8.99	597.23 AMPS	522.13 AMPS	sumop_after_catc	74
32780	"CLARMNT "	115	30	33008	"GRIZLYJ2"	115	30	"1 "	0.78	0.96	158.09	-14.83	769.17 AMPS	803.27 AMPS	sumop_before_catc	10
32780	"CLARMNT "	115	30	33008	"GRIZLYJ2"	115	30	"1 "	0.78	0.96	158.58	-14.95	771.46 AMPS	803.27 AMPS	sumop_after_catc	10
32780	"CLARMNT "	115	30	33008	"GRIZLYJ2"	115	30	"1 "	0.78	0.98	161.22	-20.26	786.27 AMPS	803.27 AMPS	sumop_before_catc	76
32780	"CLARMNT "	115	30	33008	"GRIZLYJ2"	115	30	"1 "	0.78	0.98	161.75	-20.39	788.79 AMPS	803.27 AMPS	sumop_after_catc	76
32780	"CLARMNT "	115	30	33008	"GRIZLYJ2"	115	30	"1 "	0.78	0.97	160.14	-12.78	778.01 AMPS	803.27 AMPS	sumop_before_catc	78
32780	"CLARMNT "	115	30	33008	"GRIZLYJ2"	115	30	"1 "	0.78	0.97	160.69	-12.85	780.60 AMPS	803.27 AMPS	sumop_after_catc	78
32782	"STATIN D"	115	30	32788	"STATIN L"	115	30	"1 "	0.64	0.99	160.04	-16.57	786.24 AMPS	790.22 AMPS	sumop_before_catc	78
32782	"STATIN D"	115	30	32788	"STATIN L"	115	30	"1 "	0.64	1.00	160.59	-16.66	788.88 AMPS	790.22 AMPS	sumop_after_catc	78
32990	"MARTNZ D"	115	30	33016	"ALHAMTP2"	115	30	"1 "	0.55	1.22	121.51	-6.93	594.72 AMPS	486.98 AMPS	sumop_before_catc	74
32990	"MARTNZ D"	115	30	33016	"ALHAMTP2"	115	30	"1 "	0.55	1.23	122.05	-7.03	597.29 AMPS	486.98 AMPS	sumop_after_catc	74
33006	"GRIZLYJ1"	115	30	33012	"EST PRTL"	115	30	"1 "	0.72	0.91	150.79	-13.13	733.09 AMPS	803.27 AMPS	sumop_before_catc	11
33006	"GRIZLYJ1"	115	30	33012	"EST PRTL"	115	30	"1 "	0.72	0.92	151.24	-13.24	735.19 AMPS	803.27 AMPS	sumop_after_catc	11
=1=1=1=1=1=1=1=1=1=1=1=1=1=1=1=1=1=1=1=1=1=1=1=1=1=1=1=1=1=1=1=1=1=1=1=1=1=1=1=1=1=1=																
33010	"SOBRANTE"	115	30	33020	"MORAGA "	115	30	"1 "	0.79	0.90	-188.02	20.22	919.57 AMPS	1021.16 AMPS	sumop_after_catc	11
33010	"SOBRANTE"	115	30	33020	"MORAGA "	115	30	"1 "	0.79	1.40	-291.22	33.99	1424.97 AMPS	1021.16 AMPS	sumop_before_catc	28
33010	"SOBRANTE"	115	30	33020	"MORAGA "	115	30	"1 "	0.79	1.40	-292.45	34.29	1430.87 AMPS	1021.16 AMPS	sumop_after_catc	28
33010	"SOBRANTE"	115	30	33020	"MORAGA "	115	30	"1 "	0.79	0.98	-204.07	9.38	999.83 AMPS	1021.16 AMPS	sumop_before_catc	64
33010	"SOBRANTE"	115	30	33020	"MORAGA "	115	30	"1 "	0.79	0.98	-205.01	9.49	1004.29 AMPS	1021.16 AMPS	sumop_after_catc	64
33010	"SOBRANTE"	115	30	33020	"MORAGA "	115	30	"1 "	0.79	0.95	-197.78	18.01	968.08 AMPS	1021.16 AMPS	sumop_before_catc	98
33010	"SOBRANTE"	115	30	33020	"MORAGA "	115	30	"1 "	0.79	0.95	-198.66	18.08	972.24 AMPS	1021.16 AMPS	sumop_after_catc	98

Appendix D

Steady State Power Flow Plots

Ramco Eastshore Energy Facility Project SIS Power Flow Plots

Plot	Description
Plot #1	2007 Summer Peak Normal Conditions – Before Project (MW/MVAr)
Plot #2	2007 Summer Peak Normal Conditions – Before Project (Amps/% Rate)
Plot #3	2007 Summer Peak Normal Conditions – After Project (MW/MVAr)
Plot #4	2007 Summer Peak Normal Conditions – After Project (Amps/% Rate)
Plot #5	2007 Summer Off Peak Normal Conditions – Before Project (MW/MVAr)
Plot #6	2007 Summer Off Peak Normal Conditions – Before Project (Amps/% Rate)
Plot #7	2007 Summer Off Peak Normal Conditions – After Project (MW/MVAr)
Plot #8	2007 Summer Off Peak Normal Conditions – After Project (Amps/% Rate)
Plot #9	2007 Summer Peak Before Project: East Shore – Dumbarton 115 kV Line Outage (MW/MVAr)
Plot #10	2007 Summer Peak Before Project: East Shore – Dumbarton 115 kV Line Outage (Amps/% Rate)
Plot #11	2007 Summer Peak After Project: East Shore – Dumbarton 115 kV Line Outage (MW/MVAr)
Plot #12	2007 Summer Peak After Project: East Shore – Dumbarton 115 kV Line Outage (Amps/% Rate)
Plot #13	2007 Summer Off Peak Before Project: East Shore – Dumbarton 115 kV Line Outage (MW/MVAr)
Plot #14	2007 Summer Off Peak Before Project: East Shore – Dumbarton 115 kV Line Outage (Amps/% Rate)
Plot #15	2007 Summer Off Peak After Project: East Shore – Dumbarton 115 kV Line Outage (MW/MVAr)
Plot #16	2007 Summer Off Peak After Project: East Shore – Dumbarton 115 kV Line Outage (Amps/% Rate)
Plot #17	2007 Summer Peak Before Project: Pittsburg – East Shore 230 kV Line Outage (MW/MVAr)
Plot #18	2007 Summer Peak Before Project: Pittsburg – East Shore 230 kV Line Outage (Amps/% Rate)
Plot #19	2007 Summer Peak After Project: Pittsburg – East Shore 230 kV Line Outage (MW/MVAr)
Plot #20	2007 Summer Peak After Project: Pittsburg – East Shore 230 kV Line Outage (Amps/% Rate)
Plot #21	2007 Summer Off Peak Before Project: Pittsburg – East Shore 230 kV Line Outage (MW/MVAr)
Plot #22	2007 Summer Off Peak Before Project: Pittsburg – East Shore 230 kV Line Outage (Amps/% Rate)
Plot #23	2007 Summer Off Peak After Project: Pittsburg – East Shore 230 kV Line Outage (MW/MVAr)
Plot #24	2007 Summer Off Peak After Project: Pittsburg – East Shore 230 kV Line Outage (Amps/% Rate)

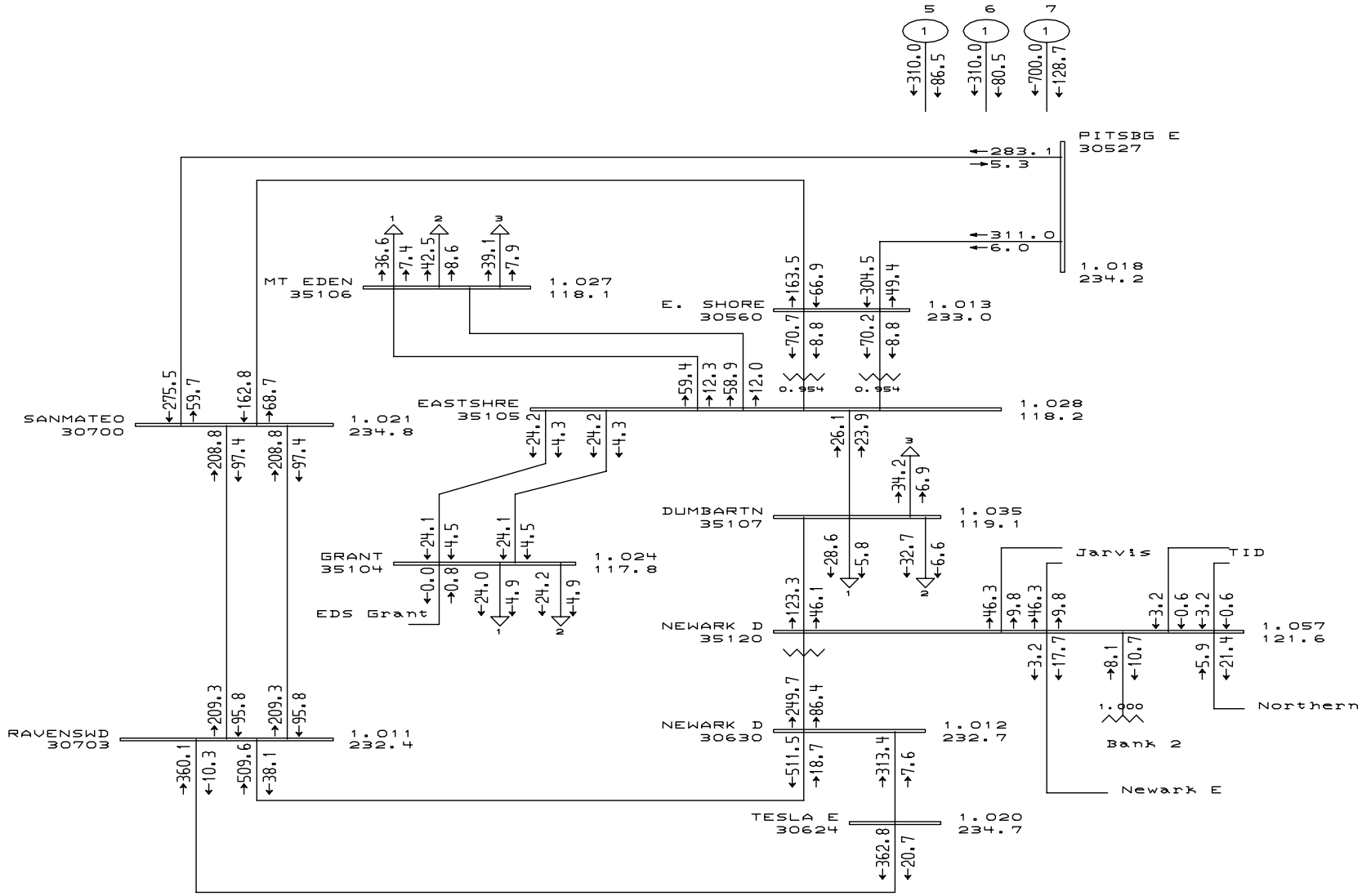

General Electric International, Inc. PSLF Program MW/MVAR Thu Mar 10 11:13:04 2005

GENERAL ELECTRIC COMPANY

PG&E 2004 BASE CASE SERIES - 2007 Greater Bay Area Summer Peak Case
PATH15=-712 MW(S-N) PATH26=3367 MW(N-S) PDCI=3104 MW(N-S) COI=4771 MW(N-S)
East Shore Energy Facility - 2007 Summer Peak - before

Plot 1 - 2007 Summer Peak Normal Conditions - Before Project

C:\pslf\pge\ramcoeef\draw\ramc
C:\pslf\pge\ramcoeef\cases\sum
Rating = 1

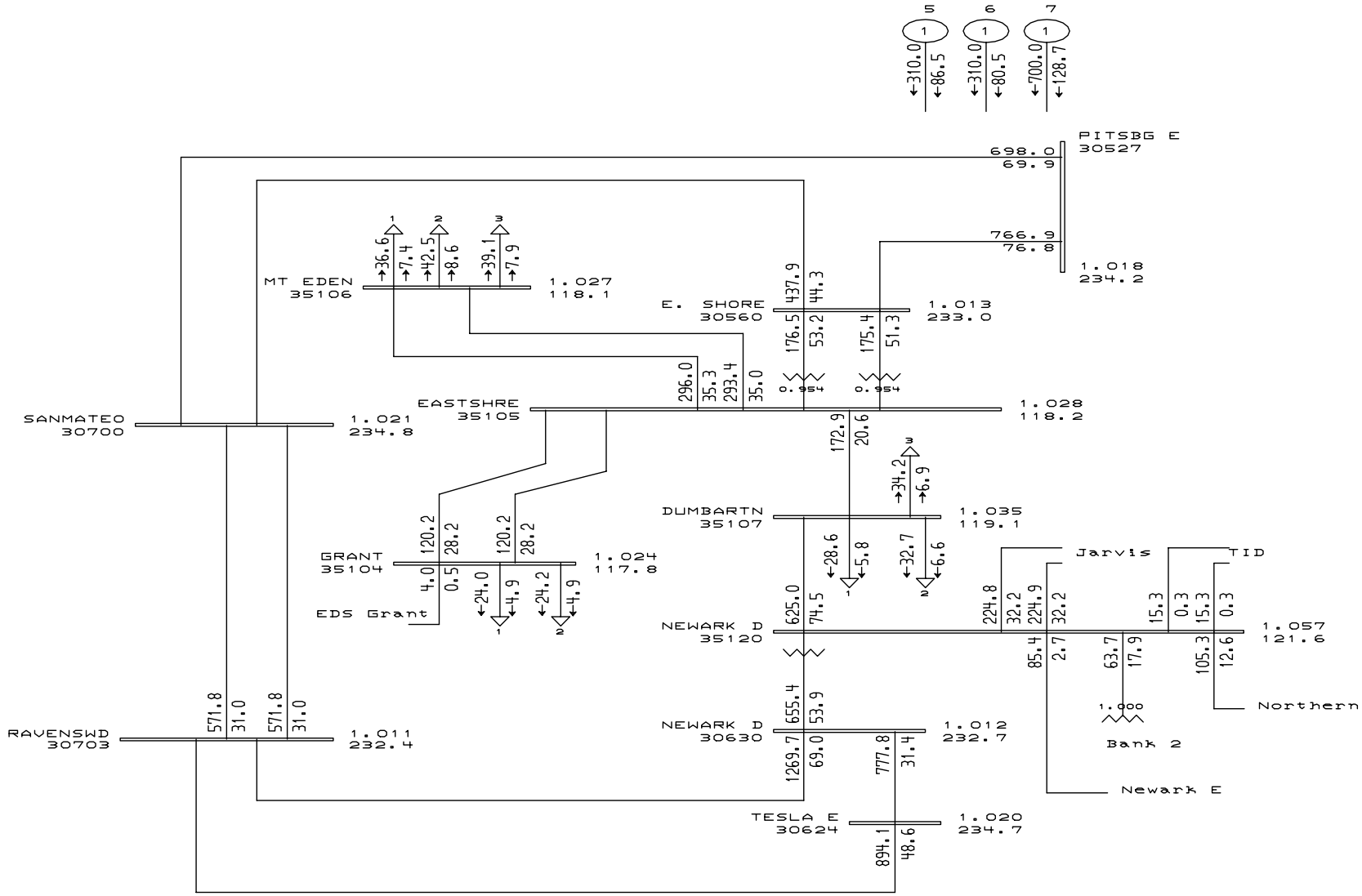

General Electric International, Inc. PSLF Program AMPS/Pct Thu Mar 10 11:13:04 2005

GENERAL ELECTRIC COMPANY	PG&E 2004 BASE CASE SERIES - 2007 Greater Bay Area Summer Peak Case PATH15=-712 MW(S-N) PATH26=3367 MW(N-S) PDCI=3104 MW(N-S) COI=4771 MW(N-S) East Shore Energy Facility - 2007 Summer Peak - before	Plot 2 - 2007 Summer Peak Normal Conditions - Before Project	C:\pslf\pge\ramcoeef\draw\ramc C:\pslf\pge\ramcoeef\cases\sum Rating = 1

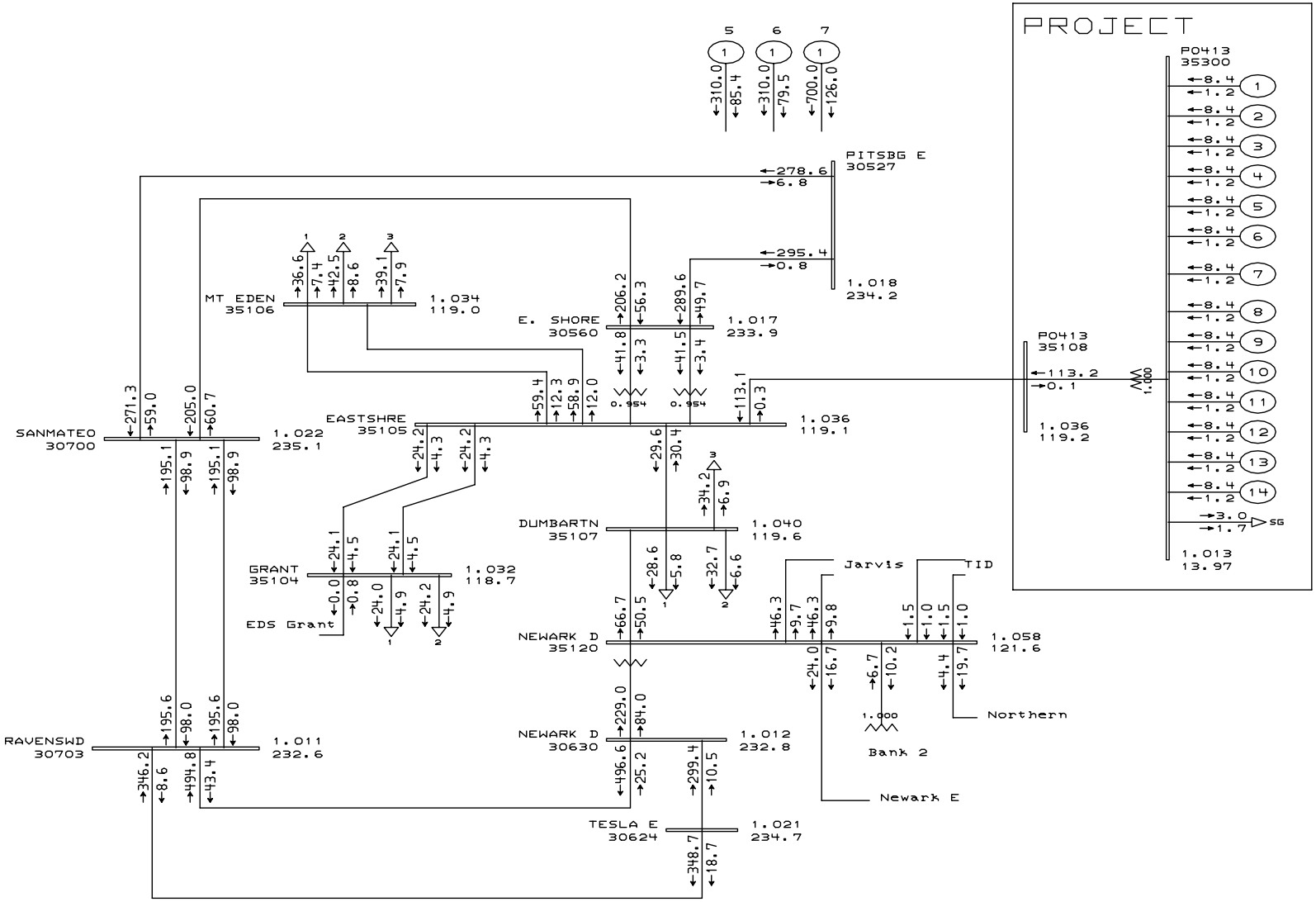

General Electric International, Inc. PSLF Program MW/MVAR Thu Mar 10 11:13:04 2005

GENERAL ELECTRIC COMPANY

PG&E 2004 BASE CASE SERIES - 2007 Greater Bay Area Summer Peak Case
PATH15=-822 MW(S-N) PATH26=3362 MW(N-S) PDCI=3104 MW(N-S) COI=4766 MW(N-S)
East Shore Energy Facility - 2007 Summer Peak - after

Plot 3 - 2007 Summer Peak Normal Conditions - After Project

C:\pslf\pge\ramcoeef\draw\ramc
C:\pslf\pge\ramcoeef\cases\sum
Rating = 1

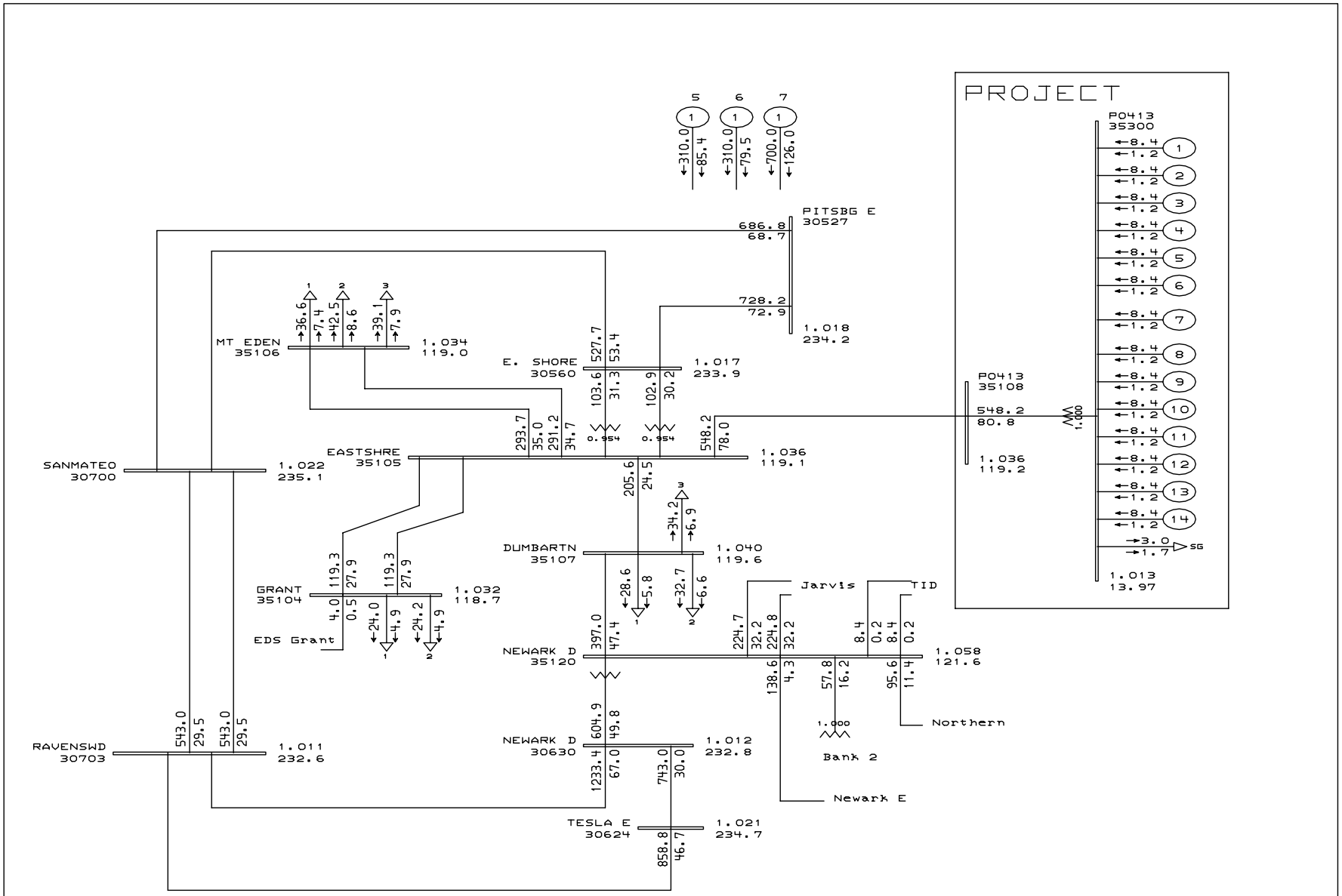

General Electric International, Inc. PSLF Program AMPS/Pct Thu Mar 10 11:13:04 2005

GENERAL ELECTRIC COMPANY	PG&E 2004 BASE CASE SERIES - 2007 Greater Bay Area Summer Peak Case PATH15=-822 MW(S-N) PATH26=3362 MW(N-S) PDCI=3104 MW(N-S) COI=4766 MW(N-S) East Shore Energy Facility - 2007 Summer Peak - after	Plot 4 - 2007 Summer Peak Normal Conditions - After Project	C:\pslf\pge\ramcoeef\draw\ramc C:\pslf\pge\ramcoeef\cases\sum Rating = 1

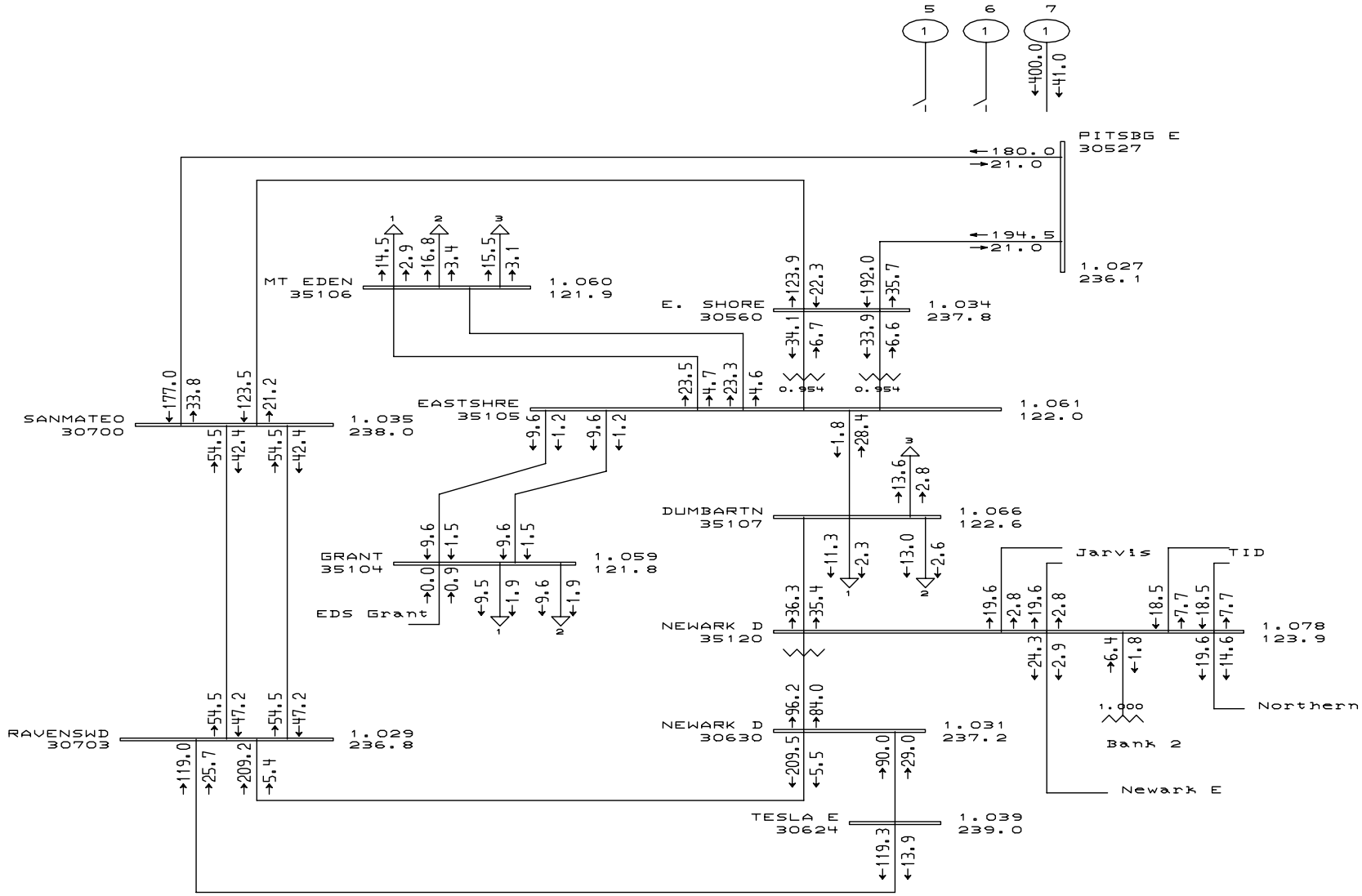

General Electric International, Inc. PSLF Program MW/MVAR Thu Mar 10 11:13:05 2005

GENERAL ELECTRIC COMPANY

PG&E 2004 BASE CASE SERIES - 2007 Summer Off Peak Case
PATH15=4946 MW(S-N) PATH26=-1616 MW(N-S) PDCI=-1848 MW(N-S) COI=-3553 MW(N-S)
East Shore Energy Facility - 2007 Summer Off Peak - before

Plot 5 - 2007 Summer Off Peak Normal Conditions - Before Project

C:\pslf\pge\ramcoeef\draw\ramc
C:\pslf\pge\ramcoeef\cases\sum
Rating = 1

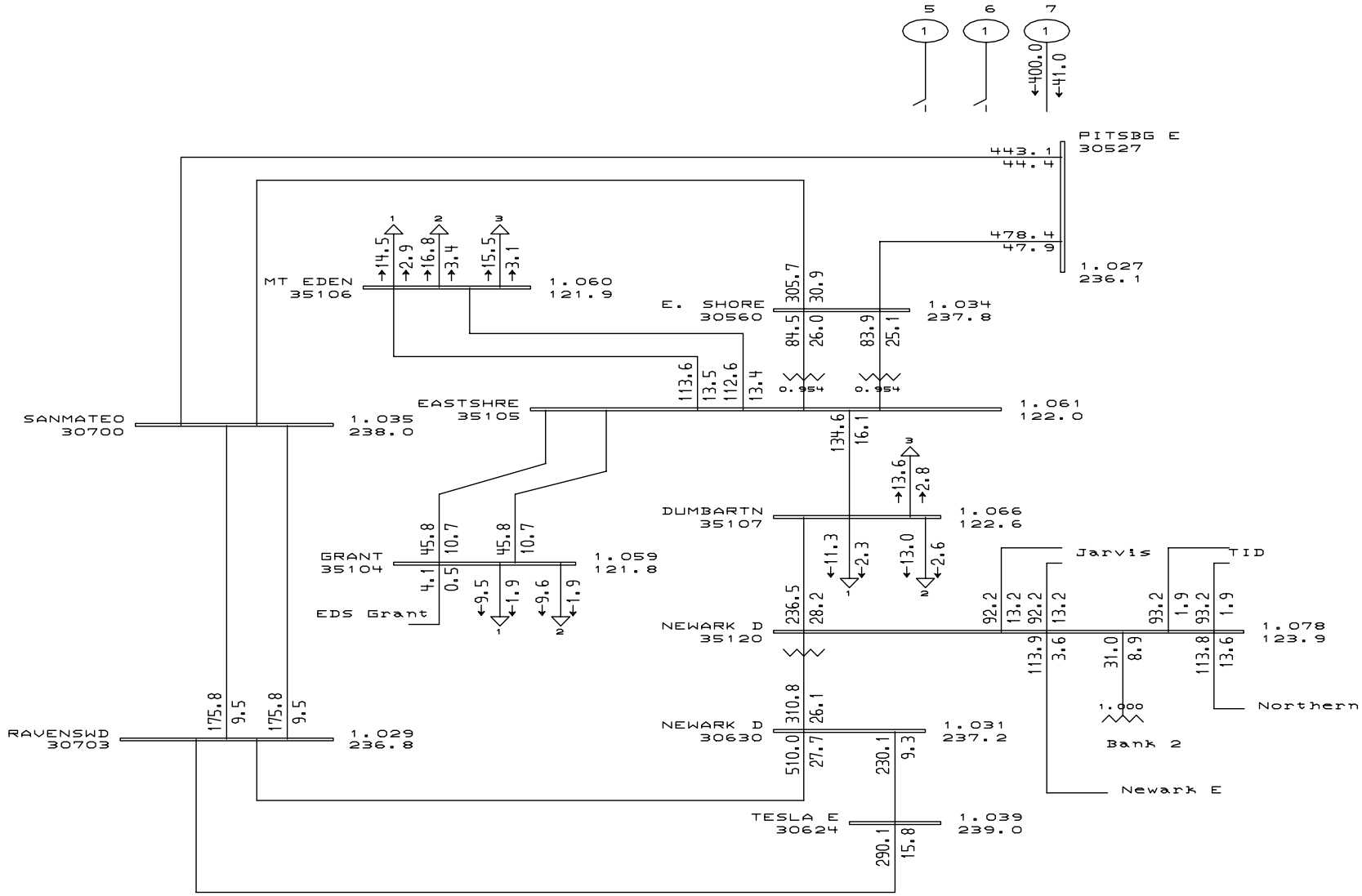

General Electric International, Inc. PSLF Program AMPS/Pct Thu Mar 10 11:13:05 2005

GENERAL ELECTRIC COMPANY	PG&E 2004 BASE CASE SERIES - 2007 Summer Off Peak Case PATH15=4946 MW(S-N) PATH26=-1616 MW(N-S) PDCI=-1848 MW(N-S) COI=-3553 MW(N-S) East Shore Energy Facility - 2007 Summer Off Peak - before	Plot 6 - 2007 Summer Off Peak Normal Conditions - Before Project	C:\pslf\pge\ramcoeef\draw\ramc C:\pslf\pge\ramcoeef\cases\sum Rating = 1

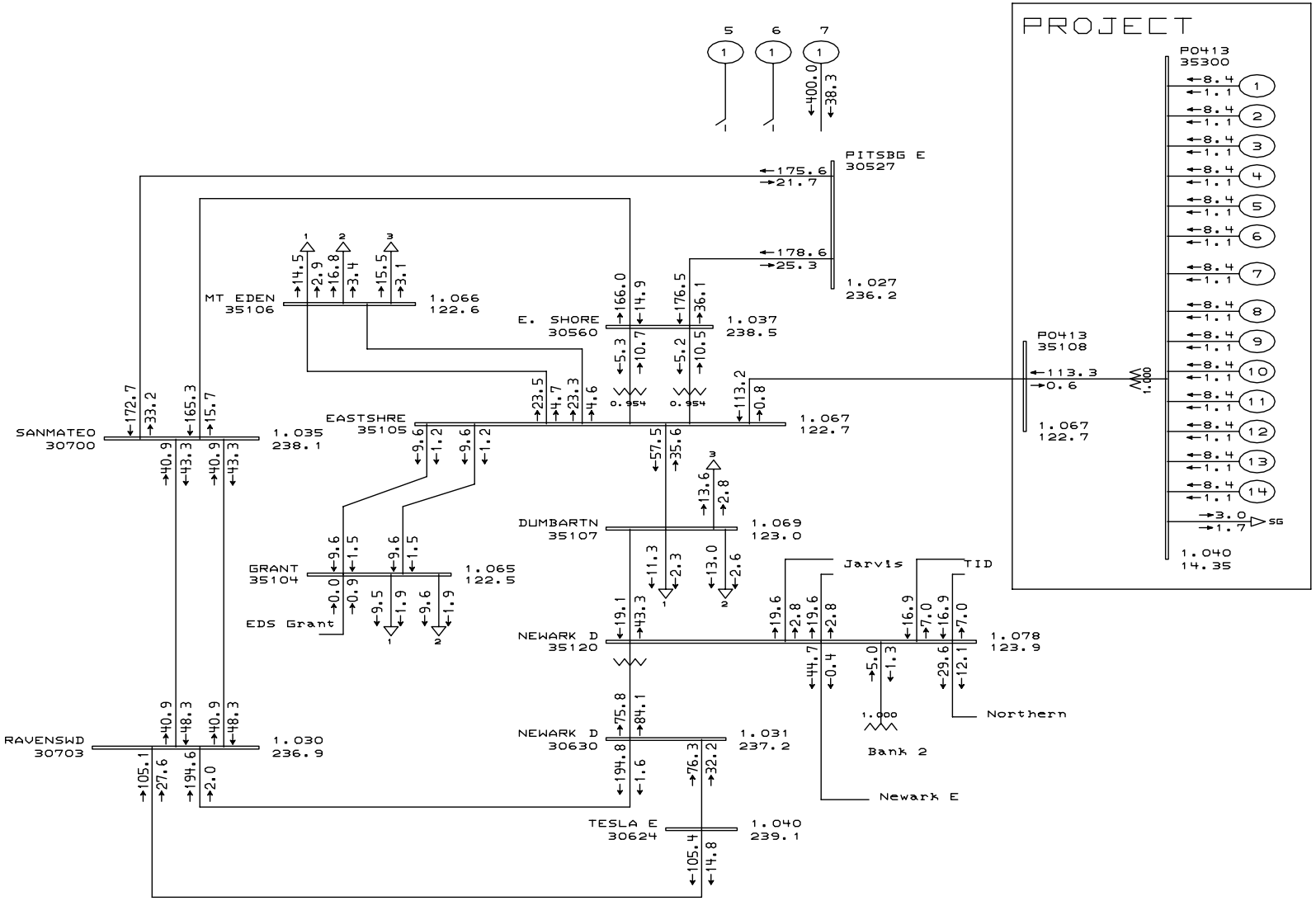

General Electric International, Inc. PSLF Program MW/MVAR Thu Mar 10 11:13:05 2005

GENERAL ELECTRIC COMPANY	PG&E 2004 BASE CASE SERIES - 2007 Summer Off Peak Case PATH15=4838 MW(S-N) PATH26=-1622 MW(N-S) PDCI=-1848 MW(N-S) COI=-3559 MW(N-S) East Shore Energy Facility - 2007 Summer Off Peak - after	Plot 7 - 2007 Summer Off Peak Normal Conditions - After Project	C:\pslf\pge\ramcoeef\draw\ramc C:\pslf\pge\ramcoeef\cases\sum Rating = 1

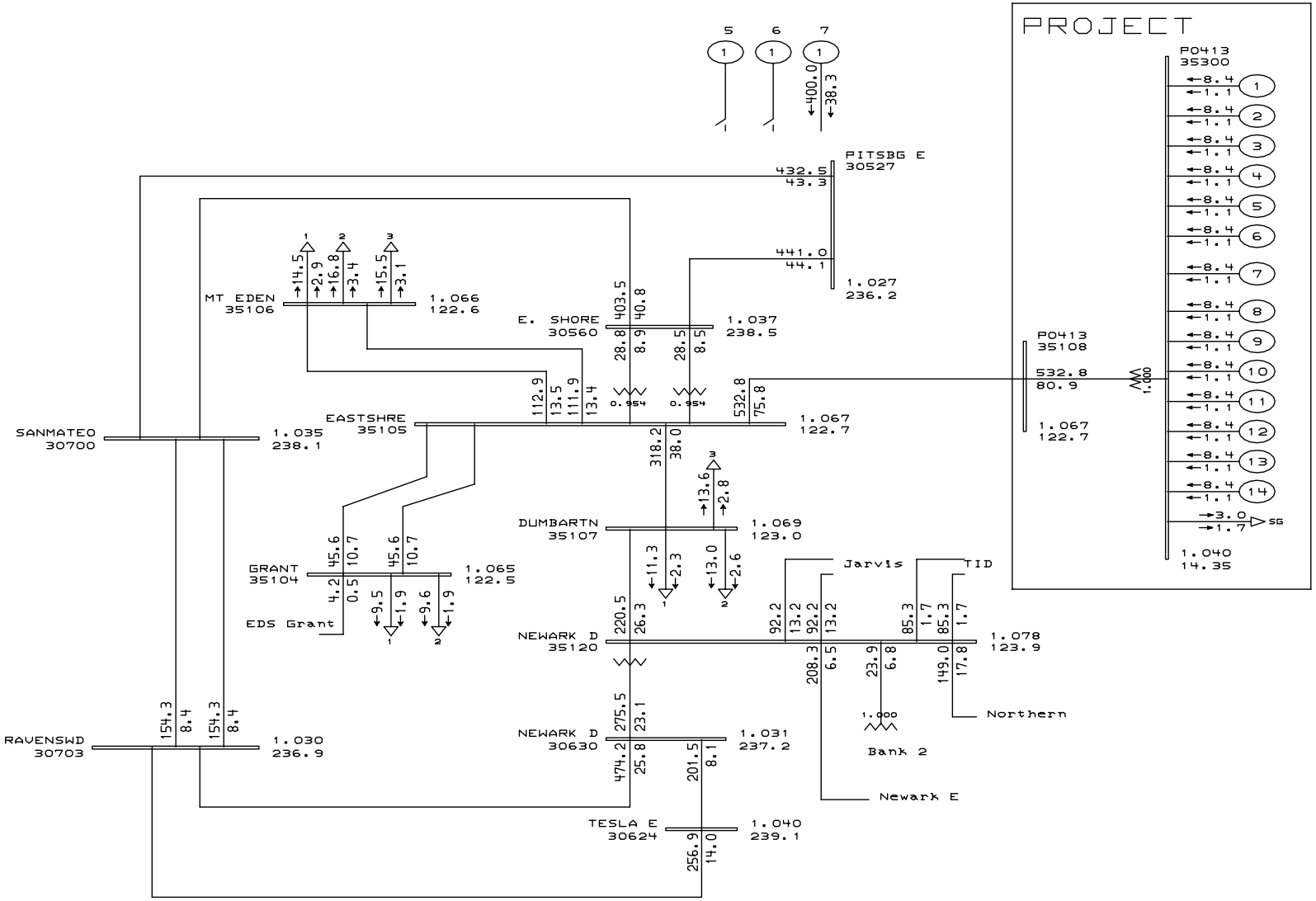

General Electric International, Inc. PSLF Program AMPS/Pct Thu Mar 10 11:13:05 2005

GENERAL ELECTRIC COMPANY

PG&E 2004 BASE CASE SERIES - 2007 Summer Off Peak Case
PATH15=4838 MW(S-N) PATH26=-1622 MW(N-S) PDCI=-1848 MW(N-S) COI=-3559 MW(N-S)
East Shore Energy Facility - 2007 Summer Off Peak - after

Plot 8 - 2007 Summer Off Peak Normal Conditions - After Project

C:\pslf\pge\ramcoeef\draw\ramc
C:\pslf\pge\ramcoeef\cases\sum
Rating = 1

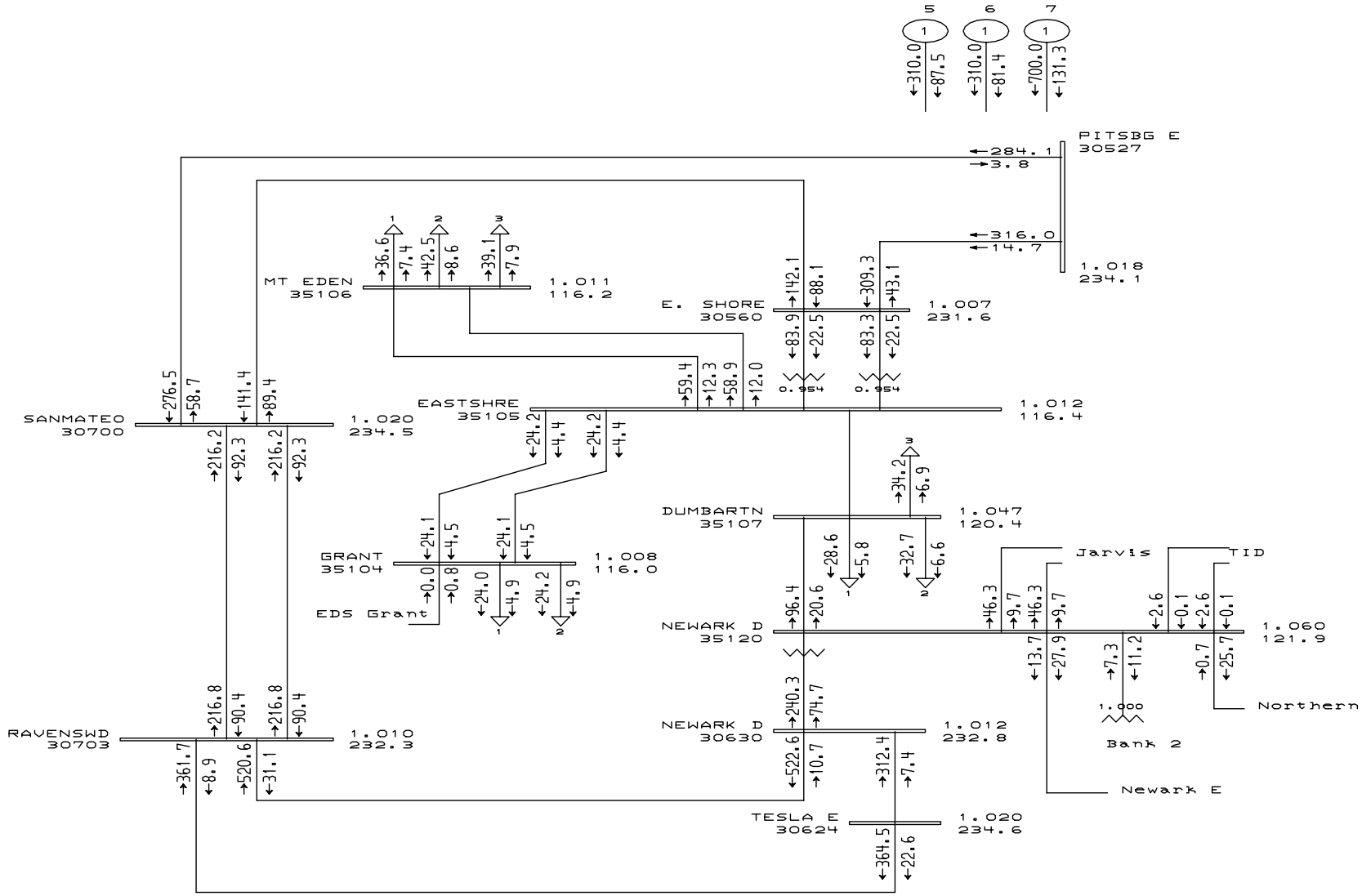

General Electric International, Inc. PSLF Program MW/MVAR Thu Mar 10 11:13:07 2005

GENERAL ELECTRIC COMPANY

PG&E 2004 BASE CASE SERIES - 2007 Greater Bay Area Summer Peak Case
PATH15=-712 MW(S-N) PATH26=3367 MW(N-S) PDCI=3104 MW(N-S) COI=4771 MW(N-S)
East Shore Energy Facility - 2007 Summer Peak - before

Plot 9 - 2007 Summer Peak - Before Project
Outage: East Shore - Dumbarton 115 kV Line

C:\pslf\pge\ramcoeef\draw\ramc
C:\pslf\pge\ramcoeef\cases\sum
Rating = 2

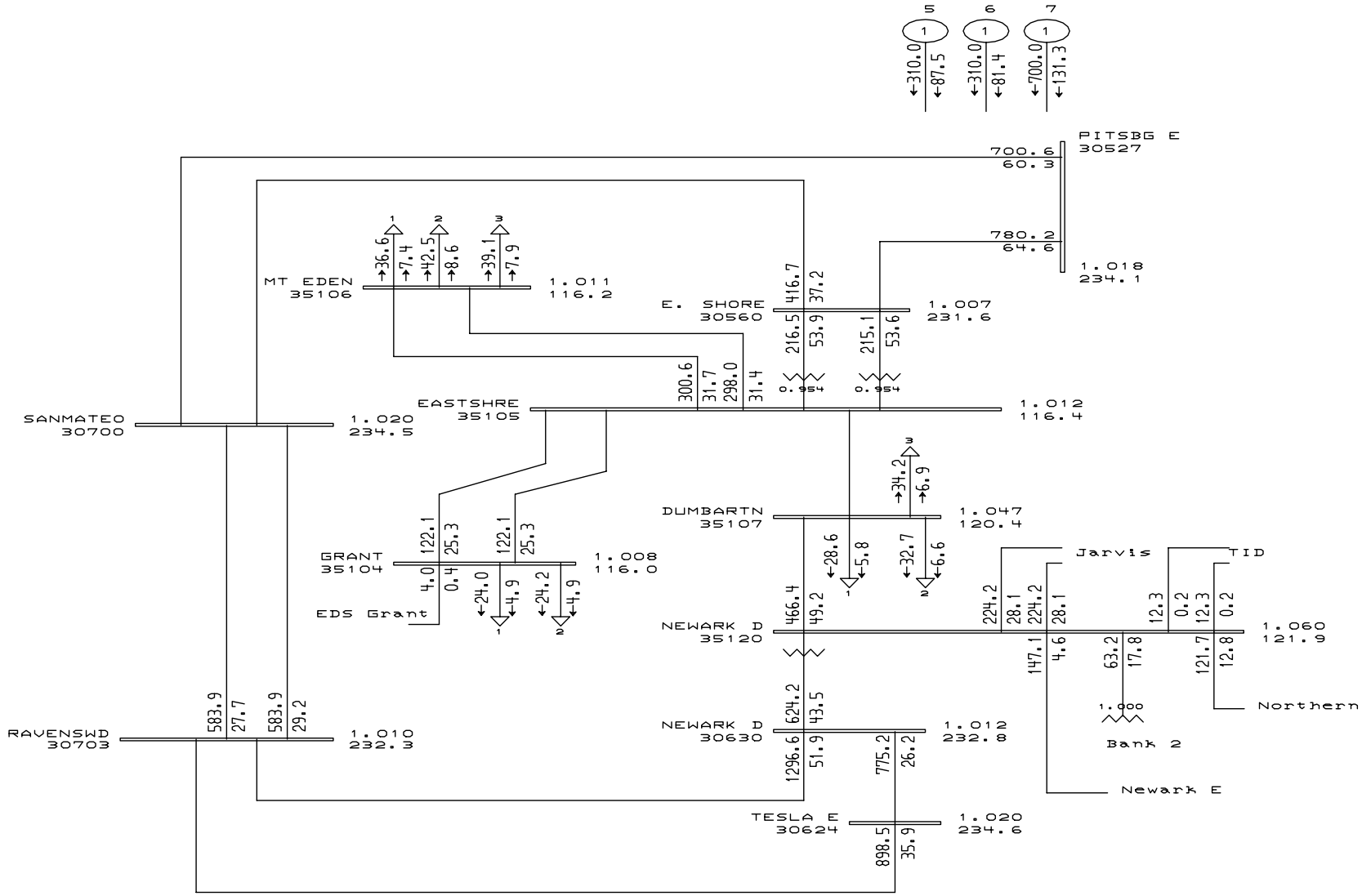

General Electric International, Inc. PSLF Program AMPS/Pct Thu Mar 10 11:13:07 2005

GENERAL ELECTRIC COMPANY	PG&E 2004 BASE CASE SERIES - 2007 Greater Bay Area Summer Peak Case PATH15=-712 MW(S-N) PATH26=3367 MW(N-S) PDCI=3104 MW(N-S) COI=4771 MW(N-S) East Shore Energy Facility - 2007 Summer Peak - before	Plot 10 - 2007 Summer Peak - Before Project Outage: East Shore - Dumbarton 115 kV Line	C:\pslf\pge\ramcoeef\draw\ramc C:\pslf\pge\ramcoeef\cases\sum Rating = 2

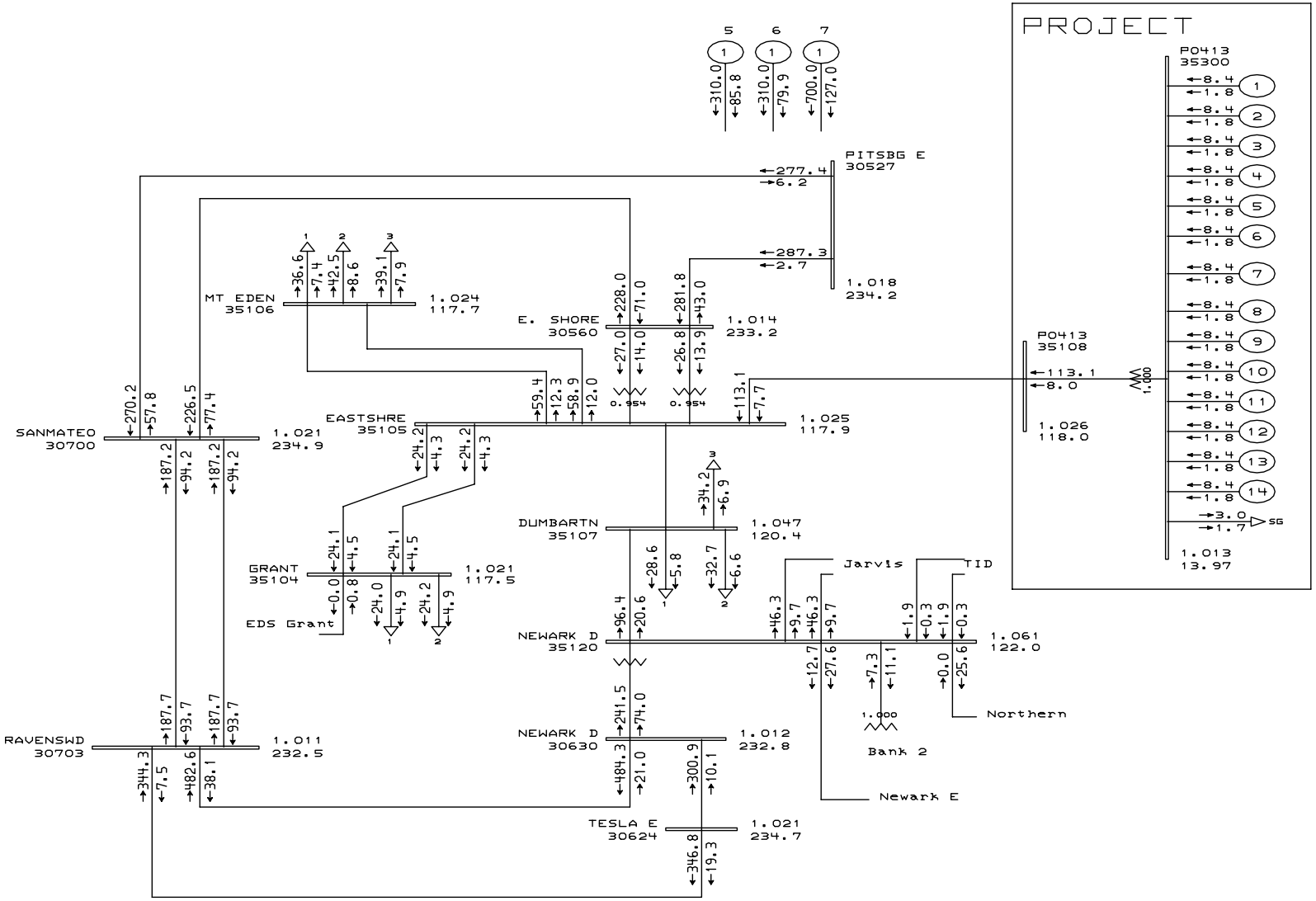

General Electric International, Inc. PSLF Program MW/MVAR Thu Mar 10 11:13:10 2005

GENERAL ELECTRIC COMPANY	PG&E 2004 BASE CASE SERIES - 2007 Greater Bay Area Summer Peak Case PATH15=-822 MW(S-N) PATH26=3362 MW(N-S) PDCI=3104 MW(N-S) COI=4766 MW(N-S) East Shore Energy Facility - 2007 Summer Peak - after	Plot 11 - 2007 Summer Peak - Before Project Outage: East Shore - Dumbarton 115 kV Line	C:\pslf\pge\ramcoeef\draw\ramc C:\pslf\pge\ramcoeef\cases\sum Rating = 2

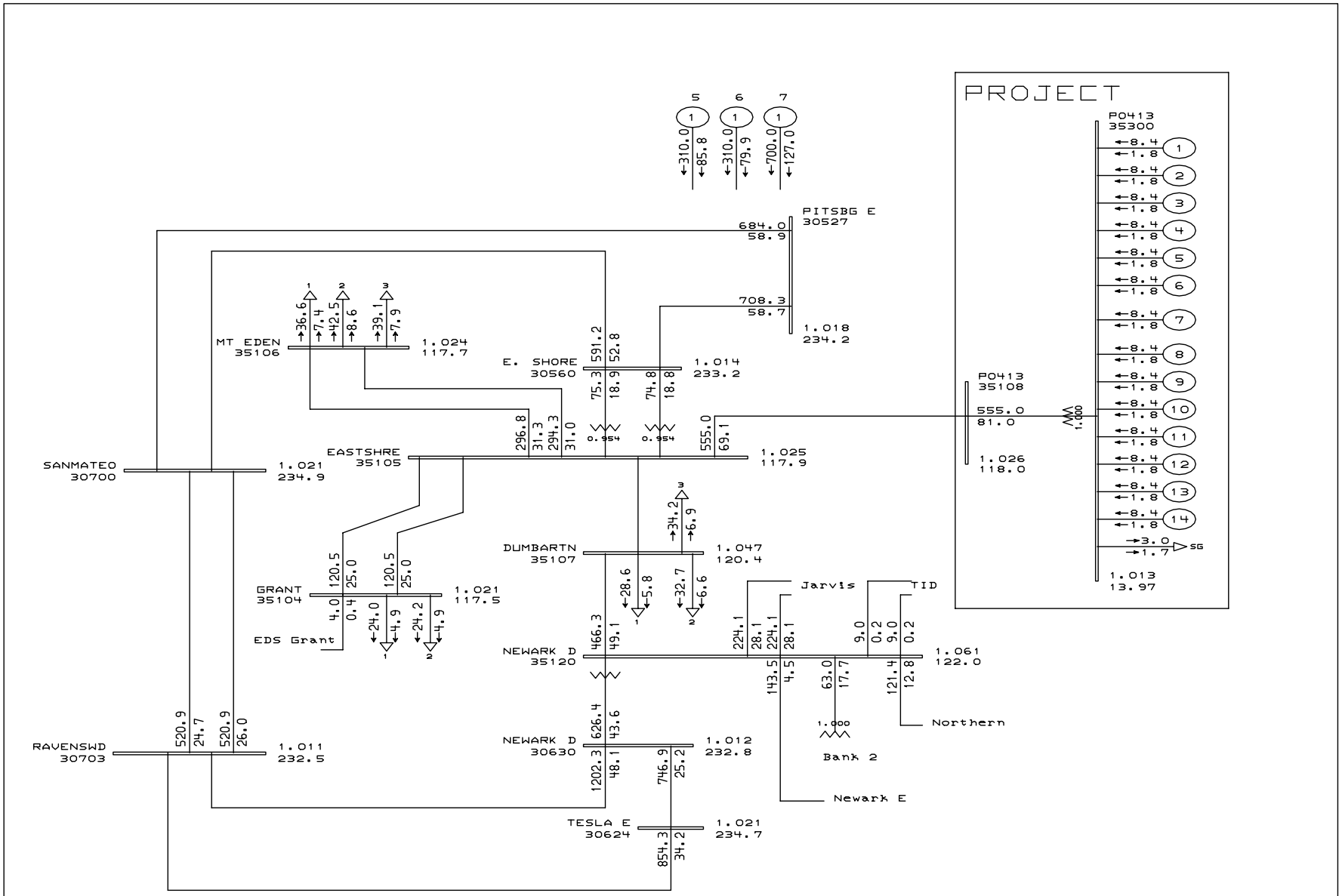

General Electric International, Inc. PSLF Program AMPS/Pct Thu Mar 10 11:13:10 2005

GENERAL ELECTRIC COMPANY	PG&E 2004 BASE CASE SERIES - 2007 Greater Bay Area Summer Peak Case PATH15=-822 MW(S-N) PATH26=3362 MW(N-S) PDCI=3104 MW(N-S) COI=4766 MW(N-S) East Shore Energy Facility - 2007 Summer Peak - after	Plot 12 - 2007 Summer Peak - Before Project Outage: East Shore - Dumbarton 115 kV Line	C:\pslf\pge\ramcoeef\draw\ramc C:\pslf\pge\ramcoeef\cases\sum Rating = 2

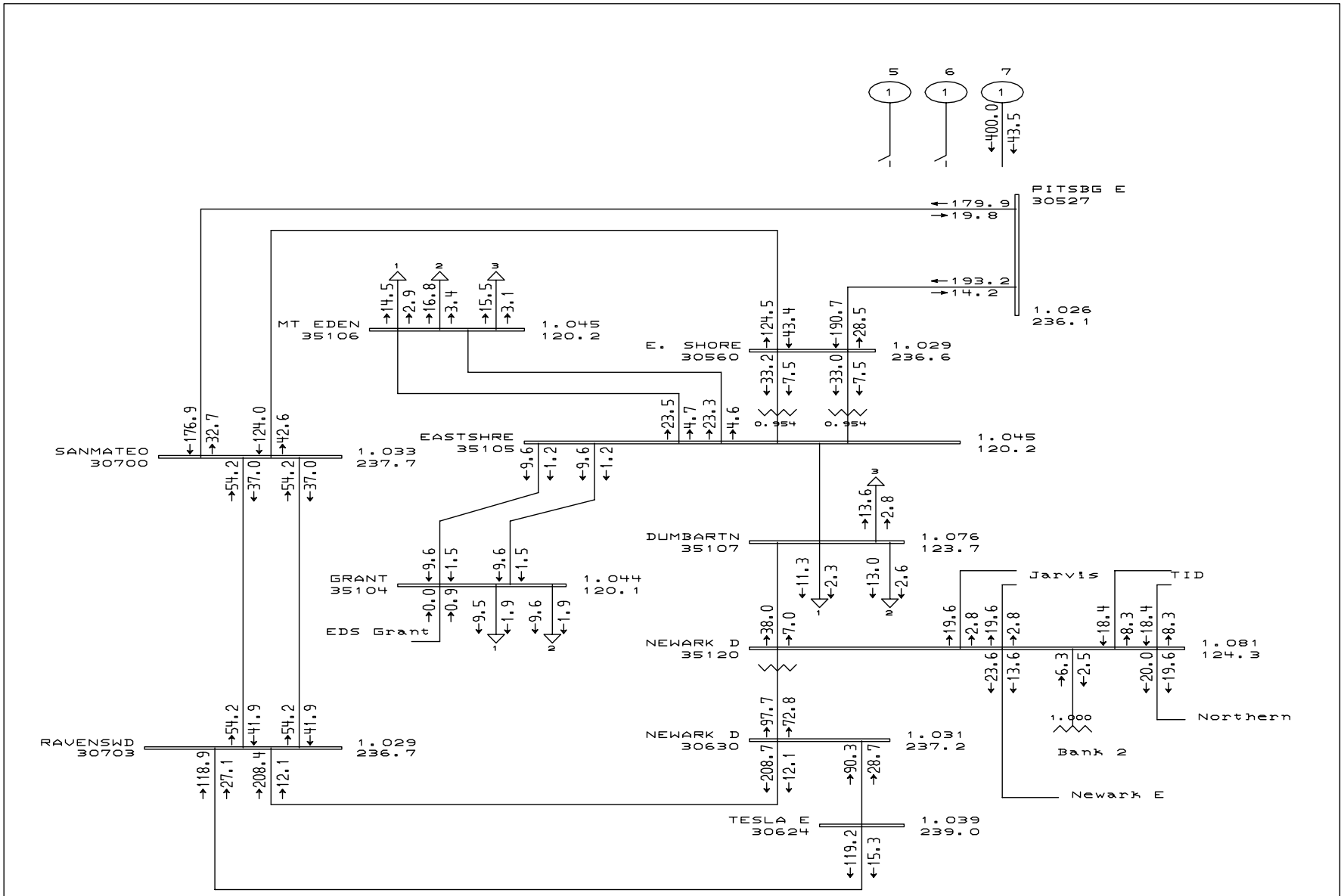

General Electric International, Inc. PSLF Program MW/MVAR Thu Mar 10 11:13:11 2005

GENERAL ELECTRIC COMPANY	PG&E 2004 BASE CASE SERIES - 2007 Summer Off Peak Case PATH15=4946 MW(S-N) PATH26=-1616 MW(N-S) PDCI=-1848 MW(N-S) COI=-3553 MW(N-S) East Shore Energy Facility - 2007 Summer Off Peak - before	Plot 13 - 2007 Summer Off Peak - Before Project Outage: East Shore - Dumbarton 115 kV Line	C:\pslf\pge\ramcoeef\draw\ramc C:\pslf\pge\ramcoeef\cases\sum Rating = 2

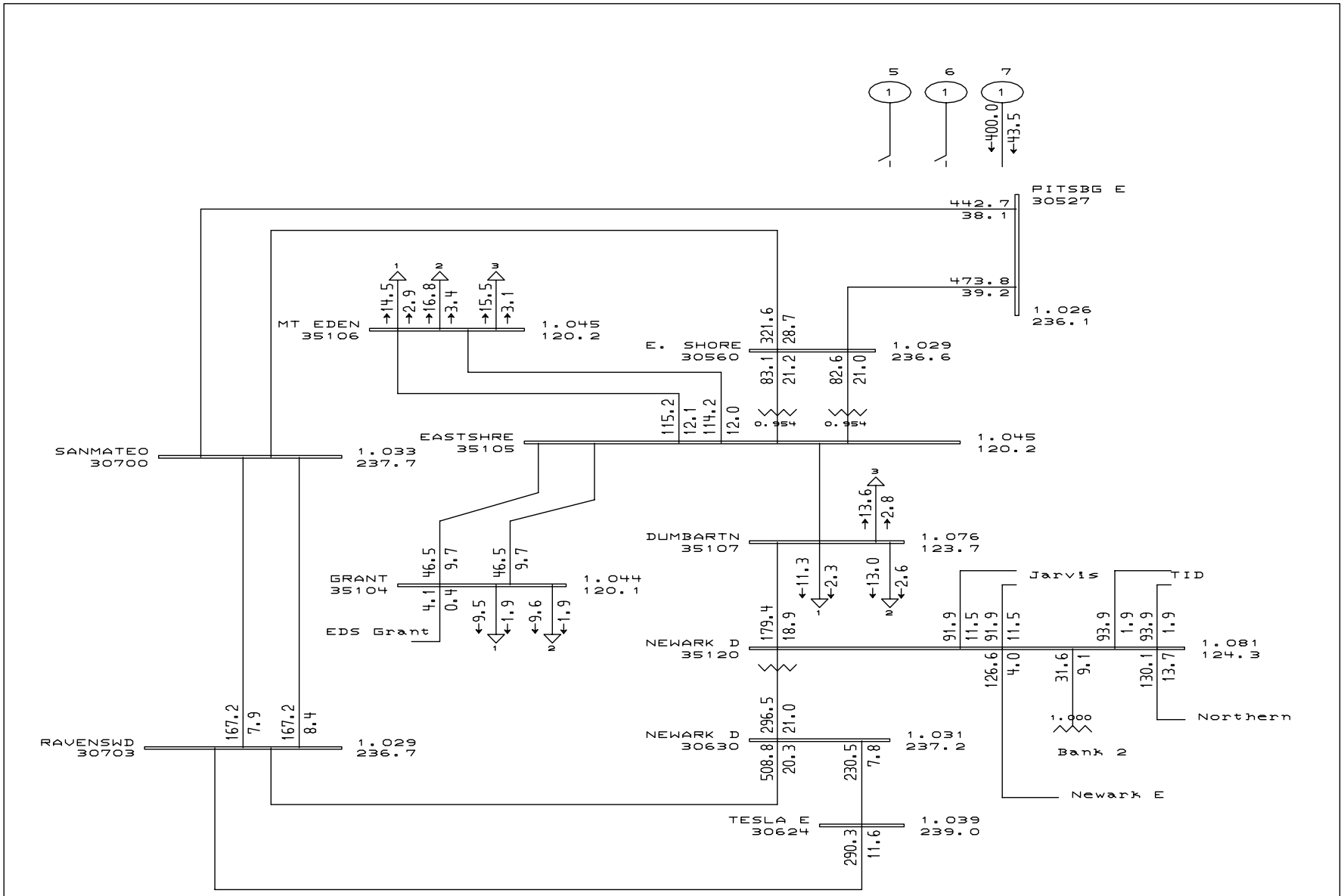

General Electric International, Inc. PSLF Program AMPS/Pct Thu Mar 10 11:13:11 2005

GENERAL ELECTRIC COMPANY	PG&E 2004 BASE CASE SERIES - 2007 Summer Off Peak Case PATH15=4946 MW(S-N) PATH26=-1616 MW(N-S) PDCI=-1848 MW(N-S) COI=-3553 MW(N-S) East Shore Energy Facility - 2007 Summer Off Peak - before	Plot 14 - 2007 Summer Off Peak - Before Project Outage: East Shore - Dumbarton 115 kV Line	C:\pslf\pge\ramcoeef\draw\ramc C:\pslf\pge\ramcoeef\cases\sum Rating = 2

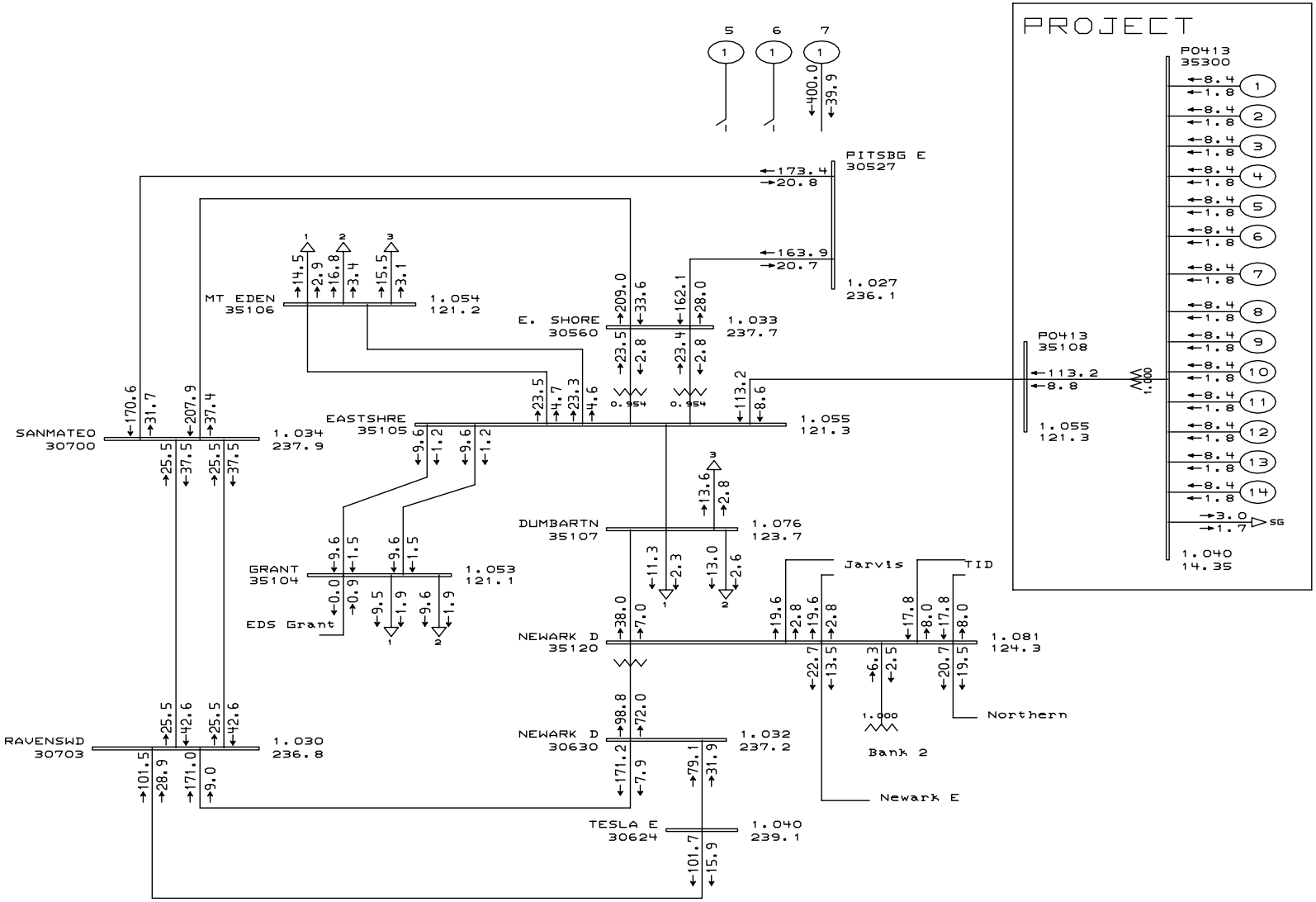

General Electric International, Inc. PSLF Program MW/MVAR Thu Mar 10 11:13:13 2005

GENERAL ELECTRIC COMPANY

PG&E 2004 BASE CASE SERIES - 2007 Summer Off Peak Case
PATH15=4838 MW(S-N) PATH26=-1622 MW(N-S) PDCI=-1848 MW(N-S) COI=-3559 MW(N-S)
East Shore Energy Facility - 2007 Summer Off Peak - after

Plot 15 - 2007 Summer Off Peak - Before Project
Outage: East Shore - Dumbarton 115 kV Line

C:\pslf\pge\ramcoeef\draw\ramc
C:\pslf\pge\ramcoeef\cases\sum
Rating = 2

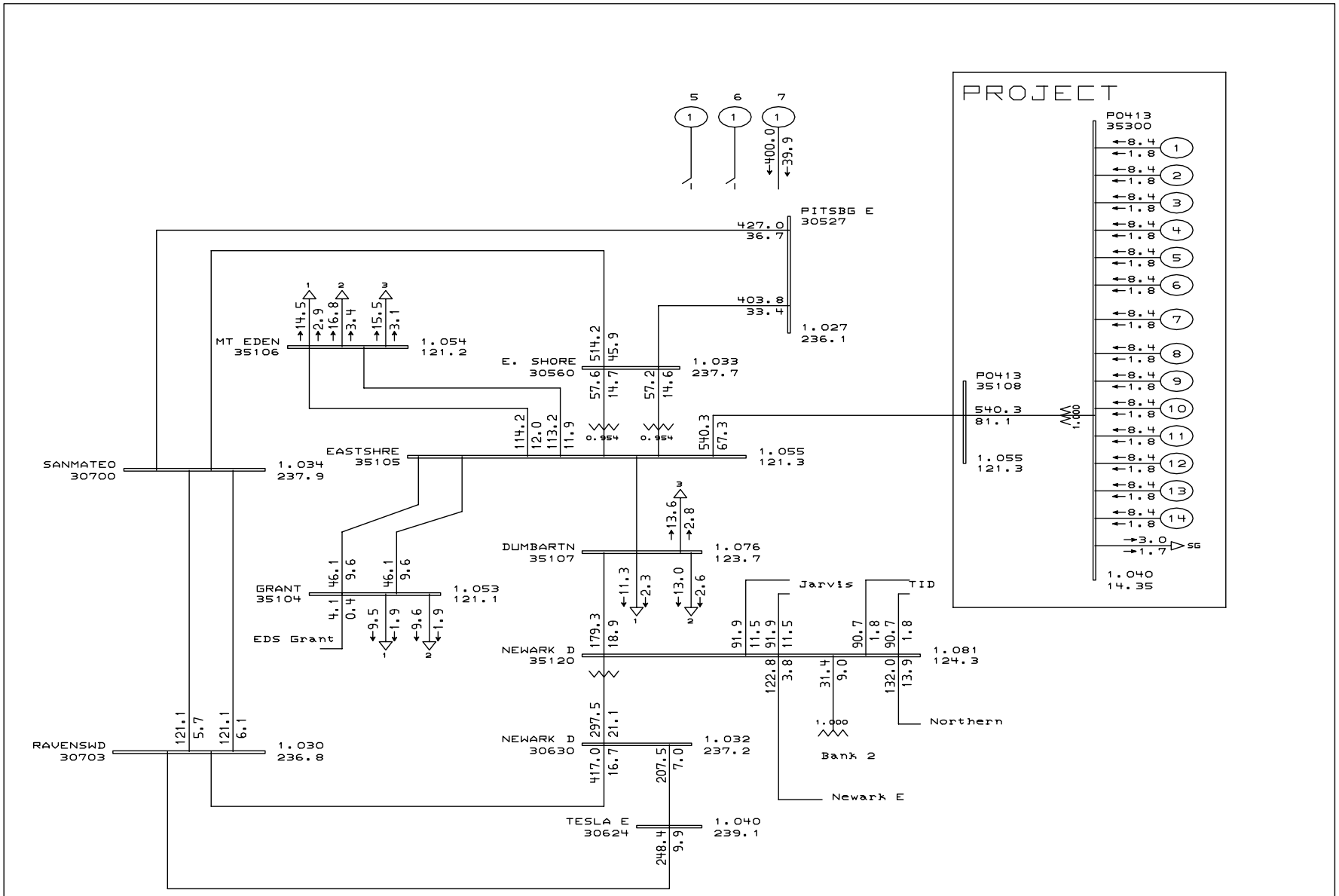

General Electric International, Inc. PSLF Program AMPS/Pct Thu Mar 10 11:13:13 2005

GENERAL ELECTRIC COMPANY	PG&E 2004 BASE CASE SERIES - 2007 Summer Off Peak Case PATH15=4838 MW(S-N) PATH26=-1622 MW(N-S) PDCI=-1848 MW(N-S) COI=-3559 MW(N-S) East Shore Energy Facility - 2007 Summer Off Peak - after	Plot 16 - 2007 Summer Off Peak - Before Project Outage: East Shore - Dumbarton 115 kV Line	C:\pslf\pge\ramcoeef\draw\ramc C:\pslf\pge\ramcoeef\cases\sum Rating = 2

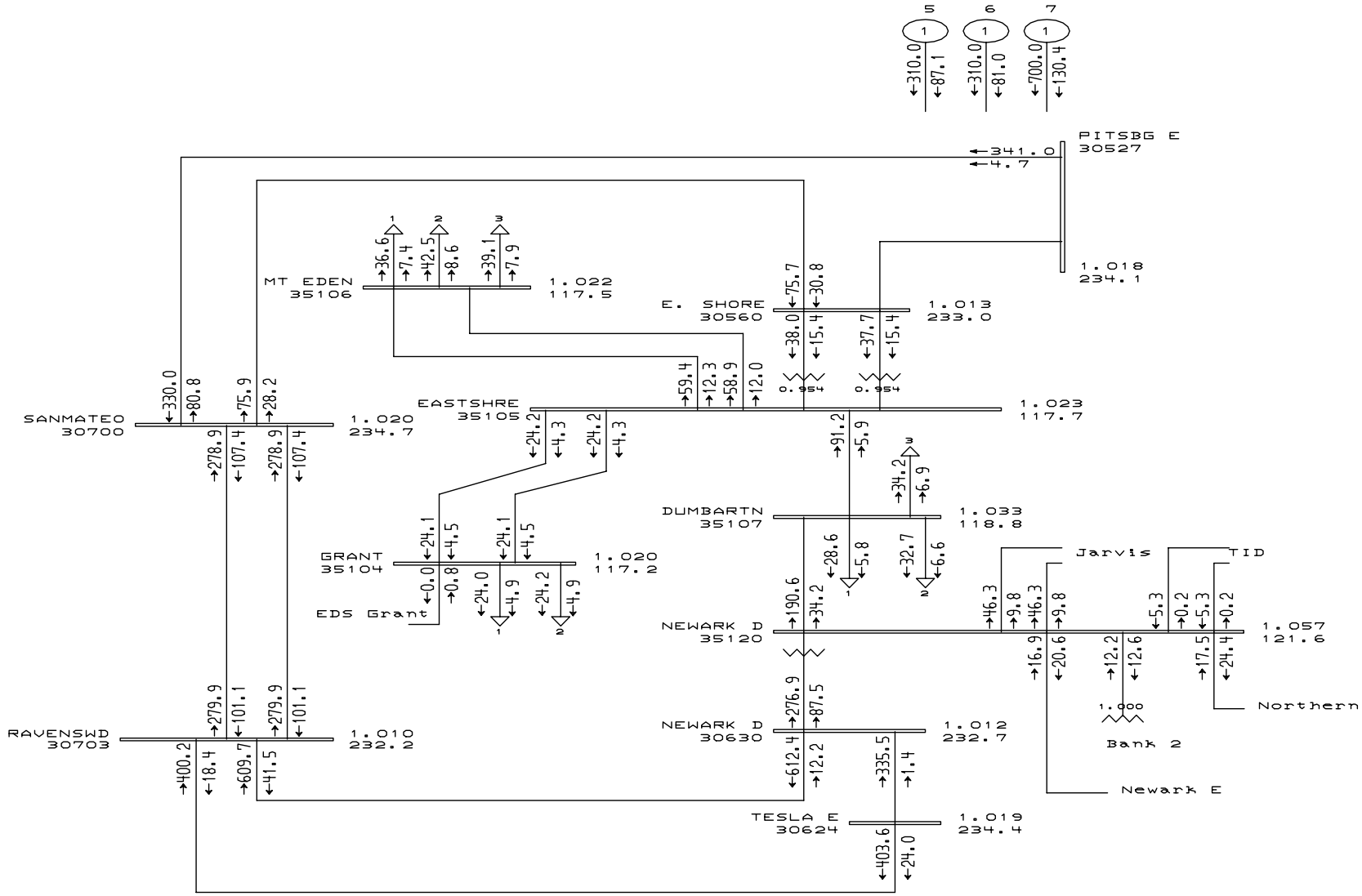

General Electric International, Inc. PSLF Program MW/MVAR Thu Mar 10 11:13:15 2005

GENERAL ELECTRIC COMPANY	PG&E 2004 BASE CASE SERIES - 2007 Greater Bay Area Summer Peak Case PATH15=-712 MW(S-N) PATH26=3367 MW(N-S) PDCI=3104 MW(N-S) COI=4771 MW(N-S) East Shore Energy Facility - 2007 Summer Peak - before	Plot 17 - 2007 Summer Peak - Before Project Outage: Pittsburg - East Shore 230 kV Line	C:\pslf\pge\ramcoeef\draw\ramc C:\pslf\pge\ramcoeef\cases\sum Rating = 2

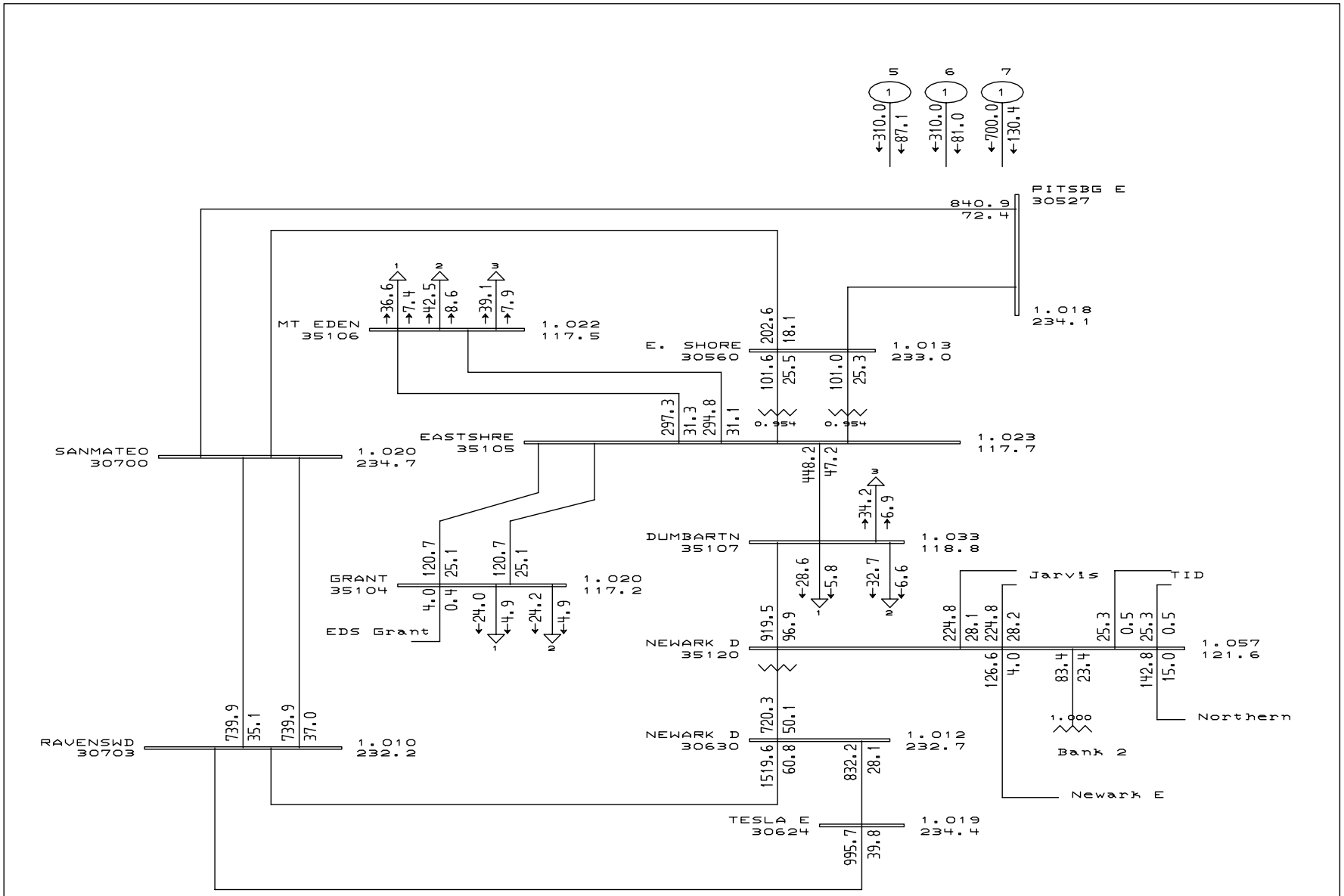

General Electric International, Inc. PSLF Program AMPS/Pct Thu Mar 10 11:13:15 2005

GENERAL ELECTRIC COMPANY	PG&E 2004 BASE CASE SERIES - 2007 Greater Bay Area Summer Peak Case PATH15=-712 MW(S-N) PATH26=3367 MW(N-S) PDCI=3104 MW(N-S) COI=4771 MW(N-S) East Shore Energy Facility - 2007 Summer Peak - before	Plot 18 - 2007 Summer Peak - Before Project Outage: Pittsburg - East Shore 230 kV Line	C:\pslf\pge\ramcoeef\draw\ramc C:\pslf\pge\ramcoeef\cases\sum Rating = 2

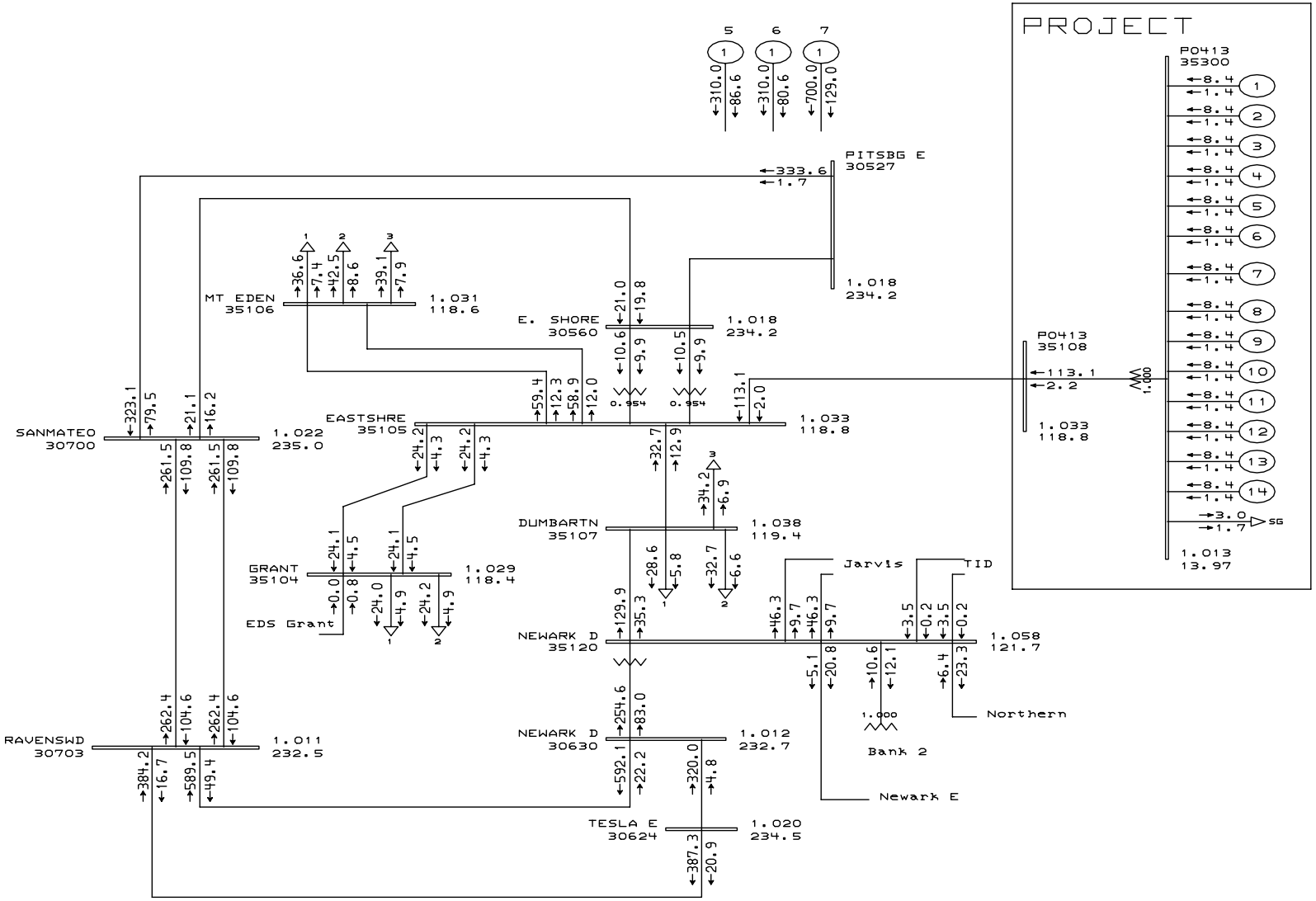

General Electric International, Inc. PSLF Program MW/MVAR Thu Mar 10 11:13:17 2005

GENERAL ELECTRIC COMPANY	PG&E 2004 BASE CASE SERIES - 2007 Greater Bay Area Summer Peak Case PATH15=-822 MW(S-N) PATH26=3362 MW(N-S) PDCI=3104 MW(N-S) COI=4766 MW(N-S) East Shore Energy Facility - 2007 Summer Peak - after	Plot 19 - 2007 Summer Peak - Before Project Outage: Pittsburg - East Shore 230 kV Line	C:\pslf\pge\ramcoeef\draw\ramc C:\pslf\pge\ramcoeef\cases\sum Rating = 2

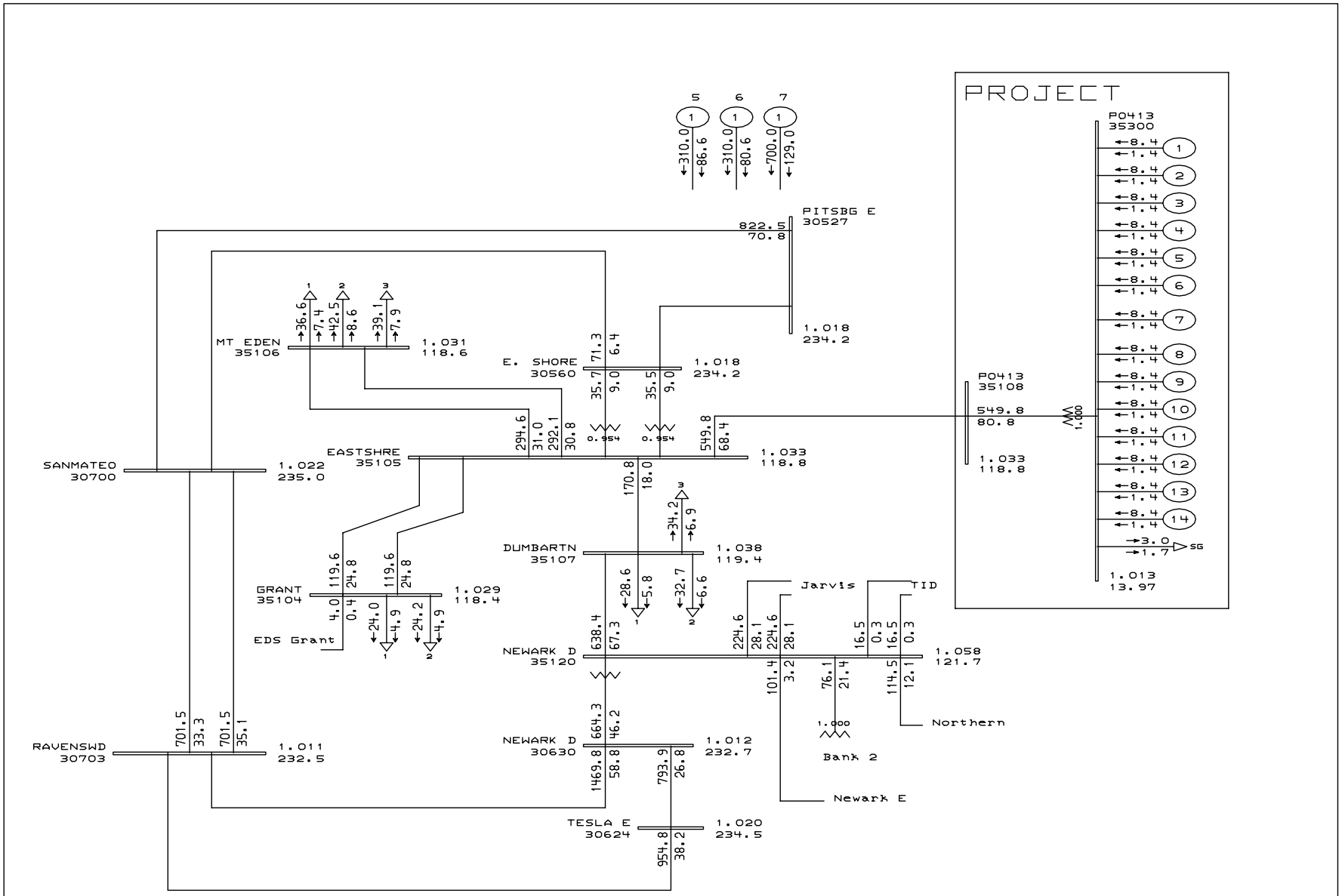

General Electric International, Inc. PSLF Program AMPS/Pct Thu Mar 10 11:13:17 2005

GENERAL ELECTRIC COMPANY	PG&E 2004 BASE CASE SERIES - 2007 Greater Bay Area Summer Peak Case PATH15=-822 MW(S-N) PATH26=3362 MW(N-S) PDCI=3104 MW(N-S) COI=4766 MW(N-S) East Shore Energy Facility - 2007 Summer Peak - after	Plot 20 - 2007 Summer Peak - Before Project Outage: Pittsburg - East Shore 230 kV Line	C:\pslf\pge\ramcoeef\draw\ramc C:\pslf\pge\ramcoeef\cases\sum Rating = 2

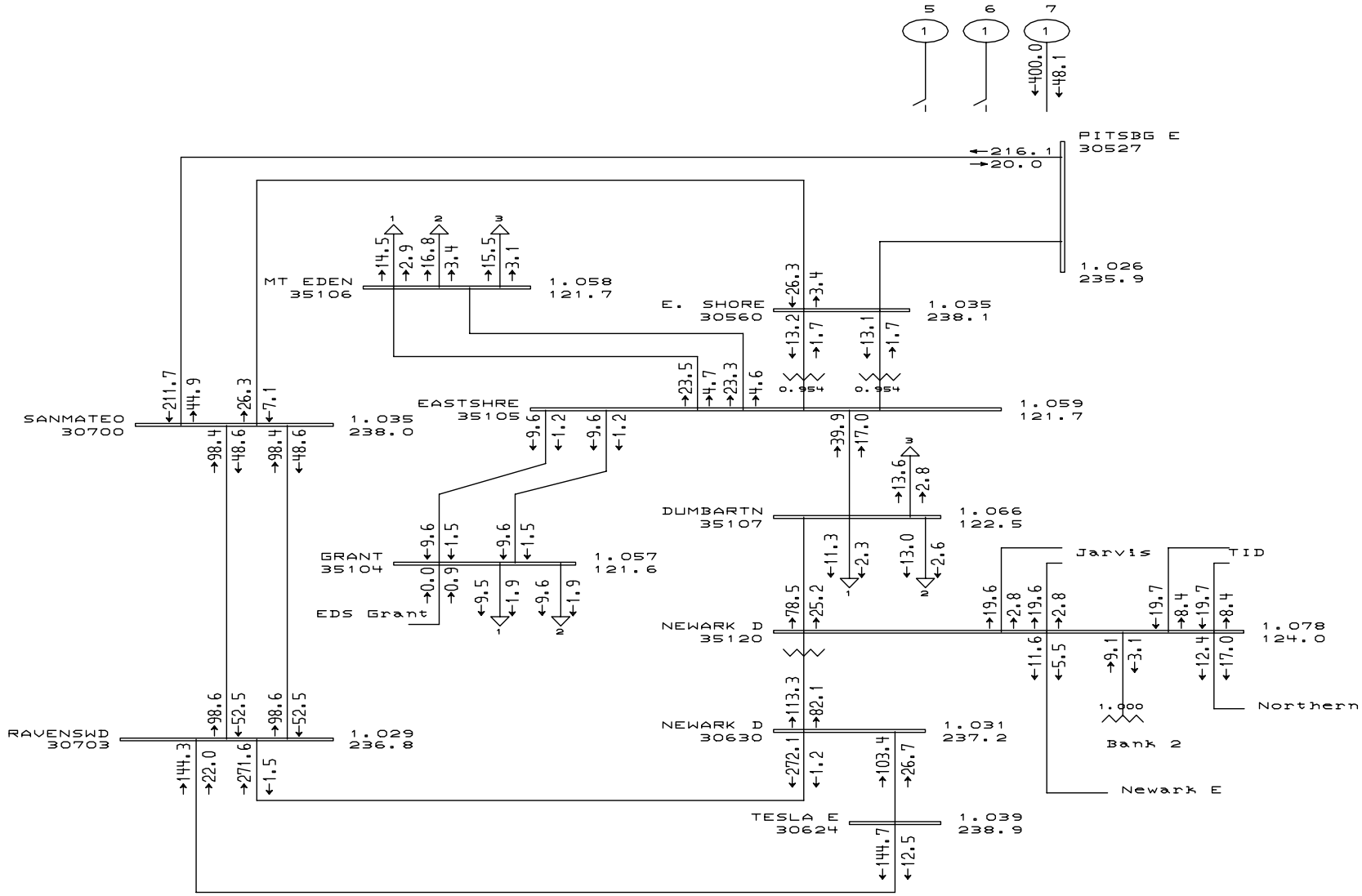

General Electric International, Inc. PSLF Program MW/MVAR Thu Mar 10 11:13:19 2005

GENERAL ELECTRIC COMPANY	PG&E 2004 BASE CASE SERIES - 2007 Summer Off Peak Case PATH15=4946 MW(S-N) PATH26=-1616 MW(N-S) PDCI=-1848 MW(N-S) COI=-3553 MW(N-S) East Shore Energy Facility - 2007 Summer Off Peak - before	Plot 21 - 2007 Summer Off Peak - Before Project Outage: Pittsburg - East Shore 230 kV Line	C:\pslf\pge\ramcoeef\draw\ramc C:\pslf\pge\ramcoeef\cases\sum Rating = 2

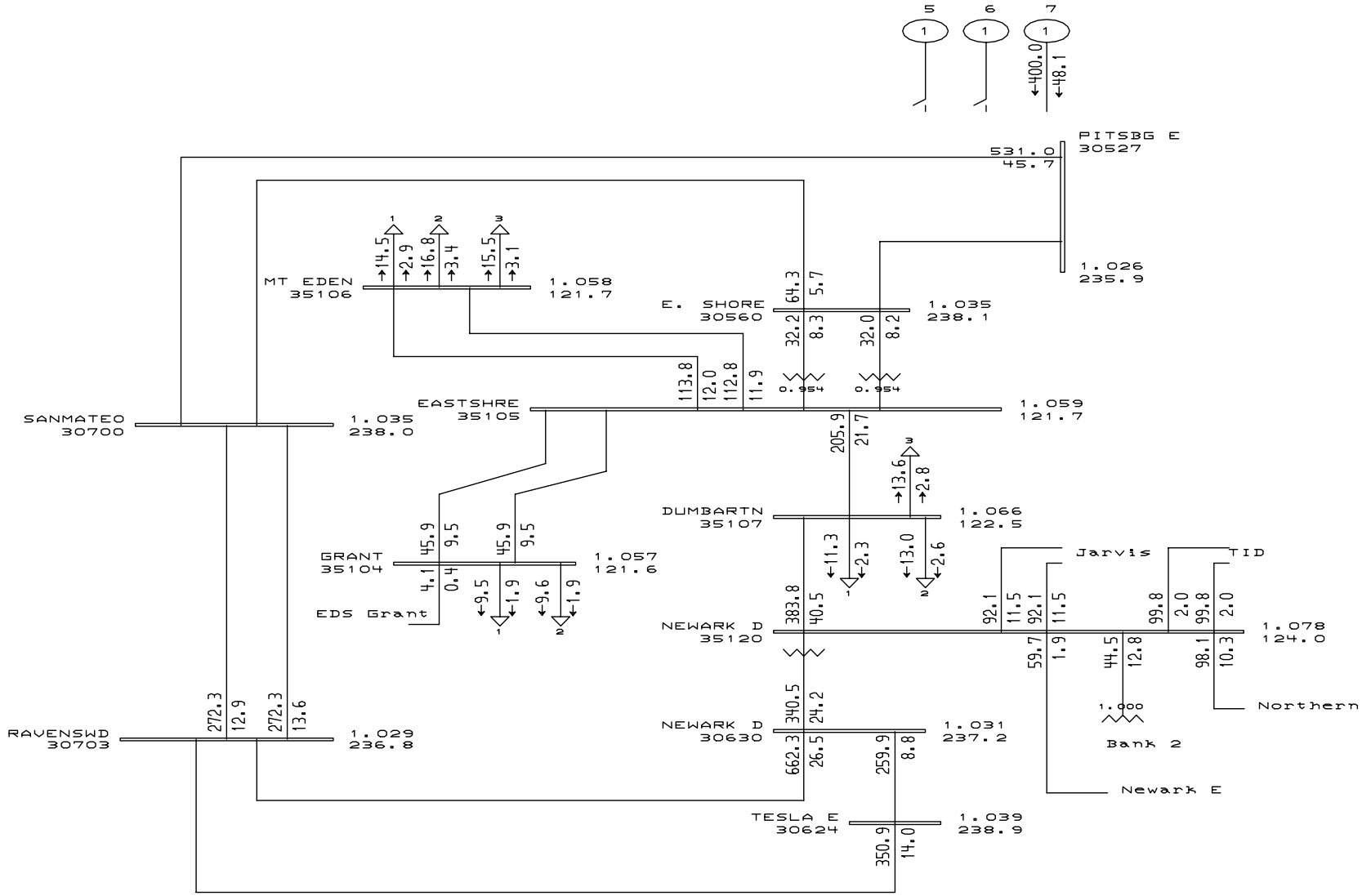

General Electric International, Inc. PSLF Program AMPS/Pct Thu Mar 10 11:13:19 2005

GENERAL ELECTRIC COMPANY	PG&E 2004 BASE CASE SERIES - 2007 Summer Off Peak Case PATH15=4946 MW(S-N) PATH26=-1616 MW(N-S) PDCI=-1848 MW(N-S) COI=-3553 MW(N-S) East Shore Energy Facility - 2007 Summer Off Peak - before	Plot 22 - 2007 Summer Off Peak - Before Project Outage: Pittsburg - East Shore 230 kV Line	C:\pslf\pge\ramcoeef\draw\ramc C:\pslf\pge\ramcoeef\cases\sum Rating = 2

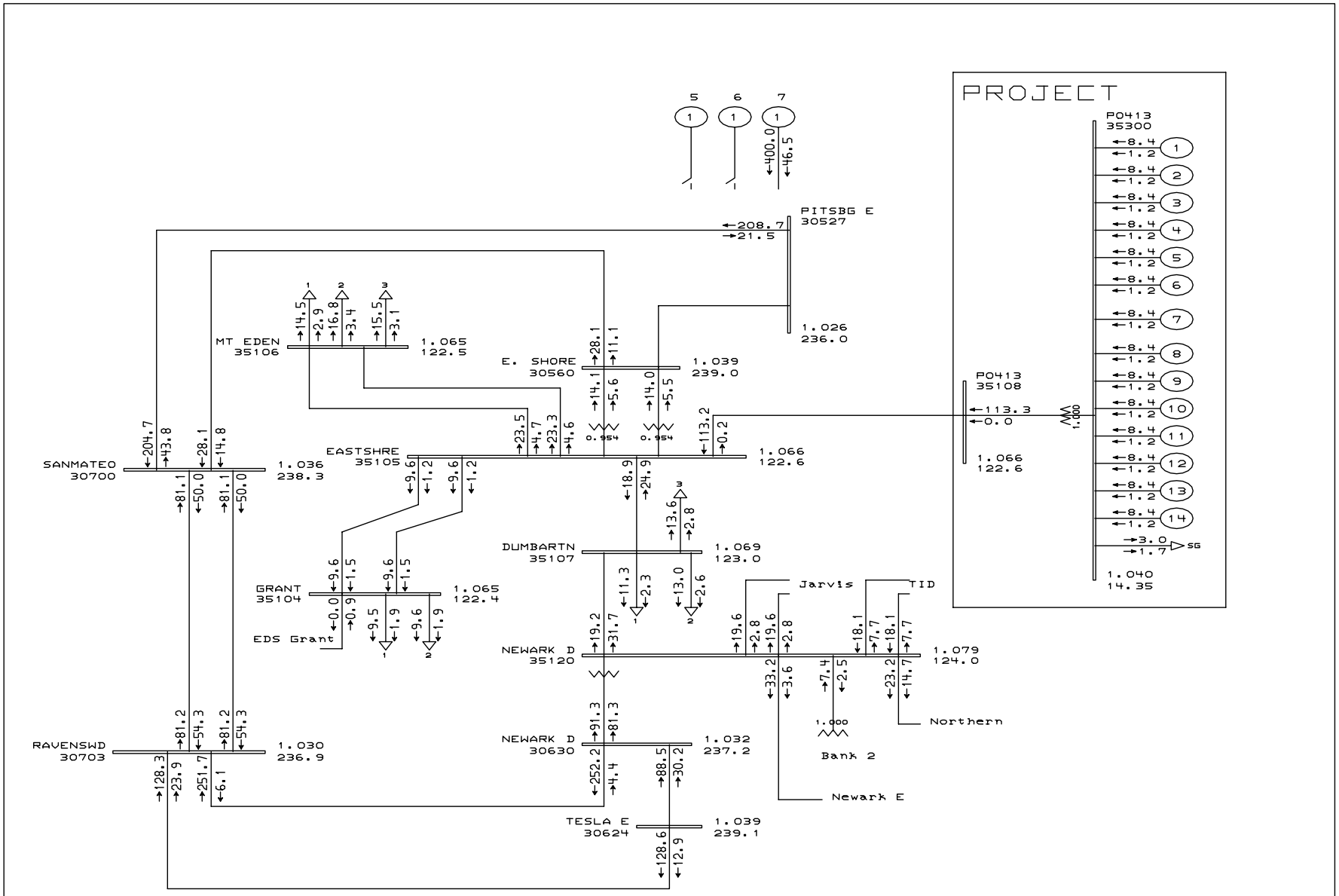

General Electric International, Inc. PSLF Program MW/MVAR Thu Mar 10 11:13:20 2005

GENERAL ELECTRIC COMPANY	PG&E 2004 BASE CASE SERIES - 2007 Summer Off Peak Case PATH15=4838 MW(S-N) PATH26=-1622 MW(N-S) PDCI=-1848 MW(N-S) COI=-3559 MW(N-S) East Shore Energy Facility - 2007 Summer Off Peak - after	Plot 23 - 2007 Summer Off Peak - Before Project Outage: Pittsburg - East Shore 230 kV Line	C:\pslf\pge\ramcoeef\draw\ramc C:\pslf\pge\ramcoeef\cases\sum Rating = 2

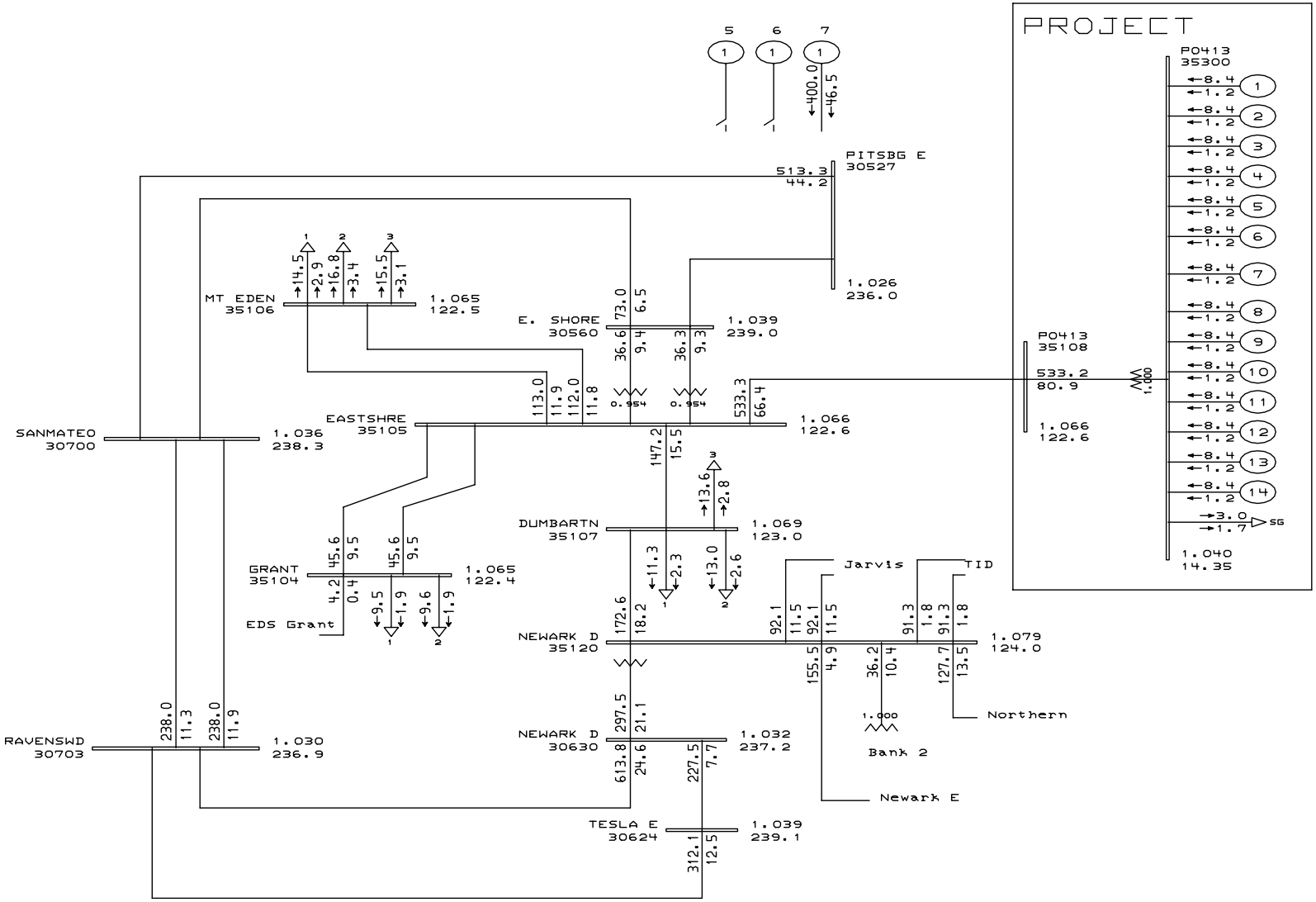

General Electric International, Inc. PSLF Program AMPS/Pct Thu Mar 10 11:13:21 2005

GENERAL ELECTRIC COMPANY	PG&E 2004 BASE CASE SERIES - 2007 Summer Off Peak Case PATH15=4838 MW(S-N) PATH26=-1622 MW(N-S) PDCI=-1848 MW(N-S) COI=-3559 MW(N-S) East Shore Energy Facility - 2007 Summer Off Peak - after	Plot 24 - 2007 Summer Off Peak - Before Project Outage: Pittsburg - East Shore 230 kV Line	C:\pslf\pge\ramcoeef\draw\ramc C:\pslf\pge\ramcoeef\cases\sum Rating = 2

Appendix E

Generator Machine Dynamic Data

Machine Data: Model: GENSAL

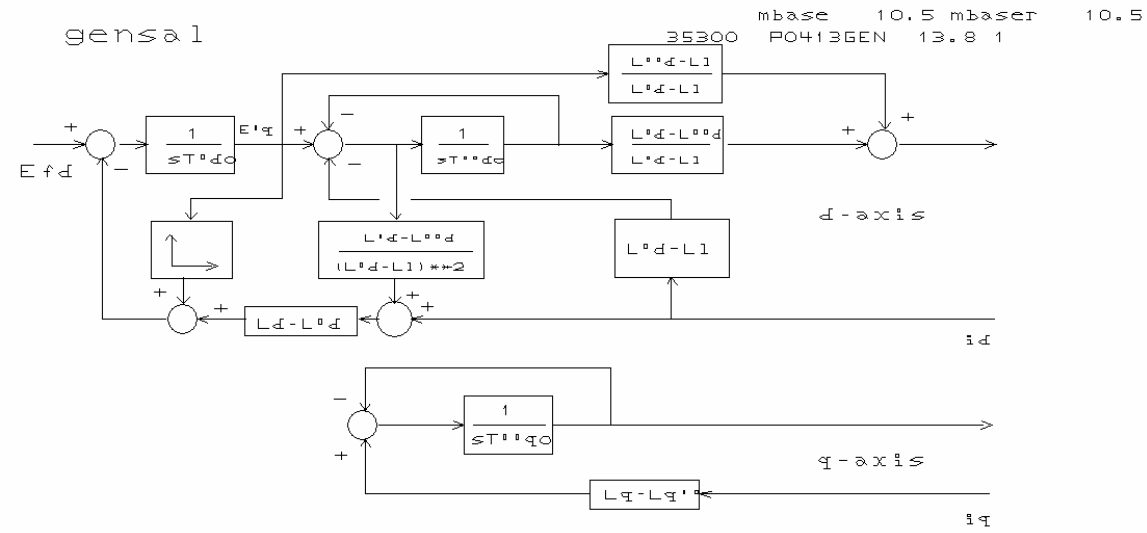

ld	1.7530	lpq	0.0000	tpdo	5.9660	s1	0.1560
lpd	0.3050	lppq	0.1780	tppdo	0.0277	s12	0.8250
lppd	0.1780	ll	0.1500	tpqo	0.0000	h	1.0200
lq	0.8920	ra	0.0041	tppqo	0.1139	d	0.0000

Variable	Description	Value
Tdop	D-axis transient rotor time constant, set	5.966
Tppdo	D-axis sub-transient rotor time constant, sec	0.0277
Tpqo	Q-axis transient rotor time constant, sec	0.0
Tppqo	Q-axis sub-transient rotor time constant, sec	0.1139
H	Inertia constant, sec	1.02
D	Damping factor, pu	0.00
Ld	D-axis synchronous reactance, pu	1.753
Lq	Q-axis synchronous reactance, pu	0.892
Lpd	D-axis transient synchronous reactance, pu	0.305
Lpq	Q-axis transient synchronous reactance, pu	0
Lppd	D-axis subtransient synchronous reactance, pu	0.178
Ll	Stator leakage reactance, pu	0.15
s1	Saturation factor at 1 pu flux	0.156
s12	Saturation factor at 1.2 pu flux	0.825
Ra	Stator resistance, pu	0.00406
Rcomp	Compounding resistance voltage control, pu	0.00
Xcomp	Compounding reactance voltage control, pu	0.00

Excitation Data: Model: EXAC8b

mbase 10.5 mbaser 10

35300 P0413GEN 13.8 1

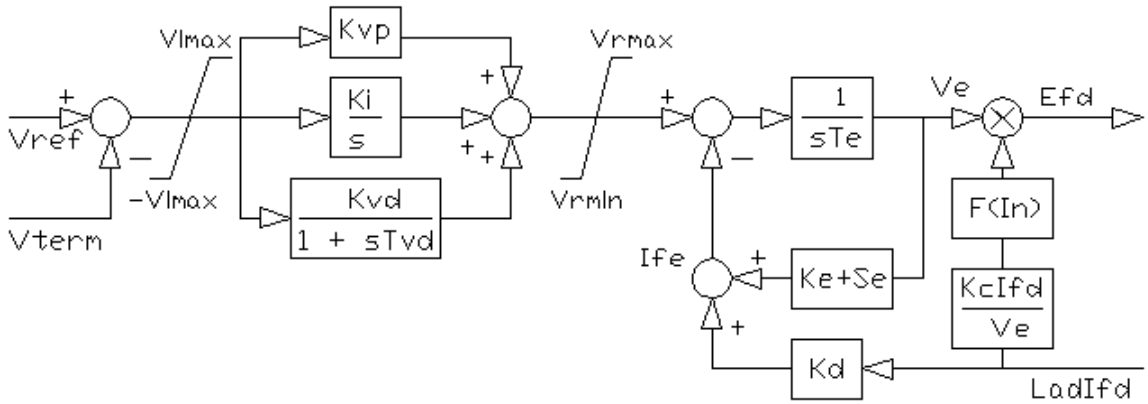

tr	0.0200	tvd	0.0300	vrmin	0.0000	kd	0.0000
kvp	7.0200	vimax	0.5450	ke	1.0000	e1	3.9500
kvi	9.1200	ta	0.0000	te	0.1200	se1	0.9530
kvd	1.4700	vrmax	5.0700	kc	0.0000	e2	5.2700

Variable	Description	Value
Tr	Voltage transducer time constant, sec	0.02
Kvp	Voltage regulator proportional gain	7.02
Kvi	Voltage regulator integral gain	9.12
Kvd	Voltage regulator derivative gain	1.47
Tvd	Voltage regulator derivative time constant, sec	0.03
Vimax	Voltage regulator input limit, p.u.	0.545
Ta	Voltage regulator time constant, sec	0.0
Vrmax	Maximum controller output, p.u.	5.07
Vrmin	Minimum controller output, p.u.	0.0
Ke	Exciter field proportional constant	1.0
Te	Exciter time constant, sec	0.12
Kc	Rectifier regulation factor, p.u.	0.0
Kd	Exciter regulation factor, p.u.	0.0
E1	Exciter flux at knee of curve, p.u.	3.95
Se1	Saturation factor at knee	0.953
E2	Maximum exciter, p.u.	5.27
Se2	Saturation factor at max flux	0.996

PSS Data: Model PSS2a

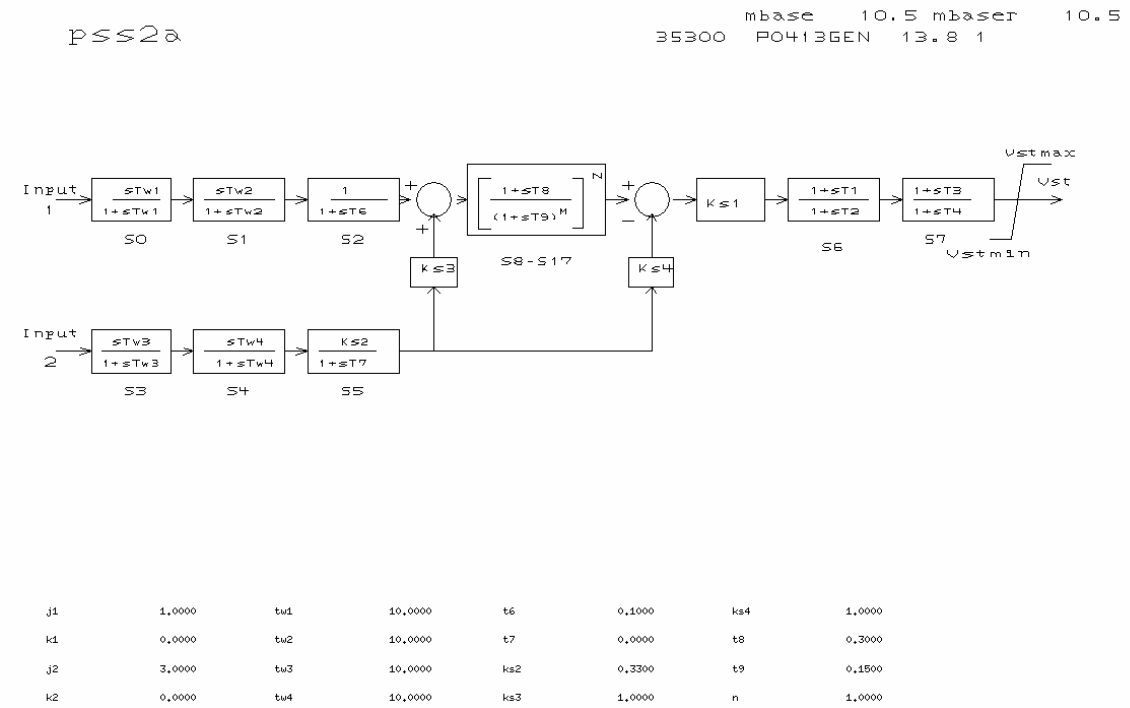

j1	1.0000	tw1	10.0000	t6	0.1000	ks4	1.0000
k1	0.0000	tw2	10.0000	t7	0.0000	t8	0.3000
j2	3.0000	tw3	10.0000	ks2	0.3300	t9	0.1500
k2	0.0000	tw4	10.0000	ks3	1.0000	n	1.0000

Variable	Description	Value
j1	Input signal #1 code	1
k1	Input signal #1 remote bus number	0
j2	Input signal #2 code	3
k2	Input signal #2 remote bus number	0
tw1	First washout on signal #1, sec	10.0
tw2	First washout on signal #1, sec	10.0
tw3	First washout on signal #2, sec	10.0
tw4	First washout on signal #2, sec	10.0
t6	Time constant on signal #1, sec	0.1
t7	Time constant on signal #2, sec	0.00
ks2	Gain signal #2	0.33
ks3	Gain signal #2	1.0
ks4	Gain signal #2	1.0
t8	Lead of ramp tracking filter	0.30
t9	Lag of ramp tracking filter	0.15
N	Order of ramp tracking filter	1.0
M	Order of ramp tracking filter	5.0
ks1	Stabilizer gain	0.10
t1	Lead/lag time constants, sec	0.16
t2	Lead/lag time constants, sec	0.02
t3	Lead/lag time constants, sec	0.16

t4	Lead/lag time constants, sec	0.02
vstmax	Stabilizer output max limit, p.u.	0.20
vstmin	Stabilizer output min limit, p.u.	-0.20

Governor Data: GGOV1

mbase 10.5 mbaser 10

35300 PD413GEN 13.8 1

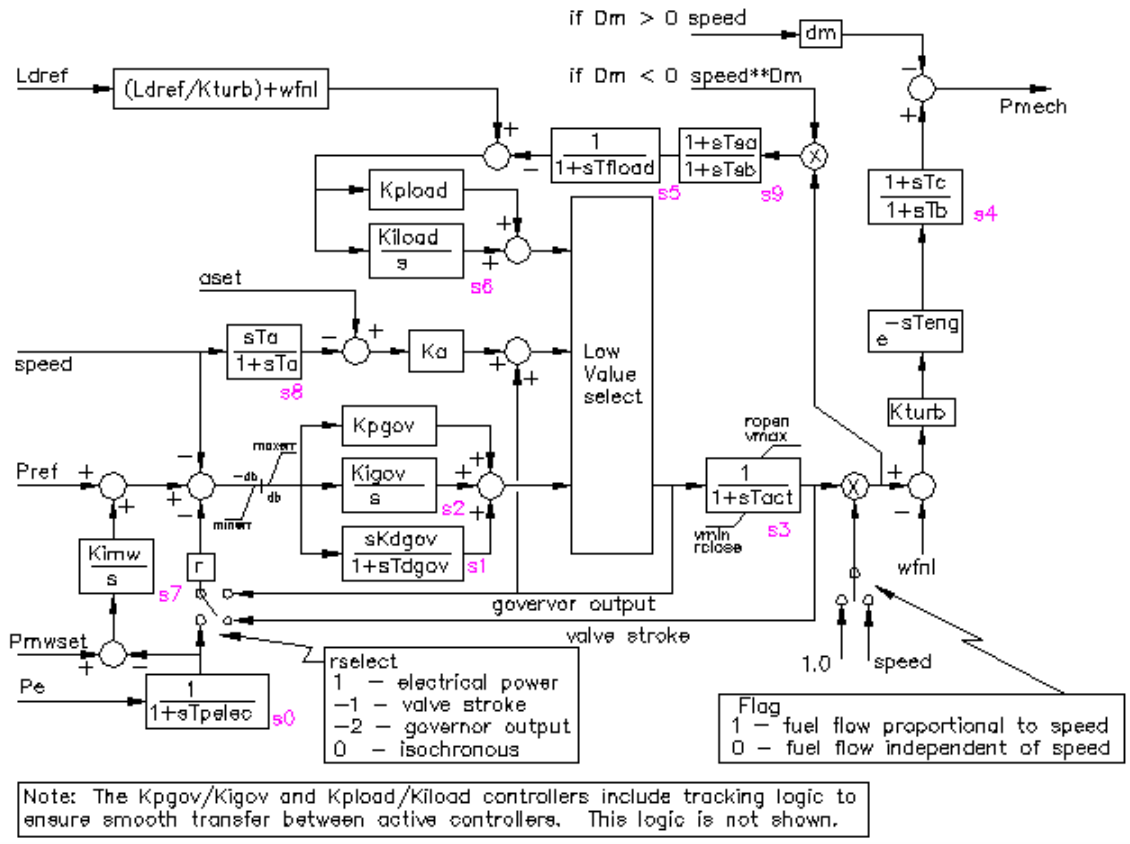

r	0.0400	minerr	-10.0000	tdgov	0.0100	kturb	1.0000
rselect	1.0000	kpgov	5.9600	vmax	1.1000	wfnl	0.0710
tpelec	0.1600	kigov	5.9600	vmin	0.0000	tb	1.0000
maxerr	10.0000	kdgov	0.0010	tact	0.0100	tc	1.0000

Variable	Description	Value
R	Permanent droop, p.u.	0.04
Rselect	Selection for feedback signal for droop	1
Tpelec	Electrical power transducer time constant, sec	1
Maxerr	Maximum value of speed error signal	10.0
Minerr	Minimum value of speed error signal	-10.0
Kpgov	Governor proportional gain	5.96
Kigov	Governor integral gain	5.96
Kdgov	Governor derivative gain	.000993
Tdgov	Governor derivative controller time constant, sec	0.01

Vmax	Maximum valve position limit	1.1
Vmin	Minimum valve position limit	0.0
Tact	Actuator time constant, sec	0.01
Kturb	Valve-to-power gain	1.0
Wfnl	No load fuel flow, p.u.	0.071
Tb	Power development lag time constant	1.0
Tc	Power development lead time constant	1.0
Flag	Switch for turbine output	1.0
Teng	Transport lag time constant for diesel engine	0.03
Tfload	Load limiter time constant	1.0
Kpload	Load limiter proportional gain for PI controller	1.0
Kiload	Load limiter integral gain for PI controller	1.0
Ldref	Load limiter reference value, p.u.	10.0
Dm	Mechanical damping coefficient, p.u.	0.0
Ropen	Maximum valve opening rate, p.u./sec	10.0
Rclose	Minimum valve closing rate, p.u./sec	-10.0
Kimw	Power controller (reset) gain	0.0
Pmwset	Power controller setpoint, MW	0.0
aset	Acceleration limiter setpoint, p.u./sec	0.0
Ka	Acceleration limiter Gain	0.0
Ta	Acceleration limiter time constant, sec	0.0
Db	Speed governor dead band	0.0
Tsa	Temperature detection lead time constant, sec	0.0
Tsb	Temperature detection lag time constant, sec	0.0
Rup	Maximum rate of load limit increase	0.0
Rdown	Maximum rate of load limit decrease	0.0
Tbd	Speed Ratio Valve and Fuel Supply lag time constant, sec	0.0
Tcd	Speed Ratio Valve and Fuel Supply lead time constant, sec	0.0

Appendix F

Dynamic Stability Plots

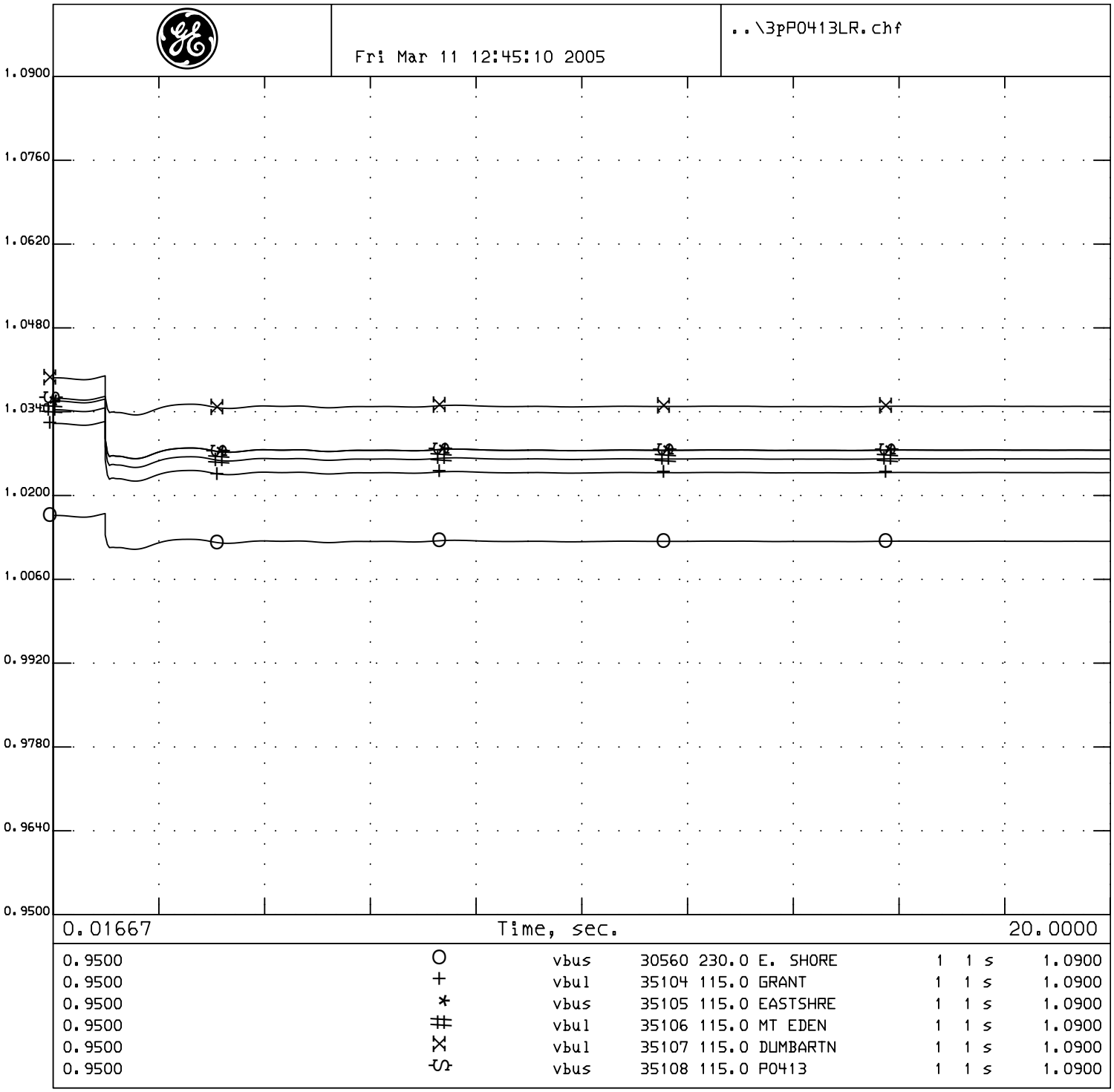

P0413 Project System Impact Study
2007 Summer Peak Base Case
P0413 @ 118MW
P0413 Load Rejection
No Fault

P0413 Project System Impact Study

Generator Interconnection Study

Selected PG&E Bus Voltage Plots Adjacent to Fault

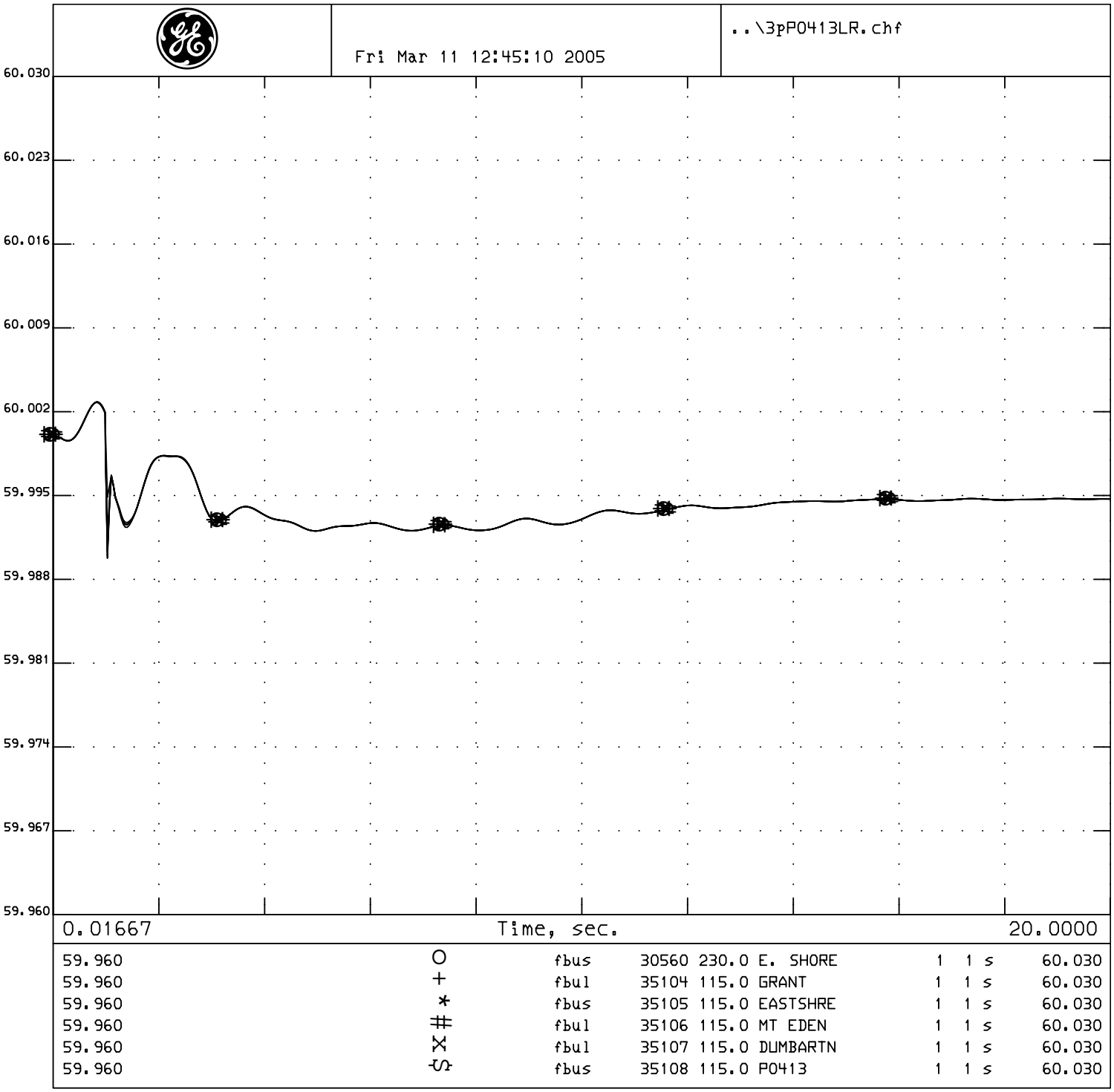

P0413 Project System Impact Study
2007 Summer Peak Base Case
P0413 @ 118MW
P0413 Load Rejection
No Fault

P0413 Project System Impact Study

Generator Interconnection Study

Selected PG&E Bus Frequency Plots Adjacent to Fault

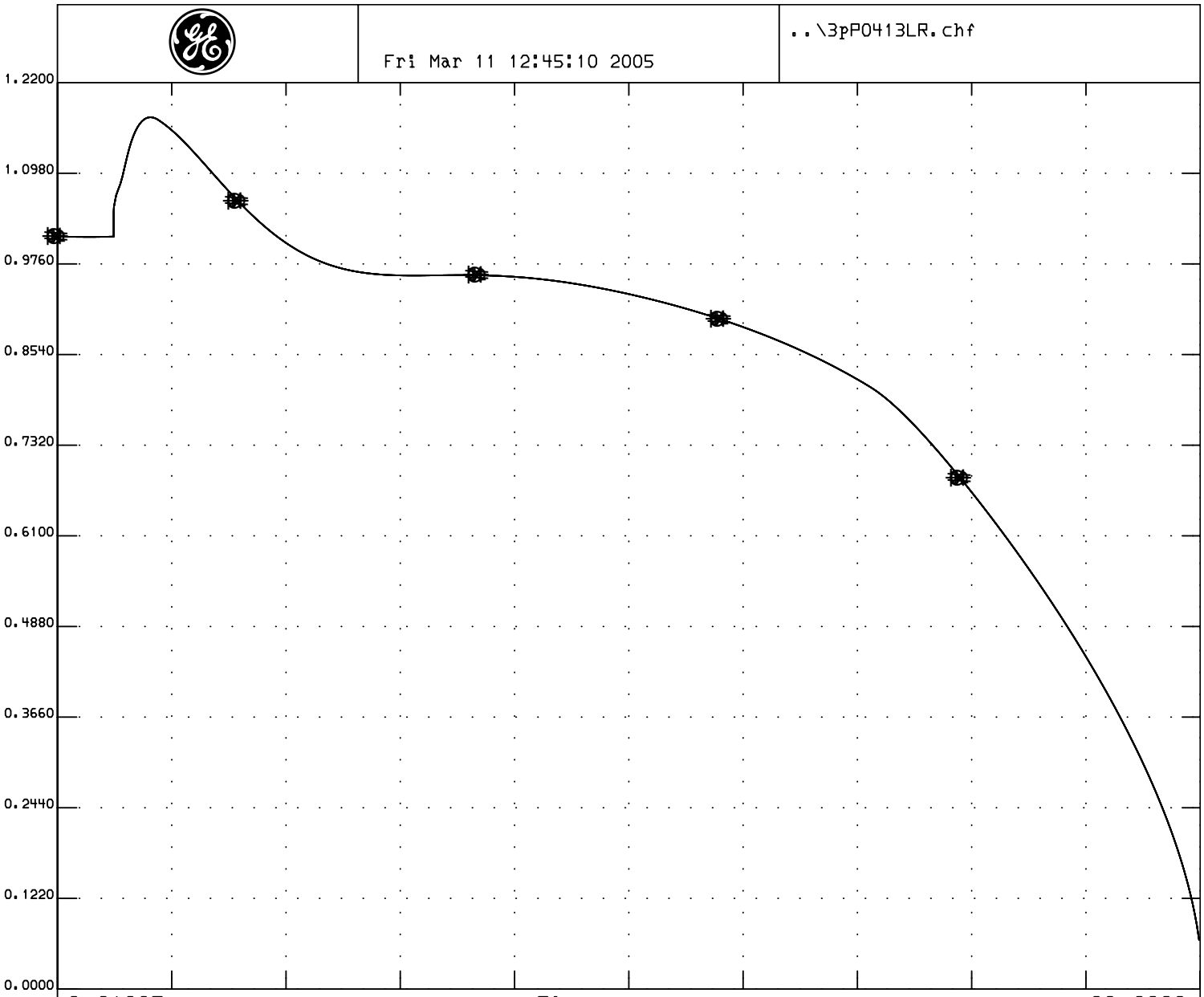

0.0000	O	vt	35300	13.8	P0413GEN	1	1 s	1.2200
0.0000	+	vt	35300	13.8	P0413GEN	10	1 s	1.2200
0.0000	*	vt	35300	13.8	P0413GEN	11	1 s	1.2200
0.0000	#	vt	35300	13.8	P0413GEN	12	1 s	1.2200
0.0000	X	vt	35300	13.8	P0413GEN	13	1 s	1.2200
0.0000	S	vt	35300	13.8	P0413GEN	14	1 s	1.2200

P0413 Project System Impact Study
2007 Summer Peak Base Case
P0413 @ 118MW
P0413 Load Rejection
No Fault

P0413 Project System Impact Study

Generator Interconnection Study

Project Generator Terminal Voltages

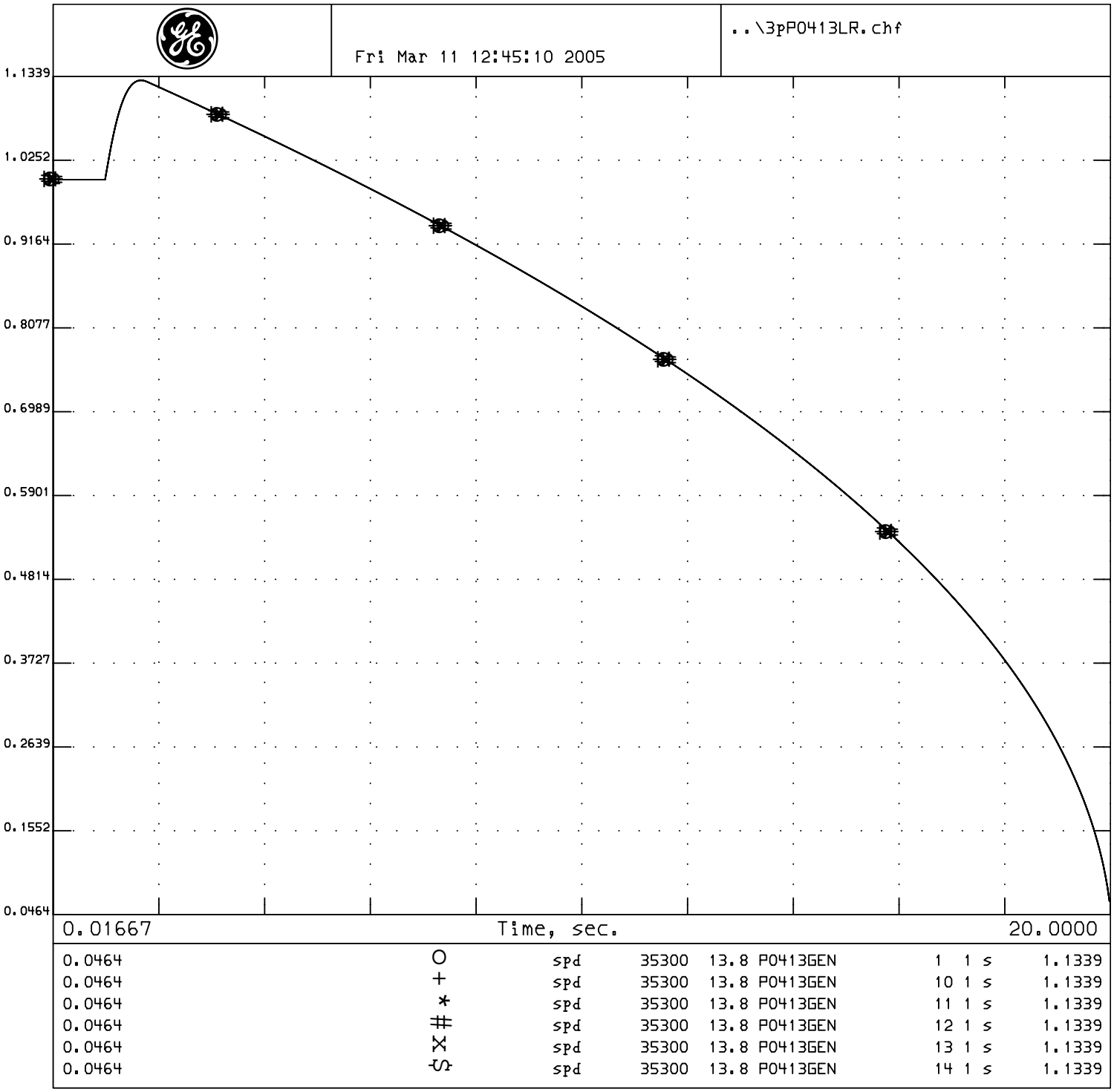

P0413 Project System Impact Study
2007 Summer Peak Base Case
P0413 @ 118MW
P0413 Load Rejection
No Fault

P0413 Project System Impact Study

Generator Interconnection Study

Project Generator Rotor Speed

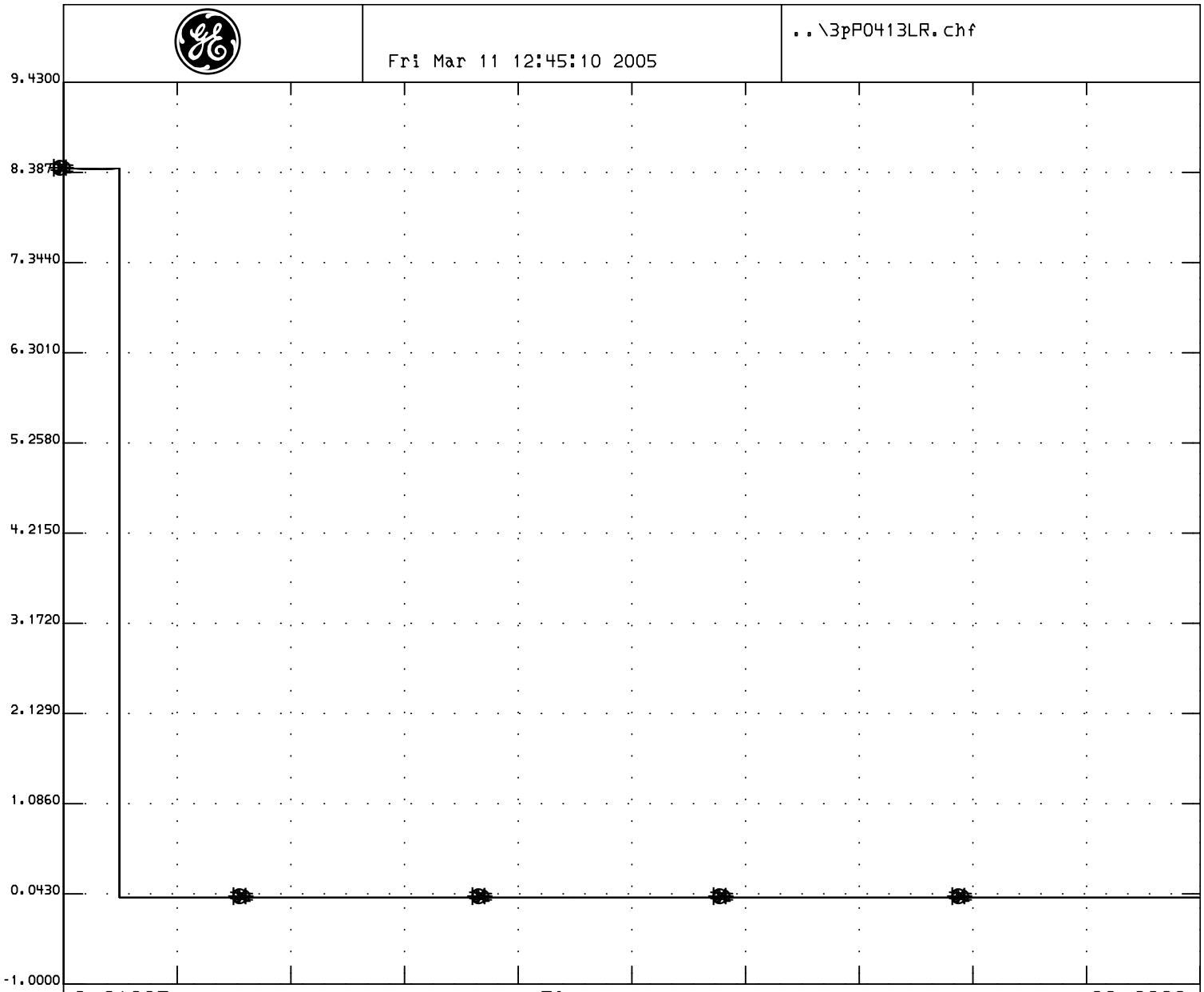

-1.000	O	pg	35300	13.8	P0413GEN	1	1 s	9.4300
-1.000	+	pg	35300	13.8	P0413GEN	10	1 s	9.4300
-1.000	*	pg	35300	13.8	P0413GEN	11	1 s	9.4300
-1.000	#	pg	35300	13.8	P0413GEN	12	1 s	9.4300
-1.000	X	pg	35300	13.8	P0413GEN	13	1 s	9.4300
-1.000	S	pg	35300	13.8	P0413GEN	14	1 s	9.4300

P0413 Project System Impact Study
2007 Summer Peak Base Case
P0413 @ 118MW
P0413 Load Rejection
No Fault

P0413 Project System Impact Study

Generator Interconnection Study

Project Generator Terminal Power

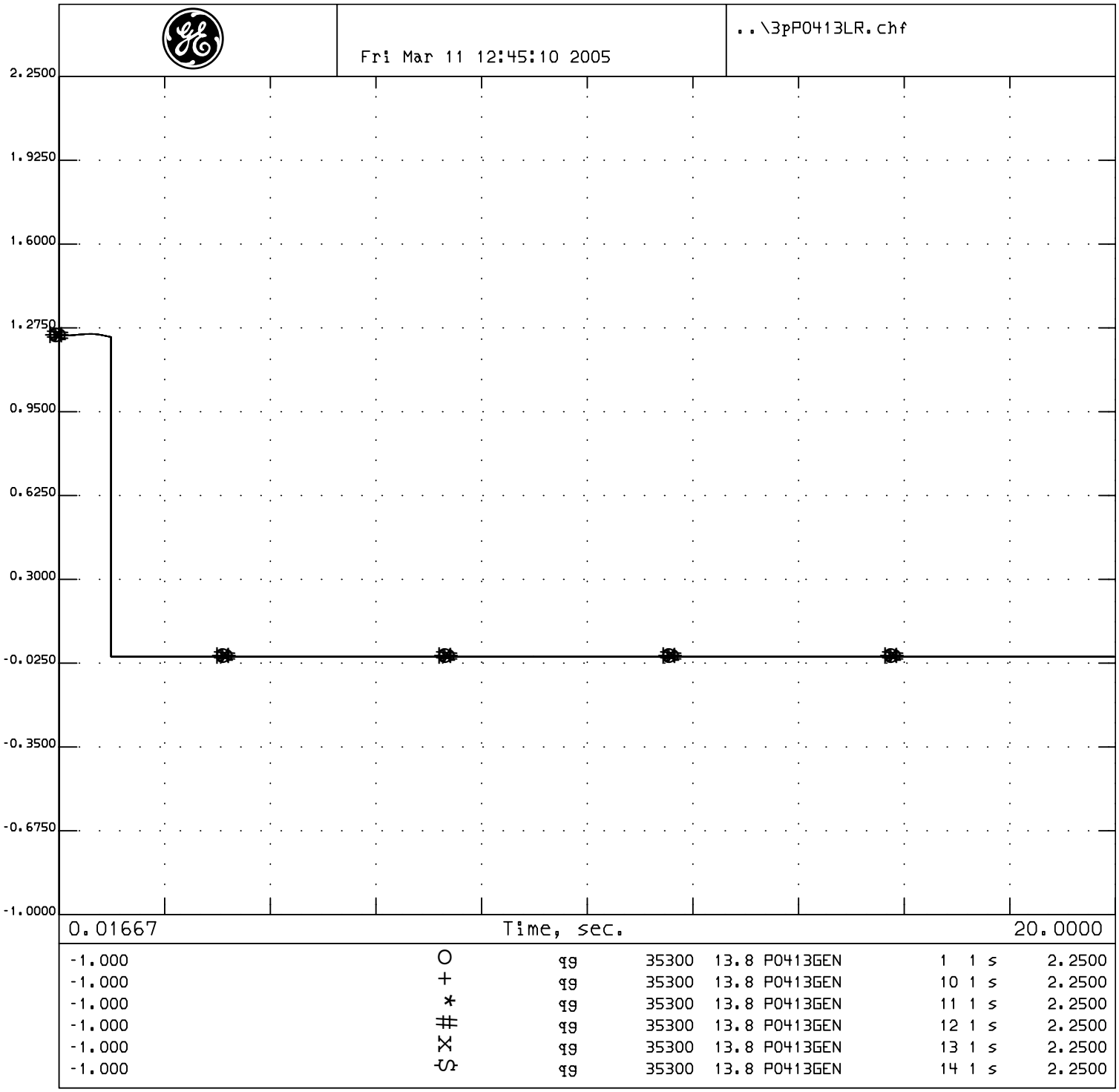

P0413 Project System Impact Study
2007 Summer Peak Base Case
P0413 @ 118MW
P0413 Load Rejection
No Fault

P0413 Project System Impact Study

Generator Interconnection Study

Project Generator Terminal Reactive Power

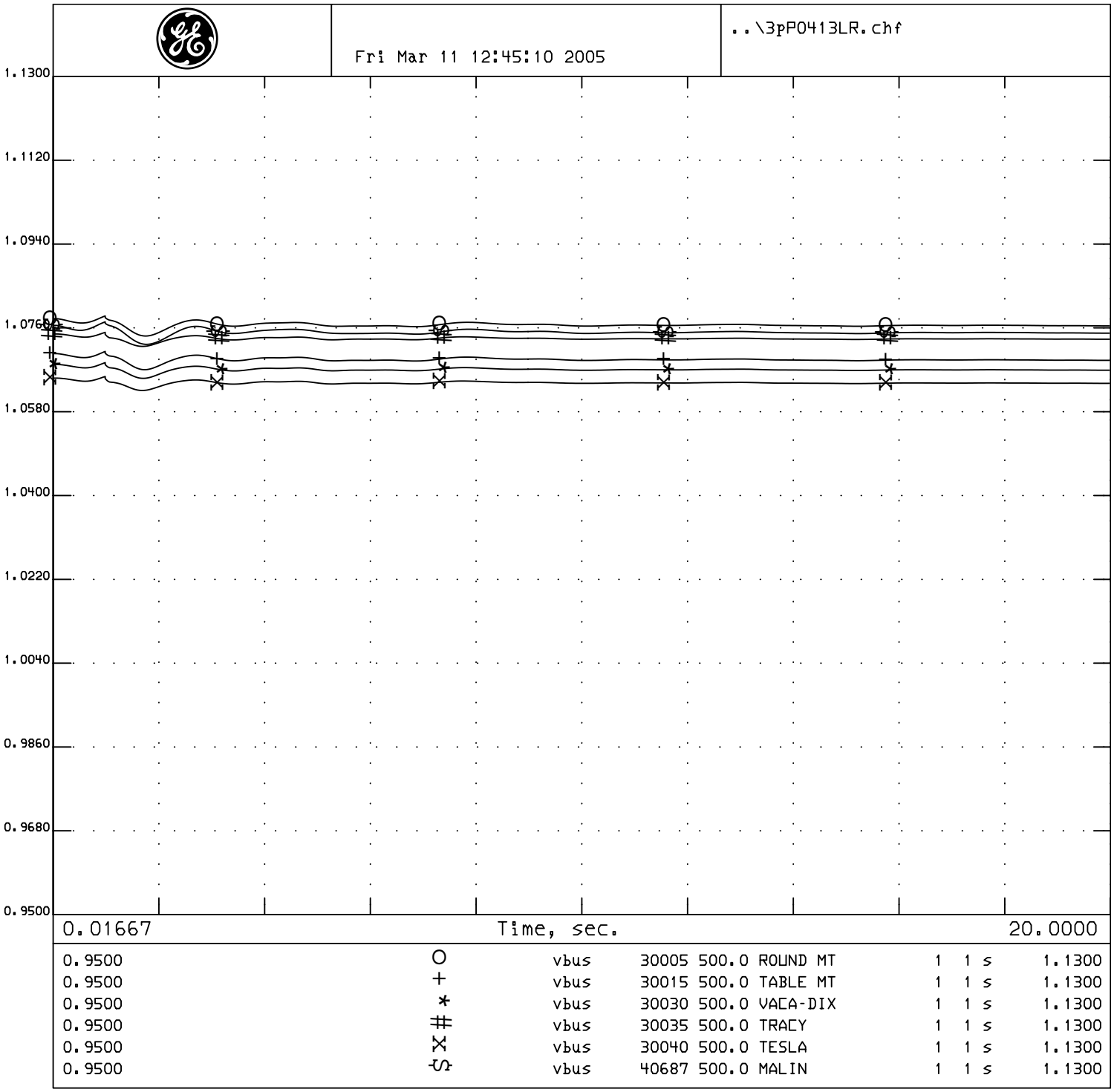

P0413 Project System Impact Study
2007 Summer Peak Base Case
P0413 @ 118MW
P0413 Load Rejection
No Fault

P0413 Project System Impact Study

Generator Interconnection Study

Selected WECC Bus Voltage Plots

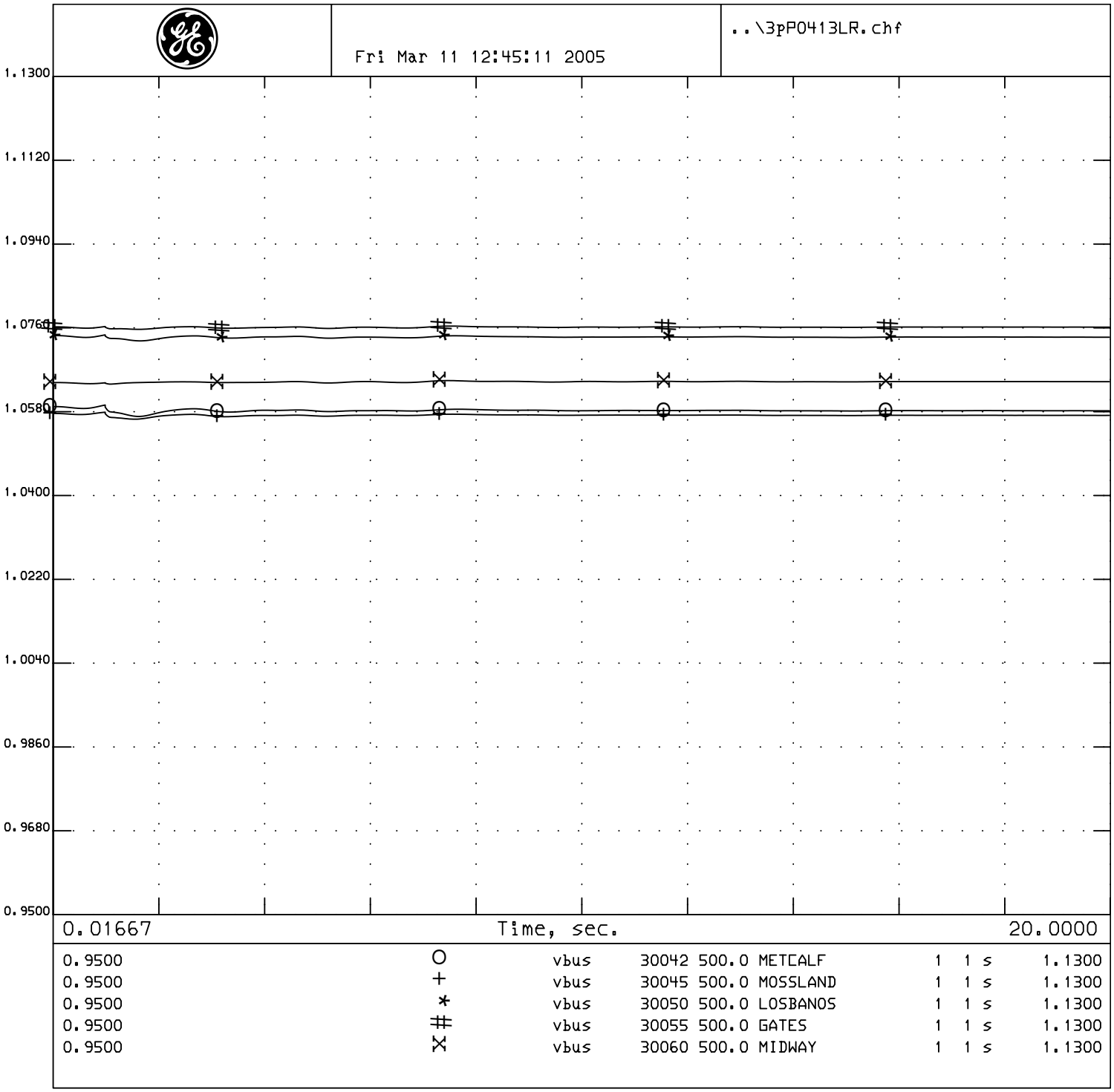

P0413 Project System Impact Study
2007 Summer Peak Base Case
P0413 @ 118MW
P0413 Load Rejection
No Fault

P0413 Project System Impact Study

Generator Interconnection Study

Selected WECC Bus Voltage Plots

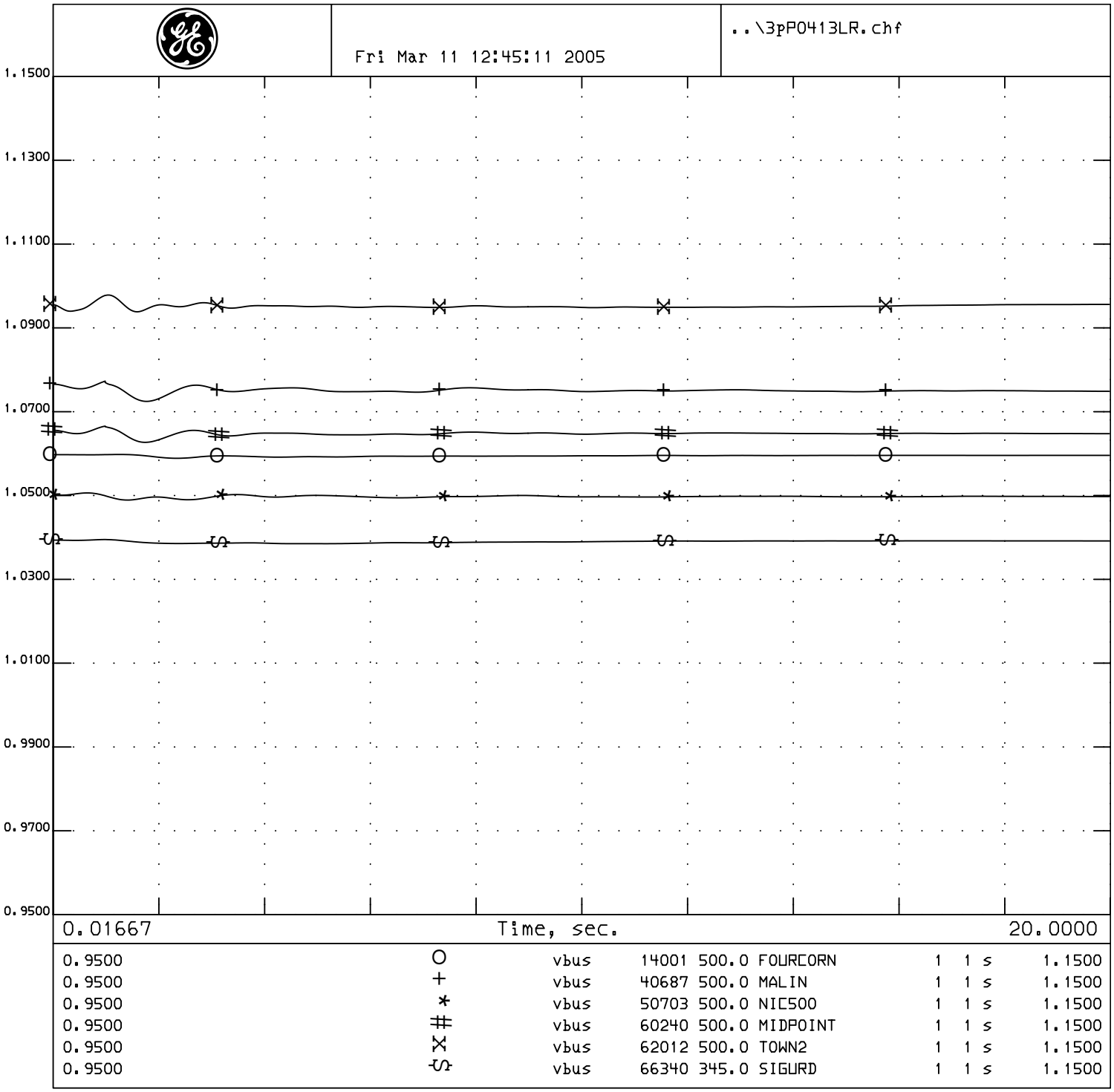

P0413 Project System Impact Study
2007 Summer Peak Base Case
P0413 @ 118MW
P0413 Load Rejection
No Fault

P0413 Project System Impact Study

Generator Interconnection Study

Selected WECC Bus Voltage Plots

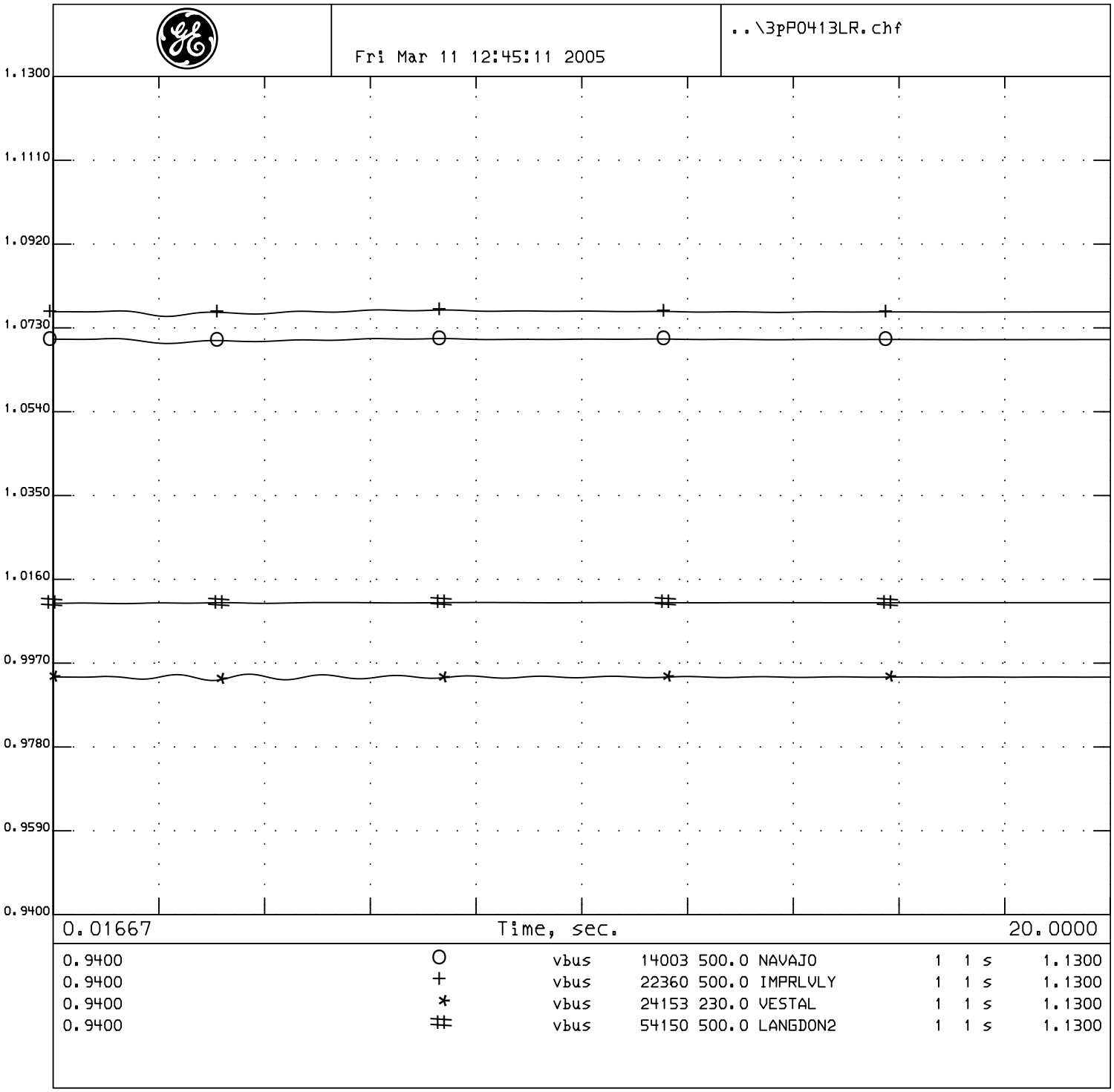

P0413 Project System Impact Study
2007 Summer Peak Base Case
P0413 @ 118MW
P0413 Load Rejection
No Fault

P0413 Project System Impact Study

Generator Interconnection Study

Selected WECC Bus Voltage Plots

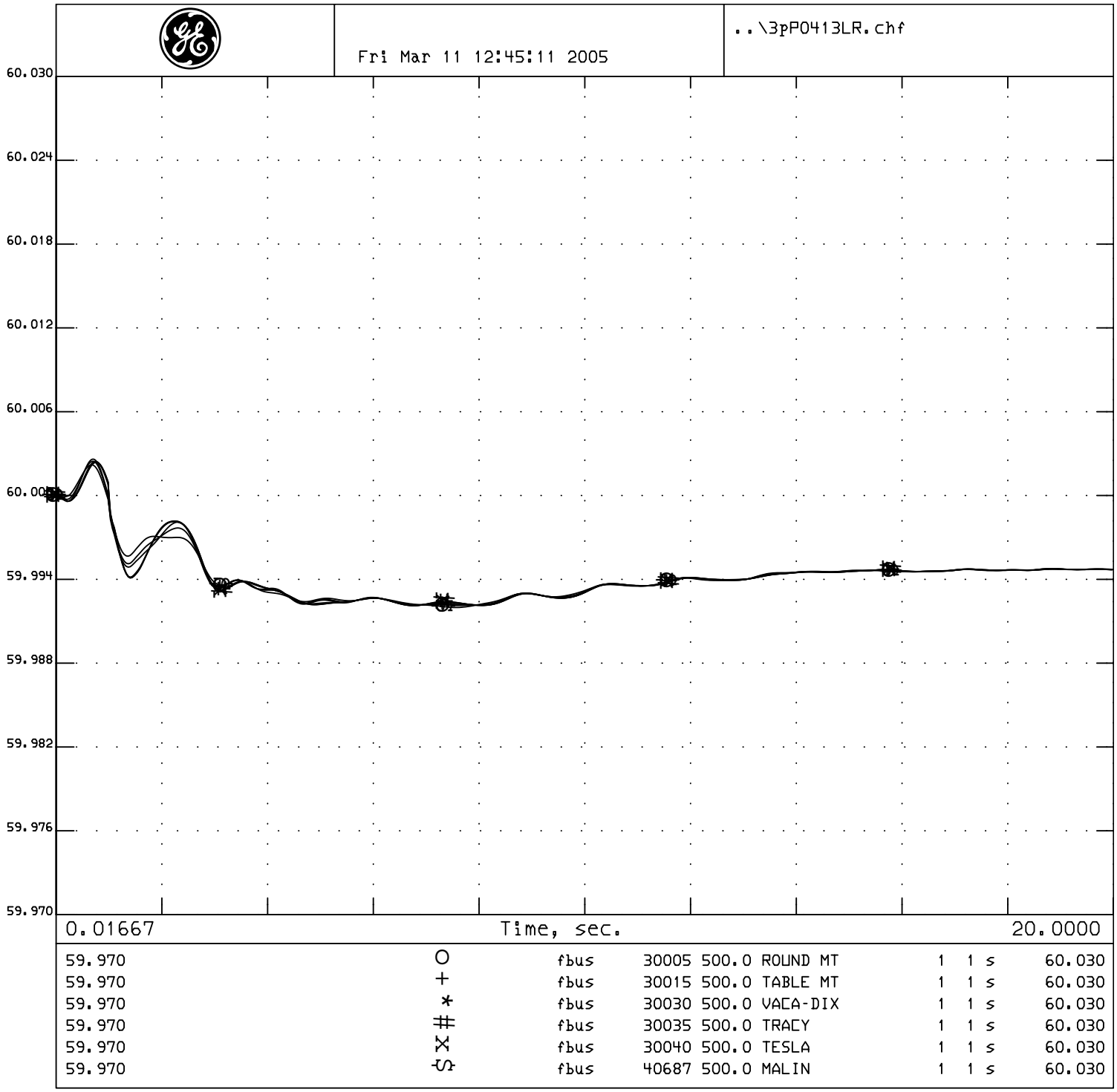

P0413 Project System Impact Study
2007 Summer Peak Base Case
P0413 @ 118MW
P0413 Load Rejection
No Fault

P0413 Project System Impact Study

Generator Interconnection Study

Selected WECC Bus Frequency Plots

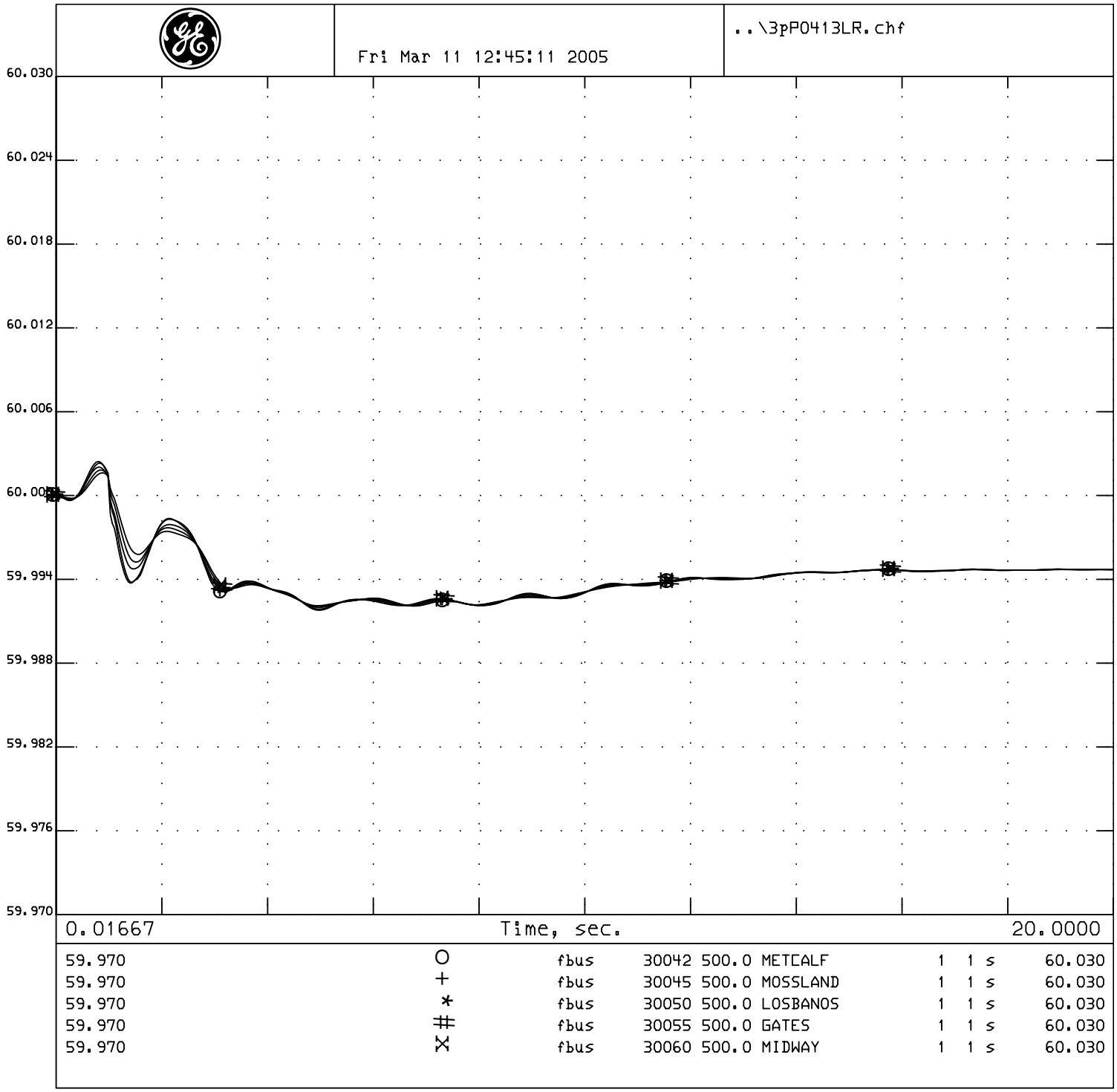

P0413 Project System Impact Study
2007 Summer Peak Base Case
P0413 @ 118MW
P0413 Load Rejection
No Fault

P0413 Project System Impact Study

Generator Interconnection Study

Selected WECC Bus Frequency Plots

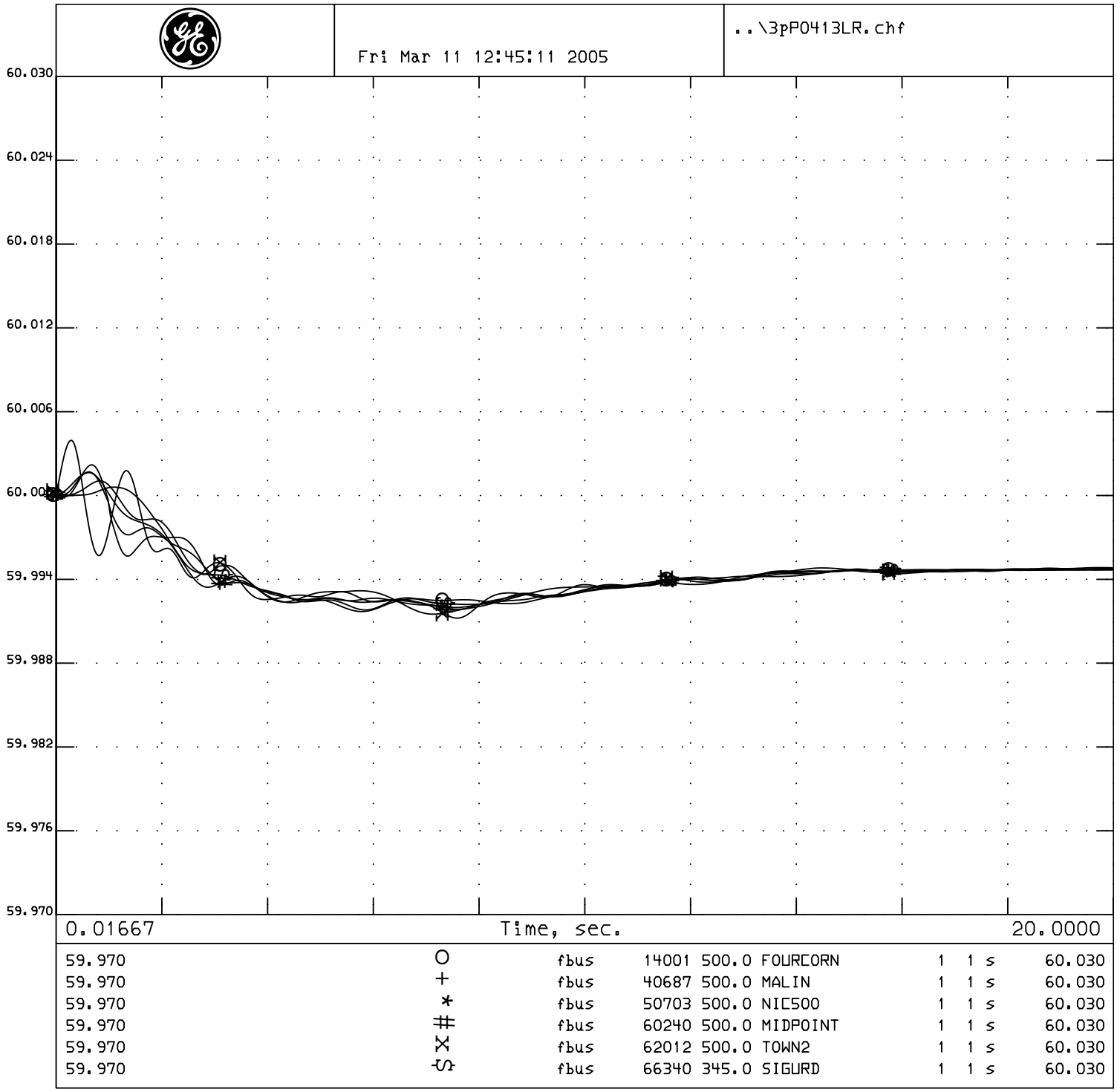

P0413 Project System Impact Study
2007 Summer Peak Base Case
P0413 @ 118MW
P0413 Load Rejection
No Fault

P0413 Project System Impact Study

Generator Interconnection Study

Selected WECC Bus Frequency Plots

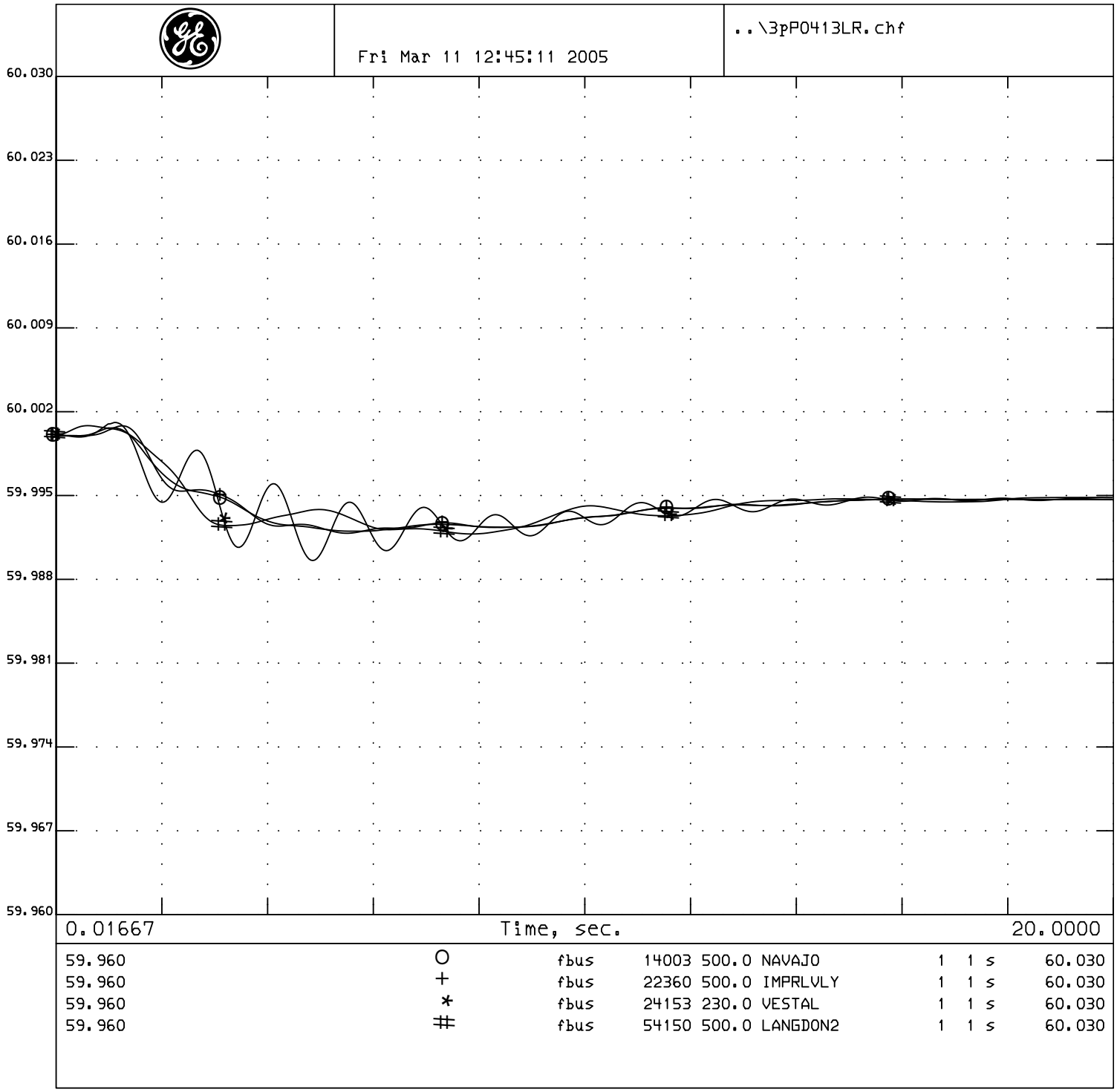

P0413 Project System Impact Study
2007 Summer Peak Base Case
P0413 @ 118MW
P0413 Load Rejection
No Fault

P0413 Project System Impact Study

Generator Interconnection Study

Selected WECC Bus Frequency Plots

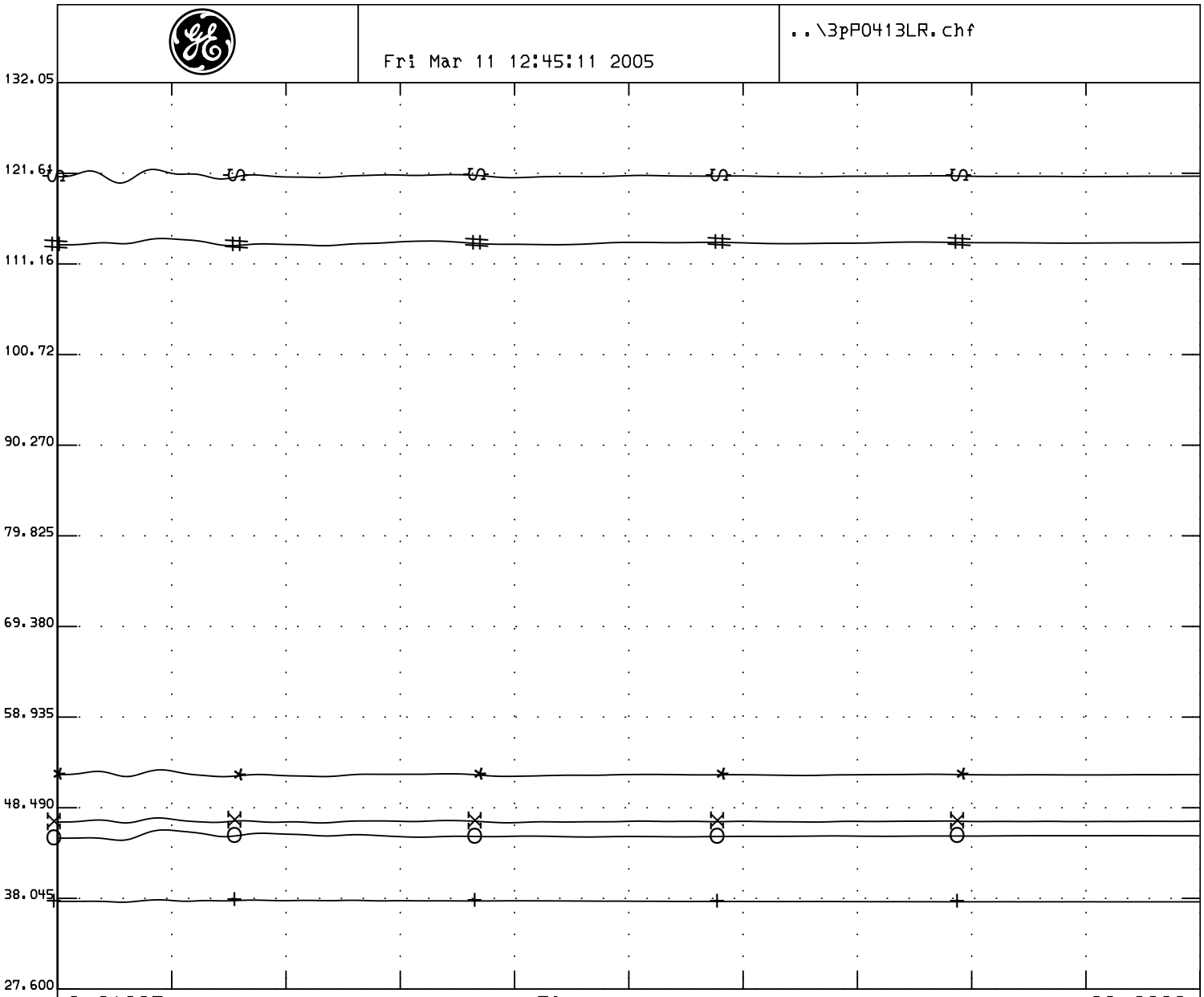

27.600	O	ang	14914	22.0	FCNGN4CC	H	1	s	132.05
27.600	+	ang	36411	25.0	DIABLO 1	1	1	s	132.05
27.600	*	ang	41701	13.8	JONDAY01	1	1	s	132.05
27.600	#	ang	50500	13.8	GMS G6	1	1	s	132.05
27.600	X	ang	60100	13.8	BRWNL 5	1	1	s	132.05
27.600	S	ang	62048	26.0	COLSTP 3	1	1	s	132.05

P0413 Project System Impact Study
2007 Summer Peak Base Case
P0413 @ 118MW
P0413 Load Rejection
No Fault

P0413 Project System Impact Study

Generator Interconnection Study

WECC Generator Rotor Angle

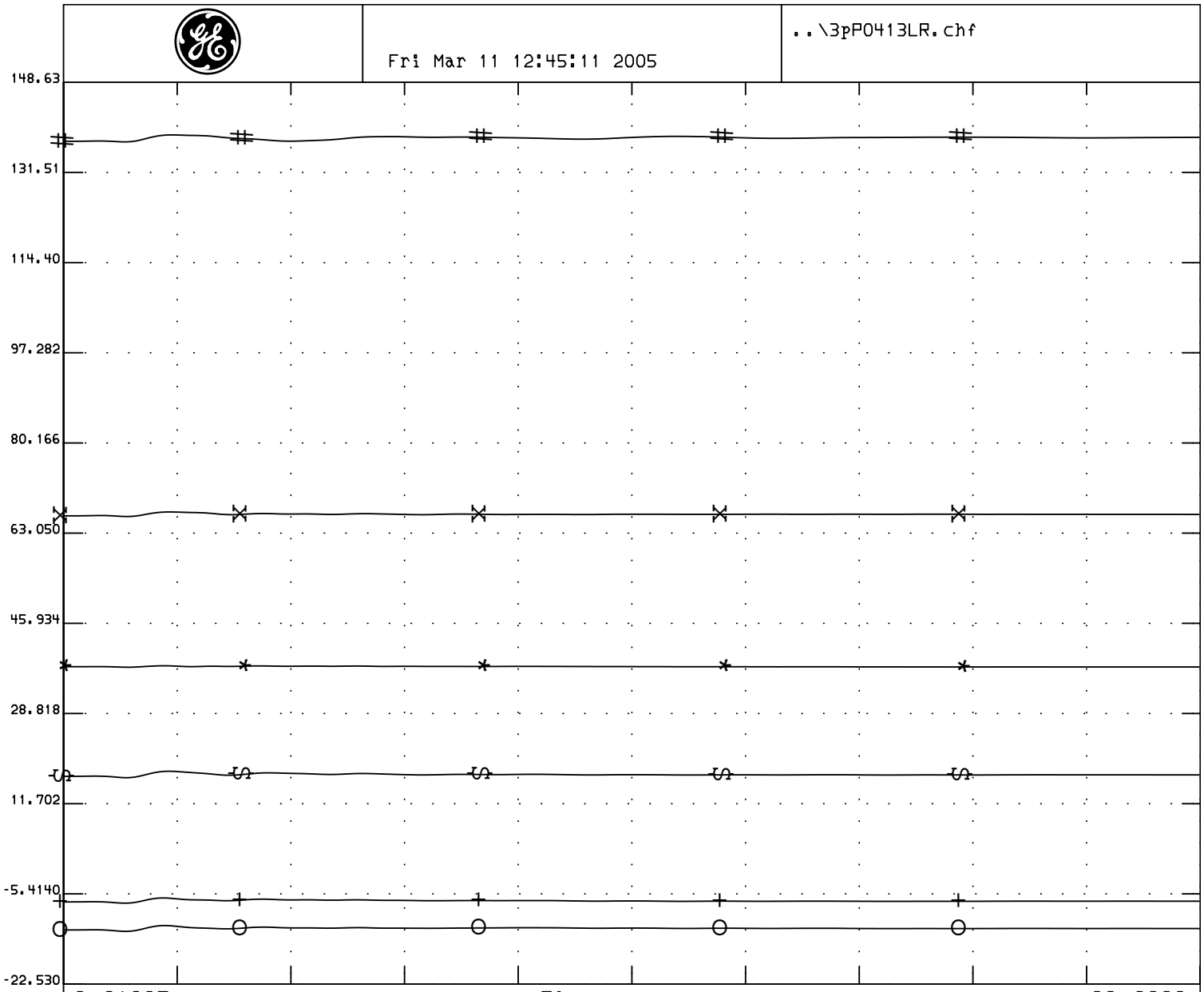

-22.53	O	ang	22244	24.0	ENCINA 5	1	1 s	148.63
-22.53	+	ang	24130	22.0	S.ONOFR3	3	1 s	148.63
-22.53	*	ang	36411	25.0	DIABLO 1	1	1 s	148.63
-22.53	#	ang	54280	18.0	SUND#2GN	2	1 s	148.63
-22.53	X	ang	65490	24.0	EHUNTR 1	1	1 s	148.63
-22.53	S	ang	79151	13.8	GLENC3-4	3	1 s	148.63

P0413 Project System Impact Study
2007 Summer Peak Base Case
P0413 @ 118MW
P0413 Load Rejection
No Fault

P0413 Project System Impact Study

Generator Interconnection Study

WECC Generator Rotor Angle

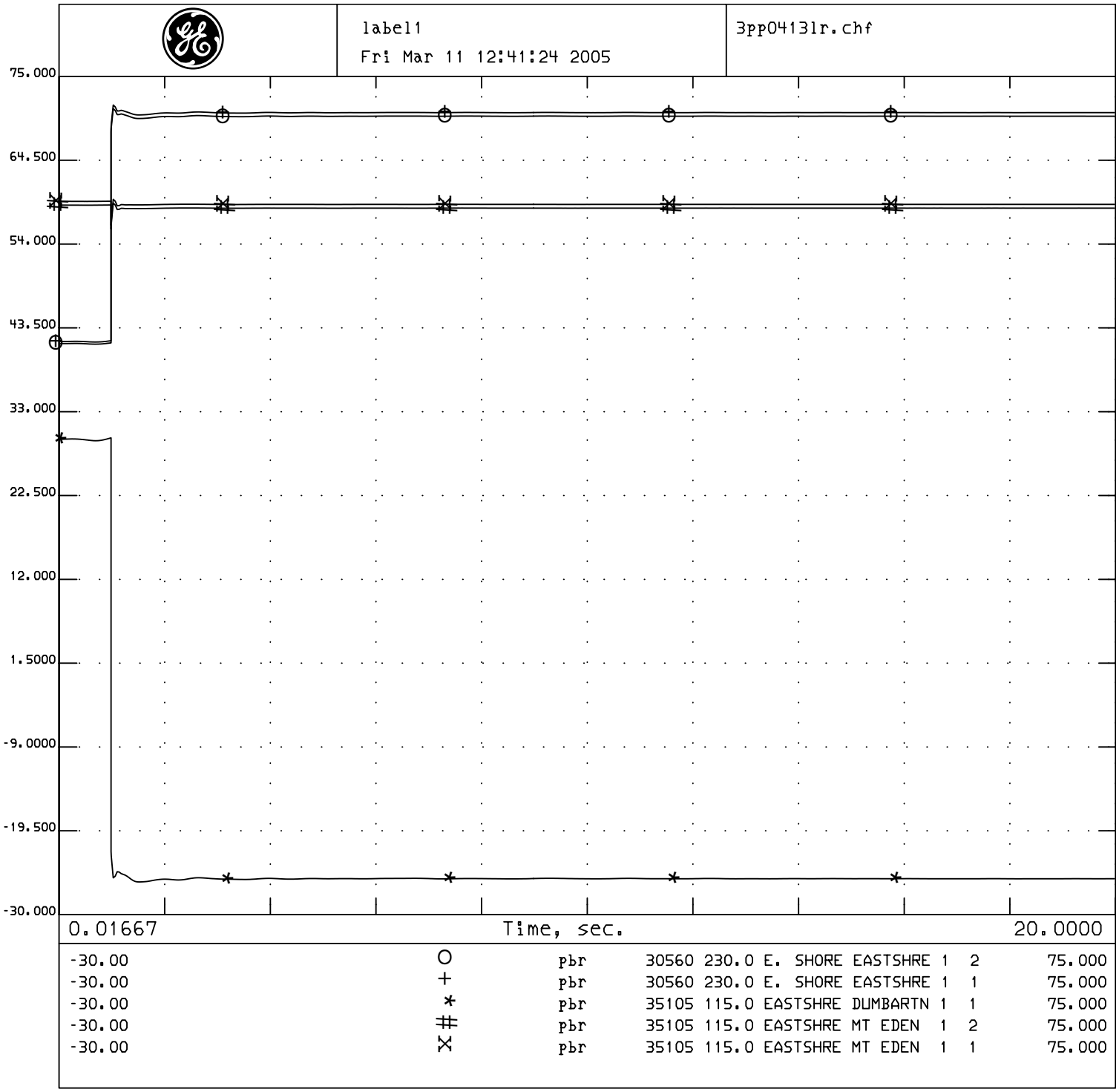

P0413 Project System Impact Study
2007 Summer Peak Base Case
P0413 @ 118MW
P0413 Load Rejection
No Fault

P0413 Project System Impact Study

Generator Interconnection Study

Selected PG&E Transmission Line Flows MW

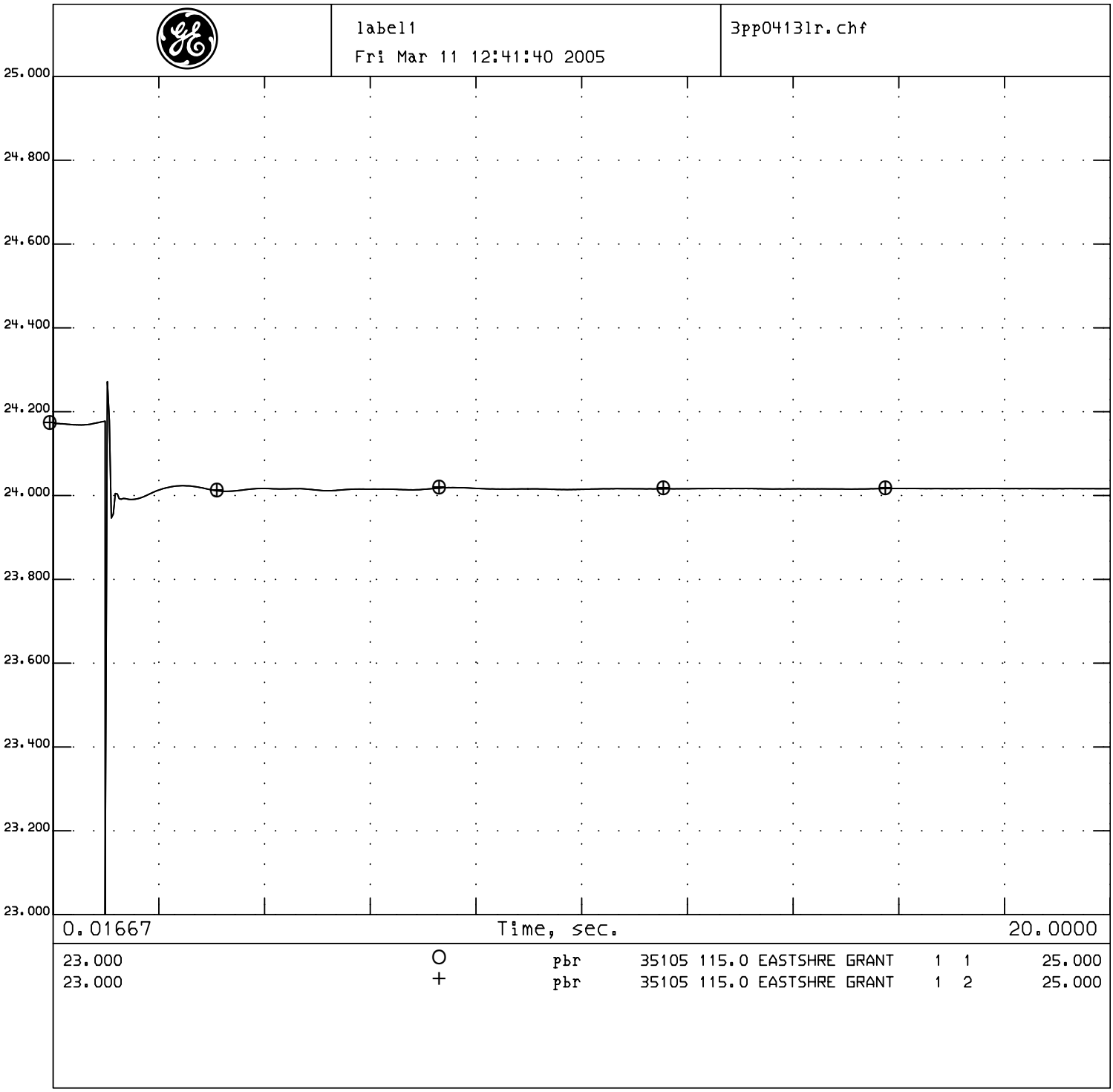

P0413 Project System Impact Study
2007 Summer Peak Base Case
P0413 @ 118MW
P0413 Load Rejection
No Fault

P0413 Project System Impact Study

Generator Interconnection Study

Selected PG&E Transmission Line Flows MW

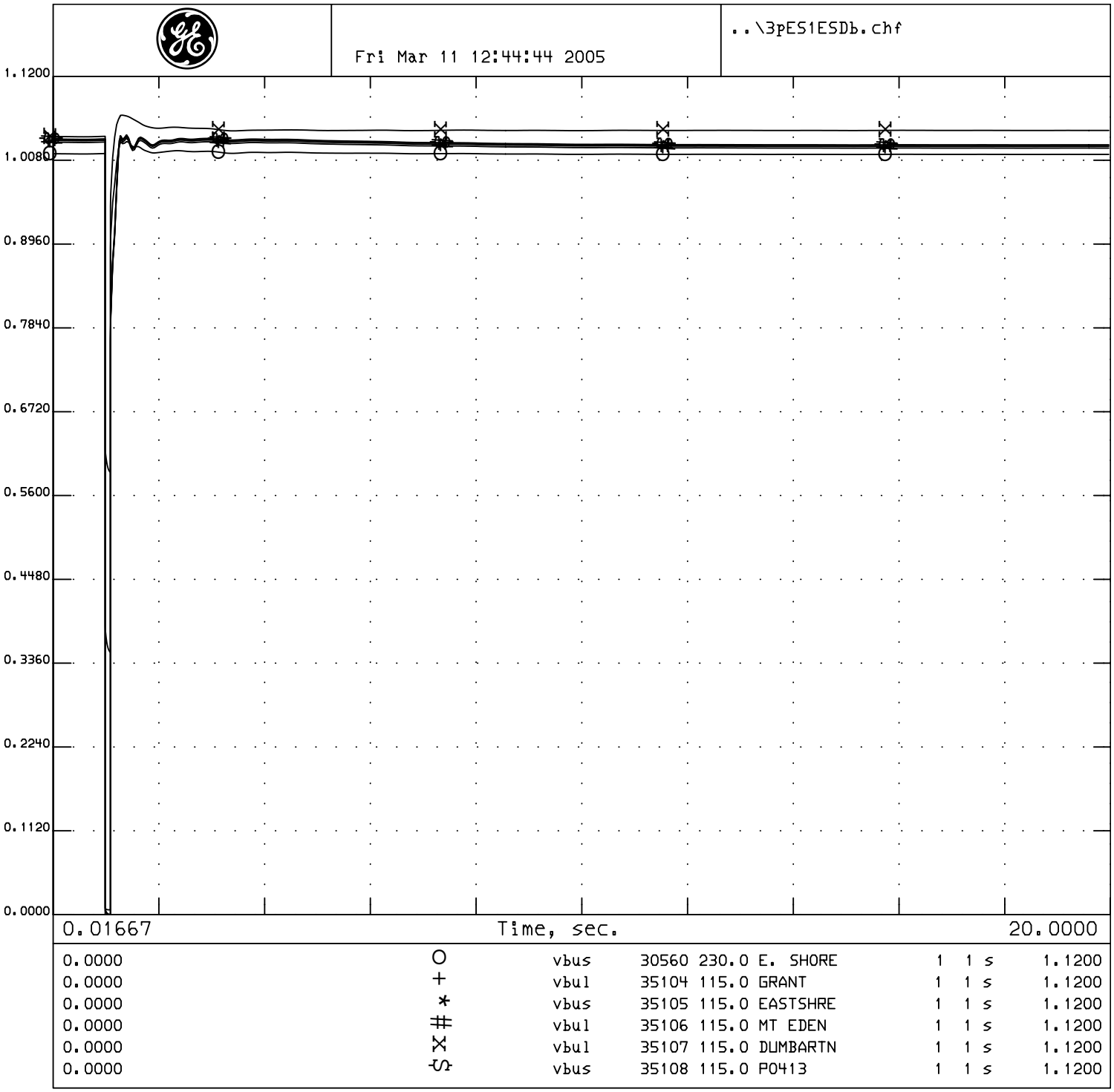

P0413 Project System Impact Study
2007 Summer Peak Base Case
P0413 @ 118MW
East Shore-Dumbarton #1 115kV line outage
3 phase 6 cycle fault at East Shore 115kV bus and trip East Shore-Dumbarton #1

P0413 Project System Impact Study

Generator Interconnection Study

Selected PG&E Bus Voltage Plots Adjacent to Fault

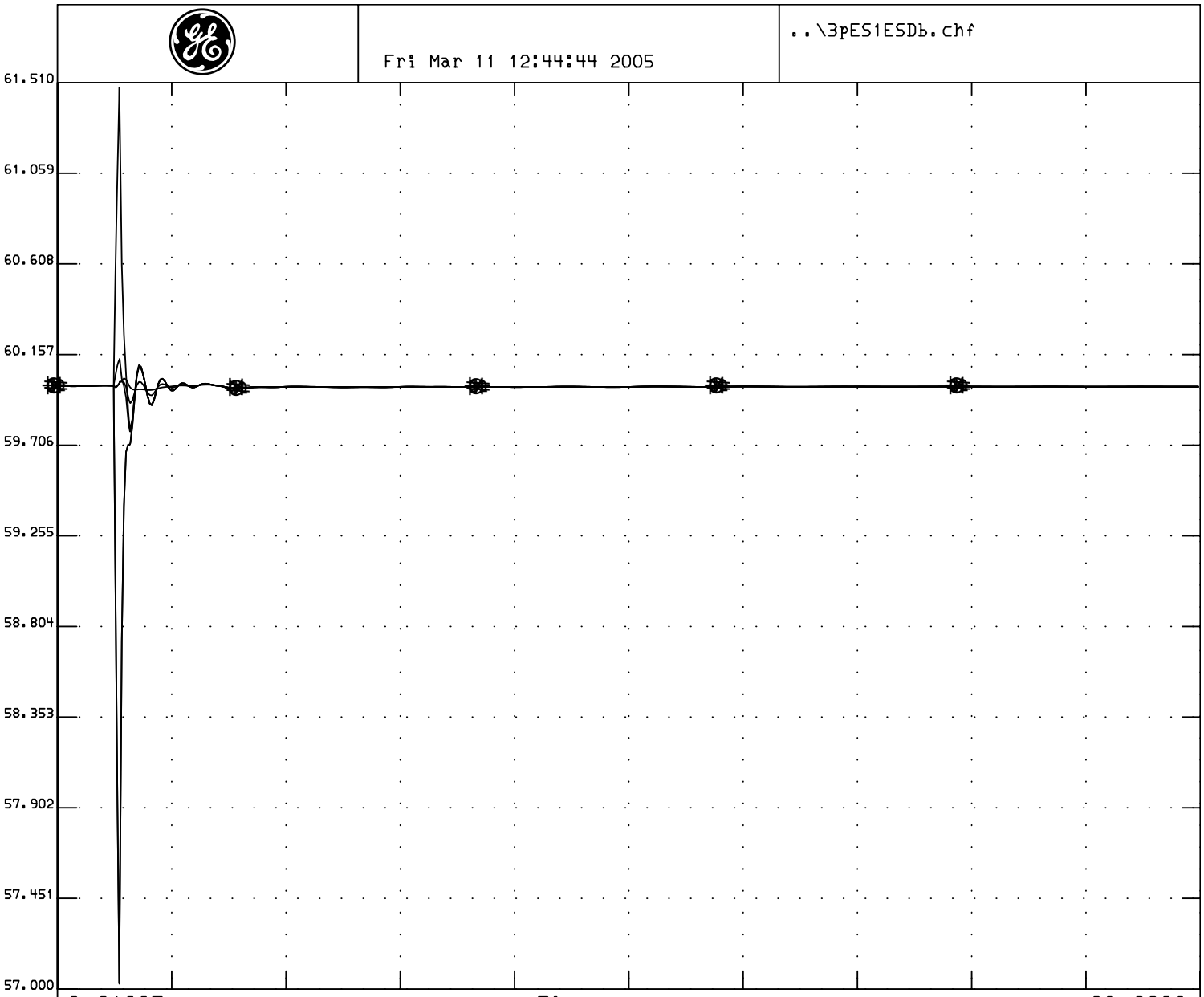

57.000	O	fbus	30560	230.0	E. SHORE	1	1	s	61.510
57.000	+	fbul	35104	115.0	GRANT	1	1	s	61.510
57.000	*	fbus	35105	115.0	EASTSHRE	1	1	s	61.510
57.000	#	fbul	35106	115.0	MT EDEN	1	1	s	61.510
57.000	X	fbul	35107	115.0	DUMBARTN	1	1	s	61.510
57.000	S	fbus	35108	115.0	P0413	1	1	s	61.510

P0413 Project System Impact Study
2007 Summer Peak Base Case
P0413 @ 118MW
East Shore-Dumbarton #1 115kV line outage
3 phase 6 cycle fault at East Shore 115kV bus and trip East Shore-Dumbarton #1

P0413 Project System Impact Study

Generator Interconnection Study

Selected PG&E Bus Frequency Plots Adjacent to Fault

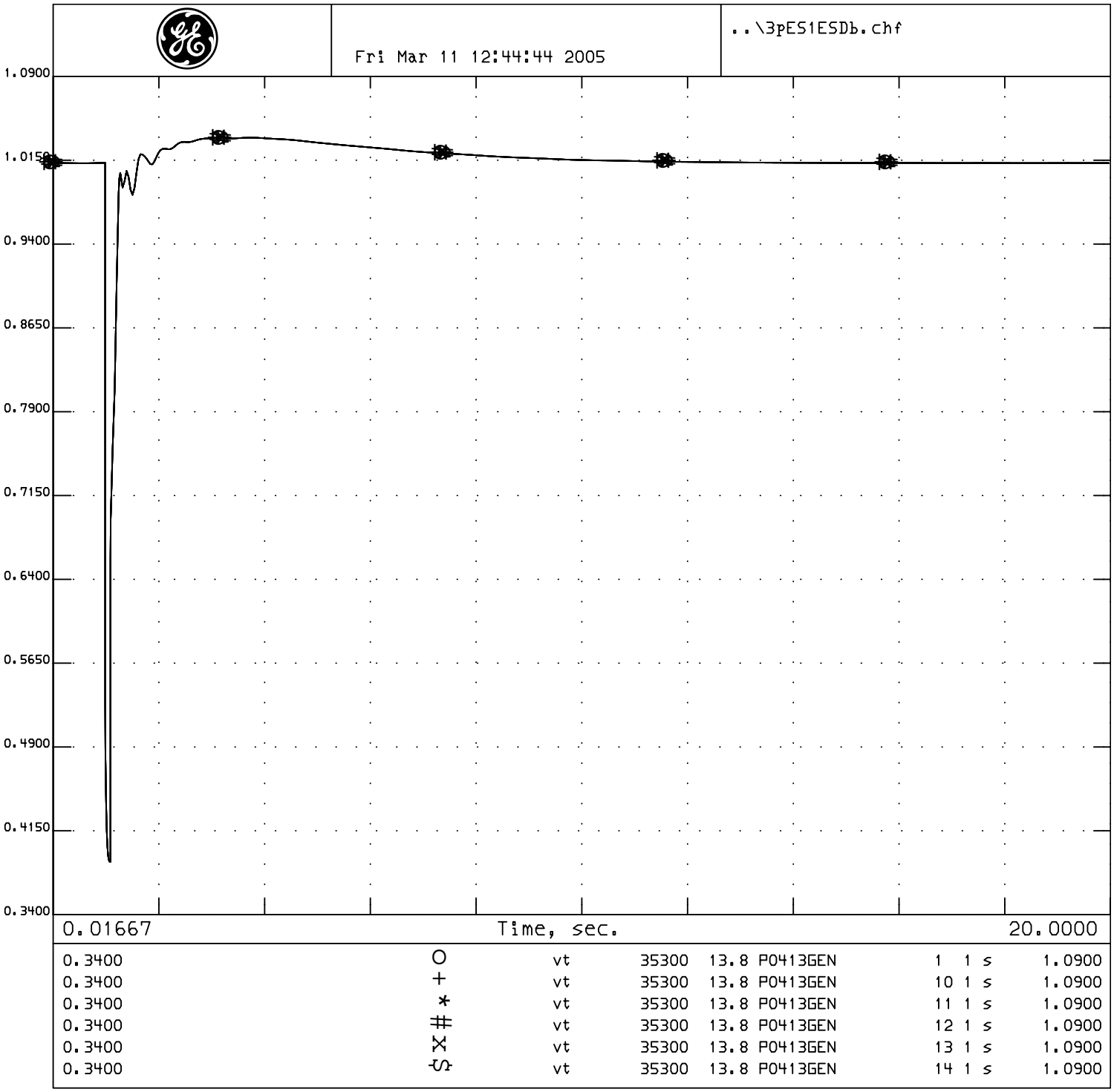

P0413 Project System Impact Study
2007 Summer Peak Base Case
P0413 @ 118MW
East Shore-Dumbarton #1 115kV line outage
3 phase 6 cycle fault at East Shore 115kV bus and trip East Shore-Dumbarton #1

P0413 Project System Impact Study

Generator Interconnection Study

Project Generator Terminal Voltages

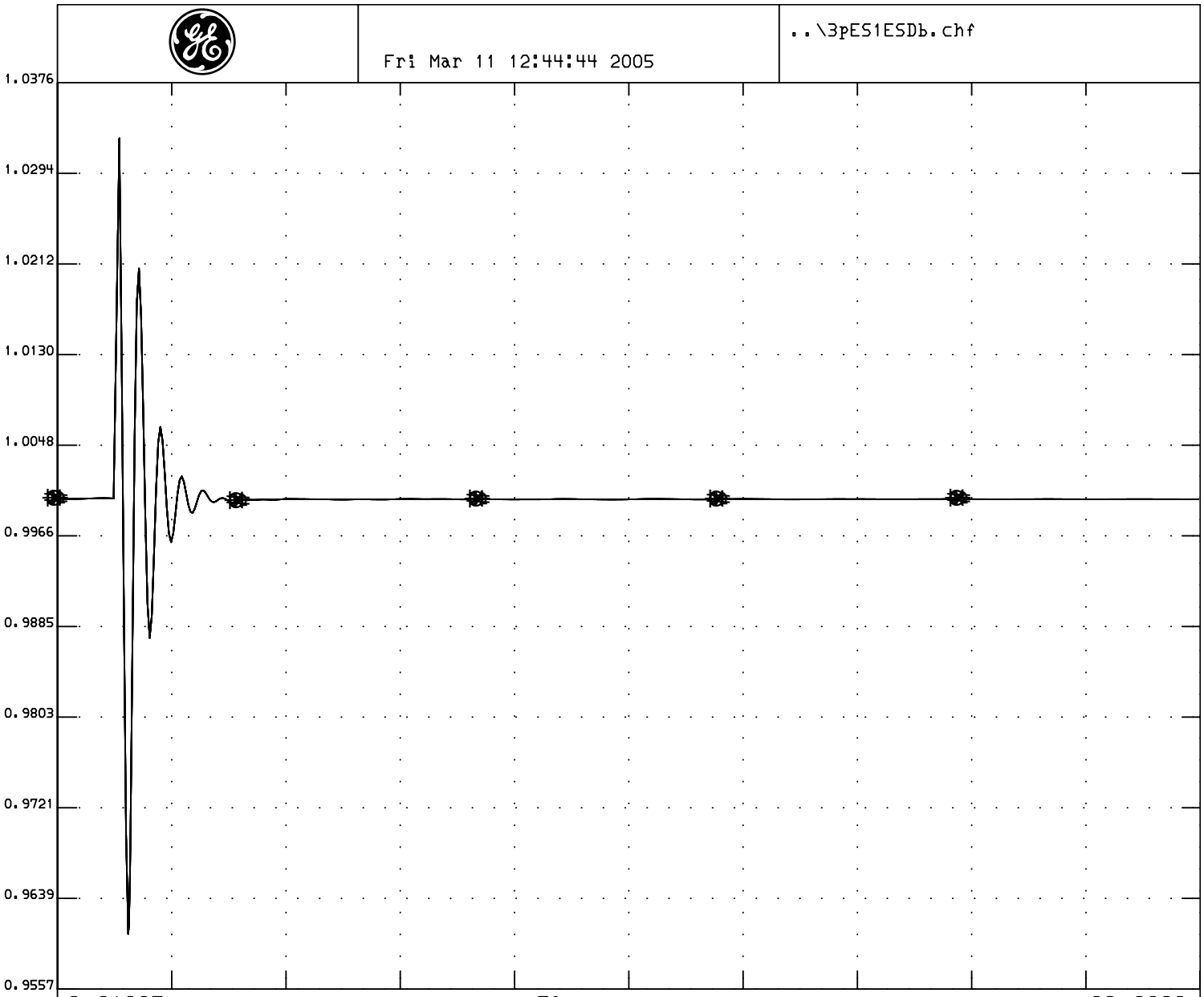

0.9557	O	spd	35300	13.8	P0413GEN	1	1 s	1.0376
0.9557	+	spd	35300	13.8	P0413GEN	10	1 s	1.0376
0.9557	*	spd	35300	13.8	P0413GEN	11	1 s	1.0376
0.9557	#	spd	35300	13.8	P0413GEN	12	1 s	1.0376
0.9557	X	spd	35300	13.8	P0413GEN	13	1 s	1.0376
0.9557	S	spd	35300	13.8	P0413GEN	14	1 s	1.0376

P0413 Project System Impact Study
2007 Summer Peak Base Case
P0413 @ 118MW
East Shore-Dumbarton #1 115kV line outage
3 phase 6 cycle fault at East Shore 115kV bus and trip East Shore-Dumbarton #1

P0413 Project System Impact Study

Generator Interconnection Study

Project Generator Rotor Speed

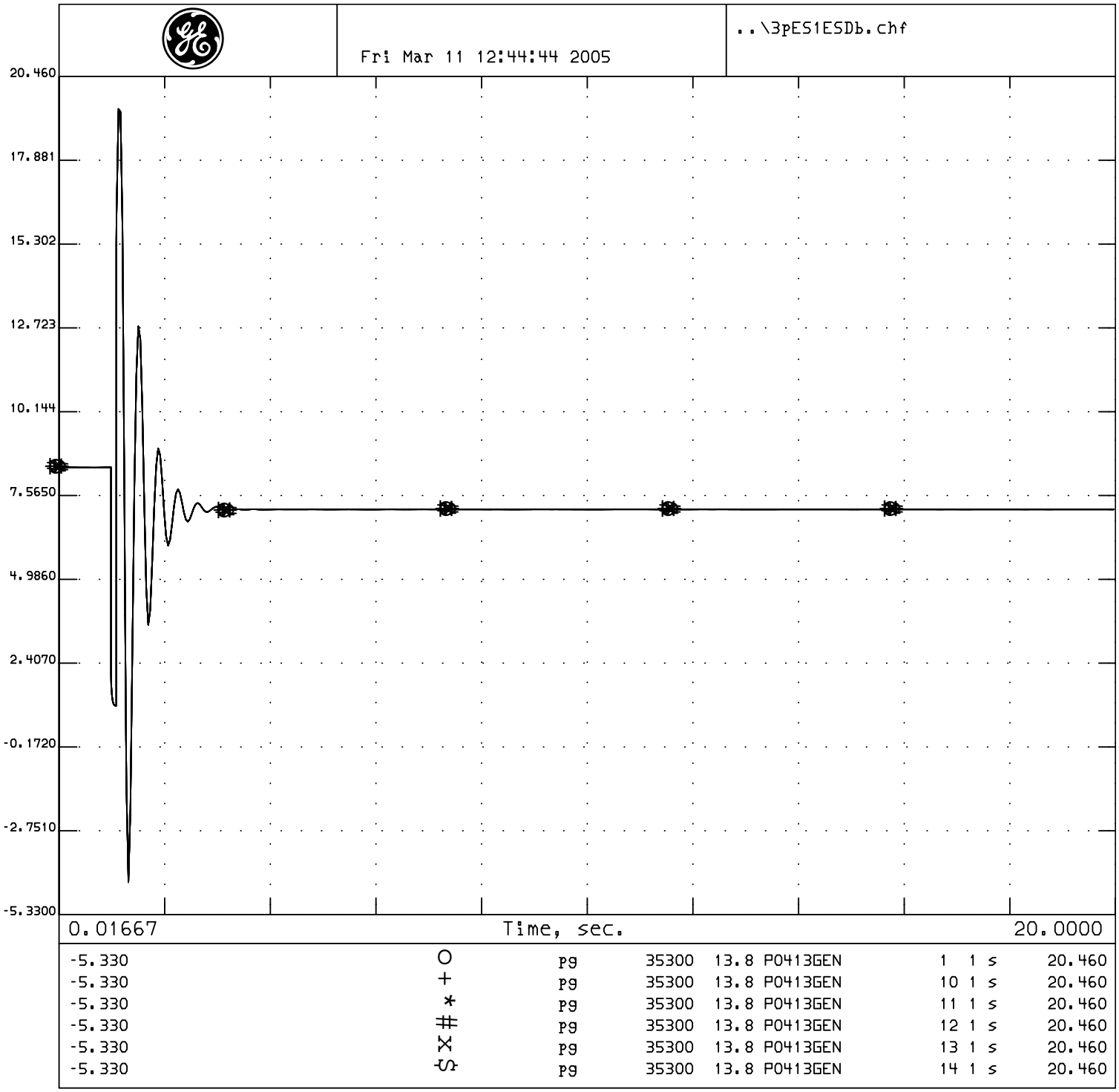

P0413 Project System Impact Study
2007 Summer Peak Base Case
P0413 @ 118MW
East Shore-Dumbarton #1 115kV line outage
3 phase 6 cycle fault at East Shore 115kV bus and trip East Shore-Dumbarton #1

P0413 Project System Impact Study

Generator Interconnection Study

Project Generator Terminal Power

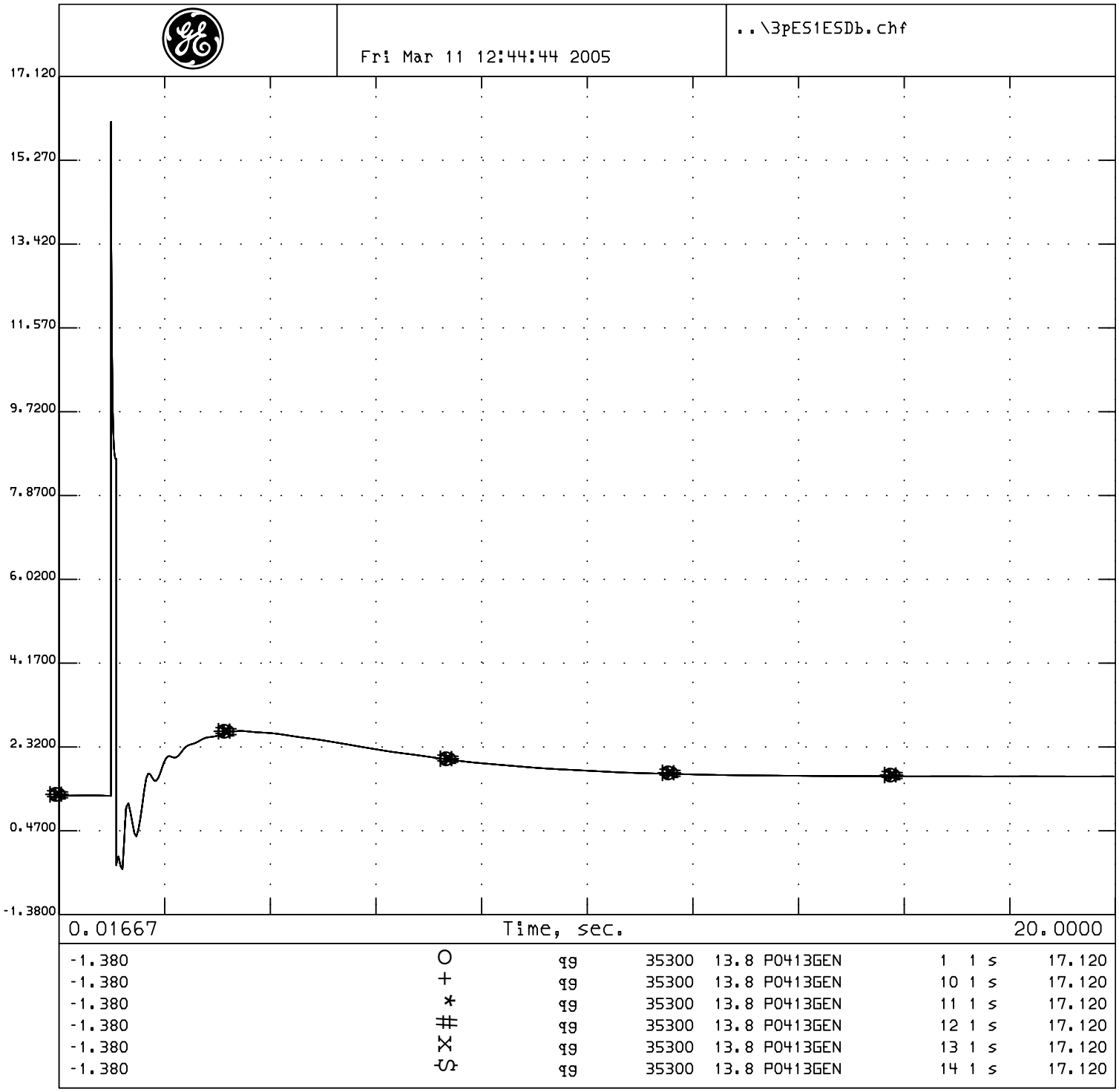

P0413 Project System Impact Study
2007 Summer Peak Base Case
P0413 @ 118MW
East Shore-Dumbarton #1 115kV line outage
3 phase 6 cycle fault at East Shore 115kV bus and trip East Shore-Dumbarton #1

P0413 Project System Impact Study

Generator Interconnection Study

Project Generator Terminal Reactive Power

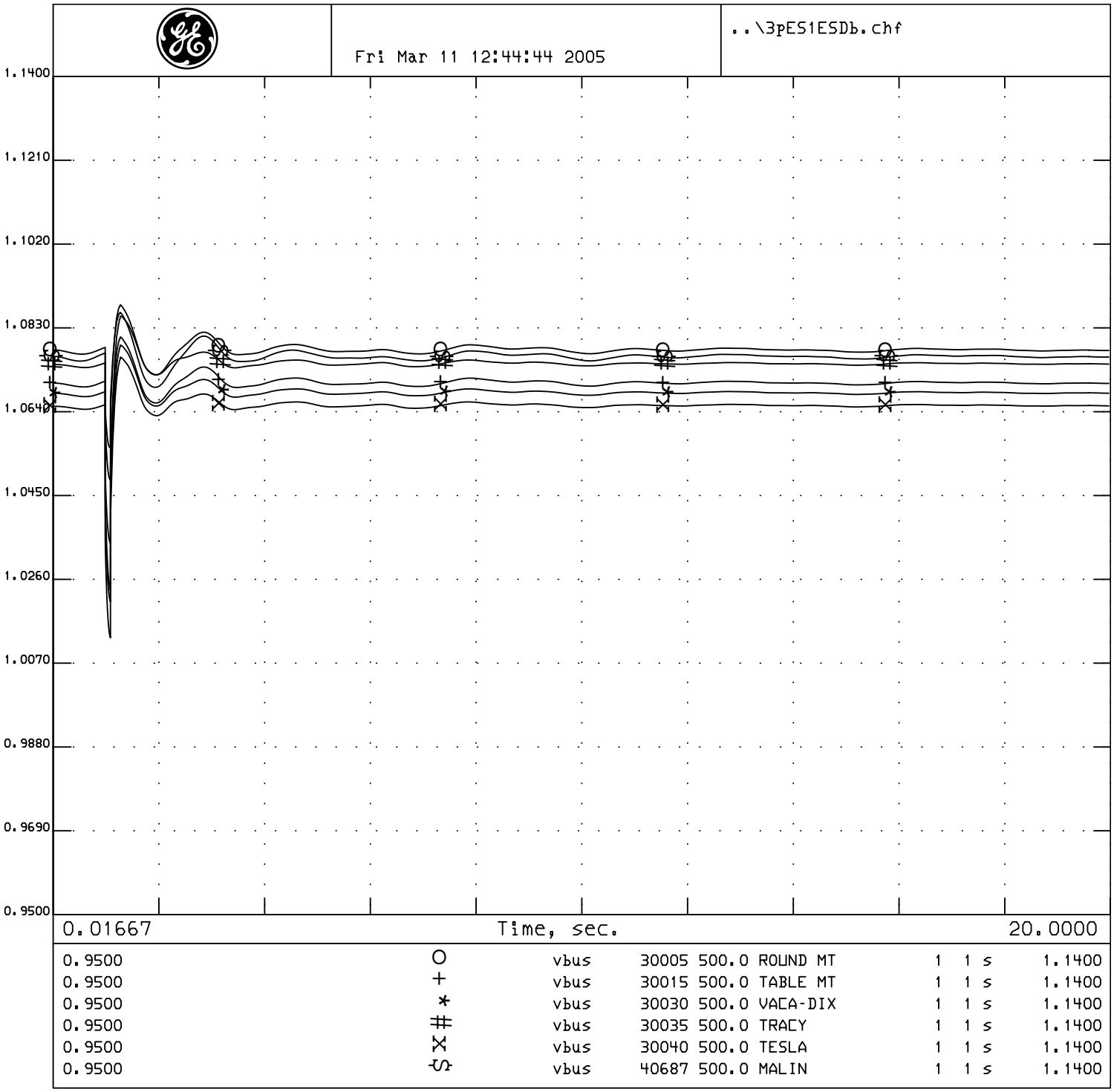

P0413 Project System Impact Study
2007 Summer Peak Base Case
P0413 @ 118MW
East Shore-Dumbarton #1 115kV line outage
3 phase 6 cycle fault at East Shore 115kV bus and trip East Shore-Dumbarton #1

P0413 Project System Impact Study

Generator Interconnection Study

Selected WECC Bus Voltage Plots

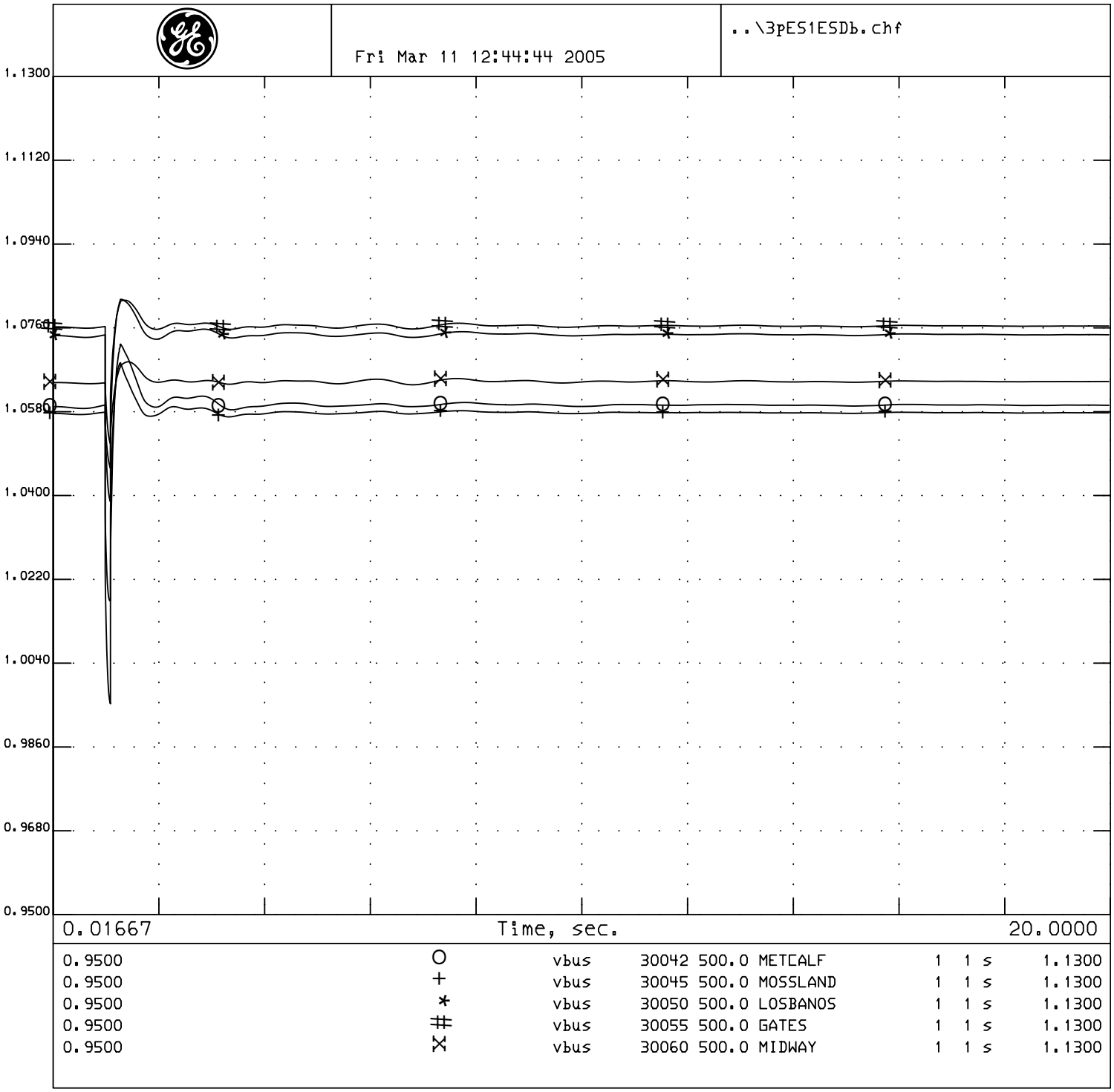

P0413 Project System Impact Study
2007 Summer Peak Base Case
P0413 @ 118MW
East Shore-Dumbarton #1 115kV line outage
3 phase 6 cycle fault at East Shore 115kV bus and trip East Shore-Dumbarton #1

P0413 Project System Impact Study

Generator Interconnection Study

Selected WECC Bus Voltage Plots

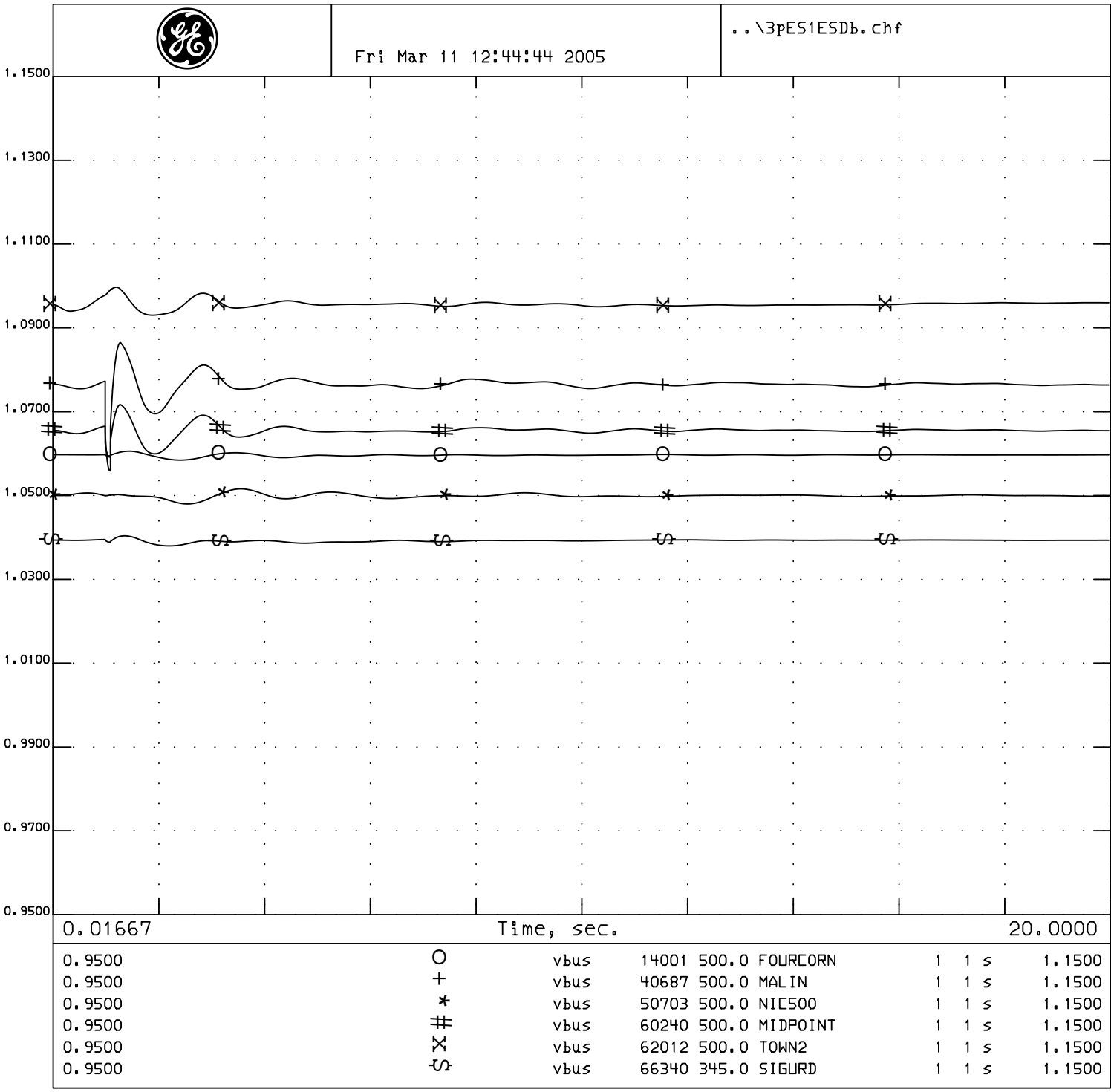

P0413 Project System Impact Study
2007 Summer Peak Base Case
P0413 @ 118MW
East Shore-Dumbarton #1 115kV line outage
3 phase 6 cycle fault at East Shore 115kV bus and trip East Shore-Dumbarton #1

P0413 Project System Impact Study

Generator Interconnection Study

Selected WECC Bus Voltage Plots

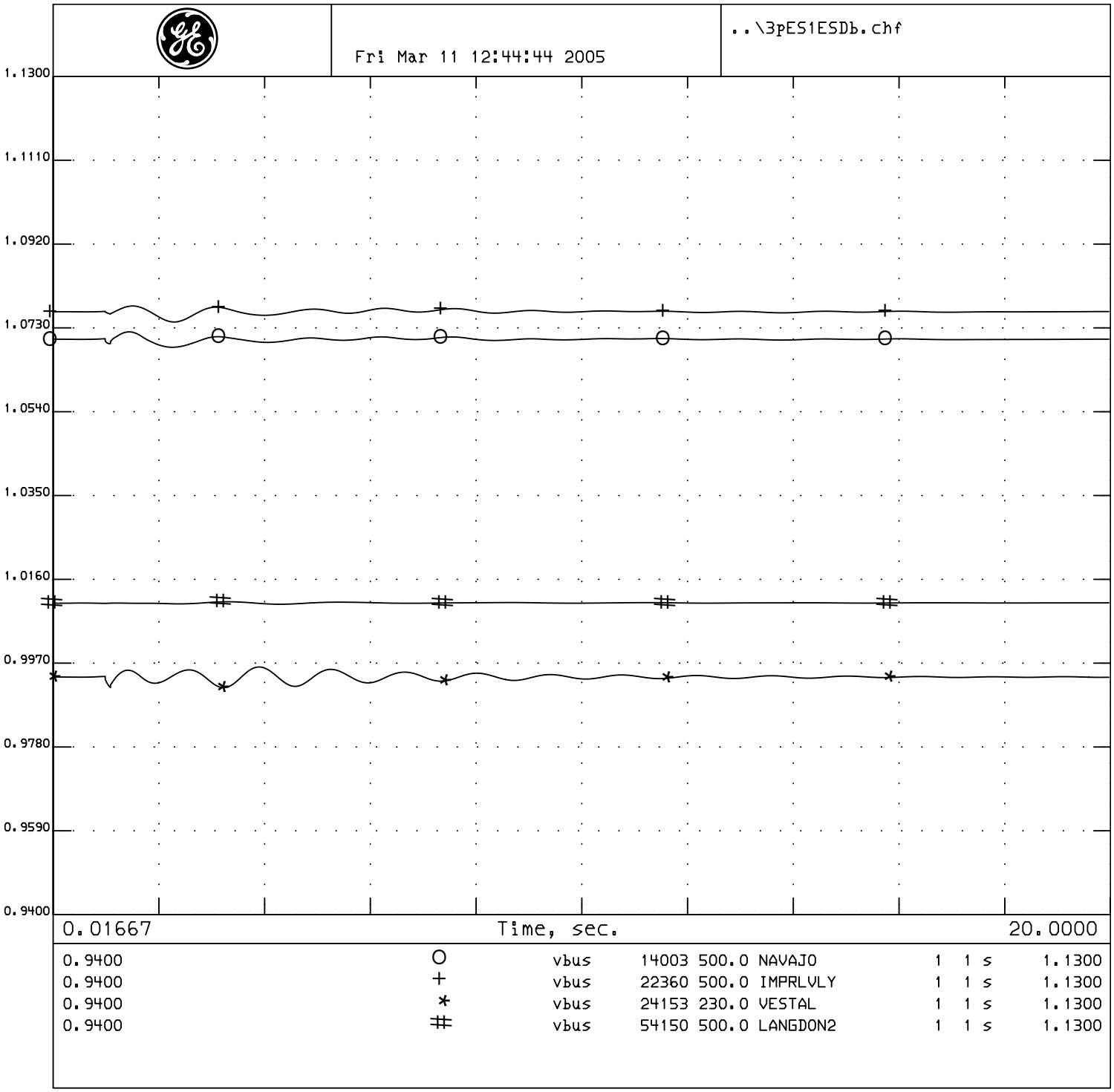

P0413 Project System Impact Study
2007 Summer Peak Base Case
P0413 @ 118MW
East Shore-Dumbarton #1 115kV line outage
3 phase 6 cycle fault at East Shore 115kV bus and trip East Shore-Dumbarton #1

P0413 Project System Impact Study

Generator Interconnection Study

Selected WECC Bus Voltage Plots

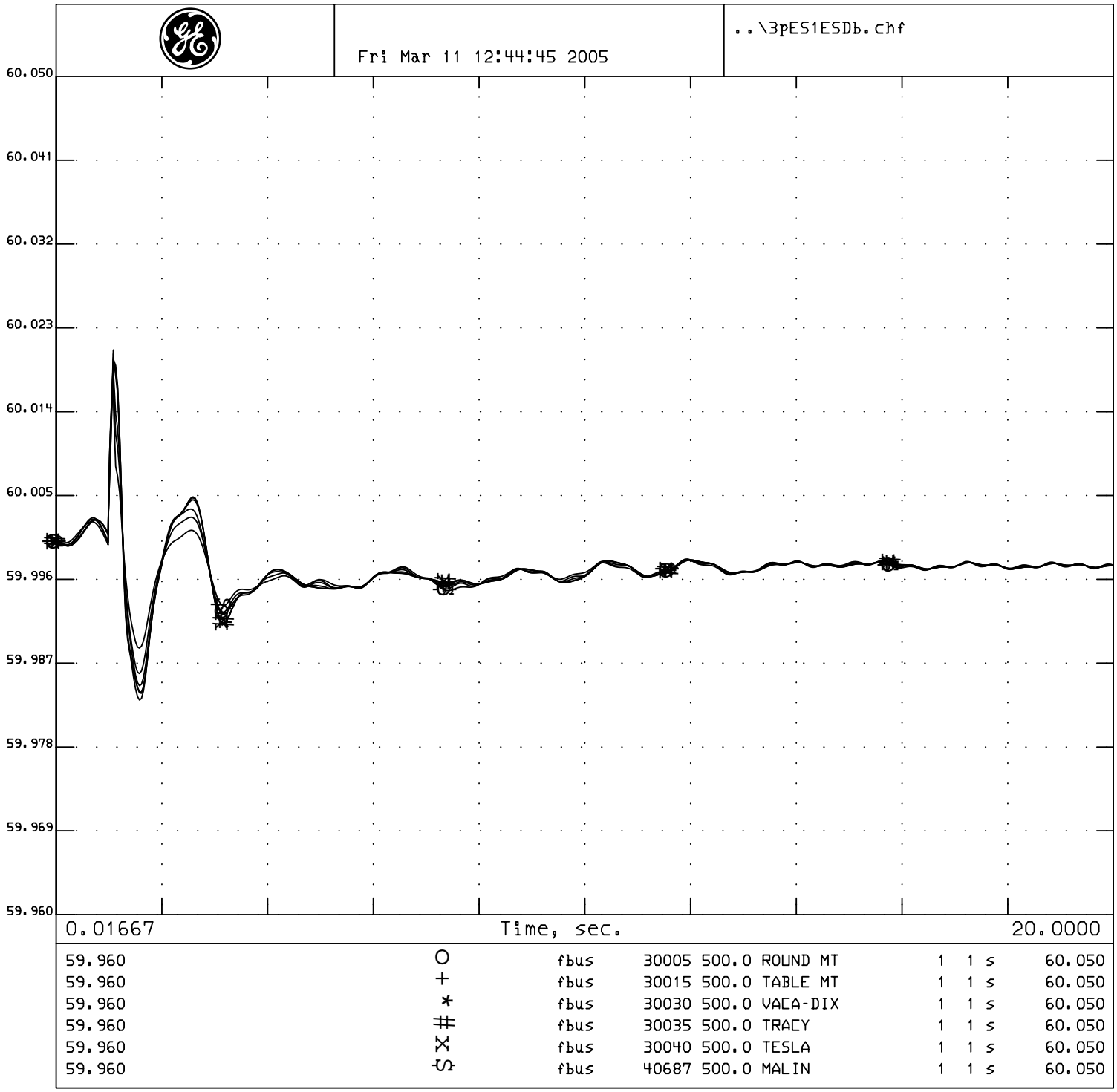

P0413 Project System Impact Study
2007 Summer Peak Base Case
P0413 @ 118MW
East Shore-Dumbarton #1 115kV line outage
3 phase 6 cycle fault at East Shore 115kV bus and trip East Shore-Dumbarton #1

P0413 Project System Impact Study

Generator Interconnection Study

Selected WECC Bus Frequency Plots

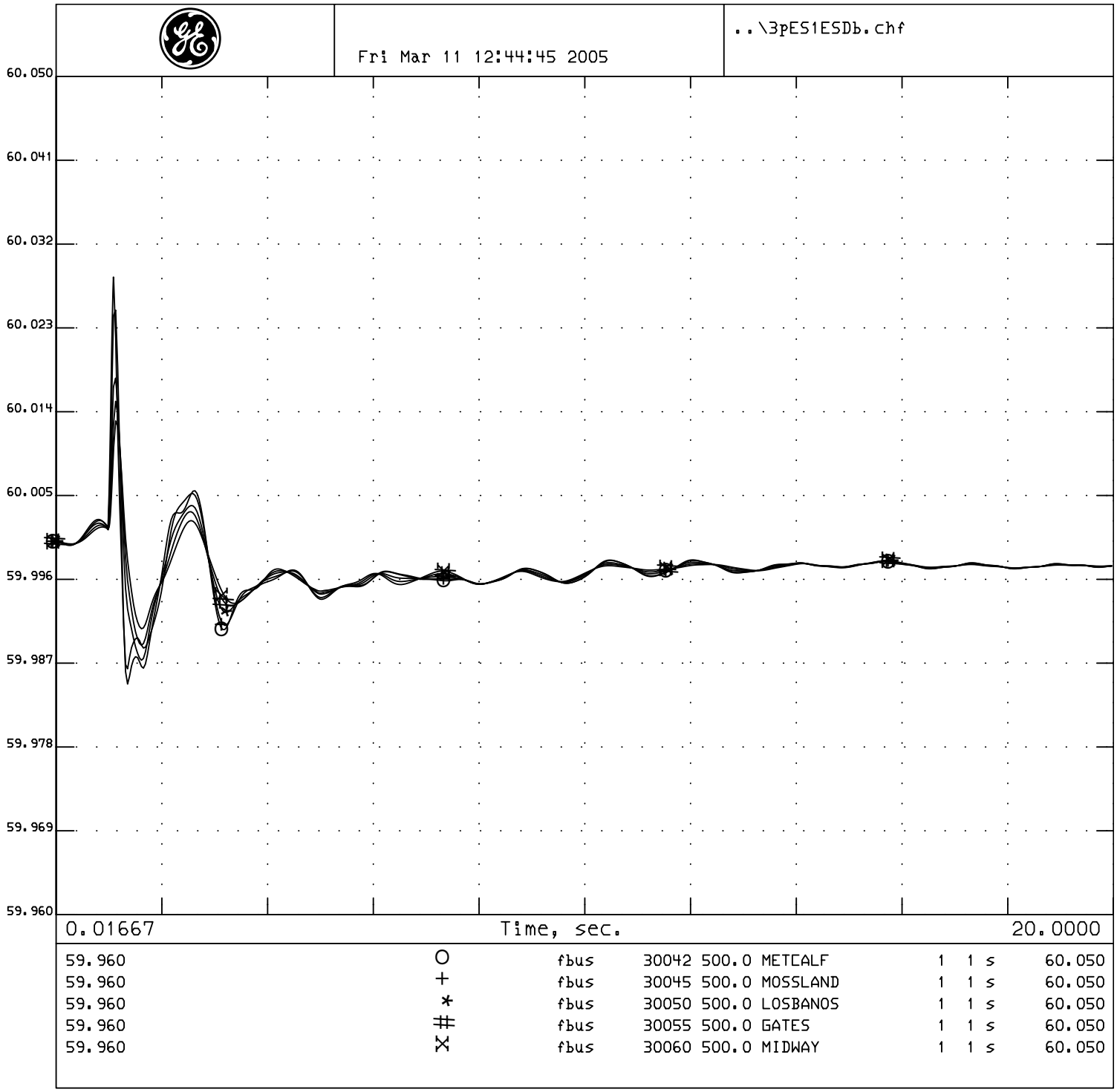

P0413 Project System Impact Study
2007 Summer Peak Base Case
P0413 @ 118MW
East Shore-Dumbarton #1 115kV line outage
3 phase 6 cycle fault at East Shore 115kV bus and trip East Shore-Dumbarton #1

P0413 Project System Impact Study

Generator Interconnection Study

Selected WECC Bus Frequency Plots

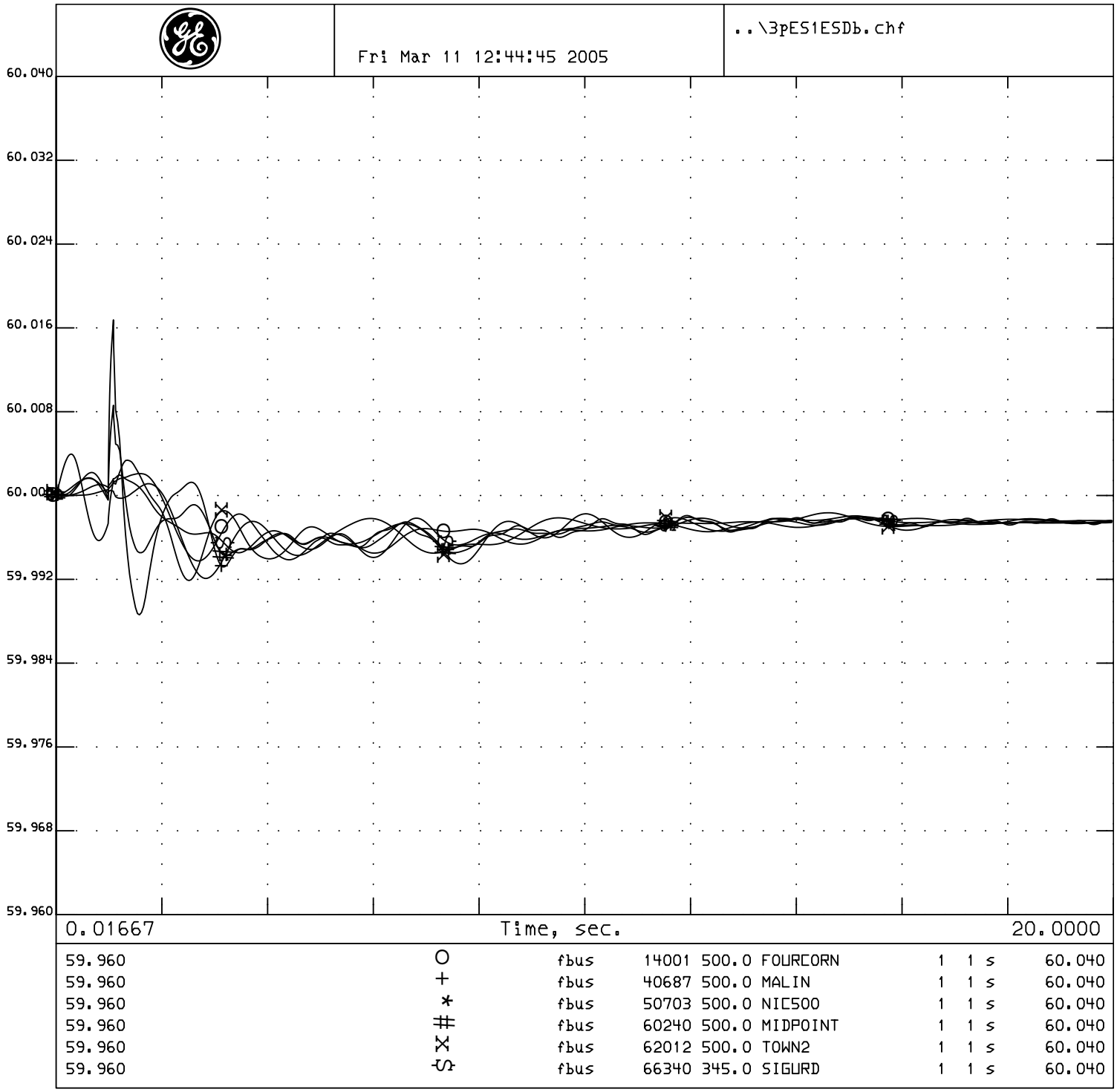

P0413 Project System Impact Study
2007 Summer Peak Base Case
P0413 @ 118MW
East Shore-Dumbarton #1 115kV line outage
3 phase 6 cycle fault at East Shore 115kV bus and trip East Shore-Dumbarton #1

P0413 Project System Impact Study

Generator Interconnection Study

Selected WECC Bus Frequency Plots

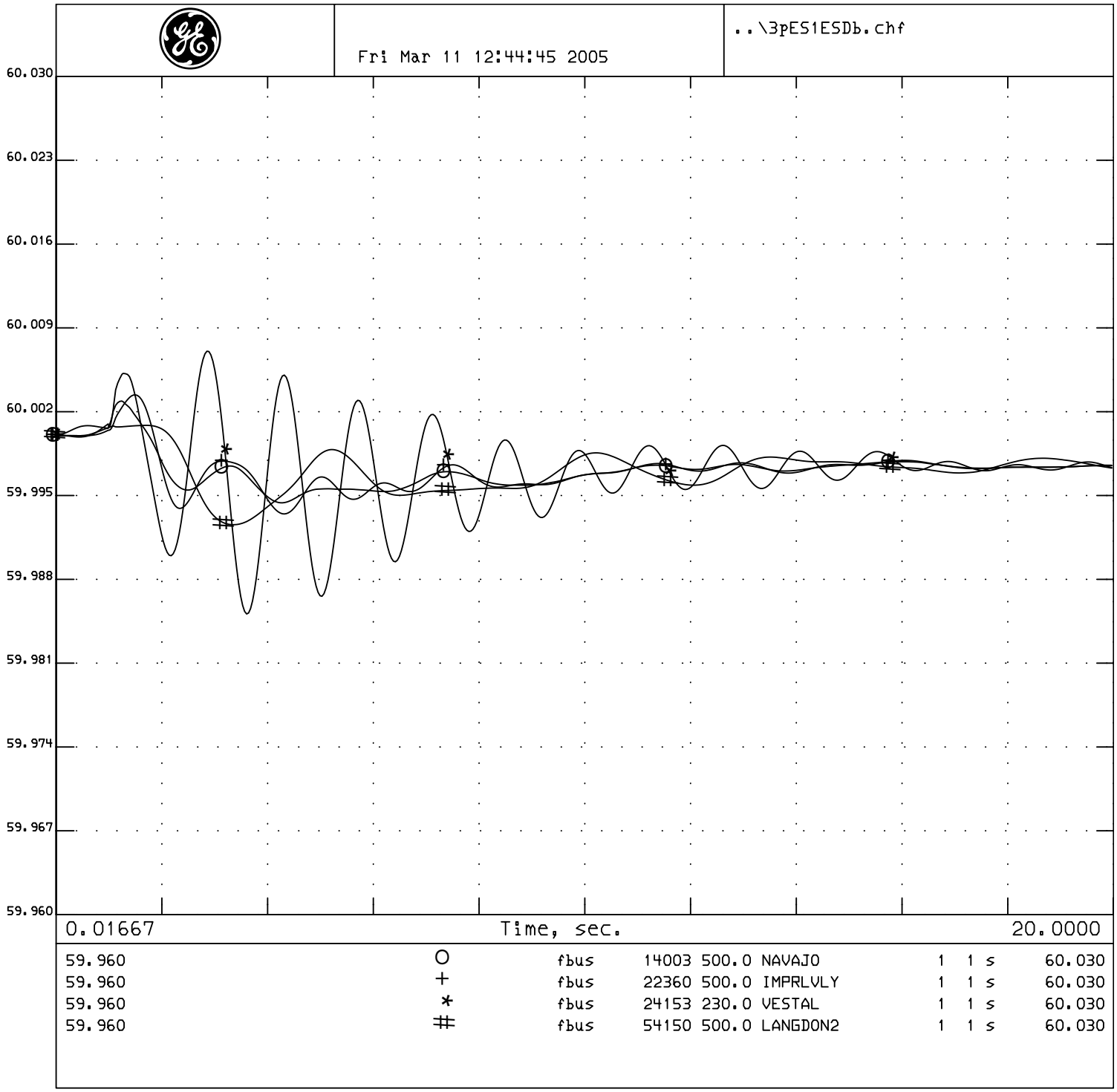

P0413 Project System Impact Study
2007 Summer Peak Base Case
P0413 @ 118MW
East Shore-Dumbarton #1 115kV line outage
3 phase 6 cycle fault at East Shore 115kV bus and trip East Shore-Dumbarton #1

P0413 Project System Impact Study

Generator Interconnection Study

Selected WECC Bus Frequency Plots

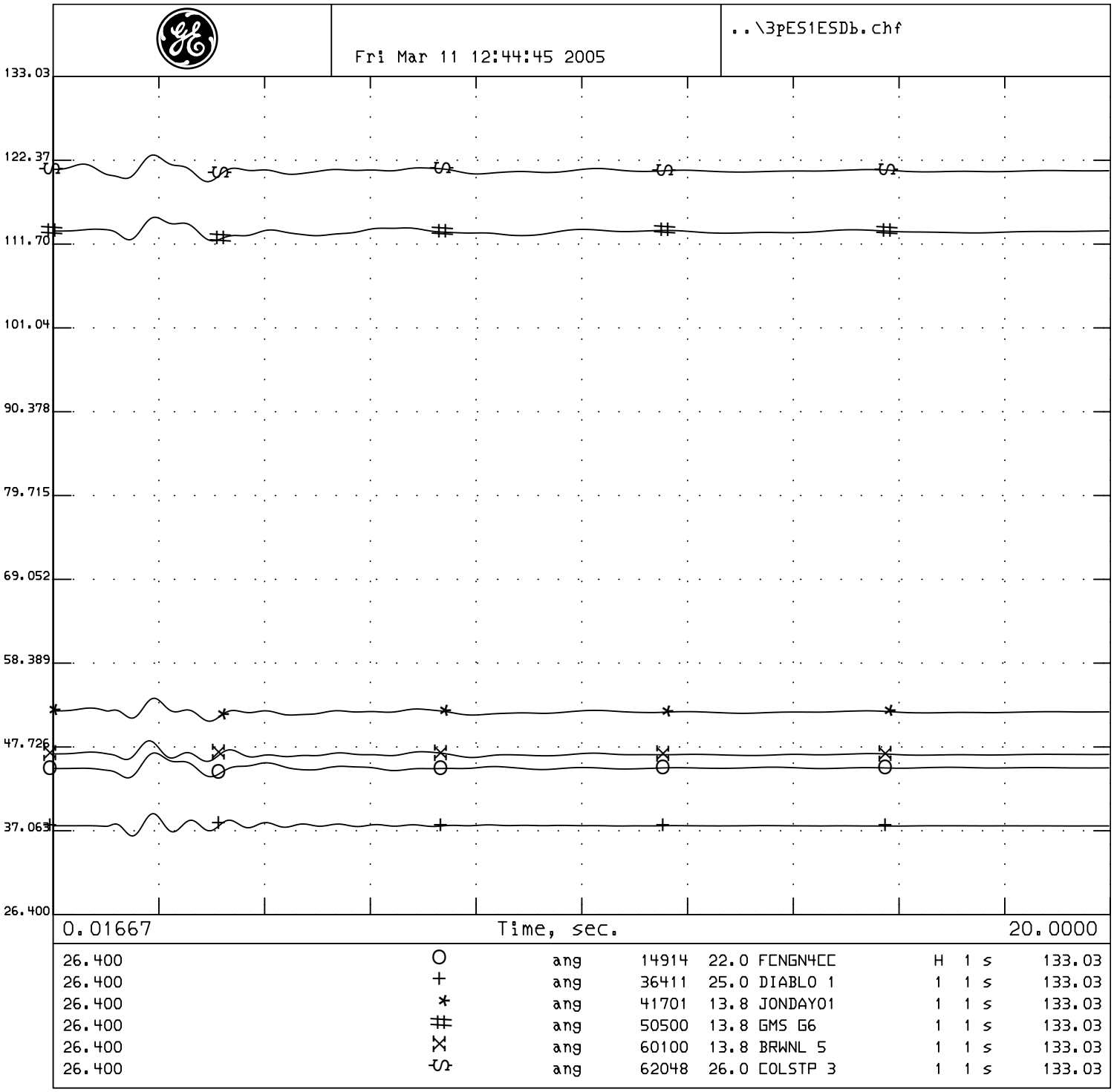

P0413 Project System Impact Study
2007 Summer Peak Base Case
P0413 @ 118MW
East Shore-Dumbarton #1 115kV line outage
3 phase 6 cycle fault at East Shore 115kV bus and trip East Shore-Dumbarton #1

P0413 Project System Impact Study

Generator Interconnection Study

WECC Generator Rotor Angle

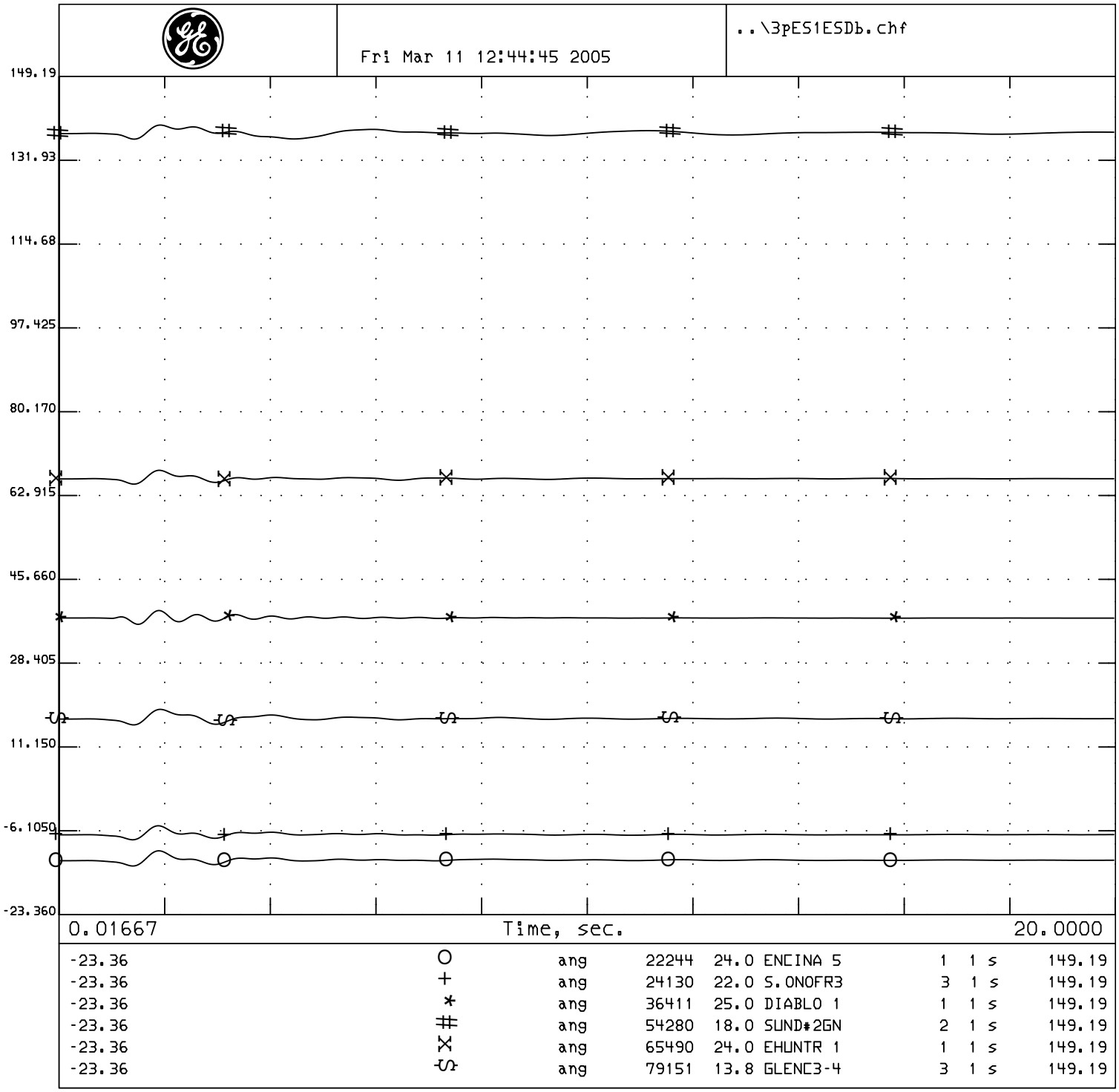

P0413 Project System Impact Study
2007 Summer Peak Base Case
P0413 @ 118MW
East Shore-Dumbarton #1 115kV line outage
3 phase 6 cycle fault at East Shore 115kV bus and trip East Shore-Dumbarton #1

P0413 Project System Impact Study

Generator Interconnection Study

WECC Generator Rotor Angle

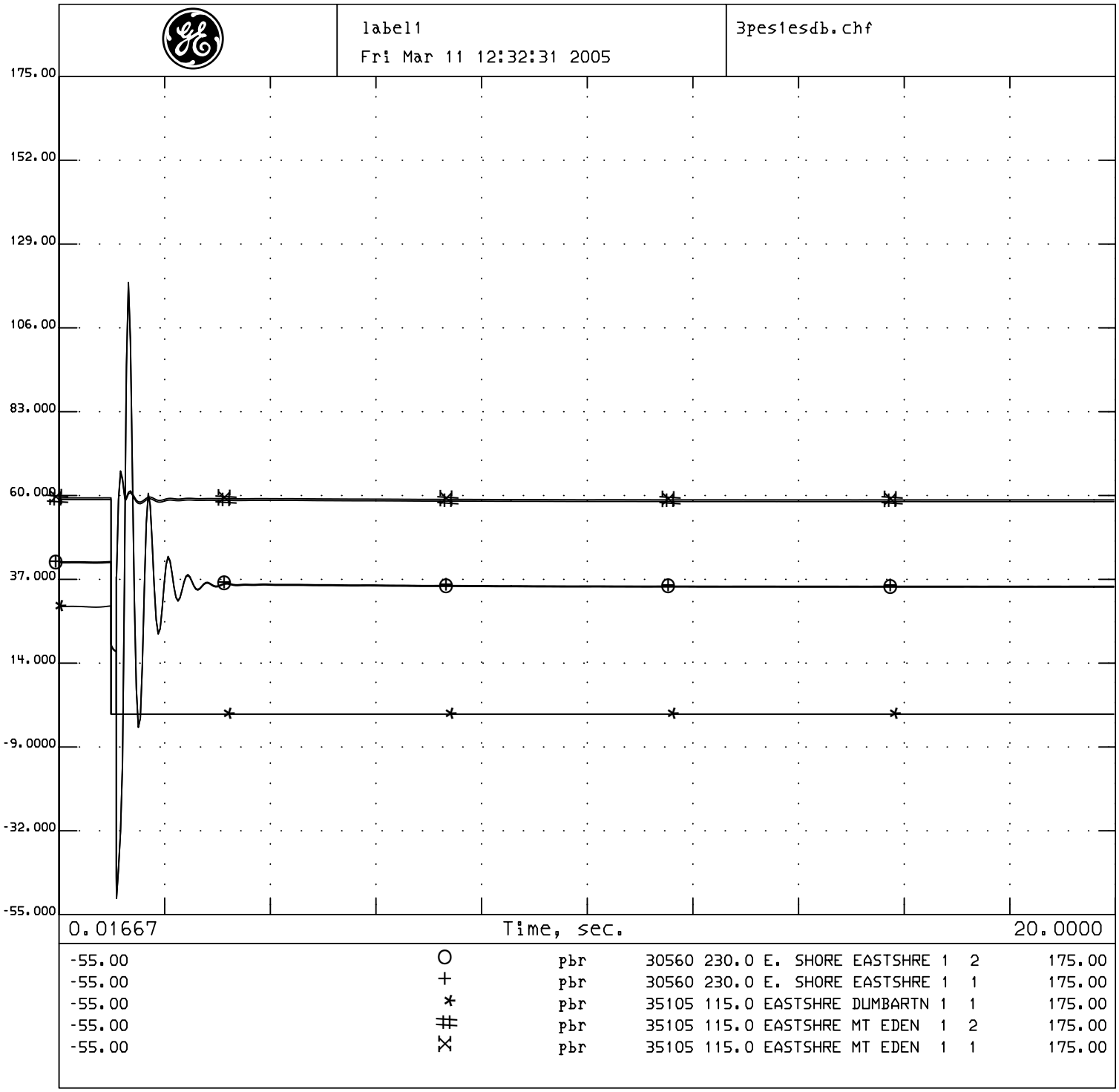

P0413 Project System Impact Study
2007 Summer Peak Base Case
P0413 @ 118MW
East Shore-Dumbarton #1 115kV line outage
3 phase 6 cycle fault at East Shore 115kV bus and trip East Shore-Dumbarton #1

P0413 Project System Impact Study

Generator Interconnection Study

Selected PG&E Transmission Line Flows MW

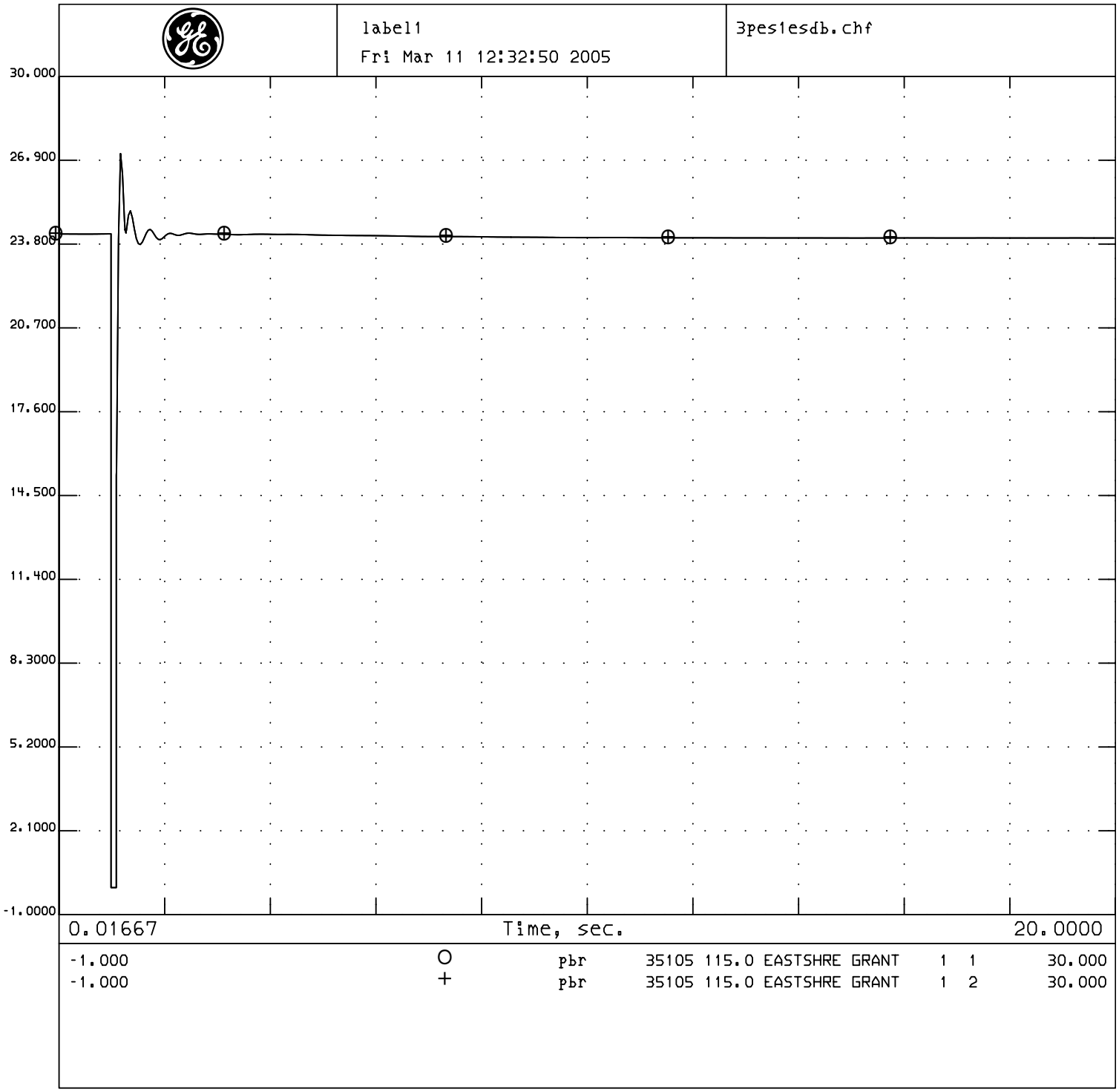

P0413 Project System Impact Study
2007 Summer Peak Base Case
P0413 @ 118MW
East Shore-Dumbarton #1 115kV line outage
3 phase 6 cycle fault at East Shore 115kV bus and trip East Shore-Dumbarton #1

P0413 Project System Impact Study

Generator Interconnection Study

Selected PG&E Transmission Line Flows MW

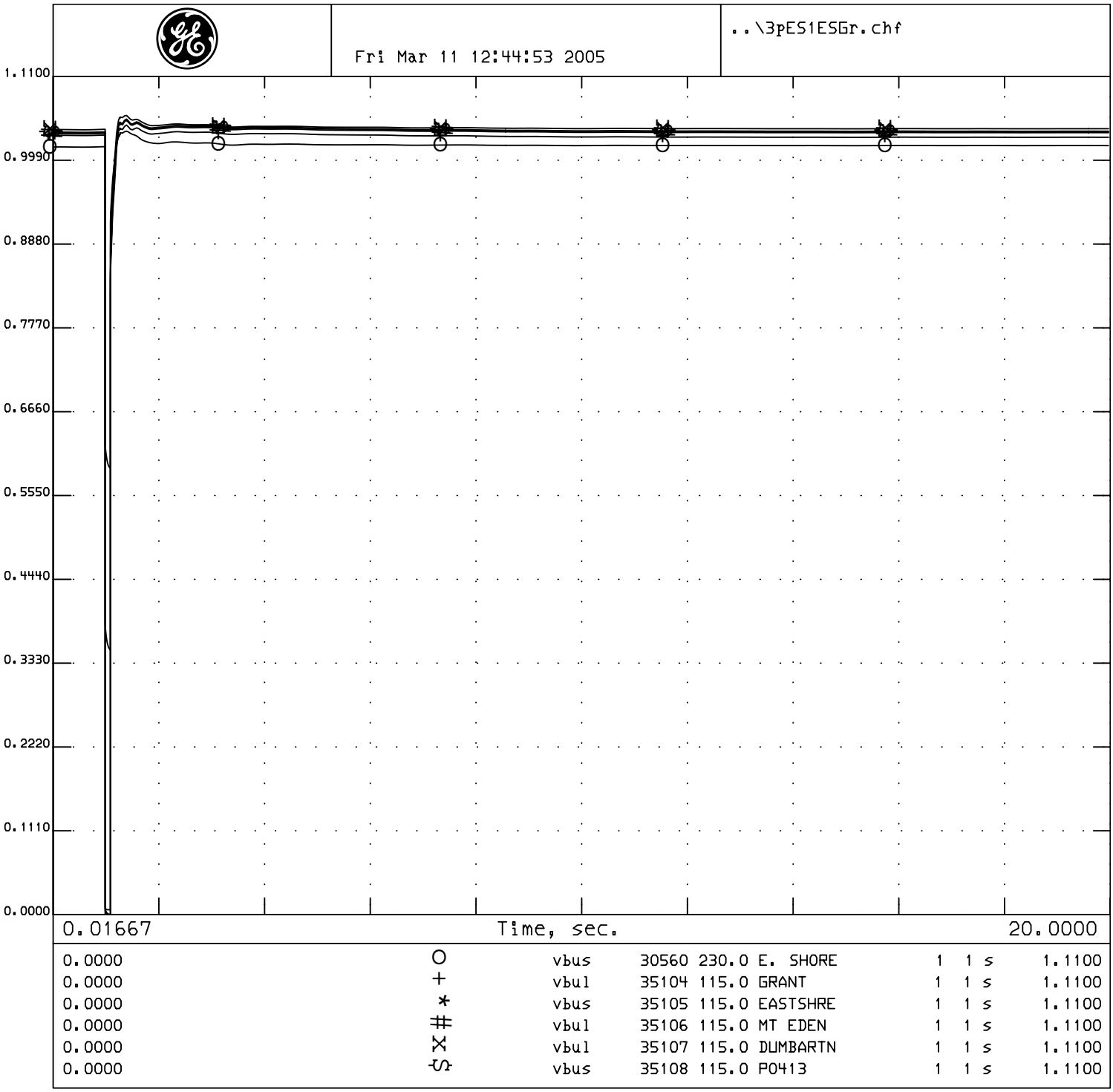

P0413 Project System Impact Study
2007 Summer Peak Base Case
P0413 @ 118MW
East Shore-Grant #1 115kV line outage
3 phase 6 cycle fault at East Shore 115kV bus and trip East Shore-Grant #1 115k

P0413 Project System Impact Study

Generator Interconnection Study

Selected PG&E Bus Voltage Plots Adjacent to Fault

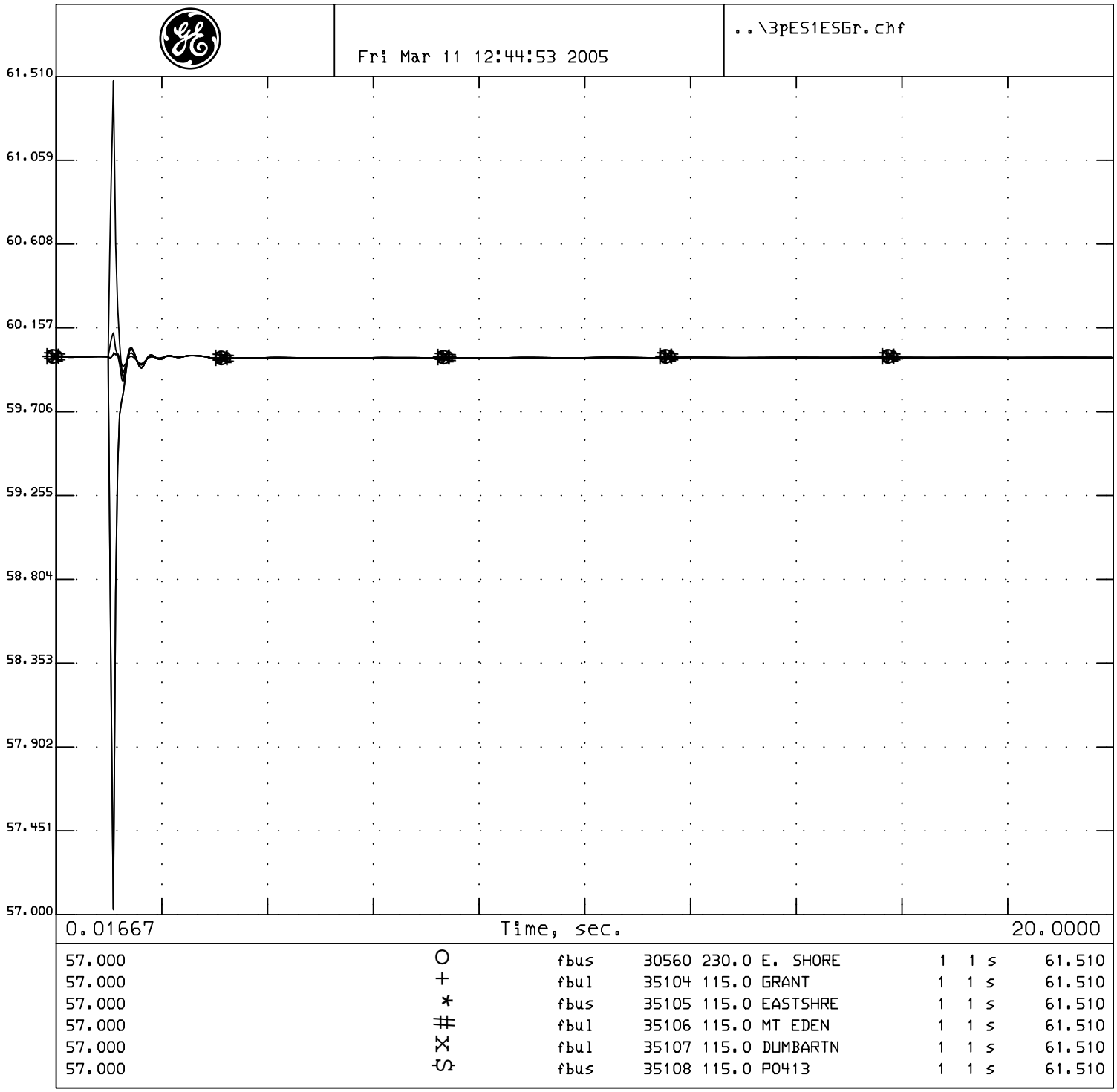

P0413 Project System Impact Study
2007 Summer Peak Base Case
P0413 @ 118MW
East Shore-Grant #1 115kV line outage
3 phase 6 cycle fault at East Shore 115kV bus and trip East Shore-Grant #1 115k

P0413 Project System Impact Study

Generator Interconnection Study

Selected PG&E Bus Frequency Plots Adjacent to Fault

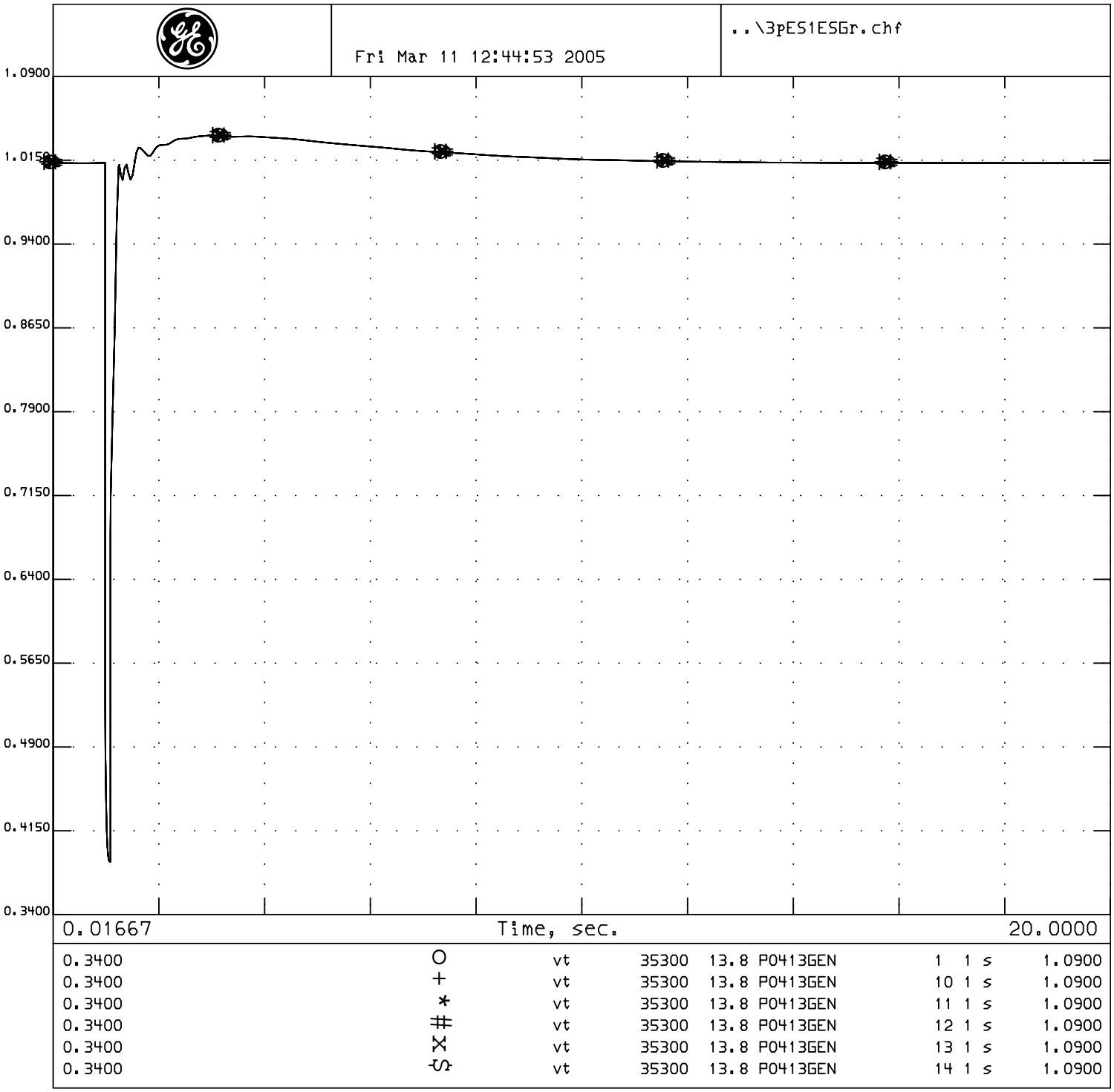

P0413 Project System Impact Study
2007 Summer Peak Base Case
P0413 @ 118MW
East Shore-Grant #1 115kV line outage
3 phase 6 cycle fault at East Shore 115kV bus and trip East Shore-Grant #1 115k

P0413 Project System Impact Study

Generator Interconnection Study

Project Generator Terminal Voltages

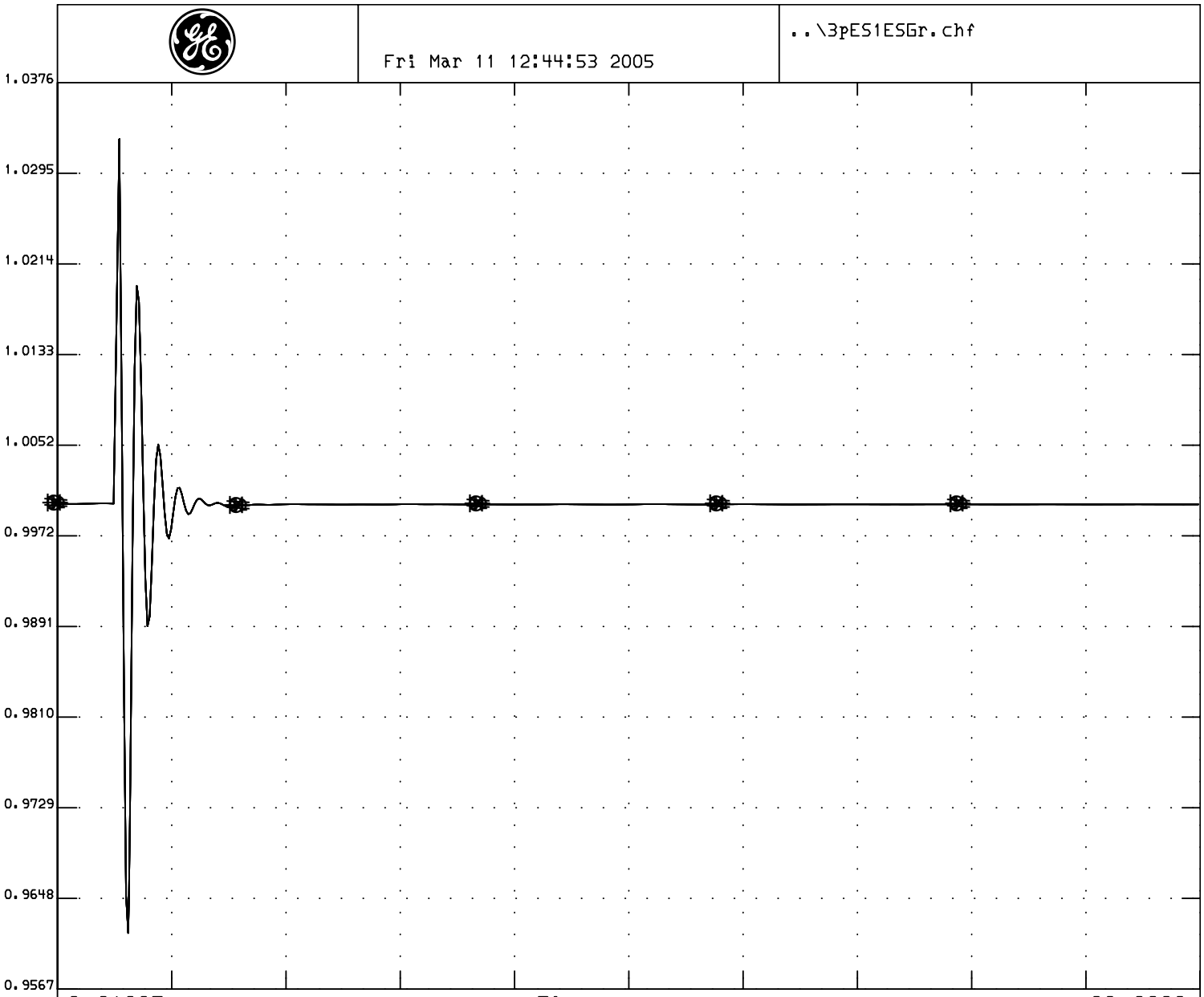

0.9567	O	spd	35300	13.8	P0413GEN	1	1 s	1.0376
0.9567	+	spd	35300	13.8	P0413GEN	10	1 s	1.0376
0.9567	*	spd	35300	13.8	P0413GEN	11	1 s	1.0376
0.9567	#	spd	35300	13.8	P0413GEN	12	1 s	1.0376
0.9567	X	spd	35300	13.8	P0413GEN	13	1 s	1.0376
0.9567	S	spd	35300	13.8	P0413GEN	14	1 s	1.0376

P0413 Project System Impact Study
2007 Summer Peak Base Case
P0413 @ 118MW
East Shore-Grant #1 115kV line outage
3 phase 6 cycle fault at East Shore 115kV bus and trip East Shore-Grant #1 115k

P0413 Project System Impact Study

Generator Interconnection Study

Project Generator Rotor Speed

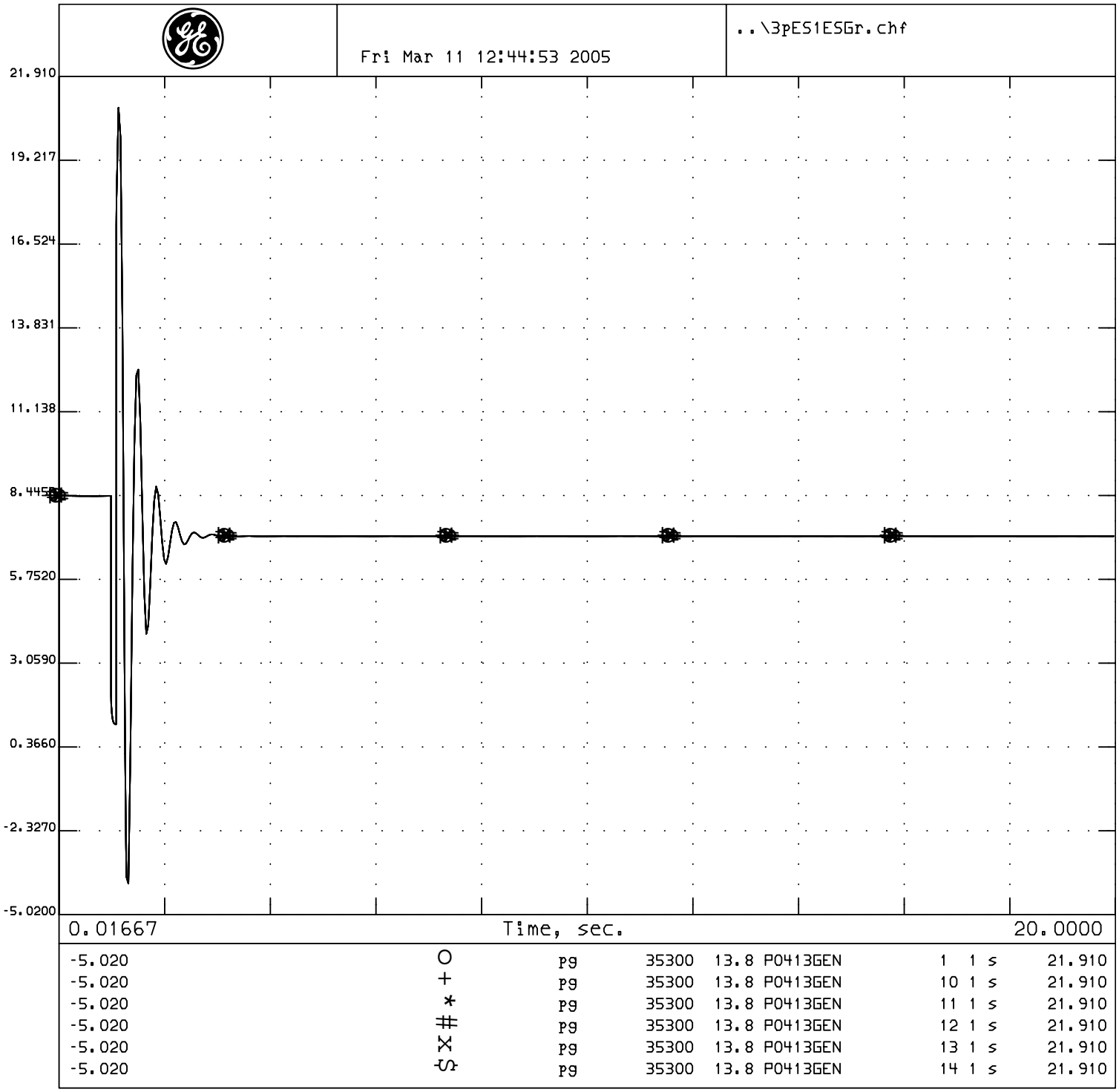

P0413 Project System Impact Study
2007 Summer Peak Base Case
P0413 @ 118MW
East Shore-Grant #1 115kV line outage
3 phase 6 cycle fault at East Shore 115kV bus and trip East Shore-Grant #1 115k

P0413 Project System Impact Study

Generator Interconnection Study

Project Generator Terminal Power

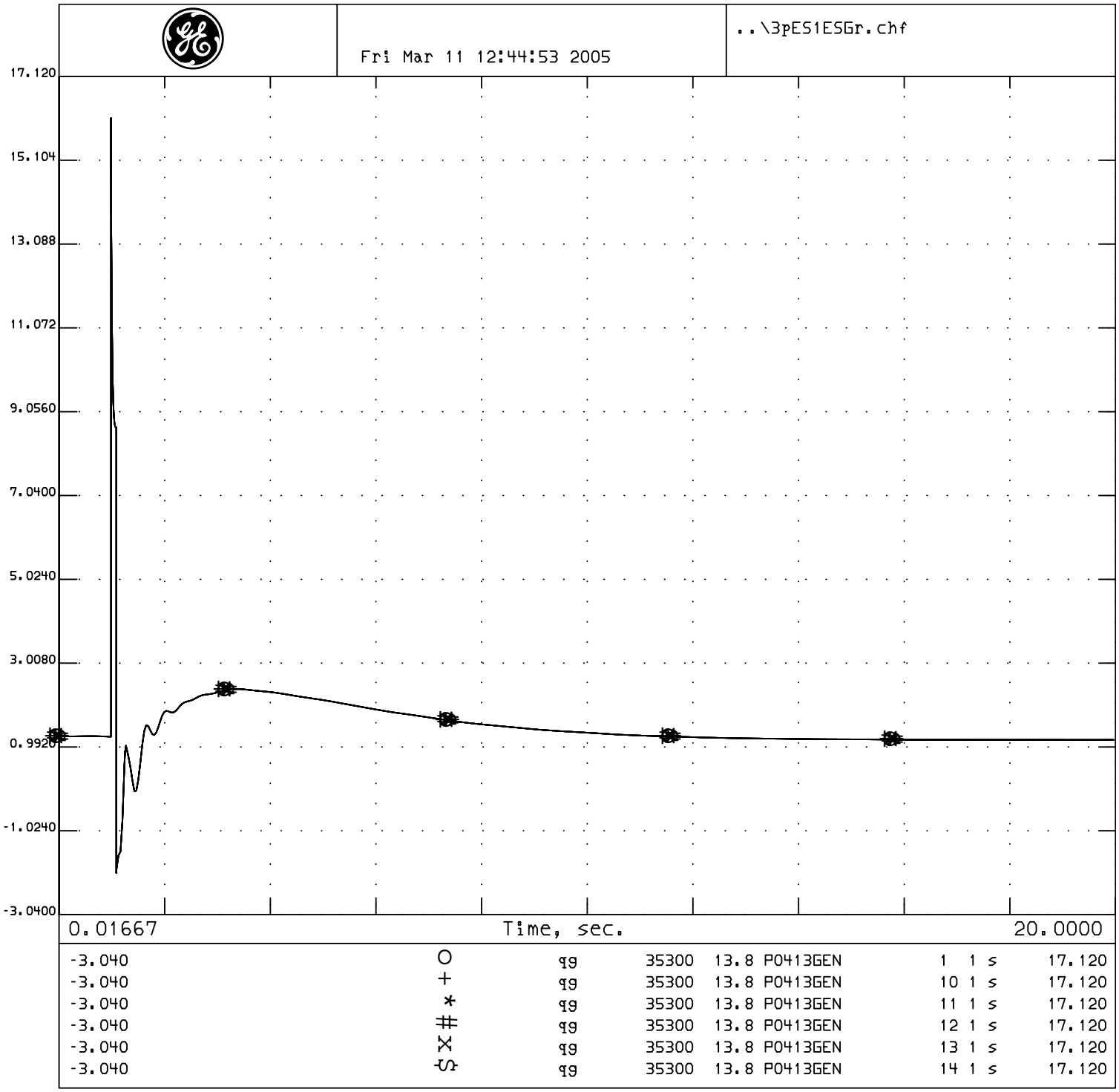

P0413 Project System Impact Study
2007 Summer Peak Base Case
P0413 @ 118MW
East Shore-Grant #1 115kV line outage
3 phase 6 cycle fault at East Shore 115kV bus and trip East Shore-Grant #1 115k

P0413 Project System Impact Study

Generator Interconnection Study

Project Generator Terminal Reactive Power

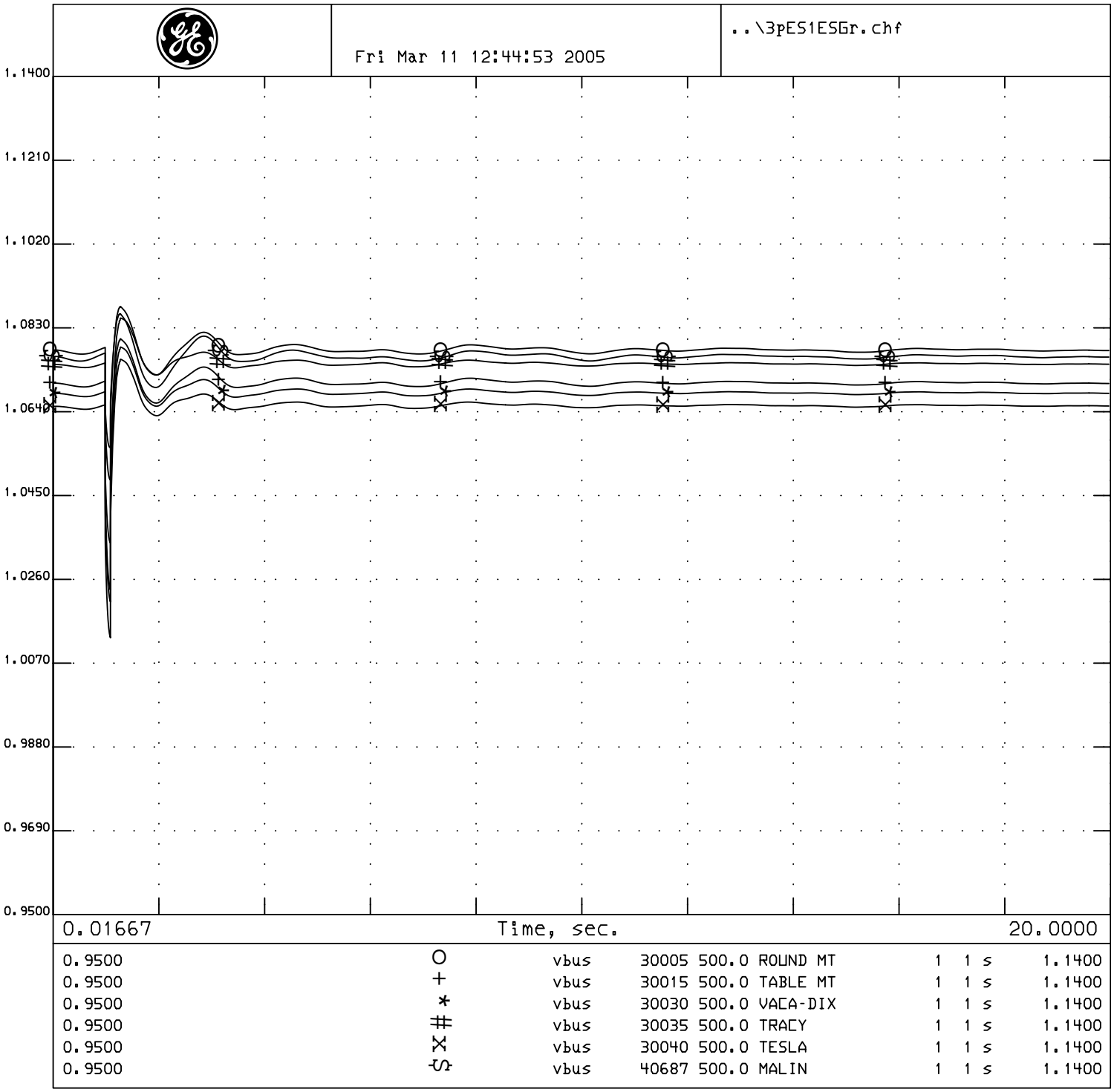

P0413 Project System Impact Study
2007 Summer Peak Base Case
P0413 @ 118MW
East Shore-Grant #1 115kV line outage
3 phase 6 cycle fault at East Shore 115kV bus and trip East Shore-Grant #1 115k

P0413 Project System Impact Study

Generator Interconnection Study

Selected WECC Bus Voltage Plots

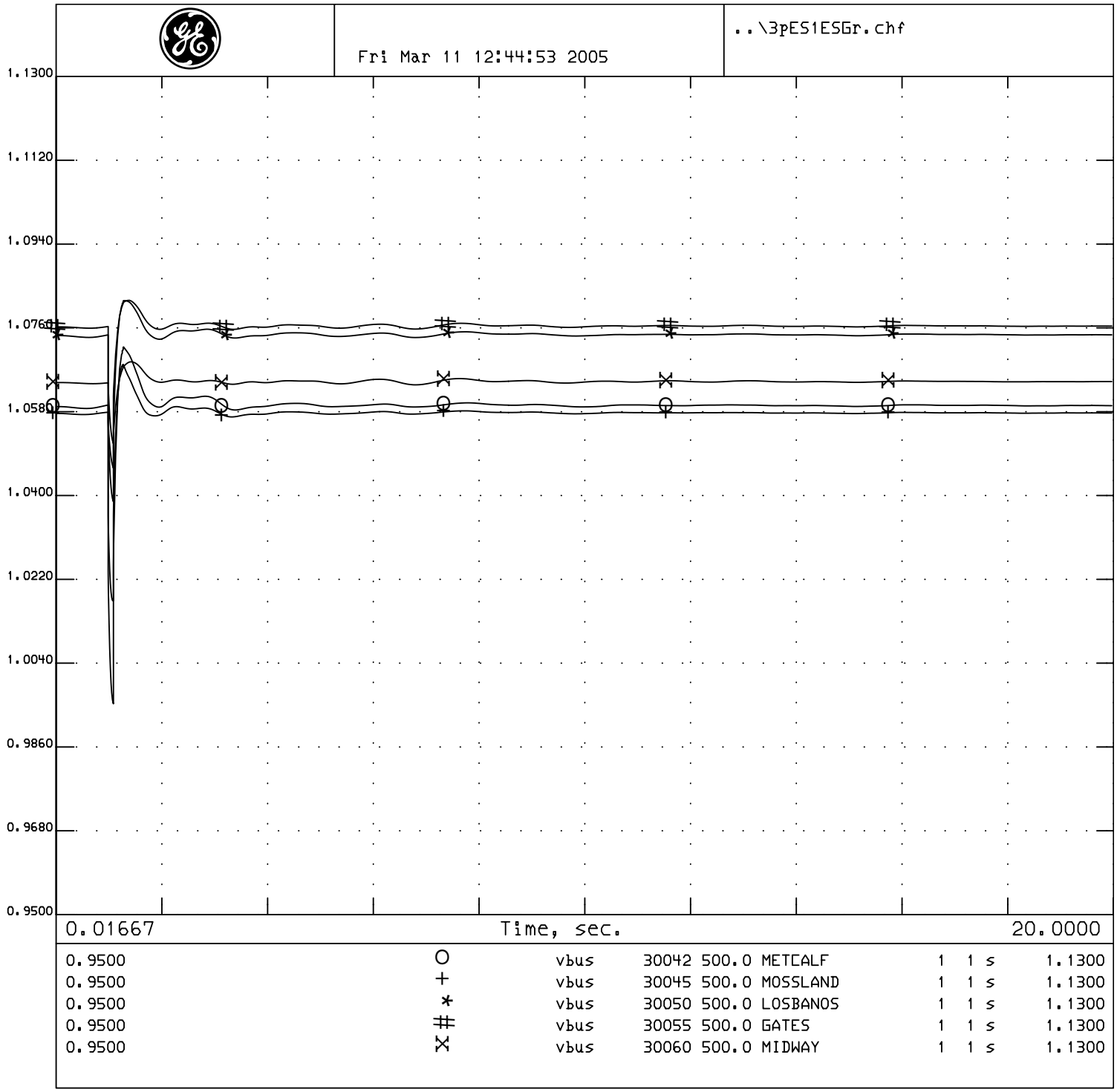

P0413 Project System Impact Study
2007 Summer Peak Base Case
P0413 @ 118MW
East Shore-Grant #1 115kV line outage
3 phase 6 cycle fault at East Shore 115kV bus and trip East Shore-Grant #1 115k

P0413 Project System Impact Study

Generator Interconnection Study

Selected WECC Bus Voltage Plots

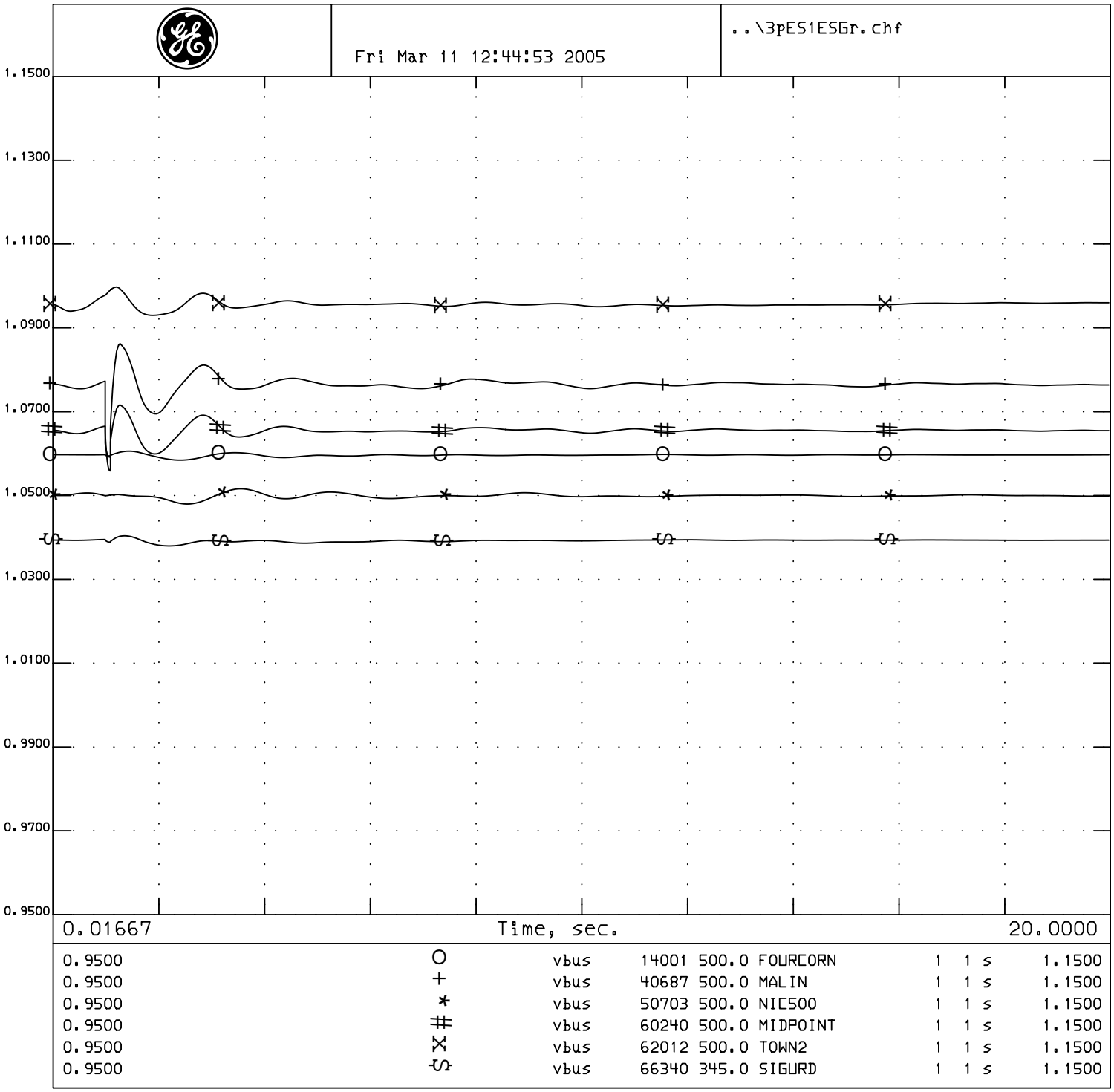

P0413 Project System Impact Study
2007 Summer Peak Base Case
P0413 @ 118MW
East Shore-Grant #1 115kV line outage
3 phase 6 cycle fault at East Shore 115kV bus and trip East Shore-Grant #1 115k

P0413 Project System Impact Study

Generator Interconnection Study

Selected WECC Bus Voltage Plots

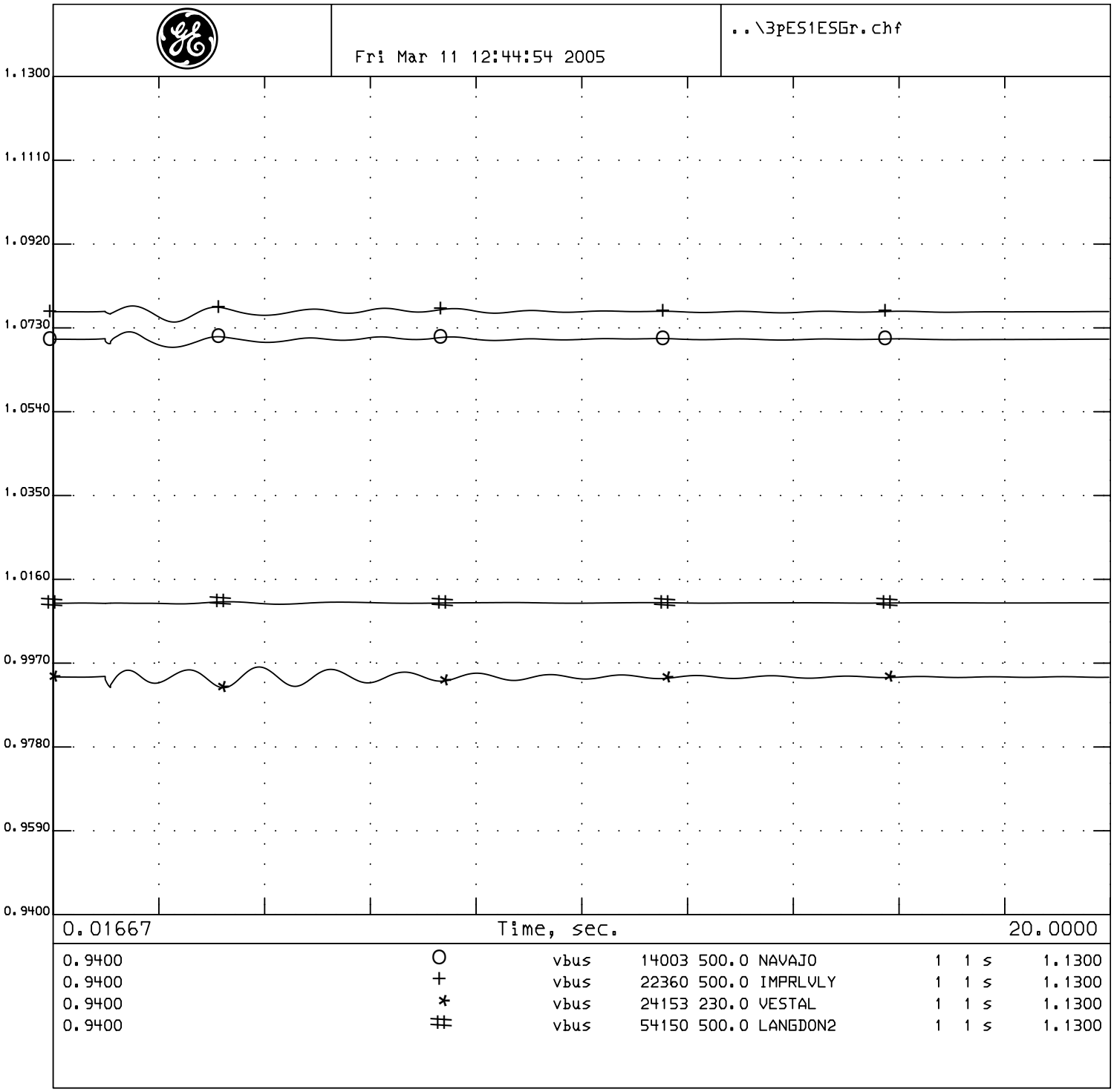

P0413 Project System Impact Study
2007 Summer Peak Base Case
P0413 @ 118MW
East Shore-Grant #1 115kV line outage
3 phase 6 cycle fault at East Shore 115kV bus and trip East Shore-Grant #1 115k

P0413 Project System Impact Study

Generator Interconnection Study

Selected WECC Bus Voltage Plots

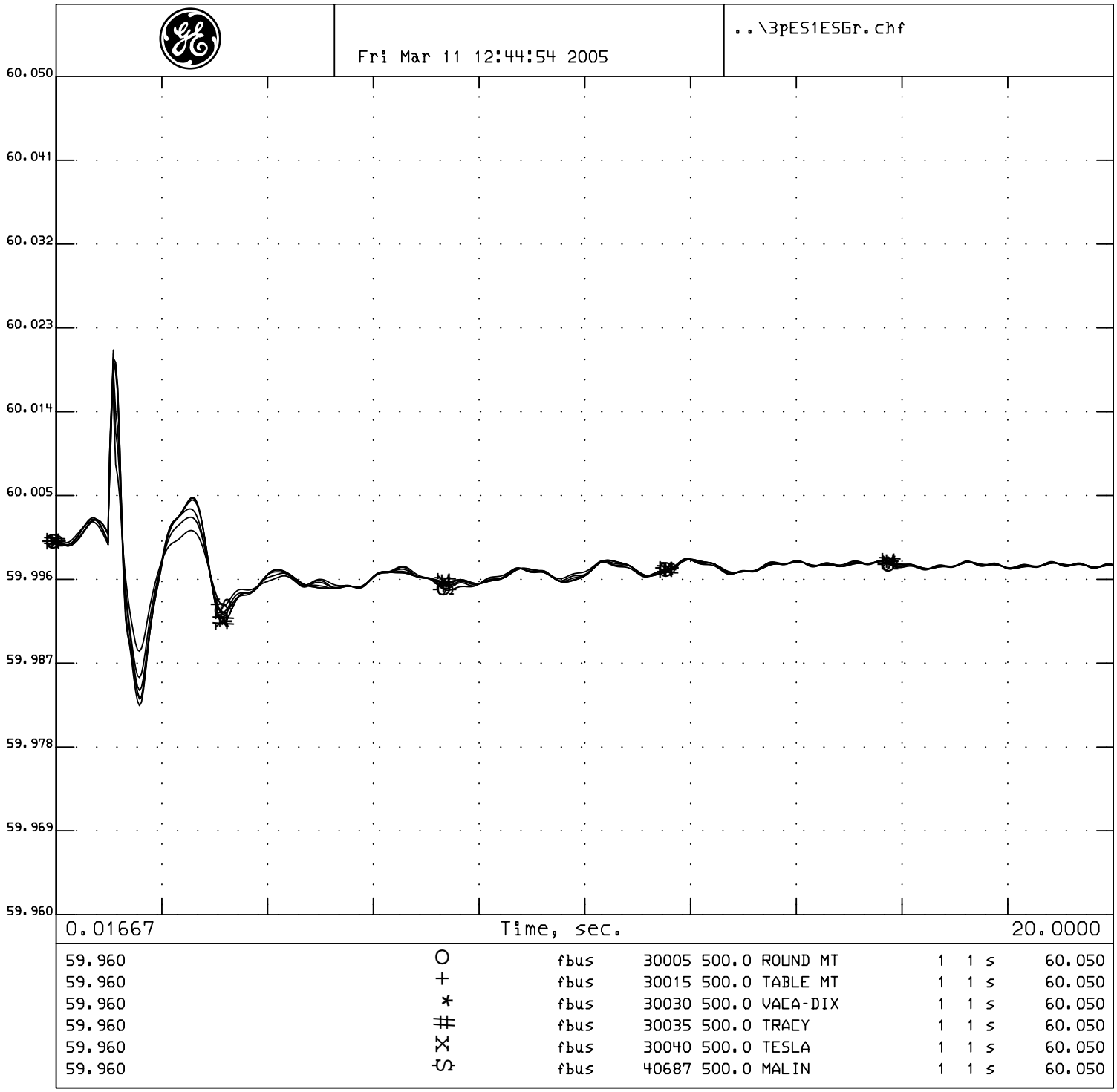

P0413 Project System Impact Study
2007 Summer Peak Base Case
P0413 @ 118MW
East Shore-Grant #1 115kV line outage
3 phase 6 cycle fault at East Shore 115kV bus and trip East Shore-Grant #1 115k

P0413 Project System Impact Study

Generator Interconnection Study

Selected WECC Bus Frequency Plots

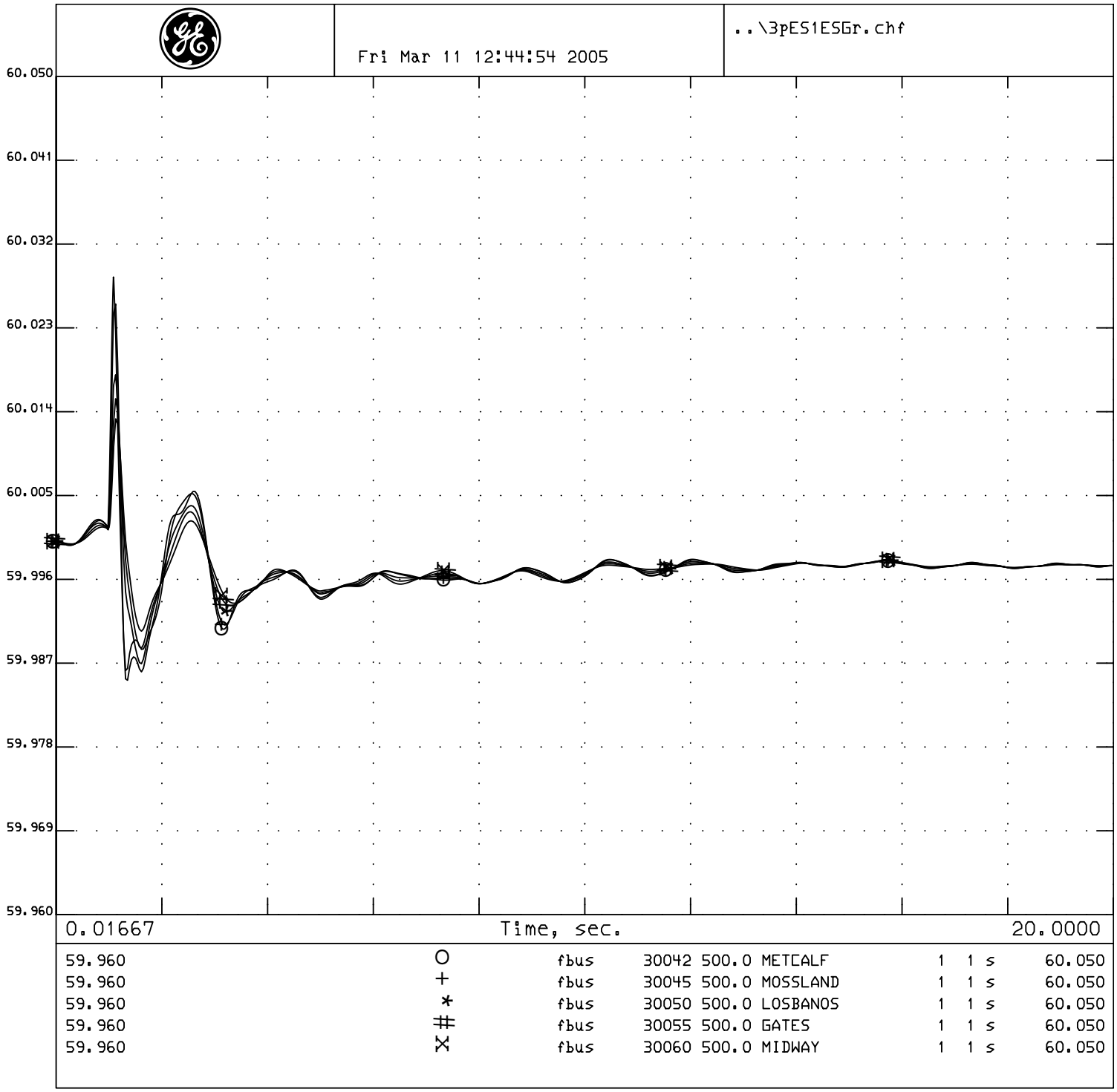

P0413 Project System Impact Study
2007 Summer Peak Base Case
P0413 @ 118MW
East Shore-Grant #1 115kV line outage
3 phase 6 cycle fault at East Shore 115kV bus and trip East Shore-Grant #1 115k

P0413 Project System Impact Study

Generator Interconnection Study

Selected WECC Bus Frequency Plots

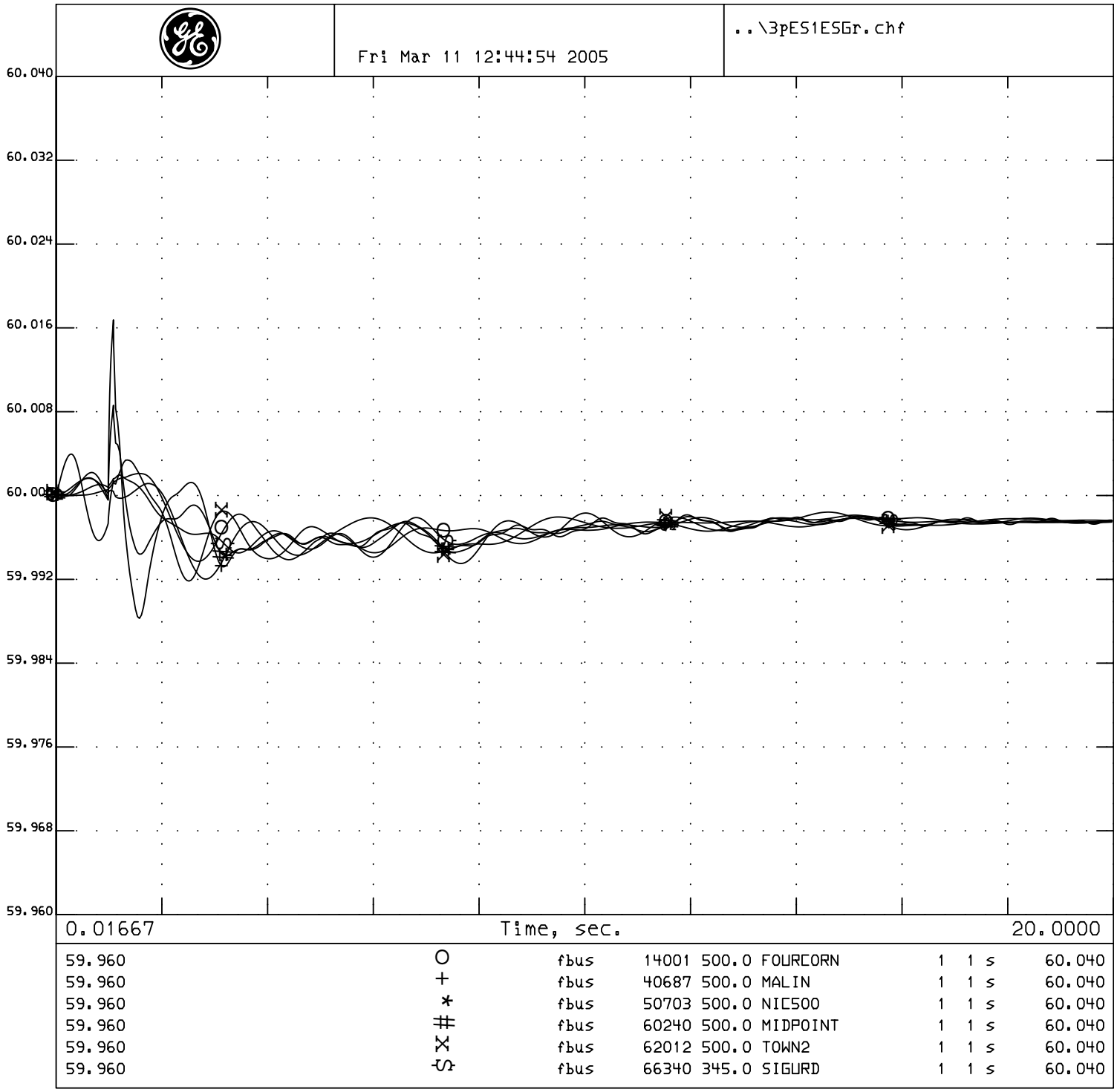

P0413 Project System Impact Study
2007 Summer Peak Base Case
P0413 @ 118MW
East Shore-Grant #1 115kV line outage
3 phase 6 cycle fault at East Shore 115kV bus and trip East Shore-Grant #1 115k

P0413 Project System Impact Study

Generator Interconnection Study

Selected WECC Bus Frequency Plots

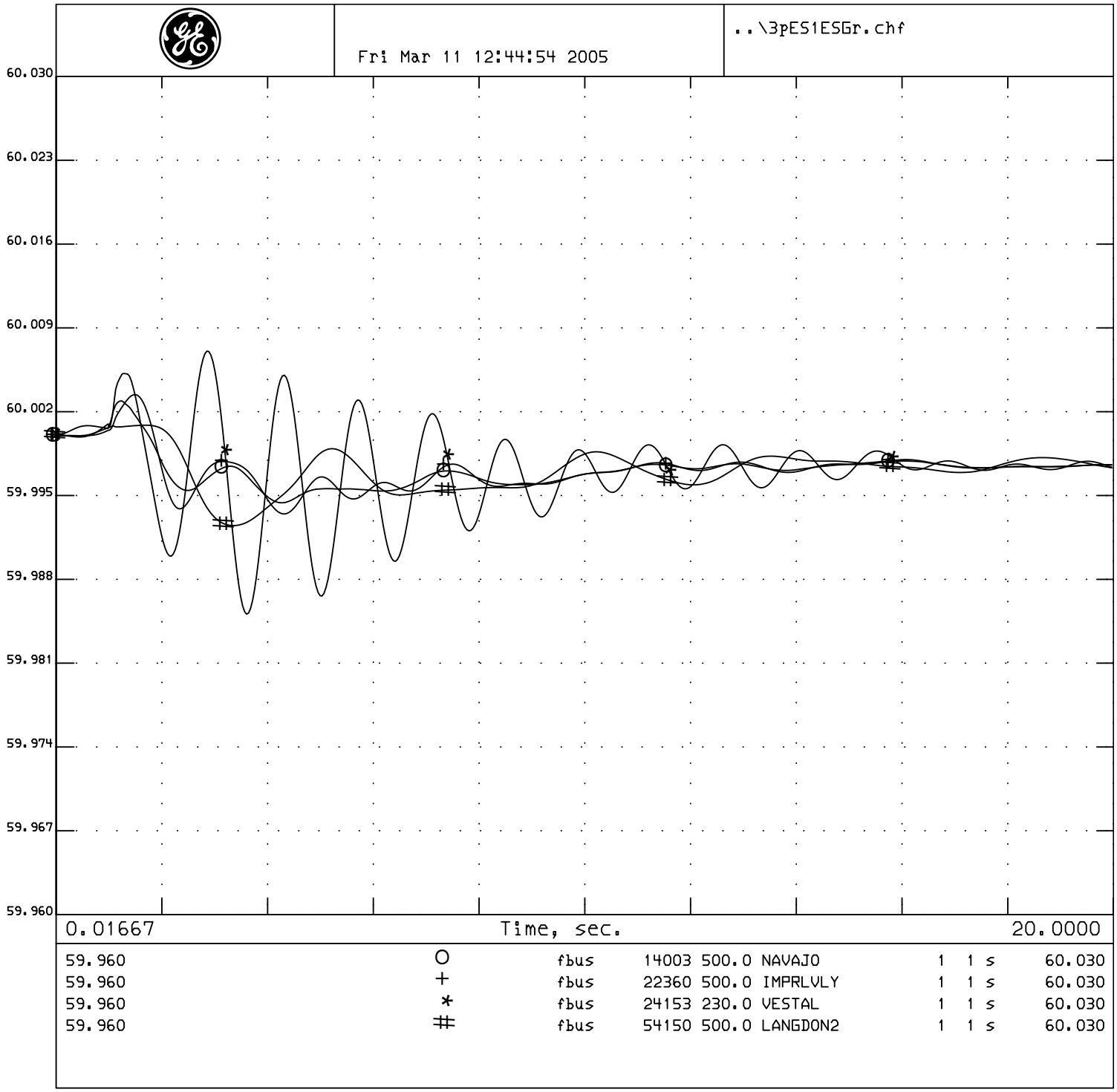

P0413 Project System Impact Study
2007 Summer Peak Base Case
P0413 @ 118MW
East Shore-Grant #1 115kV line outage
3 phase 6 cycle fault at East Shore 115kV bus and trip East Shore-Grant #1 115k

P0413 Project System Impact Study

Generator Interconnection Study

Selected WECC Bus Frequency Plots

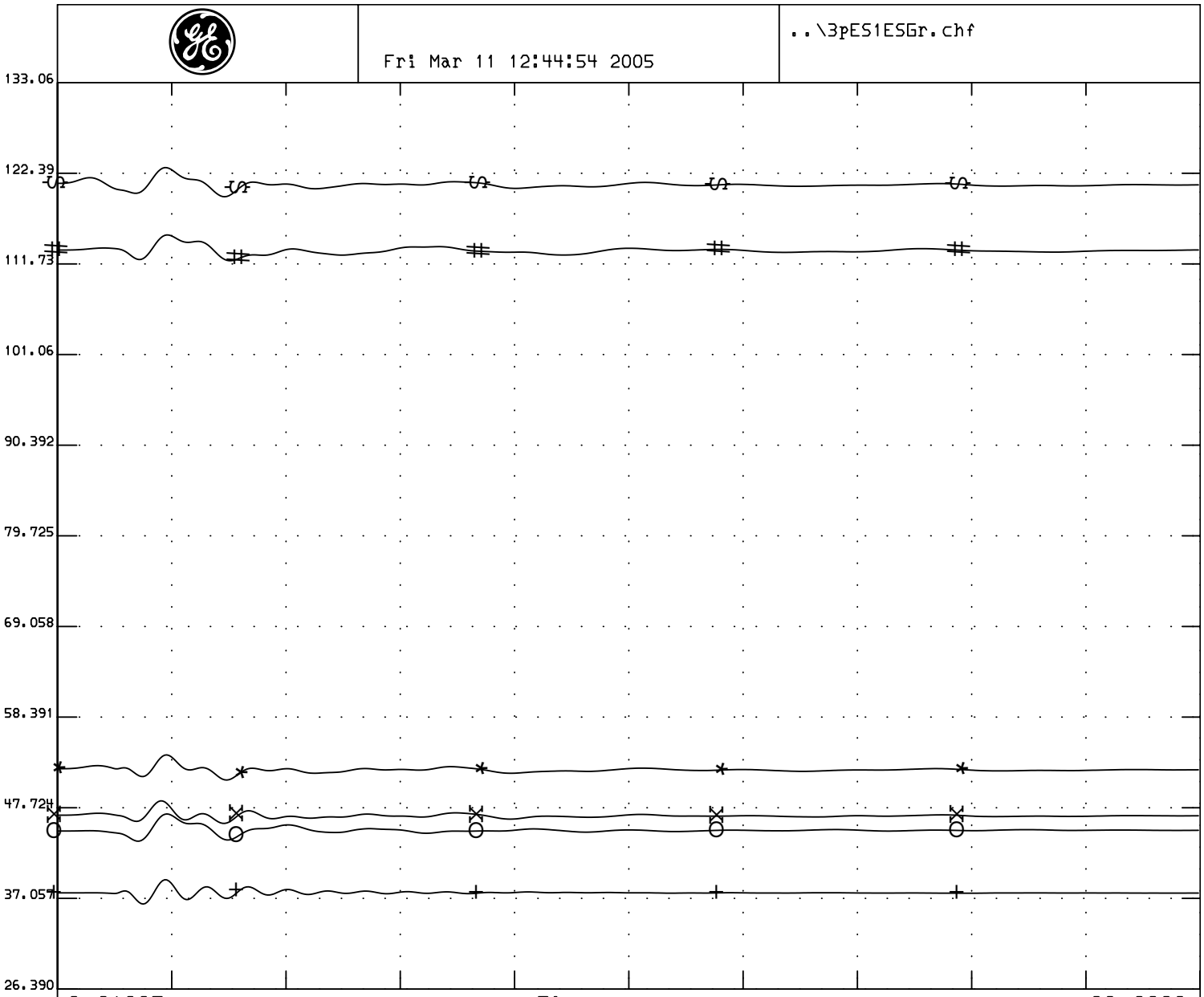

26.390	O	ang	14914	22.0	FCNGN4CC	H	1	s	133.06
26.390	+	ang	36411	25.0	DIABLO 1	1	1	s	133.06
26.390	*	ang	41701	13.8	JONDAY01	1	1	s	133.06
26.390	#	ang	50500	13.8	GMS G6	1	1	s	133.06
26.390	X	ang	60100	13.8	BRWNL 5	1	1	s	133.06
26.390	S	ang	62048	26.0	COLSTP 3	1	1	s	133.06

P0413 Project System Impact Study
2007 Summer Peak Base Case
P0413 @ 118MW
East Shore-Grant #1 115kV line outage
3 phase 6 cycle fault at East Shore 115kV bus and trip East Shore-Grant #1 115k

P0413 Project System Impact Study

Generator Interconnection Study

WECC Generator Rotor Angle

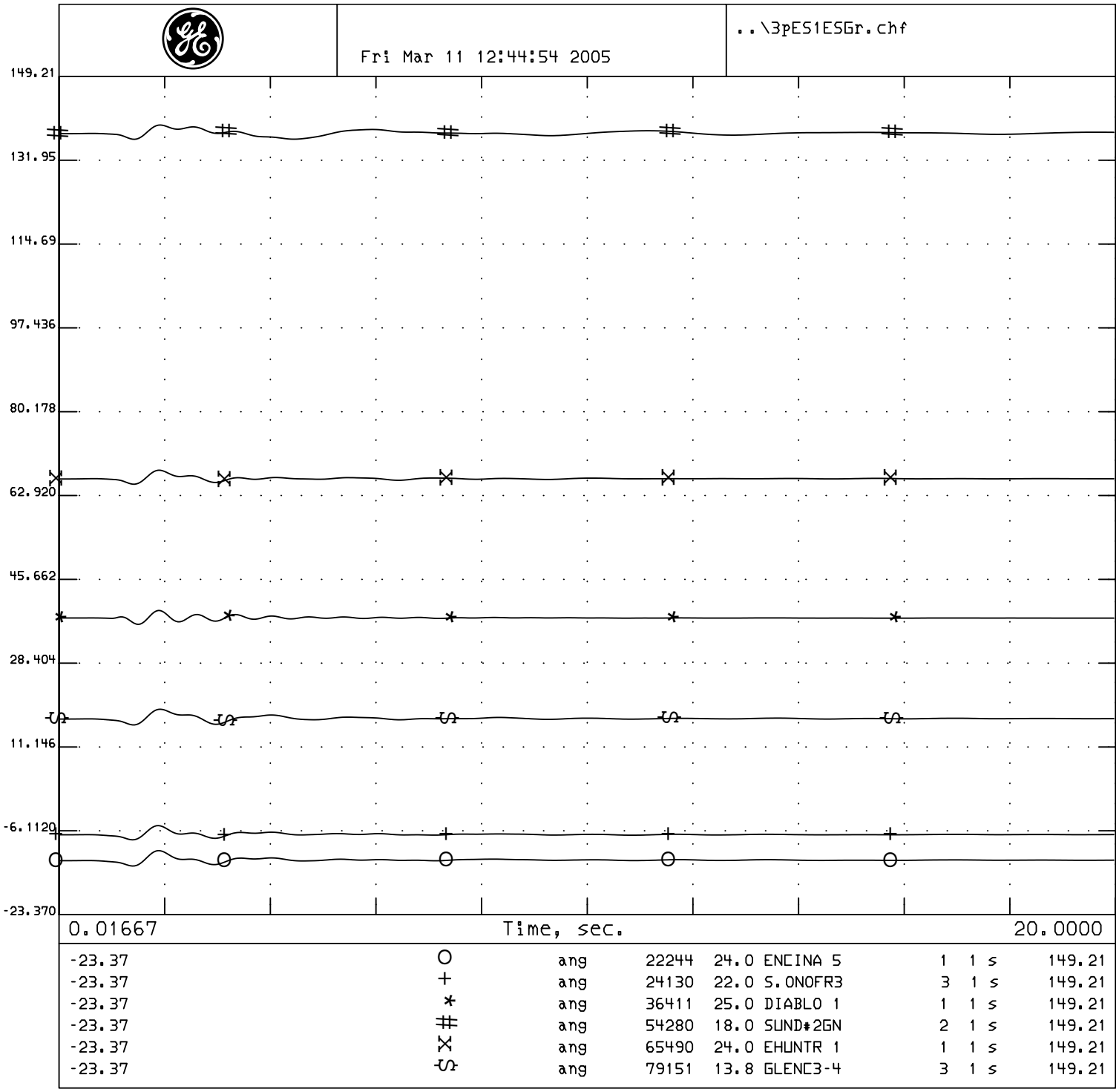

P0413 Project System Impact Study
2007 Summer Peak Base Case
P0413 @ 118MW
East Shore-Grant #1 115kV line outage
3 phase 6 cycle fault at East Shore 115kV bus and trip East Shore-Grant #1 115k

P0413 Project System Impact Study

Generator Interconnection Study

WECC Generator Rotor Angle

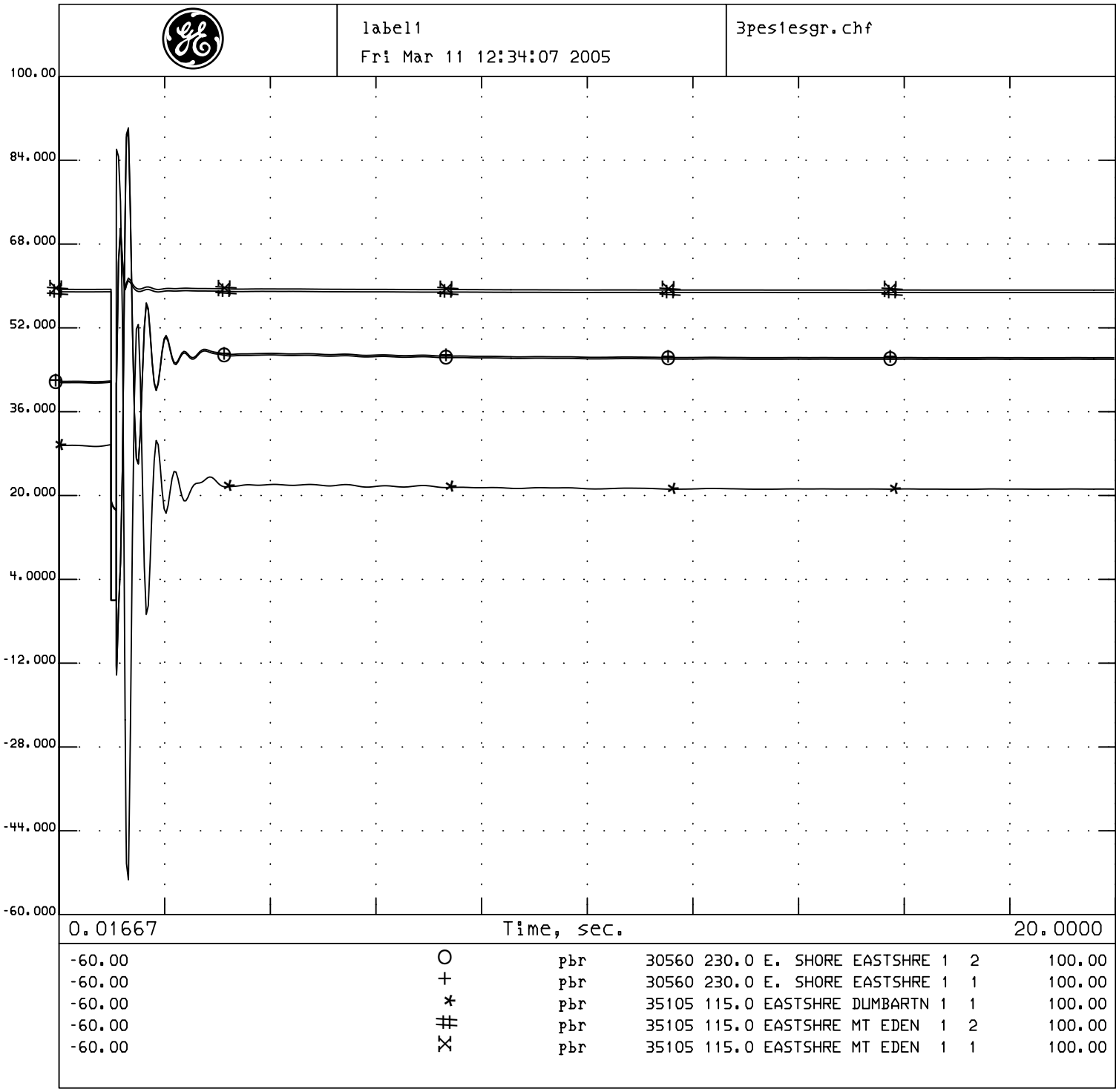

P0413 Project System Impact Study
2007 Summer Peak Base Case
P0413 @ 118MW
East Shore-Grant #1 115kV line outage
3 phase 6 cycle fault at East Shore 115kV bus and trip East Shore-Grant #1 115k

P0413 Project System Impact Study

Generator Interconnection Study

Selected PG&E Transmission Line Flows MW

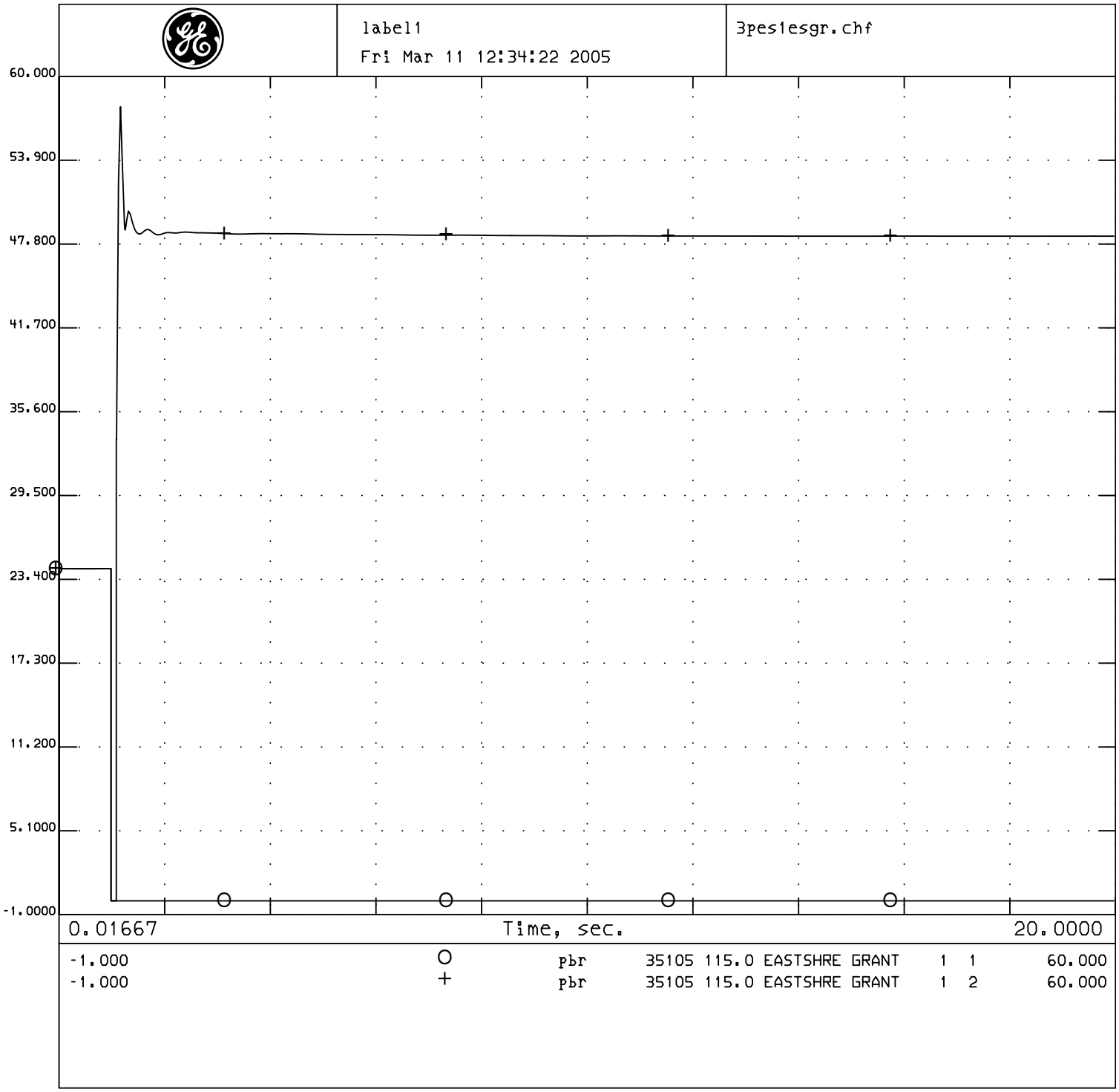

P0413 Project System Impact Study
2007 Summer Peak Base Case
P0413 @ 118MW
East Shore-Grant #1 115kV line outage
3 phase 6 cycle fault at East Shore 115kV bus and trip East Shore-Grant #1 115k

P0413 Project System Impact Study

Generator Interconnection Study

Selected PG&E Transmission Line Flows MW

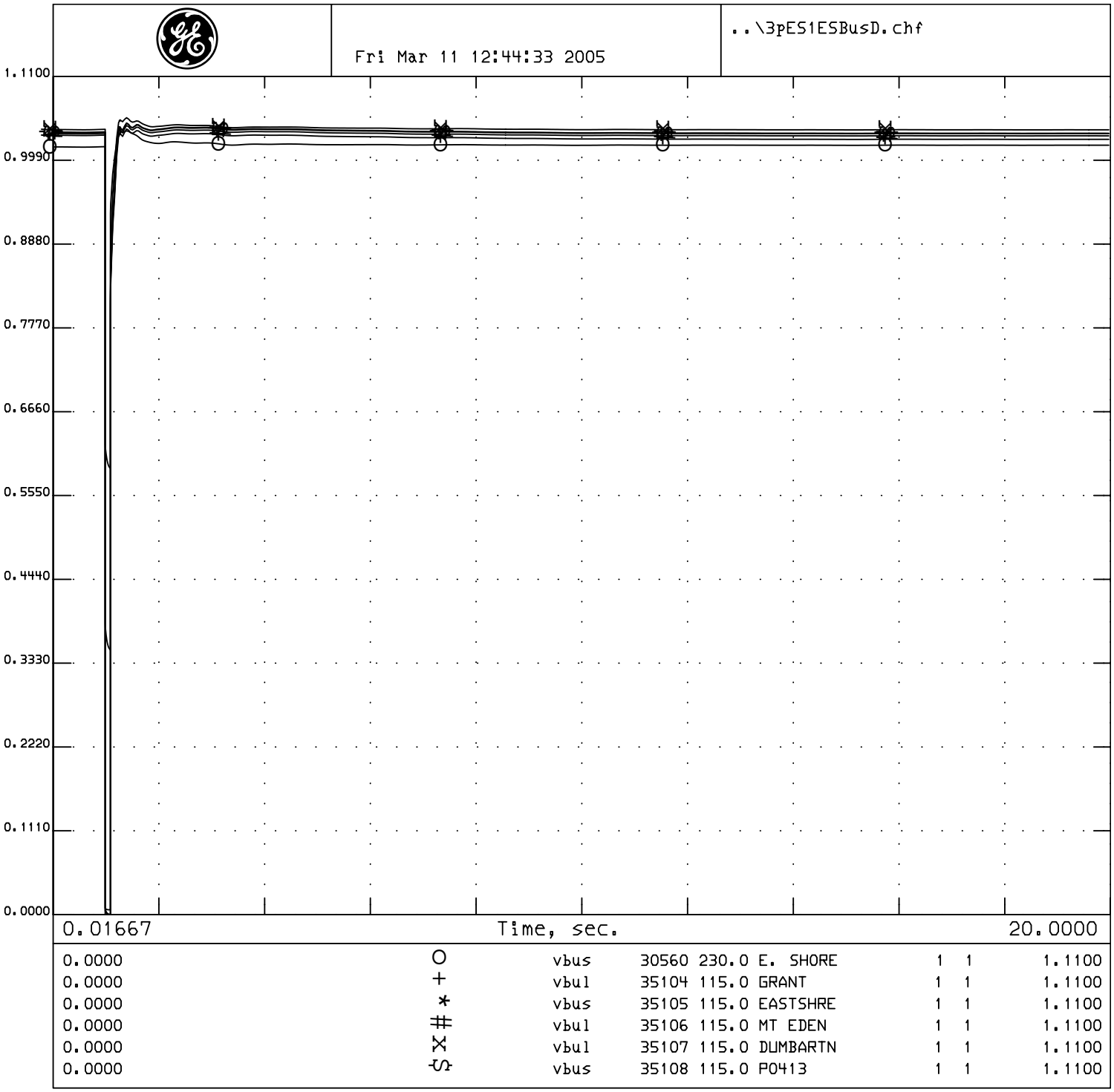

P0413 Project System Impact Study
2007 Summer Peak Base Case
P0413 @ 118MW
East Shore 115kV Bus outage D
3 phase 6 cycle fault at East Shore 115kV bus and clear the East Shore 115kV bu

P0413 Project System Impact Study

Generator Interconnection Study

Selected PG&E Bus Voltage Plots Adjacent to Fault

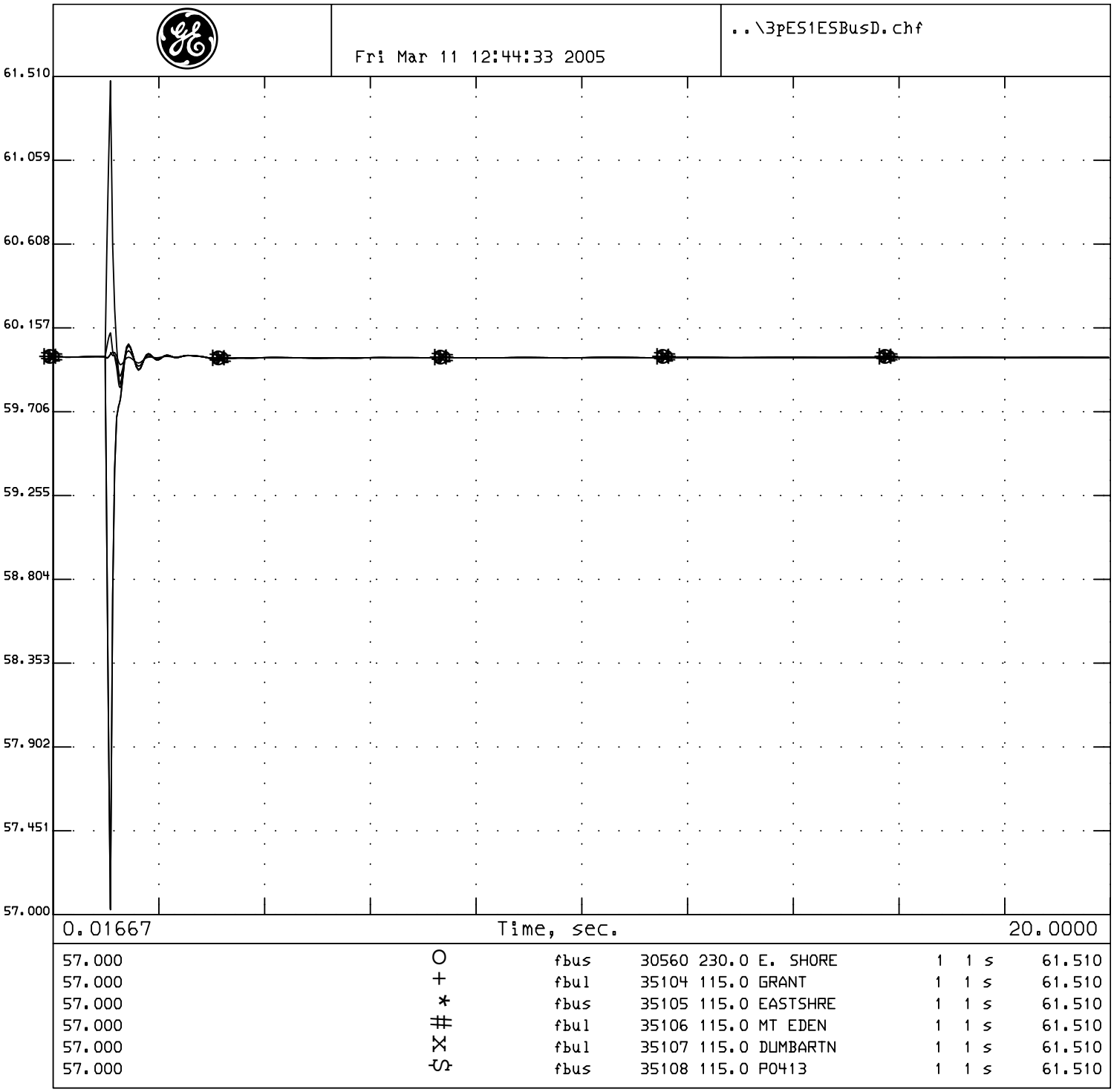

P0413 Project System Impact Study
2007 Summer Peak Base Case
P0413 @ 118MW
East Shore 115kV Bus outage D
3 phase 6 cycle fault at East Shore 115kV bus and clear the East Shore 115kV bu

P0413 Project System Impact Study

Generator Interconnection Study

Selected PG&E Bus Frequency Plots Adjacent to Fault

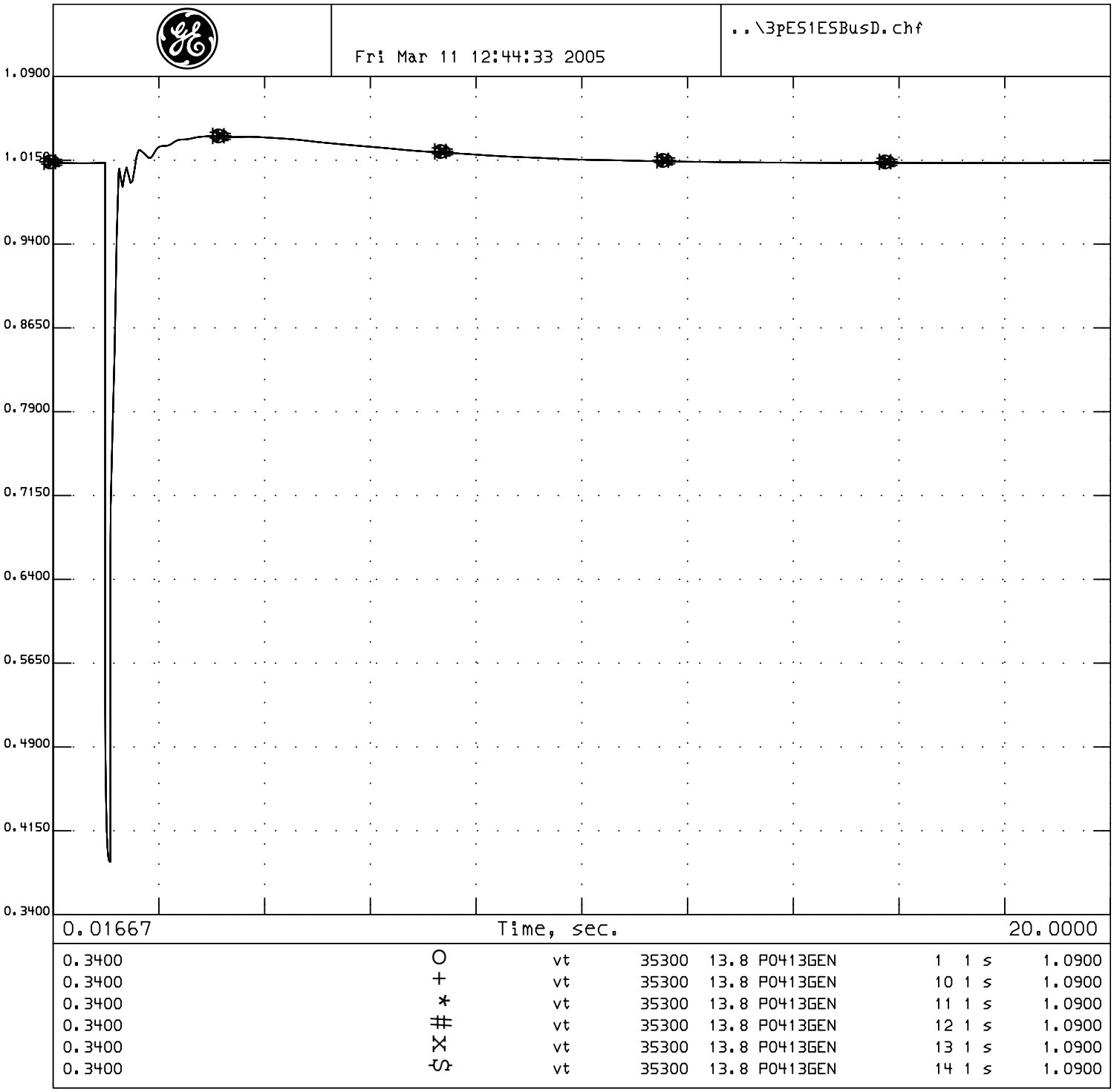

P0413 Project System Impact Study
2007 Summer Peak Base Case
P0413 @ 118MW
East Shore 115kV Bus outage D
3 phase 6 cycle fault at East Shore 115kV bus and clear the East Shore 115kV bu

P0413 Project System Impact Study

Generator Interconnection Study

Project Generator Terminal Voltages

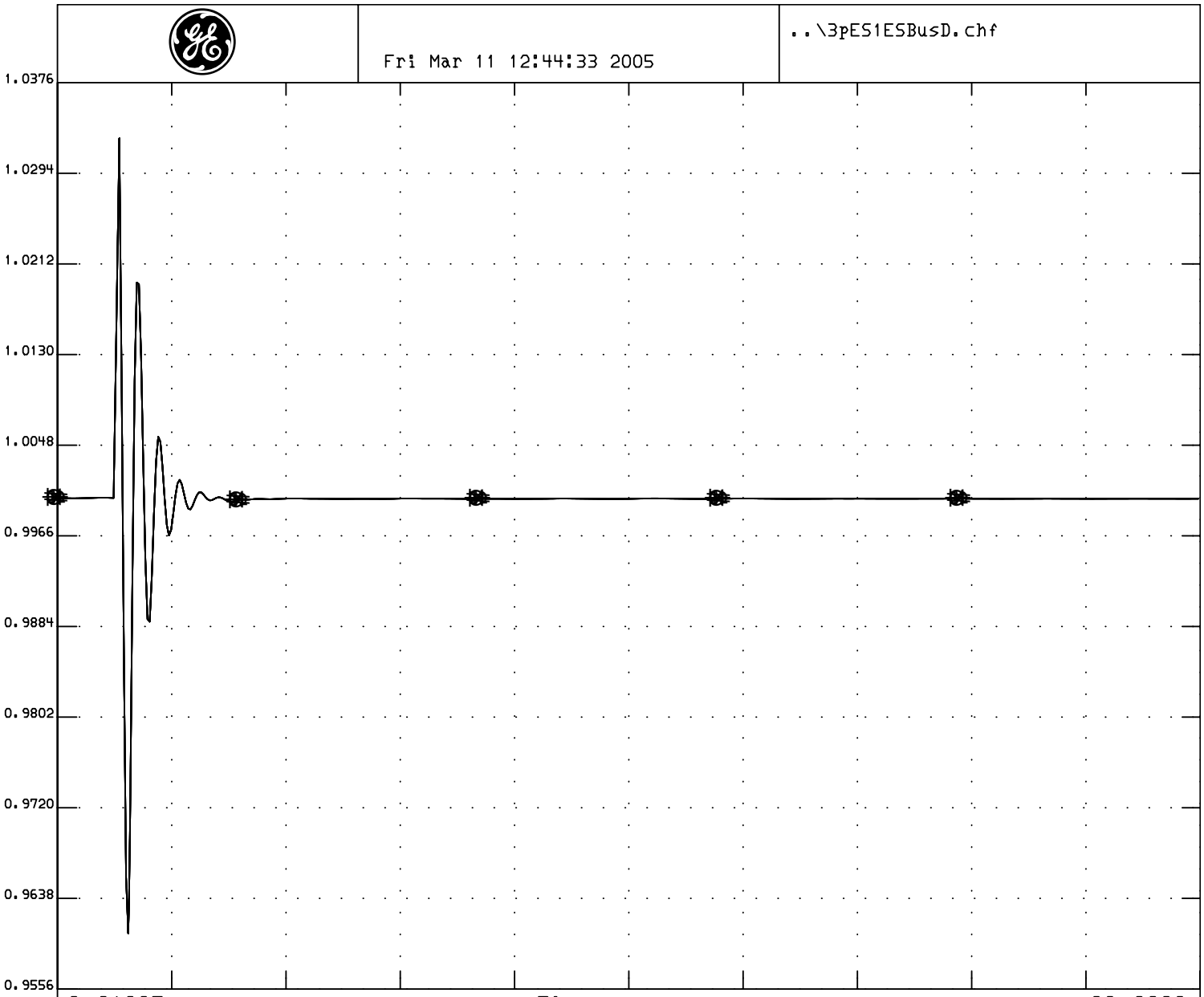

0.9556	O	spd	35300	13.8	P0413GEN	1	1 s	1.0376
0.9556	+	spd	35300	13.8	P0413GEN	10	1 s	1.0376
0.9556	*	spd	35300	13.8	P0413GEN	11	1 s	1.0376
0.9556	#	spd	35300	13.8	P0413GEN	12	1 s	1.0376
0.9556	X	spd	35300	13.8	P0413GEN	13	1 s	1.0376
0.9556	S	spd	35300	13.8	P0413GEN	14	1 s	1.0376

P0413 Project System Impact Study
2007 Summer Peak Base Case
P0413 @ 118MW
East Shore 115kV Bus outage D
3 phase 6 cycle fault at East Shore 115kV bus and clear the East Shore 115kV bu

P0413 Project System Impact Study

Generator Interconnection Study

Project Generator Rotor Speed

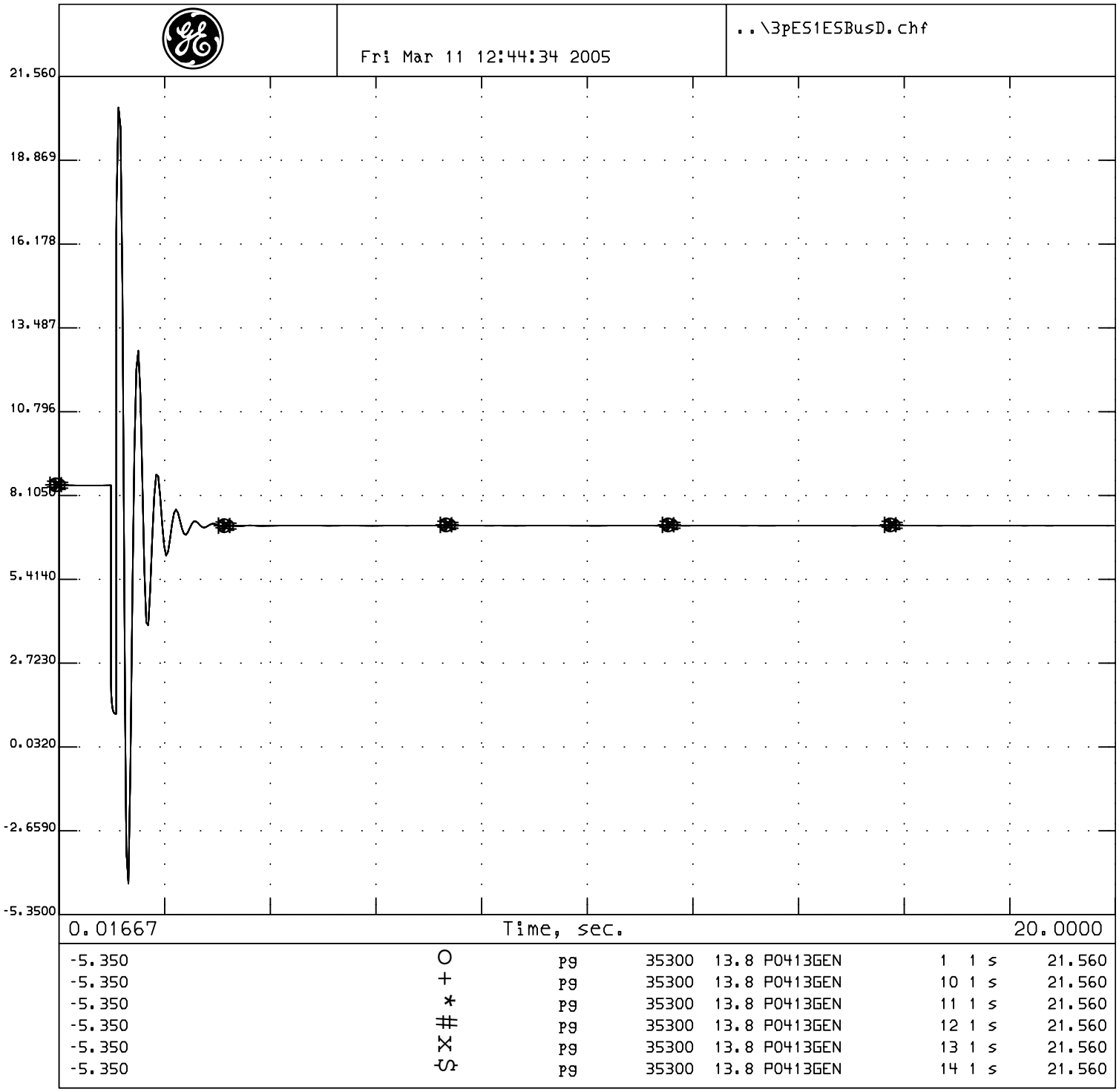

P0413 Project System Impact Study
2007 Summer Peak Base Case
P0413 @ 118MW
East Shore 115kV Bus outage D
3 phase 6 cycle fault at East Shore 115kV bus and clear the East Shore 115kV bu

P0413 Project System Impact Study

Generator Interconnection Study

Project Generator Terminal Power

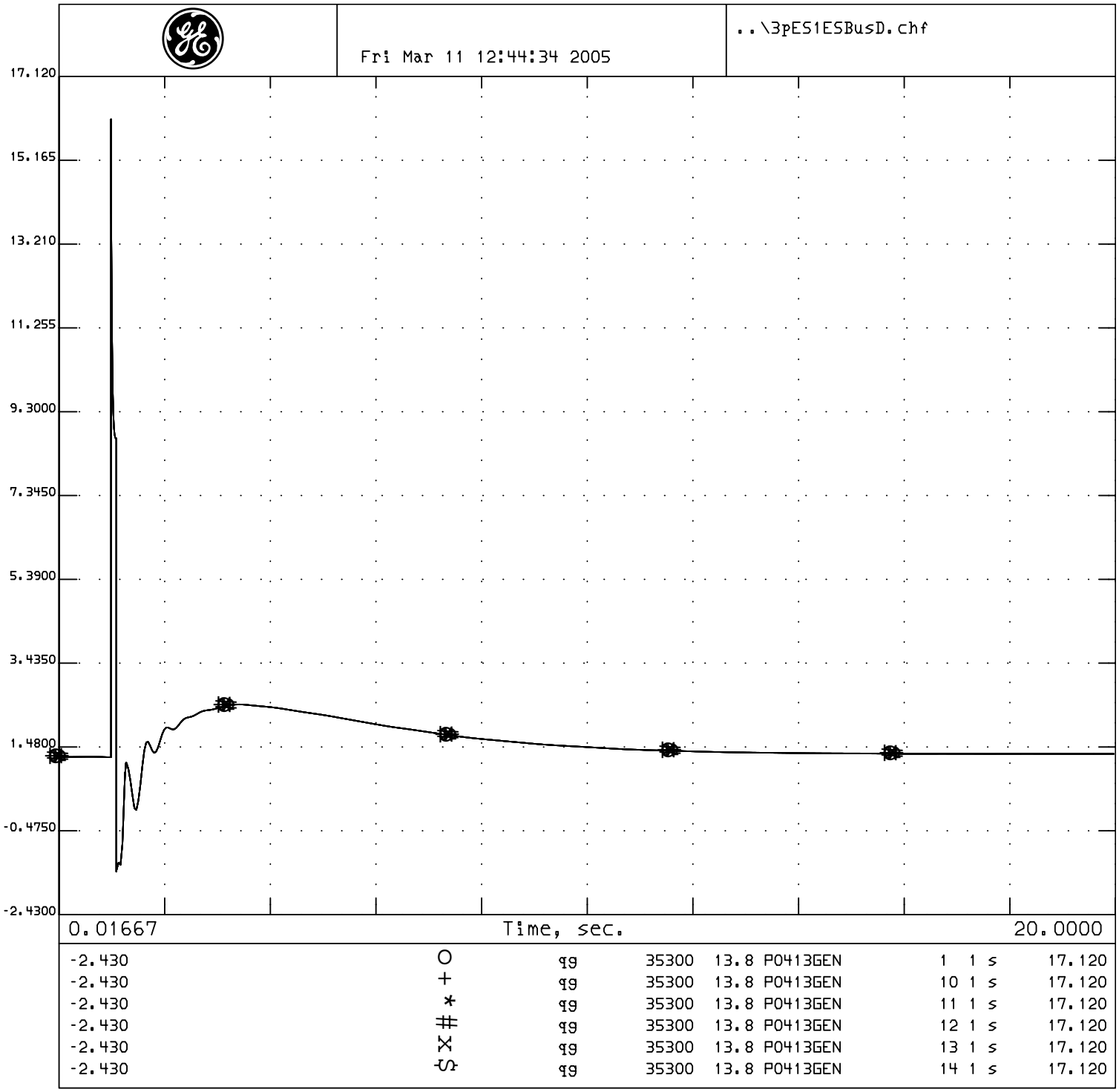

P0413 Project System Impact Study
2007 Summer Peak Base Case
P0413 @ 118MW
East Shore 115kV Bus outage D
3 phase 6 cycle fault at East Shore 115kV bus and clear the East Shore 115kV bu

P0413 Project System Impact Study

Generator Interconnection Study

Project Generator Terminal Reactive Power

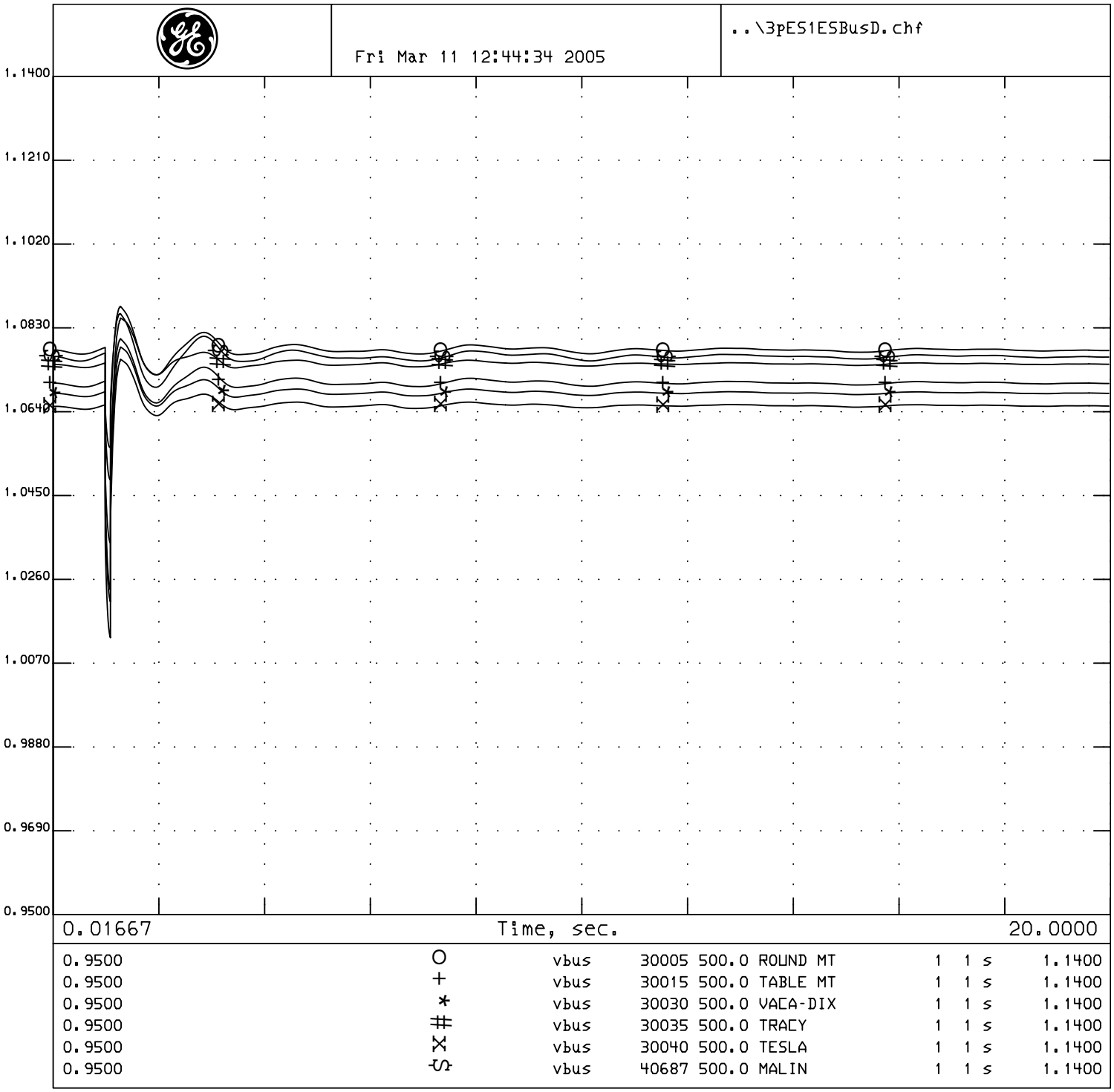

P0413 Project System Impact Study
2007 Summer Peak Base Case
P0413 @ 118MW
East Shore 115kV Bus outage D
3 phase 6 cycle fault at East Shore 115kV bus and clear the East Shore 115kV bu

P0413 Project System Impact Study

Generator Interconnection Study

Selected WECC Bus Voltage Plots

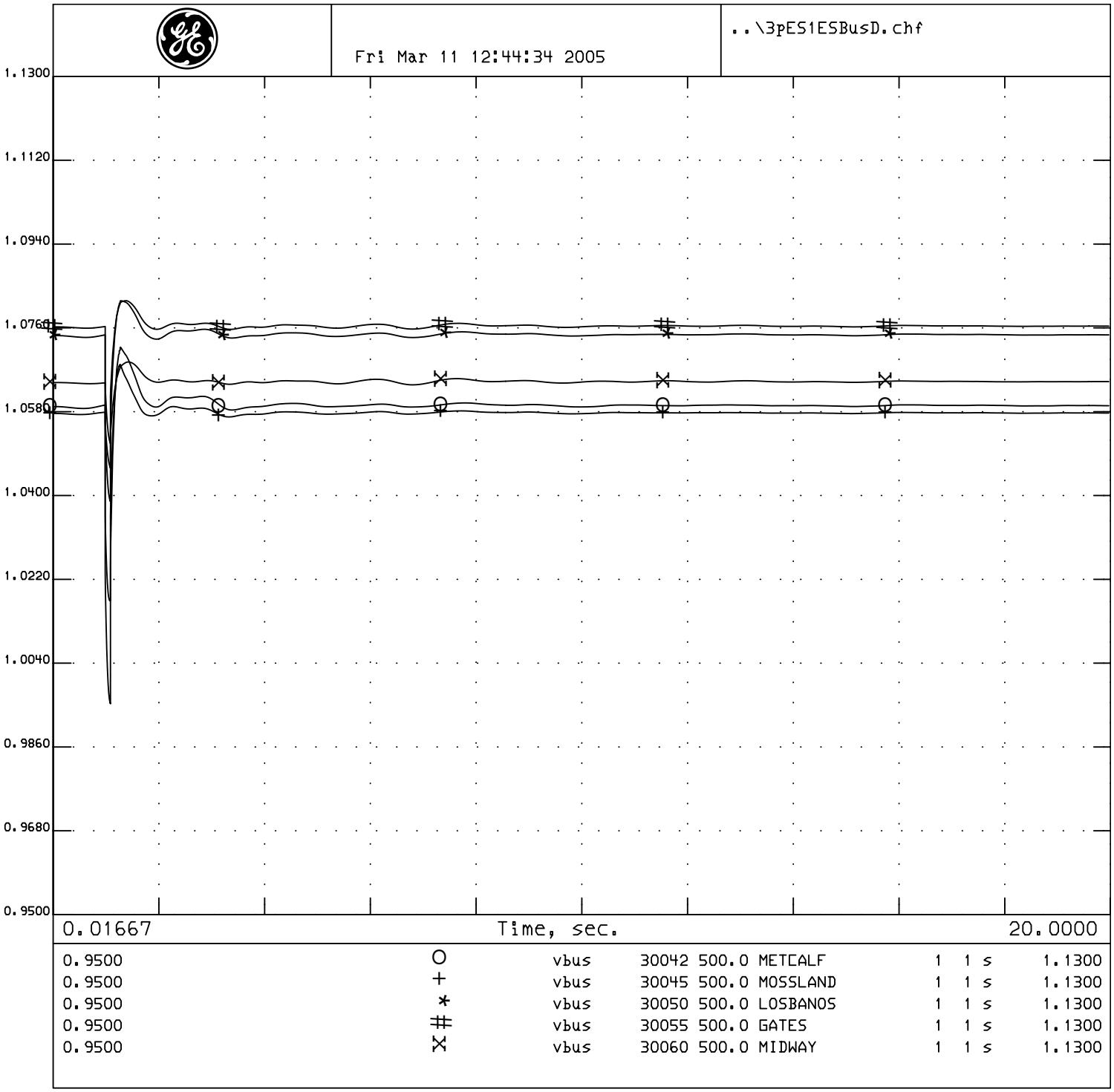

P0413 Project System Impact Study
2007 Summer Peak Base Case
P0413 @ 118MW
East Shore 115kV Bus outage D
3 phase 6 cycle fault at East Shore 115kV bus and clear the East Shore 115kV bu

P0413 Project System Impact Study

Generator Interconnection Study

Selected WECC Bus Voltage Plots

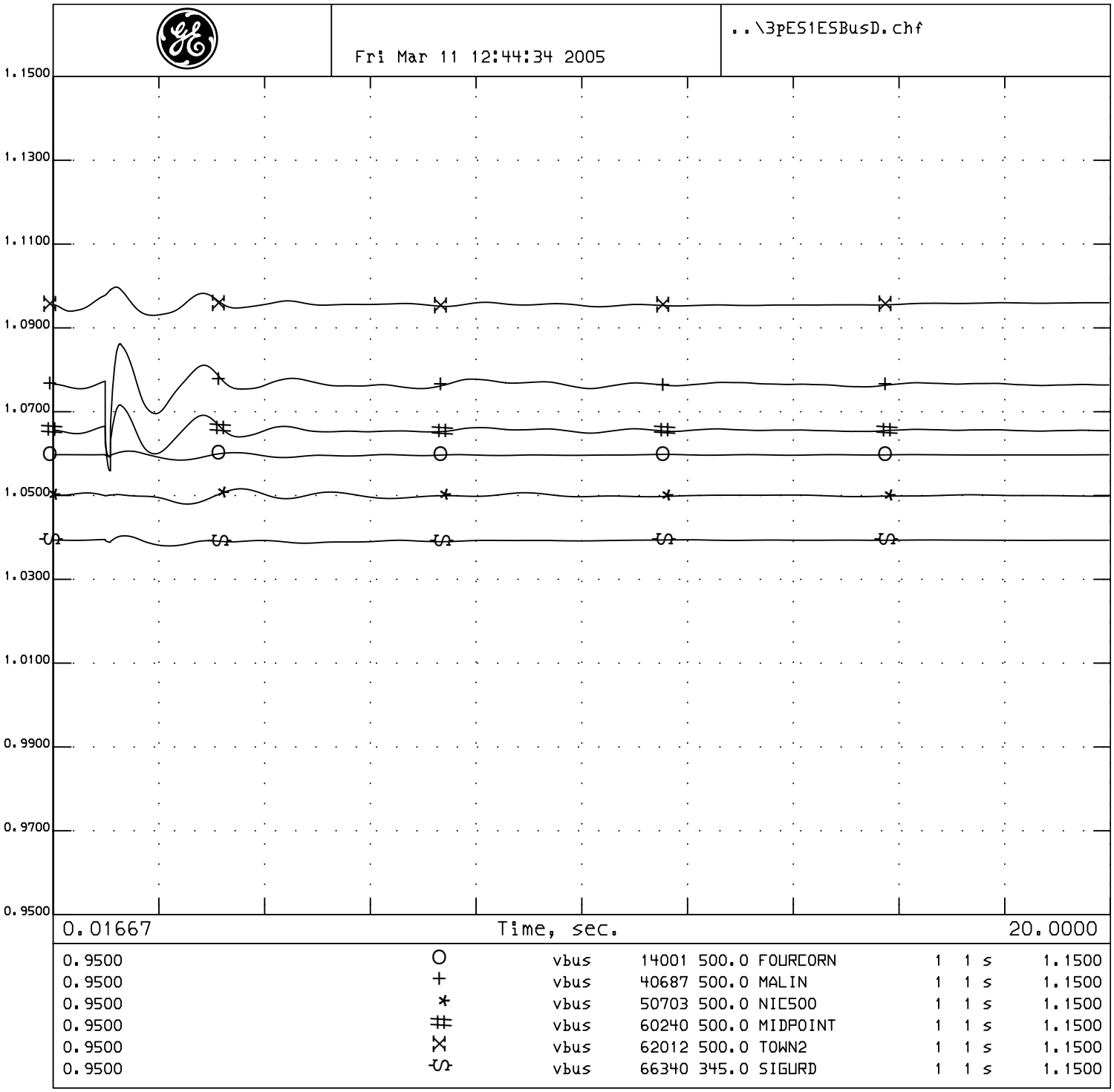

P0413 Project System Impact Study
2007 Summer Peak Base Case
P0413 @ 118MW
East Shore 115kV Bus outage D
3 phase 6 cycle fault at East Shore 115kV bus and clear the East Shore 115kV bu

P0413 Project System Impact Study

Generator Interconnection Study

Selected WECC Bus Voltage Plots

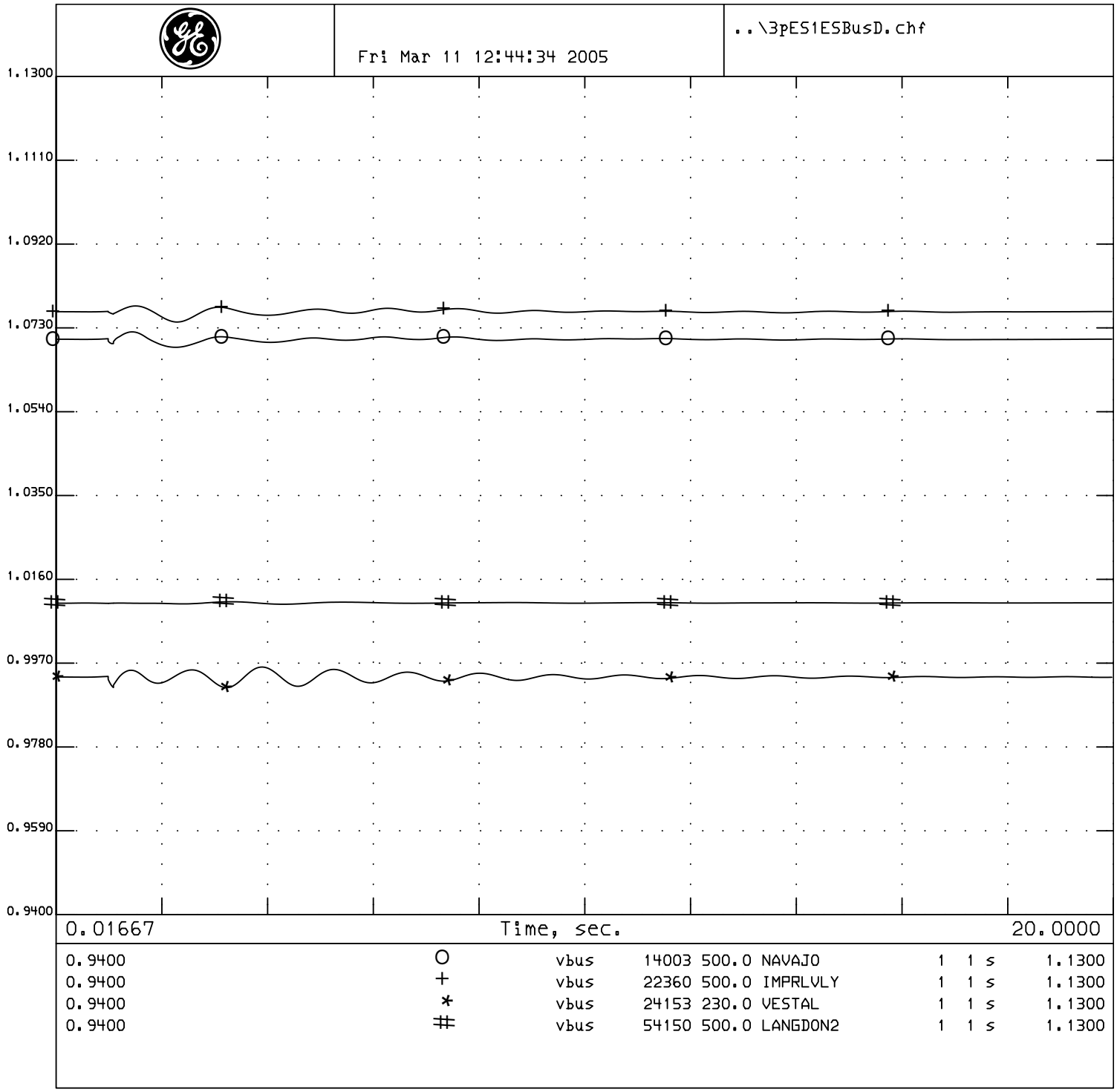

P0413 Project System Impact Study
2007 Summer Peak Base Case
P0413 @ 118MW
East Shore 115kV Bus outage D
3 phase 6 cycle fault at East Shore 115kV bus and clear the East Shore 115kV bu

P0413 Project System Impact Study

Generator Interconnection Study

Selected WECC Bus Voltage Plots

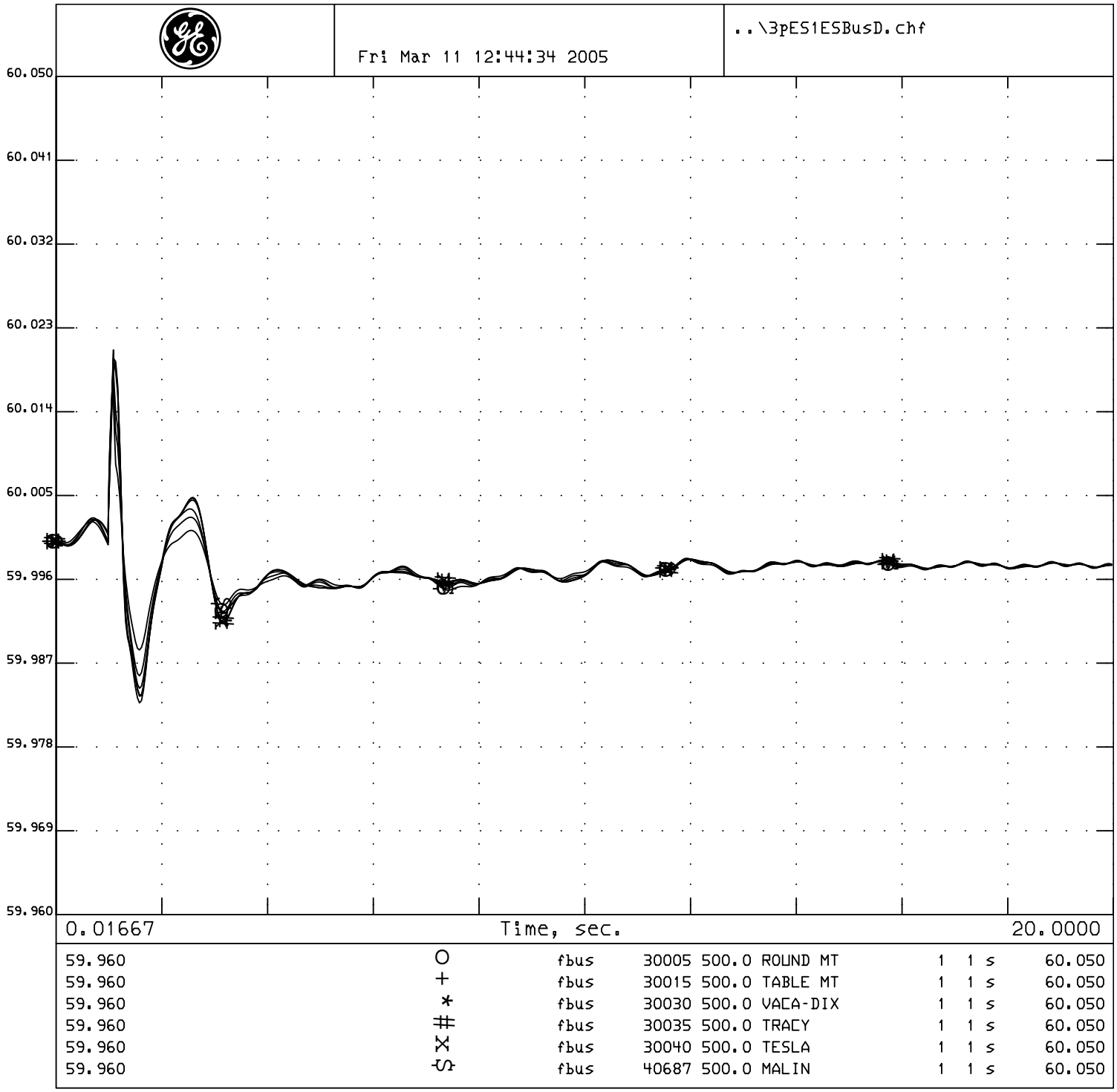

P0413 Project System Impact Study
2007 Summer Peak Base Case
P0413 @ 118MW
East Shore 115kV Bus outage D
3 phase 6 cycle fault at East Shore 115kV bus and clear the East Shore 115kV bu

P0413 Project System Impact Study

Generator Interconnection Study

Selected WECC Bus Frequency Plots

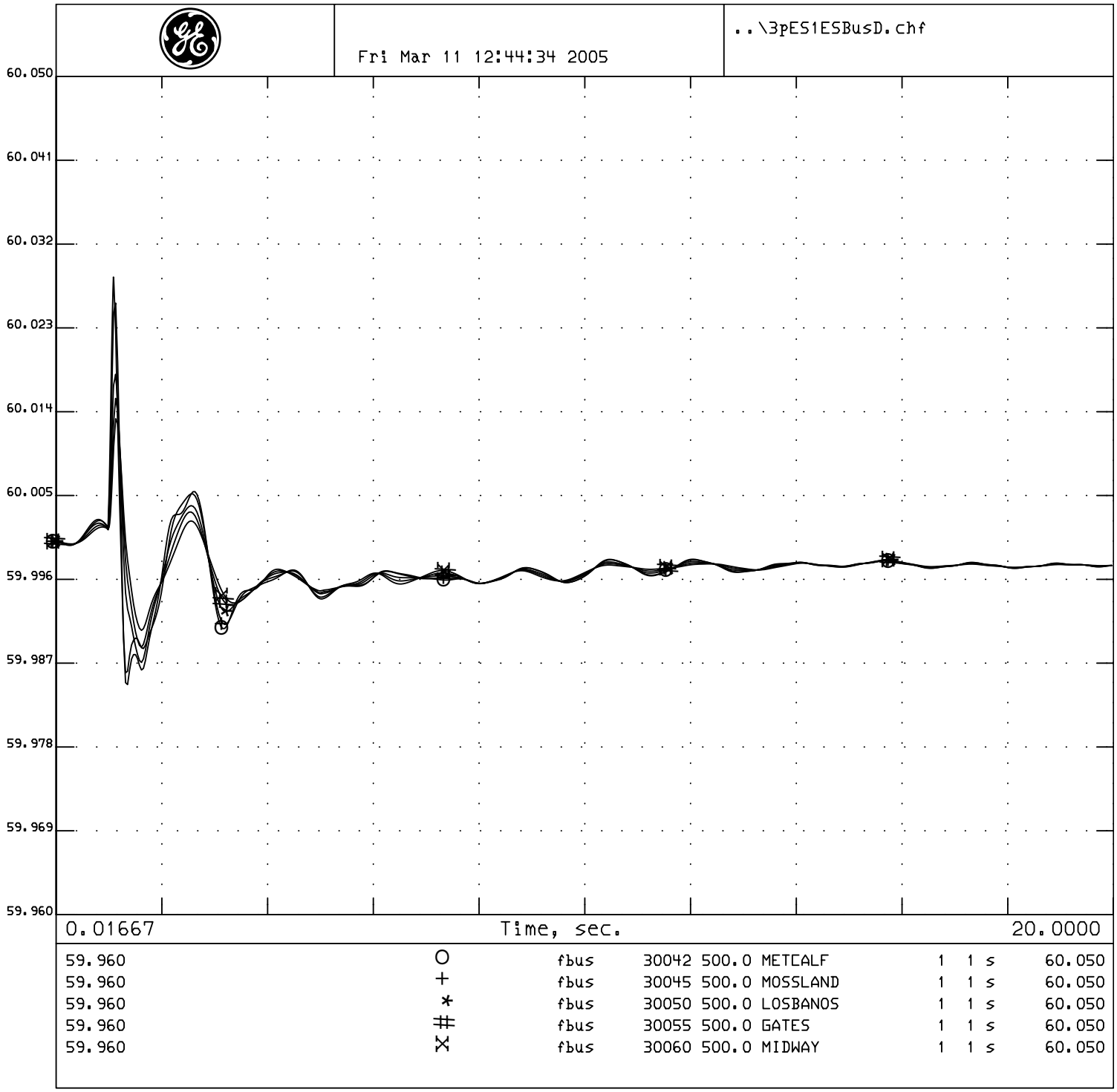

P0413 Project System Impact Study
2007 Summer Peak Base Case
P0413 @ 118MW
East Shore 115kV Bus outage D
3 phase 6 cycle fault at East Shore 115kV bus and clear the East Shore 115kV bu

P0413 Project System Impact Study

Generator Interconnection Study

Selected WECC Bus Frequency Plots

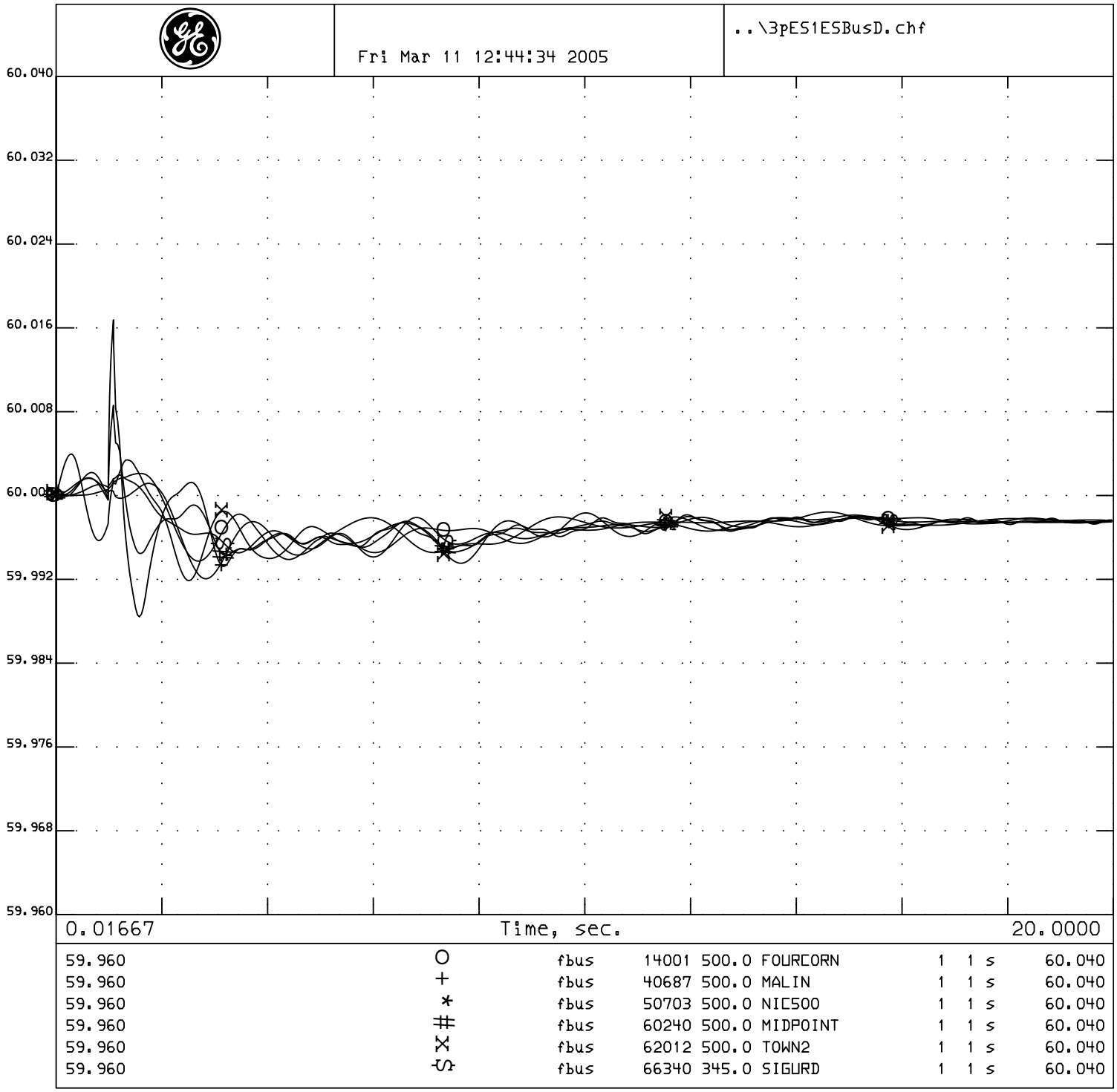

P0413 Project System Impact Study
2007 Summer Peak Base Case
P0413 @ 118MW
East Shore 115kV Bus outage D
3 phase 6 cycle fault at East Shore 115kV bus and clear the East Shore 115kV bu

P0413 Project System Impact Study

Generator Interconnection Study

Selected WECC Bus Frequency Plots

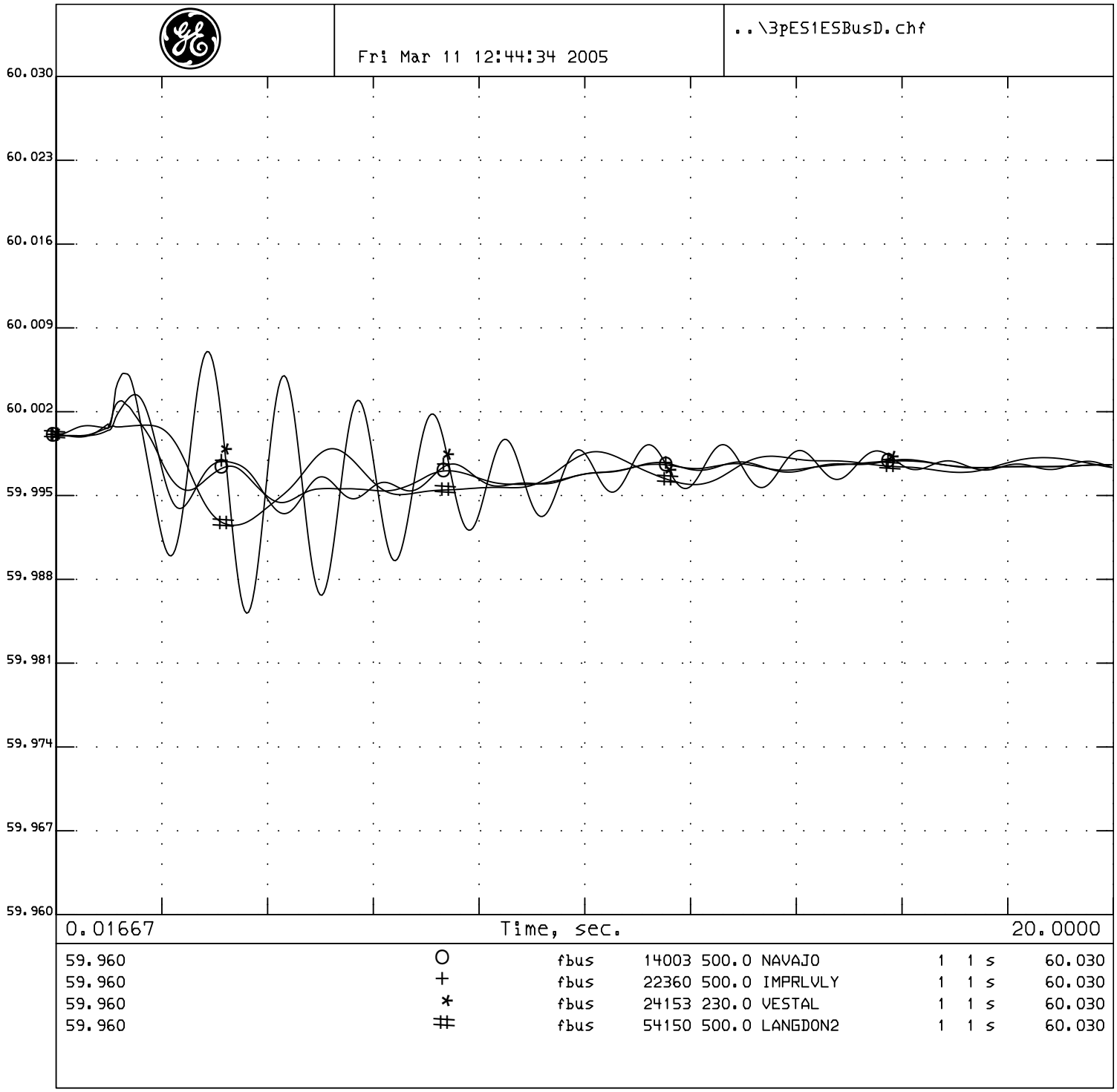

P0413 Project System Impact Study
2007 Summer Peak Base Case
P0413 @ 118MW
East Shore 115kV Bus outage D
3 phase 6 cycle fault at East Shore 115kV bus and clear the East Shore 115kV bu

P0413 Project System Impact Study

Generator Interconnection Study

Selected WECC Bus Frequency Plots

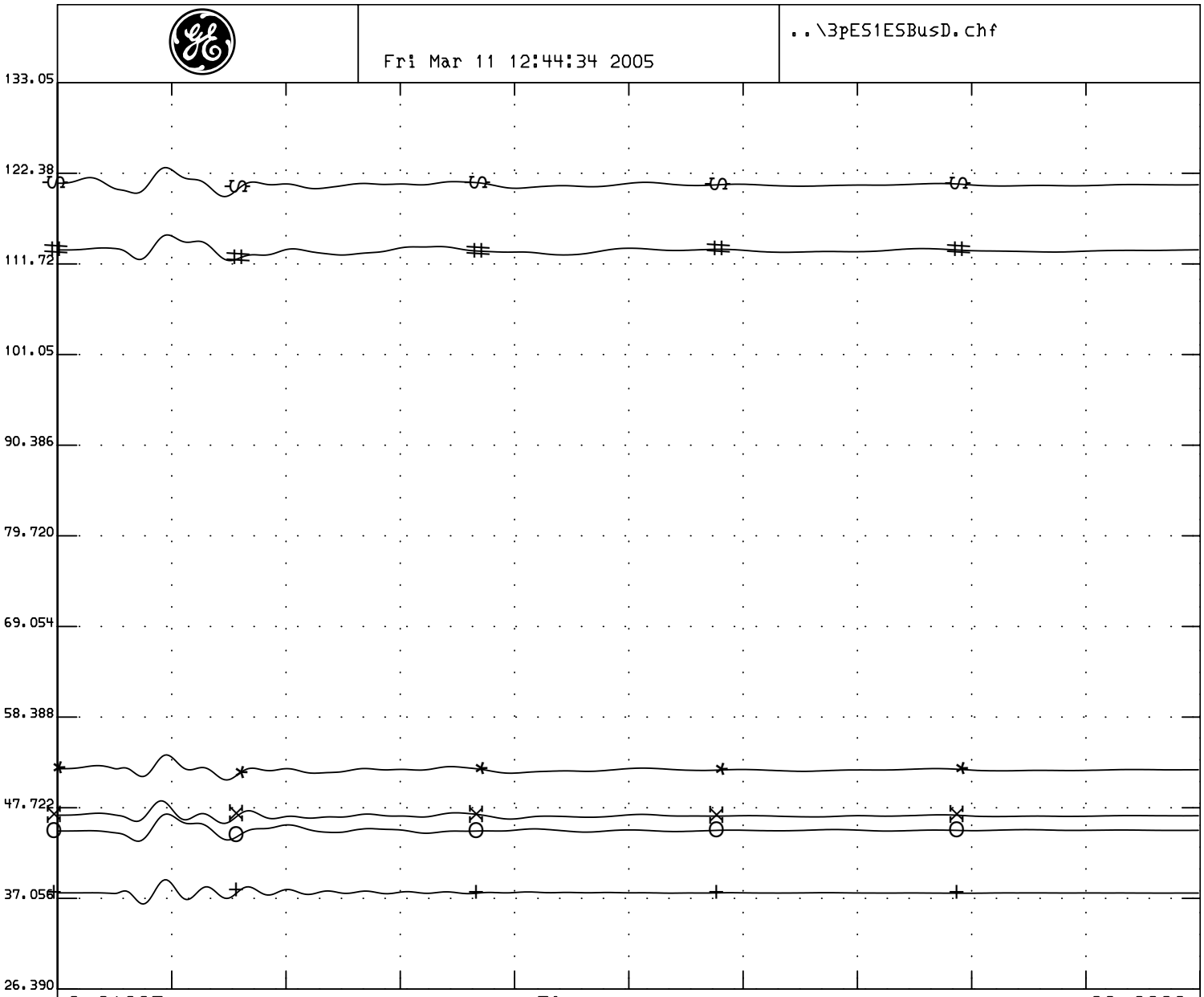

26.390	O	ang	14914	22.0	FCNGN4CC	H	1	s	133.05
26.390	+	ang	36411	25.0	DIABLO 1	1	1	s	133.05
26.390	*	ang	41701	13.8	JONDAY01	1	1	s	133.05
26.390	#	ang	50500	13.8	GMS G6	1	1	s	133.05
26.390	X	ang	60100	13.8	BRWNL 5	1	1	s	133.05
26.390	S	ang	62048	26.0	COLSTP 3	1	1	s	133.05

P0413 Project System Impact Study
2007 Summer Peak Base Case
P0413 @ 118MW
East Shore 115kV Bus outage D
3 phase 6 cycle fault at East Shore 115kV bus and clear the East Shore 115kV bu

P0413 Project System Impact Study

Generator Interconnection Study

WECC Generator Rotor Angle

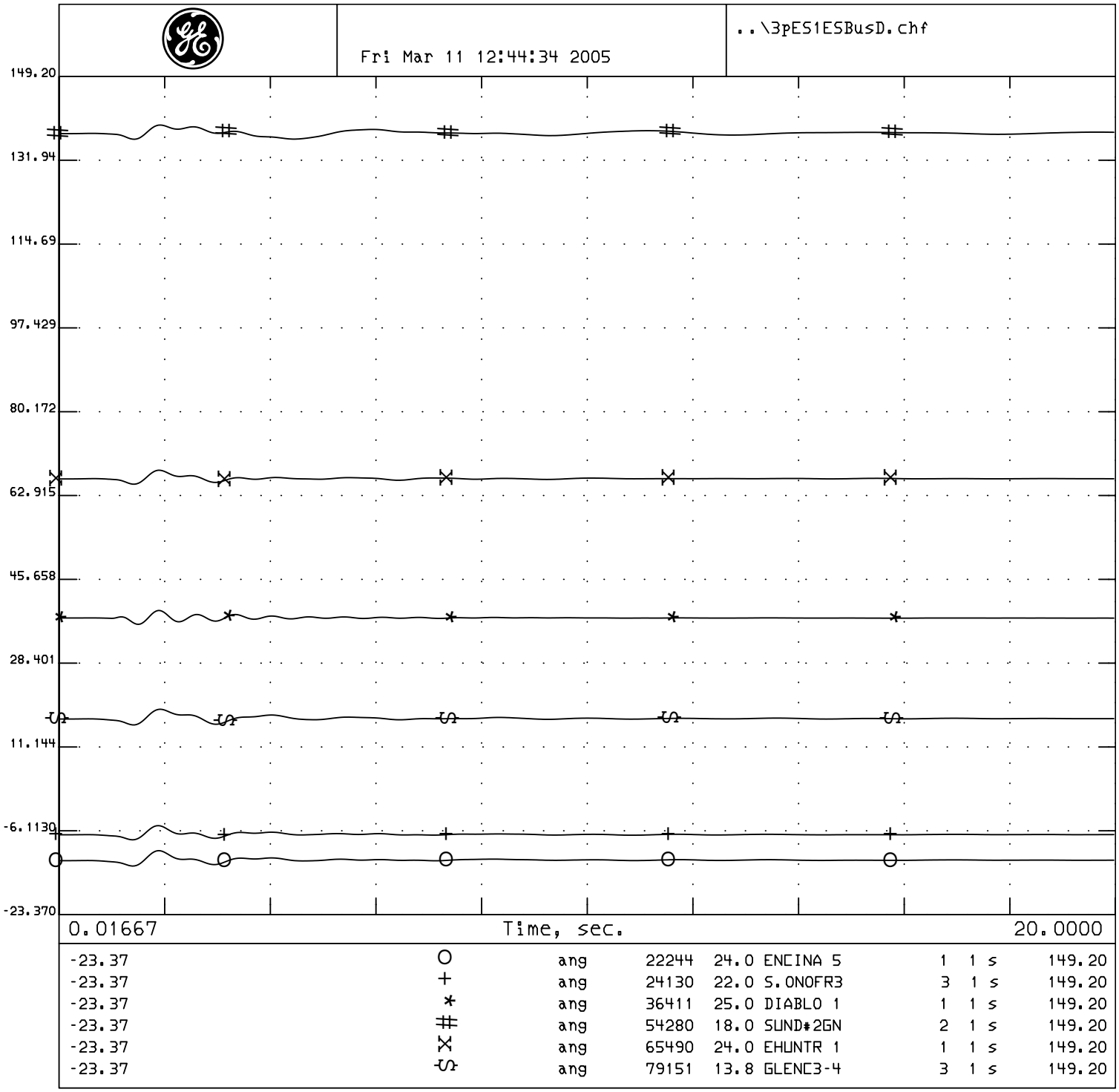

P0413 Project System Impact Study
2007 Summer Peak Base Case
P0413 @ 118MW
East Shore 115kV Bus outage D
3 phase 6 cycle fault at East Shore 115kV bus and clear the East Shore 115kV bu

P0413 Project System Impact Study

Generator Interconnection Study

WECC Generator Rotor Angle

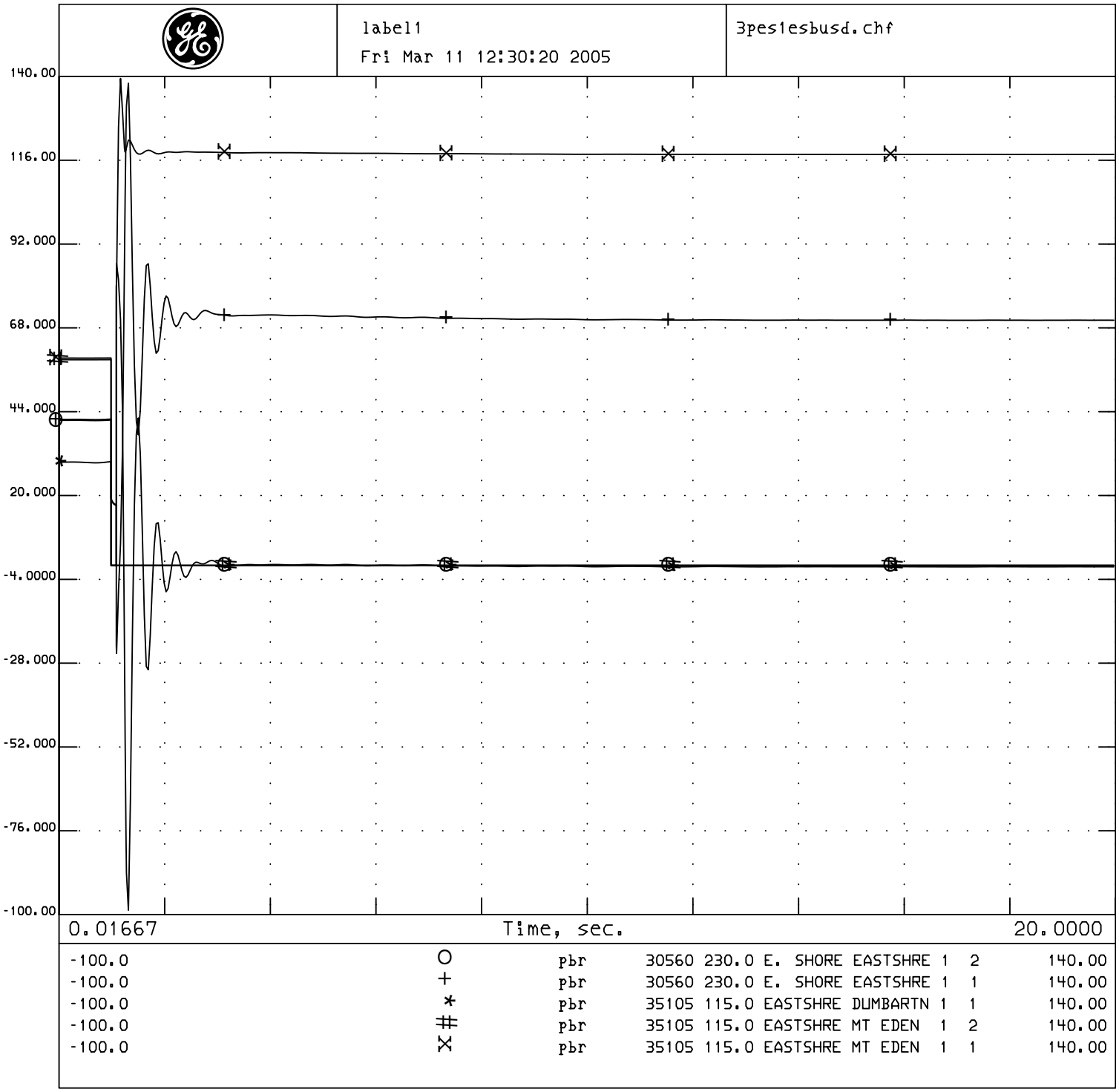

P0413 Project System Impact Study
2007 Summer Peak Base Case
P0413 @ 118MW
East Shore 115kV Bus outage D
3 phase 6 cycle fault at East Shore 115kV bus and clear the East Shore 115kV bu

P0413 Project System Impact Study

Generator Interconnection Study

Selected PG&E Transmission Line Flows MW

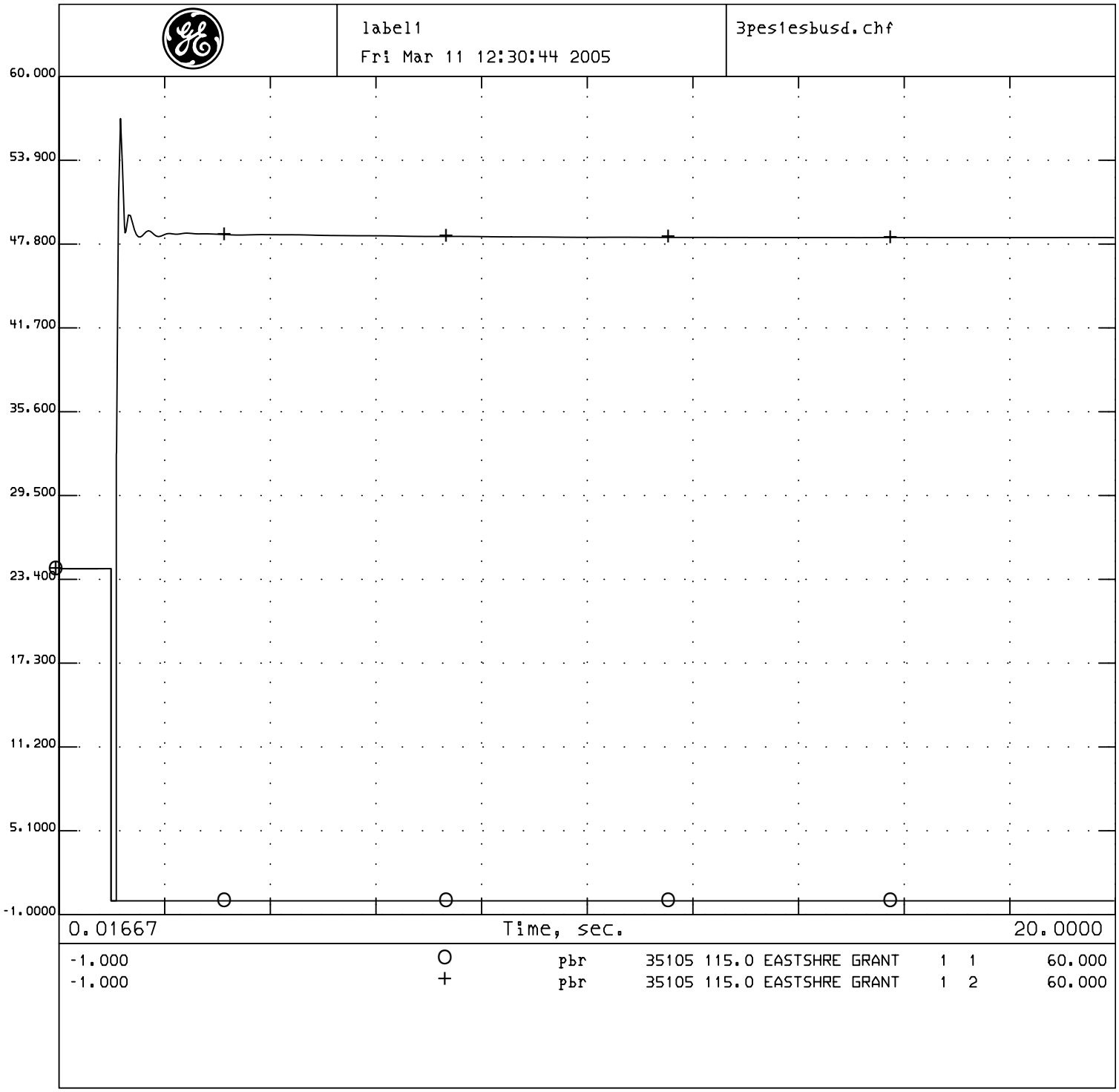

P0413 Project System Impact Study
2007 Summer Peak Base Case
P0413 @ 118MW
East Shore 115kV Bus outage D
3 phase 6 cycle fault at East Shore 115kV bus and clear the East Shore 115kV bu

P0413 Project System Impact Study

Generator Interconnection Study

Selected PG&E Transmission Line Flows MW

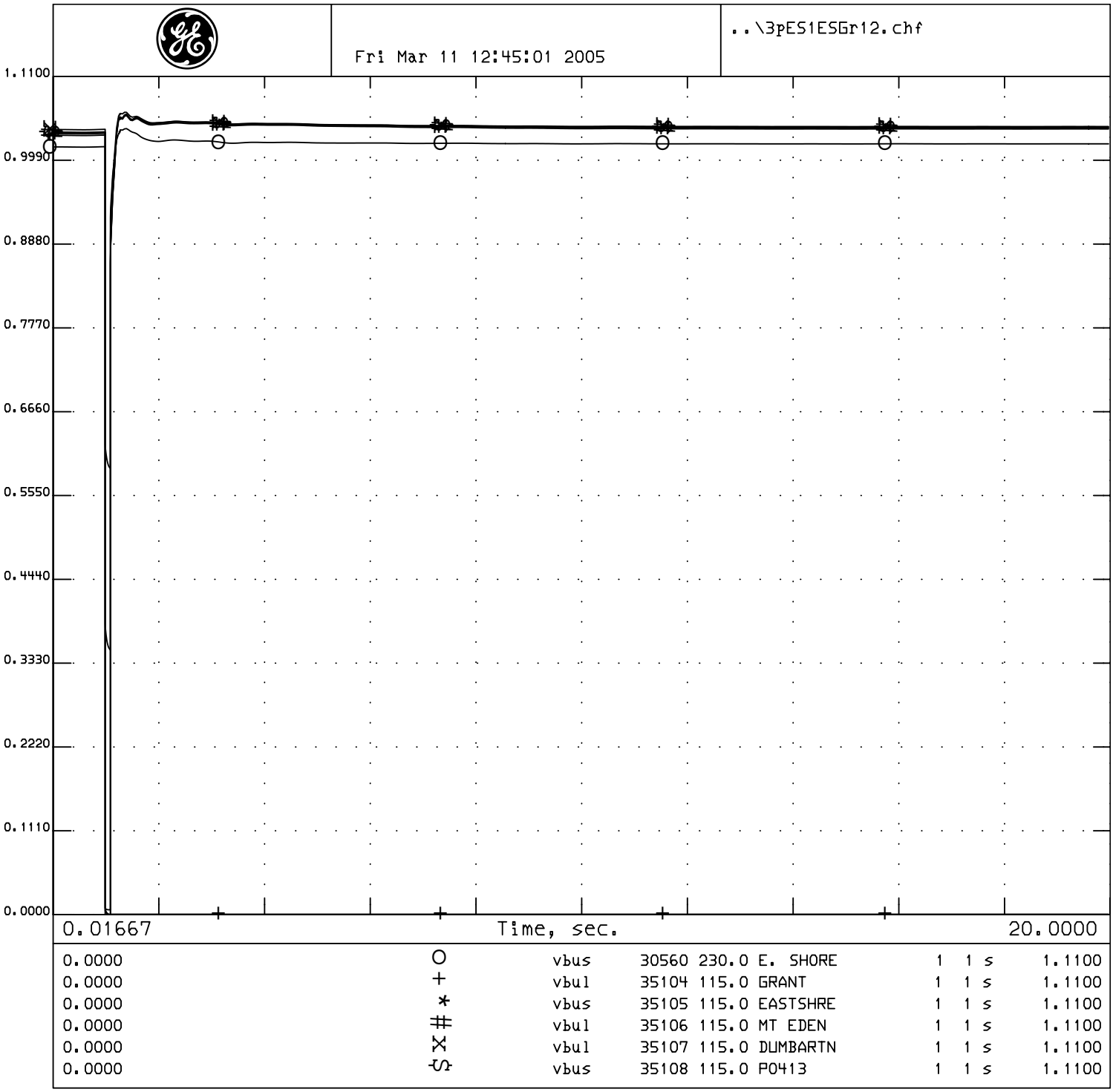

P0413 Project System Impact Study
2007 Summer Peak Base Case
P0413 @ 118MW
East Shore-Grant 115kV #1&2 lines
3 phase 6 cycle fault at East Shore 115kV bus and clear the ES-Grant 115kV #1&2

P0413 Project System Impact Study

Generator Interconnection Study

Selected PG&E Bus Voltage Plots Adjacent to Fault

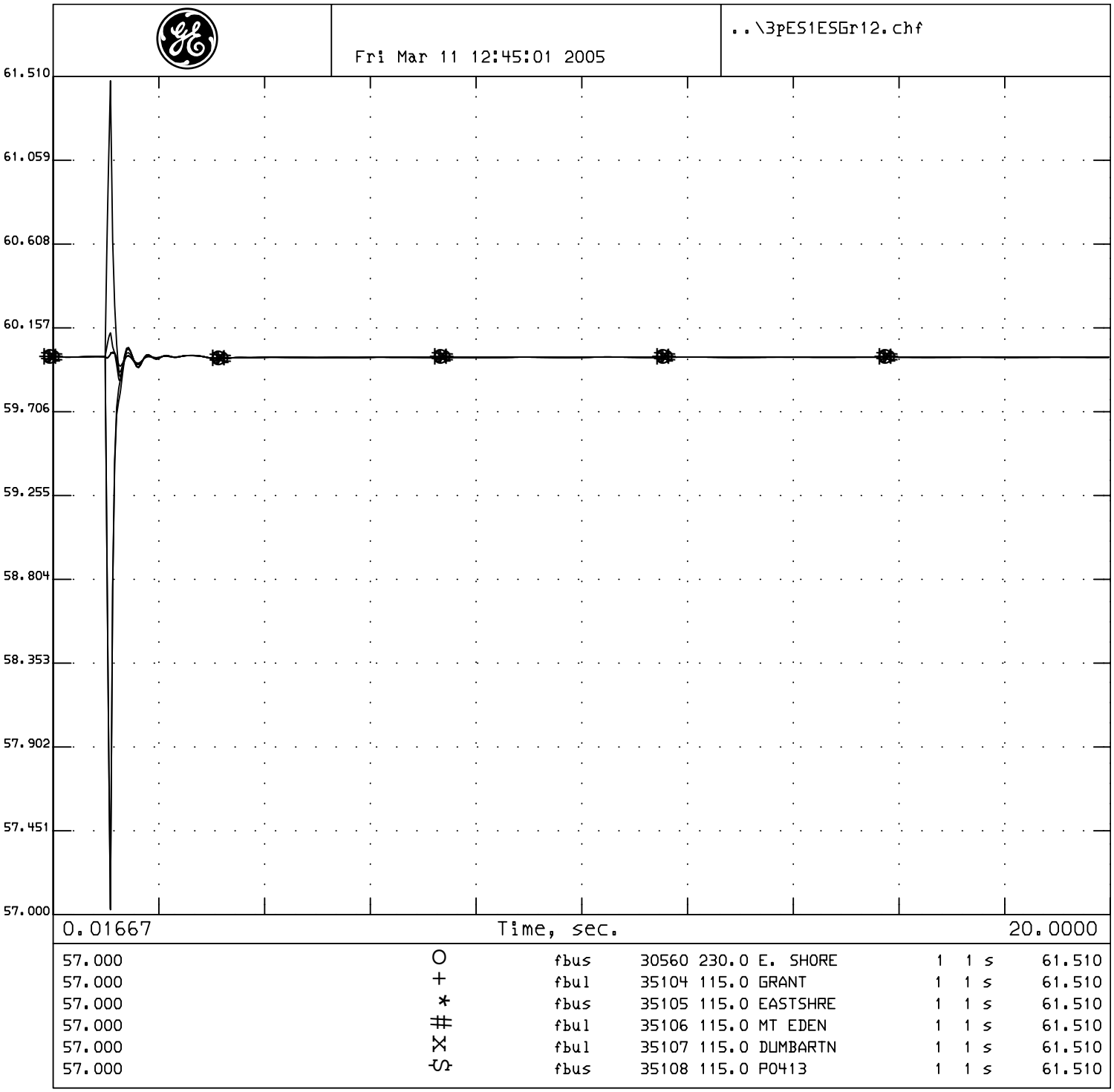

P0413 Project System Impact Study
2007 Summer Peak Base Case
P0413 @ 118MW
East Shore-Grant 115kV #1&2 lines
3 phase 6 cycle fault at East Shore 115kV bus and clear the ES-Grant 115kV #1&2

P0413 Project System Impact Study

Generator Interconnection Study

Selected PG&E Bus Frequency Plots Adjacent to Fault

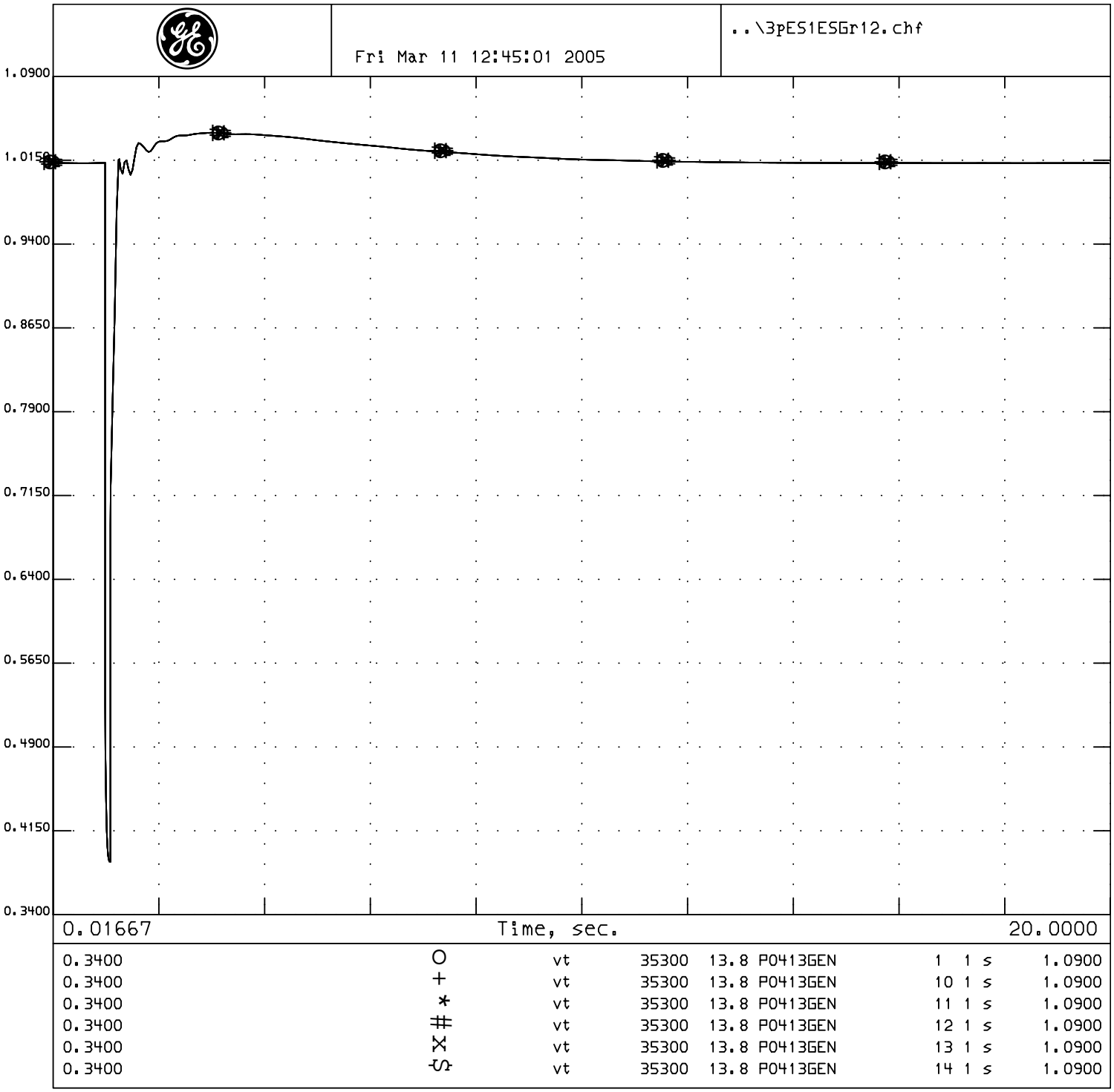

P0413 Project System Impact Study
2007 Summer Peak Base Case
P0413 @ 118MW
East Shore-Grant 115kV #1&2 lines
3 phase 6 cycle fault at East Shore 115kV bus and clear the ES-Grant 115kV #1&2

P0413 Project System Impact Study

Generator Interconnection Study

Project Generator Terminal Voltages

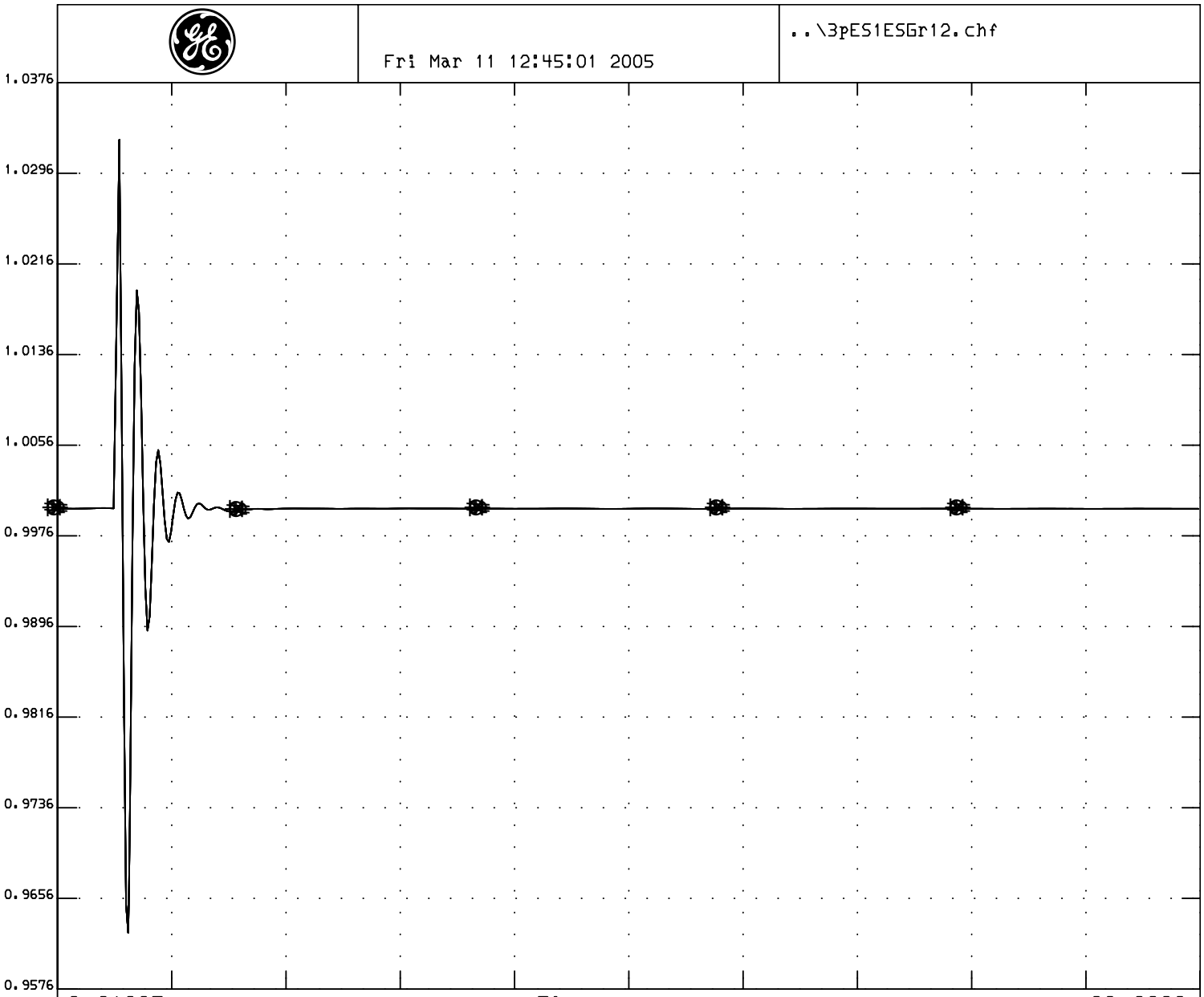

0.9576	O	spd	35300	13.8	P0413GEN	1	1 s	1.0376
0.9576	+	spd	35300	13.8	P0413GEN	10	1 s	1.0376
0.9576	*	spd	35300	13.8	P0413GEN	11	1 s	1.0376
0.9576	#	spd	35300	13.8	P0413GEN	12	1 s	1.0376
0.9576	X	spd	35300	13.8	P0413GEN	13	1 s	1.0376
0.9576	S	spd	35300	13.8	P0413GEN	14	1 s	1.0376

P0413 Project System Impact Study
2007 Summer Peak Base Case
P0413 @ 118MW
East Shore-Grant 115kV #1&2 lines
3 phase 6 cycle fault at East Shore 115kV bus and clear the ES-Grant 115kV #1&2

P0413 Project System Impact Study

Generator Interconnection Study

Project Generator Rotor Speed

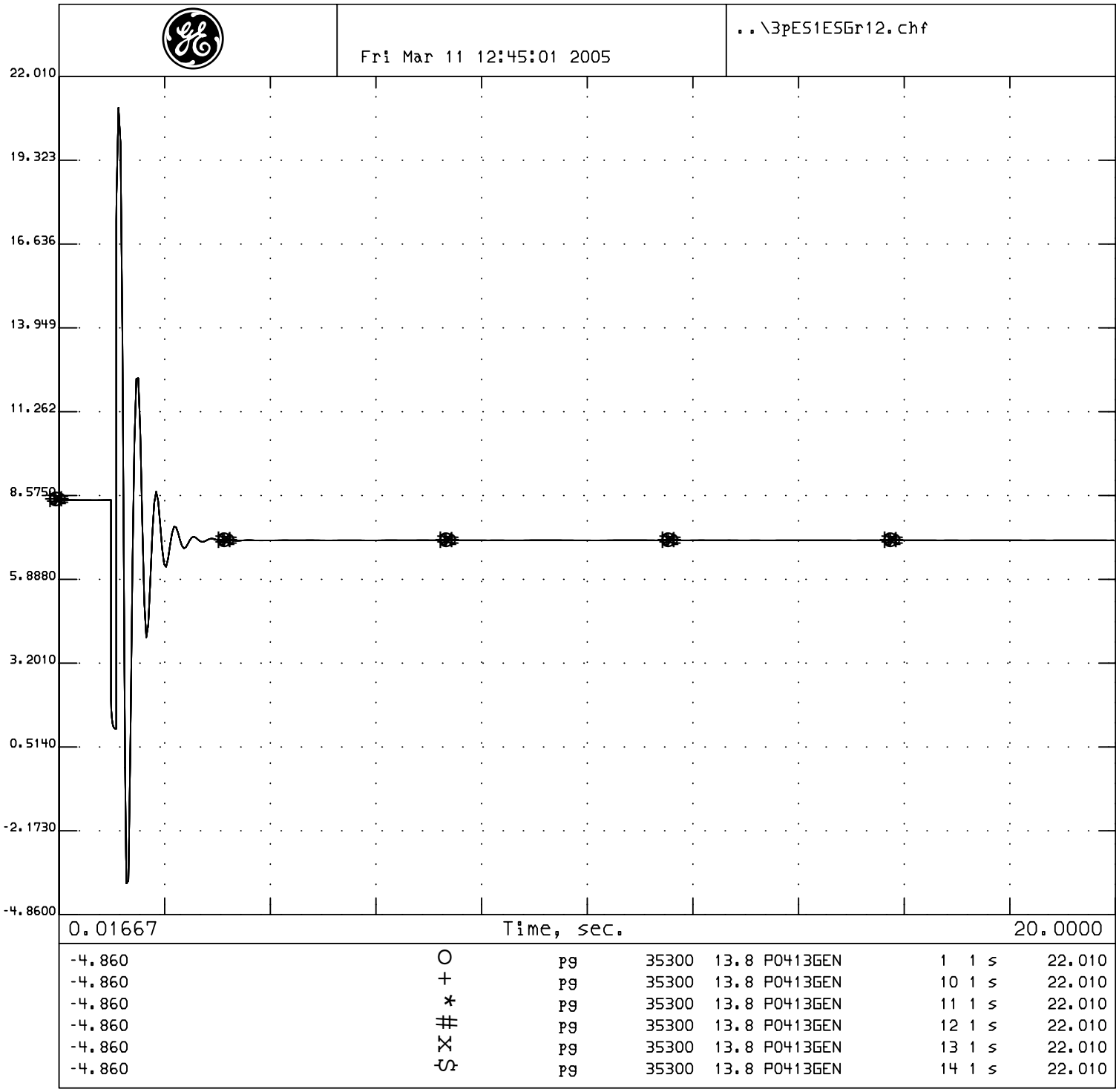

P0413 Project System Impact Study
2007 Summer Peak Base Case
P0413 @ 118MW
East Shore-Grant 115kV #1&2 lines
3 phase 6 cycle fault at East Shore 115kV bus and clear the ES-Grant 115kV #1&2

P0413 Project System Impact Study

Generator Interconnection Study

Project Generator Terminal Power

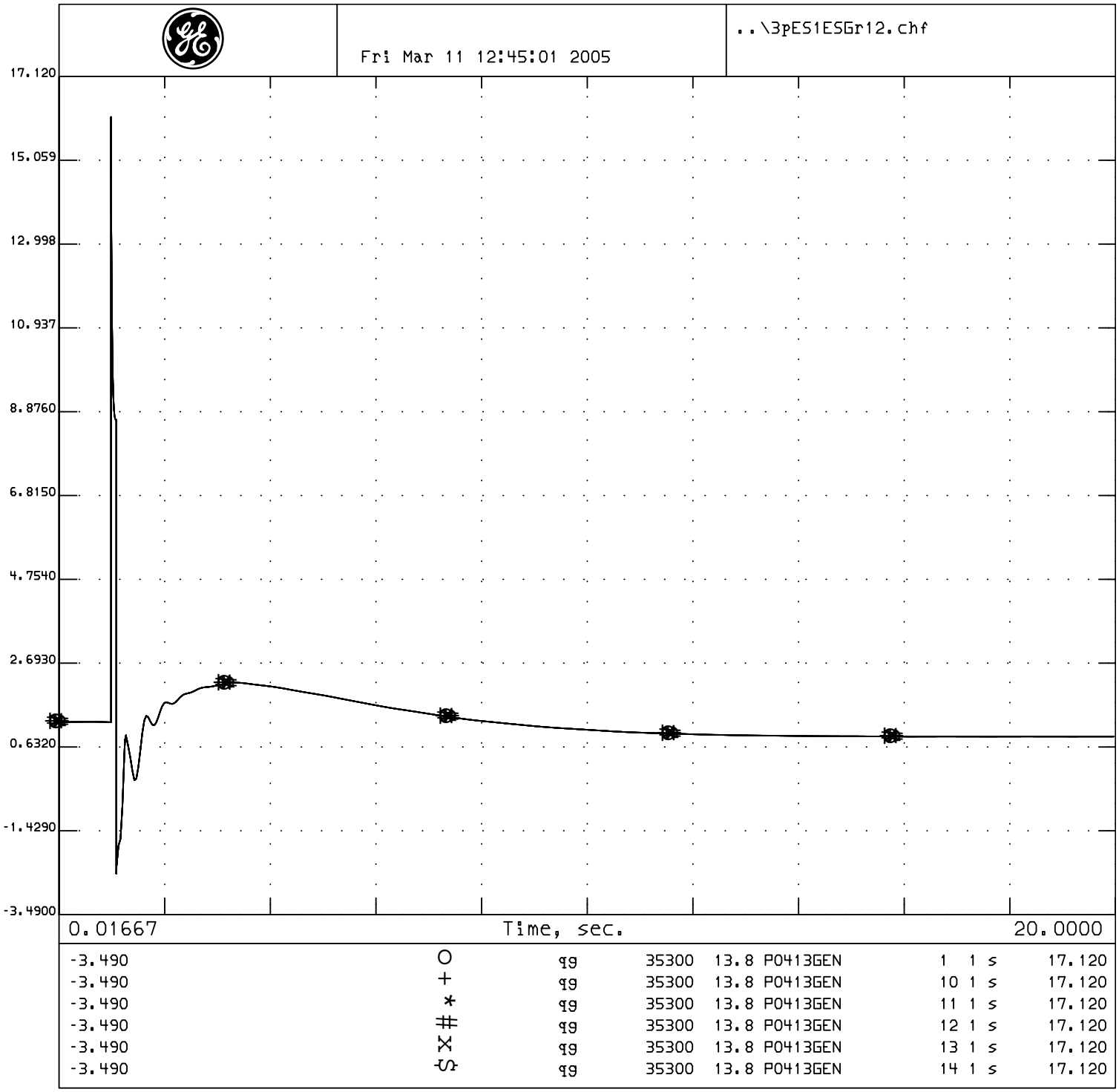

P0413 Project System Impact Study
2007 Summer Peak Base Case
P0413 @ 118MW
East Shore-Grant 115kV #1&2 lines
3 phase 6 cycle fault at East Shore 115kV bus and clear the ES-Grant 115kV #1&2

P0413 Project System Impact Study

Generator Interconnection Study

Project Generator Terminal Reactive Power

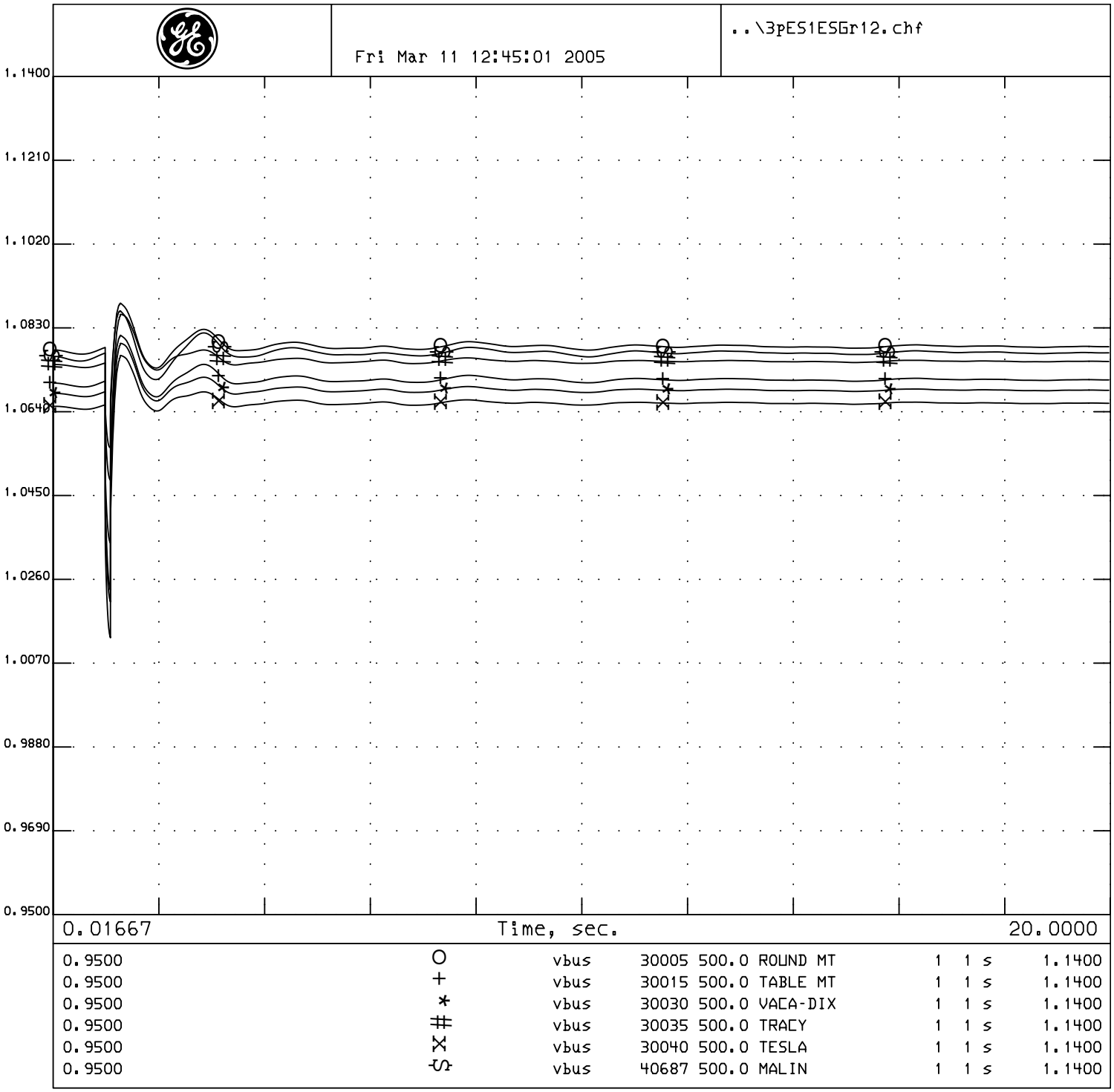

P0413 Project System Impact Study
2007 Summer Peak Base Case
P0413 @ 118MW
East Shore-Grant 115kV #1&2 lines
3 phase 6 cycle fault at East Shore 115kV bus and clear the ES-Grant 115kV #1&2

P0413 Project System Impact Study

Generator Interconnection Study

Selected WECC Bus Voltage Plots

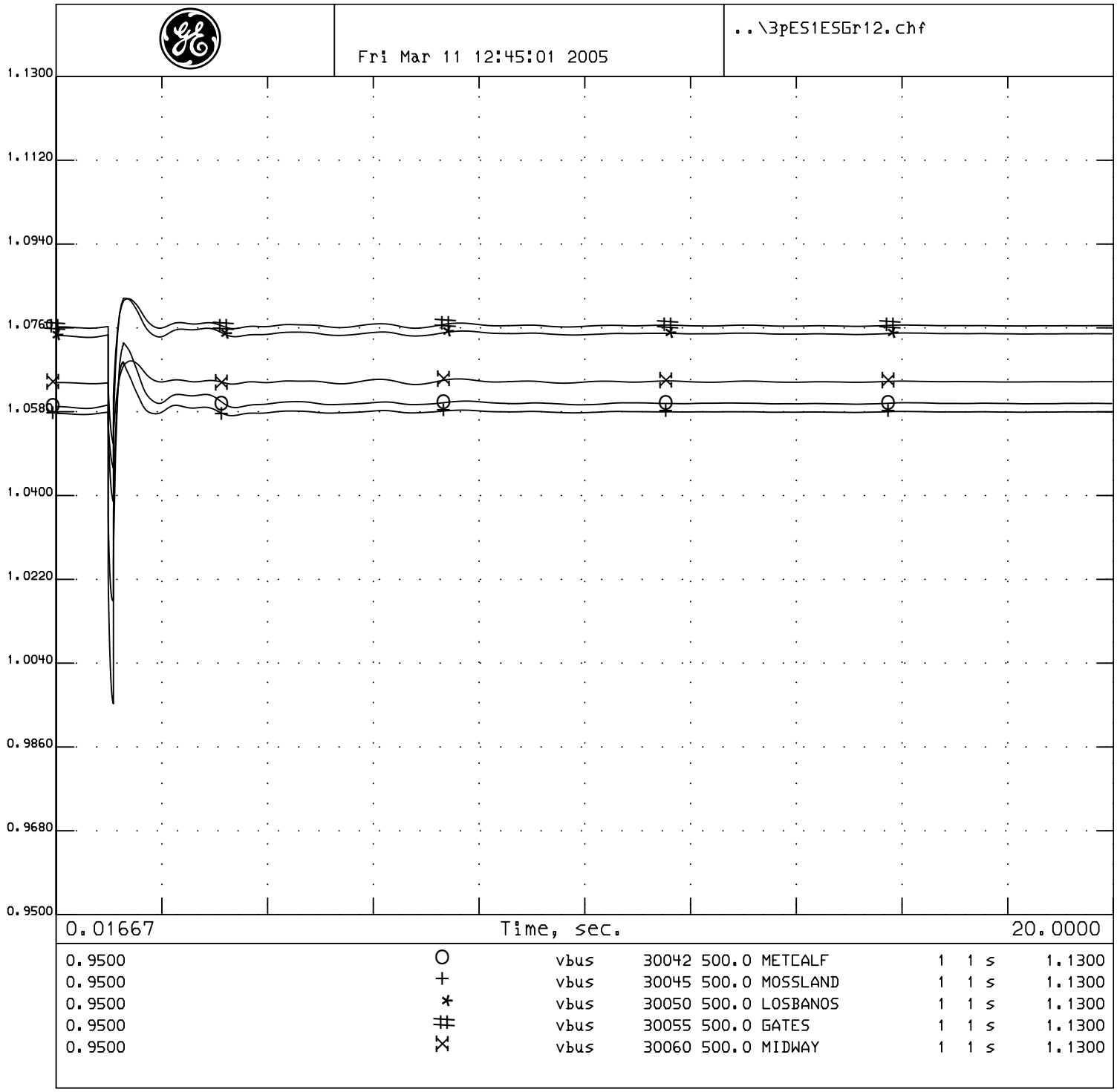

P0413 Project System Impact Study
2007 Summer Peak Base Case
P0413 @ 118MW
East Shore-Grant 115kV #1&2 lines
3 phase 6 cycle fault at East Shore 115kV bus and clear the ES-Grant 115kV #1&2

P0413 Project System Impact Study

Generator Interconnection Study

Selected WECC Bus Voltage Plots

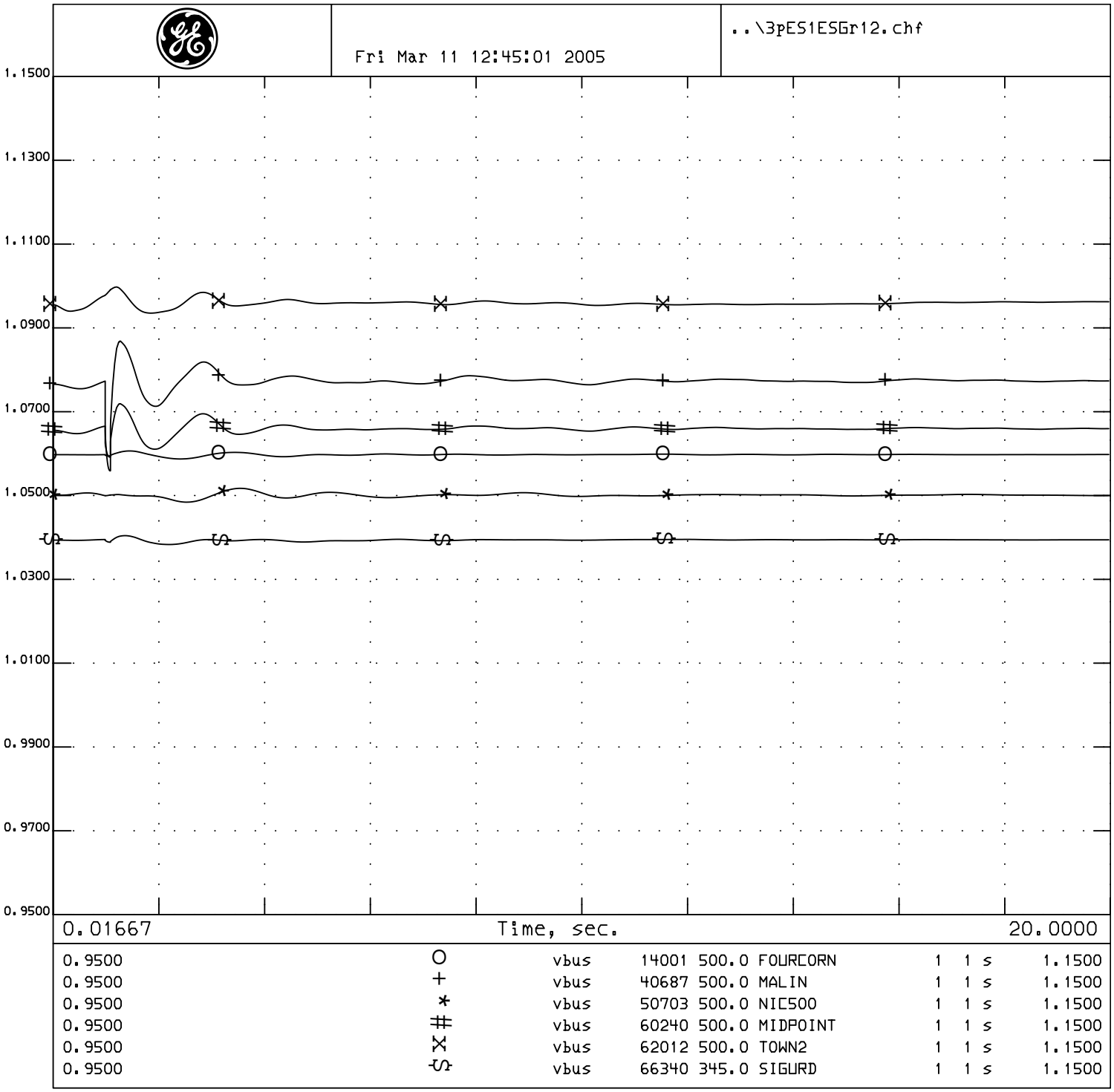

P0413 Project System Impact Study
2007 Summer Peak Base Case
P0413 @ 118MW
East Shore-Grant 115kV #1&2 lines
3 phase 6 cycle fault at East Shore 115kV bus and clear the ES-Grant 115kV #1&2

P0413 Project System Impact Study

Generator Interconnection Study

Selected WECC Bus Voltage Plots

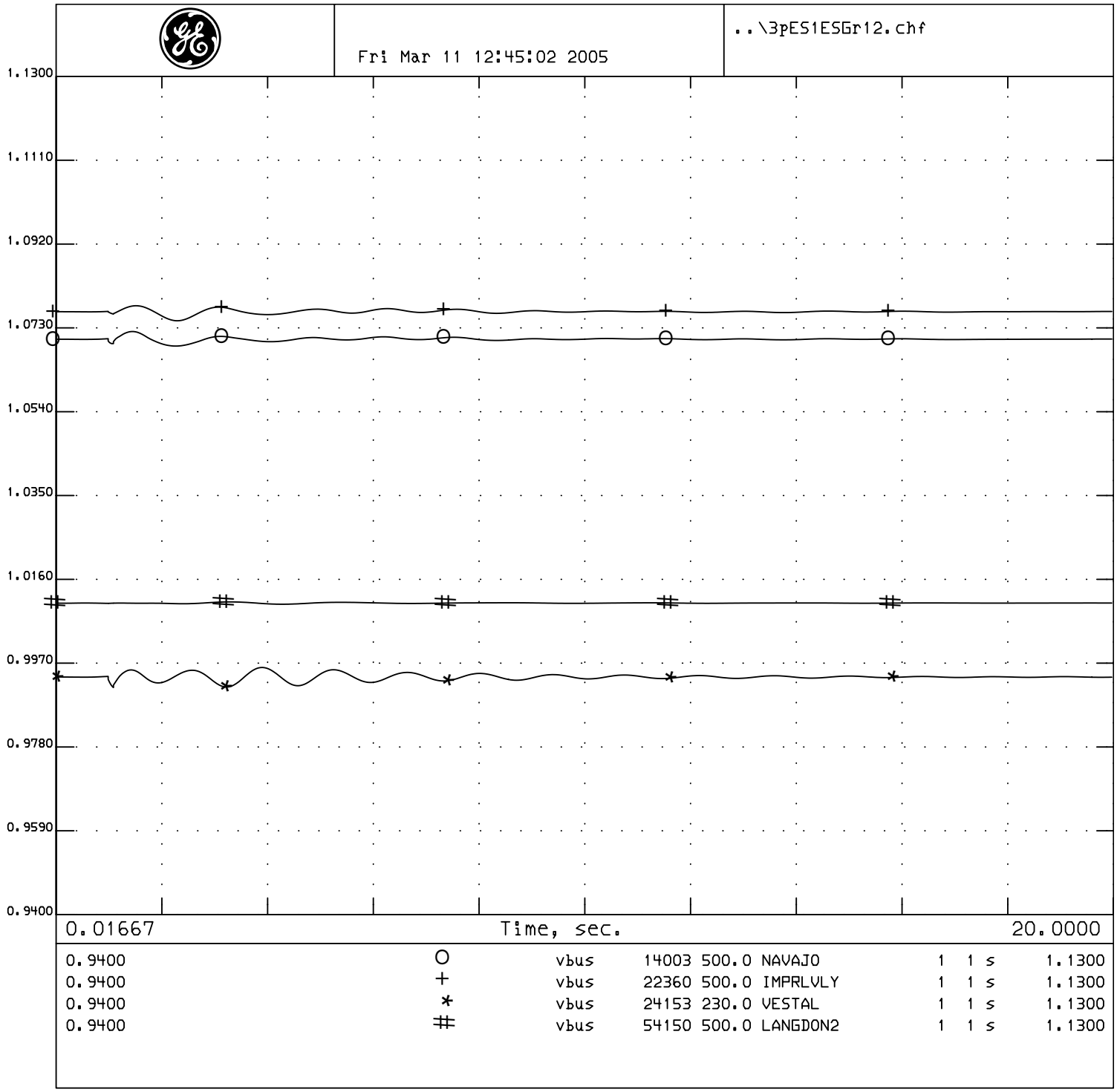

P0413 Project System Impact Study
2007 Summer Peak Base Case
P0413 @ 118MW
East Shore-Grant 115kV #1&2 lines
3 phase 6 cycle fault at East Shore 115kV bus and clear the ES-Grant 115kV #1&2

P0413 Project System Impact Study

Generator Interconnection Study

Selected WECC Bus Voltage Plots

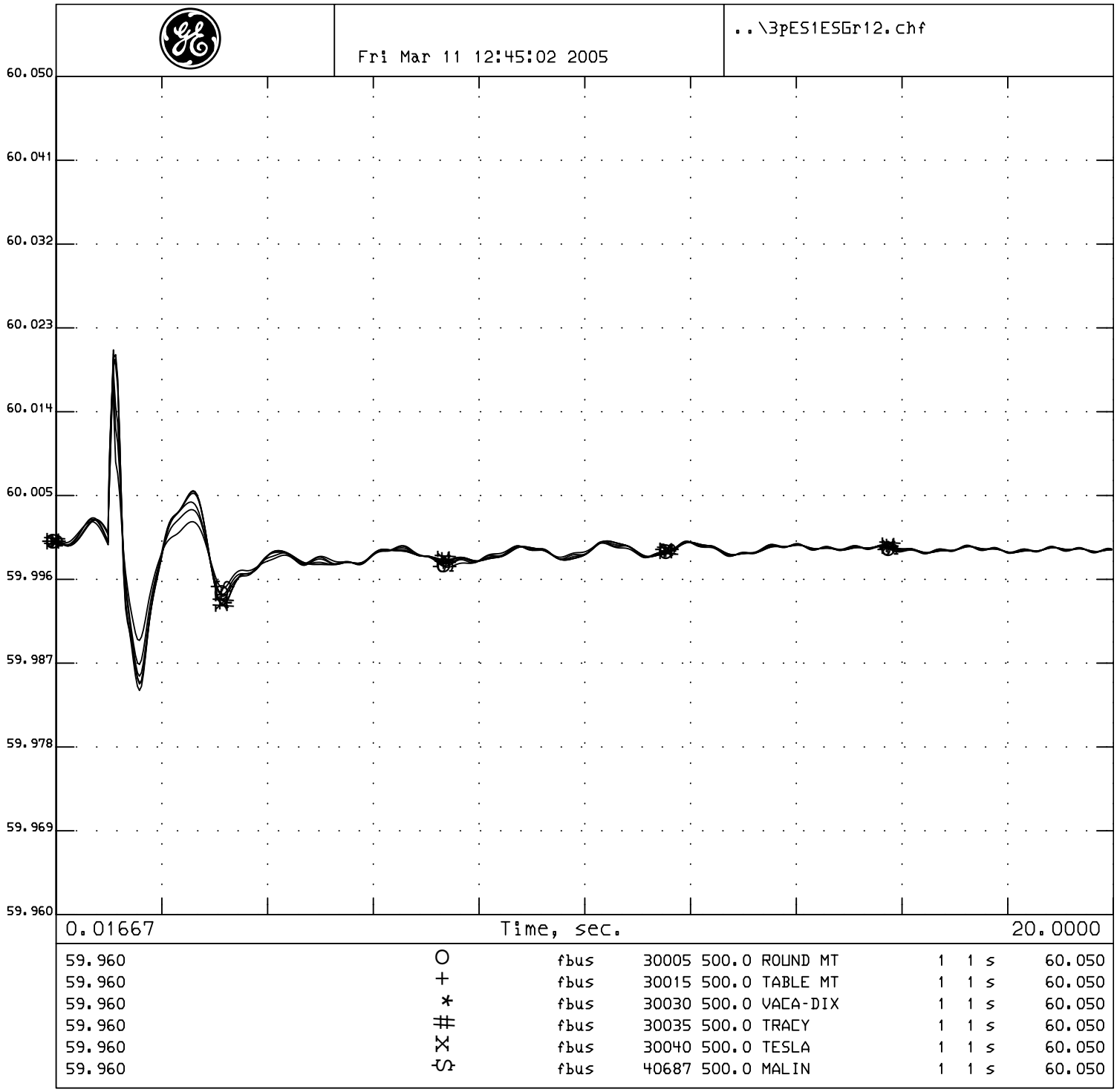

P0413 Project System Impact Study
2007 Summer Peak Base Case
P0413 @ 118MW
East Shore-Grant 115kV #1&2 lines
3 phase 6 cycle fault at East Shore 115kV bus and clear the ES-Grant 115kV #1&2

P0413 Project System Impact Study

Generator Interconnection Study

Selected WECC Bus Frequency Plots

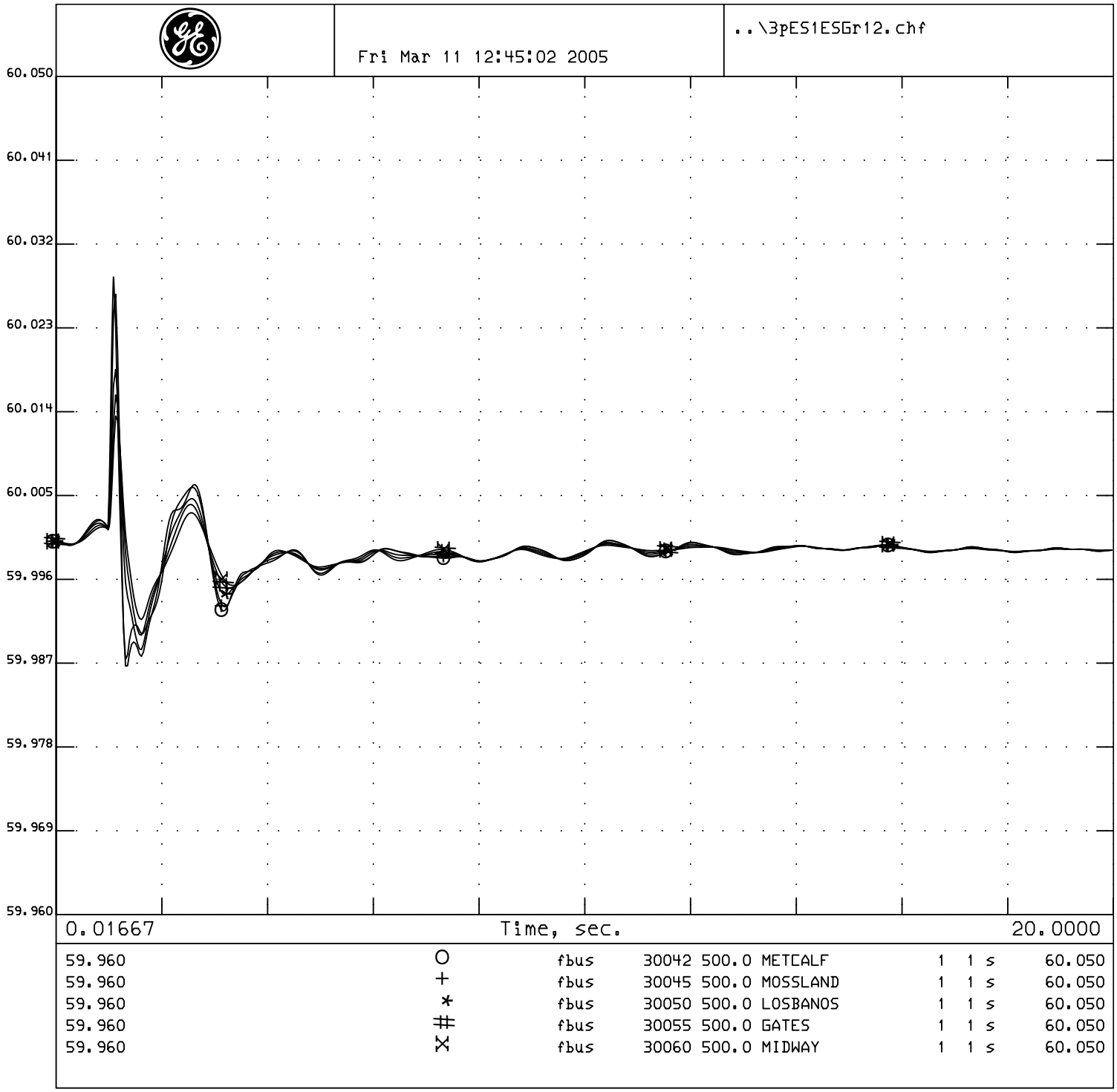

P0413 Project System Impact Study
2007 Summer Peak Base Case
P0413 @ 118MW
East Shore-Grant 115kV #1&2 lines
3 phase 6 cycle fault at East Shore 115kV bus and clear the ES-Grant 115kV #1&2

P0413 Project System Impact Study

Generator Interconnection Study

Selected WECC Bus Frequency Plots

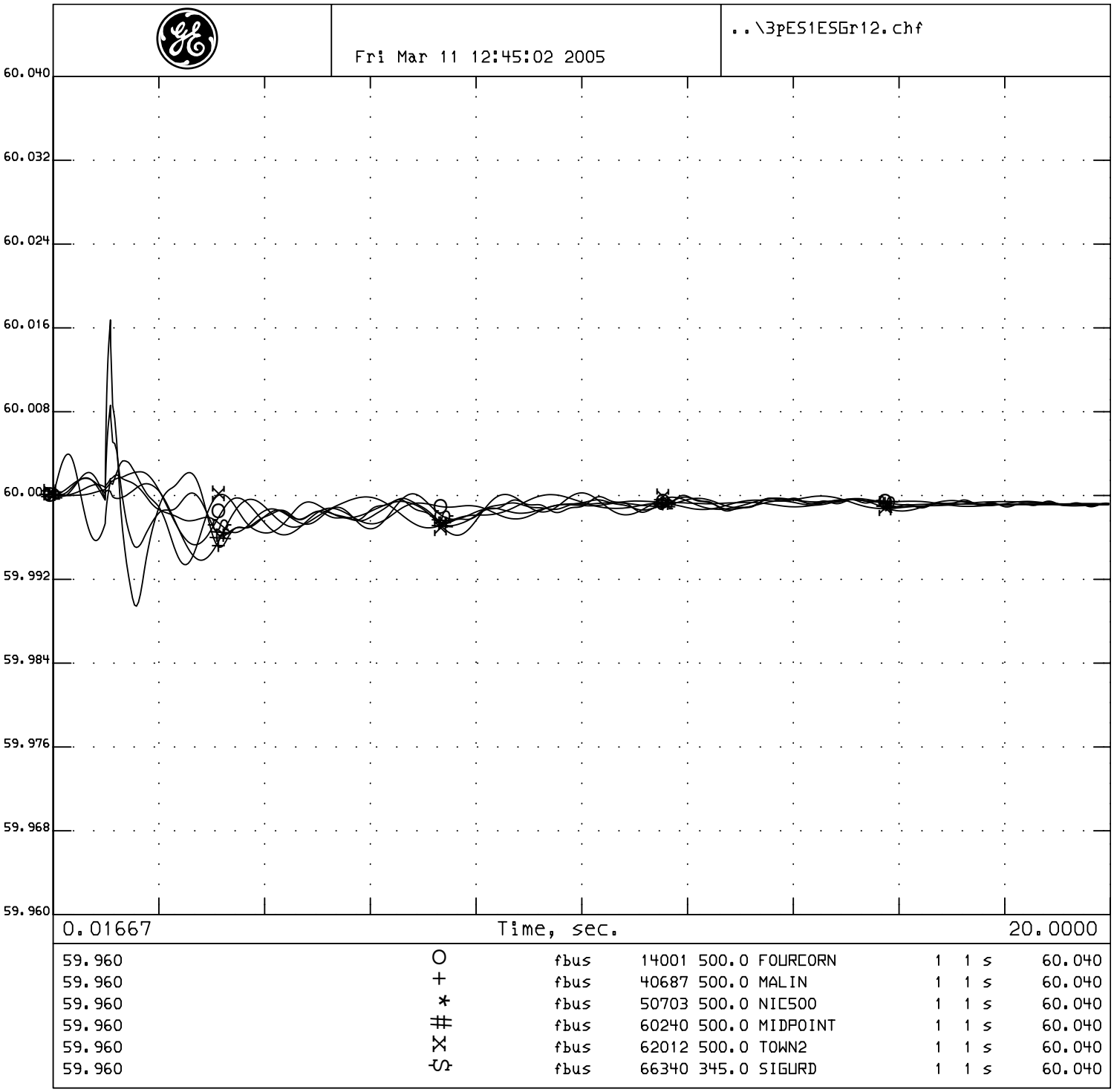

P0413 Project System Impact Study
2007 Summer Peak Base Case
P0413 @ 118MW
East Shore-Grant 115kV #1&2 lines
3 phase 6 cycle fault at East Shore 115kV bus and clear the ES-Grant 115kV #1&2

P0413 Project System Impact Study

Generator Interconnection Study

Selected WECC Bus Frequency Plots

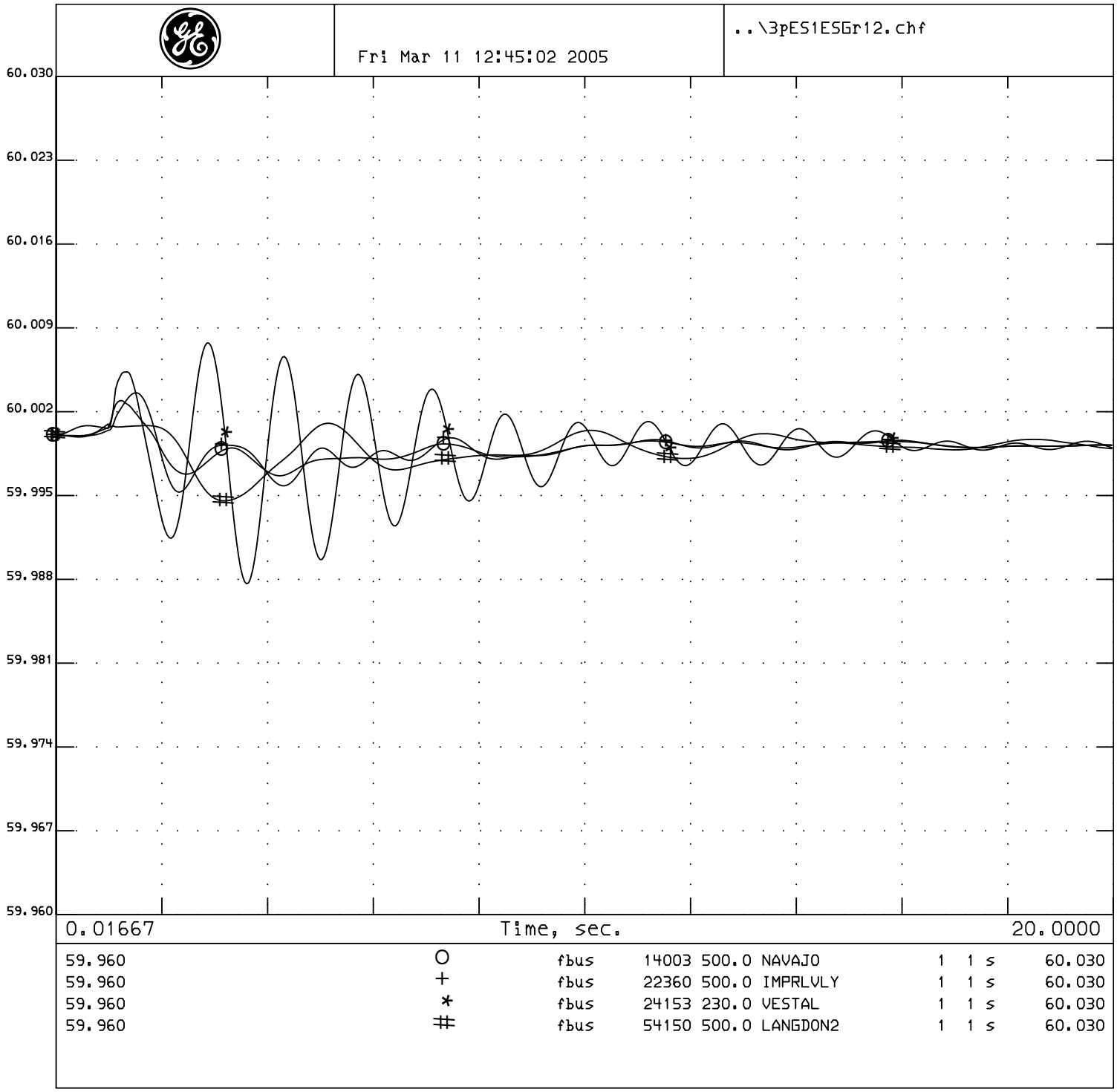

P0413 Project System Impact Study
2007 Summer Peak Base Case
P0413 @ 118MW
East Shore-Grant 115kV #1&2 lines
3 phase 6 cycle fault at East Shore 115kV bus and clear the ES-Grant 115kV #1&2

P0413 Project System Impact Study

Generator Interconnection Study

Selected WECC Bus Frequency Plots

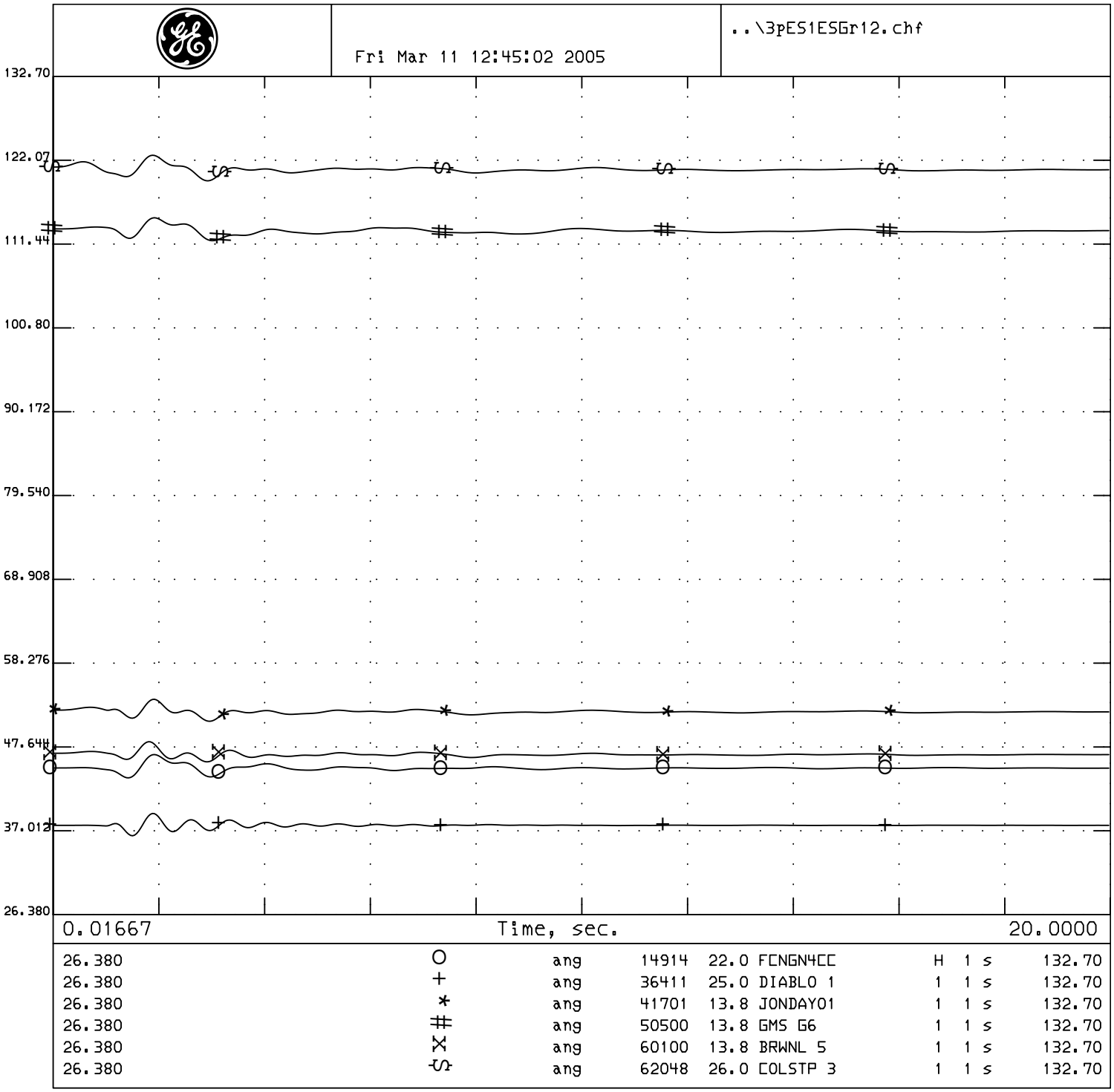

P0413 Project System Impact Study
2007 Summer Peak Base Case
P0413 @ 118MW
East Shore-Grant 115kV #1&2 lines
3 phase 6 cycle fault at East Shore 115kV bus and clear the ES-Grant 115kV #1&2

P0413 Project System Impact Study

Generator Interconnection Study

WECC Generator Rotor Angle

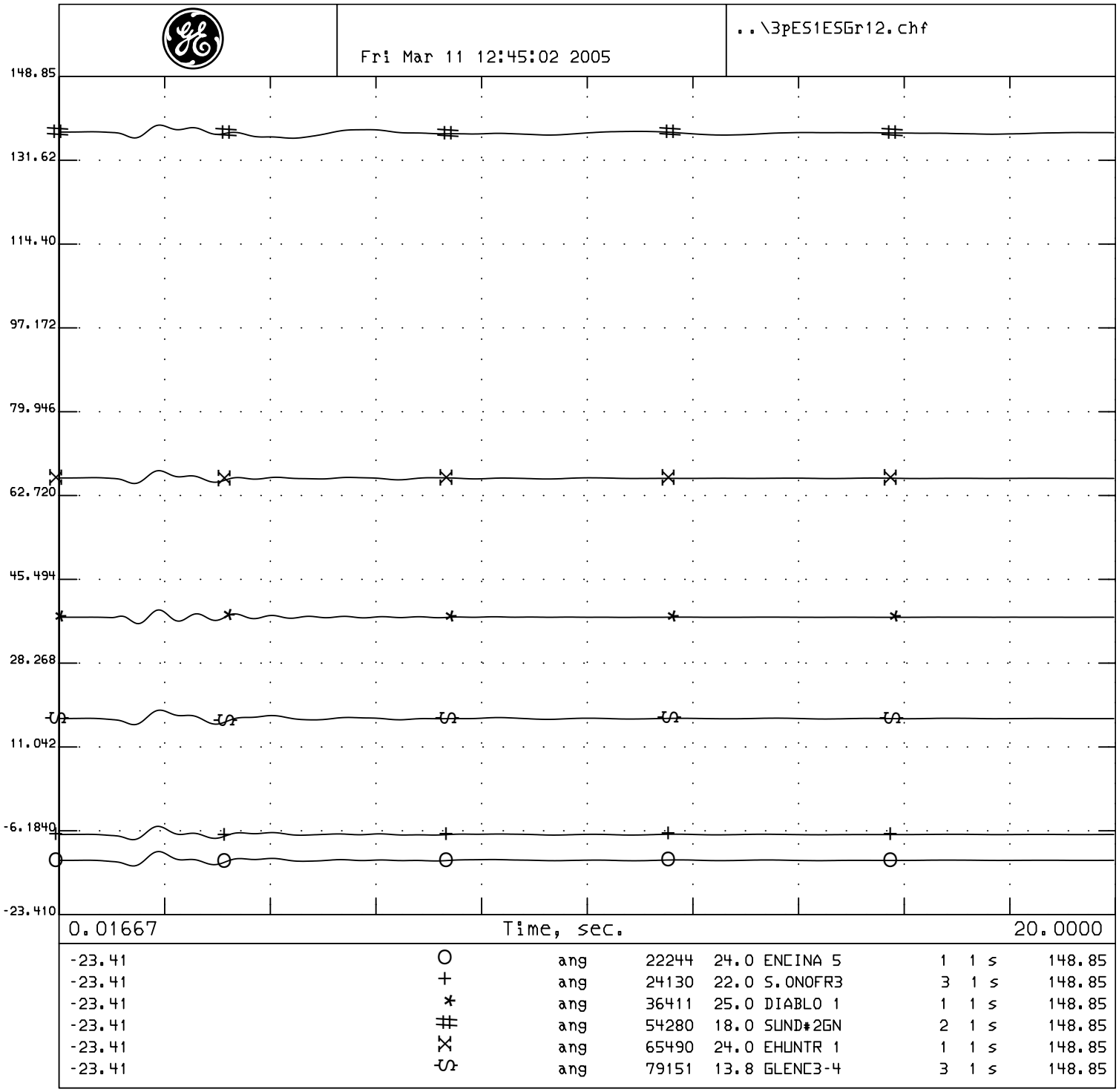

P0413 Project System Impact Study
2007 Summer Peak Base Case
P0413 @ 118MW
East Shore-Grant 115kV #1&2 lines
3 phase 6 cycle fault at East Shore 115kV bus and clear the ES-Grant 115kV #1&2

P0413 Project System Impact Study

Generator Interconnection Study

WECC Generator Rotor Angle

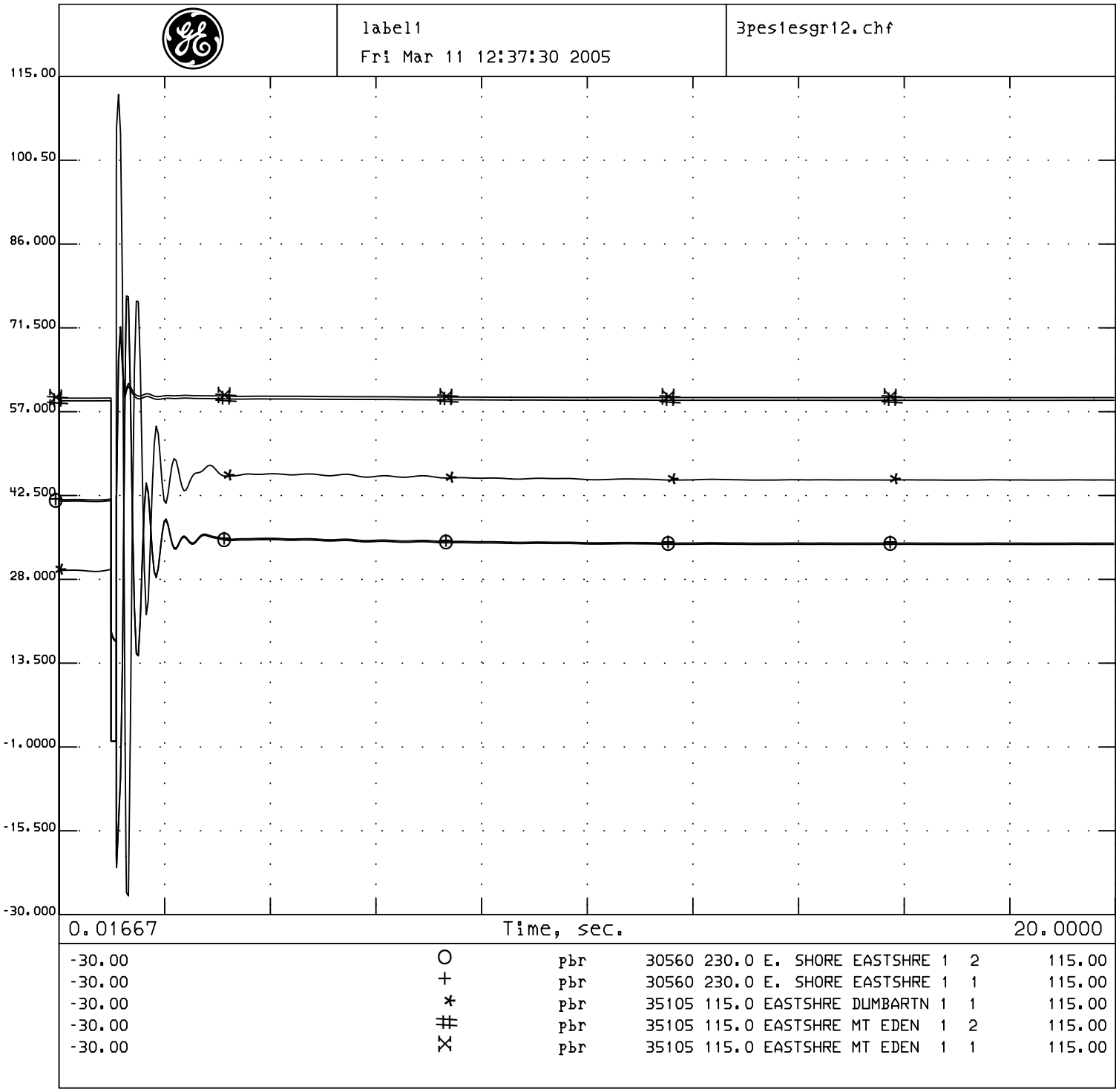

P0413 Project System Impact Study
2007 Summer Peak Base Case
P0413 @ 118MW
East Shore-Grant 115kV #1&2 lines
3 phase 6 cycle fault at East Shore 115kV bus and clear the ES-Grant 115kV #1&2

P0413 Project System Impact Study

Generator Interconnection Study

Selected PG&E Transmission Line Flows MW

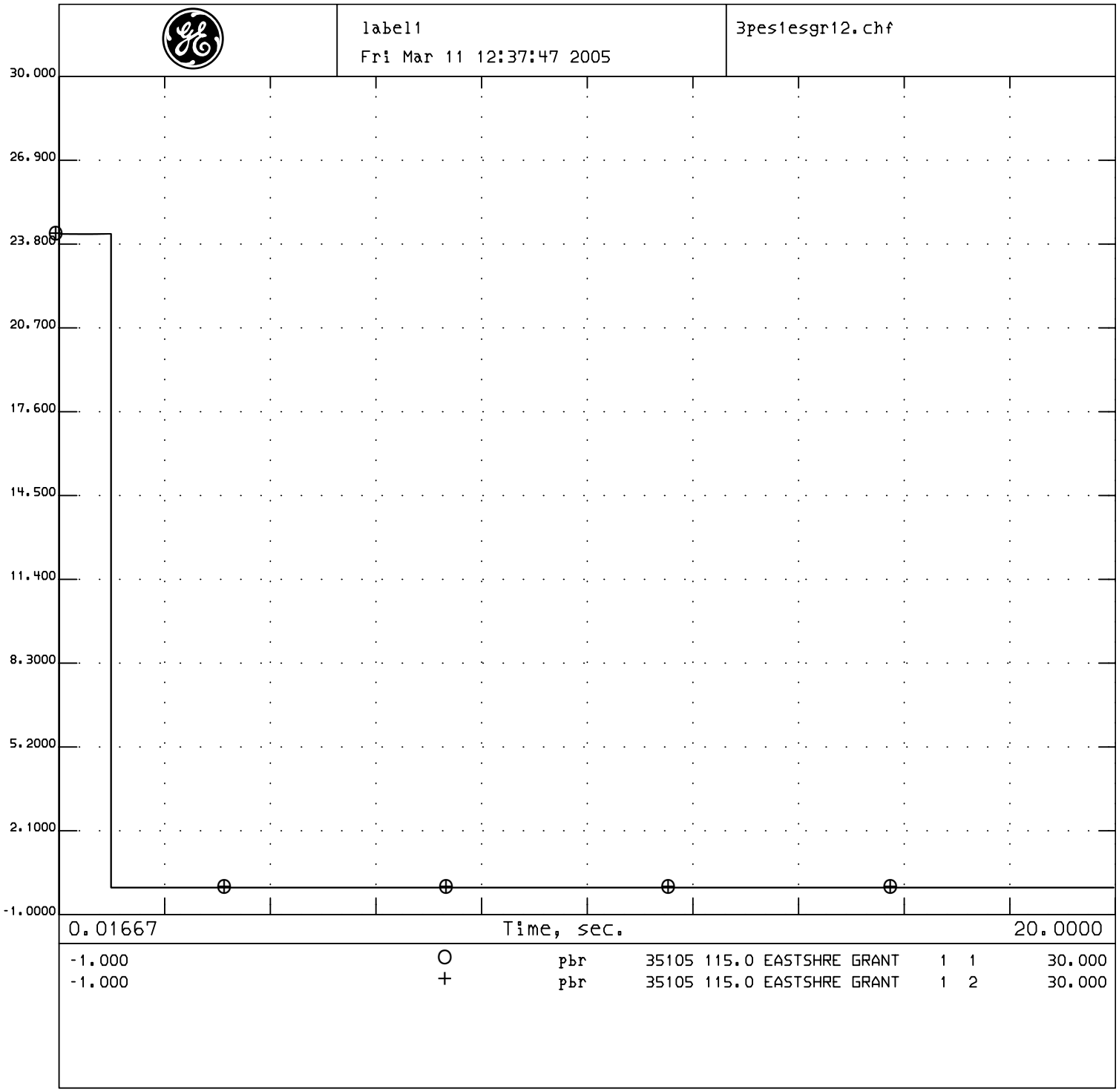

P0413 Project System Impact Study
2007 Summer Peak Base Case
P0413 @ 118MW
East Shore-Grant 115kV #1&2 lines
3 phase 6 cycle fault at East Shore 115kV bus and clear the ES-Grant 115kV #1&2

P0413 Project System Impact Study

Generator Interconnection Study

Selected PG&E Transmission Line Flows MW

Appendix G

Preliminary Protection Requirements

EASTSHORE ENERGY FACILITY PROJECT

SYSTEM IMPACT STUDY

PRELIMINARY PROTECTION REQUIREMENTS

COMMUNICATIONS

I. Fiber Optic Links:

A. Install dual redundant fiber optic cables between Eastshore 115 kV substation and Eastshore Energy Facility.

EASTSHORE SUBSTATION

I. CB AAA: Eastshore – Eastshore Energy Facility 115KV Line

A. Line Length: **Approx 100 feet**

B. CB AAA: Install one-115kV SF6 circuit breakers with bushing CTs rated 2000/5 per PG&E specifications.

C. All CTs to be pulled into the control room.

D. Install G.E. L90 SET A current differential relay as one terminal of a two-terminal Eastshore – Eastshore Energy Facility pilot scheme using dual fiber optic communication line.

1. Wire to outermost Bus-side CT.

E. Install SEL 311 L SET B current differential relay as one terminal of a two-terminal Eastshore – Eastshore Energy Facility pilot scheme using dual fiber optic communication line.

1. Wire to innermost Bus-side CT.

F. Install one (1) line-side CCVTs to provide synchronizing potential for station automatics.

G. Wire bus differential scheme to innermost line side CTs. Connect at 2000/5.

II. Bus Tie Breaker CB 302

A. If substitution for CB AAA is required by customer, PG&E will utilize Overcurrent protection for the tie line. To coordinate with the lines into Eastshore 115kV substation, it would be necessary to set the Overcurrent relay with instantaneous protection. This relay would operate instantaneously for faults on the generation tie line and in the generation facility. In the case of faults with in the facility, faults will be cleared by both the facility protective devices and the remote tie line breaker resulting in the unnecessary loss of the whole generation facility. This will, also, prevent accurate fault location and delays in restoration of the generation facility for faults on the tie line and within the facility.

EASTSHORE ENERGY FACILITY SUBSTATION

I. CB BBB: Eastshore – Eastshore Energy Facility 115KV Line

A. Line Length: **Approx 100 feet**

B. CB BBB: Install one-115kV SF6 circuit breakers with bushing CTs rated 2000/5 per PG&E specifications.

C. All CTs to be pulled into the control room.

D. Install G.E. L90 SET A current differential relay as one terminal of a two-terminal Eastshore – Eastshore Energy Facility pilot scheme using dual fiber optic communication line.

1. Wire to outermost Bus-side CT.

E. Install SEL 311 L SET B current differential relay as one terminal of a two-terminal Eastshore – Eastshore Energy Facility pilot scheme using dual fiber optic communication line.

1. Wire to innermost Bus-side CT.

F. Install three (3) bus-side CCVTs to provide polarizing potentials for line protection and station automatics.

G. Install one (1) line-side CCVTs to provide synchronizing potential for station automatics.