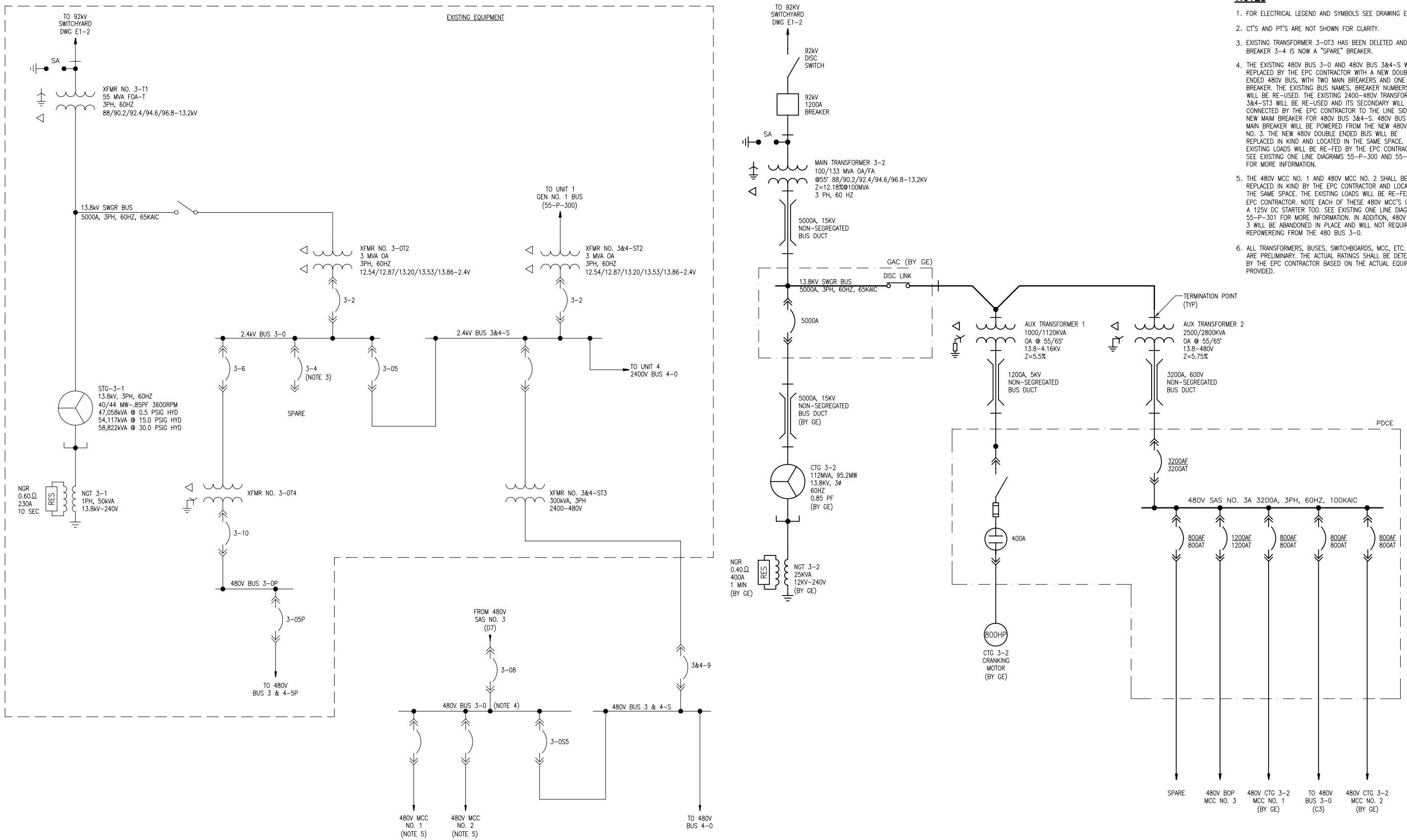

NOTES

1. FOR ELECTRICAL LEGEND AND SYMBOLS SEE DRAWING E1-0.
2. CT'S AND PT'S ARE NOT SHOWN FOR CLARITY.
3. EXISTING TRANSFORMER 3-OT3 HAS BEEN DELETED AND 2.4kV BREAKER 3-4 IS NOW A "SPARE" BREAKER.
4. THE EXISTING 480V BUS 3-0 AND 480V BUS 3&4-S WILL BE REPLACED BY THE EPC CONTRACTOR WITH A NEW DOUBLE ENDED 480V BUS, WITH TWO MAIN BREAKERS AND ONE TIE BREAKER. THE EXISTING BUS NAMES, BREAKER NUMBERS, ETC WILL BE RE-USED. THE EXISTING 2400-480V TRANSFORMER 3&4-ST3 WILL BE RE-USED AND ITS SECONDARY WILL BE CONNECTED BY THE EPC CONTRACTOR TO THE LINE SIDE OF NEW MAIM BREAKER FOR 480V BUS 3&4-S. 480V BUS 3-0 MAIN BREAKER WILL BE POWERED FROM THE NEW 480V SAS NO. 3. THE NEW 480V DOUBLE ENDED BUS WILL BE REPLACED IN KIND AND LOCATED IN THE SAME SPACE. THE EXISTING LOADS WILL BE RE-FED BY THE EPC CONTRACTOR. SEE EXISTING ONE LINE DIAGRAMS 55-P-300 AND 55-P-301 FOR MORE INFORMATION.
5. THE 480V MCC NO. 1 AND 480V MCC NO. 2 SHALL BE REPLACED IN KIND BY THE EPC CONTRACTOR AND LOCATED IN THE SAME SPACE. THE EXISTING LOADS WILL BE RE-FED BY THE EPC CONTRACTOR. NOTE EACH OF THESE 480V MCC'S CONTAIN A 125V DC STARTER TOO. SEE EXISTING ONE LINE DIAGRAM 55-P-301 FOR MORE INFORMATION. IN ADDITION, 480V MCC NO. 3 WILL BE ABANDONED IN PLACE AND WILL NOT REQUIRE REPOWEREING FROM THE 480 BUS 3-0.
6. ALL TRANSFORMERS, BUSES, SWITCHBOARDS, MCC, ETC. RATINGS ARE PRELIMINARY. THE ACTUAL RATINGS SHALL BE DETERMINED BY THE EPC CONTRACTOR BASED ON THE ACTUAL EQUIPMENT PROVIDED.

THIS DRAWING WAS PREPARED BY POWER ENGINEERS, INC. FOR A SPECIFIC PROJECT, TAKING INTO CONSIDERATION THE SPECIFIC AND UNIQUE REQUIREMENTS OF THE PROJECT. REUSE OF THIS DRAWING OR ANY INFORMATION CONTAINED IN THIS DRAWING FOR ANY PURPOSE IS PROHIBITED UNLESS WRITTEN PERMISSION FROM BOTH POWER AND POWER'S CLIENT IS GRANTED.

58ec1_1.dwg

REV	REVISIONS	DATE	DRN	DSGN	CKD	APPD	REFERENCE DRAWINGS	
D	ISSUED FOR REVIEW	06-28-06	JMD	LAT	DEJ	DCT		
C	ISSUED FOR REVIEW	06-07-06	JMD	LAT	DEJ	DCT	E1-2	ELECTRICAL ONE LINE DIAGRAM SHT 2
B	ISSUED FOR REVIEW	01-31-06	BS	LAT	DEJ	DCT	55-P-300	MAIN ONE LINE DIAGRAM SHT. 5
A	ISSUED FOR REVIEW	01-11-06	BS	LAT	DEJ	DCT	E1-0	ONE LINE LEGEND AND SYMBOLS

DSGN	BS	11-11-05
DRN	BS	11-11-05
CKD	LAT	11-11-05

SCALE: NONE

FOR 22x34 DWG ONLY

POWER ENGINEERS

IMPERIAL IRRIGATION DISTRICT

EL CENTRO UNIT 3 REPOWERING

ELECTRICAL KEY ONE LINE DIAGRAM

JOB NUMBER 108745

REV D

DRAWING NUMBER E1-1