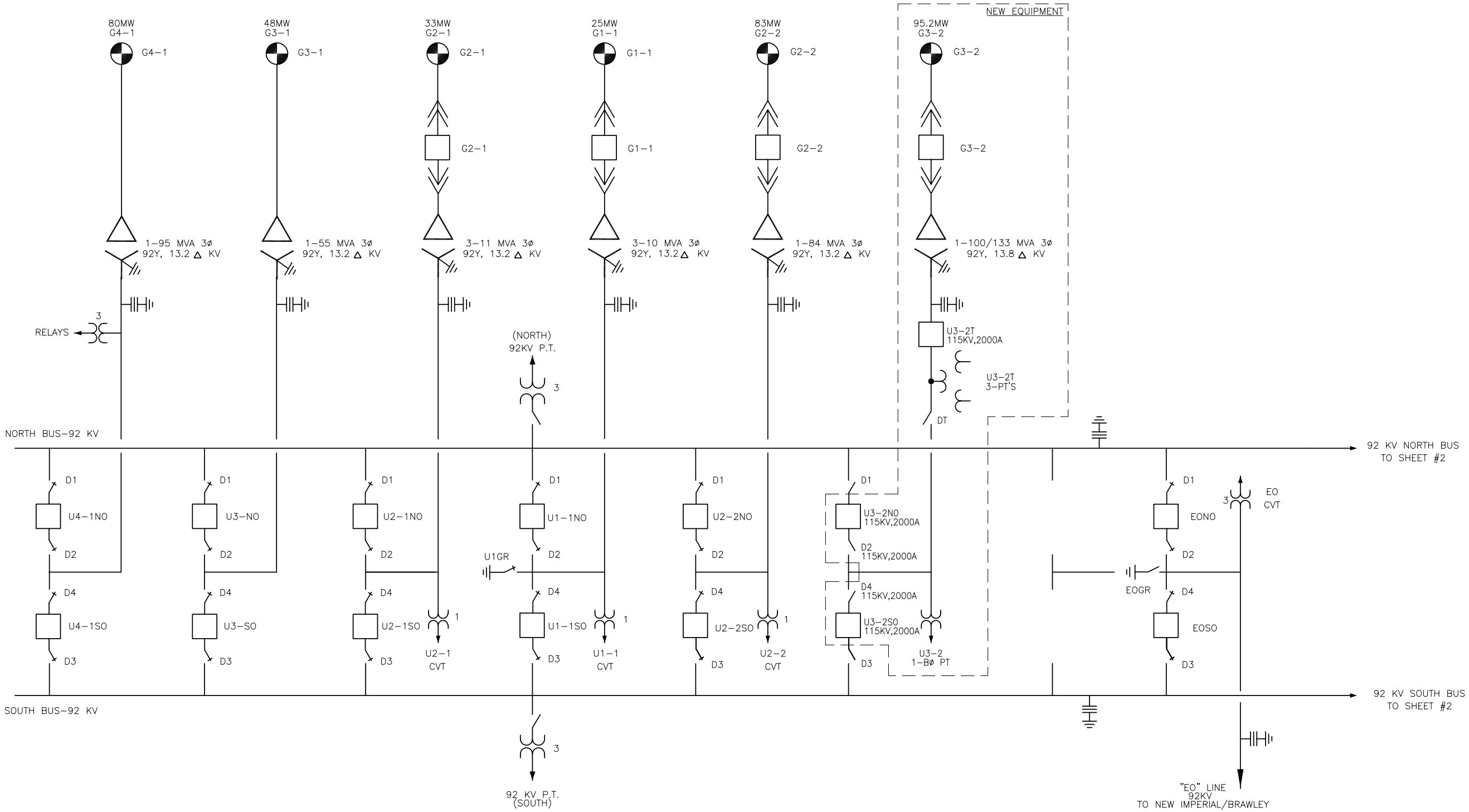

NOTES:

1. CT'S AND PT'S ARE NOT SHOWN FOR CLARITY.
2. REFER TO DWG E1-1 FOR MORE DETAIL ON 13.8KV ARRANGEMENT.

THIS DRAWING WAS PREPARED BY POWER ENGINEERS, INC. FOR A SPECIFIC PROJECT, TAKING INTO CONSIDERATION THE SPECIFIC AND UNIQUE REQUIREMENTS OF THE PROJECT. REUSE OF THIS DRAWING OR ANY INFORMATION CONTAINED IN THIS DRAWING FOR ANY PURPOSE IS PROHIBITED UNLESS WRITTEN PERMISSION FROM BOTH POWER AND POWER'S CLIENT IS GRANTED.

27ecel_2.dwg

REV	REVISIONS	DATE	DRN	DSGN	CKD	APPD	REFERENCE DRAWINGS	
C	REISSUED FOR REVIEW	6/27/06	JM	BT	DEJ	DCT		
B	REISSUED FOR REVIEW	1/30/06	JM	BT	DEJ	DCT		
A	ISSUED FOR REVIEW	1/4/06	JM	BT	DEJ	DCT	E1-1	ELECTRICAL KEY ONE LINE DIAGRAM

DSGN	BT	1/4/06
DRN	JM	1/4/06
CKD	*	*

SCALE: NONE

FOR 22x34 DWG ONLY

POWER ENGINEERS

IMPERIAL IRRIGATION DISTRICT

EL CENTRO UNIT 3 REPOWERING

ELECTRICAL KEY ONE LINE DIAGRAM
SHEET 2

JOB NUMBER 108745

REV C

DRAWING NUMBER E1-2