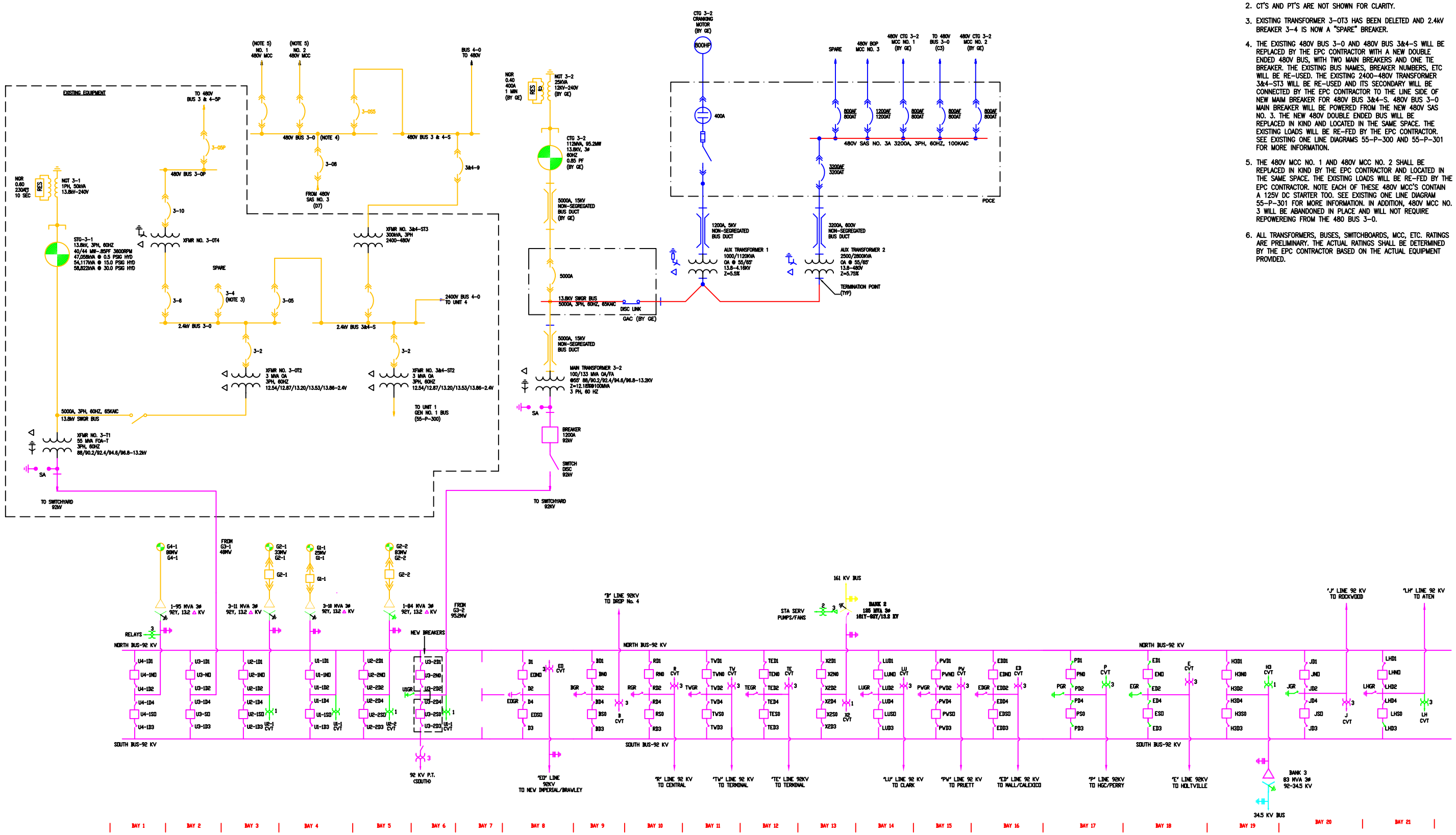

NOTES

1. FOR ELECTRICAL LEGEND AND SYMBOLS SEE DRAWING E1-0.
2. CT'S AND PT'S ARE NOT SHOWN FOR CLARITY.
3. EXISTING TRANSFORMER 3-0T3 HAS BEEN DELETED AND 2.4kV BREAKER 3-4 IS NOW A "SPARE" BREAKER.
4. THE EXISTING 480V BUS 3-0 AND 480V BUS 3&4-S WILL BE REPLACED BY THE EPC CONTRACTOR WITH A NEW DOUBLE ENDED 480V BUS, WITH TWO MAIN BREAKERS AND ONE TIE BREAKER. THE EXISTING BUS NAMES, BREAKER NUMBERS, ETC WILL BE RE-USED. THE EXISTING 2400-480V TRANSFORMER 3&4-ST3 WILL BE RE-USED AND ITS SECONDARY WILL BE CONNECTED BY THE EPC CONTRACTOR TO THE LINE SIDE OF NEW MAIN BREAKER FOR 480V BUS 3&4-S. 480V BUS 3-0 MAIN BREAKER WILL BE POWERED FROM THE NEW 480V SAS NO. 3. THE NEW 480V DOUBLE ENDED BUS WILL BE REPLACED IN KIND AND LOCATED IN THE SAME SPACE. THE EXISTING LOADS WILL BE RE-FED BY THE EPC CONTRACTOR. SEE EXISTING ONE LINE DIAGRAMS 55-P-300 AND 55-P-301 FOR MORE INFORMATION.
5. THE 480V MCC NO. 1 AND 480V MCC NO. 2 SHALL BE REPLACED IN KIND BY THE EPC CONTRACTOR AND LOCATED IN THE SAME SPACE. THE EXISTING LOADS WILL BE RE-FED BY THE EPC CONTRACTOR. NOTE EACH OF THESE 480V MCC'S CONTAIN A 125V DC STARTER TOO. SEE EXISTING ONE LINE DIAGRAM 55-P-301 FOR MORE INFORMATION. IN ADDITION, 480V MCC NO. 3 WILL BE ABANDONED IN PLACE AND WILL NOT REQUIRE REPOWEREING FROM THE 480 BUS 3-0.
6. ALL TRANSFORMERS, BUSES, SWITCHBOARDS, MCC, ETC. RATINGS ARE PRELIMINARY. THE ACTUAL RATINGS SHALL BE DETERMINED BY THE EPC CONTRACTOR BASED ON THE ACTUAL EQUIPMENT PROVIDED.

REV	REVISIONS	DATE	DRN	DSGN	CKD	APPD	REFERENCE DRAWINGS

DSGN
DRN
CKD
SCALE:

POWER ENGINEERS

***
***
***

JOB NUMBER | REV
DRAWING NUMBER