El Segundo Power Redevelopment Project (00-AFC-14C)

California Energy Commission Monthly Compliance Report

July 2011

Submitted by: El Segundo Energy Center LLC
Date Submitted: 8-12-11

I. Summary

a. **Pre-Construction Status**

Approval of Limited Pre-Demolition Activities was granted by the CA Energy Commission (CEC) on December 28, 2006. Approval of aboveground demolition was received on April 14, 2008 and approval of below ground demolition/ground disturbance was received October 7, 2008. The June 19, 2007 petition to amend the 2005 Commission Decision was approved on June 30, 2010. No additional Conditions of Certification required completion for continuation of pre-construction demolition or abatement activities.

Demolition Waste Management: Asbestos Containing Material (ACM) and Lead Abatement, Soil Management, Hazardous/Non-Hazardous/Universal Waste. LVI continued abatement of ACM during July 2011. No lead abatement occurred during July 2011.

Characterization and remediation of subsurface soils and below grade equipment continues per EPA and Department of Toxic Substances Control (DTSC) approved work plans. Hauling of impacted material began the week of April 18, 2011 and continued in July 2011. AECOM is continuing assessment and updating EPA and the Department of Toxic Substances Control as needed.

Rubicon, the dive construction contractor, completed plugging the former Unit 1 and 2 once-through cooling (OTC) tunnels on June 8th. Concrete strength tests for the tunnel plugs passed and cleared the way for forebay dewatering. ESEC mobilized Siemens treatment equipment to dewater the forebay as required by the Army Corp of Engineers Nationwide 404 Permit. ESEC mobilized vacuum tanker trucks in to test the forebay seals. Rubicon mobilized to the site to inspect the forebay. Siemens dewatered the forebay from June 30th to July 9th, and discharged the treated water to outfall 002 under General NPDES Permit No. CAG99404, CI-9628. The design engineer for the cooling tunnel bulkheads, EGW Engineering, P.C., provided a certification that construction of the bulkheads has been completed and isolation of the ocean from the plant has been achieved. A copy of the certification is provided in Attachment L.

AECOM continued performing 1166 monitoring of excavation work under various locations AQMD permits. Cultural and paleontological resource monitoring was conducted by CEC approved monitors in areas not previously surveyed. Associated reports are included attachments to this MCR.

The project construction trailers received Certificate of Occupancy from the CBO in June and ESEC project staff moved into the trailers. Siemens trailers were also mobilized to the site and will be ready for CBO inspection in July. ARB mobilized their trailers to the site in June and will be ready for CBO inspection in July.

b. **Construction Status**

Approval for early Start Construction was given by CEC on October 22, 2009. ESEC received approval to begin construction as of June 6, 2011 in a letter

from the CPM dated June 6, 2011. The north construction area is stilling prepared by LVI. Work is continuing on the below grade piping, electrical and preparations of foundations for the water treatment plant. Shoring installation has started around the east perimeter. Granite construction mobilized to the site and started modifications to the site entry road. Granite also mobilized to start work on the 45th Street berm. ARB continues forming and prep work for the north HRSG foundation.

c. **Revised/Updated Schedule**
Per COC COM-5 an updated schedule of project milestones – demolition, construction, and commercial operation, as well as COC deliverables are presented in the Compliance Matrix provided in Attachment A.

d. **Explanation of Significant Permitting Activities and Changes to Schedule (as applicable)**
ESEC submitted an application to South Coast Air Quality Management District (SCAQMD) for a Site Specific 1166 Permit Contaminated Soil Mitigation Plan in February 2011. SCAQMD issued the revised Title V Permit to Construct (PTC) on July 15, 2011 with the Site Specific 1166 permit included in Section I.
ESEC is awaiting final approval from FAA for the online Form 7460-1 filed in June 2011.

e. **Explanation of Significant Chief Building Official / Compliance Project Manager Activities and Associated Schedule Changes (as applicable)**
The CBO approved design drawings for the water treatment plant, and provided dispositions on the fire water and service water tank design. Engineering responses are required for the tank design CBO dispositions.

II. List of documents submitted to meet specific conditions

a. **AQ-C4 – Monthly Construction Compliance Report for July 2011 is includ**ed herein as **Attachment B** of this report. Also satisfies Conditions AQ-C2 (Fugitive Dust Mitigation Report) and AQ-C3 (Diesel Construction Equipment Mitigation Monthly Report).

b. COM-5 and COM-6 – July 2011 Monthly Compliance Report and updates to Key Events Schedule and Compliance Matrix are submitted herein. The Compliance Matrix, including Key Events Schedule is included as **Attachment A**.

c. COM-10 – No project complaints were received in July 2011.

d. NOISE-2 – No noise complaints were received in July 2011 regarding demolition or construction activities. ESEC maintains the Noise Hotline in accordance with NOISE-1.

e. NOISE-9 – No vibration complaints have been received to date regarding demolition or construction activities.

f. CUL-2 – A current schedule of anticipated project activity is provided in **Attachment K**.

g. CUL-5 - Worker Environmental Awareness Program training for workers to be involved in ground disturbance activities (as needed). Certification of Completion for training conducted in July 2011 is included in the Paleontological Resources Report submitted in **Attachment D**.
h. CUL-6 – Cultural resources monitoring during ground disturbance activities, when applicable, is documented in weekly and monthly reports. Monthly and weekly reports are provided in **Attachment C**.
i. PAL-4 – Worker Environmental Awareness Program training for workers to be involved in ground disturbance activities (as needed). Certification of Completion for training conducted in July 2011 is included in the Paleontological Resources Report submitted in **Attachment D**.
j. PAL-5 – Paleontological resources monitoring during ground disturbance activities, when applicable, is documented in weekly and monthly reports. Monthly report is provided in **Attachment D**.
k. WATER QUALITY-8 – Storm water drainage, erosion, and sediment control measures, best management practices (BMP) inspection report, and dates of any dewatering activities (if applicable) continues. Storm water inspection reports are provided in **Attachment F**. Documentation of BMP maintenance is provided in **Attachment G**.
l. WORKER SAFETY-4 – Construction Safety Supervisor monthly safety inspection, including safety training, safety management actions, unresolved situations, any accidents and injuries (as applicable).
m. GEN-3 – Proof of CBO payment through June 2011 is provided in Attachment H.
n. CIVIL-1 – Copies of transmittals to CBO and CBO approvals for facility design submittals are provided in **Attachment I**.
o. ELEC-1 – Copies of transmittals to CBO and CBO approvals for facility design submittals are provided in **Attachment I**.
p. MECH-1 – Copies of transmittals to CBO and CBO approvals for facility design submittals are provided in **Attachment I**.
q. STRUC-1 – Copies of transmittals to CBO and CBO approvals for facility design submittals are provided in **Attachment I**.
r. BIO-7 – Copies of biological records for monitoring are included in **Attachment J**.

III. Updated Compliance Matrices

Included in **Attachment A**.

IV. List of conditions satisfied during reporting period including reference to actions which satisfied certification

a. AQ-C4 – The Monthly Construction Compliance Report for July 2011 as prepared by the Construction Mitigation Manager to satisfy AQ-C2 and AQ-C3 is submitted herein as **Attachment B**.

b. BIO-7 – Summary of biological resources monitoring activities is submitted herein as **Attachment J**.
c. COM-5 and COM-6 – July 2011 Monthly Compliance Report, updates to Key Events Schedule and Compliance Matrix for July 2011 are submitted herein.
d. WORKER SAFETY-4 – Training records are retained on site in the contractor trailers. No lost time accidents occurred in July 2011.
e. CUL-5 – Worker Environmental Awareness Program Training records are included with the Paleontological Resources report provided in **Attachment D**.
f. CUL-6 – Cultural resources monitoring during ground disturbance activities were documented in weekly and monthly reports (**Attachment C)**.
g. PAL-4 – Worker Environmental Awareness Program Training records are included with the Paleontological Resources report provided in **Attachment D**.
h. PAL-5 – Paleontological Resources report for July 2011 is prepared by the Paleontological Resources Specialist and is submitted herein as **Attachment D**.
i. WASTE-8 – Continuation of abatement activities. Removal of transite duct bank continued in July 2011.
j. WATER QUALITY-8 – Storm water drainage, erosion, and sediment control measures, best management practices (BMP) inspection report, and dates of any dewatering activities (if applicable) continues. Inspections and reports are submitted herein as **Attachment F**. Documentation of BMP maintenance is provided in **Attachment G**.

V. List of submittal deadlines missed during reporting period including explanation and estimate of when information will be provided

None

VI. Cumulative listing of approved changes to conditions of certification

None

VII. Listing of any filings with, or permits issued by, other governmental agencies during the month

LVI notified SCAQMD under Rule 1403 on July 15, 2011 for removal of an additional 4,000 square feet of transite. The project end date was revised to July 31, 2011.

Granite Construction notified SCAQMD under Rule 1403 on July 26, 2011 for demolition of pipeline support foundations.

Granite Construction applied for a Right of Way Permit with City of Manhattan Beach on July 26, 2011 for a proposed temporary fence.

A completion certification for the Army Corps of Engineers (ACOE) 404 Permit was submitted via e-mail to the ACOE on July 20, 2011.

SCAQMD granted an extension to the Permit to Construct (PTC) on July 15, 2011. The revised expiration date for the PTC is July 13, 2012. In addition, the revised permit includes the Site Specific Rule 1166 permit in Section I, which allows excavation of VOC impacted soil as needed, up to a total volume of 50,000 cubic yards. A copy of the revised PTC is provided in Attachment E.

A revised NPDES permit was provided by the RWQCB on July 19, 2011 in response to a request for revisions made by ESEC on July 14, 2011. A copy of the revised permit is provided in Attachment E.

A various locations Rule 1166 contaminated soil notification was made by AECOM to SCAQMD on July 22, 2011.

VIII. Project compliance activities over next 2 months including changes to schedule

a. COM-5 and COM-6 - Monthly Compliance Report, updates to Key Events Schedule and Compliance Matrix completed monthly.
b. AQ-C4 – Monthly Construction Compliance Reports to be included as attachments to the Monthly Compliance Reports.
c. CUL-6 – Cultural resources monitoring during demarcation and relocation ground disturbance activities to be documented in weekly and monthly reports.
d. PAL-5 – Paleontological resources monitoring during demarcation and relocation ground disturbance activities to be documented in weekly and monthly reports.
e. CUL-5 and PAL-4 – additional Worker Environmental Awareness Program training as needed.
f. WASTE-8 – Continuation of abatement activities.
g. WATER QUALITY-7 – Continuation of training for new BMPs, as planned and implemented for demolition phase of project. Submit any amendments needed to Storm Water Pollution Prevention Plan based on CBO approved grading plans.
h. WATER QUALITY-8 – Continuation of storm water drainage, sediment, and erosion control measures and BMPs. Continuation of inspection and documentation of BMP effectiveness and maintenance.
i. VIS-3 – Submit engineering design of seawall to CBO.

j. VIS-5 – Submit Facility Treatment Plan to CPM, City of Manhattan Beach, City of El Segundo, and California Coastal Commission.
k. Seawall construction contractor ARB will submit an application for an encroachment permit for the bike path with the County of Los Angeles Public Works next month.

IX. Additions to on-site compliance file

Files maintained on regular basis as COCs are implemented.

X. Listing of complaints, notices of violation, official warnings, citations received during month, description of resolutions of any resolved complaints and status of any unresolved complaints

No complaints, notices of violation, official warnings, or citations received during July 2011.

ATTACHMENT A
COMPLIANCE-5 AND COMPLIANCE-6
KEY EVENTS AND COMPLIANCE MATRIX

El Segundo Power Redevelopment Project

Docket No. AFC-00-14C

Key Events List (Compliance-6) - Subject to Change

Compliance Project Manager: Joseph Douglas

Event Description	Date
Certification Date	23-Dec-04
Obtain Site Control	23-Dec-04
Online Date	1-Jan-13
Power Plant Site Activities:	
Start Site Mobilization	25-Oct-06
Start Ground Disturbance	1-Jul-08
Start Grading	1-Jul-11
Start Construction	1-Jun-11
Begin Pouring Major Foundation Concrete	15-Sep-11
Begin Installation of Major Equipment	15-Nov-11
Completion of Installation of Major Equipment	1-Nov-12
First Combustion of Gas Turbine	1-Sep-12
Start Commercial Operations	1-Aug-13
Complete All Construction	1-Apr-13
Transmission Line Activities:	
Start T/L Construction	1-Jan-12
Synchronization with Grid and Interconnection	1-Nov-12
Complete T/L Construction	1-Jun-12
Fuel Supply Line Activities:	
Start Gas Pipeline Construction and Interconnection	1-Oct-11
Complete Gas Pipeline Construction	1-Oct-12
Water Supply Line Activities:	
Start Water Supply Line Construction	1-Jan-12
Complete Water Supply Line Construction	1-Nov-12

Compliance Matrix
El Segundo Power Redevelopment Project
Docket 00-AFC-14C

Technical Area	COC No.	Condition Short Description	Deliverable Req.	Verification Action	Required Prior to Start of Constuction?	Action Days	Submittal Timing	Submittal Trigger Event	Expected Submittal Date	Actual Submittal Date	Submittal Action Approval Date	Amended Date	Compliance Status	Priority (Tier 1, 2, or 3)	Comments
AQ	C3	Diesel Construction Equipment Mitigation Plan	Y	2). CMM will update the initial Diesel Construction Equipment Mitigation Plan prior to specific contractor gaining access to either the main or related linear construction sites.	Y	10	days prior to	Hiring New Contractor or Project Monitor	As Needed				As Needed	1	
AQ	C3	Diesel Construction Equipment Mitigation Plan	Y	3). CMM will notify the CPM of any emergency termination.	N	10	working days prior to	Mitigation Measure Termination	As Needed				As Needed	2	
AQ	C4	Monthly Construction Compliance Report	Y	CMM shall submit to the CPM for approval, the Monthly Construction Compliance Report	N	10	days after beginning of each month	Monthly Compliance Report	10th business day of each month	8-Jun-07			In Progress	3	
AQ	C5	Use of Specific Emission Reduction Credits	Y	1). The project owner shall request from the District the report of the NSR Ledger Account for the ESPR.		15	days following	Issuance of the District's Permit to Construct	TBD				In Progress	3	
AQ	C5	Use of Specific Emission Reduction Credits	Y	2). The project shall submit the report of the NSR Ledger Account for the ESPR to the CPM	Y	30	days prior to	Turbine First Fire	2-Aug-12				Not Started	3	
AQ	C6	Tug Boats and SPMT EPA Tier 2 diesel engines or better	Y	the owner/operator shall submit the certification that the SPMT or tug boat primary source of power is based on an EPA Tier 2 diesel engine or that SPMTs or tugboats with Tier 2 diesel engines are not available to the CPM for approval.	N	5	days prior to	SPMT or tug boat being used for any type of barge delivery operation	As Needed			8-Jul-10	As Needed		Beach Only
AQ	C7	Oxidation Catalyst	Y	The owner/operator shall submit to the CPM for approval a letter stating that the installation of the oxidation catalyst is complete and operational and include the estimated effectiveness in terms of percent of VOC emission reduction achieved. This letter shall be signed and stamped by a California Registered Professional Engineer.	N	na	na	earliest point practical during the initial commissioning phase of each combustion turbine train	1-Sep-12			8-Jul-10	Not Started		
AQ	C8	Quarterly Operational Reports	Y	The project owner shall submit the Quarterly Operational Reports as specified herein to the CPM.	N	30	days following	end of quarter	Quarterly			8-Jul-10	Not Started		
AQ	2	Install NH3 Flow Gage with Monitor	N	The project owner shall make the site available for inspection by representatives of the District, California Air Resources Board (CARB), the United States Environmental Protection Agency (EPA) and the California Energy Commission (Commission).	N	na	na	Site Inspections	As Needed				As Needed	3	
AQ	3	Install Exhaust Temperature Gauge with Monitor	N	The project owner shall make the site available for inspection by representatives of the District, California Air Resources Board (CARB), the United States Environmental Protection Agency (EPA) and the California Energy Commission (Commission).	N	na	na	Site Inspections	As Needed				As Needed	3	
AQ	4	Install SCR Catalyst Bed D/P Gauge with Monitor	N	The project owner shall make the site available for inspection by representatives of the District, California Air Resources Board (CARB), the United States Environmental Protection Agency (EPA) and the California Energy Commission (Commission).	N	na	na	Site Inspections	As Needed				As Needed	3	
AQ	5	NH3 Source Test	Y	1). The project owner shall submit the proposed protocol for the source tests to both the District and CPM for approval.	N	60	days prior to	Source Test Date	2-Jun-13				Not Started	3	Expected submittal date assumes initial test will be performed at start of commercial operation (8/1/13) with subsequent quarterly tests for the first year of operation and annually thereafter
AQ	5	NH3 Source Test	Y	2). The project owner shall notify the District and CPM of the proposed source test date and time.	N	7	days prior to	Source Test Date	25-Jul-13				Not Started	3	Expected submittal date assumes initial test will be performed at start of commercial operation (8/1/13) with subsequent quarterly tests for the first year of operation and annually thereafter
AQ	5	NH3 Source Test	Y	3). The project owner shall submit source test results to both the District and CPM.	N	45	days following	Source Test Date	15-Sep-13				Not Started	3	Expected submittal date assumes initial test will be performed at start of commercial operation (8/1/13) with subsequent quarterly tests for the first year of operation and annually thereafter
AQ	6	Intial Source Tests for Units 5 and 7	Y	1). The project owner shall submit the proposed protocol for the initial source tests to both the District and CPM for approval.	N	45	days prior to	Source Test Date	14-Jan-13				Not Started	3	Expected submittal date assumes initial test will be performed no later than 180 days following turbine first fire
AQ	6	Intial Source Tests for Units 5 and 7	Y	2). The project owner shall submit source test results to both the District and CPM.	N	60	days following	Source Test Date	29-Apr-13				Not Started	3	Expected submittal date assumes initial test will be performed no later than 180 days following turbine first fire
AQ	6	Intial Source Tests for Units 5 and 7	Y	3). The project owner shall notify the District and CPM the proposed initial source test date and time.	N	10	days prior to	Source Test Date	18-Feb-13				Not Started	3	Expected submittal date assumes initial test will be performed no later than 180 days following turbine first fire
AQ	7	Three Year Source Tests for Units 5 and 7	Y	1). The project owner shall submit the proposed protocol for the source tests to both the District and CPM for approval.	N	60	days prior to	Three Year Source Test	2-Jun-13				Not Started	3	Expected submittal date assumes initial test will be performed at start of commercial operation (8/1/13) with subsequent tests every 3 years
AQ	7	Three Year Source Tests for Units 5 and 7	Y	2). The project owner shall notify the District and CPM of the proposed source test date and time.	N	7	days prior to	Three Year Source Test	25-Jul-13				Not Started	3	Expected submittal date assumes initial test will be performed at start of commercial operation (8/1/13) with subsequent tests every 3 years
AQ	7	Three Year Source Tests for Units 5 and 7	Y	3). The project owner shall submit source test results to both the District and CPM.	N	45	days following	Three Year Source Test	15-Sep-13				Not Started	3	Expected submittal date assumes initial test will be performed at start of commercial operation (8/1/13) with subsequent tests every 3 years
AQ	8	Submit Source Test Reports	Y	See verifications for AQ-5, -6, and –7.	N	60	days following	Source Test Date	See AQ-5, -6, and -7 for expected submittal date				Not Started	3	
AQ	11	Monthly Emission Limits	Y	The project owner shall submit the monthly fuel use data and emission calculations to the CPM in the Quarterly Operation Reports (AQ-9).	N	30	days following the end of each calendar quarter	Quarterly during operation	Quarterly				Not Started	3	

Compliance Matrix
El Segundo Power Redevelopment Project
Docket 00-AFC-14C

Technical Area	COC No.	Condition Short Description	Deliverable Req.	Verification Action	Required Prior to Start of Constuction?	Action Days	Submittal Timing	Submittal Trigger Event	Expected Submittal Date	Actual Submittal Date	Submittal Action Approval Date	Amended Date	Compliance Status	Priority (Tier 1, 2, or 3)	Comments
AQ	12	Keep records on Natural Gas Fuel Use	N	The project owner shall make the site available for inspection by representatives of the District, California Air Resources Board (CARB), the United States Environmental Protection Agency (EPA) and the California Energy Commission (Commission).	N	na	na	Site Inspections	As Needed				As Needed	3	
AQ	14	Install CO CEMS	N	1). Install and operate the CO CEMS within 90 days of turbine first fire and shall not install it prior to receiing approval from the AQMD.	N	90	days following	Turbine First Fire	30-Nov-12				Not Started	3	
AQ	14	Install CO CEMS	N	2). The project owner shall make the site available for inspection by representatives of the District, California Air Resources Board (CARB), the United States Environmental Protection Agency (EPA) and the California Energy Commission (Commission).	N	na	na	Site Inspections	As Needed				As Needed	3	
AQ	14	Install CO CEMS	Y	3). Provide written notification to the AQMD of turbine initial startup within 2 weeks.	N	14	days following	Turbine First Fire	15-Sep-12					3	
AQ	15	Install NOx CEMS	N	1). Install and operate the NOx CEMS within 90 days of turbine first fire according to requirements of Rule 2012.	N	90	days following	Turbine First Fire	30-Nov-12				Not Started	3	
AQ	15	Install NOx CEMS	N	2). The project owner shall make the site available for inspection by representatives of the District, California Air Resources Board (CARB), the United States Environmental Protection Agency (EPA) and the California Energy Commission (Commission).	N	na	na	Site Inspections	As Needed				As Needed	3	
AQ	15	Install NOx CEMS	Y	3). Provide written notification to the AQMD of turbine initial startup within 2 weeks.	N	14	days following	Turbine First Fire	15-Sep-12				Not Started	3	
AQ	16	Startup and Commissioning Period - 2.0 PPM NOx Exception - Commissioning period limited to 415 operating hours	N	1). The project owner shall make the site available for inspection by representatives of the District, California Air Resources Board (CARB), the United States Environmental Protection Agency (EPA) and the California Energy Commission (Commission).	N	na	na	Site Inspections	As Needed				As Needed	3	
AQ	16	Startup and Commissioning Period - 2.0 PPM NOx Exception - Commissioning period limited to 415 operating hours	N	2). Commissioning period shall be restricted to a maximum of 415 gas turbine operating hours.	N	415	operating hours	Turbine First Fire	1-Sep-12				Not Started	3	
AQ	17	Startup and Commissioning Period - 4.0 PPM CO Exception - Commissioning period limited to 415 operating hours	N	1). The project owner shall make the site available for inspection by representatives of the District, California Air Resources Board (CARB), the United States Environmental Protection Agency (EPA) and the California Energy Commission (Commission).	N	na	na	Site Inspections	As Needed				As Needed	3	
AQ	17	Startup and Commissioning Period - 4.0 PPM CO Exception - Commissioning period limited to 415 operating hours	N	2). Commissioning period shall be restricted to a maximum of 33 days.	N	415	operating hours	Turbine First Fire	1-Sep-12				Not Started	3	
AQ	18	Special NOx Limit For Commissioning Tests	N	The project owner shall make the site available for inspection by representatives of the District, California Air Resources Board (CARB), the United States Environmental Protection Agency (EPA) and the California Energy Commission (Commission).	N	na	na	Site Inspections	As Needed				As Needed	3	
AQ	19	Special NOx Limit For Commissioning Tests	N	The project owner shall make the site available for inspection by representatives of the District, California Air Resources Board (CARB), the United States Environmental Protection Agency (EPA) and the California Energy Commission	N	na	na	Site Inspections	As Needed				As Needed	3	
AQ	20	Startup NOx limit	Y	The project owner shall submit CEMS records demonstrating compliance with this condition as part of the Quarterly Operational Report required in AQ-C8.	N	30	days following the end of each calendar quarter	Quarterly during operation	Quarterly				Not Started	3	
AQ	22	Define "Continuously Record" for AQ-2,3	N	1). The project owner shall make the site available for inspection by representatives of the District, California Air Resources Board (CARB), the United States Environmental Protection Agency (EPA) and the California Energy Commission (Commission).	N	na	na	Site Inspections	As Needed				As Needed	3	
AQ	22	Define "Continuously Record" for AQ-2,3	Y	2). The Project owner shall submit CEMS records demonstrating compliance with this condition as part of the Quarterly Operational Report required in AQ-C8.	N	30	days following the end of each calendar quarter	Quarterly during operation	Quarterly				Not Started	3	
AQ	23	Define "Continuously Record" for AQ-4	N	The project owner shall make the site available for inspection by representatives of the District, California Air Resources Board (CARB), the United States Environmental Protection Agency (EPA) and the California Energy Commission (Commission).	N	na	na	Site Inspections	As Needed				As Needed	3	
AQ	24	Average NOx over 60 Minutes for 2.0 PPMV NOx Limit	Y	The project owner shall submit CEMS records demonstrating compliance with this condition as part of the Quarterly Operational Report required in AQ-C8.	N	30	days following the end of each calendar quarter	Quarterly during operation	Quarterly				Not Started	3	
AQ	25	Average NOx over 60 Minutes for 4 PPMV CO Limit	Y	The project owner shall submit CEMS records demonstrating compliance with this condition as part of the Quarterly Operational Report required in AQ-C8.	N	30	days following the end of each calendar quarter	Quarterly during operation	Quarterly				Not Started	3	
AQ	26	5 PPMV NH3 Emmissions Limit Monitoring	Y	The project owner shall submit CEMS records and all calculations demonstrating compliance with this condition, including ammonia slip concentrations averaged on an hourly basis, as part of the Quarterly Operational Report required in AQ-C8.	N	30	days following the end of each calendar quarter	Quarterly during operation	Quarterly				Not Started	3	
AQ	26	5 PPMV NH3 Emmissions Limit Monitoring	Y	Submit all calibration results performed to the CPM within 60 days of calibration date.	N	60	days following	Calibration Date	29-Jan-13				Not Started	3	Expected submittal date assumes that analyzer will be calibrated 90 days following turbine first fire (analyzer must be installed and operated within 90 days of turbine first fire)
AQ	27	Annual RTC Holding Requirement	Y	The project owner shall submit to the CPM copies of all RECLAIM reports filed with the District in each Quarterly Operational Report (see AQ-C8).	N	30	days following the end of each calendar quarter	Quarterly during operation	Quarterly				Not Started	3	
AQ	29	Maintain Special Relief Valve for Storage Tanks	N	The project owner shall make the site available for inspection by representatives of the District, California Air Resources Board (CARB), the United States Environmental Protection Agency (EPA) and the California Energy Commission	N	na	na	Site Inspections	As Needed				As Needed	3	

Technical Area	COC No.	Condition Short Description	Deliverable Req.	Verification Action	Required Prior to Start of Constuction?	Action Days	Submittal Timing	Submittal Trigger Event	Expected Submittal Date	Actual Submittal Date	Submittal Action Approval Date	Amended Date	Compliance Status	Priority (Tier 1, 2, or 3)	Comments
AQ	30	Vent this equipment, during filling	N	The project owner shall make the site available for inspection by representatives of the District, CARB, EPA and the Commission.	N	na	na	Site Inspections	As Needed			8-Jul-10	As Needed		
AQ	31	Vent equipment to the two-stage venture scrubber (Device C64) for ammonia tank.	N	The project owner shall make the site available for inspection by representatives of the District, CARB, EPA and the Commission	N	na	na	Site Inspections	As Needed			8-Jul-10	As Needed		
AQ	32	2.0 PPM VOC emission limit during turbine commissioning	N	The project owner shall make the site available for inspection by representatives of the District, California Air Resources Board (CARB), the United States Environmental Protection Agency (EPA) and the California Energy Commission	N	na	na	Site Inspections	As Needed			8-Jul-10	As Needed		
AQ	33	2.0 ppmv VOC emission limit is averaged over 60 minutes at 15 percent 02, dry basis	Y	The project owner shall submit CEMS records demonstrating compliance with this condition as part of the Quarterly Operational Report required in AQ-C8.	N	na	Quarterly	Quarterly during operation	Quarterly			8-Jul-10	Not Started		
AQ	34	natural gas <H2S greater than 0.25 gains per 100 scf	Y	The project owner shall submit fuel usage records and all other records and calculations required to demonstrate compliance with this condition as part of the Quarterly Operational Report required in AQ-C8.	N	na	Quarterly	Quarterly during operation	Quarterly			8-Jul-10	Not Started		
AQ	35	1,500 million cubic standard feet (mmcsf) limit per month	Y	The project owner shall submit fuel usage records and all other records and calculations required to demonstrate compliance with this condition as part of the Quarterly Operational Report required in AQ-C8.	N	na	Quarterly	Quarterly during operation	Quarterly			8-Jul-10	Not Started		
AQ	36	Record keeping, natural gas fuel use after CEMS certification, during commissioning, after commissioning period and prior to the CEMS certification.	Y	The project owner shall submit fuel usage records and all other records and calculations required to demonstrate compliance with this condition as part of the Quarterly Operational Report required in AQ-C8.	N	na	Quarterly	Quarterly during operation	Quarterly			8-Jul-10	Not Started		
AQ	37	PM emissions less than 100 tons in any one year	Y	The project owner shall submit to the CPM for approval all emissions and emission calculations on a quarterly basis as part of the quarterly emissions report of Condition of Certification AQ-C8.	N	na	Quarterly	Quarterly during operation	Quarterly			8-Jul-10	Not Started		
AQ	38	Compliance determination (District Rule 475)	Y	The project owner shall submit to the CPM for approval all emissions and emission calculations on a quarterly basis as part of the quarterly emissions report of Condition of Certification AQ-C8.	N	na	Quarterly	Quarterly during operation	Quarterly			8-Jul-10	Not Started		
AQ	39	Operate and maintain equipment according to COCs	N	The project owner shall make the site available for inspection by representatives of the District, CARB, EPA and the Commission.	N	na	na	Site Inspections	As Needed			8-Jul-10	As Needed		
AQ	40	Not Operate Simultaneously	N	The project owner shall make the site available for inspection by representatives of the District, CARB, EPA and the Commission.	N	na	na	Site Inspections	As Needed			8-Jul-10	As Needed		
BIO	7	Designated Biologist Duites	Y	Designated Biologist shall maintain written records of the tasks described above, and summaries of these records shall be submitted in the Monthly Compliance Reports. As necessary during project operation, the Designated Biologist shall submit record summaries in the Annual Compliance Report.	N	na	Monthly	Monthly Compliance Report	10th business day of each month	7-Apr-11		8-Jul-10	In Progress		
BIO	8	Designated Biologist	Y	The project owner's Construction/Operation Manager shall act on the advice of the Designated Biologist to ensure conformance with the biological resources Conditions of Certification.	N	5	days after	corrective action	As Needed	7-Apr-11		8-Jul-10	As Needed		
BIO	9	Biological Resources Mitigation Implementation and Monitoring Plan (BRMIMP)	Y	The project owner shall provide the CPM with the final version of the BRMIMP for this project, and the CPM will determine the plans acceptability.	N	30	days prior to	start of any site mobilization activities related to the beach front or the beach delivery system	As Needed			8-Jul-10	As Needed		Beach Delivery Only
BIO	10	Worker Environmental Awareness Program	Y	The project owner shall develop and implement a CPM approved WEAP (biological resources) in which each of its employees, as well as employees of contractors and subcontractors who work on the project site or related facilities during construction and operation, are informed about sensitive biological resources associated with the project.	N	30	days prior to	start of any site mobilization activities related to the beach front or the beach delivery system	As Needed			8-Jul-10	As Needed		Beach Delivery Only
BIO	11	Acquire any USACE permit	Y	the project owner shall submit to the CPM a copy of the USACE permit required to construct any project related features	Y	30	days prior to	start of any site mobilization activities related to the beach front or the beach delivery system	As Needed			8-Jul-10	As Needed		Beach Delivery Only
BIO	12	USFWS Biological Opinion	Y	The project owner must provide the CPM with a copy of the USFWS recommendations if formal or informal consultation between USFWS and USACE occurs. All terms and conditions resulting from the consultation will be incorporated into the BRMIMP.	Y	30	days prior to	start of any site mobilization activities related to the beach front or the beach delivery system.	As Needed			8-Jul-10	As Needed		Beach Delivery Only
BIO	13	Acquire and implement 401 State Clean Wate Act certification	Y	the project owner will provide the CPM with a copy of the final Regional Water Quality Control Board certification.	Y	30	days prior to	start of any site mobilization activities related to the beach front or the beach delivery system	As Needed			8-Jul-10	As Needed		Beach Delivery Only
BIO	14	Incorporate measures that address the Local Biological Resources into the Planned Permanent or Unexpected Permanent Closure Plan.	Y	The project owner shall address all Biological Resource-related issues associated with facility closure in a Biological Resources Element (BRE) and incorporate the BRE into the Facility Closure Plan, including a complete discussion of the local biological resources and proposed facility closure mitigation measures.	Y	365	days prior to	commencement of Closure Activities	As Needed			8-Jul-10	As Needed		
CIVIL	1	Submit proposed drainage structures and the grading plan; erosion and sedimentation control plan; calculations and specifications approved by civil engineer; and, soils report	Y	**1).** The project owner shall submit the documents described above to the CBO for design review and approval.	Y	15	days prior to	Start Grading	16-Jun-11	3/15/2011, 6/6/11	30-Mar-11		In Progress	2	Entry Road: 3/15/11 Tank Farm: 6/16/11 (in review) N Const Area: 6/6/11 (dispo received 7/14 - Resp Req)

Compliance Matrix
El Segundo Power Redevelopment Project
Docket 00-AFC-14C

Technical Area	COC No.	Condition Short Description	Deliverable Req.	Verification Action	Required Prior to Start of Constuction?	Action Days	Submittal Timing	Submittal Trigger Event	Expected Submittal Date	Actual Submittal Date	Submittal Action Approval Date	Amended Date	Compliance Status	Priority (Tier 1, 2, or 3)	Comments
CIVIL	1	Submit Pre-Grading Plans	Y	**2).** The project owner shall submit a written statement certifying that the documents have been approved by the CBO.	Y	na	in the next	Monthly Compliance Report	10th business day of each month				In Progress	2	
CIVIL	2	Stop All Affected Work For Unforseen Conditions	Y	1). The project owner shall notify the CPM, when earthwork and construction is stopped as a result of unforeseen adverse geologic/soil conditions..	N	5	days following	Inspection with Discrepancies or Unforseen Adverse Situations	As Needed				As Needed	3	
CIVIL	2	Stop All Affected Work For Unforseen Conditions	Y	**2).** The project owner shall provide to the CPM a copy of the CBO's approval to resume earthwork and construction in the affected areas.	N	5	days following	CBO's approval to resume work	As Needed				As Needed	3	
CIVIL	3	Perform Inspections Per CBC	Y	**1).** On discovery of any discrepancies, the resident engineer shall transmit to the CBO and the CPM a Non-Conformance Report (NCR), and the proposed corrective action.	N	5	days following	Inspection with Discrepancies or Unforseen Adverse Situations	As Needed				As Needed	3	
CIVIL	3	Perform Inspections Per CBC	Y	**2).** The project owner shall submit the details of the corrective action to the CBO and the CPM.	N	5	days following	Resolution of Discrepancies or Unforseen Adverse Situations	As Needed				As Needed	3	
CIVIL	3	Perform Inspections Per CBC	Y	**3).** A list of NCRs, for the reporting month, shall also be included in the following Monthly Compliance Report.	N	10	days after beginning of each month	Monthly Compliance Report	10th business day of each month				As Needed	3	
CIVIL	4	Obtain CBO Approval of As Graded and As Built Plans	Y	**1).** The project owner shall submit to the CBO the responsible civil engineer's signed statement that the installation of the facilities and all erosion control measures were completed in accordance with the final approved combined grading plans, and that the facilities are adequate for their intended purposes.	N	30	days following	Completion of Erosion and Sediment Control Plan	TBD				Not Started	3	Post construction inspection - no action neeeded right now
CIVIL	4	Obtain CBO Approval of As Graded and As Built Plans	Y	**2).** The project owner shall submit a copy of this report to the CPM in the next Monthly Compliance Report.	N	na	in the next	Monthly Compliance Report	10th business day of each month				Not Started	3	
COM	5	Compliance Matrix	Y	Submit with first monthly report as well as each consecutive monthly report	Y	10	business days after beginning of each month	General Compliance Requirements	10th business day of each month	by 10th business day of month per COM-5			In Progress	1	
COM	6	Monthly Compliance Report	Y	Submit the first monthly report for the first month after the CEC business meeting for project approval	Y	10	business days after beginning of each month	Monthly Compliance Report	10th business day of each month	by 10th business day of month per COM-6	13-Apr-07		In Progress	1	
COM	11	Planned Closure	Y	**1).** The project owner shall submit a proposed facility closure plan to the Energy Commission for review and approval	Y	365	days prior	Commencment of Closure Activities	As Needed			8-Jul-10	As Needed	3	
COM	7	Annual Compliance Report	Y	After Construction is complete, begin submitting annual reports in lieu of monthly reports, on a schedule agreed to by the CPM.	N	na	na	Annual Compliance Report	Annually during operation				Not Started	2	
COM	8	Confidential information	Y	**1).** Any information that the project owner deems confidential shall be submitted to the Energy Commission's Executive Director with an application for confidentiality pursuant to Title 20, California Code of Regulations, section 2505(a).	N	na	na	General Compliance Requirements	Not Specified			8-Jul-10	In Progress	2	Note: Original COM-8 (Construction Operation & Security Plan) deleted in last Decision
COM	8	Confidential information	Y	**2).** Any information that is determined to be confidential shall be kept confidential as provided for in Title 20, California Code of Regulations, section 2501, et. seq.	N	na	na	General Compliance Requirements	Not Specified			8-Jul-10	Not Started	2	
COM	11	Planned Closure	Y	**2).** The project owner shall file 120 copies (or other number of copies agreed upon by the CPM) of a proposed facility closure plan with the Energy Commission.	Y	na	na	General Compliance Requirements	Not Specified			8-Jul-10	Not Started	3	
COM	11	Planned Closure	Y	**3).** Prior to submittal of the proposed facility closure plan, a meeting shall be held between the project owner and the Energy Commission CPM for the purpose of discussing the specific contents of the plan.	Y	na	na	General Compliance Requirements	As Needed			8-Jul-10	As Needed	3	
COM	11	Planned Closure	Y	**4). P**rior to or during the closure plan process, the project owner shall take appropriate steps to eliminate any immediate threats to public health and safety and the environment, but shall not commence any other closure activities until the Energy Commission approves the facility closure plan.	Y	na	na	Closure Plan Process	Not Specified			8-Jul-10	Not Started	3	
COM	1	Unrestricted Access	N	None	N	na	na	General Compliance Requirements	na				In Progress	3	
COM	2	Compliance Record	N	None	N	na	na	Filing Requirement	na				In Progress	3	
COM	3	Compliance Verification Submittals	Y	Verification must include a cover letter and certain minimum requirements.	Y	na	na	General Compliance Requirements	See Individual COCs				In Progress	3	
COM	9	Annual Energy Facility Compliance Fee	Y	The project owner is required to pay an annual compliance fee, which is adjusted annually.	Y	na	na	General Compliance Requirements	July 1 of each year			8-Jul-10	In Progress	3	
COM	12	Unplanned temporary closure contingency plan	Y	**1).** Submit on-site contingency plan to the CPM for review and approval.	Y	60	days prior to	Start Commercial Operations	2-Jun-13			8-Jul-10	Not Started	3	
COM	12	Unplanned temporary closure contingency plan	Y	**2).** Notify the CPM and other responsible agencies of any unplanned closure	Y	1	days following	Facility Closure	As Needed			8-Jul-10	As Needed	3	
COM	12	Unplanned temporary closure contingency plan	Y	**3).** If the CPM determines that the unplanned temporary closure is likely to be permanent or for a duration of more than twelve months, a closure plan consistent with a planned closure shall be submitted to the CPM within 90 days of the CPM's determination	N	90	days following	Facility Closure	As Needed			8-Jul-10	As Needed	3	
COM	13	Unplanned Permanent Closure/On-Site Contingency Plan	Y	**1).** Notify the CPM and other responsible agencies of the closure and take necessary steps to implement closure plan	N	1	days following	Facility Closure	As Needed			8-Jul-10	As Needed	3	
COM	13	Unplanned Permanent Closure/On-Site Contingency Plan	Y	**2).** Submit a closure plan consistent with a planned closure to the CPM within 90 days of the permanent closure	N	90	days following	Facility Closure	As Needed			8-Jul-10	As Needed	3	

Compliance Matrix
El Segundo Power Redevelopment Project
Docket 00-AFC-14C

Technical Area	COC No.	Condition Short Description	Deliverable Req.	Verification Action	Required Prior to Start of Constuction?	Action Days	Submittal Timing	Submittal Trigger Event	Expected Submittal Date	Actual Submittal Date	Submittal Action Approval Date	Amended Date	Compliance Status	Priority (Tier 1, 2, or 3)	Comments
COM	14	Post Certification Changes to the Energy Commission Decision: Amendments, Ownership Changes, Staff Approved Project Modifications and Verification Changes	Y	The project owner must petition the Energy Commission pursuant to Title 20, California Code of Regulations, section 1769, in order to modify the project (including linear facilities) design, operation or performance requirements, and to transfer ownership or operational control of the facility.	N	na	na	Modification of Project Design	As Needed			8-Jul-10	As Needed		
CUL	1	Designate Cultural Resources Specialist meeting minimum requirements	Y	2). Termination or release of the CRS, the project owner shall submit the resume of the proposed replacement CRS.	Y	10	days prior to	Terminating Contractor or Project Monitor	As Needed				As Needed	3	
CUL	1	Designate Cultural Resources Specialist meeting minimum requirements	Y	4). If additional CRMs are needed later, the CRS shall submit written notice prior to any new CRMs beginning work.	Y	7	days prior to	Hiring New Contractor or Project Monitor	As Needed	As needed			As Needed	3	
CUL	2	Provide Maps & Drawings of Plant Footprint to CRS for Cultural Impact Assessment	Y	2). If there are changes to any project related footprint, revised maps and drawings shall be provided for those changes.	Y	15	days prior to	Start Ground Disturbance	As Needed				As Needed	1	
CUL	2	Provide Maps & Drawings of Plant Footprint to CRS for Cultural Impact Assessment	Y	3). If project construction is phased, the project owner shall submit the subject maps and drawings to each phase.	Y	15	days prior to	Project Phases	As Needed				As Needed	1	
CUL	2	Provide CRS with a Weekly Report of areas of ground disturbance during the Ground Disturbance Phase for the upcoming week.	Y	4). A current schedule of anticipated project activity shall be provided to the CRS on a weekly basis	Y	7	days prior to	Start Ground Disturbance	As Needed				As Needed	1	
CUL	2	Provide CRS with a Weekly Report of areas of ground disturbance during the Ground Disturbance Phase for the upcoming week.	Y	4). The weekly CRS reports of anticipated project activities shall be provided in the Monthly Compliance Report	N	10	business days after beginning of each month	Monthly Compliance Report	10th business day of each month				In Progress	1	
CUL	2	Notify CRS and CPM of any changes to the construction schedule	Y	5). The project owner shall provide written notice of any changes to scheduling of construction phases.	Y	5	days prior to	Construction Schedule Changes	As Needed				As Needed	1	
CUL	4	Submit Cultural Resources Report	Y	1). The project owner shall submit the subject CRR.	N	90	days following	End of Ground Disturbance and Landscaping	30-Jan-13				Not Started	3	
CUL	4	Submit Cultural Resources Report	Y	2). The project owner shall provide documentation to the CPM that copies of the CRR have been provided to the curating institution (if archaeological materials were collected), the State Historic Preservation Officer (SHPO) and the CHRIS.	N	10	days following CPM approval of CRR for	End of Ground Disturbance	11-Apr-13				Not Started	3	
CUL	5	Worker Environmental Awareness Program; weekly training of new employees for duration of Ground Disturbance	Y	The project owner shall provide in the Monthly Compliance Report the WEAP Certification of Completion form of persons who have completed the training in the prior month and a running total of all persons who have completed training to date.	N	10	days after beginning of each month	Monthly Compliance Report	10th business day of each month				In Progress	1	
CUL	6	Cultural Resources Monioring; full time monitoring of ground disturbance and daily log report non-compliance and recommend actions to return to compliance	Y	1). If the CRS wishes to reduce the level of monitoring occurring at the project, a letter identifying the area(s) where the CRS recommends the reduction and justifying the reductions in monitoring shall be submitted to the CPM for review and approval.	N	na	na	Plan or Permit Revision Notification	As Needed				As Needed	1	
CUL	6	Monitor ground disturbance full time	Y	2). The project owner shall include in the MCR to the CPM copies of the weekly summary reports prepared by the CRS regarding project-related cultural resources monitoring.	N	10	days after beginning of each month	Monthly Compliance Report	10th business day of each month				In Progress	1	
CUL	6	Monitor ground disturbance full time	N	3). Copies of daily logs shall be retained on-site and made available for audit by the CPM.	N	na	na	Filing Requirement	na				In Progress	1	
CUL	6	Monitor ground disturbance full time	Y	4). In recognition of a non-compliance issue, the CRS shall notify the CPM by telephone of the problem and of steps being taken to resolve the problem. The telephone call shall be followed by an e-mail or fax detailing the non-compliance issue and the measures necessary to achieve resolution of the issue.	N	24	hours following event	Cultural Non-Compliance	As Needed				As Needed	3	
CUL	6	Monitor ground disturbance full time	Y	5). Daily logs shall include forms detailing any instances of a non-compliance issue that describes the issue, resolution of the issue and the effectiveness or the resolution measures, shall be provided in the next MCR.	N	10	days after beginning of each month	Monthly Compliance Report	10th business day of each month				In Progress	3	
CUL	6	Monitor ground disturbance full time	Y	7). If efforts to obtain the services of a qualified Native American monitor are unsuccessful, the project owner shall immediately inform the CPM who will initiate a resolution process.	Y	1	days prior to	Hiring New Contractor or Project Monitor	As Needed				As Needed	3	
CUL	7	Designated Cultural Resource Specialist Authority	N	2). The CRS or project owner will notify the CPM immediately of any halt of construction activities, including the circumstance and proposed mitigation measures.	N	Next Morning, or Monday for Weekends	after	Halting of Ground Disturbance	As Needed				As Needed	3	
CUL	8	Water Pipeline Realignment	Y	Prior to the start of any ground disturbance or project site preparation at the newly identified location of the waterlines and associated pipelines, the project owner shall submit the following for approval by the CPM: 1) The results of the records search and the results of the survey; 2) An evaluation, including site records, of all cultural resources within or adjacent to the project Area of Potential Effects; and 3) The information shall also include the name and tribal affiliation of the Native American monitor.	Y	40	days prior to	Start Ground Disturbance or Project Site Preparation	As Needed				As Needed	3	
ELEC	1	480 Volt and Higher Systems Approved	Y	1). Prior to the start of each increment of electrical construction, the project owner shall submit to the CBO for design review and approval the above listed documents.	Y	30	days prior to	Major Construction Increment	As Needed				As Needed	3	No action needed right now

Technical Area	COC No.	Condition Short Description	Deliverable Req.	Verification Action	Required Prior to Start of Constuction?	Action Days	Submittal Timing	Submittal Trigger Event	Expected Submittal Date	Actual Submittal Date	Submittal Action Approval Date	Amended Date	Compliance Status	Priority (Tier 1, 2, or 3)	Comments
ELEC	1	480 Volt and Higher Systems Approved	Y	2). The project owner shall include in this submittal a copy of the signed and stamped statement from the responsible electrical engineer attesting compliance with the applicable LORS, and shall send the CPM a copy of the transmittal letter in the next Monthly Compliance Report.	Y	na	in the next	Monthly Compliance Report	10th business day of each month				Not Started	3	
GEN	2	Submit Schedules and Drawing Lists to CPM and CBO	Y	2). The project owner shall provide schedule updates in the Monthly Compliance Report.	N	10	days after beginning of each month	Monthly Compliance Report	10th business day of each month				In Progress	1	Following approval of schedule, updates will be provided in MCR.
GEN	4	Assign Resident Engineer/ Duties of RE	Y	3). If the RE or the delegated engineer(s) are subsequently reassigned or replaced, the project owner must submit the name, qualifications, and registration number of the newly assigned engineer to the CBO for review and approval.	N	5	days following	Terminating Contractor or Project Monitor	As Needed				As Needed	2	
GEN	1	Construct in accordance with California Building Code	Y	**1).** The project owner shall submit to the California Energy Commission Compliance Project Manager (CPM) a statement of verification, signed by the responsible design engineer, attesting that all designs, construction, installation and inspection requirements of the applicable LORS and the Energy Commission's Decision have been met in the area of facility design.	N	30	days following	Receipt of Certificate of Occupancy	1-Dec-12			8-Jul-10	Not Started	3	
GEN	1	Construct in accordance with California Building Code	Y	**2).** The project owner shall provide the CPM a copy of the Certificate of Occupancy [2007 CBC, Section 109 – Certificate of Occupancy].	N	30	days following	Receipt of Certificate of Occupancy	1-Dec-12			8-Jul-10	Not Started	3	
GEN	3	Pay the CBO for design review, plan check, and construction inspection	Y	**1).** The project owner shall make the required payments to the CBO in accordance with the agreement between the project owner and the CBO.	N	na	na	Fee Payment	As Needed				As Needed	3	
GEN	3	Pay the CBO for design review, plan check, and construction inspection	Y	**2).** The project owner shall send a copy of the CBO's receipt of payment to the CPM in the next Monthly Compliance Report indicating that the applicable fees have been paid.	N	10	days after beginning of each month	Monthly Compliance Report	10th business day of each month				In Progress	3	
GEN	4	Assign Resident Engineer/ Duties of RE	Y	**4).** The project owner shall notify the CPM of the CBO's approval of the new engineer.	N	5	days following	Hiring New Contractor or Project Monitor	As Needed				In Progress	3	
GEN	5	Assign and Duties of Other Engineers	Y	**3).** If the designated responsible engineer is subsequently reassigned or replaced, the project owner must submit the name, qualifications, and registration number of the newly assigned engineer to the CBO for review and approval.	N	5	days following	Terminating Contractor or Project Monitor	As Needed				As Needed	3	
GEN	5	Assign and Duties of Other Engineers	Y	**4).** The project owner shall notify the CPM of the CBO's approval of the new engineer.	N	5	days following	Hiring New Contractor or Project Monitor	As Needed				As Needed	3	
GEN	6	Assign and Duties of Special Inspectors	Y	**1).** The project owner shall submit to the CBO for review and approval, with a copy to the CPM, the name(s) and qualifications of the certified weld inspector(s), or other certified special inspector(s) assigned to the project to perform one or more of the duties set forth above.	Y	15	days prior to	Activity Requiring Special Inspection	As Needed				As Needed	3	
GEN	6	Assign and Duties of Special Inspectors	Y	**2).** The project owner shall also submit to the CPM a copy of the CBO's approval of the qualifications of all special inspectors in the next Monthly Compliance Report.	N	na	in the next	Monthly Compliance Report	10th business day of each month				Not Started	1	
GEN	6	Assign and Duties of Special Inspectors	Y	**3).** If the special inspector is subsequently reassigned or replaced, the project owner must submit the name and qualifications of the newly assigned special inspector to the CBO for approval.	N	5	days following	Terminating Contractor or Project Monitor	As Needed				As Needed	3	
GEN	6	Assign and Duties of Special Inspectors	Y	**4).** The project owner shall notify the CPM of the CBO's approval of the newly assigned inspector.	N	5	days following	Hiring New Contractor or Project Monitor	As Needed				As Needed	3	
GEN	7	Keep CBO Informed on Status of Construction	Y	**1).** The project owner shall transmit a copy of the CBO's approval of any corrective action taken to resolve a discrepancy to the CPM.	N	na	in the next	Monthly Compliance Report	10th business day of each month				As Needed	3	
GEN	7	Keep CBO Informed on Status of Construction	Y	**2).** If any corrective action is disapproved, the project owner shall advise the CPM of the reason for disapproval, and the revised corrective action to obtain CBO's approval.	N	5	days following	Plan or Permit Revision Notification	As Needed				As Needed	3	
GEN	8	Obtain CBO Approval of All Completed Work	Y	**1a).** The project owner shall submit to the CBO, with a copy to the CPM in the next Monthly Compliance Report, a written notice that the completed work is ready for final inspection.	N	15	days following	Completion of any Work	As Needed			8-Jul-10	As Needed	3	
GEN	8	Obtain CBO Approval of All Completed Work	Y	**1b).** The project owner shall submit to the CBO, with a copy to the CPM in the next Monthly Compliance Report, a signed statement that the work conforms to the final approved plans.	N	15	days following	Completion of any work	As Needed			8-Jul-10	As Needed	3	
GEN	8	Obtain CBO Approval of All Completed Work	Y	**2).** After storing final approved engineering plans, specifications and calculations as described above, the project owner shall submit to the CPM a letter stating that the above documents have been stored and indicate the storage location of such documents.	N	na	na	Filing Requirement	na				Not Started	3	
GEO	3	Conduct Slope Stability Analysis on existing cut slope east of Units 1 & 2	Y	The project owner shall include in the application for a grading permit (see Condition of Certification **GEO-5 below**) a report of the slope stability analysis and a summary of how the results of this analysis were incorporated into the project foundation and grading plan design for the CBO's review and comment. A copy of the CBO's comments shall be sent to the CPM prior to grading.	Y	1	day prior to	Submittal of Grading Permit	30-Jun-07	30-Jun-07			In Progress	2	
GEO	1	Designate Certified Engineering Geologist & Geotechnical Engineer	Y	**3).** If the engineering geologist(s) and geotechnical engineer(s) are subsequently replaced, the project owner shall submit for approval the resume(s) and license number(s) of the newly assigned individual(s) to the CBO and CPM.	N	1	days prior to	Terminating Contractor or Project Monitor	As Needed				As Needed	3	
GEO	1	Designate Certified Engineering Geologist & Geotechnical Engineer	Y	**4).** The CBO and CPM will approve or disapprove of the engineering geologist(s) and geotechnical engineer(s) and will notify the project owner of the findings.	N	15	days following	Resume Submittal	As Needed				As Needed	3	

Technical Area	COC No.	Condition Short Description	Deliverable Req.	Verification Action	Required Prior to Start of Constuction?	Action Days	Submittal Timing	Submittal Trigger Event	Expected Submittal Date	Actual Submittal Date	Submittal Action Approval Date	Amended Date	Compliance Status	Priority (Tier 1, 2, or 3)	Comments
GEO	4	Conduct a 10 Year Shoreline Monitoring Program and access erosion on the beach area	Y	**2).** Applicant shall submit the results of assessment as part of its Annual Compliance Report	N	na	na	Annual Compliance Report	Annually during operation			8-Jul-10	Not Started	3	
GEO	4	Conduct a 10 Year Shoreline Monitoring Program and access erosion on the beach area	Y	**3).** Applicant shall also, at that time, forward the results to the California Coastal Commission and the City of El Segundo with a copy of the transmittal letter to the CPM.	N	na	na	Annual Compliance Report	Annually during operation				Not Started	3	
GEO	4	Conduct a 10 Year Shoreline Monitoring Program and access erosion on the beach area	Y	**4).** During the first 3 years following commencement of construction, the Applicant shall submit the above mentioned quarterly reports.	N	30	days following the end of each calendar quarter	Quarterly during first three years of construction	Quarterly				In Progress	1	Baseline Monitoring Report Submitted 4/8/2011; Quarterly report submitted 7/8/2011
GEO	4	Conduct a 10 Year Shoreline Monitoring Program and access erosion on the beach area	Y	**5).** The tenth annual report shall contain the final report.	N	na	na	Annual Compliance Report	Annually during operation				In Progress	3	
GEO	5	Engineering Geologist Duties	Y	**1).** The project owner shall submit a signed statement to the CPM stating that the Engineering Geology Report has been submitted to the CBO as a supplement to the plans and specifications and that the recommendations contained in the report are incorporated into the plans and specifications.	Y	15	days after submittal of	Submittal of Grading Permit	TBD				In Progress	3	
GEO	5	Engineering Geologist Duties	Y	**2).** The project owner shall submit copies of the Final Engineering Geology Report required by the 1998 CBC Appendix Chapter 33, Section 3318 Completion of Work, to the CBO and to the CPM.	N	90	days following	Completion of Grading	30-Jan-13				Not Started	3	
GEO	6	Seawall design and construction methods approved	Y	Once a seawall design plan is available, the Applicant shall obtain approval of the design and construction methods from the CBO who will forward all approved plans and comments to the CPM. The CPM shall then forward this information to the Coastal Commission and the City of El Segundo.	Y	na	na	Plan or Permit Revision Notification	As Needed				As Needed	3	
HAZ	1	Advance Approval of Hazardous Materials In Excess of Title 40 or Table 5.15-2 Required	Y	**1).** The project owner shall provide to the CPM, a list of those hazardous materials designated as regulated substances as set forth in Title 40, CFR Part 355, Subpart J section 355.50. The list shall also include maximum quantities of these substances at the facility.	N	na	na	Annual Compliance Report	Annually during operation				Not Started	3	
HAZ	1	Advance Approval of Hazardous Materials In Excess of Title 40 or Table 5.15-2 Required	Y	**2).** Copies of the list should also be provided to the City of El Segundo Fire Department (CESFD) and the City of Manhattan Beach Fire Department (CMBFD).	N	na	na	Annual Compliance Report	Annually during operation				Not Started	3	
HAZ	2	Provide Updated Business Plan	Y	The owner shall undertake a hazardous materials floor plan exercise for each shift at the plant with the CESFD and provide a copy of the revised Business Plan, commented on by the CESFD, to the CPM. A copy of the revised Plan shall also be provided to the CMBFD.	N	45	days prior to	Start of ESPR project Units	18-Jul-12				Not Started	3	
HAZ	3	Risk Management Plan Revision	Y	**1).** The project owner shall furnish a final copy of each updated RMP to the CPM, CESFD and CMBFD. An initial draft of the CalARP RMP shall be provided to the CPM and the CESFD for review and comments. The final CalARP RMP shall be approved by the CPM.	N	45	days prior to	Start-up of Units 5,6, and 7	18-Jul-12				Not Started	3	
HAZ	3	Risk Management Plan Revision	Y	**2)**. Similarly, an initial draft of the USEPA RMP shall be provided to the CPM and the CESFD for review and comments, at the time it is submitted to the USEPA for review. The final copy of the USEPA RMP shall reflect recommendations of the CPM and the CESFD.	N	45	days prior to	Start-up of Units	18-Jul-12				Not Started	3	
LAND	5	Notification of Plan for Abandoned Fuel Tank Farm Area	Y	**1).** The project owner shall provide written notification to the planning departments of the City of El Segundo and the City of Manhattan Beach and to the Executive Director of the California Coastal Commission who shall have 30 calendar days to provide written comments to the CPM to review.	N	30	to provide	Written comments to CPM	As Needed				As Needed	3	
LAND	5	Notification of Plan for Abandoned Fuel Tank Farm Area	Y	**2).** Prior to submitting any building permit applications to any other agency for development of the abandoned fuel tank farm area (Parcel 2); the project owner shall provide a copy of the written notification to the CPM.	Y	60	days prior to	Future Plant Development	As Needed				As Needed	3	
LAND	5	Notification of Plan for Abandoned Fuel Tank Farm Area	Y	**3).** The project owner shall also provide copies of the written notification sent to the Cities of El Segundo, Manhattan Beach and to the Executive Director of the California Coastal Commission	Y	60	days prior to	Future Plant Development	As Needed				As Needed	3	
LAND	7	Provide final grading and drainage plans to COES and COMB	Y	Pursuant to the schedule contained in Condition of Certification **CIVIL-1,** the project owner shall also submit copies of the proposed drainage structures and grading plan to the City of El Segundo planning department and the City of Manhattan Beach planning department concurrent with their submittal to the Chief Building Official (CBO) and CPM.	Y	15	days prior to	Start Grading	16-Jun-11	3-May-11			In Progress	2	Provided 2 sets of Entry Road Modification Drawings to CBO for submittal to Cities on 5/3/2011
LAND	10	Bikeway Closure or Width Reduction	Y	**1).** The project owner is to contact the Los Angeles County Department of Public Works Construction Division and Bikeway Coordinator.	Y	30	days prior to	Start of Pre-Construction Activity involving Bikeway	TBD			8-Jul-10	Not Started	2	
LAND	10	Bikeway Closure or Width Reduction	Y	**2).** The project owner is to provide to the CPM a copy of the transmittal letter submitted to the Department of Public Works Construction Division and the Bikeway Coordinator requesting their review.	Y	30	days prior to	Closure of Bikeway	TBD			8-Jul-10	Not Started	2	
LAND	10	Bikeway Closure or Width Reduction	Y	**3).** The project owner is to provide to the CPM a copy of the written comments provided by the Department of Public Works Construction Division and the Bikeway Coordinator on the scheduled for bike trail closure and trail use interruption, the detour route, the installation of public signage and notification.	Y	30	days prior to	Closure of Bikeway	TBD			8-Jul-10	Not Started	2	
LAND	10	Bikeway Closure or Width Reduction	Y	**4).** The project owner is to notify the Construction Division, Bikeway Coordinator, and the CPM after posting signage along the bicycle trail.	Y	1	day after	Posting signage along bicycle trail	As Needed			8-Jul-10	As Needed	2	
LAND	10	Bikeway Closure or Width Reduction	Y	**5).** The project owner is to notify the Bikeway Coordinator after any reopening from a scheduled closure of the bicycle trail.	N	1	day after	Reopening from a scheduled closure	As Needed			8-Jul-10	As Needed	2	

Technical Area	COC No.	Condition Short Description	Deliverable Req.	Verification Action	Required Prior to Start of Constuction?	Action Days	Submittal Timing	Submittal Trigger Event	Expected Submittal Date	Actual Submittal Date	Submittal Action Approval Date	Amended Date	Compliance Status	Priority (Tier 1, 2, or 3)	Comments
LAND	10	Bikeway Closure or Width Reduction	Y	**6).** The project owner is to provide the CPM with a complaint resolution form report and resolution explanation.	N	2	days after	Receiving a bicyle related trail complaint	As Needed			8-Jul-10	As Needed	2	
LAND	3	FAA Stack Marking	Y	Pursuant to the schedule contained in Condition of Certification **TRANS- 6,** the project owner shall submit copies of the FAA Form 7460-1 with copies of the FAA response to Form 7460-1 to the CPM.	Y	30	days prior to	Start of Construction	2-May-11	3-May-11			In Progress	1	
LAND	6	Remove tanks prior to start of commercial operations of new units, remediate after removal, and pave and landscape area according to VIS-2.	Y	**1).** The project owner shall submit a detailed schedule for the removal of the fuel storage tanks, site remediation and/or soil restoration to the CPM for review and approval prior to the start of construction.	Y	30	days prior to	Start Construction	2-May-11	18-Mar-11			In Progress	1	
LAND	6	Remove tanks prior to start of commercial operations of new units, remediate after removal, and pave and landscape area according to VIS-2.	Y	**2).** Tanks must be removed prior to start of commercial operations of new units. Area must also be remediated and converted to limited-use parking area with landscaping.	Y	1	days prior to	Start Commercial Operations	31-Jul-13				Not Started	3	
LAND	8	Maintain lease rights with State Lands Commission and provide copies of new or amended agreements to CPM	Y	**1).** The project owner shall provide the CPM with a copy of submitted lease applications filed with the State Lands Commission and other relevant correspondence.	N	na	na	New Permits/Licenses	Not Specified	16-Jan-07			In Progress	3	
LAND	8	Maintain lease rights with State Lands Commission and provide copies of new or amended agreements to CPM	Y	**2).** The project owner shall submit to the CPM a copy of all new or amended lease agreements with the California State Lands Commission.	N	na	na	New Permits/Licenses	Not Specified	10-Mar-07			As Needed	3	
LAND	9	Provide final perimeter landscape plan with park benches	Y	**1).** The public park-type benches shall be installed pursuant to the schedule contained in Condition of Certification **VIS-2**.	N	na	na	Completion of Public Use Area	TBD				In Progress	3	
LAND	9	Provide final perimeter landscape plan with park benches	N	**2).** The project owner shall contact the CPM to request a final inspection.	N	14	days following	Completion of Public Use Area	TBD				Not Started	3	
LAND	11	Bikeway Restoration	Y	1). The project owner is to notify the Los Angeles County Department of Public Works Construction Division and the CPM upon completion of the restoration/repair of the bicycle trail that it is ready for inspection.	N	na	na	Completion of Bikeway restoration	TBD			8-Jul-10	Not Started		
LAND	11	Bikeway Restoration	Y	**2).** If upon completion of the site inspection by the Los Angeles County Department of Public Works Construction Division and the CPM, the CPM notifies the project owner that additional restoration/repair is needed, the project owner shall complete the specified work.	N	30	days within	Receiving notification of additional resporation/repair needed	As Needed			8-Jul-10	As Needed		
LAND	12	Beach Restoration	Y	**1).** The project owner is to video the beach delivery laydown area and provide a copy of it to the CPM.	Y	15	days prior to	Start of Pre-Construction on the beach	As Needed			8-Jul-10	As Needed		Beach Delivery Only
LAND	12	Beach Restoration	Y	**2).** The project owner is to notify the CPM after completion of the beach restoration that it is ready for inspection and provide the CPM with a video/DVD showing the restored beach area.	N	7	days after	Completion of Beach Restoration	As Needed			8-Jul-10	As Needed		Beach Delivery Only
LAND	13	California State Lands Commission Lease	Y	The project owner is to provide the CPM a copy of their executed lease or equivalent land use document with the California State Lands Commission.	Y	15	days prior to	Start of Pre-Construction Activity on Beach	As Needed			8-Jul-10	As Needed		Beach Delivery Only
LAND	14	Emergency Service Vehicle and Equipment Passage	Y	**1).** The project owner is to contact the Chief of Facilities and Property Management Division for the Los Angeles County Department of Beaches and Harbors, and the Chief Lifeguard of the Los Angeles County Fire Department to formalize the heavy equipment/emergency services vehicles passage or alternative option.	Y	30	days prior to	Start of Pre-Construction Activity on Beach	As Needed			8-Jul-10	As Needed		Beach Delivery Only
LAND	14	Emergency Service Vehicle and Equipment Passage	Y	**2).** The project owner is to provide to the CPM a map showing the agreed upon heavy equipment/emergency services vehicle passage or alternative option.	Y	10	days prior to	Start of Pre-Construction Activity on Beach	As Needed			8-Jul-10	As Needed		Beach Delivery Only
MECH	1	Submit Final Design for Each Piping System	Y	**1).** Prior to the start of any increment of major piping or plumbing construction listed in Table 1, Condition of Certification GEN-2, the project owner shall submit to the CBO for design review and approval the final plans, specifications and calculations, including a copy of the signed and stamped statement from the responsible mechanical engineer certifying compliance with the applicable LORS, and shall send the CPM a copy of the transmittal letter in the next Monthly Compliance Report.	Y	30	days prior to	Major Construction Increment	As Needed				In Progress	3	URS
MECH	1	Submit Final Design for Each Piping System	Y	**2).** The project owner shall transmit to the CPM, following completion of any inspection, a copy of the transmittal letter conveying the CBO's inspection approvals.	N	na	in the next	Monthly Compliance Report	10th business day of each month				In Progress	3	URS
MECH	2	Submit Certiifcation Records for Pressure Vessals	Y	**1).** Prior to the start of on-site fabrication or installation of any pressure vessel, the project owner shall submit to the CBO for design review and approval, the above listed documents, including a copy of the signed and stamped engineer's certification, with a copy of the transmittal letter to the CPM.	Y	30	days prior to	Major Construction Increment	As Needed				As Needed	3	URS
MECH	2	Submit Certiifcation Records for Pressure Vessels	Y	**2).** The project owner shall transmit to the CPM, following completion of any inspection, a copy of the transmittal letter conveying the CBO's and/or Cal- OSHA inspection approvals.	N	na	in the next	Monthly Compliance Report	10th business day of each month				Not Started	3	URS
MECH	3	Submit HVAC Design Plans	Y	Prior to the start of construction of any HVAC or refrigeration system, the project owner shall submit to the CBO the required HVAC and refrigeration calculations, plans and specifications, including a copy of the signed and stamped statement from the responsible mechanical engineer certifying compliance with the CBC and other applicable codes, with a copy of the transmittal letter to the CPM.	Y	30	days prior to	Major Construction Increment	As Needed				As Needed	3	URS
NOI	6	Ensure No Exceedance of Residential Noise Limits	Y	**2b).** Submit Post-Construction Noise Survey summary report of the survey to the CPM. Included in the report will be a description of any additional mitigation measures necessary to achieve compliance with the above noise limits, and a schedule, subject to CPM approval, for implementing these measures.	N	45	days following	Post-Construction Noise Survey	14-Aug-13				Not Started	3	Expected submittal date assumes survey will be performed beginning 6/1/13 following construction completion 4/1/13

Technical Area	COC No.	Condition Short Description	Deliverable Req.	Verification Action	Required Prior to Start of Constuction?	Action Days	Submittal Timing	Submittal Trigger Event	Expected Submittal Date	Actual Submittal Date	Submittal Action Approval Date	Amended Date	Compliance Status	Priority (Tier 1, 2, or 3)	Comments
NOI	2	Investigate and resolve Noise Complaints	Y	**1).** Contact the person making the Noise Complaint and conduct investigation.	N	2	days following	Noise or Other Project Complaint	As Needed				As Needed	2	
NOI	2	Investigate and resolve Noise Complaints	Y	**2).** File a copy of the Noise Complaint Resolution Form to the CPM	N	2	days following	Noise or Other Project Complaint	As Needed				As Needed	2	
NOI	2	Investigate and resolve Noise Complaints	Y	**3).** If the noise complaint is not resolved within 3 days, submit a progress report and proposed mitigation schedule to the CPM for approval and the affected City	N	5	days following	Noise or Other Project Complaint	As Needed				As Needed	2	
NOI	2	Investigate and resolve Noise Complaints	Y	**4).** The project owner shall provide to the CPM, in the applicable Monthly and/or Annual Compliance Report, a listing of noise complaints received in that time period, and the status of resolution of each complaint, including all those which have not yet been resolved.	N	10	days after beginning of each month	Monthly Compliance Report	10th business day of each month				In Progress	2	
NOI	9	Eliminate Vibrations and report complaints	Y	The project owner shall provide, in the applicable Monthly and/or Annual Compliance Report, a listing of vibration complaints received in that time period, and the status of resolution of each complaint, including all those which have not yet been resolved.	N	10	days after beginning of each month	Monthly Compliance Report	10th business day of each month				In Progress	2	
NOI	4	Low pressure steam blow shall be employed limited to ambient+5dB. Must submit steam blow description and plan	Y	The project owner shall submit to the CPM drawings or other information describing the steam blow process, including the noise levels expected and the projected time schedule for execution of the process.	Y	15	days prior to	Low Pressure Steam Blow	As Needed				As Needed	3	
NOI	5	Notice of Steam Blow	Y	**2).** The project owner shall send a letter to the CPM confirming that there has been appropriate notification to the residents, property owners, Cities and businesses of the planned steam blow activities, including a description of the method(s) of that notification.	N	5	days following	Low Pressure Steam Blow	As Needed				As Needed	3	
NOI	6	Ensure No Exceedance of Residential Noise Limits	Y	**2a).** Conduct Post-Construction Noise Survey after achieving 80 percent of rated capacity and within June 1 - September 30th using same techniques a pre-construction survey.	N	ASAP	within specified time limits	Achieve and Sustain 80 Percent Rated Capacity	TBD				Not Started	3	
NOI	6	Ensure No Exceedance of Residential Noise Limits	Y	**2b).** Submit report of post-construction noise survey to CPM.	N	45	days following	Completion of Post-Construction Noise Survey	TBD						
NOI	6	Ensure No Exceedance of Residential Noise Limits	Y	**3).** Mitigation Implementation: the project owner shall submit to the CPM a summary report of a new noise survey, performed as described in paragraph B and showing compliance with this condition. If mitigation is required, submit a summary review of measures taken	N	na	na	Noise Mitigation	As Needed				As Needed	3	
NOI	7	Conduct Occupational Noise Survey	Y	**1).** The project owner shall conduct an occupational noise survey to identify noise hazardous areas in plant.	N	30	days following	Achieve and Sustain 80 Percent Rated Capacity	TBD				Not Started	3	
NOI	7	Conduct Occupational Noise Survey	Y	**2).** The project owner shall submit the noise survey report, including proposed mitigation measures, to the CPM for review and approval.	N	30	days following	Achieve and Sustain 80 Percent Rated Capacity	TBD				Not Started	3	
NOI	7	Conduct Occupational Noise Survey	Y	**3).** The project owner shall make the report available to OSHA and Cal-OSHA upon request.	N	na	na	Achieve and Sustain 80 Percent Rated Capacity	Not Specified				Not Started	3	
PAL	1	Designate Paleo Resource Specialist (PRS) and Monitors	Y	**2b).** If additional monitors are obtained during the project, the PRS shall provide additional letters and resumes to the CPM for approval.	N	7	days prior to	Hiring New Contractor or Project Monitor	As Needed				As Needed	2	
PAL	1	Designate Paleo Resource Specialist (PRS) and Monitors	Y	**3).** Prior to the termination or release of a PRS, the project owner shall submit the resume of the proposed new PRS to the CPM for review and approval.	N	1	days prior to	Terminating Contractor or Project Monitor	As Needed				As Needed	2	
PAL	2	Provide maps and drawings to PRS	Y	**2).** If there are changes to the footprint of the project, revised maps and drawings shall be provided.	N	15	days prior to	Start Ground Disturbance	As Needed				In Progress	2	
PAL	2	Provide maps and drawings to PRS	Y	**3).** If there are changes to the scheduling of the construction phases, the project owner shall submit a letter to the CPM.	N	5	days prior to	Construction Schedule Changes	As Needed				As Needed	2	
PAL	4	Worker Environmental Awareness Program (WEAP)	Y	**3).** If an alternate paleontological trainer is requested by the owner, the resume and qualifications of the trainer shall be submitted to the CPM for review and approval. Alternate trainers shall not conduct training prior to CPM authorization.	N	1	days prior to	Hiring New Contractor or Project Monitor	As Needed				As Needed	3	
PAL	4	Worker Environmental Awareness Program (WEAP)	Y	**4).** The project owner shall provide in the Monthly Compliance Report the WEAP copies of the certification of completion forms with the names of those trained and the trainer for each training offered that month. The MCR shall also include a running total of all persons who have completed the training to date.	N	10	days after beginning of each month	Monthly Compliance Report	10th business day of each month				In Progress	3	
PAL	5	PRS Present When Needed	Y	**1).** The PRS shall prepare a summary of the monitoring report and other paleontological activities that will be placed in the Monthly Compliance Reports. **a).** the summary will include the name(s) of PRS or monitor(s) active during the month; general descriptions of training and construction activities and general locations of excavations, grading, etc.	N	10	days after beginning of each month	Monthly Compliance Report	10th business day of each month				In Progress	3	
PAL	5	PRS Present When Needed	Y	**1b).** a section of the report will include the geologic units or subunits encountered; descriptions of sampling within each unit; and a list of fossils identified in the field.	N	10	days after beginning of each month	Monthly Compliance Report	10th business day of each month				In Progress	3	
PAL	5	PRS Present When Needed	Y	**1c).** a final section of the report will address any issues or concerns about the project relating to paleontologic monitoring including any incidents of non-compliance and any changes to the monitoring plan that have been approved by the CPM.	N	10	days after beginning of each month	Monthly Compliance Report	10th business day of each month				In Progress	3	
PAL	5	PRS Present When Needed	Y	**2).** If no monitoring took place during the month, the project shall include a justification in summary as to why monitoring was not conducted	N	10	days after beginning of each month	Monthly Compliance Report	10th business day of each month				In Progress	3	

Compliance Matrix
El Segundo Power Redevelopment Project
Docket 00-AFC-14C

Technical Area	COC No.	Condition Short Description	Deliverable Req.	Verification Action	Required Prior to Start of Constuction?	Action Days	Submittal Timing	Submittal Trigger Event	Expected Submittal Date	Actual Submittal Date	Submittal Action Approval Date	Amended Date	Compliance Status	Priority (Tier 1, 2, or 3)	Comments
PAL	5	PRS Present When Needed	Y	**3).** The PRS shall submit the summary of monitoring and paleontological activities in the Monthly Compliance Report.	N	10	days after beginning of each month	Monthly Compliance Report	10th business day of each month				In Progress	3	
PAL	6	Preserve Paleontological Resources	N	**1).** The project owner shall maintain in their compliance file copies of signed contracts or agreements with the designated PRS and other qualified research specialists.	N	na	na	Filing Requirement	na				In Progress	3	
PAL	6	Preserve Paleontological Resources	N	**2).** The project owner shall maintain these files for a period of three years after completion and approval of the CPM-approved PRR.	N	na	na	Filing Requirement	na				In Progress	3	
PAL	6	Preserve Paleontological Resources	Y	**3).** The project owner shall be responsible to pay curation fees for fossils collected and curated as a result of paleontological monitoring and mitigation.	N	na	na	Fee Payment	As Needed				As Needed	3	
PAL	7	Paleontological Resources Report	Y	The project owner shall submit the Paleontological Resources Report under confidential cover.	N	90	days following	End of Ground Disturbance	30-Jan-13				Not Started	3	
SOC	1	Pay mitigation fees to City of El Segundo (consolidated previous conditions SOC-2,3,and 4, and TRANS-8)	Y	**1).** The project owner shall submit verification to the CPM that payment of any required public service mitigation fee(s) have been submitted to the City of El Segundo.	Y	7	days prior to	Start Commercial Operations	25-Jul-13				Not Started	3	
SOC	1	Pay mitigation fees to City of El Segundo (consolidatedc previous conditions SOC-2,3,and 4, and TRANS-8)	Y	**2).** The project owner shall provide proof of payment of the Traffic Mitigation Fee in the next Monthly Compliance Report following payment.	N	next monthly report	following	Start Commercial Operations	10-Sep-13				Not Started	3	
STRU	1	Obtain Incremental Lateral Force Procedures Approval	Y	**1).** Prior to the start of any increment of construction of any structure or component listed in Table 1 of Condition of Certification **GEN-2**, the project owner shall submit to the CBO, with a copy to the CPM, the responsible design engineer's signed statement that the final design plans, specifications and calculations conform with all of the requirements set forth in the Energy	Y	30	days prior to	Major Construction Increment	25-May-11	25-May-11			Not Started	3	HRSG Foundation & Calcs Submitted 5/25; Dispo (RR) received 6/15/11 - project owner working on response
STRU	1	Obtain Incremental Lateral Force Procedures Approval	Y	**2).** If the CBO discovers non-conformance with the stated requirements, the project owner shall correct and resubmit the plans to the CBO with a copy of the transmittal letter to the CPM.	Y	20	days following	Inspection with Discrepancies or Unforseen Adverse Situations	As Needed				As Needed	3	URS
STRU	1	Obtain Incremental Lateral Force Procedures Approval	Y	**3).** The project owner shall submit to the CPM a copy of a statement from the CBO that the proposed structural plans, specifications, and calculations have been approved and are in conformance with the requirements set forth in the applicable LORS.	Y	na	na	Plan or Permit Revision Notification	As Needed				As Needed	3	URS
STRU	2	Submit Reports for Tests and Other Strucutral Activities	Y	**1).** If a discrepancy is discovered in any of the above data, the project owner shall prepare and submit an NCR describing the nature of the discrepancies to the CBO, with a copy of the transmittal letter to the CPM. The NCR shall reference the Condition(s) of Certification and the applicable CBC chapter and section.	N	5	days following	Inspection with Discrepancies or Unforseen Adverse Situations	As Needed				As Needed	3	URS
STRU	2	Submit Reports for Tests and Other Strucutral Activities	Y	**2).** The project owner shall submit a copy of the corrective action to the CBO and the CPM.	N	5	days following	Resolution of Discrepancies or Unforseen Adverse Situations	As Needed				As Needed	3	URS
STRU	2	Submit Reports for Tests and Other Strucutral Activities	Y	**3).** The project owner shall transmit a copy of the CBO's approval or disapproval of the corrective action to the CPM.	N	15	days following	Resolution of Discrepancies or Unforseen Adverse Situations	As Needed				As Needed	3	URS
STRU	2	Submit Reports for Tests and Other Strucutral Activities	Y	**4).** If disapproved, the project owner shall advise the CPM of the reason for disapproval, and the revised corrective action to obtain the CBO's approval.	N	5	days following	Resolution of Discrepancies or Unforseen Adverse Situations	As Needed				As Needed	3	URS
STRU	3	Submit Design Changes Per CBC	Y	**1).** The project owner shall notify the CBO of the intended filing of design changes, and shall submit the required number of sets of revised drawings and the required number of copies of the other above-mentioned documents to the CBO, with a copy of the transmittal letter to the CPM, on a schedule suitable to the CBO,	Y	na	na	Plan or Permit Revision Notification	As Needed				As Needed	3	URS
STRU	3	Submit Design Changes Per CBC	Y	**2).** The project owner shall notify the CPM when the CBO has approved the revised plans.	Y	na	in the next	Monthly Compliance Report	10th business day of each month				Not Started	3	URS
STRU	4	HazMat Tanks or Vessels to Comply with Occ Cat 2	Y	**1).** Prior to the start of installation of the tanks or vessels. containing the above specified quantities of toxic or hazardous materials, the project owner shall submit to the CBO for design review and approval, final design plans, specifications, and calculations, including a copy of the signed and stamped engineer's certification.	Y	30	days prior to	Installation of Contaminated Tanks or Vessels	TBD				Not Started	3	URS
STRU	4	HazMat Tanks or Vessels to Comply with Occ Cat 2	Y	**2).** The project owner shall send copies of the CBO approvals of plan checks to the CPM in the following Monthly Compliance Report.	Y	na	in the next	Monthly Compliance Report	10th business day of each month				Not Started	3	URS
STRU	4	HazMat Tanks or Vessels to Comply with Occ Cat 2	Y	**3).** The project owner shall also transmit a copy of the CBO's inspection approvals to the CPM in the Monthly Compliance Report following completion of any inspection.	N	na	in the next	Monthly Compliance Report	10th business day of each month				Not Started	3	URS
TLSN	1	New Lines Must Comply with CPUC General Orders	Y	The project owner shall submit to the Commission's Compliance Project Manager (CPM) evidence of their intention to comply with the above requirements.	Y	30	days prior to	Transmission Line Construction	2-Dec-11				Not Started	3	URS
TLSN	2	Measure Pre- and Post-Modification Magnetic Strength Fields	Y	The project owner shall ensure that the post-modification measurements are tabulated together with the pre-modification measurements presented by the Applicant. A copy of these measurement results shall be filed with the CPM after completion of the	N	60	days following	Transmission Line Magnetic Field Measurements	TBD				Not Started	3	
TLSN	3	Notification of residents and Electro Interference complaint program	Y	All reports of line-related complaints shall be summarized and included in the Annual Compliance Report to the CPM.	N	na	na	Annual Compliance Report	Annually during operation				Not Started	3	
TRANS	1	Comply with Vehicle Height and Weight Requirements	Y	**1).** The project owner shall submit copies of any permits received during the month with the Monthly Compliance Report	N	10	days after beginning of each month	Monthly Compliance Report	10th business day of each month				As Needed	2	

Technical Area	COC No.	Condition Short Description	Deliverable Req.	Verification Action	Required Prior to Start of Constuction?	Action Days	Submittal Timing	Submittal Trigger Event	Expected Submittal Date	Actual Submittal Date	Submittal Action Approval Date	Amended Date	Compliance Status	Priority (Tier 1, 2, or 3)	Comments
TRANS	1	Comply with Vehicle Height and Weight Requirements	Y	**2).** In addition, the project owner shall retain copies of these permits and supporting documentation in its compliance file for at least six months after the start of commercial operation.	N	na	na	Filing Requirement	Not Specified				As Needed	2	
TRANS	2	Comply with Public Right-of-Way Encroachment Rules	Y	**1).** The project owner shall submit copies of permits received during the reporting period.	N	10	days after beginning of each month	Monthly Compliance Report	10th business day of each month				As Needed	2	
TRANS	2	Comply with Public Right-of-Way Encroachment Rules	Y	**2).** In addition, the project owner shall retain copies of these permits and supporting documentation in its compliance file for at least six months after the start of commercial operation.	N	na	na	Filing Requirement	Not Specified				As Needed	2	
TRANS	3	Comply with HazMat Transportation Requirements	Y	The project owner shall include in its Monthly Compliance Reports, copies of all permits/licenses acquired by the project owner and/or subcontractors concerning the transport of hazardous substances.	N	10	days after beginning of each month	Monthly Compliance Report	10th business day of each month				In Progress	2	
TRANS	7	Roadway Repairs	Y	**2).** The project owner shall provide to the CPM a letter from the Cities of El Segundo, Manhattan Beach and Los Angeles if work occurred within their jurisdictional public right of way stating their satisfaction with the road improvements.	N	na	na	Following Completion of Regional Road Improvements	As Needed			8-Jul-10	As Needed	3	
TRANS	6	Aircraft Hazard Markings	Y	The project owner shall provide copies of the FAA Form 7460-1 with copies of the FAA response to Form 7460-1, to the CPM and the City of El Segundo Planning Department.	Y	30	days prior to	Start Construction	2-May-11	2-Jun-11		8-Jul-10	In Progress	3	Original submittal 5/3/2011 Resubmitted 6/2/2011
TSE	1	Submit Schedules and Drawing Lists to CPM and CBO	Y	**1).** The project owner shall submit the schedule, a Master Drawing List, and a Master Specifications List to the CBO and to the CPM. The schedule shall contain a description and list of proposed submittal packages for design, calculations, and specifications for major structures and equipment (see a list of major equipment in **Table 1: Major Equipment List)**. Additions and deletions shall be made to the table only with CPM and CBO approval.	Y	60	days prior to	Transmission Line Construction	2-Nov-11				Not Started	3	URS
TSE	1	Submit Schedules and Drawing Lists to CPM and CBO	Y	**2).** The project owner shall provide schedule updates in the Monthly Compliance Report.	N	10	days after beginning of each month	Monthly Compliance Report	10th business day of each month				Not Started	3	URS
TSE	2	Assign and Duties of Electrical and Other Engineers	Y	**1).** The project owner shall submit to the CBO for review and approval, the names, qualifications and registration numbers of all the responsible engineers assigned to the project, at least 30 days prior to start of rough grading.	Y	30	days prior to	Transmission Line Construction	2-Dec-11				Not Started	3	URS
TSE	2	Assign and Duties of Electrical and Other Engineers	Y	**2).** The project owner shall notify the CPM of the CBO's approvals of the engineers.	Y	5	days following	Hiring New Contractor or Project Monitor	As Needed				As Needed	3	URS
TSE	2	Assign and Duties of Electrical and Other Engineers	Y	**3).** If the designated responsible engineer is subsequently reassigned or replaced, the project owner must submit the name, qualifications, and registration number of the newly assigned engineer to the CBO for review and approval	N	5	days following	Terminating Contractor or Project Monitor	As Needed				As Needed	3	URS
TSE	2	Assign and Duties of Electrical and Other Engineers	Y	**4).** The project owner shall notify the CPM of the CBO's approval of the new engineer**.**	N	5	days following	Hiring New Contractor or Project Monitor	As Needed				As Needed	3	URS
TSE	3	Keep CBO Informed on Status of Construction	Y	**1).** The project owner shall submit a copy of the CBO's approval or disapproval of any corrective action taken to resolve a discrepancy to the CPM.	N	15	days following	Hiring New Contractor or Project Monitor	As Needed				As Needed	3	URS
TSE	3	Keep CBO Informed on Status of Construction	Y	**2).** If disapproved, the project owner shall advise the CPM of the reason for disapproval, and the revised corrective action required to obtain the CBO's approval.	N	5	days following	Hiring New Contractor or Project Monitor	As Needed				As Needed	3	URS
TSE	4	Obtain Incremental Design Approval	Y	**1a).** The project owner shall submit to the CBO for review and approval the final design plans, specifications and calculations for equipment and systems of the power plant switchyard, outlet line and termination, including a copy of the signed and stamped statement from the responsible electrical engineer attesting to compliance with the applicable LORS,	Y	30	days prior to	Transmission Line Construction	2-Dec-11				Not Started	3	URS
TSE	4	Obtain Incremental Design Approval	Y	**1b).** and send the CPM a copy of the transmittal letter in the next Monthly Compliance Report.	N	na	in the next	Monthly Compliance Report	10th business day of each month				Not Started	3	URS
TSE	5	Project to Comply with LORS	Y	The project owner shall submit to the CBO for approval: **a)** Design drawings, specifications and calculations conforming with CPUC General Order 95 or NESC, Title 8, Articles 35, 36 and 37 of the "High Voltage Electric Safety Orders", NEC, applicable interconnection standards and related industry standards, for the poles/towers, foundations, anchor bolts, conductors, grounding systems and major [illegible]	Y	60	days prior to	Transmission Line Construction	2-Nov-11				Not Started	3	URS
TSE	5	Project to Comply with LORS	Y	**b)** For each element of the transmission facilities identified above, the submittal package to the CBO shall contain the design criteria, a discussion of the calculation method(s), a sample calculation based on "worst case conditions"4 and a statement signed and sealed by the registered engineer in responsible charge, or other acceptable alternative verification, that the transmission element(s) will conform with CPUC General Order 95 or NESC, Title 8, California Code of Regulations, Articles 35, 36 and 37 of the, "High Voltage Electric Safety Orders", NEC, applicable interconnection standards, and related industry standards.	Y	60	days prior to	Transmission Line Construction	2-Nov-11				Not Started	3	URS
TSE	5	Project to Comply with LORS	Y	**c)** Electrical one-line diagrams signed and sealed by the registered professional electrical engineer in responsible charge, a route map, and an engineering description of equipment and the configurations covered by requirements **TSE-5** a) through f) above.	Y	60	days prior to	Transmission Line Construction	2-Nov-11				Not Started	3	URS

Technical Area	COC No.	Condition Short Description	Deliverable Req.	Verification Action	Required Prior to Start of Constuction?	Action Days	Submittal Timing	Submittal Trigger Event	Expected Submittal Date	Actual Submittal Date	Submittal Action Approval Date	Amended Date	Compliance Status	Priority (Tier 1, 2, or 3)	Comments
TSE	5	Project to Comply with LORS	Y	**d)** The DFS operational mitigation measures, SPS, and executed Facility Interconnection Agreement shall be provided concurrently to the CPM and CBO. Substitution of equipment and substation configurations shall be identified and justified by the project owner for CBO approval.	Y	60	days prior to	Transmission Line Construction	2-Nov-11				Not Started	3	URS
TSE	6	Submit Design Changes	Y	The project owner shall inform the CBO and the CPM of any impending changes which may not conform to requirements of **TSE-5** and request approval to implement such changes.	Y	60	days prior to	Transmission Line Construction	2-Nov-11				Not Started	3	URS
TSE	7	Notify Cal ISO prior to synchronization	Y	**1).** The project owner shall provide copies of the Cal-ISO letter to the CPM when it is sent to the Cal-ISO.	Y	7	days prior to	Initial Grid Synchronization	25-Oct-12				Not Started	3	URS
TSE	7	Notify Cal ISO prior to synchronization	N	**2).** The project owner shall contact the Cal-ISO Outage Coordination Department, Monday through Friday, between the hours of 0700 and 1530 at (916) 351-2300 prior to synchronizing the facility with the grid for testing.	Y	1	days prior to	Initial Grid Synchronization	31-Oct-12				Not Started	3	URS
TSE	7	Notify Cal ISO prior to synchronization	Y	**3).** A report of conversation with the Cal-ISO shall be provided electronically to the CPM before synchronizing the facility with the California transmission system for the first time.	Y	1	days prior to	Initial Grid Synchronization	31-Oct-12				Not Started	3	URS
TSE	8	Inspect Transmission Facilities	Y	The project owner shall transmit to the CPM and CBO: **a)** "As built" engineering description(s) and one-line drawings of the electrical portion of the facilities signed and sealed by the registered electrical engineer in responsible charge. A statement attesting to conformance with CPUC GO-95 or NESC, Title 8, California Code of Regulations, Articles 35, 36 and 37 of the, "High Voltage Electric Safety Orders", and applicable interconnection standards, NEC, related industry standards, and these conditions shall be provided concurrently.	N	60	days following	Initial Grid Synchronization	31-Dec-12				Not Started	3	URS
TSE	8	Inspect Transmission Facilities	Y	**b)** An "as built" engineering description of the mechanical, structural, and civil portion of the transmission facilities signed and sealed by the registered engineer in responsible charge or acceptable alternative verification. "As built" drawings of the mechanical, structural, and civil portion of the transmission facilities shall be maintained at the power plant and made available, if requested, for CPM audit as set forth in the "Compliance Monitoring Plan".	N	60	days following	Initial Grid Synchronization	31-Dec-12				Not Started	3	URS
TSE	8	Inspect Transmission Facilities	Y	**c)** A summary of inspections of the completed transmission facilities, and identification of any nonconforming work and corrective actions taken, signed and sealed by the registered engineer in charge**.**	N	60	days following	Initial Grid Synchronization	31-Dec-12				Not Started	3	URS
VIS	1	Facility Visual Enhancement Plan and Seawall Design Plan	Y	**2).** If the CPM notifies the project owner that revisions of the submittal are needed before the CPM will approve the submittal, the project owner shall prepare and submit to the Coastal Commission staff, the Cities, and CPM a revised submittal.	Y	na	na	Plan or Permit Revision Notification	As Needed				As Needed	2	
VIS	2	Perimeter Screening and On-site Landscape Plan	Y	**3).** If the CPM notifies the project owner that revisions of the submittal are needed before the CPM will approve the submittal, the project owner shall prepare and submit to the Coastal Commission staff, the Cities, and the CPM a revised submittal.	Y	na	na	Plan or Permit Revision Notification	As Needed				As Needed	2	
VIS	2	Perimeter Screening and On-site Landscape Plan	Y	**4).** The project owner shall implement the landscape plan.	Y	7	days prior to	Start Commercial Operations	25-Jul-13				Not Started	2	
VIS	2	Perimeter Screening and On-site Landscape Plan	Y	**5).** The project owner shall notify the CPM when the planting and irrigation system are ready for inspection.	N	7	days following	Completion of Landscape Installation	TBD				Not Started	2	
VIS	2	Perimeter Screening and On-site Landscape Plan	Y	**6).** The project owner shall report landscape maintenance activities, including replacement of dead vegetation, for the previous year of operation in the Annual Compliance Report.	N	na	na	Annual Compliance Report	Annually during operation				Not Started	2	
VIS	8	Construction lighting	Y	**1).** The project owner shall notify the City of Manhattan Beach and the CPM that the lighting is ready for inspection after the first use of construction lighting.	N	7	days following	Site Mobilization	30-May-11	3-Jun-11			In Progress	2	6/3/2011: Notification made for temp lighting on S Side of site
VIS	8	Construction lighting	Y	**2).** If the CPM notifies the project owner that modifications to the lighting are needed to minimize impacts, the project owner shall implement the necessary modifications and notify the CPM that the modifications have been completed.	Y	15	days following	Plan or Permit Revision Notification	As Needed				As Needed	2	
VIS	8	Construction lighting	Y	**3).** The project owner shall report any lighting complaints and documentation of resolution in the Monthly Compliance Report, accompanied by any lighting complaint resolution forms for that month.	N	10	days after beginning of each month	Monthly Compliance Report	10th business day of each month				As Needed	2	
VIS	9	Temporary landscaping and 45th Street Berm	Y	**2).** If the CPM notifies the project owner that revisions of the submittal are needed before the CPM will approve the submittal, the project owner shall prepare and submit to the CPM a revised plan.	Y	30	days following	Plan or Permit Revision Notification	As Needed				As Needed	2	
VIS	9	Temporary landscaping and 45th Street Berm	Y	**3).** The project owner shall notify the CPM that the 45th Street berm is ready for inspection.	N	7	days following	Completion of 45th Street Berm	23-Sep-11				Not Started	2	Expected submittal date assumes completion of 45th St Berm on 9/16/11
VIS	9	Temporary landscaping and 45th Street Berm	Y	**4).** The project owner shall notify the CPM within seven days after completing installation of the temporary landscape screening that the planting and irrigation system are ready for	N	7	days following	Completion of Temporary Landscaping	25-Aug-11				Not Started	2	Expected submittal date assumes completion of temporary landscaping on 8/18/11
VIS	9	Temporary landscaping and 45th Street Berm	Y	**5).** The project owner shall report landscape maintenance activities, including replacement of dead vegetation, for the previous month of construction in the Monthly Compliance Report.	N	10	days after beginning of each month	Monthly Compliance Report	10th business day of each month	29-Jun-07			Not Started	2	
VIS	3	Design treatment of seawall	Y	**2).** If the CPM notifies the project owner of any revisions that are needed before the CPM will approve the plan, the project owner shall submit a revised plan to the CPM.	Y	na	na	Plan or Permit Revision Notification	As Needed				As Needed	3	

Technical Area	COC No.	Condition Short Description	Deliverable Req.	Verification Action	Required Prior to Start of Constuction?	Action Days	Submittal Timing	Submittal Trigger Event	Expected Submittal Date	Actual Submittal Date	Submittal Action Approval Date	Amended Date	Compliance Status	Priority (Tier 1, 2, or 3)	Comments
VIS	3	Design treatment of seawall	Y	**3).** The project owner shall notify the CPM that the seawall is ready for inspection.	Y	30	days prior to	Start Commercial Operations	2-Jul-13				Not Started	3	
VIS	3	Design treatment of seawall	Y	**4).** The project owner shall provide a status report regarding wall maintenance.	N	na	na	Annual Compliance Report	Annually during operation				Not Started	3	
VIS	5	Structure Surface Painting and Treatment	Y	**1).** The project owner shall submit its proposed treatment plan. Prior to the start of construction, the project owner shall submit to the Executive Director of the Coastal Commission and the Cities of El Segundo and Manhattan Beach for review and comment, and to the CPM for review and approval, a specific treatment plan whose proper implementation will satisfy these requirements.	Y	90	days prior to	Visual Treatment Purchases	TBD				In Progress	3	
VIS	5	Structure Surface Painting and Treatment	Y	**2).** If revisions are required, the project owner shall provide the CPM with a revised plan within 30 days of notification.	Y	30	days following	Plan or Permit Revision Notification	As Needed				As Needed	3	
VIS	5	Structure Surface Painting and Treatment	Y	**3).** The project owner shall notify the CPM that all buildings and structures are ready for inspection.	Y	7	days prior to	Start Commercial Operations	25-Jul-13				Not Started	3	
VIS	5	Structure Surface Painting and Treatment	Y	**4).** The project owner shall provide a status report regarding treatment maintenance in the Annual Compliance Report.	N	na	na	Annual Compliance Report	Annually during operation				Not Started	3	
VIS	6	Project Lighting	Y	**1).** The project owner shall submit to the CPM for review and comment written documentation describing the lighting control measures and fixtures, hoods, shields proposed for use, and incorporate the CPM's comments in lighting equipment orders.	Y	60	days prior to	Lighting Treatment Purchases	TBD				Not Started	3	
VIS	6	Project Lighting	Y	**2).** The project owner shall notify the CPM that the lighting has been completed and is ready for inspection.	N	7	days prior to	Turbine First Fire	25-Aug-12				Not Started	3	
VIS	6	Project Lighting	Y	**3).** If the CPM notifies the project owner that modifications to the lighting are needed to minimize impacts, the project owner shall implement the modifications and notify the CPM that the modifications have been completed.	N	30	days following	Plan or Permit Revision Notification	As Needed				As Needed	3	
VIS	6	Project Lighting	Y	**4).** The project owner shall report any lighting complaints and documentation of resolution in the Annual Compliance Report, accompanied by any lighting complaint resolution forms for that year.	N	na	na	Annual Compliance Report	Annually during operation				Not Started	3	
VIS	7	Site Lighting	Y	**1).** The project owner shall submit to the CPM for review and comment written documentation describing the lighting control measures and fixtures, hoods, shields proposed for use, and incorporate the CPM's comments in lighting equipment orders.	Y	60	days prior to	Lighting Treatment Purchases	TBD				Not Started	3	
VIS	7	Site Lighting	Y	**2).** The project owner shall notify the CPM that the lighting modifications to Unit 3 and 4 have been completed and are ready for inspection.	N	7	days prior to	Final Tank Farm Demolition	TBD				Not Started	3	
VIS	7	Site Lighting	Y	**3).** If the CPM notifies the project owner that modifications to the lighting are needed to minimize impacts, the project owner shall implement the modifications and notify the CPM that the modifications have been completed.	N	30	days following	Plan or Permit Revision Notification	As Needed				As Needed	3	
VIS	7	Site Lighting	Y	**4).** The project owner shall report any complaints about permanent lighting and provide documentation of resolution in the Annual Compliance Report, accompanied by any lighting complaint resolution forms for that year.	N	na	na	Annual Compliance Report	Annually during operation				Not Started	3	
WAS	8	Hazardous Waste Survey	Y	**2).** The project owner shall inform the CPM, via the monthly compliance report, of the data when all ACM and RBM were removed from the site.	N	10	days after beginning of each month	Monthly Compliance Report	10th business day of each month				In Progress	1	
WAS	3	Submit and Get Waste Management Plan Approved	Y	**2).** The operation waste management plan shall be submitted prior to the start of project operation.	Y	30	days prior to	Turbine First Fire	2-Aug-12				Not Started	2	
WAS	3	Submit and Get Waste Management Plan Approved	Y	**3).** The project owner shall submit any required revisions.	N	20	days following	Plan or Permit Revision Notification	As Needed				As Needed	2	
WAS	3	Submit and Get Waste Management Plan Approved	Y	**4).** In the Annual Compliance Reports, the project owner shall document the actual waste management methods used during the year compared to planned management methods.	N	na	na	Annual Compliance Report	Annually during operation				In Progress	2	
WAS	6	Prepare Remedial Investigation Workplan	Y	**2).** The project owner shall provide the results of the sampling and analysis to the Glendale Regional Office of the California Department of Toxic Substances Control, the Los Angeles Regional Water Quality Control, the City of El Segundo Fire Department, other agencies, if applicable, and the CPM for review and guidance on possible remediation - within 30 days of completion of the sampling and analysis AND prior to the initiation of any construction activities.	N	30	days following	Remedial Investigations/Actions	As Needed	1-Aug-07		1-Oct-10	As Needed	2	
WAS	6	Submit Results of Sampling	Y	Within thirty (30) days of completion of the sampling and analysis and prior to the initiation of any construction activities, the project owner shall provide the results of the sampling and analysis to the Glendale Regional Office of the California Department of Toxic Substances Control, the Los Angeles Regional Water Quality Control Board, the City of El Segundo Fire Department, other agencies, if applicable, and the CPM for review and guidance on possible remediation.	N			Completion of Sampling	As Needed	17-Mar-11			As Needed		
WAS	2	Report Any Impending Enforcement Actions	Y	**1).** The project owner shall notify the CPM in writing of an impending enforcement action.	N	10	days following	New Enforcement Action	As Needed				As Needed	3	

Compliance Matrix
El Segundo Power Redevelopment Project
Docket 00-AFC-14C

Technical Area	COC No.	Condition Short Description	Deliverable Req.	Verification Action	Required Prior to Start of Constuction?	Action Days	Submittal Timing	Submittal Trigger Event	Expected Submittal Date	Actual Submittal Date	Submittal Action Approval Date	Amended Date	Compliance Status	Priority (Tier 1, 2, or 3)	Comments
WAS	2	Report Any Impending Enforcement Actions	Y	**2).** The CPM shall notify the project owner of any changes that will be required in the manner in which project-related wastes are managed.	N	na	na	Waste Management Changes	As Needed				As Needed	3	
WAS	5	Contaminated Soil Excavation	Y	**1).** The project owner shall submit any reports filed by the Registered Professional Engineer or Geologist to the CPM and the City of El Segundo Fire Department. Within 5 days of their	N	5	days following	Identification of Soil Contamination	As Needed	2-Mar-11			As Needed	3	SMUD Area Memo: 5/5/11 HRSG Foundation Site Prep Memo Submitted 6/16/11
WAS	5	Contaminated Soil Excavation	Y	**2).** The project owner shall notify the CPM of any orders issued to halt construction.	N	1	days following	Halting of Construction	As Needed				As Needed	3	
WQ	7	Comply with NPDES Permit for Construction Activity	Y	**2).** The project owner shall submit copies to the CPM of all correspondence between the project owner and the City, the LARWQCB, and the SWRCB regarding the City's SUSMP and the Construction SWPPP . This information shall include copies the Notice of Intent and Notice of Termination for the project.	N	10	days following	Receipt or Submittal	As Needed			8-Jul-10	As Needed		
WQ	8	CPM Approval of Drainage, Erosion, and Sediment Control Plan (DESCP)	Y	**1).** The project owner shall submit a copy of the DESCP to the City of El Segundo (City) for review and comment.	Y	90	days prior to	Grading	2-Apr-11	3-May-11		8-Jul-10	Not Started	1	Provided 2 sets of Entry Road Modification Drawings to CBO for submittal to Cities on 5/3/2011
WQ	8	CPM Approval of Drainage, Erosion, and Sediment Control Plan (DESCP)	Y	**2).** The project owner shall submit the DESCP and the City's comments to the CPM for review and approval. The CPM shall consider comments received from the City on the DESCP before issuing approval.	Y	60	days prior to	Start of Grading or Excavation	2-May-11	20-Apr-11		8-Jul-10	In Progress	1	Entry Road: 4/20/11 Tank Farm: Future Submittal N Const Area: Future Submittal
WQ	8	CPM Approval of Drainage, Erosion, and Sediment Control Plan (DESCP)	Y	**3).** The DESCP shall be revised and a revision submitted to the CPM for project excavation/construction and final grading/stabilization prior to the soil disturbing activities associated with these stages of construction.	Y	na	prior to	Soil Disturbing Activities				8-Jul-10	Not Started		
WQ	8	CPM Approval of Drainage, Erosion, and Sediment Control Plan (DESCP)	Y	**4).** The DESCP shall be consistent with the grading and drainage plan as required by condition of certification CIVIL-1 and relevant portions of the DESCP shall clearly show approval by the Chief Building Official. The DESCP shall be consistent with the Stormwater Pollution Prevention Plan (SWPPP) developed in accordance with the General Construction Permit (Water Quality Order 99-08-DWQ) and the project's Standard Urban Stormwater Mitigation Plan developed in accordance with the LARWQCB NPDES Permit No. AS0004001 and the City's Ordinance No. 1348 and Chapter 7 of Title 5 of the municipal code.	Y	na	prior to	Soil Disturbing Activities	na			8-Jul-10	In Progress		
WQ	8	CPM Approval of Drainage, Erosion, and Sediment Control Plan (DESCP)	Y	**5)**. The project owner shall provide a narrative describing the effectiveness of the drainage, erosion and sediment control measures; the results of monitoring and maintenance activities, including any BMP inspection reports; and the dates of any dewatering activities.	N	10	days after beginning of each month	Monthly Compliance Report	10th business day of each month			8-Jul-10	In Progress		
WQ	9	General NPDES Permit for Discharges of Storm Water - SWPPP	Y	**1).** The project owner shall submit to the CPM a copy of the Industrial SWPPP that includes the requirements of the City's SUSMP prior to commercial operation and retain a copy on-site.	Y	na	prior to	Commercial Operation	31-Jul-13			8-Jul-10	Not Started	3	
WQ	9	General NPDES Permit for Discharges of Storm Water - SWPPP	Y	**2).** The project owner shall submit to the CPM copies of all correspondence between the project owner and the City, the LARWQCB, and the SWRCB regarding the City's SUSMP and the Individual and/or General NPDES Permit for the Discharge of Storm Water Associated with Industrial Activity. The Industrial SWPPP shall include a copy of the Notice of Intent for the project.	Y	10	days following	Receipt or Submittal	As Needed			8-Jul-10	As Needed		
WQ	10	Ballast Water Management Plan	Y	1). The project owner shall provide the State Lands Commission with a copy of the Ballast Water Management Plan that is in compliance with Title 2, Division 3, Chapter 1, Article 4.6 for review and comment.	Y	90	days prior to	Grounding of any Barge	As Needed			8-Jul-10	As Needed	3	Beach Only
WQ	10	Ballast Water Management Plan	Y	2). The project owner shall provide the CPM for review and approval, a copy of the Ballast Water Management Plan that has been reviewed by the State Lands Commission.	Y	60	days prior to	Grounding of any Barge	As Needed			8-Jul-10	As Needed		Beach Only
WRES	3	Executed and Final Recyled Water Purchase Agreement with West Basin Municipal Water District (WBMWD)	Y	**1).** The project owner shall submit two copies of the final and executed recycled water purchase agreement for the supply and on-site use of recycled water at the ESPRP.	N	60	days prior to	Delivery of Single Pass Reverse Osmosis Recycled Water	TBD			8-Jul-10	Not Started		
WRES	3	Executed and Final Recyled Water Purchase Agreement with West Basin Municipal Water District (WBMWD)	Y	**2).** The project owner shall submit to the CPM a copy of the cross connection inspection and approval report from the Los Angeles County Health Department prior to the delivery of recycled water from the new 10-inch recycled water pipeline.	N	60	days prior to	Delivery of Single Pass Reverse Osmosis Recycled Water	TBD			8-Jul-10	Not Started		
WRES	4	Potable Water Supplied by the City of El Segundo	Y	**1).** The project owner shall submit to the CPM two copies of the executed and final Potable Water Supply Agreement (agreement).	N	30	days prior to	Completion of 14-inch Potable Water Pipeline	2-Oct-12			8-Jul-10	Not Started		
WRES	4	Potable Water Supplied by the City of El Segundo	Y	**2).** The project owner shall submit to the CPM any water quality monitoring reports required by the City in the annual compliance report.	N	30	days prior to	Completion of 14-inch Potable Water Pipeline	2-Oct-12			8-Jul-10	Not Started		
WRES	4	Potable Water Supplied by the City of El Segundo	Y	**3).** The project owner shall notify the CPM of any violations of the agreement terms and conditions, the actions taken or planned to bring the project back into compliance with the agreement, and the date compliance was reestablished.	N	1	day within	Violation of Agreement Terms and Conditions	As Needed			8-Jul-10	As Needed		
WRES	5	El Segundo Power Redevlopment Project (ESPRP) Operation	Y	**1).** The project owner shall submit to the CPM evidence that metering devices have been installed and are operational on the potable and recycled water supply and distribution systems.	Y	60	days prior to	ESPRP Commercial Operation	2-Jun-13			8-Jul-10	Not Started		
WRES	5	El Segundo Power Redevlopment Project (ESPRP) Operation	Y	**2).** The project owner shall submit a Water Use Summary report to the CPM in the annual compliance report. The report shall disaggregate potable water supplied by the City and recycled water supplied by WBMWD for ESPRP industrial and landscape irrigation use.	N	na	na	Annual Compliance Report	Annually during operation			8-Jul-10	Not Started		

Compliance Matrix
El Segundo Power Redevelopment Project
Docket 00-AFC-14C

Technical Area	COC No.	Condition Short Description	Deliverable Req.	Verification Action	Required Prior to Start of Constuction?	Action Days	Submittal Timing	Submittal Trigger Event	Expected Submittal Date	Actual Submittal Date	Submittal Action Approval Date	Amended Date	Compliance Status	Priority (Tier 1, 2, or 3)	Comments
WRES	5	El Segundo Power Redevlopment Project (ESPRP) Operation	Y	**3).** The project owner shall provide a report on the servicing, testing and calibration of the metering devices in the annual compliance report.	N	na	na	Annual Compliance Report	Annually during operation			8-Jul-10	Not Started		
WRKR	2	Safety and Health Program	Y	The project owner shall submit to the CPM and the City of El Segundo Fire Department a copy of the Project Operations and Maintenance Safety & Health Program.	N	30	days prior to	Turbine First Fire	2-Aug-12				Not Started	3	

ATTACHMENT B
AQ-C4
MONTHLY CONSTRUCTION COMPLIANCE REPORTS
JULY 2011

El Segundo Power Redevelopment Project

California Energy Commission
Monthly Construction Compliance Report

July 2011

Prepared by:
Greg Wolffe, CPP
Air Quality Construction Mitigation Manager
AECOM Environment

Prepared for: El Segundo Energy Center LLC
Date Submitted: August 10, 2011

Summary

a. Construction Status

General Construction Activities

Continued construction activities during July, performed by LVI Contractors, included the following: concrete crushing and stockpiling; excavation backfill; hazardous material relocation; condensate tank demolition; and demolition of the forebay.

Construction activities performed by Performance Mechanical, Inc. (PMI) contractors included: potholing for lift station; prep work for chemical system installation; trenching; and concrete pouring in conduit area.

Construction activities performed by ARB Contractors included: excavation, foundation pouring, and potholing. Construction activities completed by Rubicon contractors included concrete pouring in North and South tunnels.

Continuous manual watering was employed in direct areas of heavy construction activity including stock pile relocation, concrete crushing, and demolition activities. Water trucks were utilized onsite to water both paved and unpaved roads, up to 10 times per day. Onsite street sweeping is conducted 3 times per week, 4 hours per day.

I. Fugitive Dust Mitigation

a. Identification of each mitigation measure approved by the Construction Project Manager (CPM)

i. Wind Erosion Control

- All of the construction parking, office, and laydown/staging areas will be graveled, paved, or left with native vegetation. Watering and limiting vehicle speeds and access will be the preferred dust control method for these areas. *The parking areas are paved, and posted vehicle speeds of 5 miles per hour (mph) are maintained and enforced through contractor and employee on-site training. Site watering is conducted both manually at direct locations of soil disturbance as well as by water truck, with a frequency of approximately 10 times per day, dependent upon site conditions and site activities.*

- Construction activities that generate significant amounts of fugitive dust will be postponed when average wind speeds are greater than 25 miles per hour, unless water, dust suppressants, or other measures have been applied to reduce dust levels to (1) less than 20 percent opacity on-site, and (2) so that no visible plumes occur in excess of 200 feet from linear facilities. *Demolition and excavation activities were conducted within containment and were generally shielded from the wind. Excavation activities employed various control measures including street sweeping and site watering; water applications were applied both manually at direct location of soil disturbance and with a water truck.*

- Any windbreaks installed to reduce wind erosion will remain in place until the soil is stabilized or permanently covered with vegetation, when applicable. *Wind breaks were not installed or utilized to control and reduce fugitive dust emissions during construction activities completed in July 2011.*

ii. Earth-Moving in Construction Fill Area Control

- Watering will be conducted for any earth moving activities to prevent visible dust emissions from migrating beyond the Site property boundary. *Earth-moving activities including stockpiling and truck loading and unloading were conducted without visible dust emissions due to employed control measures. Control measures included manual watering and use of a water truck to spray down any visible dust. A sweeper truck was utilized to contain and control fugitive dust at direct locations of earth-moving activities.*

iii. Fugitive Dust Control in Construction Area

- Watering will be applied as necessary to minimize fugitive dust generated from construction activities. *Up to 2 personnel maintained manual watering at direct locations of soil disturbance; in addition, during truck loading and hauling, an on-site watering truck was employed and provided site watering up to 10 times per day, on paved and unpaved surfaces around the perimeter of the construction site.*

iv. Unpaved Roads and Disturbed Areas Control

- Water will be applied to unpaved roads at least twice per day, or until the roads are sufficiently wet to not cause visible dust plumes beyond the Site property boundary, as applicable. *During truck loading and hauling, an on-site watering truck was employed and provided site watering up to 10 times per day, on paved and unpaved surfaces around the perimeter of the construction site.*

- Alternatively, a non-toxic chemical stabilizer will be applied to all unpaved road surfaces in sufficient quantity and frequency to maintain a stabilized surface. *Non-toxic chemical stabilizers have not been used to reduce and control fugitive dust emissions based on the efficiency of existing controls including site watering, sweeping, and stockpile management.*

- All vehicles will be subject to posted speed limits (5 mph maximum on unpaved roads) to minimize dust generation and ensure safety. *The posted vehicle speed limit of 5 mph is maintained and enforced through contractor and employee on-site training.*

v. Graded Areas where activities have ceased

- Any graded areas where construction activities have ceased will be treated with dust suppressants (e.g., magnesium chloride) within 5 working days; or the graded areas will be watered on a daily basis when there is evidence of wind driven fugitive dust, as applicable. *Grading activities were not observed during July construction activities.*

- Alternatively, a vegetative ground cover will be established after active operations have ceased, as applicable. *Grading activities were not observed during July construction activities.*

vi. Paved Roads Control

- The first 500 feet of any paved road surfaces exiting from the Site will be cleaned by vacuum mechanical sweeping to remove material buildup. The sweeping will be conducted at least daily (or less during periods of precipitation) when construction activities have the potential to track out dirt or when dirt or runoff from the construction site is visible on the paved roadways. *A sweeper truck was utilized to contain and control*

fugitive dust at direct locations of haul truck loading. No visible fugitive dust emissions were observed.

- Construction areas adjacent to any paved roadway will be provided with sandbags or other measures as specified in the Construction Storm Water Pollution Prevention Plan to prevent run-off to roadways, as applicable. *Sandbags were lined on the ingress/egress to the paved demolition area. The sandbags were replaced if bag integrity was compromised during ingress/egress usage by incoming and outgoing haul trucks or water trucks.*

vii. Site Entrance Control

- The Site Entrance road will be gravel-topped, paved, or chemically stabilized for a distance of at least 100 feet from the public roadway. All vehicles will be required to enter and exit at the Site Entrance road. *The existing entrance to El Segundo Power is paved. No additional controls were required.*

- A tire wash station will be located on the Site, installed immediately adjacent to the Site Entrance road if needed for tracking control. All large vehicles with dirty or muddy tires will be required to use the tire wash station. The tire wash station is located near the exit so that these vehicles do not travel on any unpaved road surface after passing through the tire wash station. *A tire wash station is not necessary for tracking control. All onsite roadways have been paved.*

viii. Large Haul Trucks Control

- All trucks transporting soil or loose aggregate material to and from the Site will have loads covered or wetted down to minimize dust. Trucks loaded with soil or loose aggregate will have at least one foot of freeboard on each side. *Materials loaded into haul trucks were wetted prior to loading through continuous, direct manual watering during soil disturbance activities.*

ix. Open Storage Pile Control

- Whenever possible, stockpiling operations will reduce the amount and frequency of material handling; minimize the frequency of stockpile disturbance or size of disturbed areas; and will reduce material drop height when loading trucks to minimize dust generation. *Prior to truck loading, stock pile materials were wetted. Additional controls were not required.*

- Soil stockpiles will be treated with non-toxic chemical stabilizers, or water will be applied to the soil stockpiles daily when wind-driven dust is observed, *as applicable.* Soil stockpiles that are inactive for longer than 10 days will be covered or treated with dust suppressant material or

will be stabilized with vegetation, as applicable. *Non-toxic chemical stabilizers were not employed to reduce or control fugitive dust emissions from stockpiles during June construction activities. On-site stockpiles, which were undisturbed for 10 days or longer, were controlled using plastic sheeting secured with sandbags.*

x. Additional Dust Control Measures

- Direct additional and more intensive application of the existing mitigation methods within 15 minutes of observing the dust plume, *as applicable. Dust plumes were not observed during July construction activities. Additional control measures were not required.*

- Direct additional implementation of additional methods of dust suppression within 30 minutes if the original application of additional measures (first bullet) is not effective, as applicable. *Additional control measures were not required to reduce and control dust plumes.*

- Direct a temporary shutdown of the source of emissions within one hour of the original determination, as applicable. *Additional control measures were not required to reduce and control dust plumes.*

b. Identification of specific mitigation measure performed, the location performed, date performed, and date enforced or verified as remaining effective

i. Wind Erosion Control

- *Additional wind erosion control measures were not required to reduce and control emissions during July construction activities.*

ii. Earth-Moving in Construction Fill Area Control

- *Additional fugitive dust control measures were not required to reduce and control fugitive dust emissions during July construction activities.*

iii. Fugitive Dust Control in Construction Area

- *As described above, site watering was employed using manual watering and water trucks. Manual watering in construction areas included up to 2 personnel direct watering at location of soil disturbance in areas of excavation. Water trucks were employed on-site during daily activities, and circled the perimeter of the site, which include both unpaved and paved roadway, watering up to 10 times per day. Street sweeping was implemented using mobile street sweepers. The mobile street sweeper circled the perimeter of the site, sweeping paved areas, up to 10 times per day. Inactive stockpiles remained covered and secured until further use.*

iv. Unpaved Roads and Disturbed Areas Control

- *Control measures employed to control fugitive dust on unpaved road and disturbed areas included site watering and speed limit controls.*

v. Graded Areas where activities have ceased

- *Grading activities were not observed during July construction activities.*

vi. Paved Roads Control

- *Control measures employed to control fugitive dust on paved road included watering with water truck, and street sweeping.*

vii. Site Entrance Control

- *Site entrance controls include an enforced speed limit of 5 mph. No additional controls were required or implemented during July construction activities.*

viii. Large Haul Trucks Control

- *Control measures employed to reduce fugitive dust emissions from haul trucks included soil wetting prior to loading. No additional controls were required or implemented during July construction activities.*

ix. Open Storage Pile Control

- *Open storage piles were covered by plastic sheeting and secured with sandbags to minimize dust generation.*

x. Additional Dust Control Measures

- *Additional fugitive dust control measures were not required to reduce and control emissions during June construction activities.*

c. Identification of any transgressions or circumventions of mitigation measure and the actions taken to correct the situation

- *There have been no transgressions or circumventions of any fugitive dust mitigation measure.*

d. Identification of any observation by the Compliance Mitigation Manager (CMM) of dust plumes beyond the property boundary of the main construction site or beyond an acceptable distance from the linear construction site and what actions (if any) were taken to abate the plume

- *Dust plumes were not generated during July construction activities. No additional control measures were required.*

II. Diesel Construction Equipment Mitigation

a. Identification of any changes, as approved by the CPM, to the Diesel Construction Equipment Mitigation Plan from the initial report or the last monthly report including any new contractors and their diesel construction equipment

- *Granite began site mobilization in July; equipment brought onsite included one each of backhoe, roller, and excavator, which are shown in the monthly equipment list (Appendix C) for July.*

b. A copy of all receipts or other documentation indicating type and amount of fuel purchased, from whom, where delivery occurred, and on what date for the main and related linear construction sites

- *Fuel receipts representative of onsite fueling during July construction activities are provided in Appendix A.*

c. Identification and verification of all diesel engines required to meet EPA or CARB 1996 off-road diesel equipment emission standards

- *All on-site equipment has been evaluated to determine manufacturer, model year, and engine Tier level. A list of equipment and engines onsite in July is provided in Appendix C. The list includes the model year, horse-power, EPA/CARB Tier level, and the date brought onsite. The list is grouped by those engines that arrived during July and those that arrived onsite is prior months and were continuing onsite in July.*

  Because of the number of engines onsite and their sometime intermittent usage depending on the equipment they power, the monthly list is of equipment present onsite for the reporting month and does not necessarily mean that all equipment listed onsite were operated in that month (e.g., July). The monthly equipment report is, and will be for all future monthly reports, sorted with new equipment for the reported month shown first, followed by equipment that continued onsite from prior monthly reports. Both the new and continuing equipment sections are ordered sequentially based on the date the equipment arrived onsite (most recent is listed first).

  The CEC will note that while some engines operated onsite meet the Tier 3 engine standards required in the June 2010 Amendment, other engines shown for this month are below the Tier 3 engine standard. The AQCMM worked with each of the onsite contractors to replace all equipment not already meeting the standard with Tier 3 engines, or

obtained documentation demonstrating that a good faith effort had been completed indicating that compliance is not practical, either through the availability of functionally similar equipment or the use of retrofit control devices. In these cases the AQCMM has requested approval from the CPM for this requirement and has provided the sufficient documentation to demonstrate that a good faith effort has been performed.

d. The identification of any suitability report being initiated, pursued or the completed report should be included in the monthly report (in the month that it was completed) as should the verification of any subsequent installation of a catalyzed diesel particulate filter. The suitability of the use of a catalyzed diesel particulate filter for a specific piece of construction equipment is to be determined by a qualified mechanic or engineer who must submit a report through the CMM to the CPM for approval.

- *As part of the actions associated with Tier 3 compliance, engines have been evaluated for eligibility to install retrofit control technology to achieve Tier 3 equivalent standards. Most equipment is not eligible for retrofit control device installation due to visibility impairments to the equipment operators regulated by the California Division of Occupational Safety and Health (Cal/OSHA). Therefore our continuing efforts are focused not on installing retrofit control devices but on equipment replacement with Tier 3 engines or documentation supporting a "Good Faith Effort" to obtain Tier 2 or 3 equipment.*

e. Identification of any observation by the CMM of dark plumes emanating from diesel-fired construction equipment that extend beyond the property boundary of the main construction site or beyond an acceptable distance from the linear construction site and what actions (if any) were taken to abate the plume or future expected plumes

- *Visual inspections of construction equipment tail-pipe emissions were conducted daily during Air Compliance Monitoring and Daily Recordkeeping activities. During visual inspections, there were no dark plumes observed. Additional control measures were not required to reduce direct location or fenceline emissions of diesel particulate matter.*

APPENDIX A
COPIES OF DIESEL FUEL RECEIPTS

INVOICE

NO.

INVOICE DATE 7-6-11

CUSTOMER'S ORDER NO. 173640 & 78031-201

MC FUEL

SOLD TO: PMI

SHIP TO: NRG - Plant

EL SEGUNDO, CA

SALESPERSON	SHIPPED VIA	SHIP DATE	TERMS	F.O.B.

QTY. ORDERED	QTY. SHIPPED	DESCRIPTION	UNIT	AMOUNT
1		LABOR FEE		65
	27.5	TOTAL Gallons		3.29
		EQUIPMENT		104.23
		1 LIFT 1 WELDER		65
		1 SKIPLOADER		159.23
		1 COMPRESSOR	+ TAX	

A-2872-3872 / T-3813

INVOICE

NO.

INVOICE DATE 2-20-11

CUSTOMER'S ORDER NO. 173640-78031-201

SHIP TO: NRG - Power Plant
EL SEGUNDO, CA

SOLD TO: MC Fuels
PMI

SALESPERSON	SHIPPED VIA	SHIP DATE	TERMS	F.O.B.

QTY. ORDERED	QTY. SHIPPED	DESCRIPTION	UNIT	AMOUNT
1		Labor Fee		65-
				5.85
	32 -			
		EQ. Rental		121.92
		1 Skip Loader		165
		1 Lift		156.92
		1 Welder	+ TAX	
		1 Compressor		

NSA
1:20 PM

A-2872-3872 / T-3813

"Diesel Delivered On Demand"

M C Fuels
P.O. Box 2042
Manhattan Beach, Ca 90267
Phone: 310-717-2924

Invoice

Date	Invoice #
7/31/2011	782

Bill To	Ship To
Performance Mechanical, Inc. P.O. BOX 1516 PITSBURG, CA 94565	NRG - POWER PLANT - JOB#78031 301 VISTA DEL MAR EL SEGUNDO, CA 90245

P.O. Number	Terms	Due Date	Ship	Via	F.O.B.	Project
78031	Net 15	8/15/2011	7/27/2011			

Quantity	Item Code	Description	Price Each	Amount
1	Labor Fee		65.00	65.00
36	red diesel fuel		3.88	139.68T
		EQUIPMENT 1 LIFT 1 WELDER 1 COMPRESSOR		

Subtotal	$204.68
Sales Tax (8.75%)	$12.22
Total	$216.90

Wood Oil Company of California

...Service Since 1942

Distributor of Major Brand Petroleum Products

INVOICE # 12384

Date: 7-1-11 **JOB #:** 250503 **P.O. #**

Customer Name: LVI

Delivery Address:

City: El Segundo

Equipment #(s)

Qty	Product	Inches		Equipment #(s)
71	ULS Red Dyed Diesel (15 Max PPM)	Beg	End	Top off PRS
	ULS Clear Diesel (15 Max PPM)	Beg	End	
	Unleaded Regular Gasoline	Beg	End	
	Unleaded Blend Gasoline	Beg	End	
	Unleaded Premium Gasoline	Beg	End	

Oil Products

Qty	Product
	Siemens

Drums Delivered: Drums Returned:

Driver:

Time In	Time Out
6:55	7:30

RECEIPT OF PRODUCTS ACKNOWLEDGED - ***ADDITIONAL TERMS ON BACK***

Customer Signature:

1532 W. 132nd Street • Gardena, CA 90249
(323) 321-3864 (*24 hour service*) • Fax: (310) 769-0629
Email: WoodOil@SBCGlobal.net • Web site: WoodOilCompany.com

Gasoline • Motor Oils • Diesel

For emergency response call PERS at (800) 633-8253

Wood Oil Company of California

...Service Since 1942

Distributor of Major Brand Petroleum Products

INVOICE # 12383

Date: 7-1-11 **JOB #:** 250503 **P.O. #**

Customer Name: LVI

Delivery Address:

City: El Segundo

Equipment #(s)

Qty	Product	Inches		Equipment #(s)
373	ULS Red Dyed Diesel (15 Max PPM)	Beg	End	Top off PRS
	ULS Clear Diesel (15 Max PPM)	Beg	End	
	Unleaded Regular Gasoline	Beg	End	
	Unleaded Blend Gasoline	Beg	End	
	Unleaded Premium Gasoline	Beg	End	

Oil Products

Qty	Product

Drums Delivered: Drums Returned:

Driver:

Time In	Time Out
6:00	6:55

RECEIPT OF PRODUCTS ACKNOWLEDGED - ***ADDITIONAL TERMS ON BACK***

Customer Signature:

1532 W. 132nd Street • Gardena, CA 90249
(323) 321-3864 (*24 hour service*) • Fax: (310) 769-0629
Email: WoodOil@SBCGlobal.net • Web site: WoodOilCompany.com

Gasoline • Motor Oils • Diesel

For emergency response call PERS at (800) 633-8253

Wood Oil Company of California

...Service Since 1942

Distributor of Major Brand Petroleum Products

INVOICE # 12397

Date: 7-5-11 **JOB #:** 250503 **P.O. #**

Customer Name: LVI

Delivery Address:

City: El segundo

Qty	Product	Inches	Equipment #(s)
31	ULS Red Dyed Diesel (15 Max PPM)	Beg ___ End ___	Top off pcs
	ULS Clear Diesel (15 Max PPM)	Beg ___ End ___	
	Unleaded Regular Gasoline	Beg ___ End ___	
	Unleaded Blend Gasoline	Beg ___ End ___	
	Unleaded Premium Gasoline	Beg ___ End ___	

Oil Products

Qty	Product
	Siemens

Drums Delivered: ___ Drums Returned: ___

Driver: [illegible]

Time In	Time Out
6:30	7:30

RECEIPT OF PRODUCTS ACKNOWLEDGED - ***ADDITIONAL TERMS ON BACK***

Customer Signature: [signature]

1532 W. 132nd Street • Gardena, CA 90249
(323) 321-3864 (*24 hour service*) • Fax: (310) 769-0629
Email: WoodOil@SBCGlobal.net • Web site: WoodOilCompany.com

Gasoline • Motor Oils • Diesel

For emergency response call PERS at (800) 633-8253

Wood Oil Company of California

...Service Since 1942

Distributor of Major Brand Petroleum Products

INVOICE # 12396

Date: 7-5-11 **JOB #:** 250503 **P.O. #**

Customer Name: LVI

Delivery Address:

City: El segundo

Qty	Product	Inches	Equipment #(s)
388	ULS Red Dyed Diesel (15 Max PPM)	Beg ___ End ___	Top off pcs
	ULS Clear Diesel (15 Max PPM)	Beg ___ End ___	
	Unleaded Regular Gasoline	Beg ___ End ___	
	Unleaded Blend Gasoline	Beg ___ End ___	
	Unleaded Premium Gasoline	Beg ___ End ___	

Oil Products

Qty	Product

Drums Delivered: ___ Drums Returned: ___

Driver: [illegible]

Time In	Time Out
6:30	7:30

RECEIPT OF PRODUCTS ACKNOWLEDGED - ***ADDITIONAL TERMS ON BACK***

Customer Signature: [signature]

1532 W. 132nd Street • Gardena, CA 90249
(323) 321-3864 (*24 hour service*) • Fax: (310) 769-0629
Email: WoodOil@SBCGlobal.net • Web site: WoodOilCompany.com

Gasoline • Motor Oils • Diesel

For emergency response call PERS at (800) 633-8253

Wood Oil Company of California

...Service Since 1942

Distributor of Major Brand Petroleum Products

INVOICE # 12407

Date: 7-6-11 **JOB #:** 250503 **P.O. #** _____

Customer Name: LVI

Delivery Address: _____

City: El Segundo

Equipment #(s)

Qty	Product	Inches		Equipment #(s)
63	ULS Red Dyed Diesel (15 Max PPM)	Beg____	End____	Top off pcs
	ULS Clear Diesel (15 Max PPM)	Beg____	End____	
	Unleaded Regular Gasoline	Beg____	End____	
	Unleaded Blend Gasoline	Beg____	End____	
	Unleaded Premium Gasoline	Beg____	End____	

Oil Products

Qty	Product
	Shell's

Drums Delivered: _____ Drums Returned: _____

Driver: _____

Time In	Time Out
5:40	7:30

RECEIPT OF PRODUCTS ACKNOWLEDGED - ***ADDITIONAL TERMS ON BACK***

Customer Signature: _____

1532 W. 132nd Street • Gardena, CA 90249
(323) 321-3864 (*24 hour service*) • Fax: (310) 769-0629
Email: WoodOil@SBCGlobal.net • Web site: WoodOilCompany.com

Gasoline • Motor Oils • Diesel

[illegible] call PERS at (800) 633-8253

Wood Oil Company of California

...Service Since 1942

ibutor of Major Brand Petroleum Products

7-6-11 JOB #: 250503 INVOICE # 12408 P.O. # _____

omer Name: LVJ

ery Address: El segundo

Product	Inches	Equipment #(s)
290 ULS Red Dyed Diesel (15 Max PPM)	Beg____ End____	top off PCS
ULS Clear Diesel (15 Max PPM)	Beg____ End____	
Unleaded Regular Gasoline	Beg____ End____	
Unleaded Blend Gasoline	Beg____ End____	
Unleaded Premium Gasoline	Beg____ End____	

oducts

Product

Delivered: _____ Drums Returned: _____

Time In	Time Out
5:40	7:30

EIPT OF PRODUCTS ACKNOWLEDGED - ADDITIONAL TERMS ON BACK

er Signature: _____

1532 W. 132nd Street • Gardena, CA 90249
(323) 321-3864 (*24 hour service*) • Fax: (310) 769-0629
Email: WoodOil@SBCGlobal.net • Web site: WoodOilCompany.com

Gasoline • Motor Oils • Diesel

For emergency response call PERS at (800) 633-8253

Wood Oil Company of California

...Service Since 1942

Distributor of Major Brand Petroleum Products

Date: 7-6-11 JOB #: 250503 INVOICE # 12409 P.O. # _____

Customer Name: LVJ

Delivery Address: _____

City: El segundo

Qty	Product	Inches	Equipment #(s)
	ULS Red Dyed Diesel (15 Max PPM)	Beg____ End____	top off water
25	ULS Clear Diesel (15 Max PPM)	Beg____ End____	
	Unleaded Regular Gasoline	Beg____ End____	
	Unleaded Blend Gasoline	Beg____ End____	
	Unleaded Premium Gasoline	Beg____ End____	

Oil Products

Qty	Product

Drums Delivered: _____ Drums Returned: _____

Driver: _____

Time In	Time Out
5:40	7:30

RECEIPT OF PRODUCTS ACKNOWLEDGED - ***ADDITIONAL TERMS ON BACK***

Customer Signature: _____

1532 W. 132nd Street • Gardena, CA 90249
(323) 321-3864 (*24 hour service*) • Fax: (310) 769-0629
Email: WoodOil@SBCGlobal.net • Web site: WoodOilCompany.com

Gasoline • Motor Oils • Diesel

For emergency response call PERS at (800) 633-8253

Wood Oil Company of California

...Service Since 1942

Distributor of Major Brand Petroleum Products

INVOICE # 12416

Date: 7-7-11 JOB #: _____ P.O. # 251507

Customer Name: LVI

Delivery Address: _____

City: El Segundo

Qty	Product	Inches	Equipment #(s)
27	ULS Red Dyed Diesel (15 Max PPM)	Beg ____ End ____	Top off PCS
	ULS Clear Diesel (15 Max PPM)	Beg ____ End ____	
	Unleaded Regular Gasoline	Beg ____ End ____	
	Unleaded Blend Gasoline	Beg ____ End ____	
	Unleaded Premium Gasoline	Beg ____ End ____	

Oil Products

Qty	Product
	Siemen's

Drums Delivered: _____ Drums Returned: _____

Driver: _____

Time In	Time Out
6:00	7:30

RECEIPT OF PRODUCTS ACKNOWLEDGED - ***ADDITIONAL TERMS ON BACK***

Customer Signature: _____

1532 W. 132nd Street • Gardena, CA 90249
(323) 321-3864 (*24 hour service*) • Fax: (310) 769-0629
Email: WoodOil@SBCGlobal.net • Web site: WoodOilCompany.com

Gasoline • Motor Oils • Diesel

For emergency response call PERS at (800) 633-8253

Wood Oil Company of California

...Service Since 1942

Distributor of Major Brand Petroleum Products

INVOICE # 12415

Date: 7-7-11 JOB #: _____ P.O. # 251507

Customer Name: LVI

Delivery Address: _____

City: El Segundo

Qty	Product	Inches	Equipment #(s)
338	ULS Red Dyed Diesel (15 Max PPM)	Beg ____ End ____	Top off PCS
	ULS Clear Diesel (15 Max PPM)	Beg ____ End ____	
	Unleaded Regular Gasoline	Beg ____ End ____	
	Unleaded Blend Gasoline	Beg ____ End ____	
	Unleaded Premium Gasoline	Beg ____ End ____	

Oil Products

Qty	Product

Drums Delivered: _____ Drums Returned: _____

Driver: _____

Time In	Time Out
6:00	7:30

RECEIPT OF PRODUCTS ACKNOWLEDGED - ***ADDITIONAL TERMS ON BACK***

Customer Signature: _____

1532 W. 132nd Street • Gardena, CA 90249
(323) 321-3864 (*24 hour service*) • Fax: (310) 769-0629
Email: WoodOil@SBCGlobal.net • Web site: WoodOilCompany.com

Gasoline • Motor Oils • Diesel

For emergency response call PERS at (800) 633-8253

Wood Oil Company of California

...Service Since 1942

Distributor of Major Brand Petroleum Products

INVOICE # 12434

Date: 7-8-11 JOB #: _____ P.O. # _____

Customer Name: El segundo

Delivery Address: _____

City: El Segundo

Equipment #(s)

Qty	Product	Inches	Equipment #(s)
30	ULS Red Dyed Diesel (15 Max PPM)	Beg ____ End ____	Top off
8	ULS Clear Diesel (15 Max PPM)	Beg ____ End ____	PCS
____	Unleaded Regular Gasoline	Beg ____ End ____	
____	Unleaded Blend Gasoline	Beg ____ End ____	
____	Unleaded Premium Gasoline	Beg ____ End ____	

Oil Products

Qty	Product
____	Siemens
____	
____	

Drums Delivered: _____ Drums Returned: _____

Driver: _____

Time In	Time Out
6:30	8:00

RECEIPT OF PRODUCTS ACKNOWLEDGED - ***ADDITIONAL TERMS ON BACK***

Customer Signature: _____

1532 W. 132nd Street • Gardena, CA 90249
(323) 321-3864 (*24 hour service*) • Fax: (310) 769-0629
Email: WoodOil@SBCGlobal.net • Web site: WoodOilCompany.com

Gasoline • Motor Oils • Diesel

For emergency response call PERS at (800) 633-8253

Wood Oil Company of California

...Service Since 1942

Distributor of Major Brand Petroleum Products

INVOICE # 12435

Date: 7-8-11 JOB #: _____ P.O. # _____

Customer Name: LVJ

Delivery Address: _____

City: El segundo

Equipment #(s)

Qty	Product	Inches	Equipment #(s)
203	ULS Red Dyed Diesel (15 Max PPM)	Beg ____ End ____	Top off
____	ULS Clear Diesel (15 Max PPM)	Beg ____ End ____	PCS
____	Unleaded Regular Gasoline	Beg ____ End ____	
____	Unleaded Blend Gasoline	Beg ____ End ____	
____	Unleaded Premium Gasoline	Beg ____ End ____	

Oil Products

Qty	Product
____	
____	
____	

Drums Delivered: _____ Drums Returned: _____

Driver: _____

Time In	Time Out
630	8:00

RECEIPT OF PRODUCTS ACKNOWLEDGED - ***ADDITIONAL TERMS ON BACK***

Customer Signature: _____

1532 W. 132nd Street • Gardena, CA 90249
(323) 321-3864 (*24 hour service*) • Fax: (310) 769-0629
Email: WoodOil@SBCGlobal.net • Web site: WoodOilCompany.com

Gasoline • Motor Oils • Diesel

For emergency response call PERS at (800) 633-8253

Wood Oil Company of California

...Service Since 1942

Distributor of Major Brand Petroleum Products

INVOICE # 12443

Date: 7-11-11 JOB #: _____ P.O. # _____

Customer Name: LVI

Delivery Address: _____

City: El Segundo

Equipment #(s)

Qty	Product	Inches		Equipment #(s)
509	ULS Red Dyed Diesel (15 Max PPM)	Beg	End	TOP OFF PCS
	ULS Clear Diesel (15 Max PPM)	Beg	End	
	Unleaded Regular Gasoline	Beg	End	
	Unleaded Blend Gasoline	Beg	End	
	Unleaded Premium Gasoline	Beg	End	

Oil Products

Qty	Product

Drums Delivered: _____ Drums Returned: _____

Driver: [signature]

Time In	Time Out
6:00	7:30

RECEIPT OF PRODUCTS ACKNOWLEDGED - ***ADDITIONAL TERMS ON BACK***

Customer Signature: [signature]

1532 W. 132nd Street • Gardena, CA 90249
(323) 321-3864 (*24 hour service*) • Fax: (310) 769-0629
Email: WoodOil@SBCGlobal.net • Web site: WoodOilCompany.com

Gasoline • Motor Oils • Diesel

For emergency response call PERS at (800) 633-8253

Wood Oil Company of California

...Service Since 1942

Distributor of Major Brand Petroleum Products

INVOICE # 12443

Date: 7-11-11 JOB #: _____ P.O. # _____

Customer Name: LVI

Delivery Address: _____

City: El Segundo

Equipment #(s)

Qty	Product	Inches		Equipment #(s)
41	ULS Red Dyed Diesel (15 Max PPM)	Beg	End	TOP OFF PCS
	ULS Clear Diesel (15 Max PPM)	Beg	End	
	Unleaded Regular Gasoline	Beg	End	
	Unleaded Blend Gasoline	Beg	End	
	Unleaded Premium Gasoline	Beg	End	

Oil Products

Qty	Product
	Siemens

Drums Delivered: _____ Drums Returned: _____

Driver: [signature]

Time In	Time Out
6:00	7:30

RECEIPT OF PRODUCTS ACKNOWLEDGED - ***ADDITIONAL TERMS ON BACK***

Customer Signature: [signature]

1532 W. 132nd Street • Gardena, CA 90249
(323) 321-3864 (*24 hour service*) • Fax: (310) 769-0629
Email: WoodOil@SBCGlobal.net • Web site: WoodOilCompany.com

Gasoline • Motor Oils • Diesel

For emergency response call PERS at (800) 633-8253

Wood Oil Company of California

...Service Since 1942

Distributor of Major Brand Petroleum Products

INVOICE # 12452

Date: 7-12-11 JOB #: _____ P.O. # _____

Customer Name: LVI

Delivery Address: _____

City: El segundo

Equipment #(s)

Qty	Product	Inches		Equipment #(s)
361	ULS Red Dyed Diesel (15 Max PPM)	Beg	End	Top off 7 gs
	ULS Clear Diesel (15 Max PPM)	Beg	End	
	Unleaded Regular Gasoline	Beg	End	
	Unleaded Blend Gasoline	Beg	End	
	Unleaded Premium Gasoline	Beg	End	

Oil Products

Qty	Product

Drums Delivered: _____ Drums Returned: _____

Driver: _____

Time In	Time Out
6:00	7:15

RECEIPT OF PRODUCTS ACKNOWLEDGED - ***ADDITIONAL TERMS ON BACK***

Customer Signature: _____

1532 W. 132nd Street • Gardena, CA 90249
(323) 321-3864 (*24 hour service*) • Fax: (310) 769-0629
Email: WoodOil@SBCGlobal.net • Web site: WoodOilCompany.com

Gasoline • Motor Oils • Diesel

For emergency response call PERS at (800) 633-8253

Wood Oil Company of California

...Service Since 1942

Distributor of Major Brand Petroleum Products

INVOICE # 12463

Date: 7-13-11 JOB #: _____ P.O. # _____

Customer Name: LVI

Delivery Address: _____

City: El Segundo

Equipment #(s)

Qty	Product	Inches		Equipment #(s)
345	ULS Red Dyed Diesel (15 Max PPM)	Beg	End	Top off 7 gs
	ULS Clear Diesel (15 Max PPM)	Beg	End	
	Unleaded Regular Gasoline	Beg	End	
	Unleaded Blend Gasoline	Beg	End	
	Unleaded Premium Gasoline	Beg	End	

Oil Products

Qty	Product

Drums Delivered: _____ Drums Returned: _____

Driver: _____

Time In	Time Out
6:00	7:00

RECEIPT OF PRODUCTS ACKNOWLEDGED - ***ADDITIONAL TERMS ON BACK***

Customer Signature: _____

1532 W. 132nd Street • Gardena, CA 90249
(323) 321-3864 (*24 hour service*) • Fax: (310) 769-0629
Email: WoodOil@SBCGlobal.net • Web site: WoodOilCompany.com

Gasoline • Motor Oils • Diesel

Wood Oil Company of California

...Service Since 1942

Distributor of Major Brand Petroleum Products

INVOICE # 12475

Date: 7-14-11 JOB #: _____ P.O. # _____

Customer Name: LVI

Delivery Address: _____

City: El Segundo

Qty	Product	Inches	Equipment #(s)
305	ULS Red Dyed Diesel (15 Max PPM)	Beg ____ End ____	Top off PCS
	ULS Clear Diesel (15 Max PPM)	Beg ____ End ____	
	Unleaded Regular Gasoline	Beg ____ End ____	
	Unleaded Blend Gasoline	Beg ____ End ____	
	Unleaded Premium Gasoline	Beg ____ End ____	

Oil Products

Qty	Product

Drums Delivered: _____ Drums Returned: _____

Driver: _____

Time In	Time Out
6:00	7:00

RECEIPT OF PRODUCTS ACKNOWLEDGED - ***ADDITIONAL TERMS ON BACK***

Customer Signature: _____

1532 W. 132nd Street • Gardena, CA 90249
(323) 321-3864 (*24 hour service*) • Fax: (310) 769-0629
Email: WoodOil@SBCGlobal.net • Web site: WoodOilCompany.com

Gasoline • Motor Oils • Diesel

For emergency response call PERS at (800) 633-8253

Wood Oil Company of California

...Service Since 1942

Distributor of Major Brand Petroleum Products

INVOICE # 12756

Date: 7-15-11 JOB #: _____ P.O. # _____

Customer Name: LVI

Delivery Address: _____

City: El Segundo

Qty	Product	Inches	Equipment #(s)
378	ULS Red Dyed Diesel (15 Max PPM)	Beg ____ End ____	Top off PCS
	ULS Clear Diesel (15 Max PPM)	Beg ____ End ____	
	Unleaded Regular Gasoline	Beg ____ End ____	
	Unleaded Blend Gasoline	Beg ____ End ____	
	Unleaded Premium Gasoline	Beg ____ End ____	

Oil Products

Qty	Product

Drums Delivered: _____ Drums Returned: _____

Driver: _____

Time In	Time Out
6:00	7:15

RECEIPT OF PRODUCTS ACKNOWLEDGED - ***ADDITIONAL TERMS ON BACK***

Customer Signature: _____

1532 W. 132nd Street • Gardena, CA 90249
(323) 321-3864 (*24 hour service*) • Fax: (310) 769-0629
Email: WoodOil@SBCGlobal.net • Web site: WoodOilCompany.com

Gasoline • Motor Oils • Diesel

For emergency response call PERS at (800) [illegible]

Wood Oil Company of California

...Service Since 1942

Distributor of Major Brand Petroleum Products

INVOICE # 12770

Date: 7-19-11 **JOB #:** _____ **P.O. #** _____

Customer Name: LVI

Delivery Address: _____

City: El Segundo

Equipment #(s)

Qty	Product	Inches		Equipment #(s)
437	ULS Red Dyed Diesel (15 Max PPM)	Beg ____	End ____	Top off P.S
	ULS Clear Diesel (15 Max PPM)	Beg ____	End ____	
	Unleaded Regular Gasoline	Beg ____	End ____	
	Unleaded Blend Gasoline	Beg ____	End ____	
	Unleaded Premium Gasoline	Beg ____	End ____	

Oil Products

Qty	Product

Drums Delivered: _____ Drums Returned: _____

Driver: _____

Time In	Time Out
6:00	7:30

RECEIPT OF PRODUCTS ACKNOWLEDGED - ***ADDITIONAL TERMS ON BACK***

Customer Signature: _____

1532 W. 132nd Street • Gardena, CA 90249
(323) 321-3864 (*24 hour service*) • Fax: (310) 769-0629
Email: WoodOil@SBCGlobal.net • Web site: WoodOilCompany.com

Gasoline • Motor Oils • Diesel

Wood Oil Company of California

...Service Since 1942

Distributor of Major Brand Petroleum Products

INVOICE # 12765

Date: 7-18-11 **JOB #:** _____ **P.O. #** _____

Customer Name: LVI

Delivery Address: _____

City: El Segundo

Equipment #(s)

Qty	Product	Inches		Equipment #(s)
478	ULS Red Dyed Diesel (15 Max PPM)	Beg ____	End ____	Top off P.S
	ULS Clear Diesel (15 Max PPM)	Beg ____	End ____	
	Unleaded Regular Gasoline	Beg ____	End ____	
	Unleaded Blend Gasoline	Beg ____	End ____	
	Unleaded Premium Gasoline	Beg ____	End ____	

Oil Products

Qty	Product

Drums Delivered: _____ Drums Returned: _____

Driver: _____

Time In	Time Out
5:45	7:15

RECEIPT OF PRODUCTS ACKNOWLEDGED - ***ADDITIONAL TERMS ON BACK***

Customer Signature: _____

1532 W. 132nd Street • Gardena, CA 90249
(323) 321-3864 (*24 hour service*) • Fax: (310) 769-0629
Email: WoodOil@SBCGlobal.net • Web site: WoodOilCompany.com

Gasoline • Motor Oils • Diesel

For emergency response call PERS at (800) 633-8253

Wood Oil Company of California

...Service Since 1942

Distributor of Major Brand Petroleum Products

INVOICE # 12781

Date: 7-20-11 **JOB #:** _____ **P.O. #** _____

Customer Name: LVI

Delivery Address: _____

City: El Segundo

Equipment #(s)

Qty	Product	Inches	Equipment #(s)
457	ULS Red Dyed Diesel (15 Max PPM)	Beg____ End____	Top off PCS
	ULS Clear Diesel (15 Max PPM)	Beg____ End____	
	Unleaded Regular Gasoline	Beg____ End____	
	Unleaded Blend Gasoline	Beg____ End____	
	Unleaded Premium Gasoline	Beg____ End____	

Oil Products

Qty	Product

Drums Delivered: _____ Drums Returned: _____

Driver: [illegible]

Time In	Time Out
6:15	7:30

RECEIPT OF PRODUCTS ACKNOWLEDGED - ***ADDITIONAL TERMS ON BACK***

Customer Signature: [illegible]

1532 W. 132nd Street • Gardena, CA 90249
(323) 321-3864 (*24 hour service*) • Fax: (310) 769-0629
Email: WoodOil@SBCGlobal.net • Web site: WoodOilCompany.com

Gasoline • Motor Oils • Diesel

For emergency response call PERS at (800) 633-8253

Wood Oil Company of California

...Service Since 1942

Distributor of Major Brand Petroleum Products

INVOICE # 12771

Date: 7-19-11 **JOB #:** _____ **P.O. #** _____

Customer Name: LVI

Delivery Address: _____

City: El Segundo

Equipment #(s)

Qty	Product	Inches	Equipment #(s)
	ULS Red Dyed Diesel (15 Max PPM)	Beg____ End____	Top off water Truck
25	ULS Clear Diesel (15 Max PPM)	Beg____ End____	
	Unleaded Regular Gasoline	Beg____ End____	
	Unleaded Blend Gasoline	Beg____ End____	
	Unleaded Premium Gasoline	Beg____ End____	

Oil Products

Qty	Product

Drums Delivered: _____ Drums Returned: _____

Driver: [illegible]

Time In	Time Out
6:00	7:30

RECEIPT OF PRODUCTS ACKNOWLEDGED - ***ADDITIONAL TERMS ON BACK***

Customer Signature: [illegible]

1532 W. 132nd Street • Gardena, CA 90249
(323) 321-3864 (*24 hour service*) • Fax: (310) 769-0629
Email: WoodOil@SBCGlobal.net • Web site: WoodOilCompany.com

Gasoline • Motor Oils • Diesel

For emergency response call PERS at (800) 633-8253

Wood Oil Company of California

...Service Since 1942

Distributor of Major Brand Petroleum Products

INVOICE # 12790

Date: 7-21-11 **JOB #:** _____ **P.O. #** _____

Customer Name: LVI

Delivery Address: _____

City: El Segundo

Equipment #(s)

Qty	Product	Inches	Equipment #(s)
475	ULS Red Dyed Diesel (15 Max PPM)	Beg ____ End ____	Top off YES
	ULS Clear Diesel (15 Max PPM)	Beg ____ End ____	
	Unleaded Regular Gasoline	Beg ____ End ____	
	Unleaded Blend Gasoline	Beg ____ End ____	
	Unleaded Premium Gasoline	Beg ____ End ____	

Oil Products

Qty	Product

Drums Delivered: _____ Drums Returned: _____

Driver: _____

Time In	Time Out
6:00	7:30

RECEIPT OF PRODUCTS ACKNOWLEDGED - ***ADDITIONAL TERMS ON BACK***

Customer Signature: _____

1532 W. 132nd Street • Gardena, CA 90249
(323) 321-3864 (*24 hour service*) • Fax: (310) 769-0629
Email: WoodOil@SBCGlobal.net • Web site: WoodOilCompany.com

Gasoline • Motor Oils • Diesel

For emergency response call PERS at (800) 633-8253

Wood Oil Company of California

...Service Since 1942

Distributor of Major Brand Petroleum Products

INVOICE # 12797

Date: 7-22-11 **JOB #:** _____ **P.O. #** _____

Customer Name: LVI

Delivery Address: _____

City: El Segundo

Equipment #(s)

Qty	Product	Inches	Equipment #(s)
450	ULS Red Dyed Diesel (15 Max PPM)	Beg ____ End ____	Top off YES
	ULS Clear Diesel (15 Max PPM)	Beg ____ End ____	
	Unleaded Regular Gasoline	Beg ____ End ____	
	Unleaded Blend Gasoline	Beg ____ End ____	
	Unleaded Premium Gasoline	Beg ____ End ____	

Oil Products

Qty	Product

Drums Delivered: _____ Drums Returned: _____

Driver: _____

Time In	Time Out

RECEIPT OF PRODUCTS ACKNOWLEDGED - ***ADDITIONAL TERMS ON BACK***

Customer Signature: _____

1532 W. 132nd Street • Gardena, CA 90249
(323) 321-3864 (*24 hour service*) • Fax: (310) 769-0629
Email: WoodOil@SBCGlobal.net • Web site: WoodOilCompany.com

Gasoline • Motor Oils • Diesel

For emergency response call PERS at (800) 633-8253

Wood Oil Company of California

...Service Since 1942

Distributor of Major Brand Petroleum Products

INVOICE # 12816

Date: 7-26-1 JOB #: _____ P.O. # _____

Customer Name: LVI Environ

Delivery Address: _____

City: El Segundo

Qty	Product	Inches	Equipment #(s)
405	ULS Red Dyed Diesel (15 Max PPM)	Beg ____ End ____	Top off PERS
	ULS Clear Diesel (15 Max PPM)	Beg ____ End ____	
	Unleaded Regular Gasoline	Beg ____ End ____	
	Unleaded Blend Gasoline	Beg ____ End ____	
	Unleaded Premium Gasoline	Beg ____ End ____	

Oil Products

Qty	Product

Drums Delivered: _____ Drums Returned: _____

Driver: _____

Time In	Time Out
6:00	6:45

RECEIPT OF PRODUCTS ACKNOWLEDGED - ***ADDITIONAL TERMS ON BACK***

Customer Signature: _____

1532 W. 132nd Street • Gardena, CA 90249
(323) 321-3864 (*24 hour service*) • Fax: (310) 769-0629
Email: WoodOil@SBCGlobal.net • Web site: WoodOilCompany.com

Gasoline • Motor Oils • Diesel

For emergency response call PERS at (800) 633-8253

Wood Oil Company of California

...Service Since 1942

Distributor of Major Brand Petroleum Products

INVOICE # 12805

Date: 7-25-11 JOB #: _____ P.O. # _____

Customer Name: LVI

Delivery Address: _____

City: El Segundo

Qty	Product	Inches	Equipment #(s)
496	ULS Red Dyed Diesel (15 Max PPM)	Beg ____ End ____	Top off PERS
	ULS Clear Diesel (15 Max PPM)	Beg ____ End ____	
	Unleaded Regular Gasoline	Beg ____ End ____	
	Unleaded Blend Gasoline	Beg ____ End ____	
	Unleaded Premium Gasoline	Beg ____ End ____	

Oil Products

Qty	Product

Drums Delivered: _____ Drums Returned: _____

Driver: _____

Time In	Time Out
5:45	6:45

RECEIPT OF PRODUCTS ACKNOWLEDGED - ***ADDITIONAL TERMS ON BACK***

Customer Signature: _____

1532 W. 132nd Street • Gardena, CA 90249
(323) 321-3864 (*24 hour service*) • Fax: (310) 769-0629
Email: WoodOil@SBCGlobal.net • Web site: WoodOilCompany.com

Gasoline • Motor Oils • Diesel

For emergency response call PERS at (800) 633-8253

Wood Oil Company of California

...Service Since 1942

Distributor of Major Brand Petroleum Products

INVOICE # 12827

Date: 7 28.11 **JOB #:** _____ **P.O. #** _____

Customer Name: LVI Environmental

Delivery Address: _____

City: El Segundo

Equipment #(s)

Qty	Product	Inches	Equipment #(s)
214	ULS Red Dyed Diesel (15 Max PPM)	Beg ____ End ____	Top off Pics
	ULS Clear Diesel (15 Max PPM)	Beg ____ End ____	
	Unleaded Regular Gasoline	Beg ____ End ____	
	Unleaded Blend Gasoline	Beg ____ End ____	
	Unleaded Premium Gasoline	Beg ____ End ____	

Oil Products

Qty	Product

Drums Delivered: _____ Drums Returned: _____

Driver: _____

Time In	Time Out
6:30	7:20

RECEIPT OF PRODUCTS ACKNOWLEDGED - ***ADDITIONAL TERMS ON BACK***

Customer Signature: _____

1532 W. 132nd Street • Gardena, CA 90249
(323) 321-3864 (*24 hour service*) • Fax: (310) 769-0629
Email: WoodOil@SBCGlobal.net • Web site: WoodOilCompany.com

Gasoline • Motor Oils • Diesel

For emergency response call PERS at (800) 633-8253

Wood Oil Company of California

...Service Since 1942

Distributor of Major Brand Petroleum Products

INVOICE # 12823

Date: 7.27.11 **JOB #:** _____ **P.O. #** _____

Customer Name: LVI

Delivery Address: _____

City: El Segundo

Equipment #(s)

Qty	Product	Inches	Equipment #(s)
376	ULS Red Dyed Diesel (15 Max PPM)	Beg ____ End ____	Top off Pics
	ULS Clear Diesel (15 Max PPM)	Beg ____ End ____	
	Unleaded Regular Gasoline	Beg ____ End ____	
	Unleaded Blend Gasoline	Beg ____ End ____	
	Unleaded Premium Gasoline	Beg ____ End ____	

Oil Products

Qty	Product

Drums Delivered: _____ Drums Returned: _____

Driver: _____

Time In	Time Out
7:45	

RECEIPT OF PRODUCTS ACKNOWLEDGED - ***ADDITIONAL TERMS ON BACK***

Customer Signature: _____

1532 W. 132nd Street • Gardena, CA 90249
(323) 321-3864 (*24 hour service*) • Fax: (310) 769-0629
Email: WoodOil@SBCGlobal.net • Web site: WoodOilCompany.com

Gasoline • Motor Oils • Diesel

For emergency response call PERS at (800) 633-8253

Wood Oil Company of California

...Service Since 1942

Distributor of Major Brand Petroleum Products

INVOICE # 12831

Date: 7-29-11 **JOB #:** _____ **P.O. #** _____

Customer Name: LVT

Delivery Address: _____

City: El Segundo

Equipment #(s)

Qty	Product	Inches	Equipment #(s)
308	ULS Red Dyed Diesel (15 Max PPM)	Beg____ End____	Top off PLS
	ULS Clear Diesel (15 Max PPM)	Beg____ End____	
	Unleaded Regular Gasoline	Beg____ End____	
	Unleaded Blend Gasoline	Beg____ End____	
	Unleaded Premium Gasoline	Beg____ End____	

Oil Products

Qty	Product

Drums Delivered: _____ Drums Returned: _____

Driver: _____

Time In	Time Out
6:00	7:00

RECEIPT OF PRODUCTS ACKNOWLEDGED - ***ADDITIONAL TERMS ON BACK***

Customer Signature: _____

1532 W. 132nd Street • Gardena, CA 90249
(323) 321-3864 (*24 hour service*) • Fax: (310) 769-0629
Email: WoodOil@SBCGlobal.net • Web site: WoodOilCompany.com

Gasoline • Motor Oils • Diesel

For emergency response call PERS at (800) 633-8253

APPENDIX B
COPIES OF CARB PORTABLE EQUIPMENT REGISTRATIONS

The following PERP equipment was used at the project during the month of July 2011.

Appendix B: Onsite PERP Equipment			
Equipment Operator/Contractor	**Equipment Description**	**PERP Registration Number**	**PERP Registration Expiration**
Duthie Power Services	Internal Combustion Engine	146078	12/31/11

Linda S. Adams
Secretary for Environmental Protection

Air Resources Board

Mary D. Nichols, Chairman
1001 I Street • P.O. Box 2815
Sacramento, California 95812 • www.arb.ca.gov

Arnold Schwarzenegger
Governor

Statewide Portable Equipment Registration

Registration No: 146078

Legal Owner or Operator:	Duthie Electric Service Corporation, dba Duthie Power Services
Mailing Address:	2335 E. Cherry Industrial Circle Long Beach, CA 90805

Engine Description:

Certified non-road portable internal combustion engine, compression ignition, John Deere, model 6068HF285, Serial No: PE6068L053259, rated at 216 bhp, diesel fueled, equipped with turbocharger and aftercooler.

U.S. EPA Engine Family Name:	8JDXL06.8104
Conditions:	see attached
Home District:	South Coast Air Quality Management District
Engine Inspection Discount:	No inspection discount claimed

Expiration Date: December 31, 2011

California Environmental Protection Agency
AIR RESOURCES BOARD
Statewide Portable Equipment Registration Program

Registration Number:	Expiration Date:
146078	12/31/11

:ge Fernandez
ief, Program Evaluation Branch
ationary Source Division

The energy challenge facing California is real. Every Californian needs to take immediate action to reduce energy consumption.
For a list of simple ways you can reduce demand and cut your energy costs, see our website: http://www.arb.ca.gov

California Environmental Protection Agency

Printed on Recycled Paper

Required AQMD Operation and location Log

1. Customer must Comply with ALL operating conditions of the CARB permit.
2. Customer is responsible to inform lessee if CARB permit is lost or misplaced
3. Location MUST be logged EVERY time the unit is moved and once a month regardless
4. Customer is responsible to keep a copy or rental agreement in the generator

Unit # 2340 **CRAB #** 146078

Location / Address	City	Date	Hr's	Initials
Yosemite / Los Angeles Ave.	Simi Valley	06-15-11	765.5	J.K
Eighines / South St & Paramount	LBC	06-16-11	773.	SA
Outhic Yard	LB	6-22-11	773.6	[illegible]
Palos Verdes		6-27-11	773.6	J.P
Outhic Yard	LB	6-28-4	787	JR
Outhic yard	LB	7/6/11	794	T-V.
N.R.G. 301 Vista Del Mar, El Segundo		7/6/11	794	CBS

APPENDIX C
LIST OF DIESEL-FUEL EQUIPMENT

Appendix C: List of Diesel-Fueled Offroad Equipment (July 2011)									
Contractor Name	**Equipment Manufacturer**	**Equipment Type**	**Equipment Model**	**Engine Model Year**	**Horsepower (HP)**	**EPA Engine Tier Level**	**CARB EIN**	**Status**	
								Onsite Arrival	**Onsite Departure**
Equipment Brought Onsite in July 2011									
Granite	Deere	Tractor/Loader/Backhoe	210LJ	2010	84	4	JC3X37	07/27/11	
Granite	Volvo	Roller	DD90HF	2011	130	3	EW3L59	07/27/11	
Granite	Caterpillar	Excavator	325DL	2007	216	3	NN7T85	07/27/11	
LVI Services	Deere	Dump Truck	400D	2008	422	3	FM6T89	07/26/11	
PMI	JLG	Forklift	10054	2007	87	3	EB3Y49	07/25/11	
LVI Services	Caterpillar	Rubber Tired Loader	980H	2008	318	3	KD6H44	07/06/11	07/27/11
LVI Services	Case	Rubber Tired Loader	570 MXT	2004	85	2 GFE[1]	GS7S97	07/05/11	
ARB	Case	Tractor/Loader/Backhoe	580SM	2010	97	4	KV5Y73	07/01/11	
Equipment Continuing Onsite in July 2011									
PMI	Genie	Rough Terrain Forklift	GTH-1056	2011	139	3	VU4U98	06/24/11	
ARB	Sky Track	Forklift	10K	2007	110	3	RA7A36	06/24/11	
LVI Services	Takeuchi	Skid Steer Loader	TL240C	2011	87	4	TJ7F47	06/16/11	
LVI Services	Caterpillar	Excavator	345CL	2005	345	3	BD9N79	06/13/11	07/06/11
LVI Services	Caterpillar	Dump Truck	725	2005	335.5	3	LG7D37	06/10/11	
LVI Services	HAMM	Roller	3410/SHELL	2011	134	3	GV3X88	06/10/11	
LVI Services	Takeuchi	Skid Steer Loader		2010	99	4	MF8M85	06/10/11	
PMI	JCB	Tractor/Loader/Backhoe	3CX-14	2011	100	3	SX5K47	06/09/11	
PMI	Deere	Tractor/Loader/Backhoe	210LJ	2011	75	4	PE4R88	06/06/11	

Appendix C: List of Diesel-Fueled Offroad Equipment (July 2011)									
Contractor Name	Equipment Manufacturer	Equipment Type	Equipment Model	Engine Model Year	Horsepower (HP)	EPA Engine Tier Level	CARB EIN	Status	
								Onsite Arrival	Onsite Departure
LVI Services	Dynapac	Roller	CA250D	2007	110	3	GG7M84	06/03/11	
LVI Services	Deere	Dump Truck	400D	2008	422	3	FM6T89	06/02/11	07/18/11
LVI Services	Deere	Dump Truck	350D	2007	380	3	DK5F88	05/24/11	
LVI Services	Caterpillar	Tractors/Loader/Backhoes	973C	2001	230	1 GFE[1]	MK7N84	05/17/11	
LVI Services	Caterpillar	Tractors/Loader/Backhoes	973C	2000	230	1 GFE[1]	JC8Y37	02/09/11	
LVI Services	Komatsu	Crawler/Tractor	D65EX-15EO	2006	207	3	UL5B58	02/04/11	
LVI Services	Komatsu	Excavator	PC650LC5	1991	410	0 GFE[1]	NK3X63	12/20/10	
LVI Services	Hitachi	Excavator	ZX800	2004	456	2 GFE[1]	NG4M34	12/02/10	
LVI Services	Volvo	Excavator	EC460BLC	2006	316	3	SS3T35	08/26/10	
LVI Services	Hitachi	Excavator	EX750-5	1994	446	0 GFE[1]	JX6E89	08/26/10	

Acronyms: GFE - Good Faith Effort

Notes:

1. The owner/operator of this equipment has provided sufficient information to demonstrate the requisite good faith effort and concludes that retrofit controls are not feasible or replacement with another tier-compliant engine is not available. Documentation and formal request for approval has been submitted to the California Energy Commission's Construction Project Manager (CPM) for this project.

ATTACHMENT C
CUL-5 AND CUL-6
CULTURAL RESOURCES REPORT
JULY 2011

July 11, 2011

George L. Piantka, PE
NRG Energy, West
1817 Aston Avenue, Suite 104
Carlsbad, CA 92008

RE: NRG El Segundo Repowering Project: Cultural Resources Weekly Monitoring Report, July 1 through 8, 2011

Dear Mr. Piantka:

Enumerated below are the highpoints of the Cultural Resources Monitoring Program for the week of July 1 through 8, 2011:

Friday, 7/1

JMA's designated cultural/paleontological monitor Frank McDowell on-site today. PMI excavating 5x 7-foot pothole just northwest of administrative trailer complex and west of chain link fence. Using backhoe and hand labor, shoring necessary. No finds made today.

Monday, 7/4

No work scheduled today.

Tuesday, 7/5

JMA's designated cultural/paleontological monitor Frank McDowell on-site today. PMI continuing to excavate 5x 7-foot pothole adjacent to modular trailer complex. Using backhoe and hand labor, shoring necessary. No finds made today.

Wednesday, 7/6

JMA's designated cultural/paleontological monitor Frank McDowell on-site today. PMI continues to excavate pothole adjacent to administrative trailer complex. A small bottle (medicine?) was recovered from the northeast portion of the LVI demo area. Find not considered significant.

Thursday, 7/7

JMA's designated cultural/paleontological monitor Frank McDowell on-site today. PMI expanding pothole to 8 x 5-feet. No finds made today.

Friday, 7/8

JMA's designated cultural/paleontological monitor Jessica Colston on-site today. LVI working in northwest corner of demo area. Many small shells observed…not cultural. No finds made today.

Despite careful and thorough inspection of the excavation and all associated spoils, no prehistoric or significant historic finds were made during the week of 7/1-7/8, 2011.

Very truly yours,

Laura S White

Laura S. White, M.A.
Cultural Resource Specialist

RSW/LSW:nrgweeklyjuly11,2011

July 18, 2018

George L. Piantka, PE
NRG Energy, West
1817 Aston Avenue, Suite 104
Carlsbad, CA 92008

RE: NRG El Segundo Repowering Project: Cultural Resources Weekly Monitoring Report, July 11 through 15, 2011

Dear Mr. Piantka:

Enumerated below are the highpoints of the Cultural Resources Monitoring Program for the week of July 11 through 15, 2011:

Monday, 7/11

JMA's designated cultural/paleontological monitor Jessica Colston is on-site today. LVI working in northeast corner of demo area excavating and breaking rubble. No finds made today.

Tuesday, 7/12

JMA's designated cultural/paleontological monitor Jessica Colston on-site today. LVI continues to work in northeast corner of demo area. PMI excavating potholes for utility relocation adjacent to modular trailer complex. No finds made today.

Wednesday, Thursday, 7/13

JMA's designated cultural/paleontological monitor Jessica Colston on-site today. LVI continues excavation/demo efforts in the northeast corner of the area once occupied by Units 1 & 2. PMI continuing to pothole adjacent to administrative trailer complex. No finds made today.

Thursday, 7/14

JMA's designated cultural/paleontological monitor and PRS John Minch on-site today. LVI working in northeast corner of demo area. PMI continuing utility relocation on north side of administrative trailer complex. No finds made today.

Friday, 7/15

JMA's designated cultural/paleontological monitor and PRS John Minch on-site today. LVI continuing excavation/demo work in northeast corner of plant. PMI continuing utility relocation on north side of administrative trailer complex. No finds made today.

Despite careful and thorough inspection of the excavation and all associated spoils, no prehistoric or historic finds were made during the week of 7/11-7/15, 2011.

Very truly yours,

Laura S. White, M.A.
Cultural Resource Specialist

RSW/LSW:nrgweeklyjuly18,2011

July 25, 2011

George L. Piantka, PE
NRG Energy, West
1817 Aston Avenue, Suite 104
Carlsbad, CA 92008

RE: NRG El Segundo Repowering Project: Cultural Resources Weekly Monitoring Report, July 18 through 22, 2011

Dear Mr. Piantka:

Enumerated below are the highpoints of the Cultural Resources Monitoring Program for the week of July 18 through 22, 2011:

Monday, 7/18

JMA's designated cultural/paleontological monitor Jessica Colston is on-site today. LVI working in northwest corner of demolishing large "forebay" structure. PMI pot-holing for utilities near the Morrow Meadows (SMUD) area. No finds made today.

Tuesday, 7/19

JMA's designated cultural/paleontological monitor Jessica Colston on-site today. LVI continues excavation/demo efforts in the northwest corner of the area once occupied by Units 1 & 2. PMI pot holing in central area of plant site. No finds made today.

Wednesday, Thursday, 7/20

JMA's designated cultural/paleontological monitor Jessica Colston on-site today. LVI continues demo efforts on the "forebay" structure in the northwest corner of the site. PMI pot-holing for utilities in the central portion of the site as well as along the southern fence line near 45th Street. Four older soda bottles recovered today from this area. None are considered historically important.

Thursday, 7/21

JMA's designated cultural/paleontological monitor Rebecca Knierim on-site today. Granite Construction working in southwest corner of site below access road. No finds made today.

Friday, 7/22
JMA's designated cultural/paleontological monitor Rebecca Knierim on-site today. LVI continuing excavation/demo work in southeast and southwest portions of the demo site. PMI pot-holing below entrance road. No finds made today.

Despite careful and thorough inspection of the excavation and all associated spoils, no prehistoric or significant historic finds were made during the week of 7/18-7/22, 2011.

Very truly yours,

Laura S. White, M.A.
Cultural Resource Specialist

RSW/LSW:nrgweeklyjuly25,2011

August 1, 2011

George L. Piantka, PE
NRG Energy, West
1817 Aston Avenue, Suite 104
Carlsbad, CA 92008

RE: NRG El Segundo Repowering Project: Cultural Resources Weekly Monitoring Report, July 25 through 29, 2011

Dear Mr. Piantka:

Enumerated below are the highpoints of the Cultural Resources Monitoring Program for the week of July 25 through 29, 2011:

Monday, 7/25

JMA's designated cultural/paleontological monitor Jessica Colston is on-site today. LVI working in southern half of the demo area breaking and moving debris. PMI opening new pothole in east-central portion of plant. No finds made today.

Tuesday, 7/26

JMA's designated cultural/paleontological monitor Jessica Colston on-site today. LVI excavating in the southeast and northwest corners of the demo area. No finds made today.

Wednesday, Thursday, 7/27

JMA's designated cultural/paleontological monitor Jessica Colston on-site today. Granite Construction working on main entry road. LVI excavating at north end of demo site attempting to expose sea wall. No finds made today.

Thursday, 7/28

JMA's designated cultural/paleontological monitor Rebecca Knierim on-site today. Granite Construction working on main entry road. LVI continuing excavation/demo work in the southern and southwestern portions of the demo site. One marked brick found today in LVI area. Find not considered historically important.

Friday, 7/29

JMA's designated cultural/paleontological monitor Rebecca Knierim on-site today. Granite Construction continues work on main entry road. LVI continuing excavation/demo work in the southern portion of the demo site. PMI cutting asphalt along southern edge of LVI work area. PMI did not trench today as anticipated. No finds made today.

Despite careful and thorough inspection of the excavation and all associated spoils, no prehistoric or significant historic finds were made during the week of 7/25-7/29, 2011.

Very truly yours,

Laura S. White, M.A.
Cultural Resource Specialist

RSW/LSW:nrgweeklyaugust1,2011

NRG EL SEGUNDO REPOWERING PROJECT: CULTURAL RESOURCES MITIGATION MONITORING REPORT FOR THE MONTH OF JULY, 2011

Prepared for:

George L. Piantka, PE
NRG Energy, West
1817 Aston Avenue, Suite 104
Carlsbad, CA 92008

Prepared by:

Robert S. White
Laura S. White M.A.

John Minch and Associates, Inc.
26623 Sierra Vista
Mission Viejo, CA 92692

Tel: (949) 367-1000
Fax: (949) 367-0117

Contact person:

Edwin Minch, Principal

August 7, 2011

The undersigned certifies that the attached report is a true and accurate description of the results of a CULTURAL RESOURCES MONITORING program described herein.

Laura S White

……
Laura S. White. M.A.
Cultural Resource Specialist

INTRODUCTION

As contracted by NRG Energy, West/El Segundo Power II LLC, John Minch & Associates, Inc. (JMA) has completed archaeological monitoring of construction and demolition activities for July, 2011 in conjunction with the El Segundo Repowering Project. Briefly, earth-disturbing activities focused on but were not limited to: 1) the continuing demolition of concrete foundations and other substantial features under Units 1 and 2, 2) relocation of existing utilities in the near vicinity of the administrative office trailer complex and elsewhere, and 3) widening of the entry access road. The work took place over a 20-day period between July 1 and 31, 2011.

Prior to the onset of earth-disturbing activities associated with the demolition program, JMA conducted Worker Environmental Awareness Program training (WEAP) on June 29 and July 21, 2011 for all new LVI, AECOM and Granite Construction personnel participating in earth-disturbing activities. In general, the training session addressed: 1) the paleontological and cultural resources regulatory framework with which the project must comply, 2) a discussion of the sensitivity of the project area for paleontological and cultural resources and the potential for encountering such resources, 3) examples of paleontological resources (fossils) and cultural resources (prehistoric and/or historic finds), and 4) the procedures to be followed in the event of the discovery of paleontological and cultural resources, and more importantly, human remains. The WEAP training session was presented in a narrated, Power Point format. Both the CRS and PRS were present at the presentations.

MONITORING PROGRAM

Monitoring for the month of July focused on the continuing removal of the foundations, footings, walls and contaminated materials (PCB) from the area once occupied by Units 1 and 2. This work was undertaken by LVI. On-going removal of the rock forming the sea wall was also conducted by LVI. PMI undertook pot-holing excavations adjacent: 1) the modular trailer complex, 2) in the east-central portion of the site, and 3) below the entry road. Granite Construction began widening the entry road down hill from the guard shack. All earth-disturbing activities took place within the boundaries of the NRG facility.

Demolition of the concrete structures and foundations was accomplished using numerous track excavators/hoes (fitted with buckets, hydraulic hammers and crushing jaws), a track loader, bulldozers, skid-steer loaders (Bobcats), backhoes, skiploaders and end-dump trucks. Backhoes

supplemented by handwork were used for utility relocation. The deepest of the excavation work took place in the demolition area where removals went below 15-feet in depth.

Where feasible, monitoring of excavation activities entailed closely observing the soil once the concrete had been removed and/or as the soil was being removed. If deemed necessary, uncontaminated spoils were also examined once they had been placed in the spoils pile or transport bin. Contaminated material was examined from a distance; no attempt was made to access any contaminated soils. The native ground surface was thoroughly inspected for any signs of buried prehistoric or historic deposits.

Earthwork undertaken in July was conducted by 1) LVI Services (LVI), under the direction of Mr. Kelly Arnold, LVI Foreman, 2) Professional Mechanical, Inc. (PMI), under the direction of Mr. George Hernandez, Foreman and 3) Granite Construction under the direction of Mr. Hector Montano (Foreman). JMA's Cultural Resource Monitors (CRMs') for the month of July were Frank McDowell, John Minch, Jessica Colston and Rebekka Knierim under the supervision of Ms. Laura S. White, M.A. Cultural Resource Specialist (CRS). Mr. Sam Dunlap and Mr. Edgar Perez were the designated Native American Monitors (NAM) for the Gabrielino Tongva Nation. The Source Group, Inc. (SGI) provided geotechnical inspection. Work for the month of July was conducted under the auspices of Mr. Scott Seipel (SGI Senior Hydrogeologist) and NRG Construction Manager, Mr. David Michelsen.

FINDINGS AND RECOMMENDATIONS

On July 6, a small, clear glass bottle with a cork closure was recovered from the LVI area. Age and function have yet to be determined but it appears to be over 50-years of age. No other historic material was observed in the immediate area. On July 20, four older beer and soda bottles were found during PMI excavation along the southern fence line near 45th Street. Other, more recent beverage bottles have been found in this area as well. Preliminary analysis has indicated that none are older than 1950. On July 28, a partial brick bearing the makers mark "LAOLEDE PEERLAO was recovered in the soil from the LVI area. Age of the brick fragment and the manufacturer has yet to be determined.

Neither the brick fragment nor the bottles are considered significant finds as they offer little additional research potential. Consequently, despite thorough and systematic monitoring of the operation, no significant prehistoric or historic finds were made in conjunction with the

demolition and utility relocation programs.

Plate I. Top: Northeasterly view of "forebay" structure being demolished by LVI.
Bottom: Northerly view of back (west) side of "forebay" structure (in shadow).

Plate II. Top: Easterly view of Granite Construction working on entry road..
Bottom: Northwesterly view of Granite Construction working widening on entry road.

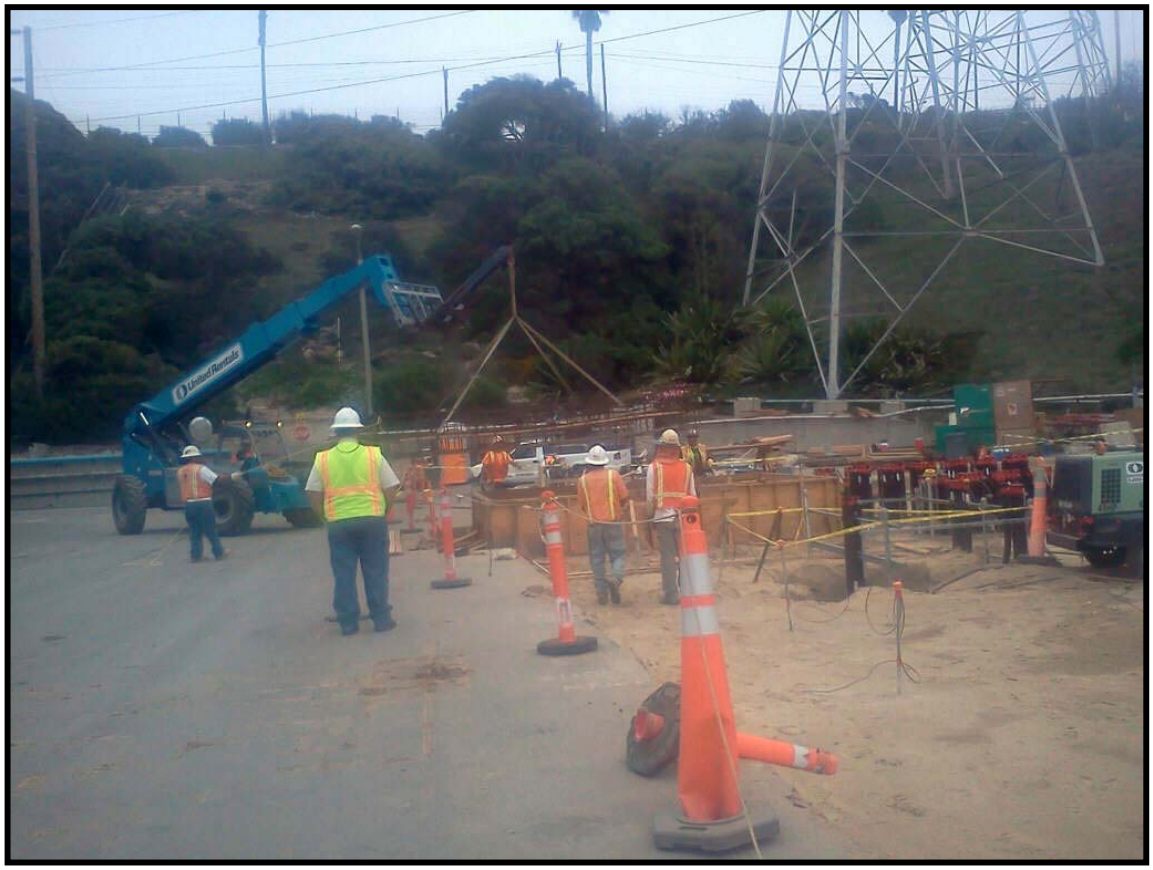

Plate III. Top: Easterly view of PMI and Morrows Meadow working in the SMUD area.
Bottom: Medicine bottle found in LVI work area on July 6.

ATTACHMENT D
PAL-4 AND PAL-5
PALEONTOLOGICAL RESOURCES REPORT
JULY 2011

NRG EL SEGUNDO REPOWERING PROJECT: PALEONTOLOGICAL RESOURCES MITIGATION MONITORING REPORT FOR THE MONTH OF JULY 2011

Prepared for:

George L. Piantka, PE
NRG Energy, West
1817 Aston Avenue, Suite 104
Carlsbad, CA 92008

Prepared by:

John Minch, Ph.D.

John Minch and Associates, Inc.
26623 Sierra Vista
Mission Viejo, CA 92692

Tel: (949) 367-1000
Fax: (949) 367-0117

Contact person:

Edwin Minch, Principal

July 31, 2011

The undersigned certifies that the attached report is a true and accurate description of the results of a PALEONTOLOGICAL RESOURCES MONITORING program described herein.

John Minch, Ph.D.
Paleontological Resource Specialist

Summary of Paleontological Mitigation Monitoring conducted by JMA for the El Segundo Power Redevelopment Project During July 2011

JMA monitored ground disturbing construction activities during the month of July for the El Segundo Power Redevelopment Project. Dates included twenty full time days, 7/1, 7/5-8, 7/11-15, 7/18-22 and 7/25-29 for ground disturbance activities related to trenching and concrete slab and foundation removal. The excavation days are included and documented in this report. One WEAP training session was conducted on July 21st.

The PRS is Dr. John A. Minch. The PRMs were Frank McDowell, Jessica Colston, Rebekka Knierim, and John Minch who monitored the construction activities during the month.

The monthly grading activities consisted of (1) breaking up and removal of various concrete slabs, deep foundations, and cable conduit vaults with front loader, track-hoes, track-hoe mounted Impact hammers and crushing of the foundation material to remove rebar and other metal objects by a track-hoe with a jaw crusher. (2) Utility trenching north and west of units 3&4 and west of modular trailers with a backhoe and hand labor. Shoring is being used in the trenches, (3) realignment of the main access road, and (4) potholing to locate utilities south of units 3&4

The foundation removal involved the disturbance of soil material to a depth of up to 10 feet or more. The material encountered in the excavations varied from imported fill material to native soils represented by the Old Dune/Gage Sand. Sediments encountered included coarse to fine sand and silt. Environments of deposition represented by the sediments appear to be consistent with sediments found in forebeach and dune environments. Scattered Mollusk specimens continue to be encountered and collected from the sediments during the excavations. The fauna collected represents both sandy beach and rocky shore environments suggesting a sandy beach with a nearby point, offshore rocks, or a cobble beach area.

There were no unresolved issues or concerns about the project relating to paleontologic monitoring. Paleontologic monitoring was conducted as deemed necessary by the PRS. Monitoring has determined that native sediments are found at shallow depths throughout the site. Thus, monitoring was conducted during ground disturbing activities.

The PRS, Dr. John Minch, certifies that the individuals on the attached list have completed the mandatory California Energy Commission-approved Worker Environmental Awareness Program (WEAP) to date and in the month of July. The WEAP includes pertinent information on Cultural and Paleontological Resources for all personnel (i.e. construction supervisors, crews and plant operators) working on-site or at related facilities.

In signing the documents the participants indicated that they understand and would abide by the guidelines set forth in the program materials. The completed forms are attached to this Monthly Compliance Report. There were no incidents of non-compliance. There were no changes in the monitoring plan.

CAT
07.29.2011 08:57

ESPR Project
Docket 00-AFC-14C

WEAP Training 10/26/09
Sign In

Name	Company	Contact Info
George Piantka	NRG	george.piantka@nrgenergy.com 760 710 2156
Bill Jones	PMI	626-382-9013
Robert DeRosa	PMI	562. 318. 8458
CHRIS MOULDEN	PMI	CMOULDEN@PERFMECH.com 925.250.8711
TOM Richey	PMI	trichey@perfmech.com 925-250-8144
Bernabe Gonzalez	P.M.I	BGonzales6@ca.rr.com (619) 628-6847
John Grear	Monte Collins/PMI	dweezle@zoho.com 714-872-2926
Edwin Minch	JMA	eminch@jma-ca.com 714-501-4163
Richard Guttenberg	JMA	rguttenberg@jma-ca.com 714-501-4165
John Minch	JMA	jminch@jma-ca.com
Roman Aguilar	NRG	(310) 529-3263
PAUL NGUYEN	SHAW ENVIRONMENTAL INC.	(949) 294-1372
Frank McDowell	JMA	(951) 249-3647
SAM DUNLAP	P.N.A.C.R.M.	909-262-9351
JIM GURGE	NRG	310-615-6382
Angela Czuba	SGI	(562) 597-1055
Scott Seipel	SGI	562-597-1055
William Collins	NRG	William.Collins@NRGENERG.com
KEN RIESZ	NRG	Ken.Riesz@NRGEnergy.com
Laurie White	JMA	(951) 244-1383
Robert White	JMA	" "
Marc Kalis	NRG	marc.kalis@nrgenergy.com 760-575-0118

JMA

JMA WEAP SIGN-IN SHEET

Project: ESEC	**Training Date:** 5/10/10
Facilitator:	**Place/Room:**

Name	Company	Phone	Signature
DERYCK ROBERTS	SGI	(562) 597-1055	
Eddie Daniels	NRG		
Laura ZARAGOZA	PMI	982 383 8839	
JOHN Camarena	PMI		
George Hernandez	PMI	818339 2033	
Frank McDowell	JMA	951 249 4637	
ELIAS LUCERO	PMI		
DAVID MICHELSEN	NRG	716 467-0377	

JMA WEAP SIGN-IN SHEET

Project:	07-103	**Training Date:**	1/7/11
Facilitator:	Robert, Laura White	**Place/Room:**	Lunch Room onsite

Name	Company	Phone	Signature
Miguel Figueroa	PMI	818 633-2971	
Tony Sepulveda	PMI	714 262-1887	
Robert Villanueva	PMI	310 924 2130	
GREG CABOTAGE	PMI	310 350-4706	
JEFF D'AMILO	P.M.I	661 733 7109	
Edgar Perez	PNACRM	626-286-1498	
SAM DUNLAP	PNACRM	409 262-5351	

John Minch and Associates, Inc.
www.jma-ca.com

JMA

JMA WEAP SIGN-IN SHEET

Project: 07-103 **Training Date:** 1/18/11

Facilitator: Robert White **Place/Room:** Lunch Rm

Name	Company	Phone	Signature
Kelly Arnold	LVI		
Steve Stapleton	LVI		
Ruben Aguilar	LVI		
Jesus Velazquez	LVI		Jesus Velazquez
Oraldo Orozco	LVI		
Emanuel Gonzalez	LVI		Emanuel Gonzalez
Jay Decker	LVI		
Daniel Hill	LVI		
Felix Ortega	LVI		
Edwin Villalobos	LVI		Edwin V.
Jorge Campa	LVI		Jorge Campa
Eric Escamilla	LVI		
Felipe Quinonez	LVI		FQ
Fr. Javier Mendivil	LVI		Fr. Javier M.
Luis Cisneros	LVI		
Brian Valenzuela	LVI		B.V
Lorenzo Ramirez	LVI		Lorenzo Ramirez
Frank Sanatia			Frank Sanatia
Jesus V Hernandez	LVI		

2

JMA WEAP SIGN-IN SHEET

Project: 07-103 **Training Date:** 1/18/11

Facilitator: Robert White **Place/Room:** Lunch Rm

Name	Company	Phone	Signature
Jaime Lopez	LVI		
Loriel Holmes	AECOM		
David Foes	AECOM		
Alexis Utrich	SGI		
Jose Soto	LVI		
José M Monter	LVI		
Oscar Chaparro	LVI		Oscar Chaparro
David Kunegel	LVI		
JOSE J. VELASQUEZ	L.V.I		
Jose A Velez	L.V.I		Jose A. Velez

John Minch and Associates, Inc.
www.jma-ca.com

JMA

JMA WEAP SIGN-IN SHEET

Project: 07-103 El Segundo	**Training Date:** 4/18/11
Facilitator:	**Place/Room:**

Name	Company	Phone	Signature
Peter Pelletier	AECOM	978-852-7945	Peter Pelletier
Ken Kitchens	Shaw	714. 290.4225	KKitchens
Patrick Rohde	SHAW	949-422 1031	
ART MERCADO	ARB INC	310 505-6258	

John Minch and Associates, Inc.
www.jma-ca.com

JMA

JMA WEAP SIGN-IN SHEET

Project: 07-103	**Training Date:** 4/19/11
Facilitator:	**Place/Room:**

Name	Company	Phone	Signature
TYRONE WONG	CAL-EX		
DOUG MANLEY	Newman		
MARIO Robles	Calex		
Mike Neilson	Calex		
Chris Jones	ARCON		

John Minch and Associates, Inc.
www.jma-ca.com

Certification of Completion of Worker Environmental Awareness Program

EL SEGUNDO POWER REDEVELOPMENT PROJECT (00-AFC-14)

This is to certify these individuals have completed a mandatory California Energy Commission-approved Worker Environmental Awareness Program (WEAP). The WEAP includes pertinent information on Cultural, Paleontology & Biology Resources for all personnel (i.e. construction supervisors, crews and plant operators) working on-site or at related facilities. By signing below, the participant indicates that they understand and shall abide by the guidelines set forth in the Program materials. Please include this completed form in your Monthly Compliance Report.

No.	Employee Name	Company	Signature
1.	RICHARD SMITH	ARB	RHSmith
2.	Steve Hinkle	ARB	[illegible]
3.	David Simonson	ARB	[illegible]
4.	JAIME GONZALEZ	PMI	[illegible]
5.	LOUIE ROMAN	PMI	[illegible]
6.	Mike Trujillo	PMI	[illegible]
7.	Faustino Muniz	PMI	[illegible]
8.	Mike Thorne	PMI	[illegible]
9.	MIKE SCHAGER	PMI	[illegible]
10.	NICK DIUGOSZ	PMI	[illegible]
11.	ARUN GOSWAMI	PMI	[illegible]
12.	MATTHEW DeLOSSANTOS	PMI	[illegible]
13.	William Jones	PMI	[illegible]
14.	Richard BERGERON	PMI	[illegible]
15.	George Guzman	PMI	[illegible]
16.	JAIME CHUCHNY	PMI	[illegible]
17.	Albert Loza	PMI	[illegible]
18.	DOMINGO	PMI	ESPAYZA
19.			
20.			
21.			
22.			
23.			
24.			
25.			
26.			
27.			
28.			
29.			
30.			

Cul Trainer: Laura S. White Signature: Laura S. White Date: 5/16/11
PaleoTrainer: [illegible] Signature: John Minch Date: 5/16/11
Bio Trainer: _____ Signature: _____ Date: __/__/__

JMA

Certification of Completion of Worker Environmental Awareness Program

EL SEGUNDO POWER REDEVELOPMENT PROJECT (00-AFC-14)

This is to certify these individuals have completed a mandatory California Energy Commission-approved Worker Environmental Awareness Program (WEAP). The WEAP includes pertinent information on Cultural, Paleontology & Biology Resources for all personnel (i.e. construction supervisors, crews and plant operators) working on-site or at related facilities. By signing below, the participant indicates that they understand and shall abide by the guidelines set forth in the Program materials. Please include this completed form in your Monthly Compliance Report.

No.	Employee Name	Company	Signature
1.	STEVEN LUND	ARB, INC	
2.	Esteban Pino Jr.	ARB	
3.	JAMES BURNIE	ARB	
4.	CRAIG IMBACH	ARB (Bills Backhoe)	
5.	Kenneth Crook	ARB	
6.	MICKEY BROWN	SIEMENS	
7.			
8.			
9.			
10.			
11.			
12.			
13.			
14.			
15.			
16.			
17.			
18.			
19.			
20.			
21.			
22.			
23.			
24.			
25.			
26.			
27.			
28.			
29.			
30.			

Cul Trainer: Laura S. White Signature: Laura S. White Date: 6 / 9 / 11
PaleoTrainer: John Minch Signature: Date: 6 / 9 / 11
Bio Trainer: _____ Signature: _____ Date: __/__/__

JMA

Certification of Completion of Worker Environmental Awareness Program

EL SEGUNDO POWER REDEVELOPMENT PROJECT (00-AFC-14)

This is to certify these individuals have completed a mandatory California Energy Commission-approved Worker Environmental Awareness Program (WEAP). The WEAP includes pertinent information on Cultural, Paleontology & Biology Resources for all personnel (i.e. construction supervisors, crews and plant operators) working on-site or at related facilities. By signing below, the participant indicates that they understand and shall abide by the guidelines set forth in the Program materials. Please include this completed form in your Monthly Compliance Report.

No.	Employee Name	Company	Signature
1.	ROBERT ACOSTA	LVI	
2.	SHAUN RILEY	LVI	
3.	DAVE SIMON	AECOM	
4.	MARIO GALAVIZ	LVI	
5.	HERIBERTO PERAZA	LVI	
6.	JOHN PALUMBO	LVI	
7.	JORGE HERNANDEZ-C	LVI	
8.			
9.			
10.			
11.			
12.			
13.			
14.			
15.			
16.			
17.			
18.			
19.			
20.			
21.			
22.			
23.			
24.			
25.			
26.			
27.			
28.			
29.			
30.			

Cul Trainer: Laura S. White Signature: _____ Date: 6/29/11
PaleoTrainer: John Minch Signature: _____ Date: 6/29/11
Bio Trainer: _____ Signature: Laura S. White Date: 6/29/11

JMA

Certification of Completion of Worker Environmental Awareness Program

EL SEGUNDO POWER REDEVELOPMENT PROJECT (00-AFC-14)

This is to certify these individuals have completed a mandatory California Energy Commission-approved Worker Environmental Awareness Program (WEAP). The WEAP includes pertinent information on Cultural, Paleontology & Biology Resources for all personnel (i.e. construction supervisors, crews and plant operators) working on-site or at related facilities. By signing below, the participant indicates that they understand and shall abide by the guidelines set forth in the Program materials. Please include this completed form in your Monthly Compliance Report.

No.	Employee Name	Company	Signature
1.	William Robinson	Granite	William Robinson
2.	Juan Garcia	GRANITE	Juan Garcia
3.	SCOTT MCARTHUR	GRANITE	Scott McArthur
4.	Thomas Gill	Granite	Thomas Gill
5.	Armando Flores	"	Armando Flores
6.	Billy C. Cole Jr	Granite	Billy C. Cole Jr
7.	Hektor Montano	"	Hektor Montano
8.	John McGee	Granite	John McGee
9.	Matthew Joseph	Granite	Matthew Joseph
10.	Rebekka Knierim	JMA	Rebekka Knierim
11.	Jessica Colston	JMA	Jessica Colston
12.			
13.			
14.			
15.			
16.			
17.			
18.			
19.			
20.			
21.			
22.			
23.			
24.			
25.			
26.			
27.			
28.			
29.			
30.			

Cul Trainer: Laura White Signature: Laura S. White Date: 7/21/11
PaleoTrainer: John Minch Signature: [illegible] Date: 7/21/11
Bio Trainer: Laura S. White Signature: _____ Date: __/__/__

ATTACHMENT E
COMPLIANCE-6
NOTIFICATIONS AND PERMITS
JULY 2011

California Regional Water Quality Control Board
Los Angeles Region

Linda S. Adams
Acting Secretary for Environmental Protection

320 West Fourth Street, Suite 200, Los Angeles, California 90013
(213) 576-6600 • Fax (213) 576-6640
http://www.waterboards.ca.gov/losangeles

Edmund G. Brown
Governor

July 19, 2011

CERTIFIED MAIL NO. 7001 2510 0002 2221 8959
RETURN RECEIPT REQUESTED

Mr. Ken H. Riesz, Sr.
El Segundo Energy Center, LLC
301 Vista Del Mar
El Segundo, CA 90245

Dear Mr. Riesz, Sr.:

REVISED COVERAGE UNDER GENERAL NATIONAL POLLUTANT DISCHARGE ELIMINATION SYSTEM AND WASTE DISCHARGE REQUIREMENTS—EL SEGUNDO ENERGY CENTER, LLC, EL SEGUNDO GENERATING STATION REDEVELOPMENT PROJECT, 301 VISTA DEL MAR, EL SEGUNDO, CALIFORNIA (NPDES NO. CAG994004, CI–9628)

We have received an email from Mr. Piantka on behalf of El Segundo Energy Center, LLC on July 14, 2011, for the above referenced facility. El Segundo Energy Center, LLC is requesting a revision of your enrollment under the General NPDES permit to include PCBs in the regulated items since PCBs were recently detected in groundwater in the southwest portion of the El Segundo Generating Station Redevelopment Project.

We have completed our review of the characterization on the extent of PCBs in groundwater by your consultant and concur with your request. Enclosed are your Revised Waste Discharge Requirements, which also serve as your NPDES permit, consisting of Order No. R4-2008-0032 and Revised Monitoring and Reporting Program No. CI-9628. The discharge limitations in Part V.1. Tables 1, 2, and 10 of Order No. R4-2008-0032 for the specific constituents listed on the Table with the enclosed Fact Sheet are applicable to your discharge. The groundwater discharge flows into Santa Monica Bay Watershed Management Area. Therefore, the discharge limitations in Attachment B of Order No. R4-2008-0032 are not applicable to your discharge.

The Monitoring and Reporting Program requires you to implement the monitoring program on the effective date of coverage under this permit. All monitoring reports should be sent to the Regional Board, ATTN: Information Technology Unit. When submitting monitoring or technical reports to the Regional Board per these requirements, please include a reference to "Compliance File No. CI-9628 and NPDES No. CAG994004", which will assure that the reports are directed to the appropriate file and staff. Also, please do not combine other reports with your monitoring reports. Submit each type of report as a separate document.

To avoid future annual fees, please submit written request for termination of your enrollment under the general permit in a separate letter, when the project has been completed and the permit is no longer needed.

We are sending a copy of Order No. R4-2008-0032 only to the applicant. For those on the mailing list, please refer to the Board Order previously sent to you. A copy of the Order will be furnished to anyone who requests it, or it can be obtained at our web site address: http://www.waterboards.ca.gov/losangeles/board_decisions/adopted_orders/.

If you have any questions, please contact Gensen Kai at (213) 576-6651.

Sincerely,

Samuel Unger
Executive Officer

Enclosures:

Order No. R4-2008-0032, General NPDES Permit No. CAG994004
Revised Fact Sheet
Revised Monitoring and Reporting Program for No. CI-9628

cc: Environmental Protection Agency, Region 9, Permit Section (WTR-5)
U.S. Army Corps of Engineers
U.S. Fish and Wildlife Services, Division of Ecological Services
NOAA, National Marine Fisheries Service
California Department of Fish and Game, Marine Resources, Region 5
Los Angeles County, Department of Public Works, Environmental Programs Division
Los Angeles County, Department of Health Services
City Manager, City of El Segundo
Jae Kim, Tetra Tech

STATE OF CALIFORNIA
CALIFORNIA REGIONAL WATER QUALITY CONTROL BOARD
LOS ANGELES REGION
320 West 4th Street, Suite 200, Los Angeles, California 90013

REVISED FACT SHEET
WASTE DISCHARGE REQUIREMENTS
FOR
EL SEGUNDO ENERGY CENTER, LLC
(EL SEGUNDO GENERATING STATION REDEVELOPMENT PROJECT)

NPDES NO. CAG994004
CI-9628

FACILITY ADDRESS

301 Vista Del Mar
El Segundo, California

FACILITY MAILING ADDRESS

301 Vista Del Mar
El Segundo, CA 90245

PROJECT DESCRIPTION:

El Segundo Energy Center, LLC (Discharger) is a conducting construction project at the El Segundo Generating Station Redevelopment Project (Project) located at 301 Vista Del Mar, El Segundo (See Figure 1 for site location). The Project consists of demolition of equipment associated with the former power block units 1 and 2 and construction of four new power generating units at the project site. It will be necessary to discharge the wastewater contained in the formerly used cooling system and the groundwater generated from construction dewatering activities. The wastewater and groundwater from the site will be passed through activated carbon vessels to remove organic contaminants and ion exchange resin vessels to remove heavy metals prior to discharge. Figure 2 shows the schematic of the treatment process.

We have received an email from Mr. Piantka on behalf of El Segundo Energy Center, LLC on July 14, 2011, for the above referenced facility. El Segundo Energy Center, LLC is requesting a revision of your enrollment under the General NPDES permit to include PCBs in the regulated items since PCBs were recently detected in groundwater in the southwest portion of the El Segundo Generating Station Redevelopment Project. We have completed our review of the characterization on the extent of PCBs in groundwater by your consultant and concur with your request.

VOLUME AND DESCRIPTION OF DISCHARGE:

The Discharger proposes to discharge up to 2.5 million gallons per day (MGD) of the treated wastewater to Discharge Point 001 (Latitude: 33° 54' 27", Longitude: 118° 25' 50"). The high rate of discharge is necessary since the groundwater underneath the Project site and sea water in the Pacific Ocean is hydrologically connected and enormous amount of sea water will be generated from the dewatering activities. The Discharger proposes to complete the demolition phase of the Project within six months from the commencement of the construction. Should the dewatering activity extend beyond six months, the maximum rate of discharge from the project becomes under 1 MGD. The discharge flows into Santa Monica Bay Watershed Management Area, a water of the United States.

APPLICABLE EFFLUENT LIMITATIONS

Based on the information provided in the NPDES Application Supplemental Requirements, the following constituents listed in the Table below have been determined to show reasonable potential to exist in the discharge. The groundwater discharge flows into Santa Monica Bay Watershed Management Area. Therefore, the discharge limitations in Attachment B of Order No. R4-2008-0032 are not applicable to your discharge.

This Table lists the specific constituents and effluent limitations applicable to the discharge.

Constituents	Units	Discharge Limitations	
		Daily Maximum	Monthly Average
Total Suspended Solids	mg/L	150	50
Turbidity	NTU	150	50
BOD_5 20°C	mg/L	30	20
Oil and Grease	mg/L	15	10
Settleable Solids	ml/L	0.3	0.1
Sulfides	mg/L	1.0	N/A
Phenols	mg/L	1.0	N/A
Residual Chlorine	mg/L	0.1	N/A
Methylene Blue Active Substances (MBAS)	mg/L	0.5	N/A
Nickel	µg/L	14	6.7
Methyl Tertiary Butyl Ether (MTBE)	µg/L	5	
Tertiary Butyl Alcohol (TBA)	µg/L	12	
Total Petroleum Hydrocarbons	µg/L	100	
Benzene	µg/L	1.0	
Ethylbenzene	µg/L	700	
Toluene	µg/L	150	
Xylenes	µg/L	1750	
PCBs*	µg/L	0.00034	0.00017

* If the reported detection level is greater than the effluent limit for this constituent, then a non detect using ML detection is deemed to be in compliance.

FREQUENCY OF DISCHARGE:

The groundwater discharge will be intermittent.

REUSE OF WATER:

Offsite disposal of the groundwater discharge is not feasible due to high cost of disposal. The property and the immediate vicinity have no landscaped areas that require irrigation using the groundwater discharge. Since there are no feasible reuse options, the groundwater will be discharged to the storm drain in accordance with the attached Order.

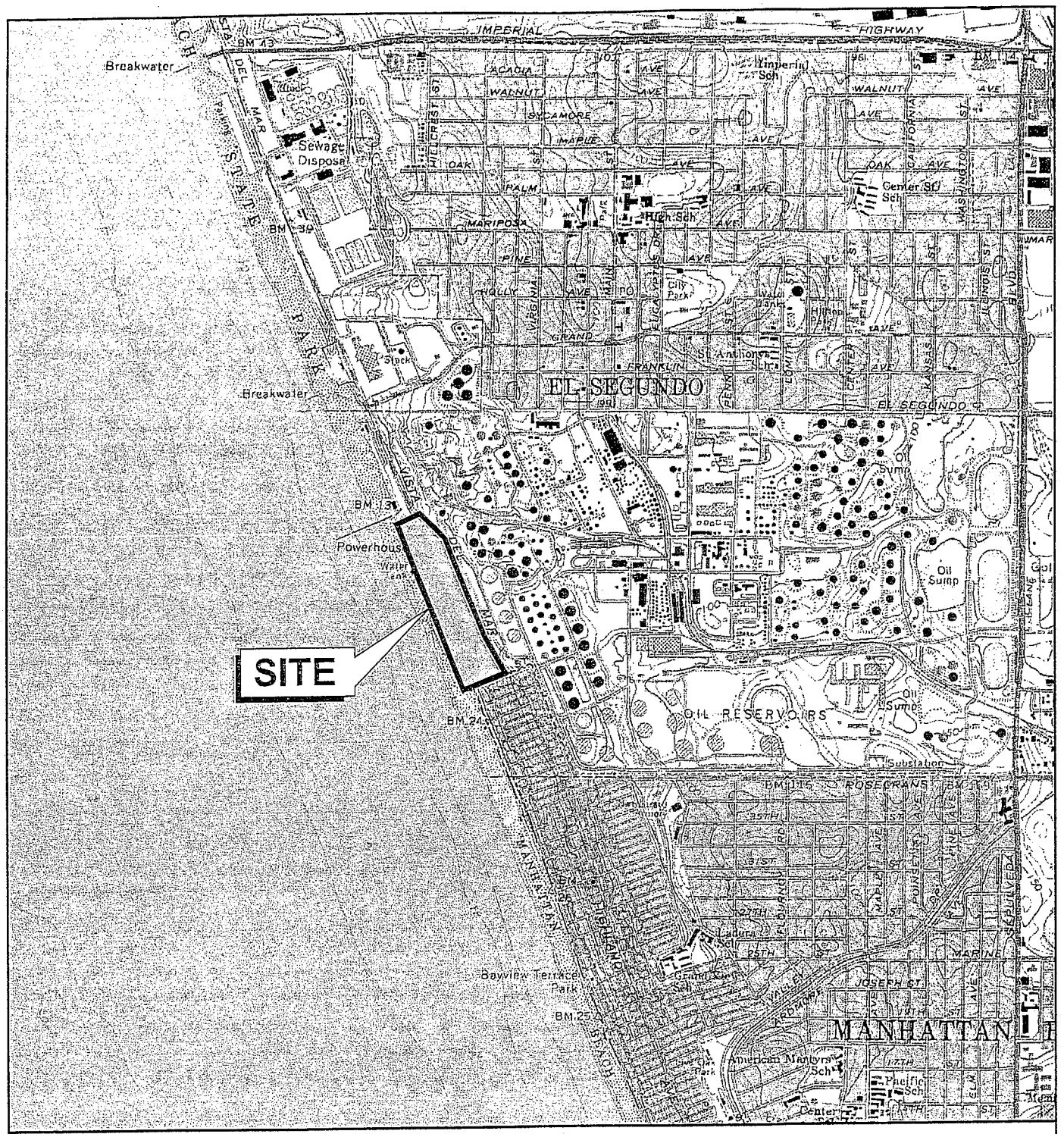

SCALE 1:24000

1 1/2 0 1 MILE

1000 0 1000 2000 3000 4000 5000 6000 7000 FEET

N

SGI environmental THE SOURCE GROUP, INC.	FILE NAME: NRG-ELS-SL DATE: 08/09 SOURCE: U.S.G.S. 7.5 MINUTE TOPOGRAPHIC QUADRANGLE MAP VENICE, CA	SITE LOCATION MAP 301 VISTA DEL MAR BOULEVARD EL SEGUNDO, CALIFORNIA	FIGURE 1

El Segundo EC Prelim Plot Plan

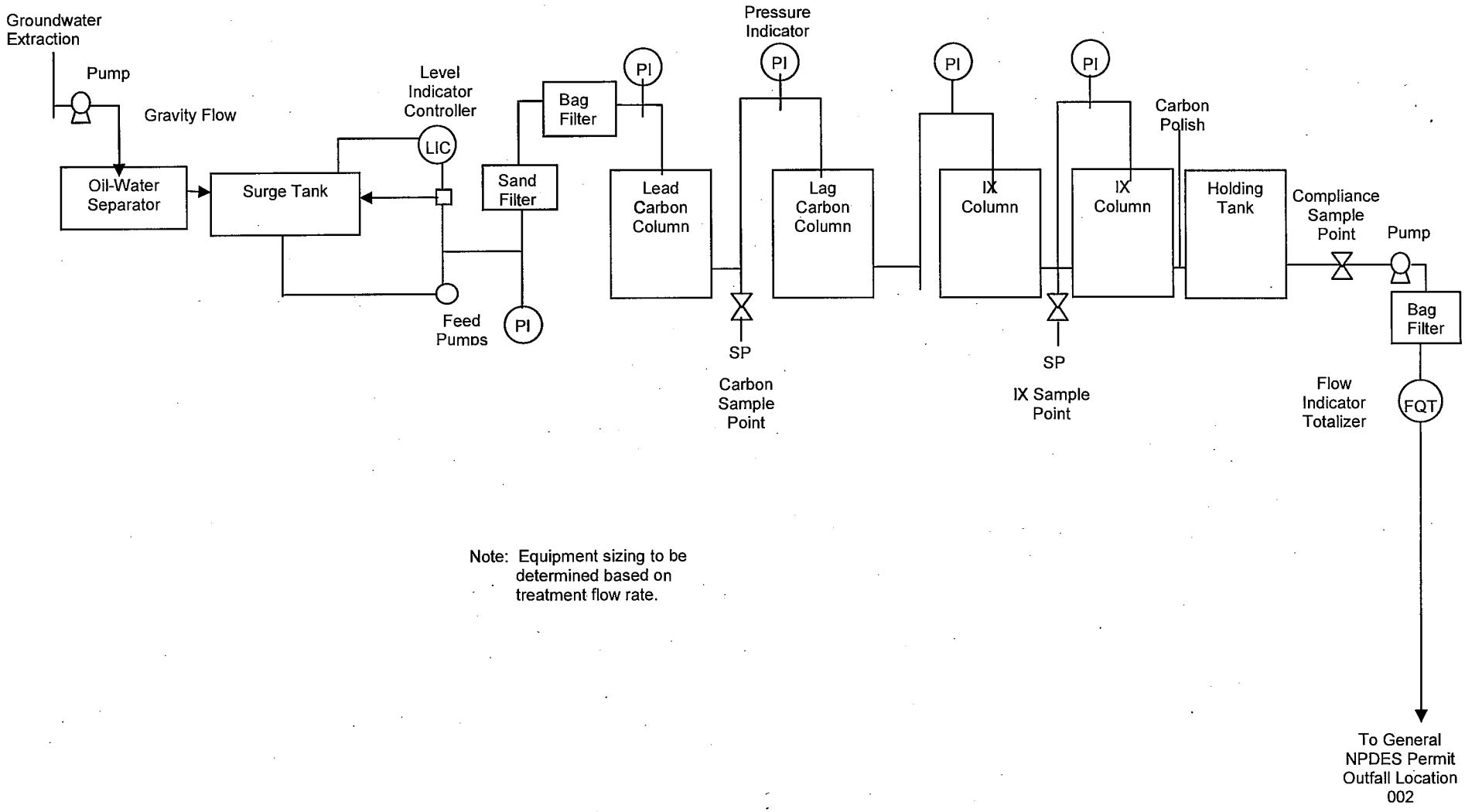

Note: Equipment sizing to be determined based on treatment flow rate.

Figure 2. Treatment Process

STATE OF CALIFORNIA
CALIFORNIA REGIONAL WATER QUALITY CONTROL BOARD
LOS ANGELES REGION

REVISED MONITORING AND REPORTING PROGRAM NO. CI-9628
FOR
DISCHARGES OF GROUNDWATER FROM CONSTRUCTION AND PROJECT DEWATERING
TO SURFACE WATERS
IN
COASTAL WATERSHEDS OF LOS ANGELES AND VENTURA COUNTIES

FOR
EL SEGUNDO ENERGY CENTER, LLC

(GENERAL NPDES PERMIT NO. CAG994004, SERIES NO.: 064)

This Order was adopted by the Regional Water Board on:	June 5, 2008
This Order shall become effective on:	July 19, 2011
This Order shall expire on:	June 5, 2013
The U.S. Environmental Protection Agency (USEPA) and the Regional Water Board have classified this discharge as a minor discharge.	

Ordered By: Samuel Unger
Samuel Unger
Executive Officer

Date: July 19, 2011

TABLE OF CONTENTS

ATTACHMENT E - Monitoring and Reporting Program (MRP)

I. GENERAL MONITORING PROVISIONS 3

II. MONITORING LOCATIONS 7

III. EFFLUENT MONITORING REQUIREMENTS 7

IV. WHOLE EFFLUENT TOXICITY TESTING REQUIREMENTS 8

A. DEFINITION OF TOXICITY 8

B. ACUTE TOXICITY EFFLUENT MONITORING PROGRAM 8

C. REPORTING 9

V. LAND DISCHARGE MONITORING REQUIREMENTS 10

VI. RECLAMATION MONITORING REQUIREMENTS 10

VII. RECEIVING WATER MONITORING REQUIREMENTS – SURFACE WATER AND GROUNDWATER 10

VIII. OTHER MONITORING REQUIREMENTS 10

IX. REPORTING REQUIREMENTS 10

A. GENERAL MONITORING AND REPORTING REQUIREMENTS 10

B. SELF MONITORING REPORTS (SMRS) 10

C. NOTIFICATION 13

D. MONITORING FREQUENCIES ADJUSTMENT 13

E. SELF MONITORING REPORTS (SMRS) 13

LIST OF TABLES

TABLE 1. MONITORING LOCATION 6

TABLE 2. MONITORING PERIODS AND REPORTING SCHEDULE 11

Attachment E – Monitoring and Reporting Program (MRP)

The Code of Federal Regulations section 122.48 requires that all NPDES permits specify monitoring and reporting requirements. Water Code Sections 13267 and 13383 also authorize the Regional Water Quality Control Board (Regional Water Board) to require technical and monitoring reports. This MRP establishes monitoring and reporting requirements, which implement the federal and California regulations.

I. GENERAL MONITORING PROVISIONS

A. An effluent sampling station shall be established for Discharge Point M-001 and shall be located where representative samples of that effluent can be obtained. Provisions shall be made to enable visual inspections before discharge. In the event of presence of oil sheen, debris, and/or other objectionable materials or odors, discharge shall not commence until compliance with the requirements is demonstrated. All visual observations shall be included in the monitoring report.

B. This Regional Board shall be notified in writing of any change in the sampling stations once established or in the methods for determining the quantities of pollutants in the individual waste streams.

C. Effluent samples shall be taken downstream of any addition to treatment works and prior to mixing with the receiving waters.

D. This Regional Water Board shall be notified in writing of any change in the sampling stations once established or in the methods for determining the quantities of pollutants in the individual waste streams.

E. Pollutants shall be analyzed using the analytical methods described in 40 CFR §§136.3, 136.4, and 136.5 (revised May 14, 1999); or, where no methods are specified for a given pollutant, by methods approved by this Regional Water Board or the State Water Board.

F. Laboratories analyzing effluent samples and receiving water samples shall be certified by the California Department of Public Health (DPH) Environmental Laboratory Accreditation Program (ELAP) or approved by the Executive Officer and must include QA/QC data in their reports. A copy of the laboratory certification shall be provided each time a new certification and/or renewal of the certification is obtained from ELAP.

G. For any analyses performed for which no procedure is specified in the USEPA guidelines or in the MRP, the constituent or parameter analyzed and the method or procedure used must be specified in the monitoring report.

H. Each monitoring report must affirm in writing that "all analyses were conducted at a laboratory certified for such analyses by DPH or approved by the Executive Officer and in accordance with current USEPA guideline procedures or as specified in this Monitoring and Reporting Program".

I. The monitoring reports shall specify the analytical method used, the MDL, and the ML for each pollutant. For the purpose of reporting compliance with numerical limitations, performance goals, and receiving water limitations, analytical data shall be reported by one of the following methods, as appropriate:

1. An actual numerical value for sample results greater than or equal to the ML; or

2. "DNQ" if results are greater than or equal to the laboratory's MDL but less than the ML; or,

3. "ND" for sample results less than the laboratory's MDL with the MDL indicated for the analytical method used.

Analytical data reported as "less than" for the purpose of reporting compliance with permit limitations shall be the same or lower than the permit limit(s) established for the given parameter.

Current MLs (Attachment G) are those published by the State Water Resources Control Board in the *Policy for the Implementation of Toxics Standards for Inland Surface Waters, Enclosed Bays, and Estuaries of California*, March 2, 2000.

J. Where possible, the MLs employed for effluent analyses shall be lower than the permit limitations established for a given parameter. If the ML value is not below the effluent limitation, then the lowest ML value and its associated analytical method shall be selected for compliance purposes. At least once a year, the Discharger shall submit a list of the analytical methods employed for each test and associated laboratory QA/QC procedures.

The Regional Water Board, in consultation with the State Water Board Quality Assurance Program, shall establish a ML that is not contained in Attachment G to be included in the Discharger's permit in any of the following situations:

1. When the pollutant under consideration is not included in Attachment G;

2. When the Discharger and Regional Water Board agree to include in the permit a test method that is more sensitive than that specified in 40 CFR Part 136 (revised May 14, 1999);

3. When the Discharger agrees to use an ML that is lower than that listed in Attachment G;

4. When the Discharger demonstrates that the calibration standard matrix is sufficiently different from that used to establish the ML in Attachment G, and proposes an appropriate ML for their matrix; or,

5. When the Discharger uses a method whose quantification practices are not consistent with the definition of an ML. Examples of such methods are the USEPA-approved method 1613 for dioxins and furans, method 1624 for volatile organic substances, and method 1625 for semi-volatile organic substances. In such cases, the Discharger, the Regional Water Board, and the State Water Board shall agree on a lowest quantifiable limit and that limit will substitute for the ML for reporting and compliance determination purposes.

K. Water/wastewater samples must be analyzed within allowable holding time limits as specified in 40 CFR §136.3. All QA/QC items must be run on the same dates the samples were actually analyzed, and the results shall be reported in the Regional Water Board format, when it becomes available, and submitted with the laboratory reports. Proper chain of custody procedures must be followed, and a copy of the chain of custody shall be submitted with the report.

L. All analyses shall be accompanied by the chain of custody, including but not limited to data and time of sampling, sample identification, and name of person who performed sampling, date of analysis, name of person who performed analysis, QA/QC data, method detection limits, analytical methods, copy of laboratory certification, and a perjury statement executed by the person responsible for the laboratory.

M. The Discharger shall calibrate and perform maintenance procedures on all monitoring instruments and to insure accuracy of measurements, or shall insure that both equipment activities will be conducted.

N. The analytical laboratory shall have an acceptable written quality assurance (QA) plan for laboratory analyses. The annual monitoring report shall also summarize the QA activities for the previous year. Duplicate chemical analyses must be conducted on a minimum of ten percent (10%) of the samples, or at least one sample per sampling period, whichever is greater. A similar frequency shall be maintained for analyzing spiked samples.

O. When requested by the Regional Water Board or USEPA, the Discharger will participate in the NPDES discharge monitoring report QA performance study. The Discharger must have a success rate equal to or greater than 80%.

P. For parameters that both monthly average and daily maximum limitations are specified and the monitoring frequency is less than four times a month, the following shall apply. If an analytical result is greater than the monthly average limitation, the Discharger shall collect four additional samples at approximately equal intervals during the month, until compliance with the monthly average limitation has been demonstrated. All five analytical results shall be reported in the monitoring report for that month, or 45 days after results for the additional samples were received,

whichever is later. In the event of noncompliance with a monthly average effluent limitation, the sampling frequency for that constituent shall be increased to weekly and shall continue at this level until compliance with the monthly average effluent limitation has been demonstrated. The Discharger shall provide for the approval of the Executive Officer a program to ensure future compliance with the monthly average limitation.

Q. In the event wastes are transported to a different disposal site during the report period, the following shall be reported in the monitoring report:

1. Types of wastes and quantity of each type;

2. Name and address for each hauler of wastes (or method of transport if other than by hauling); and

3. Location of the final point(s) of disposal for each type of waste.

If no wastes are transported off-site during the reporting period, a statement to that effect shall be submitted.

R. Each monitoring report shall state whether or not there was any change in the discharge as described in the Order during the reporting period.

S. All monitoring reports shall include the discharge limitations in the Order, tabulated analytical data, the chain of custody form, and the laboratory report (including but not limited to date and time of sampling, date of analyses, method of analysis and detection limits).

T. Sample collection requirements (as appropriate)

1. Daily samples shall be collected each day.
2. Weekly samples shall be collected on a representative day of each week.
3. Monthly samples shall be collected on a representative day of each month
4. Quarterly samples shall be collected in February, May, August, and November.
5. Semi-annual samples shall be collected in May and November.
6. Annual samples shall be collected in November.

U. Before commencing a new discharge, a representative sample of the effluent shall be collected and analyzed for all the constituents listed in Fact Sheet, and the test results must meet all applicable limitations of Order No. R4-2008-0032. This is not applicable for existing discharge.

II. MONITORING LOCATIONS

The Discharger shall establish the following monitoring locations to demonstrate compliance with the effluent limitations, discharge specifications, and other requirements in this Order:

Table 1. Monitoring Location

Discharge Point Name	Monitoring Location Name	Monitoring Location Description
Discharge Point 1	M-001	Treated effluent, after treatment and before contact with the receiving water and/or dilution by any other water or waste.
Discharge Point 2	M-002	If more than one discharge point is authorized under the General Permit, compliance monitoring locations shall be named M-002, M-003, etc. and shall be located so as to allow collection of treated effluent after treatment and before contact with receiving water and/or dilution by any other water or waste.

III. EFFLUENT MONITORING REQUIREMENTS

A. The Discharger shall monitor the effluent at Discharge Point M-001 as follows:

Constituent	Unit	Type of Sample	Minimum Frequency of Analysis
Total Waste Flow	gal/day	totalizer	continuously
pH	pH unit	grab	monthly
Temperature	°F	grab	monthly
Total Suspended Solids	mg/L	grab	monthly
Turbidity	NTU	grab	monthly
BOD_5 20°C	mg/L	grab	monthly
Oil and Grease	mg/L	grab	monthly
Settleable Solids	ml/L	grab	monthly
Sulfides	mg/L	grab	monthly
Phenols	mg/L	grab	monthly
Residual Chlorine	mg/L	grab	monthly
Methylene Blue Active Substances (MBAS)	mg/L	grab	monthly
Nickel	µg/L	grab	monthly*
Methyl Tertiary Butyl Ether (MTBE)	µg/L	grab	monthly*
Tertiary Butyl Alcohol (TBA)	µg/L	grab	monthly*
Total Petroleum Hydrocarbons	µg/L	grab	monthly*
Benzene	µg/L	grab	monthly
Ethylbenzene	µg/L	grab	monthly
Toluene	µg/L	grab	monthly

Constituent	Unit	Type of Sample	Minimum Frequency of Analysis
Xylenes	µg/L	grab	monthly
PCBs*	µg/L	grab	monthly*
Acute Toxicity	% survival	grab	annually

*: Weekly for the first month and monthly thereafter if no exceedance is observed.

IV. WHOLE EFFLUENT TOXICITY TESTING REQUIREMENTS

A. Definition of Toxicity

Acute Toxicity

The MRP requires an annual test for acute toxicity which measures primarily lethal effects that occur over a 96-hour period. Acute toxicity shall be measured in percent survival measured in undiluted (100%) effluent.

B. Acute Toxicity Effluent Monitoring Program

1. The Discharger shall conduct acute toxicity tests on effluent grab samples by methods specified in 40 CFR Part 136 which cites USEPA's *Methods for Measuring the Acute Toxicity of Effluents and Receiving Waters to Freshwater and Marine Organisms*, Fifth Edition, October 2002, USEPA, Office of Water, Washington D.C. (EPA/821-R-02-012) or a more recent edition to ensure compliance in 100 % effluent.

2. The fathead minnow, *Pimephales promelas*, shall be used as the test species for fresh water discharges and the topsmelt, *Atherinops affinis*, shall be used as the test species for brackish effluent. The method for topsmelt is found in USEPA's *Short-term Method for Estimating the Chronic Toxicity of Effluents and Receiving Waters to West Coast Marine and Estuarine Organisms*, First Edition, August 1995 (EPA/600/R-95/136), or a more recent edition.

3. In lieu of conducting the standard acute toxicity testing with the fathead minnow, the Discharger may elect to report the results or endpoint from the first 48 hours of the chronic toxicity test as the results of the acute toxicity test.

4. Accelerated Toxicity Monitoring: If the results of the toxicity test yields a survival of less than 90%, then the frequency of analyses shall increase to monthly until at least three test results have been obtained and full compliance with effluent limitations has been demonstrated, after which the frequency of analyses shall revert

to annually. Results of toxicity tests shall be included in the first monitoring report following sampling.

5. Effluent samples shall be collected after all treatment processes and before discharge to the receiving water.

C. Reporting

1. The Discharger shall submit a full report of the toxicity test results, including any accelerated testing conducted during the month as required by this permit. Test results shall be reported as % survival for acute toxicity test results with the self monitoring reports (SMR) for the month in which the test is conducted.

2. If an initial investigation indicates the source of toxicity and accelerated testing is unnecessary, then those results also shall be submitted with the SMR for the period in which the investigation occurred.

   a. The full report shall be submitted on or before the end of the month in which the SMR is submitted.

   b. The full report shall consist of (1) the results; (2) the dates of sample collection and initiation of each toxicity test; (3) the acute toxicity average limit.

3. Test results for toxicity tests also shall be reported according to the appropriate manual chapter on Report Preparation and shall be attached to the SMR. Routine reporting shall include, at a minimum, as applicable, for each test:

   a. Sample date(s);
   b. Test initiation date;
   c. Test species;
   d. End point values for each dilution (e.g., number of young, growth rate, percent survival);
   e. Any applicable charts; and
   f. Available water quality measurements for each test (e.g., pH, D.O., temperature, conductivity, hardness, salinity, ammonia).

4. The Discharger shall provide a compliance summary, which includes a summary table of toxicity data from all samples collected during that year.

   The Discharger shall notify by telephone or electronically, this Regional Water Board of any toxicity exceedance of the limit or trigger within 24 hours of receipt of the results followed by a written report within 14 calendar days of receipt of the results. The verbal or electronic notification shall include the exceedance and the plan the Discharger has taken or will take to investigate and correct the cause(s) of toxicity. It may also include a status

report on any actions required by the permit, with a schedule for actions not yet completed. If no actions have been taken, the reasons shall be given.

V. LAND DISCHARGE MONITORING REQUIREMENTS

Not Applicable.

VI. RECLAMATION MONITORING REQUIREMENTS

Not Applicable.

VII. RECEIVING WATER MONITORING REQUIREMENTS – SURFACE WATER AND GROUNDWATER

Not Applicable.

VIII. OTHER MONITORING REQUIREMENTS

Not Applicable.

IX. REPORTING REQUIREMENTS

A. General Monitoring and Reporting Requirements

1. The Discharger shall comply with all Standard Provisions (Attachment D) related to monitoring, reporting, and recordkeeping.

2. If there is no discharge during any reporting period, the report shall so state.

3. Each monitoring report shall contain a separate section titled "Summary of Non-Compliance" which discusses the compliance record and corrective actions taken or planned that may be needed to bring the discharge into full compliance with waste discharge requirements. This section shall clearly list all non-compliance with waste discharge requirements, as well as all excursions of effluent limitations.

4. The Discharger shall inform the Regional Water Board well in advance of any proposed construction activity that could potentially affect compliance with applicable requirements.

B. Self Monitoring Reports (SMRs)

1. At any time during the term of this permit, the State or Regional Water Board may notify the Discharger to electronically submit Self-Monitoring Reports (SMRs) using the State Water Board's California Integrated Water Quality System (CIWQS) Program Web site (http://www.waterboards.ca.gov/ciwqs/index.html). Until

such notification is given, the Discharger shall submit hard copy SMRs. The CIWQS Web site will provide additional directions for SMR submittal in the event there will be service interruption for electronic submittal.

2. The Discharger shall report in the SMR the results for all monitoring specified in this MRP. The Discharger shall submit SMRs including the results of all required monitoring using USEPA-approved test methods or other test methods specified in this Order. If the Discharger monitors any pollutant more frequently than required by this Order, the results of this monitoring shall be included in the calculations and reporting of the data submitted in the SMR.

3. Monitoring periods and reporting for all required monitoring shall be completed according to the following schedule:

Table 2. Monitoring Periods and Reporting Schedule

Sampling Frequency	Monitoring Period Begins On	Monitoring Period	SMR Due Date
Continuous	July 19, 2011	All	Submit with quarterly SMR
Weekly	Sunday following permit effective date or on permit effective date if on a Sunday	Sunday through Saturday	Submit with quarterly SMR
Monthly	First day of calendar month following permit effective date or on permit effective date if that date is first day of the month	1st day of calendar month through last day of calendar month	Submit with quarterly SMR
Quarterly	Closest of January 1, April 1, July 1, or October 1	January 1 through March 31. April 1 through June 30. July 1 through September 30. October 1 through December 31	45 days from the end of the monitoring period
Annually	January 1	January 1 through December 31	45 days from the end of the monitoring period

4. Reporting Protocols. The Discharger shall report with each sample result the applicable Reporting Level (RL) and the current Method Detection Limit (MDL), as determined by the procedure in Part 136.

   The Discharger shall report the results of analytical determinations for the presence of chemical constituents in a sample using the following reporting protocols:

   a. Sample results greater than or equal to the RL shall be reported as measured by the laboratory (i.e., the measured chemical concentration in the sample).

b. Sample results less than the RL, but greater than or equal to the laboratory's MDL, shall be reported as "Detected, but Not Quantified," or DNQ. The estimated chemical concentration of the sample shall also be reported.

For the purposes of data collection, the laboratory shall write the estimated chemical concentration next to DNQ as well as the words "Estimated Concentration" (may be shortened to "Est. Conc."). The laboratory may, if such information is available, include numerical estimates of the data quality for the reported result. Numerical estimates of data quality may be percent accuracy (± a percentage of the reported value), numerical ranges (low to high), or any other means considered appropriate by the laboratory.

c. Sample results less than the laboratory's MDL shall be reported as "Not Detected," or ND.

d. Dischargers are to instruct laboratories to establish calibration standards so that the ML value (or its equivalent if there is differential treatment of samples relative to calibration standards) is the lowest calibration standard. At no time is the Discharger to use analytical data derived from *extrapolation* beyond the lowest point of the calibration curve.

5. The Discharger shall submit SMRs in accordance with the following requirements:

a. The Discharger shall arrange all reported data in a tabular format. The data shall be summarized to clearly illustrate whether the facility is operating in compliance with interim and/or final effluent limitations. The Discharger is not required to duplicate the submittal of data that is entered in a tabular format within CIWQS. When electronic submittal of data is required and CIWQS does not provide for entry into a tabular format within the system, the Discharger shall electronically submit the data in a tabular format as an attachment.

b. The Discharger shall attach a cover letter to the SMR. The information contained in the cover letter shall clearly identify violations of the WDRs; discuss corrective actions taken or planned; and the proposed time schedule for corrective actions. Identified violations must include a description of the requirement that was violated and a description of the violation.

c. SMRs must be submitted to the Regional Water Board, signed and certified as required by the Standard Provisions (Attachment D), to the address listed below:

C. Notification

1. The Discharger shall notify the Executive Officer in writing prior to discharge of any chemical that may be toxic to aquatic life. Such notification shall include:

   a. Name and general composition of the chemical,
   b. Frequency of use,
   c. Quantities to be used,
   d. Proposed discharge concentrations, and
   e. EPA registration number, if applicable.

   No discharge of such chemical shall be made prior to obtaining the Executive Officer's approval.

2. The Discharger shall notify the Regional Board via telephone and/or fax within 24 hours of noticing an exceedance above the effluent limits in Order No. R4-2008-0032. The Discharger shall provide to the Regional Board within 14 days of observing the exceedance a detailed statement of the actions undertaken or proposed that will bring the discharge into full compliance with the requirements and submit a timetable for correction.

D. Monitoring Frequencies Adjustment

Monitoring frequencies may be adjusted by the Executive Officer to a less frequent basis if the Discharger requests same and the request is backed by statistical trends of monitoring data submitted.

E. Self Monitoring Reports (SMRs)

SMRs must be signed and certified as required by the standard provisions (Attachment D). The Discharge shall submit the original SMR to the address listed below:

California Regional Water Quality Control Board
Los Angeles Region
320 W. 4th Street, Suite 200
Los Angeles, CA 90013
Attention: Information and Technology Unit.

LOS ANGELES DISTRICT
U.S. ARMY CORPS OF ENGINEERS

CERTIFICATION OF COMPLIANCE WITH
DEPARTMENT OF THE ARMY NATIONWIDE PERMIT

Permit Number: *SPL-2010-01051-CO*

Name of Permitted: Mr. Ken H. Riesz, Sr., *El Segundo Energy Center LLC*

Date of Issuance: *April 18, 2011*

Upon completion of the activity authorized by this permit and any mitigation required by the permit, sign this certification and return it to the following address:

U.S Army Corps of Engineers
Regulatory Division
ATTN: CESPL-RG-SPL-2010-01051-CO
LOS ANGELES DISTRICT CORPS OF ENGINEERS
P.O. BOX 532711
LOS ANGELES, CALIFORNIA 90053-2325

Please note that your permitted activity is subject to a compliance inspection by an Army Corps of Engineers representative. If you fail to comply with this nationwide permit you may be subject to permit suspension, modification, or revocation procedures as contained in 33 CFR 330.5 or enforcement procedures such as those contained in 33 CFR 326.4 and 326.5.

I hereby certify that the work authorized by the above referenced permit has been completed in accordance with the terms and conditions of the said permit, and required mitigation was completed in accordance with the permit condition(s).

Signature of Permittee

Date 7/15/11

South Coast
Air Quality Management District
21865 Copley Drive, Diamond Bar, CA 91765-4178
(909) 396-2000 · www.aqmd.gov

APPROVAL OF EXTENSION FOR PERMIT TO CONSTRUCT

July 15, 2011

Mr. Keith Richards, President
NRG West
1817 Aston Avenue Suite 104
Carlsbad, CA 92008

SUBJECT: El Segundo Power, LLC, RECLAIM/Title V Facility Permit Revision (Facility ID: 115663), Located at 301 Vista Del Mar, El Segundo CA.

Dear Mr. Richards:

The South Coast Air Quality Management District (AQMD) has received a request for extension from El Segundo Power, LLC, dated June 21, 2011. The request provided an update of the construction schedule, and asked for a 24-month extension to July 13, 2013. AQMD staff has reviewed the request and has determined that granting the request for a 12-month extension complies with AQMD's Rules and Regulations. Therefore, in accordance with AQMD Rule 205 the Permits to Construct are extended for a period of 12 months for the applications listed in Table 1, and shall expire on July 13, 2012. This extension for Permits to Construct will become invalid if the Permits to Operate are denied or if the applications are cancelled. You must notify the AQMD, in writing, when the equipment is operational.

TABLE 1 – Approved Application/Permits to Construct

Equipment	Application Number	P/C issue date	Original P/C Expiration Date	New P/C Expiration Date
Gas Turbine No. 5	470652	July 13, 2010	July 13, 2011	July 13, 2012
Gas Turbine No. 7	470656	July 13, 2010	July 13, 2011	July 13, 2012
SCR/CO Catalyst No. 5	470653	July 13, 2010	July 13, 2011	July 13, 2012
SCR/CO Catalyst No. 7	470654	July 13, 2010	July 13, 2011	July 13, 2012

Based on the information provided by El Segundo Power, LLC the construction shall continue according to the increments of progress schedule shown in Table 2 below, and shall include an update of the project status and an anticipated construction completion date. The update shall be in written format and shall be submitted to Mr. Kenneth L. Coats within two weeks following the end of each quarter.

TABLE 2 – Increments of Progress Schedule

Calendar Quarter	Dates	Increment of Progress
2Q2011 – 4Q2012	4/1/11 – 12/31/12	Continue Unit 5 Construction
3Q2011	7/1/11 – 9/30/11	Start Unit 7 Construction
3Q2011 – 2Q2013	7/1/11 – 6/30/13	Continue Unit 7 Construction
1Q2012	1/1/12 – 3/31/12	Start Transmission Line (T/L) Construction
3Q2012	7/1/12 – 9/30/12	Complete T/L Construction
4Q2012	10/1/12 – 12/31/12	First Combustion of Unit 5
2Q2013	4/1/13 – 6/30/13	First Combustion of Unit 7
2Q2013	4/1/13 – 6/30/13	Complete Installation of Major Equipment
2Q2013	4/1/13 – 6/30/13	Synchronization with Grid and Interconnection
3Q2013	7/1/13 – 7/13/13	Complete all Construction
3Q2013	7/13/13 – 7/31/13	Start Commercial Operations

Please contact Mr. Kenneth L. Coats at 909.396.2527 (kcoats@aqmd.gov) if you have any questions regarding the permitting of this equipment.

Very truly yours,

Brian L. Yeh
Senior AQ Engineering Manager
Engineering & Complaince

cc: George Piantka, El Segundo Power, LLC

SOUTH COAST AIR QUALITY MANAGEMENT DISTRICT
SVE Operation (R203) or Rule 1166 NOTIFICATION FORM

Use this form to notify of operation of a Soil Vapor Extraction unit (SVE); or prior to Excavating, Handling, Monitoring, Treating known or suspect Volatile Organic Compounds (VOC) contaminated soil per R1166. See instructions on the back of this form. For questions check our website at www.aqmd.gov or call the Hotline at (909) 396-2326.

FAX this form to 909-396-3342 and within 48 hours of the fax, MAIL the original form and fee to:
SCAQMD - 1166/203 Notifications, File # 55641, Los Angeles, CA 90074-5641

This form will be faxed back to you with a **REFERENCE** number if you provide a **FAXBACK** # here: 714-689-7355

AQMD USE ONLY	RECEIVED BY	POSTMARK	REFERENCE #

COMPLETED BY Loriél Holmes	Company AECom		Phone # 714-795-8312
Date 7/22/11	Check #	Amount $53.15	Project # 60188888

NOTIFICATION TYPE (check one only)	Original (Initial)	Revision (prior reference #)	Cancellation (prior reference #)
	[X]	[ ]	[ ]

PROJECT TYPE (check one only)	[1] Soil Vapor Extraction (SVE)	[2] R1166 Treating Contaminated Soil	[2] R1166 Excavation of VOC Soil/Tank	[2] R1166 Reporting > 50 ppm VOC Soil	[2] R1166 Reporting > 1000 ppm VOC Soil
	[ ]	[ ]	[X]	[ ]	[ ]

[1] SVE Permit issued to (name): [1] SVE Permit Number:

[1] SVE Distance to nearest sensitive receptor in feet (see your permit condition requirements):

[2] R1166 Mitigation Plan issued to (name): AECom Technology Corp [2] R1166 Plan Number: 517086

[2] R1166 - Date & time of VOC > 50 or 1000 ppm exceedance: Highest VOC reading in ppm:

PROJECT DATES	START 7/25/11	END 11/25/11	WORK SHIFT day [X] swing [ ] night [ ]

SITE CONTRACTOR INFORMATION	AQMD ID # 127468	CSLB License # 89	Phone # 661-726-4447
Name Granite Construction Inc.	Address 38000 Monroe St.		
City Indio	Zip 92201	Site supv name & phone # Hektor Montano 661-510-6475	

SITE INFORMATION	Site Name El Segundo Power LLC	Site AQMD ID # 115663
Site Address 301 Vista Del Mar		Cross Street 45th St
Site City El Segundo	Zip 90245	Site contact name & phone # George Piantka 760-710-2156

TANK INFORMATION	# OF TANKS	EACH	CAPACITY (gal)	MATERIAL STORED IN TANK	ABOVE GROUND? (Y/N)
no tanks		@			
		@			
Example	*3 tanks*	@	*10,000*	*Gasoline*	*no*

INFORMATION CERTIFICATION I certify that the above information is complete and accurate

Company Name AECom Print Name Loriél Holmes Signature [signature] Date 7/22/11

COMMENTS

SOUTH COAST AIR QUALITY MANAGEMENT DISTRICT
NOTIFICATION OF DEMOLITION OR ASBESTOS REMOVAL

MAIL FORM AND FEE TO SCAQMD, ASBESTOS NOTIFICATIONS, FILE # 55641, LOS ANGELES CA 90074-5641

AQMD USE ONLY	SCREEN BY	RECEIVED	POSTMARK	ENTERED BY	NOTIFICATION #
COMPLETED BY R. Mendiola	COMPANY LVI Facility Services		PHONE 714.639.7600		
DATE 7/15/2011	CHECK #	FEE $ 53.15		PROJECT # 251502 Revision # 6	
NOTIFICATION TYPE	ORIGINAL	REVISION DATES	REVISION OTHER (highlight)	Additional material being added per discussion w/Min Sue	
PROJECT TYPE	DEMOLITION	ORDERED DEMOLITION	RENOVATION (removal)	EMERGENCY REMOVAL	PLANNED RENO (annual)	Procedure 4 Plan	Procedure 5 Plan
SITE INFORMATION	SITE NAME El Segundo Power, LLC				
SITE ADDRESS 301 Vista Del Mar Blvd				CROSS STREET 45th Street and Vista Del Mar	
CITY El Segundo	STATE CA	ZIP 90245	COUNTY Los Angeles		
DESCRIBE WORK AND LOCATION	Remove below grade transite pipe and ducting encountered on the former site of Unit 1 and 2 & on the former SMUD Location (see attached) – Additional 4,000 sq. ft of Transite				
BUILDING SIZE (SQ FT) 100,000+	NUMBER OF FLOORS N/A	BUILDING AGE (YEARS) 30+	NUMBER OF DWELLING UNITS N/A		
BLDG PRIOR / PRESENT USE	COMMERCIAL	HOSPITAL	INDUSTRIAL	Other	OFFICE	PUBLIC BLDG	HOUSE	SCHOOL	SHIP	UNIV/COLLEGE
SITE OWNER El Segundo Power, LLC			ADDRESS 301 Vista Del Mar Blvd.		
CITY El Segundo	STATE CA	ZIP 90245	CONTACT Mark Kodis	PHONE 760.535.2119	
REQUIRED BUILDING INFORMATION	ASBESTOS PRESENT? YES NO	ASBESTOS SURVEY? YES NO	ASBESTOS REMOVED? YES NO	BUILDING TO BE DEMOLISHED? YES NO	
PROJECT DATES	START 02/08/2011 7/18/2011	END 03/31/2011 04/29/2011 5/31/2011 6/30/201 7/31/11	WORK SHIFT (day, swing, night)		
*ASBESTOS AMOUNT TO BE REMOVED - (in square feet)	FRIABLE	CLASS I 16,925 4,000	CLASS II	TOTAL AMOUNT – 20,925	
*ASBESTOS REMOVAL FROM	SURFACES	PIPES	COMPONENTS		

*AMOUNT OF EACH TYPE OF ASBESTOS	ACOUSTIC CEILING	LINOLEUM	INSULATION	FIRE PROOFING	DUCTING	STUCCO	MASTIC

FLOOR TILES (VAT)	DRY WALL	PLASTER	TRANSITE 16,925 4,000	ROOFING	OTHER (describe)

CONTRACTOR INFORMATION	CSLB LICENSE # 518740	OSHA REG # 061	AQMD ID # 80209		
NAME LVI Facility Services	ADDRESS 718 N. Hariton Street				
CITY Orange	STATE CA	ZIP 92868	SITE SUPVR Kelly Arnold	PHONE 714.639.7600	
WASTE TRANSPORTER #1 Environmental Logistics/ Global Transloading			LANDFILL Azusa Landfill Reclamation/ US Ecology		
ADDRESS 140 W. El Monte / 1842 East 29th St			ADDRESS 1201 W. Gladstone Street / PO Box 578		
CITY Bloomington / Signal Hill	STATE CA	ZIP 92316/ 90755	CITY Azusa / Hwy 95 S. of Beatty	STATE CA / NV	ZIP 91702 / 89003

SCAQMD NOTIFICATION OF DEMOLITION OR ASBESTOS REMOVAL

MAIL FORM AND FEE TO SCAQMD, ASBESTOS NOTIFICATIONS, FILE # 55641, LOS ANGELES CA 90074-5641

WASTE TRANSPORTER #2			* WASTE STORAGE SITE		
ADDRESS			ADDRESS		
CITY	STATE	ZIP	CITY	STATE	ZIP

* **CONTROLS**: DESCRIBE WORK PRACTICES AND CONTROLS TO BE USED AT THE RENOVATION AND DEMOLITION SITE. Procedure # 1, 2, 3, 4, 5 or Other

Approval # 1214169

For asbestos removals circle the combination of Rule 1403 procedures used. Procedure 4 and 5 submit plans for AQMD prior approval (See procedure 4/5 guidelines)

* **ASBESTOS DETECTION PROCEDURE** Circle the procedures and analytical methods used to determine the presence of asbestos in the building: Survey, Bulk Sampling, Inspection, PLM, PCM, TEM, Assumed as Asbestos-PACM, Describe Other (See survey guidelines checklist):

FOR **DEMOLITIONS** GIVE THE COMPANY NAME AND DATES OF THE ASBESTOS REMOVAL:

FOR **ORDERED DEMOLITION** SEND A COPY OF THE ORDER AND GIVE THE AGENCY NAME & PHONE #
AUTHORIZING PERSON: TITLE
DATE OF ORDER: DATE ORDERED TO BEGIN:

* FOR **EMERGENCY ASBESTOS REMOVAL** GIVE THE NAME AND PHONE NUMBER OF THE PERSON DECLARING/AUTHORIZING THE EMERGENCY, DATE AND HOUR OF EMERGENCY AND DESCRIBE THE SUDDEN, UNEXPECTED EVENT (***Disturbed /damaged asbestos requires a procedure 5 plan approval prior to clean-up):***

EXPLAIN HOW THE EVENT WOULD CAUSE UNSAFE CONDITIONS, EQUIPMENT DAMAGE OR UNREASONABLE FINANCIAL BURDEN:

CONTINGENCY PLAN: DESCRIBE ACTIONS TO BE FOLLOWED IF UNEXPECTED ASBESTOS IS FOUND DURING DEMOLITION OR ASBESTOS MATERIAL BECOME DISTURBED, CRUMBLED, PULVERIZED, OR REDUCED TO POWDER. (***Disturbed /damaged asbestos requires a procedure 5 plan approval prior to clean-up):***
Stop work, stabilize materials, contact CAC for assessment

* **TRAINING CERTIFICATION:** I certify that an individual trained in the provisions of regulation AQMD Rule 1403 and NESHAP will be on site during the removal and evidence that the required training has been accomplished by this person will be available for inspection during normal business hours.

LVI Facility Services Rozanna Mendiola Rozanna Mendiola Admin. Assistant Date 7/15/2011

INFORMATION CERTIFICATION: I certify that the above information is correct and I have enclosed any required attachments.

LVI Facility Services Rozanna Mendiola Rozanna Mendiola Admin. Assistant Date 7/15/2011

Notifications can not be accepted without the required fee (Rule 301). Asbestos removals of less than 100 square feet are exempt from notification and fees. Please make checks payable to "SCAQMD". Fees are per notification, not refundable, and vary according to the project size. Fees are as follows:

PROJECT SIZE in square feet	DEMOLITION OR REMOVAL	ADDITIONAL SERVICE CHARGES
1,000 or less	$ 53.15	Special Handling Fee — $ 53.15
1,001 to 5,000	$ 162.49	Revision to Notification- - $ 53.15
5,001 to 10,000	$ 380.33	Returned Check Fee — - $ 25.00
10,001 to 50,000	$ 596.38	Planned Renovation — - $ 596.38
50,001 to 100,000	$ 864.30	Procedure 4 or 5 Plan—$ 596.38
100,001 or more	$ 1,440.49	Expedited 4 or 5 Plan.....$ 298.19

ATTENTION: Keep a copy of your notification. State law requires that you provide a copy of the demolition notification to Building and Safety before issuance of a demolition permit. For questions call 909-396-2336. Please mail the form and fee to AQMD. Mailing saves time, money and reduces traffic and air pollution

MAIL FORM AND FEE TO: SCAQMD, ASBESTOS NOTIFICATIONS, FILE # 55641, LOS ANGELES CA 90074-5641

FORMS, INSTRUCTIONS, AND THE RULE 1403 CAN BE OBTAINED FROM AQMD WEB SITE AT HTTP://WWW.AQMD.GOV

SCAQMD is located at 21865 Copley Drive, Diamond Bar, CA 91765-4182 **PHONE: (909) 396-2336 FAX: (909) 396-3342**

REV20100623

AECOM

AECOM
999 West Town and Country Road
Orange, California 92868-4713

(714) 567-2400 tel
(714) 973-9750 fax

July 15, 2011

South Coast Air Quality Management District
21865 Copley Drive
Diamond Bar, California 91765

Subject: Asbestos Removal Notification for LVI at the NRG El Segundo Facility

Dear Sir or Madam,

LVI has encountered additional transite electrical conduit piping material during the excavation activities at the NRG facility in El Segundo, California. These additional materials are similar to the materials that have been removed under the original notification and removed under the approved Procedure 5 plan.

Approximately 4,000 linear feet of additional transite piping will be removed. LVI anticipates that removal of this material will be completed by July 31, 2011.

Please contact me with any questions or concerns at (714) 689-7187 or david.simon@aecom.com

Yours sincerely,

David L Simon

David Simon
Certified Asbestos Consultant #92-0005

C:\Documents and Settings\simond\My Documents\NRG El Segundo\AQMD Letter.docx

SOUTH COAST AIR QUALITY MANAGEMENT DISTRICT
NOTIFICATION OF DEMOLITION OR ASBESTOS REMOVAL

AQMD

MAIL FORM AND FEE TO SCAQMD, ASBESTOS NOTIFICATIONS, FILE # 55641, LOS ANGELES CA 90074-5641

AQMD USE ONLY	SCREEN BY	RECEIVED	POSTMARK	ENTERED BY	NOTIFICATION #

COMPLETED BY Scott McArthur COMPANY Granite Construction PHONE 805-331-1327

DATE 7-26-11 CHECK # 182 FEE $ 53.89 PROJECT #

NOTIFICATION TYPE (ORIGINAL) REVISION DATES REVISION OTHER (highlight) Change contrator CANCELLATION

PROJECT TYPE (DEMOLITION) ORDERED DEMOLITION RENOVATION (removal) EMERGENCY REMOVAL PLANNED RENO (annual) Procedure 4 Plan Procedure 5 Plan

SITE INFORMATION SITE NAME El Segundo Power, LLC

SITE ADDRESS 301 Vista del Mar CROSS STREET 45th Street

CITY El Segundo STATE CA ZIP 90245 COUNTY Los Angeles

DESCRIBE WORK AND LOCATION Pipeline support foundations, south end of property.

BUILDING SIZE (SQ FT) 0 NUMBER OF FLOORS 0 BUILDING AGE (YEARS) 20 NUMBER OF DWELLING UNITS 0

BLDG PRIOR / PRESENT USE COMMERCIAL HOSPITAL (INDUSTRIAL) Other OFFICE PUBLIC BLDG. HOUSE SCHOOL SHIP UNIV/COLLEGE

SITE OWNER El Segundo Power, LLC ADDRESS 301 Vista del Mar

CITY El Segundo STATE CA ZIP 90245 CONTACT Steve Odabashian PHONE 310-615-6331

REQUIRED BUILDING INFORMATION	ASBESTOS PRESENT? YES (NO)	[1]ASBESTOS SURVEY? (YES) NO	ASBESTOS REMOVED? YES NO	BUILDING TO BE DEMOLISHED? (YES) NO

PROJECT DATES START 8-8-11 END 8-31-11 WORK SHIFT (day), swing, night)

*ASBESTOS AMOUNT TO BE REMOVED - (in square feet)	FRIABLE	CLASS I	CLASS II	TOTAL AMOUNT (add row)

*ASBESTOS REMOVAL FROM	SURFACES	PIPES	COMPONENTS

*AMOUNT OF EACH TYPE OF ASBESTOS (in square feet)	ACOUSTIC CEILING	LINOLEUM	INSULATION	FIRE PROOFING	DUCTING	STUCCO	MASTIC

FLOOR TILES (VAT)	DRY WALL	PLASTER	TRANSITE	ROOFING	OTHER (describe)

CONTRACTOR INFORMATION CSLB LICENSE # 89 OSHA REG # AQMD ID # 127468

NAME Granite Construction Company ADDRESS 38000 Monroe St

CITY Indio STATE CA ZIP 92201 SITE SUPVR Hector Montano PHONE 661-510-6475

WASTE TRANSPORTER #1			**LANDFILL**		
ADDRESS			ADDRESS		
CITY	STATE	ZIP	CITY	STATE	ZIP

* Not required for demolition notifications

[1] asbestos surveys are required prior to Demolition and Renovation.

Forms, instructions, and the Rule 1403 can be obtained from AQMD web site **http://www.aqmd.gov**

SCAQMD NOTIFICATION OF DEMOLITION OR ASBESTOS REMOVAL

MAIL FORM AND FEE TO SCAQMD, ASBESTOS NOTIFICATIONS, FILE # 55641, LOS ANGELES CA 90074-5641

WASTE TRANSPORTER #2			*** WASTE STORAGE SITE**		
ADDRESS			ADDRESS		
CITY	STATE	ZIP	CITY	STATE	ZIP

*** CONTROLS:** DESCRIBE WORK PRACTICES AND CONTROLS TO BE USED AT THE RENOVATION AND DEMOLITION SITE. Procedure # **1, 2, 3, 4, 5** or Other.

For asbestos removals circle the combination of Rule 1403 procedures used. Procedure 4 and 5 submit plans for AQMD prior approval (See procedure 4/5 guidelines)

*** ASBESTOS DETECTION PROCEDURE:** Circle the procedures and analytical methods used to determine the presence of asbestos in the building. Survey, Bulk Sampling, Inspection, PLM, PCM, TEM, Assumed as Asbestos-PACM, Describe Other (See survey guidelines checklist):

FOR **DEMOLITIONS** GIVE THE COMPANY NAME AND DATES OF THE ASBESTOS REMOVAL: No asbestos present as determined by CAC

FOR **ORDERED DEMOLITION** SEND A COPY OF THE ORDER AND GIVE THE AGENCY NAME & PHONE #
AUTHORIZING PERSON: TITLE
DATE OF ORDER: DATE ORDERED TO BEGIN:

* FOR **EMERGENCY ASBESTOS REMOVAL** GIVE THE NAME AND PHONE NUMBER OF THE PERSON DECLARING/AUTHORIZING THE EMERGENCY, DATE AND HOUR OF EMERGENCY AND DESCRIBE THE SUDDEN, UNEXPECTED EVENT (***Disturbed /damaged asbestos requires a procedure 5 plan approval prior to clean-up):***

EXPLAIN HOW THE EVENT WOULD CAUSE UNSAFE CONDITIONS, EQUIPMENT DAMAGE OR UNREASONABLE FINANCIAL BURDEN:

CONTINGENCY PLAN: DESCRIBE ACTIONS TO BE FOLLOWED IF UNEXPECTED ASBESTOS IS FOUND DURING DEMOLITION OR ASBESTOS MATERIAL BECOME DISTURBED, CRUMBLED, PULVERIZED, OR REDUCED TO POWDER. (***Disturbed /damaged asbestos requires a procedure 5 plan approval prior to clean-up):***
Stop work, Stablizes materials, contact CAC for assessment.

*** TRAINING CERTIFICATION:** I certify that an individual trained in the provisions of regulation AQMD Rule 1403 and NESHAP will be on site during the removal and evidence that the required training has been accomplished by this person will be available for inspection during normal business hours.

Company Name | Print name of owner/operator | Signature of owner/operator | Tittle of owner/operator | Date

INFORMATION CERTIFICATION: I certify that the above information is correct and I have enclosed any required attachments.

Company Name	Print name of owner/operator	Signature of owner/operator	Tittle of owner/operator	Date
GRANITE CONSTRUCTION Co.	SCOTT McARTHUR	Scott McArthur	CONSTRUCTION MANAGER ABEL ADRIANZEN Project Manager	7/26/11

Notifications can not be accepted without the required fee (Rule 301). Asbestos removals of less than 100 square feet are exempt from notification and fees. Please make checks payable to "SCAQMD". Fees are per notification, not refundable, and vary according to the project size. Fees are as follows:

PROJECT SIZE in square feet	DEMOLITION OR REMOVAL	ADDITIONAL SERVICE CHARGES
1,000 or less	$ ~~53.15~~ $ 53.89	Special Handling Fee ---- $ 53.15
1,001 to 5,000	$ 162.49	Revision to Notification- - $ 53.15
5,001 to 10,000	$ 380.33	Returned Check Fee --- - $ 25.00
10,001 to 50,000	$ 596.38	Planned Renovation ---- - $ 596.38
50,001 to 100,000	$ 864.30	Procedure 4 or 5 Plan-----$ 596.38
100,001 or more	$ 1,440.49	Expedited 4 or 5 Plan.....$ 298.19

ATTENTION: **Keep a copy of your notification.** State law requires that you provide a copy of the demolition notification to Building and Safety before issuance of a demolition permit. For questions call 909-396-2336. Please mail the form and fee to AQMD. Mailing saves time, money and reduces traffic and air pollution

Corporate Purchasing Card 182

RICHARD S MCARTHUR
GRANITE CONSTRUCTION CO
999 MISSION ROCK RD
SANTA PAULA CA 93060

68-1/510

JULY 26, 2011
Date

Pay to the order of SCAQMD $ 53.89

FIFTY THREE DOLLARS & 89/100 Dollars

Security Features Details on Back.

Bank of America®

Bank of America, N.A.
Richmond, VA

For NRG DEMO PERMIT

Scott McArthur

MP

⑆051000017⑆04570000793 10⑈0182

Harland Clarke

CA Storm water Multiple Applications and Report Tracking System - Ver 2.10 Bld: 7.5.2011.7.05 - Microsoft Inte

https://smarts.waterboards.ca.gov/smarts/faces/Enrollment/NoiForm.jsp

File Edit View Favorites Tools Help

CA Storm water Multiple Applications and Report Trac...

Water Boards Storm Water Multiple Application & Report Tracking System 2

You are logged-in as: **Keith Richards - NRG Energy, Inc** .
If this account does not belong to you, please log out.

NOTICE OF INTENT - Certification

The Notice of Intent (NOI) is organized into different sections. Please complete all applicable sections before submitting the form.

WDID:	4 19C345097	**Owner:**	NRG Energy, Inc 301 Vista Del Mar Blvd El Segundo CA 90245
Business Type:	Construction	**Site:**	El Segundo Power Redevelopment Proj 301 Vista Del Mar Blvd El Segundo CA 90245

Owner Info | Developer Info | Site Info | Addtnl Site Info | Risk | Billing Info | Attachments | Certification | Print | Sta

Your electronic "Notice of Intent" has been succesfully received by the State Water Resources Control Board's database. Your co

Application Id	317562
Type	Construction
Submission/Certify Date	06/30/2010
Certifier Name	Keith Richards
Certifier Title	

Please print out this screen as proof of certification. You will not be allowed to make any further changes to the certified report. If y

All records must be retained for 3 years from the date of the report or monitoring activity.

Fields marked with * are mandatory fields.

© 2011 State of California. Conditions of Use

ATTACHMENT F
WATER QUALITY-8
STORM WATER POLLUTION PREVENTION PLAN INSPECTIONS & TRAINING DOCUMENTATION
JULY 2011

Storm Water Construction Site Inspection Report

General Information					
Client	NRG				
Project Name	El Segundo Power Plant				
WDID No.	**4 19C345097**		**Location**	Power Plant Site on Vista Del Mar	
Date of Inspection	**07-05-11**	**Arrival Time**	**12:45 PM**	**Departure Time**	**2:00 PM**

Project Contacts				
	Name and Company	**Cell Phone**	**E-Mail**	**Certification**
Inspector(s)	Roman Aguilar NRG	(310) 529-3263	Roman.aguilar@nrgenergy.com	QSP Designee
Inspector(s)				
Client Contact/ Representative	George L. Piantka	(760) 707-6833	George.piantka@nrgenergy.com	PE

Type of Inspection:

☒ Regular ☐ Pre-storm event ☐ During storm event ☐ Post-storm event

SWPPP Status

Does the SWPPP and Project Schedule adequately reflect the current site conditions and contractor operations? ☒Yes ☐No

If no, describe:

Amendments Needed? ☐Yes ☒No

Training Records Present/Up to Date: ☒Yes ☐No

Inspection Records Present/Up to Date: ☒Yes ☐No

Weather Information

Has there been a storm event since the last inspection? ☐ Yes ☒ No
If yes, provide:

Storm Start Date & Time: Storm Duration (hrs): Approximate Amount of Precipitation (in):

Weather at time of inspection

☐ Clear ☒Cloudy ☐ Rain ☐ Sleet ☐ Fog ☐ Snowing ☐ Winds ____ mph

☐ Other: Temperature: 69 degrees F.

Have any discharges occurred since the last inspection? ☐Yes ☒No
If yes, describe:

Were there any discharges at the time of inspection? ☐Yes ☒No
If yes, describe:

Correction Items Identified in Previous Inspection

BMP No.	BMP	Location	Correction Measure	Issue Resolved
SE-8	Sandbag barrier	Tank farm entry road	Broken sandbags to be replaced. See photograph 1.	☒ Yes ☐ No

Observation of Project Specific BMPs

BMP No.	BMP	BMP Maintenance Required?	Location (See Note)	Corrective Action Needed and Notes (Include photos, if any)
EC-1	Scheduling	☐Yes ☒No		
EC-2	Preservation of Existing Vegetation	☐Yes ☒No		
NS-1	Water Conservation Practices	☐Yes ☒No		
NS-3	Pave/Grinding Operations	☐Yes ☒No		
NS-6	Illicit Connection / Discharge	☐Yes ☒No		
NS-8	Vehicle and Equipment Cleaning	☐Yes ☒No		
NS-9	Vehicle and Equipment Fuel	☐Yes ☒No		
NS-10	Vehicle and Equipment Maintenance	☐Yes ☒No		
SE-4	Check Dam	☐Yes ☒No		
SE-5	Fiber Rolls	☐Yes ☒No		
SE-6	Gravel Bags	☐Yes ☒No		.
SE-7	Street Sweeping	☐Yes ☒No		
SE-8	Sandbag Barrier	☒Yes ☐No	Bottom of power plant entry road.	Broken sandbags to be replaced. Move sandbag location behind k-rails. See photograph 2.

BMP No.	BMP	BMP Maintenance Required?	Location (See Note)	Corrective Action Needed and Notes (Include photos, if any)
SE-10	Storm Drain Inlet Protection	☐Yes ☒No		
WE-1	Wind Erosion Control	☐Yes ☒No		
WM-1	Material Storage	☐Yes ☒No		
WM-3	Stockpile Management	☐Yes ☒No		
WM-4	Spill Prevention and Control	☐Yes ☒No		
WM-5	Solid Waste Management	☐Yes ☒No		
WM-6	Hazardous Waste Management	☐Yes ☒No		
WM-7	Contaminated Soil Management	☐Yes ☒No		
WM-8	Concrete Waste Management	☐Yes ☒No		
WM-9	Sanitary/Septic Waste Management	☐Yes ☒No		
WM-10	Liquid Waste Management	☐Yes ☒No		

Note: Location only required when BMP maintenance is indicated.

BMP Status
Are there additional BMPs needed not currently included in SWPPP? ☐**Yes** ☒**No** **If yes, provide BMP, location descriptions, and additional correction items:**

Inspector Certification:

Print name and title: Roman Aguilar, Maintenance Coordinator _____

Signature: _____ **Date:_07-07-11**

Stormwater Construction Site Photo Log

PHOTOGRAPH NO. 1

Location: Tank farm entry road.

Description: Broken sandbags replaced – corrective action identified in inspection report 55 has been completed.

Stormwater Construction Site Photo Log

PHOTOGRAPH NO. 2

Location: Bottom of power plant entry road.

Description: Broken sandbags to be replaced. Move sandbag location behind k-rails.

Storm Water Construction Site Inspection Report

General Information					
Client	NRG				
Project Name	El Segundo Power Plant				
WDID No.	**4 19C345097**		**Location**	Power Plant Site on Vista Del Mar	
Date of Inspection	**07-11-11**	**Arrival Time**	**2:30 PM**	**Departure Time**	**3:40 PM**

Project Contacts				
	Name and Company	**Cell Phone**	**E-Mail**	**Certification**
Inspector(s)	Roman Aguilar NRG	(310) 529-3263	Roman.aguilar@nrgenergy.com	QSP Designee
Inspector(s)				
Client Contact/ Representative	George L. Piantka	(760) 707-6833	George.piantka@nrgenergy.com	PE

Type of Inspection:

☒ Regular ☐ Pre-storm event ☐ During storm event ☐ Post-storm event

SWPPP Status

Does the SWPPP and Project Schedule adequately reflect the current site conditions and contractor operations? ☒Yes ☐No

If no, describe:

Amendments Needed? ☐Yes ☒No

Training Records Present/Up to Date: ☒Yes ☐No

Inspection Records Present/Up to Date: ☒Yes ☐No

Weather Information

Has there been a storm event since the last inspection? ☐ Yes ☒ No
If yes, provide:

Storm Start Date & Time: Storm Duration (hrs): Approximate Amount of Precipitation (in):

Weather at time of inspection

☒ Clear ☐Cloudy ☐ Rain ☐ Sleet ☐ Fog ☐ Snowing ☐ Winds ____ mph

☐ Other: Temperature: 70 degrees F.

Have any discharges occurred since the last inspection? ☐Yes ☒No
If yes, describe:

Were there any discharges at the time of inspection? ☐Yes ☒No
If yes, describe:

Correction Items Identified in Previous Inspection

BMP No.	BMP	Location	Correction Measure	Issue Resolved
SE-8	Sandbag barrier	Bottom of power plant entry road.	Broken sandbags need to be replaced. Move sandbag location behind k-rails. Note: sandbags replaced, but not moved behind k-rails. See photograph 1.	☒ Yes ☐ No

Observation of Project Specific BMPs

BMP No.	BMP	BMP Maintenance Required?	Location (See Note)	Corrective Action Needed and Notes (Include photos, if any)
EC-1	Scheduling	☐Yes ☒No		
EC-2	Preservation of Existing Vegetation	☐Yes ☒No		
NS-1	Water Conservation Practices	☐Yes ☒No		
NS-3	Pave/Grinding Operations	☐Yes ☒No		
NS-6	Illicit Connection / Discharge	☐Yes ☒No		
NS-8	Vehicle and Equipment Cleaning	☐Yes ☒No		
NS-9	Vehicle and Equipment Fuel	☐Yes ☒No		
NS-10	Vehicle and Equipment Maintenance	☐Yes ☒No		
SE-4	Check Dam	☐Yes ☒No		
SE-5	Fiber Rolls	☐Yes ☒No		
SE-6	Gravel Bags	☐Yes ☒No		.
SE-7	Street Sweeping	☐Yes ☒No		
SE-8	Sandbag Barrier	☒Yes ☐No	1. Tank farm entry road. 2. Southwest corner of site by storm drain inlet.	1. Broken sandbags need to be replaced. Move sand and soil out of roadway. See photographs 2 and 3. 2. Broken gravel bags need to be replaced. See photograph 4.

BMP No.	BMP	BMP Maintenance Required?	Location (See Note)	Corrective Action Needed and Notes (Include photos, if any)
SE-10	Storm Drain Inlet Protection	☐Yes ☒No		
WE-1	Wind Erosion Control	☐Yes ☒No		
WM-1	Material Storage	☐Yes ☒No		
WM-3	Stockpile Management	☐Yes ☒No		
WM-4	Spill Prevention and Control	☐Yes ☒No		
WM-5	Solid Waste Management	☐Yes ☒No		
WM-6	Hazardous Waste Management	☐Yes ☒No		
WM-7	Contaminated Soil Management	☐Yes ☒No		
WM-8	Concrete Waste Management	☐Yes ☒No		
WM-9	Sanitary/Septic Waste Management	☐Yes ☒No		
WM-10	Liquid Waste Management	☐Yes ☒No		

Note: Location only required when BMP maintenance is indicated.

BMP Status
Are there additional BMPs needed not currently included in SWPPP? ☐**Yes** ☒**No** **If yes Provide BMP, location descriptions, and additional correction items:**

Inspector Certification:

Print name and title: Roman Aguilar, Maintenance Coordinator _____

Signature: _____ **Date: 07-11-11**

Stormwater Construction Site Photo Log

PHOTOGRAPH NO. 1

Location:
Bottom of power plant entry road.

Description:
Broken sandbags replaced in accordance with corrective action identified in inspection report 56. Sandbags need to be moved behind k-rails to move them out of wheel path.

Stormwater Construction Site Photo Log

PHOTOGRAPH NO. 2

Location: Tank farm entry road.

Description: Broken sandbags need to be replaced. Move sand and soil out of roadway.

Stormwater Construction Site Photo Log

PHOTOGRAPH NO. 3

Location: Tank farm entry road.

Description: Broken sandbags need to be replaced. Move sand and soil out of roadway.

Stormwater Construction Site Photo Log

PHOTOGRAPH NO. 4

Location: Southwest corner of site by storm drain inlet.

Description: Broken gravel bags need to be replaced.

Storm Water Construction Site Inspection Report

General Information					
Client	NRG				
Project Name	El Segundo Power Plant				
WDID No.	**4 19C345097**		**Location**	Power Plant Site on Vista Del Mar	
Date of Inspection	**07-18-11**	**Arrival Time**	**8:30 AM**	**Departure Time**	**10:00 AM**

Project Contacts				
	Name and Company	**Cell Phone**	**E-Mail**	**Certification**
Inspector(s)	Roman Aguilar NRG	(310) 529-3263	Roman.aguilar@nrgenergy.com	QSP Designee
Inspector(s)				
Client Contact/ Representative	George L. Piantka	(760) 707-6833	George.piantka@nrgenergy.com	PE

Type of Inspection:

☒ Regular ☐ Pre-storm event ☐ During storm event ☐ Post-storm event

SWPPP Status

Does the SWPPP and Project Schedule adequately reflect the current site conditions and contractor operations? ☒Yes ☐No

If no, describe:

Amendments Needed? ☐Yes ☒No

Training Records Present/Up to Date: ☒Yes ☐No

Inspection Records Present/Up to Date: ☒Yes ☐No

Weather Information

Has there been a storm event since the last inspection? ☐ Yes ☒ No
If yes, provide:

Storm Start Date & Time: Storm Duration (hrs): Approximate Amount of Precipitation (in):

Weather at time of inspection

☒ Clear ☐Cloudy ☐ Rain ☐ Sleet ☐ Fog ☐ Snowing ☐ Winds ____ mph

☐ Other: Temperature: 69 degrees F.

Have any discharges occurred since the last inspection? ☐Yes ☒No
If yes, describe:

Were there any discharges at the time of inspection? ☐Yes ☒No
If yes, describe:

Correction Items Identified in Previous Inspection

BMP No.	BMP	Location	Correction Measure	Issue Resolved
SE-8	Sandbag barrier	C11, Bottom of power plant entry road.	Move sandbags behind K-rails. See photograph 1.	☒ Yes ☐ No
SE-8	Sandbag barrier	E17, Tank farm entry road.	Broken sandbags need to be replaced. Move sand and soil out of roadway. See photographs 2&3.	☒ Yes ☐ No
SE-6	Gravel bags	F24, southwest corner of site by storm drain inlet.	Broken gravel bags need to be replaced. See photograph 4.	☒ Yes ☐ No

Observation of Project Specific BMPs

BMP No.	BMP	BMP Maintenance Required?	Location (See Note)	Corrective Action Needed and Notes (Include photos, if any)
EC-1	Scheduling	☐Yes ☒No		
EC-2	Preservation of Existing Vegetation	☐Yes ☒No		
NS-1	Water Conservation Practices	☐Yes ☒No		
NS-3	Pave/Grinding Operations	☐Yes ☒No		
NS-6	Illicit Connection / Discharge	☐Yes ☒No		
NS-8	Vehicle and Equipment Cleaning	☐Yes ☒No		
NS-9	Vehicle and Equipment Fuel	☐Yes ☒No		
NS-10	Vehicle and Equipment Maintenance	☐Yes ☒No		
SE-4	Check Dam	☐Yes ☒No		
SE-5	Fiber Rolls	☐Yes ☒No		
SE-6	Gravel Bags	☐Yes ☒No		.
SE-7	Street Sweeping	☐Yes ☒No		

BMP No.	BMP	BMP Maintenance Required?	Location (See Note)	Corrective Action Needed and Notes (Include photos, if any)
SE-8	Sandbag Barrier	☒Yes ☐No	1. E-17 2. E-17	1. Replace sandbags at location E-17, tank farm entry road. Broken sandbags identified in report 57 were replaced, however new broken sandbags were observed in this location. See photograph 5. 2. Replace broken sandbags at location E-17, opposite tank farm entry road. See photograph 6.
SE-10	Storm Drain Inlet Protection	☐Yes ☒No	Storm drain northwest of administration trailers.	Gravel bags placed around storm drain inlet to provide addition filtration and sedimentation. Corrective action has been implemented. See photograph 7.
WE-1	Wind Erosion Control	☐Yes ☒No		
WM-1	Material Storage	☐Yes ☒No		
WM-3	Stockpile Management	☐Yes ☒No		
WM-4	Spill Prevention and Control	☐Yes ☒No		
WM-5	Solid Waste Management	☐Yes ☒No		
WM-6	Hazardous Waste Management	☐Yes ☒No		
WM-7	Contaminated Soil Management	☐Yes ☒No		
WM-8	Concrete Waste Management	☐Yes ☒No		
WM-9	Sanitary/Septic Waste Management	☐Yes ☒No		
WM-10	Liquid Waste	☐Yes ☒No		

BMP No.	BMP	BMP Maintenance Required?	Location (See Note)	Corrective Action Needed and Notes (Include photos, if any)
	Management			

Note: Location only required when BMP maintenance is indicated.

BMP Status
Are there additional BMPs needed not currently included in SWPPP? ☐**Yes** ☒**No** **If yes Provide BMP, Location descriptions, and additional correction items:**

Inspector Certification:

Print name and title: Roman Aguilar, Maintenance Coordinator _____

Signature: _____ **Date: 07-18-11**

Stormwater Construction Site Photo Log

PHOTOGRAPH NO. 1

Location: C11, Bottom of power plant entry road.

Description: Sandbags were moved behind K-rails to move them out of the vehicle path.

Stormwater Construction Site Photo Log

PHOTOGRAPH NO. 2

Location: E17, Tank farm entry road.

Description: Broken sandbags were replaced and sand / soil were removed from the roadway.

Stormwater Construction Site Photo Log

PHOTOGRAPH NO. 3

Location: E17, tank farm entry road.

Description: Broken sandbags were replaced and sand / soil were removed from the roadway.

Stormwater Construction Site Photo Log

PHOTOGRAPH NO. 4

Location: F24, southwest corner of site by storm drain inlet.

Description: Broken gravel bags were replaced.

Stormwater Construction Site Photo Log

PHOTOGRAPH NO. 5

Location: E17, tank farm entry road.

Description: Replace sandbags at tank farm entry road. Broken sandbags identified in report 57 were replaced, however, new broken sandbags were observed in this location.

PHOTOGRAPH NO. 6

Location: E-17, opposite tank farm entry road.

Description: Replace broken sandbags.

PHOTOGRAPH NO. 7

Location: Storm drain northwest of administration trailers.

Description: Gravel bags placed around storm drain inlet to provide addition filtration and sedimentation. Corrective action has been implemented. See photograph 7.

Storm Water Construction Site Inspection Report

General Information					
Client	NRG				
Project Name	El Segundo Power Plant				
WDID No.	**4 19C345097**		**Location**	Power Plant Site on Vista Del Mar	
Date of Inspection	**07-26-11**	**Arrival Time**	**07:00 AM**	**Departure Time**	**09:00 AM**

Project Contacts				
	Name and Company	**Cell Phone**	**E-Mail**	**Certification**
Inspector(s)	Marcus Millett AECOM	(562) 673-9909	Marcus.millett@aecom.com	PE, QSD/QSP
Inspector(s)				
Client Contact/ Representative	George L. Piantka	(760) 707-6833	George.piantka@nrgenergy.com	PE

Type of Inspection:

☒ Regular ☐ Pre-storm event ☐ During storm event ☐ Post-storm event

SWPPP Status

Does the SWPPP and Project Schedule adequately reflect the current site conditions and contractor operations? ☒Yes ☐No

If no, describe:

Amendments Needed? ☐Yes ☒No

Training Records Present/Up to Date: ☒Yes ☐No

Inspection Records Present/Up to Date: ☒Yes ☐No

Weather Information

Has there been a storm event since the last inspection? ☐ Yes ☒ No
If yes, provide:

Storm Start Date & Time: Storm Duration (hrs): Approximate Amount of Precipitation (in):

Weather at time of inspection

☒ Clear ☐Cloudy ☐ Rain ☐ Sleet ☐ Fog ☐ Snowing ☐ Winds 7 mph from west

☐ Other: Temperature: 68 degrees F.

Have any discharges occurred since the last inspection? ☐Yes ☒No
If yes, describe:

Were there any discharges at the time of inspection? ☐Yes ☒No
If yes, describe:

Correction Items Identified in Previous Inspection

BMP No.	BMP	Location	Correction Measure	Issue Resolved
SE-8	Sandbag barrier	E17, Tank farm entry road.	Replace sandbags. Broken sandbags identified in report 58 at location E-17, tank farm entry road, were replaced. See photograph 1.	☒ Yes ☐ No
SE-8	Sandbag barrier	E17, Opposite tank farm entry road.	Replace sandbags. Broken sandbags identified in report 58 were replaced. However, new broken sandbags were observed in this location. See photograph 2.	☒ Yes ☐ No

Observation of Project Specific BMPs

BMP No.	BMP	BMP Maintenance Required?	Location (See Note)	Corrective Action Needed and Notes (Include photos, if any)
EC-1	Scheduling	☐Yes ☒No		
EC-2	Preservation of Existing Vegetation	☐Yes ☒No		
NS-1	Water Conservation Practices	☐Yes ☒No		
NS-3	Pave/Grinding Operations	☐Yes ☒No		
NS-6	Illicit Connection / Discharge	☐Yes ☒No		
NS-8	Vehicle and Equipment Cleaning	☐Yes ☒No		
NS-9	Vehicle and Equipment Fuel	☐Yes ☒No		
NS-10	Vehicle and Equipment Maintenance	☐Yes ☒No		
SE-4	Check Dam	☐Yes ☒No		
SE-5	Fiber Rolls	☐Yes ☒No		
SE-6	Gravel Bags	☒Yes ☐No	1. Storm drain inlet CB19. Northwest corner of administration trailers.	1. Replace broken gravel bags. Place cones around gravel bags. See photograph 3.
SE-7	Street Sweeping	☐Yes ☒No		

BMP No.	BMP	BMP Maintenance Required?	Location (See Note)	Corrective Action Needed and Notes (Include photos, if any)
SE-8	Sandbag Barrier	☒Yes ☐No	1. E-17, opposite tank farm entry road.	1. Replace broken sandbags. Broken sandbags identified in report 58 were replaced. However, new broken sandbags were observed in this location. See photograph 2.
SE-10	Storm Drain Inlet Protection	☒Yes ☐No	1. Storm drain inlet CB16 east of plant. 2. Storm drain inlet CB17 northwest of plant. 3. Storm drain inlet CB11 at southwest construction gate.	1. Install filter fabric in storm drain inlet. See photograph 4. 2. Install filter fabric in storm drain inlet. See photograph 5. 3. Contractor observed washing sediment into storm drain inlet with hose. Inlet is not connected. Advise contractors that this practice is unacceptable. Dry cleaning methods (e.g. broom, street sweeping) should be used. See photograph 6.
WE-1	Wind Erosion Control	☐Yes ☒No		
WM-1	Material Storage	☐Yes ☒No		
WM-3	Stockpile Management	☐Yes ☒No		
WM-4	Spill Prevention and Control	☐Yes ☒No		
WM-5	Solid Waste Management	☐Yes ☒No		
WM-6	Hazardous Waste Management	☐Yes ☒No		
WM-7	Contaminated Soil Management	☐Yes ☒No		
WM-8	Concrete Waste Management	☐Yes ☒No		

BMP No.	BMP	BMP Maintenance Required?	Location (See Note)	Corrective Action Needed and Notes (Include photos, if any)
WM-9	Sanitary/Septic Waste Management	☐Yes ☒No		
WM-10	Liquid Waste Management	☐Yes ☒No		

Note: Location only required when BMP maintenance is indicated.

BMP Status
Are there additional BMPs needed not currently included in SWPPP? ☐**Yes** ☒**No** **If yes Provide BMP, Location descriptions, and additional correction items:**

Inspector Certification:

Print name and title: Marcus Millett, PE, QSD/QSP

Signature:

Date: 07-26-11

Stormwater Construction Site Photo Log

PHOTOGRAPH NO. 1

Location: E17, Tank farm entry road.

Description: Broken sandbags identified in report 58 were replaced.

Stormwater Construction Site Photo Log

PHOTOGRAPH NO. 2

Location: E-17, opposite tank farm entry road.

Description: Replace sandbags. Broken sandbags identified in report 58 were replaced. However, new broken sandbags were observed in this location.

Stormwater Construction Site Photo Log

PHOTOGRAPH NO. 3

Location: Storm drain inlet CB19. Northwest corner of administration trailers.

Description: Replace broken gravel bags. Place cones around gravel bags.

Stormwater Construction Site Photo Log

PHOTOGRAPH NO. 4

Location: Storm drain inlet CB16 east of plant.

Description: Install filter fabric in storm drain inlet.

Stormwater Construction Site Photo Log

PHOTOGRAPH NO. 5

Location: Storm drain inlet CB17 northwest of plant.

Description: Install filter fabric in storm drain inlet.

Stormwater Construction Site Photo Log

PHOTOGRAPH NO. 6

Location: Storm drain at southwest construction gate (CB11).

Description: Contractor observed washing sediment into storm drain inlet with hose. Inlet is not connected. Advise contractors that this practice is unacceptable. Dry cleaning methods (e.g. broom, street sweeping) should be used.

Trained Contractor Personnel Log

Stormwater Management Training Log and Documentation

Project Name: El Segundo Power Redevelopment Project_____
WDID #: 4 19C345097_____

Stormwater Management Topic: (check as appropriate)

- ☒ Erosion Control
- ☒ Sediment Control
- ☒ Wind Erosion Control
- ☒ Tracking Control
- ☒ Non-Stormwater Management
- ☒ Waste Management and Materials Pollution Control
- ☐ Stormwater Sampling

Specific Training Objective: General Project Stormwater Training_____

Location: ESEC_____ Date: 072111_____

Instructor: MMillett_____ Telephone: 714.689.7265_____

Course Length (hours): 0.5_____

Attendee Roster (Attach additional forms if necessary)

Name	Company	Phone
Matthew Joseph	Granite	661.810.9548
Thomas Gall	Granite	530-200-0543
Billy C Cole Jr	Granite	(928) 277-7650
Hector Montano	Granite	661 510-6475
Scott McArthur	Granite	(805) 331-1327
William Robinson	Granite	(602) 574-6432

As needed, add proof of external training (e.g., course completion certificates, credentials for QSP, QSD).

Fernando Flores Granite

Juan Garcia Granite

ATTACHMENT G
WATER QUALITY-8
DOCUMENTATION OF BMP MAINTENANCE
JULY 2011

DOCUMENTATION OF BMP MAINTENANCE

Location: Entire Site

Date: 7/1/2011

Summary: Street sweeping (SE-7) performed site-wide twice a week.

ATTACHMENT H
GEN-3
CBO RECEIPT OF PAYMENT

CONDITIONAL WAIVER AND RELEASE UPON PROGRESS PAYMENT
{California Civil Code §3262 (d) (1)}

Upon receipt by the undersigned of a payment or a check from NRG El Segundo Operations, Inc. in the sum of $69,866.75 payable to AIMS CORPORATION and when the payment is effective or the check has been properly endorsed and has been paid by the bank upon which it is drawn, this document shall become effective to release any mechanic's lien, stop notice, or bond right the undersigned has on the job of NRG El Segundo Operations, Inc. on the job located at 301 Vista Del Mar, El Segundo, California to the following extent.

This release covers a progress payment for labor, services, equipment, or material furnished to NRG El Segundo Operations, Inc. through June, 2011 only and does not cover any retentions retained before or after the release date; extras furnished before the release date for which payment has not been received; extras or items furnished after the release date. Rights based upon work performed or items furnished under a written change order which has been fully executed by the parties prior to the release date are covered by this release unless specifically reserved by the claimant in this release. This release of any mechanic's lien, stop notice, or bond right shall not otherwise affect the contract rights, including rights between parties to the contract based upon a rescission, abandonment, or breach of the contract, or the right of the undersigned to recover compensation for furnished labor, services, equipment, or material covered by this release if that furnished labor, services, equipment, or material was not compensated by the progress payment. Before any recipient of this document relies on it, said party should verify evidence of payment to the undersigned.

Dated: July 18, 2011

AIMS Corporation

By: Donald Le[illegible]
President

ATTACHMENT I
CIVIL-1, ELEC-1, MECH-1, STRUC-1, TSE-5
COPIES OF TRANSMITTALS TO CBO AND CBO APPROVALS
JULY 2011

The following transmittals are included in this MCR:

CBO Package No.	Date Submitted	Description	COC
CBO-151	7/13/2011	Tank Farm Modification Civil Structural Drawings & Calculations (includes response to CBO Disposition dated 7/6/2011)	CIVIL-1
CBO-204	7/8/2011	Civil Structural Drawings & Calculations for Water Plant (includes response to CBO Disposition dated 7/5/2011)	STRUC-1
	N/A	CBO Disposition (Approved – all documents to date) dated 7/13/2011	STRUC-1
CBO-311	7/7/2011	Demineralized Water System Mechanical Data Sheets and Vendor General Data	MECH-1
CBO-316	7/25/2011	City Water to FW/SW Tank Piping Drawings, General Documents, and Isometrics (includes response to CBO Disposition dated 7/18/2011)	MECH-1
	N/A	CBO Disposition (Response Required) dated 7/18/2011	MECH-1
CBO-405	7/21/2011	Fire Water & Service Water Electrical Drawings, General Documents (includes response to CBO Disposition dated 7/6/2011)	ELEC-1
	7/25/2011	Fire Water & Service Water Electrical Drawings (Aboveground Package)	ELEC-1
	7/25/2011	Fire Water & Service Water Electrical Drawings (Underground Package)	ELEC-1
CBO-U-102	N/A	CBO Disposition (Response Required) dated 7/14/2011	CIVIL-1
CBO-U-205	N/A	CBO Disposition (Partial Approval/Response Required) dated 7/6/2011	STRUC-1
CBO-U-300	7/5/2011	Underground Piping Isometrics	MECH-1
CBO-U-500	N/A	CBO Disposition (Response Required) dated 7/11/2011	TSE-5

BT No.: 412

Date: 7/13/2011
To: CBO Office
Joni Boren
3071 Miraloma Ave
Anaheim, CA 92806

From: Vijay Mistry
Address: 3330 Harbor Blvd
Costa Mesa, CA 92626
714-466-7100
www.brinderson.com

Ref Pkg No.: CBO-151

BT Project: E6605N001, NRG - ENG TASK 2010 SUPPORT-TANK FARM MODIF. ACCESS ROAD

Find attached 9 **Enclosures,** 1 **copie(s) each, which are released**

as **ISSUED FOR CBO APPROVAL**

Remarks:

PACKAGE TO BE HAND DELIVER BY JIM PRENDERGAST ON 7/13/11

Copies To

Brinderson
Vijay Mistry (E), Jim Prendergast (E), Ganesh Dore (E), Bob Legg (E), George Lozano (E), Darin Mckee (E), Project File (T)

CBO
Joni Boren (2F+E)

NRG - El Segundo
Marc Kodis (E), Scott Seipel (E), David Michelsen (E), Kiet Lam (E), Johan Lueschen (E), Nola Donathan (E), Nick Laporte (E), Robert Rea (E)

Encl. No.	Number	Rev.	Title	Date
			CIVIL-STRUCTURAL GENERAL DOCUMENTS	
1	Respo to Dispo CBO-151 6-29-11		RESPONSE TO DISPOSITION CBO-151 7-6-11,	
			CIVIL-STRUCTURAL DRAWINGS	
2	6134-C-813001	2	NRG - EL SEGUNDO RELOCATION PROJECT, SOUTH AREA GRADING, COVER SHEET	7/13/2011
3	6134-C-813002	2	NRG - EL SEGUNDO RELOCATION PROJECT, SOUTH AREA GRADING, GENERAL NOTES	7/13/2011
4	6134-C-813003	1	NRG - EL SEGUNDO RELOCATION PROJECT, SOUTH AREA GRADING, PROJECT KEY MAP PLAN	7/13/2011
5	6134-C-813022	2	NRG - EL SEGUNDO RELOCATION PROJECT, SOUTH AREA GRADING, 45TH STREET BERM GRADING PLAN	7/13/2011
6	6134-C-813026	2	NRG - EL SEGUNDO RELOCATION PROJECT, SOUTH AREA GRADING, CHAIN LINK FENCE DETAILS	7/13/2011
7	6134-C-813027	1	NRG - EL SEGUNDO RELOCATION PROJECT, SOUTH AREA GRADING, RETAINING WALL ON 45TH STREET	7/13/2011

Encl. No.	Number	Rev.	Title	Date
8	6134-C-813030	2	NRG - EL SEGUNDO RELOCATION PROJECT, SOUTH AREA GRADING, NEW UTILITIES PLAN	7/13/2011
			CIVIL - STRUCTURAL CALCULATIONS	
9	CBO-151 CIVIL STRUC CALCS	1	NRG WATER PLANT SCOPE AND INDEX, CIVIL STRUCTURAL CALCULATIONS,	7/13/2011

Thank you,

Project Manager

THE AIMS CORPORATION
Associated Infrastructure Management Services, Inc.
Delegate CBO for the California Energy Commission

DISPOSITION

July 22, 2011

PROJECT:	**EL SEGUNDO ENERGY CENTER**
CEC Docket No.:	**00-AFC-14**
CBO COC:	**CIVIL-1**
CBO Package No:	**CBO-151**
Review Subject:	**Tank Farm Modification Access Road**
Applicable Documents:	**All Documents to Date**

RESPONSE REQUIRED

1. See CBO Comments attached.
2. Future revisions to this documentation, if any, shall be submitted to the CBO for review.
3. For any questions you may contact Hans Kosten by cell phone 650-996-9932 or by email hans@esec-cbo.com.

Sincerely,

Hans Kosten
Deputy CBO

Sent to Distribution List

CBO COMMENTS
CBO-151 TANK FARM MODIFICATION ACCESS ROAD
JULY 22, 2011

General Note:

1. All Drop Inlets and Catch Basins are to be numbered.

2. Add a note that covers the Hydro-seeding requirements.

Dwg. 6134-C-813003 Rev.0

1. Provide legend for different Materials.

Dwg. 6134-C-813010 Rev. 1

1. Remove call outs 17 & 23 on plan if indeed notes are no longer applicable.

Dwg. 6134-C-813020 Rev. 1

1) Location of road has been provided by indicating northing and eastings at the base of the road, BC point on the curve and at a grade break. Location of EC of curve and join line in tank farm need to be provided.

2) In order to properly layout the road by survey the road should be stationed and elevations on both sides of the road for FS and TC shown (50' max. intervals suggested). Indicate on Section B how high the hinge point should be above the TC adjacent. Indicate on plans to join existing elevations at the start and end of road.

3) Show the station at which the concrete curb and gutter are to end - it is assumed the curb and gutter will extend only to the top of berm.

4) Swale on detail 1 should be concrete rather than asphalt as there will be concentrated flow and AC will deteriorate over time. Recommend providing a concrete curb this side of the road that can be cast with the swale.

5) An elevation of 38.1' is given for the top of basins in the tank farm. Topography on Dwg. 6134-C-813003 and section K on Dwg. 6134-C-813021 would suggest the elevation is more like 40.0'. Correct inconsistencies.

6) Basin sizes are provided but they are not located on the plan. Provide northing and easting information to be able to locate these features.

7) The existing berm above the tank bottoms is to be reduced as shown on the plans. The area of berm removal is not defined on the plans. Please provide an outline of the berm removal for clarity during construction. Also provide northing and eastings of the end points of drain lines from the basis.

8) The width of the proposed top of berm is shown to be 5' wide north of the access road and 8' wide shown in Section K. Please confirm the dimension and indicate the dimensions on both sides of the access road on Dwg. 6134-C-813020 and also on the plan on Dwg. 6134-C-813021.

9) The berm cover south of the access road is indicated by a construction note bubble 39 on Dwg. 6134-C-813020. The arrows from the bubble do not include the top of berm, only the sloped area is indicated.

10) The width of the access road along the west fence is shown to be 9'-6". Offset from the fence line is not shown on Dwg. 6134-C-813020 and Dwg. 6134-C-813021. Section N on Dwg. 6134-C-813030 has a dimension from the fence to the edge of the road. The plan views showing the access road should show this information. The road paving is not indicated on Dwg. 6134-C-813020, a construction note should be added to this plan.

11) Points defining the base of toe of slope in the Water Quality Feature should be provided in the plan view as a guide to ensure the size of the feature is installed as intended.

12) The fence line is not defined. An easting that the fence line will be placed or points along the fence to allow for proper staking of the fence need to be made part of the plan.

13) The fence is to be set on a wall per Section A on Dwg. 6134-C-813020. This section does not inform the user as to where he might find details of this wall. Section N on Dwg. 6134-C-813030 refers to a drawing that is not part of the set. I am not aware of submittal for this wall. Please provide wall drawings for review, when available. More clarity on the plans referring to Section N or otherwise would be helpful.

14) The top of berm improvements, a 5' wide paved flat surface, should be extended across the opening currently being used as an access to the thank farm with the top of berm elevation held until it daylights with the existing berm.

15) Confirm that road elevation at the top of slope will be high enough to accommodate the 18" dia. RCP proposed under the access road. Provide invert elevations or indicate that the inverts should match existing FS both ends of pipe. Provide cross section detail where the road and crossing of 18” RCP with inverts occurs.

16) Piping shown on Section A and Section N drawing 6134-C-813030 should be depicted the same. Revise for consistency between details.

Dwg. 6134-C-813021 Rev. 0

2. A drain is proposed at the southwest corner of the existing tank farm connected to the storm drain along the south property line. The intent is to collect and drain water that might overwhelm the basin drainage and move it outside the Water Quality feature to the beach. This is a rare occurrence during an unusually large rain event. To ensure that this is not the normal drainage path from the area it is set a high point elevation and would only drain when a flooded condition occurred within the bermed tank farm area. I am concerned that an upset condition with heavy rainfall would fill the drain from Vista Del Mar and with it flowing full the drain connection would back up. To prevent excessive ponding with the tank farm area flooded to the top of berm elevation of 41.5' I suggest a flow over weir be incorporated at the south side of the tank farm allowing storm water during an upset to flow to the access road and beach via surface flow. If a 10' wide, 12" deep indention is provided at the top of berm over the proposed drain line it would ensure unobstructed flow off property along the intended drainage path.

~~3.~~ Section G is shown along the south access road. This is a section showing a drainage trench that will be installed to the east. There is a below grade RCP shown on Dwg. 6134-C-813030 in this location. Clarify, correct if necessary and show on plan as appropriate.

4. Paving area at the southwest corner of property is not defined as to its size/limits. Existing paving in this area is to be removed and there will be no features to pave to. Provide area limits of paving for this area.

5. An elevation of 24.0' FS is indicated along the access road north of the south property line. This area slopes up the hill and will not be level at 24.0'. If the slope of the road is to match existing grades indicate this by note and remove the 24.0' FS.

6. The width of the access road from the southwest corner to the northeast is not indicated on the plan. If it is to parallel the fence line, show the offset and the width of road.

7. The location of the catch basin at the south end of the Water Quality feature is not located on this plan or Dwg. 6134-C-813030. Please provide the northing and easting where it is to be placed. Invert and top of grate information should be shown on the plan as was done for all other drainage devices.

8. Construction note 1 and 38 appear to be the same note. Is there a difference that needs to be noted separately? Indicate section K width of road or asphalt and grade at north side. Input clear detail of section cut.

9. The paved surface and the retaining wall at the property line is missing from Section C. South west corner of road @ 24.0 TB needs to be better detailed. Define dimensions for road area, berms and facilities in the roadway.

10. Section C does not show the grates and contains inconsistent catch basin details. Correct inconsistencies.

Dwg. 6134-C-813022 Rev. 2

1. The offset from the property line to the edge of road from the southwest corner is not indicated. How will this paved area be located? Provide coordinates.

2. The distances to the top of berm and an 8' wide path at the top of berm are shown and can be located as shown on Section D. The location of the bench, the pathway width at the bench and the location of the toe of slope on the north side of the berm in the tank farm are not clearly defined. Points at the toe of slope along the bench and where the toe joins the tank bottoms area need to be located by northing and easting at angle points and intermediate points enough to fully define the pathway. Points of a specific elevation should have information to locate that point in the field.

3. At the location where the top of berm is existing there is an extension from the proposed path to the top of berm with a note "Join (E) AC". The berm is to be removed and this join is not possible. Plans need to be revised.

4. Provide FL elevations along the drainage swale at points indicated along the southeast corner of the property.

5. Curb shown on detail 5 will collect and concentrate flow from the slope toward the west. It is assumed it will continue to a collection point. The curb must be continuous to the collection point. The paved road to the west will not convey this water to the southwest corner without a curb. How will this flow be handled?

6. The path at the top of berm to the west will join the new drive path coming up the hill. Where this join is shown on the plans the top of berm stops with a gap between it and the new access drive. This needs to be corrected.

7. Construction Note 30 does not make reference to a detail number. Note 31 does. Can Note 30 be eliminated? Detail and clarification.

~~8.~~ Note 33 reads "…drain per detail on sheet…" should be changed to read "…drain per detail E on sheet…" .

9. Construction note 1 and 38 appear to be the same note. Is there a difference that needs to be noted separately?

Dwg. 6134-C-813023 Rev. 0

1. Add note that "Trench drain layout information shown is based on the path of existing drainage swale - if discrepancies are found in the field the line of the drainage devise is to match that of existing swale".

Dwg. 6134-C-813024 Rev. 1

2. Provide a water stop across expansion joints indicated on Section G.

3. Section G should include all features and be made consistent with note 38 on drawing 6134-C-813021.

Dwg. 6134-C-813025 Rev. 1

1. Provide thrust block details for all below grade high velocity piping.

2. Limits of hydro seed requirements need to be shown on final grading or landscaping plans.

3. Sandbags should be placed on the paved access way just below the bench where the new trench swale will be installed to prevent silting into the tank farm area.

6134-C-813026 Rev. 2

1. Detail 6 - Post embedment details do not seem to match. Are all other post embedded in concrete? Correct inconsistencies.

2. Add note that will make reference to the Fence Grounding Details and Requirements.

6134-C-813027 Rev. 1

1. On Section L, clarify “2FT SQ PER SQ FT”.

Dwg. 6134-C-813030 Rev. 2

1. Will one hydrant at the top of the access road be sufficient for the area to be covered in the tank farm area? Confirm with FD?

2. Revise all top of riser elevations in the tank farm area based on elevations shown on plans to match the top of basin elevations.

3. 18" RCP exiting south desilting basin has a collar installed to allow for min. depth of burial of pipe. The pipe leaving the north basin has no collar. Should the same detail be installed on this drain?

4. It appears that the 18" RCP crossing under the access road at the top of the road will have no cover. Confirm that the pipe has adequate cover and backfill for heavy truck traffic.

5. Along the bench access on the north side of the new berm along 45th street there are (2) locations where a TG is called out. One callout has a construction bubble 23 attached the other doesn't. It is assumed there are CB's at both locations. Are these CB's acting as junction structures for change in slope of the line? If not why are they in place? Will the bench have a swle directing water to the CB's? Do the inverts along the length of the line allow for min. depth of cover?

6. Construction note 30 is not shown on this drawing. The trench swale should be identified on this plan and the drawing that shows this feature referenced.

COMMENTS ON RESPONSES TO CBO COMMENTS DATED 6-29-11

GENERAL COMMENTS 6134-C-813027, REV 0

1) Comment 15 - Specify control joints and expansion joints if required by calculations. Response is not acceptable. The longest wall length is 45'-0".

COMMENTS ON "SECTION M" AND "SECTION N"

2) Comment 18. The response is not complete. Provide vertical elevations of the weep holes which are spaced at 4'-0" on center. Specify the material for 4" diameter pipe to be used as weep holes.

3) Comment No 21, 22 and 23 have not been resolved. Refer to Calculation Sketch Section D, page 2-4 of the calculations for resolutions of Comment No. 21, 22 and 23 which details the revise spacing of the reinforcing bars. Section L as shown on Drawing 6134-C-813027 should be revised to agree with Sketch shown on Section D, page 2-4 of the revised calculation. Also provide geo-textile fabric to be wrapped around "granular backfill" to prevent losing the granular backfill. Also clarify the "granular backfill 2 ft. sq. per so ft.". Specify or provide description of granular backfill. Provide also the 12" horizontal finish grade to allow transition and smooth flow of runoff.

4) Comment No 24 - Response may be accepted that compression face of the wall does not require reinforcement; however, it is desirable to provide both horizontal and vertical crack control reinforcement due to extreme exposure. Also reference to CRSI article page 14-7 and it reads "the back face is somewhat protected from the direct effect of drying and temperature changes, which undoubtedly cause warping stresses. To allow for this effect, two-thirds of horizontal reinforcing steel in the walls may be located in the front face". Please verify and provide this additional crack control reinforcement.

BT No.: 407

Date: 7/8/2011
To: CBO Office
Joni Boren
3071 Miraloma Ave
Anaheim, CA 92806

From: Vijay Mistry
Address: 3330 Harbor Blvd
Costa Mesa, CA 92626
714-466-7100
www.brinderson.com

Ref Pkg No.: CBO-204

BT Project: E6605N001, NRG - ENG TASK 2010 SUPPORT - WATER PLANT

Find attached 8 Enclosures, 1 copie(s) each, which are released

as ISSUED FOR CBO APPROVAL

Remarks:

PACKAGE TO BE HAND DELIVER BY JIM PRENDERGAST ON 7/8/11.

Copies To

Brinderson
Vijay Mistry (E), Robert Hanson (E), Jim Prendergast (E), Darin Mckee (E), Ganesh Dore (E), Bob Legg (E), Duane Petersen (E), George Lozano (E), Project File (T)

CBO
Joni Boren (2F+E)

NRG - El Segundo
Marc Kodis (E), Scott Seipel (E), David Michelsen (E), Kiet Lam (E), Johan Lueschen (E), Nola Donathan (E), Nick Laporte (E), Robert Rea (E)

Encl. No.	Number	Rev.	Title	Date
			CIVIL GENERAL DOCUMENTS	
1	Respo to Dispo CBO-204 7-5-11		RESPONSE TO DISPOSITION CBO-204 7-5-11,	
			CIVIL-STRUCTURAL CALCULATIONS	
2	CBO-204 CIVILSTRUC DESIGNCALCS	B	STRUCTURAL DESIGN CALCULATIONS FOR CATH BASIN AT, NRG - EL SEGUNDO POWER PLANT,	6/8/2011
			CIVIL-STRUCTURAL DRAWINGS	
3	6134-C-808002	2	NRG - EL SEGUNDO RELOCATION PROJECT, WATER PLANT, GENERAL NOTES	7/6/2011
4	6134-C-808003	2	NRG - EL SEGUNDO RELOCATION PROJECT, WATER PLANT, GENERAL NOTES	7/6/2011
5	6134-C-808020	3	NRG - EL SEGUNDO RELOCATION PROJECT, WATER PLANT, FOUNDATION LOCATION PLAN	7/6/2011
6	6134-C-808022	4	NRG - EL SEGUNDO RELOCATION PROJECT, WATER PLANT, SLEEPER SUPPORT AND DRAINAGE DETAILS	7/6/2011
7	6134-C-808027	1	NRG - EL SEGUNDO RELOCATION PROJECT, WATER PLANT, CATCH BASIN DETAIL	7/6/2011

Encl. No.	Number	Rev.	Title	Date
8	6134-C-808029	1	NRG - EL SEGUNDO RELOCATION PROJECT, WATER PLANT, STORM DRAIN LINE	7/6/2011

Thank you,

Project Manager

THE AIMS CORPORATION
Associated Infrastructure Management Services, Inc.
Delegate CBO for the California Energy Commission

DISPOSITION

July 13, 2011

PROJECT:	**EL SEGUNDO ENERGY CENTER**
CEC Docket No.:	**00-AFC-14**
CBO COC:	**STRUC-1**
CBO Package No:	**CBO-204**
Review Subject:	**Water Plant**
Applicable Documents:	**All Documents to Date**

APPROVED

1. Future revisions to this documentation, if any, shall be submitted to the CBO for review.
2. For any questions you may contact Hans Kosten by cell phone 650-996-9932 or by email hans@esec-cbo.com.

Sincerely,

Hans Kosten
Deputy CBO

Sent to Distribution List

P.O. Box 800, Los Gatos CA 95031-0800
Phone: 408-358-9999; Fax 408-356-2456; email: dwimberly@aimscorp.com
www.aimscorp.com

BT No.: 405

Date: 7/7/2011
To: CBO Office
Joni Boren
3071 Miraloma Ave
Anaheim, CA 92806

From: Vijay Mistry
Address: 3330 Harbor Blvd
Costa Mesa, CA 92626
714-466-7100
www.brinderson.com

Ref Pkg No.: CBO-311

BT Project: E6605N001, NRG - ENG TASK 2010 SUPPORT DEMIN WATER SYS MECH/INST/ PIPING

Find attached 3 **Enclosures,** 1 **copie(s) each, which are released**

as **ISSUED FOR CBO APPROVAL**

Remarks:

PACKAGE WILL BE DELIVER VIA FEDEX.

THESE DATA SHEETS SUPERSEDE THE DATA SHEETS ISSUED EARLIER FOR DEMIN. WATER PUMPS.

Copies To

Brinderson
GT Le (E), Morteza Panbechi (E), Jim Prendergast (E), Chau Tang (E), Duane Petersen (E), Gloria Tai (E), Vijay Mistry (E), Ganesh Dore (E), Bob Legg (E), George Lozano (E), Project File (T)

CBO
Joni Boren (2F+E)

NRG - El Segundo
Marc Kodis (E), Scott Seipel (E), David Michelsen (E), Kiet Lam (E), Johan Lueschen (E), Nola Donathan (E), Nick Laporte (E), Robert Rea (E)

Encl. No.	Number	Rev.	Title	Date
			MECHANICAL DATA SHEETS	
1	6605N001-M-DS-008	2	ASME (ANSI) B73.1 & B73.2, CENTRIFUGAL PUMPS, 6605N001-M-DS-008	6/23/2011
2	6605N001-M-MDS-004	1	DEMINERALIZED WATER PUMP MOTOR, DATA SHEET, 6605N001-M-MDS-004	6/23/2011
			VENDOR GENERAL DATA	
3	MIII7820V		BRINDERSON P-DM1,2,3 R2, 2K3x2-10ARV M3 ST, PUMP CURVE	6/1/2011

Thank you,

Project Manager

THE AIMS CORPORATION
Associated Infrastructure Management Services, Inc.
Delegate CBO for the California Energy Commission

DISPOSITION

July 18, 2011

PROJECT:	**EL SEGUNDO ENERGY CENTER**
CEC Docket No.:	**00-AFC-14**
CBO COC:	**MECH-1**
CBO Package No:	**CBO-316**
Review Subject:	**City Water to FW/SW Tank**
Applicable Documents:	**BEC Transmittal Nos. 371 and 396**

RESPONSE REQUIRED

1. See CBO Comments attached.
2. Future revisions to this documentation, if any, shall be submitted to the CBO for review.
3. For any questions you may contact Hans Kosten by cell phone 650-996-9932 or by email hans@cpwr-cbo.com.

Sincerely,

Hans Kosten
Deputy CBO

Sent to Distribution List

P.O. Box 800, Los Gatos CA 95031-0800
Phone: 408-358-9999; Fax 408-356-2456; email: dwimberly@aimscorp.com
www.aimscorp.com

THE AIMS CORPORATION
Associated Infrastructure Management Services, Inc.
Delegate CBO for the California Energy Commission

CBO COMMENTS
CBO-316 CITY WATER TO FIRE WATER-SERVICE WATER TANK
JULY 18, 2011

6134-P-813001 Rev. 0

- Clarify if any Recycled/Reclaimed sewer, or other non-potable water piping is located within 5 feet of new piping. If so show on drawings and include spacing and elevations for all.

6134-P-813002 Rev. 0

- Add backflow preventer in the line to the ARB trailers.

6134-P-813005 Rev. 0

1. Piping is shown with only 1'-0" and 2'-0" Bury, will and other protection be required due to minimal depth?

2. Will identification tape be used on underground piping? If so add appropriate notes to plan.

6134-P-804513 Rev. 0 and 6134-P-804514 Rev. 0

- Please confirm the use of NEOPRENE or Garlock gaskets to be used for CPVC connections?

6134-P-802503 Rev. 2

- Clarify location of Section Cut A-A.

P-STD-40.47

- Please clarify purpose of Tack Weld.

P.O. Box 800, Los Gatos CA 95031-0800
Phone: 408-358-9999; Fax 408-356-2456; email: dwimberly@aimscorp.com
www.aimscorp.com

BT No.: 430

Date: 7/25/2011
To: CBO Office
Joni Boren
3071 Miraloma Ave
Anaheim, CA 92806

From: Vijay Mistry
Address: 3330 Harbor Blvd
Costa Mesa, CA 92626
714-466-7100
www.brinderson.com

Ref Pkg No.: CBO-316

BT Project: E6605N001, NRG - ENG TASK 2010 SUPPORT - CITY WATER TO FW/SW TANK

Find attached **6** **Enclosures,** **1** **copie(s) each, which are released**

as **ISSUED FOR CBO APPROVAL**

Remarks: **PACKAGE TO BE DELIVER VIA FEDEX**

Copies To

Brinderson
Vijay Mistry (E), Duane Petersen (E), Manny Gracia (E), Jim Prendergast (E), GT Le (E), Chau Tang (E), Gloria Tai (E), Efren Terrible (E), Ganesh Dore (E), Project File (T)

CBO
Joni Boren (2F+E)

NRG - El Segundo
Marc Kodis (E), Scott Seipel (E), David Michelsen (E), Kiet Lam (E), Johan Lueschen (E), Nola Donathan (E), Nick Laporte (E), Robert Rea (E)

Encl. No.	Number	Rev.	Title	Date
			PIPING DRAWINGS	
1	6134-P-802503	3	NRG - EL SEGUNDO RELOCATION PROJECT, CITY OF MANHATTAN BEACH WATER TO FIRE WATER TANK, PIPING PLAN	7/20/2011
2	6134-P-813002	1	NRG - EL SEGUNDO RELOCATION PROJECT, DOMESTIC WATER TAP FOR ARB TRAILERS, PIPING PLAN	7/20/2011
			PIPING GENERAL DOCUMENTS	
3	Respo. to Dispo CBO316 7-18-11		NRG - EL SEGUNDO RELOCATION PROJECT, RESPONSE TO DISPOSITION CBO-316 7-18-11,	
			PIPING ISOMETRICS	
4	6134-P-802512	3	NRG - EL SEGUNDO RELOCATION PROJECT, CITY OF MANHATTAN WATER TO FIRE WATER TANK, PIPING ISOMETRIC	7/20/2011
5	6134-P-802513	3	NRG - EL SEGUNDO RELOCATION PROJECT, CITY OF MANHATTAN WATER TO FIRE WATER TANK, PIPING ISOMETRIC	7/20/2011
6	6134-P-813006	1	NRG - EL SEGUNDO RELOCATION PROJECT, DOMESTIC WATER TAP FOR ARB TRAILERS, PIPING ISOMETRIC	7/20/2011

BT No.: 417

Date: 7/21/2011
To: CBO Office
Joni Boren
3071 Miraloma Ave
Anaheim, CA 92806

From: Vijay Mistry
Address: 3330 Harbor Blvd
Costa Mesa, CA 92626
714-466-7100
www.brinderson.com

Ref Pkg No.: CBO-405

BT Project: E6605N001, NRG - ENG TASK 2010 SUPPORT, FIRE WATER & SERVICE WATER

Find attached 8 **Enclosures,** 1 **copie(s) each, which are released**

as **ISSUED FOR CBO APPROVAL**

Remarks:

PACKAGE WILL BE DELIVER VIA FEDEX.

Copies To

Brinderson
Dave Benner (E), Chau Tang (E), Jim Prendergast (E), Duane Petersen (E), Efren Terrible (E), Gloria Tai (E), GT Le (E), Ganesh Dore (E), Bob Legg (E), Ganesh Dore (E), Vijay Mistry (E), Project File (T)

CBO
Joni Boren (2F+E)

NRG - El Segundo
Marc Kodis (E), Scott Seipel (E), David Michelsen (E), Kiet Lam (E), Johan Lueschen (E), Nola Donathan (E), Nick Laporte (E), Robert Rea (E)

Encl. No.	Number	Rev.	Title	Date
			ELECTRICAL DRAWINGS	
7	6134-E-808002	7	NRG EL SEGUNDO RELOCATION PROJECT, FIRE WATER AND SERVICE WATER, 480V SINGLE LINE DIAGRAM - MCC FW1	7/18/2011
8	6134-E-808005	6	NRG EL SEGUNDO RELOCATION PROJECT, FIRE WATER AND SERVICE WATER, CONDUIT & CABLE SCHEDULE	7/18/2011
1	6134-E-808121	1	NRG - EL SEGUNDO RELOCATION PROJECT, FIRE WATER AND SERVICE WATER, ELECTRICAL ABOVEGROUND POWER PLAN	7/18/2011
2	6134-E-808124	1	NRG - EL SEGUNDO RELOCATION PROJECT, FIRE WATER AND SERVICE WATER, ELECTRICAL ABOVEGROUND POWER PLAN	7/18/2011
3	6134-E-808127	1	NRG - EL SEGUNDO RELOCATION PROJECT, FIRE WATER AND SERVICE WATER, ELECTRICAL SECTIONS AND DETAILS	7/13/2011
4	6134-E-808128	1	NRG - EL SEGUNDO RELOCATION PROJECT, FIRE WATER AND SERVICE WATER, ELECTRICAL SECTIONS AND DETAILS	7/18/2011
5	6134-E-808130	1	NRG - EL SEGUNDO RELOCATION PROJECT, FIRE WATER AND SERVICE WATER, ELECTRICAL SECTIONS AND DETAILS	7/18/2011

Encl. No.	Number	Rev.	Title	Date

ELECTRICAL GENERAL DOCUMENTS

6	Respo to Dispo CBO-405 7-6-11		RESPONSE TO DISPOSITION CBO-405 7-6-11,	

Thank you,

Project Manager

BT No.: 431

Date: 7/25/2011
To: CBO Office
Joni Boren
3071 Miraloma Ave
Anaheim, CA 92806

From: Vijay Mistry
Address: 3330 Harbor Blvd
Costa Mesa, CA 92626
714-466-7100
www.brinderson.com

Ref Pkg No.: CBO-405

BT Project: E6605N001, NRG - ENG TASK 2010 SUPPORT, FIRE WATER & SERVICE WATER

Find attached 5 **Enclosures,** 1 **copie(s) each, which are released**

as **ISSUED FOR CBO APPROVAL**

Remarks:

THIS IS ABOVEGROUND PACKAGE.

PACKAGE TO BE DELIVER VIA FEDEX

Copies To

Brinderson
Vijay Mistry (E), Dave Benner (E), Chau Tang (E), Jim Predergast (E), G.T Le (E), Gloria Tai (E), Duane Petersen (E), Efren Terrible (E), Ganesh Dore (E), Project File (T)

CBO
Joni Boren (2F+E)

NRG - El Segundo
Marc Kodis (E), Scott Seipel (E), David Michelsen (E), Kiet Lam (E), Johan Lueschen (E), Nola Donathan (E), Nick Laporte (E), Robert Rea (E)

Encl. No.	Number	Rev.	Title	Date
			ELECTRICAL DRAWINGS	
1	6134-E-808122	1	NRG - EL SEGUNDO RELOCATION PROJECT, FIRE WATER AND SERVICE WATER, ELECTRICAL ABOVEGROUND POWER PLAN	7/21/2011
2	6134-E-808123	1	NRG - EL SEGUNDO RELOCATION PROJECT, FIRE WATER AND SERVICE WATER, ELECTRICAL ABOVEGROUND POWER PLAN	7/21/2011
3	6134-E-808125	1	NRG - EL SEGUNDO RELOCATION PROJECT, FIRE WATER AND SERVICE WATER, ELECTRICAL SECTIONS AND DETAILS	7/21/2011
4	6134-E-808126	1	NRG - EL SEGUNDO RELOCATION PROJECT, FIRE WATER AND SERVICE WATER, ELECTRICAL SECTIONS AND DETAILS	7/21/2011
5	6134-E-808129	1	NRG - EL SEGUNDO RELOCATION PROJECT, FIRE WATER AND SERVICE WATER, ELECTRICAL SECTIONS AND DETAILS	7/21/2011

BT No.: 432

Date: 7/25/2011
To: CBO Office
Joni Boren
3071 Miraloma Ave
Anaheim, CA 92806

From: Vijay Mistry
Address: 3330 Harbor Blvd
Costa Mesa, CA 92626
714-466-7100
www.brinderson.com

Ref Pkg No.: CBO-405

BT Project: E6605N001, NRG - ENG TASK 2010 SUPPORT, FIRE WATER & SERVICE WATER

Find attached 10 **Enclosures,** 1 **copie(s) each, which are released**

as **ISSUED FOR CBO APPROVAL**

Remarks:

THIS IS UNDERGROUND PACKAGE.

PACKAGE TO BE DELIVER VIA FEDEX

Copies To

Brinderson
Vijay Mistry (E), Dave Benner (E), Chau Tang (E), Jim Predergast (E), G.T Le (E), Gloria Tai (E), Duane Petersen (E), Efren Terrible (E), Ganesh Dore (E), Project File (T)

CBO
Joni Boren (2F+E)

NRG - El Segundo
Marc Kodis (E), Scott Seipel (E), David Michelsen (E), Kiet Lam (E), Johan Lueschen (E), Nola Donathan (E), Nick Laporte (E), Robert Rea (E)

Encl. No.	Number	Rev.	Title	Date
			ELECTRICAL DRAWINGS	
1	6134-E-808006	4	NRG - EL SEGUNDO RELOCATION PROJECT, FIRE WATER AND SERVICE WATER, CONDUIT & CABLE SCHEDULE	7/21/2011
2	6134-E-808007	1	NRG - EL SEGUNDO RELOCATION PROJECT, FIRE WATER AND SERVICE WATER, CONDUIT & CABLE SCHEDULE	7/21/2011
3	6134-E-808021	2	NRG - EL SEGUNDO RELOCATION PROJECT, FIRE WATER AND SERVICE WATER, ELECTRICAL UNDERGROUND POWER PLAN	7/21/2011
4	6134-E-808023	1	NRG - EL SEGUNDO RELOCATION PROJECT, FIRE WATER AND SERVICE WATER, ELECTRICAL UNDERGROUND POWER PLAN	7/21/2011
5	6134-E-808024	2	NRG - EL SEGUNDO RELOCATION PROJECT, FIRE WATER AND SERVICE WATER, ELECTRICAL UNDERGROUND POWER PLAN	7/21/2011
6	6134-E-808025	1	NRG - EL SEGUNDO RELOCATION PROJECT, FIRE WATER AND SERVICE WATER, ELECTRICAL UNDERGROUND POWER PLAN	7/21/2011
7	6134-E-808026	1	NRG - EL SEGUNDO RELOCATION PROJECT, FIRE WATER AND SERVICE WATER, ELECTRICAL UNDERGROUND POWER PLAN	7/21/2011

Encl. No.	Number	Rev.	Title	Date
8	6134-E-808027	1	NRG - EL SEGUNDO RELOCATION PROJECT, FIRE WATER AND SERVICE WATER, ELECTRICAL UNDERGROUND POWER PLAN	7/21/2011
9	6134-E-808029	2	NRG - EL SEGUNDO RELOCATION PROJECT, FIRE WATER AND SERVICE WATER, ELECTRICAL SECTION & DETAILS	7/21/2011
10	6134-E-808030	3	NRG - EL SEGUNDO RELOCATION PROJECT, FIRE WATER AND SERVICE WATER, ELECTRICAL SECTION & DETAILS	7/21/2011

Thank you,

Project Manager

THE AIMS CORPORATION
Associated Infrastructure Management Services, Inc.
Delegate CBO for the California Energy Commission

DISPOSITION

June 14, 2011

PROJECT:	**EL SEGUNDO ENERGY CENTER**
CEC Docket No.:	**00-AFC-14**
CBO COC:	**CIVIL-1**
CBO Package No:	**CBO-U-102**
Review Subject:	**Site Grading, Drainage, Sedimentation & Erosion Control**
Applicable Documents:	**All Documents to Date**

RESPONSE REQUIRED

1. See CBO Comments attached.
2. Future revisions to this documentation, if any, shall be submitted to the CBO for review.
3. For any questions you may contact Hans Kosten by cell phone 650-996-9932 or by email hans@esec-cbo.com.

Sincerely,

Hans Kosten
Deputy CBO

Sent to Distribution List

P.O. Box 800, Los Gatos CA 95031-0800
Phone: 408-358-9999; Fax 408-356-2456; email: dwimberly@aimscorp.com
www.aimscorp.com

THE AIMS CORPORATION
Associated Infrastructure Management Services, Inc.
Delegate CBO for the California Energy Commission

CBO COMMENTS
CBO-U-102 SITE GRADING, DRAINAGE, SEDIMENTATION & EROSION CONTROL PLAN
JULY 14, 2011

General Comments

- All Drawings provided need to be at least 11" x 17" and legible.

Dwg USA659-VA08-00U-600051 Rev 1

Section 1.1 Drainage Map

1. Drawings USA659-VA08-00U-671720 sheets 1 and 2, USA659-VA08-00U-672020 and Attachment B were not provided for review.

Section 2.3 Storm water Calculations

2. Drawing USA659-BN02-00U-600050 is not provided for review

Section 3 Clearing and Grading

3. Change sentence "Contaminated soil will be properly handled and disposed of as directed by the owner." to "Contaminated soil will be properly handled by certified hauling companies and disposed of at approved sites as directed by the owner."

Section 5.7

4. Provide copy of NPDES No. CAG994004, specifically CI-9628

P.O. Box 800, Los Gatos CA 95031-0800
Phone: 408-358-9999; Fax 408-356-2456; email: dwimberly@aimscorp.com
www.aimscorp.com

THE AIMS CORPORATION
Associated Infrastructure Management Services, Inc.
Delegate CBO for the California Energy Commission

DISPOSITION

July 5, 2011

PROJECT:	**EL SEGUNDO ENERGY CENTER**
CEC Docket No.:	**00-AFC-14**
CBO COC:	**SRUC-1**
CBO Package No:	**CBO-U-205**
Review Subject:	**Ammonia Scrubber Skid Fdn**
Applicable Documents:	**All Documents to Date**

PARTIAL APPROVAL/RESPONSE REQUIRED

1. CBO provided verbal approval to pour foundation after a telephone meeting with URS, Resident Engineer, CBO, CBO Structural reviewer, and NRG. All requested changes where received as Transmittal URS-TR-0021.

2. Provide skid layout, anchoring, and anchoring calculations prior to setting skid in place. The skid should be submitted under Mechanical as it is a PFA (Pre-Fabricated Assembly).

3. Future revisions to this documentation, if any, shall be submitted to the CBO for review.

4. For any questions you may contact Hans Kosten by cell phone 650-996-9932 or by email hans@esec-cbo.com.

Sincerely,

Hans Kosten
Deputy CBO

Sent to Distribution List

P.O. Box 800, Los Gatos CA 95031-0800
Phone: 408-358-9999; Fax 408-356-2456; email: dwimberly@aimscorp.com
www.aimscorp.com

THE AIMS CORPORATION
Associated Infrastructure Management Services, Inc.
Delegate CBO for the California Energy Commission

CBO COMMENTS
CBO-323 INJECTION SKID PIPING
JULY 5, 2011

General - All Drawings

1. Add to Title Block that these apply to Units 3 and 4.

2. Provide skid and tank details including mounting/anchoring details.

6134-P-827010 Rev 1

1. Clarify or add Leak Detector Nipples at each end of the double wall pipe to monitor for leakage.

2. Define dimension from the wall to the pipe and maximum length of pipe support from the wall. Extension from wall should be kept to a minimum to prevent future pipes from being added to this support.

3. Confirm anchorage spacing and distance to edge of wall is adequate for the anchors to develop full capacity. Add minimum distance from edge of wall to anchor.

4. Previous wall mounted supports used epoxy anchors, clarify why changing types. For either type, define testing method of installed anchor.

6134-P-827011 Rev 1

1. Confirm handrail can deal with load of double wall pipe full of liquid and the required OSHA imposed loads and will not be adversely affected.

2. Confirm that tank will be of double wall construction and that additional containment will not be required.

P.O. Box 800, Los Gatos CA 95031-0800
Phone: 408-358-9999; Fax 408-356-2456; email: dwimberly@aimscorp.com
www.aimscorp.com

CBO Pkg. Number:	**CBO-U-300**
CBO Title:	**UG PIPING ISOMETRICS**
COC Reference No.	**MECH-1**
Project Name:	**29270 NRG EL SEGUNDO REPOWERING OWNER'S ENGINEER**
Transmittal Number:	**URS-TR-0022**
Reason for Issue:	**Issued for CBO Disposition**
Date Submitted:	**July 5, 2011**

Sender Details:	**Recipient Details:**
URS Corporation Kathy Tippin 7800 E. Union Ave. Suite 100 Denver, CO 80237	Joni Boren CBO Office 3071 Miraloma Ave. Anaheim, CA 92806

ELECTRONIC SUBMITTAL:

Nick Laporte-NRG
Marc Kodis-NRG
Nola Donothan-NRG
Dave Michelsen-NRG
Scott Seipel-NRG
Laura Lochridge-Siemens
Dan Priebe-URS
Kathy Tippin-URS
Devin Rhinehart-URS
Gil Martinez-ARB
Rich Smith-ARB

Signature: **Kathryn L. Tippin**	**Date:** July 5, 2011
	Phone: **303-843-2116**

URS

PLEASE SEE THE ATTACHED DOCUMENT(S) FOR YOUR USE.

DOCUMENT NUMBER	DOCUMENT TITLE	REV.
USA659-XJ00-00GAF20-520005	UNDERGROUND PIPING ISOMETRIC - RAW WATER SYSTEM	01
USA659-XJ00-00GHC20-520004	UNDERGROUND PIPING ISOMETRIC - DEMINERALIZED WATER SYSTEM	01
USA659-XJ00-00GMA10-510001	UNDERGROUND PIPING ISOMETRIC - PLANT DRAINS	01
USA659-XJ00-00LCL15-515001	UNDERGROUND PIPING ISOMETRIC - START UP & SHUTDOWN SYSTEM	01
USA659-XJ00-00SGA10-510001	UNDERGROUND PIPING ISOMETRIC - FIRE PROTECTION	01
USA659-XJ00-00SGA10-510002	UNDERGROUND PIPING ISOMETRIC - FIRE PROTECTION	01
USA659-XJ00-00SGA10-510003	UNDERGROUND PIPING ISOMETRIC - FIRE PROTECTION	01
USA659-XJ00-00SGA10-510004	UNDERGROUND PIPING ISOMETRIC - FIRE PROTECTION	01
USA659-XJ00-00SGA10-510005	UNDERGROUND PIPING ISOMETRIC - FIRE PROTECTION	01
USA659-XJ00-00SGA10-510006	UNDERGROUND PIPING ISOMETRIC - FIRE PROTECTION	01
USA659-XJ00-00SGA10-510007	UNDERGROUND PIPING ISOMETRIC - FIRE PROTECTION	01
USA659-XJ00-00SGA10-510008	UNDERGROUND PIPING ISOMETRIC - FIRE PROTECTION	01
USA659-XJ00-00SGA10-510009	UNDERGROUND PIPING ISOMETRIC - FIRE PROTECTION	01
USA659-XJ00-00SGA10-510010	UNDERGROUND PIPING ISOMETRIC - FIRE PROTECTION	01
USA659-XJ00-00SGA10-510011	UNDERGROUND PIPING ISOMETRIC - FIRE PROTECTION	01
USA659-XJ00-00SGA10-510012	UNDERGROUND PIPING ISOMETRIC - FIRE PROTECTION	01
USA659-XJ00-00SGA10-510013	UNDERGROUND PIPING ISOMETRIC - FIRE PROTECTION	01
USA659-XJ00-00SGA10-510015	UNDERGROUND PIPING ISOMETRIC - FIRE PROTECTION	01
USA659-XJ00-00SGA10-510016	UNDERGROUND PIPING ISOMETRIC - FIRE PROTECTION	01
USA659-XJ00-00SGA10-510018	UNDERGROUND PIPING ISOMETRIC - FIRE PROTECTION	01
USA659-XJ00-00SGA10-510019	UNDERGROUND PIPING ISOMETRIC - FIRE PROTECTION	01
USA659-XJ00-10EKG10-510002	UNDERGROUND PIPING ISOMETRIC FUEL GAS	00
USA659-XJ00-10EKG90-590002	UNDERGROUND PIPING ISOMETRIC FUEL GAS	00
USA659-XJ00-10GAF20-520001	UNDERGROUND PIPING ISOMETRIC - RAW WATER SYSTEM	01

USA659-XJ00-10GAF22-522002	UNDERGROUND PIPING ISOMETRIC - RAW WATER SYSTEM	01
USA659-XJ00-10GHC20-520002	UNDERGROUND PIPING ISOMETRIC - DEMINERALIZED WATER SYSTEM	01
USA659-XJ00-10GHC20-520003	UNDERGROUND PIPING ISOMETRIC - DEMINERALIZED WATER SYSTEM	01
USA659-XJ00-10GHC20-520004	UNDERGROUND PIPING ISOMETRIC - DEMINERALIZED WATER SYSTEM	01
USA659-XJ00-10GHC20-520501	UNDERGROUND PIPING ISOMETRIC - DEMINERALIZED WATER SYSTEM	01
USA659-XJ00-10GHC20-520601	UNDERGROUND PIPING ISOMETRIC - DEMINERALIZED WATER SYSTEM	01
USA659-XJ00-10GHC23-523001	UNDERGROUND PIPING ISOMETRIC - DEMINERALIZED WATER SYSTEM	01
USA659-XJ00-10GHC28-528001	UNDERGROUND PIPING ISOMETRIC - DEMINERALIZED WATER SYSTEM	01
USA659-XJ00-10GHC40-540006	UNDERGROUND PIPING ISOMETRIC - DEMINERALIZED WATER SYSTEM	01
USA659-XJ00-10GMA10-510001	UNDERGROUND PIPING ISOMETRIC - PLANT DRAINS	01
USA659-XJ00-10GMA10-510002	UNDERGROUND PIPING ISOMETRIC - PLANT DRAINS	01
USA659-XJ00-10GMA10-510003	UNDERGROUND PIPING ISOMETRIC - PLANT DRAINS	01
USA659-XJ00-10GMA10-510004	UNDERGROUND PIPING ISOMETRIC - PLANT DRAINS	01
USA659-XJ00-10GMA10-510007	UNDERGROUND PIPING ISOMETRIC - PLANT DRAINS	01
USA659-XJ00-10GMA10-510008	UNDERGROUND PIPING ISOMETRIC - PLANT DRAINS	01
USA659-XJ00-10GMA10-510009	UNDERGROUND PIPING ISOMETRIC - PLANT DRAINS	01
USA659-XJ00-10GMA10-510010	UNDERGROUND PIPING ISOMETRIC - PLANT DRAINS	01
USA659-XJ00-10GMA10-510011	UNDERGROUND PIPING ISOMETRIC - PLANT DRAINS	01
USA659-XJ00-10GMA10-510012	UNDERGROUND PIPING ISOMETRIC - PLANT DRAINS	01
USA659-XJ00-10GMA10-510013	UNDERGROUND PIPING ISOMETRIC - PLANT DRAINS	01
USA659-XJ00-10GMA10-510014	UNDERGROUND PIPING ISOMETRIC - PLANT DRAINS	01
USA659-XJ00-10GMA10-510017	UNDERGROUND PIPING ISOMETRIC - PLANT DRAINS	01
USA659-XJ00-10GMA10-510100	EMBEDDED PIPING ISOMETRIC - PLANT DRAINS	01
USA659-XJ00-10GMA10-510101	EMBEDDED PIPING ISOMETRIC - PLANT DRAINS	01
USA659-XJ00-10GMA10-510102	EMBEDDED PIPING ISOMETRIC - PLANT DRAINS	01
USA659-XJ00-10GMA10-510103	EMBEDDED PIPING ISOMETRIC - PLANT DRAINS	01
USA659-XJ00-10GMA10-510104	EMBEDDED PIPING ISOMETRIC - PLANT DRAINS	01
USA659-XJ00-10GMA10-510105	EMBEDDED PIPING ISOMETRIC - PLANT DRAINS	01
USA659-XJ00-10GMA10-510106	EMBEDDED PIPING ISOMETRIC - PLANT DRAINS	01
USA659-XJ00-10GMA10-510107	EMBEDDED PIPING ISOMETRIC - PLANT DRAINS	01
USA659-XJ00-10GMA10-510108	EMBEDDED PIPING ISOMETRIC - PLANT DRAINS	01
USA659-XJ00-10GMA10-510109	EMBEDDED PIPING ISOMETRIC - PLANT DRAINS	01
USA659-XJ00-10GMA10-510110	EMBEDDED PIPING ISOMETRIC - PLANT DRAINS	01
USA659-XJ00-10GMA10-510111	EMBEDDED PIPING ISOMETRIC - PLANT DRAINS	01
USA659-XJ00-10GMA10-510112	EMBEDDED PIPING ISOMETRIC - PLANT DRAINS	01
USA659-XJ00-10GMA10-510113	EMBEDDED PIPING ISOMETRIC - PLANT DRAINS	01
USA659-XJ00-10GMA10-510114	EMEDDED PIPING ISOMETRIC - PLANT DRAINS	01
USA659-XJ00-10GMA10-510115	EMBEDDED PIPING ISOMETRIC - PLANT DRAINS	01

USA659-XJ00-10HSJ30-530001	UNDERGROUND PIPING ISOMETRIC - AMMONIA SYSTEM	01
USA659-XJ00-10LCL15-515002	UNDERGROUND PIPING ISOMETRIC - START UP & SHUTDOWN SYSTEM	01
USA659-XJ00-10LCM10-510003	UNDERGROUND PIPING ISOMETRIC - CLEAN DRAINS	01
USA659-XJ00-10QJA10-510002	UNDERGROUND PIPING ISOMETRIC - NITROGEN SYSTEM	01
USA659-XJ00-20EKG10-510002	UNDERGROUND PIPING ISOMETRIC FUEL GAS	00
USA659-XJ00-20EKG90-590002	UNDERGROUND PIPING ISOMETRIC FUEL GAS	00
USA659-XJ00-20GAF20-520001	UNDERGROUND PIPING ISOMETRIC - RAW WATER SYSTEM	01
USA659-XJ00-20GAF22-522002	UNDERGROUND PIPING ISOMETRIC - RAW WATER SYSTEM	01
USA659-XJ00-20GHC20-520002	UNDERGROUND PIPING ISOMETRIC - DEMINERALIZED WATER SYSTEM	01
USA659-XJ00-20GHC20-520003	UNDERGROUND PIPING ISOMETRIC - DEMINERALIZED WATER SYSTEM	01
USA659-XJ00-20GHC20-520004	UNDERGROUND PIPING ISOMETRIC - DEMINERALIZED WATER SYSTEM	01
USA659-XJ00-20GHC20-520501	UNDERGROUND PIPING ISOMETRIC - DEMINERALIZED WATER SYSTEM	01
USA659-XJ00-20GHC20-520601	UNDERGROUND PIPING ISOMETRIC - DEMINERALIZED WATER SYSTEM	01
USA659-XJ00-20GHC23-523001	UNDERGROUND PIPING ISOMETRIC - DEMINERALIZED WATER SYSTEM	01
USA659-XJ00-20GHC28-528001	UNDERGROUND PIPING ISOMETRIC - DEMINERALIZED WATER SYSTEM	01
USA659-XJ00-20GHC40-540006	UNDERGROUND PIPING ISOMETRIC - DEMINERALIZED WATER SYSTEM	01
USA659-XJ00-20GMA10-510001	UNDERGROUND PIPING ISOMETRIC - PLANT DRAINS	01
USA659-XJ00-20GMA10-510002	UNDERGROUND PIPING ISOMETRIC - PLANT DRAINS	01
USA659-XJ00-20GMA10-510003	UNDERGROUND PIPING ISOMETRIC - PLANTS DRAINS	01
USA659-XJ00-20GMA10-510004	UNDERGROUND PIPING ISOMETRIC - PLANT DRAINS	01
USA659-XJ00-20GMA10-510007	UNDERGROUND PIPING ISOMETRIC - PLANT DRAINS	01
USA659-XJ00-20GMA10-510008	UNDERGROUND PIPING ISOMETRIC - PLANT DRAINS	01
USA659-XJ00-20GMA10-510009	UNDERGROUND PIPING ISOMETRIC - PLANT DRAINS	01
USA659-XJ00-20GMA10-510010	UNDERGROUND PIPING ISOMETRIC - PLANT DRAINS	01
USA659-XJ00-20GMA10-510011	UNDERGROUND PIPING ISOMETRIC - PLANT DRAINS	01
USA659-XJ00-20GMA10-510012	UNDERGROUND PIPING ISOMETRIC - PLANT DRAINS	01
USA659-XJ00-20GMA10-510013	UNDERGROUND PIPING ISOMETRIC - PLANT DRAINS	01
USA659-XJ00-20GMA10-510014	UNDERGROUND PIPING ISOMETRIC - PLANT DRAINS	01
USA659-XJ00-20GMA10-510017	UNDERGROUND PIPING ISOMETRIC - PLANT DRAINS	01
USA659-XJ00-20GMA10-510100	EMBEDDED PIPING ISOMETRIC - PLANT DRAINS	01
USA659-XJ00-20GMA10-510101	EMBEDDED PIPING ISOMETRIC - PLANT DRAINS	01
USA659-XJ00-20GMA10-510102	EMBEDDED PIPING ISOMETRIC - PLANT DRAINS	01
USA659-XJ00-20GMA10-510103	EMBEDDED PIPING ISOMETRIC - PLANT DRAINS	01
USA659-XJ00-20GMA10-510104	EMBEDDED PIPING ISOMETRIC - PLANT DRAINS	01

USA659-XJ00-20GMA10-510105	EMBEDDED PIPING ISOMETRIC - PLANT DRAINS	01
USA659-XJ00-20GMA10-510106	EMBEDDED PIPING ISOMETRIC - PLANT DRAINS	01
USA659-XJ00-20GMA10-510107	EMBEDDED PIPING ISOMETRIC - PLANT DRAINS	01
USA659-XJ00-20GMA10-510108	EMBEDDED PIPING ISOMETRIC - PLANT DRAINS	01
USA659-XJ00-20GMA10-510109	EMBEDDED PIPING ISOMETRIC - PLANT DRAINS	01
USA659-XJ00-20GMA10-510110	EMBEDDED PIPING ISOMETRIC - PLANT DRAINS	01
USA659-XJ00-20GMA10-510111	UNDERGROUND PIPING ISOMETRIC - PLANT DRAINS	01
USA659-XJ00-20GMA10-510112	UNDERGROUND PIPING ISOMETRIC - PLANT DRAINS	01
USA659-XJ00-20GMA10-510113	UNDERGROUND PIPING ISOMETRIC - PLANT DRAINS	01
USA659-XJ00-20GMA10-510114	EMBEDDED PIPING ISOMETRIC - PLANT DRAINS	01
USA659-XJ00-20GMA10-510115	EMBEDDED PIPING ISOMETRIC - PLANT DRAINS	01
USA659-XJ00-20HSJ30-530001	UNDERGROUND PIPING ISOMETRIC - AMMONIA SYSTEM	01
USA659-XJ00-20LCL15-515002	UNDERGROUND PIPING ISOMETRIC - START UP & SHUTDOWN SYSTEM	01
USA659-XJ00-20LCM10-510003	UNDERGROUND PIPING ISOMETRIC - CLEAN DRAINS	01
USA659-XJ00-20QJA10-510002	UNDERGROUND PIPING ISOMETRIC - NITROGEN SYSTEM	01

THE AIMS CORPORATION
Associated Infrastructure Management Services, Inc.
Delegate CBO for the California Energy Commission

DISPOSITION

July 11, 2011

PROJECT:	**EL SEGUNDO ENERGY CENTER**
CEC Docket No.:	**00-AFC-14**
CBO COC:	**TSE-5**
CBO Package No:	**CBO-U-500**
Review Subject:	**HV Pole Locations**
Applicable Documents:	**Per URS-TR-0014**

RESPONSE REQUIRED

1. See CBO Comments attached.
2. Future revisions to this documentation, if any, shall be submitted to the CBO for review.
3. For any questions you may contact Hans Kosten by cell phone 650-996-9932 or by email hans@esec-cbo.com.

Sincerely,

Hans Kosten
Deputy CBO

Sent to Distribution List

P.O. Box 800, Los Gatos CA 95031-0800
Phone: 408-358-9999; Fax 408-356-2456; email: dwimberly@aimscorp.com
www.aimscorp.com

THE AIMS CORPORATION
Associated Infrastructure Management Services, Inc.
Delegate CBO for the California Energy Commission

CBO COMMENTS
CBO-U-500 HV POLE LOCATIONS
JULY 11, 2011

CBO concurs with general approach of Mr. Webb.

1. Please provide detailed coordinates for each Structure.
2. Indicate on the plans the limits of responsibility of Power Engineers and Siemens.
3. Clarify for CBO who will be providing the conductors between the GSU and Out-going structure.
4. Clarify for CBO who will provide the outgoing structure.
5. Drawings are required to have numeric revisions when released for construct, please update on next release.
6. California PE stamp is required by a Transmission, Structural, Civil or Electrical engineer on drawings.

P.O. Box 800, Los Gatos CA 95031-0800
Phone: 408-358-9999; Fax 408-356-2456; email: dwimberly@aimscorp.com
www.aimscorp.com

ATTACHMENT J
BIO-7
BIOLOGICAL RESOURCES MONITORING SUMMARY REPORTS
JULY 2011

7 July 2011

George Piantka
NRG Energy West
5790 Fleet Street
Suite 200
Carlsbad, CA 92008
(760) 710-2156

Progress Report
El Segundo Energy Center, Designated Biologist

Dear Mr. Piantka:

The following is a summary of activities conducted on 7 July 2011 as part of Condition of Certification BIO-7 for the El Segundo Energy Center Project:

On 7 July 2011, the Designated Biologist (myself) conducted a biological site visit at the El Segundo project site. The treatment system was installed, and water was being pumped from the Units 1&2 forebay through the treatment system.

The water level in the forebay was reduced, and according to the Rubicon dive team leader (Tony Valdez), only two to three feet of water remain in the forebay. The water was green/grey, and plastic trash was observed floating on the water surface. No marine life was observed in the forebay. I inspected the area surrounding the Units 1&2 forebay and former screenwell, and no sensitive plants or animals were observed. Six western gulls (*Larus occidentalis*) flew over the construction site during the site inspection.

All of the riprap seaward of the tank farm has been removed (picture attached). No sensitive plants or animals were observed near the riprap construction zone.

Respectfully,

MBC *Applied Environmental Sciences*

Shane Beck
Principal Scientist / Designated Biologist

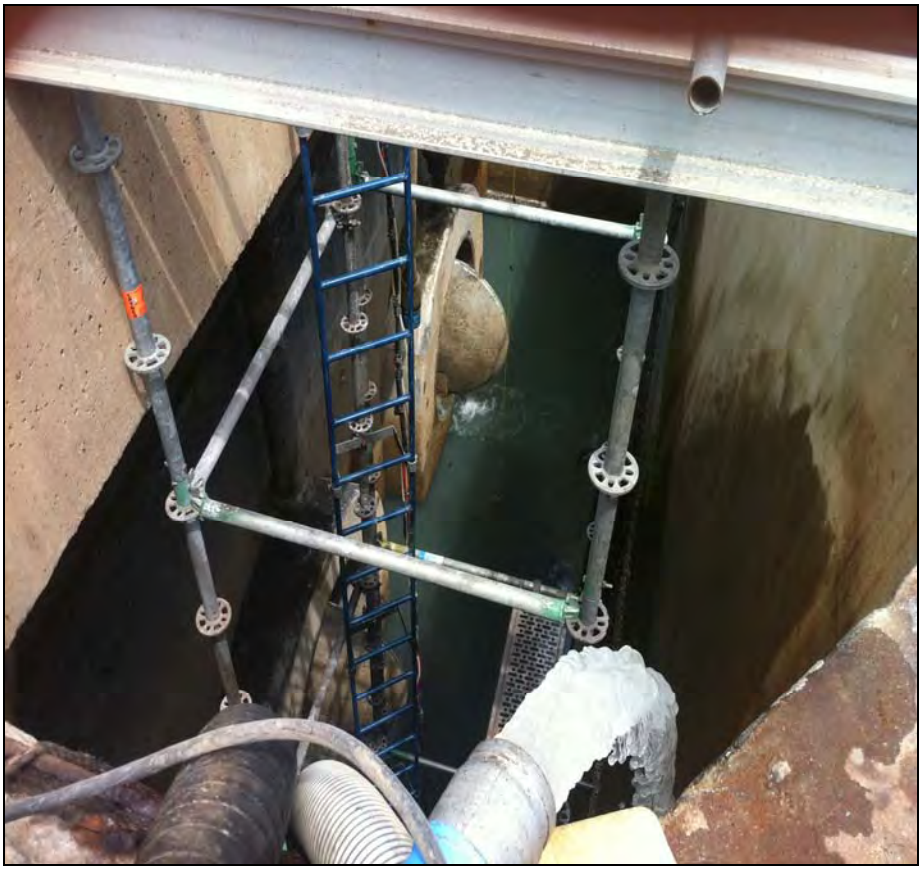

ESGS former Units 1&2 forebay, 7 July 2011. Looking upcoast (north-northwest).

Riprap removal area, 7 July 2011. Looking seaward / upcoast (northwest).

20 July 2011

George Piantka
NRG Energy West
5790 Fleet Street
Suite 200
Carlsbad, CA 92008
(760) 710-2156

Progress Report
El Segundo Energy Center, Designated Biologist

Dear Mr. Piantka:

The following is a summary of activities conducted on 20 July 2011 as part of Condition of Certification BIO-7 for the El Segundo Energy Center Project:

On 20 July 2011, the Designated Biologist (myself) and one Biological Monitor (David Vilas) conducted a biological site visit at the El Segundo project site. The Units 1&2 forebay was now been completely sealed, and the water has been treated and discharged. The construction crew was working in the vicinity of the old Units 1&2 forebay.

We surveyed the vegetated areas along the entrance road and surrounding the tank farm berm to determine the potential presence of nesting birds. All of the riprap seaward of the tank farm has been removed (pictures attached). A report summarizing our observations from today is also attached.

Respectfully,

MBC *Applied Environmental Sciences*

Shane Beck
Principal Scientist / Designated Biologist

Area formerly covered by riprap, southern end of ESGS, 20 July 2011. Looking downcoast (south-southeast).

Area formerly covered by riprap, southern end of ESGS, 20 July 2011. Looking upcoast (north-northeast).

EL SEGUNDO POWER REDEVELOPMENT PROJECT

SECOND NESTING BIRD SURVEY

Prepared by

MBC *Applied Environmental Sciences*
Costa Mesa, California

Prepared for

El Segundo Energy Center LLC
El Segundo, California

July 21, 2011

El Segundo Generating Station
Second Nesting Bird Survey

Executive Summary

A second survey for nesting birds was conducted in the planned construction areas at the El Segundo Generating Station on 20 July 2011. No active bird nesting or remnant nests from previous seasons were observed within the perimeter fence of the generating station, including along the riprap, near the tank farm, or near the entrance road. One potential nest observed in a palm tree outside of the fence near the entrance gate during the first survey was again investigated. The nest still did not appear to be active, but if construction at this location is planned during the active nesting season the status of this nest should be confirmed shortly before commencement of construction activities that could disturb the nest.

Introduction

In anticipation of vegetation removal and grading and along the southern edge of the El Segundo Generating Station (El Segundo, California) plant property by biologists from MBC Applied Environmental Sciences. All areas surveyed during the first survey (Figure1), conducted on 31 May 2011, were re-examined. Since the first survey, the riprap in Section 1 has been removed.

Figure 1. Map of nesting bird survey areas by section.

Methods

MBC Biologists were on site from 0900 to 1100 on the day of the survey. Prior to the survey, biologists reviewed the potential sensitive plant species that occur in the survey area per the California Natural Diversity Database. During the survey the biologists surveyed (on foot) the perimeter of the riprap and tank farm, as well as along the entrance road (Figure 1). Investigations included a general observation for animal activity before entering a section for closer examination. The biologists then forayed into the vegetated areas looking for ground nests and burrows and to closer evaluate likely nesting locations, such as within thicker bushes and low trees. Taller trees, particularly palms near the entrance gate and road, were evaluated by binocular from several vantage points for indications of nesting.

Results

Birds. There was little bird activity within the El Segundo Generating Station during the survey, although birds ocassionally flew over the property including unidentified gulls (*Larus* sp), and one unidentified tern (Laridae) and several American crows (*Corvus brachyrhynchos).*

About ten crows were observed flying around the property or roosting on fences or structures near the tank farm. Five house finches (*Carpodacus mexicanus*) were observed roosting in a tree along southern side of the tank farm berm in Section 3, another eight were roosting on a fence within the tank farm area, and three more on trees in Section 3 near the entrance road (Figure 1). One northern mockingbird (*Mimus polyglottos*) was observed roosting on the southern perimeter fence in Section 4, and a black phoebe (*Sayornis nigricans*) was observed flying through area.

Birds observed at the retention basin northwest of Section 5 included three gulls and one egret (Ardeidae) roosting on the central structure near the waterline. There were no nesting birds observed around the tank farm perimeter, or along the southern perimeter of the generating station property in Sections 1 through 5.

Other than the occasional flyover, no birds were observed in Sections 6, 8 or 9 during the survey. The only sign of nesting observed was an apparent nest in one of the palm trees by the entrance gate outside of the fence line, adjacent to Section 7 that was noted during the first survey. There are 12 palm trees outside the ESGS fence line upcoast (north) of the gate house, and in the first palm tree (right next to the gate) there appeared to be a nest. As during the first survey, the nest did not appear to be active (i.e., there were no birds flying to or from the nest, no adult feeding young, no adult bird tending the nest to indicate that eggs were present, and no chick noises). No other nesting was indicated in Sections 6 through 9.

Other Animals. Other than the birds described above, no other animals were observed during the survey.

Vegetation. During the survey, MBC biologists noted two plant species that had emerged in Section 7 since the first survey that had not been reported previously. These plants were cape honeysuckle (*Tecoma capensis*) and bougainvillea (*Bougainvillea* sp); both are non-native, ornamental species.

Summary

No active bird nesting or remnant nests from previous seasons were observed within the perimeter fence of the generating station, including near the tank farm berm, or near the entrance road. One potential nest was observed in a palm tree outside of the fence near the entrance gate, but within an area of planned modification. The nest was not active at the time of the survey, but if construction at this location is planned during the active nesting season the status of this nest should be confirmed shortly before the onset of construction activities that could disturb the nest.

ATTACHMENT K
CUL-2
SCHEDULE

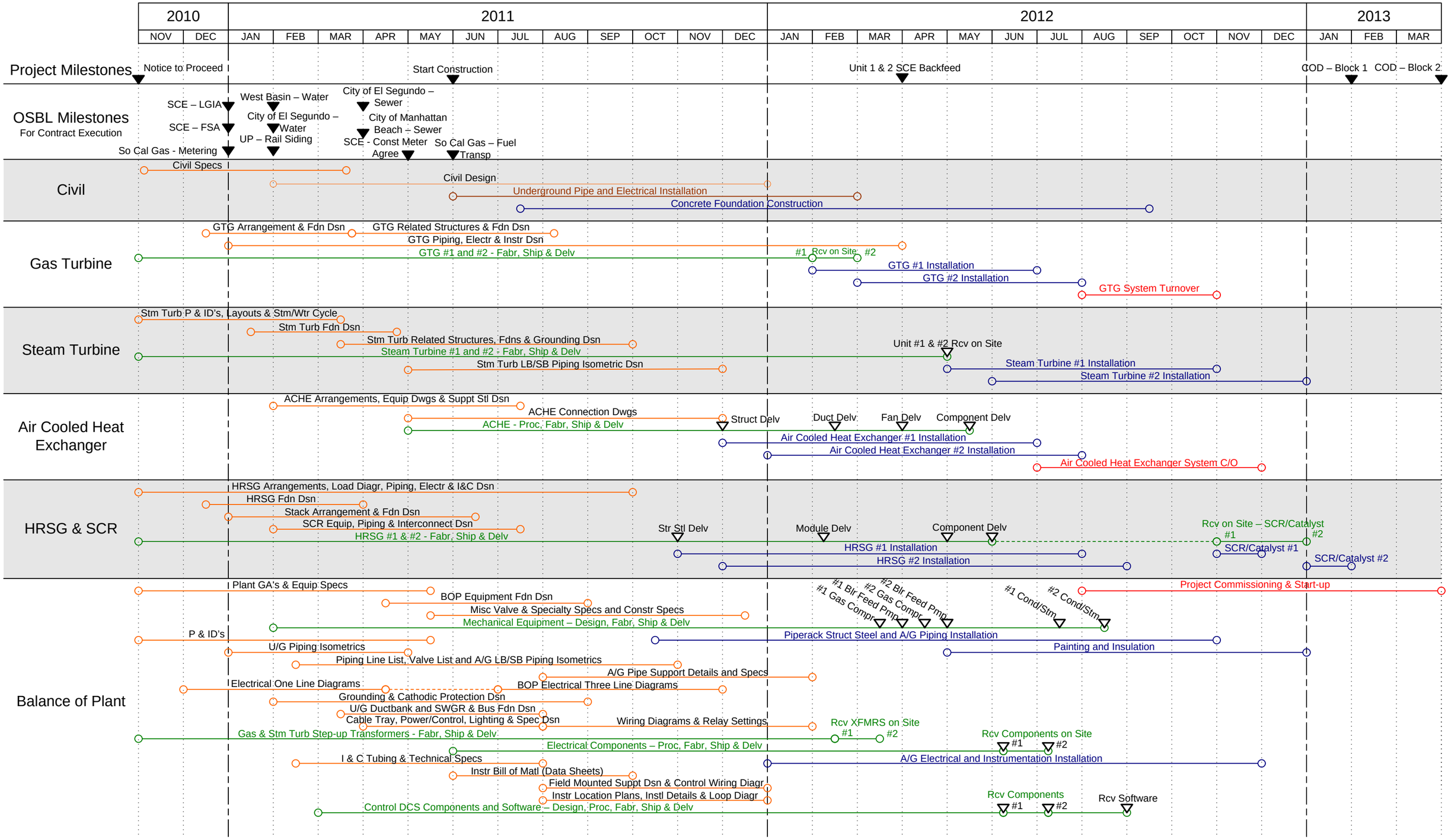

REV	DATE	DESCRIPTION	BY:	CHK:
1	12-1-2010	Revised Backfeed to 04-01-10	NL	MK
0	12-1-2010	Initial Issue	RSN	DMP

NRG Energy – El Segundo RePower Project

One Page Summary Schedule

ATTACHMENT L
CERTIFICATION BY EGW ENGINEERING, P.C.

EGW Engineering, P.C.

4220 E. San Remo Avenue ■ Gilbert, AZ 85234 ■ 480-641-4548 ■ FAX: 480-641-4548 ■ Lynnngene@cox.net

July 26, 2011

Rubicon Applied Divers
2127 S. Priest Drive Suite 408
Tempe, AZ 85282

Attn: Mr. Steve Moses

Ref: El Segundo Power Plant Intake and Outlet Tremie Plugs

Subject: Review As-Built Dewatered Condition

Gentlemen:

Between April 29, 2011 and June 9, 2011 a steel and plywood bulkhead was installed in each tunnel prior to cleanup, anchor and reinforcing bars installation and tremie concrete placement. Construction has been successfully completed for both tunnels with drilled in anchors and reinforcing bars installed as required and embedded within the tremie concrete. The bulkheads were installed prior to all other construction activities in order to prevent ocean exposure to debris and cement, and in accordance to the design prepared by EGW Engineering, P.C. to comply with the conditions of US Corps of Engineers permit No. SPL-2010-01051-C0.

On July 12, 2011 the undersigned observed the completed tremie plugs for both the intake and outlet tunnels. The shore sides of the tunnels were dewatered and showing insignificant seepage, effectively blocking both tunnels from seawater intrusion.

The undersigned verifies that complete isolation of the ocean to the plant via the tunnels has been achieved.

Sincerely,

Eugene G. Washington, RCE
Principle Engineer