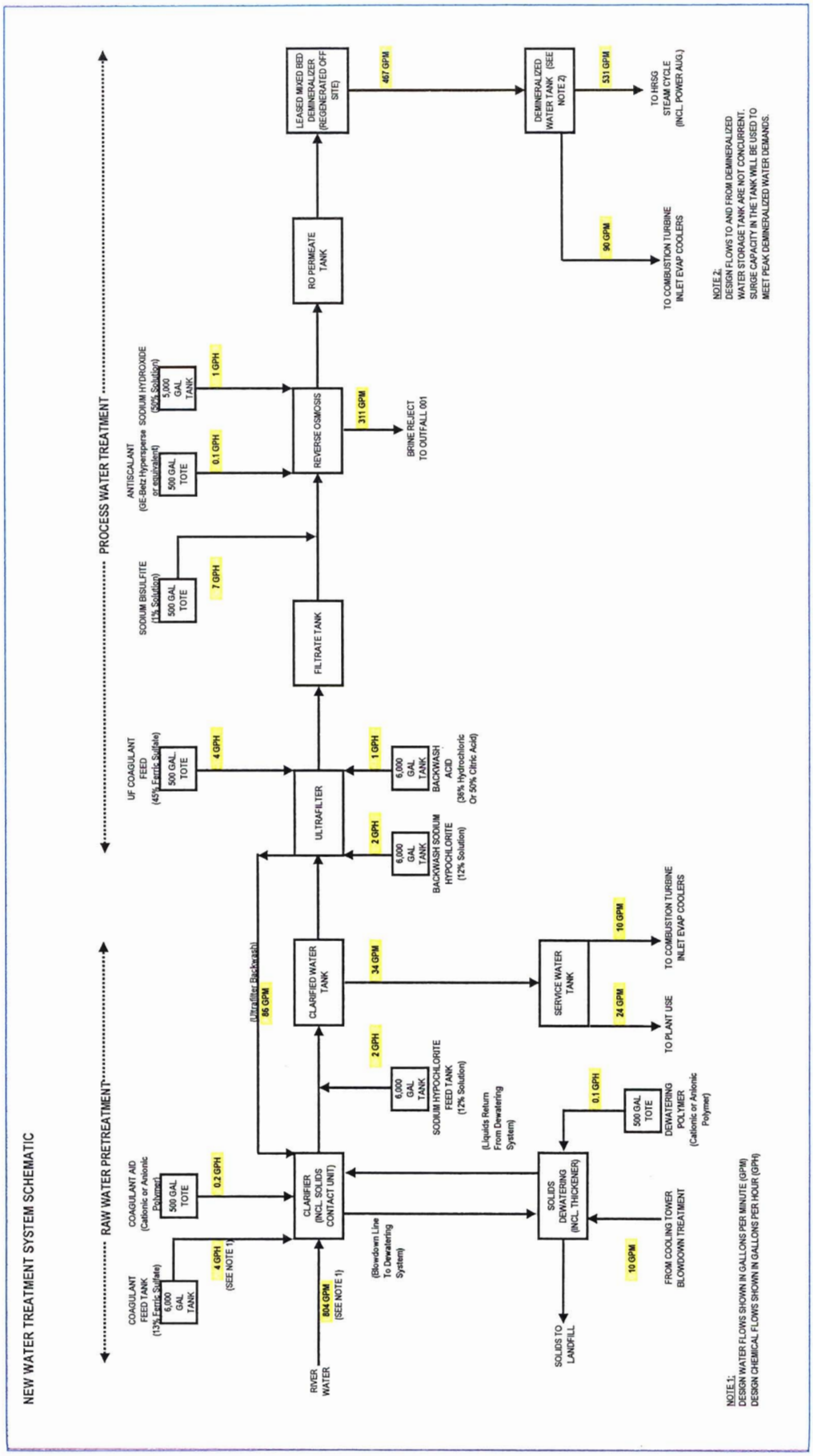ATTACHMENT D