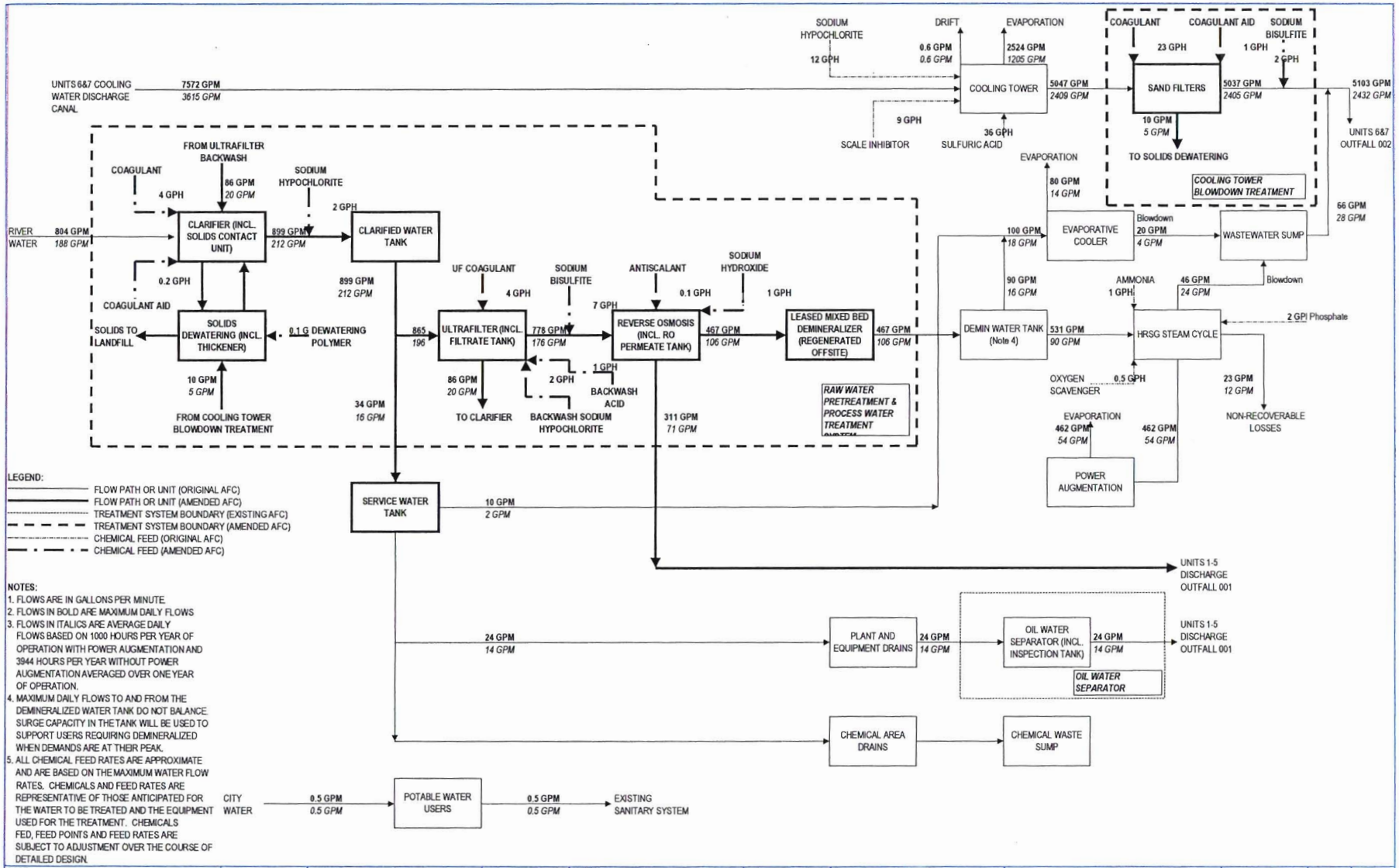

CASE	1	COMBUSTION TURBINE FUEL	NATURAL GAS		CONDENSER COOLING	WET TOWER
TOTAL ANNUAL HOURS OF OPERATION	4944 hr/yr	PLANT OUTPUT	MAX.	AVG.	CYCLES OF CONCENTRATION	1.5
EVAPORATIVE COOLER	4944 hr/yr	DRY BULB TEMP (F)	86	60	DRIFT	0.0005%
COMB. TURBINE STEAM AUG.	1000 hr/yr	RELATIVE HUMIDITY	33%	68%	CYCLE MAKEUP RATE	2%
DUCT FIRING	1000 hr/yr	TURBINE CONFIGURATION	2 x 1 7FAs			

ATTACHMENT G