Pacific Gas and Electric Company®

Mailing Address:
Pacific Gas & Electric Company
Gateway Generating Station
3225 Wilbur Ave.
Antioch, CA 94509
(925) 522-7801

February 23, 2012

Mr. Craig Hoffman
Compliance Project Manager
California Energy Commission
1516 Ninth Street, MS-2000
Sacramento, CA 95814

Reference: PG&E Gateway Generating Station (00-AFC-01C)

Subject: PETITION FOR INSIGNIFICANT PROJECT CHANGE TO PLANT FACILITY

Dear Mr. Hoffman,

Enclosed is a PETITION FOR INSIGNIFICANT PROJECT CHANGE TO PLANT FACILITY to install a new nominal 40,000 gallons bolted carbon steel storage tank which will be used to contain the additional volume of reclaimed water produced during increased frequency of start-up/shut down activities. The installation of this proposed additional storage tank will result in increased re-use rate of reclaimed water and decreased waste water discharge rate.

We have reviewed Commission Decision (00-AFC-1), and we believe that the above requested insignificant project change will not result in any new environmental impacts or require any modification to the existing Conditions of Certification contained in the Final Decision. However, we decided to submit the enclosed petition in an abundance of caution. If you have any questions regarding this matter, please contact Angel Espiritu at (925) 522-7838.

Sincerely,

Ronald A. Gawer
Senior Plant Manager

Enclosure: a/s
Cc: File

PETITION FOR INSIGNIFICANT PROJECT CHANGE
AT
GATEWAY GENERATING STATION (GGS)

1. Adding One (1) Nominal 40,000 Gallons Storage Tank at the GGS Site – The current GGS facility configuration includes a nominal 100,000 gallons reclaimed water storage tank. This tank is used to contain reclaimed water generated from different sources in the plant, which includes the Heat Recovery Steam Generator (HRSG) blow-down water, and steam condensate. The reclaimed water is re-used in the Wet Surface Air Cooler (WSAC) system and HRSG. In the 2010 operation of the plant, it was found that additional storage capacity is needed to contain the additional volume of reclaimed water resulting from more frequent start-up/shut down activities. As a temporary measure, a 22,000-gallon portable (FRAC) tank is being used to contain the additional volume of reclaimed water.

   a. **Description of Modification**: This modification proposes to install a new nominal 40,000 gallons bolted carbon steel storage tank, which is the same specification for the existing waste water storage tank at the facility. The proposed tank will be used to contain the additional volume of reclaimed water produced during the increased frequency of start-up/shut down activities. This modification also includes the installation of additional forwarding pump, valves, and interconnecting pipes. The new tank will be located near the existing 100,000 gallon reclaimed water tank (See attached Facility Layout.). Also attached is the Design Drawing for details on equipment specification.

      The new tank will provide extended retention time for the reclaimed water, originally at approximately 140 ^{o}F, to cool down below 100 ^{o}F for re-use in the system without the need to add significant volume of quenching water. By reducing the use of quenching water, the reclaimed water re-use rate is increased and the waste water discharge rate is decreased.

   b. **Necessity for the Modification**: Due to an increase in the frequency of start-up/shut down (cycling) activities, there is a need to contain the resulting additional volume of reclaimed water in a more efficient and safe manner.

   c. **Modification was not known at the time of Certification**: The need for this modification became apparent only after the unit began cycling more frequently.

   d. **If the modification is based on new information that changes or undermines the assumptions, rational, findings, or other bases of the final decision, an explanation of why the change should be permitted**: The modification does not change or undermine in any way the assumptions, rationale, findings, or other basis of the CEC Final Decision (00-AFC-1).

e. **Analysis of the impacts the modification may have on the environment**: The additional tank will be installed next to the existing tanks in the facility, and will have no significant adverse impacts on the environment. This tank is equal in specification to the smallest tank in the tank farm area. The storage tank is above ground, and normally will have no leakage. As a result of the increased retention capacity, the facility will further reduce the overall amount of water usage and discharge, reducing our environmental impact.

f. **Analysis of the impact of the modification on the facility's ability to comply with applicable laws, ordinances, regulations, and standards**: The proposed modification does not impact the facility's ability to comply with applicable laws, ordinances, regulations and standards.

g. **A discussion of how the proposed modification affects the public**: This modification will have no adverse effect on the public. The change will not likely be noticeable to the public as it has a low profile configuration, located within the tank farm area and blends with other tanks from the outside view of the plant.

h. **Property owners potentially affected by the modification**: It is anticipated that no property owners will be affected by this proposed modification.

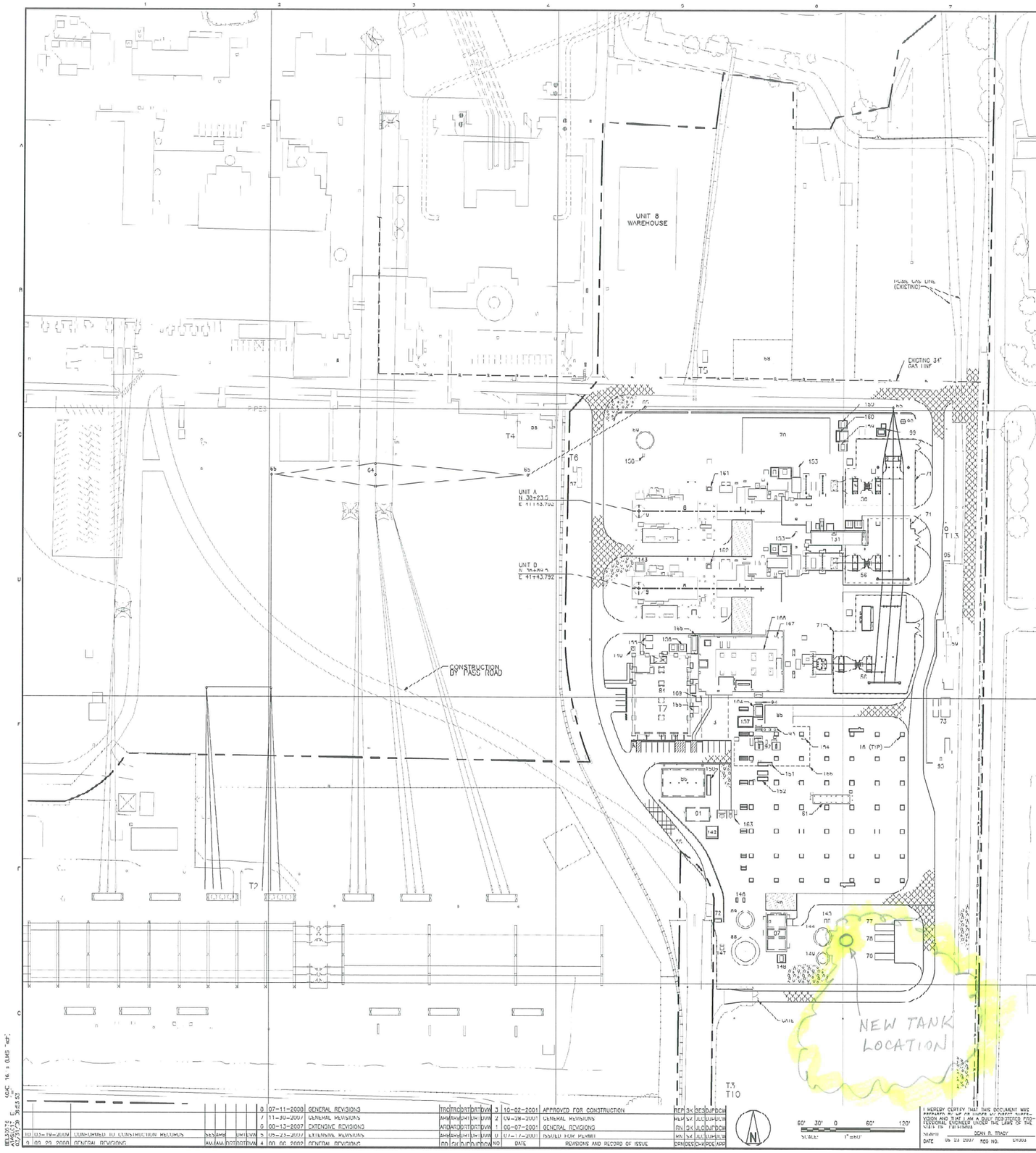

FACILITIES LEGEND

ID	FACILITY	FOUNDATION	TOWN LOCATION NORTH	TOWN LOCATION EAST	REMARKS
1	COMBUSTION TURBINE	S5011			SEE DWGS M1011A & M1011B
3	CRANE ACCESS/STEAM TURBINE MAINTENANCE AREA				SEE DWG M1021C
8	HEAT RECOVERY STEAM GENERATOR	S5022			SEE DWGS M1011A & M1011B
9	HRSG EXHAUST STACK	S5022	SEE PLAN	SEE PLAN	SEE DWG M1001A & M1001B
16	AIR COOLED CONDENSER	S5601			SEE DWG M1021C
55	ACCESS ROAD	S3101 & S3102			
56	SWITCHYARD				
57	OIL/WATER SEPARATOR (EXISTING)				SEE DWGS S3320 & S3321
58	AMMONIA STORAGE TANKS AND PUMPS (EXISTING)				
59	GAS METERING STATION (EXISTING)				
61	ACC ELECTRICAL ENCLOSURE	S5590			SEE DWG M1021D
64	230KV FLAT LINE AREA				
65	230KV TUBULAR STEEL POLES				
68	UNIT A & 7 GAS CONDITIONING STATION (EXISTING)				
69	OIL/WATER SEPARATOR DISCHARGE TANK				SEE DWG M1001A
70	GT INLET AIR CHILLER	S5610			
71	SECURITY FENCE (NEW)	S3111			SEE DWGS S3103.04.07 & S3207
72	GUARDHOUSE (EXISTING)				
73	UNIT B GAS CONDITIONING STATION	S3420			SEE DWG M1021E
76	HYDROGEN BULK STORAGE	S5440			SEE DWG M1021D
77	CO2 BULK STORAGE	S5119			SEE DWG M1021D
78	NITROGEN BULK STORAGE	S5110			SEE DWG M1021D
84	ADMIN/PLANT SERVICES BUILDING	S5501			SEE DWG M1021C
85	MOBILE CRANE ACCESS FOR GT MAINTENANCE				
86	CLOSED CIRCLE COOLING WATER HEAT EXCHANGER	S5630			SEE DWG M1021D
87	FIRE WATER PUMP ENCLOSURE	S5250			SEE DWG M1021D
88	FILE/POTABLE WATER STORAGE TANK	S5205			SEE DWG M1021D
00	DEMIN WATER STORAGE TANK	S5201			SEE DWG M1021D
90	21 KV SWITCHGEAR	S2350			
91	WET SURFACE AIR COOLER	S5640			SEE DWG M1021D
92	ACC CONDENSATE COLLECTION TANK	S5602			SEE DWG M1021C
93	CONDENSATE PUMPS	S5603			SEE DWG M1021C
94	PIPE RACK FOUNDATION	S5301			
95	RETAINING WALL	S3450			
96	MOBILE WATER TREATMENT EQUIPMENT	S3432	3160.00	4420.00	NORTHEAST CORNER OF END
99	21KV/4160V ALTERNATE FEED TRANSFORMER	S5403			
131	MAIN ELECTRICAL CONTROL ENCLOSURE	S5071			SEE DWG M1011A
110	SANITARY LIFT STATION	S3320			SEE DWG M1021C
141	NOT USED				
142	WASTEWATER SUMP PIT	S5020			SEE DWG M1021D
143	BLOWDOWN SUMP	S5021			SEE DWG M1021B
144	RECLAIM WATER STORAGE TANK	S5202			SEE DWG M1021D
145	RECLAIM WATER TRANSFER PUMPS	S5220			SEE DWG M1021D
146	DEMIN WATER TRANSFER PUMPS	S5220			SEE DWG M1021D
147	SERVICE WATER TRANSFER PUMPS	S5220			SEE DWG M1021D
148	FIRE WATER PUMP ENCLOSURE TRANSFORMER	S5401			SEE DWG M1021D
149	WASTE WATER STORAGE TANK	S5204			SEE DWG M1021D
150	CCCW MCC CABINET WITH TRENCH	S5630			
151	ACC HOGGING EJECTOR & SILENCER SKID	S5604			SEE DWG M1021D
152	ACC VACUUM PUMPS	S5604			SEE DWG M1021D
153	PIPE RACK - GT TO CHILLER	S5704			
154	ACC CLEANING WATER PUMP	S5603			SEE DWG M1021C
155	HVAC EQUIPMENT FOUNDATION	S5620			
156	ADMIN/PLANT SERVICES BUILDING TRANSFORMER	S5401			
157	ACC DRAIN POT PIT	S5008			SEE DWG M1021C
158	OWS DISCHARGE TRANSFER PUMP	S5220			SEE DWG M1021C
159	GT INLET AIR CHILLER TRANSFORMER	S5407			
160	GT INLET AIR CHILLER SWITCHGEAR	S5401			
161	UNIT A FUEL GAS COMPRESSOR & DRAINS TANK	S5083			SEE DWG M1001A
162	UNIT D FUEL GAS COMPRESSOR & DRAINS TANK	S5003			SEE DWG M1001D
163	WET SURFACE AIR COOLED CHEMICAL FEED SKIDS	S5431			SEE DWG M1021D
164	AMINE & OXYGEN SCAVENGER FEED SKID	S5430			SEE DWG M1021C
165	PHOSPHATE FEED SKID	S5430			SEE DWG M1021C
166	MCC ACC TRUSS SUPPORTS	S5020			
167	GT SLAB ON GRADE	S5031			
168	GT FOUNDATION	S5703			
169	CABLE TRAY SUPPORT FOUNDATION	S5709			

NOTES

1. SEE DRAWING S5079 FOR COMBUSTION TURBINE AREA COMPOSITE PLAN.

GENERAL LEGEND

- ASPHALT PAVING
- AGGREGATE SURFACING
- CONCRETE
- NEW FENCE
- EXISTING FENCE

TERMINAL POINTS

- T1 FUEL GAS
- T2 ELECTRICAL TRANSMISSION
- T3 POTABLE WATER (AT WILBUR AVE)
- T4 AMMONIA
- T5 STORMWATER DISCHARGE
- T6 CONSTRUCTION POWER
- T7 TELEPHONE
- T10 SANITARY (AT WILBUR AVE)
- T13 ALTERNATE POWER FEED

THE DISTRIBUTION AND USE OF THE NATIVE FILE FORMAT OF THIS DRAWING OUTSIDE OF BLACK & VEATCH IS UNCONTROLLED AND SHALL BE USED FOR REFERENCE PURPOSES ONLY.

REV	DATE	REVISIONS AND RECORD OF ISSUE	DRN	DES	CHK	PDE	APP
10	03-19-2008	CONFORMED TO CONSTRUCTION RECORDS	SS	AMK	DW	LVW	
9	09-22-2000	GENERAL REVISIONS	AM	AM	DT	DT	DW
8	07-11-2000	GENERAL REVISIONS	TRC	TRC	DT	DT	DW
7	11-30-2007	GENERAL REVISIONS	AM	AM	DW	DW	LVW
6	00-13-2007	EXTENSIVE REVISIONS	AND	AND	DT	DT	DW
5	05-23-2007	EXTENSIVE REVISIONS	AM	AM	DW	DW	LVW
4	00-06-2007	GENERAL REVISIONS	DD	CH	DW	DW	NO
3	10-02-2001	APPROVED FOR CONSTRUCTION	REP	SK	DE	DW	DW
2	09-28-2001	GENERAL REVISIONS	MW	SK	JLC	DW	LVW
1	00-07-2001	GENERAL REVISIONS	RN	SK	JLC	DT	DW
0	07-17-2001	ISSUED FOR PERMIT	MK	SK	JLC	DW	LVW

I HEREBY CERTIFY THAT THIS DOCUMENT WAS PREPARED BY ME OR UNDER MY DIRECT SUPERVISION AND THAT I AM A DULY REGISTERED PROFESSIONAL ENGINEER UNDER THE LAWS OF THE STATE OF CALIFORNIA

SIGNED: DEAN R. TRACY
DATE: 09 23 2007 REG NO. E7003

BLACK & VEATCH CONSTRUCTION, INC.

PACIFIC GAS & ELECTRIC CO.
GALLWAY GENERATING STATION

SITE ARRANGEMENT PLAN

PROJECT: 065108-8STU-S1001
REV: 10
ENG MGR: SK
DRAWN: RN
CHECKED: JLC
DATE: 10-17-2001

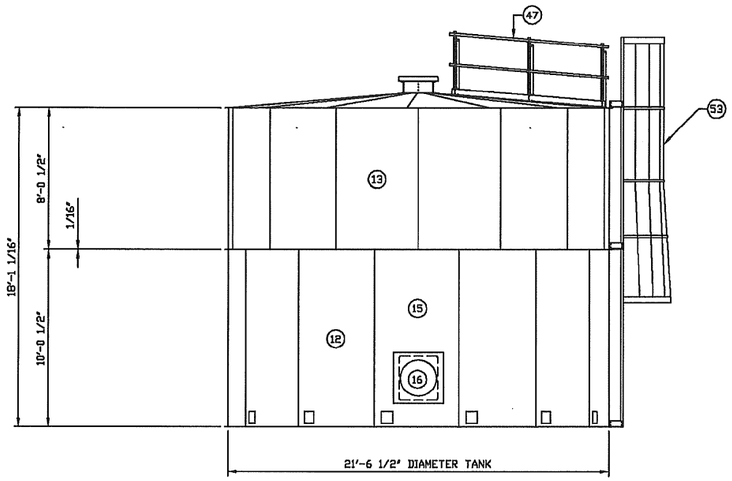

ELEVATION

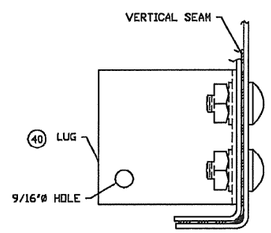

@ VERTICAL SEAM

GROUNDING LUG

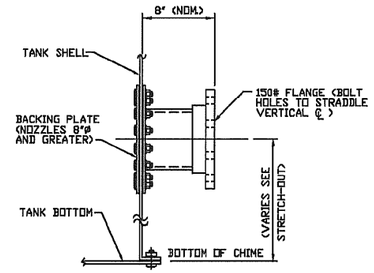

NOZZLE ELEVATIONS ARE REFERENCED FROM THE BOTTOM OF CHIME. FOR TANKS WITH CONCRETE FOUNDATIONS THE DISTANCE FROM THE TOP OF CONCRETE TO THE BOTTOM OF CHIME IS 5/8"±.

TYPICAL EXTERIOR NOZZLE INSTALLATION

NOTE:
ALL NOZZLES ARE RADIAL UNLESS NOTED AS PARALLEL

MATERIAL LIST FOR TANK

	ITEM	PART NUMBER	DESCRIPTION	QUANTITY
	1	201T12021	STD. 12 GA DECK SHEET	13
*	2	353T00001	MANHOLE COLLAR W/20"Ø VENT (28 HL)	1
+	3	201T1221-075819A	STD. 12 GA DECK SHEET W/ (2) 24" DIA. MANWAY OPNGS	1
	4			
	5	510T04021	MANHOLE SUPT. 2" X 2" X 1/4" ANGLE X 20 3/4"	2
	6	400T07252	DECK SUPT. BEAM C7X 9.8 X 21'-0" LG.	2
	7	378T06021	HANGER FOR DECK BEAM	4
	8	18-06-3059-00	ANGLE 1 1/2" X 1 1/2" X 1/8" (59 HOLE)	14
	9	520T04019	DECK SUPT. CROSS BRACE C4 X 5.4 X 19 3/8" LG	4
	10	521T02004	CLIP ANGLE	8
	11			
	12	115T1212101	12 GA X 60" SP STV X 120 1/2" W/1 STR PCH	7
	13	112T1212100	12 GA X 60" SP STV X 96 1/2"	14
	14			
	15	115T1212101J	12 GA X 60" SP STV X 120 1/2" W/1 STR PCH W/24" DIA SHELL MW OPNG	2
	16	83663PW06421	24" DIA. DOUBLE PUNCH SHELL MANWAY KIT	2
	17			
	18	351T10001	10 GA BOTTOM CENTER COVER (28 HL)	1
	19	226T12021	12 GA FLAT BOTTOM SHEET	14
	20			
	21			
	22	8PW1010703P	ANCHOR BOLT KIT 1" DIA. X 27" LG	14
	23			
	24	115T1221-075819A	12 GA X 60" SP STV X 120 1/2" W/1 STR PCH W/3"Ø NZL OPNG	1
	25	115T1221-075819B	12 GA X 60" SP STV X 120 1/2" W/1 STR PCH W/6"Ø NZL OPNG	1
	26	115T1221-075819C	12 GA X 60" SP STV X 120 1/2" W/1 STR PCH W/6"Ø NZL OPNG	1
	27	115T1221-075819D	12 GA X 60" SP STV X 120 1/2" W/1 STR PCH W/3"Ø NZL OPNG	1
	28	115T1221-075819E	12 GA X 60" SP STV X 120 1/2" W/1 STR PCH W/2"Ø NZL OPNG	1
	29			
	30	8704BPW020R0	2"Ø EXTERIOR RF NOZZLE KIT	1
	31	8704BPW030R0	3"Ø EXTERIOR RF NOZZLE KIT	2
	32	8704BPW060R1	6"Ø EXTERIOR RF NOZZLE KIT	2
	33			
	34			
	35	350T2400-075096A	24" Ø HILLSIDE COLLAR ASSY	2
	36	754W00040	MANWAY GASKET (40 HOLES)	4
	37	349T0024-075097A	24" Ø MANWAY COLLAR PLATE (40) HOLES	2
	38			
	39			
	40	390T0205-046478A	GROUNDING LUG- 5" X 2" X 1/4" X 3 1/2" LG.	4
	41	8708BGW020WT	2" DIA - BLIND FLG KIT (EPDM) BLIND FLANGE KIT WT	1
	42	8708BGW030WT	3" DIA - BLIND FLG KIT (EPDM) BLIND FLANGE KIT WT	2
	43	8708BGW060WT	6" DIA - BLIND FLG KIT (EPDM) BLIND FLANGE KIT WT	2
	44			
	45			
	46			
*	47	07-5819-ES-S1	RADIAL SEAM GUARDRAIL (BOLTED ASSY)	1
	48			
	49			
	50	795ASPEXJT48	ASPHALT IMPREGNATED FIBERBOARD 5'-0" X 48"	22
	51	10-09-0654-35	LIQUID TANK - NAMEPLATE	1
	52			
*	53	07-5819-ES-S2	EXTERIOR LADDER - WELDED W/CAGE	1
	54			
	55			
*	56	L-M 01/02	ERECTION MANUAL	1
	57			
	58			
*	59	921T018-075819A	ELEVATION, BOTTOM PLAN & BILL OF MATERIAL	1
*	60	921T018-075819B	STRUCTURE & DECK PLAN - CROSS BEAM SUPPORTED	1
*	61	921T018-075819C	TANK STRETCH-OUT	1
*	62	921T018-075819D	LIQUID TANK DETAILS	1
	63			

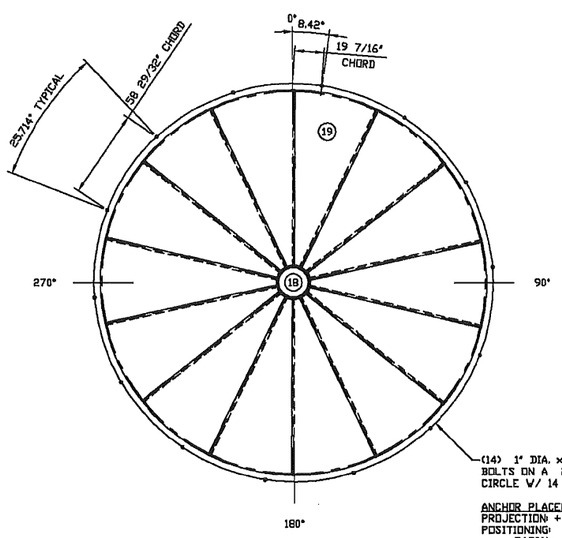

ANCHOR PLACEMENT TOLERANCES
PROJECTION: + OR - 1/4"
POSITIONING:
RADIAL: +1/4", -0"
CHORD: + OR - 1/8" (NON-ACCUMULATIVE)
PLUMBNESS: 3 DEGREES FROM VERTICAL

BOTTOM PLAN

ANCHOR PLAN NOT TO SCALE

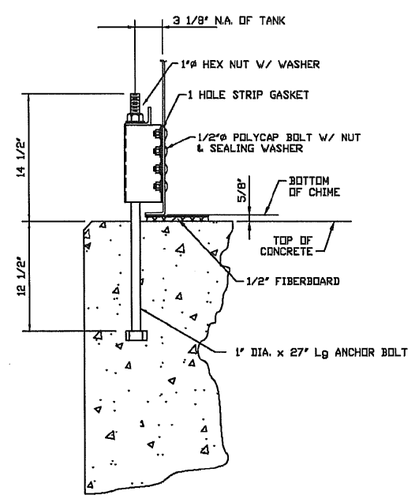

ANCHOR BOLT DETAIL

WASTE WATER TANK

NOTES:

1. THIS BILL OF MATERIAL IS FOR ONE COMPLETE TANK.
2. * DRAWINGS REQUIRED FOR FIELD USE.
3. INTERIOR AND BOTH SIDES OF BOTTOM PAINTED ONE COAT TRICO BOND EP ® THERMOSET CORROSION RESISTANT POWDER EPOXY (7 MILS AVERAGE, DFT). EXTERIOR ONE COAT TRICO BOND EP ® POWDER EPOXY WITH FINISH COAT OF BAKED ON (SHERWIN WILLIAMS FUNCTIONAL GRAY-SW-7024) PERFORMANCE URETHANE (4.5 MILS AVERAGE, DFT).
4. WATER STORAGE TANK DESIGNED IN ACCORDANCE WITH AWWA D103-97 SPEC. SEISMIC ZONE 4, I=1.25, RW=4.50, S=1.50 PER AWWA, 100 MPH WINDLOAD PER AWWA, 25 PSF LIVE DECK LOAD, SPECIFIC GRAVITY = 1.0.
5. + STAVE SHOP DRAWING REQUIRED FOR FABRICATION. OTHERWISE, USE STRETCH OUT DRAWING FOR FABRICATION.
6. STANDARD CENTER DOME WITH VENT (20") WILL RELIEVE 24 CFS (11,000 GPM) WHEN CLEAN. ADDITIONAL VENTING TO PREVENT A VACUUM GREATER THAN 0.4 oz PER SQUARE INCH IS THE RESPONSIBILITY OF THE OWNER.
7. FIBERBOARD SHALL BE INSTALLED IN ACCORDANCE WITH AWWA D103-97, SECTION 11.4.

OWNER: PG&E
PROJECT:GATEWAY GENERATING STATION
NUMBER: 065108.72.3601
TAG# 8WWC-TNK-X1
NAME: WASTE WATER TANK

REV	REVISION	DATE	BY	APPL
3				
2	REV. & RE-SUBMIT FOR FINAL REVIEW & REL FOR FAB. PER CHANGE ORDER-#3 DATED 11/8/07	11/13/07	MVH	RDR
1	REV & RE-SUBMIT PER CHANGE ORDERS-#1 & #2.	10/8/07	MVH	RDR

COLUMBIAN TecTank

ELEVATION, BOTTOM & BILL OF MATERIAL
21'-6 1/2"Ø x 18' HIGH TANK
FOR:
BLACK & VEATCH
ANN ARBOR, MI; USA

DRAWN BY	ORDER NO.	DATE	DWG. NO.
MVH	07-5819	14 Aug 2007	921T018-075819A
CHECKED BY: JDB	APPROVED BY: RDR		

CONFIDENTIAL / TRADE SECRETS: BY ACCEPTING POSSESSION OF THIS DOCUMENT, RECIPIENT AGREES THAT ITS CONTENTS ARE CONFIDENTIAL, PROPRIETARY TRADE SECRETS OF COLUMBIAN TECTANK. NO PORTION OF THIS DOCUMENT MAY BE REPRODUCED, DISTRIBUTED OR USED IN ANY MANNER WITHOUT WRITTEN PERMISSION FROM COLUMBIAN TECTANK.

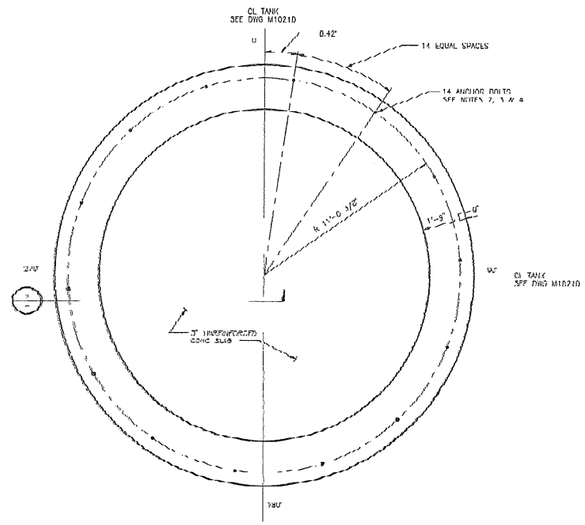

WASTE WATER TANK FOUNDATION
SCALE 3/8" = 1'-0"

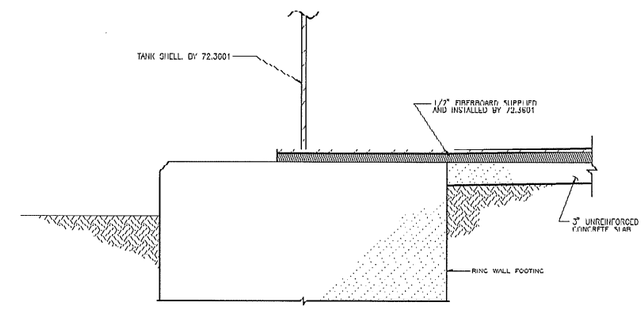

DETAIL 2
NOT TO SCALE
SEE THIS DWG

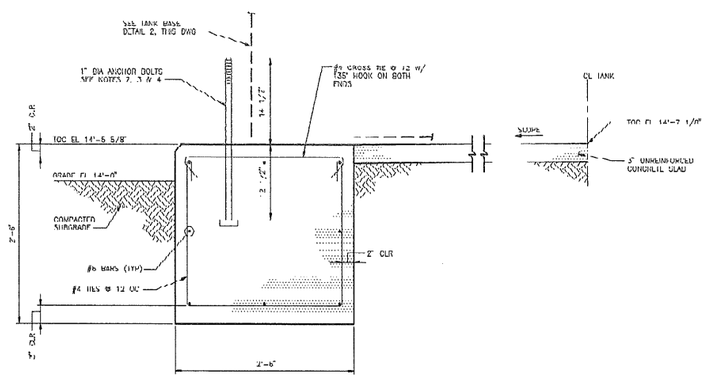

SECTION 1
SCALE 1 1/2" = 1'-0"
SEE THIS DWG

CONCRETE TOTALS FOR THIS DRAWING: 18.00 CY
* FOR TRACKING PURPOSES ONLY

NOTES

1. SEE DRAWING S5950 FOR GENERAL NOTES, LEGEND AND TYPICAL DETAILS.
2. ANCHOR BOLTS SUPPLIED BY TANK VENDOR CONTRACT 72.3601. ANCHORS INSTALLED BY 72.0402.3.
3. ANCHOR BOLTS SHALL BE EQUALLY SPACED AROUND ANCHOR CIRCUMFERENCE.
4. ANCHOR PLACEMENT TOLERANCE
   PROJECTION: + OR − 1/4"
   POSITIONING: RADIAL +1/4" −0"
   CHORD + OR − 1/8" (NON-ACCUMULATIVE)
   PLUMBNESS: 3 DEGREES FROM VERTICAL
5. ALL WORK ON THIS DRAWING BY CONTRACT 71.0402.3, UNLESS OTHERWISE NOTED.

THE DISTRIBUTION AND USE OF THE NATIVE FILE FORMAT OF THIS DRAWING OUTSIDE OF BLACK & VEATCH IS UNCONTROLLED AND SHALL BE USED FOR REFERENCE PURPOSES ONLY.

NO	DATE	REVISIONS AND RECORD OF ISSUE	DRN	DES	CHK	PDE	APP
2	03-19-2008	CONFORMS WITH CONSTRUCTION RECORDS-NIC	CSU	AWM		JWL	DVW
1	02-11-2008	ADDED DETAIL 2	ACS	ACS	RDT	RDT	DVW
0	10-19-2007	ISSUED APPROVED FOR CONSTRUCTION	TRC	ABS	TRC	JWL	DVW

SCALE: AS NOTED

I HEREBY CERTIFY THAT THIS DOCUMENT WAS PREPARED BY ME OR UNDER MY DIRECT SUPERVISION AND THAT I AM A DULY REGISTERED PROFESSIONAL ENGINEER UNDER THE LAWS OF THE STATE OF CALIFORNIA
NAME: DEAN R. TRACY
DATE: 10 19 2007 REG NO. 61003

BLACK & VEATCH CONSTRUCTION, INC.
CHECKED PAP DRAWN JRL
DATE 10-19-2007

PACIFIC GAS & ELECTRIC CO.
GATEWAY GENERATING STATION
FOUNDATIONS WASTEWATER TANK
PLAN, SECTIONS & DETAILS

PROJECT DRAWING NUMBER: 065108-8BSU-S5204
REV: 2
CODE
AREA

BEA 30774
CAD FILE: S5204
02/21/08 5:29

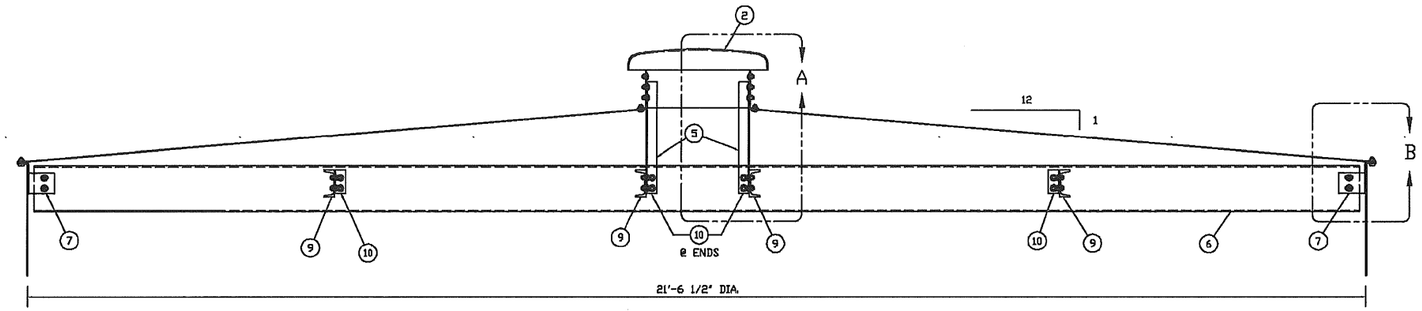

SECTION A-A

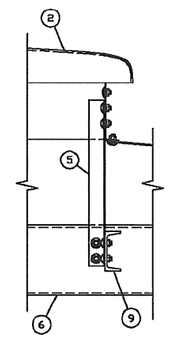

DETAIL-"A"

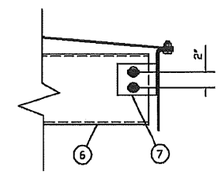

DETAIL-"B"
BEAM @ HANGER

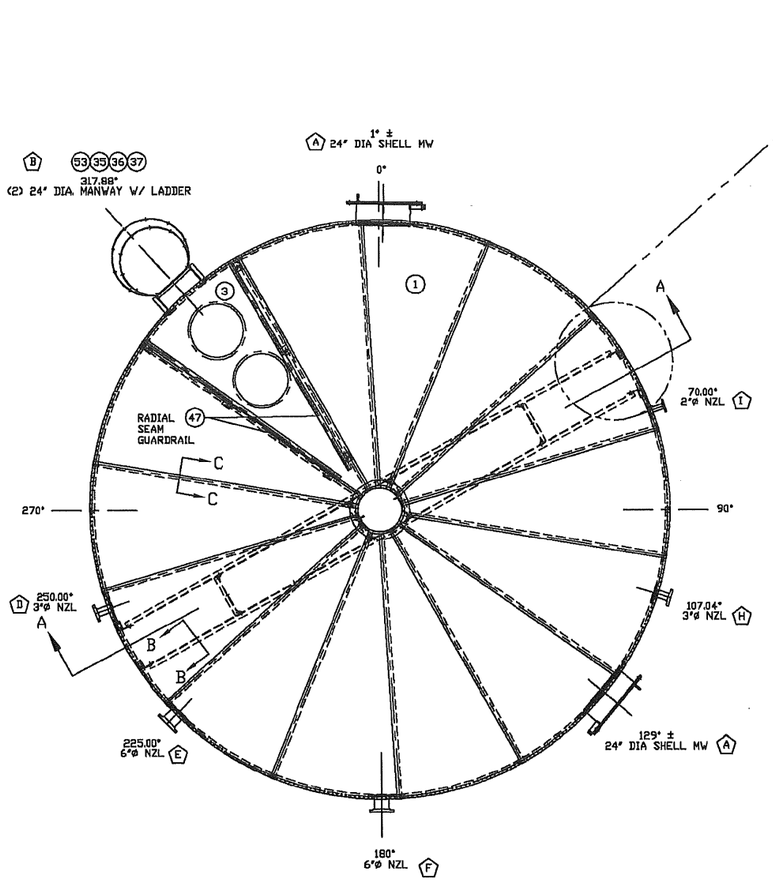

DECK PLAN

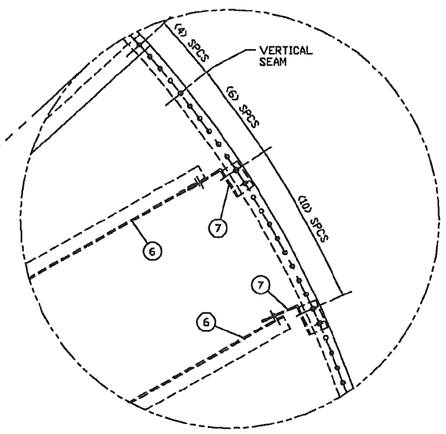

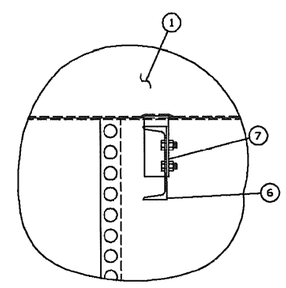

SECTION B-B

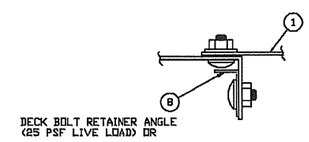

SECTION C-C
DECK SEAM

OWNER: PG&E
PROJECT:GATEWAY GENERATING STATION
NUMBER: 065108.72.3601
TAG# 8WWC-TNK-X1
NAME: WASTE WATER TANK

REV	REVISION	DATE	BY	APR.
3				
2	REV & RE-SUBMIT FOR FINAL REVIEW & REL FOR FAB. PER CHANGE ORDER-#3, DATED 11/8/07.	11/13/07	MVH	RDR
1	REV & RE-SUBMIT PER CHANGE ORDER-#1 & #2.	10/8/07	MVH	RDR

COLUMBIAN TecTank

STRUCTURE & DECK PLAN
21'-6 1/2"Ø x 18' HIGH TANK
FOR:
BLACK & VEATCH
ANN ARBOR, MI; USA

DRAWN BY	ORDER NO.	DATE	DWG. NO.
MVH	07-5819	9 Oct 2007	921T018-075819B
CHECKED BY	APPROVED BY		
JDB	RDR		

CONFIDENTIAL / TRADE SECRETS: BY ACCEPTING POSSESSION OF THIS DOCUMENT, RECIPIENT AGREES THAT ITS CONTENTS ARE CONFIDENTIAL, PROPRIETARY TRADE SECRETS OF COLUMBIAN TECTANK. NO PORTION OF THIS DOCUMENT MAY BE REPRODUCED, DISTRIBUTED OR USED IN ANY MANNER WITHOUT WRITTEN PERMISSION FROM COLUMBIAN TECTANK.