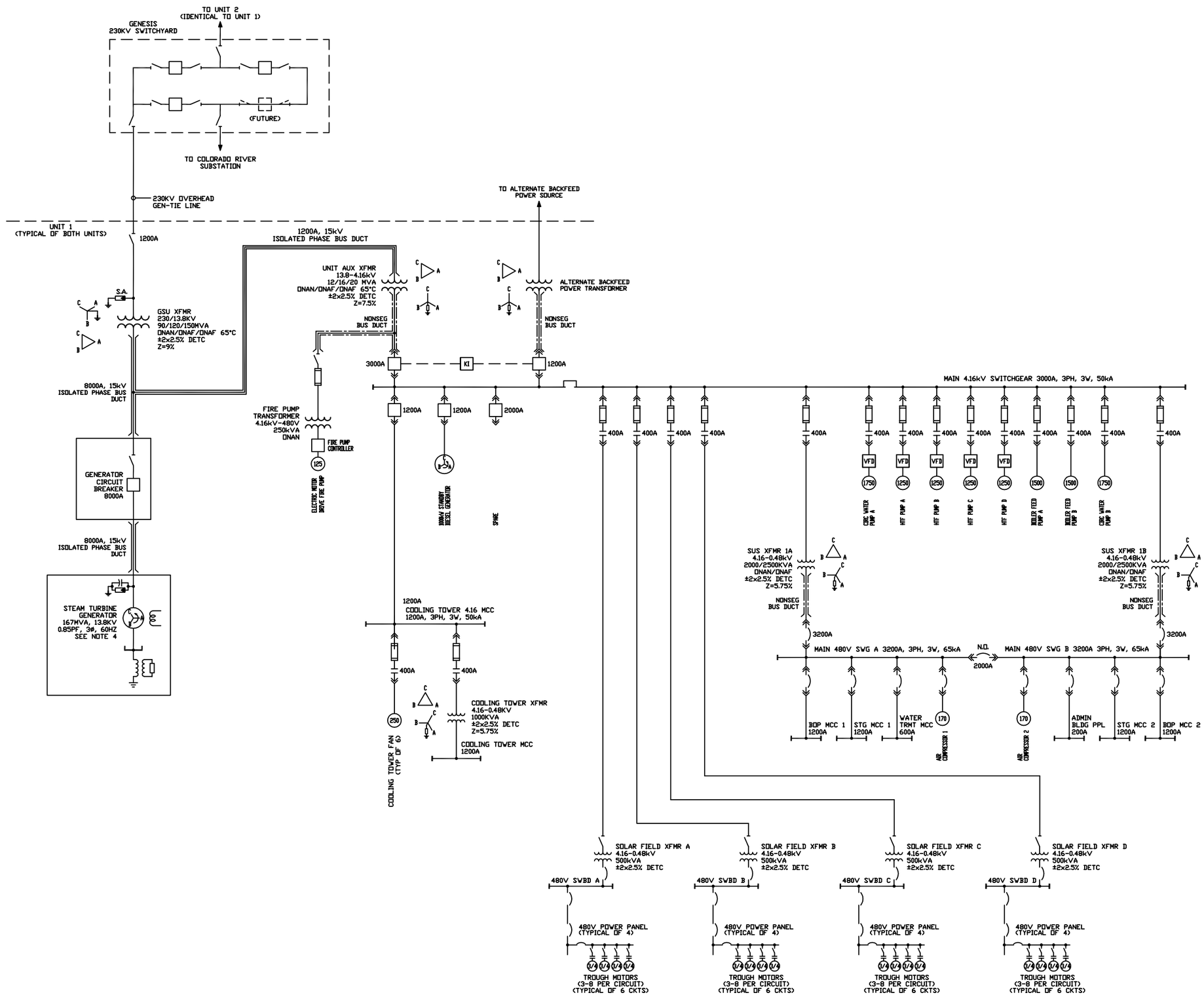

NOTES:

1. NOT FOR CONSTRUCTION.
2. ALL EQUIPMENT SIZING IS PRELIMINARY AND SUBJECT TO CHANGE.
3. FINAL GSU VOLTAGE AND IMPEDANCE RATINGS TO BE CHOSEN TO MEET VAR FLOW REQUIREMENTS FOR SPECIFIC SITE.
4. 140MW IS THE MAXIMUM ESTIMATED OUTPUT FROM THE GENERATOR.

REV	DATE	DESCRIPTION	DRAWN	CHECKED	LEAD DESIGNER	DESIGN ENGR	TECH SPEC	LEAD ELEC	PROJ ENGR	PROJECT MANAGER
B	08 17 09	CHANGED FIGURE NUMBER	PL	JH	PL	JH	JH			NC
A	08 04 09	ISSUED FOR REVIEW	PL	JH	PL	JH	JH			NC

PRELIMINARY STATUS — DATE — REPRESENTS GENERAL DESIGN CONCEPTS BASED ON ASSUMPTIONS. REVIEWED NOT CHECKED.
L.DE

APPROVED STATUS — DATE — REPRESENTS REVIEWED AND APPROVED DESIGN. ANY PORTION MARKED "HOLD" RETAINS PRELIMINARY STATUS.
L.DE

ORIGINATING PERSONNEL	PROFESSIONAL ENGINEER'S SEAL
DRAWN BY: P. LOUEN	
CHECKED BY: J. HODAPP	
LEAD DESIGNER: P. LOUEN	
ENGINEER/TECH SPECIALIST: J. HODAPP	
PROJECT ENGINEERING MANAGER	
PROJECT MANAGER: N. CHRISTO	

Zero Harm — Leadership No incidents Safe Behavior

ORIGINALLY PREPARED UNDER THE RESPONSIBLE SUPERVISION OF
PE: ____ STATE: ____
LIC. NO.: ____ DATE: ____

WorleyParsons
resources & energy

CLIENT/PROJECT TITLE

GENESIS SOLAR, LLC
GENESIS SOLAR ENERGY PROJECT

CONCEPTUAL
KEY ONE LINE DIAGRAM (TYP. 1 OF 2 UNITS)
FIGURE 3.4-7

SCALE: NONE
DRAWING SIZE: ARCH D (36" x 24")
WORLEYPARSONS DWG. NO.: GENI-0-SK-623-206-001
REV: B

GENI-0-SK-623-206-001-R8.dwg
18-Aug-2009 - 07:27