Appendix E

Generator Machine Dynamic Data

Model Name: gast

Description: Single shaft gas turbine

Invocation: gast [<n>] {<name> <kv>} <id> : [mwcap=<value>]

Parameters:

Variable	*Description*	***PROJECT DATA*** *(see note 1)*
r	Permanent droop, pu	**0.0500**
t1	Governor mechanism time constant, sec	0.4000
t2	Turbine power time constant, sec	0.5000
t3	Turbine exhaust temp. time constant, sec	3.0000
lmax	Ambient temperature load limit	1.0000
kt	Temperature limiter gain	3.0000
vmax	Maximum turbine power, pu of mwcap	1.5000
vmin	Minimum turbine power, pu of mwcap	0.0000
dturb	Turbine damping coefficient, pu [NOT USED}	
fidle	Fuel flow at zero power output, pu	0.2000
rmax	Maximum fuel valve opening rate, pu/sec	0.0100
linc	Valve position change allowed at fast rate,pu	0.0500
tltr	Valve pos. averaging time constant, sec	5.000
ltrate	Max. long term fuel valve rate,pu/sec	0.0050
a	Turb.pwr t-const. numerator scale factor	0.0000
b	Turb.pwr t-const. denominator scale factor	1.0000
db1	Intentional deadband width, Hz.	0.0000
eps	Intentional db hysteresis, Hz.	0.0000
db2	Unintentional deadband, MW	0.0000
gv1	Nonlinear gain point 1, p.u. gv	0.0000
pgv1	Nonlinear gain point 1, p.u. power	0.0000
gv2	Nonlinear gain point 2, p.u. gv	0.0000
pgv2	Nonlinear gain point 2, p.u. power	0.0000
gv3	Nonlinear gain point 3, p.u. gv	0.0000
pgv3	Nonlinear gain point 3, p.u. power	0.0000
gv4	Nonlinear gain point 4, p.u. gv	0.0000
pgv4	Nonlinear gain point 4, p.u. power	0.0000
gv5	Nonlinear gain point 5, p.u. gv	0.0000
pgv5	Nonlinear gain point 5, p.u. power	0.0000
gv6	Nonlinear gain point 6, p.u. gv	0.0000
pgv6	Nonlinear gain point 6, p.u. power	0.0000
ka	Governor gain	0.0000
t4	Governor lead time constant, sec	0.0000
t5	Governor lag time constant, sec	0.0000

Notes:
Bold text are customer data from application. All remaining values are representative values for a 'generic' LM6000 based project. Data provided by GE-PSEC staff. (data provided at GE PSLF User's Group Meeting, FLA, 4/5-6/2001)

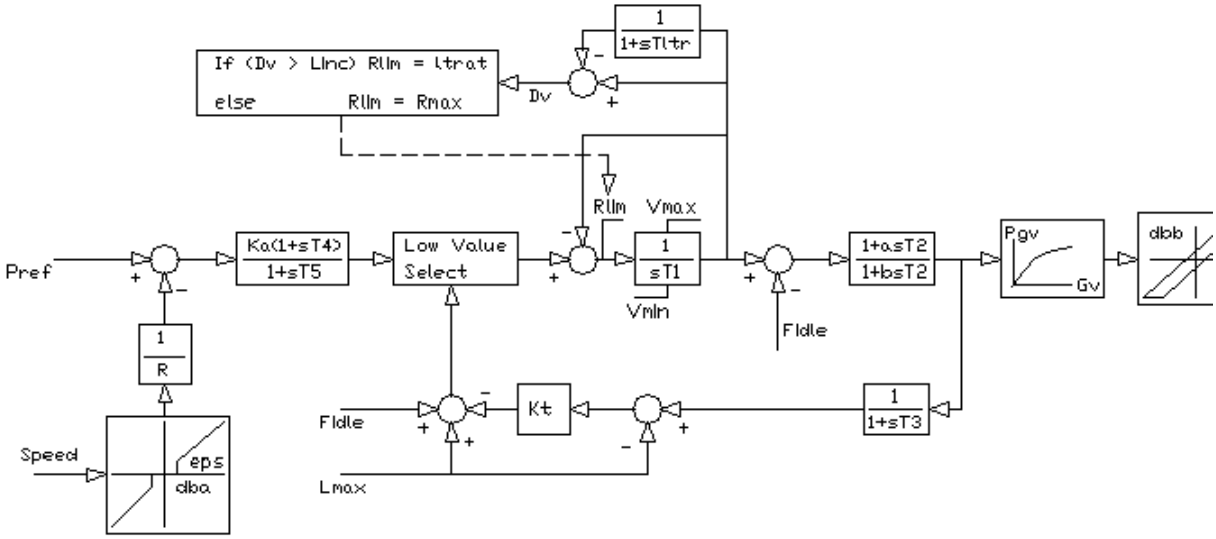
1
1+sTltr
If (Dv > Linc) Rlim = ltrat
else Rlim = Rmax
Dv
Rlim
Vmax
Pref
Ka(1+sT4)
1+sT5
Low Value
Select
1
sT1
Vmin
Fidle
1+asT2
1+bsT2
Pgv
Gv
dbb
1
R
Speed
eps
dba
Fidle
Kt
1
1+sT3
Lmax

APPENDIX E
GENERATOR MACHINE DYNAMIC DATA

Model Name: genrou

Description: Solid rotor generator represented by Equal mutual inductance rotor modeling

Invocation: genrou [<n>] {<name> <kv>} <id> :

Parameters:

Parameters:

Variable	*Description*	***PROJECT DATA***
tpdo	D-axis transient rotor time constant	**9.7000**
tppdo	D-axis subtransient rotor time constant	**0.0400**
tpqo	Q-axis transient rotor time constant	**0.5300**
tppqo	Q-axis subtransient rotor time constant	**0.0400**
h	Inertia constant, sec	**1.1760**
d	Damping factor, pu	0.0000
ld	D-axis synchronous reactance	**2.3500**
lq	Q-axis synchronous reactance	**2.1500**
lpd	D-axis transient reactance	**0.2450**
lpq	Q-axis transient reactance	**0.3500**
lppd	D-axis subtransient reactance	**0.1810**
ll	Stator leakage reactance, pu	**0.1300**
s1	Saturation factor at 1 pu flux	0.0500
s12	Saturation factor at 1.2 pu flux	0.4000
ra	Stator resistance, pu	**0.0053**
rcomp	Compounding resistance voltage control, pu	0.0000
xcomp	Compounding reactance voltage control, pu	0.0000

Notes:

Bold text are customer data from application. All remaining values are default values from GE-PSLF/PSDS version 11.2.

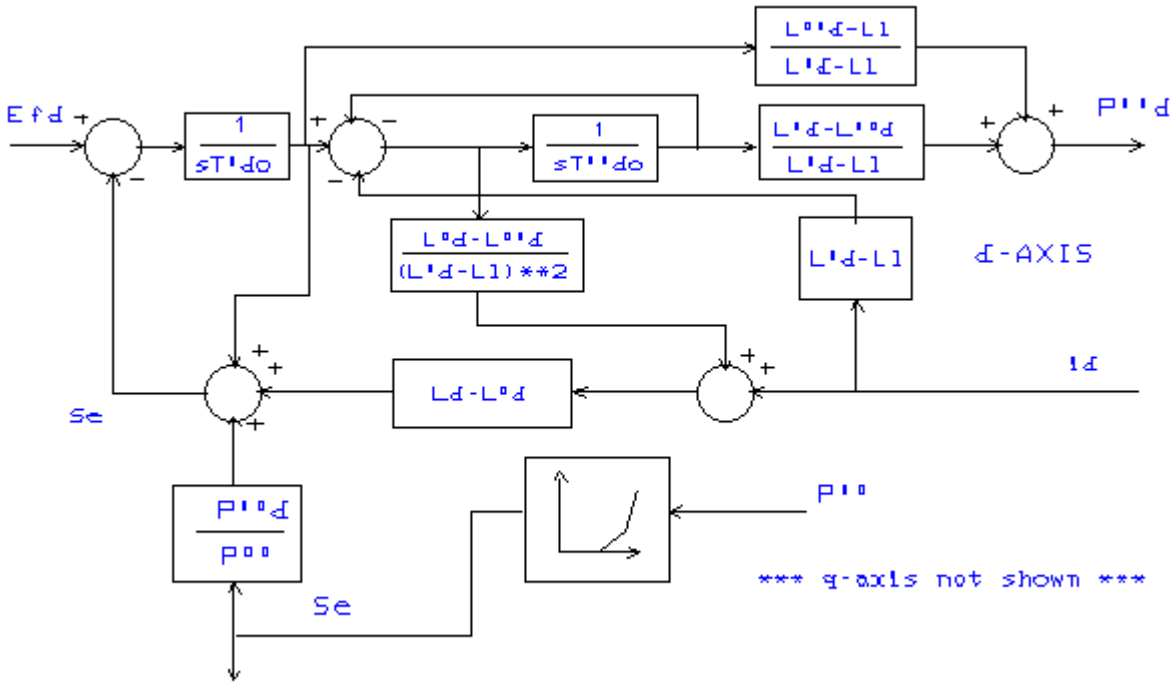
Efd
1
sT'do
1
sT''do
L''d-Ll
L'd-Ll
L'd-L''d
L'd-Ll
P''d
L''d-L''d
(L'd-Ll)**2
L'd-Ll
d-AXIS
Id
Ld-L''d
Se
P''d
P''
P''
*** q-axis not shown ***
Se

Model Name: exac2

Descriptions: Mod IEEE type AC2 excitation system

Invocation: exac1a [<n>] {<name> <kv>} <id>

Parameters:

Variable	*Description*	***PROJECT DATA***
tr	Filter time constant, sec	**0.0220**
tb	Time constant, sec	0.0000
tc	Time constant, sec	0.0000
ka	Voltage regulator gain	**2894**
ta	Time constant, sec	**0.1000**
vamax	Maximum control element output, p.u.	**47.000**
vamin	Minimum control element output, p.u.	**-47.00**
kb	Exciter fld current controller gain, p.u.	1.0000
vrmax	Maximum exciter control signal, p.u.	**47.000**
vrmin	Minimum exciter control signal, p.u.	**0.0000**
te	Exciter time constant, sec	**1.2000**
kl	Exciter field current limiter gain, p.u.	1.0000
kh	Exciter field current feedback gain, p.u.	0.0000
kf	Rate feedback gain, p.u.	**0.0170**
tf	Rate feedback time constant, sec	**1.2000**
kc	Rectifier regulation factor, p.u.	0.0000
kd	Exciter internal reactance, p.u.	0.0000
ke	Exciter field resistance constant, p.u.	**1.0000**
vlr	Maximum exciter field current, p.u.	**10.000**
e1	Field voltage value, 1	**3.0000**
se1	Saturation factor at E1	**2.4400**
e2	Field voltage value, 2	**4.0000**
se2	Saturation factor at E2	**5.2400**

Notes:
1- Bold text is data taken or calculated from customer application.
2- Unused feedforward control blocks set to 1, unused feedback blocks set to 0.

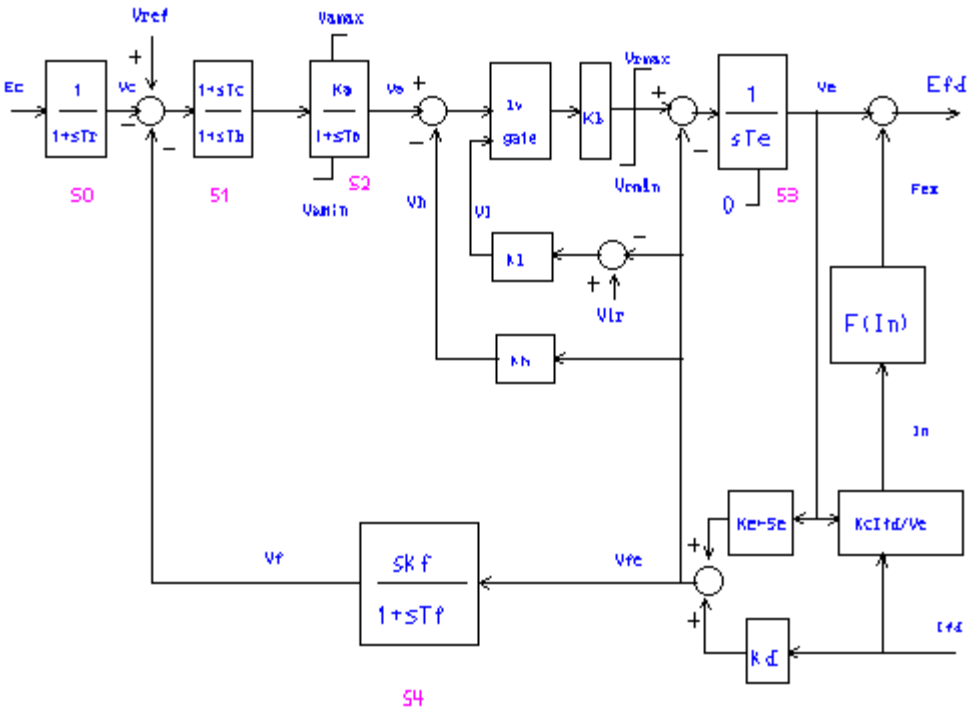
Vref
Vamax
Vrmax
Ec
1
1+sTr
Vc
1+sTc
1+sTb
Ka
1+sTb
Va
1v
gate
Kb
1
sTe
Ve
Efd
S0
S1
S2
Vamin
Vh
Vl
Vrmin
0
S3
Fex
Kl
Vlr
Kh
F(In)
In
Kc-Se
KcIfd/Ve
Vf
SKf
1+sTf
Vfe
Kd
Ifd
S4