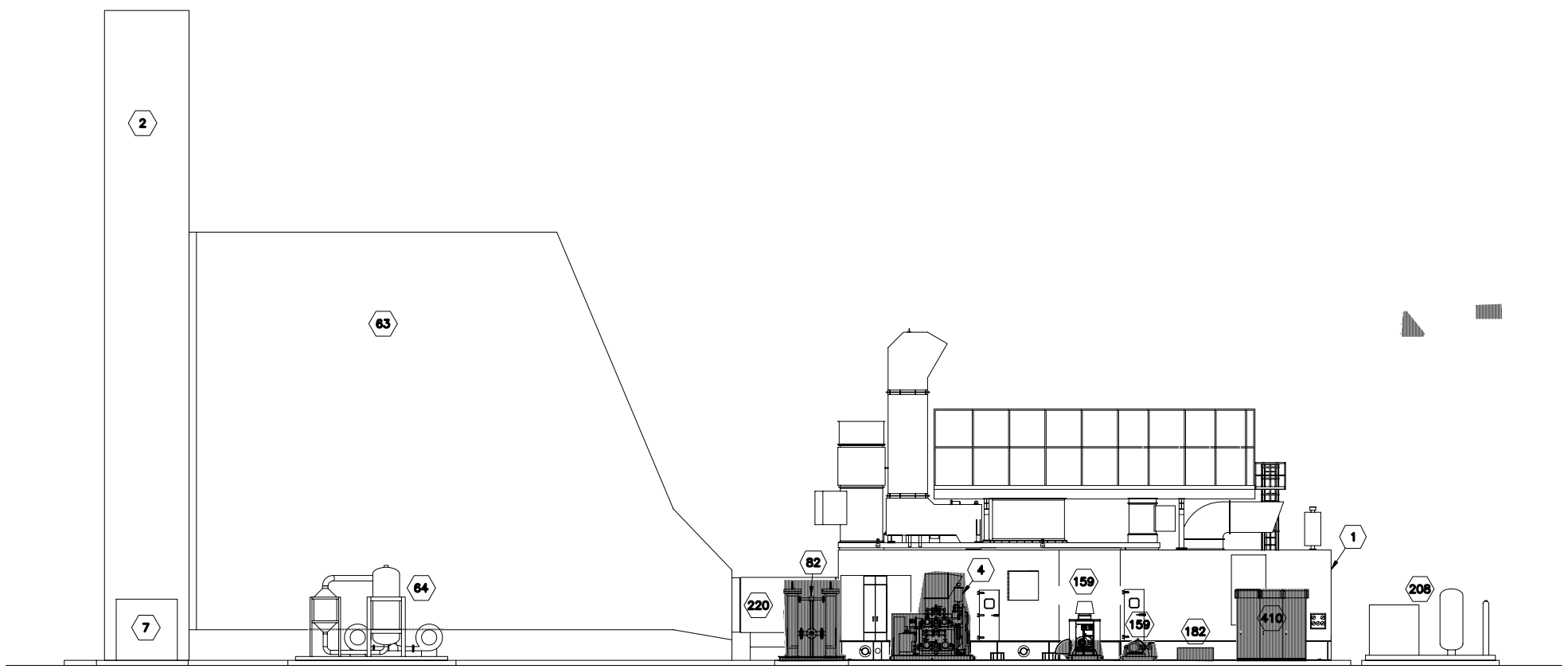

SECTION 1

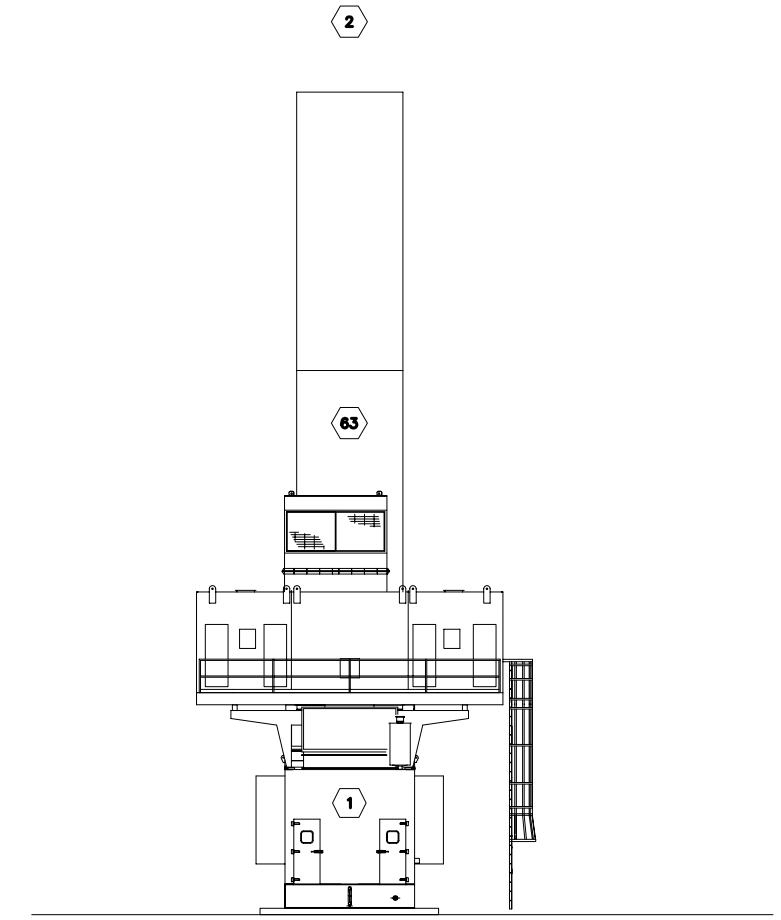

SECTION 2

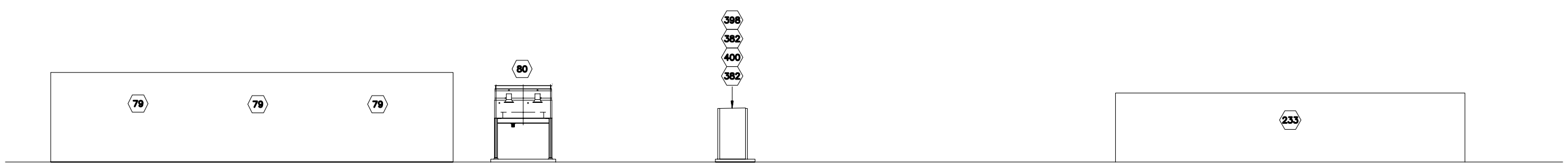

SECTION 3

NOT TO BE USED FOR CONSTRUCTION

10' 0 10' 20'
SCALE 1"=10'

Project No. 51-00167032.00	GWF ENERGY LLC HENRIETTA 230KV SWITCHYARD	ELEVATIONS AND SECTIONS	Figure 2-4B
	URS		

J:\CADSHARED\GWF\GWF-energy\HENRIETTA\SHEETS\FIG2-4B.dwg 8/21/01