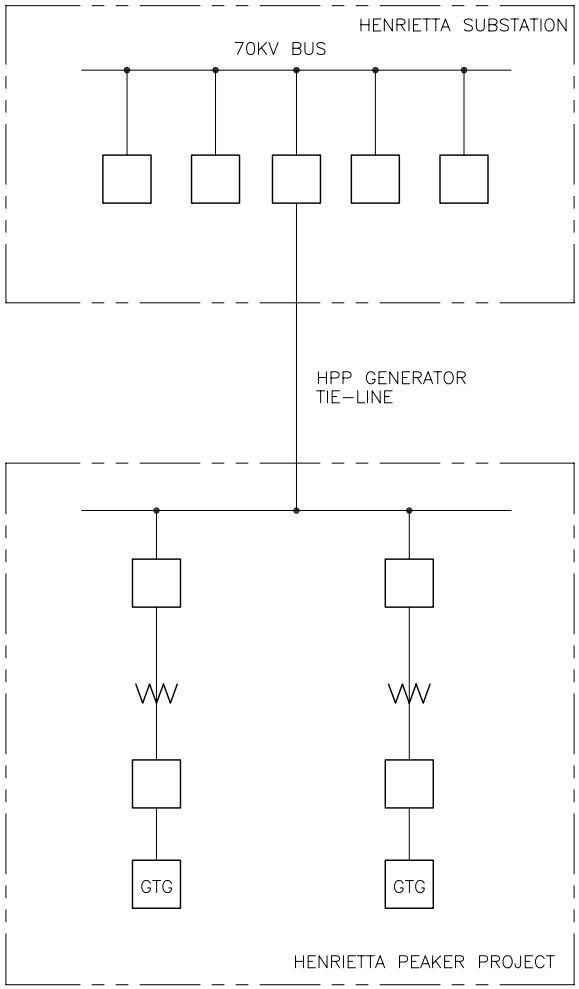

NTS

Project No. 51.00167032	GWF HENRIETTA PEAKER PROJECT	ONE-LINE DIAGRAM FOR HPP SWITCHYARD	Figure 6-2
	URS		

X:\x_env\GWF\henrietta\GWF Reveiws\FIG6-2rev.dwg