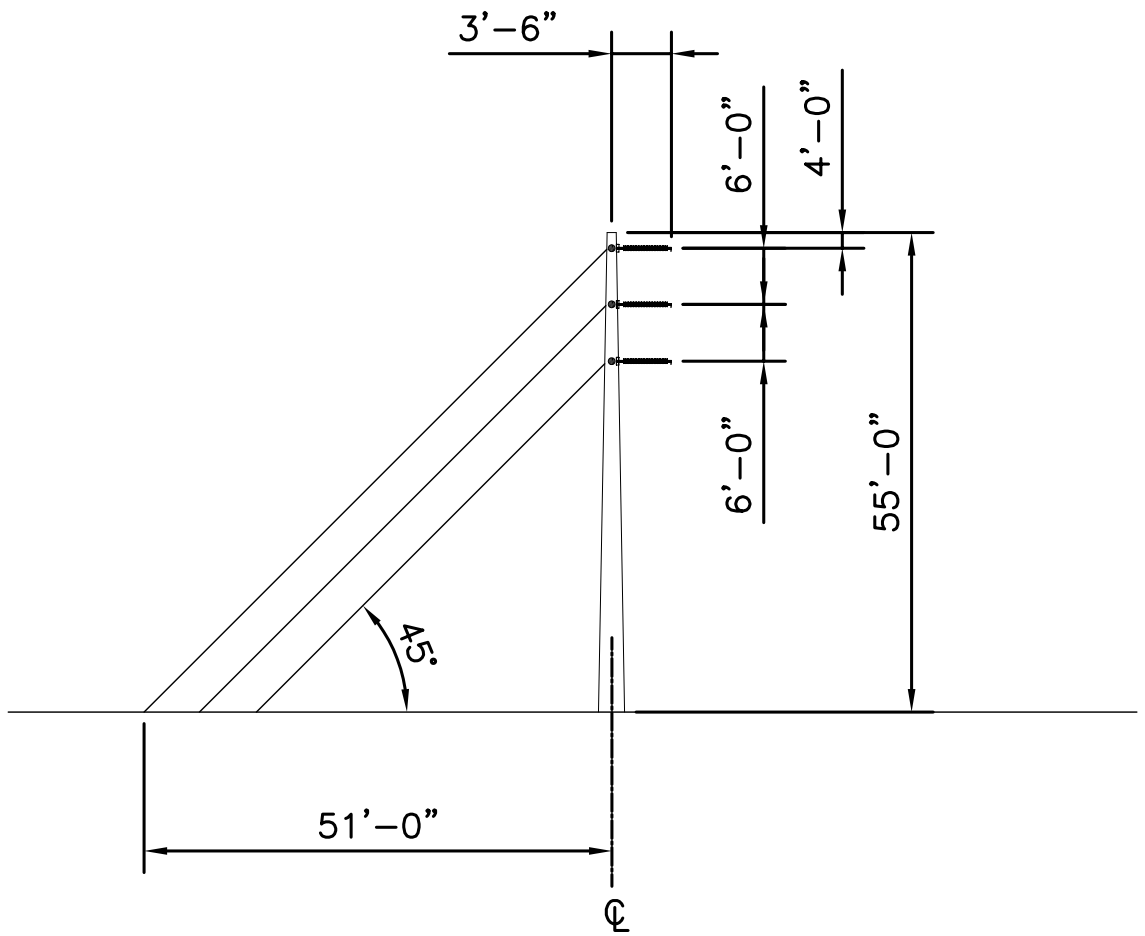

ELEVATION

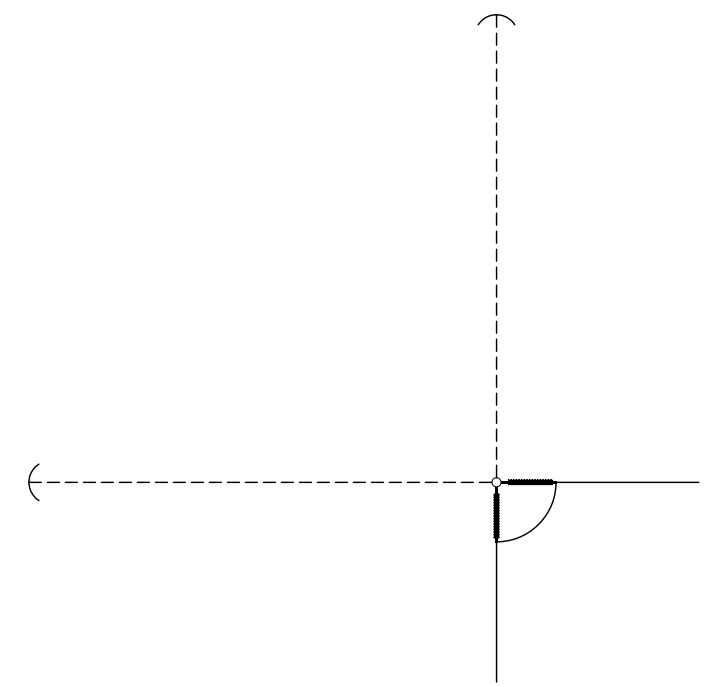

PLAN

Project No. 51–00167032.00	GWF ENERGY LLC HENRIETTA 230KV SWITCHYARD	TRANSMISSION LINE PROFILES	Figure 6–3
	URS		

J:\CADSHARED\GWF-energy\HENRIETTA\SHEETS\FIG6-3.dwg 8/23/01