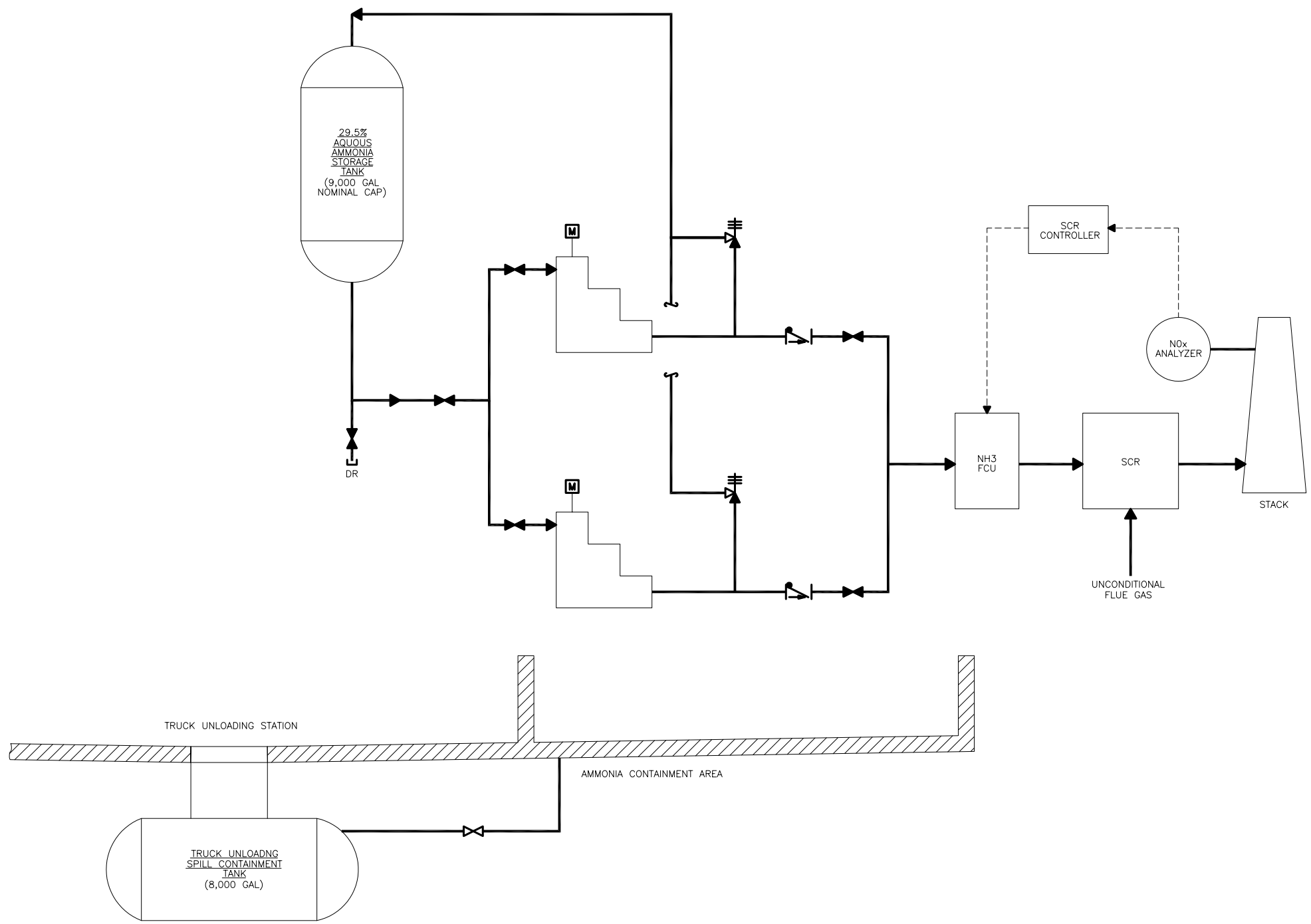

NTS

NOT TO BE USED FOR CONSTRUCTION

Project No. 51-00167032.00	GWF ENERGY LLC HENRIETTA 230KV SWITCHYARD	PIPING AND INSTRUMENTATION DIAGRAM FOR AQUEOUS AMMONIA SYSTEM	Figure 8.12-2
	URS		

J:\CADSHARED\GWF-energy\HENRIETTA\SHEETS\FIG8.12-2.dwg 8/23/01