GWF

GWF ENERGY LLC

August 23, 2001

Mr. Steve Larson
Executive Director
California Energy Commission
1516 Ninth Street
Sacramento, CA 95814

RE: Application for Certification
Henrietta Peaker Project – GWF Energy, LLC

Dear Mr. Larson:

GWF Energy, LLC is pleased to submit its Application for Certification for the Henrietta Peaker Plant, a nominal 91.4 megawatt (MW) simple cycle natural gas-fired power plant to be located west of the City of Lemoore, in Kings County. The project will interconnect to the PG&E Henrietta Substation through a 550 foot, 70 kv transmission line. Natural gas interconnection will be provided via a 2.2 mile natural gas supply line, and water supply will be obtained from the Westlands Water District and Kings County through a 16-foot water supply pipeline. A newly constructed on-site switchyard will also be part of the project.

The Henrietta Peaker Project will supply power to the California Department of Water Resources (DWR) under a 10-year contract, executed by both parties on May 11, 2001. A primary goal of the project is to provide this needed power to the people of California through DWR beginning in summer peak of June 2002.

The Henrietta Peaker Project has been designed to be constructed and operated in compliance with all applicable laws, ordinances, regulations and standards (LORS). All potentially significant environmental impacts will be mitigated, and the project will not have an adverse impact on the electrical system. As a simple cycle project, its water use will be minimal, and it will utilize a near-zero discharge system for wastewater. The project will also apply best available control technology (BACT) for reduction of air emissions. The project will be a minor source under Federal Prevention of Significant Deterioration (PSD) Regulations, and will not require a PSD Permit.

GWF Energy, LLC therefore requests that the Henrietta Peaker Project be processed under the expedited four-month licensing process envisioned under section 25552 of the Public Resources Code (PRC). Because of the 10-year length of its contract as a simple cycle peaker with the Department of Water Resources, the project is being financed on

4300 RAILROAD AVE., PITTSBURG, CALIFORNIA 94565 • TEL. (925) 431-1444 • FAX (925) 431-0515

these assumptions, and GWF Energy, LLC requests that the Commission utilize its discretion to suspend the three-year license restriction contained in section 25552. Alternatively, should the legislature eliminate this limitation, GWF Energy, LLC requests that its application be processed under such legislation.

GWF Energy, LLC looks forward to working with the Commission staff, our neighbors, and the community on the project.

Sincerely,

Doug Wheeler
Vice President, Project Development
GWF Energy, LLC

IN THE MATTER OF THE APPLICATION FOR THE CERTIFICATION OF GWF ENERGY, LLC, HENRIETTA PEAKER PROJECT	VERIFICATION IN SUPPORT OF THE APPLICATION FOR CERTIFICATION OF GWF ENERGY, LLC, HENRIETTA PEAKER PROJECT

I, Doug Wheeler, Vice President, Project Development, GWF Energy, LLC, Applicant in the above matter, am authorized to make this verification on behalf of GWF Energy, LLC.

I have read and know of the contents of the Application for Certification for GWF Energy, LLC, Henrietta Peaker Project ("Application").

I am informed and believe that the matters stated in the Application are true and on that ground I allege that the matters stated herein are true.

I declare under penalty of perjury that the foregoing is true and correct. Executed on August 23, 2001 at 4300 Railroad Ave, Pittsburg, CA 94565.

Doug Wheeler
Vice President, Project Development
GWF Energy, LLC

APPLICATION FOR CERTIFICATION

HENRIETTA PEAKER PROJECT

KINGS COUNTY, CALIFORNIA

VOLUME I – TEXT

Prepared for:

GWF Energy LLC
4300 Railroad Avenue
Pittsburg, CA 94565

Contact: Doug Wheeler (925) 431-1443

Prepared by

URS Corporation
500 12th Street, Suite 200
Oakland, CA 94607-4014

Contact: David Stein (510) 874-3143

August 2001

TABLE OF CONTENTS

Page

1.0 EXECUTIVE SUMMARY 1-1

1.1 Introduction 1-1
1.2 Project Ownership 1-2
1.3 Demand Conformance 1-3
1.4 Project Schedule 1-3
1.5 Facility Location and Description 1-3
1.5.1 Facility Location 1-3
1.5.2 Facility Description 1-4
1.5.3 Site Layout 1-5
1.5.4 Transmission Interconnection 1-6
1.5.5 Fuel Supply 1-6
1.5.6 Water Supply 1-6
1.5.7 Waste Handling and Control 1-7
1.5.8 Site Access 1-7
1.5.9 Facility Closure 1-7
1.6 Plant Operation 1-7
1.7 Safety 1-8
1.8 Environmental Considerations 1-9
1.8.1 Air Quality 1-10
1.8.2 Biological Resources 1-11
1.8.3 Cultural Resources 1-11
1.8.4 Land Use 1-12
1.8.5 Noise 1-13
1.8.6 Public Health 1-13
1.8.7 Worker Health and Safety 1-14
1.8.8 Socioeconomics 1-15
1.8.9 Agriculture and Soils 1-16
1.8.10 Traffic and Transportation 1-16
1.8.11 Visual Resources 1-16
1.8.12 Hazardous Materials Handling 1-17
1.8.13 Waste Management 1-17
1.8.14 Water Resources 1-18
1.8.15 Geologic Resources and Hazards 1-18
1.8.16 Paleontological Resources 1-18
1.9 Cumulative Impacts 1-19
1.10 Summary 1-19

2.0 PROJECT DESCRIPTION 2-1

2.1 Introduction 2-1
2.2 Power Plant Description, Design, and Operation 2-2
2.2.1 Site Plan and Access 2-2
2.2.2 Process Description 2-2

2.2.3 Power Plant Cycle 2-3
2.2.4 Combustion Turbine Generator 2-3
2.2.4.1 Air Pollution Control Systems 2-4
2.2.4.2 Emergency Diesel Engine 2-4
2.2.5 Major Electrical Equipment and Systems 2-4
2.2.5.1 AC Power – Transmission 2-5
2.2.5.2 AC Power – Distribution to Auxiliaries 2-5
2.2.5.3 DC Power Supply 2-6
2.2.5.4 Essential Service AC Uninterruptable Power Supply 2-6
2.2.6 Fuel System 2-7
2.2.7 Water Supply and Use 2-7
2.2.7.1 Water Requirements 2-8
2.2.7.2 Water Supply 2-8
2.2.7.3 Water Quality 2-8
2.2.7.4 Water Treatment 2-8
2.2.8 Plant Cooling Systems 2-8
2.2.9 Waste Management 2-9
2.2.9.1 Wastewater Collection, Treatment, and Disposal 2-9
2.2.9.2 Stormwater Management 2-9
2.2.9.3 Solid Waste 2-10
2.2.9.4 Hazardous Wastes 2-10
2.2.10 Management of Hazardous Materials 2-10
2.2.11 Emission Control and Monitoring 2-11
2.2.11.1 NOx Emission Control 2-11
2.2.11.2 CO and VOC Emission Control 2-12
2.2.11.3 Particulate Emission Control 2-12
2.2.11.4 Continuous Emission Monitoring 2-12
2.2.12 Fire Protection 2-12
2.2.13 Plant Auxiliaries 2-13
2.2.13.1 Lighting 2-13
2.2.13.2 Grounding 2-13
2.2.13.3 Control and Information System 2-14
2.2.13.4 Cathodic Protection 2-15
2.2.13.5 Freeze Protection 2-15
2.2.13.6 Service Air 2-15
2.2.13.7 Instrument Air 2-15
2.2.14 Interconnect to Electrical Grid 2-15
2.2.15 Project Construction 2-16
2.2.16 Site Grading 2-16
2.2.17 Power Plant Operation 2-17
2.3 Facility Safety Design 2-17
2.3.1 Natural Hazards 2-17
2.3.2 Emergency Systems and Safety Precautions 2-18
2.3.2.1 Fire Protection Systems 2-18
2.3.2.2 Personnel Safety Program 2-19

2.4 Facility Reliability 2-19
2.4.1 Plant Availability 2-19
2.4.2 Redundancy of Critical Components 2-20
2.4.2.1 Power Block 2-20
2.4.2.2 CIS 2-21
2.4.2.3 Demineralized Water System 2-21
2.4.2.4 Compressed Air System 2-21
2.4.3 Fuel Availability 2-22
2.4.4 Water Availability 2-22
2.4.5 Project Quality Control 2-22
2.4.5.1 Project Stages 2-23
2.4.5.2 Quality Control Records 2-24
2.5 Facility Design Laws, Ordinances, Regulations, and Standards (LORS) 2-25
2.5.1 Overview 2-25
2.5.2 Facility Design 2-25
2.5.2.1 Civil and Structural Engineering 2-25
2.5.2.2 Mechanical Engineering 2-25
2.5.2.3 Electrical Engineering 2-25
2.5.3 Typical Codes and Standards for Construction and Design 2-26

3.0 DEMAND CONFORMANCE 3-1
3.1 Integrated Assessment of Need 3-1
3.2 References 3-1

4.0 FACILITY CLOSURE 4-1
4.1 Temporary Closure 4-1
4.2 Permanent Closure 4-2

5.0 PROJECT ALTERNATIVES 5-1
5.1 No Project 5-1
5.2 Alternative Site Locations 5-2
5.2.1 Proposed Site 5-2
5.2.2 Applicant's Site Selection Process 5-3
5.2.2.1 Description and Comparison of Sites 5-3
5.2.2.2 Proposed Site 5-5
5.3 Alternative Project Configurations 5-5
5.3.1 Combustion Turbine Generator 5-6
5.3.2 Alternative Fuels 5-6
5.3.3 Alternative Cycles 5-6
5.3.4 Alternative Water Sources and Technologies 5-7
5.3.5 Preferred Project Configuration 5-7
5.4 Alternative Transmission Routes and Interconnections 5-7
5.5 Alternative Natural Gas Interconnection Routes 5-8
5.6 References 5-8

6.0 ELECTRIC TRANSMISSION 6-1

6.1 Transmission Line Engineering 6-1
6.1.1 Existing Facilities 6-1
6.1.2.1 Henrietta Peaker Project Switchyard 6-1
6.1.2.2 Henrietta Peaker Project 70-kV Transmission Line 6-2
6.1.2.3 Other 6-3
6.1.3 Applicable Regulations 6-4
6.2 Transmission Line Electrical Effects 6-4
6.2.1 Project Characteristics 6-4
6.2.1.1 Assumptions 6-4
6.2.1.2 Conductor Analysis 6-5
6.2.2 Aviation Safety 6-6
6.2.3 Audible Noise and Radio/TV Interference 6-6
6.2.4 Electric and Magnetic Fields 6-8
6.2.4.1 Transmission Line Electromagnetic Field Reduction 6-11
6.2.4.2 Conclusion on Electromagnetic Fields 6-12
6.2.5 Induced Current and Voltages 6-12
6.2.6 Nuisance Shocks 6-13
6.2.7 Fire Hazards 6-13
6.2.8 Cumulative Impacts 6-14
6.3 Transmission System Evaluation 6-14
6.3.1 PG&E Facilities Cost Report Study 6-14
6.4 Proposed Conditions of Certification 6-14
6.5 Jurisdiction 6-14
6.6 Agency Contacts 6-14

7.0 NATURAL GAS SUPPLY 7-1

7.1 The Proposed Route 7-2
7.2 Alternative Routes 7-2
7.3 Natural Gas Quality 7-2
7.4 Construction Practices 7-2
7.5 Pipeline Operations 7-3
7.6 Permits 7-4
7.7 References 7-4

8.0 ENVIRONMENTAL IMPACT 8-1

8.1 Air Quality 8.1-1
8.1.1 Laws, Ordinances, Regulations, and Standards 8.1-2
8.1.1.1 Ambient Air Quality Standards 8.1-3
8.1.1.2 Prevention of Significant Deterioration Requirements 8.1-4
8.1.1.3 Acid Rain Program Requirements 8.1-5
8.1.1.4 New Source Performance Standards 8.1-5
8.1.1.5 Federally Mandated Operating Permits 8.1-6
8.1.1.6 Power Plant Siting Requirements 8.1-7
8.1.1.7 Air Toxics “Hot Spots” Program 8.1-7

8.1.1.8 Determination of Compliance, Authority to Construct, and Permit to Operate 8.1-7
8.1.1.9 New Source Review Requirements 8.1-8
8.1.1.10 Other Prohibitory Rules 8.1-8
8.1.2 Affected Environment 8.1-9
8.1.2.1 Climatology 8.1-9
8.1.2.2 Existing Air Quality 8.1-11
8.1.3 Best Available Control Technology 8.1-12
8.1.3.1 BACT Assessment for the Gas Turbines 8.1-13
8.1.3.2 BACT Assessment for Emergency Diesel Generator 8.1-19
8.1.3.5 Fugitive Dust Control 8.1-22
8.1.4 Environmental Consequences 8.1-23
8.1.4.1 Construction Emissions 8.1-23
8.1.4.2 Operational Emissions 8.1-24
8.1.4.3 Air Dispersion Modeling 8.1-25
8.1.4.4 Compliance with Ambient Air Quality Standards 8.1-29
8.1.5 Commissioning Activities 8.1-31
8.1.6 Cumulative Impacts 8.1-33
8.1.7 Emission Offsets 8.1-33
8.1.7.1 Emission Offset Requirements 8.1-33
8.1.7.2 Emission Offset Supply 8.1-33
8.1.8 Laws, Ordinances, Regulations, and Standards 8.1-34
8.1.9 Proposed Conditions of Certification 8.1-34
8.1.10 Agency Contacts 8.1-34
8.1.11 References 8.1-35
8.2 Biological Resources 8.2-1
8.2.1 Affected Environment 8.2-1
8.2.1.1 Regional Setting 8.2-1
8.2.1.2 Vegetation 8.2-1
8.2.1.3 Wildlife 8.2-2
8.2.1.4 Sensitive Species 8.2-2
8.2.2 Biological Survey 8.2-2
8.2.2.1 Survey Methodology 8.2-2
8.2.2.2 Results 8.2-3
8.2.3 Environmental Consequences 8.2-4
8.2.3.1 Construction Phase 8.2-4
8.2.3.2 Operations and Maintenance Phase 8.2-4
8.2.4 Growth-Inducing Impacts 8.2-4
8.2.5 Cumulative Impacts 8.2-5
8.2.6 Mitigation Measures 8.2-5
8.2.7 Applicable Laws, Ordinances, Regulations, and Standards 8.2-5
8.2.8 Compliance with Applicable LORS 8.2-7
8.2.8.1 Federal Endangered Species Act 8.2-7
8.2.8.2 Migratory Bird Treaty Act 8.2-8
8.2.8.3 Clean Water Act 8.2-8

8.2.8.4 California Environmental Quality Act 8.2-8
8.2.8.5 California Endangered Species Act 8.2-8
8.2.8.6 Fish and Game Code 8.2-8
8.2.9 Proposed Conditions of Certification 8.2-8
8.2.10 Applicable Permits 8.2-9
8.2.11 Other Required Permits/Approvals 8.2-9
8.2.12 Agency Contacts 8.2-9
8.2.13 References 8.2-9
8.3 Cultural Resources 8.3-1
8.3.1 Affected Environment 8.3-2
8.3.1.1 Study Area 8.3-2
8.3.1.2 Project Description 8.3-2
8.3.1.3 Environmental Setting 8.3-2
8.3.1.4 Prehistory 8.3-2
8.3.1.5 Ethnography 8.3-5
8.3.1.6 History 8.3-7
8.3.2 Cultural Resources Inventory 8.3-8
8.3.2.1 Documentary Research 8.3-8
8.3.2.2 Native American Consultation 8.3-8
8.3.2.3 Key Personnel Qualifications 8.3-9
8.3.2.4 Field Survey Methodology and Coverage 8.3-9
8.3.2.5 Sensitivity 8.3-10
8.3.3 Environmental Consequences and Direct, Indirect, and Cumulative Impacts 8.3-11
8.3.4 Mitigation Measures 8.3-11
8.3.4.1 General Mitigation Measures 8.3-11
8.3.4.2 Proposed Conditions of Certification 8.3-12
8.3.5 Laws, Ordinances, Regulations, and Standards 8.3-12
8.3.5.1 Federal Authorities and Administering Agencies 8.3-12
8.3.5.2 State Authorities and Administering Agencies 8.3-14
8.3.5.3 Local Authorities and Administering Agencies 8.3-15
8.3.5.4 Industry Codes and Standards 8.3-15
8.3.6 Involved Agencies and Agency Contacts 8.3-15
8.3.7 Permits Required and Schedule 8.3-15
8.3.8 References 8.3-16
8.4 Land Use 8.4-1
8.4.1 Affected Environment 8.4-1
8.4.2 Land Use Plans and Policies 8.4-2
8.4.2.1 City and County 8.4-2
8.4.2.2 State 8.4-3
8.4.2.3 Federal 8.4-4
8.4.3 Description of the HPP and Components 8.4-4
8.4.3.1 Proposed HPP 8.4-4
8.4.3.2 Proposed Transmission Route 8.4-8
8.4.3.3 Proposed Natural Gas Pipeline Route 8.4-9

8.4.3.4 Water Supply Pipeline Connection 8.4-10
8.4.3.5 Recent Applications and Trends in Zoning Changes.. 8.4-10
8.4.4 Environmental Consequences 8.4-11
8.4.4.1 Significance Criteria 8.4-11
8.4.4.2 Impacts of the Proposed HPP 8.4-11
8.4.4.3 Impacts of the Proposed Transmission Line, Natural Gas Pipeline, and Water Supply Pipeline 8.4-13
8.4.5 Indirect Effects 8.4-15
8.4.6 Cumulative Impacts..... 8.4-15
8.4.7 Conditions of Certification 8.4-16
8.4.8 Agency Contacts..... 8.4-16
8.4.9 LORS Compliance 8.4-17
8.4.10 Schedule of Other Required Permits/Approvals 8.4-17
8.4.11 References 8.4-17
8.5 Noise 8.5-1
8.5.1 Affected Environment 8.5-1
8.5.2 Acoustical Terminology 8.5-1
8.5.3 Ambient Noise Survey 8.5-3
8.5.4 Environmental Consequences 8.5-3
8.5.4.1 Operational Noise Levels..... 8.5-3
8.5.4.2 Worker Noise Exposure..... 8.5-5
8.5.4.3 Construction Noise Levels..... 8.5-5
8.5.5 Equipment Design Features..... 8.5-6
8.5.6 Mitigation Measures..... 8.5-7
8.5.6.1 Construction Noise 8.5-7
8.5.6.2 Worker Noise Exposure..... 8.5-7
8.5.7 LORS Compliance 8.5-7
8.5.7.1 Federal 8.5-7
8.5.7.2 State 8.5-8
8.5.7.3 County..... 8.5-9
8.5.8 Agency Contacts..... 8.5-10
8.5.9 Schedule of Other Required Permits/Approvals 8.5-10
8.5.10 Proposed Conditions of Certification 8.5-10
8.5.11 References 8.5-10
8.6 Public Health..... 8.6-1
8.6.1 Affected Environment 8.6-1
8.6.2 Environmental Consequences 8.6-2
8.6.2.1 Construction Emissions 8.6-2
8.6.2.2 Operational Emissions 8.6-2
8.6.2.3 Public Health Impact Assessment Approach..... 8.6-3
8.6.2.4 Model Input Parameters..... 8.6-5
8.6.2.5 Calculation of Health Effects..... 8.6-6
8.6.2.6 Health Effects Significance Criteria 8.6-6
8.6.2.7 Estimated Lifetime Cancer Risk 8.6-6
8.6.2.8 Estimated Chronic and Acute Total Hazard Indices..... 8.6-7

8.6.2.9 Uncertainty in the Public Health Impact Assessment... 8.6-7
8.6.2.10 Criteria Pollutants ... 8.6-9
8.6.3 Other Public Health Risks ... 8.6-9
8.6.3.1 Chemicals Stored and Used Onsite ... 8.6-9
8.6.3.2 Electromagnetic Field Exposure ... 8.6-9
8.6.3.3 Cumulative Impacts ... 8.6-12
8.6.4 Laws, Ordinances, Regulations, and Standards ... 8.6-12
8.6.5 Agency Contacts ... 8.6-13
8.6.6 Permits/Additional Approvals with Agencies ... 8.6-14
8.6.7 Compliance with Laws, Ordinances, Regulations, and Standards ... 8.6-14
8.6.8 Proposed Conditions of Certification ... 8.6-14
8.6.9 References ... 8.6-14
8.7 Worker Health and Safety ... 8.7-1
8.7.1 Affected Environment ... 8.7-1
8.7.2 Laws, Ordinances, Regulations, and Standards ... 8.7-2
8.7.3 Occupational Safety and Health ... 8.7-2
8.7.3.1 Construction Health and Safety Programs ... 8.7-3
8.7.3.2 Operation and Maintenance Health and Safety Programs ... 8.7-7
8.7.4 Safety Training Programs ... 8.7-13
8.7.4.1 Construction Safety Training Program ... 8.7-13
8.7.4.2 Operation and Maintenance Safety Training Program ... 8.7-14
8.7.5 Proposed Conditions of Certification ... 8.7-15
8.7.6 Permits Required and Permit Schedule ... 8.7-15
8.7.7 Agency Contacts ... 8.7-16
8.7.8 References ... 8.7-16
8.8 Socioeconomics ... 8.8-1
8.8.1 Affected Environment ... 8.8-1
8.8.1.1 Labor Force, Employment, and Industry ... 8.8-1
8.8.1.2 Population and Housing ... 8.8-3
8.8.1.3 Public Services and Utilities ... 8.8-6
8.8.1.4 Public Finance and Fiscal Issues ... 8.8-9
8.8.2 Environmental Consequences ... 8.8-10
8.8.2.1 Significance Criteria ... 8.8-10
8.8.2.2 Economic Impacts ... 8.8-10
8.8.2.3 Population and Housing Impacts ... 8.8-13
8.8.2.4 Impacts on Public Services and Utilities ... 8.8-14
8.8.2.5 Fiscal Impacts ... 8.8-15
8.8.3 Environmental Justice ... 8.8-16
8.8.4 Cumulative Impacts ... 8.8-21
8.8.5 Growth-Inducing Impacts ... 8.8-22
8.8.6 Laws, Ordinances, Regulations, and Standards ... 8.8-22
8.8.6.1 Federal ... 8.8-22

8.8.6.2 State 8.8-22
8.8.6.3 Local 8.8-23
8.8.7 Proposed Conditions of Certification 8.8-23
8.8.8 Involved Agencies and Agency Contacts 8.8-23
8.8.9 Compliance with Laws, Ordinances, Regulations, and Standards 8.8-24
8.8.10 Permits Required and Permit Schedule 8.8-24
8.8.11 References 8.8-24
8.9 Agriculture and Soils 8.9-1
8.9.1 Site Setting 8.9-1
8.9.2 Soil Types Affected and Potential Impacts 8.9-1
8.9.2.1 Henrietta Peaker Plant Site and Construction Laydown Area 8.9-2
8.9.2.3 Proposed Natural Gas Pipeline Routes 8.9-3
8.9.2.4 Summary of Effects 8.9-4
8.9.3 Growth-Inducing Impacts 8.9-5
8.9.4 Cumulative Impacts 8.9-5
8.9.5 Mitigation Measures 8.9-6
8.9.5.1 General Mitigation Measures 8.9-6
8.9.5.2 Specific Mitigation Measures 8.9-6
8.9.6 Laws, Ordinances, Regulations, and Standards 8.9-7
8.9.7 Proposed Conditions of Certifications 8.9-9
8.9.8 Involved Agencies and Agency Contacts 8.9-9
8.9.9 Required Permits 8.9-9
8.9.10 References 8.9-9
8.10 Traffic and Transportation 8.10-1
8.10.1 Affected Environment 8.10-1
8.10.1.1 Regional Setting 8.10-2
8.10.1.2 Local Setting 8.10-6
8.10.2 Environmental Consequences 8.10-7
8.10.2.1 Significance Criteria 8.10-7
8.10.2.2 Construction Impacts 8.10-8
8.10.2.3 Operation and Maintenance Impacts 8.10-13
8.10.2.4 Cumulative Effects 8.10-14
8.10.2.5 Potential Indirect Effects 8.10-14
8.10.3 Mitigation Measures 8.10-15
8.10.3.1 Construction 8.10-15
8.10.3.2 Operation and Maintenance 8.10-15
8.10.4 Laws, Ordinances, Regulations, and Standards 8.10-15
8.10.4.1 Federal 8.10-15
8.10.4.2 State 8.10-15
8.10.4.3 Local 8.10-16
8.10.5 Involved Agencies and Contacts 8.10-17
8.10.6 Compliance with Laws, Ordinances, Regulations, and Standards 8.10-17

8.10.7 Proposed Conditions of Certification 8.10-17
8.10.8 References 8.10-17
8.11 Visual Resources 8.11-1
8.11.1 Affected Environment 8.11-1
8.11.1.1 Description of the HPP Site 8.11-2
8.11.1.2 Characteristics of the HPP Site 8.11-2
8.11.1.3 Visual Resources in the Vicinity of the HPP Site 8.11-2
8.11.1.4 Visibility of the HPP 8.11-4
8.11.1.5 Potential for Visible Steam Plumes 8.11-5
8.11.2 Environmental Consequences 8.11-5
8.11.2.1 Significance Criteria 8.11-5
8.11.2.2 Visual Effects 8.11-6
8.11.3 Potential Cumulative Impacts 8.11-8
8.11.4 Laws, Ordinances, Regulations, and Standards 8.11-8
8.11.4.1 Federal 8.11-8
8.11.4.2 State 8.11-8
8.11.4.3 Local 8.11-9
8.11.5 Mitigation Measures 8.11-10
8.11.6 Proposed Conditions of Certification 8.11-10
8.11.7 Agency Contacts and Required Permits or Approvals 8.11-10
8.11.8 References 8.11-11
8.12 Hazardous Materials Handling 8.12-1
8.12.1 Affected Environment 8.12-1
8.12.1.1 Flooding Concerns 8.12-2
8.12.1.2 Seismic Concerns 8.12-2
8.12.2 Potential Environmental and Human Health Effects 8.12-3
8.12.2.1 Hazardous Materials Used in the Construction Phase 8.12-3
8.12.2.2 Hazardous Materials Used in the Operation and Maintenance Phase 8.12-4
8.12.2.3 Acutely Hazardous Substances Used in Operation of the Project 8.12-4
8.12.3 Offsite Consequence Analysis 8.12-6
8.12.3.1 Accidental Release Scenarios 8.12-7
8.12.3.2 Meteorological Conditions 8.12-10
8.12.3.3 Endpoints 8.12-10
8.12.3.4 Atmospheric Dispersion Modeling 8.12-11
8.12.3.5 Discussion of OCA Results 8.12-11
8.12.3.6 RMP Program Level 8.12-13
8.12.4 Fire and Explosion Risk 8.12-13
8.12.4.1 Lubricating Oils 8.12-14
8.12.4.2 Natural Gas 8.12-14
8.12.5 Proposed Mitigation Measures 8.12-15
8.12.5.1 Transportation/Delivery of Hazardous Materials 8.12-16
8.12.5.2 Hazardous Materials Business Plan 8.12-16

8.12.5.3 Risk Management Plan 8.12-17
8.12.5.4 Spill Prevention, Control, and Countermeasure Plan 8.12-17
8.12.5.5 Material Safety Data Sheets 8.12-17
8.12.5.6 Monitoring 8.12-17
8.12.6 Indirect/Cumulative Impacts 8.12-18
8.12.6.1 Potential Indirect Effects of the Henrietta Peaker Project 8.12-18
8.12.6.2 Potential Cumulative Impacts 8.12-18
8.12.7 Laws, Ordinances, Regulations, and Standards 8.12-18
8.12.7.1 Federal 8.12-18
8.12.7.2 State/Regional 8.12-19
8.12.7.3 Local 8.12-20
8.12.7.4 Industry Codes and Standards 8.12-21
8.12.8 Involved Agencies and Contacts 8.12-21
8.12.8.1 Required Permits 8.12-22
8.12.8.2 Proposed Conditions of Certification 8.12-22
8.12.9 References 8.12-22
8.13 Waste Management 8.13-1
8.13.1 Affected Environment 8.13-1
8.13.2 Waste Generation, Storage, and Handling 8.13-1
8.13.2.1 Construction 8.13-2
8.13.2.2 Operation and Maintenance 8.13-3
8.13.3 Waste Disposal Sites 8.13-5
8.13.3.1 Nonhazardous Waste Disposal Facilities 8.13-6
8.13.3.2 Hazardous Waste Disposal Facilities 8.13-6
8.13.3.3 Waste Recycling Facilities 8.13-8
8.13.3.4 Waste Disposal Impacts 8.13-8
8.13.4 Facility Closure Issues 8.13-8
8.13.4.1 Temporary Closure 8.13-9
8.13.4.2 Permanent Closure 8.13-9
8.13.5 Monitoring 8.13-9
8.13.6 Impacts 8.13-10
8.13.7 Waste Mitigation Measures 8.13-10
8.13.8 Proposed Conditions of Certifications 8.13-13
8.13.9 Laws, Ordinances, Regulations, and Standards 8.13-13
8.13.9.1 Federal 8.13-13
8.13.9.2 State 8.13-14
8.13.9.3 Local 8.13-15
8.13.10 Involved Agencies 8.13-15
8.13.11 Waste Management Permits Required 8.13-16
8.13.12 References 8.13-16
8.14 Water Resources 8.14-1
8.14.1 Affected Environment 8.14-1
8.14.1.1 Regional Water Resources 8.14-1

8.14.1.2 Water Supply for the Proposed HPP 8.14-4
8.14.2 Environmental Consequences 8.14-5
8.14.3 Cumulative and Indirect Impacts on Water Resources 8.14-9
8.14.4 Mitigation Measures 8.14-9
8.14.4.1 Mitigation of Surface Water Impacts 8.14-9
8.14.5 Laws, Ordinances, Regulations, and Standards 8.14-10
8.14.5.1 Federal LORS 8.14-10
8.14.5.2 State LORS 8.14-11
8.14.5.3 Local Authorities and Administering Agencies 8.14-13
8.14.6 LORS Compliance 8.14-13
8.14.7 Required Permits and Approvals 8.14-13
8.14.8 Proposed Conditions of Certifications 8.14-13
8.14.9 Involved Agencies and Agency Contacts 8.14-14
8.14.10 References 8.14-14
8.15 Geologic Resources and Hazards 8.15-1
8.15.1 Affected Environment 8.15-1
8.15.1.1 Regional Geology and Physiography 8.15-1
8.15.1.2 Regional Seismotectonic Setting and Seismicity 8.15-2
8.15.1.3 Local Geology 8.15-6
8.15.1.4 Hydrogeology 8.15-9
8.15.1.5 Resources of Recreational, Commercial, or Scientific Value 8.15-10
8.15.2 Geologic Effects and Hazards 8.15-10
8.15.2.1 Surface Fault Rupture 8.15-11
8.15.2.2 Earthquake Ground Shaking 8.15-11
8.15.2.3 Soil Liquefaction 8.15-12
8.15.2.4 Landsliding 8.15-12
8.15.2.5 Subsidence 8.15-12
8.15.2.6 Expansive Soils 8.15-13
8.15.2.7 Erosion 8.15-14
8.15.3 Cumulative and Indirect Impacts 8.15-14
8.15.4 Mitigation Measures 8.15-14
8.15.5 Laws, Ordinances, Regulations, and Standards 8.15-14
8.15.6 Proposed Conditions of Certifications 8.15-15
8.15.7 Involved Agencies and Agency Contacts 8.15-15
8.15.8 Permits Required and Permit Schedule 8.15-15
8.15.9 References 8.15-15
8.16 Paleontological Resources 8.16-1
8.16.1 Affected Environment 8.16-2
8.16.1.1 Overview 8.16-2
8.16.1.2 Paleontological Literature and Locality Records Review 8.16-3
8.16.1.3 Overview of Lithologic Units 8.16-4
8.16.1.4 Method of Assessing Sensitivity 8.16-6
8.16 1.5 Field Survey Methods 8.16-7

8.16.1.6 Findings 8.16-7
8.16.2 Environmental Consequences 8.16-8
8.16.2.1 Direct Impacts 8.16-9
8.16.2.2 Indirect Impacts 8.16-9
8.16.2.3 Cumulative Impacts 8.16-9
8.16.3 Mitigation Measures 8.16-10
8.16.3.1 General Measures 8.16-10
8.16.3.2 Site-Specific Measures 8.16-11
8.16.4 Proposed Conditions of Certification 8.16-12
8.16.5 Laws, Ordinances, Regulations, and Standards 8.16-12
8.16.5.1 Federal Authorities and Administering Agencies 8.16-12
8.16.5.2 State Authorities and Administering Agencies 8.16-12
8.16.5.3 Local Authorities and Administering Agencies 8.16-13
8.16.5.4 Industry Codes and Standards 8.16-13
8.16.5.5 Agencies and Agency Contacts 8.16-13
8.16.5.6 Applicable Permits 8.16-14
8.16.6 References 8.16-14

9.0 ENGINEERING 9-1

LIST OF TABLES

2-1 Estimated Average Daily Water Requirements (63°F)
2-2 Estimated Peak Daily Water Requirements (98°F)
2-3 Project Schedule Major Milestones
2-4 Major Equipment Redundancy
2-5 LORS Related to Facility Design

6-1 Design and Construction LORS
6-2 Fire Hazard LORS
6-3 Hazardous Shock LORS
6-4 Aviation Safety LORS
6-5 Communication Interference LORS
6-6 State Regulatory Requirements on Electric and Magnetic Fields
6-7 Jurisdiction
6-8 Agency and Utility Contacts

8.1-1 Relevant Federal and California Ambient Air Quality Standards
8.1-2 Federal and State Attainment Status for Kings County
8.1-3 Temperature and Precipitation Data for Hanford, California
8.1-4 Ambient Ozone Levels Near Henrietta, 1994-2000 (ppm)
8.1-5 Ambient Particulate Levels (<10 µm) Near Henrietta, 1994-2000 ($\mu g/m^3$)
8.1-6 Ambient Carbon Monoxide Levels Near Henrietta, 1994-2000 (ppm)
8.1-7 Ambient Nitrogen Dioxide Levels Near Henrietta, 1994-2000 (ppm)
8.1-8 Ambient Sulfur Dioxide Levels Near Henrietta, 1994-2000 (ppm)
8.1-9 Emission Rates for GE LM6000 Unit Firing Natural Gas
8.1-10 Project Economic Evaluation Criteria
8.1-11 Estimated Equipment Construction Schedule
8.1-12 Estimated Criteria Pollutant Emissions from Construction Equipment
8.1-13 HPP Worst-Case Annual Emissions

LIST OF TABLES

8.1-14 Criteria Pollutant Emission Rates for the Turbine with SCR and Oxidation Catalyst During Normal Operation (pounds per hour)

8.1-15 Criteria Pollutant Emission Rates for the HPP Turbine During Startup and Shutdown

8.1-16 HPP Construction Release Parameters

8.1-17 Stack Parameters

8.1-18 HPP ISCST3 Modeling Results - Construction Activities

8.1-19 HPP ISCST3 Modeling Results - Routine Plant Operations

8.1-20 HPP Fumigation Impacts (1 hour)

8.1-21 Commissioning Modeling Analysis Results

8.1-22 Rule 2201 Emission Offset Requirements for the HPP

8.1-23 Comparison of HPP Offset Requirements under SJVUAPCD Rule 2201 and/or CEQA and Total ERCs Acquired or to Be Acquired by HPP

8.1-24 Applicable Air Quality Permits or Approvals Required for the HPP

8.1-25 HPP Summary of Compliance with Air Quality LORS

8.2-1 Special Status Species with Potential to Occur In the Vicinity of GWF HPP Site

8.2-2 Vascular Plants and Wildlife Observed During Biological Surveys

8.2-3 HPP Summary of LORS and Compliance

8.3-1 Project Components

8.3-2 Archaeological Survey Coverage By Project Component and Field Conditions

8.3-3 Summary of LORS and Compliance

8.3-4 Agency Contacts

8.4-1 Existing Land Uses in the Study Area

8.4-2 Land Use Plans and Policies Related to the HPP

8.4-3 Kings County General Plan Land Use Designations

8.4-4 Zoning Designations Within the Study Area

8.4-5 Zoning Districts Within the Study Area

8.4-6 Landowners Along the Proposed Transmission and Natural Gas Routes

8.4-7 General Plan Land Use Designations Within the Study Area

8.4-8 Laws, Ordinances, Regulation, and Standards for Land Use

LIST OF TABLES

8.5-1 Descriptions of the Noise Measurement Locations

8.5-2 Existing Ambient Sound Levels

8.5-3 Applicable Environmental Noise Level Limits as Established in the Noise Element of the Kings County General Plan

8.5-4 Major Equipment Sound Level Data

8.5-5 Predicted Future Background Sound Level During Normal Operation of the Proposed Facility

8.5-6 Construction Equipment Noise Emission Levels

8.5-7 Laws, Ordinances, Regulations, and Standards Applicable to Noise

8.6-1 List of AB2588 Air Toxics Emitted from Operation of Natural Gas Fired Combustion Turbines with SCR

8.6-2 Estimated Air Toxic Emission Factors and Emissions from Operation of Natural-Gas-Fired Combustion Turbines with SCR

8.6-3 Cancer, Chronic, and Acute Risk Factors

8.6-4 Estimated Cancer Risk and Acute and Chronic Total Hazard Indices for the HPP

8.6-5 60-Hz Magnetic Field International and Occupational Exposure Standard

8.6-6 HPP Summary of Compliance with Public Health LORS

8.7-1 Worker Health and Safety Laws, Ordinances, Regulations, and Standards

8.7-2 HPP Hazard Analysis

8.7-3 Protective Equipment Guide

8.7-4 Sample Operations Emergency Action and Evacuation Plan Outline

8.7-5 Construction Training Program

8.7-6 Operation and Maintenance Training Program

8.7-7 Health and Safety Permits

8.8-1 Employment (2000)

8.8-2 Kings County Employment

8.8-3 Kern County Employment

8.8-4 Fresno County Employment

8.8-5 Labor Union Contacts

8.8-6 Historical and Projected Population Growth

8.8-7 Annual Average Population Growth Rates

LIST OF TABLES

8.8-8 Demographic Profiles of Counties, Cities, and Census Tracts

8.8-9 Local and Regional Housing Estimates (January 2000)

8.8-10 Schools in the Vicinity of the Project Site

8.8-11 Kings County Summary of Estimated Additional Financing Sources ($ millions)

8.8-12 Kings County Budget Appropriations ($ millions)

8.8-13 Construction Personnel Requirements by Trade

8.8-14 Construction Cost

8.8-15 Annual Operation and Maintenance Cost

8.8-16 HPP Summary of Compliance with Socioeconomic LORS

8.9-1 Soil Types Identified by Project Component for the HPP Plant Site

8.9-2 Characteristics of Soil Types in the Immediate Vicinity of the HPP

8.9-3 Laws, Ordinances, Regulation, and Standards for Agricultural and Soil Resources

8.10-1 Relevant Objectives and Policies of the Kings County General Plan Circulation Element

8.10-2 Current Traffic Characteristics of Interstate Highways and State Routes in the Project Area

8.10-3 Kings County Level of Service (LOS) Definitions

8.10-4 Existing Traffic Characteristics of Local Roadways in the Immediate Vicinity of the Henrietta Peaker Project

8.10-5 Construction Workforce Distribution

8.10-6 Total Daily Construction Workforce Vehicle Trip Generation

8.10-7 Distribution of Construction Worker Generated Traffic on State Routes and Local Roadways

8.10-8 Compliance With Laws, Ordinances, Regulations, and Standards

8.11-1 Laws, Ordinances, Regulation, and Standards for Visual Resources

8.12-1 Hazardous Materials Used During the Construction Phase

8.12-2 Hazardous Materials Used During the Operations and Maintenance Phase

8.12-3 Characteristics of the Hazardous Materials Used During the Operations and Maintenance Phase

8.12-4 Occupational Exposure Limits for Airborne Ammonia Vapor

LIST OF TABLES

8.12-5 Other Exposure Limits for Ammonia Vapor

8.12-6 Accidental Release Scenario Release Rates and Meteorological Conditions

8.12-7 Dispersion Modeling Results

8.12-8 Involvement of Government Agencies and Other Organizations by Type of Incident

8.12-9 Organizational Roles for Incidents That Involve Hazardous Materials

8.12-10 Summary of Laws, Ordinances, Regulations, and Standards Applicable to Hazardous Materials Handling

8.13-1 Hazardous Wastes Generated During Construction

8.13-2 Hazardous Wastes Generated During Operation and Maintenance Phase

8.13-3 Waste Management Laws, Ordinances, Regulations, and Standards

8.14-1 Monthly Climate Summary at Lemoore-Hanford for December 1, 1927 through July 31, 2000

8.14-2 Surface Water Requirements and Source Water Quality for the HPP

8.14-3 Summary of LORS and Compliance for Water Resources

8.15-1 MCE Median (50th Percentile) Peak Horizontal Ground Accelerations on Soil

8.15-2 Laws, Ordinances, Regulations, and Standards for Geologic Resources and Hazards

8.16-1 Geologic Units Within HPP Area

8.16-2 Paleontological Sensitivity and Geologic Units for the HPP

8.16-3 Survey Coverage by Project Component and Field Conditions

8.16-4 LORS Applicable to Paleontological Resources

LIST OF FIGURES

1-1	Site Location Map
1-2	Project Location Map
2-1a	HPP Project Location
2-1b	Site Location Map
2-2	Project Location Map
2-3a	Site Layout Drawing
2-3b	Site General Arrangement
2-4a	Elevations and Sections
2-4b	Elevations and Sections
2-5	GE LM6000SPT - Heat Balance at 15°F
2-6	GE LM6000SPT - Heat Balance at 63°F
2-7	GE LM6000SPT - Heat Balance at 115°F
6-1	Proposed Transmission Route
6-2	One-Line Diagram for HPP Switchyard
6-3	Transmission Line Profiles
6-4	Audible Noise Profile
6-5	Radio Interference Profile
6-6	TV Interference Profile
6-7	Magnetic Field Profile
6-8	Electrical Field Profile
8.1-1	Quarterly Wind Rose, First Quarter, 1968
8.1-2	Quarterly Wind Rose, Second Quarter, 1968
8.1-3	Quarterly Wind Rose, Third Quarter, 1968
8.1-4	Quarterly Wind Rose, Fourth Quarter, 1968
8.1-5	Building Downwash Structures
8.1-6	Air Quality Modeling Receptor Grid Farfield
8.1-7	Air Quality Modeling Receptor Grid Nearfield
8.2-1	Project Location Map
8.2-2	CEC Approved Biological Survey Effort

LIST OF FIGURES

8.2-3 Project Location and Affected Area

8.2-4 Natural Gas Pipeline and Transmission Line Corridor

8.3-1 Site Location Map

8.3-2 Project Location Map

8.3-3 Areas Surveyed for Cultural Resources

8.3-4 Southern Valley Yokuts Ethnographic Region

8.4-1 Zoning Districts in the Area Surrounding the GWF Henrietta Power Site

8.4-2 Jurisdictional Boundaries in the Area Surrounding the GWF Henrietta Power Site

8.4-3 Existing Land Uses in the Area Surrounding the GWF Henrietta Power Site

8.4-4 Property Owners and Assessor Parcel Numbers in the Area Surrounding the GWF Henrietta Power Site

8.5-1 Noise Measurement Locations

8.5-2 Continuous Sound Level Measurements

8.5-3 Facility Noise Emission

8.5-4 Facility Noise Emission Along Property Boundaries

8.6-1a Terrain Above Stack Height Within a 10-Mile Radius of the GWF Henrietta Peaker Plant (West Half)

8.6-1b Terrain Above Stack Height Within a 10-Mile Radius of the GWF Henrietta Peaker Plant (East Half)

8.6-2 Census Tracts, Population Density and Sensitive Receptors

8.7-1 Equipment Arrangement: Fire Safety

8.8-1 Public Health, Race, and Poverty by Census Tract within 6-Mile Radius of Proposed Project

8.9-1 Soil Types Surrounding the GWF Henrietta Power Site

8.9-2 Agricultural Land Types Surrounding the GWF Henrietta Power Site

8.10-1 Site Location Map

8.10-2 Local Roadways in the Immediate Vicinity of the GWF Henrietta Peaker Project

8.11-1 Location of Key Observation Points in the HPP Viewshed

8.11-2 Existing Conditions at KOP-1

LIST OF FIGURES

8.11-3 Existing Conditions at KOP-2

8.11-4 Existing Conditions at KOP-3

8.11-5 Existing Conditions at KOP-4

8.11-6 Existing Conditions at KOP-5

8.11-7 Photosimulation of Proposed HPP at KOP-1

8.11-8 Photosimulation of Proposed HPP at KOP-2

8.11-9 Photosimulation of Proposed HPP at KOP-3

8.11-10 Photosimulation of Proposed HPP at KOP-4

8.11-11 Photosimulation of Proposed HPP at KOP-5

8.12-1 Equipment Arrangement: Hazardous Materials

8.12-2 Piping and Instrumentation Diagram for Aqueous Ammonia System

8.12-3 Ammonia Concentrations at 115°F Ambient Temperature

8.12-4 Ammonia Concentrations at 95°F Ambient Temperature

8.12-5 Ammonia Concentrations at 63°F Ambient Temperature

8.12-6 Vulnerability Zone for Aqueous Ammonia Release -- Worst-Case Meteorology

8.12-7 Vulnerability Zone for Aqueous Ammonia Release -- Alternative-Case Meteorology

8.14-1 Water Balance: Annual Average

8.14-2 Water Balance: Daily Maximum

8.14-3 FEMA Floodplain Map for the Vicinity of the GWF Henrietta Peaker Plant

8.15-1 Geomorphic Features of the GWF Henrietta Peaker Project

8.15-2 Simplified Geologic Cross Section A-A', San Andreas Fault to Kern River Fault in the Bakersfield Area

8.15-3 Quaternary Faults and Historical Seismicity, 1852-2000, within 100 km of GWF Henrietta (M>=3.0)

8.15-4 Generalized Stratigraphic Column in the GWF Henrietta Peaker Project

8.15-5 Geological Map in the Area Surrounding the GWF Henrietta Peaker Project

8.16-1 Site Location Map

8.16-2 Project Location Map

8.16-3 Paleontological Sensitivity Map

LIST OF APPENDICES

A Electrical Transmission
B Air Quality
C Cultural Resources (Confidential)
D Land Use
E Public Health
F Environmental Site Assessment
G Will-Serve Letters/Site Control
H Engineering
I Socioeconomics
J Natural Gas
K Conditions of Certification and Data Adequacy Worksheets
L Paleontologic Resources (Confidential)
M List of Contributors

1.0 EXECUTIVE SUMMARY

1.1 Introduction

GWF Energy LLC (GWF) is seeking approval of an Application for Certification (AFC) from the California Energy Commission (CEC) for the construction and operation of the Henrietta Peaker Project (HPP). GWF proposes to build and operate the HPP, a nominal 91.4-megawatt (MW), simple-cycle power plant, on a seven-acre fenced site within a 20-acre parcel in unincorporated Kings County, California. Figure 1-1 shows the regional location of the HPP site. Figure 1-2 shows the immediate site location approximately 20 miles southwest of Hanford. The HPP will consist of the power plant, an onsite 70-kilovolt (kV) switchyard, and approximately 550 feet of new 70-kV transmission line.

One of the primary goals of the HPP is the rapid introduction of new, more efficient, and environmentally superior power generation to meet California's growing power demand. For the next three years, California is expected to experience a shortfall in available electric generating sources during periods of peak demand. The HPP is being developed on a fast-track schedule to help satisfy this power shortage.

The HPP offers the following environmental and economic features and benefits:

- Use of natural gas, a clean-burning fuel, and state-of-the-art air pollution controls to minimize air emissions.
- Use of aqueous ammonia, rather than anhydrous, to reduce the potential for hazardous materials exposure.
- Emission offsets for nitrogen oxides (NO_x), volatile organic compounds (VOCs), sulfur dioxide (SO_2), and particulate matter (PM_{10}) that are in excess of HPP emissions, which creates a net air quality benefit to the region. VOC and SO_2 offsets are being provided even though none are required by local regulations.
- Location of the HPP adjacent to the existing Henrietta Substation minimizes the length of the electrical interconnection (approximately 550 feet) and eliminates associated environmental impacts.
- Use of existing rights-of-way for a significant portion of the natural gas supply pipeline and a water supply connection with minimal linear facility length.

- Use of existing GWF personnel to operate and maintain the HPP to minimize impacts on local infrastructure.
- Help to reduce an anticipated power shortfall in California during the summer of 2002 and beyond.
- Addition of approximately $900,000/year in local property tax revenue accruing to Kings County, and the addition of $2.1 million in local spending for goods and services required for construction. In addition, approximately $32,000 will be spent annually on local goods and services required for HPP operation.

This AFC provides:

- A description of the project
- A description of the project's need conformance
- A description of the project alternatives
- A description of the electric transmission system interconnection, natural gas supply, and water supply
- An assessment of the project's likely impact on the environment
- The proposed mitigation measures to ensure that environmental issues are properly and responsibly addressed
- Compliance with applicable laws, ordinances, regulations, and standards (LORS)

A list of contributors to this AFC is provided in Appendix M.

1.2 Project Ownership

GWF Energy LLC will construct, own, and operate the HPP. GWF Energy LLC is 50 percent owned by PSEG California Corporation and 50 percent owned by Harbinger GWF LLC. PSEG California Corporation is owned by PSEG Global USA Inc. Harbinger GWF LLC is owned by Harbert Cogen, Inc. Since 1989, GWF Power Systems, a subsidiary of PSEG Global USA Inc. and Harbert Cogen, Inc., has constructed, owned, and operated six small, solid-fuel power plant/cogeneration facilities in California with a combined generating capacity of 125 MW. Five of these plants are located in Contra Costa County and one is located in Hanford,

California. Electricity produced by the proposed HPP will be sold under a contract from the California Department of Water Resources (DWR).

1.3 Demand Conformance

The California legislature enacted Senate Bill 110, which, as of January 1, 2000, did away with the integrated assessment of need and with the specific requirement of former Section 25541 of the Public Resources Code to show that a project's generating capacity not be substantially in excess of the resources shown in the integrated assessment of need. The AFC for the HPP is being submitted in response to the state's critical electricity supply shortage and is consistent with the governor's recently signed executive orders (EO). EO D-26-01 and EO D-28-01 direct the CEC and other state and local agencies to expedite review of new power generating facilities. The purpose of this project is to help relieve the state's power shortages.

1.4 Project Schedule

The HPP will be constructed on a schedule of approximately five months following issuance of the AFC by the CEC. Construction is anticipated to commence in January and be completed in May 2002, with commercial operation anticipated by June 2002.

1.5 Facility Location and Description

1.5.1 Facility Location

The HPP site is located in the southwest quarter of Section 34, Township 19 South, Range 19, East Mount Diablo Base Meridian on Assessor's Parcel Number 027-190-065, as shown on Figure 1-2. The HPP site is on the eastern side of 25th Avenue, approximately one mile south of State Route (SR) 198 and directly south of and adjoining to the Pacific Gas and Electric Company (PG&E) Henrietta Substation. The power plant area will be accessed via a plant entrance and exit on 25th Avenue (see Figure 1-2 and Figure 2-3).

The HPP site location is limited by (a) the need to be located in an air basin where GWF has existing emission reduction credits (such as the San Joaquin Valley Air Pollution Control District), (b) the definition of "minor source" under federal air quality regulations to

qualify for expedited permitting, (c) requirements of a fast-track development schedule to meet a June 2002 commercial operation date, (d) the ability to interconnect at a major substation on the North Path 15 in Kings County (where GWF has an existing facility) that has adequate capacity and provides wide access to the electricity market, (e) the ability to connect to a natural gas supply with adequate capacity, and (f) the provisions of an existing DWR power purchase agreement. Prior disturbance, compatible land use, land ownership, proximity to natural gas supply, and transmission interconnection points are other key criteria considered in the site selection.

Section 6.0 (Electric Transmission), Section 8.4 (Land Use), and Appendix D provide more information on land ownership, including the assessor's parcel numbers and property owners' names and addresses, for all parcels within 500 feet of the transmission and water supply lines and within 1,000 feet of the HPP site.

1.5.2 Facility Description

The HPP will consist of the nominal 91.4-MW simple-cycle power plant, with a 70-kV switchyard and approximately 550 feet of new 70-kV transmission line. The new transmission interconnection will be to the existing PG&E Henrietta Substation, which is to the north of and contiguous with the project site. Natural gas for the facility will be delivered via approximately 2.2 miles of new 12-inch pipeline that will connect to the existing Southern California Gas Company (SoCalGas) Line 800 transmission pipeline, approximately one mile south of the intersection of 25th Avenue and the Avenal Cutoff. Westlands Water District and Kings County will supply water to the HPP from an existing Westlands Water District line via a 16.5-foot interconnection immediately adjacent to the HPP site on 25th Avenue. An approximately five-acre area within the 20-acre parcel will be used for construction laydown and parking. Figure 1-1 shows the regional location of the HPP site. Figure 1-2 shows the immediate site location of the HPP, including the proposed generating facility and proposed transmission, water supply, and access routes.

The HPP will use two General Electric LM6000 PC Sprint combustion turbine generators (CTGs), each with a base load nominal output of 46.9 MW at annual average conditions. The annual average conditions for the HPP site are assumed to be 63 degrees

Fahrenheit (°F) and 60 percent relative humidity. Each CTG will be equipped to burn only natural gas and will have an evaporative cooling system installed on the inlet air for use when the ambient temperature exceeds 50 °F.

Each CTG will be equipped with a selective catalytic reduction (SCR) emission control system that uses aqueous ammonia in the presence of a catalyst to reduce the NO_x concentration in the exhaust gases. The catalyst module will be located in a control system casing installed at the discharge of each CTG. Aqueous ammonia will be injected into the exhaust gas stream through a grid of nozzles located upstream of the catalyst module. The subsequent chemical reaction will reduce NO_x to nitrogen and water, resulting in a NO_x concentration of 3.6 or less parts per million by volume, dry (ppmvd) at 15 percent oxygen in the exhaust gas. An oxidation catalyst will reduce CO concentrations to 6 or less ppmvd at 15 percent oxygen, and VOC emissions to 2 or less ppmvd at 15 percent oxygen. In addition, GWF will provide offsets for NO_x, VOC, SO_2, and PM_{10} emissions from the HPP. The VOC and SO_2 emission offsets are being provided as an air quality benefit, even though the reductions are not required by regulation.

Westlands Water District and Kings County will provide the plant's process water supply through an existing water line adjacent to the HPP site. Drinking water for the facility will be provided by a local bottled-water vendor. The plant will be a near-zero wastewater discharge facility. Small quantities (less than one gallon per minute) of process wastewater from the plant will be collected on site and periodically transported from the plant via licensed haulers for offsite recycle or disposal.

Figures 8.11-6 and 8.11-11 in Section 8.11 (Visual Resources) provide a near-field photograph and photo-simulation of the HPP site before and after construction, respectively.

The heat balance for power plant base load operation is shown in Section 2.0 (Project Description) on Figures 2-5, 2-6, and 2-7. The three cases are at 15, 63, and 115 °F.

1.5.3 Site Layout

Figure 2-3 in Section 2.0 (Project Description) illustrates the location of the HPP components; Figures 2-4a and b provide elevation drawings of the project components.

1.5.4 Transmission Interconnection

The CTGs will be connected to individual, dedicated, three-phase step-up transformers, which in turn will be connected to the plant's 70-kV switchyard. The switchyard will consist of an airbreak disconnect switch and SF6 circuit breakers. From the switchyard, the generated power will be transmitted along overhead lines into the PG&E substation adjacent to the facility. See Section 6.0 (Electric Transmission) for additional information on the switchyard, transmission line, and connection at the PG&E Henrietta Substation. Photo-simulations of the proposed HPP are shown in Section 8.11 (Visual Resources). As stated in Section 8.11, the proposed transmission interconnect is extremely short because the Henrietta Substation is directly north and adjacent to the site. Thus, the transmission interconnection will not likely be visible to most viewers.

1.5.5 Fuel Supply

The CTGs will be designed to burn natural gas. Maximum natural gas requirements during base load operation are approximately 20,400 million British thermal units (Btus) per day on a lower heating value basis.

Natural gas will be delivered to the site via a new 2.2-mile pipeline that will tie into the SoCalGas Line 800 along the Avenal Cutoff (see Sections 2.0 and 7.0). The natural gas will be delivered at a gas pressure of 290 to 400 pounds per square inch gauge (psig). The natural gas will be pressurized by onsite compressors, as needed, and then flow through gas scrubber/filtering equipment, a gas pressure control station, a fuel gas heater, and a flow metering station before entering the CTG.

1.5.6 Water Supply

HPP will not include a cooling tower and will therefore have a minimal water demand. The plant will require water for the CTG evaporative cooler, fire protection, plant general service, and domestic use. Bottled water will be used for drinking. The process water requirements will be met by Westlands Water District and Kings County. The water for HPP operation will be supplied under pre-existing contracts with the Westlands Water District (Central Valley Project entitlement) and Kings County (State Water Project entitlement); thus, the project will not exert an additional or new demand upon the California Aqueduct and is not projected to cause a significant impact on the respective water supplies of the two providers.

1.5.7 Waste Handling and Control

Solid waste generated at the HPP will include small quantities of paper from administration; absorbent materials, packaging, and used parts from operation; and chemical containers, demolition/construction wastes, and other specialized wastes from maintenance. Potentially hazardous waste will be generated during both construction and operation of the HPP. Hazardous wastes could include contaminated soil; waste oil, solvents, and paints; waste SCR and oxidation catalysts; and other maintenance wastes. Hazardous wastes will be minimized by recycling, to the extent possible. Hazardous wastes that are not recycled will be characterized and appropriately treated or disposed.

1.5.8 Site Access

The power plant area will be accessed via a plant entrance and exit on 25th Avenue (refer to Figure 2-3).

1.5.9 Facility Closure

The HPP will be designed for an operating life of 30 years. Closure procedures will follow a plan that depends on conditions at the time. Those conditions are largely unknown at this time, but closure could include maximizing recycle of facility components; return of unused chemicals to suppliers; equipment draining and shutdown to ensure public health and

safety and environmental protection; and the collection, recycling, or offsite disposal of all solid and hazardous wastes. Facility closure is further described in Section 4.0.

1.6 Plant Operation

The HPP will be operated by current GWF operations an maintenance personnel. Operators and maintenance staff will be dispatched from other GWF operating facilities as needed to operate the HPP. The facility will be capable of operating up to 8,000 hours per year.

GWF has executed a contract with the DWR that provides for 4,000 hours per year of dispatchable power sales. GWF is seeking a license to operate the plant up to 8,000 hours per year. GWF wishes to retain the flexibility to operate the plant for sale of electricity beyond the contracted hours, contingent upon demand requirements of the Independent System Operator–managed transmission distribution system. The project is expected to have an overall annual capacity factor of approximately 50 percent or more. However, the exact operational profile of the plant cannot be defined, because the facility will be operated to satisfy the demand of the state's transmission distribution system.

Only the capacity that will be sold through the DWR contract can be accurately predicted. The contract allows DWR to purchase up to 4,000 hours per year of the HPP's full generating capacity. It is anticipated that these hours of operation will normally occur during the periods of peak power demand. Operation outside of the contract will be a function of the prices offered for spot purchases; the exact extent of HPP operation beyond 4,000 hours per year cannot be determined. It is anticipated that any one CTG will either be operated at 100 percent load or will be shut down. Therefore, possible modes of operation include: both CTGs at 100 percent load, one CTG at 100 percent load, or full shutdown. To ensure that other potential operating conditions are evaluated, the operating performance at 60 percent load has also been included.

1.7 Safety

The HPP will be designed to maximize safe operation. Hazards that could affect the facility include earthquake, flood, and fire. Facility operators will be trained in safe operation, maintenance, and emergency response procedures to minimize the risk of personal injury and damage to the plant.

Safety and emergency systems will be incorporated into the design and construction of the facility to ensure safe and reliable operation. The HPP structures will be designed to meet 1998 California Building Code (CBC) Seismic Zone 3 requirements. The facility site will be located above the 100-year floodplain. Fire protection systems include both automatic and manual systems. Worker safety programs will be developed and implemented for both construction and operation to ensure compliance with federal and state occupational safety and health requirements.

1.8 Environmental Considerations

This AFC for the HPP addresses the following environmental resource issues in detail in Section 8.0 (Environmental Impact):

- Air Quality
- Biological Resources
- Cultural Resources
- Land Use
- Noise
- Public Health
- Worker Health and Safety
- Socioeconomics
- Agriculture and Soils
- Traffic and Transportation
- Visual Resources
- Hazardous Materials Handling
- Waste Management
- Water Resources

- Geologic Resources and Hazards
- Paleontological Resources

The HPP will avoid or substantially reduce potential environmental impacts to insignificant levels through project design and incorporation of proposed mitigation measures.

1.8.1 Air Quality

The HPP will result in a net regional air quality benefit based on the inclusion of state-of-the-art control technology and air emission offsets that are greater than the project emissions. In addition to the emission offsets required by regulation, GWF will voluntarily offset expected VOC and SO_2 emissions to ensure a net air quality benefit. The HPP CTGs will be equipped with Best Available Control Technology (BACT) to control criteria pollutant emissions. These measures include clean-burning natural gas, water injection for NO_x control, and effective combustion practices. In addition, the CTGs will be equipped with an aqueous-ammonia-type SCR and an oxidation catalyst.

Emissions sources during construction of the HPP include heavy equipment exhaust and fugitive dust from disturbed areas. Water will be routinely applied to minimize fugitive dust emissions.

Operational emission estimates were based on full-load operation of the CTGs and considered emissions from startup/shutdown events. The air dispersion modeling analysis was conducted to demonstrate that air emissions from the HPP will not cause or contribute to air quality violations or negatively affect visibility in Class I areas.

Air dispersion modeling indicates that NO_x, sulfur dioxide (SO_2), CO, and PM_{10} impacts from the operation of the HPP are below ambient air quality standards. The modeling results for attainment pollutants (i.e., NO_x, CO, and SO_2) indicate that these pollutants will be well below their respective significance levels. A screening analysis concluded that the HPP will not significantly affect visibility. Both California and federal law require major sources of nonattainment pollutants in nonattainment areas to mitigate air quality impacts by providing emission offsets in the form of emission reduction credits (ERCs). The HPP will trigger offset

requirements for NO_x and PM_{10} emissions. In addition, GWF will voluntarily provide ERCs for the project's VOC and SO_2 emissions. GWF has finalized agreements with owners of ERCs to meet the applicable offset requirements and will supply all the ERCs needed for the project.

1.8.2 Biological Resources

The HPP site is dominated by intensively managed agricultural activities. Natural vegetation is restricted to the farm equipment storage area just north of the plant site and to the banks of agricultural drainage sumps and canals. All of these areas are disturbed on a regular basis, and plants are predominantly weedy and non-native.

Biological surveys at the HPP site were conducted on April 20 and May 22, 2001 for listed and other special-status plant and animal species, following methodologies approved by the U.S. Fish and Wildlife Service and California Department of Fish and Game (CDFG, 1990). During the survey, all evidence of special-status species habitat was noted. There are no sensitive wildlife or plant resources at the site. No adverse environmental consequences are associated with the operations and maintenance phase of the HPP.

The Hanford Energy Park Peaker project recently qualified to be covered under the Kern Water Bank Master Incidental Take Permit to mitigate permanent disturbance to agricultural lands. The HPP is almost identical in scope and geographic location to the Hanford project, and coverage under the Kern Water Bank permit should apply. No CDFG 2081 permit is necessary because there is little or no chance for take of individual listed animals.

Measures contained in the HPP Biological Resources Mitigation Implementation and Monitoring Plan will reduce any potential impacts to a less-than-significant level.

1.8.3 Cultural Resources

The HPP will be located and constructed to avoid or minimize, to the extent possible, impacts to all cultural resources. To ensure that such resources are protected from damage, a qualified monitor will be available during construction activities to assess the nature and importance of any cultural materials discovered. Construction personnel will be trained to

recognize cultural materials and instructed to halt construction activities upon discovery of such materials. Thus, the HPP's impact on cultural resources will not be significant.

Prior to conducting the field survey of the HPP site, two record searches were performed at the Southern San Joaquin Valley Information Center of the California Historic Resources Information System. The record searches included all previously recorded cultural resources within 0.75 miles of the study area. The Native American Heritage Commission was contacted for information regarding heritage lands or resources in the study area. Systematic pedestrian surveys of the study area were completed in May 2001. Although no prehistoric resources were located during the survey, and no recorded prehistoric resources are known to exist within 0.75 miles of the HPP plant site and its linear facilities, members of the Native American community consulted for this project are aware of unrecorded sites within one mile of the project area.

No significant or potentially significant cultural resources are known to exist within the study area. It is possible that previously unknown cultural resources may be discovered in the course of the construction of the HPP. Construction personnel will be instructed to halt their activities if such materials are discovered. In the event of unanticipated discoveries of previously unknown cultural resources, a qualified archaeologist will evaluate the find for significance and, if necessary, recommend further mitigation measures.

1.8.4 Land Use

The proposed HPP will conform with local plans and regulations and is compatible with adjacent land uses in the project area. The HPP site is on a previously disturbed parcel within an intensive agricultural area. The proposed transmission line and natural gas pipeline will be built in existing transmission corridors or below existing roads, respectively. The proposed routes for the water supply line and access road run along or beneath existing dirt roads. All structures will be located near or along existing roads. Construction activities at the HPP site and along the proposed transmission and gas route corridors will be undertaken in a way that minimizes interference to adjacent land uses. Overall, the land use impacts associated with construction activities will not be significant.

The operation of the proposed facility is not expected to result in significant adverse impacts to surrounding uses. The HPP represents further development of an area already committed to energy-related uses. The HPP will not change the land use or alter the existing character of the area. Therefore, no significant land use impacts are identified.

1.8.5 Noise

Noise impacts from the proposed HPP were assessed by performing an ambient noise survey and modeling the expected construction and operational noise levels. The nearest residences are located approximately 1.5 miles northeast of the proposed plant's combustion turbines. With the proposed noise design elements incorporated, ambient noise levels at both the HPP site boundary and the nearest residences are below significant levels.

Noise levels from facility operation will be reduced by noise abatement features incorporated as standard equipment (e.g., acoustic enclosure and inlet air silencers for the CTG). Operational noise levels modeled for the proposed facility indicate that noise from project operations will be inaudible during all but the quietest periods. No significant noise impacts are expected from the operation and maintenance of the HPP plant, transmission line, or associated switchyard.

Noise impacts during construction will be typical of power plant construction activities, with the primary noise sources associated with heavy construction equipment and vehicles. To estimate construction noise impacts, a noise level composite was created based on noise monitoring conducted during the construction of 15 actual power plants. Using this modeling approach, construction noise is anticipated to be only faintly audible at the nearest residences. Construction equipment will have appropriate mufflers or silencers to reduce noise levels.

Offsite noise levels associated with the HPP are not expected to be significant or require further mitigation beyond the measures already identified and incorporated into the project.

1.8.6 Public Health

The HPP will utilize clean-burning natural gas and state-of-the-art combustion technology to minimize potentially toxic air emissions. The maximum incremental cancer risk from the CTG emissions will be well below the significance level at one in 1 million. For sensitive receptors, the maximum chronic "total hazard index" (THI) and the maximum acute THI are both well below the significance criterion of 1. Based on this evaluation, the HPP emissions are expected to pose no significant cancer or noncancer health effects. The health risk assessment performed for the HPP is based on a number of conservative assumptions and is likely to overestimate potential public health impacts.

Criteria pollutant emissions from the HPP will meet pertinent federal and state ambient air quality standards that have been set at levels designed to protect public health. Therefore, no significant adverse health effects from criteria pollutant emissions are anticipated.

Energized electrical conductors produce electric and magnetic fields at the transmission line that will drop off exponentially with distance away from the transmission line. Current knowledge on this subject indicates that the electric and magnetic field levels expected at the edge of the transmission line right-of-way will not present a health risk.

An offsite consequence analysis (see Section 8.12, Hazardous Materials Handling) demonstrates that in the unlikley event of an aqueous ammonia spill, there will be no significant impacts to the public.

1.8.7 Worker Health and Safety

The construction, operation, and maintenance activities associated with the HPP may expose workers to physical and chemical hazards. However, worker exposure to these hazards will be minimized through adherence to appropriate engineering design criteria, implementation of appropriate administrative procedures, use of personal protective equipment, and compliance with applicable health and safety regulations. Such practices are already in place at other existing GWF plants.

The HPP onsite fire suppression systems will be supported by the Kings County Fire Department, Station No. 7, located at 18th Avenue and Indiana, which is approximately 10 miles northwest of the facility. This location allows for a quick response time. The onsite fire suppression system will be placed in service as early as practicable. An emergency action plan will be developed to designate responsibilities and actions to be taken in the event of an emergency during construction of the facility. Additional written safety programs will include, but not be limited to, hazard communication standards, a hearing conservation program, a respiratory protection program, heavy equipment procedures, and hot work procedures.

Upon startup of the HPP, the construction health and safety programs will transition into an operation and maintenance program. The primary mitigation measures for worker hazards during normal facility operation and maintenance will be contained in the Injury and Illness Prevention Plan. Fire protection will involve physical measures, such as sprinklers, water supplies, and fire extinguishers, as well as fire prevention measures. The HPP will have a site-specific plan that addresses potential emergencies, actions, and responsibilities. Additional written safety programs will be developed as components of the overall operation and maintenance health and safety plan for the HPP.

The HPP will help provide a safe work environment for all workers participating in construction and operation of the project. Systems will be implemented to ensure that workers possess the necessary information to recognize hazards and protect themselves from hazards.

1.8.8 Socioeconomics

The HPP will increase fiscal resources in the region by increasing both sales tax and property tax revenues that accrue to Kings County. Construction income earned in the county will also increase. Operation income earned in the county will not change as a result of HPP operations, because additional workers will not be required.

HPP construction is expected to last five months and will provide short-term job opportunities. A sufficient supply of labor for this project exists through unions and contractors in Kern, Fresno, Kings, and Tulare Counties. The peak construction period for the HPP is not expected to overlap with the peak construction demands of other projects planned in the area.

Due to the availability of a large construction labor force, and to the small number of other projects within the county that will result in a substantial number of permanent new residents, the HPP is not expected to cause significant cumulative impacts.

The impacts associated with increased demand for resources due to HPP construction and operation are not anticipated to be significant or adverse. HPP construction and operation will not have a significant adverse impact on the ability of the county to provide law enforcement, fire and emergency medical services, utilities, or education services.

The environmental justice impacts of the project were analyzed, and the HPP will not have a disparate impact on minorities or low-income populations.

1.8.9 Agriculture and Soils

The HPP will not cause significant impacts to agriculture or soils. The HPP is located in an intensive agricultural area, where disturbance of soils has already occurred.

During excavation of the HPP site and before compacting and grading, the soils will have susceptibility to erosion. However, compacting and other construction mitigation measures will reduce the potential for erosion. With the exception of the seven-acre proposed facility, no agricultural land will be taken out of production as a result of the HPP.

Grading operations and construction activities will meet county and state grading requirements and stormwater best management practices.

1.8.10 Traffic and Transportation

The available capacity of the regional transportation system serving the Kings County area is sufficient to accommodate the traffic generated during the construction and operation of the proposed HPP. Due to the minimal increase in traffic during construction of the HPP, and the relatively uncongested traffic conditions along state routes and local roads in the project vicinity, the HPP will not result in significant traffic impacts.

There are no other known projects in the region whose workforce and/or material deliveries will concurrently use the same state routes and local roadways. Therefore, traffic impacts during operation of the HPP are also considered to be insignificant.

1.8.11 Visual Resources

Construction and operation of the HPP will not introduce elements into the local viewsheds that substantially differ in character from the adjacent Henrietta Substation. The HPP will not significantly obstruct or intrude on views or diminish the vividness, intactness, or unity of the local viewsheds. In addition, the activities associated with construction of the plant will be compatible with the existing industrial nature of the area and the presence of trucks and equipment. Therefore, the impacts from the HPP on the visual resources in the study area are considered to be less than significant.

1.8.12 Hazardous Materials Handling

The HPP will implement accident prevention and mitigation measures to reduce the risk associated with use and storage of hazardous materials. The quantities of hazardous materials stored or used on site will be evaluated to determine whether they exceed threshold levels for federal and state risk management and process safety requirements. Plans and programs are already in place at other existing GWF plants, and these programs will be adapted to the HPP. The current programs include hazard assessments, prevention programs, emergency response programs, and process management systems. Although risk cannot be completely eliminated, engineering and procedural features will effectively reduce the possibility and potential consequences of a release.

Hazardous materials at the HPP include insulating and lubricating oils, corrosion inhibitor, detergents, carbon dioxide, and aqueous ammonia, which will be used in the SCR system for NO_x control. The aqueous ammonia tank will be double walled, and the tank unloading area will drain to an underground containment structure sized to hold the entire contents of the delivery truck. The evaluation of plausible release scenarios indicates that the likelihood of a release is too small to be considered significant.

1.8.13 Waste Management

Nonhazardous and hazardous wastes generated by the HPP during both construction and operation of the HPP facility will be recycled to the extent possible. Typical wastes include process wastewater, nonhazardous solid and liquid waste, and hazardous solid and liquid waste. When properly handled, both nonhazardous and hazardous waste will not significantly affect the environment or human health.

Disposal of the nonhazardous waste generated by the HPP will not significantly decrease the capacity of the waste disposal facilities identified as available for use by the project. With active recycling efforts in place, and the currently available Class II or III waste disposal capacity, the incremental waste disposal capacity needed by the project is insignificant.

Similarly, the disposal of hazardous waste generated by the HPP will be minimized by recycling and will not significantly decrease the capacity of Class I hazardous waste disposal facilities used by the project.

1.8.14 Water Resources

Water for the proposed HPP will be supplied by Westlands Water District and Kings County under pre-existing contracts. Therefore, the project will not exert an additional or new demand upon State Water Project water and is not projected to cause a significant impact on local or regional water supplies from the California Aqueduct. Water for the site will be pumped from the Westlands Water District's standpipe (number 30380-30-935), which is located adjacent to the HPP site.

Best management practices and drainage control will be implemented, along with erosion and sediment control, to minimize surface water impacts during construction.

1.8.15 Geologic Resources and Hazards

The HPP will not adversely affect geologic resources of recreational, commercial, or scientific value. The HPP will be designed to conform with the requirements for CBC 1998 Seismic Zone 3. The surface and subsurface geologic units are not unique; the potential for

encountering rare minerals is very low. In addition, the HPP site has been previously disturbed by historic agricultural activities, and the transmission line, natural gas pipeline, and water supply pipeline routes are close to, or within, existing rights-of-way. No significant impacts to geologic resources are expected.

1.8.16 Paleontological Resources

The literature and archival reviews and the field survey did not identify any specific fossil localities that will be affected by the proposed project. Nonetheless, monitoring will be conducted to ensure that paleontological resources are not adversely affected by the earthmoving associated with construction of the HPP. Due to the high sensitivity rating of the formation underlying the proposed plant site and associated linear facilities, there is the potential for significant paleontological resources to occur below surface. Previously unidentified paleontological resources present on the plant site could be disturbed or destroyed during excavation activity. It is recommended that a paleontologist monitor the initial excavation activities and periodically inspect any deep excavation.

1.9 Cumulative Impacts

The incremental impacts of the HPP will not contribute to cumulative impacts, when viewed in connection with other existing projects or reasonably anticipated future projects in the area.

1.10 Summary

The proposed HPP will provide benefits to the local economy and will help the state meet projected electrical power needs. By employing advanced gas-fired combustion turbine technology, the HPP will create a highly efficient and environmentally superior source of electricity for entry into California's energy market in the early summer of 2002.

The impacts associated with the construction and operation of the HPP have been considered throughout the planning process. In instances where potential environmental impacts have been identified, mitigation measures have been proposed to lessen impacts to an insignificant level.

FIGURES

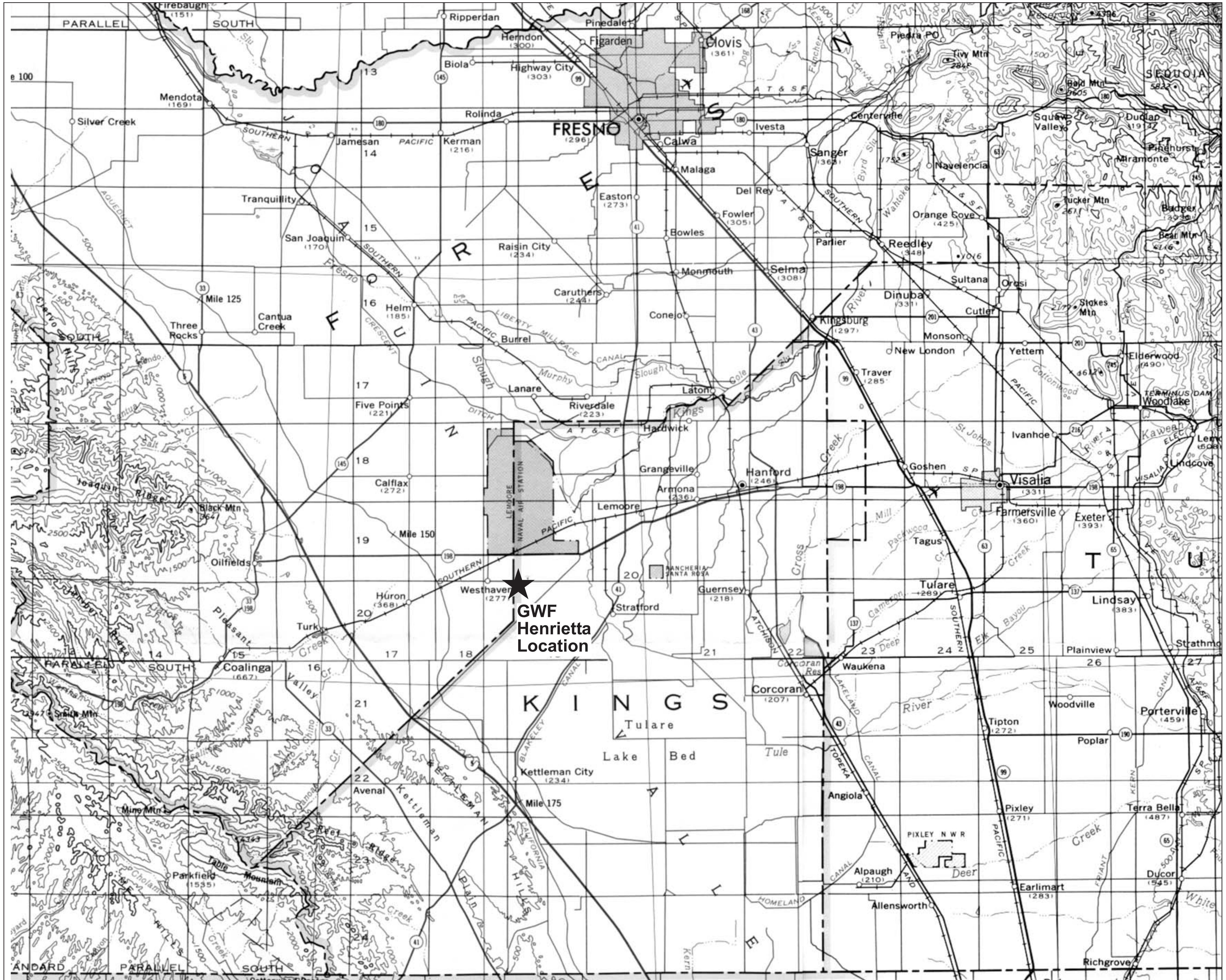

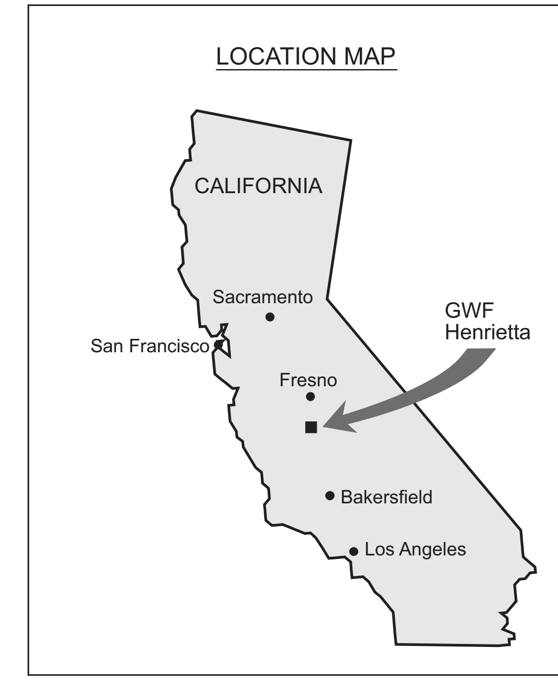

N

0 4 8
Scale in Miles

Source: USGS 1:500,000 Scale Topographic Map of California-South Half

URS	Project No. 51-00167032.00
	GWF Henrietta Peaker Project
SITE LOCATION MAP	Figure 1-1

51-00167032.00-01011/082301/gos

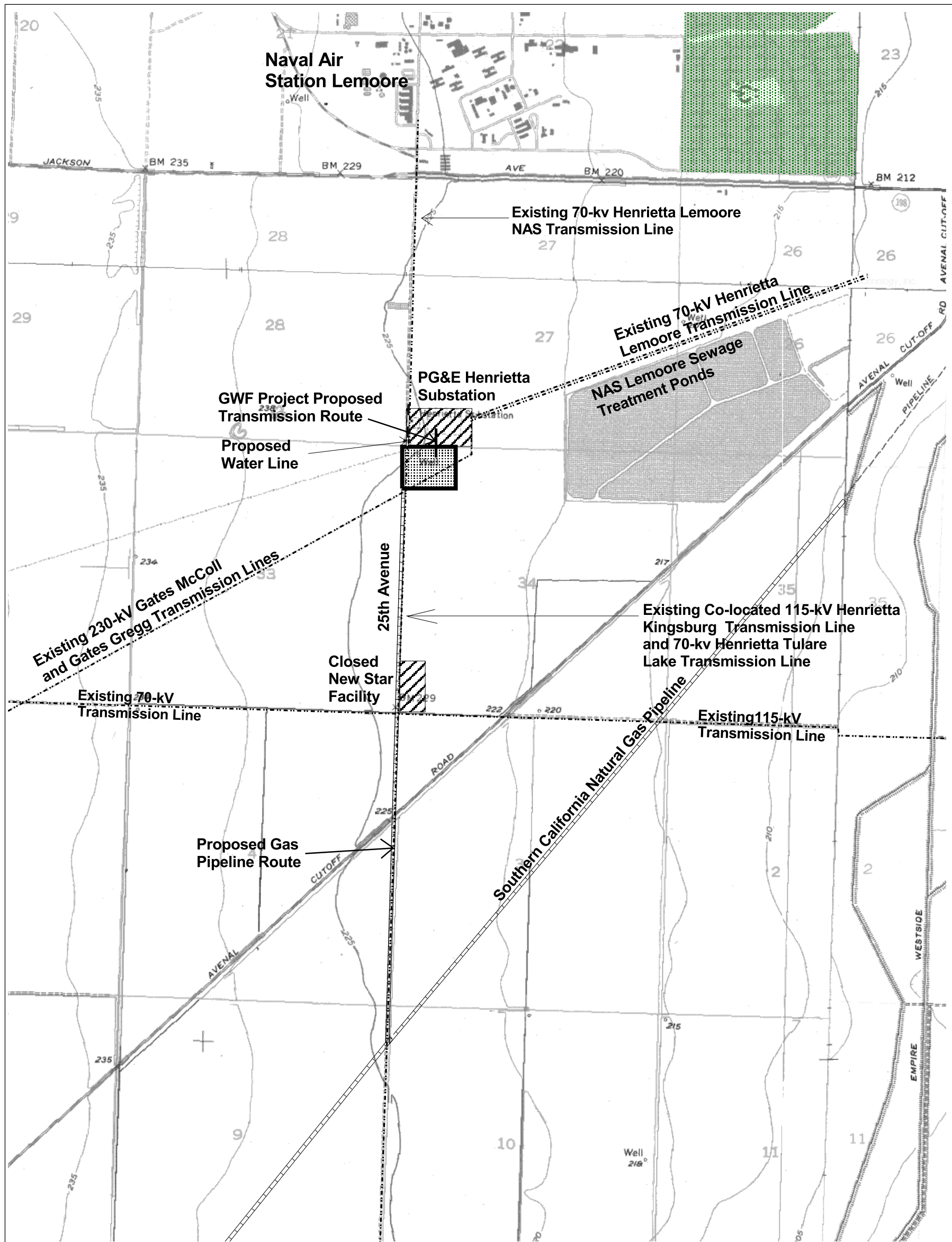

N

0 0.25 0.5 0.75 1 Miles

1000 0 1000 2000 Feet

Scale 1:24,000

Source:
Base Maps from U.S.G.S.
7.5 Minute Quadrangles
Westhaven, Calif., (Photorevised 1981),
Stratford, Calif. (1954), Lemoore (1954) and
Vanguard (1956, Photorevised 1981)

Existing Transmission Lines

Transmission Route

Gas Pipeline Routes

Water Line

Plant Site

Developed Industrial

URS	GWF Henrietta Peaker Project	Project Location Map	Figure 1-2
	Project No. 51-00167032.00		

L:\Projects\GWF_Henrietta\Apr\proj1dhw.apr

2.0 PROJECT DESCRIPTION

2.1 Introduction

The Henrietta Peaker Project (HPP) consists of a 91.4-net-megawatt (MW) (annual average conditions), natural-gas-fired, simple-cycle power plant, with a 70-kilovolt (kV) switchyard and approximately 550 feet of new 70-kV transmission line. The new transmission interconnection will be to the existing Pacific Gas and Electric Company (PG&E) Henrietta Substation to the north and contiguous with the project site. Natural gas for the facility will be delivered via approximately 2.2 miles of new 12-inch pipeline that will connect to the existing Southern California Gas Company Line 800 approximately one mile south of the intersection of 25th Avenue and the Avenal Cutoff. Kings County and the Westlands Water District will supply water to the HPP from an existing Westlands Water District line immediately adjacent to the HPP site on 25th Avenue. The site will utilize water treatment and recycling technology to achieve a near-zero discharge of wastewater from the HPP. A licensed hauler will dispose of the small quantity of wastewater generated by the plant at an approved offsite disposal facility.

The HPP site is located on the eastern side of 25th Avenue, approximately one mile south of State Route (SR) 198 and directly south of the PG&E Henrietta Substation. Figures 2-1a and 2-1b show the location of the proposed generating facility, electric transmission line, natural gas supply line, and water supply line. Additional information on ownership and location is provided in Section 8.4 (Land Use).

GWF Energy LLC (GWF) has acquired a 20-acre parcel south and adjacent to the PG&E Henrietta Substation. A copy of the Grant Deed for the parcel (a 20-acre portion of APN #024-190-065) is included in Appendix G. The plant will be developed on the northwestern portion of that parcel using approximately seven acres. The temporary construction laydown/parking area will require an additional 5 acres within the 20-acre parcel.

The following sections describe the design and operation of the power plant and the associated electric transmission line, natural gas supply line, and water supply line. The site selection process and the alternative sites considered are discussed in Section 5.0 (Alternatives).

2.2 Power Plant Description, Design, and Operation

This section describes the facility's conceptual design and proposed operation.

2.2.1 Site Plan and Access

The site layout drawing and site general arrangement are shown on Figure 2-3a and 2-3b, respectively. The typical elevation views shown on Figure 2-4a and 2-4b illustrate the location and size of the proposed power plant. The HPP will be visually compatible with the existing PG&E Henrietta Substation, which already introduces an industrial element into the surrounding area. The visual simulations with and without the proposed project are included in Section 8.11 (Visual Resources). The textual descriptions of the appearance and the architectural treatments to be employed in the HPP are also provided in Section 8.11.

The power plant area will be accessed via a plant entrance and exit on 25th Avenue (Figure 2-2).

2.2.2 Process Description

The power plant will consist of two General Electric (GE) LM6000 PC Sprint combustion turbine generators (CTGs) equipped with water injection and selective catalytic reduction (SCR) systems that use aqueous ammonia to control nitrogen oxides (NO_x) and an oxidation catalyst to control carbon monoxide (CO) and volatile organic compounds (VOCs). Air pollutant emissions from the HPP will be controlled to concentrations at or below Best Available Control Technology (BACT) levels for all criteria air pollutants.

Each CTG will generate an average of 46.9 MW (gross) output. The CTG exhaust gases will pass directly through the air pollution control systems before being discharged through an 85-foot-tall stack. Approximately 2.4 total MW will be consumed by the internal electrical demands of the plant, resulting in a net plant output of 91.4 MW. The project is expected to have a minimum overall annual capacity factor of approximately 50 percent, although during the first few years the HPP is expected to operate at significantly higher capacity factors. The HPP will be dispatched by the California Department of Water Resources (DWR) under an existing power purchase agreement. To enable the project to respond to California's

electrical transmission/distribution system demands, GWF is seeking a license to operate the plant up to 8,000 hours per year.

Heat balances for power plant base load operation are presented on Figures 2-5, 2-6, and 2-7. The three cases are at 15, 63, and 115 degrees Fahrenheit (°F).

Associated equipment includes emission control systems necessary to meet the proposed emission limits. NO_x emissions will be controlled to 3.6 or less parts per million by volume, dry (ppmvd), corrected to 15 percent oxygen by a combination of water injection into the combustor of the CTG and SCR system. CO emissions from the CTG will be controlled with an oxidation catalyst to 6 or less ppmvd at 15 percent oxygen. VOCs will be controlled to 2 or less ppmvd at 15 percent oxygen using the same oxidation catalyst.

2.2.3 Power Plant Cycle

The HPP will be a simple-cycle peaker plant. CTG combustion air will flow through the inlet air filter and evaporative cooler and associated air inlet ductwork, be compressed, and then flow to the CTG combustion section. Natural gas fuel will be injected into the compressed air in the combustion section and ignited. Water is injected in the combustor to reduce NO_x formation, into the compressor to increase power production, and into the CTG inlet for evaporative cooling. The hot combustion gases will expand through the turbine section of the CTG, causing it to rotate and drive the electric generator and CTG compressors.

2.2.4 Combustion Turbine Generator

Two GE LM6000 PC Sprint CTGs have been selected for the HPP. Thermal energy will be produced in the CTGs through the combustion of natural gas, which will be converted into the mechanical energy required to drive the combustion turbine compressor and electric generator.

The CTGs will be equipped with the following accessories to provide safe, efficient, and reliable operation.

- Evaporative inlet air coolers

- Inlet air filters with silencers
- Turbine/generator control system
- Lube oil cooling system
- Compressor wash system
- Fire detection and protection system
- Generator cooling system
- Hydraulic starting system
- Acoustical enclosures

2.2.4.1 Air Pollution Control Systems

Each CTG will be equipped with an SCR emission control system that uses aqueous ammonia in the presence of a catalyst to reduce the NO_x concentration in the exhaust gases. The catalyst module will be located in a control system casing installed at the discharge of each CTG. Aqueous ammonia will be injected into the exhaust gas stream through a grid of nozzles located upstream of the catalyst module. The subsequent chemical reaction will reduce NO_x to nitrogen and water, resulting in a NO_x concentration of 3.6 or less ppmvd at 15 percent oxygen in the exhaust gas. An oxidation catalyst will reduce CO concentrations to 6 or less ppmvd at 15 percent oxygen and VOC emissions to 2 or less ppmvd at 15 percent oxygen.

2.2.4.2 Emergency Diesel Engine

A 250-kilowatt (kW) emergency diesel generator (397 horsepower) will be installed for backup facility power and as an emergency driver for the firewater pump. The engine will normally be operated for approximately 15 minutes once each week to establish reliability.

2.2.5 Major Electrical Equipment and Systems

All power exported from the HPP will be delivered to the PG&E electrical transmission/distribution grid. The plant will generate its own auxiliary loads, including pumps, fans, control systems, and general facility loads such as lighting, heating, and air conditioning.

Some power will also be converted from alternating current (AC) to direct current (DC) for use as backup power for control systems and other uses. The following sections describe the transmission system and the HPP plant internal electrical systems.

2.2.5.1 AC Power – Transmission

Power will be generated by the CTG at 13.8 kV. An overall single-line diagram of the facility's electrical system is shown on Figure 2-2. The two 13.8-kV generator outputs will be connected to individual oil-filled generator step-up transformers, which will increase the voltage to 70 kV. Surge arresters will be provided at the high-voltage bushings to protect the transformers from surges on the 70-kV system caused by lightning strikes or other system disturbances. The transformers will be set on concrete pads within containment areas designed to contain the transformer oil in the event of a leak or spill. The high-voltage side of each step-up transformer will be connected to the plant's 70-kV switchyard. From the switchyard, power will be transmitted through a new overhead transmission line to the Henrietta Substation, which is contiguous with the northern boundary of the HPP.

2.2.5.2 AC Power – Distribution to Auxiliaries

Auxiliary power to the HPP plant will be supplied at 4,160 volts and at 480 volts AC. Power to the 4,160-volt AC system will be supplied by one oil-filled 13.8-kV to 4,160-volt transformer. Power to the 480-volt system will be supplied from a 4,160-volt to 480-volt oil-filled transformer. When power is not available through the 70-kV interconnection to the PG&E grid, the diesel generator will provide emergency load requirements for the HPP.

The 4,160-volt system will supply power to the 4,160-volt motor control center (MCC). Loads on this system include the natural gas fuel compressors and the transformer rated 4,160 to 480 volts for 480-volt power distribution. The switchgear will have vacuum breakers for the main incoming feeds and fused contactors for power distribution.

The 480-volt MCCs will provide power through feeder breakers to the various 480-volt motors, to 480-volt power panels, and to other intermediate 480-volt loads. The MCCs will distribute power to 480-480/277-volt isolation transformers when 277-volt, single-phase

lighting loads are to be served. The 480-volt power panels will distribute power to small 480-volt loads.

The 480-volt MCC and power panels will provide power to the 120/208-volt AC supply system. The 480-120/208-volt system will use dry-type transformers.

2.2.5.3 DC Power Supply

One common DC power supply system consisting of 125-volt DC batteries, a 125-volt DC full-capacity battery charger, metering, ground detectors, and distribution panels will be supplied for the balance-of-the-plant and CTG equipment.

Under normal operating conditions, the battery chargers will supply DC power to the DC loads. The battery chargers will receive 480-volt, three-phase AC power from the AC power supply (480-volt) system and continuously charge the batteries while supplying power to the DC loads. The ground detection scheme will detect grounds on the DC power supply system.

Under abnormal or emergency conditions, when power from the AC power supply (480-volt) system is unavailable, the batteries will supply DC power to the system loads. The diesel generator will provide 480-volt power to the chargers under emergency conditions.

The 125-volt DC system will also be used to provide control power to the 4,160-volt switchgear, the 480-volt switchgear, critical control circuits, protective relays, and the emergency DC motors.

2.2.5.4 Essential Service AC Uninterruptable Power Supply

The CTG power block will also have an essential service 120-volt AC, single-phase, 60-hertz (Hz) power source. This source will supply AC power to essential instrumentation, critical equipment loads, and unit protection and safety systems that require uninterruptable AC power. The essential service AC system and DC power supply system will be designed to ensure that critical safety and unit protection control circuits have power and can take the correct action on a unit trip or loss of plant AC power.

The essential service AC system will consist of one full-capacity inverter, a solid-state transfer switch, a manual bypass switch, an alternate source transformer and voltage regulator, and an AC panelboard.

The normal source of power to the system will be the DC power supply system through the inverter to the panelboard. A solid-state static transfer switch will monitor the inverter output and the alternate AC source continuously. The transfer switch will automatically transfer essential AC loads without interruption from the inverter output to the alternate source upon loss of the inverter output.

A manual bypass switch will also be included to enable isolation of the inverter-static transfer switch for testing and maintenance without interruption to the essential service AC loads.

2.2.6 Fuel System

The CTGs will be designed to burn natural gas. Maximum natural gas required for base load operation of the plant is approximately 20,400 million British thermal units (Btu) per day on a lower heating value (LHV) basis.

The pressure of natural gas delivered to the site via pipeline (see Section 7.0, Natural Gas Supply) is expected be within the range of 290 to 400 pounds per square inch gauge (psig). The natural gas will be pressurized by onsite compressors, as needed, and then flow through gas scrubber/filtering equipment, a gas pressure control station, a fuel gas heater, and a flow metering station before entering the CTG.

2.2.7 Water Supply and Use

This section describes the quantity of water required, the source of the water supply, water quality, and water treatment requirements. A water balance diagram for operation at 63 °F ambient air temperature and 60 percent relative humidity, and at 98 °F ambient air temperature and 36 percent relative humidity, showing the various water requirements and estimated flow rates for the facility at annual average and peak daily conditions, is presented on Figures 8.14-1 and 8.14-2.

2.2.7.1 Water Requirements

Table 2-1 shows a breakdown of the estimated average daily quantity of water required for the HPP. Table 2-2 shows the estimated peak daily water requirements for the HPP. Estimated quantities are based on a simple-cycle plant operating 24 hours per day.

2.2.7.2 Water Supply

The HPP will require approximately 150 acre-feet of water per year. All of the facility water for the HPP will be provided by the Westlands Water District and Kings County. Will-serve letters are provided in Appendix G.

Bottled water for drinking will be delivered to the site periodically by truck.

2.2.7.3 Water Quality

An analysis of the water sources is provided in Section 8.14 (Water Resources).

2.2.7.4 Water Treatment

The HPP will include a water treatment system for treating the water supply, which will provide higher quality water suitable for use in the combustion turbine evaporative coolers and water injection system. Water treatment will be performed through the use of a microfiltration system, a multistage reverse osmosis (RO) system, and an electro-deionization system. Demineralized water will be stored in an onsite tank. In addition, demineralized water will be used for CTG compressor washing. This water processing system will minimize the use of makeup water in the plant. Untreated supply water will be used for other purposes, such as in the service and fire water systems.

2.2.8 Plant Cooling Systems

Since the project is a simple-cycle power plant, no cooling system (such as a cooling tower) is required. The CTG and gas compressors will use an air-cooled heat exchanger for the lubrication oil cooling system. Evaporative cooling would consist of treated water that is injected into the air intake structure on the CTG using “foggers.” The use of this evaporative

cooling technology results in a zero-discharge, as all of the water is evaporated and passed through the CTG.

2.2.9 Waste Management

Waste management is the process whereby all wastes produced at the HPP will be properly collected, managed, treated off site, if necessary, and disposed of off site. Wastes include wastewater, solid nonhazardous waste, and hazardous waste (liquid and solid). Waste management is discussed in more detail in Section 8.13 (Waste Management).

2.2.9.1 Wastewater Collection, Treatment, and Disposal

The water-balance diagrams for the HPP are presented on Figures 8.14-1 and 8.14-2. The expected flow rates of the wastewater streams for both average daily ambient temperature (63 °F) and peak daily ambient temperature (98 °F) are provided in Tables 2-1 and 2-2, respectively. As illustrated, the primary wastewater discharge for the plant is from the water RO treatment and demineralization systems. This wastewater stream will be collected in a storage tank and then processed through the use of a mechanical vapor recompression unit to concentrate dissolved solids in the wastewater stream and to recycle water for use in the facility, resulting in a reduction in water supply for the HPP. The recycled clean water will be returned to the raw water holding tank and the small amount of concentrated slurry discharge will be stored in a wastewater tank and periodically transported off site for disposal. Waste streams from the oil-water separator and turbine wash-water will be collected in separate holding tanks and will also be periodically transported off site for disposal.

2.2.9.2 Stormwater Management

Contact stormwater runoff (from equipment areas on the site) associated with the operation and maintenance phase will be controlled and contained within the HPP site. This runoff will be confined within the site and be routed to an oil-water separator. The water from the oil-water separator will be used for makeup water. The recovered oil will be kept in a separate tank and disposed of offsite periodically. The area inside the fence line will be bermed and graded to direct noncontact stormwater runoff to a drainage system that discharges to the onsite evaporation/percolation pond. The drainage system for the HPP site has been designed to

manage the stormwater runoff resulting from a maximum 10-year, 10-day rainfall event to prevent flooding of permanent facilities and roads.

2.2.9.3 Solid Waste

The HPP will produce maintenance and plant wastes typical of power generation operations. Generation plant wastes include oily rags, broken and rusted metal and machine parts, defective or broken electrical materials, empty containers, and other miscellaneous solid wastes, such as the typical refuse generated by workers. These waste materials will be collected by a waste collection company and transported to a material recovery facility. Recyclables will be removed and the remaining residues deposited in a landfill, such as the Kings County Landfill (see Section 8.13). Waste collection and disposal will be performed in accordance with applicable regulatory requirements to minimize health and safety effects.

2.2.9.4 Hazardous Wastes

Several methods will be used to properly manage and dispose of hazardous wastes generated by the HPP. Waste lubricating oil will be recovered and recycled by a licensed recycling contractor. Spent lubrication oil filters will be disposed of in a Class I landfill off site. Workers will be trained to properly handle hazardous waste generated at the site. Periodically, the SCR and oxidation catalysts must be replaced and will be recycled off site by the catalyst supplier.

2.2.10 Management of Hazardous Materials

Various chemicals will be stored and used during the construction and operation of the HPP. All chemicals will be stored, handled, and used in accordance with applicable laws, ordinances, regulations, and standards (LORS). Chemicals will be stored in appropriate chemical storage facilities. Bulk chemicals will be stored in storage tanks, or in returnable delivery containers. Chemical storage and chemical use areas will be designed to contain leaks and spills. Berm and drain piping design will allow a full-tank-capacity spill without overflowing the berms. For multiple tanks located within the same bermed area, the capacity of the largest single tank will determine the volume of the bermed area and drain piping. Drains from the chemical storage and use areas will be isolated to control the release of liquids. Routine

inspections of all chemical storage areas will occur on a daily basis by plant personnel when the plant is in operation. The drain valves will normally be closed to prevent a release from the containment area. Should a chemical spill occur, the liquid will be contained and appropriate cleanup measures taken. Accumulated stormwater in the containments areas will be tested prior to manual release to the stormwater collection basin.

Aqueous ammonia will be stored in an aboveground, double-walled storage tank. The truck unloading station and ammonia pump station will be connected to an underground containment structure to collect aqueous ammonia should a spill or leak occur.

Safety showers and eyewashes will be provided adjacent to, or in the area of, all chemical storage and use areas. Water hose connections will be provided near the chemical storage and feed areas to flush spills and leaks. Plant personnel will use state-approved personal protective equipment during chemical spill containment and cleanup activities. Personnel will be properly trained in the handling of these chemicals and instructed in the procedures to follow in case of a chemical spill or accidental release. Adequate supplies of absorbent material will be stored on site for spill cleanup. Electric equipment insulating materials will be specified to be free of polychlorinated biphenyls (PCBs).

A list of the chemicals anticipated for use at the power plant is provided in Table 8.12-1 for the construction phase and Table 8.12-2 for the operation and maintenance phase. These tables identify each chemical by type and intended use and estimate the quantity to be stored on site. Section 8.12 includes additional information on hazardous materials handling.

2.2.11 Emission Control and Monitoring

Air emissions from the combustion of natural gas in the CTG will be controlled using state-of-the-art systems. Emissions that will be controlled include NO_x, VOCs, and CO. To ensure that the systems perform correctly, continuous emissions monitoring (CEM) will be performed. Section 8.1 (Air Quality) includes additional information on emission control and monitoring.

2.2.11.1 NO_x Emission Control

SCR will be used to control NO_x concentrations in the exhaust gas emitted to the atmosphere to 3.6 or less ppmvd at 15 percent oxygen. The SCR process will use aqueous ammonia. Ammonia slip, or the concentration of unreacted ammonia in the exiting exhaust gas, will be limited to 10 or less ppmvd at 15 percent oxygen. The SCR equipment will include a reactor chamber, catalyst modules, aqueous ammonia storage system, ammonia vaporization and injection system, and monitoring equipment and sensors.

2.2.11.2 CO and VOC Emission Control

CO and VOCs will be controlled at the CTG combustor and by an oxidation catalyst that is part of the air pollution control system. CO will be controlled to 6 ppmvd or less at 15 percent oxygen, and VOCs will be controlled to 2 ppmvd or less at 15 percent oxygen.

2.2.11.3 Particulate Emission Control

Particulate emissions will be controlled by using natural gas as the sole fuel for the CTG. In addition, the CTGs will employ high-efficiency inlet air filtration.

2.2.11.4 Continuous Emission Monitoring

CEM systems will sample, analyze, and record fuel gas flow rate, exhaust gas flow rate, NO_x and CO concentration levels, and percentage of oxygen in the stack exhaust gas. This system will generate emission data reports in accordance with permit requirements and will send alarm signals to the plant control room when emission levels approach or exceed preselected limits.

2.2.12 Fire Protection

The fire protection system will be designed to protect personnel and limit property loss and plant downtime in the event of a fire. The fire protection system will include a dedicated underground fire loop piping system. The fire hydrants and the fixed suppression systems will be supplied from the fire water loop. An emergency diesel generator will provide a backup power supply for the fire water pump. Fixed fire suppression systems will be installed at

determined fire risk areas, such as the administration/maintenance building. The CTGs will be protected by a carbon dioxide (CO_2) fire protection system. Hand-held fire extinguishers of the appropriate size and rating will be located throughout the facility in accordance with National Fire Protection Association Standard 10.

Section 8.12 (Hazardous Materials Handling) includes additional information on fire and explosion risk, and Section 8.8 (Socioeconomics) provides information on county fire protection capability.

2.2.13 Plant Auxiliaries

The following systems will support, protect, and control the generating facility.

2.2.13.1 Lighting

The lighting system will provide personnel with illumination for operation under normal conditions and for egress under emergency conditions. The system will include emergency lighting to perform manual operations during an outage of the normal power source. The system will also be provided with 120-volt convenience outlets for portable lamps and tools. Light will be directed toward the interior of the plant to minimize offsite light and glare impact. Lighting fixtures will also include shields and hoods to produce downcast.

2.2.13.2 Grounding

The electrical system will be susceptible to ground faults, lightning, and switching surges that can result in high voltage, constituting a hazard to site personnel and electrical equipment. The station grounding system will provide an adequate path to permit the dissipation of current created by these events.

The grounding grid will be designed for a capacity adequate to dissipate heat from ground current under the most severe conditions in areas of high ground fault current concentration. The grid spacing will be adequate to maintain safe voltage gradients.

Bare conductors will be installed below grade in a grid pattern. Each junction of the grid will be bonded together by an exothermal welding process or mechanical clamps.

Ground resistivity readings will be used to determine the necessary number of ground rods and grid spacings to ensure safe step-and-touch potentials under severe fault conditions. Grounding stingers will be brought from the ground grid to connect to building steel and nonenergized metallic parts of electrical equipment.

2.2.13.3 Control and Information System

The Control and Information System (CIS) will provide modulating control, digital control, monitoring, and indicating functions for the plant power block systems. The system will be capable of the following functions:

- Controlling the CTGs and other systems in a coordinated manner
- Controlling the balance-of-plant systems in response to plant demands
- Monitoring controlled plant equipment and process parameters and delivering this information to plant operators
- Providing control displays (printed logs, cathode ray tube [CRT]) for signals generated within the system or received from input/output (I/O)
- Providing consolidated plant process status information through displays presented in a timely and meaningful way
- Providing alarms for out-of-limit parameters or parameter trends, displaying on alarm CRT(s), and recording on an alarm log printer
- Storing and retrieving historical data

The CIS will be a redundant microprocessor-based system consisting of the following major components:

- CRT-based operator consoles
- Engineer workstation
- Distributed processing units
- I/O cabinets
- Historical data unit
- Printers

- Data links to the combustion turbine control systems

The CIS will interface with the control systems furnished by the combustion turbine supplier to provide remote control capabilities, as well as data acquisition, annunciation, and historical storage of turbine and generator operating information. The system will be designed with sufficient redundancy to preclude a single device failure from significantly affecting overall plant control and operation. Critical control and safety systems will have redundant subsystems and an uninterruptable power source.

2.2.13.4 Cathodic Protection

The cathodic protection system will be designed to control the electrochemical corrosion of designated metal piping buried in the soil. Depending upon the corrosion potential and the site soils, either passive or impressed current cathodic protection will be provided.

2.2.13.5 Freeze Protection

The freeze protection system will provide heat to various outdoor pipes, gauges, pressure switches, and other devices to protect them from freezing temperatures. The power supply for the freeze protection circuits will be controlled by an ambient temperature thermostat.

2.2.13.6 Service Air

The service air system will supply compressed air to hose connections for general plant use. Service air headers will be routed to hose connections located at various points throughout the facility.

2.2.13.7 Instrument Air

The instrument air system will provide dry air to pneumatic operators and devices. An instrument air header will be routed to locations within the facility equipment and water treatment areas where pneumatic operators and devices will be located.

2.2.14 Interconnect to Electrical Grid

The CTGs will be connected to individual, dedicated, three-phase step-up transformers, which will be connected to the plant's 70-kV switchyard. The switchyard will consist of an airbreak disconnect switch and SF6 circuit breakers. From the switchyard, the generated power will be transmitted along overhead lines into the PG&E substation adjacent to the facility. See Section 6.0 (Electric Transmission) for additional information on the switchyard, transmission line, and connection at the PG&E Henrietta Substation.

2.2.15 Project Construction

Construction of the generating facility, from site preparation and grading to commercial operation, is expected to take place from January 2002 to May 2002, for a total duration of five months of actual construction. Major milestones are listed in Table 2-3.

Access to the HPP site will be from 25th Avenue. The onsite construction laydown area and a construction parking area are shown on Figure 2-3a. It is anticipated that materials and equipment will be delivered to the site by truck.

The average and peak workforce on the project during construction will be approximately 75 and 93, respectively, including construction craft persons and supervisory, support, and construction management personnel (see Section 8.8, Socioeconomics).

Construction will be scheduled between 6 a.m. and 6 p.m., Monday through Saturday. Additional hours may be necessary to make up schedule deficiencies or to complete critical construction activities. During the startup phase of the project, some activities will continue 24 hours a day, seven days a week. The construction period is scheduled to be 5 months in length. The peak construction workforce is expected to last from month 3 through month 4 of the construction period, with month 4 being the peak month.

2.2.16 Site Grading

The HPP site will be constructed using a balanced cut-and-fill approach. The site is relatively flat and the primary excavation is associated with the onsite stormwater pond.

Approximately 11,500 cubic yards of cut and 11,500 cubic yards of fill are anticipated to achieve the final balanced site grading. A site grading and drainage plan drawing is included in Appendix H1-2.

2.2.17 Power Plant Operation

The HPP will be operated by GWF personnel from existing operating facilities. Operators and maintenance staff will be dispatched from the Hanford Cogeneration plant to the facility as needed to operate the HPP.

GWF has executed a contract with the California Department of Water Resources (DWR) that provides for 4,000 hours per year of dispatch. During the first years of operation DWR, as determined by system demand requirements, may dispatch the HPP more than 4,000 hours per year. For this reason, GWF is seeking a license to operate the plant up to 8,000 hours per year.

Security of the facilities will be maintained on a 24-hour basis. In the unlikely event that a temporary cessation of operations is required, a contingency plan will be implemented in conformance with applicable LORS for the protection of public health, safety, and the environment. Depending on the expected duration of the shutdown, the plan may include the removal of chemicals from storage tanks and other equipment and the safe shutdown of all equipment. All wastes will be disposed of according to applicable LORS. If the cessation of operations becomes permanent, decommissioning will be undertaken (see Section 4.0, Facility Closure).

2.3 Facility Safety Design

The HPP will be designed to maximize safe operation. Hazards that could affect the facility include earthquake, flood, and fire. Facility operators will be trained in safe operation, maintenance, and emergency response procedures to minimize the risk of personal injury and damage to the plant.

2.3.1 Natural Hazards

The principal natural hazards associated with the HPP site are earthquakes, floods, and lightning strikes. The site is located in Seismic Risk Zone 3. Structures will be designed to meet the seismic requirements of California Code of Regulations Title 24 and the 1998 California Building Code (CBC). Section 8.15 (Geologic Resources and Hazards) discusses the geological hazards of the site and vicinity. This section discusses potential geologic hazards, seismic ground motions, and the potential for soil liquefaction due to ground shaking. Appendix H includes the structural seismic design criteria for the buildings and equipment.

The site is essentially flat, with an average elevation of approximately 225 feet above mean sea level (MSL). According to the Federal Emergency Management Agency (FEMA), the site is not within either the 100- or 500-year floodplain. Section 8.14 (Water Resources) provides additional information on the potential for flooding.

2.3.2 Emergency Systems and Safety Precautions

This section discusses the fire protection systems, emergency medical services, and safety precautions to be used by project personnel. Section 8.8 (Socioeconomics) includes additional information on area medical services, and Section 8.7 (Worker Health and Safety) includes additional information on safety for workers. Appendix H contains the design practices and codes applicable to safety design for the project. Compliance with these requirements will minimize project effects on public and employee safety.

2.3.2.1 Fire Protection Systems

The project will rely on both onsite fire protection systems and local fire protection services.

Onsite Fire Protection Systems. The fire protection systems will be designed to protect personnel and limit property loss and plant downtime from fire or explosion. The project will have the following fire protection systems.

CO_2 Fire Protection System. This system will protect the gas turbine, generator, and accessory equipment compartments from fire. The system will have fire detection sensors in all compartments. Actuating one sensor will provide a high temperature alarm on the combustion turbine control panel. Actuating a second sensor will trip the combustion turbine, turn off ventilation, close ventilation openings, and automatically release the CO_2. The CO_2 will be discharged at a design concentration adequate to extinguish the fire.

Fire Hydrants/Hose Stations/Building Sprinklers/Deluge System. These systems will provide fire protection for the exterior plant area, generator transformers, auxiliary transformers, administration building, and maintenance building. The main fire pump will be electrically driven and will deliver water to the hydrants, hose stations, and building sprinklers through an underground piping system from the raw water tank. The main fire pump will be powered from the 480-volt plant distribution bus and will be backed up by an emergency diesel generator. An electrically driven jockey pump will operate automatically to maintain water pressure in the fire system piping.

Fire Extinguisher. The plant administrative and maintenance buildings will be equipped with portable fire extinguishers as required by the local fire department.

Local Fire Protection Services. In the event of a major fire, plant personnel could call upon the Kings County Fire Department (KCFD) for assistance. The closest fire station is KCFD Station 7, located at the intersection of 18th Avenue and Indiana, approximately 10 miles from the HPP site (see Section 8.8, Socioeconomics). The Hazardous Materials Management Plan (see Section 8.12, Hazardous Materials Handling) for the plant will include all information necessary to permit fire fighting and other emergency response agencies to plan and implement safe responses to fires, spills, and other emergencies.

2.3.2.2 Personnel Safety Program

The HPP will operate in compliance with federal and state occupational safety and health program requirements. Compliance with these programs will minimize project effects on employee safety. These programs are described in Section 8.7 (Worker Health and Safety).

2.4 Facility Reliability

This section discusses the expected plant availability, equipment redundancy, fuel availability, water availability, and project quality control measures.

2.4.1 Plant Availability

Because of the HPP's predicted high efficiency, it is anticipated that the facility will normally be called upon to operate at high average annual capacity factors. The facility will be designed to operate at base load. Neither CTG is designed to operate at partial load, except during startup and shutdown. The HPP will be designed for an operating life of 30 years. The project will employ fully mature technology that has been commercially demonstrated for many years. Therefore, the plant maturation period for the HPP will be the period between start-up and commercial operation (approximately one month). Reliability and availability projections are based on this operating life, although the HPP could operate for a longer period. Operation and maintenance (O&M) procedures will be consistent with industry standard practices to maintain the useful life status of plant components.

2.4.2 Redundancy of Critical Components

The following sections identify equipment redundancy as it applies to project availability. Specifically, redundancy in the balance-of-plant systems that serve the power block are described. Equipment redundancy is summarized in Table 2-4 and described in detail in Appendix H. Redundancy following final design may differ.

2.4.2.1 Power Block

The combustion turbine power generation train will be powered by two natural-gas-fired combustion turbines. The combustion turbine will provide 100 percent of the total simple-cycle power block output. The simple-cycle power block comprises the major components described below.

CTG Subsystems. The combustion turbine subsystems will include the combustion turbine, inlet air filtration and evaporative cooling system, generator and excitation

systems, and turbine control and instrumentation. The combustion turbine will produce thermal energy through the combustion of natural gas; the thermal energy will be converted into mechanical energy through rotation of the combustion turbine, which drives the compressor and generator. Power output can be increased through steam injection upstream of the turbine section of the CTG. Each CTG generator will be totally enclosed and air-cooled. The generator excitation system will be a solid-state static system. Combustion turbine control and instrumentation (interfaced with the CIS) will cover the turbine generating system, the protective system, and sequence logic.

2.4.2.2 CIS

The gas-turbine control system as provided by the CTG system manufacturer is a triple-modular-redundant, microprocessor-based control system. A key feature is its three separate but identical controllers. All critical control algorithms, protective functions, and sequencing are performed by these processors, which provide the data needed to generate outputs to the turbine. Protective outputs are routed through the protective module, which consists of triple-redundant processors that also provide independent protection for critical functions such as overspeed.

The three control processors acquire data from triple-redundant sensors as well as from dual or single sensors. All critical sensors for continuous controls, and for protection, are triple redundant. Other sensors are dual or single devices fanned out to all three control processors. The extremely high reliability achieved by the triple-modular-redundant control systems is due, in considerable measure, to the use of triple sensors for all critical parameters.

The control system has extensive built-in diagnostics and includes “power-up,” background, and manually initiated diagnostic routines capable of identifying both control panel, sensor, and output device faults. These faults are identified down to the board level for the panel, and to the circuit level for the sensor or actuator component. On-line replacement of boards is made possible by the triple-redundant design and is also available for those sensors where physical access and system isolation are feasible.

2.4.2.3 Demineralized Water System

Water treatment will be performed through the use of a microfiltration system, a multistage RO system, and an electro-deionization system. Demineralized water will be stored in a 300,000-gallon onsite storage tank.

2.4.2.4 Compressed Air System

The compressed air system comprises the instrument air and service air subsystems. The service air system supplies compressed air to the instrument air dryers and to hose connections for general plant use. The service air system will include two 100-percent-capacity air compressors, service air headers, and distribution piping with hose connections. The instrument air system supplies dry compressed air at the required pressure and capacity for all control air demands, including pneumatic controls, transmitters, instruments, and valve operators. The instrument air system will include two 100-percent-capacity air dryers with prefilters and after filters, an air receiver, instrument air headers, and distribution piping.

2.4.3 Fuel Availability

Fuel will be delivered by Southern California Gas Company's existing transmission system. Capacity in the local system is sufficient to supply the HPP. It is conceivable that the transmission line or the connecting line to the HPP could become temporarily inoperable, resulting in fuel unavailability at the HPP. Because the HPP has no backup supply of natural gas, it will be shut down until the outage is corrected and gas service restored.

2.4.4 Water Availability

The water supply system is considered reliable, and no backup system has been provided. The availability of water to meet the needs of the HPP is discussed in more detail in Section 8.14 (Water Resources). The will-serve letters are included in Appendix G. Water for drinking purposes will be delivered by a bottled-water supplier.

2.4.5 Project Quality Control

The objective of the HPP Quality Control Program is to ensure that appropriate quality measures are applied to all systems and components during design, procurement, manufacturing, construction, and operation. The goal of the Quality Control Program is to achieve the desired levels of safety, reliability, availability, operability, constructability, and maintainability for the generation of electricity.

Quality assurance for a system is obtained by applying appropriate controls to various activities. For example, the appropriate controls for design work are checking and review, and the appropriate controls for manufacturing and construction are inspection and testing. Appropriate controls will be applied to each project activity.

2.4.5.1 Project Stages

For quality assurance planning purposes, project activities have been divided into nine stages. As the project progresses, the design, procurement, fabrication, erection, and checkout of each power plant system will progress through the stages defined below:

Conceptual Design Criteria. Activities such as the definition of requirements and engineering analyses.

Detailed Design. Activities such as the preparation of calculations, drawings, and lists needed to describe, illustrate, or define systems, structures, or components.

Procurement Specification Preparation. Activities necessary to compile and document the contractual, technical, and quality provisions of procurement specifications for plant systems, components, or services.

Manufacturer Control and Surveillance. Activities necessary to ensure that manufacturers conform to the provisions of procurement specifications.

Manufacturer Data Review. Activities required to review manufacturers' drawings, data, instructions, procedures, plans, and other documents to ensure coordination of plant systems and components and conformance to procurement specifications.

Receipt Inspection. Inspection and review of products upon delivery to the construction site.

Construction/Installation. Inspection and review of storage, installation, and cleaning and initial testing of systems or components at the plant site.

System/Component Testing. Actual controlled operation of power plant components in a system to ensure that the performance of systems and components conforms to specified requirements.

Plant Operation. Actual operation of the power plant system.

2.4.5.2 Quality Control Records

The following quality control records will be maintained for review and reference:

- Project instructions manual
- Design calculations
- Project design manual
- Quality assurance audit reports
- Conformance to construction records drawings
- Procurement specifications (contract issue and change orders)
- Purchase orders and change orders
- Project correspondence

For procured component purchase orders, a list of qualified suppliers and subcontractors will be developed. Before contracts are awarded, the subcontractors' capabilities will be evaluated. The evaluation will include consideration of suppliers' and subcontractors' personnel, production capability, past performance, and quality assurance program.

During construction, field activities will be accomplished during the last four stages of the project: receipt inspection, construction/installation, system/component testing, and

plant operation. The construction contractor will be contractually responsible for performing the work in accordance with the quality requirements specified by the contract.

The subcontractors' quality compliance will be surveyed through inspections, audits, and the administration of independent testing contracts.

To control quality, the HPP will implement a plant O&M program typical for a project of this size. A specific O&M program for this project will be defined and implemented during initial plant startup.

2.5 Facility Design Laws, Ordinances, Regulations, and Standards (LORS)

2.5.1 Overview

Table 2-5 provides an overview of facility design LORS. See Appendix H for a more detailed presentation. The HPP will be constructed in accordance with all applicable LORS. Table 2-5 indicates specific facility design LORS, which agencies enforce them, and where conformance with the individual LORS is discussed. Proposed conditions of certification are contained in Appendix K. These conditions are proposed to ensure compliance with applicable LORS and/or to reduce potentially significant impacts to less-than-significant levels.

2.5.2 Facility Design

The following fundamental engineering fields are analyzed and discussed, where indicated, for LORS compliance.

2.5.2.1 Civil and Structural Engineering

The design of structures and facilities will be based on the codes, specifications, industry standards, and regulations, and other reference documents in effect at the time of design. Applicable codes and industry standards with respect to the project's engineering design criteria, construction, and operation are summarized in Appendix H1, Foundation and Civil Engineering Design Criteria, and Appendix H2, Structure and Seismic Engineering Design Criteria.

2.5.2.2 Mechanical Engineering

The design of structures and facilities will be based on the codes, specifications, industry standards, and regulations, and other reference documents in effect at the time of design. Applicable codes and industry standards with respect to the project's engineering design criteria, construction, and operation are summarized in Appendix H3, Mechanical Engineering Design Criteria. Applicable sections of system control design criteria, as summarized in Appendix H4, Control Engineering Design Criteria, will also be considered.

2.5.2.3 Electrical Engineering

The design of structures and facilities will be based on the codes, specifications, industry standards, and regulations, and other reference documents in effect at the time of design. Applicable codes and industry standards with respect to the project's engineering design criteria, construction, and operation are summarized in Appendix H5, Electrical Engineering Design Criteria. Applicable sections of system control design criteria, as summarized in Appendix H4, Control Engineering Design Criteria, will also be considered.

2.5.3 Typical Codes and Standards for Construction and Design

The following are typical codes and standards for general plant construction and design; additional codes and standards may be used, depending on the final plant design and equipment selection.

Air Conditioning and Refrigeration Institute (ARI)

- ARI 430-1989--Central Station Air Handling Units

Air Movement and Control Association (AMCA)

- AMCA-210 - 1985--Laboratory Methods of Testing Fans for Rotating
- AMCA-500 - 1989--Test Methods for Louvers, Dampers and Shutters

American Petroleum Institute (API)

- API 599--Steel and Ductile Iron Plug Valves

- API 608--Metal Ball Valves - Flanged and Butt-Welding Ends
- API 609--Lug and Wafer-Type Butterfly Valves
- API 610--Centrifugal Pumps for Petroleum, Heavy-Duty Chemical and Gas Industry Services

American Society of Civil Engineers (ASCE)

- ASCE 7--Minimum Design Loads for Buildings and Other Structures

American Society of Heating, Refrigeration, and Air Conditioning Engineers (ASHRAE)

- Handbook: Fundamentals - 1997
- Handbook: HVAC Applications - 1995
- Handbook: HVAC Systems and Equipment - 1996
- Handbook: Refrigeration - 1998
- Standard: 15-1994--Safety Code for Mechanical Refrigeration
- Standard: 52-1976--Method of Testing Air Cleaning Devices Used in General Ventilation for Removing Particulate Matter
- Standard: 62-1989--Ventilation for Acceptable Indoor Air Quality
- Standard: 90.1-1989--Energy Efficient Design of Buildings

American Welding Society (AWS)

- Welding procedures and qualifications for welders will follow the recommended practices and codes of the AWS
  - AWS D1.4--Structural Welding Code - Reinforcing Steel

American Water Works Association (AWWA)

- AWWA Cl10--Ductile Iron and Gray Iron Fittings, 3 inches through 48 inches for Water and Other Liquids
- AWWA ClII--Rubber-Gasket Joints for Ductile-Iron and Grey Iron Pressure Pipe and Fittings

- AWWA C301--Prestressed Concrete Pressure Pipe, Steel-Cylinder Type For Water and Other Liquids
- AWWA C304--Design of Prestressed Concrete Cylinder Pipe
- AWWA C502 Dry-Barrel Fire Hydrant
- AWWA C906--Polyethylene Pressure Pipe and Fittings, 4 inches through 63 inches for Water Distribution
- AWWA D100--Welded Steel Tanks for Water Storage
- AWWA Ml 1--Water Supply Practices, Pipe - Design and Installation

California Energy Commission

- Recommended Seismic Design Criteria for Non-Nuclear Generating Facilities in California

California Occupational Health and Safety Administration (OSHA and CAL-OSHA)

- Design and construction will conform to federal and California Occupational Safety and Health Administration (OSHA and CAL-OSHA) requirements

Chartered Institute of Building Services Engineers (CIBSE)

- Guide-A

Crane Technical Paper

- 410--Flow of Fluids Through Valves, Fittings, and Pipe

Concrete Reinforcing Steel Institute (CRSI)

- Manual of Standard Practice
- Structural concrete and reinforcing steel will be designed and placed in accordance with the codes, guides, and standards of the American Concrete Institute (ACI) and the CRSI.

Factory Mutual (FM)

- Roof covering design will comply with the requirements of the FM

Federal

- Title 29, Code of Federal Regulations (CFR), Part 1910, Occupational Safety and Health Standards
- Title 29, CFR, Part 1926, National Safety and Health Regulations for Construction
- Walsh-Healy Public Contracts Act (Public Law 50-204.10)

General Electric Standards

- Station Designers Handbook
  - GEK 27060B--Design Recommendations for Steam Piping Systems Connected to Steam Turbine Generators

Heat Exchange Institute (HEI)

- Standard for Power Plant Heat Exchangers
- TEMA (Tubular Exchanger Manufacturers Association)

Hydraulic Institute (HI)

- Standards for Centrifugal, Rotary & Reciprocating Pumps

International Society for Measurement & Control

- ISA S7.3--Quality Standard for Instrument Air

Metal Building Manufactures Association (MBMA)

- Low-Rise Building Systems Manual

National Environmental Balancing Bureau (NEBB)

- Procedural Standards for Testing, Adjusting, and Balancing of Environmental Systems - 1992

National Fire Protection Association (NFPA)

- Roof covering design will comply with the requirements of the NFPA

- NFPA 10--Portable Fire Extinguishers
- NFPA 12--Carbon Dioxide Extinguishing Systems
- NFPA 13--Installation of Sprinkler Systems
- NFPA 14--Installation of Standpipe and Hose Systems
- NFPA 15--Water Spray Fixed Systems for Fire Protection
- NFPA 22--Standard for Water Tanks for Private Fire Protection
- NFPA 24--Private Fire Service Mains and Their Appurtenances
- NFPA 30--Flammable and Combustible Liquids Code
- NFPA 70--National Electric Code
- NFPA 72--Protective Signaling Systems
- NFPA 80 --Standard for Fire Doors and Fire Windows
- NFPA 85--Fire Protection for Electric Generating Plants
- NFPA 850--Recommended Practice for Fire Protection for Electric Generating Plants
- NFPA 90A--Installation of Air Conditioning and Ventilating Systems
- NFPA 90B--Installation of Warm Air Heating and Air Conditioning Systems

Sheet Metal and Air Conditioning Contractors' National Association (SMACNA)

- HVAC Duct Construction Standards, Metal and Flexible, First Edition - 1985

State

- Business and Professions Code Section 6704, et seq.; Sections 6730 and 6736. Requires state registration to practice as a Civil Engineer or Structural Engineer in California.
- Labor Code Section 6500, et seq. Requires a permit for construction of trenches or excavations 5 feet or deeper into which personnel have to descend.

This also applies to construction or demolition of any building, structure, false work, or scaffolding that is more than three stories high or equivalent.

- Title 24, California Code of Regulations (CCR) Section 2-111, et seq.; Section 3-100, et seq.; Section 4-106, et seq.; Section 5-102, et seq.; Section 6-T8-769, et seq.; Section 6-T8-3233, et seq.; Section 6-T8-3270, et seq.; Section 6-T8-5138, et seq.; Section 6-T8-5465, et seq.; Section 6-T8-5531, et seq.; and Section 6-T8-5545, et seq. Adopts current edition of the California Building Code as minimum legal building standards.

- Title 8, CCR Section 1500, et seq.; Section 2300, et seq.; and Section 3200, et seq. Describes general construction safety orders, industrial safety orders, and work safety requirements and procedures.

- Regulations of the following state agencies, as applicable:

  - Department of Labor and Industry Regulations

  - Bureau of Fire Protection

  - Department of Public Health

  - Water and Power Resources

Steel Structures Painting Council (SSPC)

- Steel Structures Painting Manual, Volume 2, Systems and Specifications

- Metal surfaces for coating systems will be prepared following the specifications and standard practices of the SSPC and the specific instructions of the coatings manufacturer.

Underwriters Laboratory (UL)

- UL-555-1990--Fire Dampers

- UL-1025-1991--Electric Air Heaters

- UL-1042-1987--Electric Baseboard Heating Equipment

- UL-1046-1986--Electric Central Air Heating Equipment

- National Board Rules for Boiler Blow-off Tanks

Civil/Architectural

- Other recognized standards will be used where required to serve as guidelines for design, fabrication, and construction. When no other code or standard governs, the California Building Code, 1998 Edition as amended by the Los Angeles County Code, will govern.

International Conference of Building Officials

- California Building Code
- Seismic standards and criteria will follow the California Building Code
- Uniform Building Code, 1997 is mentioned but specifics of Chapter 708 are not. Chapter 708 includes the following:
  - 7006 (Grading Plans)
  - 7009 (Cuts)
  - 7012 (Terraces)
  - 7013 (Erosion Control)
  - 7015 (Final Report)
  - Figure 16-1 (Minimum Basic Wind Speeds)
  - Table 16-H, Method 1 (Wind Velocity Pressure Coefficients)
  - Figure 16-2 (Seismic Zone Map)
  - Appendix 15, Figure A-16-1 (Ground Snow Loads)
  - Section 1909 (Load Factors and Load Combinations Reinforced Concrete)
  - Section 1612 (Load Factors and Load Combinations Steel Structures)
- Standard Plumbing Code, 1997
- ASCE 7-95
- ACI 318-95/318R-95, Building Code Requirements for Structural Concrete and Commentary
- CRSI Manual of Standard Practice

- AISC Specification for Structural Steel Buildings, Allowable Stress and Plastic Design, 1989
- AWS Dl.1, American Welding Society Structural Welding Code for Steel
- ASTM, American Society for Testing and Materials Standards (as applicable)
- AASHTO-HS-20-44 (Truck Support Structures)
- Occupational Safety and Health Standard (OSHA)
- Walking and Working Surfaces, Subpart D
- Lighting
- ANSI/ASME STS-1-1992 (Steel Stacks)
- ASTM A 615, ASTM a 36, ASTM A 572, ASTM A 325, ASTM A 490, ASTM A 307, and ASTM A 185 (Steel Grades)
- ASTM C270, ASTM C129, and ASTM C 476 (Concrete Grades)
- NFPA 101, National Fire Protection Association, Life Safety Code
- NFPA 850, National Fire Protection Association, Recommended Practice of Fire Protection for Electric Generating Plants

Electrical

- Specifications for materials will follow the standard specifications of the American Society for Testing and Materials (ASTM), the Institute of Electrical and Electronics Engineers (IEEE), and the American National Standards Institute (ANSI), unless noted otherwise.

  ANSI C2-1993--National Electrical Safety Code

  ANSI C37.06-1987 (R1994)--Standard - AC High-Voltage Circuit Breakers Rated on a Symmetrical Current Basis, Preferred Ratings and Related Required Capabilities

  ANSI C37.010-1979 (R1989)--Application Guide for AC High-Voltage Circuit Breakers Rated on a Symmetrical Current Basis

  ANSI C50.41-1982--Polyphase Induction Motors for Power Generating Stations

ANSI C57.12.51-1981 (R1989)--Requirements for Ventilated Dry-Type Power Transformers 501 kVA and Larger, Three-Phase with High-Voltage 601 to 34,500 Volts, Low Voltage 208Y/120 to 480 Volts

ANSI C57.19.00-1991--General Requirements and Test Procedure for Outdoor Power Apparatus Bushing

ANSI/IEEE 422-1986--Guide for the Design and Installation of Cable Systems in Power Generating Substations

ANSI/IEEE 525-1993--Design and Installation of Cable Systems in Substations

ANSI/IES RP7-1990--Practice for Industrial Lighting

ANSI/IEEE C37.13-1990--Low Voltage AC Power Circuit Breakers Used in Enclosures

ANSI/IEEE C37.20.1-1993--Metal-Enclosed Low-Voltage Power Circuit Breaker Switchgear

ANSI/IEEE C37.20.2-1994--Metal-Clad and Station-Type Cubicle Switchgear

ANSI/IEEE C37.21-1985 (R1992)--Control Switchboards

ANSI/IEEE C57.12.00-1993--General Requirements for Liquid-Immersed Distribution, Power, and Regulating Transformers

ANSI/IEEE C57.13-1978 (R1987)--Requirements for Instrument Transformers

ANSI/IEEE C57.1 15-1992--Guide for Loading Mineral-Oil Immersed Power Transformers Rated in Excess of 100 millivolt amperes (mVA)

ANSI/IEEE 80-1986 (R1991)--Safety in AC Substation Grounding

ANSI/IEEE 141-1993--Recommended Practice for Electric Power Distribution for Industrial Plants

ANSI/IEEE 142-1991--Grounding of Industrial and Commercial Power Systems

ANSI/IEEE 242-1986 (R1991)--Recommended Practice for Protection and Coordination of Industrial and Commercial Power Systems

ANSI/IEEE 399-1990--Recommended Practice for Power Systems Analysis

IEEE 485-1983--Recommended Practice for Sizing Large Lead Storage Batteries for Generating Stations and Substations

ANSI/IEEE 1119-1988 (R1993)--Guide for Fence Safety Clearances in Electric-Supply Stations

NEMA MG1-1993--Motors and Generators

NEMA MG2-1989--Safety Standard for Construction and Guide for Selection, Installation, and Use of Electric Motors and Generators

NEMA SG3-1990--Low-Voltage Power Circuit Breakers

NEMA SG4-1990--Alternating Current High-Voltage Circuit Breakers

ANSI/NEMA 250-1991--Enclosures for Electrical Equipment

ANSI/NFPA 70-1993--National Electrical Code

NEMA PE1-1992--Uninterruptable Power System

ASTM E 84--Insulation Flame Spread

NFPA/ANSI Cl, Article 500--Initiation Criteria

ANSI 2, Article 127--Generator Station Hazardous Area Criteria for Electrical Protection

NEC Article 500, Standard 497M--Classification of Hazardous Elements

NEC Articles 501 and SO2--Standards for Construction of Electrical Equipment in Hazardous Areas

ANSI/IES RP-7-1979--Industrial Lighting

ANSI/IES RP-8-1 979--Roadway Lighting

I&C Standards

- American Society of Mechanical Engineers (ASME):

  PTC 19.3, Temperature Measurement

  PTC 19.5, Flow Measurement

  Fluid Meters, 6th Edition

  B31.1, Power Piping

- American National Standards Institute (ANSI):

  ANSI/FCI 70-2, Control Valve Seat Leakage Classifications

  B 16.5, Pipe Flanges and Flanged Fillings

  B 16.34, Valves - Flanged and Butt-Welding End

- Electronic Industries Association (EIA):

  RS-232C, Interface Between Data Terminal Equipment and Data Communications Equipment

- Institute of Electrical and Electronics Engineers (IEEE):

  518, Guide for the Installation of Electrical Equipment to Minimize Electrical Noise Inputs to Controllers from External Sources

  142, ANSI/IEEE Recommended Practice for Grounding of Industrial and Commercial Power Systems

  802.4, Ethernet

  472, Surge Withstand Capability

  998, Lighting Protection Systems

- Instrument Society of America (ISA):

  MC 96.1, Temperature Measurement Thermocouples

  RP 3.2, Flange-Mounted, Sharp Edge Orifice Plates for Flow Measurements

  S5.1, Instrumentation Symbols and Identification

  S5.2, Binary Logic Diagrams for Process Operations

  S5.4, Instrument Loop Diagrams

  S5, Graphic Symbols for Process Displays

  S50.1, Compatibility of Electronic Signals For Industrial Process Instruments

  SSI.1, Process Instrumentation Terminology

  ANSI/ISA S75.01, Control Valve Sizing Equations

  ANSI/ISA S75.02, Control Valve Capacity Procedure

70, National Electric Code

- National Electrical Manufacturers Association (NEMA):

  4, Class Enclosure

  ICS 1, General Standards for Industrial Controls and Systems

  250, Enclosures for Electrical Equipment (1,000 Volts Maximum)

- Scientific Apparatus Makers Association (SAMA):

  PMC 20.1, Process Measurement and Control Terminology, PMC 22.1, Functional Diagramming of Instrument and Control Systems

Gas Turbine Generator Codes and Standards

- The following are codes and standards for gas turbine generators. This list is typical for gas turbine-generator design; additional codes and standards may be used, depending on the final plant design and equipment selection.

  ANSI/ASME 7-1995--Minimum Design Loads for Buildings and Other Structures

  ANSI/ASME Bi.1-1989--Unified Inch Screw Threads

  ANSI/ASME Bi.20.1-1983--General Purpose (Inch) Pipe Threads

  ANSI/ASME B16.21 -1992--Nonmetallic Flat Gaskets for Pipe Flanges

  ANSI/IEEE C37.90.1-1989--Surge Withstand Capability Tests for Protective Relays and Relay Systems

  ANSI/IEEE C37.101-1993--Guide for Generator Ground Protection as Applicable to High Impedance Grounding

  ANSI/IEEE C57-1995--Compilation of all C57 Transformer Standards

  ANSI C50.10-1990--Rotating Electrical Machinery - Synchronous Machines

  ANSI C50.13-1989--Rotating Electrical Machinery - Cylindrical Rotor Synchronous Generators

  ANSI C50.14-1977--Requirements for Combustion Gas Turbine-Driven Cylindrical Rotor Synchronous Generators

  ANSI/IEEE 100-1996--Dictionary of Electrical and Electronics Terms

  NEMA TRI-1993--Transformers, Regulators, and Reactors

NFPA 497A-1992--Classification of Class I Hazardous (Classified Locations for Electrical Installations in Chemical Process Areas)

NFPA 8506-1995--Standard on Heat Recovery Steam Generator Systems

ANSI S1.4-1983--Specification for Sound Level Meters

ANSI S1.13-1995--Methods for the Measurement of Sound Pressure Levels

ANSI/SAE/J 184-Feb. 1987--Qualifying a Sound Data Acquisition System

ANSI/ASME B31.3-1996--Chemical Plant and Petroleum Refinery Piping Gas Turbine Piping Systems

ANSI/ASME PTC-36-1985--Measurement of Industrial Sound

ANSI B133.2-1997--Basic Gas Turbine

ANSI B133.3-1981--Gas Turbine-Procurements Standard Auxiliary Equipment

ANSI B133.4-1978--Gas Turbine Control and Protection Systems

ANSI B133.5-1978--Gas Turbine Electrical Equipment

ANSI B133.8-1977--Gas Turbine Installation Sound Emissions

ANSI/IEEE C37-1995--Guides and Standards for Circuit Breakers, Switchgear, Substations, and Fuses

ANSI/IEEE C37.1-1994--Definition, Specification, and Analysis of Systems

ANSI/IEEE C37.2-1996--Electrical Power Systems Device Function Numbers

AGMA 6011-H97--Specifications for High-Speed Helical Gear Units

ANSI/IEEE 421.1-1996--Definitions for Excitation Systems for Synchronous Machines

EIAITIA RS-232E-1991--Interface Between Data Terminal Equipment and Data Circuit Terminating Equipment Employing Serial Binary Interchange

ANSI/ASME 846.1-1995--Surface Texture

ANSI Y14.SM-1994--Dimensioning and Tolerancing

ANSI Y14.15-1996--Electrical and Electronics Diagrams (On-Bas Gas Turbine and Accessory Bas Equipment)

ANSI Y14.17-1966--Fluid Power Diagrams

ANSI Y14.36-1978--Surface Texture Symbols

ANSI/IEEE 315-1975--Graphic Symbols for Electrical and Electronics Diagrams

ANSI Y32.10-1967--Graphic Symbols for Fluid Power Diagrams

ANSI Y32.11-1961--Graphic Symbols for Process Flow Diagrams in the Petroleum and Chemical Industries

ANSI/ASME Y32.2.3-1949--Graphic Symbols for Pipe Fillings, Valves, and Piping

ANSI/AWS A2.4-1998--Symbols for Welding, Brazing, and Nondestructive Examination

ISO 7919-1-1986--Mechanical Vibrations - Measurements on Rotating Shafts and Evaluation

ISO 10816 (Draft)--Mechanical Vibrations - Evaluation of Machine Vibration by Measurements of Nonrotating Parts

TEMA C, 7th Edition--Mechanical Standards for Class C Heat Exchangers Crane Lifts; Factor of Safety

OSHA Regulations--Crane Lifts; Factor of Safety, No. 1910-179-1995

TABLES

Table 2-1
Estimated Average Daily Water Requirements (63 °F)

Water Use	Daily Requirements Gallons (per minute)
Water Injection (NO_x Control)	84
Water Injection (Power Augmentation)	11
Evaporative Cooling	6
Balance of Plant	1.7
Total	102.7

Table 2-2
Estimated Peak Daily Water Requirements (98 °F)

Water Use	Daily Requirements Gallons (per minute)
Water Injection (NO_x Control)	66
Water Injection (Power Augmentation)	22
Evaporative Cooling	16
Balance of Plant	1.7
Total	105.7

Table 2-3
Project Schedule Major Milestones

Activity	Date
Begin Construction	January 2002
Startup and Test	May 2002
Commercial Operation	June 2002

Table 2-4
Major Equipment Redundancy

Description	Number	Note
Simple-Cycle CTG	Two trains	No redundancy
Blowers for Air Dilution	One per train, 100 percent capacity	No redundancy
SCR and CO Catalyst	One module per train, 100 percent capacity	No redundancy
Compressed Air System	Two, 100 percent capacity	100 percent redundancy
Generator Breaker	Two trains	No redundancy
CT Auxiliary Load Supply Transformers	Two trains	100 percent redundancy
Cranking Motor Supply Transformers	Two trains	No redundancy
Unit Auxiliary Transformers	Two, 100 percent capacity	100 percent redundancy

Table 2-5
LORS Related to Facility Design

LORS	Applicability	AFC Conformance Section
	Need for Facility Demand Conformance	
		Section 2.5, Project Objectives
	Federal	
	None applicable	
	State	
	None applicable	
	Local	
	None applicable	
	Project Siting and Construction	
	Federal	
Uniform Building Code	Incorporated in and superseded by the CBC, 1998.	Section 2.3.1
	State	
Division of Industrial Safety	Boiler and Pressure Vessel Code Inspection.	Appendix H
	Local	
1997 Uniform Building Code containing the 1998 California Amendments; Title 24, Part 2, CCR		Appendix H
1997 Uniform Mechanical Code containing the 1998 California Amendments; Title 24, Part 4, CCR		Appendix H
1997 Uniform Plumbing Code containing the 1998 California Amendments; Title 24, Part 5, CCR		Appendix H
1996 National Electrical Code containing the 1998 California Amendments; Title 24, Part 3, CCR		Appendix H
CCR, Titles 19, 24, and 25	Applicable to work authorized by local jurisdiction via the permit process.	
1997 Uniform Fire Code	Applicable to work authorized by local jurisdiction via the permit process.	

Table 2-5 (continued)
LORS Related to Facility Design

LORS	Applicability	AFC Conformance Section
	Industry	
Foundation and Civil Engineering Design Criteria	Meet design criteria.	Appendix H
Structure and Seismic Engineering Design Criteria	Meet design criteria.	Appendix H
Mechanical Engineering Design Criteria	Meet design criteria.	Appendix H
Control Engineering Design Criteria	Meet design criteria.	Appendix H
Electrical Engineering Design Criteria	Meet design criteria.	Appendix H
	Project Design and Operation	
	Federal	
Occupational Health & Safety Act of 1970, 29 USC 651 et seq.; 29 CFR 1910 et seq.; and 29 CFR 1926 et seq.	Meet employee health and safety standards for employer-employee communications, electrical operations, and chemical exposures.	Section 2.3.2.2
Department of Labor, Safety and Health Regulations for Construction Promulgated Under Section 333 of the Contract Work Hours and Safety Standards Act, 40 USC 327 et seq.	Meet employee health and safety standards for construction activities. Requirements addressed by CCR Title 8, General Construction Safety Orders.	Section 2.3.2.2
Uniform Fire Code, Articles 80, 79, 4	Meet requirements for the storage and handling of hazardous materials, flammable and combustible liquids, and for obtaining permits.	Section 2.2.10
National Fire Protection Association (Refer to NFPA Table 7.4-1 for list of standards)	Meet standards necessary to establish a reasonable level of safety and property protection from the hazards created by fire and explosion.	Sections 2.2.12 and 2.3.2.1
14 CFR, Part 77, Objects Affecting Navigable Airspace	Completion of Notice of Proposed Construction or Alteration, FAA Form 7460-1H.	Section 6.2.2
Advisory Circular No. 70/7460, Obstruction Marking and Lighting	Meet FAA standards for marking and lighting of obstructions as identified by FAR Part 77.	Section 6.2.2
Advisory Circular 70/7460-2I, Proposed Construction or Alteration of Objects That May Affect the Navigable Airspace	Notify FAA prior to construction, as appropriate.	Section 6.2.2
14 CFR, Part 91, Air Traffic and General Operating and Flight Rules	Comply with restrictions governing the operation of aircraft, including helicopters.	Section 6.2.2

Table 2-5 (continued)
LORS Related to Facility Design

LORS	Applicability	AFC Conformance Section
49 USC § 1348, Subdivision (a)	Comply with Secretary of Transportation policy regarding safety of aircraft and utilization of airspace.	Section 6.2.2
47 CFR § 15.25, Operating Requirements, Incidental Radiation	Mitigation for any device that causes communications interference.	Section 2.2.5
Title 49 CFR, Part 192, Transportation of Natural and Other Gas by Pipeline	Construction must conform to Department of Transportation standards.	Section 6.2.4
	State	
CCR, Title 8	Meet requirements for a safe and hazard-free working environment. Categories of requirements include General Industry Safety Orders, General Construction Safety Orders, Electrical Safety Orders.	Section 2.3
California Clean Air Act, California Health & Safety Code, § 39650 et seq.	Meet requirements for Best Available Control Technology.	Section 8.1
California Health & Safety Code, Part 6, § 44300 et seq.	Estimate emissions for listed air toxic pollutants and submit inventory to air district for major sources of criteria air pollutants. Followup from air district may require a health risk assessment.	Section 8.12
20 CCR, Appendix B, Subdiv. (a), (d) (g) and Subdiv. (a), (h), §§ 1741–1744 and § 1752, Information Requirements for a Nongeothermal Application	Compliance with applicable laws for safety and reliability.	Each appropriate environmental section; for instance, Section 8.2 for Biological Resources
PRC, § 25000 et seq., Warren-Alquist Act, § 25520 Subdivision (g)	Provide description of transmission line including the right-of-way.	Section 2.14 and Section 6.0
General Order 52 (GO-52) CPUC, Construction and Operation of Power and Communication Lines	Prevent or mitigate inductive interference.	Section 2.2.5 and Appendices H1–H6
General Order 95 (GO-95) CPUC, Rules for Overhead Electric Line Construction	Design and construct line in compliance with GO-95.	Section 6.0 and Appendices H1–H6

Table 2-5 (continued)
LORS Related to Facility Design

LORS	Applicability	AFC Conformance Section
Radio & Television Interference (RI/TVI) Criteria	RI/TVI mitigation requirements if applicable.	Section 2.2.5 and Appendices H1–H6
	Local	
CCR, Titles 19, 24, and 25, and 1997 Uniform Fire Code, as amended by the State of California	Contain laws applicable to work authorized by local jurisdiction via the permit process.	
California Building Code, Seismic Zone 3		Section 8.15.2.2
	Industry	
EPRI, NERC, various codes and standards for components	EPRI and NERC trade associations guidelines will be followed.	Appendices H1–H6
Various	Industry codes and trade association standards are typically requirements of equipment manufacturers.	Appendices H1–H6
ANSI/AWWA C151/A21.5	Construction must conform to standards and related specifications.	Appendix H

Notes:
ANSI = American National Standards Institute
AWWA = American Water Works Association
CBC = California Building Code
CCR = California Code of Regulations
CEC = California Energy Commission
CFR = Code of Federal Regulations
EPRI = Electric Power Research Institute
FAA = Federal Aviation Administration
FAR = Federal Aviation Regulations
NERC = National Energy Regulatory Commission
OSHA = Occupational Safety and Health Administration
PRC = California Public Resources
UBC = Uniform Building Code
USC = United States Code

FIGURES

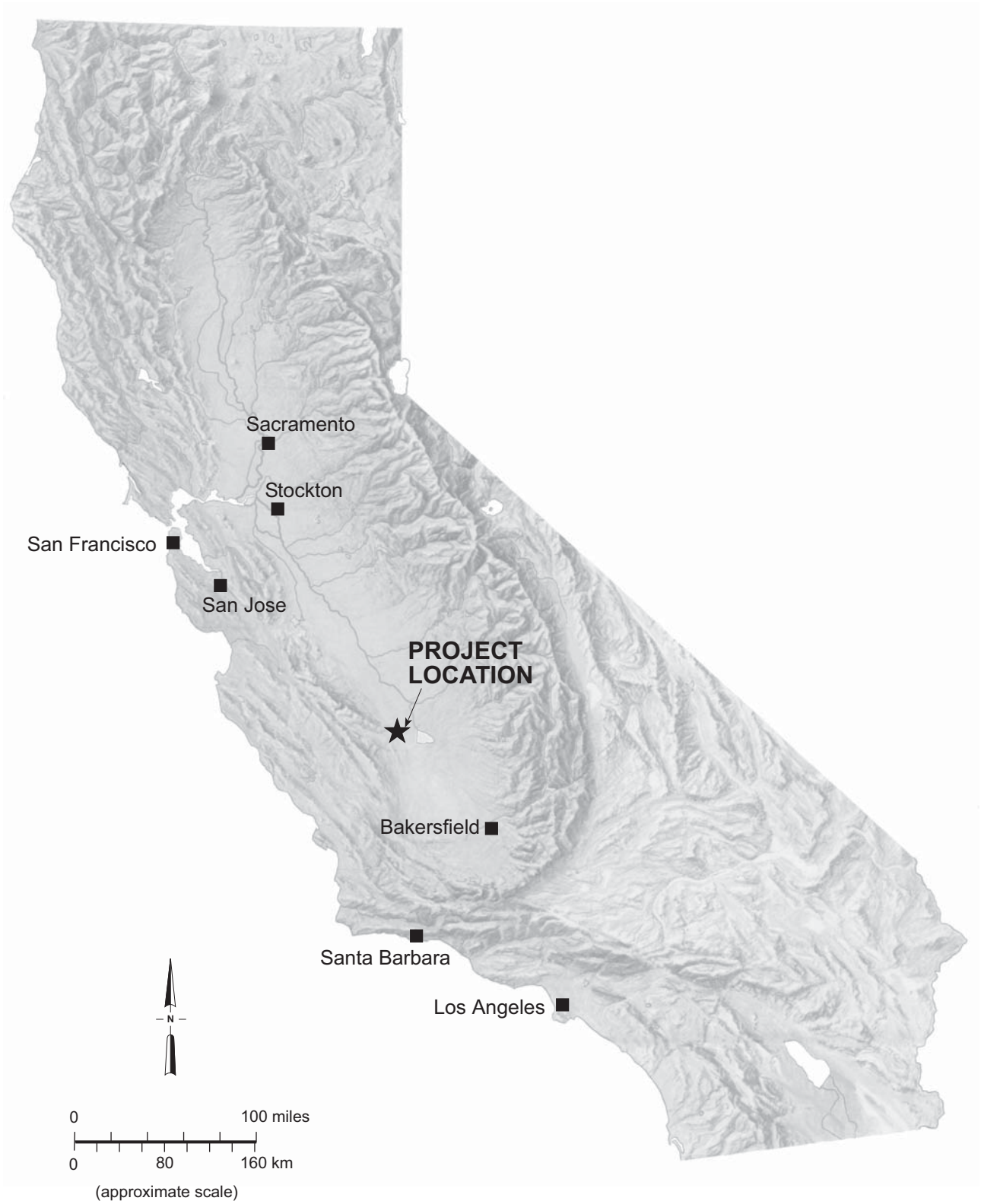

URS	Project No. 51-00167032.00 GWF Henrietta Peaker Project	HPP PROJECT LOCATION	Figure 2-1a

51-00167032.00-01023/082301/gos

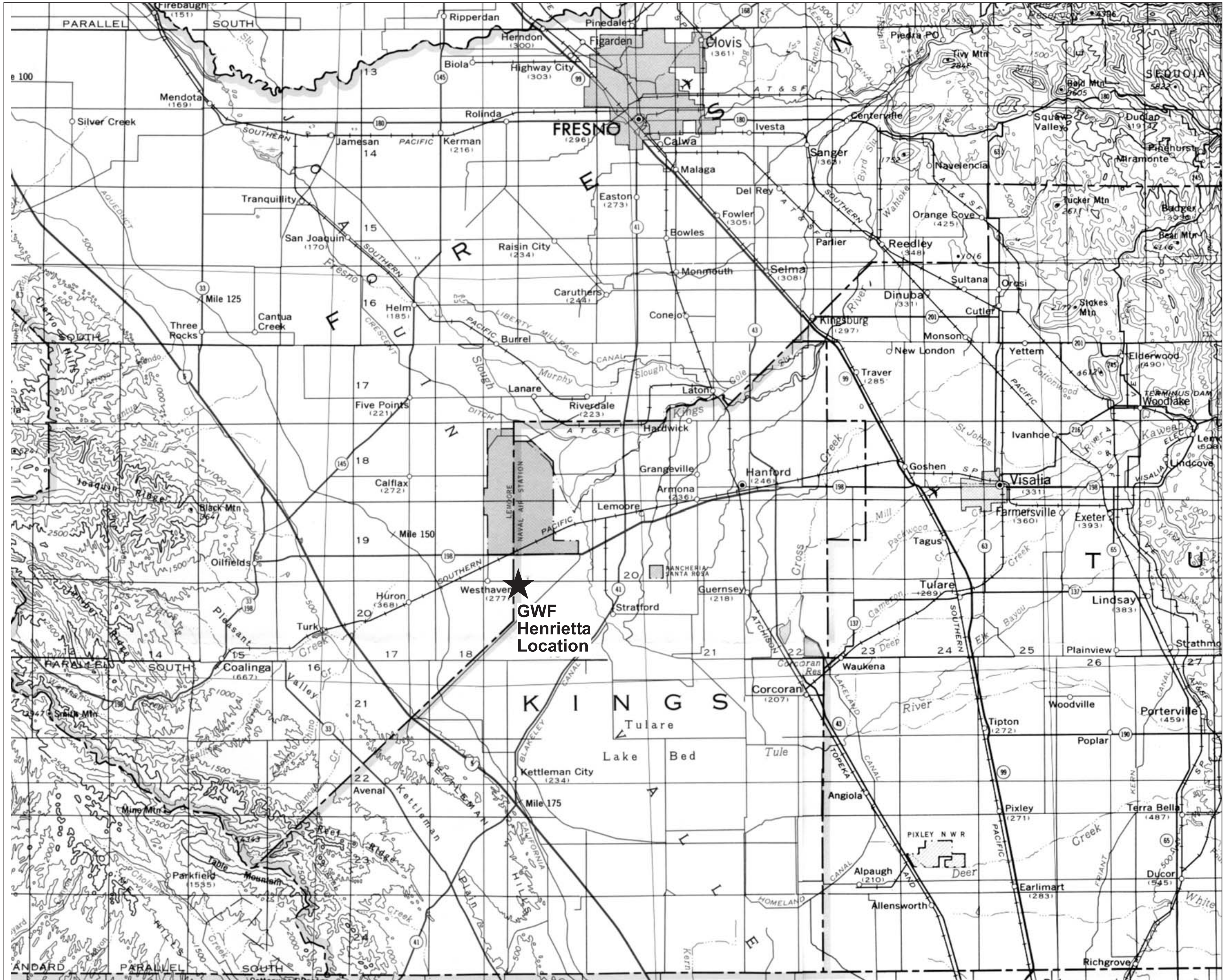

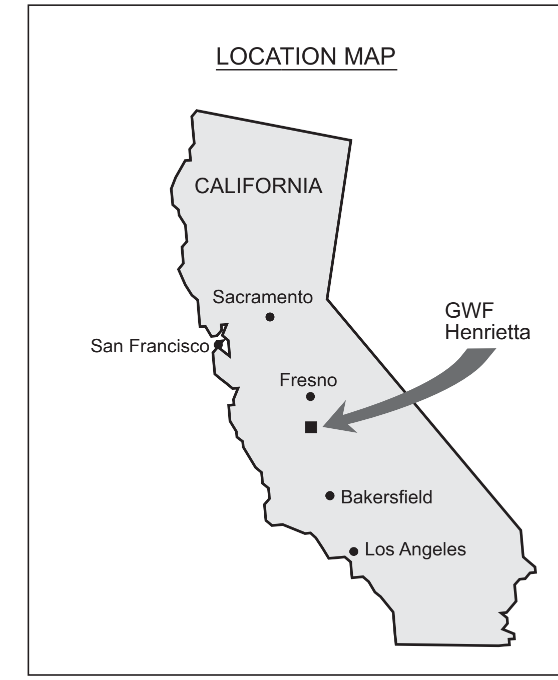

N

0 4 8

Scale in Miles

Source: USGS 1:500,000 Scale Topographic Map of California-South Half

URS

Project No. 51-00167032.00

GWF Henrietta Peaker Project

SITE LOCATION MAP

Figure 2-1b

51-00167032.00-01011/082301/gos

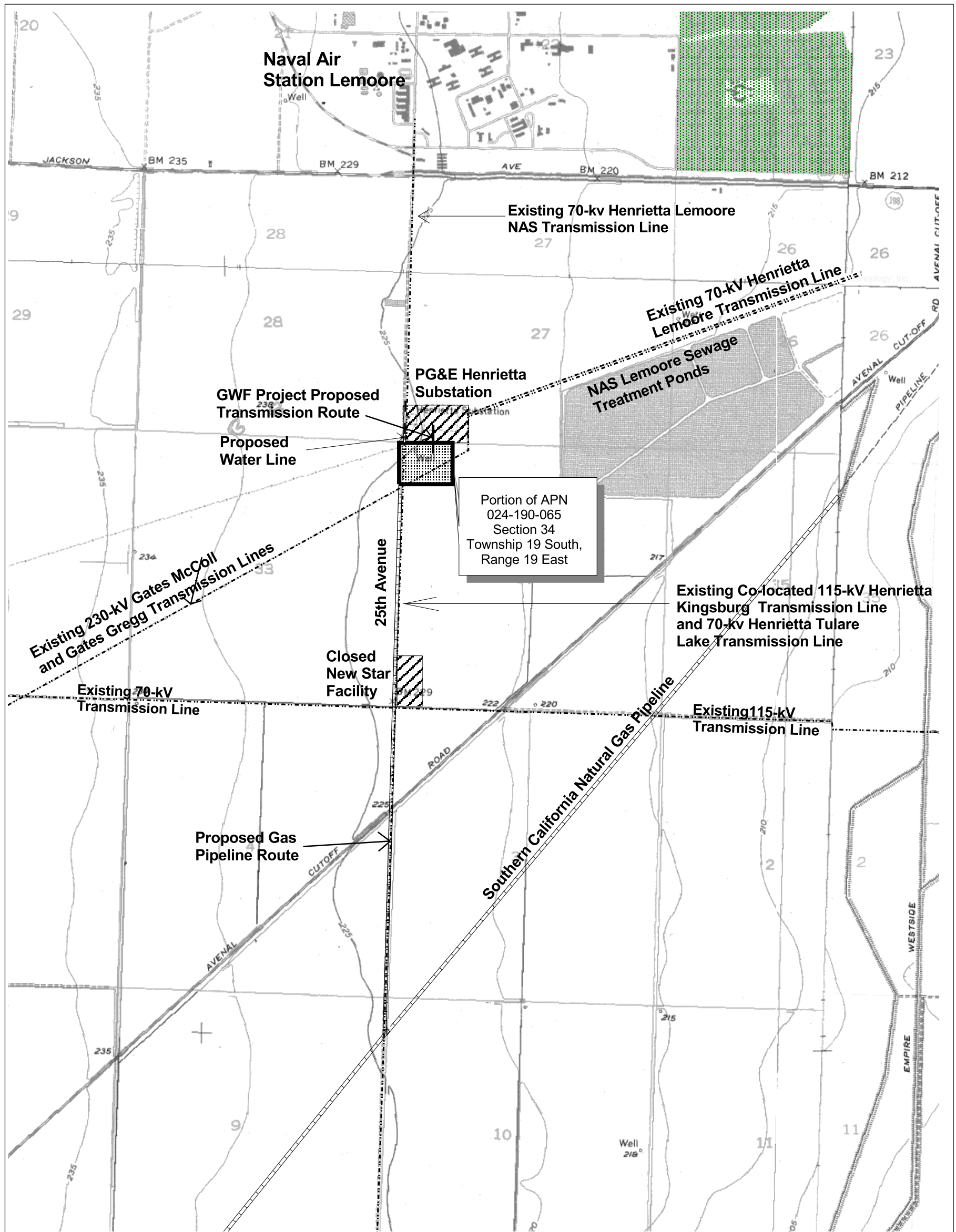

N

0 0.25 0.5 0.75 1 Miles

1000 0 1000 2000 Feet

Scale 1:24,000

Source:
Base Maps from U.S.G.S.
7.5 Minute Quadrangles
Westhaven, Calif., (Photorevised 1981),
Stratford, Calif. (1954), Lemoore (1954) and
Vanguard (1956, Photorevised 1981)

Existing Transmission Lines

Transmission Route

Gas Pipeline Routes

Water Line

Plant Site

Developed Industrial

URS	GWF Henrietta Peaker Project Project No. 51-00167032.00	Project Location Map	Figure 2-2

L:\Projects\GWF_Henrietta\Apr\proj1dhw.apr

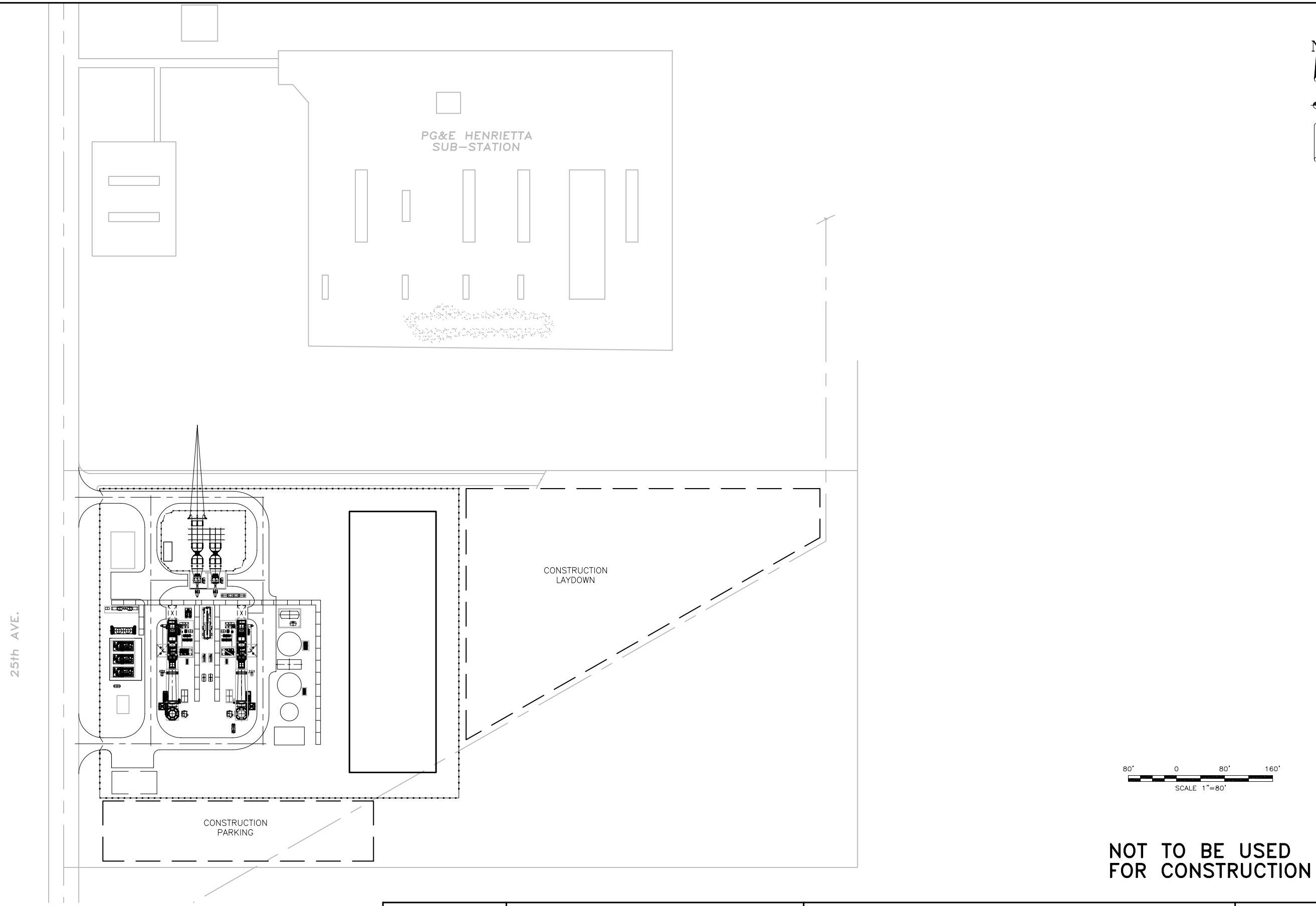

NOT TO BE USED FOR CONSTRUCTION

Project No. 51-00167032.00	GWF ENERGY LLC HENRIETTA 230KV SWITCHYARD	SITE LAYOUT DRAWING	Figure 2-3A
URS			

J:\CADSHARED\GWF-energy\HENRIETTA\SHEETS\FIG2-3A.dwg 8/21/01

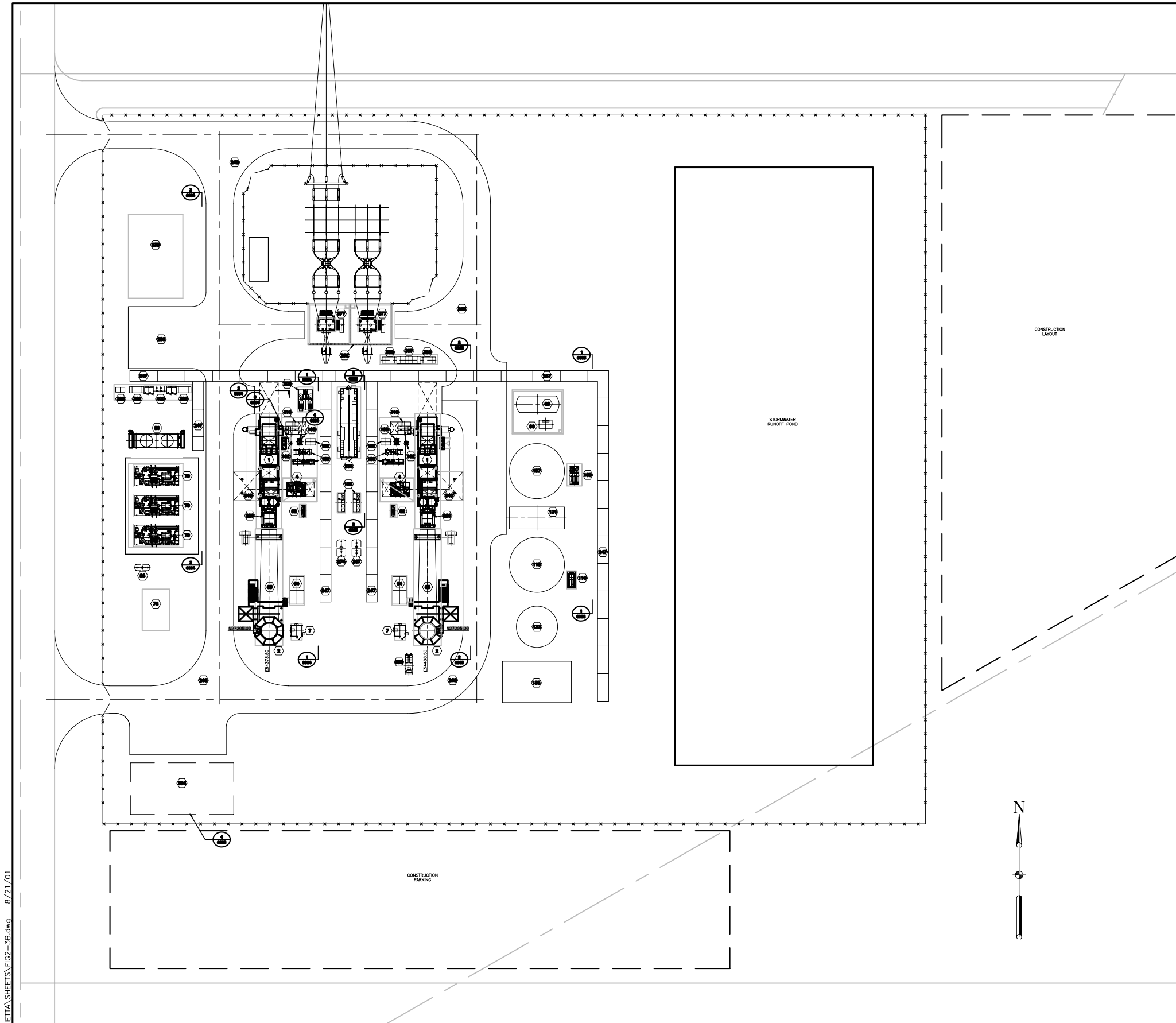

EQUIPMENT LIST

ITEM NO.	EQUIP. NO.	DESCRIPTION	TIE DOWN EL
1	–	COMBUSTION TURBINE LM6000	–
2	–	STACK	–
4	–	AUXILIARY SKID	–
7	–	CONTINUOUS EMISSION MONITORING EQUIPMENT	–
63	–	SCR	–
64	–	SCR AMMONIA INJECTION SKID	–
65	–	AMMONIA STORAGE TANK	–
66	–	AMMONIA FORWARDING PUMPS	–
78	–	FUEL GAS METERING STATION	–
79	–	FUEL GAS COMPRESSOR SKID 1A, 1B, 1C	–
80	–	FUEL GAS COOLER	–
82	–	FUEL GAS FILTER	–
84	–	FUEL GAS WASTE SUMP WITH BLOWER	–
116	–	RAW WATER FORWARDING PUMPS	–
118	–	RAW WATER STORAGE TANK	–
131	–	WATER TREATMENT MODULE	–
133	–	WASTE WATER STORAGE TANK	–
135	–	WASTE WATER PROCESS EQUIPEMENT	–
157	–	DEMIN. WATER STORAGE TANK	–
158	–	DEMIN. WATER INJECTION FORWARDING PUMPS	–
159	–	WATER INJECTION BOOST PUMP SKID 2A, 2B	–
160	–	SPRINT PERFORMANCE SKID	–
162	–	HIGH PRESSURE DEMIN. WATER FILTER SKID	–
182	–	FOGGER (FUTURE)	–
183	–	CLOSED LOOP COOLER	–
191	N/A	FIRE CARTS (NOT SHOWN FOR CLARITY)	N/A
208	–	AIR COMPRESSOR SKID	–
220	–	ANTI–ICING HEAT EXCHANGER SYSTEM	–
233	–	ADMINISTRATION BUILDING	–
234	–	MAINTENANCE BUILDING	–
236	–	POWER CONTROL MODULE	–
247	N/A	PIPE AND CABLE WAYS	N/A
248	N/A	ROAD	N/A
250	N/A	PARKING AREA	N/A
267	–	WASTE WATER WASH TANK	–
274	–	OIL/WATER SEPARATOR	–
338	–	EMERGENCY DIESEL GENERATOR	–
350	–	LIGHTING PANEL WITH TRANSFORMER	–
377	–	MAIN SUBSTATION STEP–UP TRANSFORMER	–
380	–	AUXILIARY TRANSFORMER 480V	–
382	–	GAS COMPRESSOR TRANSFORMER 13.8/4160V	–
383	–	13.8KV SWITCH	–
397	–	480V DISTRIBUTION SWITCHBOARD	–
398	–	GAS COMPRESSOR 480V MCC	–
400	–	4160 DISTRIBUTION PANEL	–
410	–	MEDIUM VOLTAGE SWITCH GEAR	–
610	N/A	TRANSFORMER FIRE WALL	N/A
640	N/A	ENGINE REMOVAL AREA	N/A

40' 0 40' 80'
SCALE 1"=40'

NOT TO BE USED FOR CONSTRUCTION

Project No. 51–00167032.00	GWF ENERGY LLC HENRIETTA 230KV SWITCHYARD	SITE GENERAL ARRANGEMENT	Figure 2–3B
	URS		

J:\CADSHARED\GWF–energy\HERIETTA\SHEETS\FIG2–3B.dwg 8/21/01

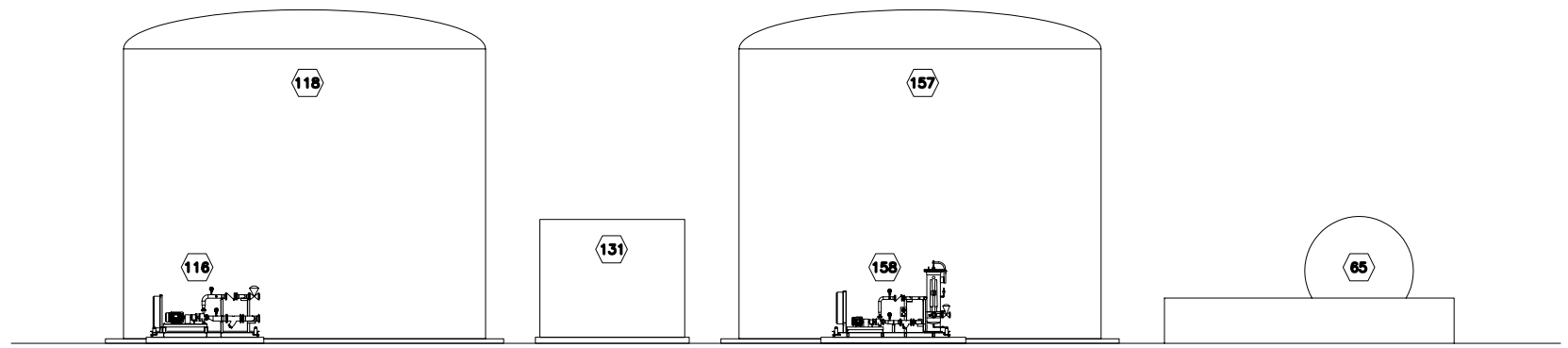

SECTION 1

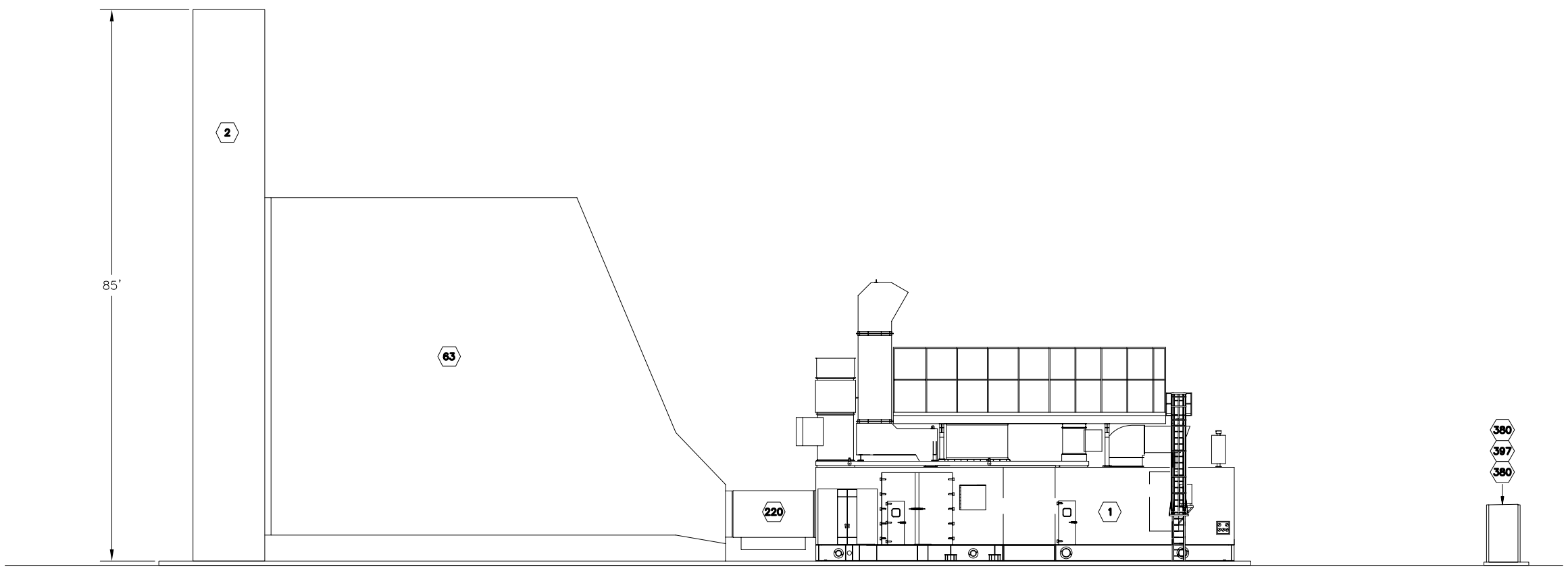

SECTION 2

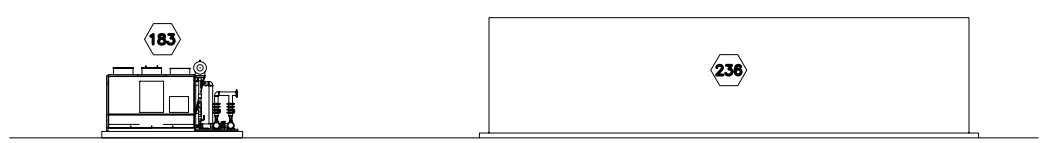

SECTION 3

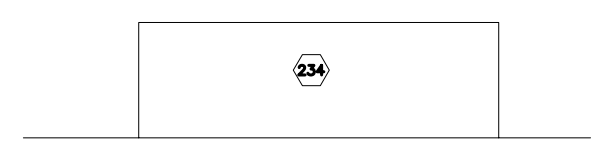

SECTION 4

NOT TO BE USED FOR CONSTRUCTION

10' 0 10' 20'
SCALE 1"=10'

Project No. 51-00167032.00	GWF ENERGY LLC HENRIETTA 230KV SWITCHYARD	ELEVATIONS AND SECTIONS	Figure 2-4A
	URS		

J:\CADSHARED\GWF-energy\HENRIETTA\SHEETS\Fig2-4A.dwg 8/21/01

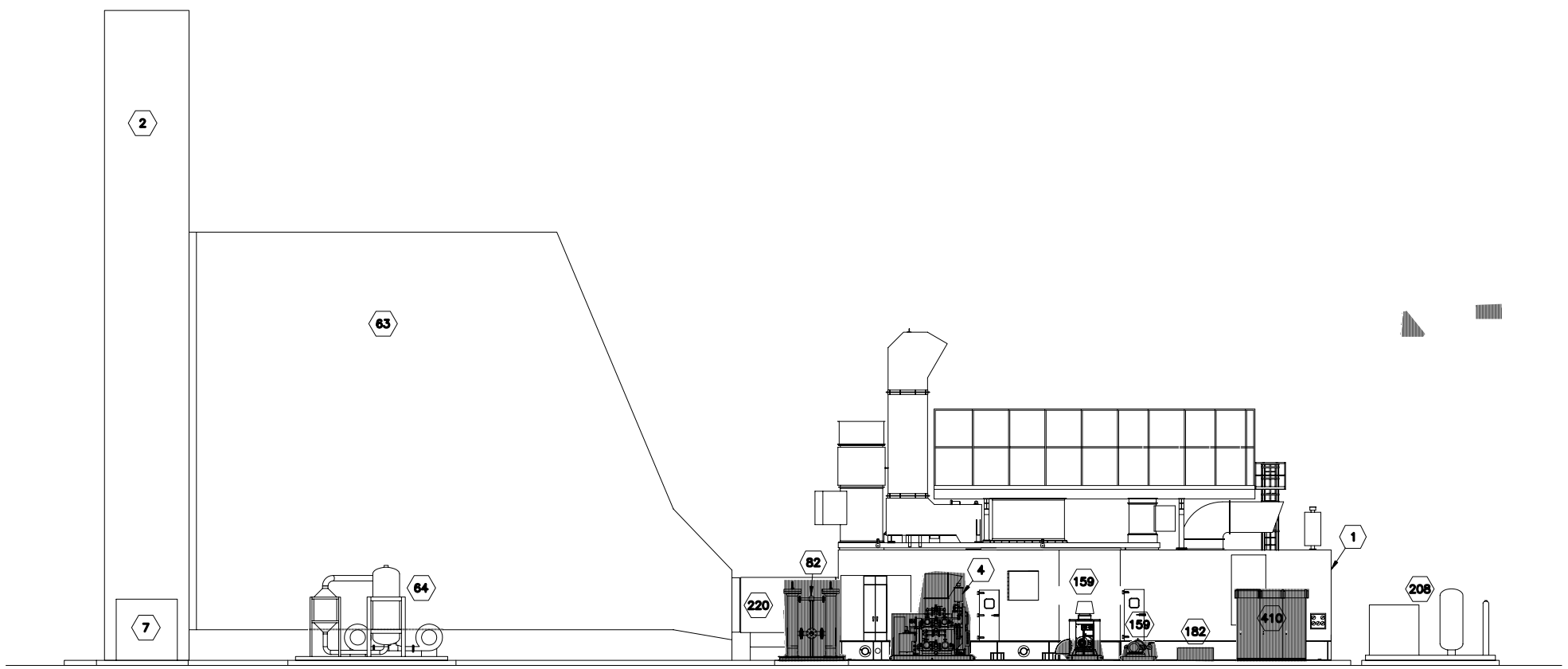

SECTION 1

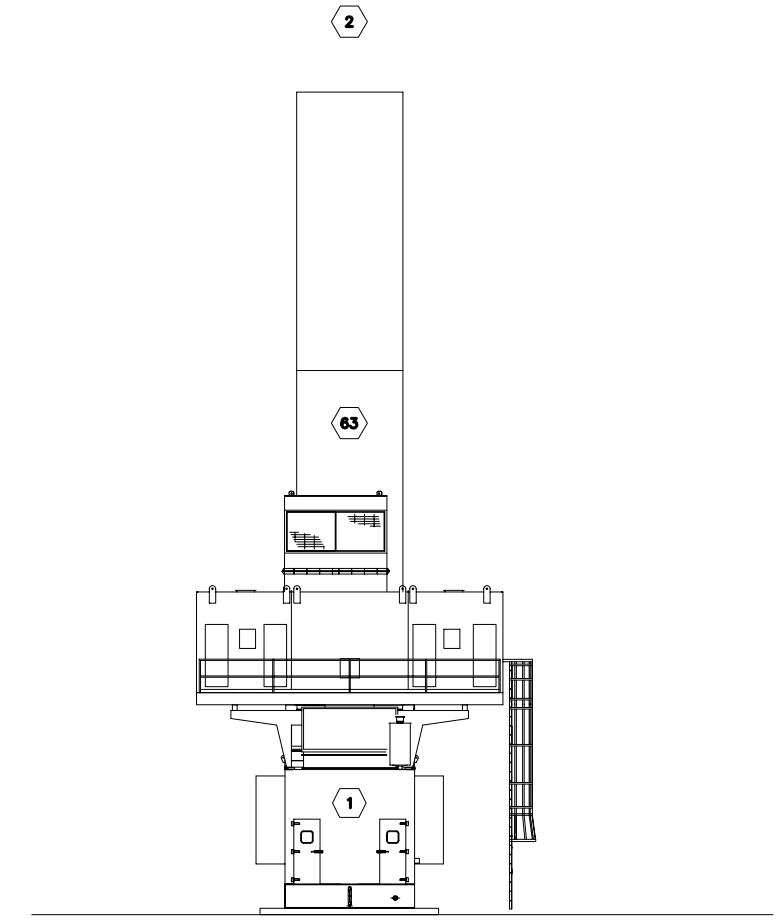

SECTION 2

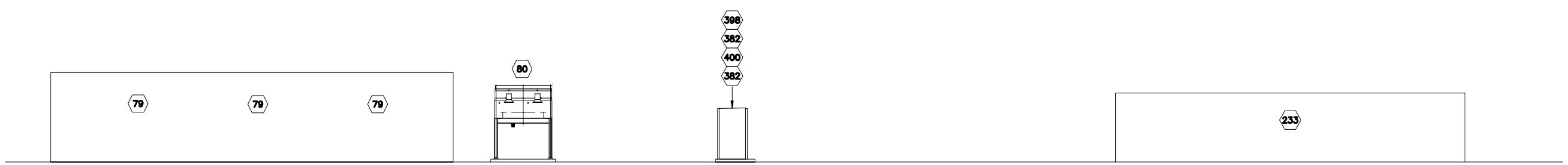

SECTION 3

NOT TO BE USED FOR CONSTRUCTION

10' 0 10' 20'
SCALE 1"=10'

Project No. 51-00167032.00	GWF ENERGY LLC HENRIETTA 230KV SWITCHYARD	ELEVATIONS AND SECTIONS	Figure 2-4B
	URS		

J:\CADSHARED\GWF\GWF-energy\HENRIETTA\SHEETS\FIG2-4B.dwg 8/21/01

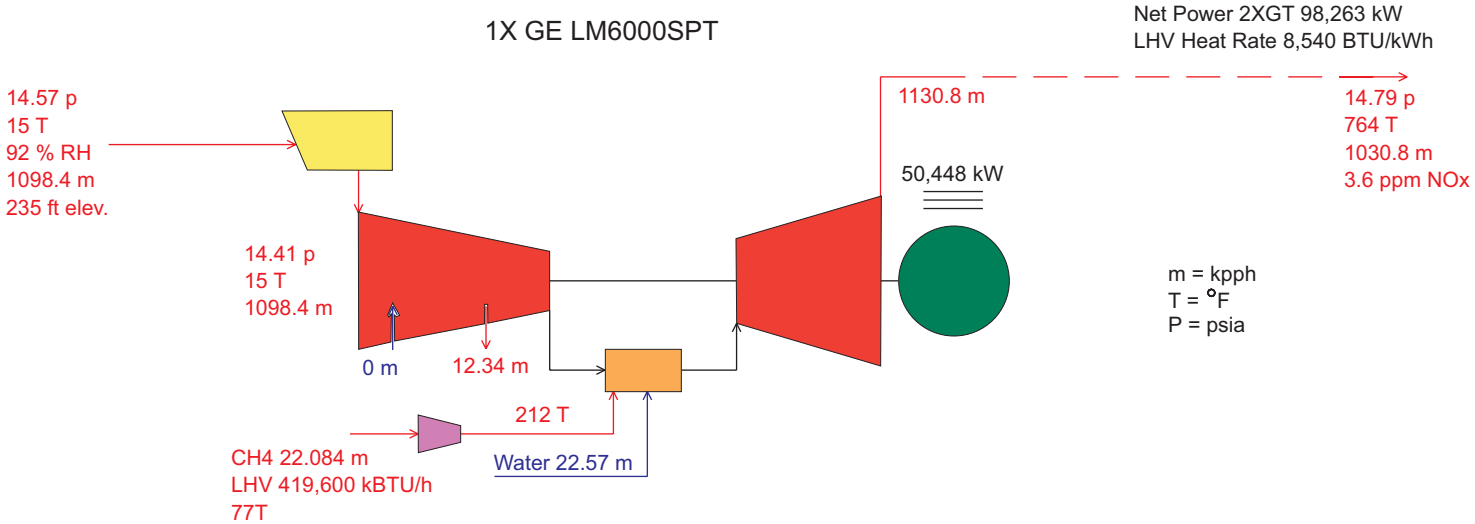

URS	Project No. 51-00167032.00 GWF Henrietta Peaker Project	GE LM6000SPT HEAT BALANCE AT 15ºF	Figure 2-5

51-00167032.00-01023/082301/gos

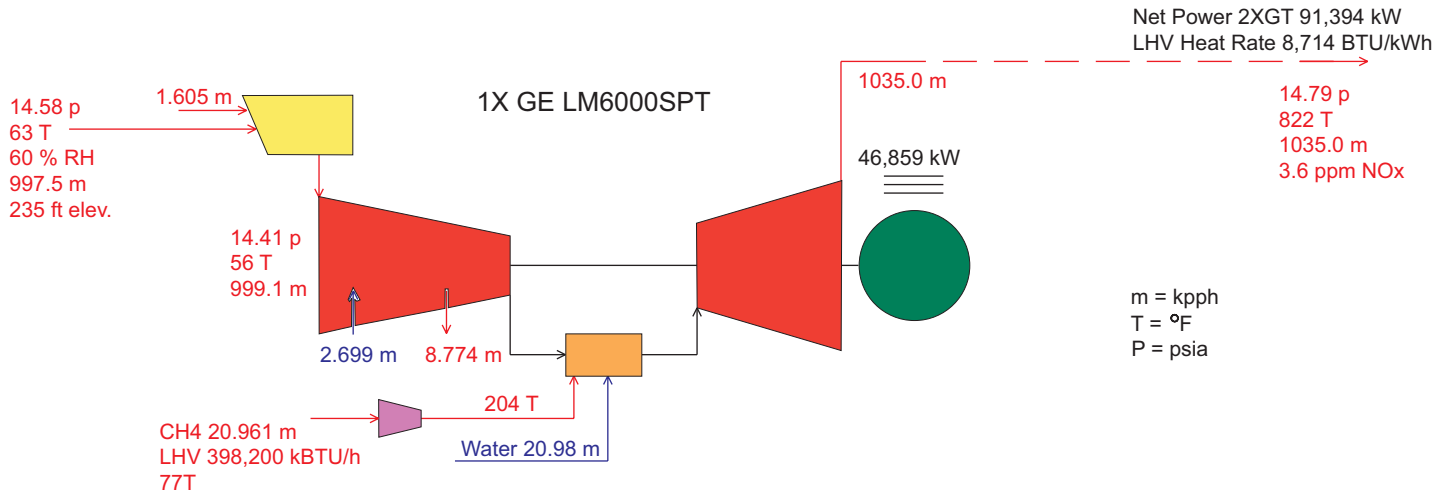

URS	Project No. 51-00167032.00 GWF Henrietta Peaker Project	GE LM6000SPT HEAT BALANCE AT 63ºF	Figure 2-6

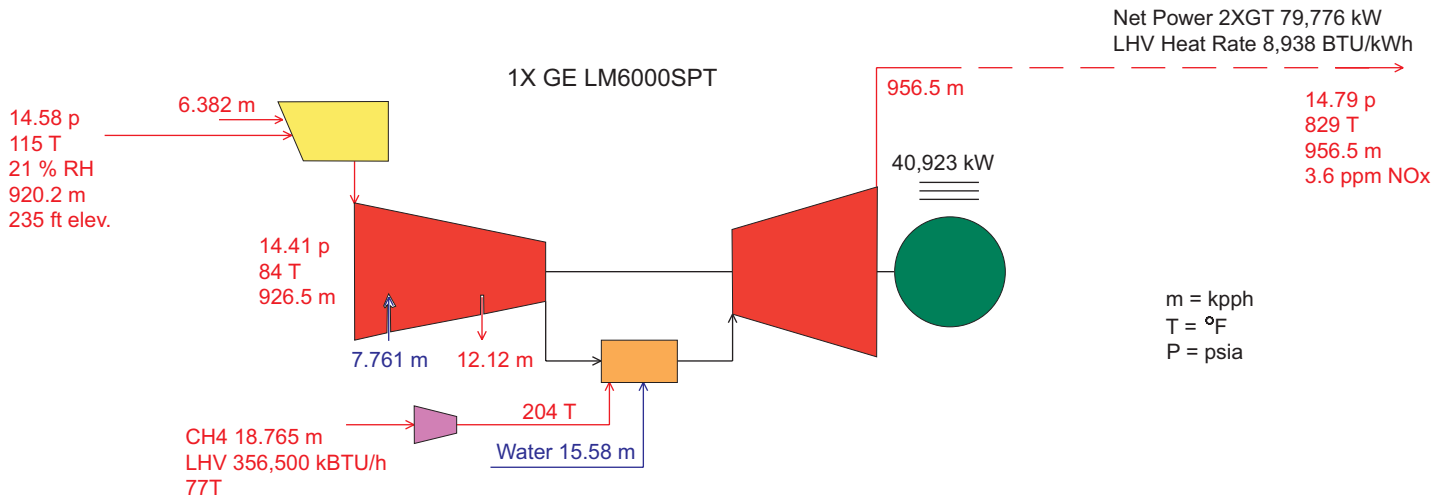

URS	Project No. 51-00167032.00 GWF Henrietta Peaker Project	GE LM6000SPT HEAT BALANCE AT 115ºF	Figure 2-7

51-00167032.00-01023/082401/gos

3.0 DEMAND CONFORMANCE

3.1 Integrated Assessment of Need

The California legislature enacted Senate Bill 110, which, as of January 1, 2000, did away with the integrated assessment of need and with the specific requirement of former Section 25541 of the Public Resources Code to show that a project's generating capacity not be substantially in excess of the resources shown in the integrated assessment of need. The Application for Certification (AFC) for the Henrietta Peaker Project (HPP) is being submitted in response to the state's critical electricity supply shortage and is consistent with the governor's recently signed executive orders (EO). EO D-26-01 and EO D-28-01 direct the CEC and other state and local agencies to expedite review of new power generating facilities. The purpose of this project is to help relieve the state's power shortages.

3.2 References

California Energy Commission, 1997. *1996 Biennial Electricity Report* (ER96).

California Energy Commission, 1999. "Proposal by the ER96 Standing Committee for an Addendum to ER96 on the Integrated Assessment of Need and Associated Need Criteria." Approved April 14.

California Senate Bill 110. 2000. Took effect January 1, 2000.

EO D-26-01. Executive Order D-26-01. Took effect February 8, 2001.

EO D-28-01. Executive Order D-26-01. Took effect March 7, 2001.

4.0 FACILITY CLOSURE

The Henrietta Peaker Project (HPP) has a planned life of 30 years or more. During this time, temporary or permanent facility closure may be required. Temporary closure would constitute an unexpected shutdown for a period exceeding for normal maintenance (e.g., for overhaul or replacement of the combustion turbines). Causes for temporary closure might include a disruption in the supply of natural gas or damage to the plant from an earthquake, fire, storm, or other event. Permanent closure would constitute a complete cessation in operations with no intent to restart operations, owing to plant age, damage to the plant that is beyond repair, economic conditions, or other reasons. These two types of closure are discussed in the following sections.

4.1 Temporary Closure

For a temporary, unexpected closure in which there is no release of hazardous materials, security of the facilities would be deployed as required, and the California Energy Commission (CEC) would be notified. Depending on the length of shutdown, a contingency plan for the temporary cessation of operations would. The contingency plan would be implemented to ensure conformance with applicable laws, ordinances, regulations, and standards (LORS) and the protection of public health, safety, and the environment. The plan, depending on the expected duration of the shutdown, could include the draining of chemicals from storage tanks and other equipment and the safe shutdown of equipment. All wastes would be disposed of according to applicable LORS, as discussed in Section 8.13 (Waste Management).

For a temporary closure in which there is the potential for a release of hazardous materials into the environment, procedures would be followed as set forth in the Hazardous Materials Business Plan (HMBP). The HMBP is described in Section 8.12 (Hazardous Materials Handling). The procedures would include methods for controlling releases, notifying authorities and the public, emergency response, and training plant personnel in responding to and controlling releases of hazardous materials. Once any immediate problem with a hazardous material release is contained and cleaned up, temporary closure would proceed as described for closure in which there is no release of hazardous materials.

4.2 Permanent Closure

Although the planned life of the HPP is 30 years, the actual life of the facility may vary due to economic or other reasons. Regardless, the closure procedures would follow a plan that would be developed as described below.

The removal of the facility from service, or decommissioning, may range from "mothballing" to the removal of all equipment and appurtenant facilities, depending on conditions at the time. Because the conditions that could affect the decommissioning decision are largely unknown at this time, such conditions would be presented to the CEC and Kings County when more information is available and the timing for decommissioning is imminent.

To ensure that public health and safety and the environment are protected during decommissioning, a decommissioning plan would be submitted to the CEC for approval prior to decommisioning. The plan would discuss the following:

- The proposed decommissioning activities for the facility and all appurtenant facilities constructed as part of the facility
- All applicable LORS and local/regional plans and the conformance of the proposed decommissioning activities with applicable LORS and local/regional plans
- The activities necessary to restore the site if the plan requires removal of all equipment and appurtenant facilities
- The decommissioning alternatives other than complete restoration
- The associated costs of the proposed decommissioning and the source of funds to pay for the decommissioning

5.0 PROJECT ALTERNATIVES

This section discusses alternatives considered for the Henrietta Peaker Project (HPP), including the "no project" alternative, alternative site locations for the facility, equipment configuration alternatives, and alternative transmission routes. Project site alternatives were evaluated according to their ability to meet certain key objectives of the project:

- Locate the site near existing gas, water, and transmission lines to minimize offsite environmental impacts
- Locate the project in Kings County where GWF has an existing operating facility
- Locate in an air basin where GWF Energy LLC has existing emission reduction credits (ERCs). (GWF currently holds ERCs in the San Joaquin Valley Air Pollution Control District.)
- Provide an additional, viable source of peak-load electricity to the California energy market on a fast-track development schedule to meet a June 2002 commercial operation date
- Meet the "minor source" definition under federal air quality regulations to qualify for expedited permitting
- Capable of being permitted in a time frame that would meet the June 1, 2002 commercial operation date
- Interconnect at a major substation on North Path 15 that has adequate capacity and provides wide access to the electricity market
- Avoid incompatible or nonconforming land uses
- Conform to the provisions of an existing California Department of Water Resources power purchase agreement with GWF.

5.1 No Project

Recent electricity shortages in California have caught the attention of the nation. It is evident that California needs a more stable and secure supply of electricity for its burgeoning population and industries. Without it, the economy of California will be adversely affected.

The HPP will provide additional, much-needed electricity for the growing California market. Generation from the HPP will assist in stabilizing the California energy supply and price structure. The HPP is being developed in response to the governor's executive orders, which call for expedited development and licensing of power plants to alleviate the state's critical electricity shortage.

The "no project" alternative would not allow for a more efficient use of fuel resources for the production of electricity and would only exacerbate the current electrical shortages.

The electrical power demand in California is expected to increase substantially over the life of the project, and new generation sources will be required to meet this demand. In addition, existing nuclear and aging fossil-fuel plants will likely be retired during the same period. Because the HPP will use a natural-gas-fired combustion turbine generator (CTG) and state-of-the-art emission control technologies, the project will help replace inefficient technologies with an environmentally superior and more efficient peak-load power plant technology. One of the primary goals of deregulation is to encourage the introduction of new, more efficient, and environmentally superior generators to meet power demand. The "no project" alternative does not further this goal.

5.2 Alternative Site Locations

The main factors in selecting a suitable site include compatible land use, appropriate land area, and proximity to existing utilities, such as transmission lines, natural gas pipelines, and water supplies. The proximity to such infrastructure reduces overall plant capital costs, results in fewer environmental impacts, and provides a more economical project. Sites outside of the San Joaquin Valley were not considered, because the ERCs that GWF owns cannot be used effectively in other air basins. Of the major substations located on North Path 15 in Kings County, only the Henrietta Substation has a point of interconnection that would provide adequate capacity for a project in the 100-megawatt (MW) range and that would not require substantial or costly upgrades.

5.2.1 Proposed Site

The proposed site is an approximately 20-acre parcel located in an unincorporated area of Kings County on the eastern side of 25th Avenue. The site is approximately one mile south of State Route (SR) 198 and directly south of and adjacent to the Pacific Gas and Electric Company (PG&E) Henrietta Substation. There are a number of reasons for selecting this site as the preferred location:

- Proximity to transmission interconnect (approximately 550 feet), fuel gas lines (2.2 miles), and service water supply (approximately 16 feet)
- Proximity to existing highways
- Compatible land use

The proposed site is located on a parcel that is properly zoned for the intended use, and the intended use is compatible with the current surrounding land uses.

5.2.2 Applicant's Site Selection Process

In addition to the criteria described above, GWF required at least 10 acres for the HPP and preferred not to acquire a site of more than 40 acres. GWF also limited its search to land available from willing sellers.

Using these criteria, GWF screened two sites in the vicinity of the Henrietta Substation, and a site in Kings County more distant from the Henrietta Substation at a location where GWF is currently developing a power plant.

5.2.2.1 Description and Comparison of Sites

Olivera 1. Olivera 1, the site eventually selected for the HPP, possesses the following characteristics:

Distance to Transmission	550 feet
Distance to Natural Gas Interconnection	2.2 miles
Distance to Water Supply	16.5 feet
Transportation	Easy access to SR 198, SR 41, and Interstate 5.
Land Use Designation and Neighboring Uses	Compatible with power plant; Williamson Act contract. Neighboring industrial uses include Naval Air Station (NAS) Lemoore evaporation ponds, PG&E Henrietta Substation, and New Star facility.
Permit Processing	No significant impediments to expedited permit processing.
Size / Constructability	20 acres provides sufficient room for the site and potential for expansion. No major construction issues were identified for the site.
Environmental	No significant site-related environmental impacts were identified.

Olivera 2. This alternative site is a 20-acre site two miles east of the proposed site and adjacent to the Avenal Cutoff.

Distance to Transmission	2 miles
Distance to Natural Gas Interconnection	0.25 miles
Distance to Water Supply	2 miles
Transportation	Easy access to SR 198, SR 41, and Interstate 5.
Land Use Designation and Neighboring Uses	Compatible with power plant. Neighboring uses include NAS Lemoore evaporation ponds and agricultural land under Williamson Act contract.
Permit Processing	No significant impediments to expedited permit processing.
Size / Constructability	20 acres provides adequate size to accommodate the proposed project.
Environmental	No significant site-related impacts were identified. However, much more disturbance would result due to the much greater length of linears needed at this site.

GWF Energy LLC Hanford Energy Park Peaker (HEPP) Site. This site is located in the Hanford Industrial Park, approximately two miles south of central Hanford on

Idaho Avenue. The project would be an expansion of approximately 90 MW to the HEPP (approximately 95.5 MW currently under construction).

Distance to Transmission	The distance to the closest point of interconnection is 1.6 miles to a PG&E 115-kilovolt (kV) line; however, the 115-kV line lacks adequate capacity and would require reconductoring 15 miles of existing transmission line to the Henrietta Substation.
Distance to Natural Gas Interconnection	The natural gas line providing service to the HEPP lacks adequate capacity to serve a modified plant. The nearest point of interconnection is Southern California Gas Company Line 800, 13 miles west in the vicinity of the proposed site.
Distance to Water Supply	On site.
Transportation	Easy access to rail, SR 198, and Interstate 5.
Land Use Designation and Neighboring Uses	Zoned industrial. Neighboring uses are industrial and agricultural. No Williamson Act contract.
Permit Processing	No significant impediments to expedited permit processing.
Size / Constructability	7 acres provides barely adequate size to accommodate the proposed project.
Environmental	No significant site-related impacts were identified. However, much more disturbance would result due to the much greater length of linears needed at this site.

5.2.2.2 Proposed Site

The Olivera 1 site was selected as the site that best fulfilled project objectives and presented no significant site-related environmental impacts.

5.3 Alternative Project Configurations

The selection of the project configuration for the HPP was based on consideration of the following factors:

- Commercially available turbine types
- Number of required units available on a fast-track delivery schedule to meet the desired electrical output for a June 2002 commercial operation date
- Performance and emission characteristics of the available turbines
- Project economics

- Ability of the emissions control equipment to meet the air quality regulations and qualify as a minor source

The project will consist of two General Electric (GE) LM6000 Sprint CTGs with a total generation capacity of 91.4 MW. Each CTG will generate a nominal 45.7 MW of electrical output for sale under annual average conditions. The CTGs are commercially available technologies that have been widely used in simple-cycle applications.

5.3.1 Combustion Turbine Generator

The basic project configuration was selected based on technical and economical evaluations of cycles capable of meeting the electrical output requirements and complying with air permit limitations and other regulatory requirements. Initial screening studies evaluated various commercially available CTG sizes and technologies. The screening studies considered the CTGs offered by major manufacturers. After reviewing studies to determine power demands in the near future and emission requirements, GWF selected a two-unit configuration to achieve better economies of scale. Final selection of the CTG was based on meeting environmental and economic criteria, and availability to meet the required June 2002 commercial operation date. The CTG model selected was a GE LM6000 Sprint. This model is an aero-derivative machine.

5.3.2 Alternative Fuels

Natural gas is the preferred fuel for the HPP. A major PG&E natural gas supply pipeline crosses the project site, eliminating the need for an additional pipeline. Natural gas is considered the most cost-effective and reliable fuel, and natural gas combustion results in lower air emissions than other fuel alternatives.

Possible alternative fuels for the project include distillate oil, crude oil, produced gas, petroleum coke, coal, and biomass. These alternate fuels are less favorable because they would produce greater air quality impacts than the preferred fuel. Also, both distillate oil and crude oil would require truck transportation or the construction of a new pipeline. For these reasons, natural gas was selected as the sole fuel for the HPP.

5.3.3 Alternative Cycles

Due to time constraints and the immediate demand for power in California, the simple-cycle design was the only viable option. Conversion to a combined-cycle power plant is possible to satisfy any future increase in the demand for power.

In addition to the simple-cycle turbine, several advanced turbine cycles are also available, including the Kalina cycle, the chemically recuperated gas turbine, the humid air turbine, the intercooled steam-recuperated gas turbine, and the steam-injected gas turbine (STIG). With the exception of the STIG cycle, all of these technologies are still in the development stage and are not considered commercial. STIG technology has had mixed commercial success and does not offer the proven longevity and efficiency of currently available advanced turbine technology.

5.3.4 Alternative Water Sources and Technologies

Simple-cycle design does not produce or utilize steam, which eliminates the need for water and for wet and dry condensers, cooling towers, pumps, piping, etc. Water consumption will be limited to the water used in the evaporative cooler, water injection for control of nitrogen oxides (NO_x), power augmentation, and in the water wash system for the CTGs. Westlands Water District and Kings County water was found to be the most suitable water source for this site because of its proximity and because it nearly eliminates the need for a pipeline external to the site. The water quality of this source is satisfactory for the evaporative cooler, so no major water equipment is necessary. Other alternatives were considered (see Section 8.14.2).

5.3.5 Preferred Project Configuration

The preferred configuration for the HPP consists of two gas-fired GE LM6000 Sprint CTGs, each equipped with water injection for NO_x control and power augmentation, and one aqueous-ammonia-type selective catalytic reduction and carbon dioxide oxidation catalyst. The preferred configuration was selected for the following reasons:

- The CTG is a commercially available unit that will efficiently meet the desired electrical output.
- The emission control devices will meet all applicable air quality regulations and achieve minor-source status under federal air quality regulations.
- The chosen configuration is the most economically viable alternative to supply power in the shortest time possible and is available.

5.4 Alternative Transmission Routes and Interconnections

Since the interconnect is only 550 feet to the existing Henrietta Substation, no alternative routes were considered.

5.5 Alternative Natural Gas Interconnection Routes

GWF considered an alternative natural gas interconnection route. This route would have extended approximately two miles east, traversing land currently in agricultural production and under Williamson Act contract. This route would have required cutting or boring underneath the Avenal Cutoff, a heavily used county road. This route would have also required permanent removal of approximately one-half acre of agricultural land under Williamson Act contract to construct and operate the gas interconnect and isolation valves. To avoid these impacts, GWF chose the proposed natural gas interconnect route.

5.6 References

Pacific Gas and Electric Company (PG&E), 2001. *System Impact/Facility Study: GWF Energy LLC, Henrietta Peaking Power Project.*

6.0 ELECTRIC TRANSMISSION

The Henrietta Peaker Project (HPP) will connect to the 70-kilovolt (kV) Henrietta Substation bus via a new transmission line, designated as the HPP Generator Tie-line, which will be owned by Pacific Gas and Electric Company (PG&E). The HPP parcel and the PG&E Henrietta Substation parcel are directly adjoining parcels. The 70-kV HPP Generator Tie-line will leave the HPP switchyard, run north for approximately 400 feet, and turn east for approximately 150 feet to connect with the existing PG&E-owned 70-kV Henrietta Substation bus. Therefore, the HPP Generator Tie-line does not cross any property other than the GWF HPP parcel or the PG&E Henrietta Substation parcel.

The proposed transmission interconnection will be an approximately 550-foot-long, single-circuit, 70-kV line. The proposed transmission route is shown on Figure 6-1. A photo-simulation of the transmission line is provided in Section 8.11 (Visual Quality).

6.1 Transmission Line Engineering

6.1.1 Existing Facilities

The existing transmission facilities in the area of the HPP were evaluated to identify transmission lines and substations with adequate capacity to accommodate the output of the proposed plant. These facilities include:

- PG&E's Henrietta Substation is located directly adjacent to the northern boundary of the HPP site. This switchyard is connected to PG&E's 70-kV, 115-kV, and 230-kV transmission systems. This substation will be the termination point for the 70-kV HPP Generator Tie-line. Several other transmission lines enter the Henrietta Substation (see Figure 6-1).

- PG&E's 115-kV Henrietta-Kingsburg transmission line parallels 25th Avenue and enters the Henrietta Substation from the west. This line is a single-circuit line utilizing wood poles. The poles are shared with the 70-kV Henrietta-Tulare line described below.

- PG&E's 70-kV Henrietta-Tulare Lake transmission line parallels 25th Avenue and enters the Henrietta Substation from the west. This line is a single-circuit line utilizing wood poles.

6.1.2 Transmission Facilities for HPP

6.1.2.1 Henrietta Peaker Project Switchyard

The 70-kV HPP switchyard will be located on the north side of the HPP site. The switchyard will use a two-breaker radial bus configuration. The two breaker positions will be for the two combustion turbine generators (one position for each unit). The HPP switchyard will be designed in accordance with applicable industry standards and will have the following ratings:

- Nominal-voltage – 70-kV
- Basic impulse level – 350-kV
- Continuous current – 2,000 amperes
- Short circuit current – 40,000 amperes

The switchyard will use a conventional outdoor-air-insulated rigid-bus design supported on galvanized steel structures. The switchyard will be enclosed with a galvanized steel, chain-link fence of typical height. All nongalvanized structures and equipment will be painted shades of ANSI gray. The control building will be a color similar to that of the adjacent HPP power generation facility.

A ground mat will be installed to provide safe step-and-touch potentials for the general public and switchyard operation and maintenance personnel. The grounding system will be designed in accordance with American National Standards Institute/Institute of Electrical and Electronics Engineers (ANSI/IEEE) Standard 80.

The switchyard alternating current (AC) supply will be derived from a redundant 480-volt AC feed from the HPP. The direct current (DC) supply for the control and protection systems of the HPP for the station will be derived from a 125-volt DC station battery. A one-line diagram for the HPP switchyard is shown on Figure 6-2. The configuration of the HPP switchyard is shown on Figure 6-2. Photo-simulations of the proposed switchyard are provided in Section 8.11 (Visual Resources).

6.1.2.2 Henrietta Peaker Project 70-kV Transmission Line

The proposed 70-kV HPP Generator Tie-line will be a single-circuit line constructed on two 55-foot-tall wood poles. Figure 6-1 shows the route of the proposed line. The route exits the HPP switchyard to the north and east, entering the Henrietta Substation and connecting with the Henrietta Substation 70-kV bus. The transmission line interconnect is approximately 550 feet in length and is entirely located on the HPP site or the PG&E site.

The proposed transmission line will require two wood poles, as shown on Figure 6-3. The ruling spans are expected to be approximately 225 feet. The selected pole heights will provide a minimum ground clearance of 30 feet at 60 degrees Fahrenheit (°F) and 28.5 feet at 130 °F, in accordance with the requirements of California Public Utilities Commission (CPUC) General Order No. 95 (GO-95).

The proposed line will use a single 954-kilo circular mills (kcmil) aluminum conductor steel-reinforced (ACSR) "Cardinal" per phase. This conductor has a normal current rating of 995 amperes. The normal conductor rating was determined from Alcoa's *T&D Conductors, Overhead Underground* handbook, based on a maximum conductor temperature rise of 40 degrees Celsius (°C) above a 40 °C ambient temperature, a 2-foot-per-second (fps) crosswind, and an emissivity factor of 0.50 without sun. The conductor has an emergency rating of 1,248 amperes. The emergency rating was determined from the *Aluminum Electrical Conductor Handbook*, assuming a maximum conductor temperature rise of 60 °C over a 40 °C ambient temperature, a 2 fps crosswind, and an emissivity factor of 0.50 without sun.

The proposed line will include one optical groundwire shield wire containing approximately 24 optical fibers. The fiber-optic groundwire will be used to provide communication paths for system protection and voice and data transmission, and shielding for lightning protection.

6.1.2.3 Other

Typical industry design, operation, or maintenance practices will be required for the proposed substation and transmission line facilities. Both substation sites and all

transmission structure locations will be accessible from existing dirt, gravel, or paved roads. An access plan will be prepared to designate acceptable construction access routes. Construction access routes will be flagged in the field as required.

Temporary disturbance of land during construction, maintenance, and operation is considered negligible because the construction laydown, access, and staging areas will be on PG&E property. The total permanent disturbance area is the approximate area of two wood poles.

The anticipated schedule for approval, materials and equipment procurement, and construction of the stations and transmission line is as follows:

- August 2001 – Submit AFC to the California Energy Commission (CEC)
- January 2002 – Start switchyard and transmission line construction
- March 2002 – Complete electrical interconnect construction

6.1.3 Applicable Regulations

The transmission line and switchyard associated with the HPP will be designed and constructed in conformance with CPUC GO-95 and the National Electrical Safety Code (NESC). A list of applicable laws, ordinances, regulations, and standards (LORS) that may apply to the transmission line and switchyard design are presented in the following sections.

Table 6-1 lists LORS applicable to the design and construction of the transmission line and switchyard. Table 6-2 lists the LORS that govern fire hazard protection for the HPP. Table 6-3 lists the LORS regarding hazardous shock protection for the HPP. Table 6-4 lists the applicable aviation safety LORS. Table 6-5 lists the applicable LORS regarding communications interference.

6.2 Transmission Line Electrical Effects

6.2.1 Project Characteristics

To integrate the HPP output into the PG&E 70-kV transmission system, GWF will construct a 550-foot, 70-kV transmission line between the HPP and PG&E's 70-kV

Henrietta Substation. The design criteria and assumptions used to complete the initial design of the project's transmission line and calculate its electromagnetic field (EMF), audible noise, and radio/television interference (RI/TVI) effects are described below.

6.2.1.1 Assumptions

The nominal transmission-voltage will be 70-kV. For these calculations, the transmission line loading was assumed to be a nominal 95.8 megawatts (MW). The line will be a single-circuit line composed of one 954-kcmil ACSR per phase carrying 791 amperes. A profile view of the transmission line is shown in Appendix A.

The EMF calculation for the HPP Generator Tie-line was complicated by the presence of the substation and the numerous other transmission lines entering the substation. The addition of the 70-kV HPP Generator Tie-line will have a minimal effect on the total EMF in the area and does not warrant further analysis.

The phase currents will be balanced (equal). The power factor used in the calculations will be 0.98 (leading or lagging). Continuous plant operation will not occur at this power factor, and variations in the actual power factor can be expected. This power factor represents a typical value for this area.

For the purposes of these calculations and to be conservative, the EMF, RI, TVI, and audible noise calculations were performed at an assumed minimum conductor height above ground of 26 feet (mid-span). However, from a design perspective, the conductors will be a minimum of 32 feet above the ground. The calculations were performed using the Bonneville Power Administration (BPA) Corona and Field Effects Program.

6.2.1.2 Conductor Analysis

The selection of a phase conductor size and type for a new transmission line typically considers a number of factors, including:

- Thermal Capacity. The conductor size/type selected must have a thermal capacity greater than the initial and future capacity requirements of the project.

- Economics. Economic evaluations typically consider the effects on conductor, structure, and foundation costs of various conductor sizes/types and bundle configurations (conductor diameters, sags, and tensions). The present worth of conductor losses is also typically considered.

- Environmental. Electric and magnetic field strengths are largely dependent on the maximum line operating-voltage, phase conductor currents, and the spatial arrangement (configuration) of the phase conductors, not the conductor size/type.

- Standardization. Industry standard/typical conductor sizes/types and bundle configurations are given preference because of operation and maintenance, and in-service reliability considerations.

- Minimum Size. A minimum allowable conductor size of 954 kcmil was selected for this project. This size selection was based on a combination of RI/TVI, corona, mechanical sag, and strength considerations and is applicable to nonbundled phase conductors only.

6.2.2 Aviation Safety

There is no major commercial aviation center in the general vicinity of the project; however, Naval Air Station (NAS) Lemoore runways are approximately 4.7 miles northwest of the HPP.

In accordance with Title 14 of the Code of Federal Regulations (CFR), Part 77, a Notice of Construction or Alteration must be filed with the Federal Aviation Administration (FAA) if any structure in the vicinity of the construction site rises 200 feet (500 feet in uncongested areas) above the average ground level. A notice is also required if any structure protrudes above an imaginary surface extending from the end of the nearest runway at a slope of 50:1 for 10,000 feet (if the longest runway length at the airport is 3,200 feet or less) or a slope of 100:1 for 20,000 feet (if the longest runway at the airport is longer than 3,200 feet).

The closest runway is over four miles from the HPP. No structures will rise 200 feet or more or penetrate the imaginary surface, as stipulated in Title 14 CFR Part 77. Therefore, an FAA Notice of Construction or Alteration is not required for the HPP.

6.2.3 Audible Noise and Radio/TV Interference

Audible noise is defined as any unwanted sound from a man-made source, such as a transmission line, a transformer, an airport, vehicular traffic, etc. Audible noise is superimposed on the background or ambient noise that existed prior to the introduction of the audible noise source.

When an electric transmission line is energized, an electric field is generated in the air around the conductors. This electric field may cause corona (the breakdown of the air in the vicinity of the transmission line phase conductors). When the intensity of the electric field at the conductor surface exceeds the breakdown strength of the surrounding air, a corona discharge occurs at the conductor surface. This corona discharge produces energy, which can result in audible noise and/or RI/TVI. The corona effects from the line were calculated using the BPA Corona and Field Effects Program.

Corona-generated audible noise can be characterized as a hissing, crackling sound, which, under certain conditions, can be heard. The noise levels generated by the line are very low, and most of the time the audible noise will not be detectable, except in an area directly beneath the line on a quiet day. The audible noise calculation results for the proposed line are shown on Figure 6-4.

Corona on transmission line conductors can also generate electromagnetic noise in the frequency bands used for radio and television signals. This phenomenon is generally referred to as RI and TVI. These terms are commonly applied to any disturbance within the radio frequency band. RI and TVI consist of two distinct types: gap-type noise and noise due to corona. Gap-type noise is the result of sparking or arcing between two pieces of hardware. This arcing occurs when hardware is loose (not tight-fitting), or at sharp burrs or edges on the hardware. This type of noise occurs at discrete points along the line and is often associated with undermaintained lines. Such interference can be easily identified and corrected with proper maintenance. The second type of noise is caused by corona on the conductors. This corona noise emanates from the entire length of conductor and is typically referred to as RI and TVI.

Corona-related interference with radio and television reception is typically associated with transmission line-voltages of 345-kV or greater, although it may occur at lower-voltages. It is a direct function of the signal strength of the received radio/television signal and the level of the noise present. The signal to noise ratio (S/N) is defined as the ratio of the average signal power to the average noise power. The higher the S/N ratio, the better the reception quality. A high S/N ratio indicates a high signal level and a low noise level. Consider the analogy of a person talking in a room with low background noise and a person talking in a room with high background noise. If the person's voice (signal level) remains constant, the person will be heard much more easily in a room with low background noise than the person in a room with high background noise. This concept also applies to radio and television signals in the presence of background noise.

It is difficult to determine whether a particular level of RI or TVI will cause unacceptable radio or television reception. Studies have been conducted, however, to determine acceptable S/N ratios. For radio reception, a S/N ratio above 20 is generally considered to provide acceptable reception. For television reception, an S/N ratio of 30 to 40 typically provides acceptable reception. It is anticipated that for receivers proximate to the proposed line right-of-way, there will be little, if any, degradation of radio or television reception. The exception, if there is one, will be for very remote, poorly received stations. In addition, RI typically interferes with amplitude modulated (AM) stations only. Frequency modulated (FM) stations are generally immune to RI because of the inherent characteristics of the modulation scheme. Therefore, the probability of RI complaints is reduced, as a major band of the radio broadcast spectrum is generally unaffected by the phenomenon. The calculated RI and TVI for the proposed HPP Generator Tie-line are shown on Figures 6-5 and 6-6, respectively. These levels of interference are not expected to be noticeable, except for remote stations. The TVI at the edge of the right-of-way will be noticeable only for weak (remote) stations.

The proposed line will be maintained as part of a regular maintenance program. Therefore, it is unlikely any gap-type noise will result. If any is reported or discovered, it will be quickly mitigated. In addition, it is anticipated that few if any RI/TVI complaints will occur, because of the low magnitude of calculated corona noise. If complaints do occur, they will be addressed, investigated, and mitigated if needed, on a case-by-case basis.

6.2.4 Electric and Magnetic Fields

Electricity is a phenomenon resulting from the existence and interaction of charges. When a charge is stationary or static, it produces forces on objects in regions where it is present. When a charge is in motion, it produces magnetic effects. Whenever electricity is used or transmitted, electric and magnetic fields are created. Transmission lines, distribution lines, house wiring, and appliances produce electric fields in their vicinity due to the associated electric charges. Electric field strengths are typically expressed in units of-volts per meter or kilovolts (thousands of-volts) per meter (kV/m).

Electric charges in motion (currents) produce magnetic fields. The strength of a magnetic field is proportional to the current through the conductor (circuit) producing the field. Magnetic fields can be characterized by the force they exert on a moving charge or on an electric current. Electric currents are sources of magnetic fields. Magnetic field strengths are measured in milligauss (mG).

An example of electric and magnetic fields in a home is a lamp plugged into an electrical outlet. If the lamp is turned off, an electric field exists in the vicinity of the cord of the lamp because of the-voltage on the cord. When the lamp is turned on, current flows through the cord and a magnetic field also exists around the cord because of the current flow.

The strength of an electric field depends on the potential (voltage) of the source of the field, and distance from that source to the point of measurement of the field strength. Electric fields decrease rapidly as the distance (r) from the source increases. If an energized conductor (source) is placed inside a grounded conducting enclosure, the electric field outside the enclosure will approach zero (limited by ambient electric field level), and the source is said to be shielded.

Transmission-line-related magnetic fields decrease at a rate of $1/r^2$ if currents are balanced and conductors are closely spaced. Magnetic fields associated with unbalanced phase currents decrease at a rate inversely proportional to the distance from the source (conductor), at a rate of 1/r. Transmission lines typically are operated with balanced phase currents.

The electric field created by a high-voltage transmission line extends from the energized conductors to other nearby conducting objects such as the ground, structures, vegetation, buildings, vehicles, and people. The strength of the vertical component of the electric field at a height of 1 meter (3.28 feet) is frequently used to characterize electric fields under transmission lines.

The transmission line parameters that have the greatest effect on electric and magnetic field levels in the vicinity of a transmission line are maximum operating-voltage, line current, conductor height, and electrical phasing. The maximum ground-level electric and magnetic fields typically occur near the centerline of a line and at mid-span where the conductors are closest to the ground. For purposes of these estimates, the minimum mid-span conductor height is assumed to be 26 feet.

The electric and magnetic fields from the proposed transmission line were calculated using the BPA Corona and Field Effects Program. The strengths of the electric and magnetic fields were calculated for a sensor height of 1 meter above ground. Calculations were performed based on the minimum 26-foot ground clearance and extend to 200 feet on each side of the centerline. The calculated magnetic fields produced by the proposed line operating at peak loading conditions are shown on Figure 6-7.

Note that for maximum current flow, the magnetic fields at 20 feet (typical right-of-way for PG&E 70-kV transmission lines) from the HPP Generator Tie-line centerline will be approximately 46 mG (40 feet is the typical 70-kV right-of-way width). At 50 feet from the centerline, the magnetic field level decreases to less than 20 mG. For lower currents through the transmission line conductors experienced during typical loading conditions, the magnetic field levels will decrease in direct proportion to the reduction in current.

The proposed route of the HPP Generator Tie-line traverses a sparsely populated area of Kings County. The closest house to the proposed route is over a mile away. At this distance, the contribution of the magnetic field of the transmission line to the overall magnetic field level will not be measurable. The HPP Generator Tie-line will be located entirely on the HPP site or the existing PG&E Henrietta Substation; therefore, the EMF effects will be

negligible compared to the EMF from the existing transmission lines entering the Henrietta Substation, and the EMF from the substation itself.

The electric field levels produced by the proposed transmission line are shown on Figure 6-8. The electric field level 20 feet from the centerline of the transmission line is estimated to be 0.29 kV/m.

Given the concerns about human exposure to electric and magnetic fields and possible adverse health effects, several states have adopted standards limiting electric and magnetic field levels within or at the edge of transmission line rights-of-way (refer to Table 6-6). California is not one of these states. However, while California does not have regulatory requirements for transmission line magnetic fields, the calculated magnetic fields for the proposed transmission line (refer to Figures 6-7 and 6-8) are much lower than the requirements for those states with existing limitations.

California does not regulate the level of transmission line electric fields. However, calculated values for the proposed line (refer to Figure 6-8) are also substantially below the levels established by those states that do have limits.

6.2.4.1 Transmission Line Electromagnetic Field Reduction

While the State of California does not require any particular limit for electric and magnetic field levels, the CPUC mandates EMF reduction as a practicable design criterion for new and upgraded electrical facilities. From this mandate, the regulated electric utilities, including PG&E, have developed their own design guidelines to reduce EMF at each new facility. The CEC requires independent power producers to follow the guidelines that have already been established by the local electric utility or transmission-system owner.

In keeping with the goal of EMF reduction, the HPP interconnection will be generally designed and constructed using the principles outlined in the PG&E publication, *Transmission Line EMF Guidelines*. These guidelines incorporate the directives of the CPUC by developing design procedures that comply with Decision 93-11-013 and GO-95, 128, and 131-D. In other words when the towers, conductors, and rights-of-way are designed and routed according to the PG&E guidelines, the transmission line is consistent with the CPUC mandate.

From the PG&E guidelines, the primary techniques for reducing EMF anywhere along the line are the following:

- Increase the distance from the line conductors
- Reduce the spacing between the line conductors
- Minimize the current on the line
- Optimize the configuration of the phases (A, B, C)

The HPP Generator Tie-line will be located entirely on the HPP site or the existing PG&E Henrietta Substation site, thereby avoiding proximity to residential and public-use areas. The nearest residence is over a mile away.

6.2.4.2 Conclusion on Electromagnetic Fields

EMF reduction will be an integral consideration during the design and routing of the interconnection between the HPP and the offsite switchyard. Since the PG&E *Transmission Line EMF Guidelines* embody the CPUC directives for EMF reduction, the guidelines are the primary criteria for EMF considerations in this project.

The route of the proposed transmission line is not near any areas of public concern, including schools and daycare centers. Mitigative measures, such as locating the line away from sensitive facilities or increasing the aboveground height of the conductor when a sensitive facility is close to the edge of the right-of-way, will not be required.

6.2.5 Induced Current and Voltages

A conducting object, such as a vehicle or person, in an electric field will experience induced-voltages and currents. The magnitude of the induced current will depend upon the electric field strength, the size and shape of the object, and object-to-ground resistance. The measured induced current for a person in a 1-kV/m electric field is 0.016 milliamps (mA); for a large school bus, 0.41 mA; and for a large trailer truck, 0.63 mA.

When a conducting object in an electric field is isolated from ground, and a grounded person touches the object, a perceptible current or shock may occur. The magnitude of

the current depends upon the field strength, the size (or length for fences, pipelines, and railroad tracks) of the object and the grounding resistance of the object and person. Shocks are classified as below perception, above perception, secondary, and primary. The mean perception level is 1.0 mA for a 180-pound man and 0.7 mA for a 120-pound woman. Secondary shocks cause no direct physiological harm but may annoy a person and cause involuntary muscle contraction. The lower average secondary-shock level for an average-sized man is about 2 mA. Primary shocks can be harmful; their lower level is described as the current at which 99.5 percent of subjects can still voluntarily "let go" of the shocking electrode. For the 180-pound man this is 9 mA, for the 120-pound woman, 6 mA, and for children, 5 mA.

The NESC specifies 5 mA as the maximum allowable short-circuit current to ground from vehicles, trucks, and equipment near transmission lines.

The mitigation for hazardous and nuisance shocks is to ensure that metallic objects on or near the right-of-way are grounded, and that sufficient clearances are provided at roadways and parking lots to keep electric-field-induced-voltages sufficiently low (below 5 mA) to prevent vehicle short-circuit currents resulting from vehicle contact by persons.

Magnetic fields can also induce voltages and currents in conducting objects. Typically, this requires a long metallic object such as a fence, pipeline, or railroad that is grounded at only one location. A person who touches the object, at a location remote from the grounded point, will experience a shock similar to that described above for an ungrounded object. Installing multiple grounds on fences or pipelines parallel to the transmission line can mitigate this problem.

The proposed 70-kV transmission line will be constructed in conformance with GO-95 and Title 8 of the California Code of Regulations (CCR), Section 2700 requirements. Therefore, hazardous shocks are unlikely to occur as a result of the HPP construction or operation.

6.2.6 Nuisance Shocks

Normal grounding practices effectively mitigate the possibility of nuisance shocks resulting from induced currents from stationary objects near the line, such as fences and

buildings. Since the electric field extends beyond the right-of-way, grounding requirements extend beyond the right-of-way for very large metal objects or very long fences. Electric fences require a special grounding technique because they can operate only if they are insulated. Application of the grounding policy during and after construction will effectively mitigate the potential for shocks from stationary objects near the proposed line.

6.2.7 Fire Hazards

The transmission line and switchyards will be constructed in conformance with CPUC GO-95 and NESC standards. Title 14 CCR, Section 1250, Article 4 (from CPUC GO-95) establishes fire prevention standards for electric utilities. The HPP will comply with these standards.

6.2.8 Cumulative Impacts

This proposed transmission line will operate near existing transmission lines along the right-of-way. Interaction with the electric and magnetic fields of other existing lines will depend on the phase arrangements and relative positions of the conductors of the new line compared to the existing lines. Based on the short length of the HPP Generator Tie-line and its distance from surrounding transmission lines, any cumulative effect with respect to electric and magnetic fields is expected to be negligible. Corona noise for the proposed line is projected to be small and is not expected to significantly increase the ambient noise near the existing lines.

6.3 Transmission System Evaluation

6.3.1 PG&E Facilities Cost Report Study

GWF Energy LLC requested that PG&E prepare a Facilities Cost Report Study for the electrical interconnection of the proposed HPP. The final study is provided in Appendix A. The study evaluated the potential impacts of adding 95.8 MW (at 0.85 power factor) of generation to the PG&E system. PG&E evaluated the existing transmission system and determined that it is adequate to accommodate the output of the HPP.

6.4 Proposed Conditions of Certification

Conditions of certification are proposed to ensure that the HPP will comply with all applicable LORS and will not result in significant transmission line safety and nuisance impacts. These conditions of certification are included in Appendix K.

6.5 Jurisdiction

Table 6-7 identifies agencies with jurisdiction to issue permits and approvals, and/or enforce laws and regulations.

6.6 Agency Contacts

Local contacts for the HPP Generator Tie-line and the HPP switchyard are shown in Table 6-8.

TABLES

Table 6-1
Design and Construction LORS

LORS	Applicability	AFC Conformance Section
GO-95 CPUC, Rules for Overhead Electric Line Construction	CPUC rule covers required clearances, grounding techniques, and maintenance and inspection requirements.	Section 6.1.2.2 Section 6.1.2.3
8 CCR, Section 2700 et seq. High Voltage Electrical Safety Orders	Establishes essential requirements and minimum standards for installation, operation, and maintenance of electrical installation and equipment to provide practical safety and freedom from danger.	Section 6.1.2
GO-128 CPUC, Rules for Construction of Underground Electric Supply and Communications Systems	Establishes requirements and minimum standards to be used for the station AC power and communications circuits.	Section 6.1.2.1 Section 6.1.2.3
GO-52 CPUC, Construction and Operation of Power and Communications Line	Applies to the design of facilities to prevent or mitigate inductive interference.	Section 6.1.2.2 Section 6.1.2.3
ANSI/IEEE 693, IEEE Recommended Practices for Seismic Design of Substations	Provides recommended seismic design and construction practices.	Section 6.1.2.1 Section 6.1.2.2
IEEE 1119, IEEE Guide for Fence Safety Clearances in Electric-Supply Stations	Provides recommended clearance practices for Substation fences.	Section 6.1.2.1 Section 6.1.2.3
ANSI/IEEE 605, IEEE Guide for Design of Substation Rigid Bus Structures	Provides recommended design and construction practices for Substation rigid bus systems.	Section 6.1.2.1 Section 6.1.2.3
NFPA 70-1996, National Electrical Code	Establishes requirements and minimum standards for low-voltage AC systems.	Section 6.1.2

Table 6-2
Fire Hazard LORS

LORS	Applicability	AFC Conformance Section
Title 14 CCR, Sections 1250–1258, Fire Prevention Standards for Electric Utilities	Provides specific exemptions from electric pole and tower firebreak and electric conductor clearance standards, and specifies when and where standards apply.	Section 6.1.2.2 Section 6.1.2.3
ANSI/IEEE 979, IEEE Guide for Substation Fire Protection	Provides guidance for fire protection practices that should be used in designing control and relay buildings.	Section 6.1.2.1 Section 6.1.2.3
GO-95 CPUC, Rules for Overhead Electric Line Construction, Section 35	CPUC rule covers tree trimming criteria to mitigate fire hazard.	Section 6.1.2.2 Section 6.1.2.3

Table 6-3
Hazardous Shock LORS

LORS	Applicability	AFC Conformance Section
Title 8 CCR, Section 2700 et seq. High Voltage Electrical Safety Orders	Establishes essential requirements and minimum standards for installation, operation, and maintenance of electrical equipment to provide practical safety and freedom from danger.	Section 6.1.2
ANSI/IEEE 80, IEEE Guide for Safety in AC Substation Grounding	Presents guidelines for assuring safety through proper grounding in AC outdoor Substations.	Section 6.1.2.1 Section 6.1.2.3
NESC, ANSI C2, Section 9 Article 92, Paragraph E Article 93, Paragraph C	Covers grounding methods for electrical supply and communications facilities.	Section 6.1.2.1 Section 6.1.2.3

Table 6-4
Aviation Safety LORS

LORS	Applicability	AFC Conformance Section
Title 14 CFR, Part 77, Objects Affecting Navigable Airspace	Describes the criteria used to determine whether a Notice of Proposed Construction or Alteration (NPCA, FAA Form 7460-1) is required for potential obstruction hazards.	Section 6.2.2
FAA Advisory Circular No. 70/7460-1G, Obstruction Marking and Lighting	Describes the FAA standards for marking and lighting of obstructions as identified by Federal Aviation Regulations, Part 77.	Section 6.2.2
FAA Advisory Circular No. 70/7460-2H, Proposed Construction or Alteration of Objects that May Affect the Navigable Airspace	Informs individuals proposing to erect or alter an object that may affect the navigable airspace of the need to notify the FAA prior to such construction.	Section 6.2.2
Public Utilities Code, Sections 21656–21660	Discusses the permit requirement for construction of possible obstructions in the vicinity of aircraft landing areas, to navigable airspace, and near the boundary of airports.	Section 6.2.2

Table 6-5
Communication Interference LORS

LORS	Applicability	AFC Conformance Section
Title 47 CFR, Section 15.25, Operating Requirements, Incidental Radiation	Prohibits operations of any device emitting incidental radiation that causes interference to communications. The regulation also requires mitigation for any device that causes interference.	Section 6.2.3
GO-52, CPUC	Governs the Construction and Operation of Power and Communications Lines and specifically applies to the prevention or mitigation of inductive interference.	Section 6.2.3 Section 6.2.4
CEC staff, RI-TVI Criteria (Kern River Cogeneration Project 82-AFC-2, Final Decision, Compliance Plan 13-7)	Prescribes the CEC's RI/TVI mitigation requirements, developed and adopted by the CEC in past siting cases.	Section 6.2.3

Table 6-6
State Regulatory Requirements on Electric and Magnetic Fields

	Electric Field		Magnetic Row
	On ROW	Edge of ROW	Edge of ROW
Florida	8-kV/m[1]	2-kV/m	150 mG[1] (max load)
	10-kV/m[2]	--	200 mG[2] (max load)
	--	--	250 mG[3] (max load)
Minnesota	8-kV/m	--	--
Montana	7-kV/m[4]	1-kV/m	
New Jersey	--	3-kV/m	--
New York	11.8-kV/m	1.6-kV/m	200 mG (max load)
	11.0-kV/m[5]	--	
	7-kV/m[4]	--	
North Dakota	9-kV/m[6]	--	--
Oregon	9-kV/m[7]	--	--
Rhode Island	8-kV/m[8]	--	--

[1]For lines of 69-kV-70-kV
[2]For 500-kV lines
[3]For double-circuit 500-kV lines
[4]Maximum for highway crossings
[5]Maximum for private road crossings
[6]For 70-kV lines and above
[7]For 70-kV lines and above
[8]For all new lines

Table 6-7
Jurisdiction

Agency or Jurisdiction	Responsibility
CEC Project Manager 1516 9th Street, MS-15 Sacramento, CA 95814-5512	Jurisdiction over new transmission lines associated with thermal power plants that are 50 MW or more (PRC 25500); jurisdiction of lines out of a thermal power plant to the interconnection point to the utility grid (PRC 25107); jurisdiction over modifications of existing facilities that increase peak operating-voltage or peak kilowatt capacity by 25 percent (PRC 25123).
CPUC Mr. Julian Ajello Supervisor, North California Safety Section 505 Van Ness Avenue San Francisco, CA 94102 (415) 703-1327	Regulates construction and operation of overhead transmission lines (GO-95); regulates construction and operation of underground transmission and distribution lines (GO-128); regulates construction and operation of power and communications lines for the prevention of inductive interference (GO-52).
Kings County Electrical Inspector 1400 West Lacey Hanford, CA 93230 (559) 582-3211	Jurisdiction over safety inspection of electrical installations that connect to the supply of electricity (NFPA 70).
Western Systems Coordinating Council Mr. Dennis E. Eyre Executive Director 615 Arapeen Drive, Suite 210 Salt Lake City, UT 84108 (801) 582-0353	Establishes power supply design criteria to improve reliability of the power system.

Table 6-8
Agency and Utility Contacts

Agency	Contact/Title	Telephone Number
California Independent System Operator 151 Blue Ravine Road Folsom, CA 95630	Armando Perez Director, Grid Planning	(916) 331-4444
PG&E Transmission Projects 406 Higuera St. San Luis Obispo, CA 93401	John Hagen Project Manager	(805) 595-6356
CPUC 505 Van Ness Avenue San Francisco, CA 94102	Julian Ajello Supervisor, North California Safety Section	(415) 703-1327
Kings County Electrical Inspector 1400 West Lacey Hanford, CA 93230	Gerry Showers Building Maintenance Superintendent	(559) 582-3211
Western Systems Coordinating Council 615 Arapeen Drive, Suite 210 Salt Lake City, UT 84108	Dennis E. Eyre Executive Director	(801) 582-0353

FIGURES

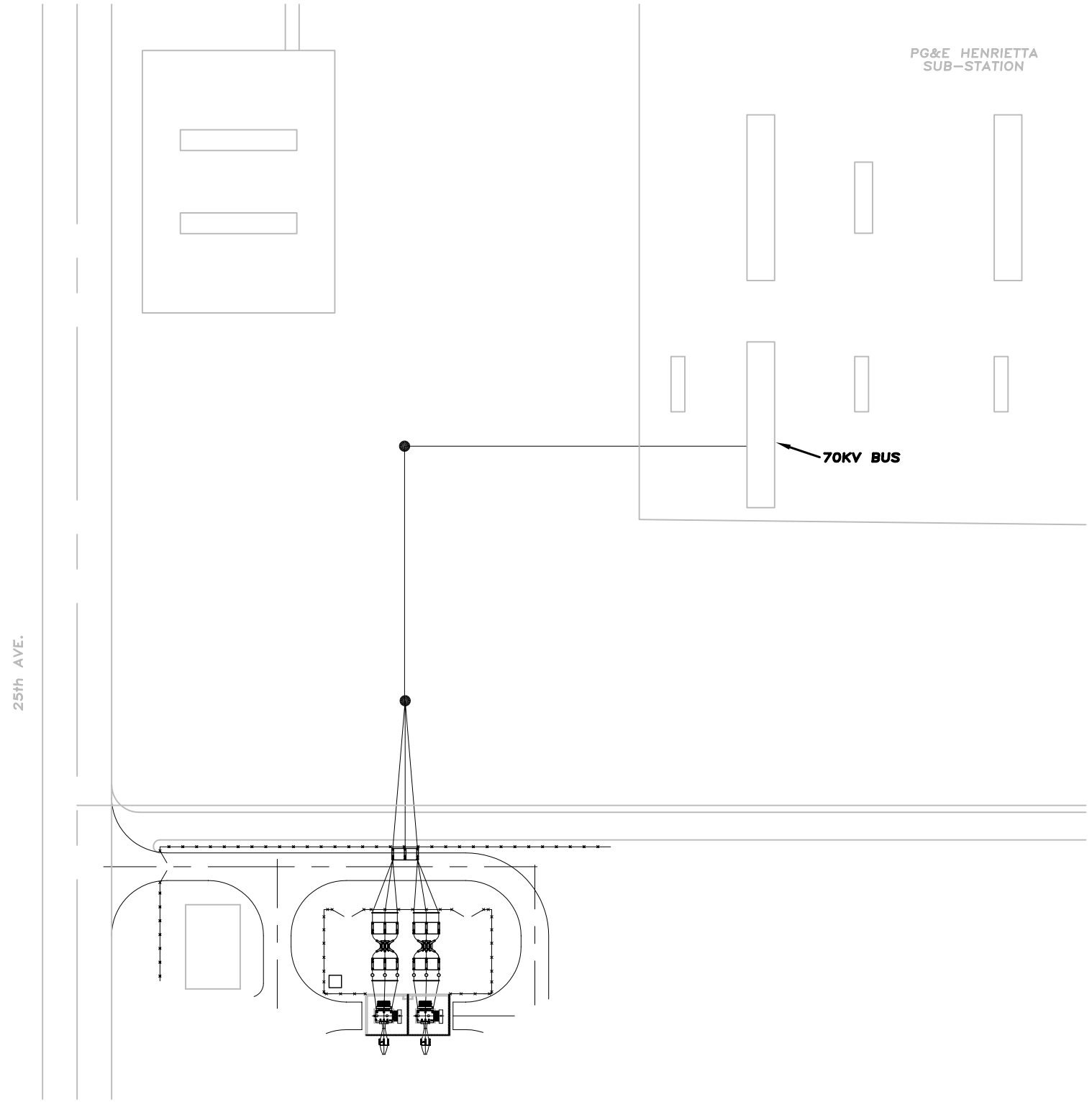

100' 0 100' 200'

SCALE 1"= 100'

Project No. 51-00167032	GWF HENRIETTA PEAKER PROJECT	PROPOSED TRANSMISSION ROUTE	Figure 6-1
URS			

X:\x_env\GWF\henrietta\GWF Reviews\FIG 6-1rev.dwg

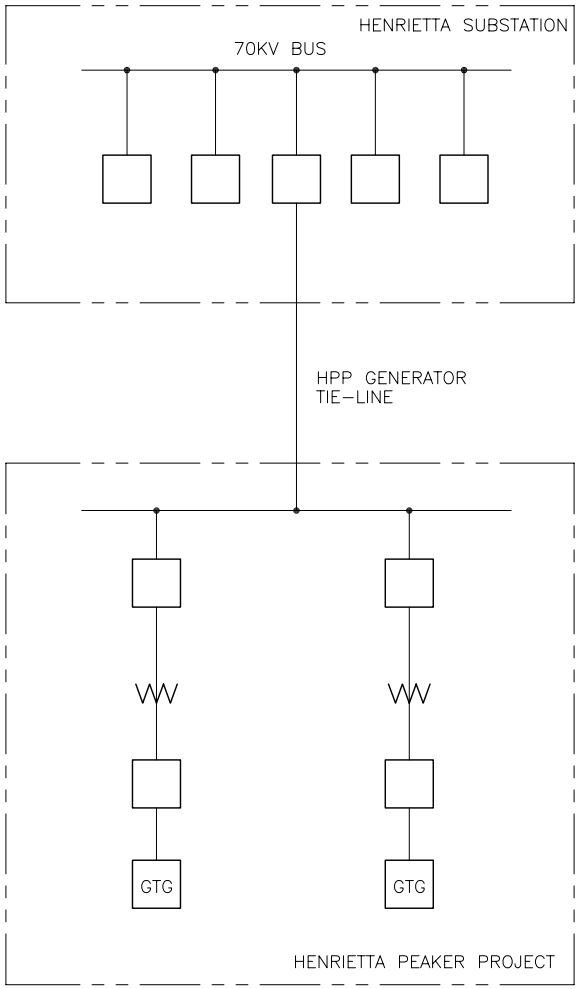

NTS

Project No. 51.00167032	GWF HENRIETTA PEAKER PROJECT	ONE-LINE DIAGRAM FOR HPP SWITCHYARD	Figure 6-2
	URS		

X:\x_env\GWF\henrietta\GWF Reveiws\FIG6-2rev.dwg

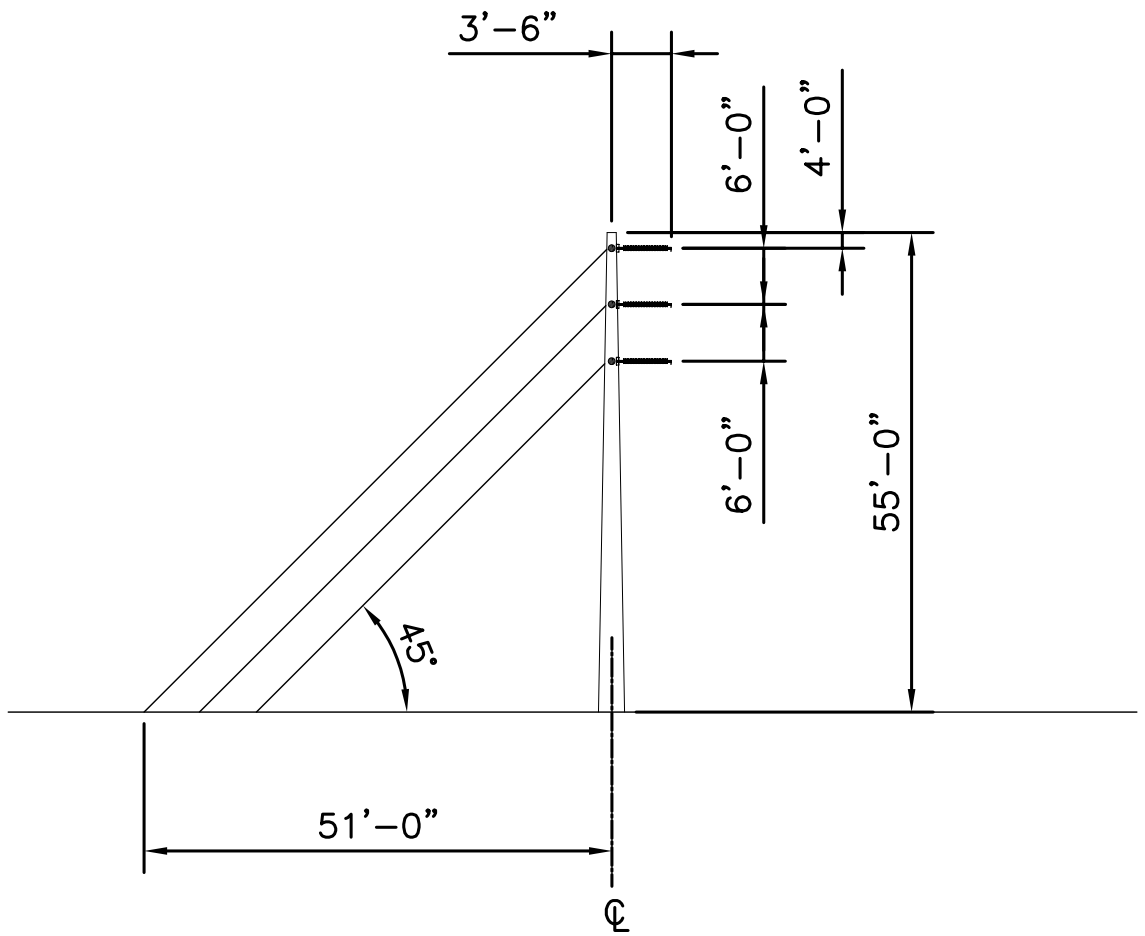

ELEVATION

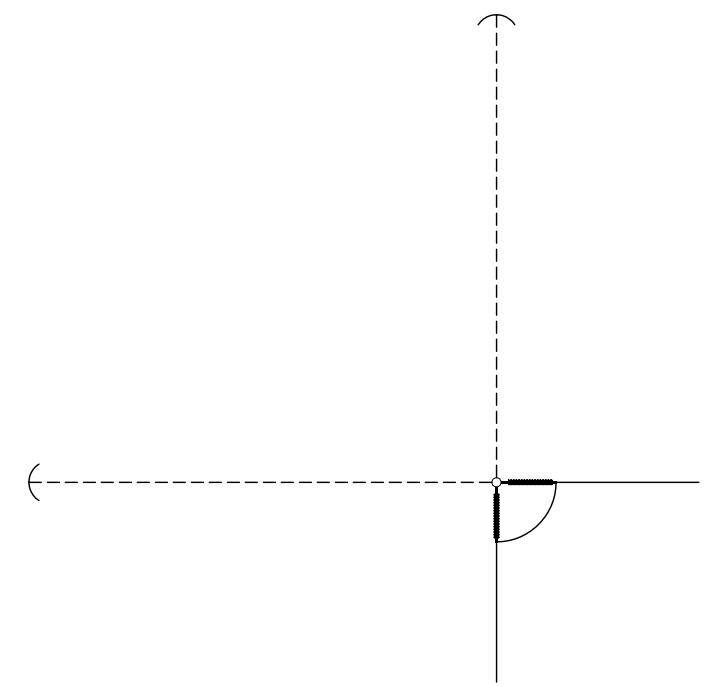

PLAN

Project No. 51–00167032.00	GWF ENERGY LLC HENRIETTA 230KV SWITCHYARD	TRANSMISSION LINE PROFILES	Figure 6–3
	URS		

J:\CADSHARED\GWF-energy\HENRIETTA\SHEETS\FIG6-3.dwg 8/23/01

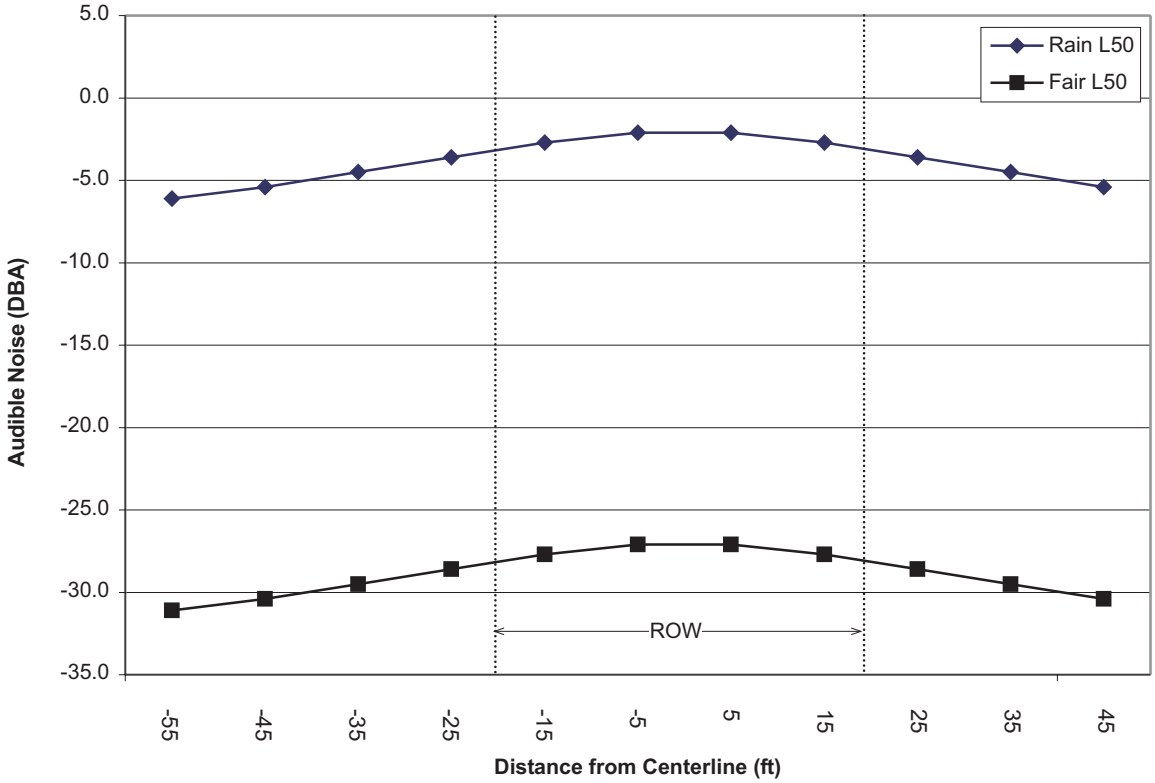

URS	Project No. 51-00167032.00 GWF Henrietta Peaker Project	AUDIBLE NOISE PROFILE	Figure 6-4

51-00167032.00-01023/082401/gos

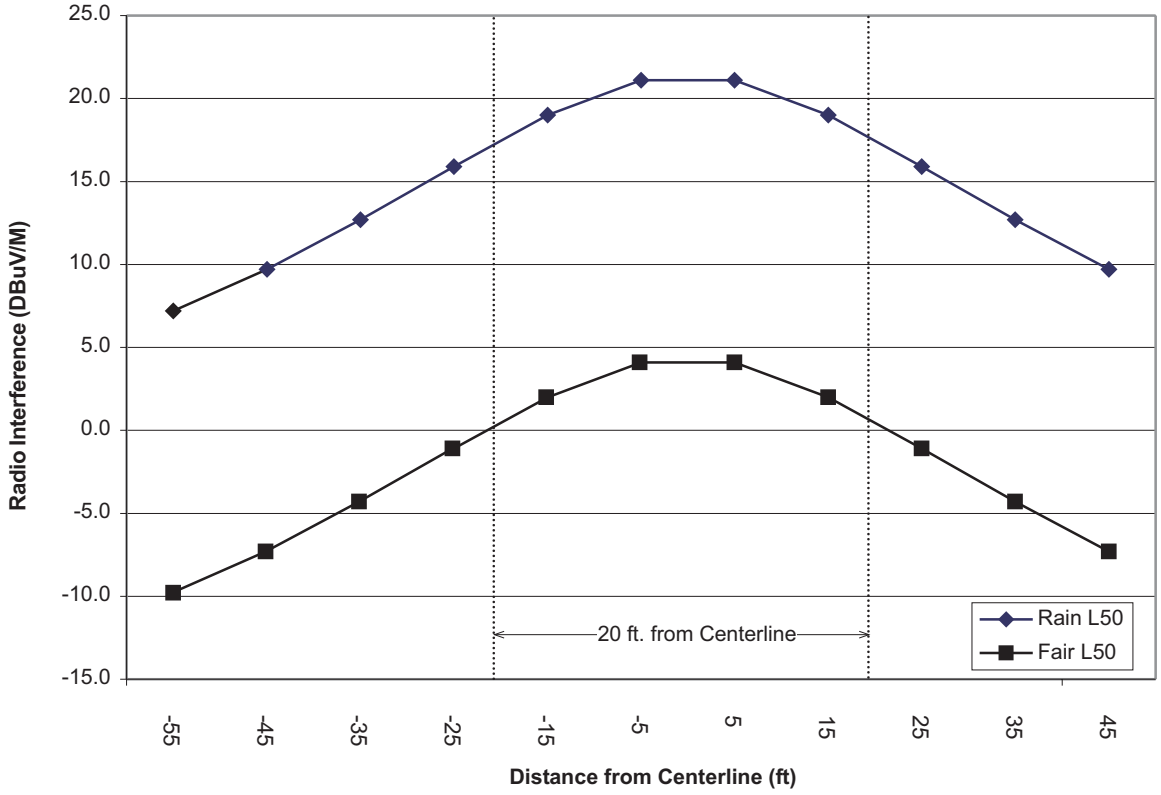

URS	Project No. 51-00167032.00 GWF Henrietta Peaker Project	RADIO INTERFERENCE PROFILE	Figure 6-5

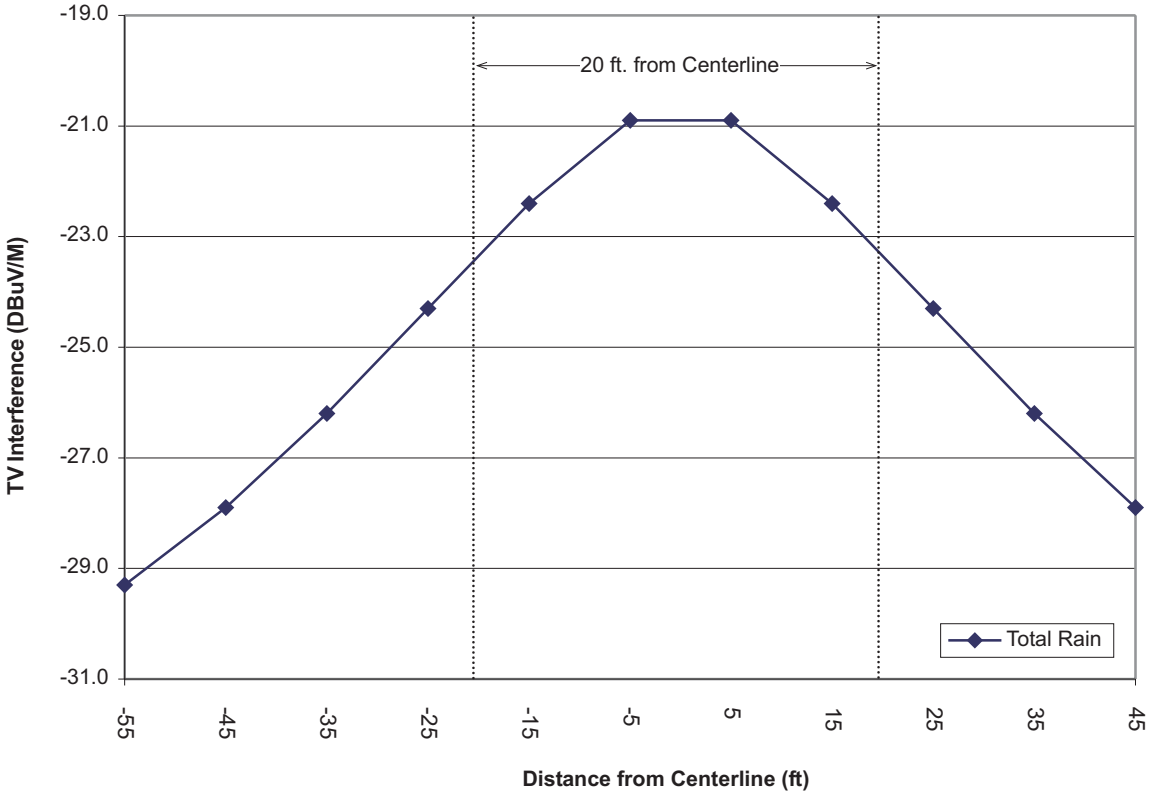

URS	Project No. 51-00167032.00 GWF Henrietta Peaker Project	TV INTERFERENCEPROFILE	Figure 6-6

51-00167032.00-01023/082401/gos

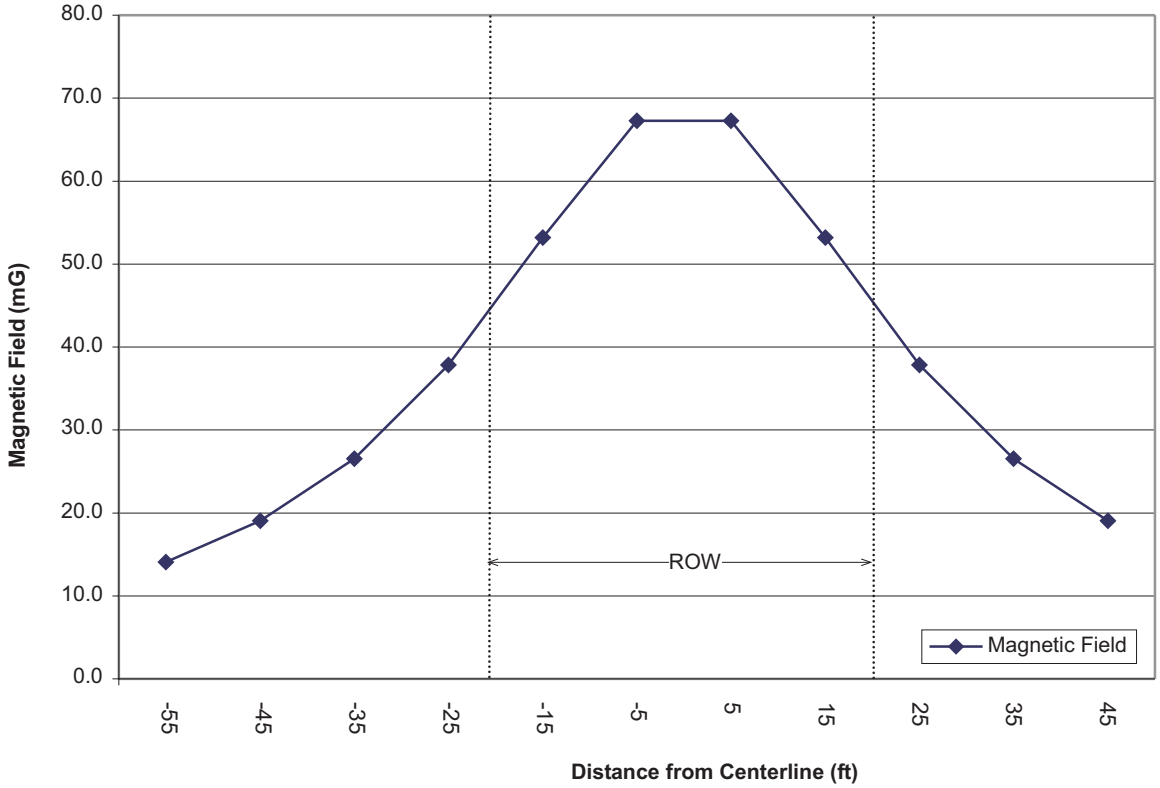

URS	Project No. 51-00167032.00 GWF Henrietta Peaker Project	MAGNETIC FIELD PROFILE	Figure 6-7

51-00167032.00-01023/082401/gos

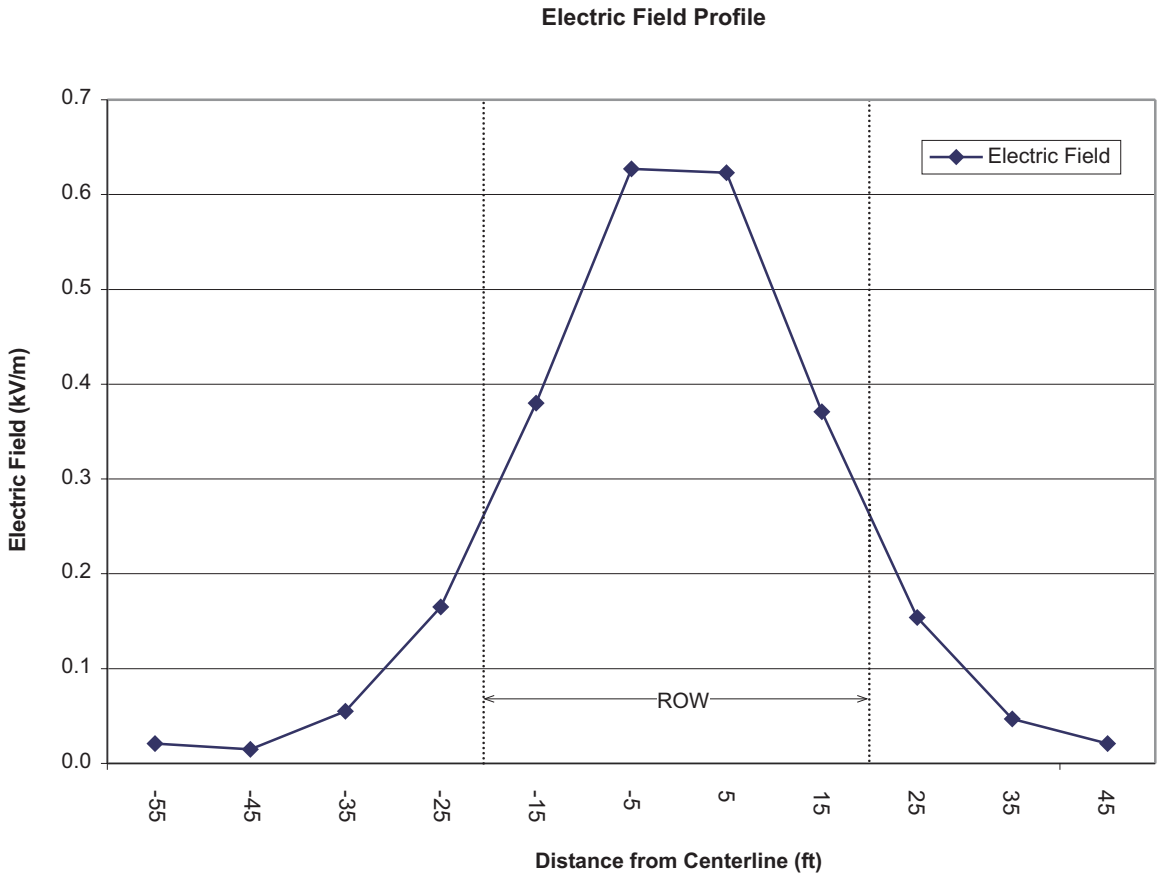

URS	Project No. 51-00167032.00 GWF Henrietta Peaker Project	ELECTRICAL FIELD PROFILE	Figure 6-8

51-00167032.00-01023/082401/gos

7.0 NATURAL GAS SUPPLY

Natural gas that serves California is produced in the Western Canadian Sedimentary Basin in Alberta and British Columbia, the San Juan Basin (the New Mexico and Colorado portions of the Four Corners area), the Permian Basin (west Texas), and the Rocky Mountains (southwestern Wyoming).

Approximately 7 billion cubic feet (Bcf) of natural gas can reach California each day through existing interstate pipelines that bring natural gas from the producing basins to the state line. More than half of this natural gas is from the San Juan and Permian Basins. Interstate pipelines interconnect with California's local natural gas distribution companies. Approximately 1 Bcf of additional natural gas is produced daily within various portions of the Sacramento Valley, the San Joaquin Valley, and Southern California.

Interstate pipelines, including El Paso Natural Gas, Transwestern, Kern River Gas Transmission, Pacific Gas Transmission, and Mojave, transport natural gas from producing basins to the state line.[1] Local distribution companies, such as Pacific Gas and Electric Company (PG&E) and Southern California Gas Company (SoCalGas), transport natural gas from the state line to customers. The California Public Utilities Commission (CPUC) regulates the natural gas transportation services.

Natural gas for the Henrietta Peaker Project (HPP) will be obtained from a SoCalGas pipeline (Line 800) located approximately one mile south of the Avenal Cutoff. SoCalGas will design, construct, own, operate, and maintain a 12-inch-diameter pipeline from the SoCalGas pipeline interconnection to the HPP site. This section describes the proposed natural gas pipeline route, natural gas quality, pipeline construction methods, pipeline operating procedures, and required permits.

7.1 The Proposed Route

The proposed natural gas pipeline route is approximately 2.2 miles long and is shown in Figure 2-2 (Project Description). It will tie into the SoCalGas Line 800 approximately

[1] Kern River and Mojave are actually interstate pipelines that cross the state line and deliver natural gas directly to customers in the southern San Joaquin Valley, near Bakersfield. They are the only interstate pipelines that currently operate within California.

one mile south of the Avenal Cutoff. A new, buried, 12-inch-diameter pipeline will travel north along the eastern side of an unimproved farm access road within an HPP easement. The line will pass beneath the Avenal Cutoff, proceed north along the eastern side of 25th Avenue within an existing SoCalGas easement, then turn east to enter the HPP site.

7.2 Alternative Routes

An alternative route, a line traveling along the unpaved farm road east of the HPP site, is longer and would involve permanent disturbance to agricultural land under Williamson Act contract. No other alternative routes for the natural gas pipeline have been identified by SoCalGas. The proposed route is the most direct route to the HPP site. Line 800 is the only main natural gas supply line in the area that could meet the needs of the HPP.

7.3 Natural Gas Quality

Natural gas delivered through intrastate pipelines must conform to certain quality specifications established by the local distribution company and approved by the CPUC. Natural gas delivered to the HPP will conform to the quality standards established in Section I of SoCalGas Rule No. 30, *Transportation of Customer-Owned Gas* and Section B, Rule No. 2, *Description of Service.* These rules include standards for heating value, moisture, hydrogen sulfide, mercaptan sulfur, total sulfur, carbon dioxide, oxygen, and inerts.

7.4 Construction Practices

Natural gas will be delivered to the project site through approximately 2.2 miles of new 12-inch-diameter pipeline. This pipeline will be buried under previously disturbed ground along or under existing surface roads in Kings County. Where the pipeline crosses a highway, a strip (approximately 32 inches wide) of the asphalt or concrete street surface will be saw-cut and removed. Where the pipeline is routed alongside an existing road, no hard surface will require cutting. The pipeline trench will be excavated using an excavator backhoe to an average depth of approximately 4 to 6 feet below grade.

The pipeline will be laid on a bed of sand that is approximately 4 inches deep. Sand will be tamped around the pipe until the pipe is covered by a 12-inch layer. Previously

excavated dirt will then be placed back in the trench and compacted in approximately 12-inch layers, until reaching either the level of the bottom of the road base or the surface of the existing grade.

Each dirt layer will be compacted according to American Society for Testing and Materials standard D1556 to a level of 95 percent. Where no road surface material is required, the pipeline installation will be complete. Where road material is required, road base course material (typically a gravel mix such as A/B fill) will be placed on top of the underlying dirt and compacted. Finally, an asphaltic or concrete road surface material will be installed to match the existing road thickness and surface. Asphaltic road surfaces will be completed with a seal coat to create a smooth, tough, resilient surface free of irregularities.

Warning signs will be installed along the length of the new natural gas pipeline route to warn of the pipeline presence.

7.5 Pipeline Operations

The proposed natural gas supply pipeline will be designed, constructed, and operated in accordance with Title 49, Code of Federal Regulations (CFR), Part 192 and CPUC General Order (GO) 112-E. Specifically, the design of the pipeline will comply with standards required for natural gas pipelines in proximity to populated areas, based on actual population densities along the proposed pipeline route.

An operations and maintenance plan will be prepared to address both normal procedures and conditions and any upsets or abnormal conditions that could occur. Periodic cathodic protection surveys will be performed along the pipeline, as required by 49 CFR 192 and GO 112-E. The pipeline will be operated with a continuous cathodic protection system.

A proactive damage prevention program will be adopted for the pipeline. Markers that identify the location of the pipeline will be placed at all road crossings. The markers will specify a toll-free number to call prior to any excavation in the vicinity of the pipeline. Buried warning tape will be placed above the pipeline to warn of its presence.

Natural gas received from the SoCalGas will be odorized. SoCalGas will own the pipeline and will develop an emergency plan to provide prompt and effective responses to upset conditions detected along the pipeline or reported by the public.

Isolation block-valves will be installed at both ends of the proposed pipeline. These valves will be manually controlled gate valves. SoCalGas will have access to the isolation block-valve at the mainline tap. SoCalGas will own and operate a metering facility to measure the natural gas supply to the HPP.

7.6 Permits

An encroachment permit will be obtained from Kings County Public Works Department. It is estimated that the permit could be obtained in one week (Reyes, 2001).

7.7 References

Southern California Gas Company, 1997. Rule No. 2, *Description of Service.*

Southern California Gas Company, 1997. Rule No. 30, *Transportation of Customer-Owned Gas.*

Reyes, 2001. Telephone communication with Jerry Reyes, Kings County Public Works Department and J. Adams, URS Corporation, June 13.

Wheeler, 2000. Personal communication from Doug Wheeler, Vice President, GWF Power Systems Company, Inc., to D. Stein, URS Corporation, March 29.

8.1 Air Quality

The Henrietta Peaker Project (HPP) consists of a 91.4-megawatt (MW) (net), natural-gas-fired, simple-cycle power plant located approximately 10 miles southwest of Lemoore, California, on a seven-acre portion of a 20-acre parcel owned by GWF Energy LLC. The HPP will interconnect to the existing adjacent Pacific Gas and Electric Company (PG&E) Henrietta Substation through a new 550-foot 70-kilovolt (kV) transmission line supported on two new transmission poles. Other linear facilities include an approximately 16.5-foot water interconnection pipeline (from the site property boundary) and a 2.2-mile Southern California Gas Company (SoCalGas) natural gas interconnection pipeline. Additionally, approximately five acres will be used for temporary construction laydown and parking. Figure 2-1a and Figure 2-1b show the regional location of the HPP site. Figure 2-2 shows the immediate site location of the project, including the location of the proposed generating facility and the transmission, natural gas, and water supply routes.

This analysis of the potential air quality impacts of the HPP was conducted according to California Energy Commission (CEC) power plant siting requirements. The analysis also addresses the San Joaquin Valley Unified Air Pollution Control District (SJVUAPCD) requirements for Authority to Construct and Permit to Operate. The details of the analysis are contained in the following sections:

- Section 8.1.1 describes all applicable laws, ordinances, regulations, and standards (LORS).
- Section 8.1.2 describes the local environment surrounding the HPP site. Meteorological data including wind speed and direction (i.e., wind roses), temperature, and precipitation are discussed, and ambient concentrations for the appropriate criteria pollutants are summarized.
- Section 8.1.3 provides an analysis of best available control technology (BACT) for gas-fired turbines, and explains how the use of dry, low nitrogen oxide (NO_x) combustors and selective catalytic reduction (SCR) with ammonia injection meet NO_x BACT requirements, and how use of an oxidation catalyst will meet BACT requirements for carbon monoxide (CO). BACT controls for the diesel generator are also proposed. In addition, mitigation of fugitive dust during construction is discussed.

- Section 8.1.4 evaluates the HPP's air quality impacts from NO_x, CO, sulfur dioxide (SO_2), volatile organic compounds (VOCs), and particulate matter less than 10 micrometers in diameter (PM_{10}) emissions. Emission estimates are presented for these pollutants for project construction and operation over a range of operating modes, including startup and shutdown. The modeling analysis conducted for nitrogen dioxide (NO_2), CO, SO_2, and PM_{10} is presented. The results indicate that the HPP will not cause an exceedance of the California and federal ambient air quality standards.

- Section 8.1.5 describes potential HPP commissioning emissions and associated air quality impacts.

- Section 8.1.6 discusses the potential for cumulative impacts with other proposed projects in the area.

- Section 8.1.7 describes the HPP emissions and planned use of emission reduction credits.

- Section 8.1.8 describes HPP compliance with all applicable LORS. Also, Table 8.1-25 summarizes HPP compliance with each LORS.

- Section 8.1.7 lists the agency contacts for the air quality assessment.

- Section 8.1.8 lists the references for the air quality assessment.

Some relevant information is presented in other sections of this Application for Certification (AFC), including an evaluation of toxic air pollutants (see Section 8.6, Public Health) and information related to the fuel characteristics (see Section 7.0, Natural Gas Supply), heat rate, and expected capacity factor of the proposed facility (see Section 2.0, Project Description).

8.1.1 Laws, Ordinances, Regulations, and Standards

The LORS that apply to the potential air quality impacts from the HPP are described below. These LORS are administered (either independently or cooperatively) by the U.S. Environmental Protection Agency (U.S. EPA) Region IX, the CEC, the California Air Resources Board (CARB), and the SJVUAPCD.

8.1.1.1 Ambient Air Quality Standards

U.S. EPA, in response to the federal Clean Air Act of 1970, established National Ambient Air Quality Standards (NAAQS) in 40 Code of Federal Regulations (CFR) Part 50. The NAAQS include both primary and secondary standards for six "criteria" pollutants. These criteria pollutants are ozone, CO, NO_2, SO_2, PM_{10}, and lead. Primary standards were established to protect human health, and secondary standards were designed to protect property and natural ecosystems from the effects of air pollution.

The 1990 Clean Air Act Amendments established attainment deadlines for all designated areas that did not attain the NAAQS. In addition to the federal standards described above, a new federal standard for particulate matter less than 2.5 μm in diameter ($PM_{2.5}$) and a revised ozone standard were promulgated in July 1997. Under an interim policy, the PM_{10} and 1-hour ozone standards will continue to be implemented for the next several years while the new standards are being phased in. The State of California has adopted state standards (SAAQS) that are in some cases more stringent than the NAAQS. The state and federal standards relevant to the HPP are summarized in Table 8.1-1.

The U.S. EPA, CARB, and the local air pollution control districts determine air quality attainment status by comparing local ambient air quality measurements from the state or local ambient air monitoring stations with the NAAQS and SAAQS. Those areas that meet ambient air quality standards are classified as "attainment" areas; areas that do not meet the standards are classified as "nonattainment" areas. Areas that have insufficient air quality data may be identified as unclassifiable areas. These attainment designations are determined on a pollutant-by-pollutant basis. Kings County has been designated as a federal and state nonattainment area for ozone and PM_{10}. The federal attainment status for all other criteria pollutants is considered unclassified due to insufficient monitoring data; however, California considers the area to be in attainment for these pollutants. Table 8.1-2 presents the attainment status (both federal and state) for Kings County, which is located in SJVUAPCD jurisdiction.

As mentioned above, both U.S. EPA and CARB are involved with air quality management in Kings County, along with SJVUAPCD. The area of responsibility for each of these agencies is described below.

U.S. EPA has ultimate responsibility for ensuring, pursuant to the Clean Air Act Amendments that all areas of the U. S. meet, or are making progress toward meeting, the NAAQS. The state of California falls under the jurisdiction of U.S. EPA Region IX, which is headquartered in San Francisco. The U.S. EPA requires that all states submit State Implementation Plans for nonattainment areas that describe how the NAAQS will be achieved and maintained. The U.S. EPA has delegated this attainment responsibility to CARB.

CARB, in turn, has delegated attainment responsibility to regional or local air quality management districts (or air districts), such as SJVUAPCD. CARB is responsible for attainment of the California standards, implementation of nearly all phases of California's motor vehicle emissions program, and oversight of the operations and programs of the regional air districts.

Each air district is responsible for establishing and implementing rules and control measures to achieve air quality attainment within its district boundaries. The air district also prepares an air quality management plan that includes an inventory of all emission sources within the district (both man-made and natural), a projection of future emissions growth, an evaluation of current air quality trends, and an assessment of any rules or control measures needed to attain the air quality standards. This air quality management plan is submitted to CARB, which then compiles the plans from all air districts within the state into the State Implementation Plan. The responsibility of the air districts is to maintain an effective permitting system for existing, new, and modified stationary sources, to monitor local air quality trends, and to adopt and enforce such rules and regulations as may be necessary to achieve the air quality standards.

8.1.1.2 Prevention of Significant Deterioration Requirements

In addition to the ambient air quality standards described above, the federal Prevention of Significant Deterioration (PSD) program has been established to protect

deterioration of air quality in those areas that already meet NAAQS. Specifically, the PSD program specifies allowable concentration increases for attainment pollutants due to new emission sources. These increases allow economic growth while preserving the existing air quality, protecting public health and welfare, and protecting Class I areas (national parks and wilderness areas). The PSD regulations require major stationary sources to undergo a preconstruction review that includes an analysis and implementation of BACT, a PSD increment consumption analysis, an ambient air quality impact analysis, and analysis of air-quality-related values. Although U.S. EPA Region IX has delegated enforcement of the PSD program in California, U.S. EPA Region IX currently retains PSD permitting authority in the SJVUAPCD.

An emission source is considered "major" when its potential to emit any regulated air pollutant exceeds 100 tons per year (tpy) (if it is one of 28 specified source categories). The HPP is not among these categories. Therefore, the PSD major-source threshold that applies to the proposed project is 250 tpy of any regulated air pollutant. The HPP will not be subject to PSD requirements, because estimated potential annual emissions are below the 250 tpy threshold for all regulated air pollutants.

8.1.1.3 Acid Rain Program Requirements

Title IV of the Clean Air Act Amendments applies to sources of air pollutants that contribute to acid rain formation, including certain sources of SO_2 and NO_x emissions. Title IV is implemented by the U.S. EPA under 40 CFR 72, 73, and 75. Allowances of SO_2 emissions are set aside in 40 CFR 73. Sources subject to Title IV are required to obtain SO_2 allowances, to monitor their emissions, and obtain SO_2 allowances when a new source is permitted. Sources such as the HPP that use pipeline-quality natural gas are exempt from many of the acid rain program requirements. However, these sources must still estimate SO_2 and carbon dioxide (CO_2) emissions, and monitor NO_x emissions with certified continuous emissions monitoring systems. All subject facilities must submit an acid rain permit application to U.S. EPA within 24 months of commencement of operation.

8.1.1.4 New Source Performance Standards

New Source Performance Standards (NSPS) have been established by U.S. EPA to limit air pollutant emissions from certain types of new and modified stationary sources. The NSPS regulations are contained in 40 CFR 60 and cover nearly 70 source categories. Stationary gas turbines are regulated under subpart GG. The enforcement of NSPS has been delegated to the SJVUAPCD, and the NSPS regulations are incorporated by reference into the District's Rule 4001.

In general, local emission limitation rules or BACT requirements are more restrictive than the NSPS requirements. For example, the NO_x emissions from the HPP's stationary gas turbine will be controlled to less than 3.6 parts per million by volume dry (ppmvd) at 15 percent oxygen, significantly less than the NSPS limit of 99 ppmvd at 15 percent oxygen.

The NSPS NO_x standard was calculated according to 40 CFR 60.332 as follows:

$$STD = 0.0075 \times \left(\frac{14.4}{Y}\right) + F$$

Where: STD = Allowable NO_x emission standard (% by volume at 15 percent oxygen dry basis)

Y = Manufacturer's rated heat rate based on lower heating value (kJ/W-hr)

F = NO_x emission allowance for fuel-bound nitrogen

The allowable NO_x emission standard was calculated as 0.0099 percent by volume (or 99 ppmvd) for the HPP based on the following:

Y = 10,317 Btu/kW-hr (or 10.89 kJ/W-hr)

F = 0 (worst-case condition)

The NSPS fuel requirements for SO_2 will be satisfied by the use of natural gas, and emissions and fuel monitoring will be performed to comply with NSPS, acid rain, and other regulatory requirements.

8.1.1.5 Federally Mandated Operating Permits

Title V of the Clean Air Act requires U.S. EPA to develop a federal operating permit program that is implemented under 40 CFR 70. This program is administered in Kings County by SJVUAPCD under Rule 2520. Each major source must obtain a Part 70 permit. Permits must contain emission estimates based on potential-to-emit, identification of all emissions sources and controls, a compliance plan, and a statement indicating each source's compliance status. The permits must also incorporate all applicable federal requirements. The HPP would be a major source subject to Title V. Permit applications must be submitted within 12 months after plant startup.

8.1.1.6 Power Plant Siting Requirements

Under the California Environmental Quality Act (CEQA), the CEC has been charged with assessing the environmental impacts of each new power plant and considering the implementation of feasible mitigation measures to prevent any significant impacts. CEQA Guidelines (Title 14, California Code of Regulations, Section 15002[a][3]) state that the basic purpose of CEQA is to "prevent significant, avoidable damage to the environment by requiring changes in projects through the use of alternatives or mitigation measures when the governmental agency finds the changes to be feasible."

The CEC's siting regulations state that, unless certain conditions justifying an override are present, a new power plant can only be approved if the proposed project complies with all federal, state, and local air quality LORS that govern the construction and operation of the project. A project must demonstrate that emissions will be appropriately controlled to mitigate significant project impacts, and that it will not jeopardize attainment or maintenance of ambient air quality standards. Cumulative impacts, impacts due to pollutant interaction, and impacts from non-criteria pollutants must also be considered.

8.1.1.7 Air Toxics "Hot Spots" Program

As required by the California Health and Safety Code Section 44300, all facilities with criteria air pollutant emissions in excess of 10 tons per year are required to submit air toxic

"Hot Spots" emissions information. This requirement is applicable only after the start of operation. Section 8.6 (Public Health) of this AFC indicates that there will not be significant air toxics impacts from the HPP.

8.1.1.8 Determination of Compliance, Authority to Construct, and Permit to Operate

Under Rule 2010, SJVUAPCD regulates the construction, alteration, replacement, and operation of sources that may emit air contaminants through the issuance of air permits such as the Authority to Construct (ATC) and Permit to Operate (PTO). This permitting process allows the SJVUAPCD to adequately review new and modified air pollution sources to ensure compliance with all applicable prohibitory rules and to ensure that appropriate emission controls are used. An ATC allows for the construction of the air pollution source and remains in effect until the PTO application is granted, denied, or canceled. For power plants licensed under the siting jurisdiction of the CEC, the SJVUAPCD issues a Determination of Compliance in lieu of an ATC. The DOC is incorporated into the CEC license. Once the project commences operation and demonstrates compliance with the DOC, the SJVUAPCD will issue a PTO. The PTO specifies conditions that the project must meet in order to comply with other air quality standards, and will incorporate applicable DOC requirements.

8.1.1.9 New Source Review Requirements

New Source Review (NSR) rules establish the criteria for siting new and modified emission sources. SJVUAPCD has been delegated authority for NSR rule development and enforcement; the District's NSR rules are contained in Rule 2201. There are three basic requirements within the NSR rules. First, BACT must be applied to any new source that has pollutant emissions above specified threshold quantities. Second, all potential emission increases from the source above specified thresholds must be offset by real, quantifiable, surplus, permanent, and enforceable emission decreases in the form of emission reduction credits (ERCs). Third, ambient air quality impact assessments must be conducted to confirm that the proposed project does not cause or contribute to a violation of a NAAQS or SAAQS or jeopardize public health.

8.1.1.10 Other Prohibitory Rules

Three applicable SJVUAPCD rules address operation emission limits for the HPP: Rule 4201, Rule 4703, and Rule 4801. Rule 4201 limits total suspended particulate matter emissions from any source operation to 0.1 grains per cubic foot of gas at dry standard conditions. Rule 4703 limits NO_x and CO emissions from stationary gas turbines rated at equal to or greater than 0.3 MW. To demonstrate compliance with Rule 4703, an emission control plan must be submitted and emissions monitoring and recordkeeping must be performed. Rule 4801 limits the discharge of sulfur compounds from any source operation to 0.2 percent by volume calculated as SO_2 on a dry basis.

Two SJVUAPCD rules apply to the HPP that prohibit visible emissions and emissions that may be considered a nuisance. Rule 4101 (Visible Emissions) limits emissions of visible air contaminants by prohibiting any emissions that exceed darkness and opacity levels designated as No. 1 on the Ringelmann Chart. Rule 4102 (Nuisance) prohibits any emissions "which cause injury, detriment, nuisance, or annoyance to any considerable number of persons or to the public or which endanger the comfort, repose, health or safety of any such person or the public or which cause or have a natural tendency to cause injury or damage to business or property."

Applicable fugitive dust requirements are implemented by SJVUAPCD Rules 8010 and 8020. Rule 8010 identifies specific activities subject to dust control (e.g., land leveling, grading, cut-and-fill grading, and the erection or demolition of any structure, etc.). This rule also defines "reasonably available control measures" for dust control (e.g., application of water, chemical stabilizers or other liquids, covering, paving, compacting, planting, etc.) and stipulates that stabilizers should not violate State Water Quality Control Board standards. Rule 8020 applies specifically to construction and requires that dust control be implemented for the duration of construction. Also, this rule states that visible dust emissions cannot exceed an opacity limit of 40 percent for a period or periods aggregating to more than three minutes in any one hour.

8.1.2 Affected Environment

This section describes the regional climate and meteorological conditions that influence the transport and dispersion of air pollutants as well as existing air quality within the region of the HPP. The data presented in this section are representative of the climatological and meteorological conditions at the HPP site, which is approximately 225 feet above sea level in the central San Joaquin Valley.

8.1.2.1 Climatology

The climate of the region, along with much of the West Coast of the country, is controlled by a semi-permanent high-pressure system that is centered over the northeastern Pacific Ocean. In the summer, this strong high-pressure system results in clear skies inland and coastal fog, and the project site typically experiences temperatures similar to those of inland areas. Very little precipitation occurs during the summer months because storms are blocked by the high-pressure system. Beginning in the fall and continuing through the winter, the high pressure weakens and moves south, allowing storm systems to move through the area. Temperature, winds, and rainfall are more variable during these months. The project site receives an average of 7.95 inches of rain annually.

Long-term average temperature and precipitation data have been collected at the Hanford Station, the nearest surface meteorological station to the project site; these data are presented in Table 8.1-3. The data indicate that July is usually the warmest month of the year, with a normal daily maximum temperature of 95.9 °F, and a normal daily minimum of 61.7 °F. In the fall and spring, the afternoon temperatures are mild, in the 60s and 70s, while nights are cooler, in the 40s and 50s. In the winter, temperatures are cool in the afternoon and crisp at night. The coldest month is usually January, with a normal daily maximum of 53.5 °F and a normal daily minimum of 34.3 °F.

Figures 8.1-1 through 8.1-4 present the predominant quarterly wind patterns in the project area. As shown, the predominant surface winds in the project area are from the north-northwest and the northwest. Winds during fall and winter tend to be more variable than during spring and summer months. Quarterly wind frequency distribution tables are located in

Appendix B. Appendix B also contains wind roses and wind frequency distribution tables showing annual conditions as well as winds by stability class.

Atmospheric stability and mixing heights are important parameters in the determination of pollutant dispersion. Atmospheric stability reflects the amount of atmospheric turbulence and mixing. In general, the less stable an atmosphere, the greater the turbulence, which results in more mixing and better dispersion. The mixing height, measured from the ground upward, is the height of the atmospheric layer in which convection and mechanical turbulence promote mixing. Good ventilation results from a high mixing height and at least moderate wind speeds within the mixing layer.

Airflow in the San Joaquin Valley can be characterized by up-valley and down-valley winds. The terrain in the project area is fairly flat. Therefore, down-valley winds are predominant as shown in Figures 8.1-1 through 8.1-4.

8.1.2.2 Existing Air Quality

Ambient air quality standards have been set by both the federal government and the State of California to protect public health and welfare with an adequate margin of safety. Pollutants for which NAAQS or SAAQS have been set are often referred to as "criteria" air pollutants. The term is derived from the comprehensive health effects review that culminates in pollutant-specific air quality criteria, which precede NAAQS and SAAQS standard setting. These standards are reviewed at a legally prescribed frequency and revised as new health effects data warrant.

Each NAAQS or SAAQS is based on a specific averaging time over which the concentration is measured. Different averaging times are based upon protection of short-term, high dosage effects or longer-term, low dosage effects. NAAQS may be exceeded no more than once per year. SAAQS are not to be exceeded.

The project site is in Kings County. The monitoring station closest to the proposed project site is the Hanford Station. There is also a monitoring station in Corcoran, approximately 22 miles to the southeast. However, these stations do not measure all criteria

pollutant concentrations, and data from other stations are necessary. Monitoring stations at Visalia (Tulare County) and at Fresno and Parlier (Fresno County) are also located near the project site. Pollutants monitored at these stations include ozone, CO, NO_x, SO_2 and PM_{10}. Air quality measurements taken at these stations are presented in Tables 8.1-4 through 8.1-8. For air quality impact analysis, the maximum background concentration from the past three years from all monitoring stations was used.

The monitoring data indicate that air quality complies with NAAQS and SAAQS for NO_2 at the Hanford, Visalia, and Parlier monitoring stations. The air quality complies with the standards for SO_2 for all averaging periods at Fresno, Oildale (Kern County), and Bakersfield (Kern County) monitoring stations. No SO_2 data were available at monitoring stations closer to the site.

Table 8.1-4 shows that the federal 1-hour ozone standard of 0.12 ppm, as well as the more stringent state ozone standard of 0.09 ppm, have been exceeded each year for the past five years at the Hanford, Visalia, and Parlier monitoring stations. The federal 8-hour ozone average standard of 0.08 ppm has also been exceeded every year. However, the federal 8-hour ozone standard requires maintaining 0.08 ppm as a three-year average of the fourth-highest daily maximum value. Therefore, the number of days that the maximum concentration exceeds the standard concentration is not the number of violations of the standard for the year.

The PM_{10} data in Table 8.1-5 show that the 24-hour average SAAQS of 50 micrograms per cubic meter ($\mu g/m^3$) has been exceeded every year at Kings County and Tulare County monitoring stations. The annual geometric mean (also called the state annual average) is a geometric mean of all measurements. The annual arithmetic mean (also called the national annual average) is an arithmetic average of the four arithmetic quarterly averages. Almost all annual geometric mean concentrations exceeded the California PM_{10} ambient air quality standard of 30 $\mu g/m^3$ in Kings and Tulare Counties. The federal PM_{10} standard of 50 $\mu g/m^3$ (annual arithmetic mean) has also been exceeded, but not for all years at all monitoring locations.

The data in Table 8.1-6 show that maximum 8-hour average CO levels comply with the NAAQS and SAAQS of 9.0 ppm.

8.1.3 Best Available Control Technology

Pursuant to SJVUAPCD Rule 2201, BACT is required for NO_x, VOC, PM_{10}, and SO_2 emissions from any new or modified emission unit that exceed 2 pounds per day, and CO emissions that exceed 550 pounds per day. The SJVUAPCD defines BACT as the most stringent emission limit or control technology that either:

1. Has been achieved in practice; or
2. Is contained in a State Implementation Plan approved by U.S. EPA, unless demonstrated not to be achievable; or
3. Emission limits found by the Air Pollution Control Officer to be feasible and cost-effective for such class or category of sources or specific source.

To identify feasible emission limits, several information sources were consulted, including the following:

- U.S. EPA's BACT/Lowest Achievable Emission Rate (LAER) Clearinghouse and updates
- CARB's BACT Clearinghouse database and CARB's BACT Guidelines for Power Plants (adopted 7/22/99)
- SJVUAPCD BACT Guideline 3.4.2
- South Coast Air Quality Management District BACT Guidelines Manual
- Discussions with permitting staff from U.S. EPA Region IX and the SJVUAPCD
- Recent CEC Applications for Certification

8.1.3.1 BACT Assessment for the Gas Turbines

The 1977 Clean Air Act established revised conditions for the approval of preconstruction permit applications under the PSD program. One of these requirements is that the BACT be installed for all pollutants emitted in significant amounts from new major sources or modifications, as regulated under the Clean Air Act. The new major sources proposed for this project include two combustion turbine generators (CTGs) that are subject to the BACT/LAER

rules. This document presents the BACT/LAER analysis and results for the new major sources on this project.

General Description. This section describes the basis of this BACT/LAER analysis. The HPP will consist of two General Electric (GE) LM 6000 simple-cycle CTGs. Each combustion turbine unit will consist of one exclusively natural-gas-fired turbine and one generator, operating in a simple-cycle mode. The net output per CTG unit will be nominally 45.7 MW. In addition, the CTG units are well-suited for quick and frequent startups and shutdowns.

The proposed operating scenario for the combustion turbines is operation up to 8,000 hours per year for each unit. For the purpose of this BACT analysis, emissions were evaluated at an average ambient temperature of 63 °F and 60 percent relative humidity during natural gas operation at 8,000 hours per year at full load. Table 8.1-9 shows the emission rates for each combustion turbine firing natural gas at 100 percent of base load and the average annual site temperature of 63 °F.

To bring consistency to the BACT process, the U.S. EPA authorized the development of a guidance document (March 15, 1990) on the use of the "top-down" approach to BACT determinations. The first step in a top-down BACT analysis is to determine, for the pollutant in question, the most stringent control technology and emission limit available for a similar source or source category. Technologies required under LAER determinations must be considered. These technologies represent the top control alternative under the BACT analysis. If it can be shown that this level of control is infeasible on the basis of technical, economic, energy, and environmental impacts for the source in question, then the next most stringent level of control is identified and similarly evaluated. This process continues until the BACT level under consideration cannot be eliminated by any technical, economic, energy, or environmental consideration.

Any economic analysis used to determine the capital and annualized costs of the control technologies would be based on methodologies provided in the U.S. EPA's *Best Available Control Technology Draft Guidance* (October 1990), *"Top Down" Best Available*

Control Technology Guidance (March 1990), *The Office of Air Quality Planning and Standards (OAQPS) Control Cost Manual* (February 1996, Fifth Edition), internal project developer cost factors, and vendor budgetary cost quotes. Table 8.1-10 lists the economic criteria that would be used in an analysis of BACT alternatives for this project. In the BACT analysis that follows, an evaluation of control costs is not included, as the most stringent control technologies per pollutant have been selected for the HPP.

NO_x LAER Analysis. The objective of this analysis is to indicate LAER for NO_x emissions from the combustion turbines. Unless otherwise noted, the NO_x emission rates described in this section are corrected to 15 percent oxygen.

A review of the U.S. EPA and CARB BACT/LAER Clearinghouse documents indicates that the most stringent NO_x emission limit for a natural-gas-fired, simple-cycle CTG unit is 5 ppmvd. This limit has been set for one project in California, the Carson Energy Project in metropolitan Sacramento (42 MW). Both facilities use water injection and high-temperature SCR to control NO_x emissions. A second facility in Kern County, the SoCalGas, Wheeler Ridge Gas Compression station has a permit limit in excess of 5 ppmvd. The principal difference in the two applications is the exhaust temperature. The Carson Energy Facility is an aero-derivative CTG that operates with an exhaust temperature of 850 °F. The Wheeler Ridge facility is a frame CTG and operates at an exhaust temperature of approximately 1,000 °F. The Carson Energy facility consists of a 450 MMBtu/hr CTG GE LM6000 gas turbine generator set that is capable of producing 42 MW. According to the CARB Clearinghouse database, the unit can be fired on natural gas or co-fired with digester gas and natural gas. However, the Sacramento Metropolitan Air Quality Management District has indicated that the facility has never fired digester gas. The SoCalGas Wheeler Ridge facility has a Solar Model H 47.64 MMBtu/hr gas turbine that fires natural gas in order to drive two Solar Model two-stage centrifugal gas compressors.

Furthermore, CEC staff recently recommended the approval of a simple-cycle project listed in the South Coast Air Quality Management District database with NO_x levels of 5 ppmvd at 15 percent oxygen. The facility will be located in Chino, California and consist of four GE LM6000 Enhanced Sprint turbines rated at 45 MW each. The NO_x emissions are to be controlled by water injection and SCR. Since the proposed turbines operate in simple-cycle

mode, a tempering air system will be installed to ensure that the flue gas temperature does not exceed 885 °F, the upper operating range of the SCR catalyst.

Two other potential technologies for the control of NOx emissions are XONON™ and SCONOx™. The XONON™ combustion system improves the combustion process by lowering the peak combustion temperature to prevent the formation of NO_x while avoiding the increases in CO and unburned hydrocarbons associated with other NO_x control technologies (such as water injection and DLN). Most gas turbine emission control technologies remove air contaminants from exhaust gas prior to release to the atmosphere. In contrast, the XONON™ system partially combusts the fuel in the catalyst module, then completes the combustion downstream of the catalyst. In the catalyst module, a portion of the fuel is combusted without a flame (i.e., at relatively low temperature) to produce a hot gas. A homogeneous combustion region is located immediately downstream, where the remainder of the fuel is combusted.

XONON™ represents an available control technology for a 170-MW F-Class turbine, although the first demonstration unit on an F-Class turbine will be the Pastoria project in Kern County. A joint venture agreement is in place between Catalytica and GE to eventually develop XONON™ as original equipment and retrofit equipment for the entire GE turbine line. It is critical to note that GE does not currently offer a XONON™ combustion option for the GE LM6000 turbine line, which is proposed for the HPP. Therefore, XONON™ is not a currently available control technology for the HPP.

SCONOx™ is a new innovative post-combustion control system produced by Goal Line Environmental Technologies that began commercial operation at the Federal Paperboard Plant in Vernon, California in December 1996. The Federal Paperboard Plant is owned by Sunlaw Cogeneration Partners and consists of an LM2500 combustion turbine (approximately 28 MW) with a heat recovery steam generator. The SCONOx™ system uses a coated oxidation catalyst installed in the flue gas to remove both NO_x and CO without a reagent such as ammonia. CO is oxidized to CO_2 and exits the stack. The NO emissions are oxidized to NO_2 and then absorbed onto the catalyst. A dilute hydrogen gas is then passed through the catalyst periodically. This gas de-absorbs the NO_2 from the catalyst and reduces it to nitrogen prior to exit from the stack.

SCONOx™ operates in a temperature range between 300 °F and 700 °F. The HPP simple-cycle turbines, operating at exhaust temperatures of approximately 800 °F, will require a significant amount of tempering air to reduce the exhaust temperature to conform with the SCONOx™ temperature requirements. This introduces a significant technology risk for a system that to date has not been applied to a simple-cycle turbine. Therefore, SCONOx™ is not a currently available control technology for the HPP.

The current LAER limit for a simple-cycle CTG is 5 ppmvd at 15 percent oxygen by use of a dry, low NO_x (DLN) combustor and SCR. However, for the aero-derivative GE LM6000 CTGs proposed for the HPP, sufficient tempering of the exhaust gas with ambient air is proposed to cool the exhaust gas to a range of about 770 °F to 830 °F to enhance SCR performance. Therefore, for the HPP, a limit of 3.6 ppmvd at 15 percent oxygen is proposed, which is lower than current NO_x levels achieved in practice for simple-cycle CTGs.

CO BACT. The objective of this analysis is to determine BACT for CO emissions from the combustion turbines.

A review of the U.S. EPA and CARB BACT/LAER Clearinghouse documents and further contacts with the Sacramento Metropolitan Air Quality Management District indicate that the most stringent CO emissions limit for natural-gas-fired CTG unit is approximately 6 ppmvd at 15 percent oxygen for the Carson Energy Facility in California. The facility consists of a 450 MMBtu/hr GE LM6000 gas turbine generator set producing 42 MW. The unit can be fired on natural gas or co-fired with digester gas and natural gas. However, the facility currently fires only natural gas. An oxidation catalyst is used to control the emission levels of CO. It should be noted that the Carson Energy project represents LAER, which is located in nonattainment areas for CO and ozone (VOC control required). The HPP will achieve an emission rate of 6 ppmvd at 15 percent oxygen through use of an oxidation catalyst.

PM/PM_{10} LAER Analysis. The emission of particulate matter from the project will be controlled by ensuring that the combustion of fuel is as complete as possible and by minimizing SO_2 to SO_3 oxidation. The NSPS for combustion turbines does not establish a particulate emission limit. Natural gas contains only trace quantities of noncombustible material.

The manufacturer's standard operating procedures include filtering the turbine inlet air and combustion controls. The BACT/LAER Clearinghouse documents do not list any post-combustion particulate matter control technologies being used on combustion turbines. Consistent with the recent determinations referenced by the CARB Clearinghouse database, such as the La Paloma Generating Company, LLC, the use of low-sulfur fuel (natural gas with a total sulfur limit of 0.75 grains per standard cubic foot [gr/100 scf]) and combustion controls is considered LAER for particulate matter (PM), and this limit is proposed for the HPP. Particulate emissions (front catch only) will be limited to 1.8 lb/hr (0.0066 lb/MMBtu) and 3.3 lb/hr (0.0125 lb/MMBtu) for front- and back-half PM/PM_{10}, while firing natural gas at full load for each GE LM6000 CTG, based on data from operating GE units with DLN combustors.

VOC LAER Analysis. The objective of this analysis is to indicate LAER for VOC emissions from the combustion turbines. Unless otherwise noted, the VOC emission rates described in this section are corrected to 15 percent oxygen.

A review of the U.S. EPA BACT/LAER and CARB BACT Clearinghouses indicates that the most stringent VOC emissions limit for a gas-fired combustion turbine is achieved through the application of an oxidation catalyst. Most oxidation catalyst applications listed assumed destruction rates of 10 percent. Only two projects show an emission reduction rate of any significance: the Combined Energy Resources project in the SJVUAPCD and the Crockett Cogeneration (C&H Sugar) project in the Bay Area Air Quality Management District. The 44 and 50 percent removals reportedly achieved on these projects may be discounted, however, due to the high-uncontrolled emissions rate for the projects.

The facility proposed for this project is located in a nonattainment area for ozone that regulates VOCs as a nonattainment pollutant since VOCs are a precursor to ozone. The current LAER limit for a CTG is 2 ppmvd at 15 percent oxygen (CARB, 1999) and is proposed for the HPP. The VOC emissions are to be controlled by DLN on the CTG and an oxidation catalyst.

Summary. The following is a summary of BACT/LAER determinations and associated emission rates for two GE LM6000 CTGs operating in simple-cycle mode to be

installed at the HPP. Emissions are currently based on the GE LM6000 CTG unit firing only natural gas. In addition, the emissions for the CTGs are for full-load operation at 8,000 hours per year at an ambient average temperature of 63 °F.

- NO_x emissions:
  - LAER is a NO_x concentration of 5 ppmvd at 15 percent oxygen. The use of DLN and an SCR system with air dilution during natural gas firing to achieve an emission limit of 3.6 ppmvd at 15 percent oxygen complies with LAER.
- CO emissions:
  - BACT is the use of good combustion controls and CO catalyst to achieve a CO emission limit of 6 ppmvd at 15 percent oxygen.
- PM/PM_{10} emissions:
  - LAER is the use of good combustion controls with natural-gas firing and combustion air filters. With these controls, the HPP will limit emissions to achieve a PM/PM_{10} (front catch) limit of 1.8 lb/hr and 3.3 lb/hr for front- and back-half PM/PM_{10}.
- VOC emissions:
  - LAER is the use of good combustion controls to achieve a VOC emission limit of 2 ppmvd at 15 percent oxygen.

8.1.3.2 BACT Assessment for Emergency Diesel Generator

The generator will only be operated periodically for required testing, except in an emergency situation. Add-on controls have not been used in practice on this type of source, due to the limited operation of the generator. Operation with low-sulfur fuel oil and restricted hours of operation meet BACT for all regulated pollutants.

NO_x Emission Control. The objective of the analysis is to determine BACT for NO_x emissions from the emergency diesel generator.

BACT/LAER Clearinghouse Reviews. A review of the U.S. EPA BACT/LAER and CARB BACT Clearinghouses indicates that the most stringent NO_x emission limit for a

diesel-fired emergency internal combustion engine (2,340 horsepower [hp], Detroit Diesel Model No. 16V-149TIB) is 2.04 lb/h (1.5 g/bhp-h) for the L.A. Times located in the South Coast Air Quality Management District in California. The unit controls NO_x emissions using the combination of a turbocharger, aftercooler, and SCR using a NERGAS catalyst. It should be noted that the unit is located in a nonattainment area for ozone. Since NO_x is a precursor to ozone, the listed control level is the LAER.

In the SJVUAPCD, NO_x is controlled for a diesel-fired internal combustion engine (208 hp) to 3.04 lb/h (6.63 g/bhp-h) using a turbocharger and an aftercooler for Kearny Ventures, Ltd., located in Lathrop, California.

Alternative NO_x Emissions Reduction Systems. This section discusses two methods of controlling NO_x emissions that include SCR and fuel injection timing retardation.

- **Selective catalytic reduction.** SCR is a post-combustion method of controlling NO_x emissions. This option provides the LAER for the diesel engine. However, SCR is not considered to be a cost-effective NO_x emission control device for the HPP diesel engine due to the emergency status of this generator, which would not be in operation for a significant percentage of the year. Therefore, SCR will not be considered further in this analysis.

- **Fuel injection timing retardation.** Fuel injection timing retardation delays the start of fuel injection in order to reduce the engine's maximum combustion pressure, thereby lowering the combustion temperature. Typically, fuel injection timing on this size unit and service is retarded by 3 to 4 degrees. The maximum amount of retardation possible is controlled by such factors as piston, cylinder, manifold shape and materials, expected unit life, and the impact of modifying the combustion process on other pollutant emissions. Retarding the fuel injection timing can reduce NO_x emissions by 20 to 30 percent, depending upon unit service, size, and design. However, the diesel engine combustion efficiency decreases with an increase in timing retardation, and the emissions of other pollutants, such as CO, VOCs, and particulate matter, subsequently increase.

Conclusions. SCR is not considered to be a cost-effective NO_x reduction alternative for the emergency diesel generator because it will operate 13 hours hours per year for routine testing, and otherwise only under emergency conditions. Therefore, the recommended BACT for the emergency diesel generator is fuel injection timing retardation.

CO and VOC Emission Control. The objective of this analysis is to determine BACT for CO and VOC emissions from the emergency diesel generator.

BACT/LAER Clearinghouse Reviews. A review of the BACT/LAER and CARB BACT Clearinghouses indicates that the most stringent CO emission level for a diesel- fired internal combustion engine is 0.56 lb/hr for OXY NGL, INC located in Johnson Bayou, Louisiana and Archie Crippen, located in Fresno, California. The OXY NGL, INC unit is a 1.4 MMBtu/h emergency diesel generator, and the Archie Crippen unit is a 500-hp diesel fuel internal combustion engine. There are no CO controls on either of these units.

A review of the BACT/LAER and CARB BACT Clearinghouses indicates that the most stringent VOC emission level for a diesel-fired internal combustion engine in this size range is 0.15 lb/h (0.33 g/bhp-h). This unit is a 208-hp internal combustion engine located at Kearny Ventures, Ltd., located in Lathrop, California, in the SJVUAPCD, and it does not have additional add-on controls.

Alternative CO and VOC Emissions Control Systems. CO and VOCs are formed as a result of incomplete oxidation of carbon contained in the fuel. Combustion controls such as high combustion temperatures, adequate excess air, and good fuel/air mixing during combustion will minimize CO and VOC formation. However, lowering combustion temperatures to reduce NO_x formation can be counterproductive with regard to CO and VOC emissions. Because of this inverse relationship, NO_x emissions control technologies must always be considered when determining CO emission controls.

Post-combustion control technologies, such as an oxidation catalyst, may reduce CO and VOC emissions. An oxidation catalyst can be located at the diesel engine exhaust. The reactions and catalyst used are identical to the catalyst oxidation technology previously described for the CTG/HRSG units. However, catalytic oxidation is not considered to be a cost-effective CO and VOC emissions control device for the HPP emergency diesel generator due to the limited operation of the diesel generator. Therefore, catalytic oxidation will not be considered further in this analysis.

Due to the emergency status of the generator and limited hours of operation, BACT for the emergency diesel generator proposed for the HPP is to use good combustion controls.

PM/PM_{10} Emission Control. The objective of this analysis is to determine BACT for PM/PM_{10} emissions from the emergency diesel generator. A review of the U.S. EPA BACT/LAER and CARB Clearinghouses indicates that the most stringent PM emission level for a diesel-fired internal combustion engine (1.5 MMBtu/hr) is 0.23 lb/hr for Saranac Energy Company with combustion control. Since the diesel generator will only be fired under emergency conditions and for 13 hours per year for routine testing, it is anticipated that emission of particulate matter will be minimal. Emissions will be controlled by filtering the source inlet combustion air and ensuring that combustion of the fuel is as complete as possible, which can be accomplished by following the manufacturer's standard operating procedures. Accordingly, BACT for the HPP emergency diesel generator for PM/PM_{10} is assumed to be inlet air filtering and good combustion control.

SO_2 Emission Control. The objective of this analysis is to determine BACT for SO_2 emissions from the emergency diesel generator. The emergency diesel generator proposed for the HPP is required to burn low-sulfur diesel fuel that is not to exceed 0.05 percent sulfur by weight. Furthermore, the diesel generator will only be in operation under emergency conditions and for 13 hours per year for routine testing. Therefore, the recommended BACT for the emergency diesel generator for controlling SO_2 is the use of low-sulfur fuel oil with a maximum content of 0.05 percent by weight.

8.1.3.5 Fugitive Dust Control

Other controls that will be implemented at the HPP site include "best achievable control measures" (BACM) during construction. Fugitive dust control measures stipulated by SJVUAPCD Rules 8010 and 8020 include the following:

- Apply water or chemical stabilizers or other liquids or cover, pave, or compact the site to control dust. Such control(s) will attain a control efficiency of not less than 50 percent (based on data available from efficiencies attained under

similar conditions). No BACM used will violate State Water Quality Control Board standards.

- HPP construction activities will not cause visible dust of such opacity as to obscure an observer's view to a degree equal to or greater than 40 percent opacity for a period or periods aggregating more than three minutes in any one hour during construction.

The HPP proposes to use fugitive dust suppression with water to mitigate construction-related emissions. The use of chemical additives is not planned. In accordance with SJVUAPCD Rules, the HPP will submit a Fugitive Dust Control Plan that will reduce projected emissions by 50 percent or more.

8.1.4 Environmental Consequences

This section describes the analyses conducted to assess the potential air quality impacts from the HPP. Emissions estimates are presented for construction and operation of the HPP. Dispersion model selection and setup are also described (i.e., emissions scenarios and release parameters, building wake effects, meteorological data, and receptor locations). Results are presented for the dispersion modeling and the visibility modeling.

8.1.4.1 Construction Emissions

The primary emission sources during construction will be heavy equipment and fugitive dust from disturbed areas as a result of site and transmission line construction. An emission factor of 0.11 ton/month/acre of PM_{10} was used to estimate fugitive dust emissions (MRI, 1996). The emission calculations assume that half of the plant site (3.5 acres) is disturbed during the construction period.

The calculations indicate emissions of 0.14 tons of fugitive PM_{10} per month, assuming a 50 percent control efficiency from frequent water applications on active construction surfaces during hours of construction (or other equivalent dust suppression measures) (see Section 8.1.3.5 for details on fugitive dust control measures). Annual average fugitive dust emissions are estimated to be 0.06 tons/month, the average disturbed land acreage listed above

over an annualized period, assuming the same fugitive dust emission factor and control efficiency.

Another source of emissions during construction will be equipment exhaust. Equipment-specific emission factors were used to estimate emissions for all criteria pollutants (SCAQMD, 1993). Table 8.1-11 presents a list of equipment expected to be used during construction, including the estimated numbers of each equipment type that are anticipated to operate during each month of construction. Emissions from equipment will occur over the five-month construction period.

The worst-case hourly, monthly, and annual emissions are presented in Table 8.1-12. Equipment activity is grouped based on the three areas of construction: the HPP site, the transmission line, and the gas line. Construction emission calculations are provided in Appendix B.

8.1.4.2 Operational Emissions

Estimated annual worst-case emissions for the HPP are presented in Table 8.1-13. These estimates include emissions from the turbine and emergency generator. This section discusses the basis for the annual short-term emission estimates for each source. Emissions and calculations for all scenarios are contained in Appendix B.

Turbine. Two gas turbine operational modes were evaluated to assess worst-case emissions from the gas turbine: base-load and startup/shutdown modes. Hourly emission rates were calculated from equipment vendor estimates for two load conditions (60 and 100 percent) and at a range of three ambient temperatures (15 ºF, 63 ºF, and 115 ºF at 92 percent, 60 percent, and 21 percent relative humidity, respectively). These are presented in Table 8.1-14. Emission rates include the effect of ammonia injection, oxidation catalysts, and SCR emission controls.

Expected event emission rates for NO_x, CO, SO_2, PM_{10}, and VOC during startup and shutdown events are summarized in Table 8.1-15. These emission rates were included in the evaluation of HPP short- and long-term emissions estimates because startup and shutdown events

are expected to generate higher emissions than base-load operating conditions. These worst-case emission estimates are included in Appendix B.

To assess worst-case annual emissions, it is estimated that the turbine would experience 300 startups and 300 shutdowns (total time: 100 hours).

The turbine is assumed to operate at 100 percent load and an annual average temperature of 63 ºF for 8,000 hours per year. The remainder of time is turbine downtime.

Emergency Diesel Generator. The HPP includes a 250-kilowatt emergency diesel generator that will operate for 15 minutes per week for reliability confirmation (13 hours of operation per year). Emissions were estimated based on hourly emission rates provided by the manufacturer for NO_x, CO, PM_{10}, and VOC. SO_2 emissions were estimated using an emission factor for stationary diesel engines from U.S. EPA AP-42 Section 3.3. Annual emissions from the emergency generator included in Table 8.1-13 are based on 13 hours of operation per year. Emissions and calculations for the emergency diesel generator are included in Appendix B.

8.1.4.3 Air Dispersion Modeling

The purpose of the air dispersion modeling analysis is to demonstrate that air emissions from the HPP will not cause or contribute to exceedances of any state or federal air quality standards and will not negatively impact visibility in Class I areas. The modeling addresses emissions from construction activities and routine plant operations. The impacts from construction activities include the generation of fugitive dust and emissions associated with combustion by-products from diesel- and gasoline-fueled equipment. The impacts from routine plant operations include the generation of combustion by-products from the turbines and the emergency generator. Separate modeling analyses were performed for the construction phase and the plant operation sources because they will occur during different time periods. The modeling approach for assessing the HPP impacts is discussed below.

Model and Model Options. The modeling was conducted using the U.S. EPA's Industrial Source Complex (ISC) model (Version 00101) for both construction and turbine emissions (U.S. EPA, 1995a). The short-term model version, ISCST3, was used for modeling

concentrations of pollutants that have short-term (i.e., 1-, 3-, 8-, and 24-hour) ambient standards. The ISCST3 model is the most appropriate model because it is a U.S. EPA guideline model for plume dispersion in flat, simple terrain. For pollutants that have both short-term and annual standards (i.e., NO_2, SO_2, and PM_{10}), modeling was conducted using ISCST3 with the PERIOD option to predict impacts with respect to the annual standard. The ISCST3 model was run with the following additional options:

- Final plume rise at all receptors
- Stack-tip downwash
- Buoyancy-induced dispersion
- Calms processing
- Default wind profile exponents
- Default vertical potential temperature gradients
- Rural dispersion coefficients

Building Wake Effects. The effect of building wakes (i.e., downwash) on the stack plumes was evaluated for the routine plant operating emissions (downwash is not applicable to construction activities) in accordance with U.S. EPA's guidance (U.S. EPA, 1985). Direction-specific building data were generated for stacks below good engineering practice stack height using U.S. EPA's Building Profile Input Program (BPIP) Version 98086 (U.S. EPA, 1995b). Five buildings and large pieces of equipment from the proposed HPP layout were included in the analysis (Figure 8.1-5). The results of the BPIP analysis were included in the ISCST3 input files to assess downwash effects. The ISCST3 model considers direction-specific downwash using both the Huber-Snyder and Schulman-Scire algorithms as evaluated in the BPIP. Input and output files for the BPIP analysis are included in Appendix B.

Meteorological Data. NAS Lemoore meteorological data from 1968 were obtained from the SJVUAPCD for use in the modeling analysis. The surface data were from the NAS Lemoore station. Upper air data used to calculate stability and mixing heights were obtained from Oakland Airport (SJVUAPCD, 2001).

Receptor Locations. Receptors were placed at offsite locations to evaluate the impacts of the HPP (Figures 8.1-6 and 8.1-7). Receptor spacing was determined according to a receptor's distance from the property boundary. To ensure that the location of highest impact was identified, receptor spacing was closest at the proposed GWF property boundary and increased with distance. Receptors were placed out to 10 kilometers (km) from the property boundary. The following receptor spacing was used in the modeling analysis:

- 25-meter spacing extending from the property boundary out to 100 meters
- 100-meter spacing within 1 km of the property boundary
- 500-meter spacing within 1 to 5 km of the property boundary
- 1,000-meter spacing within 5 to 10 km of the property boundary

The receptor locations were designated using Universal Transverse Mercator (UTM) coordinates. Receptor elevations were obtained from U. S. Geological Survey 7.5-minute electronic data.

Emission Scenarios. The modeling for the HPP required the determination of worst-case emissions scenarios for the following averaging periods and pollutants to demonstrate compliance with ambient air quality standards:

- 1-hour for CO, NO_2, and SO_2
- 3-hour for SO_2
- 8-hour for CO
- 24-hour for PM_{10} and SO_2
- Annual for PM_{10}, NO_2, and SO_2

Construction Impact Modeling. For construction activities, it was assumed that the combustion equipment emissions occur in the area of the construction zone within the HPP property boundary. The worst-case emission scenarios were used to model the construction equipment impacts (see Table 8.1-12).

The construction of the transmission and natural gas lines were not modeled because the emissions from the construction of the 550-foot transmission line is considered negligible, and the emissions associated with the construction of the 2.2-mile natural gas line are less than those associated with the onsite construction and occur over a wider area.

Due to the large amount of construction equipment needed for the HPP, it was necessary to define a representative source or sources. It was assumed that the emissions are uniformly emitted from six point sources within the construction zone. PM_{10} emissions from fugitive dust generated at the project site and laydown areas were modeled as a volume area source. The emission scenarios and release parameters for the construction activities are presented in Table 8.1-16.

Turbine Impact Screening Modeling. Screening modeling was performed to determine which turbine operating modes (i.e., load level, ambient temperature) produced "worst-case" impacts for each pollutant and averaging time. The ISCST3 model (Version 00101) was used for screening modeling. For the screening analysis, the model was configured with 1968 meteorological data from NAS Lemoore using the building wake information and the receptor grid previously described.

The model simulated natural gas combustion emissions from two 10-foot-diameter (3.05-m), 85-foot tall (25.91-m) stacks. The two sources were modeled as point sources at the proposed locations. The stack parameters for each operating mode are shown in Table 8.1-17.

For analysis of worst-case, short-term impacts (1-, 3-, 8- and 24-hour averages), the turbine emissions were modeled including the effects of turbine startups and shutdowns. Turbine startup and shutdown emissions provided in Table 8.1-15 present hourly emissions based on one startup and one shutdown averaged into the same hour, with the remainder of the hour assumed at 100 percent of base load. These emission rates therefore represent an hourly average emission rate, not the emission rate during a startup or a shutdown period, which is assumed to be 10 minutes each. Emergency generator emissions were included in each of the four short-term averaging periods as well.

Annual average impacts assume stack parameters for turbine operation at 100 percent load and 63 °F ambient temperature. These conditions represent routine, sustained operation. Annual emission estimates applied to these dispersion impacts include emissions for 300 startups and 300 shutdowns, as discussed in Section 8.1.4.2.

Refined Modeling. Refined modeling was performed to identify offsite criteria pollutant impacts from operational emissions of the proposed project. The modeling was performed as previously described. However, in addition to the turbine, the emergency generator was also included in the refined modeling analysis.

The emergency generator was included with the turbines for the 1-, 3-, 8-, and 24-hour and annual averaging period. The emergency generator is assumed to operate 13 hours per year, and only when the turbines are running at full load.

Fumigation Analysis. Fumigation occurs when a plume that was originally emitted into a stable layer of air is mixed rapidly to ground level when unstable air below the plume reaches plume level. Fumigation can cause very high ground-level concentrations. Fumigation can occur during the breakup of the nocturnal radiation inversion by solar warming of the ground surface (inversion breakup fumigation). Such conditions are short-lived and are typically compared only with 1-hour standards. A fumigation analysis was performed using the U.S. EPA SCREEN3 model (Version 96043).

8.1.4.4 Compliance with Ambient Air Quality Standards

This section provides a comparison of air quality impacts associated with the HPP emissions to the applicable short-term and long-term air quality standards. The impacts from construction activities and routine plant operations are evaluated separately because they will occur during different time periods and represent different sources. ISCST3 model results for each averaging time were added to the maximum background concentrations obtained from the most recent three years of air quality data (i.e., 1998–2000). These background air quality data are presented in Section 8.1.2.2.

The maximum air quality impacts are compared with the most stringent state or federal standards. Tables 8.1-18 and 8.1-19 summarize modeling results for construction and operation, respectively.

Construction Activities. Construction emissions are of a temporary nature and will not coincide with emissions from plant operations. The maximum air quality impacts from construction activities were predicted to occur along the southeastern boundary except for CO 8-hour and SO_2 24-hour, where the maximum concentrations occur along the northwestern boundaries. Impacts of NO_2, $PM_{10,}$ and SO_2 (24-hour averaging period) due to construction emissions exceed air quality standards, however due to the temporary nature of the emissions and the limited extent of the impacts they are not expected to lead to adverse air quality impacts. Background concentrations of PM_{10} already exceed the SAAQS in the area, and the predicted 24-hour and annual PM_{10} impacts would add to existing air quality levels. However, construction mitigation measures, described in Section 8.1.3, will be used to minimize impacts from temporary construction emissions. With these mitigation measures, the HPP will not significantly contribute to the existing PM_{10} violation. Construction modeling outputs are included in Appendix B.

The calculation of NO_x impacts from construction emissions employed additional calculations to arrive at realistic estimates. The U.S. EPA's Ambient Ratio Method (ARM) was used to estimate annual NO_2 concentration impacts. A U.S. EPA default factor of 0.75 was incorporated into the annual NO_2 concentration estimate, which is included in the results noted in Table 8.1-18. Based on CEC guidance, the ARM is not appropriate for use with the 1-hour NO_2 impacts.

Estimation of the 1-hour NO_2 impact was based on the assumption that the actual NO_2 emission rates are 10 percent of total NO_x emissions. The NO_2/NO_x ratio of 10 percent is a conservative assumption for the actual ratio of NO_2 to total NO_x emissions for internal combustion engines (Flagan and Seinfeld, 1988). In addition, it was assumed that the remaining 90 percent of NO_x is emitted as NO and would not have sufficient time to be completely converted to NO_2 near the facility boundaries where the maximum impacts occur. A first-order

reaction rate model was used to calculate the partial conversion of NO to NO_2 at near-field receptors. Details are presented in Appendix B.

Routine Plant Operations. Maximum modeled impacts due to plant operation emissions would not cause a violation of any federal or state standards and would not significantly contribute to the existing violations of the PM_{10} standards. Fumigation impacts are all below applicable short-term air quality standards. The fumigation impacts are summarized in Table 8.1-20.

Impacts for Nonattainment Pollutants and their Precursors. HPP impacts for the nonattainment pollutants (PM_{10} and ozone) and their precursors (NO_x, VOC, and SO_2) will be mitigated by emission offsets. The offsets have not been accounted for in the modeled impacts noted above. Thus, the HPP's modeled impacts overestimate actual project impacts, because they do not account for the effect of removing PM_{10}, NO_x, VOC, and SO_2 from the San Joaquin Valley airshed.

8.1.5 Commissioning Activities

Startup and commissioning for the HPP CTGs is estimated to occur over an approximate two-week duration from first fire to full load commercial operation. As a worst-case scenario, it is assumed that the HPP will perform startup and commissioning on both of the units in parallel. In reality, however, each CTG will need to be commissioned on a slightly staggered schedule to best utilize onsite personnel and resources.

The CTGs will be commissioned and tested based on the following activities associated with operation of the gas turbine. The scheduled duration listed below is for each gas turbine generator unit.

The owner will minimize emissions of CO, NO_x, and other pollutants by limiting the test time of each commissioning activity to the shortest duration feasible. The NO_x and CO catalyst will be installed at the earliest possible time in the testing cycle, consistent with manufacturer's recommendations

Commissioning Activity	Calendar Duration[1]	Unit Load
First Fire	1 day	60%
Full Speed No Load Operation	2 days	60%
Synchronization and Load Test	1 day	60%–100%
Synchronization and Loaded Incrementally	1 day	60%–100%
Operation with SCR and Catalyst	1 day	60%–100%
Performance Test	0.5 day	100%

[1]Each calendar day is 8 hours

.

Prior to initial startup of each CTG, a continuous emissions monitoring (CEM) system will be installed, tested, and calibrated to measure criteria pollutants during startup and commissioning. The CEM will provide monitoring and recording on three-minute averages of fuel flow rates, firing hours, NO_x, CO, and oxygen concentrations. The owner/operator will use District-approved methods to calculate heat-input rates, mass emissions, and concentrations of criteria pollutant emissions. The CEM type, specifications, and stack location will be in accordance with the District requirements.

The operation of the CTG without abatement will be limited to those commissioning activities whereby the SCR and CO catalyst must not be installed.

Prior to the end of the commissioning period, the owner/operator will conduct a District-approved source test using external CEMs to determine compliance with the CEC Conditions of Certification. The source test will determine NO_x, CO, and VOC emissions during startup and shutdown of the gas turbines. The VOC emissions will be analyzed for methane and ethane to account for the presence of unburned natural gas. Thirty calendar days before the execution of the source tests, the owner/operator will submit to the District and the CEC Compliance Program Manager (CPM) a detailed source test plan designed to satisfy the requirements of this condition. The District and the CEC CPM will notify the owner/operator of any necessary modifications to the plan within 30 working days of receipt of the plan; otherwise, the plan will be deemed approved. The owner/operator will notify the District and the CEC

CPM within the seven working days prior to the planned source testing date. Source test results will be submitted to the District and the CEC CPM within 30 days of the source testing date.

The emissions and results of the commissioning modeling analysis are presented in Table 8.1-21. The analysis is based on both CTGs being commissioned at the same time, with short-term emission estimates that reflect higher commissioning emissions. These estimates are not precise, since actual commissioning data from GE LM6000 CTGs are not available. The analysis was performed only for short-term averaging times. In addition, because emissions of PM_{10} and SO_2 are not expected to be greater during commissioning than during normal operations, no commissioning modeling was performed. Please refer to Table 8.1-19 for short-term impacts from the turbines.

8.1.6 Cumulative Impacts

CEC requirements specify that an analysis may be required to determine the cumulative impacts of the HPP and other power projects within a six-mile radius that have received construction permits but are not yet operational or that are in the permitting process. No other proposed power projects within six miles of the HPP have been identified.

8.1.7 Emission Offsets

8.1.7.1 Emission Offset Requirements

SJVUAPCD rules require that emissions be offset by emission reductions. These offset requirements are implemented under SJVUAPCD Rule 2201. Table 8.1-22 summarizes the offset requirements specified by Rule 2201 that are applicable to the HPP. As shown in Table 8.1-22, the HPP will trigger Rule 2201 offset requirements for NO_x and PM_{10} emissions. GWF also intends to provide offsets for HPP VOC and SO_2 emissions to ensure that there are no significant adverse impacts to air quality and as an additional air quality benefit of the project.

Rule 2201 also requires that emission reduction credits (ERCs) for offsite areas and within 15 miles must be provided at a ratio of 1.2 to 1. For areas outside of the 15 miles, ERCs must be provided at a ratio of 1.5 to 1.

In addition, the HPP is subject to the Clean Air Act Title IV provisions that will require the HPP to hold annual SO_2 allowances for each ton of SO_2 emitted after 2000. HPP will comply with applicable Title IV requirements prior to commencement of operation.

8.1.7.2 Emission Offset Supply

The SJVUAPCD maintains a formal ERC banking system pursuant to Rules 2301 and 2302. For an ERC to be deposited in the bank, the depositor must demonstrate that the ERCs meet applicable federal Emission Trading Policy criteria (i.e., ERCs are real, federally enforceable, quantifiable, verifiable, and surplus). All ERCs currently in the bank that were deposited after the date of adoption of Rules 2201, 2301, and 2302 can therefore be assumed to comply with applicable federal emissions trading criteria. It is the intention of the HPP to use only ERCs that satisfy these federal emissions trading criteria.

GWF has acquired ERC certificates from SJVUAPCD ERC holders that meet the stated ERC criteria. A comparison of the HPP offset requirements and the ERCs acquired by GWF are shown in Table 8.1-23. Table 8.1-23 includes the application of the 1.5 to 1 ratio to each ERC certificate in order to calculate the emission offsets. Appendix B contains detailed information on these emissions offset calculations. Because of the low quantity of PM_{10} ERCs available, it is proposed that the HPP partially offset PM_{10} emissions using SO_2 ERCs at an interpollutant offset ratio of 1.9 to 1. Justification for this ratio is provided in Appendix B. Table 8.1-23 shows that the indicated ERC certificates will cover the HPP's emission offset requirements.

8.1.8 Laws, Ordinances, Regulations, and Standards

Applicable LORS are summarized in Section 8.1.1. This section presents the applicable air quality permits or approvals required for the HPP (Table 8.1-24) and describes how the HPP will comply with applicable air quality LORS (Table 8.1-25). In order to demonstrate compliance with several LORS, the GWF will install and operate a CEM system. The CEM system is described in detail in Section 2.2.11 of this AFC.

In summary, the HPP will comply with all applicable LORS, conform to BACT requirements, and will not interfere with attainment or maintenance of NAAQS or SAAQS. In addition, the HPP emissions (NO_x, VOCs, PM_{10}, and SO_2) will be fully offset.

8.1.9 Proposed Conditions of Certification

Proposed conditions of certification are contained in Appendix K. These conditions are proposed to ensure compliance with applicable LORS and/or to reduce potentially significant impacts to less-than-significant levels.

8.1.10 Agency Contacts

The air quality agencies with authority over construction and operation of the HPP are shown below:

Agency	Contact/Title	Telephone
San Joaquin Valley Unified Air Pollution Control District	David Warner Permit Services Manager 1990 E. Gettysburg Avenue Fresno, CA 93726	(559) 230-6000
U.S. EPA, Region IX	Matthew Haber Chief, New Source Section U.S. EPA Region IX 75 Hawthorne Street San Francisco, CA 94105	(415) 744-1254

8.1.11 References

CARB, 2001. California Air Quality Data Statistics, 1989-1998 Data, http://www.arb.ca.gov, Air Quality Data Branch, California Air Resources Board, Sacramento, California. December.

CARB, 1999. *Guidance for Power Plant Siting and Best Available Control Technology.* California Energy Commission. June.

Flagan, R.C. and Seinfeld, J.H., 1988. *Fundamentals of Air Pollution Engineering.* Prentice-Hall, Inc.

MRI, 1996. *Improvement of Specific Emission Factors (BACM Project No. 1),* Final Report. Prepared by Midwest Research Institute for South Coast AQMD. March 29.

National Climatic Data Center (NCDC), 2001. Internet site of climate data (Fresno, CA) (http://www.ncdc.noaa.gov/ol/climate/online/ccd/avgrh.html)

National Oceanic and Atmospheric Administration (NOAA), 1992. Monthly Station Normals of Temperature, Precipitation, and Heating and Cooling Degree Days 1961-1990.

South Coast Air Quality Management District (SCAQMD), 1993. *CEQA Air Quality Handbook.* April 1993.

SJVUAPCD, 2001. Telephone conversation between Vicki Hoffman, URS Corporation and Leland Vallevelzo of the SJVUAPCD. August.

U.S. EPA, 1985. *Guideline for Determination of Good Engineering Stack Height* (Technical Support Document for the Stack Height Regulation) (Revised), EPA-450/4-80-023R. Office of Air Quality Planning and Standards, U.S. Environmental Protection Agency, Research Triangle Park, North Carolina 27711. June.

U.S. EPA, 1995a. *User's Guide for the Industrial Source Complex (ISC3) Dispersion Models*, EPA-454/B-95-003a, Office of Air Quality Planning and Standards, U.S. Environmental Protection Agency, Research Triangle Park, North Carolina 27711. September.

U.S. EPA, 1995b. *User's Guide to the Building Profile Input Program* (Revised), EPA-454/R-93-038, Office of Air Quality Planning and Standards, U.S. Environmental Protection Agency, Research Triangle Park, North Carolina 27711. February.

TABLES

Table 8.1-1
Relevant Federal and California Ambient Air Quality Standards

Pollutant	Averaging Time	California AAQS[a,c]	Federal AAQS[b,c] Primary	Federal AAQS[b,c] Secondary
Ozone (O_3)	1-hour	0.09 ppm (180 μg/m^3)	0.12 ppm (235 μg/m^3)	Same as primary standard
	8-hour[d]		0.08 ppm (157 μg/m^3)	
Carbon Monoxide (CO)	8-hour	9 ppm (10 mg/m^3)	9 ppm (10 mg/m^3)	
	1-hour	20 ppm (23 mg/m^3)	35 ppm (40 mg/m^3)	
Nitrogen Dioxide (NO_2)[e]	Annual (Arithmetic Mean)		0.053 ppm (100 μg/m^3)	Same as primary standard
	1-hour	0.25 ppm (470 μg/m^3)		
Sulfur Dioxide (SO_2)	Annual (Arithmetic Mean)		0.03 ppm (80 μg/m^3)	
	24-hour	0.04 ppm[f] (105 μg/m^3)	0.14 ppm (365 μg/m^3)	
	3-hour			0.05 ppm (1300 μg/m^3)
	1-hour	0.25 ppm (655 μg/m^3)		
Respirable Particulate Matter (PM_{10})	Annual (Geometric Mean)	30 μg/m^3		Same as primary standard
	24-hour	50 μg/m^3	150 μg/m^3	
	Annual (Arithmetic Mean)		50 μg/m^3	
Fine Particulate Matter ($PM_{2.5}$)[d]	24-hour	No separate state standard	65 μg/m^3	Same as primary standard
	Annual (Arithmetic Mean)		15 μg/m^3	
Visibility Reducing Particles	1 observation	See footnote g.	No federal standard	No federal standard

Table 8.1-1 (continued)
Relevant Federal and California Ambient Air Quality Standards

[a] Title 17, California Code of Regulations, California AAQS for ozone (as volatile organic compounds), carbon monoxide, sulfur dioxide (1-hour), nitrogen dioxide, and particulate matter (PM_{10}), are values that are not to be exceeded. The visibility standard is not to be equaled or exceeded.

[b] 40 CFR 50. National AAQS, other than those for ozone and based on annual averages, are not to be exceeded more than once a year. The ozone standard is attained when the expected number of days per calendar year with maximum hourly average concentrations above the standard is equal to or less than one.

[c] Concentrations are expressed first in units in which they were promulgated. Equivalent units are given in parentheses and based on a reference temperature of 25 degrees Celsius and a reference pressure of 760 millimeters of mercury. All measurements of air quality area to be corrected to a reference temperature of 25 degrees Celsius and a reference pressure of 760 millimeters of mercury (1,013.2 millibar); ppm in this table refers to ppm by volume, or micromoles of pollutant per mole of gas.

[d] New federal 8-hour ozone and fine particulate matter ($PM_{2.5}$) standards were promulgated by U.S. EPA on July 18, 1997. The federal 1-hour ozone standard continues to apply in areas that violated the standard.

[e] Nitrogen dioxide (NO_2) is the compound regulated as a criteria pollutant; however, emissions are usually based on the sum of all oxides of nitrogen (NO_x).

[f] At locations where the state standards for ozone and/or PM_{10} are violated. National standards apply elsewhere.

[g] In sufficient amount to reduce the prevailing visibility to less than 10 miles when the relative humidity is less that 70%. "Prevailing visibility" is defined as the greatest visibility, which is attained or surpassed around at least half of the horizon circle, but not necessarily in continuous sectors.

AAQS =Ambient Air Quality Standard
mg/m3 =milligrams per cubic meter
µg/m3 =micrograms per cubic meter

Table 8.1-2
Federal and State Attainment Status for Kings County[a]

Pollutant	Federal Attainment Status	State Attainment Status
Ozone	Serious Nonattainment	Severe Nonattainment
CO	Unclassified/Attainment	Attainment
NO_2	Unclassified/Attainment	Attainment
SO_2	Unclassified	Attainment
PM_{10}	Serious Nonattainment	Nonattainment
Lead	No Designation	Attainment

[a] Attainment status obtained from 40 CFR 81 and SJVUAPCD website (www.valleyair.org).

Table 8.1-3
Temperature and Precipitation Data for Hanford, California

Month	Average Temperatures (°F)[a]			Relative Humidity (%)[b]		Average Precipitation (inches)
	Low	High	Daily	AM	PM	
January	34.3	53.5	43.9	91	68	1.44
February	38.0	61.3	49.7	89	56	1.46
March	41.8	66.7	54.3	86	47	1.34
April	45.7	74.4	60.0	80	35	0.74
May	51.9	83.4	67.7	71	27	0.20
June	58.1	90.8	74.4	65	24	0.06
July	61.7	95.9	78.8	61	22	0.01
August	60.3	94.3	77.3	66	25	0.02
September	55.3	88.8	72.1	71	28	0.24
October	47.3	79.9	63.6	77	35	0.35
November	39.0	65.0	52.0	87	54	1.05
December	33.9	53.6	43.7	91	68	1.04
Annual Average	**47.3**	**75.6**	**61.5**	**78**	**41**	**7.95 (total)**

[a] Source: NOAA, 1992. Average temperature and precipitation data represent 1961–1990.
[b] Source: NCDC, 2001.

Table 8.1-4
Ambient Ozone Levels near Henrietta, 1994–2000 (ppm)

	1994	1995	1996	1997	1998	1999	2000
Hanford-S Irwin Street, Kings County							
Maximum 1-Hour Average	0.119	0.096	0.144	0.126	**0.143**	0.14	0.124
Number of Days Exceeding California 1-Hour Standard (0.09 ppm)	9	2	78	23	27	28	**48**
Number of Days Exceeding Federal 1-Hour Standard (0.12 ppm)	0	0	8	2	**3**	2	0
Maximum 8-Hour Average	0.102	0.085	0.121	0.106	**0.113**	0.111	0.110
Number of Days Exceeding Federal 8-Hour Standard (0.08 ppm) [a]	12	1	81	26	31	25	**51**
Visalia-N Church Street, Tulare County							
Maximum 1-Hour Average	0.154	0.132	0.14	0.125	**0.148**	0.126	0.129
Number of Days Exceeding California 1-Hour Standard (0.09 ppm)	52	48	53	24	**54**	52	46
Number of Days Exceeding Federal 1-Hour Standard (0.12 ppm)	10	2	4	1	**6**	1	1
Maximum 8-Hour Average	0.119	0.112	0.111	0.104	**0.122**	0.106	0.099
Number of Days Exceeding Federal 8-Hour Standard (0.08 ppm) [a]	51	40	44	17	**45**	33	29
Parlier, Fresno County							
Maximum 1-Hour Average	0.13	0.143	0.151	0.137	0.164	0.155	**0.165**
Number of Days Exceeding California 1-Hour Standard (0.09 ppm)	26	42	82	68	64	**81**	**81**
Number of Days Exceeding Federal 1-Hour Standard (0.12 ppm)	3	9	18	9	13	15	**17**
Maximum 8-Hour Average	0.098	0.111	0.112	0.112	0.12	0.109	**0.120**
Number of Days Exceeding Federal 8-Hour Standard (0.08 ppm) [a]	8	25	59	48	54	**68**	66

Note: Maximum average values occurring during the most recent three years are indicated in bold.

[a] Number of days with an 8-hour average exceeding federal standard concentration of 0.08 ppm. Regulatory standard is to maintain 0.08 ppm as a three-year average of the fourth-highest daily maximum. Therefore, number of days exceeding standard concentration is not the number of violations of the standard for the year.

Source: California Air Resources Board (CARB), 2000, www.arb.ca.gov.

ppm = parts per million

Table 8.1-5
Ambient Particulate Levels (<10 µm) near Henrietta, 1994-2000 (µg/m^3)

	1994	1995	1996	1997	1998	1999	2000
Hanford-S Irwin Street, Kings County							
Maximum 24-Hour Average	116	185	120	143	**146**	143	119
Annual Geometric Mean[b]	44.29	43.63	34.74	41.3	29.8	41.6	**41.9**
Annual Arithmetic Mean[c]	50.08	52.93	40.81	46.19	39.15	**53.38**	49.0
Estimated Number of Days Exceeding California 24-Hour Standard (50 µg/m^3)[a]	156	150	105	102	90	**102**	99
Estimated Number of Days exceeding Federal Standard (150 µg/m^3)[a]	0	6	0	0	0	0	0
Visalia-N Church Street, Tulare County							
Maximum 24-Hour Average	104	125	115	96	**160**	152	130
Annual Geometric Mean[b]	--	44.3	38.58	38.55	32.06	**45.53**	45.2
Annual Arithmetic Mean[c]	48.22	52.26	44.59	41.51	39.89	**54.9**	52.7
Estimated Number of Days Exceeding California 24-Hour Standard (50 µg/m^3)[a]	138	153	150	66	102	174	**180**
Estimated Number of Days exceeding Federal Standard (150 µg/m^3)[a]	0	0	0	0	6	0	0
Corcoran-Van Dorsten Avenue, Kings County							
Maximum 24-Hour Average	125	279	143	154	78	--	--
Annual Geometric Mean[b]	42.46	39.91	35.4	--	--	--	--
Annual Arithmetic Mean[c]	48.82	50.49	40.7	45.42	29.54	--	--
Estimated Number of Days Exceeding California 24-Hour Standard (50 µg/m^3)[a]	150	135	96	90	36	--	--
Estimated Number of Days exceeding Federal Standard (150 µg/m^3)[a]	0	9	0	0	0	--	--

Note: Maximum average values occurring during the most recent three years are indicated in bold.

[a] Measurements are typically collected every six days. Values reported are estimated number of days that a measurement would have been greater than the level of the standard had measurements been collected every day. The number of days above the standard is not necessarily the number of violations of the standard for the year.

[b] Almost all annual geometric mean concentrations are above the California PM10 ambient air quality standard of 30 µg/m3.

[c] The federal PM10 ambient air quality standard is an annual arithmetic mean concentration of 50 µg/m3. This concentration has been exceeded.

Source: CARB, 1999.
µg/m^3 = micrograms per cubic meter
µm = micrometer

Table 8.1-6
Ambient Carbon Monoxide Levels near Henrietta, 1994-2000 (ppm)

	1994	1995	1996	1997	1998	1999	2000
Visalia-N Church Street, Tulare County							
Maximum 1-Hour Average[a]	8.7	9.3	5.3	7.3	7.4	**7.9**	--
Maximum 8-Hour Average[b]	4.412	4.375	4.037	4.137	3.787	**4.112**	3.14
Fresno-1st Street, Fresno County							
Maximum 1-Hour Average[a]	11.9	10.3	10	8.7	**9**	8.7	--
Maximum 8-Hour Average[b]	8.1	7.275	6.825	5.687	**5.875**	5.525	5.24
Fresno-Drummond Street, Fresno County							
Maximum 1-Hour Average[a]	9.6	6.4	6	6.3	6.6	**11.9**	--
Maximum 8-Hour Average[b]	6.037	4.8	4.4	4.1	4.443	**4.886**	3.53

Note: Maximum average values occurring during the most recent three years are indicated in bold.
[a] All 1-hour concentrations are below the California CO ambient air quality standard of 20 ppm and the federal CO ambient air quality standard of 35 ppm.
[b] 8-hour concentrations are below the California and federal CO ambient air quality standards of 9.0 ppm.
Sources: CARB, 1999; U.S. EPA, 1999.
-- = Data not available
ppm = parts per million

Table 8.1-7
Ambient Nitrogen Dioxide Levels near Henrietta, 1994-2000 (ppm)

	1994	1995	1996	1997	1998	1999	2000
Hanford-S Irwin Street, Kings County							
Maximum 1-Hour Average [a]	0.082	0.094	0.066	0.08	**0.086**	**0.086**	0.072
Annual Average [b]	0.0152	0.0151	0.0145	0.0139	0.0143	**0.0160**	0.014
Visalia-N Church Street, Tulare County							
Maximum 1-Hour Average [a]	0.142	0.112	0.077	0.095	0.081	**0.092**	0.079
Annual Average [b]	0.0228	0.0233	0.0182	0.0188	0.0166	**0.0206**	0.018
Parlier, Fresno County							
Maximum 1-Hour Average [a]	0.06	0.111	0.065	0.06	0.073	**0.082**	0.056
Annual Average [b]	0.0153	0.0149	0.0139	0.0133	0.0132	**0.0153**	0.013

Note: Maximum average values occurring during the most recent three years are indicated in bold.
[a] All 1-hr concentrations are below the California NO_2 ambient air quality standard of 0.25 ppm.
[b] All annual average concentrations are below the federal NO_2 ambient air quality standard of 0.053 ppm.
Source: CARB, 1999 California Air Quality Data Statistics. (http:\\www.arb.ca.gov/adam).
ppm = parts per million.

Table 8.1-8
Ambient Sulfur Dioxide Levels near Henrietta, 1994–2000 (ppm)

	1994	1995	1996	1997	1998	1999	2000
Fresno-1st Street, Fresno County							
Maximum 1-Hour Average [a]	0.017	0.014	0.015	0.01	--	--	--
Maximum 24-Hour Average [b]	0.0115	0.0105	0.0095	0.0026	--	--	--
Annual Average [c]	0.0039	0.0037	0.0021	0.0004	--	--	--
Oildale-3311 Manor Street, Kern County							
Maximum 1-Hour Average [a]	0.029	0.022	0.018	0.02	--	--	--
Maximum 24-Hour Average [b]	0.0084	0.0087	0.0131	0.0054	--	--	--
Annual Average [c]	0.0033	0.0034	0.0027	0.0018	--	--	--
Bakersfield-5558 California Avenue, Kern County							
Maximum 1-Hour Average [a]	0.02	0.026	0.059	0.011	--	**0.011**	--
Maximum 24-Hour Average [b]	0.0067	0.0149	0.0105	0.004	--	**0.0063**	--
Annual Average [c]	0.0027	0.0028	0.0022	0.002	--	0.0032	--

Note: Maximum average values occurring during the most recent three years are indicated in bold.
[a] All 1-hour average concentrations are below the California SO_2 ambient air quality standard of 0.25 ppm.
[b] All 24-hour concentrations are below the California SO_2 ambient air quality standard of 0.05 ppm (131 $\mu g/m^3$) and the federal ambient air quality standard of 0.14 ppm (365 $\mu g/m^3$).
[c] All annual average concentrations are below the federal SO_2 ambient air quality standard of 0.03 ppm (80 $\mu g/m^3$).
Sources: CARB, 1999; U.S. EPA, 1999.
-- = Data not available
ppm = parts per million
$\mu g/m^3$ = micrograms per cubic meter

Table 8.1-9
Emission Rates for GE LM6000 Unit Firing Natural Gas

Emission Parameter	GE LM6000 CTG[a] (uncontrolled)
NO_x, ppmvd at 15% O_2	25.00
NO_x, lb/h	41.0
NO_x, lb/MMBtu (HHV)	0.0929
CO, ppmvd at 15% O_2	24.00
CO, lb/h	24.4
CO, lb/MMBtu (HHV)	0.0553
VOC, ppmvd at 15% O_2	0.6
VOC, lb/h as CH_4	0.3
VOC, lb/MMBtu (HHV)	0.0010
PM/PM_{10}, lb/h (front catch only)	1.5
PM/PM_{10}, lb/h (front and back half)	3.0
PM/PM_{10}, lb/MMBtu (front catch only)	0.0075
PM/PM_{10}, lb/MMBtu (front and back half)	0.0068

[a] Emissions are based on the CTG operating at 100% of base load with the evaporative cooler in operation and at an ambient temperature of 63 °F at CTG exhaust (prior to air dilution system), which do no reflect higher CO and VOC emissions under lower load/ambient temperature conditions, and potentially higher PM/PM_{10} emissions with SCR use. These higher emissions are reflected in the proposed permit limits.

O_2 = oxygen
HHV = higher heating valve
lb/h = pounds per hour
CH_4 = methane
MMBtu = million British thermal units
ppmvd = parts per million by volume dry

Table 8.1-10
Project Economic Evaluation Criteria

Economic Parameters	Value
Contingency, percent	20
Real Interest Rate, percent	10
Economic Life, years	3
Capital Recovery Factor (3 years)	0.4021
Labor Cost, $/man-hr	40
Energy Cost, $/kWhr (2000)	0.10
Catalyst Life Guarantee, years	3
Sales Tax,%	7.5

kWhr = kilowatt hour
man-hr = man hour

Table 8.1-11
Estimated Equipment Construction Schedule

Equipment Type	Month 1	2	3	4	5	Per Month	Time Period: Work Day	Actual % Use
Sitework (Earthwork and Civil)								
Backhoe, 1.0 Cyd.	1	1	1	1	1	26.07	20	35
Front End Loader, 2 Cyd.	1	1	1	1	1	26.07	20	35
Grader, 200-Hp 14 Ft.	1	1	1	1	1	26.07	20	25
Vibratory Plate (hand-held)	1	1	1	1	1	26.07	20	30
Rammer/Jumping Jack (hand-held)	1	1	1	1	1	26.07	20	30
Riding Vibratory Compactor		1	1			26.07	20	20
Asphalt Paver						26.07	20	60
Asphalt Cutter/Grinder						26.07	20	60
Asphalt Compactor, Tandem Steel Drum Roller						26.07	20	60
Erection Support Equipment								
Air Compressor, 185 CFM	1	1	1	1	1	26.07	20	75
Air Compressor, 185 CFM			1	1	1	26.07	20	75
Concrete Pump	1	1	1	1		26.07	20	90
Scissors Lift		1	1	1		26.07	20	40
JLG 60 Ft		1	1	1	1	26.07	20	50
JLG 60 Ft			1	1	1	26.07	20	50
JLG 60 Ft				1	1	26.07	20	50
Forklift Extended Boom	1	1	1	1	1	26.07	20	25
Crane 110 Ton			1	1	1	26.07	20	40
Hydraulic Truck Crane 55 Ton	1	1	1	1	1	26.07	20	60
Hydraulic Truck Crane 55 Ton		1	1	1	1	26.07	20	60
Hydraulic Truck Crane 35 Ton		1	1	1	1	26.07	20	60
Hydraulic Truck Crane 22 Ton	1	1	1	1	1	26.07	20	60
Hydraulic Truck Crane 22 Ton					1	26.07	20	70
7,000-Watt Portable Generator	1	1	1	1	1	26.07	20	40
Welder - Miller 400d		1	1	1	1	26.07	20	70
Welder - Miller 400d			1	1	1	26.07	20	70
Highway Tractor		1	1	1	1	26.07	20	30
Flat Bed Truck w/ Rails		1	1	1	1	26.07	20	40
Water Truck	1	1	1	1	1	26.07	20	50
Transmission Line								
Cable Tensioner Truck	0.3					20.00	20	10%
Cable Drum Puller Truck	0.3					20.00	12	10%
Pole Delivery Truck	0.3					20.00	12	3%
Cable Delivery Truck	0.3					20.00	12	3%
Boring Vehicle	0.3					20.00	12	3%
Gas Pipeline								
Compressor	1		1	1		20.00	12	85%
Asphalt Paver	1					20.00	12	85%
Asphalt Compactor	1					20.00	12	85%
Compactor	2		2	2		20.00	12	85%
Bulldozer	1		0.5			20.00	12	85%

Table 8.1-11 (continued)
Estimated Equipment Construction Schedule

	Month					Time Period		
Equipment Type	**1**	**2**	**3**	**4**	**5**	**Per Month**	**Work Day**	**Actual % Use**
Backhoe	1	1	1			20.00	12	85%
Pipe Crane	1	1	1			20.00	12	85%
Welding Machine	1	1	1			20.00	12	85%
Dump Truck	1	1	1			20.00	12	85%
Flatbed Truck	1	1	1			20.00	12	85%
Pickup Truck	1	1	1			20.00	12	85%

Table 8.1-12
Estimated Criteria Pollutant Emissions from Construction Equipment

	VOC	CO	NO_x	SO_x	PM_{10}
Main Site and Switchyard Construction					
Worst-Case Hourly Emissions (lbs/hr)	2.5	35.7	26.6	2.6	1.9
Worst-Case Monthly Emissions (lbs/month)[a]	1,279	18,634	13,893	1,367	973
Worst-Case Annual Emissions (tons/yr)	2.7	42.2	28.7	2.8	2.0
Transmission Line					
Worst-Case Hourly Emissions (lbs/hr)	< 0.1	< 0.1	0.1	0.1	< 0.1
Worst-Case Monthly Emissions (lbs/month)[a]	2.7	12.2	30.6	2.6	2.5
Worst-Case Annual Emissions (tons/yr)	< 0.1	< 0.1	< 0.1	< 0.1	< 0.1
Natural Gas Pipeline					
Worst-Case Hourly Emissions (lbs/hr)	1.4	10	18.7	1.74	1.4
Worst-Case Monthly Emissions (lbs/month)[a]	663	4,816	8,968	835	662
Worst-Case Annual Emissions (tons/yr)	0.9	6.7	12.0	1.1	0.9

[a] Using the estimated construction schedule, monthly emissions were estimated for each piece of equipment assuming 26.07 days per month at 20 hours per day (for conservative calculation purposes).

Table 8.1-13
HPP Worst-Case Annual Emissions

Pollutant	Emissions (tons/year)[a,b]
VOC	2.8
CO	21.8
NO_x	49.5
SO_2	2.5[d]
PM_{10}	27.3[c,d]

[a] Turbine and emergency generator emissions included.

[b] Turbine 300 startup and 300 shutdown events and 8,000 hours of time operating at 100% load at an annual average condition of 63 °F. Emergency generator rates consider 15 minutes per week.

[c] Turbine PM_{10} emissions are calculated from emissions rates provided by equipment vendors. These emissions include both filterable (front-half) and condensable (back-half) particulates.

[d] Condensable PM_{10} and SO_2 reflect a maximum fuel sulfur content of 0.25 grains per 100 standard cubic feet.

Table 8.1-14
Criteria Pollutant Emission Rates for the Turbine with SCR and Oxidation Catalyst During Normal Operation (pounds per hour)

		Ambient Temperature		
CTG Load	**Pollutant**	**15 ºF**	**63 ºF**	**115 ºF**
	VOC	1.17	0.33	0.20
	CO	6.25	2.44	0.80
	NO_x	6.21	5.90	5.30
	SO_2	0.32	0.30	0.27
100%	PM_{10}	3.3	3.3	3.2
	VOC	0.72	0.15	0.14
	CO	4.02	1.64	0.59
	NO_x	4.28	4.10	3.78
	SO_2	0.22	0.21	0.19
60%	PM_{10}	3.2	3.2	3.2

Table 8.1-15
Criteria Pollutant Emission Rates for the HPP Turbine During Startup and Shutdown

Pollutant	**Startup & Shutdown (Total lb/hr)[a]**
NO_x	7.7
CO	7.7
SO_2	0.33
PM_{10}	3.14

[a] Total emissions (per turbine) during an hour assuming both a startup and shutdown averaged into the hourly period.

Table 8.1-16
HPP Construction Release Parameters

	Stack Characteristics (for the Construction Zone)			
Emissions Scenario	**Stack Height (m)**	**Stack Diameter (m)**	**Exhaust Temp (°K)**	**Exhaust Velocity (m/s)**
Construction Equipment[a]	3.05	0.15	700	40

Emissions Scenario	**Release Height (m)**	**Initial Horizontal Dimension (m)**	**Initial Vertical Dimension (m)**
Fugitive Dust[b]	3.05	27.67	1.42

[a] The data shown represent the surrogate stack and release parameters for six release points.
[b] Fugitive dust emissions modeled as a single surface-based volume source.

Table 8.1-17
Stack Parameters

CTG Load Level (% of Base Load)	**Turbines**					
	100%	**60%**	**100%**	**60%**	**100%**	**60%**
Ambient Temperature °F	115	115	63	63	15	15
Stack Exit Temperature, °K	715.9	690.9	712.0	671.5	679.8	634.3
Stack Exit Velocity, m/s	35.1	27.4	37.5	29.3	39.0	30.2

m = meter
K = Kelvin
m/s = meters per second

Table 8.1-18
HPP ISCST3 Modeling Results – Construction Activities

Pollutant	Averaging Period	Maximum Modeled Impact ($\mu g/m^3$)	Background ($\mu g/m^3$)	Total Predicted Concentration ($\mu g/m^3$)	Lowest AAQS ($\mu g/m^3$)	UTM Coordinates East (m)	UTM Coordinates North (m)
CO	1-hour	3355	13,628	16,983	23,000	238,975	4,014,325
	8-hour	1583	6,728	8,311	10,000	239,225	4,014,150
NO_2	1-hour	252.3	181	433.3	470	238,975	4,014,325
	Annual[a]	40.5	40.4	80.9	100	239,143	4,014,213
PM_{10}	24-hour	80.9	160	240.9	50	239,075	4,014,370
	Annual	10.2	45.5	55.7	30	239,143	4,014,213
SO_2	1-hour	245	28.8	273.8	655	238,975	4,014,325
	3-hour	160	--	--	1,300	239,025	4,014,325
	24-hour	53.4	16.5	69.9	105	239,143	4,014,213
	Annual	5.09	8.38	13.5	80	239,175	4,014,175

.

[a] Annual NO_2 impact incorporates ARM of 0.75.

AAQS = most stringent ambient air quality standard for the averaging period
OLM = ozone limiting method
m = meters
$\mu g/m^3$ = micrograms per cubic meter
CO = carbon monoxide
NO_2 = nitrogen dioxide
PM_{10} = particulate matter less than or equal to 10 micrometers in diameter
SO_2 = sulfur dioxide
UTM = Universal Transverse Mercator

Table 8.1-19
HPP ISCST3 Modeling Results – Routine Plant Operations

Pollutant	Averaging Period	Maximum Impact ($\mu g/m^3$)[a]	Background ($\mu g/m^3$)	Total Predicted Concentration ($\mu g/m^3$)	Lowest AAQS ($\mu g/m^3$)	UTM Coordinates East (m)	UTM Coordinates North (m)
Annual Impacts –Turbine and Emergency Generator							
NO_2	Annual	0.02	40.4	40.4	100	240,400	4,010,900
PM_{10}	Annual	0.01	45.5	45.5	30	240,400	4,010,900
SO_2	Annual	< 0.01	8.38	8.38	80	240,400	4,010,900
Short-Term Impacts –Turbine and Emergency Generator							
CO	1-hour	16.2	13,628	13,644	23,000	239,120	4,014,213
	8-hour	1.17	6,728	6,729	10,000	239,120	4,014,213
NO_2	1-hour	73.0	181	254	470	239,120	4,014,213
PM_{10}	24-hour	0.14	160	160	50	239,200	4,014,125
SO_2	1-hour	11.7	28.8	40.5	655	239,120	4,014,213
	3-hour	3.26	--	--	1,300	239,120	4,014,213
	24-hour	0.09	16.5	16.6	105	239,120	4,014,213

[a] Worst-case impact for applicable averaging time.

AAQS = most stringent ambient air quality standard for the averaging period
m = meters
$\mu g/m^3$ = micrograms per cubic meter
CO = carbon monoxide
NO_2 = nitrogen dioxide
PM_{10} = particulate matter less than or equal to 10 microns in diameter
SO_2 = sulfur dioxide

Table 8.1-20
HPP Fumigation Impacts (1-hour)

Source	SCREEN3 Inversion 1-hr Result [µg/m3]/[g/s]	Emission Rate (g/s)	Maximum Modeled Impact (µg/m^3)	Background (µg/m^3)	Total Predicted Concentration (µg/m^3)	Lowest AAQS (µg/m^3)
Gas Turbine						
CO	1.056	0.970	1.02	13,628	13,629	23,000
NO_2	1.056	0.970	1.02	181	182	470
SO_2	1.056	0.042	0.044	28.8	28.8	655

Table 8.1-21
Commissioning Modeling Analysis Results

Pollutant	No. of Turbines[a]	Emission Rate per turb. (lb/hr)	Turbine Load	Modeling Results (µg/m3)	Back-ground (µg/m3)	Total Predicted Concen-tration (µg/m3)	AAQS (µg/m3)	Emission Rate Baasis
NO_2 1-hr	2	12.4	100%	5.82	181	187	470	2x uncontrolled rate
CO 1-hr	2	12.5	100%	5.86	13,628	13,634	23,000	2x uncontrolled rate
CO 8-hr	2	12.5	100%	1.97	6,728	6,730	10,000	2x uncontrolled rate

[a] Emissions based on both turbines operating simultaneously.

Table 8.1-22
Rule 2201 Emission Offset Requirements for the HPP

Pollutant	Attainment Status	Rule 2201 Offset Threshold	Applicable Project Emissions [c]
NO_x	A/NA[a]	20,000 lb/yr	99,076 lb/yr
VOC	NA[b]	20,000 lb/yr	18,962 lb/yr
PM_{10}	NA	29,200 lb/yr	54,685 lb/yr
SO_2	A	54,750 lb/yr	4,998 lb/yr
CO	A	200,000 lb/yr	109,162 lb/yr

A = Attainment NA = Nonattainment

[a] The area attains both state and federal NO_2 AAQS, but NO_x emissions are considered a precursor to ozone. The area is classified nonattainment for both California and federal ozone AAQS.

[b] VOC emissions are considered a precursor to ozone, a nonattainment pollutant.

[c] Based on annual average emissions at 63 °F ambient, 300 start-ups and 300 shutdowns per year, and including emergency generator operations (annual testing hours). VOC and CO ratioed up from annual average to maximum stack concentrations. See Appendix B.

Table 8.1-23
Comparison of HPP Offset Requirements under SJVUAPCD Rule 2201 and/or CEQA and Total ERCs Acquired or to Be Acquired by HPP

	NO_x	VOC	PM_{10}	SO_2
HPP Project Emissions, ton/yr[a]	39.5[b]	9.5	27.3	2.5
HPP ERCs at 1.5:1, ton/yr	96.3	35.0	12.3	5.0
HPP SO2 ERCs at 1.9:1, ton/yr[c]	--	--	57.1[c]	--

[a] See Appendix B for calculations
[b] Emission offset requirements reflect a 10 tpy reduction from stationary source potential to emit when determining offset requirements for new sources – see Rule 2201 Section 6.8.2.2. The 10 tpy reduction allowed for new sources is accounted for in the District Air Quality Attainment Plan Growth Allowance to ensure that overall levels of ozone precursors decline.
[c] Based on an SO2 for PM10 interpollutant offset ratio of 1.9 to 1.

Table 8.1-24
Applicable Air Quality Permits or Approvals Required for the HPP

Agency	Permit Approval	Expected Filing Date
U.S. EPA Region IX	Prevention of Significant Deterioration	Not required
San Joaquin Valley Unified Air Pollution Control District	Determination of Compliance/Authority to Construct Permit Application	July 2001
	Acid Rain Permit Application	Within two years before startup (approximately August 2001)
	Title V Permit Application	Within one year after startup (approximately May 2002)

Table 8.1-25
HPP Summary of Compliance with Air Quality LORS

Authority	Administering Agency	Requirements	HPP Compliance	AFC Conformance Section
Federal CAAA of 1990; 40 CFR 50	U.S. EPA Region IX, CARB, SJVUAPCD	NAAQS	The HPP operations will not cause a violation of any national (or state) ambient air quality standard.	8.1.4.4
40 CFR 72, 73, 75	U.S. EPA Region IX	Acid rain requirements, SO_2 allowances.	The HPP will submit an acid rain permit application within two years before startup. CEM will be implemented.	8.1.5, 8.1.8
40 CFR 60, Subpart GG; SJVUAPCD Rule 4001	SJVUAPCD	NSPS; 0.010% by volume (100 ppmvd) for NO_x and 0.015% by volume (150 ppmvd) for SO_2.	The HPP emission rate for NO_x is 3.6 ppmvd at 15% O_2; the SO_2 emission rate is less than 1 ppmvd at 15% O_2. Both emission rates are well below the NSPS emission limit. Additionally, CEM plans will be developed and CEM will be performed.	8.1.3.1, 8.1.5, 8.1.8
40 CFR 70, SJVUAPCD Rule 2520	SJUVAPCD	Federally Mandated Operating Permit (Title V) for major sources	The HPP will be a major source as defined by SJUVAPCD rules 2201 and 2520. The Title V permit application will be submitted within 12 months of startup of the HPP.	8.1.1.5
California Administrative Code, Title 14, §15002(a)(3), CEQA Guideline	CEC	Power plant siting requirements.	This AFC satisfies the CEC requirements.	8.1

Table 8.1-25 (continued)
HPP Summary of Compliance with Air Quality LORS

Authority	Administering Agency	Requirements	HPP Compliance	AFC Conformance Section
Health and Safety Code § 44300	SJVUAPCD	Air Toxics "Hot Spots" emission inventory.	GWF will submit an Air Toxics "Hot Spots" information and assessment report.	8.1.1.7
Rule 2010	SJVUAPCD	ATC and PTO	The ATC and PTO application will be submitted in the third quarter of 2001.	8.1.1.8
Rule 2201	SJVUAPCD	New Source Review (NSR).	NSR requirements will be met by the HPP.	8.1.3, 8.1.4, and 8.1.5
Rule 4101	SJVUAPCD	Visibility; prohibits visible emissions as dark or darker than No. 1 on the Ringelmann chart	The HPP will ensure compliance with the rule by using natural gas and effective combustion practices. Excess visible emissions are not anticipated from properly operating natural-gas-fired combustion equipment.	8.1.3.1
Rule 4102	SJVUAPCD	Nuisance; prohibits discharge of emissions that cause injury, illness, detriment, nuisance, etc., to any considerable number of persons or to the public.	The HPP will ensure compliance with the rule by using natural gas for combustion and maintaining ammonia slip substantially below the odor threshold. The public health analysis (Section 8.6) also demonstrates that no significant adverse health impacts are expected.	8.1.3.1, 8.6

Table 8.1-25 (continued)
HPP Summary of Compliance with Air Quality LORS

Authority	Administering Agency	Requirements	HPP Compliance	AFC Conformance Section
Rule 4201	SJVUAPCD	Total suspended particulate emission limit of 0.1 gr/DSCF.	The maximum HPP emission rate for PM_{10} is 3.3 lb/hour (0.002 gr/DSCF), well below the TSP emission limit.	8.1.3.1
Rule 4703	SJVUAPCD	NO_x emission limit of 13.1 ppm at 15% O_2 and CO emission limit of 200 ppm at 15% O_2 for the gas turbine.	The HPP emission rate for NO_x is 3.6 ppmv at 15% O_2; the CO emission rate is 6.0 ppmvd. Both the NO_x and CO emission rates are well below the limits of the rule.	8.1.3.1
Rule 4801	SJVUAPCD	SO_2 emission limit of 0.2% by volume, dry (2,000 ppmvd).	The HPP emission rate for SO_2 is well below the rule 4801 emission limit.	8.1.3.1
Rule 8010	SJVUAPCD	Fugitive dust administrative requirements; reasonably available control measures (RACMs).	The HPP will use dust control measures (application of water) as necessary to achieve 50% control efficiency (minimum) according to Rule 8010 requirements.	8.1.3.5
Rule 8020	SJVUAPCD	Fugitive dust, construction; requires RACMs and prohibits opacity to exceed 40%.	The HPP will commit to implementing RACMs during construction and controlling opacity from construction to a level below 40% (for a period or periods aggregating to more than three minutes in any one hour) per Rule 8020 requirements.	8.1.3.5

Table 8.1-25 (continued)
HPP Summary of Compliance with Air Quality LORS

Authority	Administering Agency	Requirements	HPP Compliance	AFC Conformance Section

AFC = Application for Certification
ATC = Authority to Construct
CAAA = Clean Air Act Amendments
CARB = California Air Resources Board
CEM = continuous emissions monitoring
CEC = California Energy Commission
CEQA = California Environmental Quality Act
CFR = Code of Federal Regulations
CO = carbon monoxide
gr/DSCF = grains per cubic foot of gas at dry standard conditions
NAAQS = National Ambient Air Quality Standards
NO_x = nitrogen oxide
NSPS = New Source Performance Standards
NSR = New Source Review
O_2 = oxygen
ppm = parts per million
ppmvd = parts per million by volume dry
PTO = Permit to Operate
RACM = reasonably available control measures
SJVUAPCD = San Joaquin Valley Unified Air Pollution Control District
SO_2 = sulfur dioxide

FIGURES

WIND ROSE PLOT

Lemoore

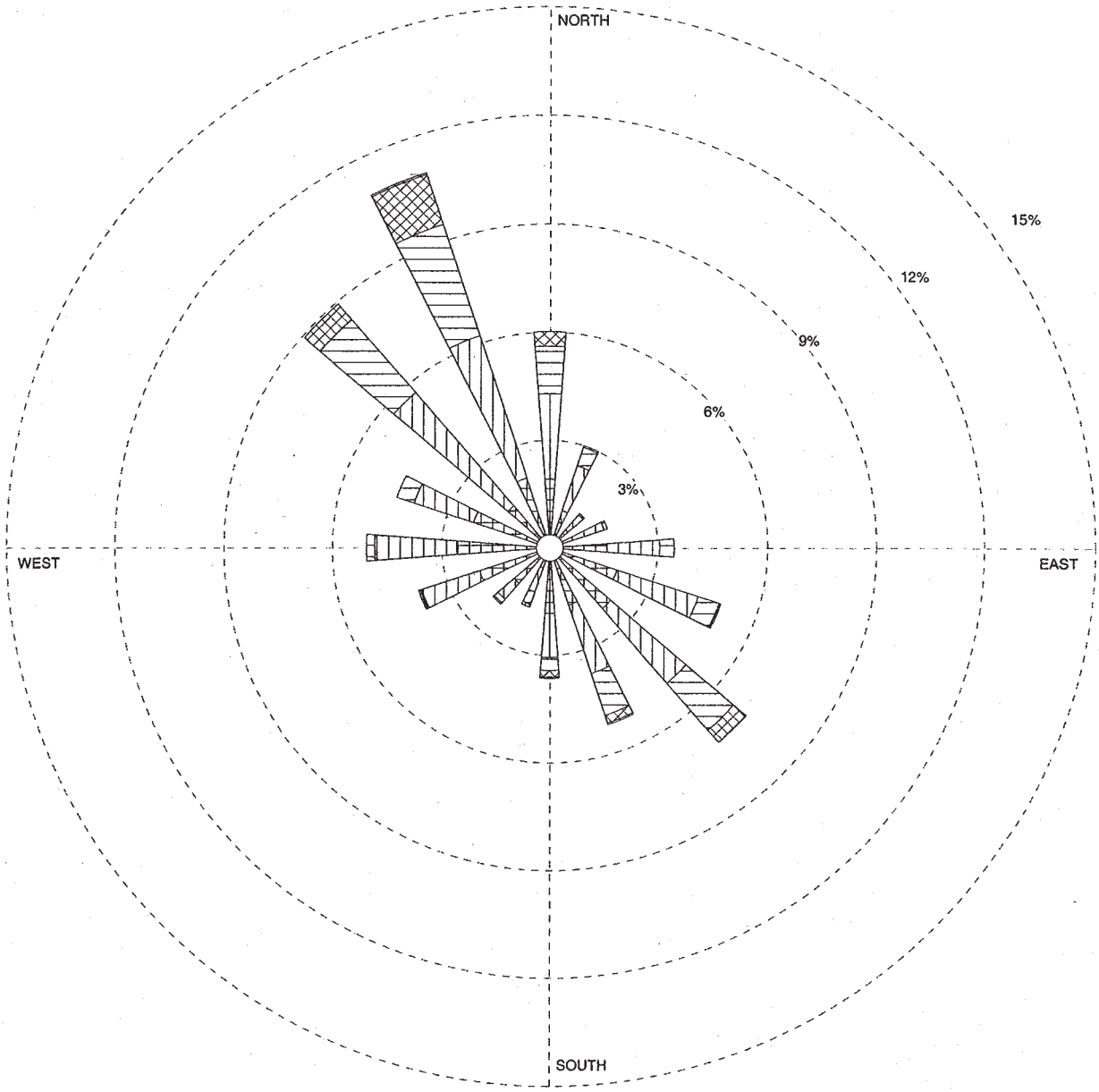

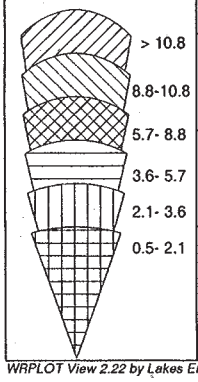

MODELER	DATE	COMPANY NAME
vjh	8/22/01	URS Corporation
DISPLAY	UNIT	COMMENTS
Wind Speed	m/s	Quarterly Wind Rose First Quarter 1968
AVG. WIND SPEED	CALM WINDS	
2.54 m/s	26.14%	
ORIENTATION	PLOT YEAR-DATE-TIME	PROJECT/PLOT NO.
Direction (blowing from)	68 January 1 - March 31 Midnight - 11 PM	Figure 8.1-1

WRPLOT View 2.22 by Lakes Environmental Software - www.lakes-environmental.com

WIND ROSE PLOT

Lemoore

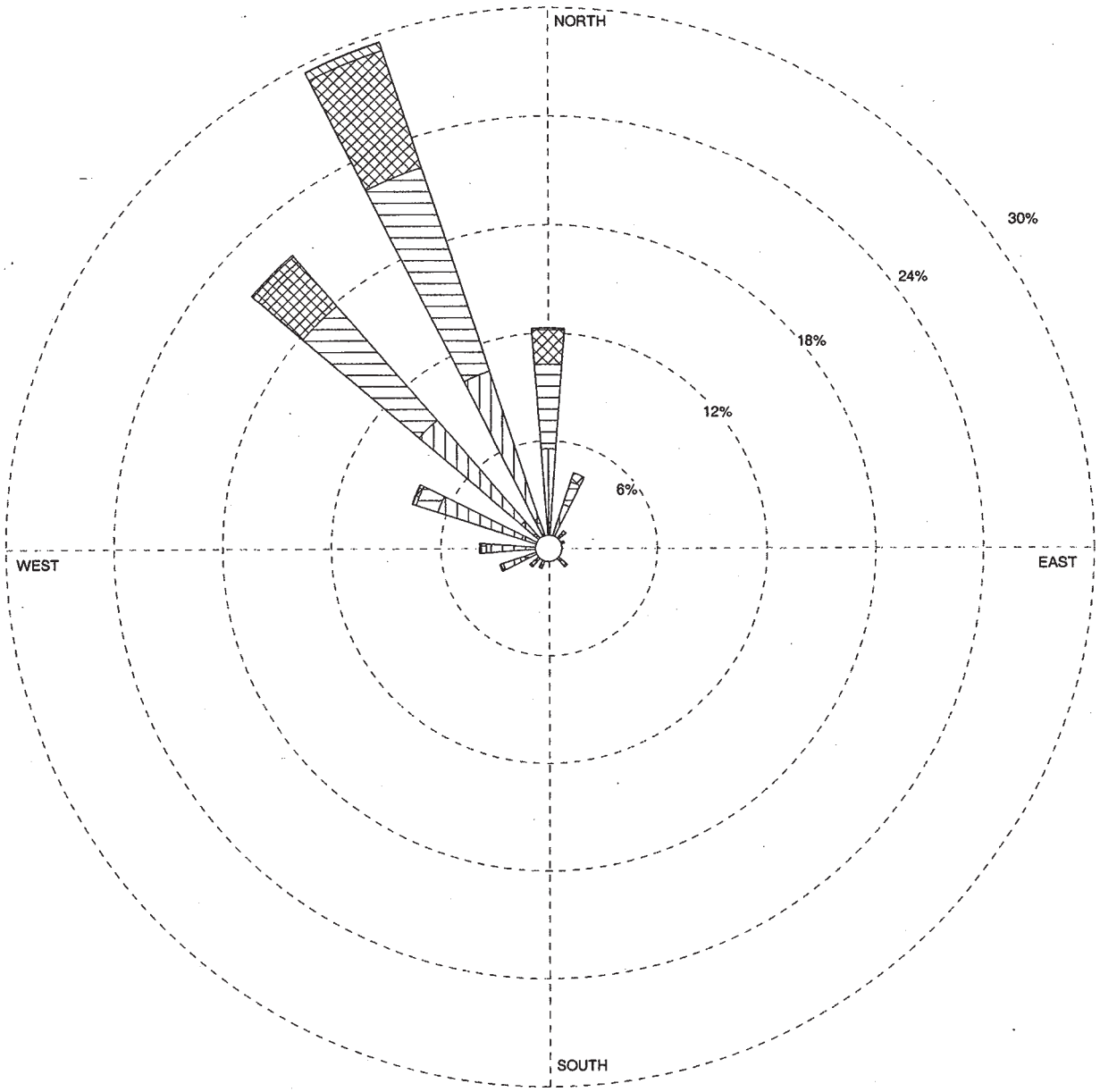

Wind Speed (m/s)	MODELER **vjh**	DATE **8/22/01**	COMPANY NAME **URS Corporation**
> 10.8 8.8-10.8 5.7- 8.8 3.6- 5.7 2.1- 3.6 0.5- 2.1	DISPLAY **Wind Speed**	UNIT **m/s**	COMMENTS **Quarterly Wind Rose** **Second Quarter** **1968**
	AVG. WIND SPEED **3.60 m/s**	CALM WINDS **7.97%**	
	ORIENTATION **Direction** **(blowing from)**	PLOT YEAR-DATE-TIME **68** **April 1 - June 30** **Midnight - 11 PM**	PROJECT/PLOT NO. **Figure 8.1-2**

WRPLOT View 2.22 by Lakes Environmental Software - www.lakes-environmental.com

WIND ROSE PLOT

Lemoore

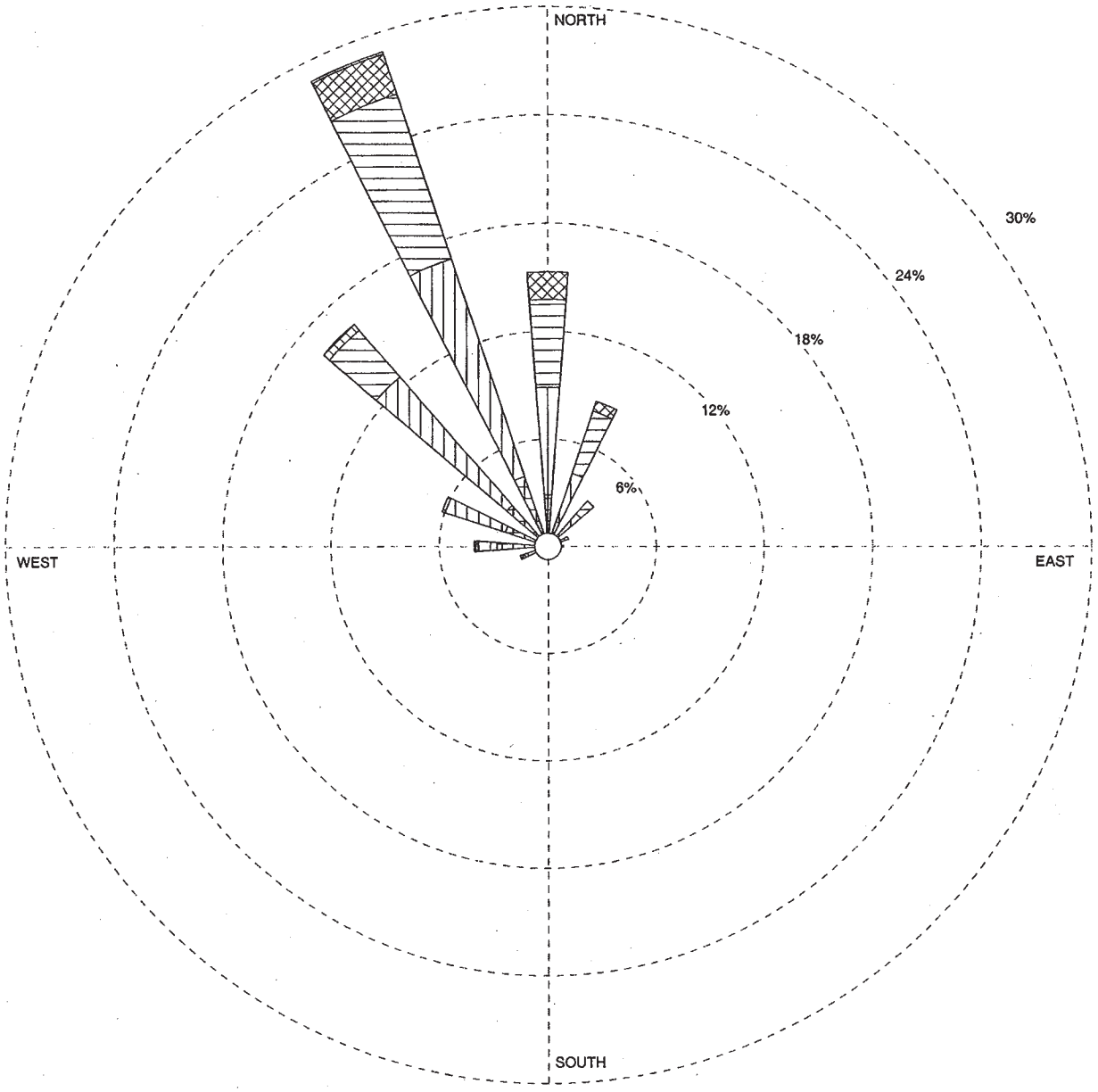

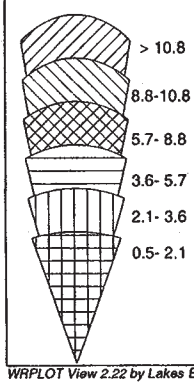

MODELER	DATE	COMPANY NAME
vjh	8/22/01	URS Corporation
DISPLAY: Wind Speed	UNIT: m/s	COMMENTS: Quarterly Wind Rose Third Quarter 1968
AVG. WIND SPEED: 2.91 m/s	CALM WINDS: 9.60%	
ORIENTATION: Direction (blowing from)	PLOT YEAR-DATE-TIME: 68 July 1 - September 30 Midnight - 11 PM	PROJECT/PLOT NO.

Figure 8.1-3

WRPLOT View 2.22 by Lakes Environmental Software - www.lakes-environmental.com

WIND ROSE PLOT

Lemoore

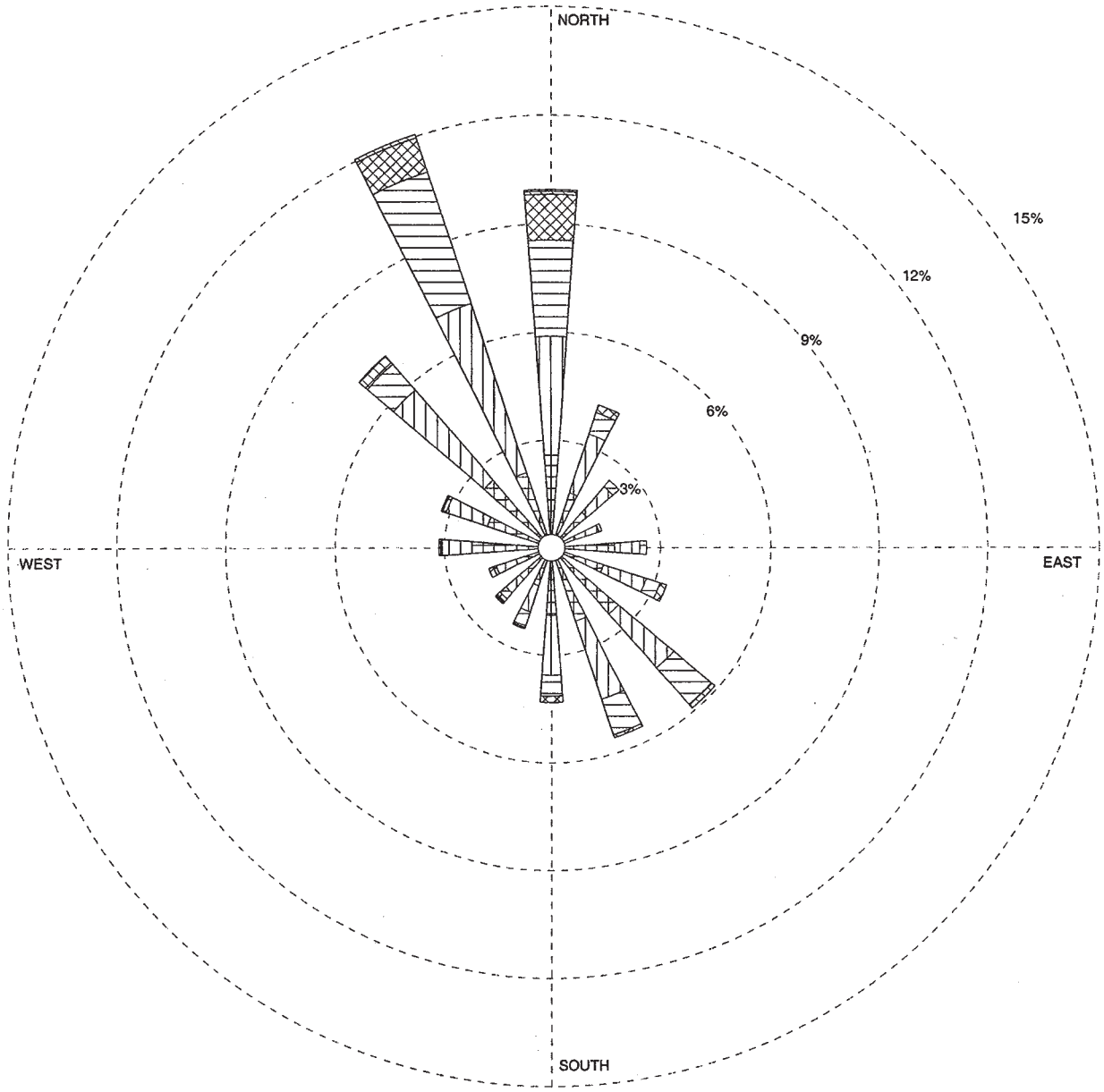

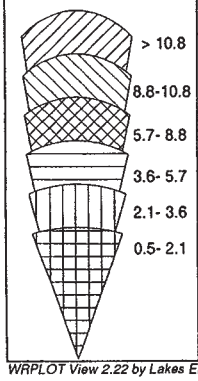

MODELER **vjh**	DATE **8/22/01**	COMPANY NAME **URS Corporation**
DISPLAY **Wind Speed**	UNIT **m/s**	COMMENTS **Quarterly Wind Rose Fourth Quarter 1968**
AVG. WIND SPEED **2.56 m/s**	CALM WINDS **28.03%**	
ORIENTATION **Direction (blowing from)**	PLOT YEAR-DATE-TIME **68 October 1 - December 31 Midnight - 11 PM**	PROJECT/PLOT NO. **Figure 8.1-4**

WRPLOT View 2.22 by Lakes Environmental Software - www.lakes-environmental.com

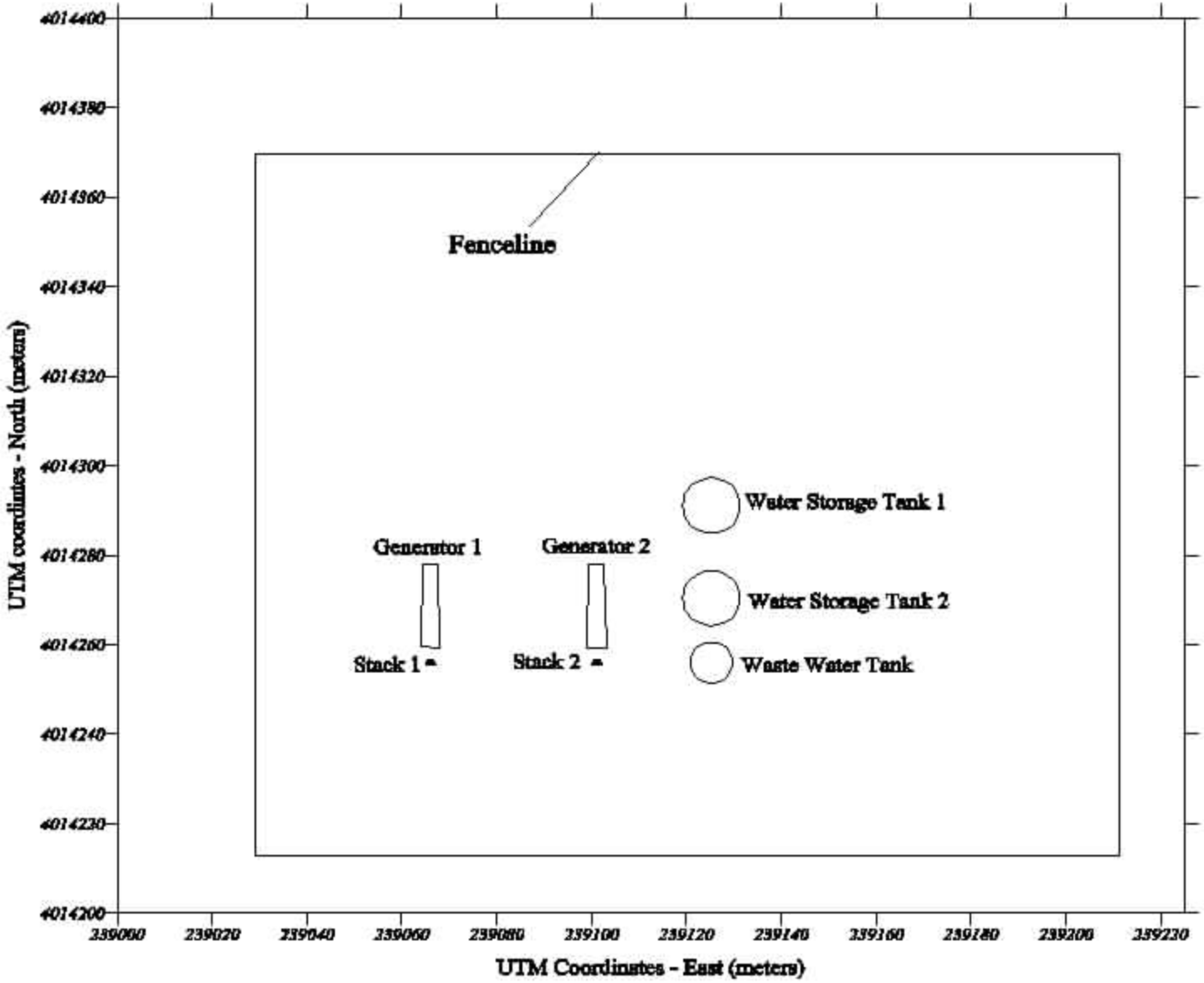

N

URS	Project No. 51-00167032.00 GWF Henrietta Peaker Project	BUILDING DOWNWASH STRUCTURES	Figure 8.1-5

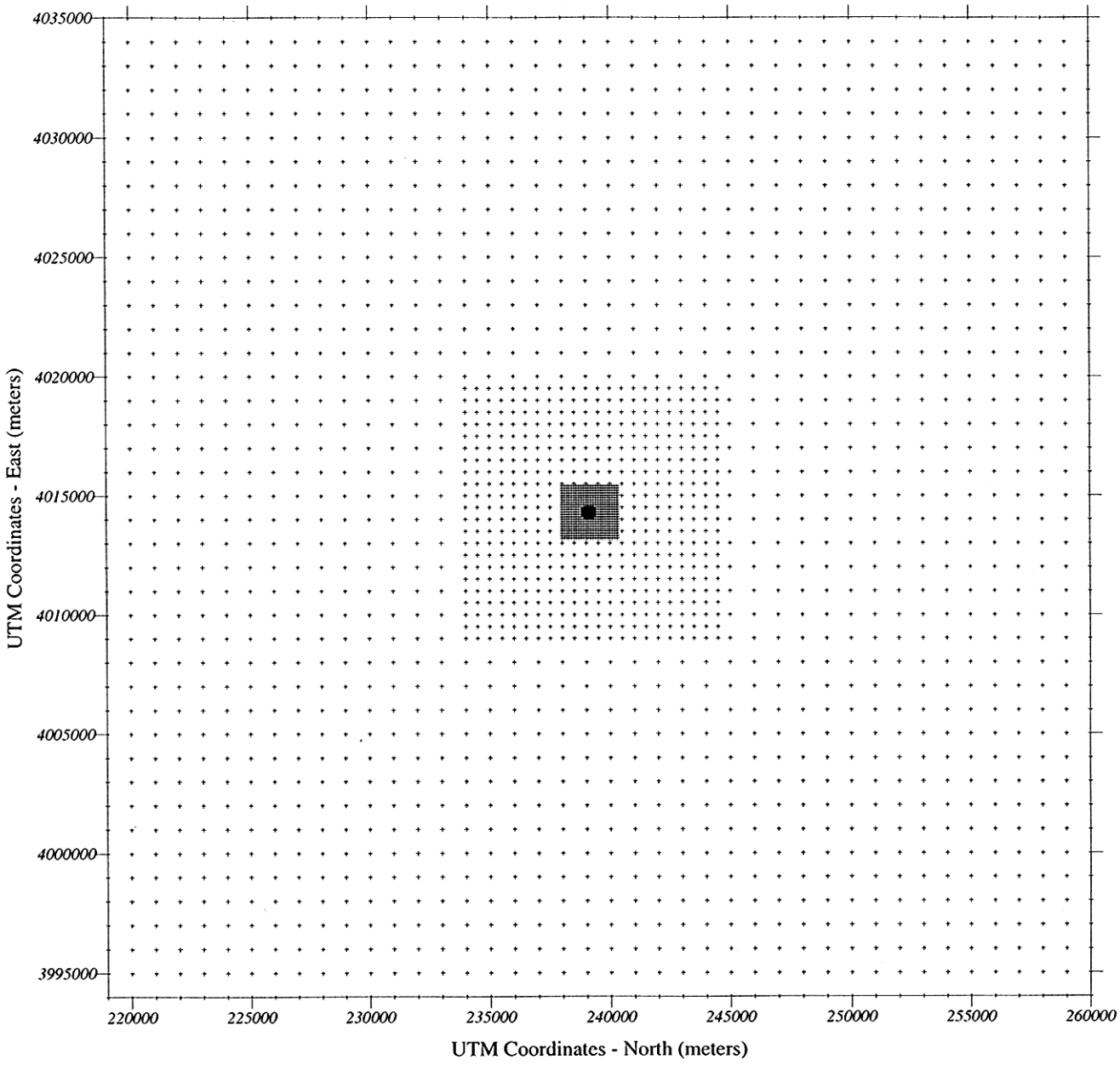

URS	Project No. 51-00167032.00 GWF Henrietta Peaker Project	AIR QUALITY MODELING RECEPTOR GRID FARFIELD	Figure 8.1-6

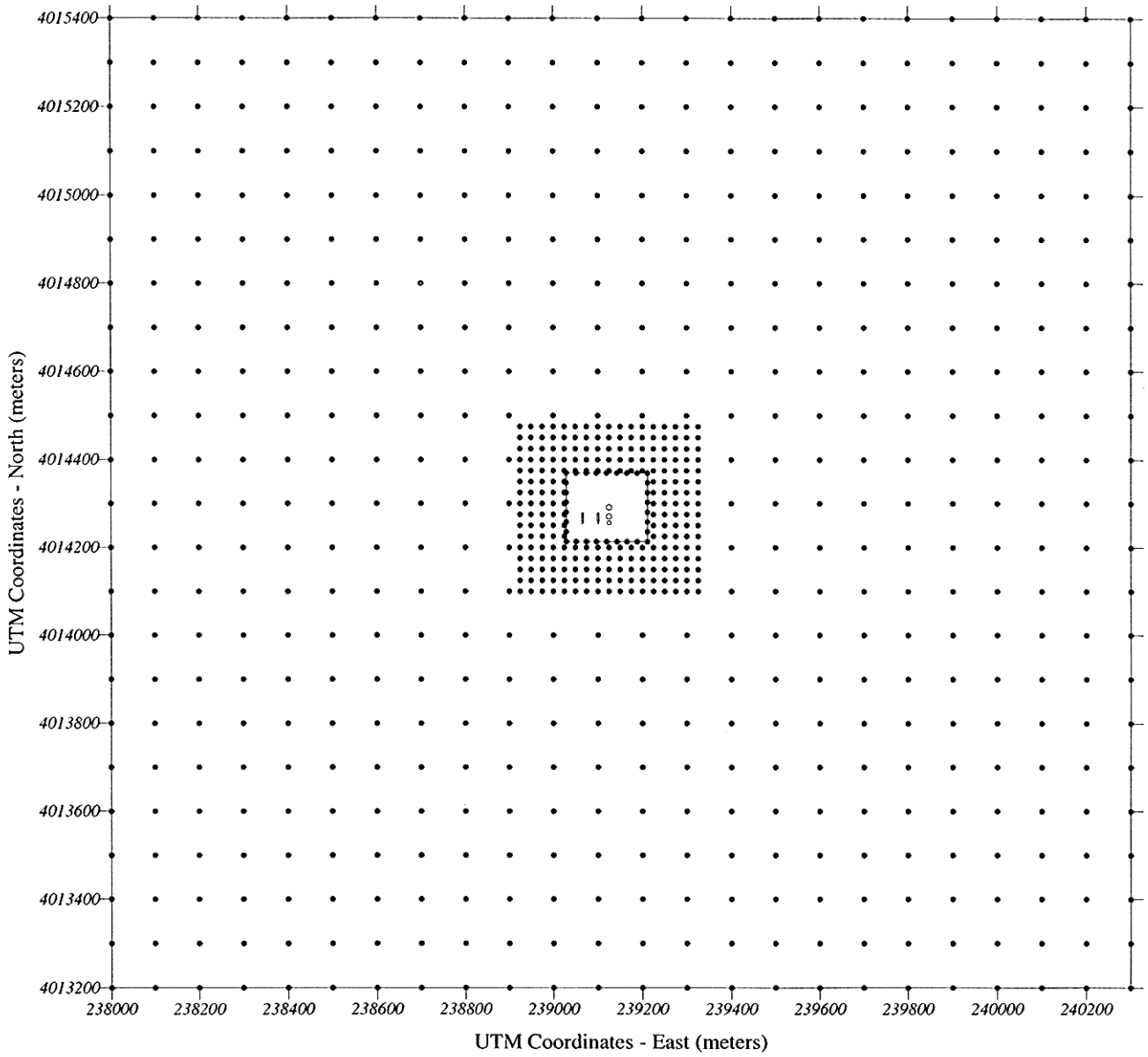

URS	Project No. 51-00167032.00 GWF Henrietta Peaker Project	AIR QUALITY MODELING RECEPTOR GRID NEARFIELD	Figure 8.1-7

8.2 Biological Resources

The Henrietta Peaker Project (HPP) consists of a 91.4-megawatt (MW) (net), natural-gas-fired, simple-cycle power plant located approximately 10 miles southwest of Lemoore, California, on a seven-acre portion of a 20-acre parcel owned by GWF Energy LLC. The HPP will interconnect to the existing adjacent Pacific Gas and Electric Company (PG&E) Henrietta Substation through a new 550-foot 70-kilovolt (kV) transmission line supported on two new transmission poles. Other linear facilities include an approximately 16.5-foot water interconnection pipeline (from the site property boundary) and a 2.2-mile Southern California Gas Company natural gas interconnection pipeline. Additionally, approximately five acres will be used for temporary construction laydown and parking.

8.2.1 Affected Environment

8.2.1.1 Regional Setting

The HPP site is located in the central San Joaquin Valley, one mile south of Naval Air Station (NAS) Lemoore in California (Figure 8.2-1). The region's climate can be characterized as Mediterranean, with hot, dry summers and cool, moist winters. Summer high temperatures typically exceed 100 degrees Fahrenheit (°F), with an average of 110 days per year over 90 °F. Winter temperatures in the San Joaquin Valley are mild, with an average of 16 days per year with frost (Twisselmann, 1967).

Rainfall in the Central Valley averages 7 to 8 inches per year. Winter fog, called "tule fog," sometimes forms during the months of November, December, and January, supplementing the annual precipitation. On average, approximately 90 percent of the rainfall occurs between November 1 and April 1 (Twisselmann, 1967). The region periodically experiences drought cycles, the most recent of which occurred during the mid and late 1980s.

8.2.1.2 Vegetation

The HPP site is dominated by intensively managed agricultural activities. Natural vegetation is restricted to the farm equipment storage area just north of the plant site and to the

banks of agricultural drainage sumps and canals. All of these areas are disturbed on a regular basis, and plants are predominantly weedy and exotic.

8.2.1.3 Wildlife

General Wildlife. The ruderal vegetation near the project site could provide marginal habitat for a variety of birds, mammals, and reptiles. Bird species include the red-tailed hawk (*Buteo jamaicensis*), northern harrier (*Circus cyaneus*), burrowing owl (*Athene cunicularia*), and western meadowlark (*Sturnella neglecta*). Mammals occupying this habitat type include the black-tailed hare (*Lepus californicus*), desert cottontail (*sylvilagus audubonii*), kangaroo rat (*Dipodomys* spp.), deer mouse (*Peromyscus maniculatus*), kit fox (*Vulpes macrotis*), coyote (*Canis latrans*), bobcat (*Felis rufus*), and American badger (*Taxidae taxus*). Amphibians and reptiles include the western toad (*Bufo boreus*), side-blotched lizard (*Uta stansburiana*), western whiptail (*Cnemidophorus Tigris*), and gopher snake (*Pituophis melanoleucus*).

Economically Important Species. One gamebird species, the mourning dove (*Zenaida macroura*), potentially occurs at the proposed HPP site. This species has some recreational value to hunters, but has no important economic value. No species of economic importance occur in the HPP area.

Biologically Sensitive Areas. The HPP lies outside any biologically sensitive area.

8.2.1.4 Sensitive Species

Lists of special-status wildlife and plant species known to occur or to potentially occur in the vicinity of the HPP site are shown in Table 8.2-1. These species were identified based on a search of the California Natural Diversity Database, unpublished biological reports produced for other projects in the area of the HPP, and staff experience and knowledge of sensitive flora and fauna of the central San Joaquin Valley.

8.2.2 Biological Survey

8.2.2.1 Survey Methodology

Surveys at the HPP site were conducted by William J. Vanherweg and Christine O'Rourke on April 20 and May 22, 2001. The surveys were conducted primarily for listed plant and animal species, following methodologies approved by the U.S. Fish and Wildlife Service (USFWS) and California Department of Fish and Game (CDFG) (CDFG, 1990). Surveys were performed concurrently for other special-status plant and wildlife species with potential to occur in the area. This section provides a discussion of the survey methodology used during the field review of the project site and the natural gas pipeline and transmission line corridors.

The HPP site and natural gas pipeline and transmission line corridors were surveyed by walking 50-foot-wide transects in suitable species habitat. An additional buffer zone (1,000 feet on either side of the corridors and around the facility) was also surveyed (Figure 8.2-2). During the survey, all dens, burrows, and other evidence of special-status species were noted. A list was compiled of all animal and vascular plant species observed (see Table 8.2-2). San Joaquin kit fox potential and known dens, kangaroo rat burrows, burrowing owl burrows, and locations of other sensitive species were marked in the field with terminal wire pin flags and mapped on a site map. Suitable blunt-nosed leopard lizard habitat was also noted and mapped on a site map.

The San Joaquin kit fox dens were classified according to the following USFWS kit fox den definitions (USFWS, 1989):

- *Known Den:* Any existing natural den or man-made structure for which conclusive evidence or strong circumstantial evidence can show that the den is used or has been used at any time in the past by a San Joaquin kit fox.
- *Potential Den:* Any natural den or burrow within the range of the species that has entrances of appropriate dimensions (4 to 12 inches in diameter) to accommodate San Joaquin kit foxes, but for which there is little to no evidence of kit fox use.
- *Pupping Den:* Any known San Joaquin kit fox den (as defined above) used by kit foxes to whelp and/or rear their pups.

- *Atypical Den:* Any known San Joaquin kit fox den that has been established in, or in association with, a man-made structure.

8.2.2.2 Results

The proposed HPP site is currently being managed as intensive agricultural land and has no habitat features that would be of value to any sensitive species. There are no sensitive wildlife or plant resources at the site. The agricultural equipment storage area just north has some potential for San Joaquin kit fox foraging and denning, although no dens were observed at the time of the survey (Figure 8.2-3).

The natural gas pipeline corridor follows the margins of intensively managed agricultural fields and paved county road right-of-ways. No other sensitive wildlife or plant resources were found in the corridor or within 1,000 feet of the route (Figure 8.2-4).

The transmission line corridor traverses the equipment storage area north of the plant site and offers some foraging and denning potential for San Joaquin kit foxes and burrowing owls, though no potential or known kit fox dens or burrowing owl burrows were observed during the survey. No other sensitive wildlife or plant resources were found in the corridor or within 1,000 feet of the route (Figure 8.2-4).

California Natural Diversity Database field survey report sheets were not completed for this project, because no sensitive wildlife or plants were observed.

8.2.3 Environmental Consequences

8.2.3.1 Construction Phase

The project will result in the permanent loss of approximately seven acres of intensely managed farmland. The USFWS has required incidental take permits and habitat compensation to mitigate the loss of these types of habitats, because San Joaquin kit foxes have been observed using farmland for denning and foraging.

8.2.3.2 Operations and Maintenance Phase

No adverse environmental consequences are associated with the operations and maintenance phase of the HPP.

8.2.4 Growth-Inducing Impacts

The HPP site is located in unincorporated Kings County adjacent to an existing electrical substation. Conversion of agricultural lands to nonagricultural use will be minimal and will be limited to the seven-acre HPP site. Collectively, these activities could indicate a trend toward energy-related uses in this part of Kings County. Increased industrial activity in the vicinity of the HPP may increase the possibility that lands under agricultural production will be converted to nonagricultural uses. However, the specific characteristics of individual projects are not known and should be considered speculative. Additionally, such projects would undergo appropriate environmental review at the time their applications were submitted.

8.2.5 Cumulative Impacts

The proposed HPP will not cause a significant change in the character of the region when considered in conjunction with similar, planned projects (see Section 8.4, Land Use). The proposed HPP will impact land use in its vicinity by increasing the concentration of industrial activity. However, it will not result in changes to existing land use patterns and is fully consistent with existing zoning. The previously approved Hanford Energy Park Peaker project is located approximately 15 miles away. Both the Hanford Energy Park Peaker project and the proposed HPP are low-impact projects. No other energy-related projects are planned or proposed in the vicinity of the HPP. Direct impacts associated with the HPP are extremely minimal, and no significant cumulative impacts on biological resources are expected to occur. As a result, the cumulative land use impacts are considered insignificant.

8.2.6 Mitigation Measures

Preconstruction biological surveys will be undertaken at least 30 days before the start of construction activity for the plant site, the electric transmission line, and the natural gas pipeline. If San Joaquin kit foxes, burrowing owls, or nesting raptors are found in or near the

corridors during these surveys, additional mitigation measures may be necessary to comply with LORS. Lost habitat will be replaced according to appropriate ratios (see Appendix K).

8.2.7 Applicable Laws, Ordinances, Regulations, and Standards

This section lists the laws, ordinances, regulations, and standards (LORS) related to biological resources that potentially apply to the proposed HPP. Additional information concerning compliance with LORS is included in Table 8.2-3.

Federal Endangered Species Act: The project must demonstrate compliance with the Endangered Species Act of 1973 (as amended) because it is located within habitat areas determined to be currently or historically occupied by the endangered San Joaquin kit fox (*Vulpes macrotis mutica*), the blunt-nosed leopard lizard (*Gambelia sila*), and Tipton kangaroo rat (*Dipodomys nitratoides nitratoides).*

Migratory Bird Treaty Act: Title 16, United States Code, Sections 703–712, prohibits take of migratory birds, including nests with viable eggs.

Clean Water Act: The U.S. Army Corps of Engineers (USACE), under Section 404 of the Clean Water Act, regulates discharges of dredged or fill material in "waters of the United States". The term "waters" includes wetlands and nonwetland bodies of water that meet specific criteria, as defined in the Code of Federal Regulations. The definition of waters of the United States includes "...intrastate lakes, rivers, streams (including intermittent streams)...the use, degradation or destruction of which could affect interstate or foreign commerce..." and tributaries defined as waters of the United States.

Some intermittent washes may qualify as waters of the United States. Areas that meet the definition of waters of the United States or the definition of wetlands would be under USACE jurisdiction. Any impacts in these areas could require a permit, depending on the type and size of the activity within USACE jurisdiction.

California Environmental Quality Act: The effects of the project on environmental resources must be analyzed and assessed as to their significance using criteria

provided in various sections and appendices of the CEQA. Preparation for this Application of Certification fulfills CEQA requirements.

California Endangered Species Act: Compliance with the California Endangered Species Act is required because the project area is within habitats currently or historically occupied by the state-threatened San Joaquin kit fox and the endangered Fresno kangaroo rat and blunt-nosed leopard lizard. If field assessments indicate a likelihood of "take" of these species, consultation with the CDFG under Fish and Game Code Sections 2050 and 2091 is required.

Fish and Game Code Section 1600 et seq: Any activity that will divert or obstruct the natural flow or change the bed, bank, or channel of any river, stream, or lake must provide a Streambed Alteration Notification to the CDFG. A Streambed Alteration Notification is also required if streambed material is proposed for removal. A Streambed Alteration Notification may result in a Streambed Alteration Agreement between the project applicant and the CDFG. The CDFG should be notified of any project construction in intermittent streams so that the agency can determine whether or not a Streambed Alteration Agreement is necessary.

Fish and Game Code Section 3503: This section protects California's birds by making it unlawful to take, possess, or needlessly destroy the nest or eggs of any bird.

Fish and Game Code Section 3503.5: This section protects California's birds of prey and their eggs by making it unlawful to take, possess, or destroy any birds of prey or to take, possess, or destroy the nest or eggs of any such bird.

Fish and Game Code Section 3513: This section protects California's migratory birds by making it unlawful to take or possess any migratory nongame bird, as designated in the Migratory Bird Treaty Act, or any part of such migratory nongame bird.

Fish and Game Code Sections 3511, 4700, 5050, and 5515: These sections prohibit take of animals that are classified as fully protected in California.

Fish and Game Code Sections 1900 et seq: These sections designate state rare, threatened, and endangered plants.

Title 14, California Code of Regulations, Sections 670.2 and 670.5: These sections list animals of California designated as threatened or endangered.

8.2.8 Compliance with Applicable LORS

8.2.8.1 Federal Endangered Species Act

The HPP requires a Section 10 consultation with USFWS. It is anticipated that USFWS would require incidental take permits and habitat compensation to mitigate for the loss of habitat. A draft Biological Resources Mitigation Implementation and Monitoring Plan (BRMIMP) has been prepared that includes initial estimates of these mitigation requirements. USFWS will review and approve a final BRMIMP as part of the Section 10 consultation. The HPP is eligible to be covered under the Kern Water Bank Master Incidental Take Permit. HPP will participate in the Kern Water Bank Habitat Conservation Plan (HCP) through an agreed-upon payment to the Kern Water Bank to secure the appropriate compensation acreage.

8.2.8.2 Migratory Bird Treaty Act

The HPP BRMIMP will include measures to reduce any potential impacts to migratory birds to less-than-significant levels.

8.2.8.3 Clean Water Act

No intermittent streams, jurisdictional wetlands, or other "waters of the United States" would be impacted by the project. Therefore, no further action is needed to comply with the Clean Water Act.

8.2.8.4 California Environmental Quality Act

Preparation of this AFC and the subsequent review and licensing by the CEC will conform with CEQA requirements.

8.2.8.5 California Endangered Species Act

There is little or no chance for take of California-listed species. Thus, no CDFG Section 2081 permit will be required.

8.2.8.6 Fish and Game Code

No streams or streambeds would be impacted by the HPP. Therefore, no Streambed Alteration Agreement is required. In addition, a BRMIMP will be prepared to ensure there are no significant impacts.

8.2.9 Proposed Conditions of Certification

Proposed conditions of certification are included in Appendix K. Incorporation of these conditions will ensure that the HPP complies with all applicable LORS and will not result in significant impacts to biological resources.

8.2.10 Applicable Permits

The Hanford Energy Park Peaker project recently qualified to be covered under the Kern Water Bank Master Incidental Take Permit to mitigate permanent disturbance to agricultural lands. The HPP is almost identical in scope and geographic location to the Hanford project, and coverage under the Kern Water Bank permit should apply. No CDFG 2081 permit is necessary because there is little or no chance for take of individual listed animals.

8.2.11 Other Required Permits/Approvals

The following provides a list of other permits or approvals required:

Permit/Approval	Responsible Agency	Schedule
Section 10 Endangered Species Act Compliance	Kings County, USFWS	October 31, 2001

8.2.12 Agency Contacts

Agency	Contact/Title	Telephone
Kings County	William R. Zumwalt Director Kings County Planning Department 1400 W. Lacey Blvd. Hanford, CA 93230	(559) 582-3211

Agency	Contact/Title	Telephone
U.S. Fish and Wildlife Service	Peter Cross 2800 Cottage Way, W-2605 Sacramento, CA 95825	(916) 441-6655
California Department of Fish Game, Region 4	Bill Loudermilk, Regional Manager 1234 E. Shaw Avenue Fresno, CA 93710	(559) 243-4005

8.2.13 References

California Department of Fish and Game (CDFG), 1990. CDFG Region 4 Survey Methodologies for San Joaquin Kit Fox, Blunt-Nosed Leopard Lizard, San Joaquin Antelope Squirrel, Tipton Kangaroo Rat, and Giant Kangaroo Rat. Compiled by R. Rempel and G. Presley.

Twisselman, E. C., 1967. "A Flora of Kern County, California." Wasmann J. Biol. 24:1–395.

U.S. Fish and Wildlife Service (USFWS), 1989. Endangered and Threatened Wildlife and Plants. U.S. Government Printing Office: 1989-0-225-765:QL3.

TABLES

Table 8.2-1
Special-Status Species with Potential to Occur in the Vicinity of the HPP Site

Species	Status Federal/State/ CNPS	Habitat
Branchinecta longiantenna Longhorn fairy shrimp	-/E/-	Intermittent wetlands, vernal pools
Branchinecta lynchi Vernal pool fairy shrimp	-/E/-	Intermittent wetlands, vernal pools
Lepidurus packardi Vernal pool tadpole shrimp	-/T/-	Intermittent wetlands, vernal pools
Ambystoma californiense California tiger salamander	-/CSC/-	Intermittent wetlands, vernal pools
Gambelia sila Blunt-nosed leopard lizard	E/E/-	Open saltbush scrub and grassland habitats, roads, and open washes
Athene cunicularia Burrowing owl	-/CSC/-	Valley grasslands and open saltbush scrub
Lanius ludovicianus Loggerhead shrike	-/CSC/-	Valley grasslands and saltbush scrub
Buteo swainsoni Swainson's hawk	-/T/-	Open grassland or cropland with scattered trees
Dipodomys nitratoides nitratoides Tipton kangaroo rat	E/E/-	Western and southern side of the San Joaquin Valley, saltbush scrub, and other alluvial plain and low foothill habitats
Onychomys torridus tularensis Tulare grasshopper mouse	-/CSC/-	Scrub and grassland habitats on the west side of the San Joaquin Valley
Perognathus inornatus San Joaquin pocket mouse	-/CSC/-	Open habitats in the San Joaquin Valley
Taxidae taxus American badger	-/CSC/-	Grassland and scrub habitats of the San Joaquin Valley and surrounding foothills
Vulpes macrotis mutica San Joaquin kit fox	E/T/-	Grassland and scrub habitats of the San Joaquin Valley and surrounding foothills
Cirsium crassicaule Slough thistle	FSC/-/1B	Wet areas
Delphinium recurvatum Recurved larkspur	FSC/CSC/1B	Alkali sink, frequently with spiny saltbush
Caulanthus californicus California jewelflower	E/-/4	Open, sparsely vegetated areas in saltbush scrub and grassland

E = Endangered
T = Threatened
FSC = Federal Species of Concern
CSC = California Species of Concern
CNPS = California Native Plant Society
1B = Rare or endangered in California and elsewhere
4 = Plants of limited distribution

Table 8.2-2
Vascular Plants and Wildlife Observed During Biological Surveys

Common Name	Scientific Name
Alkali weed	*Cressa truxillensis*
Tumbling oracle	*Atriplex rosea*
Bull thistle	*Cirsium vulgare*
Cheese weed	*Malva parviflora*
Wire lettuce	*Stephanomeria pauciflora*
Common groundsel	*Senecio vulgaris*
Pepper grass	*Lepidium nitidum*
Jackass clover	*Wislizenia refracta*
Filaree	*Erodium cicutarium*
Rancher's fireweed	*Amsinckia menziesii* var. *intermedia*
Field mustard	*Brassica rapa*
Low Barley	*Hordeum depressum*
Salt grass	*Distichilis spicata*
Italian rye grass	*Lolium multiflorum*
Canary grass	*Phalaris minor*
Eucalyptus	*Eucalyptus sp.*
Western kingbird	*Tyrannus verticalis*
Red-winged black bird	*Agelaius phoeniceus*

Table 8.2-3
HPP Summary of LORS and Compliance

Jurisdiction	Authority	Administering Agency	AFC Conformance Section
Federal	Endangered Species Act of 1973; 16 USC § 1531 et seq.; 50 CFR Parts 17 and 222	USFWS	8.2.8
State	California Endangered Species Act of 1984; California Fish & Game Code §§ 2050–2091, 1603	CDFG	8.2.8
State	California Environmental Quality Act: California Public Resources Code § 21000 et seq.	CEC	8.2.8

FIGURES

Naval Air Station Lemoore

Existing 70-kv Henrietta Lemoore NAS Transmission Line

Existing 70-kV Henrietta Lemoore Transmission Line

NAS Lemoore Sewage Treatment Ponds

PG&E Henrietta Substation

GWF Project Proposed Transmission Route

Proposed Water Line

25th Avenue

Existing 230-kV Gates McColl and Gates Gregg Transmission Lines

Existing Co-located 115-kV Henrietta Kingsburg Transmission Line and 70-kv Henrietta Tulare Lake Transmission Line

Closed New Star Facility

Existing 70-kV Transmission Line

Existing115-kV Transmission Line

Southern California Natural Gas Pipeline

Proposed Gas Pipeline Route

N

0 0.25 0.5 0.75 1 Miles

1000 0 1000 2000 Feet

Scale 1:24,000

Source:
Base Maps from U.S.G.S.
7.5 Minute Quadrangles
Westhaven, Calif., (Photorevised 1981),
Stratford, Calif. (1954), Lemoore (1954) and
Vanguard (1956, Photorevised 1981)

Existing Transmission Lines

Transmission Route

Gas Pipeline Routes

Water Line

Plant Site

Developed Industrial

URS

GWF Henrietta Peaker Project

Project No. 51-00167032.00

Project Location Map

Figure 8.2-1

L:\Projects\GWF_Henrietta\Apr\proj1dhw.apr

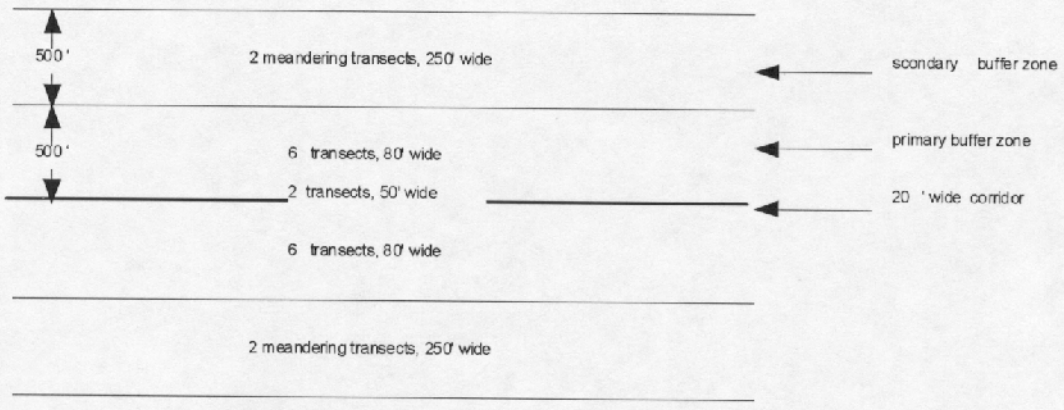

Fuel Line Corridor Survey Effort

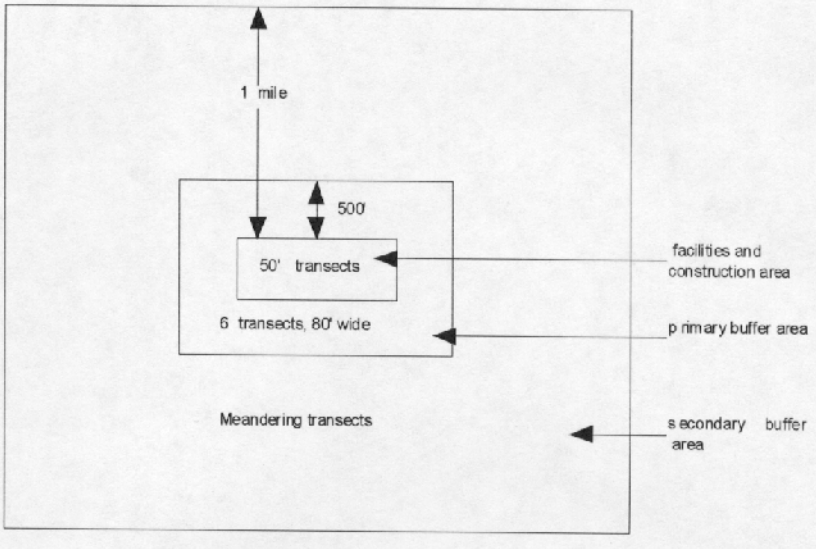

Facility Site Survey Effort

Figure 2. CEC Approved Biological Survey Effort.

URS	GWF Henrietta Peaker Project Project No. 51-00167032.00	CEC Approved Biological Survey Effort	Figure 8.2-2

Naval Air Station Lemoore

Existing 70-kv Henrietta Lemoore NAS Transmission Line

Affected Area

Existing 70-kV Henrietta Lemoore Transmission Line

NAS Lemoore Sewage Treatment Ponds

GWF Project Proposed Transmission Route

PG&E Henrietta Substation

Proposed Water Line

(1 mile)

25th Avenue

Existing 230-kV Gates McColl and Gates Gregg Transmission Lines

Existing Co-located 115-kV Henrietta Kingsburg Transmission Line and 70-kv Henrietta Tulare Lake Transmission Line

Closed New Star Facility

Existing 70-kV Transmission Line

Existing115-kV Transmission Line

Southern California Natural Gas Pipeline

Proposed Gas Pipeline Route

Habitat Type: Intensive Agriculture

N

0 0.25 0.5 0.75 1 Miles

1000 0 1000 2000 Feet

Scale 1:24,000

Source:
Base Maps from U.S.G.S.
7.5 Minute Quadrangles
Westhaven, Calif., (Photorevised 1981),
Stratford, Calif. (1954), Lemoore (1954) and
Vanguard (1956, Photorevised 1981)

Existing Transmission Lines

Transmission Route

Gas Pipeline Routes

Water Line

Plant Site

Developed Industrial

URS	GWF Henrietta Peaker Project	Project Location and Affected Area	Figure 8.2-3
	Project No. 51-00167032.00		

L:\Projects\GWF_Henrietta\Apr\proj1dhw.apr

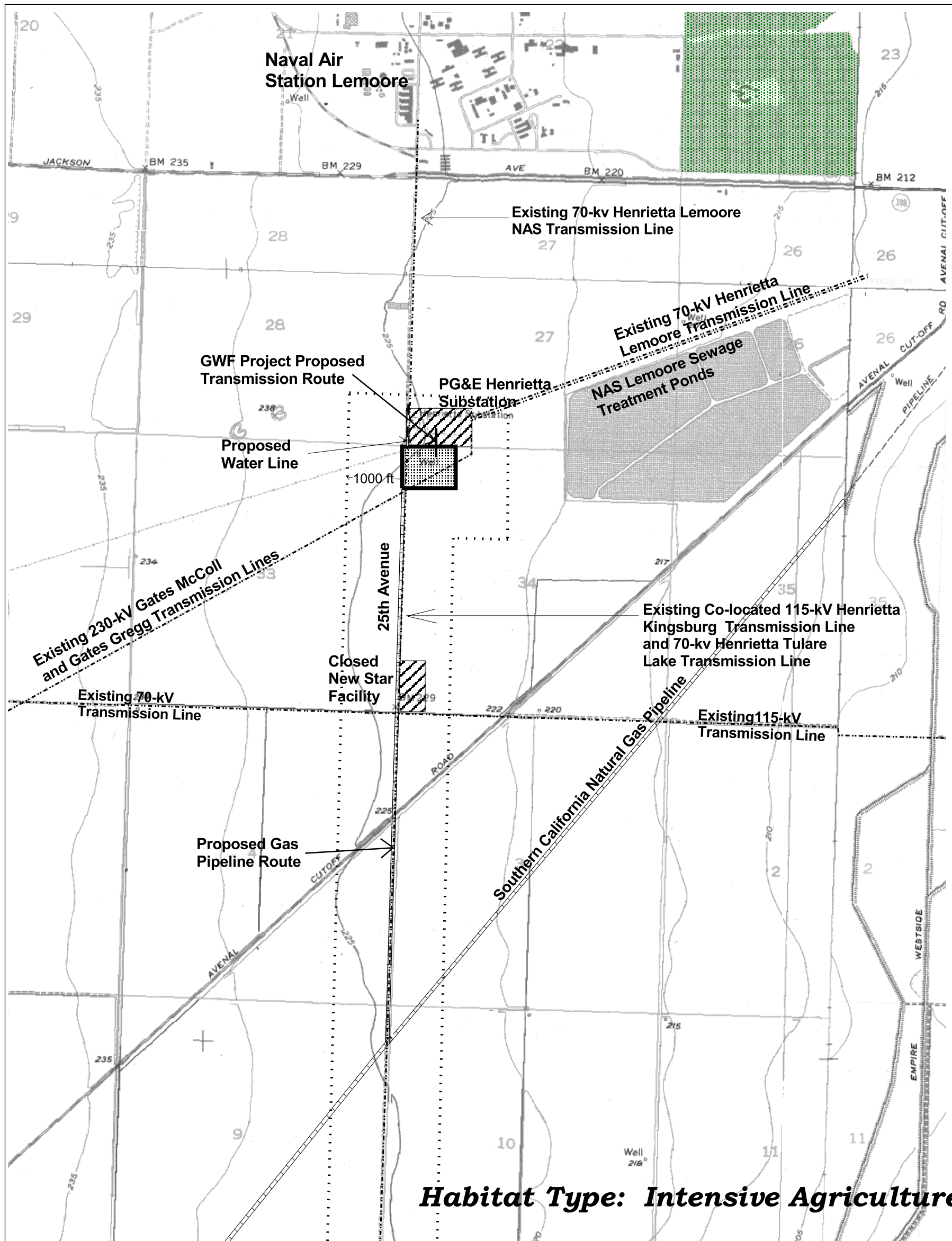

N

0 0.25 0.5 0.75 1 Miles

1000 0 1000 2000 Feet

Scale 1:24,000

Source:
Base Maps from U.S.G.S.
7.5 Minute Quadrangles
Westhaven, Calif., (Photorevised 1981),
Stratford, Calif. (1954), Lemoore (1954) and
Vanguard (1956, Photorevised 1981)

Existing Transmission Lines
Transmission Route
Gas Pipeline Routes
Water Line
1000 ft. Corridor
Plant Site
Developed Industrial

URS	GWF Henrietta Peaker Project	Natural Gas Pipeline and Transmission Line Corridor	Figure 8.2-4
	Project No. 51-00167032.00		

L:\Projects\GWF_Henrietta\Apr\proj1dhw.apr

8.3 Cultural Resources

The Henrietta Peaker Project (HPP) consists of a 91.4-megawatt (MW) (net), natural-gas-fired, simple-cycle power plant located approximately 10 miles southwest of Lemoore, California, on a seven-acre portion of a 20-acre parcel owned by GWF Energy LLC (Figure 8.3-1). The HPP will interconnect to the existing adjacent Pacific Gas and Electric Company (PG&E) Henrietta Substation through a new 550-foot 70-kilovolt (kV) transmission line supported on two new transmission poles (Figure 8.3-2). Other linear facilities include an approximately 16.5-foot water interconnection pipeline (from the site property boundary) and a 2.2-mile Southern California Gas Company natural gas interconnection pipeline. Additionally, approximately five acres will be used for temporary construction laydown and parking. The temporary staging/parking areas will be located within the 20-acre parcel, as shown on Figure 2-3a.

Cultural resources include archaeological and historical sites, objects, and districts; historic structures; cultural landscapes; and sites of concern to local Native Americans and other ethnic groups. This section documents the cultural resources that could be adversely affected by the construction and operation of the HPP. Measures are proposed to mitigate potential adverse impacts to cultural resources.

This analysis was completed in compliance with California Energy Commission (CEC) *Instructions to the California Energy Commission Staff for Review of and Information Requirements for an Application for Certification* (CEC, 1992) and *Rules of Practice and Procedure and Power Plant Site Certification Regulations* (CEC, 2000). Detailed information on the cultural resources in the study area for the HPP has been included in a confidential technical appendix (Appendix C) to this Application for Certification (AFC) and submitted to the CEC under a request for confidentiality pursuant to Title 20, California Code of Regulations (CCR), Section 2501 et seq.

8.3.1 Affected Environment

8.3.1.1 Study Area

The plant site and all linear project components were subjected to a records search within a 0.75-mile study area (i.e., 0.75 miles on each side of the centerline for linear components, and a 0.75-mile study area around the outer boundaries of the plant site). Table 8.3-1 outlines all project components addressed in this section.

8.3.1.2 Project Description

A detailed project description can be found in Section 2.0.

8.3.1.3 Environmental Setting

The environmental setting of the HPP is the central San Joaquin Valley. Topographically, the valley is an expansive flatland comprising alluvial floodplains, river and creek channels, dried lakebed, marshes, sloughs, and various other riparian environments. The environmental setting is also characterized by uplands of low and gradual relief. Regionally, the land slopes gently to the east. During prehistoric times (i.e., late Pleistocene and early Holocene), wetlands covered more than 3,000 square miles of the San Joaquin Valley area (Moratto, 1984). The HPP area lies to the north of the Tulare Lake bed and south of the Kings River. The plant site is at an elevation of approximately 225 feet above mean sea level (MSL) and is relatively flat with little topographic relief.

8.3.1.4 Prehistory

The now-desiccated wetlands of Tulare Lake and its sister to the south, Buena Vista Lake, have been the focus of most archaeological research in the southern San Joaquin Valley. It is from this area that numerous local chronologies have been constructed.

During the 1930s, W.R. Wedel conducted archaeological excavations at a complex of midden and burial sites along the southwestern perimeter of Buena Vista Lake (Wedel, 1941), in particular at the ethnohistoric Yokuts village of Tulamniu. The results of his archaeological program at Ker-39 and Ker-60 (Tulamniu, now Ker-116) and adjacent hilltop

cemeteries (Ker-40 and Ker-41) led Wedel to conclude tentatively that there were typological relationships between these Central Valley sites and other archaeological assemblages outside of the region.

On the basis of milling artifact and burial types and other traits, Wedel speculated that there were similarities between the taxonomies applicable to lower deposits of Ker-39 and Ker-60, the Oak Grove culture found along the Santa Barbara coast, and the Early Horizon in the San Joaquin Delta. Moratto (1984) also notes similarities between archaeological manifestations at the Buena Vista and the Oak Grove localities that include extended burials, milling stones, and stemmed and leaf-shaped projectile points. Wedel also described patterns in the upper deposits of the southern San Joaquin sites that suggest ties to the Middle Delta and Late Horizon and even stronger associations with southern California groups.

Excavations in the 1950s at Tulare Lake led archaeologists Warren and McKusick (1959) to propose the following tripartite chronology for the Southern San Joaquin Valley region. This chronology was recognized, in part, by burial practice.

1. Early: ? to 2000 B.C.
   The preferred burial position is extended, supine or prone, with no burial goods.

2. Middle: 1500 B.C.–A.D. 500
   The preferred burial position is supine, semiflexed, with few burial goods.

3. Late: A.D. 500 to ethnographic present
   The preferred burial position is tightly flexed on the side or in a supine position. There are usually a moderate amount of burial goods, and the individuals are often interred with artifacts of European origin.

This chronology is essentially based on variations of the older three-horizon "Delta Sequence" (i.e., river deltas at the confluence of the San Joaquin and Sacramento Rivers, east of San Francisco Bay), which proposed the following chronology: an early period, a transitional period, and a late period.

The Warren and McKusick tripartite chronology was supplanted by a much longer chronology in the 1960s, when new archaeological excavations by Fredrickson (1964) at the previously excavated Ker-116 site resulted in the discovery of a deeper stratum. This work

began to fill in the unknown early period (the "?" in the early period proposed by Warren and McKusick).

Evidence of Early Holocene Paleoindian (circa 12000–8000 Before Present [B.P.]) cultural activities within the southern San Joaquin Valley has been firmly substantiated, though the sites do not necessarily span the region in great quantity. The paleo-shoreline sites of Tulare Lake have provided nearly all of the diagnostic materials, including fluted projectile points (described as Clovis-like), scrapers, and chipped crescents (Moratto, 1984). The fluted projectile points of the San Joaquin Valley sites associate with sites to the east, in the Mojave Desert, and can be loosely classified into a "Far Western Fluted-Point Tradition" (Moratto, 1984). These sites appear along paleo-shorelines, piedmont zones of former grasslands and in mountain passes associated with fossil lakes. The lithic assemblage typically contains chipped stone crescents, gravers, scrapers, choppers, perforators, and various fluted points.

The often-cited Witt site, situated along the paleo-shores of Lake Tulare in the San Joaquin Valley, has produced numerous fluted chert points, scrapers, chipped crescents, Lake Mojave–type points, and other artifacts associated with the so-called Fluted-Point Tradition. The Witt site (surface dimensions measuring 1.5 miles long and 0.5 miles wide) has also yielded numerous specimens of extinct early Holocene fauna in similar contexts to the cultural materials. If these finds are generally contemporaneous, the area could have fluted-point cultural connections earlier than 11,000 B.P. (Moratto, 1984). It is of interest to note that a fluted point was found in the Tehachapi Mountains (Moratto, 1984), which is in proximity to the project area.

Fredrickson (1964), while working on the paleo-shoreline of Buena Vista Lake at site Ker-116, discovered a stratum deeper than those previously excavated. Artifacts and apparently associated freshwater mollusk shell were discovered below the strata excavated in the 1930s. The results of radiocarbon dating on the shell suggest that the site and hence the region were initially occupied at least 8,000 years B.P. If the Buena Vista Lake dates on shell and their association with cultural materials are valid, the site may be a manifestation of the Western Pluvial Lakes Tradition. Although this tradition was originally described by Bedwell (1970) as a

subsistence-settlement pattern adapted and focused on post-Pleistocene pluvial lakes, Great Basin investigations suggest a more complex response to changing environmental conditions.

8.3.1.5 Ethnography

The study area is located within the ethnographic boundaries of the Southern Valley Yokuts, the historical occupants of the central and southern San Joaquin Valley (Figure 8.3-4). The discussions below are primarily derived from Wallace (1978).

"Yokuts" is a term applied to a large number of people inhabiting the San Joaquin Valley and Sierra Nevada foothills of central California. The Southern Valley Yokuts tribes inhabited the southern or lower end of the San Joaquin Valley, from the lower Kings River to the Tehachapi Mountains, and formed the nucleus of a culture that differed in significant respects from that of the northern and foothill Yokuts tribes. Many of the differences can be attributed to ecological factors. The lifestyle of the Southern Valley Yokuts tribes was closely integrated with the natural circumstances of the unique lake-slough-marsh environment central to their territory. The homeland of the Southern Valley Yokuts included Tulare, Buena Vista, and Kern Lakes, their connecting sloughs, and the lower portions of the Kings, Kaweah, Tule, and Kern Rivers (Wallace 1978). Ethnohistoric Yokuts tribes occupying the area north of Tulare Lake near Lemoore included the Wimilchi, the Telamni, and the Nutunutu, which had an aggregate population of perhaps 2,000 people in precontact times.

The lake and marshland environment of the southern San Joaquin Valley sheltered an enormous variety and abundance of wildlife and permitted the Southern Valley Yokuts tribes to occupy fairly permanent annual residences. The Southern Valley Yokuts relied heavily on fish, waterfowl, roots (especially tule roots), seeds, mussels, turtles, shellfish, and rabbits. Acorns were not readily available in the San Joaquin Valley floodplain and thus did not constitute as large a staple food source as they did among other California Indians.

The biological family consisted of a husband, wife, and their offspring and formed the basic domestic and economic unit in Southern Valley Yokuts society. Family groups were affiliated in patrilineal totemic lineages, but no extensive political unity existed within the several Southern Valley Yokuts tribes. Instead, they were split into self-governing, local groups

or miniature tribes averaging 350 members. Each had a special name for itself, spoke a different dialect, and claimed a strip of territory of about 250 square miles. The territory was owned collectively, and every tribal member enjoyed the right to utilize the resources of the territory. In some localities, individual women claimed tracts that yielded plentiful supplies of seeds.

In some cases, a single village constituted a political unit, but usually the tribelet was divided among several permanent settlements, with the largest recognized as dominant. The names and approximate locations of almost 50 ethnohistoric Southern Valley Yokuts settlements are known. People lived for most of the year in the permanent village, and vacated in family groups in the late spring or early summer for varying periods of time to gather seeds and other wild plant foods. Camp locations were shifted with the change of seasonally available crops through the summer and into the fall, but people would return to the seasonal village for the winter. Overall, Southern Valley Yokuts communities tended to remain relatively stable.

The smallest and least elaborate residences were the single-family dwellings. These were pole-framed, domed structures on an oval floor plan, with large tule mats covering the wooden framework. Long, steep-roofed communal residences sheltered ten families or more; sections of the big mat-covered structures, each with its own fireplace and door, were apportioned to individual families. Other structures included mat-covered granaries and at least one communally owned sweathouse per village. The men did their daily sweats and, occasionally, slept in these sweathouses.

The Southern Valley Yokuts were encountered by the Spaniards soon after they settled in California. In the fall of 1772, Pedro Fages led a small band of soldiers through Tejon Pass and down into the southernmost part of the San Joaquin Valley. There, he visited a native village on the shores of Buena Vista Lake before continuing his westward journey to San Luis Obispo.

After a visit by the friar and explorer Francisco Garces in 1776, there was infrequent contact between the Spanish and the Southern Valley Yokuts for nearly three decades. However, a new series of Spanish expeditions into the interior began in 1806. No ranchos were established in the lake country, and the Mexican influence on the tribes appears to have been

slight until 1833. In that year, an epidemic of unusual severity, possibly malaria, devastated the native population. An estimated mortality rate of 75 percent occurred during this period.

The great influx of nonnative populations (i.e., Europeans), shortly after the annexation of California by the United States in 1848, led to a rapid cultural breakdown—and the near-total disappearance—of the Southern Valley Yokuts tribes. Although there was no gold in the valley to draw the vast immigrations of the Gold Rush, settlers seeking farm and ranch lands soon overran the country, driving out or disenfranchising the surviving Yokuts. Surviving Southern Valley Yokuts went to the Fresno Reservation, located on leased land near Madera, or the Tejon Reservation, established at the base of the Tehachapi Range.

In 1970, approximately 325 Yokuts lived on the 54,110 acres of the Tule River Reservation. Their economy was fairly good and relatively stable due to the employment of most of the men in the lumber industry, income from the harvest of Indian-owned timber, and the lease of grazing lands.

8.3.1.6 History

The first European explorers reached the Tulare Lake area during the expedition of Spanish Captain Pedro Fages to the San Joaquin Valley in 1772. Fages, who was at that time acting governor of Alta California, was in pursuit of deserters from the Spanish army (Hoover, Rensch, and Rensch, 1966).

The Spanish focused their settlements on the coast and in nearby valleys, leaving the interior largely to its original inhabitants. Although the Spanish entered and explored the Central Valley in 1775, they established no permanent settlement in the interior. After successfully throwing off Spanish rule in 1820–1824, the Mexicans continued the general pattern of settlement in California established by the Spanish government. Late in the 1830s, the Mexican government began to grant ranchos to Mexican and foreign settlers. Although the ranchos tended to be clustered in the vicinity of formerly Spanish coastal settlements, a few were located in the interior. However, no Spanish or Mexican land grants were made in Kings County (Hoover, Rensch, and Rensch, 1966; Bissell, 1990).

Kings County was organized in 1893 from a part of Tulare County and was later augmented by two small parts of Fresno County. The county is named for the Kings River, which was originally given the name "El Rio de los Santos Reyes" in 1805 by Spanish Explorers. The dominant feature of the county in historic times was Tulare Lake, which in 1865 was 40 by 65 miles, with another large area covered by marsh. The lake and its surrounding marshes were gradually drained for irrigation. The city of Lemoore, closest town to the HPP site became an incorporated city on July 11, 1900 and was named after a visionary man named Dr. Lavern Lee Moore, who organized individual farming families into a working community (Hoover, Rensch, and Rensch, 1966).

8.3.2 Cultural Resources Inventory

8.3.2.1 Documentary Research

Prior to conducting the field survey of the HPP site, a record search was performed at the Southern San Joaquin Valley Information Center (SSJVIC) of the California Historic Resources Information System (CHRIS). The record search encompassed the HPP site, its associated linear facilities, and a 0.75-mile-radius area around them. Information was requested on archaeological sites and historic built environment resources. Information sources included the National Register of Historic Places, California Historic Landmarks, California Register of Historic Resources, and California Points of Historical Interest. This record search was conducted on May 10, 2001 (RS #01-253). A second record search was conducted on May 22, 2001 (RS #01-257) after an additional linear component was added to the project. Both record searches indicated that prior archaeological surveys had not been conducted in the study area. Additionally, there are no previously recorded cultural resources in the study area.

8.3.2.2 Native American Consultation

Concurrent with the records search at the SSJVIC and prior to the field survey, the California Native American Heritage Commission (NAHC) was contacted for a list of local Native American groups and/or individuals with knowledge of cultural resources within or near the study area (defined as a one-mile radius around the HPP site and its associated linear facilities). These consultations also sought to identify any sacred lands within the study area

listed in the NAHC's Sacred Lands File. A record search of the file did not indicate the presence of Native American cultural resources in the immediate area of the HPP site.

A letter describing the proposed HPP and its components and a map of the proposed HPP plant site were sent to the one person identified by the NAHC. The letter inquired whether he or any members of his group had concerns about the project or wished to provide input regarding cultural resources in the project area. One respondent informed URS that his tribal members did not recall any Native American village sites within the vicinity of the HPP, but that he knew of a historic Indian farm house/ranch settlement and a prehistoric site within one-mile of the project area. This individual and a representative from his tribal Elders Council made a site visit on June 14, 2001. Due to the proximity of known sites in the area this individual and his tribal community are concerned that the construction of the HPP could result in the discovery of previously unknown cultural resources. They recommended that a Native American monitor be present during excavation activities. The log documenting this correspondence can be found in the confidential technical report, Appendix C.

8.3.2.3 Key Personnel Qualifications

The URS cultural resources personnel who conducted and/or supervised the field survey and prepared the technical report and this section are:

- Brian Hatoff, MA, RPA (Principal Investigator)
- Rachael Egherman, BA (URS Archaeologist)

Mr. Hatoff meets the professional standards of the Secretary of the Interior (*Standards and Guidelines for Archeology and Historic Preservation*, National Park Service, 1983) and is professionally certified by the Register of Professional Archaeologists.

8.3.2.4 Field Survey Methodology and Coverage

The cultural resources inventory provided the basis for evaluating project impacts to cultural resources likely to be present in the project area. Review of the inventory results indicated that no portions of the project area had previously undergone archaeological survey,

suggesting the need for a field inventory. Wherever possible, a pedestrian survey was conducted. In all cases, the subject lands were visually inspected.

Archaeology. Figure 8.3-3 illustrates the project components and the areas surveyed for cultural resources. Table 8.3-2 gives the specific coverage details and field conditions encountered at each project component. A crew of six archaeologists and field technicians conducted the field survey on May 17–18, 2001. The pedestrian survey covered the 20-acre proposed HPP site plus a 200-foot buffer zone around it, in 65-foot linear transects. For the linear features, a 400-foot corridor (200 feet on either side of the centerline) was surveyed in 65-foot linear pedestrian transects. However, the survey corridor had to be narrowed in one area along the proposed gas pipeline route where a fenced-in modern (post-1970s) New Star warehouse facility is located. This facility is entirely paved and would have afforded zero ground visibility had it been surveyed. Construction would not affect this built environment feature and is therefore considered to be outside the Area of Potential Effect (APE) for the HPP.

Built Environment. No historic built environment structures in the vicinity of the HPP exhibit qualities that would make them eligible for inclusion on the National Register of Historic Places or the California Register of Historic Resources. Only two facilities exist within or near the project APE. Because the structures are not over 50 years old, they are not considered historically significant, and no further research or recordation is necessary. The New Star facility is a trucking transfer station that would not be affected by the HPP and is therefore considered outside the project APE. The second facility is the Henrietta Substation, which is inside the project APE. This substation was constructed in the 1960s. Limited construction activities would be performed inside the Henrietta Substation to interconnect the HPP transmission line. These built environment facility locations are shown on Figure 8.3-2 and identified as “developed industrial” in the legend.

Survey Results. Except for the areas where the corridors were obstructed, ground visibility was good. No prehistoric or historic resources were located during the survey. No historic built environment resources were located during the survey.

8.3.2.5 Sensitivity

Although no prehistoric resources were located during the survey, and no recorded prehistoric resources are known to exist within 0.75 miles of the HPP site and its linear facilities, the members of the Native American community consulted for this project are aware of unrecorded sites within one mile of the project area. The sensitivity of the HPP project area is moderate for prehistoric sites potentially eligible for inclusion on the National Register of Historic Resources. The sensitivity of the HPP is low for historic resources potentially eligible for inclusion on the National Register of Historic Resources. No historic resources were located during the survey, and no historic resources are known to exist within 0.75 miles of the project area.

8.3.3 Environmental Consequences and Direct, Indirect, and Cumulative Impacts

No impacts to cultural resources are anticipated. However, unidentified buried cultural resources could potentially be present. Because no significant impacts to cultural resources are anticipated as a result of the HPP, no direct, indirect, or cumulative effects on the cultural resources of the area are anticipated.

8.3.4 Mitigation Measures

8.3.4.1 General Mitigation Measures

No significant or potentially significant cultural resources are known to exist within the study area. It is possible that previously unknown cultural resources may be discovered in the course of the construction of the HPP. Construction personnel will be instructed to halt their activities if such materials are discovered. In the event of unanticipated discoveries of previously unknown cultural resources, a qualified archaeologist will evaluate the find for significance and, if necessary, recommend further mitigation measures.

The HPP will document and report to the CEC the discovery during construction of any previously unknown significant cultural resources and consult with CEC staff regarding the management of any such resources, including the design and implementation of appropriate mitigation measures if the resource cannot be avoided.

If human remains are encountered during construction activities, work will stop immediately within 100 feet of the discovery, and the provisions of California Health and Safety Code Section 70500.5, Public Resources Code Section 5097.98, and other applicable sections shall apply.

It is anticipated that the construction of the HPP would not result in any avoidable direct or indirect impacts to significant cultural resources. Consequently, the HPP would not contribute to cumulative, adverse, direct or indirect impacts to cultural resources in the study area.

8.3.4.2 Proposed Conditions of Certification

Proposed conditions of certification are contained in Appendix K. These conditions are proposed in order to ensure compliance with applicable LORS and/or to reduce potentially significant impacts to less-than-significant levels.

8.3.5 Laws, Ordinances, Regulations, and Standards

A discussion of the applicable LORS follows (see Table 8.3-3). Federal regulations, which generally only apply to federal undertakings, are included here for the sake of completeness.

8.3.5.1 Federal Authorities and Administering Agencies

National Historic Preservation Act of 1966 (NHPA), as amended (16 United States Code [USC], Section 470 et seq.; NHPA Section 106; 36 Code of Federal Regulations [CFR] 800): This authority includes provisions for protection of significant archaeological and historical resources. Procedures for dealing with previously unsuspected cultural resources discovered during construction are identified in 36 CFR 800 (for implementing NHPA Section 106 processes). The administering agency for this authority is the State Historic Preservation Officer (SHPO) and the federal lead agency. Federal involvement has not yet been identified for the HPP; a lead federal agency will be identified if the HPP is determined to be a federal undertaking.

National Environmental Policy Act of 1968 (NEPA), as amended (USC Sections 4321–4327; 40 CFR 1502.25): NEPA requires analysis of potential environmental impacts to cultural resources. Federal involvement has not yet been identified for the HPP; a lead federal agency will be identified if the project is determined to be a federal undertaking.

Federal Antiquities Act of 1906 (16 USC 432, 433): This act serves as the basis for legislation regarding the preservation of cultural properties on federal lands, provides for a permit process for scholarly use of properties, and stipulates misdemeanor-level penalties for theft, vandalism, or destruction of cultural resources. Federal involvement has not yet been identified for the HPP; a lead federal agency will be identified if the project is determined to be a federal undertaking.

Executive Order 11593: Directs federal agencies to inventory cultural properties under their jurisdiction, to nominate properties to the National Register of Historic Places, and to use due caution until the inventory and nomination processes are completed. Federal involvement has not yet been identified for the HPP; a lead federal agency will be identified if the project is determined to be a federal undertaking.

Archaeological Resources Protection Act of 1979 (42 USC 470aa et seq.): This act provides felony-level penalties for removal or damage to archaeological resources that are more than 100 years old. Federal involvement has not yet been identified for the HPP; a lead federal agency will be identified if the project is determined to be a federal undertaking.

Native American Graves Protection and Repatriation Act of 1990 (25 USC 3001): This act establishes the rights of Indian tribes and Native Hawaiians to claim ownership of certain cultural items held or controlled by federal agencies. Federal involvement has not yet been identified for the HPP; a lead federal agency will be identified if the project is determined to be a federal undertaking.

Archaeological and Historic Preservation Act of 1976 (16 USC 469): This act provides for the preservation of historical and archaeological data that might otherwise be lost as the result of a federal construction project or a federally licensed or assisted project. Federal

involvement has not yet been identified for the HPP; a lead federal agency will be identified if the project is determined to be a federal undertaking.

Secretary of the Interior's Standards and Guidelines for Archeology and Historic Preservation (September 29, 1983): These guidelines are nonregulatory standards for the gathering and treatment of data related to cultural resources. The administering agency for the above authority is the Secretary of the Interior and the lead federal agency, which will be identified if the project is determined to be a federal undertaking.

Prevention of Significant Deterioration Permit (PSD): Provided when the project is a federal undertaking and requires compliance with Section 106 of the NHPA. A PSD permit is not required for the HPP.

American Indian Religious Freedom Act of 1979 (42 USC 1996): It is the policy of the United States to protect and preserve the right of American Indians (and other indigenous groups) to express and exercise their traditional religions, including access to religious sites. Federal involvement has not yet been identified for the HPP; a lead federal agency will be identified if the project is determined to be a federal undertaking.

8.3.5.2 State Authorities and Administering Agencies

California Environmental Quality Act (CEQA), Section 15064.5; California Public Resources Code, Sections 5024, 5024.5, and 21083.2; Title 14, CCR Section 15126: CEQA addresses the treatment of cultural resources that could be affected by the HPP, the importance of these resources, potential project impacts to important cultural resources, and the development of a plan to avoid or mitigate any adverse effects to these resources. Formal findings of importance (for state purposes, eligibility for the California Register of Historic Resources) and project effects are made by the lead state regulatory agency or, for federal undertakings, in consultation with the federal lead agency, the State Historic Presentation Officer, and the Advisory Council on Historic Preservation. The administering agency for this authority is the CEC.

California Public Resources Code, Sections 25523(A), 25527; 20 CCR Sections 1752, 1752.5, 2300–2309, and Chapter 2, Subchapter 5, Article 1, Appendix B, Part (i): This authority provides that the CEC consider protection of environmental quality in its decision on an AFC. This AFC includes a detailed description and discussion of potential environmental impacts in the project area. In its evaluation, the CEC is also required to give special consideration to the need for protection of unique historical, archaeological, and cultural sites. The administering agency for this authority is the CEC.

California Health and Safety Code, Section 7050.5: This authority provides for County Coroner identification of human remains and, if determined to be of Native American origin, coordination with the Native American Heritage Commission. The administering agency for this authority is the Kings County Sheriff-Coroner (Medical Examiner).

California Public Resources Code, Section 5024.1: This authority provides for the establishment of the California Register of Historic Resources and describes the procedures for nominating sites to the register. The administering agency for this authority is the State Historical Resources Commission.

California Public Resources Code, Sections 5097.94 and 5097.98: This authority provides for mediation of disputes related to the recovery and treatment of Native American remains and the identification of Most Likely Descendants. The administering agency for this authority is the Native American Heritage Commission.

California Public Resources Code, Section 5097.5: This authority makes it a misdemeanor to remove, without authorization, archaeological resources or paleontological remains from sites located on public lands. The administering agency for this authority is the Kings County Planning Department.

8.3.5.3 Local Authorities and Administering Agencies

Open Space Element of the Kings County General Plan: Goal 26 of the open space element stipulates the preservation of significant historical and archaeological sites and

structures in Kings County. Kings County also follows all provisions of CEQA regarding cultural resources. The administering agency for this authority is the Kings County.

City of Lemoore: Although the HPP is not located within the City of Lemoore, the administrative agency for the City of Lemoore will be consulted regarding conformance with the cultural resources provisions of CEQA.

8.3.5.4 Industry Codes and Standards

No industry codes or standards are applicable to the HPP.

8.3.6 Involved Agencies and Agency Contacts

Agencies with jurisdiction to issue applicable permits and/or enforce LORS related to cultural resources are shown in Table 8.3-4.

8.3.7 Permits Required and Schedule

No permits pertaining to cultural resources are required.

8.3.8 References

Bedwell, S.F., 1970. *Prehistory and Environment of the Pluvial Fort Rock Lake Area of South Central Oregon*. Unpublished Ph.D. dissertation, University of Oregon, Eugene.

Bissel, Ronald M., 1990. *Cultural Resources Reconnaissance of the Proposed Kettleman Landfill, Expansion of the Hanford Landfill, Three Transfer Stations and Access Roads, Kings County, California*. RMW Palaeo Associates, Mission Viejo, California.

California Energy Commission, 1992. *Instructions to the California Energy Commission Staff for Review of and Information Requirements for an Application for Certification.* Sacramento.

California Energy Commission, 2000. *Rules of Practice and Procedure and Power Plant Site Certification Regulations.* Sacramento.

Fredrickson, D. A., 1964. *Preliminary Impressions of the Archaeology at KER-116*. Report to the California Department of Parks and Recreation. Sacramento.

Hoover, M. B., H. E. Rensch, and E. G. Rensch, 1966. *Historic Spots in California.* 3rd edition. Stanford: Stanford University Press.

Moratto, M., 1984. *California Archaeology*. Florida: Academic Press.

Wallace, W., 1978. "Southern Valley Yokuts." In *Smithsonian Handbook of North American Indians, Volume 8, California*. R. F. Heizer, ed., 448–461. Washington, D.C.: Smithsonian Institution Press.

Warren, C., and M.B. McKusick. 1959. A burial complex from the southern San Joaquin Valley. *University of California, Los Angeles, Archaeological Survey Annual Report, 1959*: 17–26.

Wedel, R., 1941. *Archaeological Investigations at Buena Vista Lake, Kern County, California.* Bureau of American Ethnology, Bulletin 130. Washington, D.C.

TABLES

Table 8.3-1
Project Components

Component	Description
Plant Site	A seven-acre project site, on 20-acre parcel in Kings County.
Linear Components	
Transmission Route	A 550-foot-long transmission line between the HPP and the PG&E Henrietta Substation.
Water Pipeline Route	A 16.5-foot line connecting the HPP site with the Westlands Water District pipeline.
Natural Gas Pipeline Route	A 2.2-mile natural gas pipeline route partially within a paved road and a dirt farm road.
Construction Staging Area	
Construction Staging/Parking Area	An approximately five-acre area located within the 20-acre project site.

Table 8.3-2
Archaeological Survey Coverage by Project Component and Field Conditions

Project Component	Field Conditions	Comments
Plant Site	95 percent ground visibility, area spans agricultural lands, which at the time of the survey had small cotton seedlings growing affording good ground visibility.	Pedestrian field inspection, good ground visibility.
Transmission Route	95 percent ground visibility, area spans a dirt farm road, a portion of the Henrietta Substation, and agricultural lands, which at the time of the survey had small cotton seedlings growing affording good ground visibility.	Pedestrian field inspection, good ground visibility.
Natural Gas Pipeline Route	0-95 percent ground visibility, area spans a paved road, agricultural lands, and a wide dirt road. Within the paved portion of 25th Avenue and in the agricultural field south of Avenal Cutoff Road and west of 25th Avenue where dense barley was growing at the time of the survey there was zero ground visibility. The area where the New Star facility is located was not inspected.	Pedestrian field inspection, good ground visibility except along the paved road and in the one agricultural parcel with dense barley growth.
Water Pipeline Route	The 16.5-foot right-of-way is not markedly different from the project site described above.	Pedestrian field inspection, good ground visibility.

Table 8.3-3
Summary of LORS and Compliance

Jurisdiction	Authority	Administering Agency	Requirements/Compliance	AFC Conformance Section
Federal †	NHPA, as amended; 16 USC § 470 et. seq.; Section 106; 36 CFR § 60.4 and 800.	SHPO/Lead Federal Agency †	Formal findings by the lead federal agency for cultural resources in consultation with the State Historic Preservation Officer and the Advisory Council on Historic Preservation. Implement procedures for dealing with cultural resources discovered during construction.	8.3.5.1, Appendix K
Federal †	NEPA; 42 USC §§ 4321 - 4327; 40 CFR § 1502.25.	Lead Federal Agency †	Analysis of potential environmental impacts on federal lands.	8.3.5.1, Appendix K
Federal †	Federal Antiquities Act of 1906: 16 USC §§ 432, 433	Lead Federal Agency †	Basic legislation for preservation of cultural properties on federal lands.	8.3.5.1, Appendix K
Federal †	Executive Order 11593	Lead Federal Agency †	Directs federal agencies to inventory, nominate properties to the National Register of Historic Resources and protect cultural resources	8.3.5.1, Appendix K
Federal †	Archaeological Resources Protection Act of 1979 (16 USC § 470a et seq.).	Secretary of the Interior and Lead Federal Agency †	Provides for felony-level penalties for destruction, damage or removal of cultural resources on federal lands.	8.3.5.1, Appendix K
Federal †	Native American Graves Protection and Repatriation Act of 1990 (25 USC § 3001).	Lead Federal Agency †	Establishes mechanism for right of Indian tribes to claim ownership of human remains and certain cultural items.	8.3.5.1, Appendix K
Federal †	Archaeological and Historic Preservation Act of 1976 (16 USC § 469)	Secretary of the Interior and Lead Federal Agency †	Provides for coordination with the Secretary when a federally licensed undertaking may cause irreparable damage to significant cultural resources.	8.3.5.1, Appendix K
Federal †	Secretary of the Interior's Standards and Guidelines, September 29, 1983.	Secretary of the Interior and Lead Federal Agency †	Establishes standards for the gathering and treatment of data related to cultural resources.	8.3.5.1, Appendix K

Table 8.3-3 (continued)
Summary of LORS and Compliance

Jurisdiction	Authority	Administering Agency	Requirements/Compliance	AFC Conformance Section
Federal †	Prevention of Significant Deterioration (PSD) permit.	U.S. Fish and Wildlife Service † (via delegation to South Coast Air Quality Management District)	Requires compliance with Section 106 of the National Historic Preservation Act.	8.3.5.1, Appendix K
Federal †	American Indian Religious Freedom Act of 1979 (42 USC 1996)	Lead Federal Agency †	Gives American Indians the right to express and exercise their traditional religions, including access to religious sites.	8.3.5.1, Appendix K
State	California Environmental Quality Act (CEQA) § 15064.5; California Public Resources Code §§ 5024, 5024.5, and 21083.2; Title 14, CCR § 15126.4.	CEC	Formal findings by the lead state agency regarding project-related effects to important cultural resources.	8.3.5.2, Appendix K
State	Cal. Pub. Res. Code §§ 25523(A), 25527; 20 CCR §§ 1752, 1752.5, 2300–2309, and Chapter 2, Subchapter 5, Article 1, Appendix B, Part (i).	CEC	Special consideration of unique historical, archaeological and cultural sites.	8.3.5.2, Appendix K
State	Cal. Health & Safety Code § 7050.5.	County Sheriff-Coroner (Medical Examiner)	Determination of origin of human remains and coordination with Native American Heritage Commission.	8.3.5.2, Appendix K
State	Cal. Pub. Res. Code § 5024.1	State Historical Resources Commission	Provides for the establishment of the California Register of Historic Resources and procedures for nominating sites to the Register.	8.3.5.2, Appendix K
State	Cal. Pub. Res. Code § 5097.94 and 5097.98.21	Native American Heritage Commission	Provides for mediation of disputes related to recovery and treatment of Native American remains and identification of Most Likely Descendants.	8.3.5.2, Appendix K
State	Cal. Pub. Res. Code § 5097.5	Kings County Planning Department	Makes it a misdemeanor to remove, without authorization, archaeological or paleontological resources on sites located on public lands.	8.3.5.2, Appendix K

Table 8.3-3 (continued)
Summary of LORS and Compliance

Jurisdiction	Authority	Administering Agency	Requirements/Compliance	AFC Conformance Section
Local	Kings County Planning Department – General Plan Open Space Element; Goal 26	Kings County	The county follows all provisions of CEQA. The General Plan Open Space Element Goal 26 stipulates the preservation of significant historical and archaeological sites and structures within the county.	8.3.5.3, Appendix K
Local	City of Lemoore Planning Department	City of Lemoore	The city follows all provisions of CEQA.	8.3.5.3, Appendix K
Industry	None applicable.	--	--	8.3.5.4, Appendix K

† This project is not a federal undertaking at this time and is not expected to trigger any of the federal LORS described herein.

Table 8.3-4
Agency Contacts

Agency	Contact	Telephone Number
California Energy Commission 1516 9th Street, MS-2000 Sacramento, CA 95814-5512	Dale Edwards	(916) 654-3929
Native American Heritage Commission 915 Capitol Mall, Room 364 Sacramento, CA 95814	Rob Wood Associate Governmental Program Analyst	(919) 653-4040
Kings County Sheriffs Department 1444 West Lacey Boulevard Hanford, CA 93230	Ken Marvin Sheriff-Coroner	(559) 582-3211
Kings County Planning Department 1400 West Lacey Boulevard, Building 6 Hanford, CA 93230	Chuck Kinney Planner	(559) 582-3211 ext. 2674
City of Lemoore Planning Department 210 Fox Street Lemoore, CA 93245	Gloria Hobbs Planner	(559) 924-6740

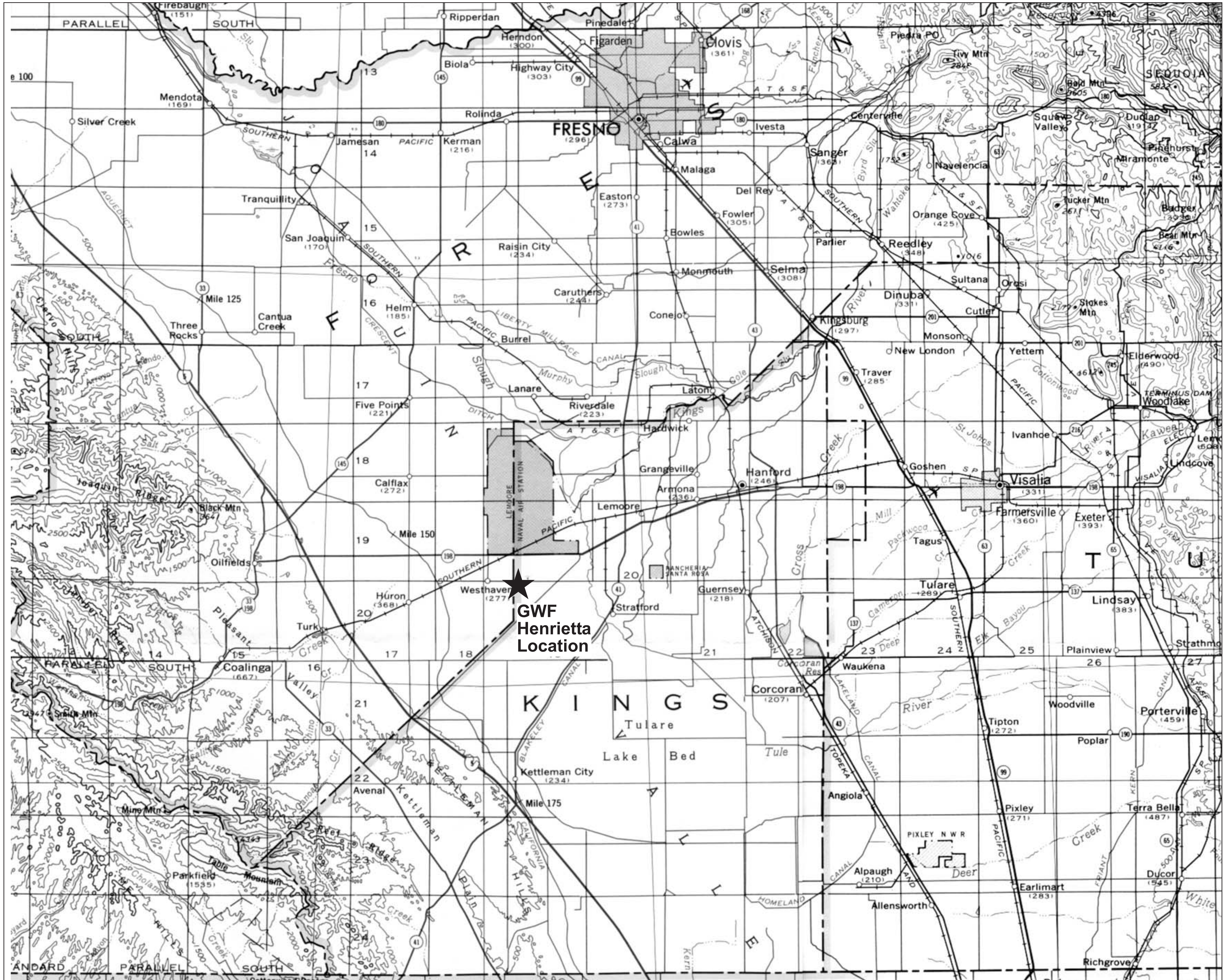

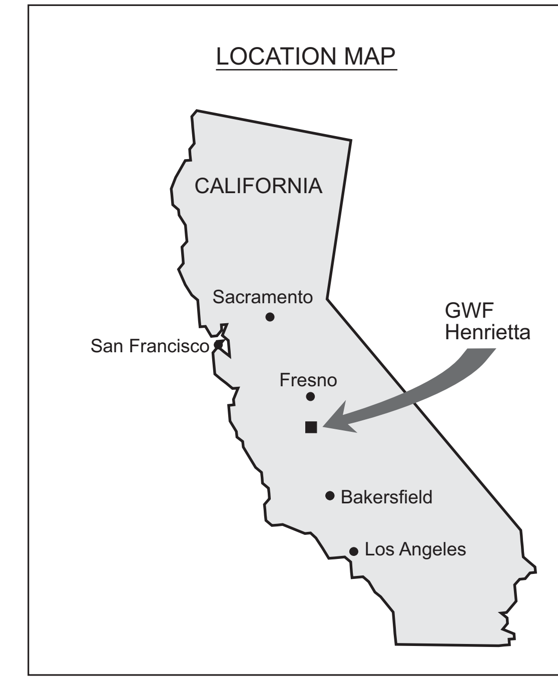

N

0 4 8

Scale in Miles

Source: USGS 1:500,000 Scale Topographic Map of California-South Half

URS

Project No. 51-00167032.00

GWF Henrietta Peaker Project

SITE LOCATION MAP

Figure 8.3-1

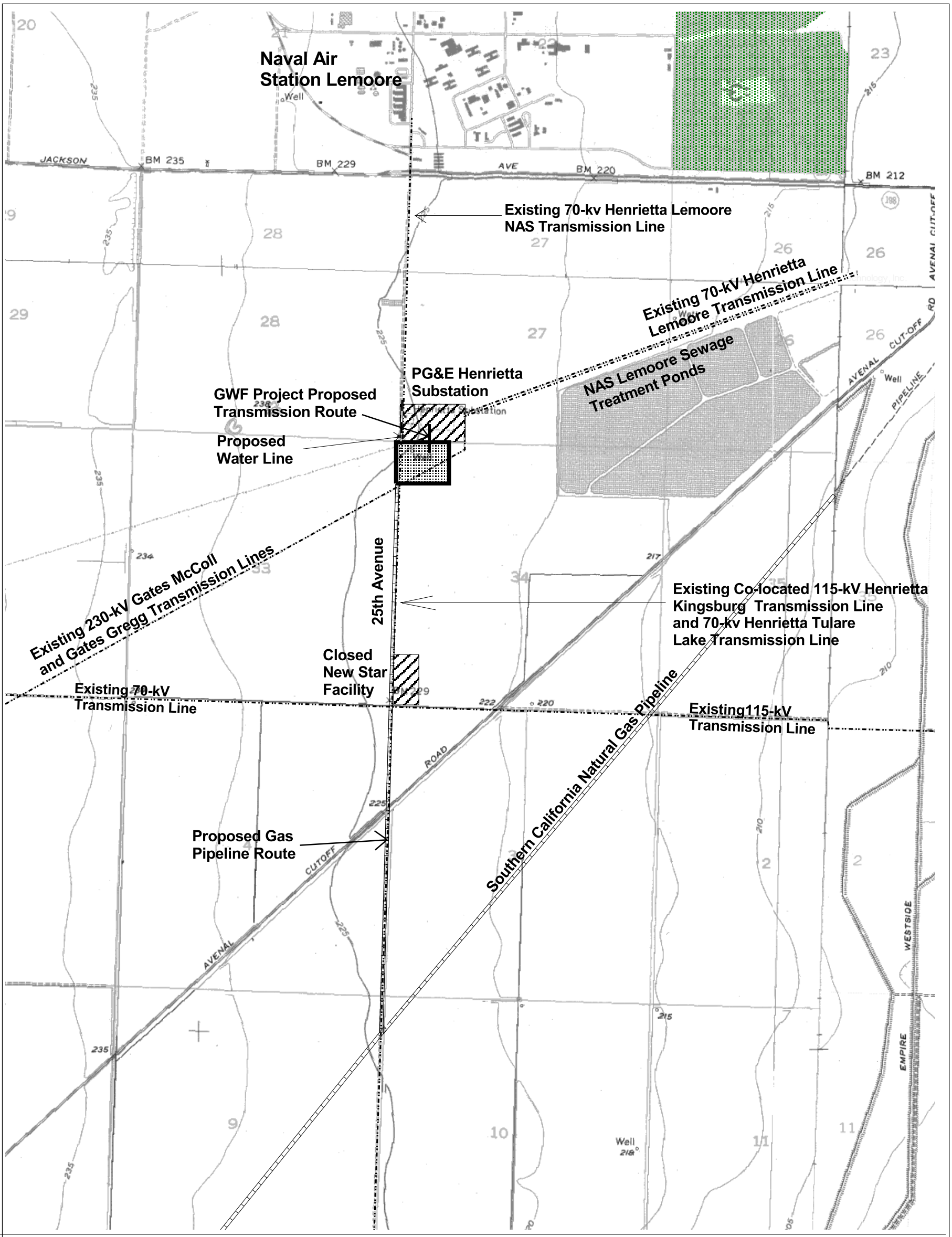

N

0 0.2 0.4 0.6 0.8 Miles

1000 0 1000 2000 Feet

Scale 1:24,000

Source:
Base Maps from U.S.G.S.
7.5 Minute Quadrangles
Westhaven, Calif., (Photorevised 1981),
Stratford, Calif. (1954), Lemoore (1954) and
Vanguard (1956, Photorevised 1981)

Existing Transmission Lines

Transmission Route

Gas Pipeline Routes

Water Line

Plant Site

Developed Industrial

URS	GWF Henrietta Peaker Project Project No. 51-00167032.00	Project Location Map	Figure 8.3-2

L:\Projects\GWF_Henrietta\Apr\proj1dhw.apr

Naval Air Station Lemoore

Existing 70-kv Henrietta Lemoore NAS Transmission Line

Existing 70-kV Henrietta Lemoore Transmission Line

NAS Lemoore Sewage Treatment Ponds

PG&E Henrietta Substation

GWF Project Proposed Transmission Route

Proposed Water Line

Alternative Gasline Route Surveyed

25th Avenue

Existing 230-kV Gates McColl and Gates Gregg Transmission Lines

Existing Co-located 115-kV Henrietta Kingsburg Transmission Line and 70-kv Henrietta Tulare Lake Transmission Line

Closed New Star Facility

Existing 70-kV Transmission Line

Existing115-kV Transmission Line

Southern California Natural Gas Pipeline

Proposed Gas Pipeline Route

N

0.25 0 0.25 0.5 0.75 1 Miles

1000 0 1000 2000 Feet

Scale 1:24,000

Source:
Base Maps from U.S.G.S.
7.5 Minute Quadrangles
Westhaven, Calif., (Photorevised 1981),
Stratford, Calif. (1954), Lemoore (1954) and
Vanguard (1956, Photorevised 1981)

Existing Transmission Lines

Transmission Route

Gas Pipeline Routes

Water Line

Plant Site

Areas Surveyed

Developed Industrial

URS

GWF Henrietta Peaker Project

Project No. 51-00167032.00

Areas Surveyed for Cultural Resources

Figure 8.3-3

L:\Projects\GWF_Henrietta\Apr\proj1dhw.apr

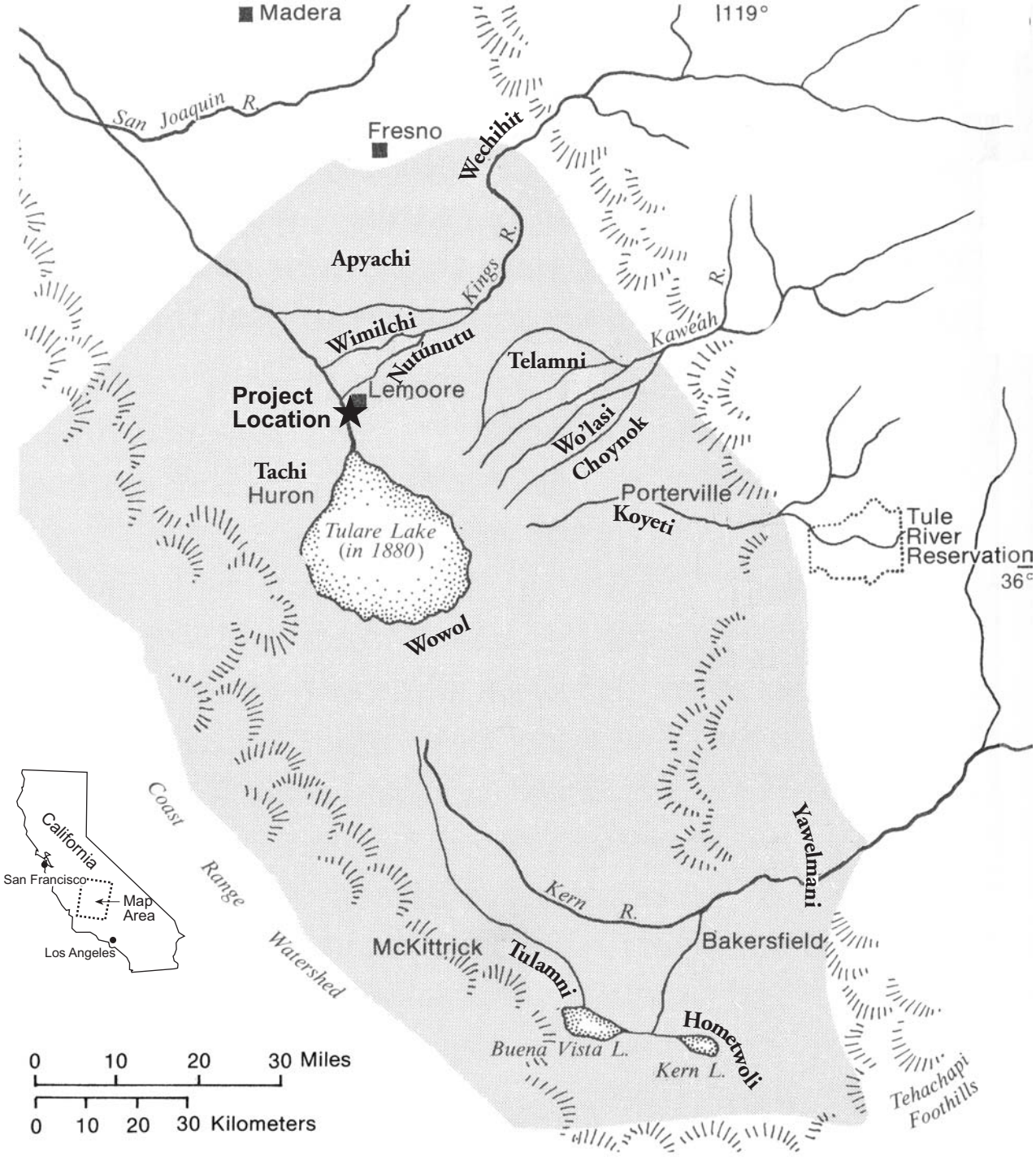

Adapted from Wallace (1978: 44B)

URS	Project No. 51-00167032.00 GWF Henrietta Peaker Project	SOUTHERN VALLEY YOKUTS ETHNOGRAPHIC REGION	Figure 8.3-4

51-00167032.00-01011/082301/gos

8.4 Land Use

The Henrietta Peaker Project (HPP) consists of a 91.4-megawatt (MW) (net), natural-gas-fired, simple-cycle power plant located approximately 10 miles southwest of Lemoore, California, on a seven-acre portion of a 20-acre parcel owned by GWF Energy LLC. The HPP will interconnect to the existing adjacent Pacific Gas and Electric Company (PG&E) Henrietta Substation through a new 550-foot 70-kilovolt (kV) transmission line supported on two new transmission poles. Other linear facilities include an approximately 16.5-foot water interconnection pipeline (from the site property boundary) and a 2.2-mile Southern California Gas Company natural gas interconnection pipeline. Additionally, approximately five acres will be used for temporary construction laydown and parking.

This section inventories existing land uses in the vicinity of the proposed HPP site and discusses the potential land use impacts associated with the project. Land uses are described within one mile of the HPP site and within one-quarter mile of the proposed transmission and natural gas pipeline corridors. The land use issues have been identified and evaluated based on onsite reconnaissance surveys, a review of current U.S. Geological Survey 7.5-minute topographic quadrangle maps, aerial photography, a review of local land use ordinances, and a review of the land use goals and policies identified in the Kings County General Plan.

The local, state, and federal agencies with jurisdiction over the HPP are identified, as are their respective plans, policies, laws, and regulations (including zoning). The conformance and compatibility of the HPP with local plans and regulations and general land use are evaluated. Planned development and land use trends in the area of the HPP site are identified based on currently available development plans. Reasonably foreseeable future development projects within the affected area are noted. Where appropriate, mitigation measures are proposed to reduce the potential land use impacts to acceptable levels.

8.4.1 Affected Environment

The California Energy Commission (CEC) defines the affected environment of a project as the study area boundary. For the proposed HPP, the affected environment includes, but is not limited to, the territory within one mile of the HPP site and all lands within one-quarter

mile of the associated transmission and natural gas pipeline routes. The zoning districts in the affected environment are shown on Figure 8.4-1.

Governmental jurisdictions within the affected region include Kings County and the U.S. Department of Defense, specifically Naval Air Station (NAS) Lemoore, as shown on Figure 8.4-2. The existing transmission lines are within one mile of the proposed HPP property and are discussed in Section 6.0 (Electric Transmission).

Figure 8.4-3 identifies existing land uses and potentially sensitive land uses in the project vicinity. Potentially sensitive land uses include recreational and religious sites, agricultural areas, schools, churches, health care facilities, parks, commercial and residential areas, airports and landing strips, and radar sites. Sensitive land uses can also include cultural and historical sites and natural scenic areas. See Section 8.3 (Cultural Resources) and Section 8.11 (Visual Resources) for assessments of these environmental topics. Table 8.4-1 summarizes the land uses identified on Figure 8.4-3.

Section 8.9 (Agriculture and Soils) describes the proximity of prime, statewide, and unique farmland to the project site, as designated by the Natural Resources Conservation District, and any potential project-related impacts on such lands.

The affected environment is discussed in Section 8.4.3 by project component. Topics addressed include existing and proposed land uses, sensitive land uses, jurisdictions and associated land use plans (i.e., general plans), zoning, subdivision, and the general plan goals, policies, and implementation guiding development at the HPP site. Land ownership patterns are discussed in accordance with the CEC Guidelines (CEC, 2000).

8.4.2 Land Use Plans and Policies

8.4.2.1 City and County

The proposed locations of the HPP and associated transmission and natural gas routes are entirely within unincorporated areas of Kings County; therefore, no city land use plans or policies apply to the project. If not for the exclusive jurisdiction of the CEC, Kings County

would have authority over the location and conditions of energy development in unincorporated areas of the county.

The Kings County General Plan includes specific policies intended to ensure appropriate development in unincorporated areas of the county. It contains seven elements: land use, resource conservation, open space, circulation, housing, safety, and noise. The policies and goals of the Kings County General Plan that apply to the HPP are summarized in Table 8.4-2.

The Kings County General Plan divides all unincorporated lands in the county into general land use designations and includes provisions that specify acceptable uses. Land use designations in a general plan are intended to guide land use patterns and development. The land use designations described in the Kings County General Plan that are pertinent to the affected environment of the proposed HPP are summarized in Table 8.4-3.

The Kings County Zoning Ordinance specifies the zoning districts that correspond with the land use designations of the General Plan. The Zoning Ordinance sets the development standards, such as allowable uses, activities, setbacks, and height requirements for each zoning district in the unincorporated areas. Table 8.4-4 depicts the actual zoning designations by project component, and Table 8.4-5 gives definitions for each zoning district. The Kings County General Plan is the only land use management plan relevant to the affected environment of the proposed HPP.

The Kings County Land Division Ordinance, adopted pursuant to the Subdivision Map Act, requires that every subdivision created through sale, lease, or financing of unincorporated County lands be recorded on a tract or parcel map (Kings County Planning Department, 1998). Tract maps, required for subdivisions consisting of five or more parcels, and parcel maps, required for subdivisions consisting of four or fewer parcels, represent discretionary approvals. Normally, the Kings County Planning Department is the primary review agency for subdivision applications and oversees the review process. Final approval has been granted by the Planning Commission for a parcel map waiver (see Appendix D).

8.4.2.2 State

The CEC has both policy development and exclusive permitting responsibilities for generating projects that have a capacity of over 50 MW. However, the CEC license must incorporate conditions that require compliance with all applicable LORS. Generating facilities such as the proposed HPP require CEC approval. The CEC is also the lead agency in the implementation of the California Environmental Quality Act (CEQA) and must follow appropriate state law and guidelines in its review and decision-making.

The California Department of Conservation, Division of Land Resources Protection implements the Williamson Act, a state land use policy that is intended to preserve agricultural land and open space. The Williamson Act is implemented by creating a voluntary contract with property owners that restricts land use for 10 years, with an automatic annual renewal. In return for the agreement to restrict the use of land for agriculture, the landowner receives preferential property tax rates based on the current use of the land rather than its market value. Williamson Act contracts may be cancelled by Kings County upon a finding by the county that the cancellation is in the public interest and payment of a cancellation fee. The cancellation becomes effective upon issuance of an entitlement for conversion of the land to its new use. A copy of the Tentative Cancellation of Land Conservation Contract for the 20-acre HPP parcel is included in Appendix D.

8.4.2.3 Federal

The Federal Aviation Regulations (Section 77.13 ff, Part 77) require notice of any construction or alteration that is (a) more than 200 feet in height above ground level, or (b) greater than identified heights at specified radii and slopes from the nearest runway of certain airports. The proposed HPP and the associated transmission and natural gas pipelines will neither exceed 200 feet in height nor the most restrictive radius and slope requirement. In addition, the HPP will not exceed the height of neighboring transmission towers. No other applicable federal land use plans or policies have been identified for the proposed HPP.

8.4.3 Description of the HPP and Components

8.4.3.1 Proposed HPP

The proposed HPP site is located within unincorporated land in Kings County. The seven-acre plant site is on a 20-acre parcel acquired by GWF; this parcel is situated on the east side of 25th Avenue, approximately one mile south of the intersection of State Route (SR) 198 and 25th Avenue. The HPP is directly south and adjacent to the PG&E Henrietta Substation. An unpaved farm road that separates Sections 27 and 34 on property owned by PG&E currently provides access to the agricultural land in production to the south. The HPP site will be accessed from 25th Avenue. A detailed description of the proposed HPP, the transmission route, and the natural gas pipeline can be found in Sections 2.0 (Project Description), 6.0 (Electric Transmission), and 7.0 (Natural Gas Supply). Figures 8.4-1 and 8.4-3 illustrate the zoning districts and existing land uses, respectively, within a one-mile radius of the HPP. Existing land uses, general plan designations, and zoning are also summarized in Tables 8.4-1, 8.4-2, 8.4-3, 8.4-4, 8.4-5, and 8.4-7.

The proposed transmission route runs approximately 400 feet north and 150 feet east of the proposed HPP site to the PG&E Henrietta Substation. The proposed natural gas pipeline will be constructed within a designated utility corridor running south on the east side of 25th Avenue. From the intersection of 25th Avenue and the adjacent unpaved farm road, the utility corridor includes 30 feet on each side of the centerline of 25th Avenue (north of this intersection portions of the utility corridor are offset to the east). The proposed natural gas pipeline will cross the Avenal Cutoff before reaching the connecting point with the Southern California Gas Company Line 800. There is no designated utility corridor south of the Avenal Cutoff (Kings County Public Works Department, 2001). A 40-foot-wide easement has been granted from KJC Farms to construct the natural gas pipeline interconnect south of the Avenal Cutoff (Appendix D4).

The HPP will receive its water supply from the Westlands Water District pipeline directly adjacent to the western property line of the site parcel.

Land Acquisition. GWF purchased the 20-acre HPP site from John and Sally Oliveira, the private landowners. The minimum lot size for districts zoned Exclusive Agricultural (AX) is 40 acres; however, a parcel of no less than one acre is allowed in the AX district for specified conditional uses, including electric generation. An Application for Parcel Map Waiver was submitted on May 25, 2001 to Kings County Planning Department. The Kings County Board of Supervisors granted a waiver on July 9, 2001 (Appendix D3).

Although lands within one-quarter mile of the proposed transmission route and within one mile of the HPP site are zoned AX (see Figures 8.4-1 and 8.4-3) and are currently in agricultural production (URS, 2001), the HPP will permanently impact only the seven-acre proposed plant site. As described in detail below, the plant site is bordered by 25th Avenue to the west, a farm road to the north, and a transmission line that crosses the southeastern portion of the parcel. The proposed new transmission line is approximately 550 feet in length.

Kings County has an existing easement that runs along each side of 25th Avenue. Construction of the proposed natural gas pipeline within this easement will require an encroachment permit. South of the Avenal Cutoff, an easement from KJC Farms has been granted for the construction of the natural gas pipeline. The landowners along the transmission and natural gas corridors are listed in Table 8.4-6 and shown on Figure 8.4-4. All private easements for the offsite linear facilities have been finalized.

Existing and Proposed Land Uses. Figure 8.4-3 shows existing land uses within the HPP site and in the surrounding one-mile area. The plant site itself is located at the northwestern corner of Section 34, which is currently under active agricultural use (see Table 8.4-4). The site is bordered by a paved county road to the west and by the adjacent unpaved farm road to the north. Across the unpaved farm road is the Henrietta Substation operated by PG&E. Existing transmission corridors connecting with the Henrietta Substation cross the HPP site and surround the proposed plant site itself, isolating the plant site from the remainder of the adjoining agricultural land. Other nonagricultural uses within the surrounding one-mile area include the presently closed New Star facility, located approximately 0.7 miles south on the eastern side of 25th Avenue, and portions of an approximately 275-acre complex of sewage wastewater ponds at NAS Lemoore. NAS Lemoore (extending east and west of 25th

Avenue north of SR 198) and a Pacific Bell facility (on the south side of SR 198, approximately 1.4 miles east of 25th Avenue) are located just outside the one-mile radius. With these exceptions, the remainder of the surrounding one-mile area is currently used for agricultural purposes.

The proposed HPP site portions of the transmission line, the 16.5-foot water interconnection, and the natural gas pipeline routes are located on property under Williamson Act contract (see Section 8.9, Agriculture and Soils). However, the natural gas pipeline will be buried and will not change the existing use. The gas line, transmission line, and water interconnection are compatible uses with agriculture under the Williamson Act (Government Code Section 51238.1). In addition, as noted above, the HPP site is surrounded on two sides by roads, and by existing transmission corridors on the remaining sides. According to the Kings County Planning Department, no proposed industrial developments are planned within a two-mile radius of the plant site (Kings County Planning Department, 2001b).

Three projects are currently under review in other areas of Kings County. In the Hanford area, the Hanford Church of Nazarene is proposing a church and parsonage for 8635 Lacey Boulevard. Hanford Christian Care has proposed an assisted-living facility that will include adult daycare and staff housing (Kings County Planning Department, 2001b). Both projects are approximately 20 miles east of the project site.

The third project, an expansion of the V&F Dairy in Lemoore (approximately 6.5 miles east of the project site), is presently on hold pending release of the latest amendment to the dairy element of the General Plan (Kings County Planning Department, 2001b).

Agency Approvals. Approval by the Kings County Planning Department was required to obtain an in-lieu parcel map. A resolution by the Kings County Board of Supervisors authorizing cancellation of the Williamson Act contract was also required. These approvals from Kings County have been received (see Appendix D). An application for a nondiscretionary encroachment permit from Kings County for natural gas pipeline construction in an existing public utility easement will be submitted by Southern California Gas Company.

Potentially Sensitive Land Uses. There are no parks, recreational areas, educational facilities, religious sites, agricultural areas, health care facilities, or commercial uses on the HPP site or within a one-mile radius of the site (see Section 8.1, Air Quality, and Section 8.5, Noise, for additional information regarding sensitive land uses).

Zoning. As shown on Figure 8.4-1, the proposed HPP site and the area surrounding the site are zoned AX (see Table 8.4-5). Pursuant to Kings County Ordinance No. 269.53, thermal power-generating facilities are a conditionally permitted use for areas zoned AX and General Agricultural (AG-40) (Kings County Planning Department, 2001). Thus, if the CEC did not have exclusive jurisdiction, the proposed project would be an allowable use upon receipt of a conditional use permit.

Land Ownership Patterns. Both public and private land ownership is found within one mile of the proposed HPP site and in the surrounding study area. The United States of America (NAS Lemoore) holds the public lands in the vicinity of the HPP. Appendix D1 lists the surrounding property owners within 1,000 feet of the proposed HPP site and within 500 feet of the proposed linear facilities.

Land Use Goals, Policies, and Implementation. Land use goals and policies pertaining to Kings County energy development and transmission lines are expressed in the Kings County Zoning Ordinance, Section 1710, which governs review of utility towers under the jurisdiction of the Public Utilities Commission. Routes for overhead transmission lines must be submitted to the zoning administrator for nonbinding review and recommendations as to the route, placement, and height of the towers, and the effect on land use (Kings County Planning Department, 2001).

8.4.3.2 Proposed Transmission Route

The proposed 70-kV transmission line will originate at the HPP site and extend north approximately 400 feet and east 150 feet to the Henrietta Substation (see Figure 8.4-2). The transmission poles for the line will be located within the adjacent PG&E parcel. Figures 8.4-1 and 8.4-3 illustrate the zoning and existing land uses, respectively, along the proposed

transmission route. Existing land uses, general plan land uses, and zoning within the transmission line corridor are summarized in Tables 8.4-1, 8.4-2, 8.4-3, 8.4-4, 8.4-5, and 8.4-7.

Existing and Proposed Land Uses. The proposed transmission route crosses contiguous lands between the HPP parcel and the Henrietta Substation, as shown on Figure 8.4-3. The HPP site is located within unincorporated Kings County. There are no residences within one-quarter mile of the transmission route (URS, 2000), and no residential developments are currently proposed in the study area along the route (Kings County Planning Department, 2001b). The proposed transmission route does not cross any transportation route other than the adjacent unpaved farm road.

Agency Approvals. With the exception of the zoning administrator's nonbinding review of proposed overhead electric transmission routes under the jurisdiction of the Public Utilities Commission, no discretionary approvals from Kings County would be required.

Potentially Sensitive Land Uses. No potentially sensitive land uses occur within one-quarter mile of the proposed transmission route. The nearest residences to the transmission line (condominiums on NAS Lemoore) are approximately 1.5 miles northeast of the proposed transmission route, north of SR 198 and 0.5 miles east of 25th Avenue.

Zoning. The single zoning designation within one-half mile of the proposed transmission route is AX (County). Figure 8.4-1 illustrates the zoning districts along the route. These districts are also described in Table 8.4-5.

8.4.3.3 Proposed Natural Gas Pipeline Route

The proposed natural gas pipeline route for the HPP originates at the plant site and runs south along the east side of 25th Avenue for approximately 1.1 miles to the Avenal Cutoff. The line crosses the Avenal Cutoff and continues south along the eastern side of the now unpaved 25th Avenue for an additional mile to the connection point with Southern California Gas Company Line #800. The proposed natural gas pipeline route lies entirely within unincorporated Kings County (see Figure 8.4-2).

Agency Approvals. An encroachment permit is required for the natural gas pipeline route, because the pipeline will be located in the Kings County public utility easement north of the Avenal Cutoff. Rights-of-way or easements have been obtained from the property owners for the portion of the pipeline south of the Avenal Cutoff. GWF submitted a permit application to the Kings County Public Works Department and concluded discussions with the property owners in July 2001.

Potentially Sensitive Land Uses. No potentially sensitive land uses occur within one-quarter mile of the proposed natural gas pipeline route. The nearest residences to the pipeline route are at NAS Lemoore, approximately 1.5 miles northeast of the northern boundary of the HPP site.

Zoning. The zoning designations within one-half mile of the proposed natural gas pipeline route include AX (County) and AG-40 (County). Figure 8.4-1 illustrates the zoning districts along the route. These districts are also described in Table 8.4-5.

8.4.3.4 Water Supply Pipeline Connection

The proposed 16.5-foot water supply pipeline for the HPP originates at the northwest corner of the plant site parcel and connects to a standpipe that taps an existing Westlands Water District water distribution pipeline, which follows the eastern side of 25th Avenue running north and south. The proposed pipeline lies entirely within unincorporated Kings County (see Figure 8.4-2).

Agency Approvals. An encroachment permit is required for the proposed water supply pipeline route because the pipeline will be located in the Kings County public utility easement. GWF submitted a permit application to the Kings County Public Works Department and concluded discussions with PG&E, the property owner, in July 2001.

Potentially Sensitive Land Uses. No potentially sensitive land uses occur within one-quarter mile of the proposed water supply pipeline route. The nearest residences to the water pipeline route are located at NAS Lemoore, approximately 1.5 miles northeast of the northern end of the pipeline.

Zoning. The single zoning designation within one-half mile of the proposed water supply pipeline route is AX (County). Figure 8.4-1 illustrates the zoning districts along the route. These districts are also described in Table 8.4-5.

8.4.3.5 Recent Applications and Trends in Zoning Changes

There have been 28 discretionary project reviews by Kings County within the 18 months prior to this Application for Certification (AFC) (Kings County Planning Department, 2001a, 2001b). Of these projects reviews, one has been a residential project, two have been public projects, four have been commercial/retail projects, six have been industrial projects, and 15 have been agricultural projects. The industrial projects included a surface mining project and a number of communication-related projects. A list of the discretionary reviews is included in Appendix D2.

A recent change to a zoning designation in Kings County has been completed. The proposal will redesignate a parcel along the southeast corner of SR 43 and Hanford-Armona Road from General Agricultural (AG-40) to either Public Facility or Light Industrial for a fire station (Kings County Planning Department, 2001b).

8.4.4 Environmental Consequences

This section discusses the environmental consequences of the HPP within one mile of the proposed site and within one-quarter mile of the proposed transmission and natural gas pipeline routes. The potential environmental consequences concern both the construction and the operation of the generating plant, the transmission line, and the natural gas pipeline.

8.4.4.1 Significance Criteria

Significance criteria from the CEC Guidelines (CEC, 2000) and CEQA Guidelines (California Code of Regulations, Title 14, Section 15000 et seq., 1999) were used to determine whether significant impacts could occur as a result of the HPP. According to Appendix G of the CEQA Guidelines, land use impacts are considered significant if the project will:

- Conflict with the adopted environmental plans and goals of the community where a project is located; displace a large number of people or induce substantial population growth; disrupt or divide an established community; convert or impair prime agricultural land; or conflict with established recreational, educational, religious, or scientific uses of the area.

According to CEC requirements, the following effects are considered significant:

- Noise and odor nuisances that will cause existing land uses to cease or be adversely affected, or inhibit the development of future land uses;
- Traffic problems that will restrict access, adversely affecting land uses, such as residential or commercial; or
- Visual impacts that will affect land uses, such as recreation.

8.4.4.2 Impacts of the Proposed HPP

Construction-Related Impacts. Construction activities will be performed in such a way as to minimize interference with existing agricultural and energy-related uses. Construction activities could affect local roadways by adding additional traffic along access routes to existing industrial operations in the area. These potential impacts are discussed in Section 8.10 (Traffic and Transportation).

Residences in the vicinity of the proposed HPP may experience short-term impacts associated with facility construction, including visual disruption, increased noise and dust, and increased traffic and vehicle emissions due to project equipment and vehicles using surrounding roadways (see Sections 8.1, 8.5, 8.10, and 8.11). However, as noted above, the nearest residences are approximately 1.5 miles to the northeast and across SR 198.

Material and equipment staging areas will be required for the construction period. An approximately five-acre staging area will accommodate employee parking, field offices, laydown, and storage for materials, equipment, and vehicles. The staging areas will be east and south of the seven-acre HPP site within the 20-acre parcel. The site is on agricultural land and has no known environmentally sensitive areas.

Overall, construction impacts are considered insignificant, because they will result from construction of a compatible land use that expands an existing energy-related area, and will be temporary (approximately five months).

Operations-Related Impacts. The proposed HPP will be adjacent to an existing electric substation and will be designed for an operating life of 30 years. The HPP will further develop an area committed to energy-related uses, rather than introduce industry to a nonindustrial area. The proposed use of the site is compatible with adjacent uses, as evidenced by its inclusion as a conditionally permitted use in the Kings County Zoning Ordinance. The operations of the proposed plant are not expected to result in significant adverse impacts to surrounding land uses.

Compatibility with Existing and Proposed Land Uses. The Kings County General Plan indicates that thermal-power-generating facilities are compatible with adjacent utility distribution areas (Kings County General Plan, 1993 [2001]). The proposed HPP will create power generation use in an area already committed to energy-related uses. The HPP will be consistent with the existing uses in the vicinity.

The operation of the HPP is not expected to result in an influx of workers to Kings County (see Section 8.10). The impact of the proposed HPP on recreational facilities will be insignificant and will not result in an increased demand on area facilities or services.

Consistency with Existing Land Use Plans, Policies, and Regulations. The current Kings County zoning designation at the proposed HPP site is AX. Thermal-power-generating facilities are conditionally permitted uses within the AX district. The minimum lot size requirement for such uses of land zoned AX is one acre. The HPP is therefore consistent with the applicable land use plans, policies, and regulations.

8.4.4.3 Impacts of the Proposed Transmission Line, Natural Gas Pipeline, and Water Supply Pipeline

Construction-Related Impacts. The construction activities associated with the proposed transmission line, natural gas pipeline, and water supply pipeline are expected to occur

over a five-month period. Construction will be undertaken in a way that minimizes interference with existing land uses in the proposed corridors.

The assessment of construction impacts along the proposed transmission route considered of the type of structures to be installed, access to these structures, and temporary construction area requirements. For additional information on these structures, refer to Section 6.0 (Electric Transmission). Construction of the transmission line will temporarily disturb approximately 0.6 acres and will not permanently disturb land outside the fenced areas of the Henrietta Substation or the HPP site. The safety measures listed in Section 8.7 (Worker Health and Safety) will be implemented during the construction of the transmission lines and associated structures.

All structures will be located near or along existing roads. A suitable marking system will be developed to ensure that construction personnel use designated access routes.

Construction impacts along the natural gas and water supply pipeline routes will result during the installation of buried pipelines. No aboveground structures are associated with the proposed gas or water lines. An area approximately 20 feet wide along the length of the proposed routes will be disturbed during construction. Construction of the proposed gas line will temporarily disturb approximately 5.1 acres, but will not permanently disturb land because the line will be entirely underground. The proposed line is near existing roads for its entire length, and all but about 1.7 acres of temporary disturbance will occur in an existing public utility easement. Approximately two acres are required for material and equipment staging during construction. The water pipeline will be approximately 16.5 feet in length and runs from the site boundary to the nearby Westlands Water District pipeline. The onsite portion of the pipeline will be constructed as part of the overall project development.

The residential areas in the project vicinity may experience short-term impacts associated with facility construction, including visual disruption, an increase in noise and dust, and an increase in traffic and vehicular emissions, because project equipment and vehicles will use surrounding roadways. However, these potential impacts will occur only during project construction, and significant long-term impacts are not anticipated (see Sections 8.1, 8.5, 8.10, and 8.11).

There are no schools, hospitals, parks, or other sensitive land uses within one-half mile of the proposed transmission and natural gas pipeline routes.

Operations-Related Impacts. Following installation of the transmission structures, the affected land will be restored to its original condition wherever possible. There will be no operational impacts, as all structures will be located within the fenced areas. No access routes are required.

Compatibility with Existing and Proposed Land Uses. Existing land uses along the proposed transmission and natural gas pipeline routes include agricultural operations, agricultural distribution facilities, and developed public utility uses. These proposed routes traverse slightly more than two miles of roads within active agricultural areas. The Kings County General Plan provides for thermal power generation as a conditionally permitted use in areas designated AG-40. Public utilities are a compatible use in undeveloped areas designated for agricultural use. Because the zoning designations along the proposed transmission route are compatible with utility facilities, there are no conflicts between the new and existing land uses.

There are no residences or schools within the study area, and no residential developments have been proposed in the area along the proposed transmission or pipeline routes. Therefore, no adverse impacts to sensitive land uses are anticipated from the operation of the proposed HPP and its associated linear facilities.

Consistency with Existing Land Use Plans, Policies, and Regulations. The proposed transmission and pipeline routes traverse land zoned for agricultural use by the County and are located in public utility easements or beneath existing roads; thus, these linear facilities are compatible with existing land use plans and policies.

8.4.5 Indirect Effects

The HPP site is located in unincorporated Kings County adjacent to an existing electrical substation. The HPP could continue a trend toward energy-related uses in this part of Kings County. Permanent conversion of agricultural lands to nonagricultural use is limited to the site of the proposed HPP facility. Increased industrial activity due to the HPP might increase the possibility of other lands under agricultural production being converted to nonagricultural

uses. However, the proposed location of the HPP minimizes the impact on agricultural lands by reducing the requirement for extended utility connections.

The proposed natural gas pipeline will be built in existing right-of-way corridors or below existing roads. The transmission line will cross the property boundary between the HPP site and PG&E's parcel. The pipeline will use an existing corridor, thus limiting the overall impact by reducing the amount of land that would otherwise be converted. There are no indirect effects associated with a 16-foot water line, sized to serve only the HPP.

The consolidation of aboveground transmission lines in established transmission corridors minimizes the overall land use impact and is consistent with the Kings County General Plan land use element. Placement of the natural gas pipeline within an existing public utility easement is also consistent with the Kings County General Plan land use element (Kings County Planning Department, 1993 [2001]).

8.4.6 Cumulative Impacts

The proposed linear facilities (transmission lines, natural gas pipeline, and water supply pipeline) will not cause a significant change in the character of the region when considered in conjunction with similar, planned projects (see Sections 6.0, 8.4.3.2). The proposed HPP will affect land use in its vicinity by increasing the concentration of industrial activity. However, it will not result in changes to existing land use patterns and is consistent with current zoning. No other energy-related projects are planned or proposed in the vicinity of the HPP. As a result, the cumulative land use impacts are considered insignificant.

The proposed HPP will convert seven acres of agricultural land to electric utility uses. This limited conversion of land adjacent to developed public utility lands will result in an incremental loss of agricultural lands. The proposed location of the HPP minimizes the impact on agricultural lands and is consistent with the County's land use planning goal of consolidating industrial uses. Further, because the proposed location of the switchyard is adjacent to two permanent barriers to agricultural production (25th Avenue and the Henrietta Substation), the proposed switchyard is consistent with the requirements of the Kings County General Plan to minimize the conversion of agricultural land. Therefore, the proposed switchyard will have an

insignificant impact on land use patterns. No significant unavoidable adverse impacts will occur to land uses due to the construction or operation of the HPP and associated transmission and pipeline routes.

8.4.7 Conditions of Certification

Proposed conditions of certification are contained in Appendix K. These conditions are proposed in order to ensure compliance with applicable LORS and/or to reduce potentially significant impacts to less-than-significant levels.

8.4.8 Agency Contacts

Agency	Contact/Title	Telephone
Kings County Planning Department 1400 W. Lacey Blvd. Hanford, CA 93230	William R. Zumwalt Director	(559) 582-3211

8.4.9 LORS Compliance

The CEC has exclusive jurisdiction over power plant siting and licensing for plants more than 50 MW in size, such as the HPP. The CEC is the lead agency pursuant to CEQA. This AFC has been prepared in accordance with the CEC and CEQA Guidelines.

The proposed HPP site is located entirely within unincorporated areas of Kings County. The Kings County General Plan identifies goals and policies regarding energy and industrial development. The proposed HPP will conform to these goals and policies.

The proposed transmission and natural gas pipeline routes will traverse lands under the jurisdiction of Kings County. The proposed transmission line and its associated structures will be constructed in compliance with the regulations and standards of Kings County.

A summary of the applicable laws, ordinances, regulations, and standards (LORS) related to land use is included in Table 8.4-8.

8.4.10 Schedule of Other Required Permits/Approvals

Permit/Approval	Project Component	Responsible Agency	Schedule
Parcel Map Waiver	HPP	Kings County Planning Department	Issued (see Appendix D)
Cancellation of Williamson Act Contract	HPP	Kings County Planning Department	Issued (see Appendix D)

8.4.11 References

California Energy Commission (CEC), 1997. Siting Regulations: *Rules of Practice and Procedure and Power Plant Site Certification Regulations*.

Kings County Assessor's Office, 2001. Telephone communications between Datha Ivie and Joyce Babin, Kings County Assessor's Office, and J. Adams, URS Corporation.

Kings County Planning Department, 1993 [2001]. Kings County General Plan. Updated January 2001.

Kings County Planning Department, 1994. Kings County Airport Land Use Compatibility Plan. (includes excerpts from the Federal Aviation Regulations, Part 77)

Kings County Planning Department, 1999 [2000]. Kings County Zoning Ordinance. Updated November 2000.

Kings County Planning Department, 2001. Kings County Assessor's Map.

Kings County Planning Department, 2001a. Personal communication between Chuck Kinney and Steve Sopp, Kings County Planning Department, and J. Adams, URS Corporation.

Kings County Planning Department, 2001b. Various telephone communications between Dottie Agueda, Chuck Kinney, and Rick Williams, and J. Adams, URS.

Kings County Public Works Department, 2001. Telephone communication between Jerry Reese and Tony Gomes, Kings County Public Works Department, and J. Adams, URS Corporation.

URS, 2001. Field reconnaissance performed by J. Adams, URS Corporation.

TABLES

Table 8.4-1
Existing Land Uses in the Study Area

Project Component	Existing Land Uses (General Type)[1]
HPP Site[2]	Agricultural (including easements for existing transmission lines)
Transmission Route	Agricultural (unpaved farm road)
Natural Gas Pipeline Route	Agricultural (paved and unpaved farm road)

[1] Existing land uses correspond to an inventory of land uses within a one-half mile corridor centered on the transmission line and natural gas pipeline (one-quarter mile to either side) and within one mile of the proposed HPP site.

[2] HPP site includes 16.5-foot water line.

Table 8.4-2
Land Use Plans and Policies Related to the HPP

Authority Category	Policy
Kings County General Plan: Land Use, Resource Conservation, Open Space, and Safety Elements	Industrial uses must locate near adequate transportation resources and away from residential concentrations (Policy 3b). New development must not result in encroachment of incompatible uses (Policy 3c). Industrial development must use Best Available Control Technology to minimize air emissions (Policy 13b). Development must be located adjacent to existing development (Policy 16a). Agricultural lands must be maintained as open space when not necessary for other uses that promote the economy, public welfare, or quality of life for Kings County residents (Policy 22b). New construction astride known faults or fault lines is prohibited (Policy 36e). Proposed developments must be reviewed by the Fire Department to ensure compliance with building standards (Policy 36f).

Source: Kings County Planning Department, 1993 [2001].

Table 8.4-3
Kings County General Plan Land Use Designations[1]

Kings County Land Use Designation	Definition
General Agricultural (AG-40)	This designation is intended to preserve agricultural land and to prevent premature conversion of agricultural land to other uses. This designation includes a 40-acre minimum lot size requirement for some uses.
Exclusive Agricultural (AX)	This designation is intended to preserve agricultural land in a three-mile band around NAS Lemoore and to prevent premature conversion of agricultural land to other uses. This designation includes a 40-acre minimum lot size requirement for some uses.

[1] The land use designations identified have been summarized, and only those designations directly affected by the proposed HPP are discussed.
Sources: Kings County Planning Department, 1993 [2001].

Table 8.4-4
Zoning Designations Within the Study Area[1]

Project Component	Zoning Designation[2]
HPP site[3]	AX (County)
Transmission Route	AX (County)
Natural Gas Pipeline Route	AX (County) AG-40 (County)

[1] The study area consists of area within one mile of the plant site and within a one-half mile corridor centered on the proposed transmission route and water supply route (one-quarter mile to either side).
[2] These abbreviated zoning designations correspond with the descriptions given in Table 8.4-5.
[3] HPP site includes the 16.5-foot water line.
Source: Kings County Planning Department, 1999 [2000].

Table 8.4-5
Zoning Districts Within the Study Area

Kings County Zoning District	Description[1]
General Agriculture (AG-40)	This designation is designed to reserve the rural areas south of Kansas Avenue for commercial agricultural production. Permitted conditional uses include thermal-power-generating facilities. The minimum lot requirement for such a conditional use is one acre. §405.D.18, 405.F.4
Exclusive Agricultural (AX)	This designation is designed to reserve the rural areas in a three-mile band around NAS Lemoore for commercial agricultural production. Permitted uses include public utility and public service structures, including electric transmission and distribution substations and electric generation. The minimum lot requirement for utility-related uses is one acre. §403.D.11, 403.F.4

Table 8.4-5
Zoning Districts Within the Study Area

[1] Reference to "compatible" uses within the descriptions are based on the zoning requirements.
Source: Kings County Planning Department, 1999 [2000].

Table 8.4-6
Landowners Along the Proposed Transmission and Natural Gas Routes

Assessor's Parcel Number	Owner(s)
024-019-065	John D. & Sally L. Oliveira
(APN for project site TBD)	
024-019-002	Pacific Gas & Electric Company
024-019-023	John D. & Sally L. Oliveira
024-019-066	John D. & Sally L. Oliveira
024-019-069	NewStar Fresh Foods LLC
024-026-004	Nancy L. Oliveira Revocable Trust[1]
024-026-018	John D. & Sally L. Oliveira[1]
026-001-038	West Grand Partners[1]
026-001-041	John D. & Sally L. Oliveira[1]
026-001-042	West Grand Partners[1]
026-002-010	Rancho Naranja
026-002-015	John D. & Sally L. Oliveira
026-002-016	K J C Farms

[1] Landowner of property on opposite site of 25th Avenue from proposed natural gas pipeline.

Table 8.4-7
General Plan Land Use Designations Within the Study Area[1]

Project Component	General Plan Land Uses[2]
HPP site[3]	Exclusive Agricultural (County)
Transmission Route	Exclusive Agricultural (County)
Natural Gas Pipeline Route	Exclusive Agricultural, General Agricultural (County)

[1] The study area consists of area within one mile of the plant site and within a one-half mile corridor of the proposed transmission and natural gas pipeline routes.
[2] General plan land use designations are defined in Table 8.4-3.
[3] HPP site includes the 16.5-foot water line.

Table 8.4-8
Laws, Ordinances, Regulation, and Standards for Land Use

Jurisdiction	Authority	Administering Agency	AFC Conformance Section
Federal	Federal Aviation Regulations, Part 77, § 77.13 ff.	Federal Aviation Administration (FAA)	8.4.2.3
State	Williamson Act, California Government Code §§ 51200–51295	Department of Conservation, Office of Land Conservation; Kings County Board of Supervisors	8.4.2.2
	California Environmental Quality Act, Public Resources Code §§ 21000–21177	California Energy Commission (CEC)	AFC in its entirety
	PRC § 25523(a); 20 CCR §§ 1752, 1752.5, 2300-2309, and Chapter 2 Subchapter 5, Appendix B, part (i)(3) and (4)	CEC	8.4.2.1
Local	Kings County General Plan	Kings County Planning Commission	8.4.3, 8.4.4, and 8.4.5
	Kings County Zoning Ordinance	Kings County Planning Commission	8.4.3, 8.4.4, and 8.4.5
	Kings County Land Division Ordinance	Kings County Planning Commission	8.4.3, 8.4.4, and 8.4.5
	Kings County Permit for Work Performed in a Right-of-Way	Kings County Public Works Department	8.4.3.3, 8.4.4.3, and 8.4.5
	Kings County Encroachment Permit for Installation of Pipelines Beneath a Transportation Corridor	Kings County/City of Taft Public Works Department	8.4.3.3, 8.4.4.3, and 8.4.5

FIGURES

Naval Air Station Lemoore

Existing 70-kv Henrietta Lemoore NAS Transmission Line

Affected Area

Existing 70-kV Henrietta Lemoore Transmission Line

NAS Lemoore Sewage Treatment Ponds

GWF Project Proposed Transmission Route

Proposed Water Line

Existing 230-kV Gates McColl and Gates Gregg Transmission Lines

25th Avenue

Existing Co-located 115-kV Henrietta Kingsburg Transmission Line and 70-kv Henrietta Tulare Lake Transmission Line

Closed New Star Facility

Existing 70-kV Transmission Line

Existing115-kV Transmission Line

Southern California Natural Gas Pipeline

Proposed Gas Pipeline Route

(1/4 mile) (1/4 mile)

AX

AG-40

AX

AG-40

AX

AG-40

N

0 0.2 0.4 0.6 0.8 Miles

1000 0 1000 2000 Feet

Scale 1:24,000

Source:
Base Maps from U.S.G.S.
&.5 Minute Quadrangles
Westhaven, Calif., (Photorevised 1981),
Stratford, Calif. (1954), Lemoore (1954) and
Vanguard (1956, Photorevised 1981)

Existing Transmission Lines

Gas Pipeline Routes

Water Line

Agricultural Distribution

Public Utility

Plant Site

Affected Area

AG-40 General Agricultural (County)

AX Exclusive Agricultural (County)

URS	GWF Henrietta Project No. 51-00167032.00 01013	Zoning Districts in the Area Surrounding the GWF Henrietta Power Site	Figure 8.4-1

L:\Projects\GWF_Henrietta\Apr\proj1dhw.apr

Naval Air Station Lemoore

Federal Property

Unincorporated Kings County

Existing 70-kv Henrietta Lemoore NAS Transmission Line

Affected Area

Existing 70-kV Henrietta Lemoore Transmission Line

NAS Lemoore Sewage Treatment Ponds

GWF Project Proposed Transmission Route

Proposed Water Line

Federal Property

(1 mile)

25th Avenue

Existing 230-kV Gates McColl and Gates Gregg Transmission Lines

Existing Co-located 115-kV Henrietta Kingsburg Transmission Line and 70-kv Henrietta Tulare Lake Transmission Line

Closed New Star Facility

Existing 70-kV Transmission Line

Existing115-kV Transmission Line

Southern California Natural Gas Pipeline

Proposed Gas Pipeline Route

(1/4 mile) (1/4 mile)

N

0 0.2 0.4 0.6 0.8 Miles

1000 0 1000 2000 Feet

Scale 1:24,000

Source:
Base Maps from U.S.G.S.
7.5 Minute QuadranglesWesthaven, Calif., (Photorevised 1981), Stratford, Calif. (1954), Lemoore (1954) and Vanguard (1956, Photorevised 1981)

Existing Transmission Lines

Gas Pipeline Routes

Water Line

Agricultural Distribution

Public Utility

Plant Site

Affected Area

URS	GWF Henrietta Project No. 51-00167032.00 01013	Jurisdictional Boundaries in the Area Surrounding the GWF Henrietta Power Site	Figure 8.4-2

L:\Projects\GWF_Henrietta\Apr\proj1dhw.apr

Naval Air Station Lemoore

Existing 70-kv Henrietta Lemoore NAS Transmission Line

Existing 70-kV Henrietta Lemoore Transmission Line

NAS Lemoore Sewage Treatment Ponds

GWF Project Proposed Transmission Route

Proposed Water Line

Existing 230-kV Gates McColl and Gates Gregg Transmission Lines

25th Avenue

Existing Co-located 115-kV Henrietta Kingsburg Transmission Line and 70-kv Henrietta Tulare Lake Transmission Line

Closed New Star Facility

Existing 70-kV Transmission Line

Existing115-kV Transmission Line

Southern California Natural Gas Pipeline

Proposed Gas Pipeline Route

0 0.2 0.4 0.6 0.8 Miles

1000 0 1000 2000 Feet

N

Scale 1:24,000

Source:
Base Maps from U.S.G.S.
7.5 Minute Quadrangles
Westhaven, Calif., (Photorevised 1981),
Stratford, Calif. (1954), Lemoore (1954) and
Vanguard (1956, Photorevised 1981)

Existing Transmission Lines
Transmission Route
Gas Pipeline Routes
Water Line
Agricultural Distribution
Public Utility
Plant Site
Agricultural

URS	GWF Henrietta Project No. 51-00167032.00 01013	Existing Land Uses in the Area Surrounding the GWF Henrietta Power Site	Figure 8.4-3

L:\Projects\GWF_Henrietta\Apr\proj1dhw.apr

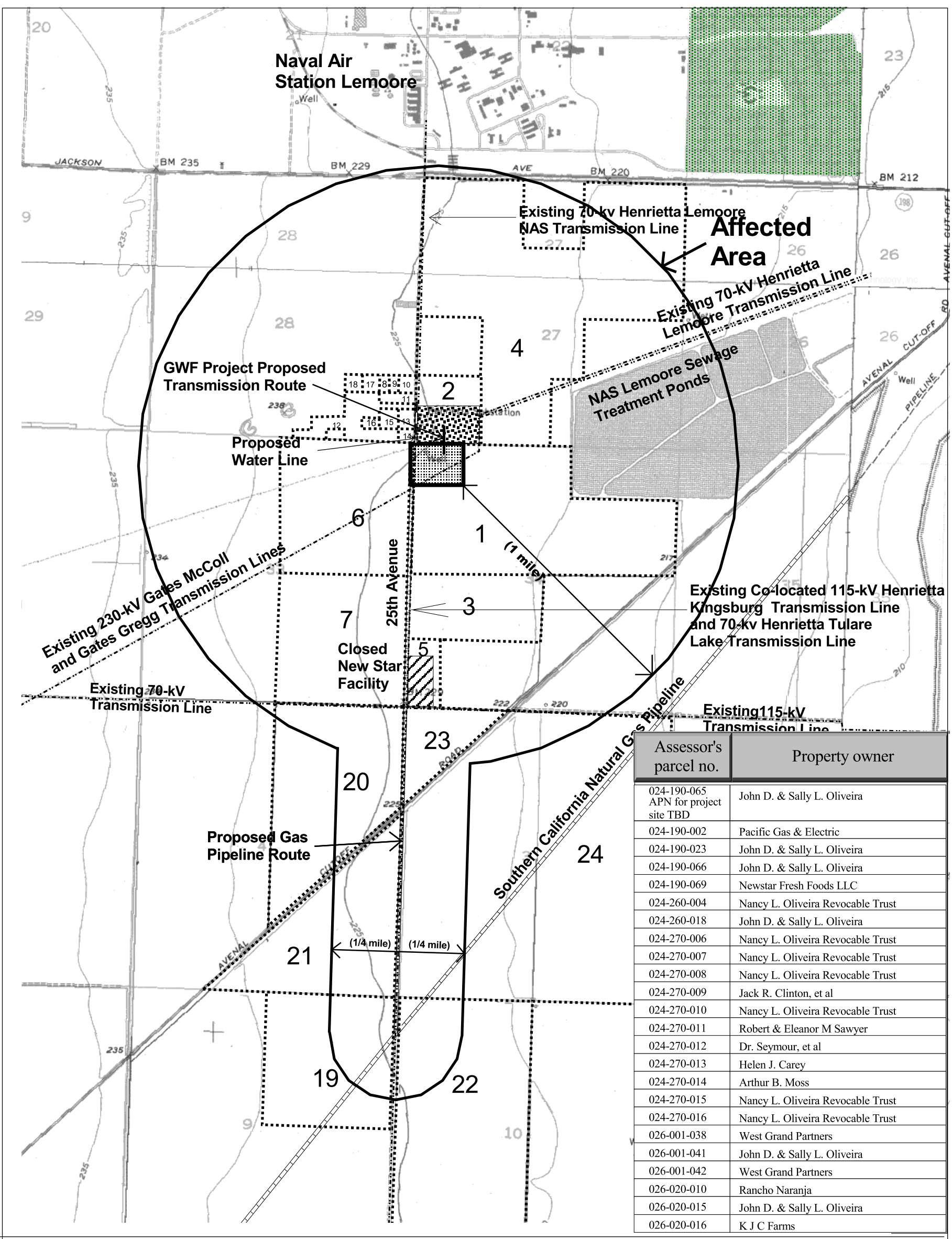

Assessor's parcel no.	Property owner
024-190-065 APN for project site TBD	John D. & Sally L. Oliveira
024-190-002	Pacific Gas & Electric
024-190-023	John D. & Sally L. Oliveira
024-190-066	John D. & Sally L. Oliveira
024-190-069	Newstar Fresh Foods LLC
024-260-004	Nancy L. Oliveira Revocable Trust
024-260-018	John D. & Sally L. Oliveira
024-270-006	Nancy L. Oliveira Revocable Trust
024-270-007	Nancy L. Oliveira Revocable Trust
024-270-008	Nancy L. Oliveira Revocable Trust
024-270-009	Jack R. Clinton, et al
024-270-010	Nancy L. Oliveira Revocable Trust
024-270-011	Robert & Eleanor M Sawyer
024-270-012	Dr. Seymour, et al
024-270-013	Helen J. Carey
024-270-014	Arthur B. Moss
024-270-015	Nancy L. Oliveira Revocable Trust
024-270-016	Nancy L. Oliveira Revocable Trust
026-001-038	West Grand Partners
026-001-041	John D. & Sally L. Oliveira
026-001-042	West Grand Partners
026-020-010	Rancho Naranja
026-020-015	John D. & Sally L. Oliveira
026-020-016	K J C Farms

N

0 0.2 0.4 0.6 0.8 Miles

1000 0 1000 2000 Feet

Scale 1:24,000

Source:
Base Maps from U.S.G.S.
7.5 Minute Quadrangles
Westhaven, Calif., (Photorevised 1981),
Stratford, Calif. (1954), Lemoore (1954) and
Vanguard (1956, Photorevised 1981)

Existing Transmission Lines
Transmission Route
Gas Pipeline Route
Water Line
Property Boundary
Agricultural Distribution
Public Utility
Plant Site

URS

GWF Henrietta

Project No. 51-00167032.00 01013

Property Owners and Assesor Parcel Numbers in the Area Surrounding the GWF Henrietta Power Site

Figure 8.4-4

L:\Projects\GWF_Henrietta\Apr\proj1dhw.apr

8.5 Noise

The Henrietta Peaker Project (HPP) consists of a 91.4-megawatt (MW) (net), natural-gas-fired, simple-cycle power plant located approximately 10 miles southwest of Lemoore, California, on a seven-acre portion of a 20-acre parcel owned by GWF Energy LLC. The HPP will interconnect to the existing adjacent Pacific Gas and Electric Company (PG&E) Henrietta Substation through a new 550-foot 70-kilovolt (kV) transmission line supported on two new transmission poles. Other linear facilities include an approximately 16.5-foot water interconnection pipeline (from the site property boundary) and a 2.2-mile Southern California Gas Company natural gas interconnection pipeline. Additionally, approximately five acres will be used for temporary construction laydown and parking.

8.5.1 Affected Environment

The proposed site and vicinity are a mix of rural, industrial, and residential areas. The nearest residential area is the Naval Air Station (NAS) Lemoore housing, located approximately 1.5 miles northeast of the site. The acoustical environment is influenced by typical rural sources, such as birds, insects, wind, occasional traffic along State Route 198 and the Avenal Cutoff, occasional military aircraft, and an existing substation.

The proposed facility will use two simple-cycle combustion turbine generators (CTGs). The major noise sources associated with the proposed facility are anticipated to include the CTG packages, the turbine exhaust stacks, the fuel gas compressor building, the fuel gas cooler, and the generator step-up transformers.

The anticipated environmental noise levels associated with the proposed facility have been evaluated with respect to the applicable laws, ordinances, regulations, and standards (LORS). LORS are described in Section 8.5.6 and summarized in Table 8.5-7.

8.5.2 Acoustical Terminology

Sound levels are measured in decibels (dB) using a logarithmic scale. The standard measure for environmental sound levels is the A-weighted sound pressure level (dBA).

The A-weighting scale was developed to simulate the frequency response of the human ear to sounds at typical environmental levels.

The background environmental sound level is the quasi-static sound level that exists in the absence of sporadic and transient noise events such as local traffic, aircraft flyovers, etc. The background sound level itself varies slowly with time as these sources increase or diminish. The statistical sound level typically considered representative of the background sound level in environmental settings is called the L_{90}; this sound level is the level that is exceeded 90 percent of the time during a given interval.

The true energy average level over a specific time period is defined as the equivalent level, L_{eq}. The equivalent level is the perfectly constant level containing the same acoustic energy over the same interval as the fluctuating interval. Hence, the L_{eq} sound level provides a measure of the true average sound level and includes all sporadic or transient events during the interval. In environmental settings, L_{eq} is usually measured in hourly intervals over long periods in order to determine 24-hour sound levels.

The day-night sound level, L_{dn}, is the 24-hour measure specified in the Kings County Noise Element and is used by the U.S. Environmental Protection Agency (U.S. EPA) and other federal agencies. This noise descriptor is the equivalent noise level over a 24-hour period that is mathematically weighted during the nighttime when residents are more sensitive to intrusive noise. The daytime period is from 7:00 a.m. to 10:00 p.m., and the nighttime period is from 10:00 p.m. to 7:00 a.m. A weighting factor of 10 dB is added to all sound levels that occur during the nighttime period. The weighted levels over a 24-hour period are then averaged to determine the L_{dn} sound level.

An additional 24-hour measure specified in the Kings County Noise Element is the community noise equivalent level, CNEL. CNEL is very similar to L_{dn}, except that an additional weighting factor of 5 dB is added to the evening period of 7:00 p.m. to 10:00 p.m. Accordingly, the daytime period is shortened to 7:00 a.m. to 7:00 p.m. Measurements of both CNEL and L_{dn} sound levels in the same residential environments indicate that the CNEL sound level is typically only slightly higher (by less than 1 dB) than the L_{dn} sound level due to the evening weighting.

8.5.3 Ambient Noise Survey

An ambient noise survey was conducted on June 6 and 7, 2001 to characterize the existing acoustical environment within the vicinity of the proposed site. Three noise measurement locations were selected to capture an acoustical environment representative of the site and the nearest noise-sensitive receptors. A description of each measurement location is provided in Table 8.5-1; the locations of nearby residences and noise monitoring locations are shown on Figure 8.5-1. Weather conditions were conducive to ambient noise surveying and generally included clear skies, occasional light breezes, and temperatures ranging from 68 to 88 degrees Fahrenheit.

Continuous monitoring was conducted at each location for a minimum duration of 25 hours to capture typical ambient daytime and nighttime sound levels. The measurements included the hourly L_{eq} and L_{90} sound levels. The hourly L_{eq} sound levels are used to determine the L_{dn} and CNEL levels, whereas the hourly L_{90} sound level represents the background levels. Additional parameters were recorded, including the hourly L_{10} and L_{50} sound levels. The L_{10} level is the sound level exceeded 10 percent of the period and is typically considered the intrusive sound level. The L_{50} sound level is the level exceeded 50 percent of the period and represents the median sound level. The noise monitoring results are detailed in Table 8.5-2 and on Figure 8.5-2.

The acoustical environment at the nearest residential area (Location 1) was influenced by traffic along State Route 198 and other nearby roadways, traffic and facilities associated with NAS Lemoore, occasional military aircraft, and natural sounds (birds, insects, wind, etc.). As listed in Table 8.5-2, the quietest background sound level for Location 1 was approximately 41 dBA and occurred during early morning hours (2:00 to 3:00 a.m.)

8.5.4 Environmental Consequences

8.5.4.1 Operational Noise Levels

The facility noise emissions were modeled using noise prediction software. The software simulated the outdoor propagation of sound from each point source and accounted for sound-wave divergence, atmospheric sound absorption, sound directivity, and sound attenuation

due to interceding barriers. A database was developed that specified the location, octave-band sound power levels, and sound directivity of each noise source. A receptor grid was specified that covered the entire project area. The model calculated the overall A-weighted sound level at each receptor location based on the octave-band sound-level contribution of each noise source. Finally, a noise contour plot was produced based on the overall A-weighted sound level at each receptor location. Noise modeling was conducted to predict the facility noise emissions during normal facility operation, which excludes intermittent activities such as startup, shutdown, and any abnormal or upset operating conditions.

The primary noise sources anticipated from this facility are the CTG packages, the exhaust stack packages, the generator step-up transformers, the fuel gas cooler, and the fuel gas compressor enclosure. Equipment sound levels were based on available manufacturer's equipment data, available in-house data, or empirical data provided by the Edison Electric Institute (EEI, 1984). The sound-level data for the major equipment are listed in Table 8.5-4.

The predicted environmental noise emissions during normal operation of the proposed facility are detailed on Figures 8.5-3 and 8.5-4. As shown on Figure 8.5-3, the A-weighted sound level at the nearest noise-sensitive receptor is approximately 32 dBA. As shown in Table 8.5-5, this results in an increase in the existing background sound level of approximately 0.5 dB, an inaudible increase. In addition, the predicted future background sound level of 41.5 dBA corresponds to L_{dn} and CNEL sound levels of 47.9 dBA and 48.1 dBA, respectively. These levels are within the "acceptable" limit of L_{dn} / CNEL 60 dBA prescribed by the Kings County Noise Element (further described in Section 8.5.7.3, below) and the guideline of L_{dn} 55 dBA recommended by the U.S. EPA (Section 8.5.7.1).

The switchyard is located on the north side of the HPP adjacent to the existing substation. Sound levels associated with the switchyard and transmission line will be less than HPP operational noise and therefore inaudible at the nearest residence, which is 1.5 miles away.

As shown on Figure 8.5-4, the A-weighted sound level ranges from approximately 47 to 63 dBA. The higher sound levels are anticipated to occur along the boundaries nearest the major equipment. Accordingly, the corresponding L_{dn} and CNEL sound levels along the boundary will reach 69.4 dBA and 69.6 dBA, respectively. These levels comply

with the "acceptable" limit of L_{dn} / CNEL 70 dBA prescribed by the Kings County Noise Element.

As shown in Table 8.5-4, there are generally no noise emissions associated with the HPP equipment. Although the transformers may tend to radiate a 120-hertz tone, the tone will be inaudible at noise-sensitive receptors.

8.5.4.2 Worker Noise Exposure

Power plant equipment can typically be provided that does not exceed an average sound level of 85 dBA at 3 feet from the equipment face and 5 feet above the ground or personnel platform. However, the noise levels in some areas within a power plant typically exceed 85 dBA, due to the additive effect of nearby equipment as well as the effect of sound reflection and reverberation. Special noise control measures, such as silencers, acoustical enclosures, insulation, or acoustical lagging, may be considered to reduce the in-plant noise levels. However, these noise control measures are not always practical for reasons of maintenance access, heat buildup, space limitations, safety, etc. Therefore, although noise levels in some areas may exceed a sound level of 85 dBA, OSHA and Cal-OSHA noise exposure limits will be satisfied through the use of hearing protection within any areas that exceed 85 dBA.

8.5.4.3 Construction Noise Levels

The major construction phases consist of site clearing and preparation, foundation construction, building and equipment erection, site cleanup, and facility startup. Noise emissions will vary with each phase of construction, depending on the activity and the associated equipment.

Site clearing and preparation will require the use of heavy, diesel-powered earthmoving equipment. This equipment includes bulldozers, scrapers, dump trucks, and front-end loaders. Noise emissions during this phase will be dominated by the diesel engine noise. Site clearing and preparation activities will occur at all locations where facility equipment is to be installed.

Foundation construction will primarily involve concrete-handling equipment such as concrete trucks, mixers, vibrators, and pumps. Some earthmoving equipment will also be required to backfill the foundations.

The erection phase will involve mobile cranes, equipment delivery, impact wrenches, and air compressors. Because combustion turbine installation requires minimal onsite assembly, noise emissions during the erection phase are expected to be less than during other phases of construction. Similarly, site cleanup and facility startup will generally result in minimal noise emissions.

Construction activities will be scheduled during daytime periods (7:00 a.m. to 10:00 p.m.) to the extent possible. Some activities will require extended hours of operation, due to scheduling constraints or to maintain structural integrity of concrete pours. Nighttime construction will be limited to low-noise-producing activities to the extent possible.

The anticipated construction equipment noise levels and equipment usage are detailed in Table 8.5-6 (Bolt, Beranek, and Newman, Inc., 1977). The resulting construction noise levels at the nearest noise-sensitive receptor (NAS Lemoore housing) are anticipated to range from 45 to 50 dBA. These levels are expected to occur primarily during daytime periods and to be only faintly audible. Accordingly, construction noise is not anticipated to cause a disturbance to the nearby noise-sensitive receptors.

8.5.5 Equipment Design Features

The HPP incorporates the following noise reduction design features:

Combustion Turbine Generator Package

- Air inlet silencer
- Outdoor/weather enclosure
- Compartment ventilation silencers

Exhaust Stack Package

- Stack silencer

Transformer Package

- Low-noise unit or barrier wall

Fuel Gas Cooler Package

- Low-noise fans
- Barrier wall

Fuel Gas Compressor Package

- Enclosure
- Acoustically treated building ventilation

8.5.6 Mitigation Measures

8.5.6.1 Construction Noise

Where feasible, noisy construction activities will be scheduled during daytime periods. All engine-driven equipment will have mufflers or silencers that are in good working order. No other construction noise mitigation is necessary.

8.5.6.2 Worker Noise Exposure

The equipment noise design features described above will reduce the in-plant sound levels as well. Any locations determined to exceed 85 dBA will be posted as "high noise" areas, and hearing protection will be required within these areas, as required by state and federal Occupational Safety and Health Administration (OSHA) standards.

8.5.7 LORS Compliance

8.5.7.1 Federal

U.S. Environmental Protection Agency: The U.S. EPA has identified yearly day-night average sound levels, L_{dn}, sufficient to protect public health and welfare from the effects of environmental noise. The U.S. EPA emphasizes that since the protective sound levels were derived without concern for technical or economic feasibility, and contain a margin of

safety to ensure their protective value, they must not be viewed as standards, criteria, regulations, or goals. Rather, they should be viewed as levels below which there is no reason to suspect that the general population will be at risk from any of the identified effects of noise. Additionally, the U.S. EPA has no authority to regulate ambient noise levels. According to the U.S. EPA, levels are sufficient to protect public health and welfare if they do not exceed an yearly average L_{dn} of 55 dBA outdoors and 45 dBA indoors in sensitive areas such as residences, schools, and hospitals (U.S. EPA, 1997).

U.S. Occupational Safety and Health Administration: OSHA has established maximum permissible worker noise exposure levels to protect against hearing damage. The level is based on a worker's noise exposure over a specific time period. For example, as stipulated in Title 29 of the Code of Federal Regulations, Part 1910, a worker cannot be exposed to an average sound level in excess of 90 dBA for over an eight-hour period. When noise exposure exceeds the permissible level, noise must be reduced through feasible engineering or administrative controls. When such controls fail to reduce the noise exposure to a permissible level, personal protective equipment must be provided and used to reduce the noise exposure. Additionally, when worker noise exposure exceeds 85 dBA over an eight-hour period, the employer must provide hearing protection and establish an annual audiometric testing program to track potential hearing loss. Therefore, OSHA requirements allow areas within facilities to exceed 85 dBA, provided that feasible noise control has been implemented and these areas are designated as high noise areas requiring hearing protection at all times.

Compliance with the OSHA noise exposure limits will be achieved by providing equipment noise mitigation and by identifying the high noise areas with warning signs that prescribe hearing protection.

8.5.7.2 State

California Department of Industrial Relations (Cal-OSHA): Cal-OSHA has established maximum permissible worker noise exposure levels to protect against hearing damage. The Cal-OSHA worker noise exposure limits are consistent with the federal OSHA limits (California Code of Regulations, Title 8, Subchapter 7).

Compliance with the Cal-OSHA noise exposure limits will be achieved by providing equipment noise mitigation and by identifying the high noise areas with warning signs that prescribe hearing protection.

California Environmental Quality Act (CEQA): CEQA requires lead agencies to evaluate whether a project will result in significant increases in ambient noise levels at sensitive receptors. Noise-sensitive receptors include residences, schools, churches, and hospitals. The California Energy Commission (CEC) staff's practice is to determine that an increase in ambient noise levels at sensitive receptors of 5 dB or less is not a significant noise impact.

Compliance with the CEC limit will be achieved by providing noise mitigation measures on the major equipment. The facility noise emissions are anticipated to increase the existing background sound levels by 0.5 dB, well below the CEC signifigance threshold.

8.5.7.3 County

Kings County General Plan – Noise Element: The State of California has not promulgated statewide environmental noise regulations, but rather charges each county to develop a noise element as part of its General Plan. The Kings County Noise Element establishes environmental noise limits based on the land use of the property receiving the noise. The allowable noise levels are outlined in Table 8.5-3 (Kings County, 1993). The limits listed in Table 8.5-3 include only those limits that potentially apply to the project.

As shown in Table 8.5-3, the environmental noise levels are classified as acceptable, conditionally acceptable, and unacceptable. Noise levels that fall in the conditionally acceptable range require specific approval from Kings County in order to be permissible.

The properties adjacent to the project site consist of agricultural and industrial uses. Accordingly, the acceptable environmental noise level at the boundary of these adjacent properties is less than L_{dn} 70 dBA. The nearest residential land use to the proposed site is the NAS Lemoore housing, located approximately 1.5 miles northeast of the site. While this housing consists predominantly of multiple-family dwellings, some are single-family residences.

The acceptable environmental noise level at the boundary of these residential land uses is less than L_{dn} 60 dBA.

Compliance with the Kings County limits will be achieved by including noise design features on the major equipment. The facility noise emissions are anticipated to contribute to future L_{dn} / CNEL sound levels of 69.4 / 69.6 dBA at the nearest adjacent property boundary and 47.9 / 48.1 dBA at the NAS Lemoore housing.

8.5.8 Agency Contacts

Agency	Contact/Title	Telephone
Kings County Planning Department 1400 W. Lacey Blvd. Hanford, CA 93230	William R. Zumwalt Director	(559) 582-3211

8.5.9 Schedule of Other Required Permits/Approvals

No permits or additional approvals are required.

8.5.10 Proposed Conditions of Certification

Proposed conditions of certification are contained in Appendix K. These conditions are proposed in order to ensure compliance with applicable LORS and/or to reduce potentially significant impacts to less-than-significant levels.

8.5.11 References

Bolt, Beranek, and Newman, Inc., 1977. *Power Plant Construction Noise Guide*. May.

California Code of Regulations (CCR), Title 8, Subchapter 7, Group 15.

CEC, 2000. California Energy Commission Regulations.

Code of Federal Regulations (CFR), Title 29, Part 1910, Subpart G.

Edison Electric Institute (EEI), 1984. *Electric Power Plant Environmental Noise Guide*. Volume I, 2nd Edition.

Kings County, 1993. Kings County General Plan Noise Element. December.

U.S. Environmental Protection Agency (U.S. EPA), 1977. *Toward a National Strategy for Noise Control*. April.

TABLES

Table 8.5-1
Descriptions of the Noise Measurement Locations

Noise Measurement Location	Description
1	Approximately 5,500 feet northeast of the site, adjacent to military base housing near the south end of NAS Lemoore.
2	Along 25th Avenue at the boundary of the proposed site.
3	Approximately 3,300 feet south of the site along 25th Avenue, adjacent to the closed New Star facility.

Table 8.5-2
Existing Ambient Sound Levels

Noise Measurement Location	$L_{eq\ (25hr)}$	L_{dn}	CNEL	L_{90} (lowest hourly)
1 (Residential)	63 dBA	67 dBA	67 dBA	41 dBA
2 (Site)	63 dBA	64 dBA	64 dBA	34 dBA
3	54 dBA	57 dBA	59 dBA	28 dBA

Table 8.5-3
Applicable Environmental Noise Level Limits
Established in the Noise Element of Kings County General Plan

Land Use Receptor	Exterior Noise Exposure Allowance, L_{dn}		
	Acceptable	**Conditionally Acceptable**	**Unacceptable**
Agricultural (Agricultural and Intensive Agricultural Uses)	< 70 dBA	70 to 75 dBA	> 75 dBA
Commercial (Retail Sales, Office Buildings, Professional Services, Commercial Business)	< 70 dBA	70 to 75 dBA	> 75 dBA
Industrial (Industrial, Manufacturing, Utility, and Waste Disposal Facilities)	< 70 dBA	70 to 75 dBA	> 75 dBA
Residential (Multiple Family)	< 65 dBA	65 to 70 dBA	> 70 dBA
Residential (Single Family)	< 60 dBA	60 to 70 dBA	> 70 dBA
Residential (Rural Residential)	< 65 dBA	65 to 70 dBA	> 70 dBA

Table 8.5-4
Major Equipment Sound Level Data

Equipment	Octave Band Sound Power Level, dB									Overall	Comments
	31.5	63	125	250	500	1K	2K	4K	8K	dBA	
CTG Package	114	111	108	103	97	92	89	85	83	100	No tonal noise emissions.
Exhaust Stack Package	118	112	102	96	97	95	87	86	83	99	No tonal noise emissions.
Transformer	99	104	105	103	97	89	83	77	69	98	Transformers tend to radiate a 120-hertz tone. However, the tone will be inaudible at noise sensitive receptors.
Fuel Gas Cooler	106	104	101	89	82	80	72	66	60	88	No tonal noise emissions.
Fuel Gas Compressor	114	114	112	111	110	109	108	107	103	115	Located within enclosure.

Table 8.5-5
Predicted Future Background Sound Level during Normal Operation of the Proposed Facility

Receptor	Measured Background Sound Level (L_{90})	Predicted Facility Sound Level	Future Background Sound Level with Facility	Increase in Future Background Sound Level
NAS Lemoore Housing	41.0 dBA	32.0 dBA	41.5 dBA	0.5 dB

Table 8.5-6
Construction Equipment Noise Emission Levels

Construction Phase	Equipment	Sound Pressure Level @ 50 ft, dBA	Quantity	Acoustic Usage Factor, dB	Equivalent Sound Pressure Level @ 50 ft, dBA
Clearing	Backhoe	83	2	-6	80
	Grader	85	2	-6	82
	Trencher	85	1	-6	79
	Dozer	87	2	-5	85
	Front-End Loader	84	2	-5	82
	Compactor	80	2	-3	80
	Mobile Crane	83	1	-8	75
	Truck, Large	85	4	-5	86
	Diesel Generator	79	1	-8	71
	TOTAL				**91**
Foundation	Backhoe	83	2	-6	80
	Front-End Loader	84	1	-5	79
	Dozer	87	1	-5	82
	Trencher	85	1	-6	79
	Mobile Crane	83	2	-8	78
	Stationary Crane	85	1	-13	72
	Truck, Large	85	2	-5	83
	Concrete Mix Trucks	85	2	-5	83
	Concrete Pump	80	1	-8	72
	Concrete Vibrator	76	4	-8	74
	Diesel Generator	79	1	-8	71
	TOTAL				**88**
Erection	Backhoe	83	2	-6	80
	Trencher	85	1	-6	79
	Mobile Crane	83	2	-8	78
	Stationary Crane	85	4	-13	78
	Truck, Large	85	4	-5	86
	Diesel Generator	79	1	-8	71
	Pneumatic Tools	85	7	-8	85
	Air Compressors	85	2	-7	81
	TOTAL				**91**
Startup/Site Cleanup	Dozer	87	1	-5	82
	Trencher	85	1	-6	79
	Mobile Crane	83	1	-8	75
	Truck, Large	85	2	-5	83
	Diesel Generator	79	1	-8	71
	Pneumatic Tools	85	2	-8	80
	Air Compressors	85	1	-7	78
	TOTAL				**88**

Table 8.5-7
Laws, Ordinances, Regulations, and Standards Applicable to Noise

LORS	Applicability	AFC Conformance Section
Federal		
U.S. EPA 1974 Noise Guidelines	Guidelines for state and local governments.	N/A
The Occupational Safety and Health Act of 1970 (OSHA), (29 CFR § 1919 et seq.)	Guidelines for exposure of workers to noise during construction and operations.	8.5.7.1
Noise Control Act (1972) as amended by the Quiet Communities Act (1978); (42 USC 4901–4918)	Separate noise-sensitive areas are encouraged.	N/A
State		
Rules of Practice and Procedure & Power Plant Site Certification Regulations (CEC, 2000)	Defines noise impacts at residential/recreational receptors in relation to an increase over pre-existing background noise levels.	8.5.7.2
Cal-OSHA Occupational Noise Exposure Regulations (8 CCR, General Industrial Safety Orders, Article 105, Control of Noise Exposure, § 5095, et seq.)	Sets employee noise exposure limits. Equivalent to federal OSHA standards.	8.5.7.2
California Noise Control Act of 1973 (California Health and Safety Code, Division 28)	Comply with local noise ordinances.	N/A
Local		
Kings County, General Plan Noise Element, 1993	Establishes environmental noise limits based on the land use of the property receiving the noise. Noise levels are classified as acceptable, conditionally acceptable, and unacceptable. Acceptable noise level of <70 dBA for industrial/agricultural land uses, and <65 dBA for multiple-family residential, <60 dBA for single-family residential.	8.5.7.3

FIGURES

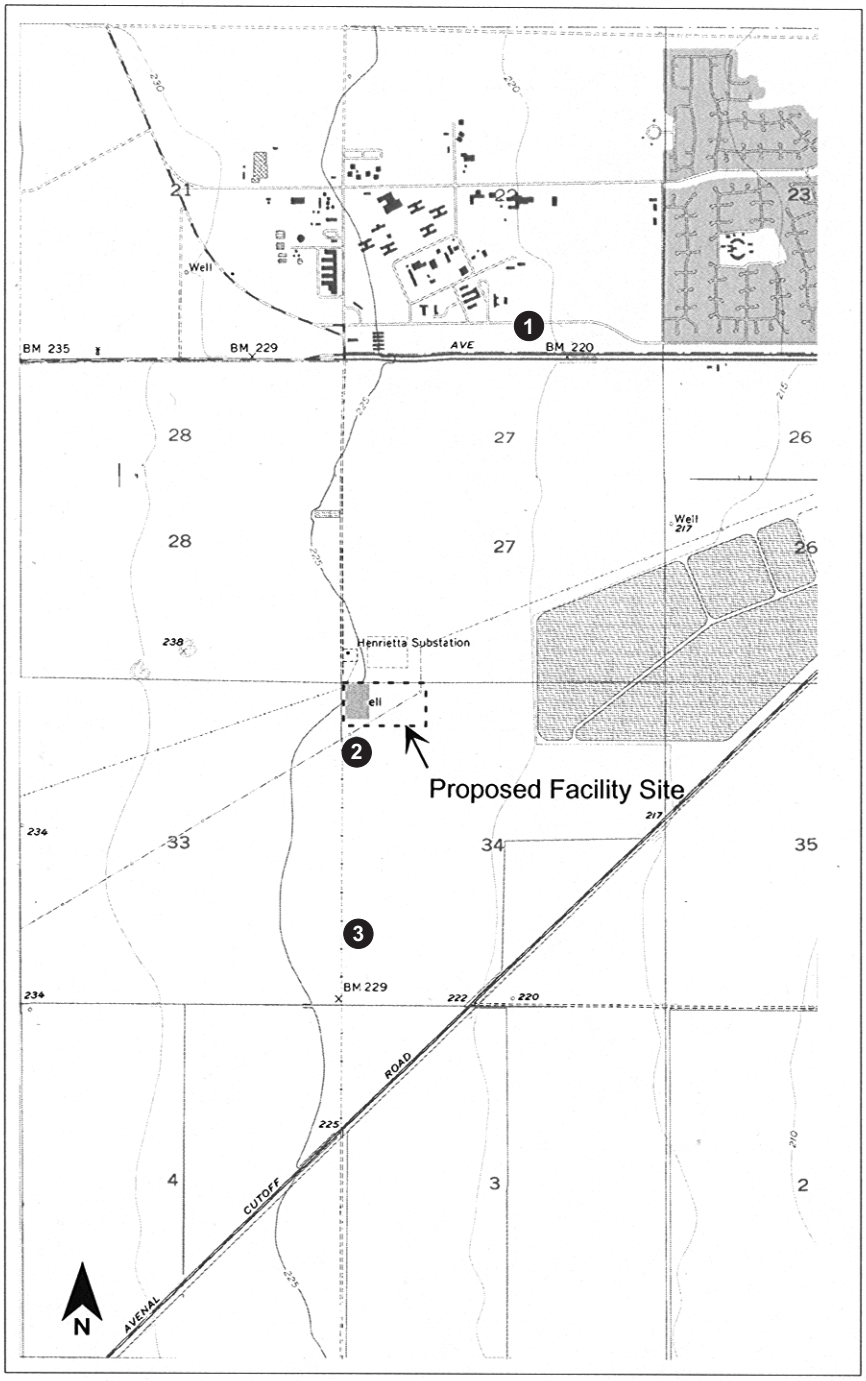

URS	Project No. 51-00167032.00 GWF Henrietta Peaker Project	NOISE MEASUREMENT LOCATIONS	Figure 8.5-1

51-00167032.00-01023/082401/gos

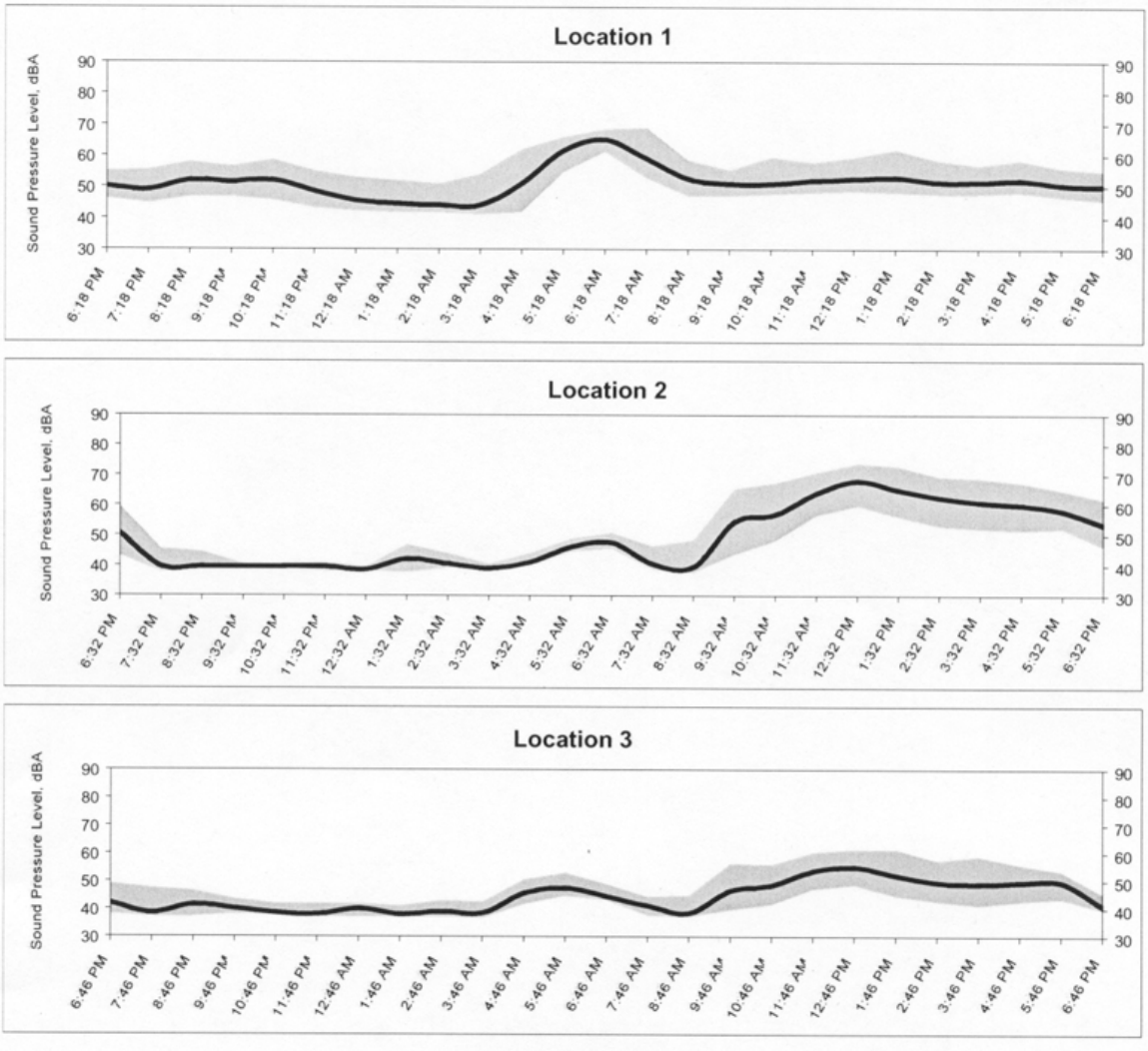

10-percentile Exceedance Sound Level, L10

90-percentile Exceedance Sound Level, L90

50-percentile Sound Level, L50

URS	GWF Henrietta Peaker Project Project No. 51-00167032.00	Continuous Sound Level Measurements	Figure 8.5-2

L:\Projects\GWF_Henrietta\Apr\proj1dhw.apr

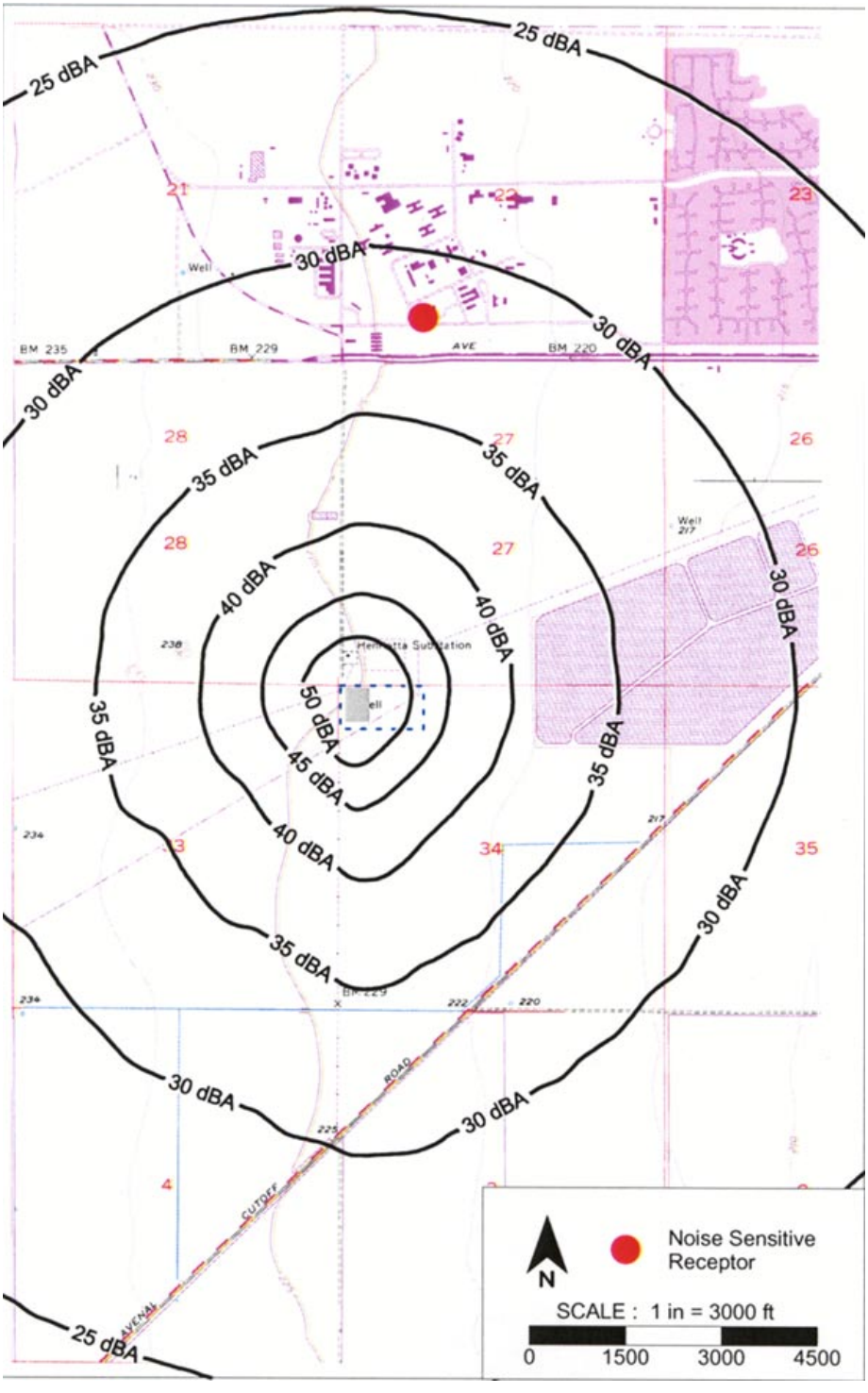

URS	GWF Henrietta Peaker Project Project No. 51-00167032.00	Facility Noise Emission	Figure 8.5-3

L:\Projects\GWF_Henrietta\Apr\proj1dhw.apr

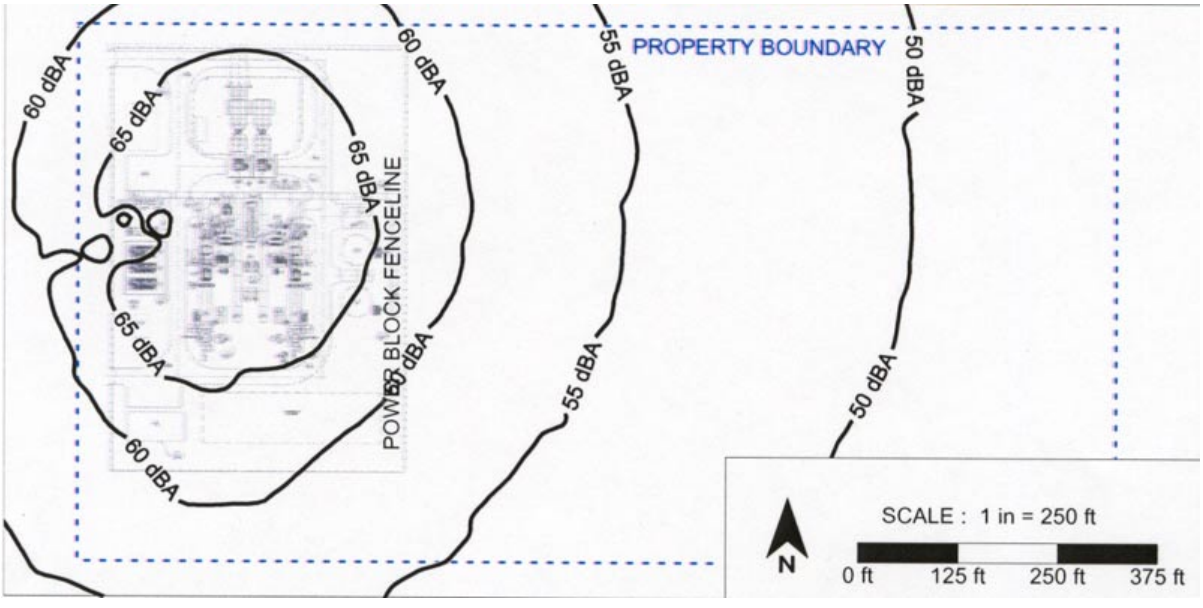

URS	GWF Henrietta Peaker Project Project No. 51-00167032.00	Facility Noise Emission Along Property Boundaries	Figure 8.5-4

L:\Projects\GWF_Henrietta\Apr\proj1dhw.apr

8.6 Public Health

The Henrietta Peaker Project (HPP) consists of a 91.4-megawatt (MW) (net), natural-gas-fired, simple-cycle power plant located approximately 10 miles southwest of Lemoore, California, on a seven-acre portion of a 20-acre parcel owned by GWF Energy LLC. The HPP will interconnect to the existing adjacent Pacific Gas and Electric Company (PG&E) Henrietta Substation through a new 550-foot 70-kilovolt (kV) transmission line supported on two new transmission poles. Other linear facilities include an approximately 16.5-foot water interconnection pipeline (from the site property boundary) and a 2.2-mile Southern California Gas Company natural gas interconnection pipeline. Additionally, approximately five acres will be used for temporary construction laydown and parking.

This section contains the methodology and results of the human health risk assessment (HRA) for the HPP. The purpose of the HRA is to evaluate potential public exposure to pollutant emissions from routine operations. Potential public exposure during upset conditions is addressed in Section 8.12 (Hazardous Materials Handling). This section also addresses exposure to electric and magnetic fields. A detailed analysis of electric and magnetic field strengths at the edge of the right-of-way for the proposed transmission line is provided in Section 6.2, Transmission Line Electrical Effects.

8.6.1 Affected Environment

The nearest public receptors to the HPP site are workers, residences, and the two neighboring businesses. The nearest residences are approximately 1.5 miles northeast. The nearest business is the New Star facility (0.7 miles south), but this facility is currently not operating. The closest operating business is Naval Air Station (NAS) Lemoore, located approximately one mile north of the facility. There are no other sensitive receptors within a one-mile radius of the proposed HPP site.

The HPP turbine stacks would exhaust combustion gases at 85 feet (25.9 meters) above grade elevation. Topographical features within a 10-mile radius that are of equal or greater elevation than the assumed stack exhaust exit point (i.e., stack height plus grade elevation, which is 309 feet or 94 meters) are shown on Figures 8.6-1a and 8.6-1b.

Sensitive receptors are defined as groups of individuals that may be more susceptible to health risks due to chemical exposure. Schools (public and private), day care facilities, convalescent homes, and hospitals are of particular concern. Figure 8.6-2 shows sensitive receptors within a 10-mile radius of the proposed facility. This figure is provided at a scale of 1:24,000. The closest sensitive receptor is the Empire School located approximately 3.9 miles east of the HPP.

8.6.2 Environmental Consequences

This section describes the potential public health risks due to construction and operation of the HPP, the methodology and results of the HRA, the uncertainties in the HRA, and other potential health impacts.

8.6.2.1 Construction Emissions

Due to the relatively short duration of the construction (i.e., approximately five months), significant long-term public health effects are not expected. To ensure worker safety during construction, safe work practices will be followed (see Section 8.7, Worker Health and Safety). A detailed analysis of the potential environmental impacts due to criteria pollutant emissions during construction and operation and the control of these emissions is provided in Section 8.1 (Air Quality).

8.6.2.2 Operational Emissions

Facility operations were evaluated to determine whether substances used or generated at the HPP could cause adverse health effects if released to the air. The sources of potential emissions from facility operations include the natural-gas-fired combustion turbine generators (CTGs) and the emergency generator. The substances emitted from turbine operations that have potential toxicological impacts are shown in Table 8.6-1. These potential air toxic species were identified from the California Air Toxics Emission Factor (CATEF) II database (CARB, 2001). All air toxic species associated with Source Classification Code (SCC) 20200203 (natural-gas-fired CTGs with selective catalytic reduction [SCR]) are included in Table 8.6-1. Ammonia emissions associated with potential ammonia slip from the SCR system

are calculated from the permit limit maximum of 10 parts per million by volume, dry (ppmvd) at 15 percent oxygen. Diesel particulate emissions from the emergency generator are calculated from manufacturer's data. More detailed information on the chemicals stored and used onsite, associated potential impacts, and potential accidental chemical releases is included in Section 8.6.3.1.

Turbine emissions were estimated by assuming that both turbines would operate simultaneously under normal load conditions. The turbine emission factors, in units of pounds per million standard cubic feet (lb/MMscf) of natural gas, were multiplied by the amount of gas combusted per hour to obtain emissions in units of pounds per hour (lb/hr). For maximum hourly emissions, the maximum natural gas consumption rate of 0.496 MMscf per hour per turbine was used (100 percent load at 15 °F ambient temperature). For annual emissions, the annual average natural gas consumption rate of 0.470 MMscf per hour per turbine was used (100 percent load at 63 °F ambient temperature), assuming that the turbines would operate 8,100 hours per year (including startups and shutdowns). Routine testing emissions from the emergency generator assumed operation for 15 minutes once per week. The emission factors and estimated maximum hourly and annual emissions are summarized in Table 8.6-2.

8.6.2.3 Public Health Impact Assessment Approach

The potential human health risks posed by the project's emissions were assessed using procedures consistent with the California Air Pollution Control Officers Association (CAPCOA) *Air Toxics "Hot Spots" Program: Revised 1992 Risk Assessment Guidelines* (CAPCOA, 1993). The CAPCOA guidelines were developed to provide risk assessment procedures as required under the Air Toxics Hot Spots Information and Assessment Act of 1987, Assembly Bill (AB) 2588 (Health and Safety Code Sections 44360 et seq.). The Hot Spots law established a statewide program for the inventory of air toxic emissions from individual facilities as well as requirements for risk assessment and public notification of potential health risks.

The HRA was conducted in four steps:

1. Hazard Identification

2. Dose-Response Assessment
3. Exposure Assessment
4. Risk Characterization

First, hazard identification was performed to determine the potential health effects that may be associated with emissions from the HPP. The purpose was to identify whether pollutants emitted could be characterized as potential human carcinogens or associated with other types of adverse health effects. The chemicals evaluated in this analysis (Table 8.6-1) were identified from the CAPCOA guidelines (CAPCOA, 1993), the California Office of Environmental Health Hazard Assessment (OEHHA) *California Cancer Potency Factors* (Cal-EPA, 2001a), OEHHA's *Determination of Acute Reference Exposure Levels for Airborne Toxicants* (Cal-EPA, 1999), and *Determination of Chronic Reference Exposure Levels* (Cal-EPA, 2000a, 2000b, and 2001b).

Second, a dose-response assessment was performed to characterize the relationship between pollutant exposure and the incidence of an adverse health effect in exposed populations. The dose-response relationship is expressed in terms of potency values (i.e., unit risk factors or URFs) for cancer risk and reference exposure levels (RELs) for acute and chronic noncancer risks. The CAPCOA and OEHHA documents identified above provide a list of pollutants and their associated URFs and RELs.

Third, an exposure assessment was conducted to estimate the extent of public exposure to the emissions from the HPP. Public exposure is dependent on the short- and long-term ground-level concentrations resulting from emissions, the route of exposure, and the duration of exposure to those emissions. Dispersion modeling was performed using the ISCST3 model to estimate the ground-level concentrations near the project site. The methods used in the dispersion modeling were consistent with the approach described in Section 8.1 (Air Quality). The exposure pathways included in this analysis were inhalation, soil ingestion, dermal, ingestion of locally produced plants and produce, and mother's milk. Analysis of exposure through other pathways was determined to be unnecessary due to the location of the project site. The duration of exposure to emissions from the HPP was conservatively assumed to be 24 hours

per day, 365 days per year, for 70 years even though the facility has a planned 30-year operating life.

Fourth, risk characterization was performed to integrate the health effects and public exposure information and provide qualitative estimates of health risks. Risk modeling was performed using the ACE2588 model to estimate cancer and noncancer health risks. The ACE2588 model utilizes CAPCOA equations and algorithms (CAPCOA, 1993) to calculate health risks based on input parameters such as emissions, "unit" ground-level concentrations, and toxicological data. A detailed description of the model input parameters and results of the HRA are provided below.

8.6.2.4 Model Input Parameters

The HRA was conducted using worst-case turbine emissions (short- and long-term). Cancer and chronic noncancer health effects were estimated using the annual turbine emission estimates coupled with annual stack parameters (both 100 percent load at 63 ^{o}F ambient temperature) and annualized emissions from routine emergency generator testing. Acute noncancer health effects were estimated using the worst-case maximum hourly emissions (100 percent load at 15 ^{o}F ambient temperature) coupled with low-flow stack parameters (start-up/shutdown conditions) and emissions during generator testing averaged over a one-hour period. The emissions values in lb/hr were converted to grams per second (g/s) for use as input to the ACE2588 model.

Dispersion modeling was performed using the ISCST3 model and methods consistent with the approach described in Section 8.1 (Air Quality) of this Application for Certification (AFC). As prescribed by the ACE2588 model, the dispersion modeling was conducted using emission rates of 1 g/s. The results using 1 g/s emission rates produced "unit" ground-level concentrations, which were input to the ACE2588 model. The ACE2588 model, using the turbine emission rates (provided in the input file as described above) and the unit ground-level concentrations (provided from the dispersion modeling), calculated ground-level concentrations for each chemical species. The meteorological data used for the HRA were the same data used in the air quality analysis, presented in Section 8.1.

Toxicological factors (URFs and RELs) were obtained from the most recently updated factors published by OEHHA (Cal-EPA 2000a, 2000b, 2001a, and 2001b). The pollutant-specific URFs and RELs used in the HRA are listed in Table 8.6-3. The ACE2588 model uses the toxicological data, in conjunction with the other input data described above, to perform health risk estimates based on CAPCOA equations and algorithms.

8.6.2.5 Calculation of Health Effects

Adverse health effects are expressed as cancer or noncancer health risks. Cancer risk is typically reported as "lifetime cancer risk." Lifetime cancer risk is the maximum estimated increased risk of contracting cancer caused by long-term exposure to a pollutant suspected of being a carcinogen. Cancer risk is calculated by assuming an individual is exposed continuously to pollutants for 24 hours per day for 70 years. Although the continuous lifetime exposure is unlikely, the goal of the approach is to produce a worst-case estimate of potential cancer risk. Noncancer risk is typically reported as a "total hazard index" (THI). The THI is calculated for each target organ as the sum of the ratios of each chemical's estimated exposures divided by the maximum acceptable exposure level (or the REL) of that pollutant. The acceptable exposure level is generally the level at (or below) which no adverse health effects are expected. The THI is calculated for short-term (acute) and long-term (chronic) exposures.

The cancer and noncancer risk estimates provided in this HRA represent incremental risks (i.e., risks due to the HPP only) and do not include potential health risks posed by existing background concentrations. The ACE2588 model performs all of the necessary calculations to estimate the potential lifetime cancer risk and acute and chronic THIs posed by the proposed project emissions.

8.6.2.6 Health Effects Significance Criteria

State and local agencies provide varying significance criteria for cancer and noncancer health effects. For the HPP, the California Energy Commission (CEC) Guidelines provide the most stringent significance criteria for potential cancer and noncancer health effects from project-related emissions. For carcinogenic health effects, an exposure is considered potentially significant when the predicted lifetime cancer risk exceeds one in 1 million

(1.0×10^{-6}). For noncarcinogenic health effects, an exposure that affects a target organ is considered potentially significant when the acute or chronic THI exceeds a value of 1.

8.6.2.7 Estimated Lifetime Cancer Risk

The maximum incremental cancer risk resulting from the project's emissions was estimated to be 0.0296 in 1 million, at a location approximately 2.2 miles to the southeast of the turbines at an elevation of 216 feet (receptor #104 in ACE output file, 240,400 meters east, 4,010,900 meters north Universal Transverse Mercator [UTM] Coordinate System). The estimated cancer risk at all sensitive receptors would be less than this maximum. The maximum cancer risk was modeled with the maximum annual operating scenario (100 percent load at 63 °F ambient temperature). Table 8.6-4 presents the detailed cancer results of the HRA for the HPP. Applicable excerpts of the ACE2588 model output can be found in Appendix E.

The estimated cancer risks are well below the significance criteria of one in 1 million. Thus, the HPP does not pose significant health effects, based on analysis using the most stringent significance criteria established for carcinogenic health effects.

8.6.2.8 Estimated Chronic and Acute Total Hazard Indices

The maximum chronic THI resulting from project emissions was estimated to be 0.000785, approximately 2.2 miles southeast of the turbines at an elevation of 216 feet (receptor #104 in ACE output file, 240,400 meters east, 4,010,900 meters north UTM). The maximum chronic THI was modeled with the maximum annual operating scenario (100 percent load at 63 °F ambient temperature). The maximum acute THI resulting from the project's emissions was estimated to be 0.0035, at a location approximately 0.1 mile southeast of the turbines at an elevation of 223 feet (receptor #76 in ACE output file, 239,200 meters east, 4,014,150 meters north UTM). The maximum acute THI was modeled using startup stack parameters. The estimated THI's at all sensitive receptors would be less than these maximums. Table 8.6-4 presents the detailed noncancer results of the HRA for the HPP.

The estimated chronic and acute THIs are well below the significance criteria of one. Thus, the HPP emissions do not pose significant health effects, based on analysis using the most stringent significance criteria established for noncarcinogenic health effects.

8.6.2.9 Uncertainty in the Public Health Impact Assessment

Sources of uncertainty in HRAs include emissions estimates, dispersion modeling, exposure characteristics, and extrapolation of toxicity data in animals to humans. Assumptions used in HRAs are designed to provide sufficient health protection to avoid underestimation of risk to the public. Some sources of uncertainty applicable to this HRA are discussed below.

The turbine emission rates were derived using vendor data for ammonia slip and diesel particulate exhaust from the emergency generator and data from the CATEF II database (CARB, 2001) for the other air toxics. The short-term turbine emissions were developed assuming all turbines would operate at the same time and at the maximum heat input rate. Long-term turbine emissions were estimated based on 100 percent load at an average ambient temperature of 63 °F and 8,100 hours per year operation. Under actual operating conditions, the turbines may operate less than 8,100 hours per year, or the typical loads could be lower. Consequently, the emissions used for this HRA are likely to be higher than levels that would be experienced under normal operation of the turbines.

The models used in dispersion modeling contain assumptions that tend to overpredict ground-level concentrations. For example, the modeling performed in the HRA assumed a conservation of mass (i.e., all of the pollutants emitted from the sources remained in the atmosphere while being transported downwind). During the transport of pollutants from sources to receptors, none of the material was assumed to be removed through chemical reaction or to be lost at the ground surface through reaction, gravitational settling, or turbulent impaction. In reality, these mechanisms work to reduce the level of pollutants remaining in the atmosphere.

The exposure characteristics assessed in the HRA included the assumption that residents were exposed to turbine emissions continuously at the same location for 24 hours per day, 365 days per year, for 70 years. It is extremely unlikely that any person would meet this

condition. The conservative exposure assumptions tend to overpredict risk estimates in the HRA process.

The toxicity data used in the HRA contain uncertainties due to the extrapolation of data from animals to humans. Typically, safety factors are applied when doing the extrapolation. Furthermore, the human population is much more diverse, both genetically and culturally, than bred experimental animals, and thus the intraspecies variability among humans is expected to be much greater than in laboratory animals. With all of the uncertainty in the assumptions used to extrapolate toxicity data, significant measures are taken to ensure that there is sufficient health protection built into the available health effects data.

8.6.2.10 Criteria Pollutants

The criteria pollutants (nitrogen oxides, carbon monoxide, sulfur dioxide, and particulate matter) were modeled, and an evaluation of their impacts on air quality is provided in Section 8.1 (Air Quality). The national and California ambient air quality standards (NAAQS/CAAQS) set limits on the allowable level of air pollutants in the ambient air necessary to protect public health. The results show that the NAAQS/CAAQS for the above pollutants are not exceeded as a result of operation of the HPP, with the exception of particulate matter (PM_{10}) under the California standards. Current PM_{10} levels already exceed the CAAQS in the project area. However, PM_{10} impacts from the HPP were shown to have an insignificant contribution to CAAQS violations. Because the results indicate compliance with the NAAQS/CAAQS, no significant adverse health effects are anticipated from HPP criteria pollutant emissions.

8.6.3 Other Public Health Risks

8.6.3.1 Chemicals Stored and Used Onsite

Aqueous ammonia will be stored and used onsite. In the extremely unlikely event of an accidental release of aqueous ammonia there would be a potential to adversely affect public health. Refer to Section 8.12 (Hazardous Materials Handling) for an assessment of potential offsite consequences and measures proposed to minimize the potential health risk. With the

incorporation of these measures public health risk from exposure to ammonia is reduced to insignificant levels.

The HPP will coordinate with local emergency response units by providing them with copies of the emergency response plan, conducting a plant site tour to point out the locations of hazardous materials and safety equipment, and encouraging periodic emergency response drills.

8.6.3.2 Electromagnetic Field Exposure

Electric and magnetic field (EMF) strengths produced by the proposed transmission line are provided in Section 6.2.4 of this AFC. Section 6.0 (Electric Transmission) discusses aviation safety, corona effects, and the strength of the electric and magnetic fields produced by the proposed transmission line. The remainder of this section addresses human health effects from exposure to electric and magnetic fields from the proposed transmission line.

Introduction. Energized electrical conductors produce electric fields. Conductors that carry electrical current also produce magnetic fields. Concern about the health effects from exposure to electric and magnetic fields in humans dates from the 1960s. Wertheimer and Leeper (1979) reported that children who lived in homes close to certain types of electric power transmission and distribution lines had a small but elevated risk of childhood leukemia. In 1988, a follow-up study found essentially the same risk (Savitz et al., 1988). However, the Savitz study also measured the strength of magnetic fields from nearby power lines and found no significant association with childhood cancer. A third study (London et al., 1991) agreed with the 1979 Wertheimer and Leeper study.

In January 1991, the California Public Utilities Commission (CPUC) issued an Order Instituting Investigation (I.91-01-012; CPUC, 1991) into the potential health effects from electric and magnetic fields emitted by electric power and cellular telephone facilities. In September 1991, the assigned CPUC judge issued a ruling that created the California EMF Consensus Group. This group of representatives from utilities, industry, government, private and public research, and labor organizations submitted a report entitled *Issues and Recommendations for Interim Response and Policy Regarding Power Frequency EMFs* on

March 20, 1992. The report stated that the CPUC should recommend that utilities take public concern about electromagnetic fields into account when siting new electric facilities. Although this group could not conclude that there is a relationship between EMF and human health effects, they also could not conclude that this relationship does not exist; therefore, they recommended that the CPUC authorize further research.

As a result of the concern raised in these and other studies, Congress in 1991 asked the National Academy of Sciences to review the research literature and determine whether there was sufficient basis to assess the health risks of electric and magnetic fields. In response, the National Research Council (NRC) of the Academy convened the Committee on the Possible Effects of Electromagnetic Fields on Biologic Systems. After examining more than 500 studies spanning 17 years of research, the committee concluded in an October 1996 report: "No conclusive and consistent evidence shows that exposures to residential electric and magnetic fields produce cancer, adverse neurobehavioral effects or reproductive and developmental effects" (NRC, 1996).

On June 27, 1998, a 28-member advisory panel sponsored by the National Institute of Environmental Health Science (NIEHS), part of the National Institute of Health, voted 19 to 9 to label EMFs a "possible human carcinogen," which allowed for continued funding of government studies. On May 4, 1999, NIEHS issued a report entitled *Health Effects from Exposure to Power-Line Frequency Electric and Magnetic Fields* (NIEHS, 1999). This report found that the evidence is "weak" that electric and magnetic fields cause cancer. The report concludes: "The NIEHS believes that the probability that EMF exposure is truly a health hazard is currently small. The weak epidemiological associations and lack of any laboratory support for these associations provide only marginal scientific support that exposure to this agent is causing any degree of harm." While the report says EMF exposure "cannot be recognized as entirely safe," the report goes on to say "… the conclusion of the report is insufficient to warrant aggressive regulatory action." Because virtually everyone in the United States is exposed to EMF, the report recommends that "… passive regulatory action is warranted such as continued emphasis on educating both the public and the regulatory community on means aimed at

reducing exposures," but that cancer and noncancer health outcomes do not provide "… sufficient evidence of a risk to warrant current concern."

Project Impacts. The HPP transmission line would produce maximum electric fields of approximately 0.63 kilovolts per meter (kV/m) within the right-of-way of the new HPP Generator Tie-line. These fields would drop off with distance away from the transmission line and would be approximately 0.29 kV/m at the edge of right-of-way. Magnetic fields would peak at approximately 67.5 milligauss (mG) in the center of the right-of-way and would also drop off with distance, to a value of approximately 46 mG at the edge of the right-of-way.

Although several states have set standards to limit exposure to electric and magnetic fields from transmission power lines, California has not done so. Even so, the electric and magnetic field levels produced by this transmission line would be well below the standards that apply in other states. States with regulations have edge-of-right-of-way standards for electric fields ranging from 1 to 3 kV/m, and for magnetic fields ranging from 150 to 200 mG (for 230-kV transmission lines) (see Section 6.2.4). Also, several organizations have set occupational standards for EMF exposure that are many times greater than the field levels set by states for residential exposure (Table 8.6-5). The electric and magnetic fields produced by the HPP transmission line would be well below all of these levels.

Given the current knowledge of this subject, the electric and magnetic field levels expected at the edge of the right-of-way of the new HPP Generator Tie-line do not present a risk of adverse health consequences. Similarly, adverse health consequences are not expected from secondary shock, as discussed in Section 6.2.5. In addition, the nearest residence is approximately 1.5 miles from the edge of the HPP Generator Tie-line right-of-way. The electric and magnetic field exposure from the proposed transmission line to people living in that location would be insignificant. Any exposure to electric and magnetic fields in that or other residences would occur primarily from the power lines serving the homes and from wiring and appliances within the homes, not from the HPP transmission line.

8.6.3.3 Cumulative Impacts

Sections 8.6.2.7 and 8.6.2.8 presented the estimated cancer and noncancer health risks associated with the HPP. These data indicate that the HPP would not present significant health risks. Cumulative health impacts are effects associated with operation of other power projects in the area combined with effects of the proposed project. There are no other proposed power projects within six miles of the HPP.

8.6.4 Laws, Ordinances, Regulations, and Standards

The applicable laws, ordinances, regulations, and standards (LORS) related to public health impacts from the HPP are as follows:

California Public Resource Code Section 2553(a); 20 California Code of Regulations (CCR) Sections 1752, 1752.5, 2300–2309, and Division 2, Chapter 5, Article 1, Appendix B, Part (I). This code provides HRA guidelines to assist in the evaluation of potential health impacts of a proposed project. The requirements include a quantitative HRA. The administering agency for this authority is the CEC.

California Health and Safety Code Sections 2550–25542; 10 CCR Sections 2720–2734. This code establishes inventory, reporting, business, and area planning requirements with respect to hazardous and acutely hazardous materials in accordance with the federal Emergency Planning and Community Right-to-Know Act of 1986. It requires preparation of risk management and prevention plans where acutely hazardous materials are used, and requires development and implementation of a business plan for emergency responses to a release or threatened release of the hazardous materials or mixtures. The administering agencies for this authority are the Office of Emergency Services and the Kings County Department of Public Health, Division of Environmental Health Services.

California Clean Air Act, California Health and Safety Code Section 39650 et seq. This code requires that the California Air Resources Board (CARB) and the state establish safe exposure limits for toxic air pollutants and identify pertinent best available control technologies (BACT). It requires that the new source review (NSR) rule for each air pollution

control district include regulations that require new or modified procedures for controlling the emissions of toxic air contaminants (TACs). According to this code, CARB has developed cancer potency estimates for several carcinogenic pollutants to use in assessing the carcinogenic risk associated with exposure to these pollutants. The administering agencies for this authority are CARB and the San Joaquin Valley Unified Air Pollution Control District (SJVUAPCD).

California Health and Safety Code, Part 6, Section 44300 et seq. This law requires facilities that emit large quantities of a criteria pollutant, and that emit any quantity of a toxic contaminant, to provide the local air pollution control district with an inventory of toxic emissions. Such facilities may also be required to prepare a quantitative HRA. The administering agency for this law is SJVUAPCD.

8.6.5 Agency Contacts

Agency contacts regarding public health assessment of the HPP are as follows:

Agency	Contact/Title	Telephone
Kings County Division of Environmental Health	Keith Winkler, Director 330 Campus Drive Hanford, CA 93230	(559) 584-1411 x2625
San Joaquin Valley Unified Air Pollution Control District	David Warner Permit Services Manager, Central Region 1990 E. Gettysburg Avenue Fresno, CA 93726	(559) 230-6000

8.6.6 Permits/Additional Approvals with Agencies

No permits or additional approvals are required.

8.6.7 Compliance with Laws, Ordinances, Regulations, and Standards

Applicable LORS and the administering agencies are summarized in Table 8.6-6. This table also shows the sections where HPP conformance with the LORS pertaining to public health is discussed.

8.6.8 Proposed Conditions of Certification

The proposed conditions of certification are contained in the Air Quality and Hazardous Materials sections of Appendix K. These conditions are proposed to ensure compliance with applicable LORS and/or to reduce potentially significant impacts to less-than-significant levels.

8.6.9 References

California Air Pollution Control Officers Association (CAPCOA), 1993. *Air Toxics "Hot Spots" Program: Revised 1992 Risk Assessment Guidelines.*

California Air Resources Board (CARB), 2001. California Air Toxic Emission Factor (CATEF) II database. March 5.

California Environmental Protection Agency (Cal-EPA), 2001a. *California Cancer Potency Factors*. Office of Environmental Health Hazard Assessment. http://www.oehha.ca.gov/risk/chemicalDB/Index.asp. January.

California Environmental Protection Agency (Cal-EPA), 2001b. *Determination of Chronic Reference Exposure Levels for Airborne Toxicants - 22 Chemicals*. Office of Environmental Health Hazard Assessment. March.

California Environmental Protection Agency (Cal-EPA), 2000a. *Determination of Chronic Reference Exposure Levels for Airborne Toxicants - 22 Chemicals*. Office of Environmental Health Hazard Assessment. February.

California Environmental Protection Agency (Cal-EPA), 2000b. *Determination of Chronic Reference Exposure Levels for Airborne Toxicants - 16 Chemicals*. Office of Environmental Health Hazard Assessment. April.

California Environmental Protection Agency (Cal-EPA), 1999. *Determination of Acute Reference Exposure Levels for Airborne Toxicants*. Office of Environmental Health Hazard Assessment. March.

London, Stephanie J., Duncan C. Thomas, Joseph D. Bowman, Eugene Sobel, Tsen-Chung Cheng, and John M. Peters, 1991. "Exposure to Residential Electric and Magnetic Fields and Risk of Childhood Leukemia." *American Journal of Epidemiology,* Volume 134, Number 9. November 1.

National Institute of Environmental Health Sciences (NIEHS), 1999. *Health Effects from Exposure to Power-Line Frequency Electric and Magnetic Fields*. National Institute of Health. May 4.

National Research Council (NRC), 1996. *Possible Health Effects of Exposure to Residential Electric and Magnetic Fields.* National Research Council. National Academy Press. November 18.

Savitz, David A., Howard Warchtel, Frank A. Barnes, Esther M. John, and Jiri G. Tvrdik, 1988. "Case-Control Study of Childhood Cancer and Exposure to 60-Hz Magnetic Fields." *American Journal of Epidemiology,* Volume 126, Number 1.

Wertheimer, Nancy, and Ed Leeper, 1979. "Electrical Wiring Configurations and Childhood Cancer." *American Journal of Epidemiology,* Volume 109, Number 3.

TABLES

Table 8.6-1
List of AB2588 Air Toxics Emitted from
Operation of Natural-Gas-Fired Combustion Turbines with SCR

Chemical	Carcinogen	Chronic Noncarcinogen	Acute Noncarcinogen
1,3-Butadiene	X	X	
Acetaldehyde	X	X	
Ammonia		X	X
Benzene	X	X	X
Ethylbenzene		X	
Formaldehyde	X	X	X
Hexane		X	
Naphthalene		X	
PAHs[a]	X		
Propylene		X	
Propylene Oxide	X	X	X
Toluene		X	X
Xylenes		X	X
Diesel Particulate[b]	X	X	

[a] Polycyclic aromatic hydrocarbons, excluding naphthalene.
[b] Emitted from diesel-fired emergency generator.

SCR =Selective Catalytic Reduction

AB2588 =Assembly Bill 2588, Air Toxics "Hot Spots" Information and Assessment Act of 1987

Table 8.6-2
Estimated Air Toxic Emission Factors and Emissions from Operation of Natural-Gas-Fired Combustion Turbines with SCR

Chemical Species	Emission Factor[a] (lb/MMscf)	Maximum Hourly Emissions Per Turbine (lb/hr)	Annual Emissions Per Turbine (ton/yr)
Acetaldehyde	1.37×10^{-1}	0.068	0.26
Ammonia[b]	-	14.52	52.49
Benzene	1.33×10^{-2}	0.0066	0.025
1,3-Butadiene	1.27×10^{-4}	0.000063	0.00024
Ethylbenzene	1.79×10^{-2}	0.0089	0.034
Formaldehyde	9.17×10^{-1}	0.45	1.75
Hexane	2.59×10^{-1}	0.13	0.49
Naphthalene	1.66×10^{-3}	0.00082	0.0032
PAHs[c]	6.60×10^{-4}	0.00033	0.0013
Propylene	7.71×10^{-1}	0.38	1.47
Propylene oxide	4.78×10^{-2}	0.024	0.091
Toluene	7.10×10^{-2}	0.035	0.14
Xylenes	2.61×10^{-2}	0.013	0.050
Diesel Particulate[d]	--	0.0275[d]	0.00072[d]

[a] Air toxic emission factors from CATEF database, Version 1.2 (CARB, 2001).
[b] Based on estimated ammonia slip from NOx control (10 ppmvd at 15 percent oxygen).
[c] Polycyclic aromatic hydrocarbons (excluding naphthalene).
[d] Emergency generator diesel particulate emissions calculated from vendor specifications (full load for 15 minutes).

SCR = selective catalytic reduction
lb/MMscf = pounds per million standard cubic feet
ppmvd = parts per million by volume, dry

Table 8.6-3
Cancer, Chronic, and Acute Risk Factors

Compound	Cancer Unit Risk Factor $(\mu g/m^3)^{-1}$	Chronic Reference Exposure Level $(\mu g/m^3)$	Acute Reference Exposure Level $(\mu g/m^3)$
Acetaldehyde	2.70×10^{-6}	9	—
Ammonia	—	200	3,200
Benzene	2.90×10^{-5}	60	1,300
1,3-Butadiene	1.70×10^{-4}	20	—
Ethylbenzene	—	2,000	—
Hexane	—	7,000	—
Formaldehyde	6.00×10^{-6}	3	94
Naphthalene	—	9	—
PAHs[a]	1.10×10^{-3}	—	—
Propylene		3,000	—
Propylene Oxide	3.70×10^{-6}	30	3100
Toluene	—	300	37,000
Xylenes	—	700	22,000
Diesel Particulate	3.00×10^{-4}	5	—

Sources: Cal-EPA, 2000a, 2000b, 2001a, and 2001b.
[a] Polycyclic aromatic hydrocarbons, excluding naphthalene (assume toxicity factor for benzo(a)pyrene).
— = Not applicable
$\mu g/m^3$ = micrograms per cubic meter

Table 8.6-4
Estimated Cancer Risk and Acute and Chronic Total Hazard Indices for the HPP

Cancer Risk at Maximum Point of Impact	Chronic Risk at Maximum Point of Impact	Acute Risk at Maximum Point of Impact
0.0296 excess risk in 1 million	0.000785 total hazard index	0.0035 total hazard index

Table 8.6-5
60-Hz Magnetic Field International and Occupational Exposure Standards

Organization and Type of Standard	Application	Numeric Value of Allowed Exposure
American Conference of Governmental Industrial Hygienists; threshold limit value (TLV)	Occupational exposure to whole body	1 mT (10,000 mG)
	Occupational exposure to extremities	5 mT (50,000 mG)
	Persons wearing cardiac pace makers	0.1 mT (1,000 mG)
International Non-Ionizing Radiation Committee of the International Radiation Protection Association (IRPA/INIRC); guideline	Occupational 8-hour time-weighted average guideline exposure to whole body	200 mT (2,000,000 mG)
	Occupational peak exposure whole body	2,000 mT (20,000,000 mG)
	Occupational exposure to extremities	5,000 mT (50,000,000 mG)
	Exposure to general public	40 mT (400,000 mG)
European Committee for Electrotechnical Standardization (CENELEC); standards	Occupational exposure (50 Hz)	1.6 mT (16,000 mG)
	Exposure to general public (50 Hz)	0.64 mT (6,400 mG)
Commission of the European Union (CEU); directives	Occupational exposure action level 2 requiring reduction of magnetic field exposure	0.4 mT (4,000 mG)

Hz = hertz
mT = millitesla
mG = milligauss

Table 8.6-6
HPP Summary of Compliance with Public Health LORS

Authority	Administering Agency	Requirement	AFC Conformance Section
California Public Resources Code § 2553(a); 20 CCR § 1752.5, 2300–2309, and Division 2 Chapter 5, Article 1, Appendix B, Part(1)	CEC	HRA guidelines; requires quantitative HRA	Section 8.6
H&SC § 39650, et seq.	CARB	Requires safe exposure limits for TACs, use of BACT, and NSR	HPP will not cause unsafe exposure to TACs (Section 8.6.2) and has performed an NSR assessment, including BACT (Section 8.1.3)
H&SC, Part 6, SS 44300 et seq.	SJVUAPCD	Inventory of TACs and HRA	Section 8.6.2

CARB = California Air Resources Board
CEC = California Energy Commission
HRA = Health Risk Assessment
H&SC = California Health and Safety Code
SJVUAPCD = San Joaquin Valley Unified Air Pollution Control District
TAC = Toxic Air Contaminant

FIGURES

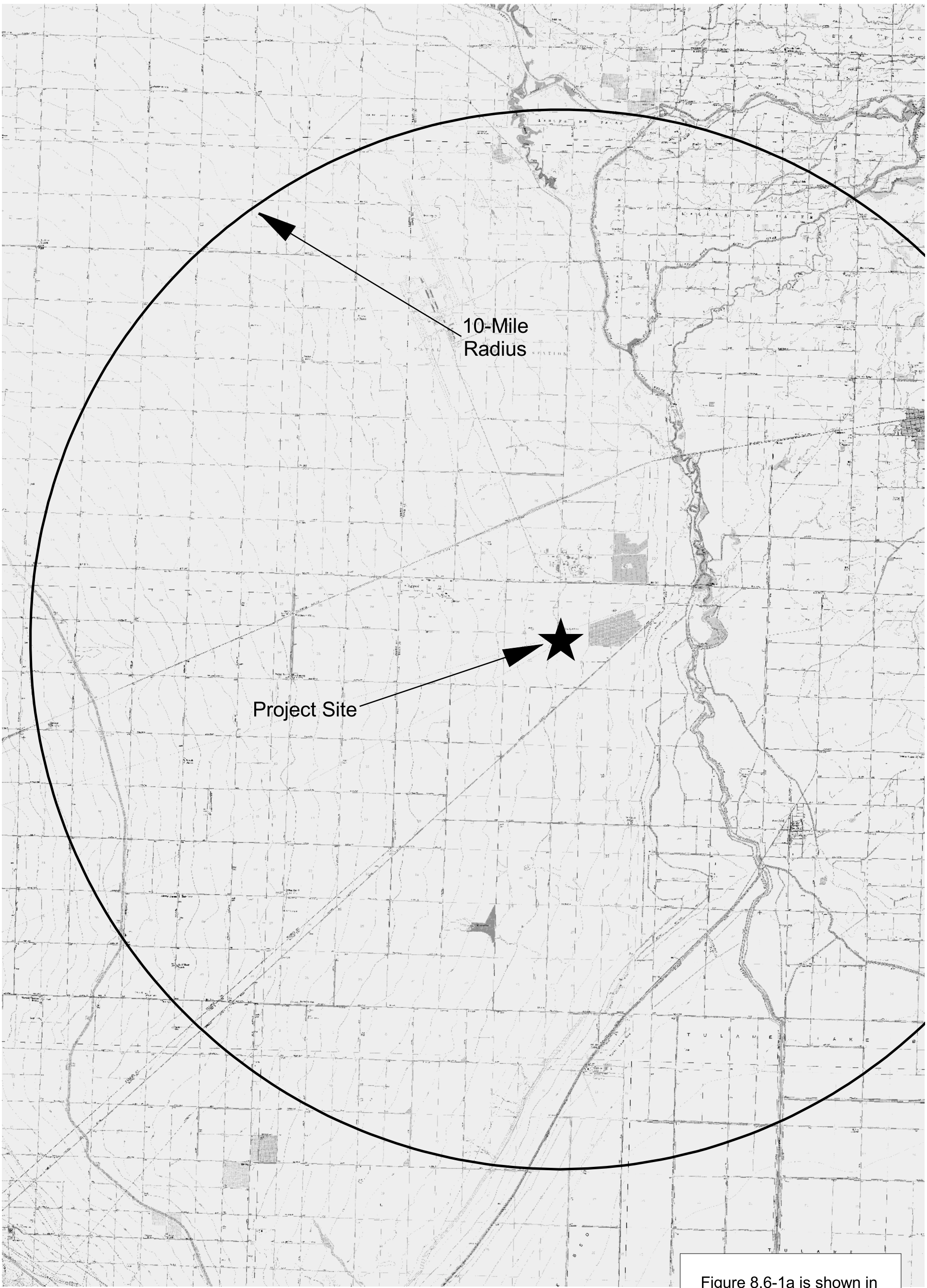

Figure 8.6-1a is shown in 1:24,000 scale in Appendix E

1 0 1 2 Miles

N

GWF Henrietta Peaker Project	TERRAIN ABOVE STACK HEIGHT WITHIN A 10-MILE RADIUS OF THE GWF HENRIETTA PEAKER PLANT (West Half)	Figure 8.6-1a

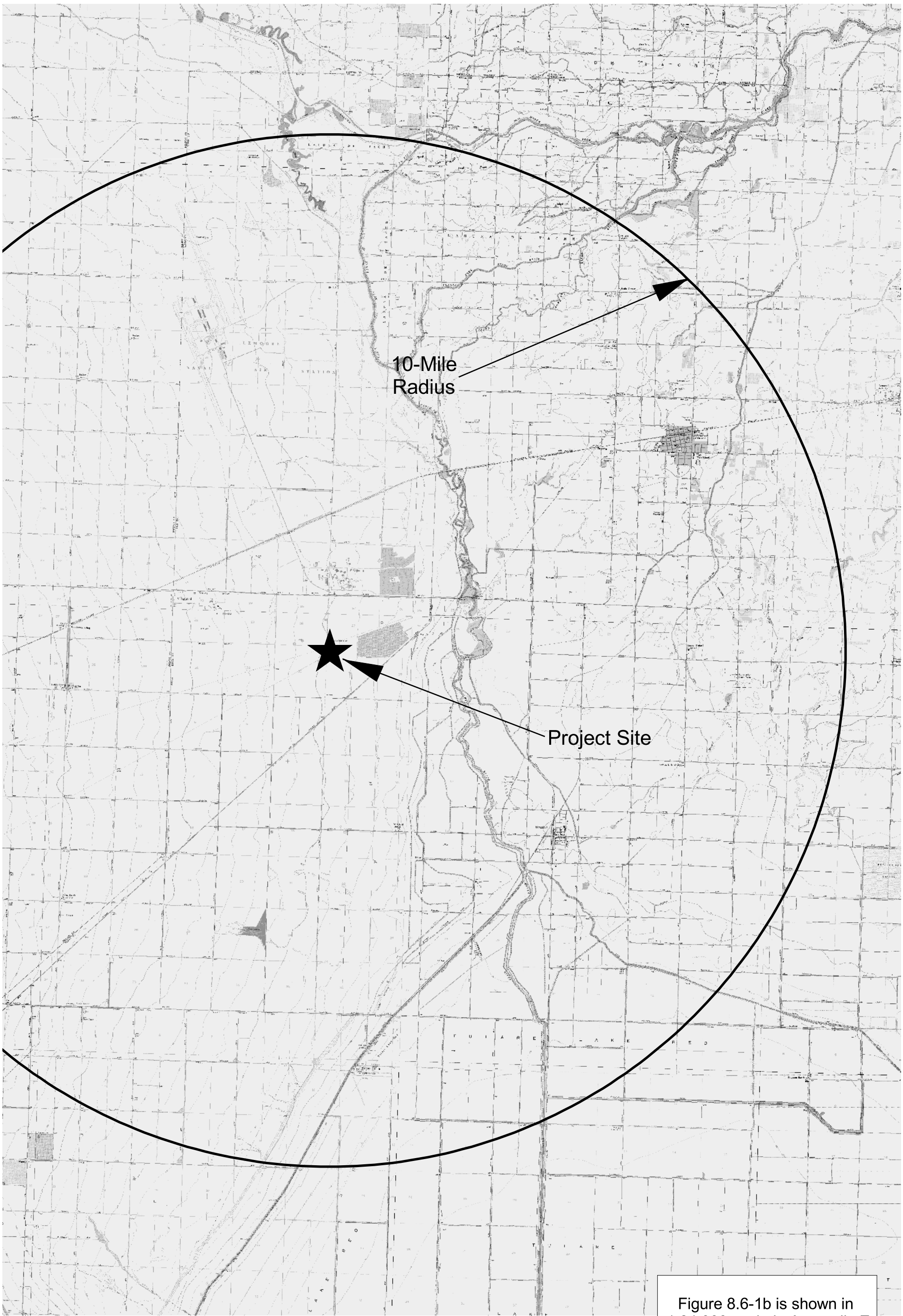

Figure 8.6-1b is shown in 1:24,000 scale in Appendix E

1 0 1 2 Miles

N

GWF Henrietta Peaker Project	TERRAIN ABOVE STACK HEIGHT WITHIN A 10-MILE RADIUS OF THE GWF HENRIETTA PEAKER PLANT (East Half)	Figure 8.6-1b

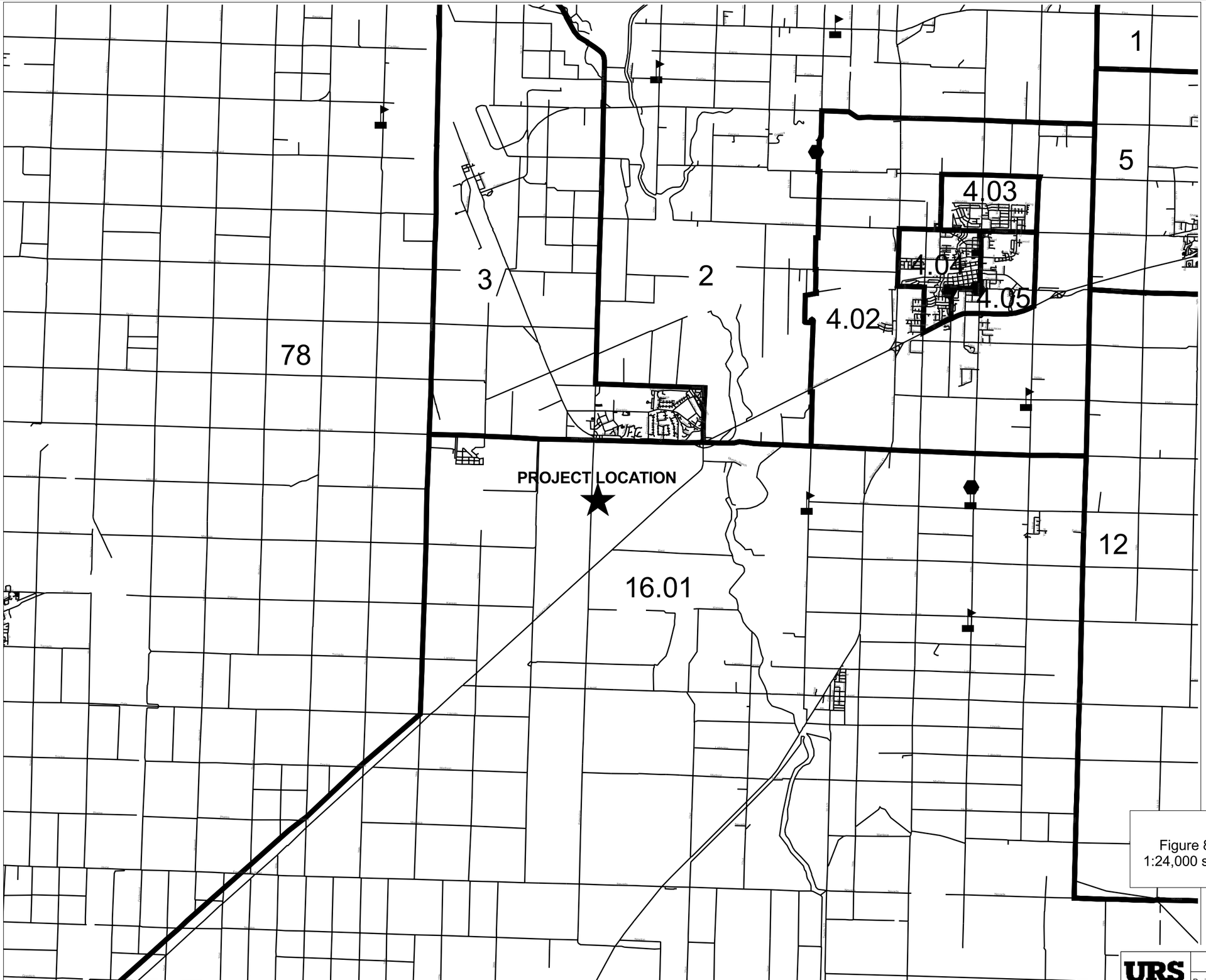

Tract	Population Density (people/sq.mi)
78	42
1	34
2	36
3	212
4.02	147
4.03	2992
4.04	3522
4.05	3550
5	363
12	16
16.01	7

LEGEND

- Proposed Power Plant Site
- Convalescent
- Day Care
- Hospital
- Park
- School
- Unknown Receptor Type

Sources:
1) U.S. Census 2000 California Census Data Center
2) Environmental Data Resources, Inc.

Figure 8.6-2 is shown in 1:24,000 scale in Appendix E

N

0.9 0 0.9 Miles

URS

GWF Henrietta Peaker Project

Project No. 51-00167032.00

CENSUS TRACTS, POPULATION DENSITY AND SENSITIVE RECEPTORS

Figure 8.6-2

L:\Projects\gwf_henrietta\apr\envjustice.apr

8.7 Worker Health and Safety

The Henrietta Peaker Project (HPP) consists of a 91.4-megawatt (MW) (net), natural-gas-fired, simple-cycle power plant located approximately 10 miles southwest of Lemoore, California, on a seven-acre portion of a 20-acre parcel owned by GWF Energy LLC. The HPP will interconnect to the existing adjacent Pacific Gas and Electric Company (PG&E) Henrietta Substation through a new 550-foot 70-kilovolt (kV) transmission line supported on two new transmission poles. Other linear facilities include an approximately 16.5-foot water interconnection pipeline (from the site property boundary) and a 2.2-mile Southern California Gas Company natural gas interconnection pipeline. Additionally, approximately five acres will be used for temporary construction laydown and parking.

This section describes the health and safety programs and procedures that will be established and implemented during construction and operation of the HPP, including the switching station, the transmission line, the natural gas pipeline, and the power generation facility. Health and safety information on the electric transmission system is provided in Section 6.0 (Electric Transmission). These programs will be established in accordance with applicable laws, ordinances, regulations, and standards (LORS) to ensure the safety and well-being of all workers participating in the HPP. The following sections describe the affected environment, applicable LORS, anticipated occupational hazards associated with the construction and operation of the facility, health and safety programs that will be established during construction and operation, and safety permit requirements and local agency contacts. The HPP will be operated and maintained by the personnel from the GWF Power System's Hanford Cogeneration Facility. GWF maintains a comprehensive worker health and safety program at the existing facility that will be modified as needed to incorporate the HPP operation.

8.7.1 Affected Environment

The HPP includes the construction and operation of a natural-gas-fired peaker plant with ancillary support facilities, including a 70-kV power transmission line, a natural gas pipeline, and a switching station. Figure 2-3 depicts the detailed facility layout. Figure 8.12-1 shows the locations of the hazardous materials used at the HPP. Figure 8.7-1 shows the locations of the fire protection systems and emergency response equipment at the HPP.

8.7.2 Laws, Ordinances, Regulations, and Standards

Conformance with LORS is discussed in Section 8.7.3.1 for all construction-related requirements and in Section 8.7.3.2 for all requirements applicable to operation and maintenance. Conformance with training requirements is covered in Sections 8.7.4.1 and 8.7.4.2 for construction and operations and maintenance, respectively. The LORS applicable to worker health and safety are summarized in Table 8.7-1. California is one of 23 states that operates its own Occupational Safety and Health Administration (Cal-OSHA). As such, Cal-OSHA regulations will take precedence over the federal OSHA regulations at this site. In addition to requiring all contractors and employees to comply with established LORS, periodic health and safety compliance self-audits will be performed during the course of the construction and operation and maintenance of the HPP to ensure that employees are conducting their work in accordance with the regulations.

8.7.3 Occupational Safety and Health

Construction, operation, and maintenance activities associated with the HPP may expose workers to a wide variety of physical and chemical hazards. Worker exposure to these hazards will be minimized through adherence to appropriate engineering design criteria, implementation of appropriate administrative procedures, use of personal protective equipment (PPE), and compliance with applicable health and safety LORS. Potential hazards that workers may be exposed to while working on the HPP are presented in Table 8.7-2. Formal health and safety procedures and programs will be established and implemented by GWF and its contractors on the HPP to control the various hazards and to provide for a safe workplace.

The programs, regulations, and preventive measures intended to protect worker health and safety are described in the construction and operation and maintenance portions of this section. The comprehensive health, safety, and fire prevention program enforces safe and healthful practices and implements an accident/injury prevention program intended to ensure safe and healthful operations at the facility on startup and operation.

During the construction, operation, and maintenance of the HPP, employers will develop and implement the necessary health and safety programs to mitigate the identified

workplace hazards and to protect the health and safety of the workers. Brief descriptions and outlines detailing anticipated program content are provided in the following sections.

8.7.3.1 Construction Health and Safety Programs

During construction, the general contractor will be responsible for enforcing contract provisions to ensure compliance with the construction safety program and federal, state, and local health standards that pertain to worker health and safety. Consistent with OSHA's policy on multi-employer work sites, each employer will be responsible for the health and safety of its own employees. Periodic health and safety audits will be conducted to verify contractor and subcontractor compliance with contractual health and safety obligations.

Construction Injury and Illness Prevention Program. The overall written Construction Safety Program will include provisions to ensure compliance with requirements of Cal-OSHA's Injury and Illness Prevention Program (IIPP) (Title 8, California Code of Regulations [CCR], Section 1509). The written Construction Safety Program will include:

- A Code of Safe Practices that relates to construction operations
- Identification of the person or persons responsible for implementing the Construction Safety Program
- Posting of the Code of Safe Practices at a conspicuous location at the job site office and providing it to each supervisor, who shall have it readily available
- A description of the system for identifying workplace hazards, including workplace inspections, job hazard analysis, and written hazard assessments
- Periodic meetings with employee representatives, supervisors, and management to discuss safety issues, including compliance assessments, accidents, injuries, and new or modified health and safety procedures
- A system for ensuring employee and subcontractor compliance
- Routine "toolbox" or "tailgate" safety meetings conducted with employees and supervisors
- A system for promoting employee feedback and suggestions for improving workplace safety
- Procedures for promptly correcting unsafe conditions

- Identification of safety training and experience requirements for specific work activities

Construction Personal Protective Equipment Program. Contractor employees will be required to use the required PPE during construction. Required PPE will conform with general industry standards. The use of PPE for site activities includes, but is not limited to, the items described in Table 8.7-3. All PPE worn on site will comply with Cal-OSHA and American National Standards Institute (ANSI) requirements. Respiratory protection will be included in the PPE Program. Employees will not be required to wear respiratory protection until they have received a medical evaluation, respirator fit-testing, and training on the proper use, limitations, and care of respirators.

Construction Exposure Monitoring Program. Appropriate exposure monitoring will be conducted to evaluate potential employee exposures to hazardous/toxic materials. Air monitoring may be conducted, if necessary, to evaluate the potential for employee exposures to the contaminants of concern. Airborne exposures will be controlled through the implementation of engineering controls, administrative controls, or PPE. Air monitoring will also be required in support of other safety programs, including confined space entry, hot work permits, and emergency response. Sound-level monitoring will also be performed as necessary during the construction phase to evaluate potential employee noise exposures.

Construction On site Fire Suppression and Prevention. The HPP will rely on both on site fire protection systems and local fire protection services. A Fire Protection and Prevention Program will be followed throughout all phases of construction and will provide the specified firefighting equipment. The Fire Protection and Prevention Program will address each of the following requirements:

- General requirements
- Responsibilities
- Housekeeping
- Employee alarm/communication system
- Portable fire extinguishers

- Fixed firefighting equipment
- Fire control
- Flammable and combustible liquid storage
- Use and handling of flammable and combustible liquids
- Dispensing and disposal of flammable and combustible liquids
- Servicing and refueling areas
- Training

During construction, portions of the facility fire suppression system will be placed in service as soon as practicable to provide early fire protection. Construction fire prevention procedures will be developed in accordance with applicable regulations (8 CCR, Sections 1620 et seq.) and will be followed as necessary to prevent construction-related fires. Special emphasis will be given to operations involving open flames, such as welding, metal cutting, and brazing. Hot work permits will be required for specific activities that present the potential for fire, and the personnel involved in such operations will receive appropriate training by the contractor. In addition, a fire watch that utilizes the appropriate class of extinguishers or other equipment will be maintained during hot work operations. Site personnel will not be expected to fight fires past the incipient stage.

Materials brought on site by contractors must conform to contract requirements, insofar as flame resistance or fireproof characteristics are concerned. The contractor must provide a copy of the material safety data sheet for each material delivered to the project site and retain a copy in his files. Specific materials in this category include fuels, paints, solvents, plastic materials, lumber, paper, boxes, and crating materials. Specific attention will be given to the storage of compressed gases, fuels, solvents, glues, oils and greases, and paints.

The onsite fire suppression system during construction will consist of portable and fixed firefighting equipment. Portable firefighting equipment will consist of fire extinguishers and small hose lines in conformance with Cal-OSHA and the National Fire Protection Association (NFPA). Contractor safety representatives will conduct fire prevention inspections on a weekly basis during construction of the plant.

Fire extinguishers will be inspected monthly and replaced immediately if defective or in need of recharge. All firefighting equipment will be situated so as to allow for unobstructed access to the equipment and will be conspicuously marked. A temporary or permanent water supply, of sufficient volume, duration, and pressure to operate the required firefighting equipment, will be provided. Combustible waste materials will be controlled in covered roll-off dumpsters. The designated, approved flammable materials storage areas and flammable materials storage containers will be provided with adequate fire prevention systems.

Construction Offsite Fire Suppression Support. The HPP on site fire suppression systems will be supported by Kings County Fire Department (KCFD), Station 7, which will provide assistance as described under the fire protection provisions developed for working safely during construction activities. The nearest fire station is located at 18th Avenue and Indiana (Station No. 7), approximately 7.5 miles northwest of the facility. This location allows for a quick response time. The local fire response units will be provided with information regarding the types and locations of the potential fire hazards at the site. This information will be included in emergency response planning. Routine fire prevention inspections will be conducted by the KCFD.

Construction Emergency Action Plan. An emergency action plan (EAP) will be developed for the construction phase of the HPP. The EAP will designate responsibilities and actions to be taken in the event of an emergency at the site. All employees working at the site will be trained on the contents of the program. The EAP will include:

- Emergency roles and responsibilities
- Emergency notification procedures
- Egress routes and mustering points

Construction Written Safety Programs. Additional written safety programs that will be established for the construction phase include, but are not limited to:

- Hazard communication program
- Confined space program

- Control of hazardous energy program (lockout/tagout)
- Hearing conservation program
- Respiratory protection program
- Blood-borne pathogens control program
- Injury and accident reporting and investigation program
- Ergonomics program
- Emergency response program, including first-aid and medical services
- Smoking policy
- General housekeeping, material handling, and storage procedures
- Vehicle and traffic procedures
- Elevated work procedures
- Heavy equipment procedures
- Hot work procedures
- Crane and hoist procedures
- Compressed gas and air handling procedures
- Subcontractor safety programs
- Equipment inspection programs
- Supervisor safety and health orientations
- Excavation and trenching program
- Hazard identification team and safety marshal program

8.7.3.2 Operation and Maintenance Health and Safety Programs

On completion of the construction phase and implementation of routine operation at the HPP, the construction safety and health program will be transitioned into the existing GWF safety programs that reflect the hazards and controls necessary during routine operation and maintenance. Program outlines for the IIPP, the Fire Protection and Prevention Program, the

EAP, the Hazardous Materials Management Program, and the PPE Program that will be implemented are provided below.

Injury and Illness Prevention Program. The primary mitigation measures for worker hazards during normal plant operation and maintenance are contained in the IIPP, as required by 8 CCR Section 3203. GWF has an existing IIPP that will be modified as appropriate to incorporate the HPP. The IIPP designates a safety representative, who is responsible for implementing the IIPP. The written IIPP also describes safety training for new employees and procedures for tracking safety training. Job safety analyses will identify the safety hazards related to each work task and establish procedures for avoiding, correcting, reporting, and notifying employees of these hazards.

The existing IIPP contains the following information and procedures:

- The person(s) with authority and responsibility for implementing the IIPP
- A system for ensuring that employees comply with safe and healthy work practices
- A system for facilitating employer-employee communications regarding safety
- Procedures for identifying and evaluating workplace hazards, including inspections to identify hazards and unsafe conditions
- Methods for correcting unhealthy or unsafe conditions in a timely manner when danger is imminent
- An employee training program that includes:
  - introducing the program
  - training of new, transferred, or promoted employees
  - training on new processes and equipment
  - training for supervisors
  - training for contractors
- Methods for documenting inspections and training and for maintaining appropriate records

Fire Protection and Prevention Program. Fire protection at the HPP site will include measures to safeguard human life, prevent personnel injury, preserve property, and minimize downtime due to fire or explosion. The program will principally involve physical arrangements, such as sprinkler systems, water supplies, and fire extinguishers. Fire protection measures will include measures to prevent the inception of fires. Points of special concern for this program are adequate exits, fire-safe construction, reduction of ignition sources, and control of fuel sources.

The KCFD provides countywide fire protection services, including fire inspection, limited emergency medical and first aid, suppression and protection, arson inspection, and weed abatement. The department headquarters are located in Hanford, and 11 KCFD fire stations operate countywide (Kings County, 2001). Stations No. 7 (approximately 7.5 miles from the site) and No. 10 (approximately 9 miles from the site) are the closest to the project site and will be the "first response" stations to the project site. Each station can reach the site in eight to nine minutes. Each of the two stations is staffed with one firefighter and 15 volunteers. Station No. 10 has a 2,500-gallon engine, and Station No. 7 is equipped with a 1,000-gallon engine. Station No. 5 will provide backup to Stations No. 10 and No. 7. The KCFD has a mutual-aid agreement with Naval Air Station Lemoore, which could respond to an emergency at the project site in three to four minutes (Virden, 2001).

The HPP site will become the fire protection responsibility of the KCFD, Station No. 7. As such, fire suppression systems will be subject to review and approval by the KCFD, which will have final approval responsibility. The fire suppression systems will be designed by a California Registered Fire Protection Engineer, and fire protection equipment will be installed and maintained in accordance with applicable NFPA standards and recommendations (NFPA, 2000).

The KCFD, Station No. 7, will perform the final inspection of the HPP site when construction is complete. In addition, the KCFD will conduct periodic fire and life safety inspections thereafter, including reviewing and approving programs for regular equipment inspections and servicing and for the training of employees in fire protection procedures. In addition, the project's insurance carrier will provide annual inspections by a fire protection

specialist. Servicing of the fixed carbon dioxide (CO_2) and portable fire extinguishers will be conducted by a licensed contractor.

The overall Fire Protection and Prevention Program for the facility will be designed and implemented to protect both personnel and property. GWF has an existing Fire Protection and Prevention Program that will be modified for the site-specific criteria of HPP. The existing program specifically addresses:

- Names and/or job titles responsible for maintaining equipment and controlling the accumulation of flammable or combustible materials
- Procedures in the event of fire
- Fire alarm and protection equipment
- System and equipment maintenance
- Monthly inspections
- Annual inspections
- Firefighting demonstrations and training
- Good housekeeping practices

Fire Suppression. The following fire suppression systems are proposed for the HPP:

- **CO_2 Fire Protection System.** This system will protect the gas turbine, generator, and accessory equipment compartments from fire. The system will have fire detection sensors in all compartments. The actuating of one sensor will provide a high-temperature alarm on the combustion turbine control panel. The actuating of a second sensor will trip the combustion turbine, turn off ventilation, close ventilation openings, and automatically release the CO_2 fire extinguishing media. The CO_2 fire extinguishing media will be discharged at a design concentration adequate to extinguish the fire.
- **Smoke Detectors and Fire Extinguishers.** These devices will be provided at all locations having potential fire hazards due to the presence of combustible liquids, solids, or other highly flammable materials, and where major property damage could result. Extinguishers will be located at Uniform Fire Code–approved intervals throughout the facility as directed by the local fire inspector and selected for the appropriate class of service.

- **Fire Hydrants/Hose Stations/Building Sprinklers/Deluge System.** These systems will provide fire protection for the exterior plant area, the generator transformers, auxiliary transformers, the administration building, and maintenance building. The main fire pump will be electrically driven and will deliver water to the hydrants, hose stations, and building sprinklers through an underground piping system from the raw water tank. The main fire pump will be powered from the 480-volt plant distribution bus and will be backed up by an emergency diesel generator. An electrically driven jockey pump will operate automatically to maintain water pressure in the fire system piping.

Water will be used as the primary extinguishing agent. Chemical and gas extinguishing agents (permanently installed or in portable extinguishers) will be provided in special hazard areas where water will be ineffective or harmful to the equipment being protected.

Emergency Action and Evacuation Plan. In addition to the incorporation of various safety and environmental features and design measures to minimize emergencies and their effects on public and worker safety, the HPP will have a site-specific Emergency Action and Evacuation Plan. A sample Emergency Action and Evacuation Plan outline is provided in Table 8.7-4. The HPP plan will be modified, as necessary, to incorporate new emergency issues. The Emergency Action and Evacuation Plan addresses potential emergencies, including fires or explosions, hazardous materials releases, medical emergencies, natural disasters, bomb threats, and workplace violence. The plan describes notification and evacuation procedures, points of contact, responsibilities, and other actions to be taken in the event of an emergency. The plan also includes evacuation and assembly area maps. The Emergency Action and Evacuation Plan will be used in conjunction with the IIPP.

Hazardous Materials Management Program. As described in Section 8.12 (Hazardous Materials Handling), several chemicals will be stored and used during both the construction and operation of the HPP. The storage and handling of chemicals will follow applicable LORS to minimize risk to workers. Chemicals will be identified and stored in appropriate chemical storage facilities. Bulk chemicals will be stored in aboveground storage tanks; other chemicals will be stored in their delivery containers. Chemical storage and chemical feed areas will be surrounded by temporary or permanent containment or curbing to contain leaks and spills. The containment areas will be sized to hold an appropriate volume (considering

the potential for the local hazard contingencies) as designated by a California-registered professional engineer.

Safety showers and eyewash stations will be provided in or adjacent to chemical storage and use areas in accordance with 8 CCR requirements. Standard PPE for use during materials handling activities will be provided in a readily available location for use during minor chemical spill containment and cleanup activities by plant personnel. Adequate supplies of absorbent material will also be available on site for minor spill cleanup. A hazardous material emergency response team that has been trained to handle accidental releases of the chemicals used and stored at the plant will be available through contract. Emergency contact numbers will be available to summon assistance from these contractors and to notify local agencies. These procedures will be detailed in the EAP.

Personal Protective Equipment Program. The existing PPE Program addresses the following topics:

- Hazard analysis and prescription of PPE
- Personal protective devices
- Head protection
- Eye and face protection
- Body protection
- Hand protection
- Foot protection
- Sanitation
- Safety belts and life lines
- Protection for electric shock
- Respiratory protective equipment

Written Safety Programs. Written safety programs are in place at the existing GWF operating plants and will be modified as needed to address the overall operation and

maintenance health and safety plan for the HPP. These programs include, but are not limited to, the following:

- Hazard Communication Program
- Respiratory Protection Program
- Hearing Conservation Program
- Hazardous Energy Control Program
- Confined Space Entry Program
- Safe Work Practices Program
- Ergonomics Program
- General Facility Safety Procedures:
  - Compressed Gas Safety Procedures
  - Heavy Equipment Safety Procedures
  - Hand Tools and Equipment Guarding Procedures
  - Hoist and Rigging Safety Procedures
  - Slips, Trips, and Falls Prevention Procedures
  - Hot Work Safety Procedures
- Fall Protection Program
- Contractor Safety Program
- Risk Management Plan

8.7.4 Safety Training Programs

GWF maintains an existing training program to ensure that workers possess the necessary information to recognize and protect themselves from hazards. The program provides comprehensive training for construction personnel and operation/maintenance personnel. The program will be modified as needed to incorporate the HPP.

8.7.4.1 Construction Safety Training Program

Workers participating in the construction phase of the HPP will be required to participate in applicable training programs designed to protect them and others from injuries while working at the site. All construction personnel will be required to attend a basic site safety orientation training course. Additional training will be required based on each individual's specific job responsibilities. All training courses will be documented and attendance records will be maintained at the local job site trailer. Table 8.7-5 provides an overview of the training programs that will be available to construction personnel.

8.7.4.2 Operation and Maintenance Safety Training Program

GWF's Hanford Cogeneration plant personnel will operate and maintain the HPP. Existing operations and maintenance employees participate in training that includes instructions regarding their responsibility for the safe conduct of their work. The program will be modified as needed to incorporate the HPP. These instructions are given at the time the employee is first hired and as an ongoing training program of hazard recognition and avoidance. Employees are instructed in the safety regulations pertinent to their employment tasks. Safe working conditions, work practices, and PPE requirements are communicated in the following manner:

- A new, promoted, or transferred employee receives safety training orientation.
- Safety meetings are held with employees.
- "Toolbox/tailgate" safety meetings are conducted periodically for each crew. General safety topics and specific hazards that may be encountered are discussed. Comments and suggestions from all employees are encouraged.
- A monthly staff safety meeting is held for supervisors.
- Hazard communication training, including California Proposition 65 warnings and discharge prohibitions, is conducted as necessary when new hazardous materials are introduced to the workplace.
- Material safety data sheets are available as required for all appropriate chemicals.
- A bulletin board with required postings and other information is maintained at the plant site.

- Warning signs (e.g., hazardous waste storage area or confined space area) are posted in hazardous areas; these signs comply with applicable regulations (i.e., signs will be bilingual, have the specified font size, etc.).

The safety orientation program provided to new employees is described below:

- The safe work rules for the HPP are explained to each employee.
- A written description of the applicable safe work practices is given to each employee.
- The Hazard Communication Program and requirements for personal protection for the types of hazards that may be encountered at the HPP site are explained and documented.
- Unusual hazards that are found at the work site are explained in detail to each employee, including any specific requirements for personal protection.
- Safety requirements for a new employee's specific job assignment are explained by the foreman upon initial assignment and upon any reassignment.

An element of the Operation and Maintenance Safety Training Program is contractor safety while on site. Contractors are provided with a list of potential safety hazards for their assigned activity by a foreman. The list includes safety rules, chemical exposure hazards, physical hazards, and PPE. In addition, contractors are invited to attend tailgate safety meetings.

Table 8.7-6 provides an overview of the existing training programs that are available to operation and maintenance personnel.

8.7.5 Proposed Conditions of Certification

Proposed conditions of certification are included in Appendix K. With incorporation of the proposed conditions, the HPP will comply with all applicable LORS and will not result in significant impacts to worker health and safety.

8.7.6 Permits Required and Permit Schedule

Table 8.7-7 provides a list of applicable permits related to the protection of worker health and safety for the HPP. For each permit, the list shows the activities covered and the application requirements to obtain the permit. All permits noted in Table 8.7-7 may be

obtained from the Cal-OSHA district office, which for workplaces in Kings County is located in Fresno, California.

Permits listed in Table 8.7-7 are supplied on an as-needed basis by any Cal-OSHA district or field office. Activities that require at least 24 hours' prior notification to Cal-OSHA before they may be initiated are also listed in Table 8.7-7. No specific permitting schedule is provided, as the permits and notifications may be required at variable times during the construction of the HPP or during operation.

8.7.7 Agency Contacts

Agency contacts regarding worker health and safety at the HPP are as follows:

Agency	Contact/Title	Telephone
Kings County Fire Station No. 7 Lemoore, CA	Greg Diaso – A shift Captain Don Wilson – B shift	(559) 924-2626
Cal-OSHA (District Office) Fresno, CA	Larry Baca Area Manager	(559) 445-5302

8.7.8 References

California Code of Regulations (CCR). Title 8. General Industry Safety Orders, (Chapter 4, Subchapter 7) and Construction Safety Orders (Chapter 4, Subchapter 4).

Code of Federal Regulations (CFR). Title 29, Part 26, Health and Safety for Construction, and Title 29, Part 1910, Occupation Safety and Health Standards.

Kings County, 2001. KCFD website: http://www.countyofkings.com/fire/index.htm.

National Fire Protection Association (NFPA), 2000. A Compilation of NFPA Codes, Standards, Recommended Practices and Guides. Quincy, Massachusetts. On-line version available at www.nfpa.org/codes/index.html.

Virden, Mike, 2001. Telephone communication between Mike Virden, Fire Marshall, KCFD, and Katie McKinstry, URS Corporation. June 18, 2001.

TABLES

Table 8.7-1
Worker Health and Safety
Laws, Ordinances, Regulations, and Standards

Administering Authority	Applicable LORS	Requirement/Compliance	AFC Conformance Section
California Occupational Safety and Health Act of 1973 (Cal-OSHA)	Title 8, CCR	The act establishes the Cal-OSHA and establishes minimum safety and health standards for work operations that occur in the state.	8.7.3, 8.7.4
	8 CCR, Section 339	Requires listing of hazardous chemicals relating to the Hazardous Substance Information and Training Act.	8.7.3.1, 8.7.3.2, 8.7.4
	8 CCR, Sections 450 et seq. – 560 et seq.	Establishes safety orders for pressurized vessels, including air tanks, anhydrous ammonia, and general safe work practices.	8.7.3.1, 8.7.3.2, 8.7.4
	8 CCR, Sections 750 et seq.	Establishes safety orders for work with high pressure steam.	8.7.3.1, 8.7.3.2, 8.7.4
	8 CCR, Construction Safety Orders (Sections 1500 et seq. – 1938 et seq.)	Establishes safety orders for construction work.	8.7.3.1, 8.7.4
	8 CCR, Sections 1508 et seq. – 1527 et seq.	Requirements for IIPP, PPE, and general site safety.	8.7.3.1, 8.7.3.2, 8.7.4
	8 CCR, Sections 1528 et seq. – 1537 et seq.	Requirements for controlling exposures to hazardous air contaminants.	8.7.3.1, 8.7.3.2, 8.7.4
	8 CCR, Sections 1539 et seq. – 1547 et seq.)	Requirements for excavations and trenching.	8.7.3.1, 8.7.4
	8 CCR, Sections 1590 et seq. – 1596 et seq.	Requirements for earth moving and haulage.	8.7.3.1, 8.7.4
	8 CCR, Sections 1597 et seq. – 1599 et seq.	Requirements for vehicles, traffic control, flaggers, barricades, and warning signs.	8.7.3.1, 8.7.3.2, 8.7.4
	8 CCR, Sections 1604 et seq. – 1605 et seq.	Requirements for construction hoists.	8.7.3.1, 8.7.3.2, 8.7.4
	8 CCR, Sections 1620 et seq. – 1635 et seq.	Requirements for railings, ramps, stairs, access and egress, openings in floors, roofs and walls, and temporary floors.	8.7.3.1, 8.7.3.2, 8.7.4
	8 CCR, Sections 1635 et seq. – 1667 et seq.	Requirements for scaffolding.	8.7.3.1, 8.7.3.2, 8.7.4
	8 CCR, Sections 1669 et seq. – 1678 et seq.	Requirements for safety belts, nets, and ladders.	8.7.3.1, 8.7.3.2, 8.7.4

Table 8.7-1 (continued)
Worker Health and Safety
Laws, Ordinances, Regulations, and Standards

Administering Authority	Applicable LORS	Requirement/Compliance	AFC Conformance Section
Cal-OSHA (continued)	8 CCR, Sections 1680 et seq. – 1708 et seq.	Requirements for saws, power-actuated tools, miscellaneous tools and equipment.	8.7.3.1, 8.7.3.2, 8.7.4
	8 CCR, Sections 1709 et seq. – 1722 et seq.	Requirements for steel reinforcing, concrete pouring, and structural steel erection operations.	8.7.3.1, 8.7.3.2, 8.7.4
	8 CCR, Sections 1760 et seq.	Electrical requirements for construction work.	8.7.3.1, 8.7.4
	8 CCR, Sections 1920 et seq. – 1938 et seq.	Requirements for construction-related fire protection and prevention.	8.7.3.1, 8.7.3.2, 8.7.4
	8 CCR, Electrical Safety Orders (Sections 2299 et seq. – 2974 et seq.)	Establishes safety orders for installation of low- and high-voltage electrical systems.	8.7.3.1, 8.7.3.2, 8.7.4
	8 CCR, General Industry Safety Orders (Sections 3200 et seq. – 6184 et seq.)	Establishes safety orders for general industry work, including operations and maintenance.	8.7.3.1, 8.7.3.2, 8.7.4
	8 CCR, Sections 3200 et seq. – 3583 et seq.	Requirements for IIPP, PPE, and general site safety.	8.7.3.1, 8.7.3.2, 8.7.4
	8 CCR, Sections 3620 et seq. – 3920 et seq.	Requirements for mobile equipment operation.	8.7.3.1, 8.7.3.2, 8.7.4
	8 CCR, Sections 3940 et seq. – 4647 et seq.	Requirements for power transmission equipment, rotating equipment, moving parts, points of operation, etc.	8.7.3.1, 8.7.3.2, 8.7.4
	8 CCR, Sections 4794 et seq. – 4884 et seq.	Requirements for compressed gases and gas systems for cutting and welding.	8.7.3.1, 8.7.3.2, 8.7.4
	8 CCR, Sections 4850 et seq. – 4853 et seq.	Requirements for electric welding.	8.7.3.1, 8.7.3.2, 8.7.4
	8 CCR, Sections 4884 et seq. – 5049 et seq.	Requirements for cranes and other hoisting equipment.	8.7.3.1, 8.7.3.2, 8.7.4
	8 CCR, Sections 5094 et seq. – 5100 et seq.	Requirements for control of excessive noise exposure and ergonomic hazards.	8.7.3.1, 8.7.3.2, 8.7.4
	8 CCR, Sections 5139 et seq. – 5223 et seq.	Requirements for the control of hazardous substances, including Hazard Communication Program requirements.	8.7.3.1, 8.7.3.2, 8.7.4
	8 CCR, Sections 5615 et seq. – 5629 et seq.	Requirements for the control of hazards from flammable liquids, gases, and vapors.	8.7.3.1, 8.7.3.2, 8.7.4

Table 8.7-1 (continued)
Worker Health and Safety
Laws, Ordinances, Regulations, and Standards

Administering Authority	Applicable LORS	Requirement/Compliance	AFC Conformance Section
Cal-OSHA (continued)	8 CCR, Sections 6150 et seq. – 6184 et seq.	Requirements for fire protection and prevention.	8.7.3.1, 8.7.3.2, 8.7.4
	8 CCR, Part 6	Health and safety requirements for working with tanks and boilers.	8.7.3.1, 8.7.3.2, 8.7.4
Federal Occupational Safety and Health Administration[1]	29 CFR 1926	Federal health and safety regulations pertaining to construction activities.	8.7.3.1, 8.7.3.2, 8.7.4
	29 CFR 1910	Federal health and safety regulations pertaining to general industry.	8.7.3.1, 8.7.3.2, 8.7.4
California Health and Safety Code	Sections 25500 et seq. (LaFollette Bill)	Requires that every new or modified facility that handles, treats, stores, or disposes of more than the threshold quantity of any of the listed acutely hazardous materials prepare and maintain a Risk Management Plan.	8.7.3.2, 8.7.4
	Sections 25500 et seq. – 25541 et seq.	Requires the preparation of a Hazardous Materials Business Plan that details emergency response plans for a hazardous materials emergency at the facility.	8.7.3.2, 8.7.4
City of Lemoore Fire Department	UFC, Article 80	Requires the prevention, control, and mitigation of dangerous conditions related to storage, dispensing, use, and handling of hazardous materials and information needed by emergency response personnel.	8.7.3.1, 8.7.3.2, 8.7.4
	NFPA 10: Portable Fire Extinguishers	Requirements for portable fire extinguishers pertaining to selection, placement, inspection, maintenance, and employee training.	8.7.3.1, 8.7.3.2, 8.7.4
	NFPA 12: Carbon Dioxide Fire Extinguishing Systems	Requirements for the installation and use of carbon dioxide extinguishing systems.	8.7.4, 8.7.3.2
	NFPA 13 & 13A: Sprinkler Systems	Guidelines for selection, installation, maintenance, and testing of fire sprinkler systems.	8.7.3.2, 8.7.4
	NFPA 14: Standpipe and Hose Systems	Guidelines for the selection and installation of standpipe and hose fire protection systems.	8.7.3.2, 8.7.4
	NFPA 15: Water Spray Fixed Systems	Guidelines for the selection and installation of fixed water spray systems.	8.7.3.2, 8.7.4
	NFPA 22: Water Tanks and Private Fire Protection	Requirements for water tanks that are used for private fire protection.	8.7.3.2, 8.7.4

Table 8.7-1 (continued)
Worker Health and Safety
Laws, Ordinances, Regulations, and Standards

Administering Authority	Applicable LORS	Requirement/Compliance	AFC Conformance Section
City of Lemoore Fire Department (continued)	NFPA 24: Installation of Private Fire Service Mains and their Appurtenances	Requirements for the installation of private fire service mains and appurtenances.	8.7.3.2, 8.7.4
	NFPA 26: Supervision of Valves Controlling Water Supplies	Guidance for the installation and supervision of valves used to control water supplies.	8.7.3.1, 8.7.3.2, 8.7.4
	NFPA 30: Flammable and Combustible Liquids	Requirements for storage, transfer, and use of flammable and combustible liquids.	8.7.3.2, 8.7.4
	NFPA 37: Stationary Combustion Engines and Gas Turbines	Fire protection requirements for the installation and use of combustion engines and gas turbines.	8.7.3.2, 8.7.4
	NFPA 50A: Gaseous Hydrogen Systems	Fire protection requirements for hydrogen systems.	8.7.3.2, 8.7.4
	NFPA 54: National Fuel Gas Code	Fire protection requirements for the use of fuel gas.	8.7.3.2, 8.7.4
	NFPA 70, 70B & 70E: National Electric Code	Guidance on the safe selection and work practices associated with the design, installation, construction, and maintenance of electrical systems.	8.7.3.1, 8.7.3.2, 8.7.4
	NFPA 71: Installation, Maintenance, and Use of Central Station Signaling Systems	Requirements for the installation, maintenance, and use of central station signaling systems.	8.7.3.2, 8.7.4
	NFPA 72A, 72E & 72F: Local Protective Signaling System, Automatic Fire Detection System, Emergency Voice/Alarm Communication System	Requirements for the design, installation, use, and maintenance of local protective signaling systems, automatic fire detection systems, and emergency communication systems.	8.7.3.2, 8.7.4
	NFPA 78: Lightning Protection Code	Requirements for lightning protection.	8.7.3.2, 8.7.4
	NFPA 80: Fire Doors and Windows	Requirements for fire doors and windows.	8.7.3.2, 8.7.4
	NFPA 90A: Installation of Air Conditioning and Ventilation Systems	Guidance for the installation of air conditioning and ventilation systems.	8.7.3.2, 8.7.4

Table 8.7-1 (continued)
Worker Health and Safety
Laws, Ordinances, Regulations, and Standards

Administering Authority	Applicable LORS	Requirement/Compliance	AFC Conformance Section
City of Lemoore Fire Department (continued)	NFPA 101: Life Safety, Fire in Buildings and Structures	Requirements for the design and construction of means of egress from structures.	8.7.3.2, 8.7.4
	NFPA 291: Fire Flow Testing and Marking of Hydrants	Requirements for flow testing and marking of fire hydrants.	8.7.3.2, 8.7.4
	NFPA 1962: Care, Maintenance and Use of Fire Hoses	Requirements for the care, use, and maintenance of fire hoses, connections, and nozzles.	8.7.3.2, 8.7.4
City of Lemoore Building Inspector	ANSI/ASME Boiler and Pressure Vessel Code	Specifications and requirements for boilers and pressure vessels.	8.7.3.2, 8.7.4
	ANSI, B31.2, Fuel Gas Piping	Specifications and requirements for fuel gas piping.	8.7.3.2, 8.7.4

[1] Cal-OSHA has primary jurisdiction for worker health and safety in California. These regulations are provided for reference purposes and apply as referenced in Cal-OSHA regulations.

ANSI/ASME= American National Standards Institute/American Society for Mechanical Engineers
Cal-OSHA = California Occupational Safety and Health Administration
CCR = California Code of Regulations
CFR = Code of Federal Regulations
IIPP = Injury and Illness Prevention Program
LORS = Laws, ordinances, regulations, and standards
NFPA = National Fire Protection Association
PPE = Personal protective equipment
UFC = Uniform Fire Code

Table 8.7-2
HPP Hazard Analysis

Activity	Exposure Potential	Potential Hazard	Control Strategies
Heavy Equipment Operation	C, O, M	Employee injury and property damage from collisions with workers and/or facility equipment.	Implement heavy equipment safety program and ensure that operators are properly trained.
Trenching and Excavation	C, O, M	Employee injury and property damage from collapse of trenches and excavations or contact with underground utilities.	Implement an excavation and trenching safety program and ensure that operators are properly trained. Require digging permits prior to initiating excavation or trenching.
Work at Elevation	C, O, M	Employee injury due to falls from the same level and elevated areas.	Implement a fall protection program that requires fall protection systems whenever unprotected work is performed at greater than 6 feet.
General Project Work	C, O, M	Employee injury resulting from a slip, trip, or fall.	Maintain good housekeeping, adequate lighting, and compliant stairways and railings.
Crane and Derrick Operation	C, O, M	Employee injuries and property damage due to falling loads.	Implement hoisting and rigging safety program and ensure that operators are properly trained.
Hot Work	C, O, M	Employee injuries and property damage due to fire or explosion.	Implement fire protection and prevention program, require hot work permits, and ensure that welders, pipe fitters, etc., are properly trained.
Working with Combustible Liquids	C, O, M	Employee injuries and property damage due to fire or explosion.	Implement fire protection and prevention program that includes proper procedures for the proper storage and use of flammable or combustible liquids.
Concrete/Forms Work	C	Employee injuries due to work at height, slips, trips, and falls.	Wear fall protection when working at height, protect exposed rebar, and maintain good housekeeping.
Electrical Work	C, O, M	Employee injuries due to contact with energized parts.	Implement energy control program, including LO/TO of energized sources.
Materials Handling	C, O, M	Employee injuries due to improper lifting.	Implement an ergonomics program and train employees in proper lifting techniques.

Table 8.7-2 (continued)
HPP Hazard Analysis

Activity	Exposure Potential	Potential Hazard	Control Strategies
Confined Space Entries	C, O, M	Employee injuries due to suffocation, exposure to toxic materials, engulfment, etc.	Implement a confined space program, including permit procedures and air monitoring requirements.
Compressed Gas Storage	C, O, M	Employee injuries and equipment damage due to explosive release of pressure.	Implement a compressed gas safety program, including procedures for proper use and storage.
Power Tool Use	C, O, M	Employee injuries due to improper use, or use of damaged power tools.	Implement procedures for inspecting power tools before operation and train employees on the proper use and care of power tools.
Working with or near hazardous or toxic materials	C, O, M	Employee injuries due to exposure to hazardous and/or toxic materials.	Implement hazard communication program and exposure control procedures, including engineering controls, administrative controls, and PPE for activities that may expose employees to hazardous/toxic materials.
Working with or near noisy equipment	C, O, M	Employee overexposure to noise.	Implement a hearing conservation program to include: identifying high noise activities and sources, Sound-level monitoring, and PPE.
Working with or near exposed machinery	C, O, M	Employee injuries from entanglement in rotating or moving equipment.	Develop and implement machine-guarding equipment LO/TO procedures.

C = Construction Phase
O = Facility Operation
M = Facilities Maintenance
LO/TO = lockout/tagout
PPE = personal protective equipment

Table 8.7-3
Protective Equipment Guide

Body Area	Hazards	Recommended Protection
Eyes/Face	Low-velocity flying particles	Safety glasses with side shields
	High-velocity chips and sparks	Impact goggles or safety glasses with full face shield
	Corrosive liquid splash during transfer	Splash proof goggles and face shield
	Welding – injurious light rays	Welding hood with appropriate eye filter lenses and welding screens
Head/Ears	General overhead hazards, overhead rigging, material handling, maintenance, and general construction operations	Nonconductive hard hat
	Noise exposure	Earplugs or muff
Respiratory System	Low-hazard inert dust	Nuisance dust mask
	Welding fumes	Dust, fume, mist respirator
	Low-concentration solvent vapors	Cartridge-type air purifying respirator with organic vapor cartridges
	Acid or base mists	Cartridge-type air purifying respirator with appropriate acid/base cartridges
	High-concentration dusts or toxic vapors, gases	Air line respirator
	Oxygen-deficient atmospheres, IDLH concentrations of vapors, gases	Self-contained breathing apparatus
Hands and Arms	Handling of rough or sharp objects	Leather gloves
	Handling of hot objects	Insulated gloves
	Using solvents	Chemical-resistant synthetic gloves
Feet and Legs	Handling light objects	Safety shoes
	Handling heavy objects	Steel-toed safety boots
	Using brush hooks or scythes	Shin guards
	Working with corrosive liquids	Chemical-resistant safety boots
	Underground work	Steel-toed safety boots

Table 8.7-3 (continued)
Protective Equipment Guide

Body Area	Hazards	Recommended Protection
Trunk and Full Body	Normal work activities	Cotton pants and shirt
	Hot or corrosive liquids	Chemical resistant apron or full body suit
	Punctures, impact, or cuts	Canvas or leather kickback apron or metal mesh apron
	Heat stress	Covered break area and remind workers to drink plenty of fluids.
Fall Protection/Rescue	Working from elevated structure of platform without standard railings	Full body safety harness and lanyard
	Vessel (confined space) entry	Full body safety harness and lifeline or wristlets and lifeline
	Suspended scaffolds	Full body safety harness/lanyard

IDLH = Immediately dangerous to life and health

Table 8.7-4
Sample Operations Emergency Action and Evacuation Plan Outline

1.0 Introduction
2.0 Emergency Organizational Structure
  2.1 Purpose
  2.2 Scope
3.0 Training
4.0 Notification of Emergencies
  4.1 Notifications
  4.2 Internal Notification
  4.3 External Communication
  4.4 Community Alert Network
  4.5 General Emergency Response
5.0 Evacuation Procedures
  5.1 Evacuation Procedures
  5.2 Assembly Areas
  5.3 Re-Entry
  5.4 Key Points for All Site Personnel to Follow During Evacuation
  5.5 Area Relocation
  5.6 Long-Term Evacuation
6.0 Fires or Explosions
7.0 Hazardous Materials Releases
  7.1 Purpose
  7.2 Release Potential
  7.3 Small Spill Release Procedures
  7.4 Large Release Procedures
  7.5 Disposal of Cleanup Wastes
  7.6 Water Pollution Control
8.0 Medical Emergencies
9.0 Natural Disasters
  9.1 Major Earthquakes
  9.2 Floods
10.0 Sabotage and Bomb Threats
  10.1 Sabotage
  10.2 Bomb Threats
11.0 Train Derailment
12.0 Workplace Violence
13.0 Emergency Public Information
14.0 Coordination with Outside Agencies

Table 8.7-5
Construction Training Program

Training Course	Target Employees
Site Safety Orientation	All
Injury and Illness Prevention Program	All
Emergency Action Plan	All
PPE Program	All
Heavy Equipment Safety Program Forklift Operator Training	Employees working on, near, or with heavy equipment
Trenching and Excavation Safety Program	Employees working on or near trenches or excavations.
Fall Protection Program	Employees required to work at elevation (> 6 feet).
Scaffolding Safety Program	Employees required to erect or use scaffolding
Hoisting and Rigging Safety Program	Employees responsible for performing and/or supervising hoisting and rigging.
Crane Safety Program	Employees supervising or performing crane operations
Flammable and Combustible Liquid Storage and Handling	Employees responsible for the handling and storage of flammable or combustible liquids or gasses
Hot Work Permits	Employees performing hot work
Hazardous Energy Control (Lockout/Tagout)	Employees performing lockout/tagout
Electrical Safety	Employees required to work on electrical systems and equipment
Permit Required Confined Space Entry	Employees required to supervise or perform confined space entry
Hand and Portable Power Tool Safety	All
Housekeeping Policy and Program	All
Hearing Conservation	All
Safe Lifting Program	All
Safe Driving Program	Employees supervising or driving motor vehicles
Hazard Communication	All
Pressure Safety	Employees supervising or working on pressurized systems or equipment
Line Breaking Safety	Employees performing general maintenance or working on pressurized systems or equipment

Table 8.7-5 (continued)
Construction Training Program

Training Course	Target Employees
Respiratory Protection Program	All employees required to wear respiratory protection
Fire Prevention Program	All
Emergency Action Plan	All
HAZWOPER/First Responder	Employees working around hazardous materials or waste
Recognition of and Treatment for Heat Stress	All
First Aid	All
CPR	All

Table 8.7-6
Operation and Maintenance Training Program

Training Course	Target Employees
Site Safety Orientation	All
Injury and Illness Prevention Program	All
Emergency Action Plan	All
PPE Program	All
Trenching and Excavation Safety Program	Employees performing or supervising trenching or excavation work
100% Fall Protection Program	Employees required to use fall protection
Hoisting and Rigging Safety Program	Employees responsible for the oversight or conduct of hoisting and rigging
Forklift Operator Training	Employees working on, near, or with forklifts
Crane Safety Program	Employees supervising or performing crane operations
Flammable and Combustible Liquid Storage and Handling	Employees responsible for the handling and storage of flammable or combustible liquids or gasses
Hot Work Permits	Employees performing hot work
Hazardous Energy Control (Lockout/Tagout)	Employees performing lockout/tagout
Electrical Safety	Employees required to work on electrical systems and equipment
Permit Required Confined Space Entry	Employees required to supervise or perform confined space entry
Hand and Portable Power Tool Safety	All
Housekeeping Policy and Program	All
Hearing Conservation	All
Safe Lifting Program	All
Safe Driving Program	Employees supervising or driving motor vehicles
Hazard Communication	All
Pressure Safety	Employees supervising or working on pressurized systems or equipment
Line Breaking Safety	Employees performing general maintenance or working on pressurized systems or equipment

Table 8.7-6 (continued)
Operation and Maintenance Training Program

Training Course	Target Employees
Relief Valve Maintenance and Testing	Employees performing maintenance or testing of relief valves
Respiratory Protection Program	All employees required to wear respiratory protection
Fire Prevention Program	All
Fire Protection Program	All
HAZWOPER/First Responder	Employees working with hazardous materials or waste
Recognition of and Treatment for Heat Stress	All
First Aid	All
CPR	All

Table 8.7-7
Health and Safety Permits

Permit	Issuing Agency	Application Requirements	Permit Procurement
Trenching and Excavation Permit	Any Cal-OSHA district or field office	Required for the following: • Trenches and excavations more than five feet into which personnel are required to enter or that are adjacent to structures • Construction of buildings, structures, scaffolding, or falsework more than three stories high • Demolition of any building or structure, or the dismantling of scaffolding or falsework more than three stories high	Submit completed permit application to any Cal-OSHA district or field office prior to commencing construction

Cal-OSHA = California Occupational Safety and Health Administration

FIGURES

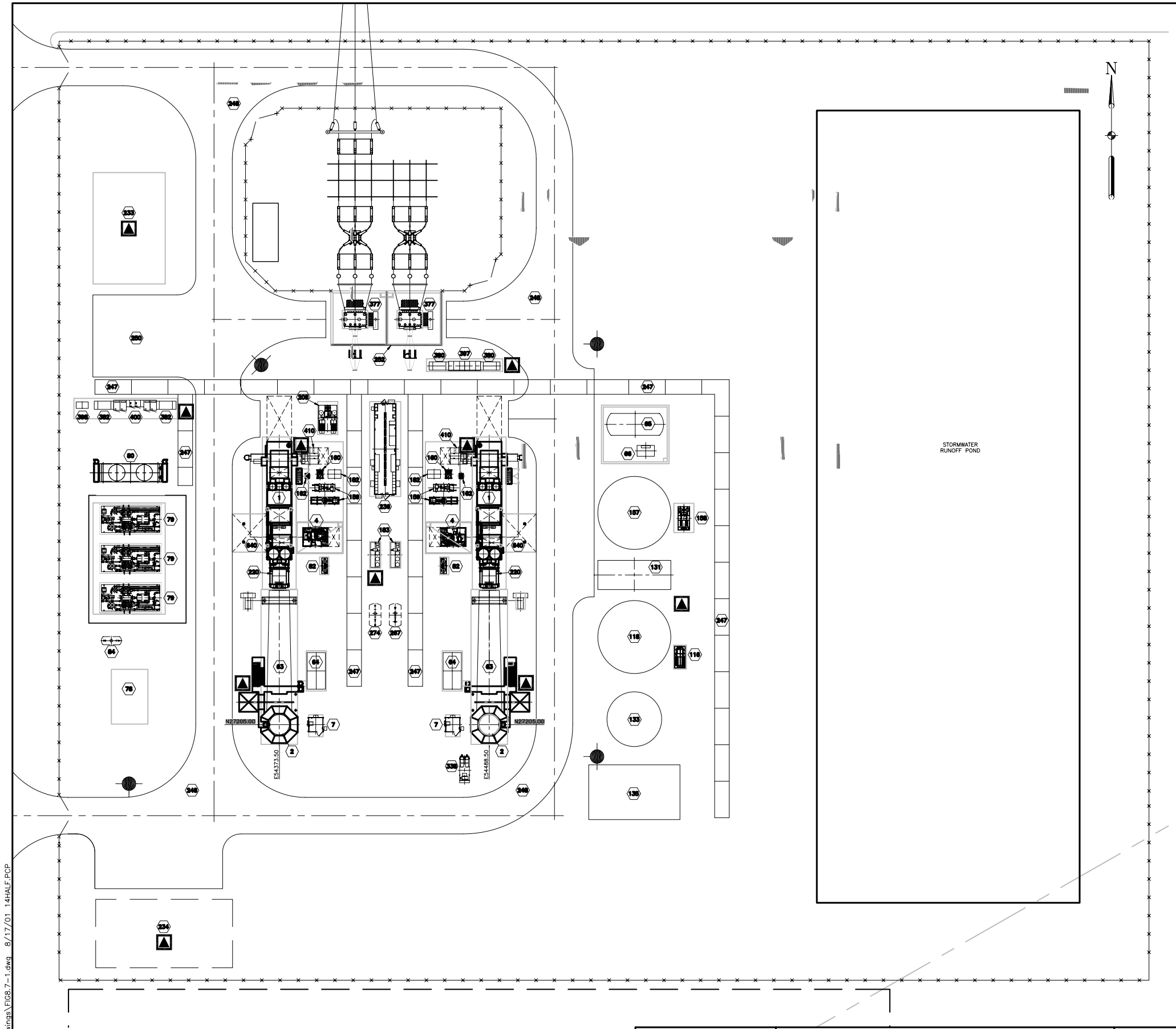

EQUIPMENT LIST

ITEM NO.	EQUIP. NO.	DESCRIPTION	TIE DOWN EL
1	–	COMBUSTION TURBINE LM6000	–
2	–	STACK	–
4	–	AUXILIARY SKID	–
7	–	CONTINUOUS EMISSION MONITORING EQUIPMENT	–
63	–	SCR	–
64	–	SCR AMMONIA INJECTION SKID	–
65	–	AMMONIA STORAGE TANK	–
66	–	AMMONIA FORWARDING PUMPS	–
78	–	FUEL GAS METERING STATION	–
79	–	FUEL GAS COMPRESSOR SKID 1A, 1B, 1C	–
80	–	FUEL GAS COOLER	–
82	–	FUEL GAS FILTER	–
84	–	FUEL GAS WASTE SUMP WITH BLOWER	–
116	–	RAW WATER FORWARDING PUMPS	–
118	–	RAW WATER STORAGE TANK	–
131	–	WATER TREATMENT MODULE	–
133	–	WASTE WATER STORAGE TANK	–
135	–	WASTE WATER PROCESS EQUIPEMENT	–
157	–	DEMIN. WATER STORAGE TANK	–
158	–	DEMIN. WATER INJECTION FORWARDING PUMPS	–
159	–	WATER INJECTION BOOST PUMP SKID 2A, 2B	–
160	–	SPRINT PERFORMANCE SKID	–
162	–	HIGH PRESSURE DEMIN. WATER FILTER SKID	–
182	–	FOGGER (FUTURE)	–
183	–	CLOSED LOOP COOLER	–
191	N/A	FIRE CARTS (NOT SHOWN FOR CLARITY)	N/A
208	–	AIR COMPRESSOR SKID	–
220	–	ANTI–ICING HEAT EXCHANGER SYSTEM	–
233	–	ADMINISTRATION BUILDING	–
234	–	MAINTENANCE BUILDING	–
236	–	POWER CONTROL MODULE	–
247	N/A	PIPE AND CABLE WAYS	N/A
248	N/A	ROAD	N/A
250	N/A	PARKING AREA	N/A
267	–	WASTE WATER WASH TANK	–
274	–	OIL/WATER SEPARATOR	–
338	–	EMERGENCY DIESEL GENERATOR	–
350	–	LIGHTING PANEL WITH TRANSFORMER	–
377	–	MAIN SUBSTATION STEP–UP TRANSFORMER	–
380	–	AUXILIARY TRANSFORMER 480V	–
382	–	GAS COMPRESSOR TRANSFORMER 13.8/4160V	–
383	–	13.8KV SWITCH	–
397	–	480V DISTRIBUTION SWITCHBOARD	–
398	–	GAS COMPRESSOR 480V MCC	–
400	–	4160 DISTRIBUTION PANEL	–
410	–	MEDIUM VOLTAGE SWITCH GEAR	–
610	N/A	TRANSFORMER FIRE WALL	N/A
640	N/A	ENGINE REMOVAL AREA	N/A

SAFETY EQUIPMENT LEGEND

FIRE HYDRANT

FIRE EXTINGUISHER

NOT TO BE USED FOR CONSTRUCTION

Project No. 51–00167032.00	GWF ENERGY LLC HENRIETTA 230KV SWITCHYARD	EQUIPMENT ARRANGEMENT FIRE SAFETY	Figure 8.7–1
	URS		

X:\x_env\GWF\henrietta\drawings\FIG8.7–1.dwg 8/17/01 14HALF.PCP

8.8 Socioeconomics

The Henrietta Peaker Project (HPP) consists of a 91.4-megawatt (MW) (net), natural-gas-fired, simple-cycle power plant located approximately 10 miles southwest of Lemoore, California, on a seven-acre portion of a 20-acre parcel owned by GWF Energy LLC. The HPP will interconnect to the existing adjacent Pacific Gas and Electric Company (PG&E) Henrietta Substation through a new 550-foot 70-kilovolt (kV) transmission line supported on two new transmission poles. Other linear facilities include an approximately 16.5-foot water interconnection pipeline (from the site property boundary) and a 2.2-mile Southern California Gas Company natural gas interconnection pipeline. Additionally, approximately five acres will be used for temporary construction laydown and parking.

Socioeconomic issues relevant to the evaluation of environmental impacts include the economy (the labor force, employment, and industry); population and housing; public services and utilities (including fire protection and emergency response, law enforcement, schools, medical facilities, and utilities); and public finance and fiscal issues.

8.8.1 Affected Environment

The HPP site is located along 25th Avenue in unincorporated Kings County, approximately one mile south of the 25th Avenue and State Route (SR) 198 intersection and approximately three miles east of the border with Fresno County. Economic and demographic information for Kings County, the nearby counties of Fresno and Kern, and cities near the project site are presented throughout this section. Cities analyzed include Kings County cities and the city of Huron in Fresno County, which is 10 miles west of the project site. Information is also presented for Tulare County.

8.8.1.1 Labor Force, Employment, and Industry

Agriculture and related industries predominate in the Kings County economy (EDD, 2001a) and are important in neighboring Kern and Fresno Counties as well. In 2000, the total civilian labor force in Kings County was 45,900 persons, and the unemployment rate was 14 percent (Table 8.8-1; EDD, 2001b). Of the incorporated cities in Kings County, Avenal had the highest unemployment rate in 2000 (21.2 percent), followed by Corcoran (16.1 percent),

Lemoore (14.3 percent), and Hanford (12.3 percent). The city of Huron in Fresno County had an unemployment rate of approximately 15 percent, which is generally comparable to the unemployment rates of the four Kings County cities. Fresno County had an unemployment rate comparable to that of Kings County (14.3 percent), but Kern County's rate was slightly lower (11.3 percent). The unemployment rates in the three counties were more than double the rate of the state of California as a whole in 2000 (4.9 percent). The agricultural nature of the economy in these counties results in seasonal employment fluctuations, and unemployment rates likely fluctuate throughout the year.

Tables 8.8-2, 8.8-3, and 8.8-4 show 1998 and 1999 employment by industry for Kings, Kern, and Fresno Counties, respectively. As shown in Table 8.8-2, the highest percentages of employment in Kings County are in government, farm, trade, and services. In 1998, the government sector represented one-third of total employment in Kings County, due primarily to the presence of Naval Air Station (NAS) Lemoore (1,400 civilian employees), Avenal State Prison (1,300 employees), and two correctional facilities in Corcoran (2,900 employees) (KEDC, 2001). Farm production and services in Kings County represented over one-fifth of total employment, and wholesale and retail trade represented slightly less than one-fifth of total employment. The services sector (hotels, lodging, and health) employed approximately 15 percent of the total employees in Kings County. Construction and mining employment was approximately 1,000 in 1999.

The State of California Employment Development Department (EDD) expects an average annual growth rate in nonfarm employment of 2.8 percent between 1997 and 2004. Recent years reflect conservative growth (i.e., Kings County experienced a 3.4 percent average annual increase in nonfarm employment between 1993 and 2000). From 1998 to 1999, farm production and services decreased by an average annual rate of 0.2 percent (EDD, 2001c).

The government division, which accounted for 11,040 jobs in Kings County in 1999, continues to be the largest nonfarm industry in Kings County. Two state prisons in Corcoran, one state prison in Avenal, and NAS Lemoore account for most of the jobs in the government division. As the Kings County population grows (see Section 8.8.1.2), government

employment will increase in the form of public school educators and general government support employees.

Table 8.8-3 shows total farm and nonfarm employment in Kern County. The highest percentages of total employment within Kern County are in the government, services, farming, and trade sectors. Government employment represents approximately one-fifth of Kern County employment, and most of this employment is at Edwards Air Force Base, located in the southeast portion of the county. Services (business, health, engineering, management, and other services), wholesale and retail trade, and farming each account for approximately one-fifth of Kern County employment. The construction workforce includes approximately 10,000 workers, representing roughly 4 percent of total employment.

Total employment by industry for Fresno County is presented in Table 8.8-4. The sectors with the highest employment are services, trade, government, and farming. Service-related jobs, wholesale and retail trade, and government employment each represent approximately one-fifth of total employment. The construction and mining sector employed 14,800 workers in 1999, representing approximately 5 percent of Fresno County employment.

In 1999, Tulare County's employment was 127,900, representing approximately 40 percent of Fresno County employment and 55 percent of Kern County employment. The county economy is strong in agricultural commodity production, packing and shipping operations, and light and medium manufacturing plants (Tulare County, 2001). Visalia is the county seat. Farming represented 27 percent of total employment in 2000, followed by government (21 percent), retail trade (15 percent), and services (15 percent). Manufacturing represents approximately 9 percent of county employment (EDD, 2001d). Of the Tulare County civilian labor force of 170,100, 15 percent was unemployed in 2000 (Table 8.8-1; EDD, 2001d).

Table 8.8-5 shows labor unions in the area that provide workforces for construction projects in the three-county area of Kings, Fresno and Kern Counties. Private and commercial contractors also operate in Fresno and Kern Counties.

8.8.1.2 Population and Housing

Population. Kings County includes the four incorporated cities of Avenal, Corcoran, Hanford, and Lemoore and comprises 1,396 square miles of land (Kings County, 2001a). The unincorporated population of Kings County accounted for 28 percent of the total county population in 2000. Available historical and projected population data for Kings County, broken down into incorporated cities and unincorporated area, are presented in Table 8.8-6. The same data for the city of Huron in Fresno County, Kern County itself, Fresno County, and the state of California are also included in Table 8.8-6.

Annual population growth rates (historic and projected) are shown in Table 8.8-7 for the period 1981 to 2010. The population of Kings County increased from 75,100 in 1981 to 131,200 in 2000, for an average annual increase of 3 percent. By 2020, the Kings County population is expected to reach 186,600 (CDF, 2001). Kern County and Fresno County had larger populations than Kings County (658,900 and 805,000 residents, respectively) in 2000. However, both counties grew slightly slower than Kings County during the 1981–2000 period: Kern County grew 2.5 percent annually, on average, and Fresno County grew 2.3 percent annually, on average. The state as a whole grew 1.9 percent annually on average during the same period. Since 1990, the majority of population growth in Kings County has occurred in the incorporated cities. The unincorporated areas of Kings County had an average annual population growth rate of 0.7 percent from 1990 to 2000.

The California Department of Finance (CDF) expects the population of Kings County to grow at an annual average rate of 1.7 percent between 2000 and 2010. Kern County will grow slightly faster (2.7 percent) and Fresno County will grow at the same rate as Kings County.

In January 2001, Tulare County had 377,500 residents, 25 percent of whom lived in the city of Visalia, followed by 12 percent in the city of Tulare, and 11 percent in the city of Porterville. From 1990 to 2000, the county's population grew at an average of 1.7 percent annually, slightly faster than the state and slower than Kern, Fresno, and Kings Counties (see Table 8.8-7). Cities with the highest annual average growth rate during this period included Visalia (2.5 percent), Porterville (2.5 percent), Tulare (2.3 percent), Farmersville (2.1 percent),

and Dinuba (2.1 percent). Tulare County population is expected to grow to 469,509 by 2010 and to 569,896 by 2020, representing an average of 2 percent annual growth from 2001 to 2010, and from 2010 to 2020 (Tables 8.8-6 and 8.8-7; CDF, 2001).

The closest residences to the project site are condominiums on NAS Lemoore property. In addition to its role as a military base and employment center for Kings County, NAS Lemoore is a residential community for Navy personnel and their families. The condominiums closest to the project site are approximately 0.7 miles east of the intersection of SR 198 and 25th Avenue, bordering SR 198, which is approximately 1.5 miles northeast of the project site.

Demographics and Poverty Level. Both 1990 and 2000 Census data were used for this analysis, as 2000 census data showing the number of minority residents (excluding only white non-Hispanic/Latino) had not yet been released in June 2001.[1]

Census data from 1990 show that the demographic composition of Kings County and the surrounding counties is diverse; slightly over half of the population in each of the counties is white non-Hispanic. Forty-six percent of Kings County residents are minority, including nonwhite races and persons who listed themselves as Hispanic or Latino white. The same measures for Fresno and Kern Counties were 49 percent and 37 percent, respectively.

Based on the 2000 Census, 44 percent of Kings County was nonwhite, while 43 percent and 36 percent of Fresno and Kern Counties were nonwhite, respectively.[2] In 2000, about 5 percent of the residents of these counties listed themselves as "more than one race." In terms of ethnic origin, 44 percent of the population in Kings County was Hispanic or Latino in 2000. In Fresno and Kern Counties, 44 percent and 38 percent of the population was Hispanic or Latino in 2000, respectively. Whether the minority percentage in the counties has increased since 1990 is not discernible, since the number of white non-Hispanics was not available from the 2000 Census in June 2001.

[1] The number of persons of nonwhite races was available for 2000 in June 2001. However, since Hispanic/Latino origin by race in 2000 was not available in June 2001, the number of Hispanic or Latino whites was not available, and therefore the number of minority persons could not be estimated using the 2000 Census data.

[2] The 2000 race percentages include all "one race" races except white, and the category of "more than one race."

In 1990, 16 percent of Kings County residents, 21 percent of Fresno County residents, 16 percent of Kern County residents, and 22 percent of Tulare County residents lived below the poverty level. Table 8.8-8 shows the demographic profiles and poverty statistics of Kings, Kern, Fresno, and Tulare Counties as well as the incorporated cities in Kings County and the city of Huron in Fresno County.

Table 8.8-8 indicates that the incorporated cities in Kings County have a higher percentage of minority residents than Kings County in its entirety, suggesting that the unincorporated portions of Kings County are less racially diverse.

Housing. Housing information for Kings County and the neighboring counties of Kern, Fresno, and Tulare are shown in Table 8.8-9, along with housing information for the cities in Kings County and the city of Huron in Fresno County. In January 2000, the housing stock for Kings County was an estimated 37,018 dwelling units, consisting of 74 percent single-family homes, 20 percent multiple-family dwellings, and 6 percent mobile homes or trailers. The residential vacancy rate for Kings County was 6.2 percent at that time, which was lower than the state of California's vacancy rate of 7.4 percent, indicating a slightly tighter housing market in Kings County than in the state as a whole. Kern County had 234,487 housing units in January 2000 and a vacancy rate of 8.5 percent. Also in January 2000, Fresno County's housing supply was 273,159 housing units, and the vacancy rate was 6.1 percent. Tulare County had 121,707 housing units in January 2000 and a vacancy rate of 6.6 percent.

The supply of temporary housing is greater in Kern and Fresno Counties than in Kings County. However, the city of Lemoore in Kings County has two motels with a combined total of 127 rooms. Lemoore is approximately 10 miles east and within a 15-minute driving distance of the site. The city of Hanford in Kings County, approximately 20 miles northwest and within a half-hour driving distance of the site, has nine hotels, including two large chain hotels with a combined total of 227 rooms. Avenal and Corcoran in Kings County have one hotel each (KEDC, 2001). The larger cities of Fresno and Bakersfield are approximately 40 miles north and 80 miles south of the project site, respectively. The city of Fresno has 75 hotels or motels with approximately 7,000 rooms (FCVB, 2001). Bakersfield, the largest city in Kern County, has 33 hotels or motels with approximately 4,300 rooms (Belluomini, 2001).

8.8.1.3 Public Services and Utilities

Fire Protection and Emergency Response. The Kings County Fire Department (KCFD) provides countywide fire protection services, including fire inspection, limited emergency medical and first aid, suppression and protection, arson inspection, and weed abatement. The department headquarters are located in Hanford, and 11 KCFD fire stations operate countywide (Kings County, 2001a). The Number 7 Station is the closest to the project site and will be the "first response" station, as it is approximately 7.5 miles from the site. The Number 10 Station will provide backup response and is located approximately nine miles from the site (10-minute response time). Each of the two stations is staffed with one firefighter and 15 volunteers. The Number 10 Station has a 2,500-gallon engine, and the Number 7 Station is equipped with a 1,000-gallon engine. The KCFD has a mutual-aid agreement with NAS Lemoore, which could respond to an emergency at the project site in three to four minutes (Virden, 2001).

American Ambulance provides ambulance service to the project site. The closest ambulance and staff to the site are stationed in Lemoore, and the second closest are in the city of Hanford. The ambulance based in Lemoore could respond to an emergency at the site in eight to nine minutes (Virden, 2001).

Law Enforcement. The Kings County Sheriff's Department (KCSD) provides law enforcement services to the county, serves as the public administrator and county coroner, and operates the county jail in Hanford. The KCSD has over 200 employees and 73 sworn officers, and patrols four beats throughout the county. The KCSD would provide law enforcement services to the project site at all times, based out of its Hanford headquarters. The department also has mutual-aid agreements statewide (Wheat, 2001).

Schools. The project site is within the boundaries of two school districts: the Central Union Elementary School District (Central Union) and the Lemoore Union High School District (Lemoore Union). Central Union educates students in grades K through 8, and Lemoore Union educates students in grades 9 through 12. The closest schools to the project site are Akers Elementary School and Neutra Elementary School, both of which are approximately two miles north of the site.

In Kings County, 25,364 students attended schools during the 2000–2001 school year. In Hanford, seven school districts serve grades K–12. The projected K–12 enrollment for the 2002–2003 school year is 11,319 students, an increase of 720 students (3 percent) over current levels (GWF, 2000). Community colleges and adult education programs are also provided throughout Kings County.

Table 8.8-10 shows current and projected enrollment and school capacity in the districts where the project site is located. The enrollment in these districts is not expected to grow substantially, and the schools are not over capacity.

Medical Facilities. The closest medical facilities to the project site are in Hanford, Corcoran, Avenal, and Fresno. Medical facilities within Kings County include the following:

- Avenal Hospital District, 317 E. Alpine Street, Avenal
- Corcoran District Hospital, 1310 Hanna Avenue, Corcoran
- Central Valley Comprehensive Care, 869 W. Lacey Boulevard, Hanford
- Central Valley General Hospital, 1025 N. Douty, Hanford
- Douty Health Clinic, 1000 N. Douty, Hanford
- Hacienda Health Care, 361 E. Grangeville Boulevard, Hanford
- Hanford Community Medical Center, Adventist Health, 450 Greenfield Avenue, Hanford
- Hanford Nursing & Rehabilitation Hospital, 1007 W. Lacey Boulevard, Hanford
- Kerr Outpatient Center, 470 Greenfield Avenue, Hanford (Kings County, 2001b)

Fresno has several medical centers that could also serve the project site if necessary. American Ambulance would provide ambulance service to the project site. The closest stationed ambulance, based in Lemoore, has a response time to the project site of eight to nine minutes (Virden, 2001).

Utilities. The project site is currently not served with potable water or sewer service, as the site is used for agricultural purposes. PG&E supplies electricity to the project site vicinity. PG&E supplies natural gas to Avenal, and the Southern California Gas Company supplies natural gas to the cities of Corcoran, Lemoore, and Hanford (KEDC, 2001). All nonhazardous waste from the city of Lemoore goes to the local materials recovery facility, where it is sorted and recyclables are removed. The remaining waste is then transferred to the Chemical Waste Management facility in Kettleman City. The Kings Waste Recycling Authority has an agreement with Chemical Waste Management to send nonhazardous waste from the cities of Lemoore, Hanford, and Corcoran to the Class II/III Kettleman Hills Facility (Cooke, 2001). Telephone service is provided to Kings County by Pacific Bell and by GTE (KEDC, 2001).

8.8.1.4 Public Finance and Fiscal Issues

For fiscal year (FY) 2000/2001, Kings County adopted a revenue budget of approximately $136 million. Intergovernmental revenue accounts for approximately $86 million, taxes generate about $15 million, and charges for services generate approximately $8 million. Table 8.8-11 summarizes the revenue sources for Kings County for FY 1998/1999 through FY 2000/2001. The FY 2001/2002 budget had not been adopted as of June 2001.

Table 8.8-12 shows how the FY 2000/2001 funds were allocated. The allocated percentage of the budget for each department and the percentage change from the FY actual 1999/2000 budget is also shown.

Welfare received the largest percentage of FY 2000/2001 budget appropriations (31 percent), followed by public safety (27 percent), and capital outlay (18 percent). Other funds that received appropriations included health (11 percent), general government (7 percent), and public transportation (4 percent). Internal service funds, education, and recreation each received 1 percent of appropriations.

For construction that occurs in Kings County, the County receives the sales tax revenue on the nonlabor cost, at 1 percent of total sales. The revenue goes to the County's general fund and is used for general government uses (Nikoghosian, 2001).

The total assessed value of all secured property in Kings County was $4.4 billion in FY 2000/2001 (Dorna, 2001), and the total property tax revenue collected was approximately $46 million (Nikoghosian, 2001). In Kings County, 47 percent of the property tax revenue is distributed to the general fund, the library, and the fire district; 34 percent to education; 8 percent to the cities; 4 percent to utilities, hospitals, and other services; 4 percent to other funds; and 3 percent to redevelopment agencies or funds (Dorna, 2001). Kings County levies property tax at 1 percent of the assessed value of the property. Depending on the tax code area, an additional tax for school capital facility needs could apply (Nikoghosian, 2001).

8.8.2 Environmental Consequences

Local and regional socioeconomic impacts attributable to the HPP were determined by evaluating projected demands from the construction, operation, and maintenance of the HPP relative to existing conditions. Construction, operation, and maintenance of the HPP are not expected to result in significant socioeconomic impacts to the local area or region.

8.8.2.1 Significance Criteria

Appendix G of the California Environmental Quality Act (CEQA) Guidelines provides criteria for determining whether project-related socioeconomic impacts would be significant. Impacts attributable to the project are considered significant if they would:

- Induce substantial growth or concentration of population;
- Induce substantial increases in demand for public services and utilities;
- Displace a large number of people;
- Disrupt or divide the physical arrangement of an established community; or
- Result in substantial long-term disruptions to businesses.

8.8.2.2 Economic Impacts

Direct Construction Impacts. HPP construction will occur over five months, beginning in January 2002 and ending in May 2002. Primary trades in demand include manual staff, consisting of pipefitters, electricians, laborers, and millwrights, and contractor staff. Table

8.8-13 shows the HPP schedule and the estimated construction personnel requirements by trade and month. Total construction personnel requirements will be approximately 373 personnel months, peaking at 93 personnel during month 4 of construction.

As shown in Table 8.8-2, Kings County had approximately 1,000 construction and mining workers in 1999. The demand for construction labor attributable to the HPP will not likely be met within Kings County; therefore, construction workers will originate from nonlocal areas and commute on a daily basis. For the purpose of analysis, an estimated 50 percent of the construction workers (48 peak workers) are assumed to commute from Bakersfield or Kern County, approximately 35 percent (34 peak workers) from Fresno or Fresno County, and the remaining 15 percent (15 peak workers) from Kings or Tulare Counties.

During the five-month construction period, an average of 75[3] workers will work daytime shifts at the HPP site from Monday through Saturday. Based on the percentages above, an average of 38 workers will commute from Kern County, an average of 26 workers from Fresno County, and an average of 11 workers from Kings and Tulare Counties. Table 8.10-5 in Section 8.10 (Traffic and Transportation) shows the average distribution of the workforce. The project could draw from the labor unions listed in Table 8.8-5 for project construction. An adequate construction labor force exists in Kings, Kern, Fresno, and Tulare Counties to meet the demand attributable to the HPP.

The total construction cost of the proposed project is anticipated to be approximately $84 million. Table 8.8-14 shows that labor costs (including base wages, benefits, taxes, and overtime) represents approximately one-tenth of the total cost. The remainder of the cost, approximately $76 million, will be spent on materials, equipment, and other nonlabor items. An estimated $2.1 million (3.5 percent) of the cost of construction materials and equipment will be spent in Kings County (Kieffer, 2001).

Indirect and Induced Economic Impacts from Construction. Construction activity will support secondary economic impacts (indirect and induced impacts) that will occur within Kings County and the surrounding larger region, depending on where labor originates

[3] The average number of workers was determined by dividing the total worker-months (373) by the number of months in the construction period (5).

(where labor income is spent) and where materials and supplies are purchased. Secondary employment effects include indirect employment due to the purchase of goods and services by firms involved with construction, and induced employment due to construction workers spending their income in the local area. Using an IMPLAN multiplier[4] for the four-county area of 1.5 and the average number of workers (75), the number of indirect and induced jobs supported during construction is approximately 39, for a total impact of 116 jobs in the four-county area. The total employment impacts to Kings County will be a small portion of the 116 employees, as construction employees will commute to the project site from outside the county, and much of the labor income that is earned from construction will be spent outside Kings County. These impacts will be temporary, since they are attributable to temporary construction activities, and will lag behind the direct effects of construction by approximately 6 to 12 months.

Direct Operation and Maintenance Impacts. The proposed HPP will begin operating in June 2002. Operation and maintenance personnel for the proposed project will be provided from other GWF operating facilities. Therefore, there will be no new operation and maintenance jobs created by the HPP. The maximum number of employees on site at the HPP during normal operating conditions will range from one (an operator) to four (a supervisor, operator, an instrument technician, and a mechanic). Operation and maintenance personnel from the Hanford Cogeneration Power Plant will be dispatched to the HPP when the proposed project is scheduled to operate.

[4] IMPLAN Professional Version 2.0, copyright Minnesota IMPLAN Group, 1997. The multiplier 1.5 was the industry output multiplier (induced and indirect) for Sector #51, New Streets and Highways, for the study area of Kings, Kern, Tulare, and Fresno Counties.

The total cost of annual operation and maintenance of the HPP will be approximately $2.5 million, as shown in Table 8.8-15. Approximately $32,000 (5.9 percent of the costs of materials and supplies) will be spent locally.

Indirect and Induced Economic Impacts from Operation and Maintenance. Operation and maintenance of the HPP will support no secondary economic impacts (indirect and induced impacts). There will be no secondary impacts from operation and maintenance as there will be no new employees associated with HPP.

8.8.2.3 Population and Housing Impacts

Construction. Construction of the HPP will not cause substantial permanent population increases or changes in the concentration of population due to the temporary nature and relatively short time period for construction. Construction workers will be a temporary addition to the Kings County population during the daytime. During the day, workers could purchase food, gasoline, and other miscellaneous items in the area. All workers will be daily commuters and will therefore not need overnight lodging. However, if workers were to require temporary lodging, such lodging is available in Hanford, Avenal, and Corcoran, as well as in Fresno and Bakersfield. The temporary influx of construction workers will not place demands on the local lodging industry that could not be met. The secondary (indirect and induced) impacts associated with construction are not expected to result in a substantial impact on population or housing in the area. The number of secondary employees will be small, and the jobs will be temporary. Housing availability and vacancy rates in the area indicate that any new residents associated with secondary employment attributable to construction will be able to find adequate housing.

Operation and Maintenance. HPP operation and maintenance will not cause any change in population or in the concentration of population, because there are no new employees required to operate the HPP. The employees will commute on a daily basis; therefore, no demand for permanent housing or temporary lodging will result. Operation and maintenance workers could spend income in the local area surrounding the HPP on items such as food and gasoline. However, this increase in spending will not be significant relative to spending in Kings County. Secondary (indirect and induced) employment associated with the

operation and maintenance of the HPP is not expected to occur since there will be no new employees associated with HPP.

8.8.2.4 Impacts on Public Services and Utilities

Fire Protection, Emergency Response, and Law Enforcement Services. The construction of the proposed HPP will result in slight increases in demand for public services, as the construction workforce will average 75 workers, and construction will last approximately five months. The KCSD and the KCFD will serve the project site during construction, operation, and maintenance. The increased demand for service will not be substantial in relation to the service areas for each department. The KCFD has adequate resources to accommodate the additional demand placed on the department as a result of HPP construction, operation, and maintenance (Virden, 2001). The KCSD also has adequate resources to accommodate the additional demand resulting from the HPP (Wheat, 2001).

Schools. The construction, operation, and maintenance of the HPP will not result in an increase in the local student population or have an adverse impact on the ability of the school district to provide educational services. Construction workers and production employees will commute to the site on a daily basis and are not expected to temporarily or permanently relocate with their families, due to the adequate nearby labor force and the short construction period. Few if any additional students will attend Kings County schools as a result of the HPP.

The school impact fees resulting from construction of the HPP will support education in Kings County. The current school impact fee is $0.33 per square foot of covered and enclosed structure space for commercial or industrial development (Corl, 2001). The covered and closed structures to be built at the HPP site are approximately 14,000 square feet, which results in a school impact fee of $4,620 to be paid by the owners of the HPP. Using the breakdown of property tax revenue allocations (see Section 8.8.1.4) and the increase in property tax revenues attributable to the project (Section 8.8.2.5), an estimated $50,000 in property tax revenues will be generated for education in Kings County on an annual basis as a result of the HPP.

Medical Facilities. The impact of the HPP on hospitals and ambulances in the area will not be substantial. Medical facilities will be able to accommodate the potential demand for additional services. See Section 8.7 (Worker Health and Safety) for more information about the safety procedures to be used during construction.

Utilities. The construction, operation, and maintenance of the HPP will not have a substantial impact on electricity and gas, sewer, water, or telephone service in the area. The HPP project includes construction of an approximately two-mile natural gas pipeline that will connect to the Southern California Gas Company Line 800 south of the site, as discussed in Section 7.0 (Natural Gas Supply). The pipeline will be installed along existing roads and will not interrupt any agricultural production. In addition, a new 70-kV transmission line will connect the HPP to the PG&E Henrietta Substation. The transmission line will be approximately 550 feet in length and will not transect any agricultural land.

The HPP will obtain its process water and fire water from Westlands Water District and Kings County through an existing water supply line owned and operated by Westlands Water District. No improvements in the water line are necessary to supply the project, and no existing water customers will be curtailed. Bottled water will be delivered to the site for drinking and other domestic purposes. There will be no wastewater discharged to a publicly owned treatment system. A septic system will be installed at the site. Refuse pickup and both public and private waste haulers will provide disposal services for the project site. Where appropriate, wastes will be recycled; any remaining wastes will be temporarily stored until periodic disposal at the Class III Hanford Sanitary Landfill. PG&E will provide electricity service to the HPP site, and Southern California Gas Company will provide natural gas service.

8.8.2.5 Fiscal Impacts

The sales tax revenue attributable to purchase of construction materials and equipment for the HPP will be approximately $4.4 million. Approximately $160,000 of the $4.4 million will result from taxed purchases within Kings County. Of the 7.25 percent tax rate ($160,000), 6 percent will go to the State of California ($126,000) and the remaining 1.25 percent ($26,000) will go to Kings County.

The school impact fees resulting from HPP construction will support education in Kings County and will be approximately $4,620.

Kings County taxes secure property at 1 percent of assessed value, unless an additional educational capital facilities levy is added. For the project site parcel, the property tax rate is approximately 1.06 percent, including the 1 percent standard property tax in addition to a school levy that pays bonds for West Hills College and Lemoore High School (Dorna, 2001). The total assessed value of secured property in Kings County in FY 2000/2001 was approximately $4.4 billion (Dorna, 2001). Assuming the assessed value of the project site parcel will increase by the value of construction ($84 million), the increase in property tax revenue that will accrue to Kings County is approximately $900,000 annually, of which $50,000 will go toward paying the two school bonds. The rest of the property taxes will be allocated according to the breakdown discussed in Section 8.8.1.4. The valuation of the HPP is based on components related to its anticipated revenue-generating capability, including production capacity, amount and term of income stream, expenses, discount rate, and present value at the end of the term. Therefore, property tax revenue could vary annually depending on facility revenue.

To support operation and maintenance, the HPP will make local purchases of about $32,000 annually in equipment and supplies. The purchases will generate approximately $2,400 annually in sales tax revenue in Kings County.

8.8.3 Environmental Justice

Executive Order 12898, *Federal Actions to Address Environmental Justice in Minority and Low-Income Populations* (1994), requires federal government agencies to identify and address disproportionately high and adverse effects of federal actions on the health or environment of minority and low-income populations. The U.S. Environmental Protection Agency (U.S. EPA) has published several guidelines for addressing environmental justice issues, including *Draft Title VI Guidance for EPA Assistance Recipients Administering Environmental Permitting Programs* and *Draft Revised Guidance for Investigating Title VI Administrative Complaints Challenging Permits* (U.S. EPA, 2000a, b).

In recent environmental justice analyses, the CEC has used consistent methodology under U.S. EPA guidelines. Under current U.S. EPA methodology and CEC practice, for potential environmental justice impacts to exist, an environmental justice population must be present within six miles of a project site, and the project must result in "high and adverse" impacts that affect the environmental justice populations disproportionately. Under U.S. EPA guidance, an environmental justice population exists if the percentage of the population that is minority is over 50 percent. The 50 percent threshold can also be applied to low-income residents.

A six-mile-radius area centered on the HPP site includes parts of Kings and Fresno Counties. In 1990, Kings County and Fresno County residents were 46 and 49 percent minority, respectively (see Table 8.8-8). As shown in Figure 8.8-1, the six-mile-radius area includes parts of census tracts 2, 3, 4.02, and 16/16.01[5] in Kings County and census tract 78 in Fresno County. In 1990, the percentage of minority residents in the census tracts ranged from approximately 23 to 96 percent.

Census 2000 data indicate that the nonwhite population in Kings County and Fresno County was 46 percent in both counties. In addition, the percentage of the population that was Hispanic or Latino in 2000 was 44 percent in both counties.[6] The five census tracts surrounding the project site ranged from 25 to 70 percent nonwhite, and from 17 to 76 percent Hispanic or Latino.

In 1990, 16 and 21 percent of residents of Kings and Fresno Counties, respectively, lived below the poverty level (see Table 8.8-1). The range of percentage of residents living below the poverty level by individual census tract within the six-mile-radius area was 11 to 39 percent in 1990. Poverty statistics by census tract for 2000 were not available from Census 2000 in July 2001.

---

[5] 1990 Census boundaries label this census tract as census tract 16, while 2000 Census boundaries label the census tract at 16.01.

[6] Both 1990 and 2000 Census data were used for this analysis because 2000 census data showing the number of minority residents (excluding only white non-Hispanic/Latino) had not yet been released in July 2001. The number of persons of nonwhite races was available for 2000 in June 2001. However, since Hispanic/Latino origin *by race* in 2000 was not available in July 2001, the number of Hispanic or Latino whites was not available, and therefore, the number of minority persons could not be estimated for comparison to 1990 data or true representation of a minority percentage.

The census tracts with minority percentages over 50 percent are census tract 16/16.01 (76 percent in 1990) and census tract 78 (96 percent in 1990). A portion of each census tract falls into the six-mile-radius area; however, the only population center that falls into this area is the town of Stratford in Kings County, which is approximately 5.5 miles southeast of the site. Stratford is approximately 67 percent nonwhite and 76 percent Hispanic/Latino according to the 2000 Census. Minority and/or low-income data are not available from the1990 Census, because Stratford was not considered a designated "place" in 1990 by the Census Bureau.

The town of Stratford appears to be an environmental justice population based on the U.S. EPA's 50 percent rule. In 2000, the percentage of the population that was minority in Stratford was 20 percentage points higher than in Kings County and 26 percentage points higher than in the state as a whole.

If significant impacts are found to be attributable to the proposed project, an environmental justice impact could also result if the impacts fall disproportionately on this population compared to other populations within the affected area.

According to the Kings County Health Department, Division of Environmental Health Services (Fillmore, 2001), no known public health studies pertaining to environmental impacts have been performed for specific populations in Kings County within six miles of the project site. The California Department of Health Services has not performed any health studies of populations within the six-mile area (Neutra, 2001).

Permitted air emission sources within six miles of each project site include two cotton-ginning facilities, a government office, a portable equipment facility, and a concrete batching facility (see Figure 8.8-1) (SJVAPCD, 2001). None of the five air emission sources is a Title 5 permitted facility. During operation, the proposed project will also be a pollution source (see Section 8.1, Air Quality, for more information).

The VISTA Information Systems Environmental Database was searched for records of hazardous sites within six miles of the project site (VISTA, 2001).[7] The nearest hazardous site reported by VISTA is approximately 0.2 miles northwest of the project site. The locations and summary descriptions of the sites are presented in Figure 8.8-1. VISTA reported the following records:

- 23 sites with leaking underground storage tanks
- 1 solid waste landfill
- 16 sites with an emergency response notification of spills classification
- 1 RCRA-registered generator of hazardous waste
- 3 sites listed in the state index of properties with hazardous waste
- 1 RCRA violation/enforcement action

Other sections of this AFC evaluate project-related environmental impacts, such as Section 8.1 (Air Quality), Section 8.5 (Noise), Section 8.6 (Public Health), Section 8.10 (Traffic and Transportation), Section 8.11 (Visual Resources), Section 8.12 (Hazardous Materials), and Section 8.14 (Water Resources). The impacts associated with each of these areas are summarized below.

Air Quality. Maximum air quality impacts from both construction and operation of the HPP are summarized in Tables 8.1-18 and 8.1-19, respectively. The locations of maximum impact vary by averaging period, but are generally within 2.2 miles of the HPP. Concentrations at the location of the Stratford environmental justice population are substantially lower than the values shown in Tables 8.1-18 and 8.1-19, as the environmental justice population is further from the HPP (approximately 5.5 miles away).

[7] VISTA database lists include hazardous waste sites permitted by U.S. EPA (Toxic Release Inventory Sites) and the California Department of Toxic Substances Control. Databases were searched for properties within a 6-mile radius of the site, according to availability of data. Databases searched to six miles included U.S. EPA's National Priority List and Resource Conservation and Recovery Act (RCRA) Corrective Actions, and the State equivalent priority list. Databases searched to 5.5 miles include the U.S. EPA RCRA permitted treatment, storage, and disposal facilities; sites under review by U.S. EPA (Comprehensive Environmental Response, Compensation, and Liability Act/No Further Remedial Action Planned): the state-equivalent CERCLIS list; Leaking Underground Storage Tanks; and solid waste landfills, incinerators, or transfer stations. Databases searched to 5.25 miles included the state/county registered underground storage tanks list and the state's registered

Tables 8.1-18 and 8.1-19 demonstrate that even at the point of maximum impact, construction of the HPP will not cause a new violation of applicable air quality standards for carbon monoxide, nitrogen dioxide, and sulfur dioxide. Although a violation of the 24-hour particulate matter (PM_{10}) standard is predicted at the point of maximum impact, and the area is designated as nonattainment, the HPP impacts are small relative to background levels and will be substantially lower at the location of the environmental justice population. Mitigation measures will be applied during construction and operation to limit PM_{10} impacts, and the impacts during construction will be short term, potentially occurring only under limited conditions during the five-month construction period. The region is also considered to be in nonattainment with applicable state and federal ozone standards. Emission offsets provided by the HPP will create a net reduction in regional emissions of ozone precursors and PM_{10}.

Noise. As described in Section 8.5.4, noise will be barely audible during construction and will be inaudible during operation at the nearest receptor, approximately 1.5 miles from the HPP. Because sound levels decrease markedly with distance and the environmental justice population is more than three times the distance to the most sensitive receptor, noise impacts from the HPP will be imperceptible at the location of the environmental justice population.

Public Health. Table 8.6-4 demonstrates that the acute hazard index, chronic hazard index, and cancer risk impacts associated with the HPP will be 0.0035, 0.000785, and 0.0296, respectively, at the point of maximum impact. These impacts are well below the recognized significance thresholds for acute, chronic, and cancer risk of 1.0, 1.0, and one in 1 million, respectively. The HPP impacts at the environmental justice population location, over three miles from the point of maximum impact, will be even further below these significance thresholds.

Traffic and Transportation. As shown in Table 8.7-7, construction of the HPP will not change the level of service on any regional highways or roadways in the vicinity of the site. Trip generation during operation will be substantially lower than during the construction

aboveground storage tanks list. Databases searched to 5.125 miles included U.S. EPA's RCRA-registered small or large generators of hazardous waste, and the U.S. EPA/State Emergency Response Notification System and state spills lists.

period. Therefore, any impacts to roadways in the vicinity of the environmental justice population will be insignificant during construction and operation of the HPP.

Visual Resources. The HPP site is not visible from the environmental justice population due to its distance from the site, as well as line-of-sight interference from intervening terrain and land uses. Therefore, there are no impacts to visual resources at the environmental justice population.

Hazardous Materials. No materials handled during construction of the HPP have the potential to impact the environmental justice population, which is 5.5 miles away. Offsite consequence modeling described in Section 8.12 demonstrates that potential offsite impacts of ammonia in the unlikely event of a spill at the site would be well below any levels of public health concern. No other hazardous materials handled during operation have the potential for offsite consequences for the environmental justice population.

Water Resources. The HPP will receive water under existing entitlements and thus will not impact the water supply to the environmental justice population. There will be no wastewater discharges from the HPP to either surface water or ground water. Therefore, the HPP will not impact water quality in the vicinity of the environmental justice population.

Potential environmental impacts have been evaluated and mitigation recommended, if needed, so that the impacts are not significant. Therefore, because there are no significant environmental impacts, no significant disproportionate impacts will occur for any population in the project's area of influence, including the environmental justice population.

8.8.4 Cumulative Impacts

Cumulative adverse socioeconomic impacts could potentially result from a project if construction or operational demands, when combined with similar demands from one or more other projects in the region, exceed or undermine available resources. Other future or proposed projects in the area include a cellular communication tower and a cheese processing facility in Lemoore (Kinney, 2001). The cellular communication tower would not result in a large increase in nearby population or employment; the cheese processing facility could result in an increase in employment in Lemoore. These two projects would not likely have a substantial impact on

population near the HPP, due to the types of projects and their locations in Lemoore. Therefore, cumulative impacts on population are expected to be less than significant, and subsequent impacts on the ability to provide public services are also expected to be less than significant.

8.8.5 Growth-Inducing Impacts

The HPP project is not expected to result in substantial growth-inducing impacts, as no direct or indirect relocations will result from the HPP. However, positive economic impacts and increased power generation capability will support potential future growth opportunities in the county and the region.

8.8.6 Laws, Ordinances, Regulations, and Standards

The laws, ordinances, regulations, and standards (LORS) applicable to socioeconomic conditions and the potential impacts of the proposed project include Executive Order 12898 (Environmental Justice), CEQA, and the school impact fees imposed by Kings County. Table 8.8-16 summarizes HPP compliance with applicable LORS pertaining to socioeconomic impacts.

8.8.6.1 Federal

Executive Order 12898, *Federal Actions to Address Environmental Justice in Minority and Low-Income Population* (Executive Order 12898, 1994), requires federal government agencies to identify and address disproportionately high and adverse effects of federal actions on the health or environment of minority and low-income populations. The U.S. EPA has adopted the order, and the California EPA has established a working group for environmental justice concerns. The CEC receives federal funding and therefore must address environmental justice concerns associated with projects under its permitting jurisdiction. Environmental justice concerns related to the HPP are addressed in Section 8.8.3.

8.8.6.2 State

This analysis of the potential socioeconomic impacts attributable to the proposed project is based on Appendix G of the CEQA Guidelines. CEQA governs economic and social effects of a project to the extent that the effects result in physical impacts to the environment,

such as substantial growth in population, displacement of a large number of people, or disruption to or division of the physical arrangement of an established community. Other potential impacts include changes in community interaction patterns or social organizations, structures, or institutions; effects on community attitudes, values, or perceptions; or substantial inequities in the distribution of project costs and benefits.

8.8.6.3 Local

California Code of Regulations Sections 65770–65981 and 65995–65998 include provisions for levies against development projects near school districts. The levies are often called "school impact fees" because they go toward education. For commercial or industrial construction, Kings County school districts levy a school impact fee of $0.33 per square foot of chargeable covered and enclosed space (Corl, 2001). The determination of chargeable and covered and enclosed space within the perimeter of a commercial or industrial structure will be made by the building department of the city or county issuing the building permit.

8.8.7 Proposed Conditions of Certification

Proposed conditions of certification are included in Appendix K. With incorporation of the proposed conditions, the HPP will comply with all applicable LORS and will not result in significant socioeconomic impacts.

8.8.8 Involved Agencies and Agency Contacts

The following public service agencies were contacted in the course of the socioeconomics investigation to check on levels of activity and expected impacts of the proposed project.

Agency	Contact	Telephone
Kings County Auditor	Ute Dorna Harold Nikoghosian	(559) 582-3211
Kings County Office of Education	Cathy Marroquin Steve Corl	(559) 584-1441

Agency	Contact	Telephone
Lemoore Union High School District	Marten Powers	(559) 924-6610
Central Union Elementary School District	Jack Bogard	(559) 924-3405
Kings County Planning Department	Chuck Kinney, Planner	(559) 582-3211
Kings County Fire Department	Mike Virden	(559) 582-3211
Kings County Sheriff's Department	Brian Wheat	(559) 582-3211

8.8.9 Compliance with Laws, Ordinances, Regulations, and Standards

Table 8.8-16 summarizes HPP with compliance applicable LORS pertaining to socioeconomic impacts.

8.8.10 Permits Required and Permit Schedule

There are no specific permits to protect socioeconomic values. See Sections 8.4 (Land Use), 8.6 (Public Health), and 8.7 (Worker Health and Safety) for permits relating to land use and public health and safety issues.

8.8.11 References

Belluomini, Jackie, 2001. Telephone communication between Jackie Belluomini, Greater Bakersfield Convention and Visitors Bureau, and Katie McKinstry, URS Corporation. June 18, 2001.

Bogard, Jack, 2001. Telephone communication between Jack Bogard, Central Union Elementary School District, and Katie McKinstry, URS Corporation. June 20, 2001.

Bonner, Anna, 2001. Telephone communication between Anna Bonner, Lemoore Union High School District, and Katie McKinstry, URS Corporation. June 20, 2001

California Birth Defects Monitoring Program (CBDMP), 1999. California Department of Health Services Environmental Health Investigations Branch. Birth Defects in McFarland. April 1999.

California Environmental Quality Act (CEQA) Desk book, 2001.

CDF, 2001. Population and other demographics information on California Department of Finance (CDF) websites: http://www.dof.ca.gov/HTML/DEMOGRAP/90e-4.xls, http://www.dof.ca.gov/HTML/DEMOGRAP/Hist_E-4.xls,

http://www.dof.ca.gov/HTML/DEMOGRAP/projco.pdf.,
http://www.dof.ca.gov/HTML/DEMOGRAP/E-5.xls.

CEC, 2000. California Energy Commission Rationale For Adoption of Emergency Regulations to Implement to Six-Month Power Plant Licensing Process. November 15, 2000.

Cooke, Raymond, 2001. Kings County Division of Environmental Health Services. Telephone number: (559) 584-1411. Personal Communication with Angela Liang (URS Oakland) on June 28.

Corl, Steve, 2001. Telephone communication between Steve Corl, Kings County Office of Education, and Katie McKinstry, URS Corporation. June 14, 2001.

DOE, 2001. State of California Department of Education (DOE). Data Quest, School and District Profiles. www.cde.ca.gov.

Dorna, Ute, 2001. Telephone and email communication between Ute Dorna, Kings County Planning Department, Auditor's Office, and Katie McKinstry, URS Corporation. June 13 and 19, 2001.

EDD, 2001a. Kings County Snapshot. California State Employment Development Department (EDD). www.calmis.ca.gov/file/Cosnaps/KingsSNAP.pdf. June 18, 2001.

EDD, 2001b. Labor market information. Current employment and labor force information. California State Employment Development Department (EDD). http://www.calmis.ca.gov/htmlfile/subject/indtable.htm and http://calmis.ca.gov/FILE/LFHIST/00AASUB.TXT

EDD, 2001c. Labor market information. Employment by Industry Data, Kings County. California State Employment Development Department (EDD). http://www.calmis.ca.gov/htmlfile/subject/indtable.htm.

EDD, 2001d. Labor Market Information Division. California State Employment Development Department (EDD). Information obtained from websites:
http://www.calmis.cahwnet.gov/file/indhis/kingshaw.xls. and
http://www.calmis.cahwnet.gov/file/indhist/bakeshaw.xls and
http://www.calmis.cahwnet.gov/file/indhist/fresnhaw.xls and
http://www.calmis.cahwnet.gov/file/indhist/turarhaw.xls

Executive Order 12898, 1994. *Federal Actions to Address Environmental Justice in Minority and Low-Income Populations*. 1994.

FCVB, 2001. Fresno Convention and Visitors Bureau (FCVB), Information from websites: http://www.fresnocvb.org/Interactive/lodging/search.php3; http://www.fresnocvb.org/maps&facts/intro.htm. June 18, 2001.

Fillmore, Tim, 2001. Telephone communication between Tim Fillmore, Supervising Environmental Health Officer, Kings County Health Department, Division of Environmental Health Services, and Steven Appleton, URS Corporation. July 10, 2001.

GWF, 2000. Hanford Energy Park Application for Small Power Plant Exemption, Socioeconomics section. 2000.

KEDC, 2001. Kings Economic Development Council (KEDC). http://www.kingsedc.org

Kieffer, Paul, 2001. Email communication between Paul Kieffer, GWF, and Katie McKinstry, URS Corporation. June 19, 2001.

Kings County, 1993. Kings County General Plan Environmental Impacts Analysis.

Kings County, 2001a. Kings County Fire Department website: http://www.countyofkings.com/fire/index.htm.

Kings County, 2001b. Kings County website: http://www.countyofkings.com/

Kings County, 2001c. County of Kings 2000-2001 Final Budget. Volume II Budget Schedules and Details. Schedules 4 and 7. Fiscal Year ending June 30, 2001.

Kinney, 2001. Telephone and fax communication between Chuck Kinney, Kings County Association of Governments, and Katie McKinstry, URS Corporation. June 15 and 21, 2001.

Neutra, Dr. Raymond, 2001. Telephone communication between Dr. Raymond Neutra, Chief Director of Occupational and Environmental Disease Control, California Department of Health Services, and Katie McKinstry, URS Corporation. July 19, 2001.

Nikoghosian, Harold, 2001. Telephone and fax communication between Harold Nikoghosian, Kings County Auditor's Office, and Katie McKinstry, URS Corporation. June 18 and 20, 2001.

Powers, Marten, 2001. Telephone communication between Marten Powers, Lemoore Union High School District, and Katie McKinstry, URS Corporation. June 21, 2001.

San Joaquin Valley Air Pollution Control District (SJVAPCD), 2001. Fax communication between San Joaquin Valley Air Pollution Control District (Leland Villavoz) and Katie McKinstry, URS Corporation. August 2, 2001.

Tulare County, 2001. Tulare County website. http://www.co.tulare.ca.us, July 9, 2001.

U.S. Bureau of the Census, 1990. 1990 Census. Lookup Page website: http://www.census.gov/.

U.S. Bureau of the Census, 1990. U.S. Census Data, 1990 Census. Lookup Files. Summary Tape File 3A. July, 2001.

U.S. Bureau of the Census, 2000. U.S. Census Data, 2000 Census. American Fact Finder.

U.S. Bureau of the Census, 2000. 2000 Census. American Fact Finder website: http://www.census.gov/.

U.S. EPA (U.S. Environmental Protection Agency), 2000a. *Draft Title VI Guidance for EPA Assistance Recipients Administering Environmental Permitting Programs*.

U.S. EPA (U.S. Environmental Protection Agency), 2000b. *Draft Revised Guidance for Investigating Title VI Administrative Complaints Challenging Permits*.

Virden, Mike, 2001. Telephone communication between Mike Virden, Fire Marshall, Kings County Fire Department, and Katie McKinstry, URS Corporation. June 18, 2001.

VISTA, 2001. Vista Information Systems, Inc. Site Assessment Reports. July 5, 2001.

Wheat, Brian, 2001. Telephone communication between Brian Wheat, Assistant Sheriff, Kings County Sheriff's Department, and Katie McKinstry, URS Corporation. June 18, 2001.

TABLES

Table 8.8-1
Employment (2000)

Area	Labor Force	Employment	Unemployment	Percent Unemployment Rate
City of Avenal	2,450	1,930	520	21.2
City of Corcoran	3,920	3,290	630	16.1
City of Hanford	16,900	14,820	2,080	12.3
City of Lemoore	6,970	5,970	1,000	14.3
City of Huron	2,970	2,530	440	14.8
Kings County	45,900	39,480	6,420	14.0
Kern County	287,200	254,700	32,500	11.3
Fresno County	393,000	336,800	56,200	14.3
Tulare County	170,000	143,900	26,200	15.4
State Total	**17,090,800**	**16,245,600**	**845,200**	**4.9**

Source: EDD, 2001b. Not seasonally adjusted. Information obtained from websites at
http://www.calmis.ca.gov/htmlfile/subject/indtable.htm
http://www.calmis.ca.gov/file/lfhist/00aasub.txt

Table 8.8-2
Kings County Employment

	1998	Percent of Category	1999	Percent of Category	Percent Change
Total Farm	7,780	22%	6,890	19%	-11%
Farm Production	4,260	55%	3,830	56%	-10%
Farm Services	3,520	45%	3,060	44%	-13%
Total Nonfarm	27,750	78%	28,630	81%	3%
Goods Producing	4,290	15%	4,480	16%	4%
Construction & Mining	930	22%	1,030	23%	11%
Manufacturing	3,370	79%	3,450	77%	2%
Service Producing	23,460	85%	24,150	84%	3%
Transportation & Public Utilities	810	3%	780	3%	-4%
Transportation	550	68%	520	67%	-5%
Communications & Public Util.	260	32%	260	33%	0%
Trade	6,530	28%	6,420	27%	-2%
Wholesale Trade	980	15%	1,000	16%	2%
Retail Trade	5,550	85%	5,420	84%	-2%
Finance, Insurance & Real Estate	700	3%	750	3%	7%
Services	4,930	21%	5,160	21%	5%
Hotels & Other Lodging Places	130	3%	120	2%	-8%
Health Services	2,230	45%	2,070	40%	-7%
Other Services	2,580	52%	2,970	58%	15%
Government	10,500	45%	11,040	46%	5%
Federal Government	1,140	11%	1,070	10%	-6%
State Government	4,140	39%	4,500	41%	9%
Local Government	5,210	50%	5,470	50%	5%
Total, All Industries	**35,530**	**100%**	**35,520**	**100%**	**0%**

Note: Labor force data are by place of residence; data include self-employed individuals, unpaid family workers, household domestic workers, and workers on strike. Industry employment is by place of work; it excludes self-employed individuals, unpaid family workers, household domestic workers, and workers on strike.

Source: EDD, 2001d.

Table 8.8-3
Kern County Employment

	1998	Percent of Category	1999	Percent of Category	Percent Change
Total Farm	46,500	20%	44,900	19%	-3%
Farm Production	17,300	37%	17,700	39%	2%
Farm Services	29,200	63%	27,200	61%	-7%
Total Nonfarm	184,300	80%	188,900	81%	2%
Goods Producing	28,900	16%	27,900	15%	-3%
Mining	9,100	31%	8,200	29%	-10%
Construction	9,900	34%	10,000	36%	1%
Manufacturing	9,900	34%	9,700	35%	-2%
Service Producing	155,400	84%	160,900	85%	4%
Transportation & Public Utilities	11,000	7%	11,200	7%	2%
Transportation	7,500	68%	7,900	71%	5%
Communications/Public Util.	3,400	31%	3,300	29%	-3%
Trade	42,800	28%	44,500	28%	4%
Wholesale Trade	8,200	19%	8,700	20%	6%
Retail Trade	34,600	81%	35,800	80%	3%
Finance, Insurance & Real Estate	7,200	5%	7,300	5%	1%
Services	45,600	29%	47,500	30%	4%
Business Services	10,500	23%	10,600	22%	1%
Health Services	13,500	30%	14,200	30%	5%
Engineering & Management	4,700	10%	5,100	11%	9%
Other Services	16,900	37%	17,600	37%	4%
Government	48,800	31%	50,300	31%	3%
Federal Government	9,700	20%	9,800	19%	1%
State Government	6,500	13%	6,700	13%	3%
Local Government	32,600	67%	33,900	67%	4%
Total, All Industries	**230,800**	**100%**	**233,700**	**100%**	**1%**

Note: Labor force data are by place of residence; data include self-employed individuals, unpaid family workers, household domestic workers, and workers on strike. Industry employment is by place of work; it excludes self-employed individuals, unpaid family workers, household domestic workers, and workers on strike.
Source: EDD, 2001d.

Table 8.8-4
Fresno County Employment

	1998	Percent of Category	1999	Percent of Category	Percent Change
Total Farm	58,700	19%	57,100	18%	-3%
Farm Production	23,800	41%	23,500	41%	-1%
Farm Services	34,900	59%	33,600	59%	-4%
Total Nonfarm	253,600	81%	261,400	82%	3%
Goods Producing	40,800	16%	42,400	16%	4%
Mining and Construction	13,800	34%	14,800	35%	7%
Manufacturing	27,000	66%	27,600	65%	2%
Service Producing	212,800	84%	219,000	84%	3%
Transportation & Public Utilities	12,500	6%	12,500	6%	0%
Transportation	7,900	63%	7,800	62%	-1%
Communications & Public Utilities	4,600	37%	4,600	37%	0%
Trade	62,200	29%	63,400	29%	2%
Wholesale Trade	14,600	23%	14,500	23%	-1%
Retail Trade	47,700	77%	48,800	77%	2%
Finance, Insurance & Real Estate	13,400	6%	13,800	6%	3%
Services	65,600	31%	67,900	31%	4%
Business Services	11,800	18%	12,000	18%	2%
Health Services	21,900	33%	21,700	32%	-1%
Other Services	31,900	49%	34,200	50%	7%
Government	59,100	28%	61,600	28%	4%
Federal Government	10,700	18%	10,800	18%	1%
State Government	7,800	13%	8,400	14%	8%
Local Government	40,600	69%	42,500	69%	5%
Total All Industries	**312,300**	**100%**	**318,500**	**100%**	**2%**

Note: Labor force data are by place of residence; data include self-employed individuals, unpaid family workers, household domestic workers, and workers on strike. Industry employment is by place of work; it excludes self-employed individuals, unpaid family workers, household domestic workers, and workers on strike.
Source: EDD, 2001d.

Table 8.8-5
Labor Union Contacts

Local Union	No. of Members and Areas Covered	Telephone
Aluminum, Brick, and Glass Workers, Local No. 474-6	200–Central Valley/Fresno	(559) 264-5342
Auto Mechanics and Machinists Union, Local No. 653	1,300–from Merced to Bakersfield	(559) 264-2815
Auto Mechanics and Machinists Union	10	(805) 322-7925
Bricklayers and Tilelayers, Local No. 4	Not available	(805) 832-0255
Carpenter's, Local No. 701	700–Fresno, Tulare, Kings, & Madera Counties	(559) 266-0273
Carpenter's, Local No.743	600–Kings, Inyo, & Mono Counties	(805) 327-1429
Construction Local No.12	600–Kings, Inyo, & Mono Counties. Can draw from southern California and southern Nevada.	(805) 325-9491
Electrical Workers, Local No. 100	550–Fresno, Tulare, Kings, & Madera Counties	(559) 251-8241
International Brotherhood of Electrical Workers Local No. 428	70 (more available if needed)	(805) 323-2979
Iron Workers, Local No. 155	500–All of the Central Valley and Southern California	(559) 251-7388
Laborers, Local No. 294	800–Fresno, Tulare, Kings, & Madera Counties	(559) 255-3019
Laborers' International Union of North America Local No. 220	325 active/250 retirees, some available for work	(805) 322-3460
Painters, Local No. 294	220–Fresno, Tulare, Kings, & Madera Counties	(559) 255-2113
Painters, Local No. 52	200–(6 counties)/50 in Kings	(805) 325-1825
Plasters and Cement Masons, Local No. 300, Area 188	265 active–Fresno, Tulare, Kings, & Madera Counties	(559) 251-8259
Plasters and Cement Masons, Local No. 600	50–Kings County; 1,200–Los Angeles, Ventura, Santa Barbara, Inyo, & Mono Counties	(805) 323-6018
Plasters Union, Local No. 200	5–10 Kings–membership covers all of Southern California, have a large pool to draw from	(800) 559-2701
Plumbers, Local No. 460	Not available	(559) 252-7246
Plumbers and Steamfitters, Local No. 460	600	(805) 589-4600
Roofers and Waterproofers, Local No. 27	225–Mostly Fresno area	(559) 255-0933

Table 8.8-5 (continued)
Labor Union Contacts

Local Union	No. of Members and Areas Covered	Telephone
Sheet Metal Workers, Local No. 162	1,800–Fresno, Tulare, Kings, & Madera Counties	(559) 255-0454
Teamster Union, Local No. 431	25–30–Fresno, Tulare, Kings, & Madera Counties	(559) 486-5410
Teamster Union, Local No. 87	30–40 for construction. Can have many more if needed.	(805) 327-8594

Source: GWF, 2000.

Table 8.8-6
Historical and Projected Population Growth

Area	January 1981	April 1990	January 1999	January 2000	July 2010
City of Avenal	4,160	9,770	12,250	13,100	17,700
City of Corcoran	6,550	13,360	20,700	21,550	24,600
City of Hanford	21,550	30,463	39,350	41,000	59,400
City of Lemoore	9,275	13,622	17,900	18,800	27,900
City of Huron	2,830	4,766	5,675	5,875	N/A
Unincorporated Kings County	33,500	34,254	35,600	36,750	N/A
Kings County	75,100	101,469	125,800	131,200	154,617
Kern County	412,800	544,981	645,900	658,900	859,818
Fresno County	523,200	667,490	789,700	805,000	953,457
Tulare County	250,800	311,921	363,433	367,961	469,509
California	24,039,000	29,758,213	33,766,000	34,336,000	39,957,616

Note: The Kings County row is a summation of the cities of Avenal, Corcoran, Hanford, and Lemoore and unincorporated Kings County. The summation may not be exact due to rounding.
Sources: CDF, 2001; Kinney, 2001.
N/A = not available

Table 8.8-7
Annual Average Population Growth Rates

	Percent 1981–1990	Percent 1990–2000	Percent 1981–2000	Percent 2000–2010[a]
City of Avenal	10.0	3.0	6.2	3.1
City of Corcoran	8.2	4.9	6.5	1.3
City of Hanford	3.9	3.0	3.4	3.8
City of Lemoore	4.4	3.3	3.8	4.0
City of Huron	6.0	2.0	3.9	N/A
Unincorporated Kings County	0.2	0.7	0.5	N/A
Kings County	3.4	2.6	3.0	1.7
Kern County	3.1	1.9	2.5	2.7
Fresno County	2.7	1.9	2.3	1.7
Tulare County	2.5	1.7	2.0	2.5
California	2.4	1.4	1.9	1.5

[a] Projected growth.
Sources: CDF, 2001; Kinney, 2001.
N/A = not available

Table 8.8-8
Demographic Profiles of Counties, Cities, and Census Tracts

	% Minority 1990[a]	% Minority by Race Only 2000[b]	% Hispanic/Latino 2000	% Living Below Poverty Level 1990
State of California	42.6	40.5	32.3	12.2
Kings County	46.1	46.3	43.6	16.0
Fresno County	48.9	45.7	44.0	21.0
Kern County	37.0	38.4	38.4	16.4
Tulare County	45.0	42.0	51.0	22.2
City of Avenal	68.8	64.2	65.9	15.1
City of Corcoran	70.6	65.9	59.6	14.8
City of Hanford	37.7	35.9	38.7	15.5
City of Huron	98.6	79.6	98.3	44.1
City of Lemoore	35.7	40.7	30.5	13.8
Kings County:				
Census Tract 2	23.1	25.3	28.7	15.3
Census Tract 3	31.3	38.4	16.8	11.2
Census Tract 4.02	33.6	34.0	33.5	12.1
Census Tract 16.01/16	76.1	64.1	72.2	13.5
Fresno County:				
Census Tract 78	96.0	70.1	75.7	39.4

[a] Includes nonwhite races, and Hispanic whites.
[b] Does not account for Hispanic or Latino ethnicity. Includes persons listed as only one race and Black or African American, American Indian/Alaska Native, Asian, Native Hawaiian/Other Pacific Islander, or some other race; and includes persons listed as more than one race.

The totals may not equal 100% because at "smaller geographic levels, the 100% counts for race will have expected differences" (U.S. Bureau of the Census, 1990). The differences between sample estimates and 100% counts for the American Indian and Hispanic origin are generally larger than for other groups. The major differences in the Hispanic percent count can be accounted for by the sample processing of Hispanic origin when the responder did not mark any ethnic category. When processing the entries, the Census Bureau used written entries for race as well as the response to questions asked on the sample, such as ancestry and place of birth.

Sources: U.S. Bureau of the Census, 1990; U.S. Bureau of the Census, 2000.

Table 8.8-9
Local and Regional Housing Estimates (January 2000)

Community	Housing Units	Occupied	Percent Vacancy
City of Avenal	1,925	1,724	10.4
City of Corcoran	3,055	2,852	6.6
City of Hanford	14,553	13,606	6.5
City of Lemoore	6,668	6,366	4.5
Unincorporated	10,817	10,192	5.8
Kings County Total	37,018	34,740	6.2
Kern County	234,487	214,614	8.5
Fresno County	273,159	256,503	6.1
Tulare County	121,707	113,657	6.6
City of Huron	1,260	1,222	3.0

Source: CDF, 2001.

Table 8.8-10
Schools in the Vicinity of the Project Site

School District	School	2000–01 Enrollment	Enrollment Capacity	Over Capacity?	Projection 2001–2002
Central Union Elementary School District	Akers Elementary	690	1,020[a]	No	690
	Central Elementary	317	540[a]	No	317
	Neutra Elementary	480	870[a]	No	480
	Stratford Element.	325	510[a]	No	325
	TOTAL	**1,812**	**2,940[a]**	**No**	**1,812**
Lemoore Union High School District	Jamison (Donald C.) High	110	110	No	110
	Lemoore High	1,924	1,924	No	1,924
	Yokuts High	17	25	No	17
	TOTAL	**2,051**	**2,059**	**No**	**2,051**

[a] Assumes class size would increase and Central Union School District would not receive California state class-size reduction funds.
Sources: DOE, 2001; Bogard, 2001; Bonner, 2001; Powers, 2001.

Table 8.8-11
Kings County Summary of Estimated Additional Financing Sources ($ millions)

Revenue Source	Adopted 1998/1999	Adopted 1999/2000	Adopted 2000/2001	Percent Change 1999/2000 to 2000/2001	Estimated 2001/02[a]	Estimated 2002/03[a]
Taxes	14.0	15.0	15.0	2%	15.0	16.0
Licenses and Permits	1.0	1.0	1.0	6%	1.0	1.0
Fines and Forfeits	-	-	0.5	14%	-	-
Use of Money and Property	2.0	2.0	2.0	2%	2.0	2.0
Intergovernmental Revenue	74.0	82.0	86.0	8%	93.0	100.0
Charges for Services	7.0	8.0	8.5	8%	9.0	10.0
Miscellaneous Revenues	1.0	1.0	2.0	66%	3.0	6.0
Other Financing Sources	-	3.0	20.0	853%	23.0	26.0
Total:	**99.0**	**111.0**	**136.0**		**147.0**	**161.0**

[a] The estimated revenues for 2001/2002 and 2002/2003 were based on the average annual percent change between 1998/1999 and 2000/2001 listed above and the adopted revenues for 2000/2001, except Other Financing Sources. Since the increase between 1999/2000 and 2000/2001 was so high, an average of the other rates' increases was used to project Other Financing Sources for 2001/2001 and 2002/2003.
Note: Numbers may not add exactly due to rounding.
Sources: Kings County, 2001c; Nikoghosian, 2001.

Table 8.8-12
Kings County Budget Appropriations ($ millions)

Department	FY 1999/2000 Adopted Appropriations	FY 2000/2001 Adopted Appropriations	Percent Change	Percent of Funds 2000/2001
General Government	9.2	9.8	6%	7%
Special Revenue	36.2	-	-100%	0%
Public Safety	3.4	37.8	1,004%	27%
Public Transportation	0.7	5.9	739%	4%
Internal Service Funds	12.7	0.8	-94%	1%
Health	44.7	14.7	-67%	11%
Welfare	1.3	42.1	3,086%	31%
Education	-	1.4		1%
Recreation	0.8	0.9	20%	1%
Capital Outlay	4.7	24.5	423%	18%
Total Specific Financing	**113.7**	**137.8**	**21%**	**100%**

FY = Fiscal Year
Sources: Kings County, 2001c; Nikoghosian, 2001.

Table 8.8-13
Construction Personnel Requirements by Trade

Craft or Trade	Month of Construction 1	2	3	4	5	Total Person-Months
Boilermakers	0	5	9	8	2	24
Carpenters	12	10	4	4	0	30
Electricians	8	16	18	20	6	68
Insulation Workers	0	0	2	4	2	8
Iron Workers	10	6	4	4	0	24
Laborers	16	11	8	8	8	51
Millwrights	0	10	13	13	6	42
Operating Engineers	3	3	3	3	1	13
Painters	0	0	2	2	2	6
Pipefitters	4	20	20	20	8	72
Teamsters	1	1	1	1	1	5
Manual Staff Subtotals	54	82	84	87	36	343
Contractor Staff	6	6	6	6	6	30
Total Site Staff	**60**	**88**	**90**	**93**	**42**	**373**

Table 8.8-14
Construction Cost

Type	Cost
Labor	$8.1 million
Material and Equipment	$58.9 million
Other Nonlabor Costs	$17 million
Total Construction Cost	**$84.0 million**

Source: Kieffer, 2001.

Table 8.8-15
Annual Operation and Maintenance Cost

Type	Cost
Labor	$140,000
Contract Maintenance, Materials and Supplies	$2,350,000
Total Cost of Annual Operation and Maintenance	**$2,490,000**

Source: Kieffer, 2001.

Table 8.8-16
HPP Summary of Compliance with Socioeconomic LORS

Authority	Administering Agency	Requirements	HPP Compliance
Executive Order 12898 Environmental Justice	U.S. EPA	Agencies must develop strategies to focus on environmental conditions and human health in minority communities and low-income populations.	**Section 8.8.3 – Environmental Justice.** Project would not result in disproportionate impacts to low-income or minority populations.
CEQA	CEC	Analysis of potential environmental impacts in AFC.	**Section 8.8.2 – Environmental Consequences.** Environmental impacts (economic and/or social effects) are analyzed in the AFC.
California Government Code, Sections 53080, 65955–65997	Kings County	Provisions for school impact fees for development projects near school districts are included.	**Sections 8.8.1.3 – Affected Environment, Schools; and 8.8.2.5 – Environmental Consequences, Fiscal Impacts.** School development fees would be levied against the project.

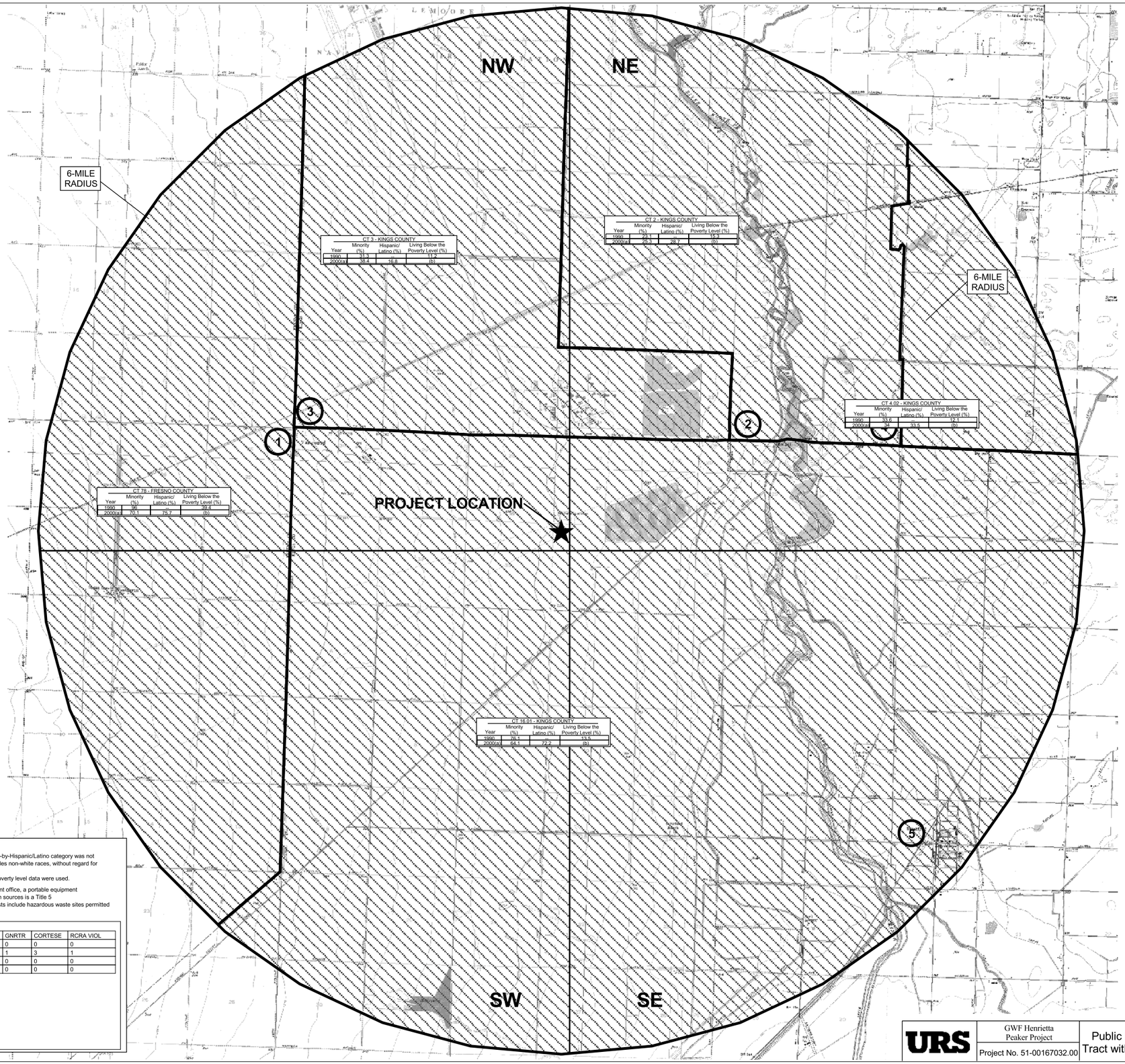

CT 3 - KINGS COUNTY			
Year	Minority (%)	Hispanic/ Latino (%)	Living Below the Poverty Level (%)
1990	31.3		11.2
2000(a)	38.4	16.8	(b)

CT 2 - KINGS COUNTY			
Year	Minority (%)	Hispanic/ Latino (%)	Living Below the Poverty Level (%)
1990	23.1		15.3
2000(a)	28.3	28.7	(b)

CT 4.02 - KINGS COUNTY			
Year	Minority (%)	Hispanic/ Latino (%)	Living Below the Poverty Level (%)
1990	33.6		12.1
2000(a)	34	33.5	(b)

CT 78 - FRESNO COUNTY			
Year	Minority (%)	Hispanic/ Latino (%)	Living Below the Poverty Level (%)
1990	56		29.4
2000(a)	70.1	75.7	(b)

CT 16.01 - KINGS COUNTY			
Year	Minority (%)	Hispanic/ Latino (%)	Living Below the Poverty Level (%)
1990	78.1		33.5
2000(a)	84.1	72.2	(b)

Notes:
(a) The 1990 percentage of minority residents includes all residents except white non-Hispanics. Since the race-by-Hispanic/Latino category was not available from the 2000 Census for California census tracts in July 2001, the minority percentage for 2000 includes non-white races, without regard for ethnicity. Ethnicity (Hispanic/Latino) is presented as a separate percentage.
(b) Below-poverty level statistics were not available in July 2001 from the 2000 Census; therefore 1990 below-poverty level data were used.

Permitted air emission sources within 6 miles of the project site include two cotton-ginning facilities, a government office, a portable equipment facility, and a concrete batching facility (labeled No. 1 through No. 5 on Figure 8.8-1). None of the 5 air emission sources is a Title 5 permitted facility. VISTA reported the sites listed in the table below and labeled on the map. VISTA database lists include hazardous waste sites permitted by U.S. EPA (Toxic Release Inventory Sites) and the California Department of Toxic Substances Control.

			Database Category:						
Map Label	Number of Hazardous Site Locations	Number of Sites	LUST	SWLF	ERNS	TRIS	GNRTR	CORTESE	RCRA VIOL
NW	23	35	0	0	0	0	0	0	0
NE	28	85	23	1	16	0	1	3	1
SW	19	28	0	0	0	0	0	0	0
SE	26	40	0	0	0	0	0	0	0

Key:
LUST = leaking underground storage tank
SWLF = solid waste landfill
ERNS = emergency response notification of spills
TRIS = toxic release inventory database
GNRTR = RCRA registered small or large generators of hazardous waste
CORTESE = state index of properties with hazardous waste
RCRA VIOL = RCRA violation/enforcement actions
Sources:
VISTA, 2001; SJVAPCD, 2001
US Census 1990; US Census 2000

Figure 8.8-1 is provided at 1:24,000 scale in Appendix I.

N

0.9 0 0.9 Miles

URS

GWF Henrietta Peaker Project

Project No. 51-00167032.00

Public Health, Race, and Poverty by Census Tract within a 6-Mile Radius of Proposed Project

Figure 8.8-1

L:\Projects\gwf_henrietta\apr\envjustice.apr

8.9 Agriculture and Soils

8.9.1 Site Setting

The Henrietta Peaker Project (HPP) consists of a 91.4-megawatt (MW) (net), natural-gas-fired, simple-cycle power plant located approximately 10 miles southwest of Lemoore, California, on a seven-acre portion of a 20-acre parcel owned by GWF Energy LLC. The HPP will interconnect to the existing adjacent Pacific Gas and Electric Company (PG&E) Henrietta Substation through a new 550-foot 70-kilovolt (kV) transmission line supported on two new transmission poles. Other linear facilities include an approximately 16.5-foot water interconnection pipeline (from the site property boundary) and a 2.2-mile Southern California Gas Company (SoCalGas) natural gas interconnection pipeline. Additionally, approximately five acres will be used for temporary construction laydown and parking.

The HPP site lies on a flat area of alluvial fan deposits associated with the Kings River. The elevation of the site is approximately 225 feet above mean sea level. Before agricultural and urban development in the area, the alluvial fan deposits were dissected and cut by shallow, meandering sloughs and creeks. Many of the sloughs have been filled and leveled and are now farmed. The topographic gradient slopes gently to the east-southeast, and local drainage is directed towards Kings River. Rainfall is less than 10 inches per year; groundwater is approximately 80 to 100 feet below ground surface (Mills, 2000).

The site is currently being used for agricultural production. Cotton is cultivated on 90 to 95 percent of the site. The site has been used for the cultivation of cotton for at least 30 years. Prior to that time, the site was not developed or utilized. Properties to the east, west, and south of the site are also used for the cultivation of cotton (Harding, 2001). The northeast corner of the property extends into a wheat field.

8.9.2 Soil Types Affected and Potential Impacts

The HPP will affect the soil at the locations of the support structures for the transmission route and along the natural gas pipeline route. Soil resource information was obtained from a soil survey of Kings County published by the U.S. Department of Agriculture Soil Conservation Service (Arroues and Anderson, 1986). The soil types surrounding the HPP

site are shown on Figure 8.9-1. Soil types are identified by project component in Table 8.9-1. The characteristics of the soil types in the immediate vicinity of the HPP and its components are provided in Table 8.9-2. Potential impacts to these soil types are discussed in the "Comments" column of Table 8.9-2.

8.9.2.1 Henrietta Peaker Plant Site and Construction Laydown Area

Lethent clay loam covers the entire site (Arroues and Anderson, 1986) (see Figure 8.9-1). This soil type occurs on alluvial fans and basin rims and is typically used for irrigated crops and urban development. The soil type has a high concentration of salts and is alkaline. Lethent clay loam is not prime farmland, even when it is irrigated (Arroues and Anderson, 1986).

The Storie Index provides a numerical expression of the suitability of a soil for intensive farming, based on the characteristics of the soil profile and the surface (Arroues and Anderson, 1986). From the numerical rating obtained from this index, soils are placed in one of six grades, ranging from Grade 1 (soil that is best-suited for intensive farming) to Grade 6 (soil that is unsuitable for farming). Based on the soil survey, Lethent clay loam has a Storie Index of 41, which corresponds to Grade 3. Grade 3 soils are only fairly well-suited to farming and are limited in their agricultural potential (City of Hanford Planning Department, 1988). In this case, the salt and alkali content of the soil limits its agricultural potential.

In addition, the Soil Conservation Service developed categorical definitions of important farmlands for land inventory purposes. Important farmlands provide the best opportunity for agricultural production. Land designated as "Prime Farmland" or "Farmland of Statewide Importance" has a good combination of physical and chemical features for the production of agricultural crops. Figure 8.9-2 shows the various classifications of agricultural farmlands in the immediate vicinity of the HPP site. The HPP site and the construction laydown area are located on potential Farmland of Statewide Importance, as defined by the Soil Conservation Service.

The Williamson Act is a state land use policy enacted to preserve open space and agricultural land. The act discourages premature urbanization and prevents landowners from

being forced to develop their property. The Williamson Act is implemented by creating a voluntary contract with property owners that restricts land use for 10 years, with an automatic annual renewal. The proposed HPP site is located on land that is under Williamson Act contract and is currently being used for agricultural production, except for portions of the parcel that are used for roads. The construction of the HPP will permanently remove seven acres of the 20-acre parcel from agricultural production. Therefore, Kings County recommended cancellation of the Williamson Act contract for the parcel.

During construction at the HPP site, an area of approximately seven acres of surface soils will be excavated. The physical and biological characteristics of the native soil in this area will be altered by this excavation. The Lethent clay loam and some underlying alluvium will be compacted as fill to support the generators and other structures. The compaction will increase the density of the soil and reduce its porosity and already low permeability. Also, in the area of the building, the saline-alkali condition of the soil could contribute to the corrosion of steel and concrete. Thus, steel and concrete should be treated before being placed in contact with the soil. The soil also has the potential for shrinking and swelling. Buildings and roads should be designed to offset the effects of shrinking and swelling. During the development of the construction laydown area and before compacting and grading at the HPP site, the excavated soil will have an increased susceptibility to erosion. The soil loss potential from wind or water erosion was not calculated, because the construction activity will employ mitigation and sedimentation/erosion controls. Because excavation of the soil can expose material susceptible to wind erosion, revegetation or the use of a synthetic mat covering may be necessary following disturbance.

8.9.2.3 Proposed Natural Gas Pipeline Routes

The proposed natural gas pipeline will begin at the southwest corner of the HPP site. The pipeline will run south along the eastern edge of 25th Avenue to the Avenal Cutoff, then continue south adjacent to an unimproved farm access road to the SoCalGas Line 800, approximately one mile south of the intersection of 25th Avenue and the Avenal Cutoff. The proposed pipeline will be within the Kings County rights-of-way along 25th Avenue to the intersection of 25th Avenue with the Avenal Cutoff. The HPP has obtained an easement for that

portion of the gas line extending south of the Avenal Cutoff to the interconnection point on the SoCalGas Line 800.

Approximately one mile of the proposed 2.2-mile natural gas pipeline route will traverse parcels that are designated as Farmland of Statewide Importance and under Williamson Act contract (Kings County Planning Department, 2001). However, the impact of the proposed natural gas pipeline will be minimal, because the pipeline follows the Kings County right-of-way associated with 25th Avenue and the unpaved farm road. Therefore, no land will be converted from agricultural production due to the natural gas pipeline, other than potential temporary conversion during construction.

The proposed pipeline will cross only one soil type: Lethent clay loam (Arroues and Anderson, 1986) (see Figure 8.9-1). See the preceding discussion of the proposed transmission route for information regarding this soil type. The construction of the proposed natural gas pipeline will disturb approximately seven acres of surface soils.

8.9.2.4 Summary of Effects

The HPP site is designated as Farmland of Statewide Importance and located on lands under Williamson Act contracts. The Williamson Act contract for the HPP site has been the subject of a Tentative Cancellation under a Kings County Board of Supervisors resolution (see Section 8.4, Land Use, and Appendix B). Although lands within one-quarter mile of the proposed transmission route and within one mile of the HPP site are currently used for agricultural production, the HPP will only permanently impact the seven acres used for the proposed plant site. The site is bordered by a paved county road to the west and by an unpaved farm road to the north. Across the unpaved farm road is the Henrietta Substation, operated by PG&E. Existing transmission corridors connecting with the Henrietta Substation cross the proposed HPP site and surround the proposed plant site itself. Therefore, the proposed plant site is isolated from the remainder of the adjoining agricultural land. The loss of 20 acres of isolated agricultural land with soil of limited agricultural potential is not considered a significant impact.

The proposed natural gas pipeline crosses land designated as Farmland of Statewide Importance and under Williamson Act contract. However, the impact of the natural

gas pipeline will be minimal, because the pipeline runs beneath the Kings County right-of-way associated with 25th Avenue and an unpaved farm road. Therefore, the impacts to agricultural land from the construction of the proposed natural gas pipeline are expected to be minimal.

The aboveground transmission line is within existing utility corridors and will not impact agricultural use. There are no impacts associated with a 16.5-foot water line, sized to serve only the HPP.

Approximately 12 acres of soil at the HPP site will be disturbed during construction. The soil cover will be removed and compacted for improved support of the cogeneration equipment. Approximately seven acres of soil will be disturbed during construction of the natural gas pipeline route. As described above, the natural gas pipeline will run adjacent to 25th Avenue, along a Kings County right-of-way. Impacts from construction of the proposed pipeline to soil resources are anticipated to be minimal.

One potential impact of the HPP on soil resources is increased erosion by water or wind during construction. However, the mitigation measures described below will reduce the impact to less than significant.

8.9.3 Growth-Inducing Impacts

The HPP site is in unincorporated Kings County adjacent to an existing electrical substation. Because the HPP is next to a substation and will not be providing energy to a specific entity, growth from the additional energy that the HPP will provide is not expected to occur in the project vicinity.

8.9.4 Cumulative Impacts

There are currently no new applications for development in the vicinity of the HPP site. Given the minimal impacts of the HPP, as mitigated, and the protections afforded by the controls and programs under the Porter-Cologne Act, the Williamson Act, and the resource conservation elements of the Kings County General Plan, no significant negative cumulative impacts are anticipated.

8.9.5 Mitigation Measures

8.9.5.1 General Mitigation Measures

The following mitigation measures will be implemented to minimize the impacts of the HPP on agriculture and soil resources.

The construction of the HPP will result in the permanent loss of seven acres currently in crop production. It will also result in the temporary loss of five acres within the 20-acre parcel. While the Williamson Act contract for the 20-acre parcel has been cancelled, GWF does not plan to fence the 13 acres not used for the project site. Construction of the proposed natural gas pipeline will occur within the Kings County right-of-way associated with 25th Avenue to the Avenal Cutoff and will not impact agricultural lands. There are no county right-of-ways associated with 25th Avenue south of the Avenal Cutoff; however, construction impacts to agricultural land in this area are expected to be minimal. If agricultural lands are affected, they will be returned to agricultural use following construction.

After grading and compacting, the soil excavated from the HPP site will be revegetated or covered with a synthetic mat, as necessary, to reduce the potential for wind and water erosion. The HPP site will be graded and will have drainage controls. Best management practices (BMPs) will be implemented to control erosion during construction activities. These measures will be described in the stormwater pollution prevention plan (SWPPP) required by the General Storm Water Permit for Construction.

8.9.5.2 Specific Mitigation Measures

The following specific measures are proposed to reduce construction impacts to minimal levels:

- Prior to construction, a SWPPP will be prepared that describes BMPs to minimize soil erosion. BMPs will be implemented during and after construction. Surface soil protection may include the use of mulches, synthetic netting material, riprap, and the compacting of native soil.
- All construction activities will be conducted in accordance with California's General Industrial Storm Water Permit for Construction Sites, including the

erosion control measures in the SWPPP and BMPs to reduce erosion and the transport of increased suspended sediment from construction areas.

- In the construction area, soil will be graded and compacted and not left in irregular piles that are more susceptible to water and wind erosion. The areas will be reseeded where natural vegetation has been distressed or removed by construction activity.

8.9.6 Laws, Ordinances, Regulations, and Standards

The laws, ordinances, regulations, and standards (LORS) that apply to agricultural and soil resources at the HPP site are presented in Table 8.9-3. The LORS for federal, state, and local authorities are presented in this section; no industry LORS apply.

Federal Water Pollution Control Act of 1972 and the Clean Water Act of 1977 (including 1987 Amendments): These laws establish requirements for discharges from any activity that will affect the beneficial uses of receiving waters. Since no wastewater discharges or stormwater will leave the HPP site, the HPP will not violate these statutes. The HPP will file a SWPPP that identifies BMPs to be used during construction to avoid offsite consequences.

U.S. Department of Agriculture, Natural Resources Conservation Service, National Engineering Handbook, Sections 2 and 3 (1983): This guidance provides standards for soil conservation during planning, design, and construction activities.

The HPP will conform with applicable standards in the *National Engineering Handbook* to ensure that the project does not cause soil loss though accelerated erosion. The proposed mitigation measures outline steps to be taken during grading and construction to limit erosion caused by the soil disturbance.

California Public Resources Code, Section 25523(a); California Code of Regulations (CCR), Sections 1752, 1752.5, 2300–2309, and Chapter 2, Subchapter 5, Article 1, Appendix B, Part (i): These regulations stipulate the environmental review and siting procedures to be followed in the development of power generation projects larger than 50

megawatts. The California Energy Commission (CEC) is the administering agency for this authority.

The HPP will comply with this authority, as all information regarding environmental impacts on soil and agriculture will be submitted to the CEC and all mitigation measures identified in the final certification will be implemented.

California Environmental Quality Act, California Public Resources Code, Section 21000 et seq.; Guidelines for Implementation of the California Environmental Quality Act (CEQA) of 1970, 14 CCR, Sections 15000–15387, Appendix G: CEQA specifies that: "A project will normally have a significant effect on the environment if it will …(q) Cause substantial flooding, erosion, or siltation; …(y) Convert prime agricultural land to nonagricultural use or impair the agricultural productivity of prime agricultural lands."

The proposed mitigation measures identified in Section 8.9.3 outline steps to be implemented during grading and construction to ensure that the HPP will not cause substantial flooding, erosion, or siltation. The HPP will permanently remove seven acres of land from agricultural production. In addition, any area disturbed by the construction of the HPP and the proposed natural gas pipeline will be returned to agricultural use after construction is complete.

California Porter-Cologne Water Quality Control Act of 1972; California Water Code, Sections 13260–13269; 23 CCR Chapter 9: The Water Code requires protection of water quality by appropriate design and implementation of erosion and sediment controls. Land disturbance that results in the discharge of "waste" soil into surface waters may require the filing of a waste discharge report (see Water Code Section 13260a).

The HPP will not discharge waste soils during grading and construction. Implementation of mitigation measures during grading and construction will protect all surface water courses.

Williamson Act: The HPP site is located on land formerly under Williamson Act contract. The Williamson Act contract for the HPP site has been the subject of a Tentative Cancellation by the Kings County Board of Supervisors. A portion of the proposed natural gas pipeline will cross under land subject to Williamson Act contract. The remainder of the

proposed pipeline is within a Kings County right-of-way. Land within the right-of-way is not currently being used for production of agricultural crops and will not be used for the production of crops in the near future.

Resource Conservation Element of the Kings County General Plan (1993): The resource conservation element of the Kings County General Plan sets forth policies that address the protection of soil and prime agricultural farmland.

Seven acres of agricultural farmland will be permanently taken out of production for the HPP. It is anticipated that the HPP will not significantly reduce the quality of surrounding agricultural resources or significantly reduce access to soil or agricultural resources.

8.9.7 Proposed Conditions of Certifications

Proposed conditions of certification are contained in Appendix K. These conditions are proposed in order to ensure compliance with applicable LORS and/or to reduce potentially significant impacts to less-than-significant levels.

8.9.8 Involved Agencies and Agency Contacts

Agency	Contact/Title	Telephone
California Department of Conservation, Division of Land Resources Protection 801 K Street, MS 13-71 Sacramento, CA 95814-3528	Emily Tesche	(916) 323-0868

8.9.9 Required Permits

No permits related to agriculture and soils are required.

8.9.10 References

Arroues, Kerry D., and Carl H. Anderson, Jr., 1986. *Soil Survey of Kings County, California*. U.S. Department of Agriculture, Soil Conservation Service.

Harding Engineering and Environmental Services, 2001. *Phase I Environmental Site Assessment; GWF Power Systems – Henrietta Peaker 25th Avenue, Henrietta, California*. June.

Kings County Planning Department, 1993 [2001]. Kings County General Plan. Resource Conservation Element. Updated January 2001.

Kings County Public Works Department, 2001. Telephone communication between Jerry Reese and Tony Gomes, Kings County Public Works Department, and J. Adams, URS Corporation.

Mills, Don, 2000. Personal communication from Don Mills, Kings County Water District, to J. Low, URS/Radian International, February 8.

Natural Resources Conservation Service, 1983. *National Engineering Handbook*. U.S. Government Printing Office.

TABLES

Table 8.9-1
Soil Types Identified by Project Component for the HPP Plant Site

Project Component	Approximate Area Disturbed	Map Symbol[a]	Soil Type[a]
Henrietta Peaker Project site and construction laydown area	12 acres	139	Lethent clay loam
Proposed natural gas pipeline route	7 acres	139	Lethent clay loam

[a] Map symbols and soil types were obtained from *Soil Survey of Kings County, California* (Arroues and Anderson, 1986).

Table 8.9-2
Characteristics of Soil Types in the Immediate Vicinity of the HPP

Map Unit Name and Description[a]	Slopes Percent[a]	Soil Profile	Erosion Susceptibility		
			Water	Wind	Comments
139 – Lethent clay loam: Very deep, saline-alkali, moderately well drained. Formed on alluvium derived dominantly from sedimentary rock.	0–1	Pale brown clay loam: 0 to 6 inches; Light brownish gray clay: 6 to 24 inches; Brownish gray clay loam: 24 to 31 inches; light yellowish brown sandy loam: 31 to 60 inches.	Slight	Low	Permeability: very slow. Excavations for roads or building site pads can expose material that may be susceptible to wind and/or water erosion. Disturbed areas of construction sites should be revegetated or covered with synthetic matting where needed to reduce the risk of erosion.

[a] Map symbols, soil types, and descriptions were obtained from *Soil Survey of Kings County, California* (Arroues and Anderson, 1986).
NA = not applicable

Table 8.9-3
Laws, Ordinances, Regulations, and Standards for Agricultural and Soil Resources

Jurisdiction	Authority	Administering Agency	AFC Conformance Section
Federal	Federal Water Pollution Control Act of 1972; Clean Water Act of 1977 (including 1987 amendments)	RWQCB – Central Valley Region under State Water Resources Control Board	Sections 8.9.3 and 8.9.4
	Soil Conservation Service (1983), *National Engineering Handbook*, Sections 2 and 3	Natural Resources Conservation Service	Sections 8.9.3 and 8.9.4
State	California Public Resources Code § 25523(a); CCR §§ 1752, 1752.5, 2300–2309, and Chapter 2, Subchapter 5, Article 1, Appendix B, Part (i)	CEC	Section 8.9.4
	Guidelines for Implementation of CEQA, Appendix G; 14 CCR §§ 15000 – 15387	CEC	Sections 8.9.2 through 8.9.4
	Porter-Cologne Water Quality Control Act of 1972; Cal. Water Code §§ 13260–13269; 23 CCR Chapter 9	CEC and the Central Valley RWQCB under the State Water Resources Control Board	Section 8.9.3
	Williamson Act	California Dept. of Conservation, Office of Land Conservation	Section 8.9.2 and 8.9.3
Local	Kings County General Plan – Resource Conservation Element, 1993	Kings County Planning Department	Sections 8.9.2 and 8.9.3

CCR = California Code of Regulations
CEC = California Energy Commission
CEQA = California Environmental Quality Act
RWQCB = Regional Water Quality Control Board

FIGURES

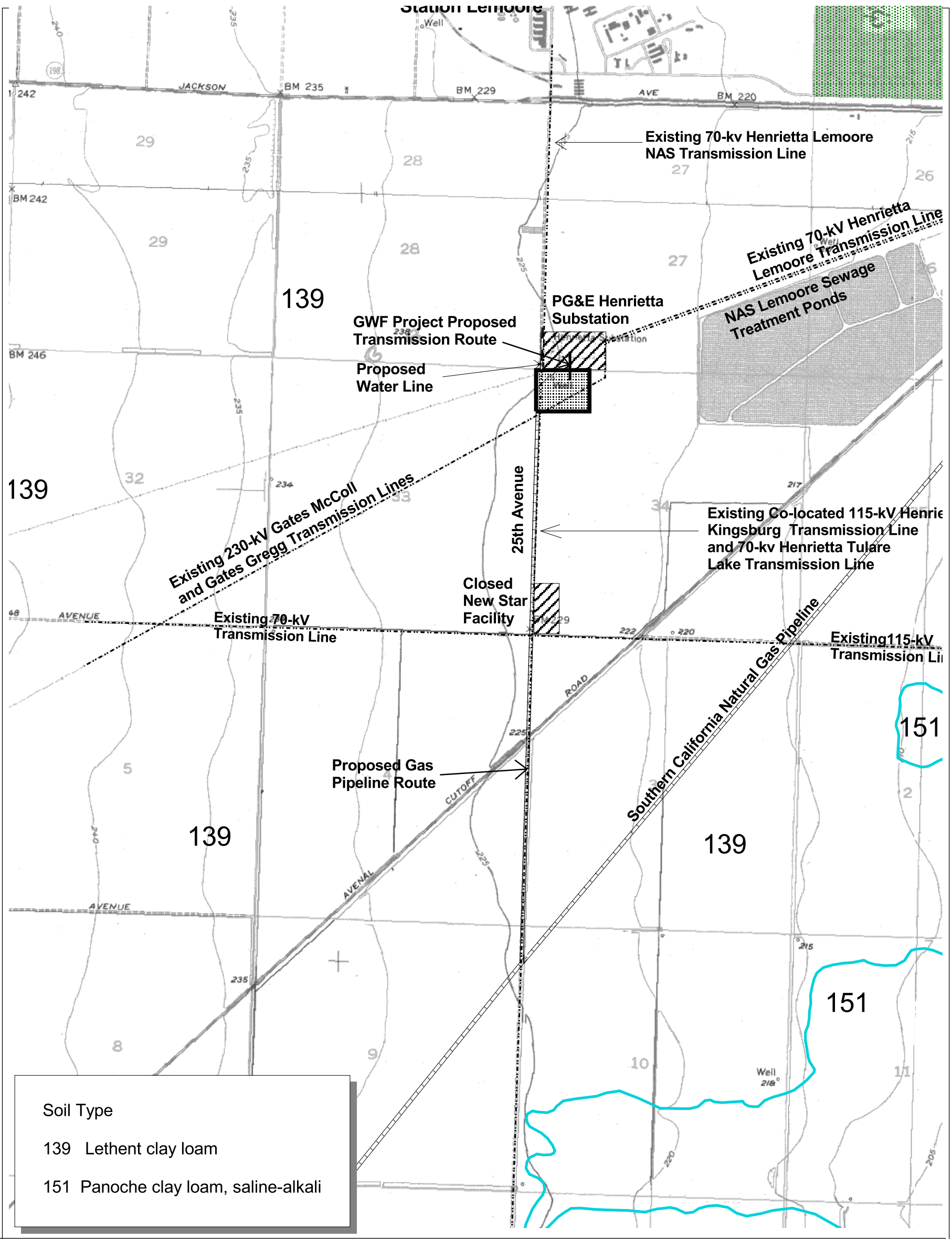

N

0 0.2 0.4 0.6 0.8 Miles

1000 0 1000 2000 Feet

Scale 1:19,000

Source:
Base Maps from U.S.G.S.
7.5 Minute Quadrangles
Westhaven, Calif., (Photorevised 1981),
Stratford, Calif. (1954), Lemoore (1954) and
Vanguard (1956, Photorevised 1981)

Existing Transmission Lines

Water Line

Soil Unit Boundary

Gas Pipeline Routes

Plant Site

Developed Industrial

URS	GWF Henrietta Peaker Project Project No. 51-00167032.00 01018	Soil Types Surrounding the GWF Henrietta Power Site	Figure 8.9-1

L:\Projects\GWF_Henrietta\Apr\proj1dhw.apr

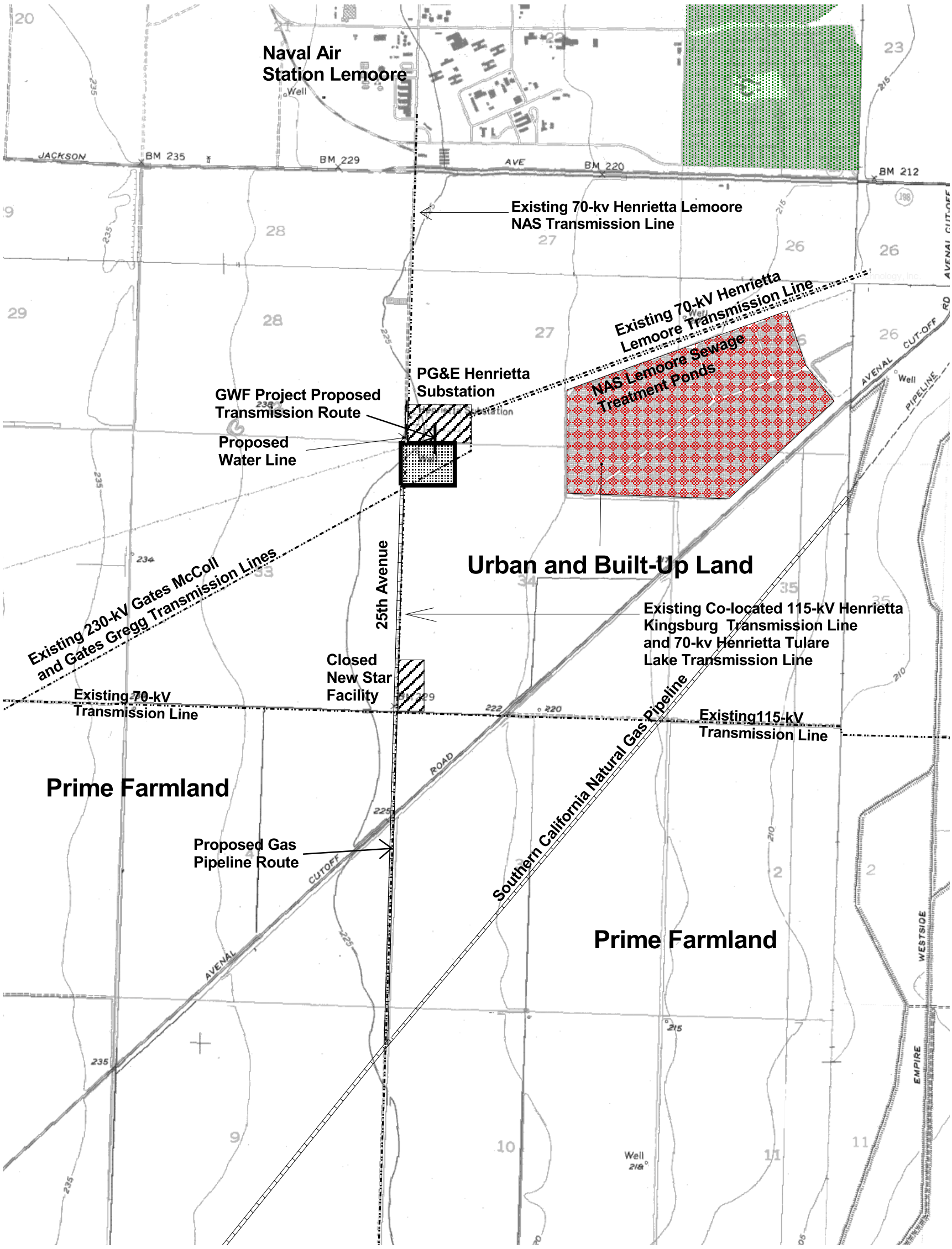

N

0 0.2 0.4 0.6 0.8 Miles

1000 0 1000 2000 Feet

Scale 1:24,000

Source:
Base Maps from U.S.G.S.
&.5 Minute Quadrangles
Westhaven, Calif., (Photorevised 1981),
Stratford, Calif. (1954), Lemoore (1954) and
Vanguard (1956, Photorevised 1981)

Existing Transmission Lines

Gas Pipeline Routes

Water Line

Plant Site

Developed Industrial

NAS Lemoore Sewage Treatment Ponds

URS	GWF Henrietta Peaker Project Project No. 51-00167032.00 01018	Agricultural Land Types Surrounding the GWF Henrietta Power Site	Figure 8.9-2

L:\Projects\GWF_Henrietta\Apr\proj1dhw.apr

8.10 Traffic and Transportation

The Henrietta Peaker Project (HPP) consists of a 91.4-megawatt (MW) (net), natural-gas-fired, simple-cycle power plant located approximately 10 miles southwest of Lemoore, California, on a seven-acre portion of a 20-acre parcel owned by GWF Energy LLC. The HPP will interconnect to the existing adjacent Pacific Gas and Electric Company (PG&E) Henrietta Substation through a new 550-foot 70-kilovolt (kV) transmission line supported on two new transmission poles. Other linear facilities include an approximately 16.5-foot water interconnection pipeline (from the site property boundary) and a 2.2-mile Southern California Gas Company natural gas interconnection pipeline. Additionally, approximately five acres will be used for temporary construction laydown and parking.

This section analyzes existing transportation conditions at the HPP site and the potential impacts of the construction and operation of the HPP on the surrounding transportation systems. Section 8.10.1 describes the affected environment in the vicinity of the HPP and existing local and regional transportation conditions. Section 8.10.2 assesses the potential environmental impacts of the construction and operation of the HPP on traffic and the existing transportation system. The analysis focuses on local and regional roadways in the vicinity of the HPP site.

The proposed project will affect transportation systems by temporarily causing small increases in the number of construction-related vehicles on the roadways surrounding the HPP site. Few construction materials and little equipment will be transported to the HPP site by rail and no other (nonroad) transportation resources will be used during the construction or the operation of the HPP. Consequently, no other transportation systems will be affected by the proposed HPP. Section 8.10.3 presents the mitigation measures proposed to minimize the potential impacts of the HPP on traffic and transportation. The laws, ordinances, regulations, and standards (LORS) that apply to traffic and transportation are presented in Section 8.10.4.

8.10.1 Affected Environment

The HPP site is located in an unincorporated area in northwestern Kings County. This section describes existing regional (state routes) and local roadways. Figure 8.10-1 illustrates the regional highways and potential access routes in the HPP study region, at a

1:100,000 scale. This scale provides a broad regional overview of roads and highways on a single map. In addition, Figure 8.10-2 shows the roadways and other transportation resources in the immediate vicinity of the HPP site at a 1:24,000 scale, as required in the California Energy Commission (CEC) Guidance (CEC, 1997).

8.10.1.1 Regional Setting

Kings County has a transportation network of approximately 1,352 miles of surfaced public roads that serves an estimated 1,396 square-mile region. In the western portion of Kings County, State Route (SR) 41 and Interstate (I) 5 are the primary north-south state highways providing regional access to the HPP site. West of the HPP site in Fresno County, SR 269 is a primary north-south regional highway that intersects with SR 198, the main east-west travel corridor in the county, to serve the HPP site. In eastern Kings County, SR 43 is the primary north-south highway. This highway provides regional access to the HPP site via SR 198.

The rail network in Kings County consists of approximately 67 miles of mainline and branchline railroad over which two railroad companies operate. The Burlington Northern Santa Fe (BNSF) Mainline runs north-south through the county and the San Joaquin Valley Railroad runs east-west on the leased Union Pacific (UP) Coalinga Branchline. Neither of these two active railroads provides direct access to the HPP site, and the leg of the UP Coalinga Branchline closest to the HPP site is currently proposed for abandonment.

The HPP site and surrounding vicinity are located in an unincorporated area of Kings County and are therefore under the jurisdiction of the Kings County General Plan and various other transportation-related plans adopted by the county. The following sections describe the framework for managing the transportation resources in the area of the HPP site.

Kings County General Plan Circulation Element. In California, cities and counties are required to adopt circulation elements as part of their general plans. The function of a circulation element is to guide the development of the circulation system in a manner compatible with the land use element of the general plan. The Kings County General Plan Circulation Element sets up goals and provides guidance policies regarding development and related transportation improvements. The Circulation Element also introduces planning tools

essential for achieving local transportation goals and policies (Kings County Planning Department, 2001). The relevant objectives and policies of the Kings County General Plan Circulation Element are listed in Table 8.10-1.

Kings County Hazardous Waste Management Plan (HWMP). The Kings County HWMP includes a hazardous waste transportation plan that defines preferred major and minor routes for hazardous waste transport that connect to regional, state, and interstate highways and railroad systems. The HWMP requires that transporters of hazardous waste in Kings County drive a minimum amount of time on the minor roads specified in the plan, connecting as soon as possible to one of the major hazardous waste transport routes identified in the plan.

Kings County Regional Transportation Plan (RTP). The Kings County Association of Governments (KCAG) is responsible for preparing and administering the Kings County RTP, which establishes regional transportation goals, policies, objectives, and actions for various modes of transportation in the county. The preparation of and guidelines for the RTP are mandated by California Government Code Chapter 2.5, Section 65080, which specifies that the RTP must be updated very two years. The RTP is a long-range (20-year) plan that discusses current and planned intermodal and multimodal transportation activities, outlines funding sources for proposed transportation-related projects, and establishes plans for air quality conformity as required by federal regulations. The current Kings County RTP was adopted in December 1999.

Transportation Improvement Program (TIP). KCAG is required by federal law to develop and publish a TIP at least every two years. The TIP is a short-range (7-year) program that incrementally implements proposed transportation projects identified in the RTP. The TIP consists of project lists from the State Transportation Improvement Program (STIP) for urbanized and nonurbanized areas as well as from other programs that use state and/or federal funding. The current TIP was adopted by KCAG in December 1999.

Kings County Regional Bicycle Plan. The current Kings County Regional Bicycle Plan was adopted by KCAG in 1998 with the objective of accommodating the use of bicycles as an alternative to the automobile. In the HPP vicinity, the Regional Bicycle Plan

identifies planned Class III with Striping (on road) bicycle routes along Jackson Avenue and Avenal Cutoff. The plan also encourages employers to install bicycle parking facilities onsite to encourage bicycle commuting by employees.

Kings County Transit Development Plan (TDP). The current Kings County TDP, prepared by KCAG in August 1998, evaluates current transit services in Kings County and determines future transit needs in the county through 2002. The TDP ensures that the transit system is developed relative to population and traffic growth and recommends plans for service improvements to meet anticipated future transit demand.

State Highways and Regional Roadways. Traffic in the vicinity of the proposed HPP site is served primarily by SR 41, SR 198, and I-5. More distant regional traffic coming to the HPP vicinity would travel along SR 43 and SR 269 (in Fresno County) and connect to SR 198. SR 198 runs east-west across northern Kings County. It is a four-lane divided highway along a 16.98-mile stretch between the Naval Air Station (NAS) Lemoore main gate and SR 43; otherwise SR 198 is a conventional two-lane road. SR 41 transects western Kings County, running north-south along 48.28 miles between Kern and Fresno Counties. It is a two-lane road for 42 miles between the Kern County line and just south of Hanford-Armona Road. There SR 41 becomes a 4-lane expressway for about 6 miles to the Fresno County line, where it narrows again to a two-lane road. I-5 is a four-lane freeway cutting 26.72 miles across the southwestern portion of Kings County. SR 43 is a two-lane north/south expressway that runs along the northwestern quadrant of Kings County. All of these state routes are under the jurisdiction of the California Department of Transportation (Caltrans). Refer back to Figure 8.10-1 for an illustration of the regional transportation setting and primary roadways in the general vicinity of the HPP.

Table 8.10-2 contains the annual average daily traffic (AADT), annual average daily truck traffic, percent of truck traffic, peak hour highway capacity, peak-hour traffic, and level of service (LOS) for the state highways in the HPP vicinity.

LOS criteria and standards for state highways are established by Caltrans. These criteria take into account numerous variables, such as AADT, capacity, grade, environment (urban or rural), and other relevant considerations. According to Caltrans policy, LOS D is

acceptable for planning purposes, whereas LOS E and LOS F are unacceptable. Currently, all of the state highways potentially affected by the proposed HPP are operating at or above LOS C.

As shown in Table 8.10-2, the highest peak hour traffic volume along SR 198 in the immediate HPP vicinity (between Fresno County line and SR 41) is 1,350 vehicles, and the LOS for this stretch of SR 198 ranges from A to C. The percentage of daily truck traffic on SR 198 is 8 percent in the immediate HPP vicinity, and peaks at 16 percent along the segment of SR 198 through the city of Hanford (12th Avenue to SR 43). Along SR 41, the highest peak hour traffic volumes range from 1,000 to 1,050 vehicles between SR 198 and Fresno County. Along this stretch, SR 41 operates at LOS A and LOS B, and trucks constitute up to 15 percent of total traffic. The highest peak hour traffic volume along I-5 is 3,650 vehicles between SR 41 and Avenal Cutoff Road. This segment of I-5 operates at LOS B, and 32 percent of the traffic consists of trucks.

Roadways in the HPP area have accident rates that typically range from 0.15 to 1.72 accidents per million vehicle-miles traveled on freeways and multilane facilities, respectively (Caltrans, 1997b). The range of accident rates for the roadways in the project vicinity is less than the range of statewide averages for similar roadways (the statewide averages are 0.71 for freeways and 2.27 for multilane facilities) (Caltrans, 1997b).

In the vicinity of the HPP site, planned long- and short-range improvements to the regional transportation system (state highways and regional roadways) include the following (KCAG, 1999c):

- SR 198 between SR 43 and Tulare County. Widening of the highway from two lanes to a four-lane expressway. An Environmental Impact Statement for this project was completed in 2000. The estimated date of completion is 2007.
- SR 198 at 19th Ave. Construction of an interchange, estimated to be completed by 2006.
- SR 198 at 9th Ave. Construction of an interchange, estimated to be completed by 2008.
- SR 41 at Grangeville Blvd. Construction of an interchange, estimated to be completed by 2015.

- 18th Avenue from Kansas Ave. to Jackson Ave. Pavement overlay (rehabilitation) to be completed by 2001.
- Grangeville Boulevard from SR 41 to 18th Ave. Pavement overlay (rehabilitation) to be completed by 2002.
- Jackson Avenue from 11th Ave. to 17th Ave. Pavement overlay (rehabilitation) to be completed by 2002.
- Laurel Avenue from 18th Ave. to 20th Ave. Pavement overlay (rehabilitation) to be completed by 2001.
- Laurel Avenue from Avenal Cutoff Rd. to SR 41. Pavement overlay (rehabilitation) to be completed by 2002.

Most of these state highway improvement projects are long-range in scope, and the proposed construction schedules for these projects are not expected to overlap with the construction of the proposed HPP. Some of the pavement rehabilitation projects on regional roadways in the HPP vicinity may occur simultaneously with the construction of the HPP. However, because none of these county-maintained local roadways are critical access routes to the HPP site, if any overlap in construction periods does occur, only minor traffic delays, if any, would result. Currently, no major construction projects are occurring within the immediate vicinity of the proposed HPP, and no new county roads are planned.

8.10.1.2 Local Setting

Local Roadways. The LOS criteria for county-maintained roadway throughway segments, as defined in the Kings County RTP (KCAG, 1999c), are identified in Table 8.10-3. These LOS criteria are similar to the standards established by Caltrans for state highways; they take into account numerous variables, such as AADT, capacity, grade, environment (urban or rural), and other relevant considerations. The Kings County RTP and General Plan Circulation Element specify that LOS D is the minimum acceptable level for planning purposes (LOS E and F are considered unacceptable).

The roadways that would provide access to the proposed HPP site are described in Table 8.10-4, which identifies the roadway classification, average daily traffic volume, average peak hour traffic volume, peak hour roadway capacity, and existing LOS of each roadway affected by the HPP. (See Figure 8.10-3 for annual average daily traffic volumes.) The LOS for

almost all of these local roadways is free-flowing operating conditions with minimal or no congestion (LOS A or LOS B). The following data are not available from Kings County for these roads: annual average daily truck traffic and truck traffic counts.

Kings County has weight and load limits or capacity levels for county-maintained roadways. According to Caltrans, the weight and load limitations for state highways apply to county roadways if the county does not specify its own limitations. For this reason, all the local and regional roadways to be used during the construction and operation of the HPP are subject to a load limit of 80,000 pounds per truck. This load limitation is specified in the California Vehicle Code Section 35780; the California Street and Highways Code Sections 117 and 660–711; and Title 21 California Code of Regulations (CCR) Sections 1411.1 to 1411.6.

Vehicles used during project construction that are over-sized, over-weight, over-width, or over-length will require a transportation permit from Kings County and Caltrans. The transporters (i.e., trucking companies) are responsible for obtaining the necessary transportation permits. The Kings County permits are issued by the Public Works Department. The Caltrans permits are typically issued within two to three hours of receipt of the applications.

Local Railroad Facilities. Neither the BNSF Mainline nor the UP Coalinga Branchline provides direct access to the HPP site, and the leg of the UP Coalinga Branchline closest to the HPP site is currently proposed for abandonment.

8.10.2 Environmental Consequences

8.10.2.1 Significance Criteria

According to the CEC Staff Application for Certification Instructions and those set forth in Appendix G of the California Environmental Quality Act (CEQA) Guidelines, a project results in a significant effect when it will:

- Cause a substantial increase in traffic in relation to the existing traffic load and capacity of the street system;
- Cause a substantial deterioration of the roadway surface as a result of construction activities;
- Substantially increase the traffic delay experienced by drivers;

- Substantially alter present patterns of circulation or movement; or
- Cause traffic hazards for pedestrians or operators of motor vehicles or bicycles.

Other potentially significant impacts might include inability to comply with federal and state regulations governing the transportation of hazardous materials and generation of traffic volumes that violate local LOS standards. State and local concerns with regard to traffic analysis focus on avoiding a degradation of public highways/road service below an adopted LOS. Both Caltrans and Kings County consider LOS D and above to be acceptable for planning purposes; any roadway operating at LOS E or LOS F is considered unacceptable, and such conditions must be mitigated to an acceptable LOS.

8.10.2.2 Construction Impacts

The following methods and assumptions were used to estimate the construction traffic impacts associated with the HPP site and the proposed transmission route.

The construction of the HPP will occur over an estimated five months. The project will require a total construction workforce of 75 workers on average, assuming a Monday through Saturday (six-day) workweek. All workers are assumed to be nonlocal (refer to Section 8.8, Socioeconomics). During the peak construction period, an estimated 93 construction workers (all nonlocal) will be required for the HPP. The workforce vehicle trips associated with the construction were calculated based on these assumptions.

Construction Workforce Vehicle Trips. Table 8.10-5 summarizes the vehicle origins and distribution (by county) of the daily average and peak construction workforce. Table 8.10-6 presents the projected number of daily average and peak construction period vehicle trips to be generated by the construction of the HPP.

Table 8.10-5 illustrates the assumed geographical distribution and size of the daily average construction workforce (75 workers) and peak construction workforce (93 workers). The daily vehicle trip generation calculations in Table 8.10-6 are based on the assumption that 20 percent of the workers will carpool with each other (at a rate of two workers per vehicle), and 80 percent of the workers will drive alone in separate vehicles. Each individual driver and carpool

duo is assumed to generate two vehicle trips per day (one round-trip between home and the HPP site).

According to this scenario, the average daily construction workforce of 75 workers will generate 68 one-way and 136 total daily vehicle trips. These trips are a sum of 61 one-way/122 total vehicle trips made by 61 workers (80 percent) driving alone plus 7 one-way/14 total vehicle trips made by 14 workers (20 percent) carpooling. Similarly, the peak construction workforce of 93 workers will generate 84 one-way/168 total daily vehicle trips. These peak construction workforce trips are a sum of 75 one-way/150 total vehicle trips made by 75 workers (80 percent) driving alone, plus 9 one-way/18 total vehicle trips made by 18 workers (20 percent) carpooling.

In summary, construction of the HPP will result in an estimated total of 136 vehicle trips per day, on average, and 168 vehicle trips per day during the peak construction period. It is assumed that parking for construction site personnel and visitors will be provided on or adjacent to the HPP site.

Preferred Travel Routes of Construction Workers: The preferred travel routes of the construction workers for the HPP are as follows:

- Bakersfield/Kern County. The route preferred by construction workers commuting north from Bakersfield/Kern County is assumed to be north on SR 43 and continuing west on SR 198. From SR 198, workers exit south onto 25th Avenue or Avenal Cutoff (and then turn onto 25th Avenue) to access the project site. Alternatively, workers commuting from the south may also travel north along I-5 and exit north onto Avenal Cutoff, then turn north onto 25th Avenue to access the project site.

- Fresno/Fresno County. Workers traveling south from Fresno/Fresno County take either SR 41 or SR 43. They then connect with SR 198 and travel west. From SR 198, workers exit south onto 25th Avenue or Avenal Cutoff (and then turn onto 25th Avenue) to access the project site.

- Tulare County. Workers traveling west from Tulare County travel west along SR 198. From SR 198, workers exit south onto 25th Avenue or Avenal Cutoff (and then turn onto 25th Avenue) to access the project site.

Impacts of Construction Workforce Traffic on State Routes: Construction workforce traffic would generally occur between 5:00 a.m. and 6:00 a.m. and between 6:00 p.m.

and 7:00 p.m., corresponding with a proposed 6:00 a.m. to 6:00 p.m., Monday through Saturday work week. Using the travel pattern assumptions described above, Table 8.10-7 presents the estimated effect of the HPP on state routes in the vicinity of the HPP as a result of the construction workforce commuting to and from the construction site. During the peak construction period (estimated to occur during month four of the five-month construction period), construction-related vehicle traffic will increase traffic on state routes by less than 1 percent. The HPP construction workforce traffic will not lower the existing LOS ratings of the roadways (all roadways will remain at LOS A or LOS B, except one segment of SR 198, which will remain at LOS C). Also, the construction-related increases will be short term, occurring mostly during the peak construction period. Therefore, traffic impacts on state routes in the HPP vicinity are not considered significant.

Impacts of Construction Workforce Traffic on Local Roads: The local roads that provide access from the state routes to the HPP site will be more affected than the state routes by construction workforce traffic commuting to and from the construction site. The projected peak vehicle trips per day and average vehicle trips per day are presented in Table 8.10-7. During the peak construction period, total daily traffic is estimated to increase by up to 4 percent on 25th Avenue but less along other local roadways serving the HPP site. Traffic increases on local roadways will generally occur between 5:00 a.m. and 6:00 a.m. and again between 6:00 p.m. and 7:00 p.m. With these traffic increases the projected peak LOS will remain at LOS A or LOS B on all local roadways serving the HPP site. These minor increases will be short term, occurring mostly during the peak construction period. Therefore, traffic impacts on local roadways serving the HPP vicinity are not considered significant.

Summary of Construction Workforce Traffic Impacts on State Routes and Local Roads: Due to the minimal traffic impacts that will result from the HPP construction workforce and the relatively uncongested traffic conditions along state routes and local roads in the HPP area, the HPP construction workforce will not produce significant traffic impacts.

Construction Equipment and Material Deliveries. Construction of the HPP will require the use and installation of heavy equipment and associated systems. According to the construction schedule, heavy equipment will most likely be delivered during months 2 and 3 of the construction period. However, construction materials (such as concrete, wire, pipe, cables,

fuel, and reinforcing steel) will be delivered continually to the site via trucks. An estimated 620 total truck deliveries will be made to the HPP site over the course of the construction period (see Section 2.0). Deliveries will typically occur between 6:00 a.m. and 6:00 p.m. on weekdays. It is assumed that most of these materials will be transported from either Bakersfield or Los Angeles.

The vehicles used to transport heavy equipment and construction materials will require transportation permits when they exceed the size, weight, width, or length thresholds set forth in Section 35780 of the California Vehicle Code, Sections 117 and 660–711 of the California Streets and Highways Code, and Sections 1411.1 to 1411.6 of the CCR. Affected vehicles will be required to obtain transportation permits from Kings County and Caltrans. Kings County considers the weight/load specifications outlined for Caltrans transportation permits (for state highways) sufficient for travel on county-maintained roadways.

Of the estimated 620 total truck deliveries needed for equipment and materials during construction of the HPP, 112 to 125 of these deliveries will include some amount of hazardous materials (solvents, lube oils, paint, paint thinners, adhesives, batteries, construction gases, etc.) in their original manufacturer containers. Of the estimated 112 to 125 truck deliveries with hazardous materials, total quantities of hazardous materials and subsequent public risk should be relatively low. The only deliveries with large amounts of hazardous materials will be lube oils for the combustion turbines, transformer oil, structural paints, weekly or biweekly deliveries of fuels for construction equipment, initial stocking of construction gases, and weekly or biweekly deliveries of construction gases. Hazardous wastes will be sent from the site to treatment or disposal facilities on a biweekly or monthly basis. Proper containers and transportation procedures that conform to applicable Caltrans requirements (i.e., 49 CFR Chapters II, III; California Vehicle Code Section 31300, et seq.) will be used for all material and waste shipments.

Distribution of Construction Truck Traffic and Routes of Travel: An estimated 620 total truck deliveries will be made to the HPP construction site over the five-month construction period. Months 2 and 3 of construction will likely have the greatest number of material deliveries (approximately 180 deliveries during each month), while the remaining three months of the construction period will average approximately 87 deliveries per month. Assuming an average of 24 workdays per month and two trips (1 round-trip) for each truck

delivery, the HPP construction would generate approximately 7 truck trips per day under average conditions and approximately 15 truck trips per day during the two peak delivery months.

This analysis assumes that an estimated 50 percent of the daily truck deliveries will originate in Kern County (Bakersfield). Truck drivers from Bakersfield will use SR 43 north and continue west on SR 198. From SR 198, drivers will exit south onto 25th Avenue or Avenal Cutoff (and then turn onto 25th Avenue) to access the project site. Alternatively, truck drivers commuting from the south can travel north along I-5, exit north onto Avenal Cutoff, and then turn north onto 25th Avenue to access the project site.

Thirty-five percent of truck deliveries are assumed to originate in Fresno County (Fresno), which is north of the project site. Drivers from Fresno will travel south along either SR 41 or SR 43 to SR 198, proceed west, then exit south onto 25th Avenue or Avenal Cutoff (and then turn onto 25th Avenue) to access the project site.

Fifteen percent of truck deliveries are assumed to originate in Kings County or Tulare County. Drivers from Tulare County and Kings County will travel west along SR 198 and exit south onto 25th Avenue or Avenal Cutoff (and then turn onto 25th Avenue) to access the project site.

Impacts of Construction Truck Traffic on State Routes: Increases of 7 truck trips on state routes during average conditions and 15 truck trips on state routes during peak delivery months are minor compared with existing truck traffic on these routes (see Table 8.10-2) and represent a minimal increase in truck traffic along the proposed routes of travel in the HPP area. Consequently, the impact of delivery truck traffic on state routes is considered less than significant.

Impacts of Construction Truck Traffic on Local Roads: Increases of 7 truck trips on local roads during average conditions and 15 truck trips on local roads during peak delivery months are considered minor compared with existing traffic conditions on these roads and represent a minimal increase in total traffic along the proposed routes of travel (i.e., 25th Avenue and Jackson Avenue). Due to the size and weight of the trucks used for the construction of the HPP, the increase in truck traffic will contribute to wear on the roads and will increase the need

for regular roadway maintenance. However, the increase in roadway wear and tear resulting from construction truck traffic is not considered significant.

Construction Equipment Deliveries by Rail. During the construction of the HPP, a small number of major, heavy equipment components will be delivered to the site by rail. Two transformers for the HPP will be delivered by rail.

Because of the limited number of rail deliveries, no impacts to existing rail service or resources will occur.

Transportation of Construction Debris and Hazardous Wastes. Construction debris and small quantities of hazardous wastes will be generated during construction (see Section 8.13, Waste Management). During construction, a minimal number of truck trips per month will be required to haul waste for disposal. Transportation of hazardous materials to and from the HPP site will be conducted in accordance with California Vehicle Code Sections 31300 et seq. and the Kings County HWMP. Because the transport of hazardous wastes will be conducted in accordance with the relevant transportation regulations, no significant impact is expected.

8.10.2.3 Operation and Maintenance Impacts

Impacts on State Routes and Local Roads. The operation of the HPP will be conducted by personnel from the GWF Hanford facility on an as-needed basis. The HPP will operate up to a maximum of 8,000 hours per year. Due to the minimal number of vehicle trips generated by HPP operations personnel, the long-term traffic impacts are considered insignificant.

During the operation of the HPP, a minimal number of hazardous materials deliveries will be made to the HPP site. The hazardous materials to be delivered to the HPP site will include one to three truck deliveries per month of aqueous ammonia; one truck delivery per month of Nalco water treatment chemicals; one truck delivery every three months of process gases (nitrogen, nitric oxide, and carbon monoxide); and one truck delivery per year of each of the following: liquid carbon dioxide, diesel fuel, and combustion turbine generator waterwash soap. The anticipated travel routes for hazardous materials deliveries from the Bakersfield,

Fresno, Hanford-Lemoore, and Visalia areas will be along SR 99, SR 198 and 25th Avenue. Overall, the number of delivery trips will be minimal and the traffic impacts will not be significant.

Some of the hazardous materials generated at the HPP site during plant operations will be transported to a Class I landfill for disposal or transported offsite for recycling. It is estimated that hazardous wastes generated at the site will be transported offsite for disposal about once every 90 days or less by licensed hazardous waste transporters. Overall, the number of transport trips will be minimal and the traffic impacts will not be significant.

The traffic associated with the operation of the transmission line will be minimal and will be limited to preventive maintenance vehicles or repair vehicles required in the event of damage to the lines. The overall impacts of the traffic generated by the operation and maintenance of the HPP transmission line will not be significant.

Impacts on Local Railroads. The operation of the HPP is not anticipated to include any routine or periodic deliveries via local or regional railroads. Because any such deliveries would be nonroutine and limited, no impacts to rail services will occur.

8.10.2.4 Cumulative Effects

The available capacity of the regional state routes serving the Kings County area shows that the regional transportation system has ample capacity to accommodate the traffic resulting from the construction and operation of the HPP. There are no other known proposed projects whose workforces and/or material deliveries would concurrently travel the state routes and local roadways to be used for the HPP. Therefore, no significant cumulative traffic impacts are anticipated to result from the HPP.

8.10.2.5 Potential Indirect Effects

The potential indirect effects of the HPP are effects that may result from the implementation of the project but are not directly related to the project itself. Operation of the HPP is not expected to indirectly result in or generate new growth or construction in the HPP project area that may result in impacts to transportation resources. Due to the limited number of personnel and material deliveries required for HPP operation, the HPP will not necessitate or

result in demand for additional public transportation services, facilities, or infrastructure. Therefore, no potential indirect effects to transportation resources are anticipated to result from the HPP.

8.10.3 Mitigation Measures

8.10.3.1 Construction

The construction of the HPP will add a minimal amount of traffic to state routes and local roadways on average and during the peak construction period. Because existing roadway capacity is adequate, these project-related traffic increases will not result in significant impacts. Therefore, no construction-related mitigation measures are required for the HPP.

8.10.3.2 Operation and Maintenance

The operations-related traffic associated with the HPP is considered to be minimal; state routes and local roadways have adequate capacity to accommodate operations-related traffic. Consequently, no operations-related mitigation measures are required for the HPP.

8.10.4 Laws, Ordinances, Regulations, and Standards

8.10.4.1 Federal

49 Code of Federal Regulations (CFR), Chapter II, Subchapter C and Chapter III, Subchapter B. Standards for the transportation of hazardous materials are covered in Chapter II, Subchapter C. National safety standards for the transport of goods, materials, and substances over public highways are addressed in Chapter III, Subchapter B, Parts 171–173, 177–178. Caltrans is the administering agency for these requirements.

The proposed HPP will cause no traffic or transportation impacts that would be inconsistent with federal LORS.

8.10.4.2 State

California Vehicle Code Section 35780; California Streets and Highways Code Sections 117 and 660–711; 21 CCR Sections 1411.1–1411.6. These codes cover the permit requirements for "overload" approvals (transportation permits) for travel over state highways.

California Streets and Highways Code Sections 117 and 660–711. This code requires permits for any construction, maintenance, or repair involving encroachment on state highway rights-of-way.

California Vehicle Code Sections 31300 et seq. This code includes provisions for the transportation of hazardous materials on state highways.

The HPP will cause no traffic or transportation impacts that would be inconsistent with state LORS.

8.10.4.3 Local

Kings County General Plan Circulation Element. The Circulation Element of the Kings County General Plan establishes goals and policies and identifies implementation measures for the traffic and transportation systems in the unincorporated areas of the county.

Kings County Hazardous Waste Management Plan. The goal of the Kings County HWMP is to ensure safe and effective management and transport of hazardous waste within the county. Various policies concerning the transport of hazardous materials in and through Kings County are detailed in the HWMP.

Kings County Regional Transportation Plan and Transportation Improvement Plan. The Kings County RTP, administered by KCAG, establishes regional transportation goals, policies, objectives, and actions for various modes of transportation, including intermodal and multimodal transportation activities. Funding to implement the transportation activities proposed in the RTP is programmed through the Kings County TIP.

Kings County Regional Bicycle Plan. The Kings County Regional Bicycle Plan, administered by KCAG, describes existing bicycle facilities and details proposed locations for new bicycle routes and amenities in the county. The plan advocates bicycling as an alternative to vehicular transportation to achieve potential improvements in traffic congestion and air quality.

Kings County Transit Development Plan. The Kings County Transit Development Plan, administered by KCAG, analyzes future transit needs and itemizes the necessary future service requirements needed to make public transit more efficient and accessible.

The HPP will cause no significant traffic or transportation impacts that would be inconsistent with local LORS.

8.10.5 Involved Agencies and Contacts

Agency	Contact	Telephone
Kings County Planning Department	Dennis Mills, Transportation Planner	(559) 582-3211 x2684
Kings County Planning Department	David Lear, Transportation Planner	(559) 582-3211 x2676
Kings County Planning Department	Chuck Kinney, Planner	(559) 582-3211 x2674
Kings County Public Works Department, Roads Division	Anthony Gomes, Road Superintendent	(559) 582-3211 x2694
California Department of Transportation	Larry Waggle	(916) 653-1655

8.10.6 Compliance with Laws, Ordinances, Regulations, and Standards

All applicable LORS and the administering agencies are summarized in Table 8.10-8. Table 8.10-8 also lists the sections that discuss how the HPP will conform with all applicable LORS pertaining to traffic and transportation impacts.

8.10.7 Proposed Conditions of Certification

Proposed conditions of certification are contained in Appendix K. These conditions are proposed in order to ensure compliance with applicable LORS and/or to reduce potentially significant impacts to less-than-significant levels.

8.10.8 References

Caltrans, 1997a. *1997 Truck Traffic on the California State Highway System*. California Department of Transportation.

Caltrans, 1997b. *1997 Route Segment Report.* California Department of Transportation.

Caltrans, 1998. *1998 Traffic Volumes on California State Highways.* California Department of Transportation.

CEC, 1997. *Siting Regulations: Rules of Practice and Procedure and Power Plant Site Certification Regulations.* California Energy Commission.

KCAG, 1998. *Kings County Transit Development Plan.* Kings County Association of Governments. August.

KCAG, 1999a. *County of Kings Regional Traffic Count Report.* Kings County Association of Governments. September.

KCAG, 1999b. *Federal Transportation Improvement Program.* Kings County Association of Governments. December.

KCAG, 1999c. *Kings County Regional Transportation Plan.* Kings County Association of Governments. December.

Kings County Planning Agency and McLaren Environmental Engineering, Inc., 1989. *1988 Kings County Hazardous Waste Management Plan*. January 31.

Kings County Planning Department, 2001. *Kings County General Plan Circulation Element.* Amendment No. 9. January 30.

TABLES

Table 8.10-1
Relevant Objectives and Policies of the
Kings County General Plan Circulation Element

Relevant Objectives	Relevant Policies
Objective 28.3: Provide a bicycle route system which meets the transportation and recreation needs of Kings County residents.	• Policy 28i: Through the RTP, designate a bicycle route plan which consists of a system of bicycle routes connecting major residential, commercial, employment, educational, and recreational areas. • Policy 28m: Designate the Kings County Department of Public Works as the agency responsible for establishing and maintaining bicycle routes along roadways in unincorporated areas. • Policy 28o: Consider methods to accommodate bicycle and pedestrian traffic in new development.
Objective 29.1: Design circulation systems that provide access to employment, commerce and markets, and recreational and residential areas of the county; promote safety; and minimize traffic congestion and air pollution.	• Policy 29d: Assure that new parcels of land have frontage on, or access to, a public road. • Policy 29f: Streets in industrial and commercial zones are to be designed to accommodate the needs of truck and non-truck traffic with as little conflict as possible. • Policy 29h: The goals, objectives, and siting criteria of the *Kings County Hazardous Waste Management Plan* as they pertain to hazardous waste transportation are incorporated herein by reference.
Objective 29.2: Approve development only when there are adequate circulation facilities to serve it, or the installation of new facilities to handle increased demand is made a condition of approval.	• Policy 29i: Review proposed circulation systems to ensure there will be no unmitigated adverse effects. • Policy 29j: Require all developers to pay the cost of mitigating the impacts of their developments on existing roads and highways; and to pay the cost of new roads necessary to serve their developments, and to provide the mechanism for assuring the continued maintenance of such roads. • Policy 29l: The minimum level of service (LOS) for intersections in Kings County shall be "D". For State highways other operational LOS standards will be considered. For more specific information about level of service see the Glossary or the RTP. As the RTP is updated, any significant findings that may affect this Circulation Element will be revisited within this document and updated as appropriate, including mitigation. • Policy 29m: Where precise plan lines or ultimate right of way lines exist, require their dedication as a condition of development approval.

Source: Kings County Planning Department, 2001.

Table 8.10-2
Current Traffic Characteristics of the Interstate Highways and State Routes in the Project Area

Highway/ Milepost	Location	Annual Average Daily Traffic	Annual Average Daily Truck Traffic	Percent of Truck Traffic[a]	Peak-Hour Highway Capacity	Peak-Hour Traffic	LOS
Interstate 5							
0.0 – 16.6	Kern Co. – SR 41	24,600	7,870	32%	3,720	3,550	B
16.6 – 25.4	SR 41 – Avenal Cutoff Rd.	25,000	8,000	32%	3,720	3,650	B
25.4 – 26.7	Avenal Cutoff Rd. – Fresno Co.	24,300	7,780	32%	3,720	3,500	B
State Route 41							
8.1 – 16.3	SR 33 – Interstate 5	5,200	730	14%	1,620	570	A
16.3 – 28.4	Interstate 5 – Nevada Ave.	7,600	1,060	14%	3,720	840	C
28.4 – 37.8	Nevada Ave.– Jackson Ave.	6,000	840	14%	1,900	800	A
37.8 – 40.1	Jackson Ave. – SR 198	11,700	1,170	10%	1,900	990	B
40.1 – 42.1	SR 198 – Hanford-Armona Rd.	12,100	970	8%	1,920	1,050	B
42.1 – 48.3	Hanford-Armona Rd. – Fresno Co.	12,400	990 - 1860	8% - 15%	3,840	1,000	A
State Route 43							
16.4 – 18.2	Houston Ave. – SR 198	7,600	1,750	23%	1,860	660	B
18.2 – 22.3	SR 198 – 10th Ave.	8,200	1,310	16%	1,840	790	B
State Route 198							
0.0 – 3.0	Fresno Co. - NAS Lemoore	6,900	550	8%	1,900	610	B
3.0 – 5.0	NAS Lemoore – Avenal Cutoff Rd.	11,800	940	8%	3,800	1,100	C
5.0 – 8.9	Avenal Cutoff Rd. – SR 41	14,500	1,160	8%	3,880	1,350	A
8.9 – 15.8	SR 41 – 16th Ave.	12,500	1,130	9%	3,880	1,200	A
15.8 – 17.1	16th Ave. – 12th Ave	21,000	2,310	11%	3,880	1,800	B
17.1 – 21.0	12th Ave. – SR 43	17,000	2,720	16%	3,880	1,450	A
21.0 – 28.3	SR 43 – Tulare Co.	13,500	2,020	15%	1,800	1,150	A

[a] Percent of trucks in 1996 ADT.
Source: 1999 Kings County Regional Transportation Plan

LOS = Level of Service
NAS = Naval Air Station
SR = State Route

Table 8.10-3
Kings County Level of Service (LOS) Definitions

LOS	Description
A	Free flow; insignificant delays
B	Stable operation; minimal delays
C	Stable operation; acceptable delays
D	Approaching unstable; queues develop rapidly but no excessive delays
E	Unstable operation; significant delays
F	Forced flow; jammed conditions

Source: KCAG, 1999c.

Table 8.10-4
Existing Traffic Characteristics of Local Roadways in the Immediate Vicinity of the Henrietta Peaker Project

Roadway	Location	Roadway Classi-fication	Average Daily Traffic Volume	Average Peak Hour Traffic Volume	Peak Hour Roadway Capacity	LOS
Avenal Cutoff Rd.	SR 269 to Nevada Ave.	Arterial, 2 lane	3,500	290	1,796	B
	Nevada Ave. to SR 198	Arterial, 2 lane	4,000	510	1,718	B
Jackson Ave.	SR 198 to SR 41.	Arterial, 2 lane	500	90	1,484	A
	SR 41 to 18th Ave.	Arterial, 2 lane	700	90	1,404	A
25th Ave.	Avenal Cutoff to SR 198	Arterial, 2 lane	3,000	N/A	N/A	A

Source: KCAG, 1999c.

LOS = Level of Service
N/A = Not Available
SR = State Route

Table 8.10-5
Construction Workforce Distribution

Worker (Vehicle) Origin	Daily Distribution of Workforce	Daily Average Workforce[a]	Peak Distribution of Workforce	Peak Workforce[b]
Bakersfield/Kern County	50%	38	50%	46
Fresno/Fresno County	35%	26	35%	33
Kings/Tulare Counties	15%	11	15%	14
Total	**100%**	**75**	**100%**	**93**

[a] The daily average workforce is based on an average of months 1, 2, 3, and 5 of the five-month construction period.
[b] The peak workforce is based on month 4 of the five-month construction period.

Table 8.10-6
Total Daily Construction Workforce Vehicle Trip Generation

Origin / Destination of Worker Trips	Trip Distribution[a]	Average Daily Workforce One-way Trips[b]	Average Daily Workforce Total (Two-way) Trips[b]	Peak Workforce One-way Trips[b]	Peak Workforce Total (Two-way) Trips[b]
Bakersfield / Kern County	50%	34	68	42	84
Fresno / Fresno County	35%	24	48	29	59
Kings / Tulare Counties	15%	10	20	13	25
Total	**100%**	**68**	**136**	**84**	**168**

[a] Combination of construction and contractor labor force.
[b] This analysis assumes that 20% of the workforce will carpool. Columns may not add because of rounding.

Table 8.10-7
Distribution of Construction Worker Generated Traffic on State Routes and Local Roadways

			Daily Average Construction Period		Peak Construction Period		
Highway/Roadway	Existing AADT	Existing LOS	Projected Total Vehicle Trips/Day	AADT Increase	Projected Total Vehicle Trips/Day	Increase in Vehicle Trips/ Day	Projected LOS
Interstate 5							
Kern Co. to SR 41	24,600	B	34	<1%	42	<1%	B
SR 41 to Avenal Cutoff	25,000	B	34	<1%	42	<1%	B
SR 41							
SR 198 to Grangeville	12,400	A	24	<1%	30	<1%	A
Grangeville to Fresno Co.	11,700	A	24	<1%	30	<1%	A
SR 43							
Houston Ave. to SR 198	7,600	B	3	<1%	42	<1%	B
SR 198 to 10th Ave.	8,200	B	24	<1%	29	<1%	B
SR 198							
Lemoore to Avenal Cutoff	11,800	C	51	<1%	63	<1%	C
Avenal Cutoff to SR 41	14,500	A	102	<1%	126	<1%	A
SR 41 to 16th Ave.	12,500	A	78	<1%	96	<1%	A
16th Ave. to 12th Ave.	21,000	B	78	<1%	96	<1%	B
12th Ave. to SR 43	17,000	A	78	<1%	96	<1%	A
SR 43 to Tulare Co.	13,500	A	20	<1%	25	<1%	A
Avenal Cutoff							
SR 269 to Nevada Ave.	3,500	B	34	1%	42	1%	B
Nevada Ave. to SR 198	4,000	B	85	2%	105	3%	B
Jackson Avenue							
SR 198 to SR 41	500	A	0	0%	0	0%	A
SR 41 to 18th Ave.	700	A	0	0%	0	0%	A
25th Avenue							
North of site	3,000	A	51	2%	63	2%	A
South of site	3,000	A	85	3%	105	4%	A

AADT = Annual Average Daily Traffic
LOS = Level of Service
SR = State Route

Table 8.10-8
Compliance With Laws, Ordinances, Regulations, and Standards

Authority	Administering Agency	Requirements	Compliance	AFC Conformance Section
49 CFR, Chapter II, Subchapter C and Chapter III, Subchapter B	U.S. Department of Transportation and California Department of Transportation (Caltrans)	Requires proper handling and storage of hazardous materials during transportation.	Project and transportation will comply with all standards for the transportation of hazardous materials.	8.10.2.2, 8.10.2.3
California Vehicle Code Section 35780; California Streets & Highways Code Sections 660–711; 21 CCR 1411.1–1411.6	Caltrans	Requires permits for any load that exceeds Caltrans weight, length, or width standards for public roadways.	Transportation permits will be obtained by transporters for all overloads, as required.	8.10.2.2
California Streets & Highways Code Sections 117, 660–711	Caltrans	Requires permits from Caltrans for any roadway encroachment during truck transportation and delivery.	Encroachment permits will be obtained by transporters, as required.	8.10.2.2
California Vehicle Code Section 31300 et seq.	Caltrans	Requires transporters to meet proper storage and handling standards for transporting hazardous materials on public roads.	Transporters will comply with standards for transportation of hazardous materials on state highways during construction and operations.	8.10.2.2, 8.10.2.3
Circulation Element of the Kings County General Plan	Kings County Planning Department	Specifies long-term planning goals and procedures for transportation infrastructure system quality in Kings County.	Project will comply with goals and policies for county transportation and traffic system.	8.10.2.2, 8.10.2.3
Kings County Hazardous Waste Management Plan	Kings County Planning Department	Specifies goals for the safe and effective transfer of hazardous wastes through the county.	Transporters will comply with standards for transportation of hazardous materials on county-maintained roadways and state highways during construction and operations.	8.10.2.2, 8.10.2.3

CCR = California Code of Regulations
CFR = Code of Federal Regulations

FIGURES

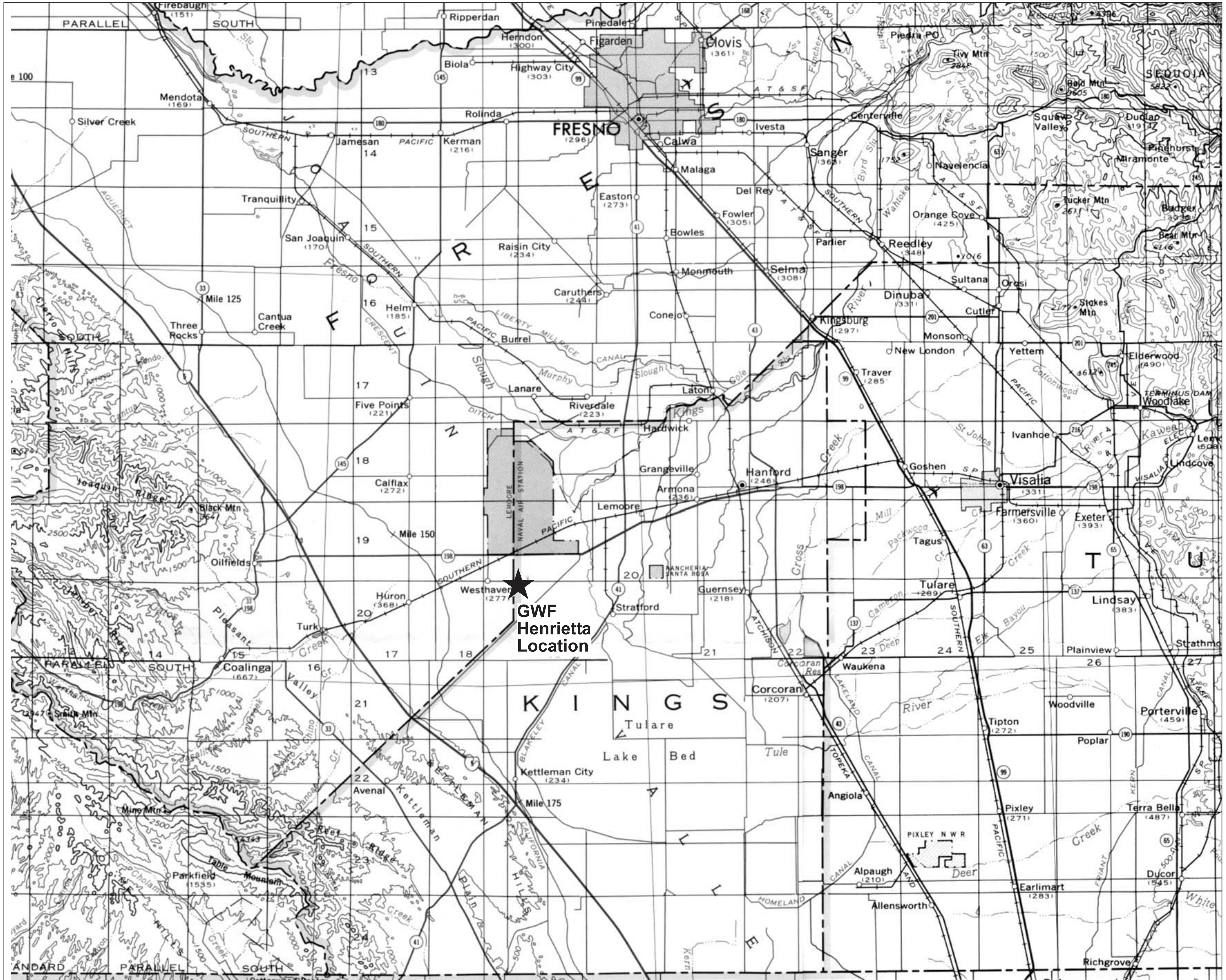

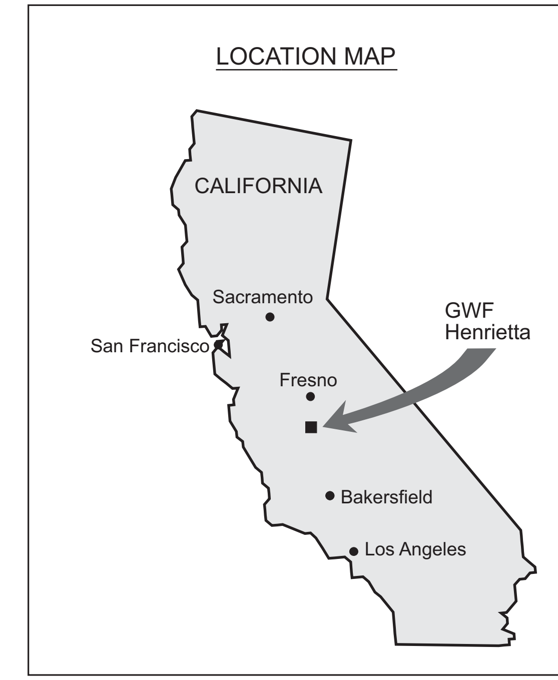

N

0 4 8

Scale in Miles

Source: USGS 1:500,000 Scale Topographic Map of California-South Half

URS

Project No. 51-00167032.00

GWF Henrietta Peaker Project

SITE LOCATION MAP

Figure 8.10-1

51-00167032.00-01011/082301/gos

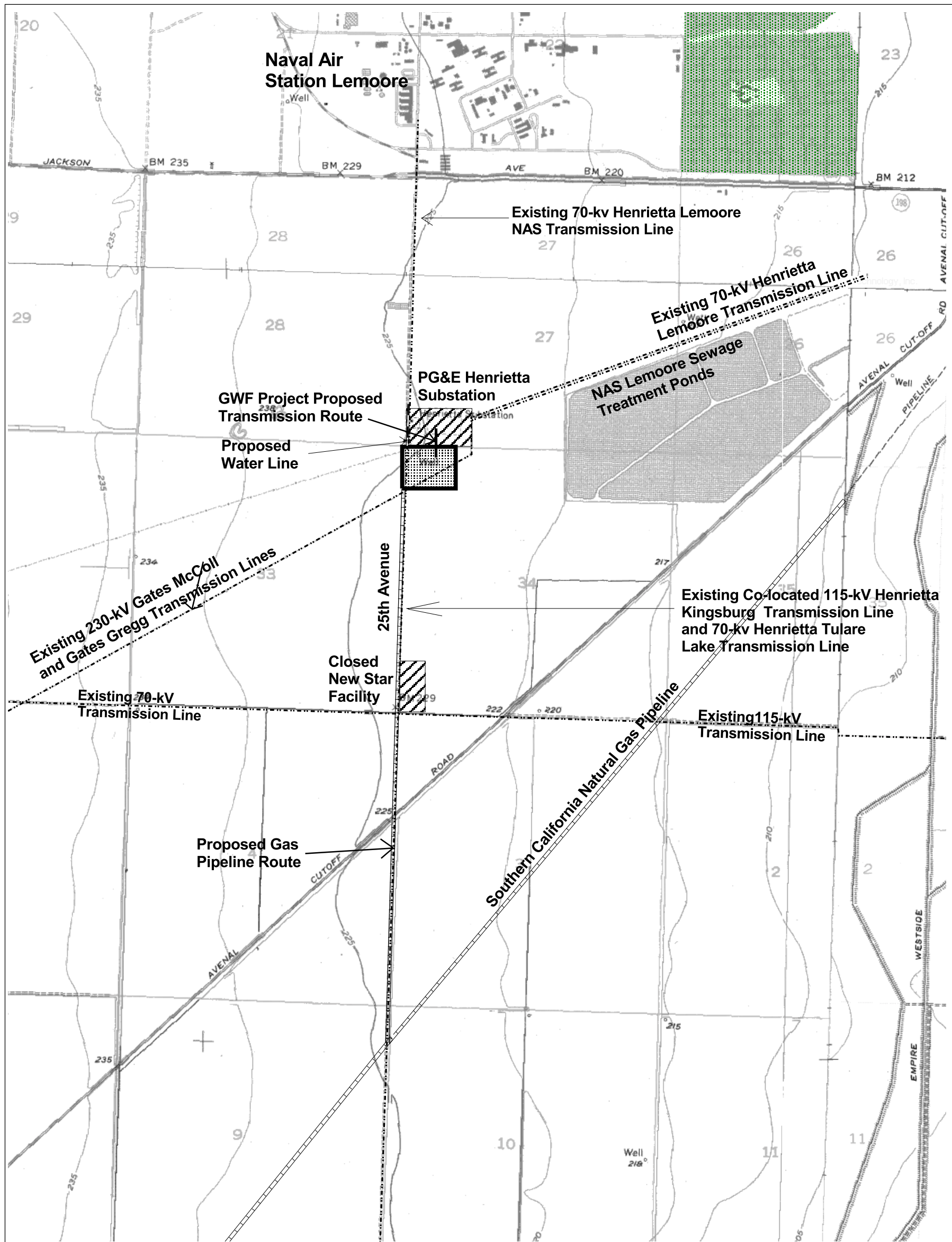

N

0 0.25 0.5 0.75 1 Miles

1000 0 1000 2000 Feet

Scale 1:24,000

Source:
Base Maps from U.S.G.S.
7.5 Minute Quadrangles
Westhaven, Calif., (Photorevised 1981),
Stratford, Calif. (1954), Lemoore (1954) and
Vanguard (1956, Photorevised 1981)

Existing Transmission Lines

Transmission Route

Gas Pipeline Routes

Plant Site

Developed Industrial

URS	GWF Henrietta Peaker Project Project No. 51-00167032.00	Local Roadways in the Immediate Vicinity of the GWF Henrietta Peaker Project	Figure 8.10-2

L:\Projects\GWF_Henrietta\Apr\proj1dhw.apr

8.11 Visual Resources

The Henrietta Peaker Project (HPP) consists of a 91.4-megawatt (MW) (net), natural-gas-fired, simple-cycle power plant located approximately 10 miles southwest of Lemoore, California, on a seven-acre portion of a 20-acre parcel owned by GWF Energy LLC. The HPP will interconnect to the existing adjacent Pacific Gas and Electric Company (PG&E) Henrietta Substation through a new 550-foot 70-kilovolt (kV) transmission line supported on two new transmission poles. Other linear facilities include an approximately 16.5-foot water interconnection pipeline (from the site property boundary) and a 2.2-mile Southern California Gas Company natural gas interconnection pipeline. Additionally, approximately five acres will be used for temporary construction laydown and parking.

This section analyzes the potential for the proposed HPP to cause impacts on the visual resources in the project vicinity. This analysis is conducted in accordance with California Energy Commission (CEC) guidelines for preparing visual impact assessments and the methodology developed by the Federal Highway Administration (FHWA). The analysis also conforms to the documentation requirements of the California Environmental Quality Act (CEQA).

8.11.1 Affected Environment

The HPP is located on 25th Avenue approximately one mile south of the entrance to NAS Lemoore and State Route (SR) 198. A closed commercial warehouse is located approximately 0.7 mile south of the HPP site, on the east side of 25th Avenue. A sewage treatment plant percolation-evaporation pond area, occupying approximately 275 acres and operated by the NAS, is approximately 0.5 mile east of the site. The remainder of the surrounding area is in agricultural use. There are very few residences or other aesthetically sensitive land uses in the immediately vicinity of the site. The closest residents are living in NAS Lemoore housing, located north of SR 198 and approximately 1.5 miles northeast of the HPP. This section presents descriptions of the HPP site, its characteristics, and the visibility of the project components to nearby viewer groups.

Figure 8.11-1 provides a general location map of the project vicinity showing the location of key observation points (KOPs) in the project area. Figures 8.11-2 through 8.11-6 depict existing conditions at each KOP.

8.11.1.1 Description of the HPP Site

The HPP project site is in the south-central portion of the greater San Joaquin Valley in California. The Lemoore region of the valley is an expansive flatland with a strong rural and agricultural character. The HPP site is approximately one mile south of NAS Lemoore, near the western border of Kings County. The population density in the vicinity of the HPP site is extremely low, with no residences within a mile of the site. Most residences in the vicinity of the site are scattered ranch-style homes on parcels ranging up to several hundred acres. The majority of the local population resides on NAS Lemoore and in the city of Lemoore, approximately eight miles to the northeast of the site.

8.11.1.2 Characteristics of the HPP Site

The HPP site is bordered on the west by 25th Avenue, on the north by the PG&E Henrietta Substation, and on the east and south by agricultural property. Several 30- to 40-foot-tall wood poles supporting 115-kilovolt (kV) transmission lines run north and south on the east side of 25th Avenue along the western edge of the property. Additional 115-kV transmission lines run north-south on the west side of 25th Avenue. Three large lattice-type transmission line support towers are located on the southern and eastern fringe of the parcel.

8.11.1.3 Visual Resources in the Vicinity of the HPP Site

Because of the flatness of the area, low-lying vegetation, and intervening industrial development, views of the HPP site are largely limited to those associated with through-traffic on SR 198 or visitors exiting the NAS Lemoore entrance at the intersection of SR 198 and 25th Avenue. A limited amount of traffic on 25th Avenue will also directly pass the site. The intactness and unity of views of the area are low to moderate, due to the presence of the Henrietta Substation adjacent to the HPP site and the existing overhead transmission lines. The location of each KOP in the project area is shown on Figure 8.11-1 and discussed below.

KOP-1. KOP-1 is shown on Figure 8.11-2. KOP-1 is a view looking southwest toward the HPP site from SR 198, between the Avenal Cutoff and 25th Avenue, at a location approximately 1.4 miles east of 25th Avenue. This is the view of the site that would be seen by motorists traveling westbound on SR 198 from the city of Lemoore, Hanford, or other population centers east of the HPP site. The view has low to moderate vividness associated with the agricultural land in the foreground and the silhouette of the low foothills east of the area. The view has low intactness and unity due to the many transmission lines and the Henrietta Substation, which are dominant visual elements in the middleground of the view.

KOP-2. KOP-2 is shown on Figure 8.11-3. KOP-2 represents the view looking southeast from the closest housing to the HPP site, located at NAS Lemoore. These houses are located along SR 198 about one mile east of the intersection of 25th Avenue. These homes are slightly lower in elevation than the SR 198 roadway and will not have a direct line-of-sight view from the first floor. However, a clear view is possible from the second floor of these homes, as represented by KOP-2. This view is very similar to KOP-1, with low to moderate vividness associated with the agriculture in the foreground. The view also lacks (i.e., possesses low) intactness and unity because of the dominant presence of transmission lines and the Henrietta Substation, now somewhat closer in the middleground.

KOP-3. KOP-3 is shown in Figure 8.11-4. KOP-3 is a view of the HPP site looking south from the NAS Lemoore entrance as seen by a visitor of the NAS. This view is considered to have low vividness, as the dominant feature of the view is the intersection of 25th Avenue and SR 198. The agricultural activities in the foreground and the transmission lines and Henrietta Substation in the middleground are incongruous visual elements that compete for the viewer's attention, resulting in a view with low intactness and unity.

KOP-4. KOP-4 is shown in Figure 8.11-5. KOP-4 is a view of the HPP looking southeast from SR 198 approximately 0.5 miles west of 25th Avenue. This view is representative of the view seen by motorists traveling eastbound on SR 198 from Interstate 5 toward NAS Lemoore, the city of Lemoore, Hanford, or other destinations to the east. This is the most visually pleasing view of the site. The view has moderate vividness as a result of the pastoral nature of the foreground agriculture and the contrast created with the sky. The view has

low to moderate intactness and unity, as the Henrietta Substation and transmission lines on the horizon are dominant industrial-type elements that compete with the otherwise natural quality of the landscape.

KOP-5. KOP-5 is shown in Figure 8.11-6. KOP-5 is a view of the HPP from 25th Avenue looking northeast. This view is representative of the view seen by a motorist traveling northbound on 25th Avenue toward NAS Lemoore. The view has low vividness due to the dominance of industrial-type elements, including the transmission lines along the shoulder of 25th Avenue and the various structures within the Henrietta Substation. The view has low intactness and unity, as the substation structures create a strong visual distraction from the agriculture in the foreground.

8.11.1.4 Visibility of the HPP

The HPP includes two 85-foot-tall, 10.5-foot-diameter exhaust stacks. These will be the most visible structures because of their height. Each combustion turbine generator (CTG) power block will be approximately 195 feet long, 20 feet wide, and 30 feet tall. In addition, each CTG inlet air structure will each be approximately 45 feet tall. An air pollution control system structure approximately 85 feet long, 25 feet wide, and 55 feet tall will extend perpendicular to the CTG. The HPP includes a control building that is approximately 85 feet long, 25 feet wide, and 15 to 22 feet tall, in addition to two approximately 30-foot-tall, 40-foot-diameter water storage tanks. Other tanks have smaller dimensions. All of the plant equipment will be located within an approximately 550-foot by 380-foot area surrounded by a neutral-colored, approximately six-foot-high fence. The existing transmission line poles and towers range in height from 75 to 140 feet. Each transmission pole supports a set of three conductors, with insulators separating the wire from the pole. Although these structures are substantially above grade level, the surrounding flat topography will limit contrasting views of the site. In addition, the proposed new transmission interconnection is extremely short, since the Henrietta Substation is directly north and adjacent to the site. Thus, the transmission interconnection will not likely be visible to most viewers. The neutral coloration of the HPP structures will soften their appearance and contrast with surrounding visual elements.

8.11.1.5 Potential for Visible Steam Plumes

The HPP is a simple-cycle project that does not involve the use of either a cooling tower or a heat recovery steam generator. Therefore, no visible steam plumes are expected from the project.

8.11.2 Environmental Consequences

8.11.2.1 Significance Criteria

This section provides a summary of the key evaluation criteria used to identify adverse visual impacts. CEQA Section 15382 includes objects of aesthetic significance in defining "significant effect." CEQA Section 15064 stipulates that public perception must be considered in determining adverse views. According to Appendix G of the CEQA Guidelines, visual resource impacts are defined as significant if a project has a "substantial, demonstrable, negative aesthetic effect."

Appendix I of the CEQA Guidelines adds that an impact is considered significant if it results in "the obstruction of any scenic vista or view open to the public, or result(s) in the creation of an aesthetically offensive site open to public view."

According to the professional standards presented in the CEC *Siting Regulations: Rules of Practice and Procedure and Power Plant Site Certification Regulations* (the CEC Guidelines) (CEC, 1997), a project will normally be considered to have a significant impact on visual resources if it would significantly:

- Conflict with local guidelines or goals related to visual quality;
- Alter the existing natural viewsheds, including changes in natural terrain;
- Alter the existing visual quality of the region or eliminate visual resources;
- Increase light and glare in the project vicinity, particularly nighttime glare;
- Result in backscatter light into the nighttime sky; or
- Result in a reduction of sunlight or the introduction of shadows in community areas.

8.11.2.2 Visual Effects

This section describes the visual and aesthetic impacts associated with the HPP.

KOP-1. A photo-simulation of the proposed HPP from KOP-1 is shown on Figure 8.11-7. Because of the distances involved, the HPP is not dominant in the view, and it appears as an almost imperceptible extension of the Henrietta Substation. While the HPP would further obstruct the view of the foothills in the far field, the obstruction is minimal. The HPP would not significantly change the vividness, intactness, or unity of this view, which remain low to moderate, low, and low, respectively. Therefore, there are no significant impacts on visual resources at KOP-1.

KOP-2. A photo-simulation of the proposed HPP from KOP-2 is shown on Figure 8.11-8. The view is similar to KOP-1 in that the HPP appears to be minor expansion of the Henrietta Substation. The stacks are discernible but not obtrusive and are consistent with other visual elements in the middleground. While the view of the foothills in the far field is more obstructed in this view, the obstruction is still minimal. Thus, the HPP would not result in significant changes to the vividness, intactness, or unity of this view, which remain low to moderate, low, and low, respectively. Therefore, there are no significant impacts on visual resources at KOP-2.

KOP-3. A photo-simulation of the proposed HPP from KOP-3 is shown on Figure 8.11-9. The stacks are clearly discernible but not obtrusive and are consistent with other industrial elements of the Henrietta Substation in the middleground. Thus, the HPP would not result in significant changes to the vividness, intactness, or unity of this view, which remain low, low, and low, respectively. Therefore, there are no significant impacts on visual resources at KOP-3.

KOP-4. A photo-simulation of the proposed HPP from KOP-4 is shown on Figure 8.11-10. The structures of the HPP are a discernible, codominant feature in the view. The vividness and unity of the view remain unchanged, at moderate and low to moderate, respectively. However, the intactness of the view is reduced from low/moderate to low due to the introduction of the new industrial element. This reduction in intactness is not considered

significant, because the existing view is not a high-quality view, and the vividness and unity of the view remain unchanged. Therefore, there are no significant impacts on visual resources at KOP-4.

KOP-5. A photo-simulation of the proposed HPP from KOP-5 is shown on Figure 8.11-11. The structures associated with the HPP are clearly dominant in this view. The HPP obstructs the view of the Henrietta Substation, with only about 50 percent of the Henrietta switchgear still visible between the two HPP units to the east of the HPP. While the HPP will further reduce the visual quality at this KOP, the existing KOP already has low vividness, low intactness, and low unity. There are no significant changes to existing vividness, intactness, or unity of this view. Therefore, there are no significant impacts on visual resources at KOP-5.

Light. The HPP site will be illuminated to provide lighting for normal conditions. Lights will be turned on each night for purposes of security and identification of the facility, and task lighting will be used as necessary. Emergency lighting may be employed during occasional training events. Light will be directed toward the interior of the plant to minimize offsite light and glare impacts. To minimize backscatter light and maintain the current relatively low levels of ambient and fugitive light, and because the purpose of the lighting is to illuminate the surfaces and ground plane of the facility, the lighting fixtures will include shields and hoods to produce downcast.

Glare. Project components at the HPP site will be constructed primarily of painted steel. Although a minimal number of features will have galvanized steel and aluminum surfaces, these materials and surfaces typically corrode, oxidize, and become dull within a few years of installation, depending on weather variability. Because the potential for daytime glare is temporary (given the natural dulling of the surfaces) and the area lacks sensitive visual receptors, glare impacts from the HPP site are considered less than significant.

Summary. Construction and operation of the HPP will not introduce elements into the local viewsheds that substantially different in character from the adjacent Henrietta Substation. The HPP will not obstruct or intrude on any views in a significant way and will not significantly diminish the vividness, intactness, or unity of the local viewsheds. In addition, the

activities associated with plant construction will be compatible with the industrial nature of the area and the existing presence of trucks and equipment.

In summary, the impacts from the construction and operation of the HPP are below significant thresholds for viewsheds, light and glare, and consistency with visual resource guidelines. The visual quality after construction of the HPP will remain consistent with existing conditions. Views of the HPP site will have:

- Low to moderate vividness due to a minimum of diversity, interest, or unique or sensitive features in the landscape and lack of distinct high-quality views
- Low to moderate intactness and unity due to the Henrietta Substation and associated transmission lines, which affect the integrity of the local viewshed

Further, construction of the HPP will not substantially alter the low to moderate vividness and low to moderate intactness of the existing viewshed. Therefore, the impacts from the HPP on visual resources in the study area are considered to be less than significant.

8.11.3 Potential Cumulative Impacts

Cumulative adverse impacts to visual resources in the local and regional vicinity of the HPP site would result from the combined implementation of the HPP and other planned or proposed industrial projects. Currently, no other planned or proposed industrial projects are known in the project vicinity.

8.11.4 Laws, Ordinances, Regulations, and Standards

Conformance with applicable laws, ordinances, regulations, and standards (LORS) is discussed in this section and summarized in Table 8.11-1.

8.11.4.1 Federal

No federal LORS concerning visual resources are applicable to the HPP.

8.11.4.2 State

The CEC Guidelines (CEC, 1997) and Appendices G and I of the CEQA Guidelines provide the criteria used to determine whether project-related visual impacts are significant. These criteria are discussed in Section 8.11.3.1.

8.11.4.3 Local

Kings County does not have specific policies on visual or aesthetic resources that apply to the HPP. However, scenic resources are addressed in the open space element of the Kings County General Plan, which is implemented by the Kings County Planning Department (1998). This element of the General Plan requires public notification and review of any projects that could adversely impact visual resources. The HPP is consistent with the land use designation for the area; therefore, the HPP is considered consistent with the General Plan requirements and the associated visual resource planning purposes.

Numerous methods have been developed to characterize the scenic quality of a viewscape and the viewer response to that resource. A standard approach to visual analysis is the one adopted by the FHWA. This approach employs the criteria of vividness, intactness, and unity (FHWA, 1983; Dunne and Leopold, 1978; Jones et. al., 1975). These criteria are defined as follows:

- *Vividness* is the visual power or memorability of landscape components as they combine in visual patterns.
- *Intactness* is the visual integrity of the natural and artificial landscape and its freedom from encroaching elements. This factor can be present in urban and rural landscapes as well as in natural settings.
- *Unity* is the visual coherence and compositional harmony of the landscape considered as a whole. Unity frequently attests to the careful design of individual components in an artificial landscape.

Visual quality is evaluated based on the relative degree of vividness, intactness, and unity apparent in a viewscape, as modified by its visual sensitivity. High-quality views are highly vivid and relatively intact and exhibit a high degree of visual unity. Low-quality views

lack vividness, are not visually intact, and possess a low degree of visual unity. The measure of the quality of a view must be balanced by the overall sensitivity of the viewer.

Aesthetic sensitivity is described in terms of viewer activity, awareness, and visual expectations in relation to the number of viewers and the viewing duration. For example, commuters and nonrecreational travelers generally have fleeting views and tend to focus their attention away from surrounding scenery and onto commute traffic. For this reason, a viewer group composed of commuting travelers is generally considered to have low aesthetic sensitivity. Residential viewers typically have extended viewing periods and are generally concerned about changes in the views from their homes. As a group, residential viewers are considered aesthetically sensitive.

The visibility and visual dominance of landscape elements are described with respect to their placement within the field of view. Foreground elements are features nearest to the viewer, and background elements are features at a great distance from the viewer. The middleground portion of a view is intermediate between the foreground and the background. A viewshed is defined as all the surface area visible from a particular location or a sequence of locations (e.g., roadway or trail) (FHWA, 1983).

The requirement to evaluate the project under CEQA is the only specific LORS that applies to visual resources. This AFC conforms to CEQA requirements. The project is not expected to have a significant impact on visual resources. Furthermore, the CEC, through its CEQA-equivalent review, will independently determine whether visual resources are impacted. The CEC license, when granted, will incorporate conditions of certification deemed necessary to ensure that the facility conforms with all applicable LORS and will not have a significant impact on the environment. Therefore, the project will comply with all applicable LORS.

8.11.5 Mitigation Measures

The impacts of the HPP and its transmission line on visual resources are considered less than significant; therefore, no mitigation measures are needed.

8.11.6 Proposed Conditions of Certification

Proposed conditions of certification are contained in Appendix K. These conditions are proposed in order to ensure compliance with applicable LORS and/or to reduce potentially significant impacts to less-than-significant levels.

8.11.7 Agency Contacts and Required Permits or Approvals

Applicable agency contacts are listed below. No permits or other approvals are required for visual resources.

Agency	Contact	Telephone
Kings County Department of Public Works 1400 West Lacey Boulevard Hanford, CA 93230	Harry Vechuel Public Works Director	(559) 582-3211

8.11.8 References

California Energy Commission (CEC), 1997. *Siting Regulations: Rules of Practice and Procedure and Power Plant Site Certification Regulations.*

Dunne, T., and L. B. Leopold, 1978. *Water in Environmental Planning*. San Francisco, CA.: W. H. Freeman and Company.

Federal Highway Administration (FHWA), 1983. Visual Impact Assessment for Highway Projects. Contract DOT-FH-11-9694. Washington, D.C.

Jones, G. R., J. Jones, B. A. Gray, B. Parker, J. C. Coe, J. B. Burnham, and N. M. Geitner. 1975. A Method for the Quantification of Aesthetic Values for Environmental Decision Making. *Nuclear Technology* 25(4): 682–713.

Kings County Planning Department, 1998. Kings County General Plan. Updated.

TABLES

Table 8.11-1
Laws, Ordinances, Regulation, and Standards for Visual Resources

Jurisdiction	Authority	Administering Agency	AFC Conformance Section
Federal	None applicable.	Not applicable	Not applicable
State	California Environmental Quality Act, Public Resources Code §§ 15382, 15064, Guidelines: Appendices G and I	California Energy Commission	8.11.4.2; 8.11.3.1
Local	Kings County General Plan, Open Space Element	Kings County Community Development Department	8.11.4.3

FIGURES

Naval Air Station Lemoore

Existing 70-kv Henrietta Lemoore NAS Transmission Line

Existing 70-kV Henrietta Lemoore Transmission Line

NAS Lemoore Sewage Treatment Ponds

PG&E Henrietta Substation

GWF Project Proposed Transmission Route

Proposed Water Line

25th Avenue

Existing 230-kV Gates McColl and Gates Gregg Transmission Lines

Existing Co-located 115-kV Henrietta Kingsburg Transmission Line and 70-kv Henrietta Tulare Lake Transmission Line

Closed New Star Facility

Existing 70-kV Transmission Line

Existing115-kV Transmission Line

Southern California Natural Gas Pipeline

Proposed Gas Pipeline Route

N

0.25 0 0.25 0.5 0.75 1 Miles

1000 0 1000 2000 Feet

Scale 1:24,000

Source:
Base Maps from U.S.G.S.
7.5 Minute Quadrangles
Westhaven, Calif., (Photorevised 1981),
Stratford, Calif. (1954), Lemoore (1954) and
Vanguard (1956, Photorevised 1981)

Existing Transmission Lines

Transmission Route

Gas Pipeline Routes

Water Line

Plant Site

Areas Surveyed

Developed Industrial

URS

GWF Henrietta Peaker Project

Project No. 51-00167032.00

Location of Key Observation Points in the HPP Viewshed

Figure 8.11-1

L:\Projects\GWF_Henrietta\Apr\proj1dhw.apr

URS	GWF Henrietta Peaker Project Project No. 51-00167032.00	Existing Conditions at KOP-1	Figure 8.11-2

L:\Projects\GWF_Henrietta\Apr\proj1dhw.apr

URS	GWF Henrietta Peaker Project Project No. 51-00167032.00	Existing Conditions at KOP-2	Figure 8.11-3

L:\Projects\GWF_Henrietta\Apr\proj1dhw.apr

URS	GWF Henrietta Peaker Project Project No. 51-00167032.00	Existing Conditions at KOP-3	Figure 8.11-4

L:\Projects\GWF_Henrietta\Apr\proj1dhw.apr

URS	GWF Henrietta Peaker Project Project No. 51-00167032.00	Existing Conditions at KOP-4	Figure 8.11-5

L:\Projects\GWF_Henrietta\Apr\proj1dhw.apr

URS	GWF Henrietta Peaker Project Project No. 51-00167032.00	Existing Conditions at KOP-5	Figure 8.11-6

L:\Projects\GWF_Henrietta\Apr\proj1dhw.apr

URS	GWF Henrietta Peaker Project Project No. 51-00167032.00	Photosimulation of Proposed HPP at KOP-1	Figure 8.11-7

L:\Projects\GWF_Henrietta\Apr\proj1dhw.apr

URS	GWF Henrietta Peaker Project Project No. 51-00167032.00	Photosimulation of Proposed HPP at KOP-2	Figure 8.11-8

L:\Projects\GWF_Henrietta\Apr\proj1dhw.apr

URS	GWF Henrietta Peaker Project Project No. 51-00167032.00	Photosimulation of Proposed HPP at KOP-3	Figure 8.11-9

L:\Projects\GWF_Henrietta\Apr\proj1dhw.apr

URS	GWF Henrietta Peaker Project Project No. 51-00167032.00	Photosimulation of Proposed HPP at KOP-4	Figure 8.11-10

L:\Projects\GWF_Henrietta\Apr\proj1dhw.apr

URS	GWF Henrietta Peaker Project Project No. 51-00167032.00	Photosimulation of Proposed HPP at KOP-5	Figure 8.11-11

L:\Projects\GWF_Henrietta\Apr\proj1dhw.apr

8.12 Hazardous Materials Handling

8.12.1 Affected Environment

The Henrietta Peaker Project (HPP) consists of a 91.4-megawatt (MW) (net), natural-gas-fired, simple-cycle power plant located approximately 10 miles southwest of Lemoore, California, on a seven-acre portion of a 20-acre parcel owned by GWF Energy LLC. The HPP will interconnect to the existing adjacent Pacific Gas and Electric Company (PG&E) Henrietta Substation through a new 550-foot 70-kilovolt (kV) transmission line supported on two new transmission poles. Other linear facilities include an approximately 16.5-foot water interconnection pipeline (from the site property boundary) and a 2.2-mile Southern California Gas Company (SoCalGas) natural gas interconnection pipeline. Additionally, approximately five acres will be used for temporary construction laydown and parking.

The project will consist of two General Electric LM6000 combustion turbine generators (CTGs) operating in simple-cycle mode on a 16 hour/day, six-day/week schedule. The CTGs will be equipped with inlet air filtration, evaporative cooling, and a standard acoustical enclosure. Each turbine exhaust will be equipped with an oxidation catalyst for control of carbon monoxide (CO) and volatile organic compounds (VOCs) and an aqueous-ammonia-type selective catalytic reduction (SCR) system for control of nitrogen oxides (NO_x). The plant will be designed to conform to the California Air Resources Board (CARB) Best Available Control Technology (BACT) guidelines. Actual emissions will be at or below BACT guidelines, as follows: 3.6 parts per million by volume, dry (ppmvd) NO_x, 6 ppmvd CO, and 2 ppmvd VOCs, all corrected to 15 percent oxygen.

Water will be supplied to the HPP by the Kings County and Westlands Water District using existing water rights. The project will not include a cooling tower and will therefore have a minimal water demand. Wastewater will be recycled using a near-zero-discharge system. Water that cannot be recycled and used on site will be trucked off site for appropriate disposal.

The surrounding property is primarily agricultural. The nearest public receptors are workers or neighboring residents/businesses. The nearest residences are approximately 1.5

miles north and east at Naval Air Station (NAS) Lemoore housing. A trucking business is located approximately 0.9 miles south of the site. A Pacific Bell office is located approximately 1.3 miles to the northeast. Land use is discussed in more detail in Section 8.4 of this Application for Certification (AFC).

This section reviews the hazardous materials that will be handled, used, and stored at the HPP. This section also provides the procedures and engineering controls to be employed to minimize potential environmental impacts from the use of these materials.

The HPP will use one substance designated by federal law as acutely hazardous, aqueous ammonia, to control emissions of NO_x. This section provides information on a potential accidental release of aqueous ammonia, the impacts of such a release, and proposed mitigation measures.

8.12.1.1 Flooding Concerns

There are no permanent bodies of water near the HPP site. Flood hazard maps for the site show that the project area is not subject to flooding, and that the project is outside of the 100-year floodplain (see Figure 8.14-3 for the Federal Emergency Management Agency floodplain map for the HPP site).

The largest storm event in the region recorded by the National Oceanic and Atmospheric Administration measured 4.3 inches of rainfall. The storm occurred on February 1, 1998 in Hanford, California, approximately 15 miles to the east of the HPP site. The average monthly precipitation for the area is 1.5 inches during the winter and 0 inches during the summer. The hydrology of the site is discussed in more detail in Section 8.14 (Water Resources) of this AFC. Hazardous materials storage areas will be designed to withstand weather impacts in accordance with Article 80 of the Uniform Fire Code.

8.12.1.2 Seismic Concerns

The HPP site is approximately 65 miles west of the Sierra Nevada fault and 50 miles east of the San Andreas fault. According to the U.S. Geological Survey, 54 earthquakes

have been reported within a 25-mile radius of the proposed HPP site since 1979. Ninety-six percent of these earthquakes had magnitudes of 4.0 or less.

The HPP will be built in accordance with the California Building Code 1998 Seismic Zone 3 requirements. The aqueous ammonia tank will be designed and installed in accordance with seismic and other criteria in Article 80 of the Uniform Fire Code. The seismic hazards associated with the aqueous ammonia process will be addressed in the Hazard and Operability Study that will be conducted as part of the Progress Safety Management (PSM) and California Accidental Release Prevention (CalARP) programs. Additional information on seismic and geologic issues is provided in Section 8.15 (Geologic Resources and Hazards) of this AFC.

8.12.1.3 Potential Environmental and Human Health Effects

This section reviews the hazardous materials that will be used and stored on site during the construction and the operation and maintenance phases of the HPP. Hazardous and extremely hazardous substances will be stored and handled according to applicable laws, ordinances, regulations and standards (LORS).

8.12.1.4 Hazardous Materials Used in the Construction Phase

During the construction phase of the HPP, the following hazardous materials will be used: gasoline, diesel fuel, motor oil, hydraulic fluid, lubricants, solvents, cleaners, sealers, paints, and paint thinner. The potential for environmental and human health effects associated with these hazardous materials is minimal, and storage quantities will be minimized. Information on the storage quantities, storage types, uses, and hazards of these materials is shown in Table 8.12-1.

The most likely incident involving hazardous materials during construction is a small spill or release of fuels, solvents, paints, or lubricants. The potential for adverse health effects will be avoided by quickly cleaning up any spill that occurs and ensuring that workers are adequately trained to recognize the hazards associated with such spills. A more serious incident

could involve a service or refueling vehicle. Such incidents can be avoided by following proper safety procedures and using an informed construction crew.

In case of an accident, the Kings County Fire Department will be notified as the first responder. All other federal, state, and local notification requirements will be followed for any release that exceeds the reportable quantity or threatens to have a significant impact. The HPP will comply with all requirements for hazardous materials transportation on state highways.

In summary, due to the small quantities of hazardous materials that will be used during construction, no adverse environmental or human health impacts are anticipated.

8.12.1.5 Hazardous Materials Used in the Operation and Maintenance Phase

A variety of hazardous materials in small volumes and one extremely hazardous substance will be used and/or stored on site during operation of the HPP. These hazardous materials are listed in Table 8.12-2, along with information on categories of each hazardous material and other information. The locations of some of these hazardous materials are shown in Figure 8.12-1. Table 8.12-3 shows the characteristics of the hazardous materials used during operation and maintenance of the facility.

The hazardous materials that will be used during the operation and maintenance phase are typical of those used at other industrial facilities and include oils, solvents, and other products. Hazardous materials will be handled and stored in accordance with applicable codes and regulations. Incompatible materials will be stored in separate storage containment areas (i.e., locked storage sheds). Areas susceptible to potential leaks and/or spills will be paved and bermed or have other secondary containment. Piping and tanks will be protected from potential traffic hazards by concrete barriers or concrete-filled pipe bollards. The HPP will comply with all requirements for hazardous material transportation on state highways.

Additional information on the hazardous substances regulated under the CalARP program is provided below.

8.12.1.6 Acutely Hazardous Substances Used in Operation of the Project

The proposed HPP will use a 29.5 percent aqueous ammonia solution for SCR of NO_x emissions. Aqueous ammonia storage and handling facilities will be equipped with continuous tank level monitors, temperature monitors, and excess flow and emergency block valves. A secondary containment tank beneath the tank-truck-unloading pad will be provided so that in the event of an inadvertent release from the tank truck, the liquid will be contained within the secondary structure. The secondary containment tank will have an approximately 10-inch-diameter opening for spills to enter into the tank. The small size of the secondary-containment tank opening will restrict ammonia vapor releases to the atmosphere. Maintenance access to the underground secondary containment tank will be via a trap door and ladder.

Tank trucks will be unloaded in an engineered, reinforced-concrete, tank-truck-unloading area. This unloading area will be constructed of concrete that has chemically resistant coating. The unloading area will be sloped to drain into the underground secondary containment tank. A piping and instrumentation diagram for the aqueous ammonia process is shown on Figure 8.12-2. The thresholds adopted for aqueous ammonia are listed below:

Program	Administrative Agency	Threshold Quantity
CalARP Program[1]	Office of Emergency Services/Administering Agency	500 pounds
Risk Management Plan	U.S. Environmental Protection Agency	20,000 pounds (ammonia content basis)

[1] Substances regulated under California Accidental Release Prevention (Cal/ARP) were called "acutely hazardous materials" under the former Risk Management and Prevention Program.

Although ammonia poses numerous physical and health hazards, as explained below, a 29.5 percent aqueous ammonia solution is safer than anhydrous ammonia.

Physical Hazards of Ammonia. Aqueous ammonia is stored and transported as a liquid under ambient temperature and pressure. Ammonia is incompatible or reactive with the following: strong oxidizers, acids, halogens, and silver and zinc salts. It is also corrosive to copper and galvanized surfaces. Ammonia gas is generally regarded as nonflammable; however, it can burn. Under certain conditions, mixtures of ammonia gas and air will explode when ignited. It has a lower explosive limit of 15 percent, and an upper explosive limit of 28 percent.

Health Hazards of Airborne Ammonia. Airborne ammonia is corrosive, highly toxic, and extremely irritating to any exposed tissues. Contact can cause severe burns of the skin or eyes. Exposure can cause headaches, loss of sense of smell, and nausea. Higher levels may irritate the lungs and cause coughing and/or shortness of breath. Very high exposures can cause pulmonary edema, which can lead to death.

With proper protection, the adverse effects of exposure to ammonia can be reduced or eliminated. The threshold limit value set by the American Conference of Governmental Industrial Hygienists (ACGIH) is 25 parts per million (ppm) (ACGIH, 1996). Exposure limits set by ACGIH, the National Institute for Occupational Safety and Health, and the Occupational Safety and Health Administration (OSHA) are listed in Table 8.12-4.

Other exposure limits include the Emergency Response Planning Guidelines (ERPG), developed by the American Industrial Hygiene Association. ERPG Level 2 corresponds to the concentration that persons may be exposed to for up to an hour without suffering irreversible health effects. The U.S. Environmental Protection Agency (U.S. EPA) uses ERPG-2 as the toxic endpoint for Risk Management Plan (RMP) accident analyses; facilities with public receptors within a circle delineated by the toxic endpoint are required to develop a prevention program for the chemical process.

ERPG levels are shown in Table 8.12-5, along with other values that are considered by the California Energy Commission (CEC) for siting purposes.

8.12.3 Offsite Consequence Analysis

This section presents an Offsite Consequence Analysis (OCA) and evaluation of potential acute public health impacts from an accidental release of acutely hazardous materials. An evaluation of materials to be stored and used on site was made against both the federal and state lists of acutely hazardous materials regulated under the federal RMP and CalARP requirements. Both programs require an OCA if maximum storage quantities of regulated substances exceed threshold quantities. The only material that may be stored and used on site by the HPP in excess of state thresholds is aqueous ammonia.

The OCA involves two accidental release scenarios. The first scenario is considered an "alternative" release scenario. The second scenario is considered a worst-case release and serves to determine which RMP program level would apply to the aqueous ammonia process. This is discussed further in Section 8.12.4.6.

8.12.3.1 Accidental Release Scenarios

One 9,000-gallon, doubled-walled tank will store aqueous ammonia in a 29.5 percent concentration. Potential accidental release scenarios due to aqueous ammonia handling and use include losses from the storage tank, losses during truck unloading to the storage tanks, losses in the liquid ammonia delivery system from the storage tanks to the vaporizer, and losses of vaporized ammonia during delivery to the SCR catalyst beds. All of these steps of the ammonia storage and handling system were evaluated. Because of safety shutoff systems associated with delivery of aqueous ammonia from the tanks to the vaporizer, and of ammonia vapor to the SCR, potential ammonia release quantities from these system components in the event of an upset condition are small compared to losses from the storage tanks or from truck unloading. The storage tank will be a double-walled tank. In the event of a failure of the inside tank wall, tank contents will be contained within the exterior tank wall. This "passive" mitigation system does not require any further mechanical systems to contain the tank contents. Since this passive mitigation will be in place and the probability of a double-wall rupture is extremely unlikely, the truck unloading accident was identified as the "worst-case" scenario. For the purposes of this assessment, the alternative release analysis also considered a truck unloading accident, since mitigation for the storage tank will be passive, but under alternative meteorological conditions.

The aqueous ammonia unloading station will be an engineered tank-truck-unloading area, paved with reinforced, sealed concrete. The unloading area will slope to a center drain leading to an underground containment tank. The underground tank will be adequate to hold the entire contents of a single, 6,700-gallon delivery truck plus a wash-water allowance.

The worst-case release scenario involving truck unloading assumes that the truck contents will empty and drain into the underground tank. The release scenario is summarized below:

Ammonia Release Scenario. The accidental release occurs during truck unloading. The spilled aqueous ammonia splashes as it releases and drains to the underground containment tank, after which time ammonia will evaporate only through the 10-inch opening of the inlet drain. The resulting emissions release is assumed to last 60 minutes until the tank can be closed.

Release assumptions are summarized below. Release rates, which assume liquid temperatures that are 20 degrees Fahrenheit (°F) above ambient temperatures, are summarized in Table 8.12-6. The ambient temperatures analyzed were 115 °F (slightly higher than the 112 °F maximum summertime temperature,[1] 95 °F (representative of average maximum summertime temperatures), and 63 °F (representative of the annual mean temperature).[2] The assumption of the aqueous ammonia temperature inside the underground contaminant tank being 20 °F above ambient provides for a conservative calculation of evaporation rate, since the liquid temperature inside the underground tank is not expected to be this high.

Emissions due to evaporation of ammonia inside the containment tank were estimated from the following U.S. EPA model for evaporative emissions from a single-phase low-volatility liquid (U.S. EPA, 1993):

$$E = 6.94\times10^{-7}(1+0.0043\ (T_a - 273.15)^2)\ u_r^{0.75}\ A_p\ M\ (p_v/p_{vh})$$

where: E = emission rate (kg/s)

u_r = ambient wind speed at 10-m altitude (meters per second [m/s])

T_a = ambient temperature (°K); here T_a must be greater than 273.15°K

[1] Data from a 51-year meteorological record for Fresno obtained from http://www.ncdc.noaa.gov/ol/climate/online/ccd.

[2] The annual mean temperature of 63.6 °F from a 30-year meteorological record from Fresno, and the 62.8 °F annual average temperature from the 1968 NAS Lemoore meteorological data set. (Note that National Weather Service data from Hanford provided an annual average temperature of 61.5 °F.)

A = pool area (m^2)

M = molecular weight (kg/kgmol)

p_v = vapor pressure of the chemical (Pa)

p_{vh} = vapor pressure of hydrazine at T_a (Pa)

The value for p_{vh} is given by:

$$p_{vh} = \exp[76.8580 - (7245.2/T_a) - 8.22\ln(T_a) + 0.006155T_a]$$

The predicted emissions are a function of the "pool area," ambient temperature, ambient wind speed, molecular weight of the liquid, and vapor pressure of the ammonia above the liquid. For the purposes of this emission assessment, the "pool area" was set equal to the opening of the 10-inch-diameter drain. The assumption is that evaporation of ammonia inside the underground containment tank is accounted for by ammonia vapor pressure and temperature, and that ambient wind speed accounts for convection of the ammonia vapor from the effective emission area (the drain opening).

Example Calculation

Pool surface area:

Diameter = 10 inches = **0.0507 m^2**

Ambient temperature of 115 °F; ammonia temperature 135 °F, wind speed of 1.0 m/s:

Vapor pressure of 29.5% ammonia: **2,211 mm Hg (293,842 Pa**) at 135 °F (interpolated from data in Perry's *Chemical Engineer's Handbook*, 5th Edition, Table 3-23, p.3-68).

Vapor pressure of hydrazine: **10,758 Pa** at 135 °F (calculated from equation above)

$$E = [6.94\times10^{-7}(1+0.0043\ (\mathbf{330.37} - 273.15)^2)\ (\mathbf{1.0})^{0.75}\ (\mathbf{0.0507})\ (17)\ (\mathbf{293,842})/(\mathbf{10,758})]$$

$$= 0.0002464\text{kg/s} = \mathbf{0.2464}\ \text{g/s}$$

8.12.3.2 Meteorological Conditions

Atmospheric dispersion modeling requires the input of various meteorological conditions. Low wind speeds and stable atmospheric conditions inhibit pollutant dispersion, resulting in higher pollutant concentrations. Higher wind speeds and/or neutral to unstable atmospheric conditions provide for better pollutant dispersion. The 1968 meteorological data from NAS Lemoore were used to determine the frequency distribution of wind speed and stability combinations. These data indicate that the most prevalent wind speeds are 46 knots (2.06 m/s to 3.09 m/s), occurring about 30.2 percent of the time. The most prevalent atmospheric stability is F (very stable), occurring 27.8 percent of the time. However, F stability is already covered by the assumed worst-case meteorological conditions (with a 1-m/s wind speed). The next most prevalent atmospheric stability is D (neutral), occurring 26.9 percent of the time, which could be associated with 2–3 m/s winds. Therefore, a wind speed of 2.5 m/s and D atmospheric stability represent reasonable average meteorological conditions for the project area.

The U.S. EPA requires that worst-case OCA modeling be performed assuming a wind speed of 1.5 m/s with a stability class of F (stable) (U.S. EPA, 1998). This meteorological condition will generally result in overpredictive (conservative) concentrations. For the HPP, worst-case modeling was performed with a wind speed of 1.0 m/s and F stability to provide even more conservatism. The alternative meteorological analysis used a stability class of D and a wind speed of 2.5 m/s. Three ambient temperatures were used to assess potential impacts: 63 °F, 95 °F, and 115 °F (the latter temperature being representative of extreme summer conditions used in the worst-case analysis; the “alternative” meteorological analysis used the average maximum summertime temperature of 95 °F).

8.12.3.3 Endpoints

The OCA establishes an impact zone or a zone of vulnerability that depends upon the "endpoint." The endpoint corresponds to a concentration that is associated with a certain health effect. Any receptors between the source and this endpoint (i.e., within the impact zone) could experience the specified health effect. The four endpoints specified by the CEC for the OCA are 75 ppm, 200 ppm, 300 ppm, and 2,000 ppm. See Section 8.12.2.3 for a discussion of the health effects associated with these concentrations.

8.12.3.4 Atmospheric Dispersion Modeling

Atmospheric dispersion modeling was performed to estimate downwind concentrations of ammonia for the hypothetical release scenario discussed in Section 8.12.3.1. The dispersion modeling provided a conservative estimate of the zone of vulnerability (the maximum downwind distance at which a specific level of concern may potentially be exceeded).

The U.S. EPA–approved SCREEN3 dispersion model, Version 96043, was used (USEPA, 1995). SCREEN3 is a Gaussian steady-state dispersion model that can calculate potential ground-level air pollutant concentrations from either a point or area source. It is considered a screening-level model in that it predicts air pollutant concentrations based on 10-minute-average dispersion factors (which are conservatively taken to represent up to 1-hour concentrations) under either: (1) a prescribed wind speed–stability class combination, or (2) an assumed array of potential wind speed–stability class combinations, reporting the maximum predicted concentrations at any downwind distance under any of the meteorological conditions in the array. Ammonia vapor is lighter than air. Therefore, emissions associated with the evaporating ammonia would mix rapidly with the surrounding air and result in a neutrally buoyant plume. The area source for these runs was taken to be the area of the 10-inch drain opening to the underground containment tank.

8.12.3.5 Discussion of OCA Results

The SCREEN3 model provides concentration outputs with respect to distance from the release location. The radii of influence (distance from the source) to the four CEC-

identified levels of concern (75 ppm, 200 ppm, 300 ppm, and 2,000 ppm) for the different meteorological conditions are summarized in Table 8.12-7. Figures 8.12-3, 8.12-4, and 8.12-5 are graphs that show concentrations of ammonia as they decrease with distance for the ambient temperatures of 115 °F, 95 °F, and 63 °F, respectively. Figure 8.12-6 illustrates the radii of influence for the worst-case wind speed–stability class combination at 115 °F ambient temperature (worst-case meteorology), and Figure 8.12-7 shows the radii of influence for the annual average wind speed–stability combination at 95 °F ambient temperature (alternative-case meteorology). The circles shown on Figures 8.12-6 and 8.12-7 indicate the radii of influence equal to the maximum downwind distances corresponding to the concentration of ammonia modeled. Dispersion modeling files can be found in Appendix B.

Even under worst-case meteorological conditions (F stability, 1-m/s wind speed, 115 °F), concentrations of ammonia from the HPP site are estimated to fall below 75 ppm approximately 36.3 meters (119 feet) from the truck unloading area, which would not go off site. Under alternative-case meteorology (D stability, 2.5-m/s wind speed, 95 °F), the distance to 75 ppm falls to 13.62 meters (45 feet) from the truck unloading area.

It is important to note that this OCA is ultraconservative. For example, the worst-case meteorology used in the analysis (ambient temperature of 115 °F, F stability, and 1-m/s winds) would not realistically occur. Stable atmospheres and low winds are associated with typical nighttime and morning conditions, when ambient temperatures are not expected to be this high.

In summary, no significant offsite public health consequences due to an ammonia release are expected to occur, based on the results of the OCA. Power plant workers in the vicinity of the aqueous ammonia truck unloading area could be exposed to harmful concentrations of ammonia in the unlikely event of an accidental release, and may need to take protective action upon detection of ammonia odors. The proposed project design includes measures to reduce the likelihood and consequences of an accidental aqueous ammonia release. As discussed in Section 8.7 (Worker Safety), workers at the HPP facility will be trained to avoid and respond to accidental releases of hazardous materials, including aqueous ammonia. A checklist will be used whenever ammonia is delivered that reminds operators to shut the valves on the vapor return line

after delivery. The mechanical integrity program will ensure that the check valve on the vapor return line is regularly tested and inspected and replaced at prescribed intervals. Limited personal protective equipment will be available in a specified location in the event such equipment is required by emergency response personnel to approach the tank and stop the release. These systems will also be inspected and tested at prescribed intervals.

8.12.3.6 RMP Program Level

Both the U.S. EPA and California RMP requirements prescribe three program levels. The proposed aqueous ammonia system will require an RMP to satisfy California (CalARP) requirements. The quantity of aqueous ammonia on site is below the federal program level. CalARP regulations define program levels in accordance with California regulation (California Code of Regulations [CCR] 25531). Processes qualify for the lowest level (Level 1) if:

- There are no public receptors within a distance to an endpoint from a worst-case release.
- The facility has coordinated emergency response activities with local responders.
- The process has had no release of a regulated substance in the past five years that resulted in one or more offsite deaths, injuries, or response or restoration activities.

The HPP will coordinate emergency response activities with local responders, and as a newly proposed facility, there is no offsite accident history. The remaining Level 1 qualification is whether there are public receptors within a distance to an endpoint from a worst-case release. Under federal regulations, the toxic endpoint for ammonia is the ERPG-2 level of 200 ppm. The distance to 200 ppm under worst-case meteorology is 20.77 meters (68 feet) from the truck unloading area, which does not go off site. Thus, there are no public receptors within the offsite distance to ERPG-2, and the HPP is therefore eligible for Level 1 status under CalARP regulations, pursuant to CCR 25531.

8.12.4 Fire and Explosion Risk

As shown in Tables 8.12-1 and 8.12-2, several materials that will be used and/or stored on site during construction and operation of the proposed HPP are flammable. The following discussion focuses on the fire and explosion risk posed by lubricating oils and natural gas. These materials are considered to pose a greater risk than the other flammable substances, either because they are handled in large quantities (lubricating oils) or because they have a National Fire Protection Association (NFPA) fire rating of 4 (natural gas). The NFPA 4 rating is used only for substances that pose an extreme fire or explosion risk.

8.12.4.1 Lubricating Oils

Approximately 14,000 gallons of insulating oil will be used in the transformers at the HPP. A total of 7,400 gallons of lubricating oil will be used in rotating equipment and stored on site. The flashpoints of mineral oil and lubricating oil are 444 °F and 315–366 °F, respectively (Sax, 1992). NFPA assigns lubricating oils a fire hazard rating of 1, meaning that the materials "must be preheated before ignition can occur. Materials in this degree range require considerable preheating, under all ambient temperature conditions, before ignition and combustion can occur" (NFPA, 1991).

Because an external event, such as a fire, could preheat these materials to the point of ignition, fire suppression equipment will be available near the transformers and the lubricating oil storage area. As an additional mitigation measure, no mineral insulating oil will be stored on site.

8.12.4.2 Natural Gas

Natural gas has an NFPA rating of 4. The main component of natural gas, methane, is regulated under the RMP and the CalARP when used in processes in excess of 10,000 pounds. Natural gas will not be stored on site, but will be drawn from the pipeline that supplies gas to the facility. Therefore, the quantity of natural gas on site will be below the RMP and CalARP thresholds. Therefore, natural gas will not be regulated under RMP or CalARP

requirements. Approximately 24,000 million British thermal units (MMBtu) will be required at the HPP on a daily basis.

Approximately 2.2 miles of new 12-inch pipeline will be installed to connect the proposed HPP to the SoCalGas Company Line 800, 1.1 miles south of the intersection of 25th Avenue and Avenal Cutoff. An analysis of natural gas pipeline safety was conducted in 1993 and 1994 by the Sacramento Municipal Utility District and Woodward-Clyde, respectively (Woodward-Clyde, 1998). This safety analysis studied the incremental individual fatality risk per mile of 800 new miles of natural gas pipeline to be constructed in California. The results of this study indicated that the risk associated with the new pipeline was much lower than that for fires, earthquakes, electrocution, and lightning strikes in California. These conclusions can be applied to the pipeline proposed for the HPP.

8.12.5 Proposed Mitigation Measures

As discussed throughout this section, the proposed HPP will implement numerous accident prevention and mitigation measures to reduce the risk associated with the usage and storage of hazardous materials. Risk is a function of both the likelihood of a release and the consequences of a release. Although risk cannot be completely eliminated, the engineering and procedural features of the HPP will effectively reduce the possibility and potential consequences of a release.

The key prevention and mitigation features of the HPP include:

- Construction and operations personnel will be trained in safety and defensive emergency response procedures.
- Storage quantities of all hazardous materials will be minimized and nonhazardous materials will be substituted for hazardous materials at the Henrietta facilities to the extent practicable.
- Incompatible materials will be stored in separate, bermed or otherwise secondarily contained areas.
- Piping and tanks will be protected from potential traffic hazards by vehicle barriers.

- Personnel will be trained in the hazards of the materials they handle and in preventing accidents.
- Personnel will be trained in the use of fire suppression equipment, evacuation, notification, and other defensive emergency response procedures. (Information on fire suppression equipment is provided in Section 8.7.3.2 of this AFC application.)

The following prevention and mitigation measures will be implemented in the design and operation of the aqueous ammonia process:

- To prevent incidents associated with ammonia delivery, a trained HPP operator will be present at all times during delivery of aqueous ammonia and will follow a checklist of procedures.
- The mechanical integrity program will ensure that all valves in the ammonia process are regularly tested and inspected and replaced at prescribed intervals.
- Personal protective equipment will be available in a specified location in the event it is required by plant personnel to approach the tank and stop a release.

Additional accident prevention measures are mandated by various regulations. These measures are discussed below.

8.12.5.1 Transportation/Delivery of Hazardous Materials

Hazardous materials will be delivered to the HPP site periodically. Transportation of these materials will comply with all applicable regulations of the U.S. Department of Transportation, U.S. EPA, California Department of Toxic Substances Control, California Highway Patrol, and California State Fire Marshal. Transportation of aqueous ammonia will comply with the specific regulations in California Vehicle Code Section 32100.5 regarding materials that pose an inhalation hazard.

8.12.5.2 Hazardous Materials Business Plan

A Hazardous Materials Business Plan will be prepared prior to delivery of specified hazardous materials to the HPP, in conformance with Title 19 CCR and Health and Safety Code Section 25504. The plan requires facilities to develop the following information:

- Facility map showing locations of hazardous materials and emergency response equipment
- Hazardous materials inventory, including material safety data sheets (MSDSs)
- Emergency contact information
- Emergency response plans and procedures
- Emergency notification procedures
- Emergency response training for all employees

8.12.5.3 Risk Management Plan

An RMP will be prepared in conformance with requirements of the U.S. EPA and the local administering agency (Kings County Division of Environmental Health Services) for any regulated substance stored in any process in excess of its threshold quantity. An RMP will be prepared for aqueous ammonia prior to delivery to the HPP to meet Program Level 1 requirements. This RMP must include:

- Offsite Consequence Analysis (or Hazard Assessment)
- Emergency Response Program

8.12.5.4 Spill Prevention, Control, and Countermeasure Plan

The Spill Prevention, Control, and Countermeasure (SPCC) Plan will be prepared in accordance with federal and state regulations. This plan must be prepared if petroleum products are stored on site in aboveground storage tanks with a capacity that equals or exceeds 660 gallons for a single tank, or equals or exceeds 1,320 gallons for more than one tank. The SPCC Plan must be prepared prior to delivery of petroleum products to the site. The SPCC Plan will include information on spill response procedures and fuel storage.

8.12.5.5 Material Safety Data Sheets

MSDSs for the hazardous materials to be used on site will be kept on site as required by OSHA's Hazard Communication Standard, 29 CRF 1910.1200.

8.12.5.6 Monitoring

An extensive monitoring program will not be required, as the environmental and human health effects are expected to be minimal during both the construction and the operation and maintenance phases of the HPP. A variety of auditing and inspection requirements will ensure that the proposed measures effectively mitigate the risks associated with hazardous materials.

8.12.6 Indirect/Cumulative Impacts

8.12.6.1 Potential Indirect Effects of the Henrietta Peaker Project

The HPP is located in a rural area of Kings County, and the use of hazardous materials on the project site will not have indirect impacts on the local area.

8.12.6.2 Potential Cumulative Impacts

In accordance with the requirements of the California Environmental Quality Act (CEQA), this analysis must consider the potential cumulative impacts on existing public receptors and future residential development that could occur as a result of the proposed project and other planned and foreseeable future projects in the site vicinity. No other projects with related environmental impacts are anticipated in the local area. Therefore, no cumulative impacts associated with hazardous materials are expected from the HPP.

8.12.7 Laws, Ordinances, Regulations, and Standards

The following section describes the LORS that are applicable to the storage and handling of hazardous materials at the HPP. The HPP will comply with all applicable LORS regarding hazardous materials handling. A summary table of applicable LORS is provided at the end of this section (Table 8.12-10).

8.12.7.1 Federal

Hazardous substances are governed in part by the Comprehensive Environmental Response, Compensation, and Liability Act (CERCLA) of 1980 and the Superfund Amendments

and Reauthorization Act (SARA) of 1986. Additional information on these laws and implementing regulations is provided below:

- SARA Title III, also known as the Emergency Planning and Community Right-to-Know Act (EPCRA), establishes reporting requirements for businesses and facilities that store, handle, or produce significant quantities of hazardous substances. EPCRA also requires states to establish a system to inform federal, state, and local authorities of any such substances stored or handled by the regulated community.

- Title 40 of the Code of Federal Regulations (CFR), Part 302 implements the CERCLA hazardous material release requirements and identifies hazardous substances, reportable quantities (RQs), and notification requirements. The National Response Center in Washington, D.C. must be notified in case of an accidental release of a hazardous substance in excess of its RQ. CERCLA-listed hazardous substances and RQs are listed in 40 CFR 302.4.

- 40 CFR Part 355 codifies the planning requirements of EPCRA and establishes the list of extremely hazardous substances, threshold planning quantities, and emergency response planning requirements.

- 29 CFR Part 1910 et seq. includes standards set by OSHA regarding the storing and handling hazardous materials. It also identifies equipment for protecting workers who handle hazardous materials and provides requirements for general facility safety. In general, California regulations pertaining to industrial relations (Title 8 CCR) are more stringent than those established by 29 CFR 1910.

Hazardous substances are also governed in part by the Clean Air Act.

- 40 CFR Part 68, Chemical Accident Prevention Provisions, identifies regulated substances, threshold quantities, and requirements for preventing accidental releases of these substances. An RMP is required for any processes involving regulated substances in excess of the respective threshold quantity. Aqueous ammonia is a listed toxic substance and has a threshold quantity of 20,000 pounds when stored at a concentration greater than 20 percent by weight. An RMP must be submitted when the regulated toxic substance is first introduced to the process.

Hazardous substances are also governed in part by the Clean Water Act.

- 40 CFR 112 identifies facilities required to prepare a Spill Prevention, Control, and Countermeasure (SPCC) Plan. Regulated facilities are those that store oil in aboveground tanks with a capacity greater than 660 gallons for

individual tanks or 1,320 gallons for more than one tank. Facilities with an underground storage capacity greater than 42,000 gallons must also comply with the SPCC requirements. The SPCC program is designed to prevent discharge of oil into navigable waters.

8.12.7.2 State/Regional

- California's version of the federal Community Right-to-Know law is set forth in Chapter 6.95 of the California Health and Safety Code, Article 1, the Hazardous Materials Release Response Plans and Inventory. This law requires emergency response plans for facilities storing hazardous materials in excess of 55 gallons, 500 pounds, or 200 cubic feet. Facilities that handle more than these quantities of hazardous materials must submit a Hazardous Materials Business Plan to the Certified Uniform Program Agency (CUPA).

- The CalARP Program requires facilities handling regulated substances in any process in quantities greater than the applicable threshold quantity to prepare an RMP, as described in Title 19 CCR Division 2, Chapter 4.5. Aqueous ammonia is regulated under CalARP when 500 pounds or more are stored on site.

- The State Water Resources Control Board administers the Aboveground Petroleum Storage Tank Program in accordance with Section 25270 of the California Health and Safety Code. Tanks must be registered with this agency. The Regional Water Quality Control Board ensures compliance with the program through inspections of tanks and review of the facility's SPCC Plan.

- Title 8 CCR addresses the control of hazardous substances. Section 5189 of Title 8 sets forth the PSM standard for processes involving a highly hazardous chemical in excess of certain quantities. Aqueous ammonia (greater than 44 percent by weight) is regulated under this program when a process use is equal to or greater than 15,000 pounds. PSM requires a process hazard analysis, current safety information, an employee participation program, written operating procedures, a mechanical integrity program, and other procedures.

- Section 5194, Hazard Communication, requires that employers evaluate the potential hazards of chemicals handled at their workplace and share this information with employees.

- California Vehicle Code Section 32100.5 requires specific regulations regarding materials that may pose an inhalation hazard.

8.12.7.3 Local

The Kings County Division of Environmental Health Services is the CUPA with responsibility for the following programs pertaining to hazardous materials:

- Business Plan
- CalARP/RMP
- Underground storage tanks
- Hazardous waste
- SPCC Plan

The 1988 Kings County Hazardous Waste Management Plan ensures that hazardous waste is managed safely and effectively. The major objectives of the Hazardous Waste Management Plan are to:

- Evaluate the current hazardous waste stream within the county
- Project hazardous waste quantities through the year 2001
- Provide for adequate waste management capacity for the treatment, storage, and disposal of these wastes

8.12.7.4 Industry Codes and Standards

Hazardous materials storage and delivery systems will be designed, constructed, operated, and maintained in accordance with applicable codes and regulations. Some of these codes and their applicability are listed below:

- California Building Code – incorporates the Uniform Building Code, Uniform Fire Code, Uniform Mechanical Code, and Uniform Plumbing Code
- Uniform Fire Code, Article 80 – Hazardous Materials section
- California Vehicle Code – includes licensing requirements for hazardous materials haulers

8.12.8 Involved Agencies and Contacts

Agency	Contact/Title	Telephone	Requirement
Regional Water Quality Control Board 3614 East Ashlan Fresno, CA 93726	Shelton Gray Senior Engineering Geologist	(209) 445-5508	SPCC Plan
Kings County Division of Environmental Health Services 330 Campus Drive Hanford, CA 93230	Tim Fillmore	(559) 584-1411 x2629	CalARP/ Hazardous Materials Business Plan

The extent of involvement, if any, by government agencies and/or private organizations in emergencies would depend on the type and magnitude of an incident. Table 8.12-8 identifies government agency and other organizational involvement by type of incident. Table 8.12-9 identifies organizational roles for incidents that involve hazardous materials.

In the event of an emergency, the HPP will rely on local emergency service providers. A Hazardous Materials Business Plan will be submitted to the Kings County Fire Department in Lemoore. The plan will illustrate the layout of the HPP and provide the HPP's Hazardous Materials Inventory Statement. The emergency service agencies will be given MSDSs for chemicals used in the facility, upon request. These sheets will be updated as new MSDSs are developed or revised or as more information on these chemicals is made available.

8.12.8.1 Required Permits

There are no permits required for storage and use of the planned hazardous materials.

8.12.8.2 Proposed Conditions of Certification

Proposed conditions of certification are contained in Appendix K. These conditions are proposed in order to ensure compliance with applicable LORS and/or to reduce potentially significant impacts to less-than-significant levels.

8.12.9 References

ACGIH, 1996. Documentation of the Threshold Limit Values and Biological Exposure Indices. American Conference of Governmental Industrial Hygienists, Cincinnati, Ohio.

Johnson, 2001. Personnel communication from Lee Johnson, Kings County Environmental Health Services to Joe Morgan, URS, Senior Project Scientist, June 15.

Lees, 1996. *Loss Prevention in the Process Industries*.

Luft Engineering, 2000. Personal communication from Karl Luft, Luft Engineering, to S. Bryant, URS/Radian, and Peter Lai, Project Engineer, GWF Power Systems Company, Inc. May 1.

NFPA, 1991. *Fire Protection Guide on Hazardous Materials*. Tenth Edition. National Fire Protection Association, Quincy, Mass.

Sax, 1992. *Sax's Dangerous Properties of Industrial Materials*. Eighth Edition. Edited by Richard J. Lewis, Sr. New York: Van Nostrand Reinhold.

Tyler, 1998. Personal communication from Rick Tyler, California Energy Commission, to Deborah Pansius, Radian International. October 2.

U.S. EPA, 1987. *Prevention Reference Manual – Chemical Specific: Control of Accidental Releases of Ammonia.* Volume 11. EPA 600 3-87 034k. August.

U.S. EPA, 1993. *Guidance on the Application of Refined Dispersion Models to Hazardous/Toxic Air Pollutant Releases*. EPA-454/R-93-002. April 30.

U.S. EPA, 1995. *SCREEN3 Model User's Guide*. EPA 454/B-95-004. September.

U.S. EPA, 1996. *RMP Offsite Consequence Analysis Gui*dance. May.

U.S. EPA, 1998. *General Guidance for Risk Management Programs* (40 CFR Part 68). EPA 550-B-98-003. July.

U.S. EPA, no date. *Handbook of Chemical Analysis Procedures*.

Woodward-Clyde, 1998. *Application for Certification: La Paloma Generating Project*. Submitted to the California Energy Commission. Docket 98-AFC-2. July 10.

Wray, Thomas, 1991. "HazMat Chemist, Ammonia." *HazMat World,* D 86, November.

TABLES

Table 8.12-1
Hazardous Materials Used During the Construction Phase

Material	Maximum Onsite Quantity	Use	Hazards[1]	Storage Type/Area
Fuels				
Unleaded gasoline	2,000 gallons	Fuel for construction equipment	Acute, chronic, fire	Equipment service vehicle tanks
Diesel fuel	2,000 gallons	Fuel for construction equipment	Acute, chronic, fire	Equipment service vehicle tanks
Lubricants				
Turbine oil, maintenance	55–110 gallons	Lubricating oil for CTGs	Acute, chronic, fire	Equipment service vehicle tanks
Turbine oil, filling operation	5,000 gallons, short term, 1 day	Lubricating oil for CTGs	Acute, chronic, fire	Equipment service vehicle tanks
Motor oils	20–30 gallons	Lubricating oil for construction equipment and vehicles	Acute, chronic, fire	Equipment service vehicle tanks
Hydraulic oils	40–50 gallons	Hydraulic construction equipment	Acute, chronic, fire	Equipment service vehicle tanks
Various greases	< 25 gallons	Lubricants for construction equipment and permanent plant equipment including motors, pumps, valves, etc.	Acute, chronic, fire	Original shipping containers, equipment service vehicle
Solvents				
WD-40, similar solvents	2–3 gallons	Grease remover	Acute, chronic, fire	Original shipping containers, construction warehouse, flammables storage cabinet
Methyl ethyl ketone	< 25 gallons	Solvent and cleaner	Acute, chronic, fire, reactive	Original shipping containers, construction warehouse, flammables storage cabinet
PVC pipe cleaner	10–20 gallons	Solvent to clean PVC pipe joints prior to completing pipe joint welding	Acute, chronic, fire	Original shipping containers, construction warehouse, flammables storage cabinet
Paint, miscellaneous	10–20 gallons	Paint for touch-up painting of construction equipment and buildings	Acute, chronic	Original shipping containers, construction warehouse

Table 8.12-1 (continued)
Hazardous Materials Used During the Construction Phase

Material	Maximum Onsite Quantity	Use	Hazards[1]	Storage Type/Area
Paint	400–500 gallons	Permanent structures paint	Acute, chronic	Original shipping containers, construction warehouse
Paint thinner, miscellaneous	5–10 gallons	Thinner for touch-up paint	Acute, chronic, fire, reactive	Original shipping containers, construction warehouse
Paint thinner	200–300 gallons	Thinner for structures paint	Acute, chronic, fire, reactive	Original shipping containers, construction warehouse
Aerosol paint	40–50 12 ounce cans	Touch-up paint or marking paint	Acute, chronic, fire, pressure	Original shipping containers, construction warehouse
Miscellaneous				
Concrete curing agents	25–30 gallons	Curing agent applied to surface of freshly poured concrete to aid in proper curing	Acute, chronic, fire	Original shipping containers, construction warehouse
Concrete form release agents	25–30 gallons	Agent sprayed on concrete forms prior to placement of concrete so forms can be stripped after concrete sets	Acute chronic fire	Original shipping containers, construction warehouse
Epoxy Resins				
Epoxy type grout material	5–10 gallons	Epoxy based grout material for grouting of equipment	Fire	Original shipping containers construction warehouse
PVC pipe joint cement	5–10 gallons	Solvent based joint cement for assembly of PVC piping	Fire	Original shipping containers, construction warehouse
Concrete anchor epoxy	100–200 epoxy-filled 4–6 ounce glass vials	Combination epoxy and hardener agents in glass vials used for bonding anchor bolts	Fire	Original shipping containers, construction warehouse

[1] Hazard categories are defined by 40 CFR 370.2. Health hazards include acute (immediate) and chronic (delayed). Physical categories include fire, sudden release of pressure, and reactive.

CFR = Code of Federal Regulations
CTG = combustion turbine generator
PVC = polyvinyl chloride

Table 8.12-2
Hazardous Materials Used During the Operation and Maintenance Phase

Chemical Name	Quantity	State	Location	Delivery Freq.	Use
CTG Lube & Hydraulic Oil	7,400 gal	L	6	1x/10 years	Lubrication
CTG Water-wash Soap	100 gal	L	8	1x/year	CTG Cleaning
CTG Step-up Xfrmr Oil	9,000 gal	L	12	1x/10 years	Xfrmr Insulation
Liquid Carbon Dioxide	3,200 lb	L	16	1x/year	Fire Suppression
Nitrogen	20,000 cf	G	23	2x/year	CEMS
Nitric Oxide (5 ppm)	800 cf	G	23	4x/year	CEMS
Carbon Monoxide (15 ppm)	550 cf	G	23	4x/year	CEMS
Diesel Fuel in EG	250 gal	L	37	1x/year	Emergency Power
Aqueous Ammonia	9,000 gal	L	17	1x/4 days	NO_x Control
115 kV/4, 160V Xfrmr Oil	2,000 gal	L	62	1x/10 years	Xfrmr Insulation
4160V/480V Xfrmr Oil	3,000 gal	L	62	1x/10 years	Xfrmr Insulation

*Water treatment chemicals (mainly by Nalco) will be delivered as needed. One Nalco delivery is expected each month; however, not all water treatment chemicals will be delivered each month.

Note: The location numbers correspond to the plant arrangement drawing (see Figure 8.12-1).

cf = cubic feet
CEMS = continuous emissions monitoring system
CTG = combustion turbine generator
EG = emergency generator
G = gas
gal = gallons
L = liquid
lb = pounds
STG = steam turbine generator
V = volt
Xfrmr = transformer

Table 8.12-3
Characteristics of the Hazardous Materials Used During the Operation and Maintenance Phase

Material	CAS Number	Maximum Onsite Quantity	Hazards	Phase	CalARP Threshold Quantity
CTG Lube & Hydraulic Oil	None	7,400 gal	Fire, acute	Liquid	N/A
CTG Water-wash Soap	None	Unknown	Acute	Liquid	N/A
CTG Step-up Transformer Oil	None	9,000 gal	Fire, acute	Liquid	N/A
Liquid Carbon Dioxide	124-38-9	3,200 lb	Pressure, acute	Liquid	N/A
Nitrogen	7727-37-9	20,000 cf	Pressure, acute	Gas	N/A
Nitric Oxide (5 ppm)	10102-43-9	800 cf	Pressure, acute	Gas	100 lb
Carbon Monoxide (15 ppm)	630-08-0	550 cf	Pressure, acute	Gas	N/A
Diesel Fuel in EG	6847-3-6	250 gal	Fire, acute	Liquid	N/A
Aqueous Ammonia	7664-41-7	<20,000 lb. *	Acute, reactive	Liquid	500 lb
115kV/4160V Transformer Oil	None	2,000 gal	Fire, acute	Liquid	N/A
4160V/480V Transformer Oil	None	3,000 gal	Fire, acute	Liquid	N/A

CalARP = California Accidental Release Prevention
CAS = Chemical Abstract Service
cf = cubic feet
CTG = combustion turbine generator
EG = emergency generator
gal = gallons
lb = pounds
N/A = not applicable
ppm = parts per million
STG = steam turbine generator
* On an anhydrous basis

Table 8.12-4
Occupational Exposure Limits for Airborne Ammonia Vapor

Agency	Name	Value (ppm)
NIOSH	Recommended Exposure Limit (REL)[1]	25
NIOSH	Recommended Exposure Limit, Ceiling (REL CL)[2]	50
NIOSH	Short-Term Exposure Limit (STEL)[3]	35
OSHA	Permissible Exposure Limit (PEL)[4]	50
OSHA	Short-Term Exposure Limit (STEL)[5]	35
ACGIH	Short-Term Exposure Limit (STEL)[6]	35
ACGIH	Permissible Exposure Limit (PEL)[7]	25
ACGIH	Threshold Limit Value (TLV)[8]	25

[1] Time-weighted average concentration for up to a 10-hour workday during a 40-hour workweek.
[2] Concentration that should not be exceeded at any time.
[3] Time-weighted average concentration for 15 minutes that should not be exceeded at any time during a workday.
[4] Time-weighted average concentration that must not be exceeded during any eight-hour work shift of a 40-hour workweek.
[5] Time-weighted average concentration for 15 minutes that must not be exceeded at any time during a workday.
[6] Recommended time-weighted average concentration for 15 minutes that should not be exceeded at any time during a workday.
[7] Recommended time weighted average concentration that must not be exceeded during any eight-hour work shift of a 40-hour workweek.
[8] Airborne concentration under which it is believed that nearly all workers may be repeatedly exposed without adverse health effects.

ACGIH = American Conference of Governmental Industrial Hygienists
NIOSH = National Institute for Occupational Safety and Health
OSHA = Occupational Safety and Health Administration
ppm = parts per million

Table 8.12-5
Other Exposure Limits for Ammonia Vapor

Agency/Source	Name	Value (ppm)
AIHA	Emergency Response Guideline (ERPG) Level 1[1]	25
NRC[2]	STPEL	75
AIHA	ERPG-2[3]	200
NIOSH	Immediately Dangerous to Life and Health (IDLH)[4]	300
AIHA	ERPG-3[5]	1,000
Wray, 1991	Lethality Level[6]	2,000

[1] The ERPG-1 corresponds to the maximum airborne concentration below which it is believed that nearly all individuals could be exposed for up to one hour without experiencing other than mild, transient adverse health effects or perceiving a clearly defined objectionable odor.
[2] The Short-Term Public Emergency Limit (STPEL) was developed by the National Research Council (NRC). The STPEL is considered the significance level by CEQA and the CEC (Tyler, 1998).
[3] The ERPG-2 corresponds to the maximum airborne concentration below which it is believed that nearly all individuals could be exposed for up to one hour without experiencing or developing irreversible or other serious health effects or symptoms which could impair an individual's ability to take protective action.
[4] Maximum concentration exposure of up to 30-minute duration from which a worker could escape without loss of life or irreversible health effects.
[5] The ERPG-3 corresponds to the maximum airborne concentration below which it is believed that nearly all individuals could be exposed for up to one hour without experiencing or developing life-threatening health effects.
[6] The human lethality value of ammonia over a 30-minute averaging time.

AIHA = American Industrial Hygiene Association
NIOSH = National Institute for Occupational Safety and Health
ppm = parts per million

Table 8.12-6
Accidental Release Scenario Release Rates and Meteorological Conditions

Ambient Temperature (°F)	Wind Speed (m/s)	Stability Class[1]	Assumed Liquid Temperature (°F)[2]	Release Rate (kg/s)
63	1.0	F	83	0.0001215
63	2.5	D	83	0.0002415
95	1.0	F	115	0.0001995
95	2.5	D	115	0.0003966
115	1.0	F	135	0.0002464
115	2.5	D	135	0.0004898

[1] Stability classes: F (Stable conditions); D (Neutral conditions).
[2] Released aqueous ammonia assumed to be 20 °F higher for conservative calculation of evaporation rate.

kg/s = kilograms per second
m/s = meters per second

Table 8.12-7
Dispersion Modeling Results

Ambient Temperature (°F)	Wind Speed (m/s)	Stability Class[1]	Distance to Various Levels of Concern (m)[2]			
			2,000 ppm	300 ppm	200 ppm	75 ppm
63	1.0	F	3.32	10.45	13.45	23.11
63	2.5	D	------[3]	4.72	6.03	9.85
95	1.0	F	4.79	14.43	18.23	31.58
95	2.5	D	1.81	6.73	8.43	13.62
115	1.0	F	5.76	16.63	20.77	36.30
115	2.5	D	2.41	7.80	9.30	15.20

[1] Stability classes are defined as follows: D = neutral conditions; F = stable conditions.
[2] Refer to Figures 8.12-3, 8.12-4, and 8.12-5 for graphical representations of ammonia concentrations under the modeling scenarios.
[3] The SCREEN3 model did not calculate ammonia concentrations this high.

Table 8.12-8
Involvement of Government Agencies and Other Organizations by Type of Incident

Organization	Emergency Phone #	Fire	Spill	Security	Medical	Technical Assistance	Other
South Lemoore Fire Department	911	X	X	X	X	X	X
Emergency Medical Services	911	X	X		X		
Police Department	911			X			
California Highway Patrol	911		X[a]				
Hanford Community Medical Center	(559) 582-9000				X	X	
San Joaquin Valley Unified Air Pollution Control District	(559) 497-1000		X			X	
Central Valley Regional Water Quality Control Board	(559) 445-5116		X			X	X
Kings County Department of Public Health, Division of EHS	(559) 584-1411 (559) 582-3211 (after hours)		X		X	X	
California EPA; Department of Toxic Substances Control	(510) 540-2122		X		X	X	
California Office of Emergency Services	(800) 852-7550	X	X		X	X	X
California Department of Fish & Game	(707) 944-5512		X[b]				
U.S. EPA National Response Center	(800) 424-8802		X[b]			X	
U.S. Department of Transportation	(415) 280-4897		X[a]			X	
U.S. Coast Guard	(415) 556-2103		X[b]			X	
M. P. Vacuum Services	(800) 458-3036 (805) 393-1151		X[b]			X	
Poison Control Center	(800) 876-4766		X		X	X	
Pacific Gas & Electric Company	(800) 743-5000						X
Southern California Gas Company							X

[a] If spill is on highway.
[b] If spill is into waterways or sewer.
EHS = Environmental Health and Safety
EPA = Environmental Protection Agency

Table 8.12-9
Organizational Roles for Incidents That Involve Hazardous Materials

Agency	Role
Fire Department	Lead agency for all life-safety issues (e.g., fire, explosion, injury or illness, chemical release); assistance in initial care of victims.
Emergency Medical Services	Lead agency for medical operations and primary care and transport of victims.
Police Department	Lead agency for security-related emergencies (e.g., bomb threat, sabotage, civil disturbance, etc.); maintains order in emergencies involving community evacuations; expedites the movement of vehicles; California Highway Patrol must be notified of violations of hazardous materials transportation regulations or hazardous materials releases onto highways.
Water District; Sanitation District	Required to be notified in the event of a discharge of hazardous materials to the sanitary sewer system or storm drain.
Hanford Community Medical Center	Receives and treats injury and illness victims, can provide technical assistance for first aid and basic life support or other issues.
Kings County Department of Public Health, Division of Environmental Health Services	Regulates hazardous waste regulations for hazardous waste generators; must be notified of hazardous waste incidents; must be notified of any sanitary concerns (e.g., food poisoning, epidemics, etc.).
San Joaquin Valley Unified Air Pollution Control District	Must be notified of any unauthorized discharges of or hazardous materials to the atmosphere.
RWQCB - Central Valley	Must be notified of any unauthorized discharges of hazardous materials into the soil, groundwater, or surface water.
California EPA; Department of Toxic Substances Control	Must be notified of any unauthorized discharges of hazardous materials to the environment; can provide technical assistance for toxicology issues (HESIS).
California Office of Emergency Services	Must be notified of any life threatening releases of hazardous materials into the environment; acts as the lead agency in coordinating responses to large-scale emergencies and regional disasters.
California Department of Fish and Game	Must be notified of any discharges of hazardous materials into surface waters.
U.S. EPA	Overall regulation of environmental laws; must be notified about discharges of hazardous materials in excess of reportable quantities; must be notified of discharges of oil.

Table 8.12-9 (continued)
Organizational Roles for Incidents That Involve Hazardous Materials

Agency	Role
U.S. Department of Transportation	Regulates the transportation of hazardous materials on public roads.
U.S. Coast Guard	Must be notified of hazardous materials releases into navigable waters.
M.P. Vacuum Services or CET Environmental	Provides assistance in removal and transportation of hazardous material spills.
Phillips Services	Provides assistance in removal and transportation of hazardous materials spills when CET Environmental is not available.
Poison Control Center	Provides information regarding the ingestion or inhalation of poisonous chemicals.
Pacific Gas and Electric Company	Must be notified in the event of a power failure. Provides assistance if electrical services are temporarily unavailable.
Southern California Gas Company	Must be notified in the event of a gas leak. Provides assistance if gas services are temporarily unavailable.

Table 8.12-10
Summary of Laws, Ordinances, Regulations, and Standards Applicable to Hazardous Materials Handling

Jurisdiction	Authority	Administering Agency	Requirements & Compliance	AFC Conformance Section
Federal	CERCLA, as amended by SARA; Title III, Emergency Planning and Community Right-to-Know Act (EPCRA) of 1986, 42 USC 11001 et seq.; 40 CFR Parts 302, 355, 370, and 372.	U.S. EPA Region IX; National Response Center; California Office of Emergency Services (OES); Kings County Division of Environmental Health Services	Project will comply with CERCLA, release notification requirements; SARA Title III, reporting requirements for storing, handling, or producing regulated substances.	8.12.3 and 8.12.6
Federal	29 CFR 1910 et seq. 29 CFR 1926 et seq.	Occupational Safety and Health Administration (OSHA)	Project will comply with requirements pertaining to employers whose employees handle hazardous materials and extremely hazardous chemicals.	8.12.6
Federal	Clean Air Act Amendments of 1990, Section 112(r), Accidental Release Prevention Program, 42 USC 7412 (r), 40 CFR Part 68	U.S. EPA Region IX; California OES; Kings County Division of Environmental Health Services	Project will comply with requirements pertaining to risk management of regulated substances.	8.12.3.3, 8.12.4, and 8.12.6
Federal	Clean Water Act, Spill Prevention, Control, and Countermeasure Plan, 40 CFR 112		Project will comply with requirements designed to prevent the discharge of oil into navigable waters.	8.12.6.4
State	California Health & Safety Code §§ 25500–25520; 19 CCR §§ 2720–2734	Kings County Division of Environmental Health Services	Project will prepare a Hazardous Materials Business Plan (HMBP).	8.12.6
State	California Accidental Release Prevention (CalARP) Program, California Health & Safety Code § 25531 et seq., 19 CCR Division 2, Chapter 4.5	California OES, Kings County Division of Environmental Health Services	HMBP requirements.	8.12.6

Table 8.12-10 (continued)
Summary of Laws, Ordinances, Regulations, and Standards Applicable to Hazardous Materials Handling

Jurisdiction	Authority	Administering Agency	Requirements & Compliance	AFC Conformance Section
State	8 CCR § 339, § 3200 et seq., 5139 et seq., 5160 et seq., 5189 et seq.	Cal-OSHA	Project will meet requirements pertaining to the control and management of hazardous substances.	8.12.3 and 8.12.6
State	Uniform Fire Code, Article 80 and others	Kings County Fire Department	Project will meet provisions regarding fire protection and neutralization systems for hazardous materials.	8.12.8 and 8.12.9
Industry	State Building Code	Various agencies	Project will meet requirements pertaining to fire prevention, building safety, etc.	8.12.8 and 8.12.9
Industry	California Vehicle Code 31300 et seq.	Caltrans	Project will comply with requirements for transportation of hazardous materials on state highways.	8.12.3.1, 8.12.3.2, and 8.12.6.1

CCR = California Code of Regulations
CERCLA = Comprehensive Environmental Response, Compensation, and Liability Act of 1980
CFR = Code of Federal Regulations
EPA = Environmental Protection Agency
SARA = Superfund Amendments and Reauthorization Act of 1986
AFC = Application for Certification
USC = U.S. Code

FIGURES

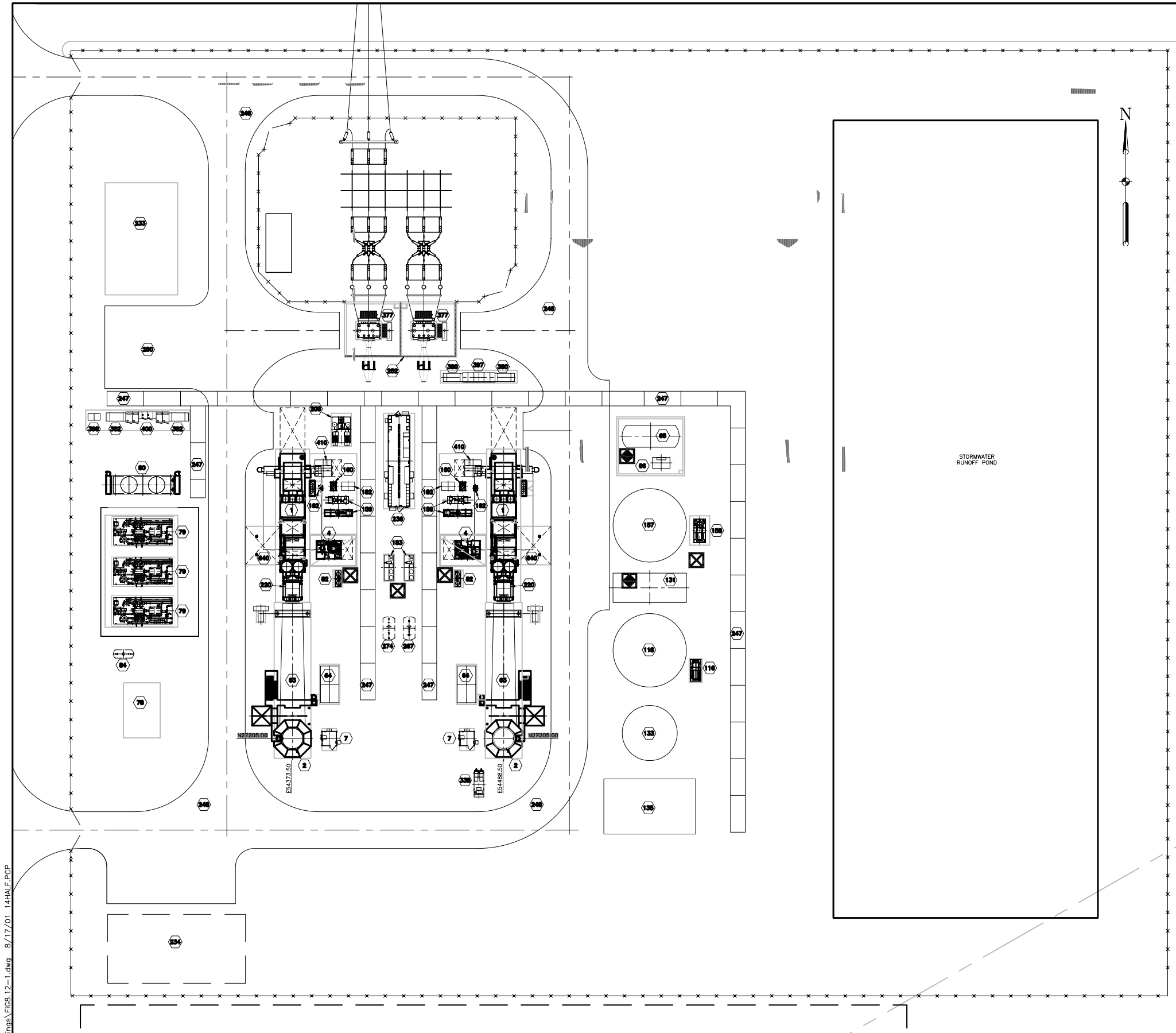

EQUIPMENT LIST

ITEM NO.	EQUIP. NO.	DESCRIPTION	TIE DOWN EL
1	–	COMBUSTION TURBINE LM6000	–
2	–	STACK	–
4	–	AUXILIARY SKID	–
7	–	CONTINUOUS EMISSION MONITORING EQUIPMENT	–
63	–	SCR	–
64	–	SCR AMMONIA INJECTION SKID	–
65	–	AMMONIA STORAGE TANK	–
66	–	AMMONIA FORWARDING PUMPS	–
78	–	FUEL GAS METERING STATION	–
79	–	FUEL GAS COMPRESSOR SKID 1A, 1B, 1C	–
80	–	FUEL GAS COOLER	–
82	–	FUEL GAS FILTER	–
84	–	FUEL GAS WASTE SUMP WITH BLOWER	–
116	–	RAW WATER FORWARDING PUMPS	–
118	–	RAW WATER STORAGE TANK	–
131	–	WATER TREATMENT MODULE	–
133	–	WASTE WATER STORAGE TANK	–
135	–	WASTE WATER PROCESS EQUIPEMENT	–
157	–	DEMIN. WATER STORAGE TANK	–
158	–	DEMIN. WATER INJECTION FORWARDING PUMPS	–
159	–	WATER INJECTION BOOST PUMP SKID 2A, 2B	–
160	–	SPRINT PERFORMANCE SKID	–
162	–	HIGH PRESSURE DEMIN. WATER FILTER SKID	–
182	–	FOGGER (FUTURE)	–
183	–	CLOSED LOOP COOLER	–
191	N/A	FIRE CARTS (NOT SHOWN FOR CLARITY)	N/A
208	–	AIR COMPRESSOR SKID	–
220	–	ANTI–ICING HEAT EXCHANGER SYSTEM	–
233	–	ADMINISTRATION BUILDING	–
234	–	MAINTENANCE BUILDING	–
236	–	POWER CONTROL MODULE	–
247	N/A	PIPE AND CABLE WAYS	N/A
248	N/A	ROAD	N/A
250	N/A	PARKING AREA	N/A
267	–	WASTE WATER WASH TANK	–
274	–	OIL/WATER SEPARATOR	–
338	–	EMERGENCY DIESEL GENERATOR	–
350	–	LIGHTING PANEL WITH TRANSFORMER	–
377	–	MAIN SUBSTATION STEP–UP TRANSFORMER	–
380	–	AUXILIARY TRANSFORMER 480V	–
382	–	GAS COMPRESSOR TRANSFORMER 13.8/4160V	–
383	–	13.8KV SWITCH	–
397	–	480V DISTRIBUTION SWITCHBOARD	–
398	–	GAS COMPRESSOR 480V MCC	–
400	–	4160 DISTRIBUTION PANEL	–
410	–	MEDIUM VOLTAGE SWITCH GEAR	–
610	N/A	TRANSFORMER FIRE WALL	N/A
640	N/A	ENGINE REMOVAL AREA	N/A

SAFETY EQUIPMENT LEGEND

- SAFETY SHOWER
- HAZARDOUS MATERIALS STORAGE

NOT TO BE USED FOR CONSTRUCTION

Project No.	GWF ENERGY LLC HENRIETTA 230KV SWITCHYARD	EQUIPMENT ARRANGEMENT HAZARDOUS MATERIALS	Figure 8.12–1
51–00167032.00	URS		

X:\x_env\GWF\henrietta\drawings\FIG8.12–1.dwg 8/17/01 14HALF.PCP

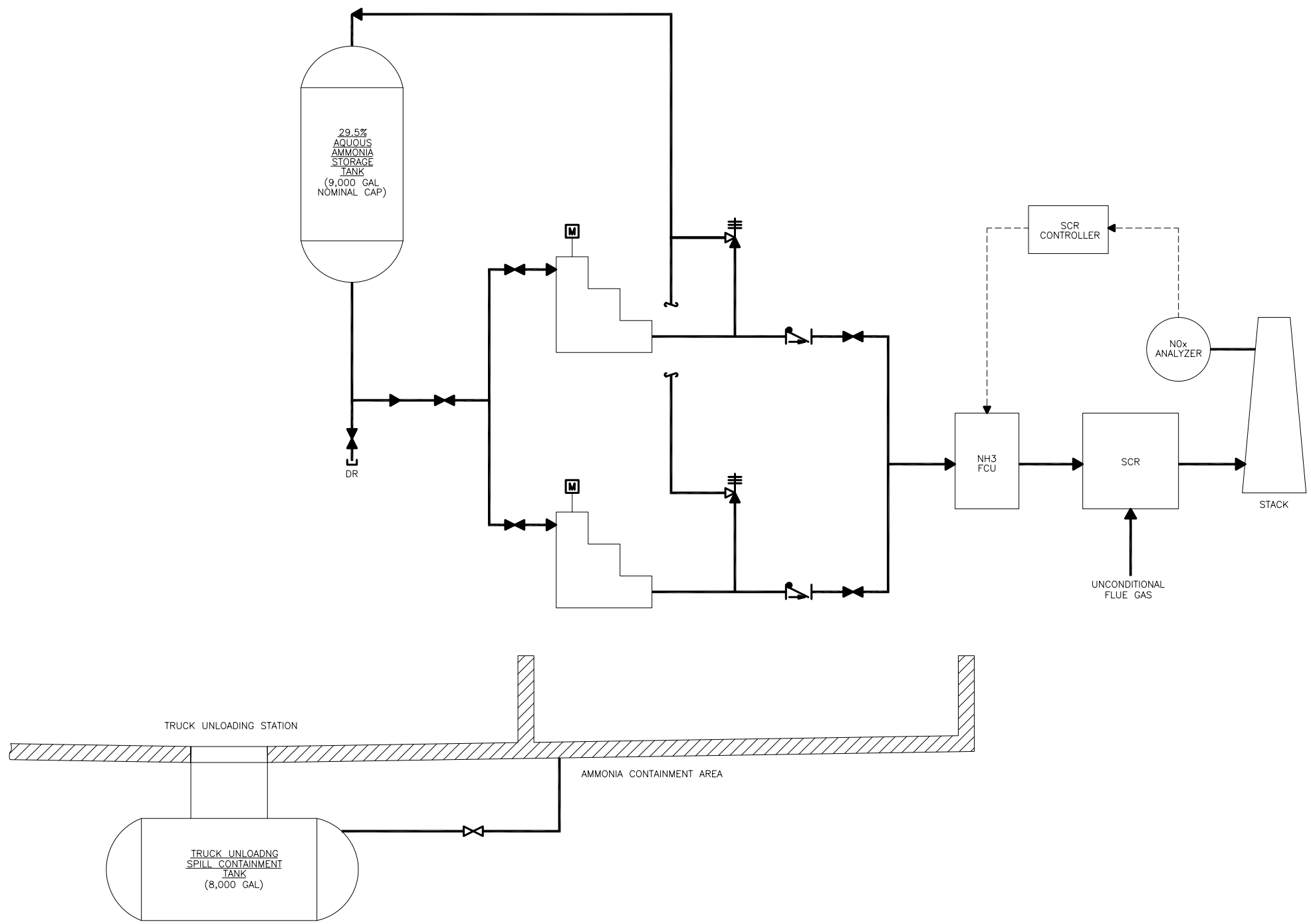

NTS

NOT TO BE USED FOR CONSTRUCTION

Project No. 51-00167032.00	GWF ENERGY LLC HENRIETTA 230KV SWITCHYARD	PIPING AND INSTRUMENTATION DIAGRAM FOR AQUEOUS AMMONIA SYSTEM	Figure 8.12-2
	URS		

J:\CADSHARED\GWF-energy\HENRIETTA\SHEETS\FIG8.12-2.dwg 8/23/01

FIGURE 8.12-3
Ammonia Concentrations at 115°F Ambient Temperature

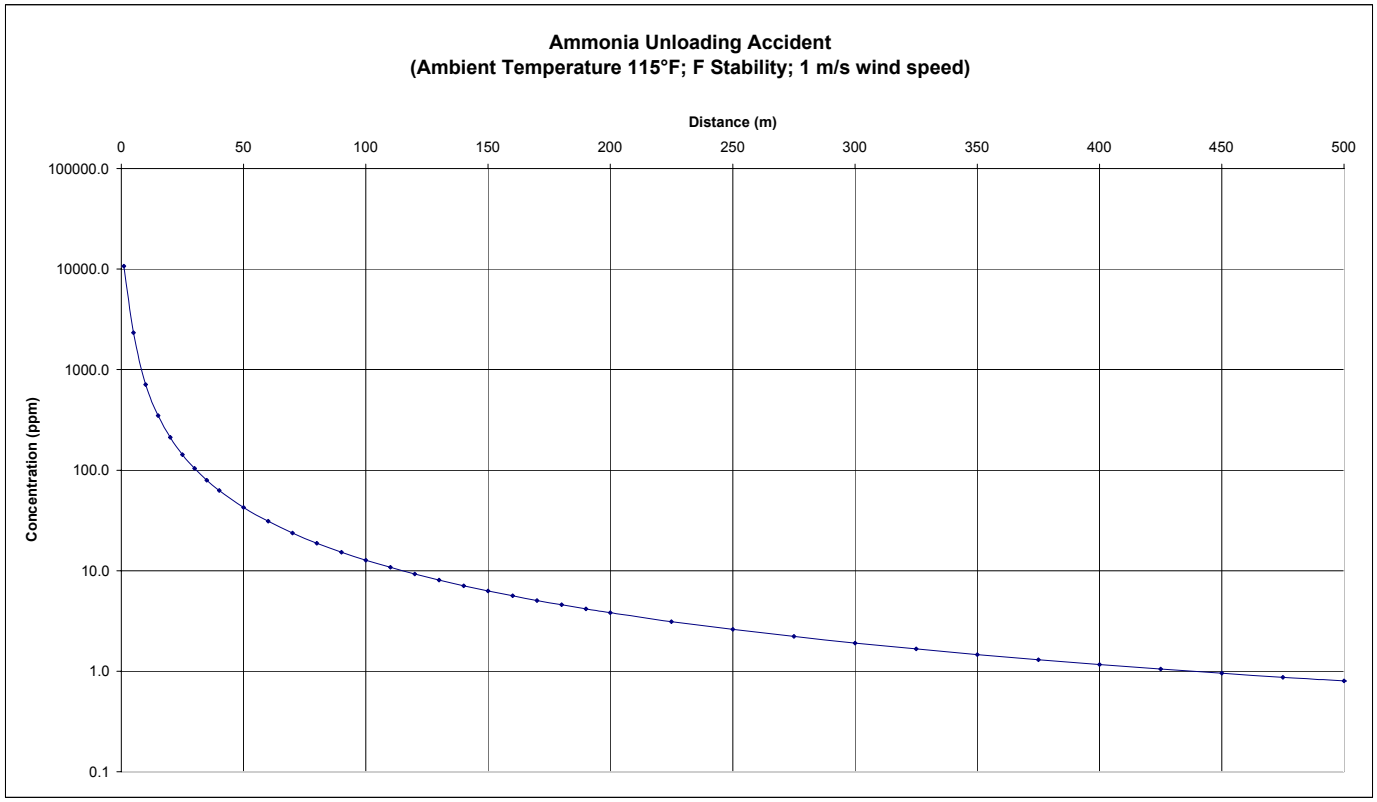

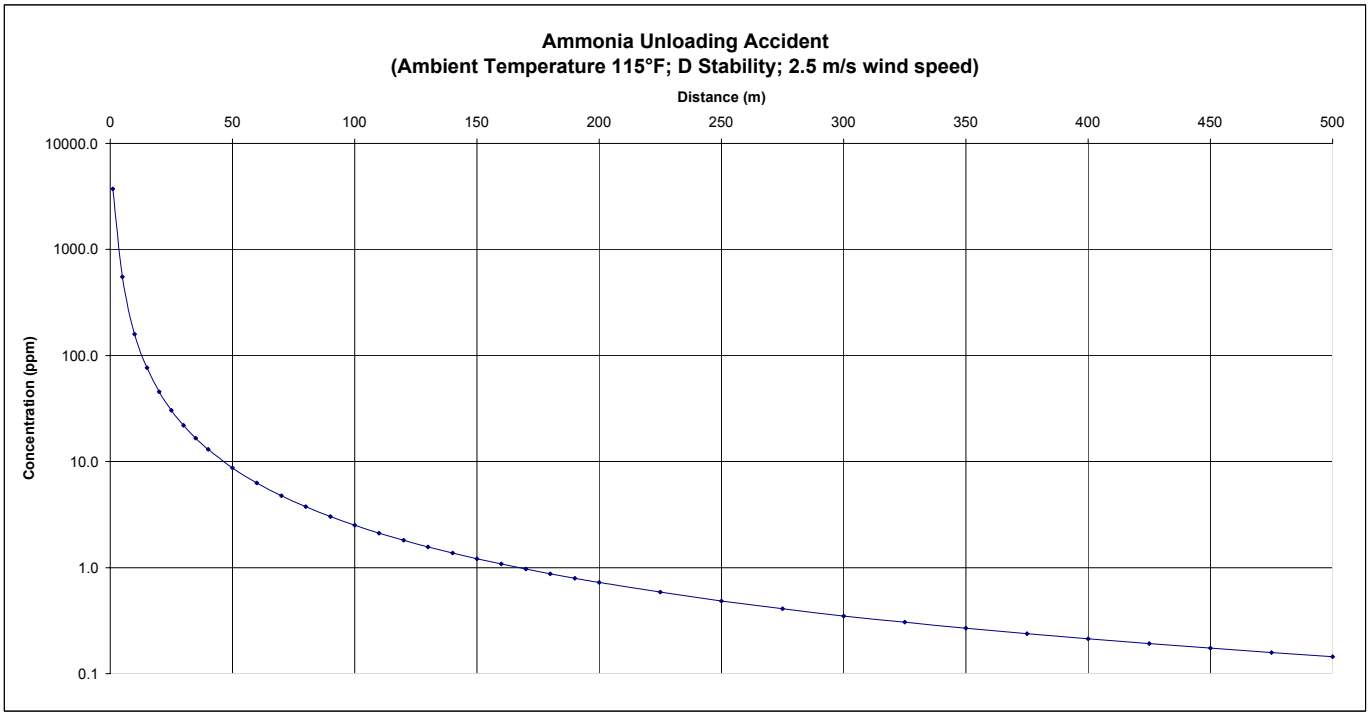

FIGURE 8.12-4
Ammonia Concentrations at 95°F Ambient Temperature

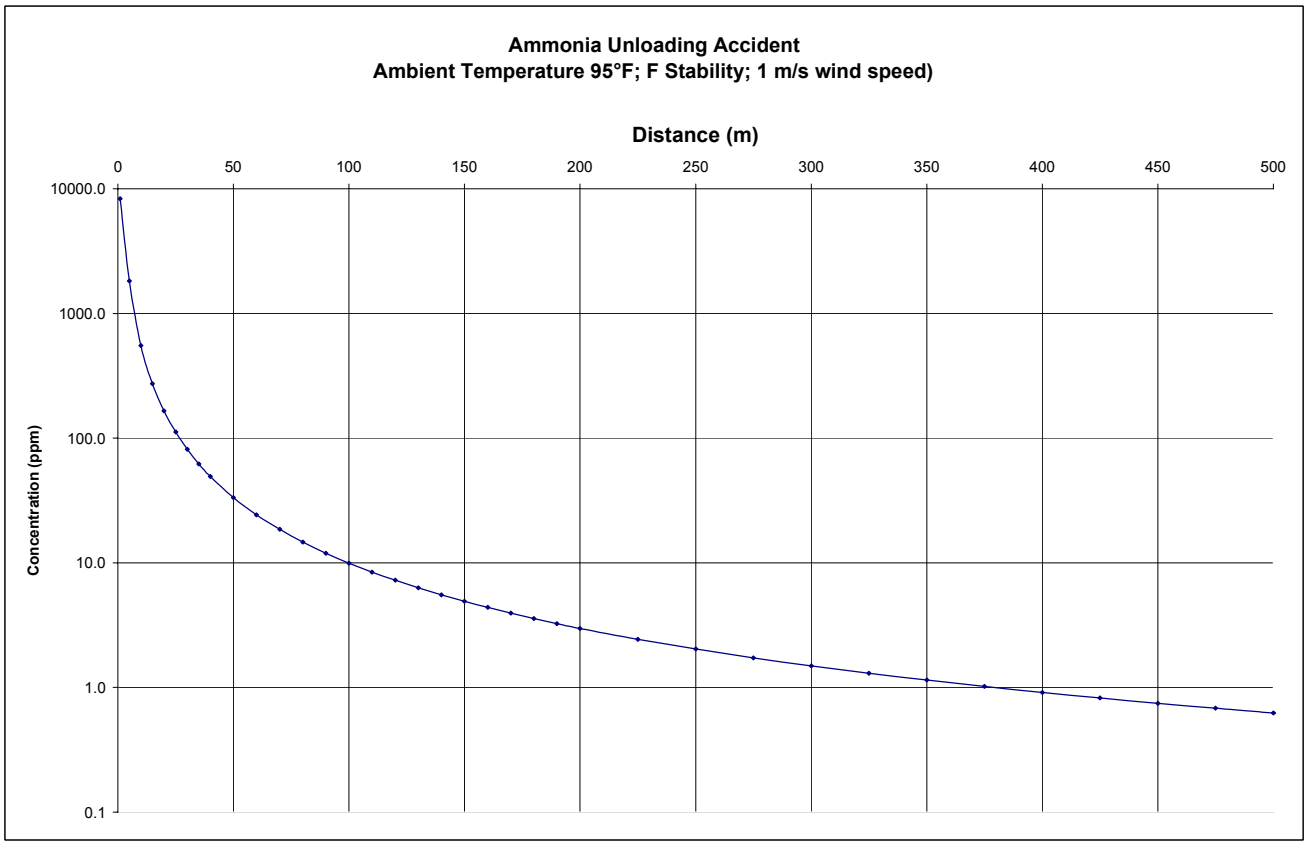

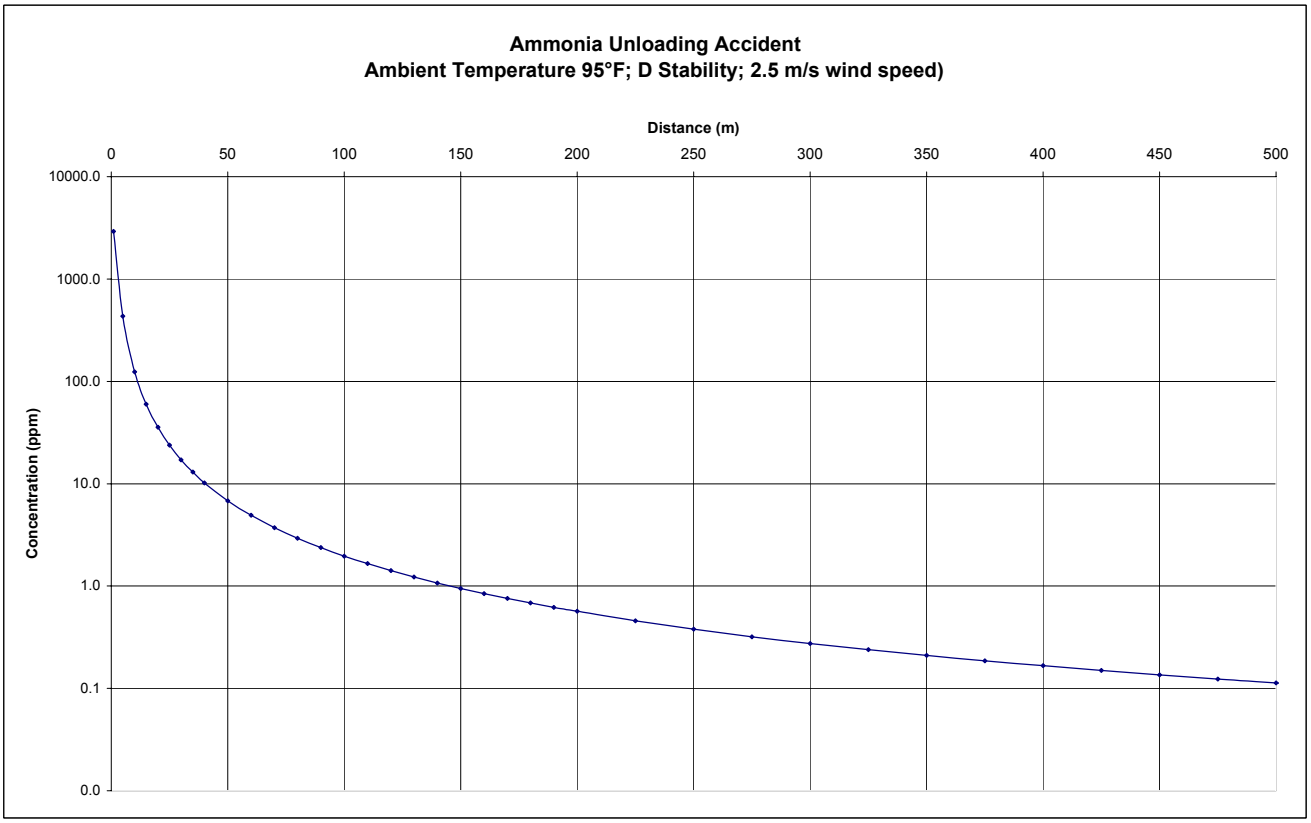

FIGURE 8.12-5
Ammonia Concentrations at 63°F Ambient Temperature

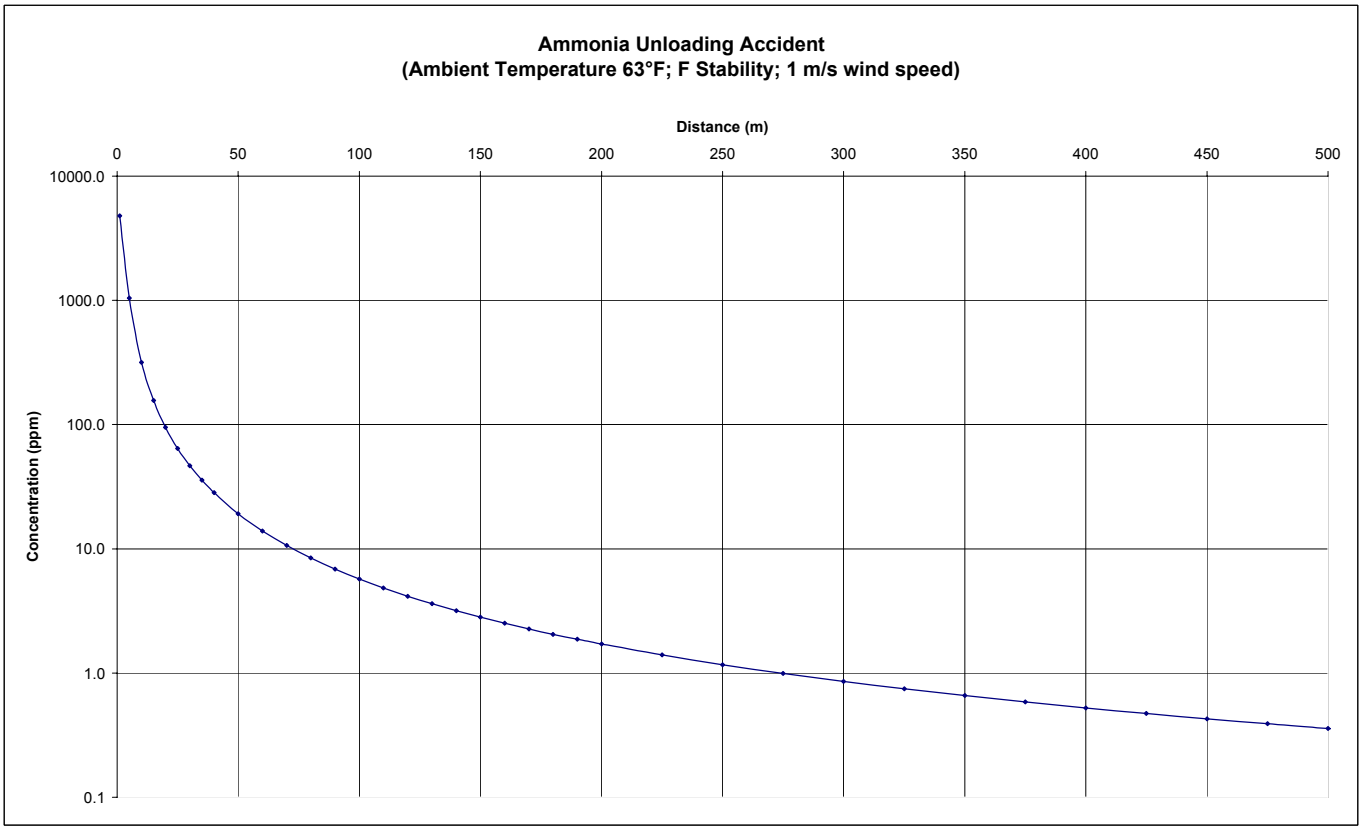

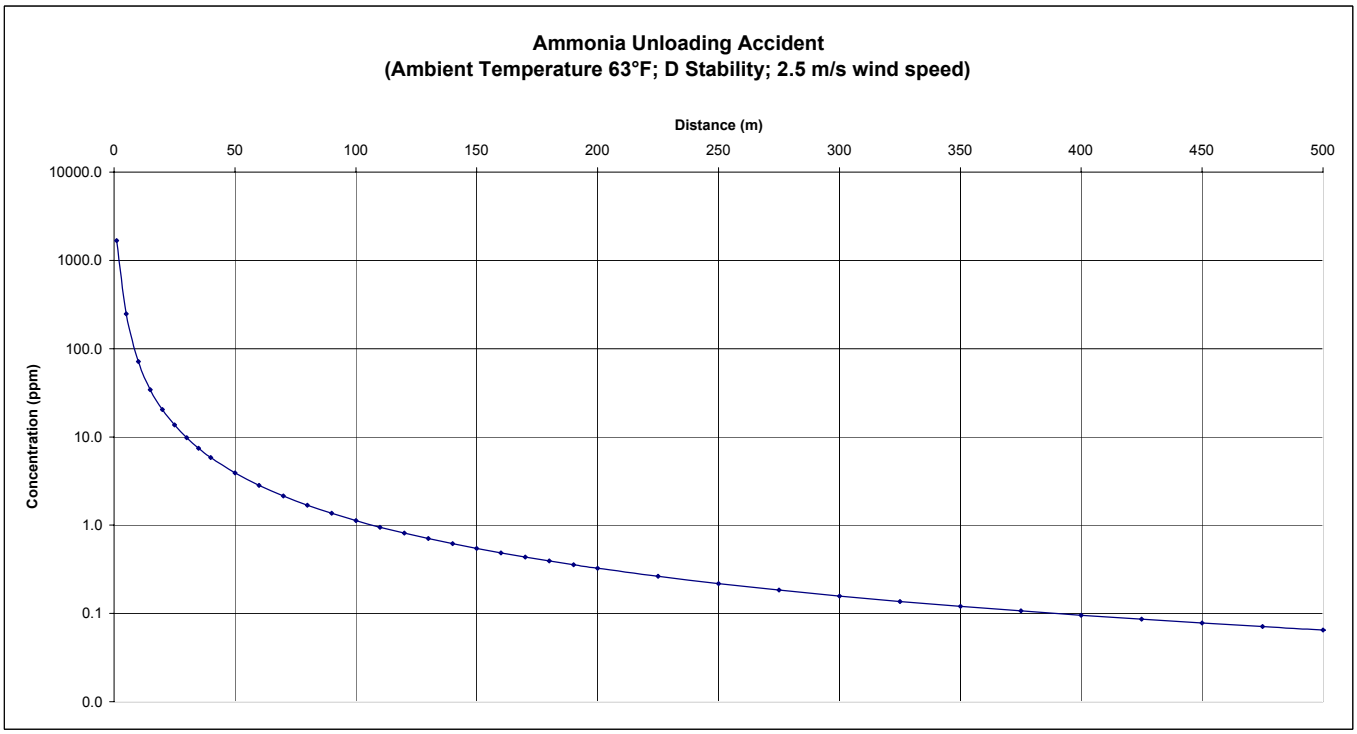

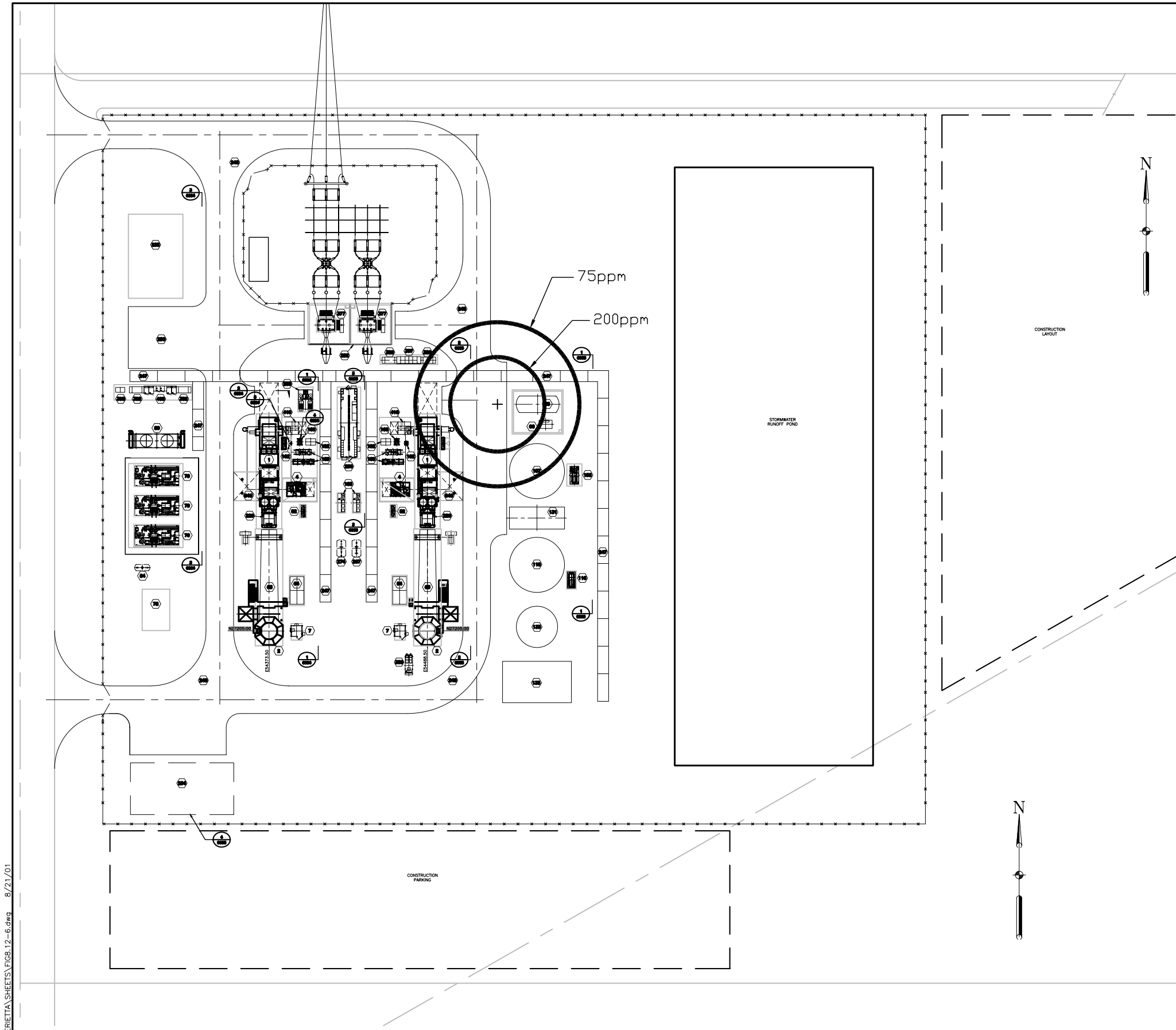

EQUIPMENT LIST

ITEM NO.	EQUIP. NO.	DESCRIPTION	TIE DOWN EL
1	–	COMBUSTION TURBINE LM6000	–
2	–	STACK	–
4	–	AUXILIARY SKID	–
7	–	CONTINUOUS EMISSION MONITORING EQUIPMENT	–
63	–	SCR	–
64	–	SCR AMMONIA INJECTION SKID	–
65	–	AMMONIA STORAGE TANK	–
66	–	AMMONIA FORWARDING PUMPS	–
78	–	FUEL GAS METERING STATION	–
79	–	FUEL GAS COMPRESSOR SKID 1A, 1B, 1C	–
80	–	FUEL GAS COOLER	–
82	–	FUEL GAS FILTER	–
84	–	FUEL GAS WASTE SUMP WITH BLOWER	–
116	–	RAW WATER FORWARDING PUMPS	–
118	–	RAW WATER STORAGE TANK	–
131	–	WATER TREATMENT MODULE	–
133	–	WASTE WATER STORAGE TANK	–
135	–	WASTE WATER PROCESS EQUIPEMENT	–
157	–	DEMIN. WATER STORAGE TANK	–
158	–	DEMIN. WATER INJECTION FORWARDING PUMPS	–
159	–	WATER INJECTION BOOST PUMP SKID 2A, 2B	–
160	–	SPRINT PERFORMANCE SKID	–
162	–	HIGH PRESSURE DEMIN. WATER FILTER SKID	–
182	–	FOGGER (FUTURE)	–
183	–	CLOSED LOOP COOLER	–
191	N/A	FIRE CARTS (NOT SHOWN FOR CLARITY)	N/A
208	–	AIR COMPRESSOR SKID	–
220	–	ANTI–ICING HEAT EXCHANGER SYSTEM	–
233	–	ADMINISTRATION BUILDING	–
234	–	MAINTENANCE BUILDING	–
236	–	POWER CONTROL MODULE	–
247	N/A	PIPE AND CABLE WAYS	N/A
248	N/A	ROAD	N/A
250	N/A	PARKING AREA	N/A
267	–	WASTE WATER WASH TANK	–
274	–	OIL/WATER SEPARATOR	–
338	–	EMERGENCY DIESEL GENERATOR	–
350	–	LIGHTING PANEL WITH TRANSFORMER	–
377	–	MAIN SUBSTATION STEP–UP TRANSFORMER	–
380	–	AUXILIARY TRANSFORMER 480V	–
382	–	GAS COMPRESSOR TRANSFORMER 13.8/4160V	–
383	–	13.8KV SWITCH	–
397	–	480V DISTRIBUTION SWITCHBOARD	–
398	–	GAS COMPRESSOR 480V MCC	–
400	–	4160 DISTRIBUTION PANEL	–
410	–	MEDIUM VOLTAGE SWITCH GEAR	–
610	N/A	TRANSFORMER FIRE WALL	N/A
640	N/A	ENGINE REMOVAL AREA	N/A

NOT TO BE USED FOR CONSTRUCTION

Project No. 51–00167032.00	GWF HENRIETTA PEAKER PROJECT	VUNERABILITY ZONE FOR AQUEOUS AMMONIA RELEASE–WORST–CASE METEOROLOGY	Figure 8.12–6
	URS		

J:\CADSHARED\GWF–energy\HERIETTA\SHEETS\FIG8.12–6.dwg 8/21/01

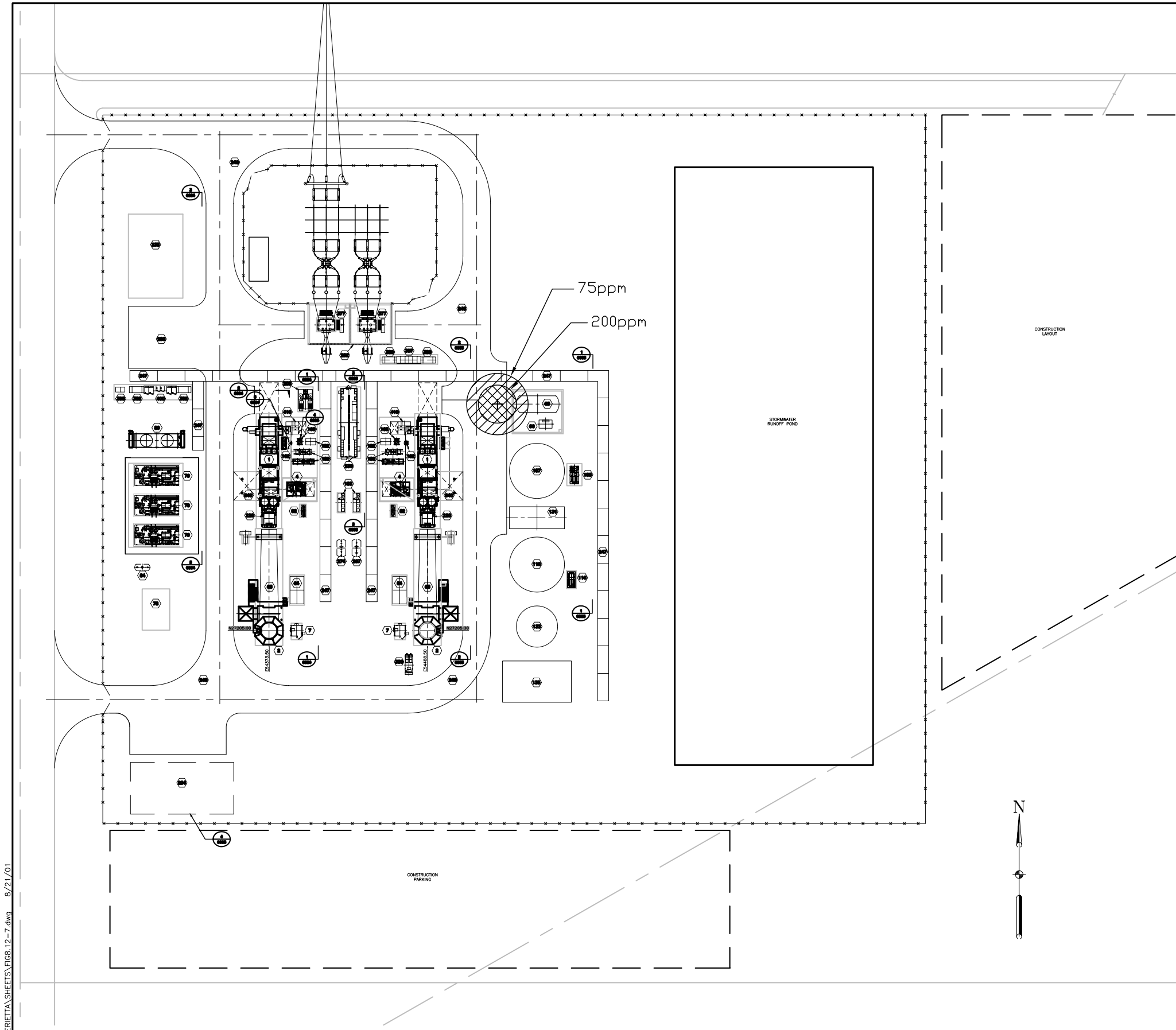

EQUIPMENT LIST

ITEM NO.	EQUIP. NO.	DESCRIPTION	TIE DOWN EL
1	–	COMBUSTION TURBINE LM6000	–
2	–	STACK	–
4	–	AUXILIARY SKID	–
7	–	CONTINUOUS EMISSION MONITORING EQUIPMENT	–
63	–	SCR	–
64	–	SCR AMMONIA INJECTION SKID	–
65	–	AMMONIA STORAGE TANK	–
66	–	AMMONIA FORWARDING PUMPS	–
78	–	FUEL GAS METERING STATION	–
79	–	FUEL GAS COMPRESSOR SKID 1A, 1B, 1C	–
80	–	FUEL GAS COOLER	–
82	–	FUEL GAS FILTER	–
84	–	FUEL GAS WASTE SUMP WITH BLOWER	–
116	–	RAW WATER FORWARDING PUMPS	–
118	–	RAW WATER STORAGE TANK	–
131	–	WATER TREATMENT MODULE	–
133	–	WASTE WATER STORAGE TANK	–
135	–	WASTE WATER PROCESS EQUIPEMENT	–
157	–	DEMIN. WATER STORAGE TANK	–
158	–	DEMIN. WATER INJECTION FORWARDING PUMPS	–
159	–	WATER INJECTION BOOST PUMP SKID 2A, 2B	–
160	–	SPRINT PERFORMANCE SKID	–
162	–	HIGH PRESSURE DEMIN. WATER FILTER SKID	–
182	–	FOGGER (FUTURE)	–
183	–	CLOSED LOOP COOLER	–
191	N/A	FIRE CARTS (NOT SHOWN FOR CLARITY)	N/A
208	–	AIR COMPRESSOR SKID	–
220	–	ANTI–ICING HEAT EXCHANGER SYSTEM	–
233	–	ADMINISTRATION BUILDING	–
234	–	MAINTENANCE BUILDING	–
236	–	POWER CONTROL MODULE	–
247	N/A	PIPE AND CABLE WAYS	N/A
248	N/A	ROAD	N/A
250	N/A	PARKING AREA	N/A
267	–	WASTE WATER WASH TANK	–
274	–	OIL/WATER SEPARATOR	–
338	–	EMERGENCY DIESEL GENERATOR	–
350	–	LIGHTING PANEL WITH TRANSFORMER	–
377	–	MAIN SUBSTATION STEP–UP TRANSFORMER	–
380	–	AUXILIARY TRANSFORMER 480V	–
382	–	GAS COMPRESSOR TRANSFORMER 13.8/4160V	–
383	–	13.8KV SWITCH	–
397	–	480V DISTRIBUTION SWITCHBOARD	–
398	–	GAS COMPRESSOR 480V MCC	–
400	–	4160 DISTRIBUTION PANEL	–
410	–	MEDIUM VOLTAGE SWITCH GEAR	–
610	N/A	TRANSFORMER FIRE WALL	N/A
640	N/A	ENGINE REMOVAL AREA	N/A

NOT TO BE USED FOR CONSTRUCTION

Project No. 51–00167032.00	GWF HENRIETTA PEAKER PROJECT	VUNERABILITY ZONE FOR AQUEOUS AMMONIA RELEASE–ATLERNATIVE–CASE METEOROLOGY	Figure 8.12–7
	URS		

J:\CADSHARED\GWF–energy\HERIETTA\SHEETS\FIG8.12–7.dwg 8/21/01

8.13 Waste Management

The Henrietta Peaker Project (HPP) consists of a 91.4-megawatt (MW) (net), natural-gas-fired, simple-cycle power plant located approximately 10 miles southwest of Lemoore, California, on a seven-acre portion of a 20-acre parcel owned by GWF Energy LLC. The HPP will interconnect to the existing adjacent Pacific Gas and Electric Company (PG&E) Henrietta Substation through a new 550-foot 70-kilovolt (kV) transmission line supported on two new transmission poles. Other linear facilities include an approximately 16.5-foot water interconnection pipeline (from the site property boundary) and a 2.2-mile Southern California Gas Company natural gas interconnection pipeline. Additionally, approximately five acres will be used for temporary construction laydown and parking.

This section presents an evaluation of the potential environmental and human health effects related to hazardous and nonhazardous wastes generated by the proposed HPP. Refer to Section 2.0 (Project Description) of this Application for Certification (AFC) for a full project description. This section discusses the environmental condition of the proposed HPP and issues related to the generation, handling, and disposal of wastes.

8.13.1 Affected Environment

Land use in the surrounding area is primarily agricultural and industrial, with the exception of a few businesses and residences in the vicinity. Land use in the area of the proposed HPP is discussed in more detail in Section 8.4 of this AFC. The parcel is undeveloped and currently under cultivation in cotton. The topography of much of the site and surrounding area is flat.

A Phase I Environmental Site Assessment of the 20-acre parcel was performed by Harding ESE (Harding, 2001) and can be found in Appendix F. The assessment established that no adverse environmental conditions exist at the HPP site.

8.13.2 Waste Generation, Storage, and Handling

This section describes the wastes that will be produced during the construction and operation and maintenance of the proposed HPP, and the storage and handling facilities

associated with these wastes. Waste categories include sanitary wastewater, nonhazardous solid and liquid wastes, and hazardous solid and liquid wastes.

8.13.2.1 Construction

Both nonhazardous and hazardous wastes will be generated during the construction phase of the proposed project. Only small amounts of hazardous wastes will be generated and, when handled properly, neither nonhazardous nor hazardous wastes will significantly impact the environment or human health.

Nonhazardous Wastes. The types of nonhazardous wastes that will be generated during the construction phase of the HPP primarily include debris and other materials requiring removal during site grading and excavation. These materials consist of paper, wood, glass, plastics, excess concrete, scrap metal, calcium silicate insulation, mineral wool insulation, empty nonhazardous material containers, steel cuttings, packaging metal, and electrical wiring waste. Approximately 40 cubic yards of these loosely packed materials will be generated weekly during construction. Recycling of wastes will be maximized to include materials such as scrap metal, copper wire, empty containers, and absorbent materials. Approximately 20 cubic yards of wastes will be recycled every two to three weeks during construction. The remaining wastes will be placed into covered, temporary storage containers for periodic removal and will be disposed of at an offsite Class II or III land disposal facility.

Some nonhazardous wastewater will also be generated during the construction phase of the proposed HPP. This wastewater will consist of sanitary wastewater, equipment wash water, and stormwater runoff. Sanitary waste will be collected in portable chemical toilets, removed from the site, and disposed of periodically by licensed contractors. Equipment wash water will be collected and contained in designated areas and will be recycled where feasible or removed from the site for appropriate treatment and disposal. Stormwater runoff will be managed in accordance with best management practices (BMPs).

All nonhazardous wastes generated during the construction phase will be handled and disposed of according to standard procedures and all applicable laws, ordinances, regulations, and standards (LORS).

Hazardous Wastes. Small amounts of contaminated soil or other solids and small volumes of waste oil, cleaning fluids, solvents, paints, batteries, lighting lamps, and welding materials may be generated during the construction phase of the proposed project. Many of these wastes will be recycled under the "excludable recyclable" provision of Title 22 of the California Health and Safety Code. The wastes that require disposal will be characterized based on generator knowledge or analytical testing to determine the appropriate management and handling. Once properly characterized, the wastes will be temporarily stored at the site in appropriate containers, according to all applicable hazardous waste storage LORS. Wastes will be managed appropriately at a recycling/transformation facility or an offsite Class I Treatment, Storage, or Disposal Facility (DSTF).

The construction contractor will be considered the generator of the hazardous wastes and will be responsible for handling, storage, transfer, and disposal of the hazardous wastes generated. Hazardous wastes will be stored on site for less than 90 days, in accordance with all applicable LORS. The approximate volumes of hazardous wastes generated during the construction of the project are listed in Table 8.13-1.

All hazardous wastes generated during the construction phase will be handled and disposed of according to standard procedures and applicable LORS. When handled properly, these hazardous wastes will not impact the environment or human health.

8.13.2.2 Operation and Maintenance

Both nonhazardous and hazardous wastes will be generated during operation and maintenance of the proposed HPP. The primary waste will be nonhazardous wastewater. These wastes and their estimated quantities are discussed below.

Nonhazardous Wastes. The types of nonhazardous wastes that will be generated during operation and maintenance of the proposed HPP include sanitary wastewater, surface water runoff, solid maintenance wastes, and standard office wastes. Where appropriate, wastes will be recycled, and the remaining wastes will be placed into appropriate storage containers until periodic removal from the site.

All sanitary wastewater will be routed to the onsite septic tank/leach field. All other wastewater will be handled and disposed of according to standard procedures and all applicable LORS.

Water collected from the off-line combustion turbine compressor washing will drain to a wastewater holding tank and be disposed off site. Wastewater from the transformer sump drains and various plant drains will be connected to an oil-water separator unit. The clean water from the oil-water separator will be recycled on site for process water or discharged to the wastewater management system. On-line wash of the combustion turbine generators with demineralized water will not generate wastewater. Stormwater collected from areas of the plant not subject to oil contamination will drain to an onsite evaporation/infiltration detention basin.

The facility will produce solid wastes from maintenance and office activities typical of industrial facilities. These wastes include rags, broken and rusted metal and machine parts, defective or broken electrical materials, empty containers, pallets and wood materials, and other solid wastes. Where appropriate, wastes will be recycled; the remaining wastes will be placed into covered, temporary storage containers and periodically removed for disposal at an offsite Class III land disposal facility.

All nonhazardous wastes generated during operation and maintenance will be handled and disposed of according to standard procedures and all applicable LORS.

Hazardous Wastes. Types of hazardous waste that will be generated during operation and maintenance of the proposed HPP include selective catalytic reduction (SCR) catalyst, waste oils, off-line turbine wash wastewater, and other maintenance wastes (Table 8.13-2). Many of these wastes will be recycled under the "excludable recyclable" provisions of Title 22 of the California Health and Safety Code. The wastes that require disposal will be characterized based on generator knowledge or analytical testing to determine the appropriate management and handling. Once properly characterized, the wastes will be temporarily stored at the site in appropriate containers, according to all applicable hazardous waste storage LORS. When appropriate, the wastes will be transported by a licensed hazardous waste hauler to a recycling facility or an offsite Class I TSDF. The handling, storage, transfer, and disposal of hazardous wastes will comply with all applicable LORS. When handled properly, the hazardous

wastes generated during operation and maintenance of the proposed project will not impact the environment or human health.

It is estimated that approximately 525 cubic feet of waste SCR and/or carbon monoxide (CO) catalyst will be generated periodically. The catalysts will be returned to the manufacturer for metals reclamation and/or disposal. Other hazardous wastes expected to be generated at the HPP during operation and maintenance include paint and thinner waste, lead acid batteries, natural gas filters, consumer-type batteries, spent sandblast media, and nonempty aerosol cans. A description of these wastes is included in Table 8.13-2. Heavy metals are present in the SCR and CO catalysts, which are considered hazardous wastes, if not recycled.

The combustion turbine has a capacity of 7,400 gallons for lubricating oil. It is estimated that this amount of lubricating oil will be replaced every 10 years. These oils must be replaced to ensure proper operation of the turbines. Approximately 300 gallons of waste oils from other equipment will be generated annually. These oils will be recycled where feasible. Glycol used in the combustion turbine generator cooling system will be replaced periodically and recycled if feasible or disposed of off site. The off-line turbine wash wastewater will be drained to a dedicated storage tank, characterized and disposed of off site as appropriate.

Properly trained personnel will be present during the handling of hazardous materials/wastes in the event of an accidental release of these materials. All hazardous wastes generated during operation and maintenance will be handled and disposed of according to standard procedures and all applicable LORS.

The HPP will obtain a hazardous waste generator ID number as required by the Resource Conservation and Recovery Act (RCRA) and California Department of Toxic Substances Control (DTSC).

8.13.3 Waste Disposal Sites

This section reviews the nonhazardous and hazardous waste disposal facilities that may feasibly be used for disposal of wastes associated with the HPP.

8.13.3.1 Nonhazardous Waste Disposal Facilities

Nonhazardous wastes will be removed from the site periodically for disposal or recycling. All nonhazardous waste from the city of Lemoore goes to the local materials recovery facility, where it is sorted and recyclables removed. The remaining waste is then transferred to the Chemical Waste Management facility in Kettleman City. The Kings Waste Recycling Authority (KWRA) has an agreement with Chemical Waste Management to send nonhazardous waste from the cities of Lemoore, Hanford, and Corcoran to the Kettleman Hills facility (Cooke, 2001). The facility has a permitted capacity of 10.7 million cubic yards, with future plans to increase the capacity to 16.7 million cubic yards. Currently, the remaining capacity is 6 million cubic yards. If the current intake volume remains constant, the estimated closure date is 2007. However, the proposed expansion will extend the closure date to the year 2013. The facility is not involved in any major cleanup actions that could affect the future availability of the facility (Yarbrough, 2001).

8.13.3.2 Hazardous Waste Disposal Facilities

The hazardous waste generated at the HPP will be disposed of at a nearby hazardous waste TSDF. In California, there are three major commercial Class I disposal facilities that accept hazardous wastes. The status of these facilities is summarized below.

Chemical Waste Management Kettleman Hills Facility (EPA ID# CAT000646117). This permitted Class I disposal facility is located in Kings County off State Route (SR) 41 west of Kettleman City. It is approximately 15 miles from the proposed HPP site. The categories of wastes handled at this facility include organic sludges and solids, polychlorinated biphenyls (PCBs) with a concentration of less than 50 parts per million (ppm), pesticides, cyanide and sulfide reactives, halogenated and nonhalogenated solvents, substances with metals that exceed the Toxicity Characterization Leaching Procedures (TCLP) and/or California hazardous waste limits, and waste acids, caustics, and oil. Onsite treatment and disposal methods include evaporation, landfilling, neutralization, pesticide hydrolysis, and stabilization. The facility has a permitted capacity of 10.7 million cubic yards, with future plans to increase the capacity to 16.7 million cubic yards. The remaining capacity is 6 million cubic yards. If the current intake volume remains constant, the estimated closure date is 2007.

However, the proposed expansion will extend the closure date to the year 2013. The facility is not involved in any major cleanup actions that could affect the future availability of the facility (Yarbrough, 2001).

Safety-Kleen® Environmental Services (Formerly Laidlaw Environmental Services) Buttonwillow Facility (EPA ID# CAD980675276). This permitted Class I disposal facility is located in Kern County on Lokern Road between SR 33 and SR 58, near Buttonwillow. The facility is approximately 70 miles from the proposed HPP site. The categories of wastes handled at this facility include aqueous wastes, contaminated soil, inorganic and organic sludges, PCBs with a concentration of less than 50 ppm, cyanide and sulfide reactives, and substances with metals exceeding concentration limits set by the TCLP and/or California hazardous waste limits. Onsite treatment and disposal methods include evaporation, landfilling, and solidification/stabilization. The facility has a permitted capacity of 13,800,000 cubic yards and a remaining capacity of 10,850,000 cubic yards. The estimated closure date is 2036. The facility is not involved in any major cleanup actions that could affect the future availability of the facility (Buona, 2001).

Safety-Kleen® Environmental Services (Formerly Laidlaw Environmental Services) Imperial Valley Disposal Facility (EPA ID# CAD000633164). This permitted Class I disposal facility is in Imperial Valley, approximately seven miles west of Westmoreland on SR 86. It is approximately 300 miles from the proposed HPP site. The categories of wastes handled at this facility include aqueous wastes, contaminated soil, inorganic and organic sludges and solids, latex paint sludges, PCBs with concentrations of less than 50 ppm, pesticides, substances with metals that exceed the TCLP limits and/or California hazardous waste limits, and waste acid, caustic, and oil sludges. Onsite treatment and disposal methods include landfilling, microencapsulation, neutralization, and solidification/stabilization. After planned construction of two additional land disposal cells (2,600,000 cubic yards), the facility will have a permitted capacity of 6,100,000 cubic yards. The available capacity is approximately 2,500,000 cubic yards. The annual usage is approximately 115,000 cubic yards. Based on this annual usage, the estimated closure date is 2020. With construction of the two additional cells, the estimated closure date is 2050. The facility is not involved in any major cleanup actions that could affect the future availability of the facility (Smith, 2001).

8.13.3.3 Waste Recycling Facilities

All nonhazardous waste from the city of Lemoore goes to the local materials recovery facility, where it is sorted and the recyclables removed.

8.13.3.4 Waste Disposal Impacts

This section describes the potential impacts the proposed HPP may have on the aforementioned hazardous and nonhazardous waste disposal capacities. Many of the wastes generated by the HPP will be recycled, minimizing the amount of wastes for disposal and the impacts on waste disposal capacities.

Nonhazardous Waste Impacts. It is anticipated that nonhazardous waste disposal from the proposed HPP will not significantly decrease the capacity of the waste disposal facilities used by the project. With active waste recycling efforts in place, along with the currently available Class II or III waste disposal capacity, the incremental decrease in available waste disposal capacity resulting from the proposed HPP can be considered insignificant.

Hazardous Waste Impacts. It is anticipated that hazardous waste disposal from the proposed HPP will not significantly decrease the capacity of the waste disposal facilities used by the project. With active waste recycling efforts in place, along with the currently available Class I waste disposal capacity, the incremental decrease in available waste disposal capacity resulting from the proposed HPP can be considered insignificant.

8.13.4 Facility Closure Issues

Facility closure of the proposed HPP involves either temporary or permanent closure. Temporary closure could occur due to general facility maintenance; replacement of one or more critical operating components of the facility; a disruption in the supply of critical natural gas, chemicals, or labor; or a natural occurrence beyond the control of plant operators (e.g., flooding, earthquake, fire, etc.). Permanent closure of the facility could result from similar causes, but could also include causes such as facility obsolescence, irreparable damage to the facility, economic forces, or other unforeseen causes. The waste management issues associated

with the temporary or permanent closure of the HPP are discussed below. See Section 4.0 (Facility Closure) for more information.

8.13.4.1 Temporary Closure

In the case of an unforeseen temporary closure of the facility in which there is no accidental release of hazardous materials, a contingency plan for cessation of operations will be implemented. This plan will be prepared before the facility begins operation and will ensure that, throughout temporary closure, all facility operations comply with LORS. Depending on the length of the closure, hazardous materials may be eliminated from the facility by removing materials from their respective storage containers and/or by halting delivery of hazardous materials. In the former case, wastes removed from their storage containers will be disposed of according to all applicable LORS. It is also possible that temporary closure of the facility could lead to the cessation of waste-generating activities. In this case, periodic removal of wastes from the facility will be halted until needed again.

If an accidental release of hazardous materials is associated with an unforeseen temporary closure in the facility, procedures set forth in the Hazardous Materials Business Plan, as described in Section 8.12 (Hazardous Materials Handling), will be followed. The business plan will be prepared before the facility begins operation and will ensure that appropriate measures are developed to respond to an accidental release of hazardous materials, clean up hazardous materials, and notify authorities and the public of the hazardous materials release.

8.13.4.2 Permanent Closure

Management of hazardous and nonhazardous wastes for permanent facility closure will be addressed in the general closure plan. At the time of permanent closure, recycling efforts will be maximized to prevent excess of waste generation. Unused chemicals will be sold back to the suppliers, other purchasers, or users. To protect the environment and human health, equipment containing hazardous material residue will be decommissioned, according to a decommissioning plan that will be prepared at the appropriate time. Nonhazardous wastes will be removed from the facility and disposed of in a Class II or III land disposal facility.

8.13.5 Monitoring

The environmental impacts caused by the construction and operation of the HPP are expected to be minimal; therefore, extensive monitoring programs are not required. Wastes will be monitored in accordance with the generator permit requirements throughout the life of the plant.

8.13.6 Impacts

The nonhazardous waste generated at the HPP will add to the total waste generated in Kings County and in California. However, there are adequate recycling facilities and landfill capacity to dispose of the waste from Kings County over the next 40 to 50 years. The impact of the solid waste generated by the plant is therefore not considered to be individually or cumulatively significant. No significant, indirect impacts on nonhazardous waste disposal or recycling from materials suppliers are anticipated.

The hazardous waste generated at the facility will be recycled and treated to the extent possible. California has more than adequate treatment and disposal capacity for the hazardous wastes that cannot be recycled. The impact of hazardous waste generated by the project is not individually or cumulatively significant. No significant, indirect impacts on nonhazardous waste disposal or recycling from materials suppliers are anticipated.

8.13.7 Waste Mitigation Measures

No significant impacts are anticipated from the handling and management of wastes generated at the HPP facility. The handling and management of the waste will follow the hierarchy approach of waste reduction set forth in Public Resources Code (PRC) Section 40000 et seq. (i.e., source reduction, waste recycling, and waste disposal). A plan, as well as associated performance reports, will be prepared for reducing the generation of hazardous waste. These best management practices will ensure that there are no significant impacts resulting from the project.

During the construction and the operations and maintenance phases of the project, minor quantities of nonhazardous wastes will be generated. With proper mitigation measures, a

significant portion of these wastes can be diverted from the local Class II or III disposal facility. Where feasible, these wastes will be recycled or reused.

The mitigation measures for hazardous wastes are as follows:

- Prior to initiation of the project construction phase, construction employees will receive hazardous-waste-related training that focuses on recognition of potential contaminated soil and/or groundwater (e.g., that may be encountered during subsurface excavations for foundations or pipeline trenches) and contingency procedures to be followed to protect worker safety and public health.

- A detailed waste management plan will be prepared prior to startup to ensure proper storage, labeling, packaging, record keeping, manifesting, minimization, and disposal of all hazardous materials and wastes. The waste management plan will include:

  – A description of each hazardous waste stream

  – Handling, transport, treatment, and disposal procedures for each waste

  – Preparedness, prevention, contingency, and emergency procedures

  – Personnel training

- Prior to facility startup, an application will be made to the California Department of Toxic Substances Control (DTSC) for a hazardous waste generator number. The facility will not treat, store, or dispose of hazardous waste in a manner that will cause the facility to be characterized as a TSDF.

- All hazardous wastes will be stored on site for less than 90 days (or other accumulation periods, as allowed by 22 California Code of Regulations [CCR] 66262.34 for hazardous waste generators) and will be managed in accordance with state and federal hazardous waste generator requirements. Hazardous wastes, as well as hazardous materials that are spilled or otherwise become unsuitable for use, will be stored in an appropriately segregated hazardous waste storage area. Hazardous waste will be stored in a commercially available storage shed with integral secondary containment or in a sealed concrete hazardous waste storage area to control leaks and spills. Secondary containment areas will be sized to hold a volume equal to at least 110 percent of the largest tank (or container).

  If hazardous wastes are stored out-of-doors, the secondary containment structure will also have a volume equal to at least the capacity of the largest tank (or container) plus the volume of rainfall from a 25-year, 24-hour storm event, or will be covered to prevent rainwater from collecting in the containment basin. The hazardous waste storage area will be inspected and

maintained frequently. Inspections and maintenance activities will be documented.

- Hazardous wastes will be transported by a licensed hazardous waste transporter and disposed of at an offsite hazardous waste facility. Hazardous wastes will be transported off site using hazardous waste manifests. Copies of manifests, reports, waste analyses, exception reports, land disposal restriction notices/certifications, destruction certifications, etc. will be kept on site and accessible for inspection for three years.

- A spill control and management plan will be developed for the HPP before commercial operation. The purpose of the spill control and management plan is to avoid spills and accidental mixing of incompatible chemicals during transfer of chemicals. The design features for the spill control and management plan will include secondary containment, collection, and treatment systems. The spill control and management plan is further discussed in Section 8.12 (Hazardous Materials Handling).

- Facility employees will receive hazardous materials training as required by the Occupational Safety and Health Administration's Hazard Communication Standard. Additionally, employees will be trained in hazardous waste procedures, spill contingencies, and waste minimization procedures. Hazardous waste training will include, but not be limited to, the following subjects:

  - Hazardous waste characteristics
  - Use and management of containers
  - Waste packaging
  - Marking and labeling
  - Accumulation/storage areas
  - Inspections
  - Preparedness and prevention
  - Emergency equipment
  - Contingency plan
  - Emergency response procedures
  - Hazardous waste manifesting
  - Spill response and containment
  - Waste minimization

- Procedures to minimize hazardous waste generation will be established. Employees will be trained in procedures to reduce the volume of hazardous

waste generated at the HPP. The procurement of hazardous materials will be controlled to minimize surplus materials on site and to prevent unused materials from becoming "off-spec." Nonhazardous materials will be used in lieu of hazardous materials whenever possible. Hazardous materials will be reused whenever possible. Hazardous wastes will be recycled whenever possible.

Environmental impacts related to waste management issues caused by the construction (including pipelines and transmission facilities) and operation of the HPP are expected to be minimal. Therefore, extensive monitoring programs are not required. The volumes and characteristics of waste generated during construction and operation of the proposed HPP will be monitored in accordance with requirements stipulated in appropriate regulatory permits obtained for the project.

With the implementation of the above measures the HPP will comply with all applicable LORS and will not result in significant impacts.

8.13.8 Proposed Conditions of Certifications

Proposed conditions of certification are contained in Appendix K. These conditions are proposed in order to ensure compliance with applicable LORS and/or to reduce potentially significant impacts to less-than-significant levels.

8.13.9 Laws, Ordinances, Regulations, and Standards

The following section lists the LORS that apply to the hazardous waste storage, handling, and disposal activities for the proposed HPP. These LORS are in place to protect employees, the environment, and the surrounding community from exposure to hazardous and nonhazardous wastes. The applicable LORS are summarized in Table 8.13-3.

8.13.9.1 Federal

Hazardous and nonhazardous wastes are governed in part by RCRA. As required by RCRA, an application for a hazardous waste generator identification number will be coordinated through the U.S. Environmental Protection Agency and the DTSC.

Title 40, Code of Federal Regulations (CFR), Parts 260–272 govern the generation, transportation, treatment, storage, and disposal of hazardous waste through a comprehensive management system. These sections also list the characteristics of hazardous wastes, including ignitability, corrosivity, reactivity, and toxicity. Subtitle D of these parts grants authority for regulating nonhazardous waste to the state.

Title 49 CFR, Parts 172, 173, and 179 provide standards for labels, placards, and markings on hazardous waste shipments by truck, and standards for packaging hazardous wastes.

Title 42, United States Code, Section 6922 sets forth standards applicable to generators of hazardous waste regarding record keeping, labeling practices, informing hazardous waste transporters of general composition of wastes, use of a manifest system, and reporting requirements from the generators.

8.13.9.2 State

The Hazardous Waste Control Act of 1972 is codified in Section 25100 et seq. of the California Health and Safety Code. Regulations addressing the management of hazardous wastes are found in 22 CCR 66001 et seq. These management issues include:

- Characterizing wastes
- Obtaining a waste identification number
- Implementing a waste reduction program
- Manifesting wastes
- Packaging and labeling wastes
- Record keeping
- Monitoring
- Emergency preparedness

Title 22 CCR, Section 67100 (Hazardous Waste Source Reduction and Management Review) requires waste generators to develop a plan for reducing hazardous

wastes, depending on the quantities of hazardous waste generated. Then, if applicable, generators must prepare a hazardous waste management performance report every four years.

Health and Safety Code, Section 25500 et seq. (Hazardous Materials Business Plans) require emergency response plans from facilities storing hazardous materials in excess of 55 gallons, 500 pounds, and 200 cubic feet, as appropriate. Hazardous wastes or mixtures of hazardous wastes are included in the definition of hazardous materials. Inventories prepared in accordance with this requirement will include information on hazardous wastes.

Nonhazardous wastes are governed in part by the California Integrated Waste Management Act of 1989, which is found in PRC Section 40000 et seq. This law serves as a guide for an integrated statewide system of solid waste management, which includes efforts for solid waste handling, disposal, source reduction, recycling, and land disposal safety.

Title 22 CCR, Sections 66260–66270 establish hazardous waste regulations for generators and transporters of hazardous wastes, and owners of hazardous waste DSTFs.

The Porter-Cologne Water Quality Control Act regulates wastes that have the potential to cause loss of beneficial use of California's waters. This act requires the State Water Resources Control Board to establish reportable quantities of hazardous wastes and hazardous materials based on their potential to degrade the waters of the state. Any discharge of hazardous materials that is not consistent with the discharge requirements must be reported to the appropriate authorities.

8.13.9.3 Local

As stipulated in the Kings County Zoning Ordinance, the proposed HPP must comply with the appropriate setbacks required by the Kings County Fire Department for fire safety. The Kings County Division of Environmental Health Services will serve as the Certified Uniform Program Agency (CUPA) for the proposed project. Any other local agencies or LORS that are applicable to the HPP will be addressed before the construction and operation of the project.

8.13.10 Involved Agencies

The agencies that will provide regulatory oversight during the construction and operation of the proposed HPP are the Kings County Division of Environmental Health Services, the Central Valley Regional Water Quality Control Board, and DTSC. Agency contacts are presented below.

Involved Agencies and Agency Contacts

Agency	Contact	Reason for Involvement
Kings County Planning Department 330 Campus Drive Hanford, CA 93230	Steve Sopp (559) 584-1411	Assistance with solid waste management facilities, CEQA, and similar information.
Kings County Division of Environmental Health Services 330 Campus Drive Hanford, CA 93230	Raymond Cooke/Permit Assistance Center (559) 584-1411	Assistance with waste handling and regulation. Notification required if pre-existing onsite contaminated soil is considered hazardous. Issues Hazardous Waste Generator License equivalent via acceptance of facility's Hazardous Materials Business Plan.
Kings County Fire Department		Management of hazardous materials and fire response.
Department of Toxic Substances Control 400 P Street P.O. Box 806 Sacramento, CA 95812-0806	U.S. EPA ID Center (916) 324-1781	Application for U.S. EPA identification number.

CEQA = California Environmental Quality Act
U.S. EPA = U.S. Environmental Protection Agency

8.13.11 Waste Management Permits Required

Prior to construction of the proposed HPP, the project will obtain a U.S. Environmental Protection Agency identification number from the DTSC. Application and qualification for this identification number are dependent on the quantities and characteristics of the wastes generated at the HPP.

8.13.12 References

Buona, Marianna, 2001. Safety-Kleen Landfill, Buttonwillow, California. Telephone number: (661) 762-6200. Personal Communication with Angela Liang (URS Oakland) on June 8.

Cooke, Raymond, 2001. Kings County Division of Environmental Health Services. Telephone number: (559) 584-1411. Personal Communication with Angela Liang (URS Oakland) on June 28.

Harding ESE, 2001. *Phase 1* Environmental *Site Assessment: GWF Power Systems, Henrietta Peaker, 25th Avenue, Henrietta, California.* June 1.

Smith, Allen, 2001. Environmental Manager, Safety-Kleen® Landfill, Imperial County, Westmorland Facility, California. Telephone number: (760) 344-9400. Personal communication with Angela Liang (URS Oakland) on June 8.

Yarbrough, Terri, 2001. Chemical Waste Management Inc., Kettleman Hills Facility; Telephone number: (559) 386-6115. Personal communication with Angela Liang (URS Oakland) on June 9.

TABLES

Table 8.13-1
Hazardous Wastes Generated During Construction

Hazardous Waste	Description	Approximate Quantity Generated
Empty hazardous material containers	Contains hazardous materials residue	1 cubic yard/week
Solvents, used construction equipment lube oils, paint, adhesives, and wastewater contaminated by oil, etc.	Various hazardous wastes	7 to 10 55-gallon drums/month
Used and waste lube oil during CT lube oil flushes	Excludable recyclable material	<55 gallons/3 weeks
Oily rags, oil absorbent from CT lube oil flushes	Contaminated with excludable recyclable material	1 to 2 55-gallon drums/3 weeks
Oily rags, oil absorbent generated during normal construction activities (excluding lube oil flushes)	Contaminated with excludable recyclable material	3 to 4 55-gallon drums/month
Consumer-type lighting lamps	Waste lamps	<50 pounds/year
Spent batteries; lead acid	Potentially recyclable	145 pounds/year
Consumer-type batteries	Waste batteries, dry, containing potassium hydroxide, solid (contains manganese dioxide)	65 pounds/year

CT = combustion turbine

Table 8.13-2
Hazardous Wastes Generated During Operation and Maintenance Phase

Hazardous Waste	Description	Approximate Quantity Generated
SCR and CO catalysts	Waste catalyst (contains heavy metals)	17,500 pounds/ periodically
Lubricating oil	Excludable recyclable material	7,400 gallons/10 years
Used oil	Excludable recyclable material	300 gallons/year
Paint & thinner waste	Waste paint-related material, 3, UN1263, PG II (D001)	<100 gallons/year
Lead acid batteries	Waste batteries, wet, filled with acid, 8, PGIII, UN3028	Less than 575 pounds/year
Natural gas filters	Spent natural gas filters, non-RCRA hazardous waste, solid	75 pounds/year
Consumer-type batteries	Waste batteries, dry, containing potassium hydroxide, solid (contains manganese dioxide)	Less than 65 pounds/year
Fluorescent lamps	Used lamps, "universal waste"	Less than 50 pounds/year
Oil filters	Used filters, excludable recyclable materials	Less than 500 pounds/year
Nonempty aerosol cans	Waste aerosols, 2.1 (contains flammable liquid)	Less than 50 pounds/year

CO = carbon monoxide
RCRA = Resource Conservation and Recovery Act
SCR = selective catalytic reduction

Table 8.13-3
Waste Management Laws, Ordinances, Regulations, and Standards

Jurisdiction	Authority	Administering Agency	Requirements & Compliance	AFC Conformance Section
Federal	RCRA, 40 CFR §§ 260–272	U.S. EPA, Region IX	Management of hazardous wastes. California is an authorized state for RCRA.	8.13.2
	49 CFR §§ 172, 173, and 179	CHP and DOT	Project will meet standards for labels, placards, packaging, and markings on hazardous waste shipments.	8.13.2
	42 USC § 6922, Solid Waste Disposal Act/RCRA	U.S. EPA, Region IX and Cal-EPA, DTSC	Project will meet standards for record keeping, labeling practices, notification requirements, use of a manifest system, and reporting requirements from generators.	8.13.2
State	Hazardous Waste Control Act of 1972, as amended; California Health & Safety Code § 25100 et seq.; 22 CCR § 66001 et seq.	DTSC; Kings County – Division of Environmental Health Services	Management of hazardous wastes.	8.13.2
	22 CCR § 67100	Kings County – Division of Environmental Health Services	Project will prepare a plan for reducing hazardous waste generation, and prepare associated performance report.	8.13.5
	California Health & Safety Code §§ 25500–25541	CIWMB; Kings County – Division of Environmental Health Services	Project will ensure nonhazardous wastes are disposed of separately and appropriately from hazardous wastes.	8.13.2
	California Integrated Waste Management Act of 1989, PRC § 40000 et seq.	CIWMB; Kings County – Division of Environmental Health Services	Management of solid waste.	8.13.2

Table 8.13-3 (continued)
Waste Management Laws, Ordinances, Regulations, and Standards

Jurisdiction	Authority	Administering Agency	Requirements & Compliance	AFC Conformance Section
State	22 CCR §§ 66260–66270	DTSC; Kings County – Division of Environmental Health Services	Project will comply with regulations for generators of hazardous wastes.	8.13.2
	California Porter-Cologne Water Quality Control Act	SWRCB; RWQCB Central Valley Region	Project will comply with waste discharge requirements for septic system and injection wells, if applicable.	8.14.2
Local	Kings County Zoning Ordinance, Development Standards	Kings County Fire Department	Project will comply with safety setbacks.	8.7.3.1, 8.7.3.2
Industry Codes	AICHE–Center for Chemical Process Safety, 1985 Guidelines	California OES	Project will comply with chemical hazard evaluation procedures as required.	8.12.6

AICHE = American Institute of Chemical Engineers
CCR = California Code of Regulations
CFR = Code of Federal Regulations
CHP = California Highway Patrol
CIWMB = California Integrated Waste Management Board
DOT = Department of Transportation
OES = Office of Emergency Services
PRC = Public Resources Code
RCRA = Resource Conservation and Recovery Act
RWQCB = Regional Water Quality Control Act
USC = United States Code

8.14 Water Resources

The Henrietta Peaker Project (HPP) consists of a 91.4-megawatt (MW) (net), natural-gas-fired, simple-cycle power plant located approximately 10 miles southwest of Lemoore, California, on a seven-acre portion of a 20-acre parcel owned by GWF Energy LLC. The HPP will interconnect to the existing adjacent Pacific Gas and Electric Company (PG&E) Henrietta Substation through a new 550-foot 70-kilovolt (kV) transmission line supported on two new transmission poles. Other linear facilities include an approximately 16.5-foot water interconnection pipeline (from the site property boundary) and a 2.2-mile Southern California Gas Company natural gas interconnection pipeline. Additionally, approximately five acres will be used for temporary construction laydown and parking.

The affected environment of the HPP is described in terms of regional water resources and the identified water supply. The potential impacts that may result from the HPP are described with regard to state water policy, surface water (floodwater and stormwater), and groundwater. Cumulative and indirect impacts and mitigation measures are also addressed below. The laws, ordinances, regulations, and standards (LORS) that apply to the use and conservation of water resources are presented in Section 8.14.5.

8.14.1 Affected Environment

The HPP facility will be constructed on previously disturbed agricultural property. The area immediately surrounding the site is predominantly used for agricultural purposes. A closed trucking transfer station is located approximately one mile south of the site. The nearest residences are condominiums on the Naval Air Station (NAS) Lemoore property, bordering State Route (SR) 198, approximately 0.5 miles east of the intersection of SR 198 and 25th Avenue (the base entrance), and approximately 1.5 miles northeast of the project site. The water supply for the HPP will be provided by Westlands Water District and Kings County.

8.14.1.1 Regional Water Resources

Climate and Precipitation. The Lemoore-Hanford area is Mediterranean-subtropical, with mild winters and dry summers. Most of the yearly precipitation falls between the months of October and May. Table 8.14-1 lists the average monthly maximum temperatures,

the average monthly minimum temperatures, and the average monthly rainfall recorded at the Hanford weather station from 1927 through 2000. Average annual rainfall is 8.18 inches.

Regional Water Use and Supply. Within Kings County, water needs are supplied by groundwater and surface water. Total annual water use in Kings County is 1,400,000 acre-feet (456 billion gallons). Approximately 32 to 35 percent of the total use is from groundwater; the remainder of the water comes from surface water supplies, which include the Kings River and the State Water Project (Kings County Planning Department, 1998).

Geologic Setting and Groundwater. The HPP site is located in the Tulare Lake Groundwater Basin, which underlies portions of Kings and Tulare Counties. This groundwater basin has a surface area of approximately 524,800 acres and a storage capacity of 1,500,000 acre-feet. Annual average extraction for agriculture is 648,000 acre-feet. Annual extraction for urban uses, which include industrial uses, is 24,000 acre-feet.

The aquifer system in the vicinity of the site generally consists of an upper and a lower aquifer, which are separated by a relatively thick clay layer of regional extent called the Corcoran Clay member of the Tulare Formation (shown as E-clay on Figure 8.15-5). The Corcoran Clay, part of the modified E-clay in the San Joaquin Valley, is approximately 450 feet below ground surface (bgs) and 50 to 100 feet thick. The Corcoran Clay is a silty, diatomaceous clay with low permeability and is one of the largest confining bodies in the area, underlying an area of approximately 5,000 square miles. In general, clay zones are impermeable aquitards that restrict vertical and lateral movement of groundwater. Movement of groundwater through soil can be retarded or terminated by aquitards. Several clay beds were deposited in a lake that once occupied the San Joaquin Valley trough. These many fine-grained lenses located throughout the valley have a combined thickness of several thousand feet.

Within the vicinity of the HPP site, the upper aquifer generally consists of interbedded sands and clays that contain water under unconfined or semiconfined conditions. The lower aquifer underlies the Corcoran Clay and also consists of interbedded sands and clays. Although the Corcoran Clay is believed to be a competent barrier between the upper and the lower aquifers, the Corcoran Clay pinches out and disappears to the north and east of the HPP site. Where the Corcoran Clay disappears, the lower aquifer is no longer isolated from the upper

aquifer. Historically, when a groundwater supply well has been drilled and completed in the area, the casing has commonly not been cemented across the clay. Thus, many wells have been completed in both the upper and the lower aquifers, providing hydraulic communication between the two aquifers. Water level data from 1971 and 1987 indicate that the static pressure of groundwater is approximately equal in both the lower aquifer and the upper aquifer in the area near Hanford due to the presence of these wells. These data indicate that the aquifers are not confined. As of spring 1999, the groundwater elevation in these aquifers was located at approximately 80 feet bgs, though well depths to groundwater vary from 50 to over 150 feet bgs within the general area (Mills, 2000a). Depth to groundwater measured by Kleinfelder at the proposed HPP site was 6 feet bgs as stated in their geotechnical report of June 2001 (see Appendix H1-3). For more information on the hydrogeology of the HPP site, see Section 8.15.1.2.

Surface Water. The HPP site is located within the Tulare Lake Hydrogeologic Basin, which consists of the drainage area of the southern San Joaquin Valley. The basin is interior draining, with no normal outlet to the Pacific Ocean, except in years of extreme rainfall when flood-release water from the Kings River flows north into the San Joaquin River Basin via the Fresno Slough.

To the north, the Kings River is one of four major rivers that supply fresh surface water to the basin. Historically, the Kings River flowed into its delta, consisting of a number of parallel channels on the northeast side of Tulare Lake. These channels, as well as the lake itself, were shallow and largely temporary, forming only during the late winter and spring and disappearing by mid-summer. Many of these channels were removed during the installation of agricultural operations. The south fork of the Kings River is approximately six miles east of the HPP site. The closest point of the historic Tulare Lake bed is approximately eight miles southeast of the site.

Surface water is used within the basin primarily for municipal, agricultural, and industrial purposes. In addition to the rivers, State Water Project (SWP) and federal Central Valley Project (CVP) water is imported into the basin through the California Aqueduct. These sources provide water to agricultural lands, cities, and industries throughout the central San

Joaquin Valley region. The closest ditch to the HPP site is the Crescent Ditch, which is parallel to the Avenal Cutoff on its southeast side, approximately 0.7 miles to the southeast. A series of sewage treatment system stormwater detention basins, approximately 275 acres in extent, are located approximately 0.5 miles east of the HPP site. These ponds are owned and operated by NAS Lemoore and serve to dispose of effluent from the NAS Lemoore sewage treatment plant located on the base.

8.14.1.2 Water Supply for the Proposed HPP

The water supply source for the proposed HPP will be SWP and CVP surface water from Westlands Water District and Kings County. Both the SWP and CVP water will be delivered to the HPP site by the Westlands Water District from an existing pipeline and standpipe located adjacent to the site. GWF Energy LLC has completed the following agreements to secure the delivery of the HPP proposed water supply:

1. A contract with Westlands Water District to deliver 44 acre-feet of CVP Entitlement to the HPP site
2. An agreement with Kings County under which the entity will deliver 200 acre-feet per year of its SWP entitlement for use by HPP
3. A wheeling agreement with Westlands Water District to deliver the Kings County SWP water to the HPP site

Water for the site will be pumped from the Westlands Water District's standpipe (number 30380-30-935), located adjacent to the northwest corner of the HPP site.

The HPP's simple-cycle unit does not include a cooling tower and will therefore have a minimal water demand. The average annual water consumption for the HPP, assuming 8,000 hours of operation, will be 150 acre-feet per year. The HPP average daily flow rate is 148,000 gallons per day. Water used by the combustion turbines for evaporative cooling (for power augmentation), emission control (water injections for control of nitrogen oxides), and turbine compressor washing will be treated using microfiltration, a multistage reverse osmosis system, electro-deionization, and mechanical vapor recompression. The firewater system and plant service water requirements will be provided from the untreated raw water storage tank. Bottled water will be delivered to the HPP site for drinking.

8.14.2 Environmental Consequences

This section evaluates the potential impacts of the HPP on water resources, including groundwater, surface water use and storage, and the supply of surface water from local water districts to the HPP site. Consistency with state water policy and power plant cooling water policy are also examined.

Consistent with the California Environmental Quality Act (CEQA) Guidelines, the HPP will have a significant effect on the environment if it impacts the water resources in any of the following ways:

- Substantially degrades water quality;
- Contaminates a public water supply;
- Substantially degrades or depletes groundwater resources;
- Interferes substantially with groundwater recharge;
- Encourages activities that result in the use of large amounts of water;
- Uses water in a wasteful manner;
- Causes substantial flooding, erosion, or siltation; or
- Substantially diminishes habitat for fish, wildlife, or plants.

Project-related impacts and their significance are described below. The cumulative and indirect impacts on water resources are discussed in 8.14.3. Figures 8.14-1 and 8.14-2 illustrate the water balance for the annual average and maximum daily cases under the HPP. Table 8.14-2 provides general water quality information for the source proposed for HPP supply water.

Impacts to Groundwater. The HPP will not use groundwater from the area and thus will not have any impact on local or regional groundwater supplies. The onsite stormwater detention basin will only contain “noncontact” stormwater and therefore will not cause an impact on local and regional groundwater.

Impacts on Surface Water Use and Storage. Potential surface water impacts resulting from the HPP include the disruption of surface runoff patterns during the construction phase and stormwater management during the operations and maintenance phase.

During construction of the HPP, approximately 12 acres will be disturbed at the HPP site. Seven acres will be permanently altered for the HPP site and 5 acres will be temporarily disturbed for material and equipment staging and parking during construction.

During construction of a natural gas pipeline, approximately seven acres will be disturbed. The natural gas pipeline route crosses the Crescent Ditch south of the Avenal Cutoff and parallels a tributary ditch along the east side of 25th Avenue. No project features will be located within the 100-year floodplain, as shown on Figure 8.14-3. No surface water bodies are present within the immediate vicinity of the site.

The HPP site is relatively flat. Grading during construction of the HPP will alter existing drainage patterns on the site. Surface water runoff will be directed around the construction site to the maximum extent feasible to minimize excess erosion and pollutant loading. The drainage patterns of areas disturbed during the construction of the HPP linear facilities will be re-established after construction. Existing roadways will be used to the maximum extent possible; if additional temporary roadways are required, they will be sited and graded to minimize erosion and disturbance to runoff patterns. Best engineering management practices and drainage control will be implemented to minimize impacts from construction activities. A stormwater monitoring program will also be implemented for construction activities at the HPP site prior to the commencement of construction. In addition, erosion and sediment controls will be implemented in compliance with the National Pollutant Discharge Elimination System (NPDES) General Permit for Stormwater Discharges Associated with Construction Activity and all other applicable LORS. These controls will be identified in a Stormwater Pollution Prevention Plan (SWPPP) to be prepared prior to the start of construction.

Runoff from the HPP site during construction will not contribute significantly to existing watershed runoff. The nearest surface water body to the HPP site is the NAS Lemoore sewage treatment system stormwater detention basin complex, which contains water year-round. The water in these ponds is not allowed to flow into the watershed drainage network. The

nearest drainage facility is the Crescent Ditch, which carries water intermittently, depending on the season. Average annual rainfall for the Lemoore-Hanford area is low (8.18 inches). Runoff from the HPP site during the construction period will continue to make a minor contribution to surface water in the project vicinity. With implementation of proper stormwater pollution prevention controls, no significant adverse impacts on surface water are anticipated.

Following completion of project construction, contact stormwater runoff (from equipment areas on the site) associated with the operation and maintenance phase will be controlled and contained within the HPP site. This runoff will be confined within the site and be routed to an oil-water separator. The water from the oil-water separator will be recycled on site or disposed of off site. Any oil separated from the oil-water separator will be diverted to a waste oil tank and periodically disposed of off site. The HPP site will be graded to ensure that all noncontact stormwater runoff is collected and drained to the onsite stormwater detention basin. The drainage system for the HPP site has been designed to manage the stormwater runoff resulting from a maximum 10-year, 10-day rainfall event. Drainage at the HPP site will also be designed to prevent flooding of permanent facilities and roads. Facilities that do not discharge stormwater to the waters of the United States do not require a permit under the General Permit.

Processed wastewater from the HPP will be recycled to reduce the HPP water supply requirements. Wastewater from this system will be recycled or disposed of off site in accordance with applicable LORS.

Impacts on Local, CVP, and SWP Water Supplies. Process and firewater requirements for the HPP will be met by Westlands Water District and Kings County. The average annual water requirement for the HPP is estimated at 150 acre-feet, based on 8,000 hours of operation per year. The CVP water entitlement on the 20 acres acquired by GWF is 44 acre-feet per year. The additional water for the HPP will be supplied by Kings County. The 200 acre-feet of SWP entitlement to be transferred to the HPP, along with the 44-acre-foot CVP entitlement, significantly exceeds the projected plant water supply requirements. Because the water to be supplied for the operation of the HPP is held under pre-existing SWP and CVP contracts, the project will not exert an additional or new demand upon SWP or CVP water and

will therefore not cause a significant impact on local or regional water supplies from the California Aqueduct.

Consistency With State Water Policy. The volume of water that will be used for the HPP represents a small fraction of the current beneficial use of the state's inland waters. Use of water from the California Aqueduct for the HPP will not adversely impact the Sacramento–San Joaquin Delta. Water is provided to the canal through a series of water rights agreements that will not be affected by the project. Water will be supplied to the HPP under existing SWP and CVP contracts and will not represent a new demand on either system. The project will not alter the flow of surface or ground water into the Delta and will not impact Delta outflow or water quality objectives.

Consistency With State Power Plant Cooling Water Policy. The State Water Resources Control Board's (SWRCB) policy regarding power plant cooling water indicates preferences for the sources of the water (SWRCB, 1975). Before concluding that it is necessary to use surface water as cooling water for the HPP, GWF evaluated other potential sources of water, based on SWRCB policy to determine whether these sources will be environmentally sound and economically feasible. The following process water supply alternatives were considered and rejected:

- *Effluent from the NAS Lemoore sewage treatment system and evaporation ponds.* Effluent from the sewage treatment plant does not meet the water quality criteria for the HPP and would require costly water treatment in order to be useful. In addition, a pipeline exceeding two miles in length would need to be constructed. Effluent from the closer evaporation ponds would have even poorer water quality due to the effects of evaporation and would be even more expensive to treat.

- *Wastewater from industrial facilities in the area.* There are no facilities in the area that generate a wastewater stream of sufficient quality. The closest industrial facility with sufficient quantity is over eight miles from the site. However, the quality of the water from this facility does not meet the water quality requirements of the HPP.

- *Drilling an onsite water supply well.* Concerns over the local and regional drawdown of the aquifer underlying the HPP site, the difficulty of providing for groundwater recharge to mitigate the project impacts, and the relatively

poor quality of water sampled from existing water supply wells near the HPP site led to the rejection of the onsite supply well option.

All of these options were rejected as economically unsound. The existing SWP and CVP contracts and the HPP site proximity to the Westlands Water District water supply pipeline makes the surface water option the most economical and efficient water source for the HPP.

8.14.3 Cumulative and Indirect Impacts on Water Resources

The HPP is not expected to have significant cumulative or indirect impacts on water resources. There are no current plans to construct additional industrial facilities in the project vicinity that will require substantial water supplies. Proposals for new facilities will undergo separate environmental review, and any water resource impacts will be evaluated and mitigated.

8.14.4 Mitigation Measures

Though no significant adverse water resources impacts are expected to result from HPP construction and operation, this section discusses mitigation measures that will be implemented by GWF to minimize potential adverse but less-than-significant impacts to surface water and groundwater.

8.14.4.1 Mitigation of Surface Water Impacts

GWF will take these actions during the construction and operation of the HPP to minimize impacts to surface water quality:

- Project design and construction practices will minimize soil erosion during construction and operation of all HPP facilities. Soil erosion will be minimized by implementing recommendations of the U.S. Natural Resource Conservation Service in Hanford and from the *California Stormwater Best Management Practice Handbook*. All best management practices to be implemented during construction will be installed according to specifications contained in a SWPPP prepared for the project prior to the start of construction.

- Contact stormwater from the HPP will be collected within confined areas and routed to the oil-water separator. Water from the oil-water separator will be reused on site. Oil from the oil-water separator will be disposed of off site in accordance with applicable LORS.

- Equipment refueling and maintenance during construction will be performed within designated areas in a way that is consistent with best management practices. Spill contingency plans will be prepared and followed.

8.14.5 Laws, Ordinances, Regulations, and Standards

The LORS applicable to the HPP are discussed in this section and are summarized in Table 8.14-3.

8.14.5.1 Federal LORS

Clean Water Act, as amended (Title 40 of the Code of Federal Regulations [CFR], Parts 112, 122, and 125): The Clean Water Act has the objective to restore and maintain the chemical, physical, and biological properties of the nation's surface waters. The Clean Water Act authorizes the U.S. Environmental Protection Agency to regulate discharges of wastewater and stormwater into any surface water body by issuing NPDES permits and pretreatment standards. These regulations apply to stormwater and any other point-source discharges released during construction and operation of any industry or activity that disturbs five acres or more.

In California, the administering authority for issuing and enforcing these permits has been delegated to the SWRCB (described below). The Central Valley Regional Water Quality Control Board (CVRWQCB) will issue and have oversight of the General Construction Activity Stormwater Permit for construction of the proposed HPP. The General Industrial Activity Stormwater Permit is not applicable to the operation of the HPP, because contact stormwater will be collected and recycled on site as makeup water.

Resource Conservation and Recovery Act of 1976, 40 CFR Part 260 et seq: The Resource Conservation and Recovery Act (RCRA) seeks to prevent surface and

groundwater contamination by issuing permits and establishing guidelines to track and control the handling and disposal of hazardous waste and hazardous materials.

In California, the administering agency for issuing and enforcing these permits is the California Department of Toxic Substances Control (DTSC). Region I of the DTSC will issue and have oversight of any RCRA permits required for the proposed HPP.

8.14.5.2 State LORS

California Constitution, Article 10, Section 2: Article 10 of the California Constitution prohibits waste or unreasonable use of water. The article also regulates the method of use and diversion of water. The administering agency is the SWRCB.

California Environmental Quality Act, Public Resources Code Section 21000 et seq.; CEQA Guidelines, 14 California Code of Regulations (CCR) Section 15000 et seq., Appendix G: CEQA establishes guidelines that define water resources impacts. Appendix G contains definitions of projects that may be considered to cause significant impacts to water resources. The administering agency for the CEQA is the California Energy Commission (CEC).

California Porter-Cologne Water Quality Control Act (1998); California Water Code, Sections 13000–14957, Division 7, Water Quality: The Porter-Cologne Water Quality Control Act authorizes implementation of a statewide program to control the quality of all waters of the state. The act establishes the state and regional water quality control boards as the state agencies with the primary responsibilities for coordinating and controlling water quality. The siting, operation, and closure of waste disposal sites are regulated. The CVRWQCB requires that wastes and disposal site be classified, and that discharges comply with groundwater protection and monitoring requirements, as set forth in RCRA.

The CEC, the SWRCB, and CVRWQCB have authority and oversight of water quality issues for the proposed project.

California Water Code, Sections 13260–13269; 23 CCR Chapter 9: The Water Code requires that a waste discharge report be filed regarding any waste discharge

requirements where a discharge can affect the quality of any waters. The discharge requirements will support enforcement of relevant water quality protection objectives for the Water Quality Control Plan and applicable federal technology-based effluent standards. The discharge requirements may also incorporate requirements based on Clean Water Act Section 402(p) to address construction activities. The administering agency is the CVRWQCB. The HPP is not required to obtain waste discharge requirements because it will not discharge wastes that will affect water quality.

California Water Code, Sections 13271–13272; 23 CCR Sections 2250–2260: The California Water Code requires that releases of specified quantities of hazardous substances, sewage, or petroleum products be reported if the release is likely to result in discharge to waters of the state. Where the release or threat of discharge affects surface waters, hazardous substances and reportable quantities are defined in 40 CFR Section 116.5 under Section 311(b)(2) of the Clean Water Act. Where the release or threat of discharge affects groundwater, hazardous substances are defined as the substances listed as hazardous under the California Hazardous Waste Control Act, Health and Safety Code Sections 2510 and 2520, and the reportable quantities are those specified in 40 CFR Part 302. Releases of hazardous quantities are not anticipated as a result of operation of the proposed HPP; however, if releases occur, reporting requirements specified in this code will be followed.

The administering agency is the CVRWQCB and the California Office of Emergency Services.

Water Quality Control Policy – Use and Disposal of Inland Waters Used for Power Plant Cooling: The SWRCB requires alternative sources of water to be evaluated when fresh inland waters are used for power plant cooling. Alternative sources must be shown to be environmentally undesirable or economically unsound. The SWRCB also requires an analysis of the impacts that the use of inland waters for power plant cooling will have on Delta outflow and Delta water quality objectives.

California Public Resources Code, Section 25523(a); 20 CCR Sections 1752, 1752.5, 2300–2309, and Chapter 2, Subchapter 5, Article 1, Appendix B, Part (1): These sections of the Public Resources Code allow the CEC to include requirements to ensure

protection of environmental quality in its decision on an AFC. These sections also require information to be submitted to the CEC regarding water resources and water quality protection. The administering agency is the CEC.

8.14.5.3 Local Authorities and Administering Agencies

Resource Conservation District: Soil resource policies, which are intended to maintain agricultural productivity, are administered largely by the Resource Conservation District rather than by Kings County. To avoid increased erosion, recommendations for handling of soil during grading and construction will be obtained from the local Resource Conservation District.

8.14.6 LORS Compliance

Compliance with applicable LORS is summarized in Table 8.14-3. Construction and operation of the proposed HPP, including the plant, the switchyard, the transmission line, the natural gas pipeline, water supply pipeline, and any other associated facilities, will comply with all applicable hydrology and water quality LORS.

8.14.7 Required Permits and Approvals

A Notice of Intent will be filed with the CVRWQCB for coverage under the California General Permit for Stormwater Discharges Associated with Construction Activity by December 2001.

8.14.8 Proposed Conditions of Certifications

Proposed conditions of certification are contained in Appendix K. These conditions are proposed in order to ensure compliance with applicable LORS and/or to reduce potentially significant impacts to less-than-significant levels.

8.14.9 Involved Agencies and Agency Contacts

Agency	Contact/Title	Responsibilities	Telephone
Central Valley Regional Water Quality Control Board 3614 East Ashlan Ave. Fresno, CA 93726	Doug Patterson, Senior Water Resource Control Engineer	In charge of the Industrial, Wastewater, and Stormwater Unit (including General Construction Activity Stormwater Permit and General Industrial Activities Stormwater Permit)	(559) 445-5116
Westlands Water District P. O. Box 6056 Fresno, CA 93703	Thad Bettner, Director	Water Supply	(559) 241-6215
Kings County 1400 West Lacey Blvd. Hanford, CA 93230	Larry Spikes, County Administrative Officer	Water Supply	(559) 582-3211
Tulare Lake Water Storage District 1100 Whitley Ave. Corcoran, CA 93242	Mike Nordstrom	Attorney and responsible party for district transfers	(559) 992-3118

8.14.10 References

California Department of Water Resources, Division of Operations and Maintenance 2001, Water Quality at Selected SWP Locations, June, 2001. From website (www.omwq.water.ca.gov/wqmon.html).

California Department of Water Resources, Division of Operations and maintenance, 2001. Pesticides, Herbicides, and Other Organic Substances Detected at Selected SWP Locations, March, 2001. From website (www.omwq.water.ca.gov/pest.html).

Durfee, Kevin, 2000. Personal communication from Kevin Durfee, Western Regional Climatic Data Center, to T. Cudzilo, URS/Radian, March.

Kings County Planning Agency, 1999. Flood data from Federal Emergency Management Administration (FEMA) National Flood Insurance Program, May 1996, provided on Kings County Planning Agency website at http://www.countyofkings.com/planning/.

Kings County Planning Department, 1998. Kings County General Plan. Updated.

State Water Resources Control Board (SWRCB), 1975. *Water Quality Control Policy: Use and Disposal of Inland Waters Used for Powerplant Cooling.*

U.S. Geological Survey (USGS), 1998. *Environmental Setting of the San Joaquin-Tulare Basins, California.*

U.S. Geological Survey (USGS), 1998. *Water Quality in the San Joaquin-Tulare Basins, California, 1992-95*

Western Regional Climatic Data Center. Climate information obtained from http://www/wrcc/dri/edu.

TABLES

Table 8.14-1
Monthly Climate Summary at Lemoore-Hanford
for December 1, 1927 through July 31, 2000

	Jan	Feb	Mar	Apr	May	Jun	Jul	Aug	Sep	Oct	Nov	Dec	Annual
Average Max. Temperature (degrees F)	54.4	61.5	67.5	75.4	83.6	91.0	97.3	95.7	90.0	80.4	66.3	55.2	76.5
Average Min. Temperature (degrees F)	35.5	38.7	42.2	46.5	52.4	58.1	62.3	60.4	55.6	47.7	38.6	34.8	47.7
Average Total Precipitation (inches)	1.56	1.55	1.47	0.72	0.23	0.07	0.01	0.01	0.14	0.37	0.81	1.23	8.18

Note: Percentages of possible observations for period of record: maximum temperature, 98.4%; minimum temperature, 98.1%; precipitation, 98.8%; snowfall, 98.2%.
Source: Western Regional Climate Center website, 2001.

Table 8.14-2
Surface Water Requirements and Source Water Quality for the HPP

California Aqueduct (SWP) Needs of HPP	
Maximum Daily Water Requirements for the HPP	
Flow (gpd)	152,000
Flow (gpm)	105.7
Average Daily Water Requirements for the HPP	
Flow (gpd)	148,000
Flow (gpm)	102.7

Quality Parameters (mg/L unless otherwise indicated)[1,2]	
Calcium	20
Hardness	95 (as $CaCO_3$)
Antimony	<0.005
Alkalinity	71 (as $CaCO_3$)
Total Dissolved Solids	253
Specific Conductance	410 (microSiemens/cm)
Sulfate	33
Chloride	56
Arsenic	0.002
Beryllium	<0.001
Boron	0.2
Fluoride	<0.01
Chromium	0.006
Copper	0.002
Iron	0.047
Lead	<0.001
Selenium	not reported
Magnesium	11
Manganese	<0.005
Turbidity	10.2 (NTU)
Phosphorus-Total	0.12
Phosphorus-Ortho	0.08
Sodium	43
Zinc	<0.005
Bromide	0.16
Nitrite+Nitrate	0.66 (as N)
Carbon-Total Organic	not reported
Carbon-Dissolved Organic	not reported
Diuron	0.6 (micrograms/L)
Simazine	0.08 (micrograms/L)
Diazinon	0.01 (micrograms/L)
2,4-Dichlorophenylacetic acid	0.365 (micrograms/L)

[1] Sampled at Check 21 (California Aqueduct near Kettleman City) in March and June, 2001.
[2] Reported by the California Department of Water Resources, 2001.

mg/L = milligrams per liter (equivalent to parts per million)
gpd = gallons per day
gpm = gallons per minute
NTU = turbidity units

Table 8.14-3
Summary of LORS and Compliance for Water Resources

Jurisdiction	Authority	Administering Agency	Requirements & Compliance	AFC Conformance Section
Federal	Clean Water Act, 40 CFR Parts 111,122, and 125	RWQCB Central Valley Region (authority deferred from U.S. EPA to RWQCB)	Stormwater management practices during construction must follow best management practices. Completed applications and fees must be submitted prior to construction.	8.14.5.1
	Resource Conservation and Recovery Act	California Department of Toxic Substances Control, Region 1	Hazardous material and hazardous waste must be handled, tracked, and reported in conformance with permits issued for the facility. Potential water resources impacts will be monitored through any permits issued.	8.14.5.1
State	California Constitution, Article 10, Section 2	RWQCB Central Valley Region	Minimization of consumptive water use through recycling of process wastewater; water uses combined where feasible in facility design and process operations.	8.14.2, 8.11.5.2
	California Porter-Cologne Water Quality Control Act, California Water Code §§ 13000–14957, Division 7, Water Quality	CEC, RWQCB Central Valley Region	Siting, operation, and closure of waste disposal points. Requires submission of waste and site classification for any waste discharge permit required.	8.14.5.2
	CEQA, Public Resources Code Section 2100 et seq.; CEQA Guidelines, 14 CCR § 15000 et seq., Appendix G	CEC	Water resources impacts identified and mitigation measures detailed in this document.	8.14.5.2

Table 8.14-3 (continued)
Summary of LORS and Compliance for Water Resources

Jurisdiction	Authority	Administering Agency	Requirements & Compliance	AFC Conformance Section
State	California Water Code, Sections 13260–13269; 23 CCR Chapter 9; Sections 13271–13272; 23 CCR Sections 2250–2260	RWQCB Central Valley Region and California Office of Emergency Services	Construction activity stormwater management will be addressed under the construction activities general permit. Industrial stormwater is exempt from the general permit. Reporting of any accidental leaks or spills related to discharge piping and connections will be conducted in compliance with the Water Code.	8.14.5.2, 8.14.6
	Water Quality Control Policy: Use and Disposal of Inland Waters Used for Power Plant Cooling	RWQCB Central Valley Region	Evaluation of alternative water sources for cooling water was performed; potential impacts to the Delta were evaluated.	8.14.2, 8.14.5.2
	California Public Resources Code § 25523(a); 20 CCR §§1752, 1752.5, 2300–2309, and Chapter 2, Subchapter 5, Article 1, Appendix B, Part (1)	California Energy Commission	Requires AFC to include information on water resources and water quality protection.	8.14.5.2

CEQA = California Environmental Quality Act
CCR = California Code of Regulations
CEC = California Energy Commission
CFR = Code of Federal Regulations
RWQCB = Regional Water Quality Control Board

FIGURES

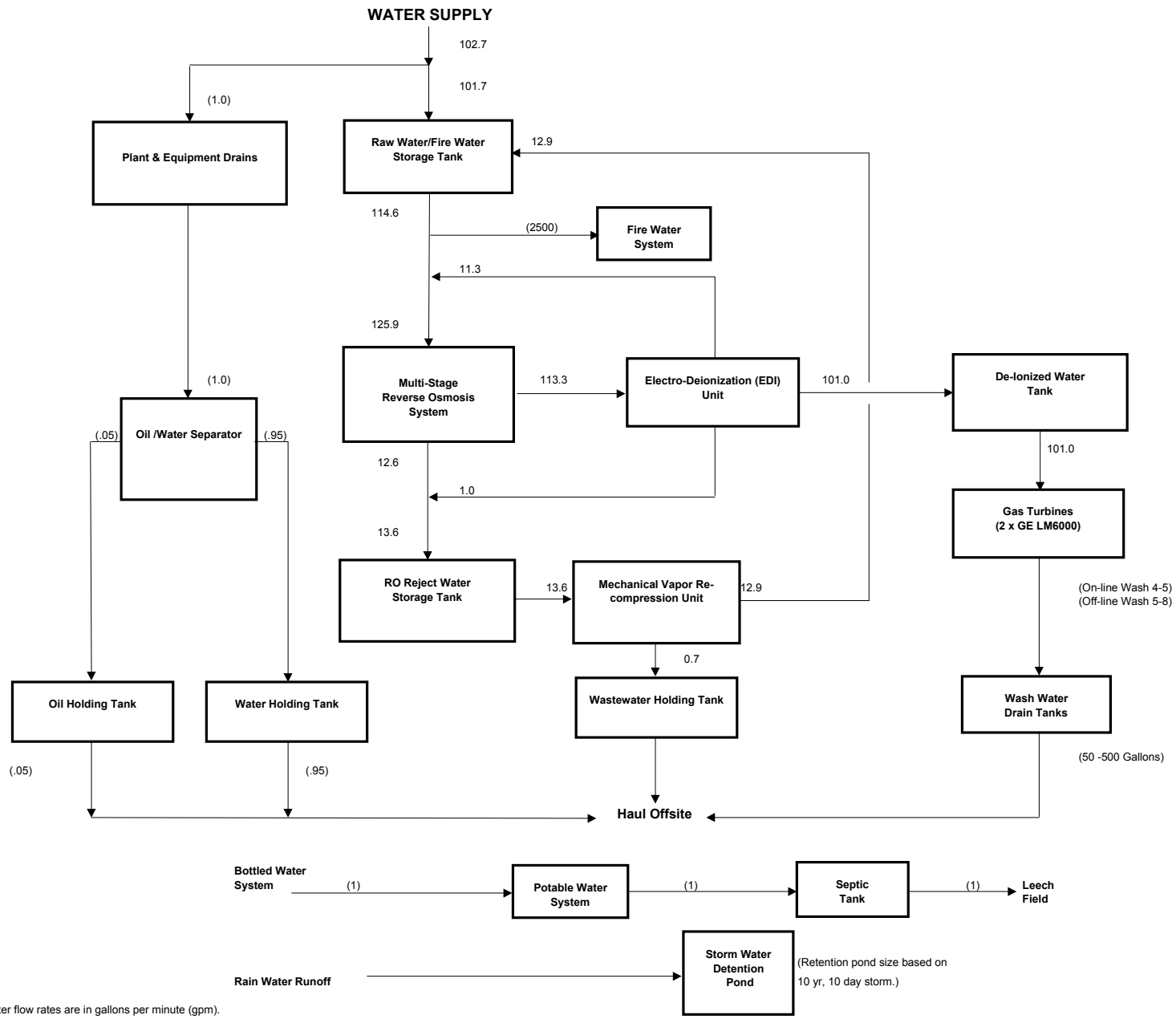

Notes:
1. All water flow rates are in gallons per minute (gpm).
2. Flows indicated in parenthesis ( ) are intermittent.

URS	Project No. 51-00167-032.00 GWF Henrietta Peaker Project	**Water Balance: Annual Average** **(@ 63°F and 60% RH)**	Figure 8.14-1

K:\GWF\HENRIETTA\TEXT\HPP Figure 8.14-1.xls

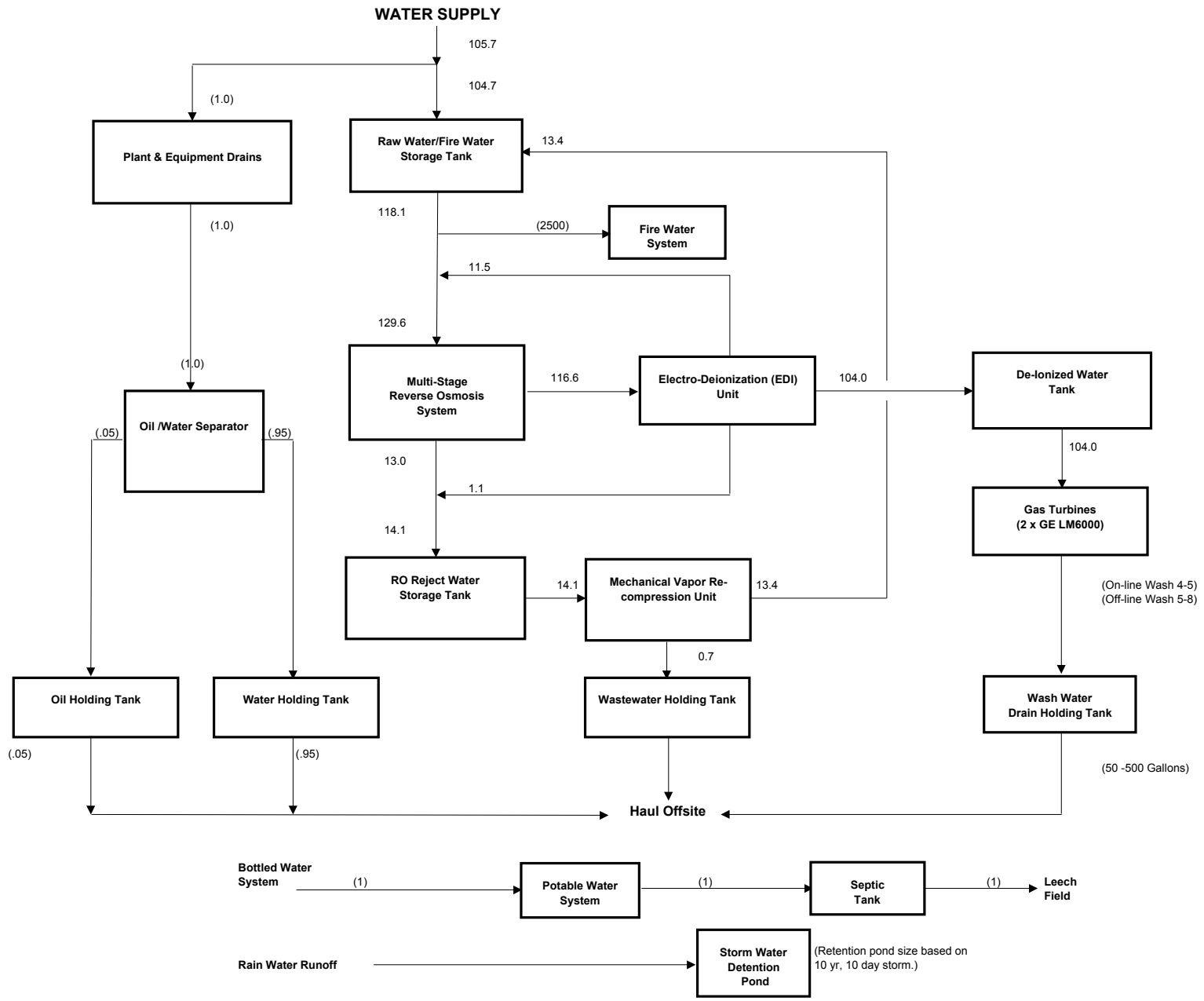

Notes:
1. All water flow rates are in gallons per minute (gpm).
2. Flows indicated in parenthesis ( ) are intermittent.

URS	Project No. 51-00167-032.00 GWF Henrietta Peaker Project	**Water Balance: Daily Maximum** **(@ 63°F and 60% RH)**	Figure 8.14-2

K:\GWF\HENRIETTA\TEXT\HPP Figure 8.14-2.xls

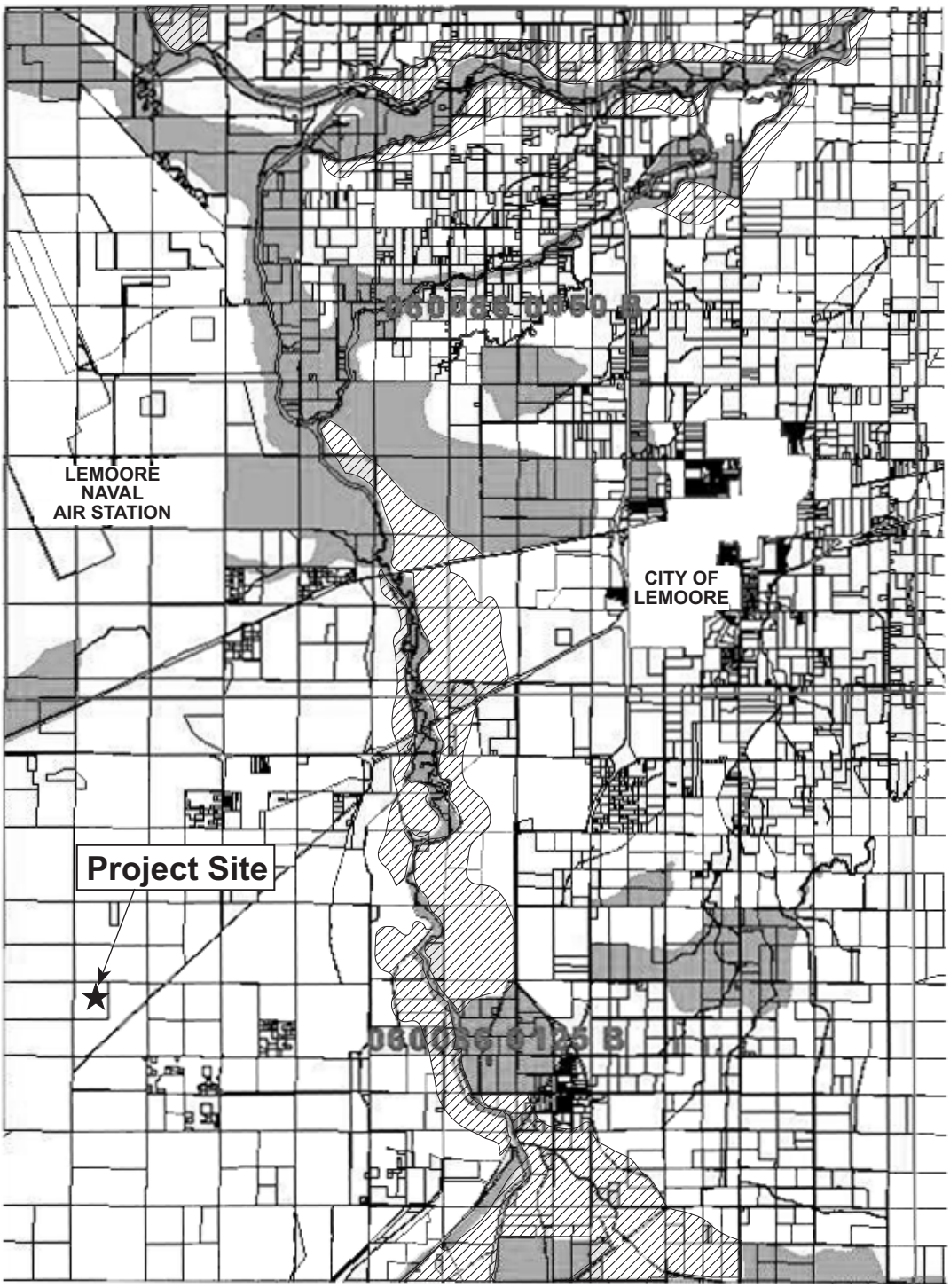

LEGEND

Special flood hazard areas: Zone A
Inundated by 100-year flood. No base flood elevations determined.

Other flood areas: Zone X
Areas of 500-year flood: areas of 100-year flood with average depths of less than 1 foot or with drainage areas less than 1 square mile; and areas protected by levees from 100-year flood.

0 1 2 3 miles

Flood data provided by:
Federal Emergency Management Agency
National Flood Insurance Program, May 1996

Map prepared by:
Kings County Planning Agency, June 24, 1999

URS	Project No. 51-00167032.00 GWF Henrietta Peaker Project	FEMA FLOODPLAIN MAP FOR THE VICINITY OF THE GWF HENRIETTA PEAKER PLANT	Figure 8.14-3

8.15 Geologic Resources and Hazards

The Henrietta Peaker Project (HPP) consists of a 91.4-megawatt (MW) (net), natural-gas-fired, simple-cycle power plant located approximately 10 miles southwest of Lemoore, California, on a seven-acre portion of a 20-acre parcel owned by GWF Energy LLC. The HPP will interconnect to the existing adjacent Pacific Gas and Electric Company (PG&E) Henrietta Substation through a new 550-foot 70-kilovolt (kV) transmission line supported on two new transmission poles. Other linear facilities include an approximately 16.5-foot water interconnection pipeline (from the site property boundary) and a 2.2-mile Southern California Gas Company natural gas interconnection pipeline. Additionally, approximately five acres will be used for temporary construction laydown and parking.

The primary geologic issues at the HPP site are land subsidence and seismic hazards. Approximately 4 feet of land subsidence may have occurred in the vicinity of the HPP site between 1920 and 1970. The majority of the land subsidence is due to withdrawal of groundwater from aquifers in the area (USGS, 2000). Groundwater in the area continues to be used for municipal, industrial, and agricultural purposes.

8.15.1 Affected Environment

8.15.1.1 Regional Geology and Physiography

The HPP site is in the south-central portion of the Great Valley Physiographic Province of California (Figure 8.15-1). The Great Valley is bordered by the Sierra Nevada range on the east, the Coast Ranges on the west, the Tehachapi Mountains on the south, and the Klamath and Cascade Ranges on the north (Figure 8.15-1). This province is comprised of two elongated northwest to southeast-trending basins: the Sacramento basin to the northwest and the San Joaquin basin to the southeast. This province is approximately 435 miles long and 43 to 56 miles wide and is characterized by a thick, relatively undeformed sequence of alluvium and volcanic deposits.

The present-day basin evolved from a late Jurassic to middle Tertiary (40–150 million years [Ma]) marine fore-arc basin (Dickinson, 1981; Castillo and Zoback, 1994). In the late Tertiary (25–30 Ma), a change in the relative motion between the Pacific and North

American plates resulted in the gradual uplift of the Coast Ranges and the eventual isolation of the basin from the ocean. More recent Miocene and lower Pliocene sediments were derived from the neighboring Coast Ranges and the Sierra Nevada (Perkins, 1987). By the late Pliocene (2–3 Ma), subaerial depositional conditions prevailed and Sierra Nevada-derived sediments were deposited in the basins (Bartow, 1987). A simplified present-day basin structure is presented in Figure 8.15-2.

8.15.1.2 Regional Seismotectonic Setting and Seismicity

The western margin of the Great Valley Physiographic Province is termed the Coast Ranges–Central Valley geomorphic boundary (Wakabayashi and Smith, 1994). This boundary is defined by a system of seismically active folds and thrust faults. Earthquakes associated with this system include the 1983 moment magnitude (M) 6.5 Coalinga and the 1985 M 6.1 Kettleman Hills events (Bloch et al., 1993; Wakabayashi and Smith, 1994). The Coast Ranges–Great Valley boundary separates the relatively undeformed strata of the Great Valley from the deformed rocks of the Coast Ranges of California. To be consistent with references, distances in this section are given in kilometers with miles in parenthesis.

Significant Faults. The southern San Joaquin Valley is surrounded by a number of active and potentially active faults, some of which have generated large, damaging earthquakes during historic time (see Historical Seismicity, below). There are approximately 10 Quaternary faults within a 100-kilometer-radius (approximately 60-mile-radius) of the site (Figure 8.15-3). The most significant of these are listed in Table 8.15-1, along with estimates of the maximum credible earthquake (MCE) for each fault. MCE magnitude estimates are based on the Working Group for Northern California Earthquake Potential (1996), Working Group for California Earthquake Probabilities (1995), and empirical relationships among fault rupture length, fault rupture area, and maximum magnitude (Wells and Coppersmith, 1994). The most significant Quaternary faults within 100 km (roughly 60 miles) of the site are discussed briefly below.

San Andreas Fault. The San Andreas fault is the main, active crustal discontinuity separating the northwest-moving Pacific plate from the southeast-moving North American plate (Figure 8.15-3). This right-lateral strike-slip fault extends northwestward from the Gulf of California in Mexico along the western edge of California through the Coast Ranges,

then heads offshore and runs parallel to the coast to north of San Francisco Bay, finally terminating near Cape Mendocino. The fault is divided into several earthquake rupture segments, based on differing structural, geomorphic, and seismic characteristics along the fault. The three fault segments nearest to the site are the Mojave, Carrizo, and Cholame segments (Figure 8.15-3). Simultaneous rupture of all three of these fault segments, with a fault length of approximately 315 km (196 miles), would generate an earthquake of moment magnitude (M) 7.8. The 1857 M 7.8 Fort Tejon earthquake ruptured these fault segments and parts of neighboring segments between the Coachella Valley and San Benito. From empirical relationships between fault length and earthquake magnitude (Wells and Coppersmith, 1994), the Mojave, Carrizo, and Cholame fault segments have calculated maximum earthquakes of M 7.5, 7.6, and 7.2, respectively. The 1857 M 7.8 rupture is considered the MCE along this reach of the San Andreas (Table 8.15-1). The closest segment of this fault is approximately 55 km (34 miles) to the southwest of the site (Figure 8.15-3).

Coast Range-Sierran Block Boundary. The Coast Ranges–Sierran Block (CRSB) boundary zone is a complex zone of thrust reverse faulting that marks the boundary between the Coast Range block and the Sierran basement rocks that are concealed beneath the Great Valley sedimentary rocks of the San Joaquin Valley (Figure 8.15-3). This is a complex array of west-dipping thrusts and east-dipping back-thrusts. The CRSB boundary zone extends for over 500 km (300 miles), from near Red Bluff in the northern Sacramento Valley to Wheeler Ridge in the southern San Joaquin Valley (Wakabayashi and Smith 1994; Wong et al., 1988) (Figure 8.15-3). The CRSB boundary zone was the probable source of the 1892 M 6.5 and 6.2 Winters earthquakes and the 1983 M 6.5 Coalinga earthquake (Wong and Ely, 1983; Wong et al., 1988; Bakun, 1999). Although the faults themselves do not rupture to the surface, the CRSB is marked along much of its length by an alignment of fault-propagation folds that form a series of low hills along the western side of the Sacramento and San Joaquin Valleys. At its closest approach, the Kettleman Hills portion of the CRSB boundary zone is only 20 km (12.4 miles) southwest of the site and is capable of generating an MCE of M 6.8 (Figure 8.15-3, Table 8.15-1).

Kern Front Faults. Immediately north and west of Bakersfield are a series of north- and northwest-striking faults with apparent normal, down-to-the-west displacement (Figure 8.15-3). These faults mark the boundary between the sedimentary rocks of the San

Joaquin Valley and the granitic rocks of the Sierra Nevada. A number of these faults, including the Pond-Poso, Kern Front, New Hope, and Premier faults, are either actively creeping or have experienced creep during historic time as a result of aquifer collapse due to groundwater removal (Holzer, 1980). Several of these faults, including the Mt. Poso, Poso Creek, Jewett, and Kern Gorge faults all offset Quaternary deposits. The exact age of fault movement is unknown. Several of these faults experienced ground breaks (possible triggered slip) during the 1952 M 7.3 Arvin-Tehachapi earthquake on the White Wolf fault (Jennings, 1994). The relatively short length of these faults indicates that each is probably only capable of generating an MCE of M 6.5.

Historical Seismicity. The historical earthquake record for the San Joaquin Valley only extends to the mid-1800s, coinciding with the influx of miners and settlers during the Gold Rush (Toppozada et al., 1981; Wong and Ely, 1983). Until adequate seismographic coverage came into existence in southern California in the 1930s, earthquake detection was generally limited to those events that produced felt or physical effects. Earthquakes as small as Richter local magnitude (M_L) 3.0 were probably not completely observed throughout the San Joaquin Valley until about 1960. Thereafter, seismographic coverage in southern California improved significantly, and currently earthquakes as low as M_L 2.5 can be detected for most portions of the San Joaquin Valley.

The site is located in a seismically active area. The largest historical earthquakes have generally occurred along the valley margins. A historical catalog from 1852 to 2000 was compiled for the study region, and the epicentral locations are shown on Figure 8.15-3. The study region encompasses a 100-km-radius (approximately 60-mile-radius) area from the site and includes all seismic sources that may generate potential strong ground shaking.

The catalog was compiled from the following data sources: the National Earthquake Information Center's Preliminary Determination of Epicenters; Stover, Reagor, and Algermission's U.S. historical catalog; the catalog of the California Division of Mines and Geology, 1735–1974; the catalog of the Decade of North American Geology; and the Northern California Seismic Network and the Southern California Earthquake Center catalogs. The

resulting catalog (1852–2000) for the study region consists of nearly 1,700 earthquakes of approximate M_L 3.0 and greater (Figure 8.15-3).

Ten earthquakes of estimated M_L 6.0 or greater have occurred in the site region in historical times. The most significant of these events are annotated on Figure 8.15-3 and discussed in more detail below. The closest earthquake to the site (approximately four miles [7 km]) occurred on February 25, 1987 and measured ML 3.0.

1857 Fort Tejon Earthquake. On January 9, 1857, the largest earthquake within the study region ruptured the San Bernardino, Mojave, Carrizo, and Cholame segments of the San Andreas fault (Figure 8.15-3). An M 7.8 has been estimated for the event based on the rupture length, average slip, and comparison to the 1906 earthquake in northern California (Sieh, 1978). The epicenter of the earthquake is near Fort Tejon (Real et al., 1978), 100 km (approximately 60 miles) southwest of the site. Fort Tejon was destroyed (maximum Modified Mercalli intensity [MM] IX), and the effects were felt over an area of at least 135,000 square miles (Townley and Allen, 1939). The site likely experienced a maximum intensity of MM VII to IX (Stover and Coffman, 1993). Instances of fissuring, sandblows, and hydrologic changes were reported from Sacramento to the Colorado River delta. One report describes liquefaction in the region between Stockton and Sacramento (Stover and Coffman, 1993). Reported surface rupture extended over a distance of 230 km (145 miles), possibly as great as 360 km (225 miles), from San Bernardino to San Benito County. Offset channels and alluvial deposits are evidence of at least 6 meters (20 feet) of right-lateral slip during the 1857 event (Grant and Sieh, 1993).

1983 Coalinga Earthquake. The mainshock (M_L 6.5) of a sequence of events occurred on May 2, 1983 near the town of Coalinga beneath the Coalinga anticline (Figure 8.15-3). More than 6,000 aftershocks were recorded over a four-month period; seven of these were greater than M_L 5.0 (Eaton, 1990). The town of Coalinga was heavily damaged, and a four-block industrial area downtown was destroyed. A large number of houses and public buildings also received significant structural damage (Stover and Coffman, 1993). The maximum intensity in the area of the project site was MM V to VI. Although there was no surface rupture associated with the mainshock, Anticline Ridge, northeast of Coalinga, was uplifted by 20 inches (Stein, 1983).

1985 North Kettleman Hills Earthquake. On August 4, 1985, an earthquake occurred beneath the Kettleman Hills–North Dome anticline, a segment of the CRSB boundary zone (Figure 8.15-3). The mainshock ranged in size from M 6.0 to 6.2 (Ekström et al., 1992). Over 400 aftershocks were recorded within a four-week period. Buildings and water lines in the town of Avenal sustained significant damage, and minor damage was widespread. The earthquake was felt over an area of approximately 37,450 square miles.

Parkfield Earthquakes. The Parkfield segment of the San Andreas fault has generated three moderate to large earthquakes, in 1922, 1934, and 1966 (Figure 8.15-3). The 1922 event (M_L 6.3 to 6.5) generated a maximum intensity of MM IX (Townley and Allen, 1939). Major damage was minimal due to sparse population in the epicentral region; however, minor damage was widespread, as intensities of MM IV to V were felt over an area of 25,300 square miles. Surface rupture was noted in Cholame Valley over a distance of about 1,640 feet (Townley and Allen, 1939). The 1934 earthquake occurred in close proximity to the 1922 event and had a maximum intensity of MM VIII. Damage was limited to toppled chimneys within the town of Parkfield, and nearby bridges shifted from their foundations. A 17-km-long (11-mile-long) zone of surface rupture associated with this event was observed at Middle Mountain along the San Andreas fault (Coffman et al., 1982). The 1966 event also occurred near Parkfield and measured M 6.1. The total felt area was 20,000 square miles, and a maximum intensity of MM VII was assigned to a narrow zone of the San Andreas fault where surface rupture was noted (Coffman et al., 1982). Because of similarities in magnitude, location, and southeast unilateral rupture propagation, Bakun and McEvilly (1984) have suggested that these three events along the Parkfield segment are "characteristic" Parkfield earthquakes.

8.15.1.3 Local Geology

The HPP site lies on a flat area of alluvial fan deposits associated with the Kings River. The elevation at the site is approximately 225 feet above mean sea level. Before agricultural and urban development in the area, the alluvial fan deposits were dissected and cut by shallow, meandering sloughs and creeks. Many of the sloughs have been filled and leveled and are now farmed. The topographic gradient slopes gently to the east-southeast, and local drainage is directed towards the Kings River (see Section 8.14, Water Resources).

Structure. The overall structure beneath the San Joaquin Valley consists of an asymmetric syncline (Figure 8.15-2). The axis of this fold is approximately parallel to the valley axis. The western limb of this fold is considerably steeper than the eastern limb. Within this major fold are many smaller folds and several faults. The steeper western limb of the syncline is cut by a number of reverse or thrust faults belonging to the CRSB boundary zone. The eastern limb of the syncline is cut by several west-dipping normal faults.

Stratigraphy. Sources reviewed on the general geology included maps compiled by the California Division of Mines and Geology (CDMG, 1966) and maps published in Croft and Gordon (1968). Results from a geotechnical investigation performed at the site on July 2, 2001 (Kleinfelder, 2001) were also used. The investigation consisted of drilling one exploratory boring to a depth of 76.5 feet below ground surface (bgs). Figure 8.15-4 presents the general stratigraphic column in the HPP area (Croft and Gordon, 1968), and a geological map of the HPP area is presented in Figure 8.15-5.

Sedimentary rocks in the locality of the site range in age from late Mesozoic to Holocene (140 Ma to 10,000 years). The majority of the area is underlain by Quaternary (0–2 Ma) alluvium, which overlies a series of sandstones and shales that represent the filling of a marine basin. This sequence also represents the transition from a marine to a lacustrine and deltaic environment. The sequence was subsequently capped by coalescing alluvial fan deposits. The lithologies of the stratigraphic column at the site, from oldest to youngest, are briefly described below.

The study region is ultimately underlain by the Mesozoic crystalline basement of the Sierra Nevada block (Figures 8.15-2 and 8.15-4). This folded and faulted Mesozoic basement is overlain by a sequence of upper Jurassic to Quaternary sedimentary rocks, commonly called the Great Valley Sequence. This is essentially a thick succession of marine shales with interbedded greywacke. These clastic deposits were derived from a source to the east, as they lack any granitic detritus that would indicate a Salinian origin (Page, 1966). In addition to these marine deposits, the lower part of the Great Valley Group contains basaltic pillow lavas, breccias, and volcanoclastic deposits in some localities. This sequence is generally found at a depth of approximately 21,000 feet in the San Joaquin Valley (Bloch et al., 1993).

Above the Great Valley Group is the Lower Tertiary sequence, comprised of siliceous to calcareous shales and sandstones representing deep marine, continental shelf, and possibly deltaic depositional environments (Medwedeff, 1989) (Figures 8.15-2 and 8.15-4). The transition from marine to terrestrial deposition occurred during the Pliocene (2–5 Ma). Lower Pliocene rocks are shallow marine, while overlying, younger formations tend to be consistent with a brackish-water paleoenvironment. Fluvial and lacustrine siltstones, sandstones, and conglomerates are typical of sedimentary layers deposited during the Pliocene to Pleistocene. Above these units the recent Quaternary alluvium was deposited (Holocene or post-Holocene age).

Surficial sedimentary units of predominantly Pleistocene and Holocene to Recent age underlie the entire project area (noted as Qal, Quaternary undifferentiated, in Figure 8.15-5). These sediments include deposition that ranges from continental alluvial, fluvial, lacustrine, fan-derived sediments to subaerial floodplain deposits. Lithologies encountered at the proposed site area during the geotechnical investigation conducted in July 2001 (Kleinfelder, 2001) consisted of soft to stiff lean clay, extending to a depth of about 33 feet. These clay soils were underlain by alternating layers of medium-dense silty sand and poorly graded sand, extending to a depth of about 46 feet. These sand soils were underlain by medium-stiff to very stiff lean clay, extending to a depth of about 72 feet. Between 72 and 76.5 feet, the encountered soil consisted of medium-dense, silty sand with high plasticity. Total thickness of these units is approximately 200 feet (Croft and Gordon, 1968).

Soils. The entire project area is covered by Lethent clay loam (see Section 8.9, Agriculture and Soils). This soil consists of brownish to yellowish sandy and clay loam and has a very low permeability. The soil type has a high concentration of salts and is alkaline. Excavations for roads or building site pads can expose material that may be susceptible to wind and/or water erosion. The loose nature of the soil limits its use for embankments, dikes, and levees.

8.15.1.4 Hydrogeology

The HPP site is located in the southern portion of the San Joaquin Valley groundwater basin, which is the largest groundwater basin in California. The basin covers approximately 13,500 square miles and has a storage capacity of 570 million acre-feet.

One of the principal subsurface geological features of the San Joaquin Valley is the Corcoran Clay formation within the Tulare Formation. Formed as a lakebed about 600,000 years ago, this clay layer ranges in thickness from 20 to 200 feet. Varying in depth from 200 to 600 feet bgs in the valley, the Corcoran Clay divides the groundwater system into two major aquifers, a confined aquifer below and a semiconfined above (Westlands Water District, 1996). The entire HPP area is underlain by the Corcoran Clay unit, which is located approximately 500 to 600 feet bgs (Croft and Gordon, 1968; Mayer, 2001). This unit is not continuous west of Huron, 8.5 miles from the HPP (Westlands Water District, 1996).

The groundwater basin underlying the HPP area is comprised of two main water-bearing zones: (1) an upper zone above a nearly impervious Corcoran Clay layer containing the Coastal and Sierran aquifers, and (2) a lower zone below the Corcoran Clay containing the Sub-Corcoran aquifer. The water-bearing zones are recharged by subsurface percolation of groundwater and by imported and local surface water. The lower aquifer underlies the Corcoran Clay and consists of interbedded sands and clays. Depth to water in this unit in the vicinity of the HPP area varied between 200 and 400 feet in December 2000 (Westlands Water District, 2001). In the study area, most of the wells encountered were drilled in this aquifer unit and are used for irrigation. The upper aquifer generally consists of interbedded sands and clays that contain water under unconfined or semiconfined conditions. As of spring 1999, the groundwater elevation in these aquifers were located at approximately 80 feet bgs, though well depths to groundwater vary from 50 to over 200 feet bgs within the general project area (Mills, 2000; Westlands Water District, 2001). The presence of clay layers within the upper aquifer induces perched water in the area. In the site vicinity, perched groundwater was located between approximately 10 to 20 feet bgs in 1997 (San Joaquin Water District, 2001) and was encountered at about 6 feet bgs in July 2001 (Kleinfelder, 2001).

8.15.1.5 Resources of Recreational, Commercial, or Scientific Value

No information was found to indicate that the HPP will adversely affect geologic resources of recreational, commercial, or scientific value.

At the HPP site and along the proposed transmission route, the geologic units at the surface and in the subsurface are widespread throughout the southwestern part of the San Joaquin Valley; these alluvial deposits are not unique in terms of recreational, commercial, or scientific value. The potential for the presence of rare minerals is very low, given the geologic environment in the area (see also Section 8.16, Paleontological Resources). Furthermore, the HPP site has been disturbed by previous industrial activities. Therefore, it is unlikely that undiscovered near-surface resources will be adversely affected by the construction associated with the HPP.

The HPP is located in a sedimentary basin where oil, gas, and geothermal energy are produced. However, no oil, gas, or geothermal fields are currently in production within 15 miles of the project site (CDOG, 2001). Therefore, the HPP will not adversely affect the commercial value of any energy resources. If further oil or natural gas reserves were discovered at a later date, the reserves could be tapped by directional drilling, even if they were directly beneath the facilities.

Deeper excavation at the plant site and other related facilities could disturb soils that have a high potential for significant paleontological resources to occur (see Section 8.16, Paleontological Resources). However, if a mitigation program is adopted during the construction phase of the project, the direct, indirect, and cumulative adverse environmental impacts on paleontological resources will be reduced to insignificant levels.

8.15.2 Geologic Effects and Hazards

No geologic hazards were identified for the proposed HPP that will preclude construction. However, surface fault rupture, earthquake ground shaking, soil liquefaction, landsliding, subsidence, expansive soils, and erosion must be considered in the final design and construction.

8.15.2.1 Surface Fault Rupture

Surface fault rupture occurs when an active fault intercepts and offsets the earth's surface. The State of California delineates zones around active faults under the Alquist-Priolo Earthquake Fault Zoning Act (Hart, 1994) in order to mitigate for the effects of surface faulting. The nearest Alquist-Priolo special studies zone is the San Andreas fault zone, approximately 60 km (37 miles) from the HPP site (California Department of Conservation, 2000). The nearest fault to the HPP site is probably a buried fault approximately 20 km (12 miles) southeast within the CRSB boundary zone in the Kettleman Hills. Based on these data, the hazard from ground rupture is considered to be insignificant.

8.15.2.2 Earthquake Ground Shaking

No known active or potentially active faults pass through or are close to the HPP site (Jennings, 1994). The closest active faults are associated with the Kettleman Hills segments of the CRSB boundary zone approximately 20 km (12 miles) southeast of the site. An active fault is defined as having had movement along its trace at least once during the Holocene (approximately the last 11,000 years). However, the site is also within about 60 miles of several major active fault systems. The two most important faults considered most likely to cause significant ground-shaking motion at the HPP site, the CRSB boundary zone and the San Andreas fault, are listed in Table 8.15-1 (see Section 8.15.1.2 for a description).

The California Building Code (CBC) (1998) provides the seismic standards specified by the California Energy Commission (CEC) for non-nuclear plants such as the HPP. Under the criteria of the code, the entire project area is within CBC Seismic Zone 3 and therefore will have a Z value of 0.30. The Z value is used to calculate seismic forces for the design of structures located in certain zones.

To estimate the ground shaking that might occur at the project site in a future earthquake, median estimates of the ground motion parameter, peak ground acceleration, were made using four empirical attenuation relationships and the estimates of the maximum earthquakes listed in Table 8.15-1. The maximum value, assuming soil conditions at the project site, is expected to occur from a M 6.5 earthquake on the Kettleman Hills portion of the CRSB

for the closest horizontal distance to vertical projection of the rupture assumed of 1 km (0.62 mile). Such an event would result in a median peak ground acceleration of 0.35 g (35 percent of the acceleration under the force of "g," or gravity).

In the most recent update of the U.S. Geological Survey (USGS) national hazard maps, which are the basis for CBC criteria, Frankel et al. (1997) estimated probabilistic ground motions for the U.S. for a 10 percent exceedance probability in 50 years (approximate 500-year return period). From the USGS maps, the 500-year return period peak horizontal ground acceleration at the project area is 0.24 g. The ground motions calculated by the USGS assume soft rock soil conditions; however, the project site is situated alluvial fan deposits that are 100 or more feet thick. As a result, ground motions would be modified by the site response of the soil.

8.15.2.3 Soil Liquefaction

Liquefaction is the phenomenon in which loose, saturated, cohesionless soils temporarily lose shear strength during strong ground shaking. Significant factors known to affect the liquefaction potential of soils are the characteristics of the material, such as grain size distribution, relative density, degree of saturation, the initial stresses acting on the soils, and the characteristics of the earthquake, including the intensity and duration of the ground shaking. Under conditions of liquefaction, granular materials lose all bearing capacity and become fluid.

The geotechnical investigation (Kleinfelder, 2001) concluded that seismically induced settlement could occur in various granular zones between 38 and 46 feet in depth. This settlement is estimated to be less than 1 inch. Consequently, seismically induced differential settlement at the surface will not be significant.

8.15.2.4 Landsliding

The site is on a flat alluvial fan surface. The relatively stable soil and the lack of any significant slopes on or near the site indicate that the hazard from slope instability (landslides and debris flows/lateral spreads) is negligible.

8.15.2.5 Subsidence

The southern San Joaquin Valley has been subsiding. Maps for the San Joaquin Valley indicate that approximately 4 feet of subsidence may have occurred in the vicinity of the HPP site between 1920 and 1970; as much as 8 feet of subsidence is reported in the area about one mile southeast of the HPP site. The primary cause of land subsidence has been the compaction of fine-grained sediments (predominately clay) in the aquifer system following long-term withdrawal of groundwater in excess of recharge (USGS, 2000). Subsidence in the area has coincided with a water level decline on the order of 100 feet or more (USGS, 2000). Groundwater beneath the project area is used for agricultural, domestic, and industrial purposes (see Section 8.14, Water Resources), and the rate of subsidence is generally dependent on the demand for groundwater. If long-term demand for groundwater grows, the rate of land subsidence may increase due to the increase in groundwater withdrawal.

The engineering design of major equipment foundations will incorporate subsidence considerations, including such factors as selection of foundation type, foundation dimensions, foundation location, and extent of soil recompaction. Final foundation designs that minimize subsidence impacts to insignificant levels will be submitted to the Compliance Program Manager and the County Building Official for review prior to commencement of construction.

8.15.2.6 Expansive Soils

Certain soils, especially those containing smectite and mixed-layer clays, have the ability to shrink and swell depending on their moisture content. While the soils are wet, the clay crystal structure absorbs water, leading to expansion or swelling. This expansion causes the ground surface to rise. The site soils consist of lean clay extending to a depth of about 30 feet, with a groundwater table level ranging between 6 and 20 feet bgs. These conditions could result in a moderate to high expansion potential.

The engineering design of major equipment foundations will incorporate additional geotechnical investigation results and soil expansion considerations, including such factors as selection of foundation type, foundation dimensions, foundation location, and extent of

soil recompaction. Final foundation designs that minimize soil expansion impacts to insignificant levels will be submitted to the Compliance Program Manager and the County Building Official for review prior to commencement of construction.

8.15.2.7 Erosion

The site is on a flat alluvial fan surface. The relatively stable soil and the lack of significant slopes on or near the site indicate that the hazard from erosion is negligible.

8.15.3 Cumulative and Indirect Impacts

No cumulative and indirect (or growth-inducing) impacts have been identified with regard to geologic resources or hazards.

8.15.4 Mitigation Measures

Mitigation measures are necessary for the HPP because of potential geologic hazards. The following mitigation measures will reduce potential impacts to a less-than-significant level.

- The HPP and transmission route will be designed to conform with the CBC requirements for Seismic Zone 3 and an estimated seismic coefficient of 0.3.
- Geotechnical investigations will be performed to better define the soil characteristics.
- The project will be designed and constructed to account for geologic hazards (see Appendix K, Facility Design)

No mitigation measures are required for geologic resources because the HPP will not have a significant impact on geologic resources of recreational, commercial, or scientific value.

8.15.5 Laws, Ordinances, Regulations, and Standards

The laws, ordinances, regulations, and standards (LORS) that apply to geologic resources and hazards for the HPP are presented in Table 8.15-2. Only LORS for state and local authorities are listed in the table, as no federal LORS apply.

California Public Resources Code, Section 25523(a); California Code of Regulations (CCR), Sections 1752, 1752.5, 2300–2309, and Chapter 2, Subchapter 5, Article 1, Appendix B, Part (i): These regulations stipulate the environmental review and siting procedures to be followed for the development of power generation projects larger than 50 megawatts. The CEC is the administering agency for this authority. The project applicant will be in compliance with this authority by submitting all information on environmental impacts to soil and agriculture to the CEC and implementing the mitigation measures identified in the final certification.

CBC, 1998. Appendix Chapter 16, Division 4: This section of the CBC describes design requirements that ensure structures will withstand the effects of earthquake ground motions that could cause them to collapse.

Safety Element of the Kings County General Plan (1993): The safety element of the county's general plan sets forth policies that are intended to reduce loss of life, serious injury, property damage, and economic and social dislocation resulting from a seismic event. The county's general plan requires adherence to construction standards and outlines zoning and building permit review procedures.

8.15.6 Proposed Conditions of Certifications

Proposed conditions of certification are contained in Appendix K. These conditions are proposed in order to ensure compliance with applicable LORS and/or to reduce potentially significant impacts to less-than-significant levels.

8.15.7 Involved Agencies and Agency Contacts

Agency	Contact/Title	Telephone
Kings County – Building Department 1400 West Lacey Blvd., Building #6 Hanford, CA 93230	Carl Goss Deputy Building Officer	(559) 582 3211 ext. 2687

8.15.8 Permits Required and Permit Schedule

No permit requirements that specifically address geologic resources and hazards were identified.

8.15.9 References

Abrahamson, N.A. and Silva, W.J., 1997, Empirical response spectral attenuation relations for shallow crustal earthquakes: Seismological Research Letters, v. 68, p. 94-127.

Bakun, W.H. and McEvilly, T.V., 1984, Recurrence models and Parkfield, California, earthquakes: Journal of Geophysical Research, v. 89B, p. 3051-3058.

Bakun, W.H., 1999, Seismic activity of the San Francisco Bay area: Bulletin of the Seismological Society of America, v.89, p.764-784.

Bartow, J.A., 1987, Cenozoic nonmarine sedimentation in the San Joaquin Basin, central California, in R.A. Ingersoll and W.G. Ernst (eds.), Cenozoic Basin Development of Coastal California: Prentice-Hall, New Jersey, p. 146-171.

Bloch, R.B., von Huene, R., Hart, P.E., and Wentworth, C.M., 1993, Style and magnitude of tectonic shortening normal to the San Andreas fault across Pyramid Hills and Kettleman Hills South Dome, California: Geological Society of America Bulletin, v. 105, p. 464-478.

Boore, D.M., Joyner, W.B., and Fumal, T.E., 1997, Equations for estimating horizontal response spectra and peak acceleration from western North American earthquakes: A summary of recent work: Seismological Research Letters, v. 68, p. 128-153.

California Building Code (CBC), 1998, Volume 2. Structural Engineering Design Provisions.

California Department of Conservation, 2000. Information obtained from the California Department of Conservation website at http://www.consrv.ca.gov/dmg/rghm/a-p/mapidx/4c.htm.

California Division of Mines and Geology (CDMG). 1966. Fresno Sheet. Regional Geological Map Series, Scale 1:250,000.

California Division of Oil and Gas (CDOG), 2001. Oil, Gas, and Geothermal Fields in California, map at 1:1,500,000.

Campbell, K.W., 1997, Empirical near-source attenuation relationships for horizontal and vertical components of peak ground acceleration, peak ground velocity, and pseudo-absolute acceleration response spectra: Seismological Research Letters, v. 68, p. 154-179.

Castillo, D.A. and Zoback M.D., 1994, Systematic variations in stress state in the southern San Joaquin Valley: Inferences based on well-bore data and contemporary seismicity: American Association of Petroleum Geologists Bulletin, v. 78, p.1,257-1,275.

Coffman, J.L., Von Hake, C.A., and Stover, C.W., 1982, Earthquake history of the United States: National Oceanic and Atmospheric Administration and U.S. Geological Survey Publication 41-1 with supplement, 208 p.

Croft, M.G., and G.V. Gordon, 1968, Geology, hydrology, and quality of water in Hanford-Visalia area, San Joaquin Valley, California. Prepared in Cooperation with the California Department of Water Resources.

Dickinson, W.R., 1981, Plate tectonics and the continental margin of California, in W.G. Ernst (ed.), The Geotectonic Development of California: Prentice Hall, p. 1-28.

Eaton, J.P., 1990, The earthquake and its aftershocks from May 2 through September 30, 1983, in Rymer, M.J. and Ellsworth, W.L. (eds.), The Coalinga, California, Earthquake of May 2, 1983: U.S. Geological Survey Professional Paper 1487, p. 113-170.

Ekström, G., Stein, R.S., Eaton, J.P., and Eberhart-Phillips, D., 1992, Seismicity and geometry of a 110-km-long blind thrust fault: The 1985 Kettleman Hills, California, earthquake: Journal of Geophysical Research, v. 97B, p. 4843-4864.

Frankel A., Mueller C., Barnhard T., Perkins D., Leyendecker E.V., Dickman N. Hanson S., Hooper M., 1997, U.S. Department of the interior. National seismic hazard maps, June 1996: U.S. Geological Survey. Open File Report 96-532.

Grant, L.B. and Sieh, K.E., 1993, Stratigraphic evidence for 7 meters of dextral slip on the San Andreas fault during the 1857 earthquake in the Carrizo Plain: Bulletin of the Seismological Society of America, v. 83, p. 619-635.

Harden, D.R., 1998, California Geology: Prentice Hall, 479 p.

Hart, E.W., 1994, Fault-rupture hazard zones in California, Alquist-Priolo Earthquake Fault Zoning Act with index to Earthquake Fault Zones maps: California Division of Mines and Geology, Special Publication 42, 33 p.

Holzer, T.L., 1980, Faulting caused by groundwater level declines, San Joaquin Valley, California: Water Resources Research, v. 16, p. 1,065-1,070.

Jennings, C.W., 1994, Fault activity map of California and adjacent areas: California Division of Mines and Geology, California Geologic Data Map Series, Map No. 6, 1:750,000 scale.

Kleinfelder, 2001, Geotechnical Investigation Letter Report, Geotechnical Engineering Services, Proposed Henrietta Peaker Plant, prepared for GWF Power Systems, July, 12.

Matthews A. and Burnett J.L., 1965, Geological map of California, Fresno sheet, Olaf P. Jenkins Edition, scale 1:250,000.

Mayer, Carlynn, 2001, Personal communication from Carlynn Meyer, Kings County Water District, to J. Low, URS/Radian International, February 8.

Medwedeff, D.A., 1989, Growth fault-bend folding at southeast Lost Hills, San Joaquin Valley, California: Bulletin of the American Association of Petroleum Geologists, v. 73, p. 54-67.

Mills, Don, 2000. Personal communication, Kings County Water District, to J. Low, URS/Radian International, February 8.

Page, B.M., 1966, Geology of the Coast Ranges of California, in Bailey, E.H. (ed.), Geology of Northern California: California Division of Mines and Geology Bulletin 190, p. 255-276.

Perkins, J.A., 1987, Provenance of the Upper Miocene and Pliocene Etchegoin Formation: Implications for paleogeography of the Late Miocene of Central California: Unpublished MS Thesis, San Jose State University, 110 p.

Real, C.R., Toppozada T.R., and Parke, D.L., 1978, Earthquake catalog of California, January 1, 1900-December 31, 1974: California Division of Mines and Geology Special Publication 52.

Sadigh, K., Chang, C.Y., Egan, J.A., Makdisi, F., and Youngs, R.R., 1997, Attenuation relationships for shallow crustal earthquakes based on California strong motion data: Seismological Research Letters, v. 68, p. 180-189.

San Joaquin Water District, 1997, Map showing areas of shallow groundwater: Obtained from the San Joaquin District Web page: http://dpla.water.ca.gov.

Sieh, K.E., 1978, Slip along the San Andreas fault associated with the great 1857 earthquake: Bulletin of the Seismological Society of America, v. 68, p. 1,421-1,448.

Spudich, P., Joyner, W.B., Lindh, A.G., Boore, D.M., Margaris, B.M., and Fletcher, J.B., 1999, SEA99 - A revised ground motion prediction relation for use in extensional tectonic regimes: Bulletin of the Seismological Society of America, v. 89, p. 1156-1170.

Stein, R.S., 1983, Reverse slip on a buried fault during the 2 May 1983 Coalinga earthquake sequences: Evidence from geodetic elevation changes, in Bennett, J.H. and Sherburne, R.W. (eds.), The 1983 Coalinga, California Earthquakes: California Division of Mines and Geology Special Publication 66, p. 151-163.

Stover, C.W. and Coffman, J.L., 1993, Seismicity of the United States, 1568-1989 (revised): U.S. Geological Survey Professional Paper 1527, 418 p.

Toppozada, T.R., Real, C.R., and Parke, D.L., 1981, Preparation of isoseismal maps and summaries of reported effects for pre-1900 California earthquakes: California Division of Mines and Geology Open-File Report 81-11, 181 p.

Townley, S.D. and Allen, M.W., 1939, Descriptive catalog of earthquakes of the Pacific Coast of the United States 1769 to 1928: Bulletin of the Seismological Society of America, v. 29, 297 p.

U.S. Geological Survey (USGS), 2000. Information obtained from the website at http://ca.water.usgs.gov//gwatlas/valley/landsub.html.

Wakabayashi, J. and Smith, D.L., 1994, Evaluation of recurrence intervals, characteristic earthquakes and slip-rates associated with thrusting along the Coast Range-Central Valley geomorphic boundary, Bulletin of the Seismological Society of America, v. 84, p. 1,960-1,970.

Wells, D.L. and Coppersmith, K.J., 1994, New empirical relationships among magnitude, rupture length, rupture width, rupture area, and surface displacement: Bulletin of the Seismological Society of America, v. 84, p. 974-1,002.

Westlands Water District, 1996. Groundwater Management Plan, 1996. Obtained from the Westlands Water District Web page: http://www.westlandswater.org/.

Westlands Water District, 2001. Deep Groundwater Conditions, February. Obtained from the Westlands Water District Web page: http://www.westlandswater.org/.

Wong, I.G. and Ely, R., 1983, Historical seismicity and tectonics of the Coast Ranges-Sierran Block boundary: Implications to the 1983 Coalinga, California earthquakes, in The 1983 Coalinga Earthquakes, J. Bennett and R. Sherburne (eds.): California Division of Mines and Geology Special Publication 66, p. 89-104.

Wong, I.G., Ely, R.W., and Kollmann, A.C., 1988, Contemporary seismicity and tectonics of the Northern and Central Coast Ranges-Sierran Block Boundary zone, California: Journal of Geophysical Research, v. 93, p. 7,813-7,833.

Working Group for California Earthquake Probabilities, 1995, Seismic hazards in southern California: Probable earthquakes, 1994 to 2024: Bulletin of the Seismological Society of America, v. 85, p. 379-439.

Working Group on Northern California Earthquake Potential, 1996, Database of potential sources for earthquakes larger than magnitude 6 in northern California: U.S. Geological Survey Open-File Report 96-705, 53 p.

TABLES

Table 8.15-1
MCE Median (50th Percentile) Peak Horizontal Ground Accelerations on Soil

			Distances in km			Peak Horizontal Ground Acceleration					
Seismic Source	**MCE (M_w)**	**Fault Style**	**Horizontal**	**Rupture[1]**	**Seismogenic[2]**	**Abrahamson & Silva (1997)**	**Campbell (1997)**	**Sadigh et al. (1997)**	**Boore et al. (1997)**	**Spudich et al. (1999)**	**Weighted Average PGA**
San Andreas Fault (Parkfield Segment)	8.0	S	65	65	65	0.11	0.15	0.12	0.14	--	0.13
CRSB (Kettleman Hills)	6.5	R	1	12	12	0.29	0.35	0.31	0.49	--	0.35
Kern Front Faults	6.8	N	67	67	69.3	0.05	0.05	0.05	--	0.05	0.05

N = Normal Slip, S = Strike Slip, R = Reverse Slip
PGA = peak ground acceleration
CRSB = Coast Ranges–Sierran Block
MCE = maximum credible earthquake
[1] Assume faults extend to depth of 12 km
[2] Assume depth to seismogenic portion of fault is 2 km

Table 8.15-2
Laws, Ordinances, Regulations, and Standards
for
Geologic Resources and Hazards

Jurisdiction	Authority	Administering Agency	AFC Conformance Section
Federal	None applicable	—	—
State	California Public Resources Code § 25523(a); CCR §§ 1752, 1752.5, 2300–2309, and Chapter 2, Subchapter 5, Article 1, Appendix B, Part (I)	California Energy Commission	Section 8.15.1
Local	California Building Code (CBC), 1998. Appendix Chapter 16, Division 4. Alquist-Priolo Earthquake Fault Zoning Act (1994 rev).	Kings County Community Development – Building Department	Section 8.15.2
	Safety Element of the Kings County General Plan.	Kings County Community Development – Building Department	Section 8.15.2

CCR = California Code of Regulations

FIGURES

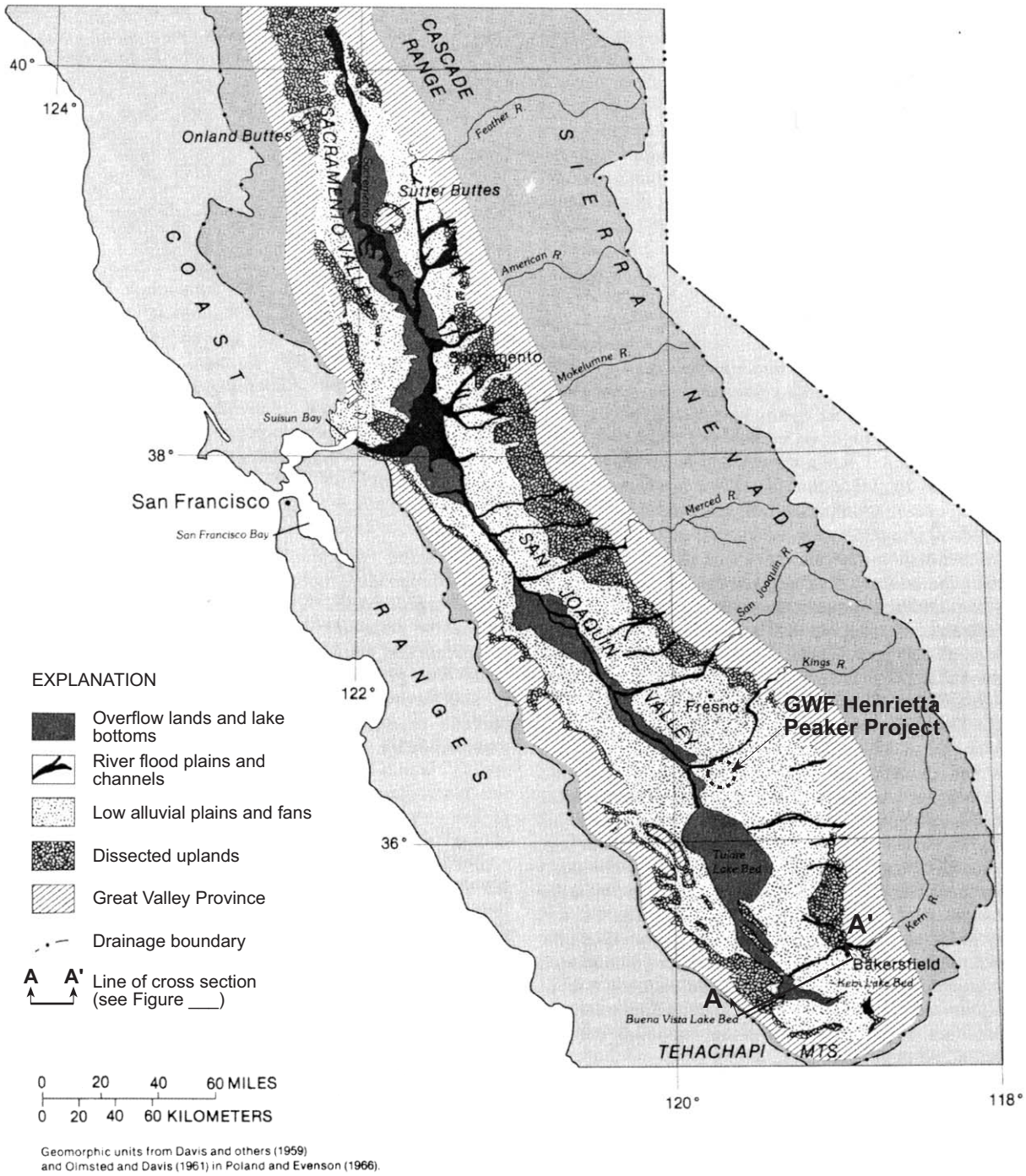

Source: Page, 1986

URS	Project No. 51-00167032.00 GWF Henrietta Peaker Project	GEOMORPHIC FEATURES OF THE GWF HENRIETTA PEAKER PROJECT	Figure 8.15-1

51-00167032.00-01017/082301/gos

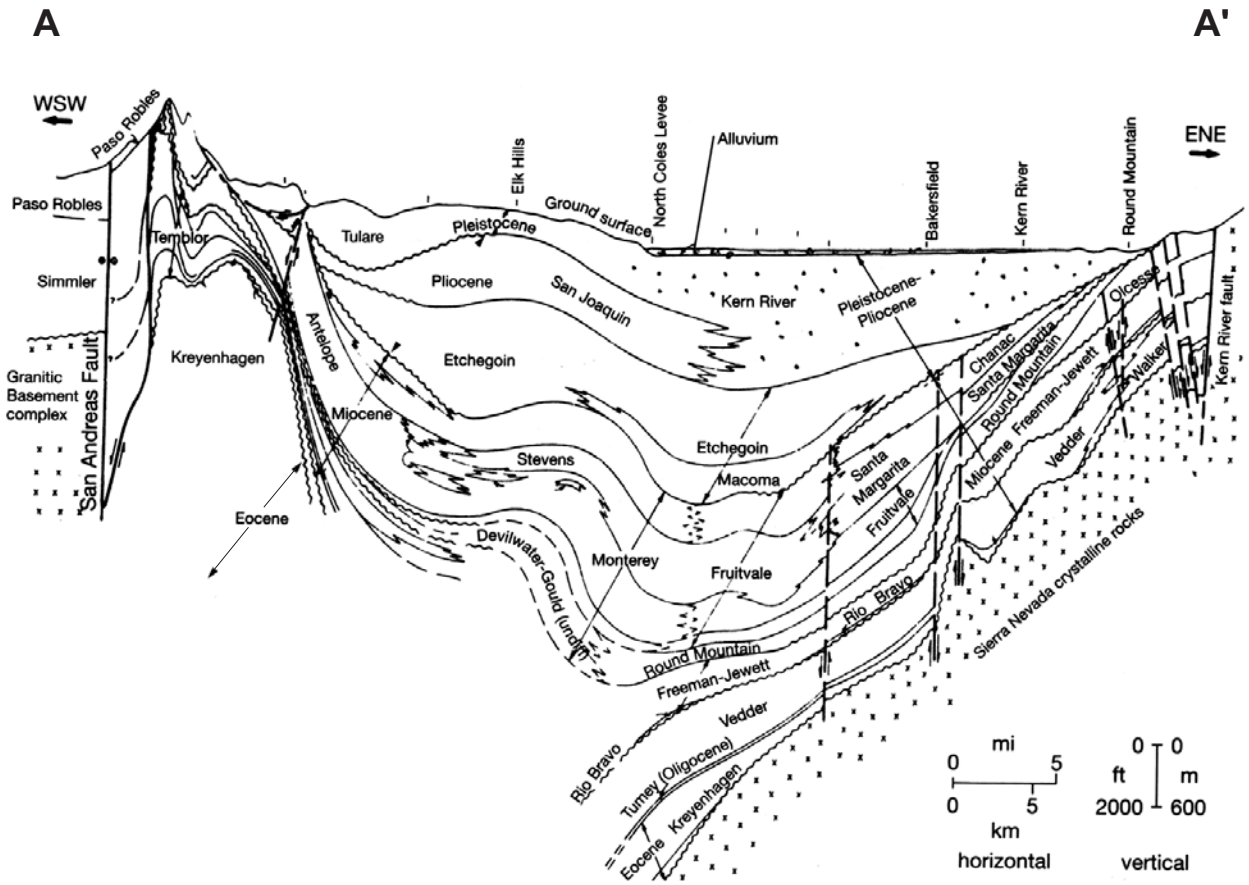

SOURCE: Harden (1997)

URS	Project No. 51-00167032.00 GWF Henrietta Peaker Project	SIMPLIFIED GEOLOGIC CROSS SECTION A-A', SAN ANDREAS FAULT TO KERN RIVER FAULT IN THE BAKERSFIELD AREA	Figure 8.15-2

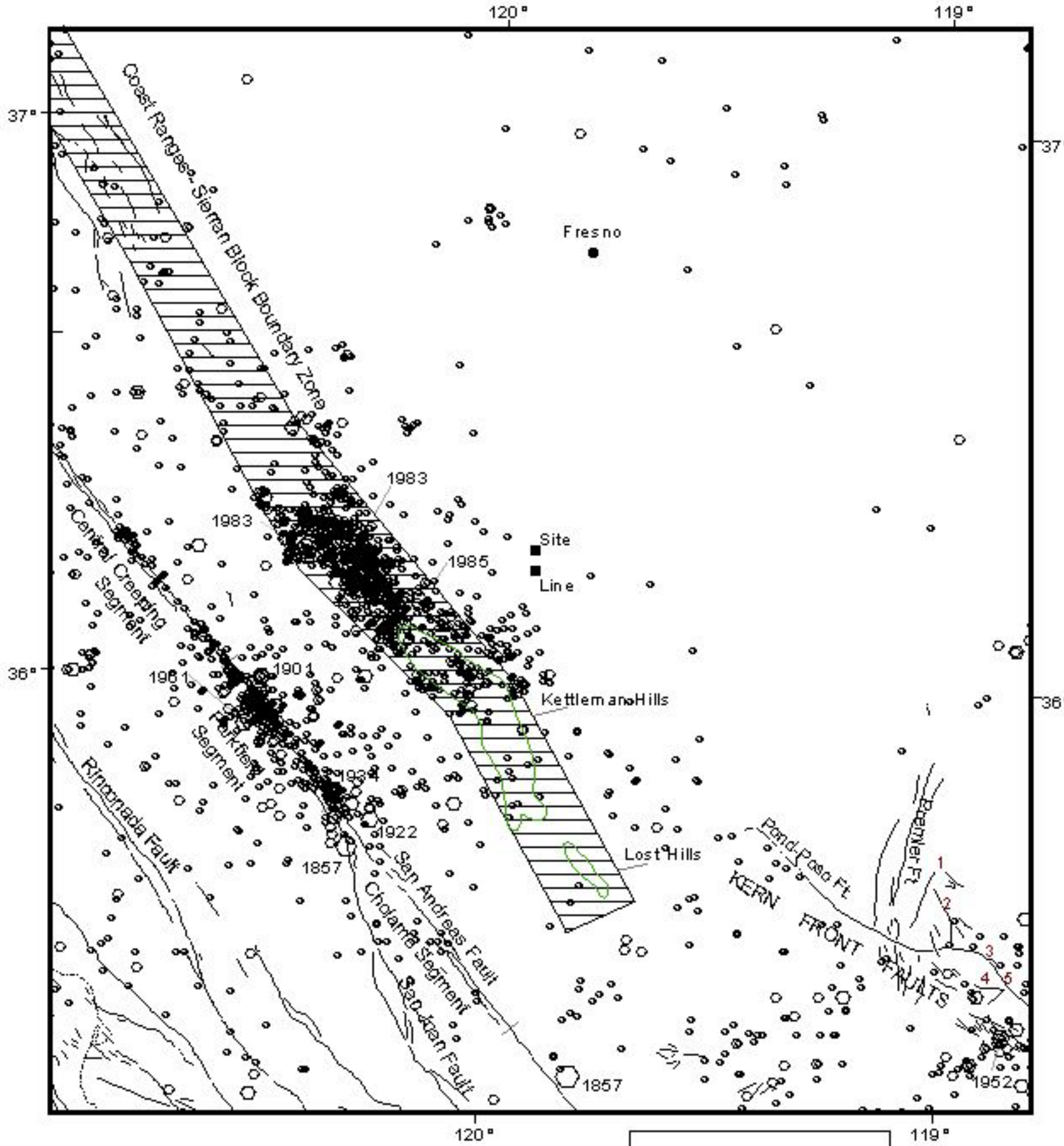

1 - New Hope Fault
2 - Mt Poso Fault
3 - Poso Creek
4 - Jewett Fault
5 - Kern Gorge Fault

Magnitude

- 3.0 - 3.9
- 4.0 - 4.9
- 5.0 - 5.9
- 6.0 - 6.9
- 7.0 - 7.9
- 8.0 - 8.9

URS	Project No. 51-00167032.00 GWF Henrietta	QUATERNARY FAULTS AND HISTORICAL SEISMICITY, 1852-2000, WITHIN 100 KM OF GWF HENRIETTA (M >=3.0)	Figure 8.15-3

System		Geologic Unit	Lithologic Character	Maximum Thickness (feet)	Water-bearing Character
Unconsolidated Deposits					
QUATERNARY Recent		Flood-basin deposits	Silt, clay, and fine sand, reduced fossiliferous	<50	Poorly permeable, water is of poor quality. Unconfined.
QUATERNARY Recent		Younger alluvium	Sand, gravelly, arkosic, silty sand, silt, and clay, weakly oxidized or reduced; poorly developed soil profiles	55	Highly permeable. Unconfined. However, is largely unsaturated and serves as a conduit for recharge to the underlying units.
QUATERNARY Pleistocene & Recent (?)	Older alluvium	Oxidized	Sand, fine to very coarse, gravel, silt, and clay; well-sorted, crossbedded, arkosic, moderately oxidized; contains well-developed soil profiles and hardpan horizons	600	Highly permeable. Unconfined and semiconfined. Wells yield large quantities of water, which is generally of the calcium or magnesium bicarbonate type. Major aquifer.
QUATERNARY Pleistocene & Recent (?)	Older alluvium	Reduced	Sand, fine to coarse, arkosic, silty sand and clay, sporadically calcareous, fossiliferous; interfingers with lacustrine clay. Unweathered	1,000±	Moderately permeable. Semiconfined and confined. Wells yield large quantities of water, generally of the sodium bicarbonate type. Major aquifer.
TERTIARY & QUATERNARY Pliocene & Pleistocene		Lacustrine and marsh deposits	Silt, clay, and fine sand, reduced, fossiliferous, gypsiferous. In subsurface, lacustrine clay interfingers as tongues with continental and alluvial deposits	3,000±	Poorly permeable. Confined. Water is of poor quality.
TERTIARY & QUATERNARY (?) Pliocene & Pleistocene (?)	Continental deposits	Oxidized	Silt, sandy, and clay, some sand and gravel, arkosic, oxidized, deeply weathered, calcareous; contains well-developed soil profiles	500	Poorly permeable. Semiconfined. Wells generally have low yields. Water is generally of the sodium bicarbonate type.
TERTIARY & QUATERNARY (?) Pliocene & Pleistocene (?)	Continental deposits	Reduced	Sand, fine- to medium-grained, silt, and clay, arkosic, micaceous, calcareous; interfingers with lacustrine clay	2,000±	Moderately permeable. Semiconfined and confined. Wells yield large quantities of water generally of the sodium bicarbonate type.
Consolidated Rocks					
TERTIARY		Marine rocks	Sandstone, siltstone, and shale	12,000±	Generally do not yield fresh water, contain mostly brackish water.
PRE-TERTIARY		Basement complex	Metamorphic and igneous rocks		Fractures, faults, and joints locally yield small quantities of water; otherwise virtually impermeable.

Source: Croft and Sordon, 1968

URS

Project No. 51-00167032.00

GWF Henrietta Peaker Project

GENERALIZED STRATIGRAPHIC COLUMN IN THE GWF HENRIETTA PEAKER PROJECT

Figure 8.15-4

51-00167032.00-01017/082301/gos

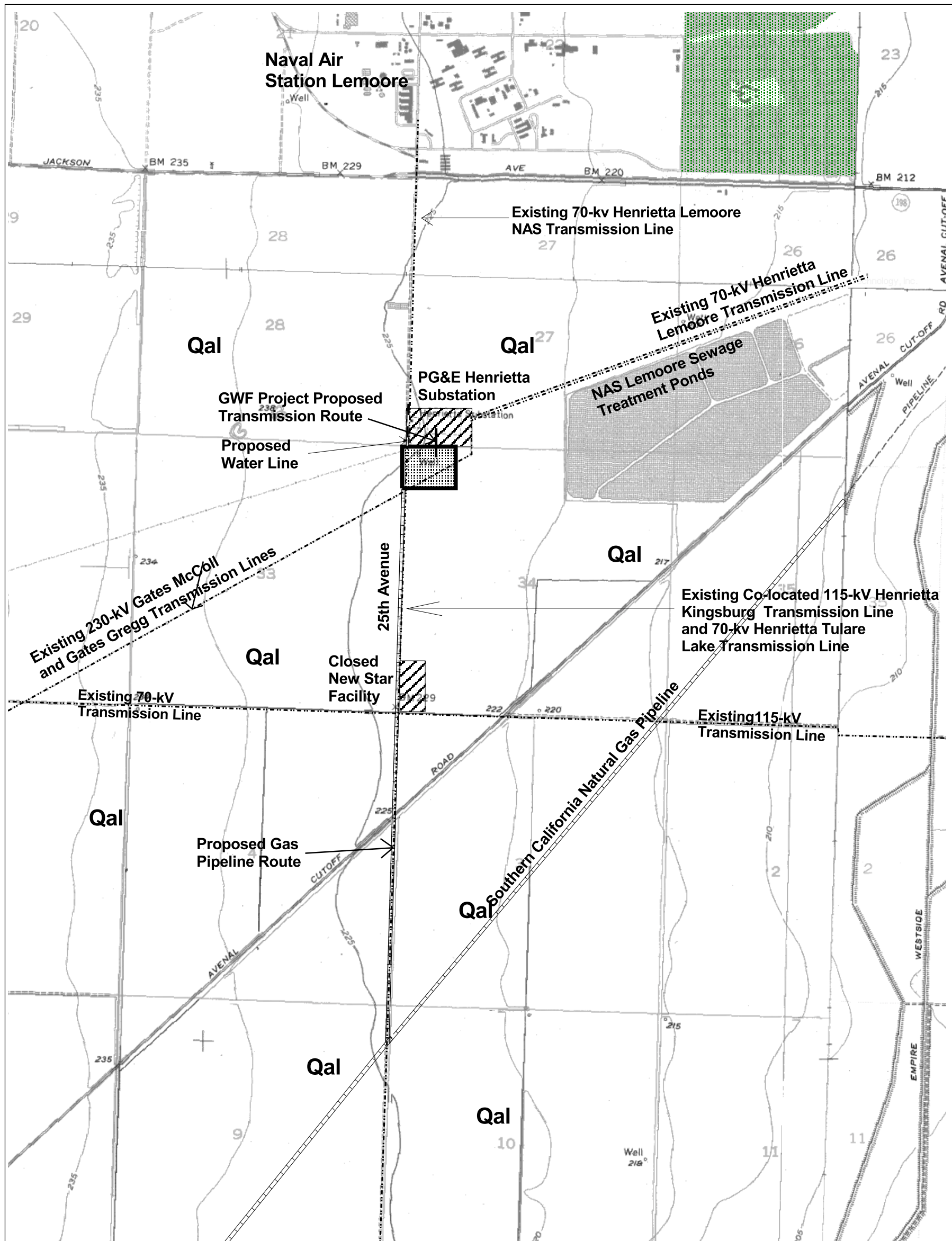

N

0 0.2 0.4 0.6 0.8 1 Miles

1000 0 1000 2000 Feet

Scale 1:24,000

Source:
Base Maps from U.S.G.S.
7.5 Minute Quadrangles
Westhaven, Calif., (Photorevised 1981),
Stratford, Calif. (1954), Lemoore (1954) and
Vanguard (1956, Photorevised 1981)

Existing Transmission Lines

Transmission Route

Gas Pipeline Routes

Water Line

Plant Site

Developed Industrial

Qal - Quaternary Alluvium (Pleistocene, Holocene, Recent)

URS	GWF Henrietta Peaker Project Project No. 51-00167032.00	Geological Map in the Area Surrounding the GWF Henrietta Peaker Project	Figure 8.15-5

L:\Projects\GWF_Henrietta\Apr\proj1dhw.apr

8.16 Paleontological Resources

The Henrietta Peaker Project (HPP) consists of a 91.4-megawatt (MW) (net), natural-gas-fired, simple-cycle power plant located approximately 10 miles southwest of Lemoore, California, on a seven-acre portion of a 20-acre parcel owned by GWF Energy LLC. The HPP will interconnect to the existing adjacent Pacific Gas and Electric Company (PG&E) Henrietta Substation through a new 550-foot 70-kilovolt (kV) transmission line supported on two new transmission poles. Other linear facilities include an approximately 16.5-foot water interconnection pipeline (from the site property boundary) and a 2.2-mile Southern California Gas Company natural gas interconnection pipeline. Additionally, approximately five acres will be used for temporary construction laydown and parking.

Paleontological resources are the mineralized (fossilized) remains of prehistoric plant and animal organisms, as well as the mineralized impressions (trace fossils) left as indirect evidence of the form and activity of such organisms. These resources are considered to be nonrenewable resources significant to our culture under state and federal law.

In compliance with California Energy Commission (CEC) Guidelines (CEC, 1992) and *Rules of Practice and Procedure & Power Plant Site Certification Regulations* (CEC, 1997), the paleontological analysis provided herein assesses whether significant paleontological resources exist in areas that could be adversely affected by the HPP. Measures are proposed to mitigate potential adverse effects of the HPP to any significant resources that may be present.

Laws, ordinances, regulations, and standards (LORS) pertinent to the identification, assessment of significance, and assessment and mitigation of adverse effects to paleontological resources are identified in Section 8.16.4 and Table 8.16-4.

This paleontological analysis also complies with guidelines and significance criteria issued in 1994 by the Society for Vertebrate Paleontology, a national professional organization. These criteria outline acceptable practices in the conduct of paleontological resource surveys, data recovery, analysis, and curation. Mr. David Lawler, a qualified paleontologist, carried out the paleontological resources assessment for the HPP site.

This section summarizes the technical report, which is presented as Appendix L (Lawler, 2001). The technical report, which contains sensitive resource location information, has been filed under separate cover with the CEC under a request for confidentiality.

In 1978, the U.S. Department of the Interior, Bureau of Land Management proposed the following guidelines to determine the significance of a paleontological resource. A significant paleontological resource is one that:

- Provides important information on evolutionary trends, relating living organisms to extinct organisms;
- Provides important information pertaining to biological community development and zoological/botanical biota interaction;
- Demonstrates unusual circumstances in biotic history; or
- Is of limited sample size, in danger of depletion or destruction by natural processes, vandalism, or commercial exploitation, or is found in no other geographic location.

In addition, all vertebrate fossils are categorized as being of significant scientific value, in keeping with the significance criteria of the Society for Vertebrate Paleontology (1994). Under the California Environmental Quality Act (CEQA) Guidelines, a significant effect on paleontological resources can occur when a proposed HPP will "directly or indirectly destroy ...a unique paleontological resource."

Paleontological resources are classified as a nonrenewable scientific-cultural resource and are protected most notably by the 1906 Federal Antiquities Act and other subsequent federal legislation and policies and CEQA environmental provisions. Significant paleontological resources are defined in this report to include the interpretation outlined by the Society for Vertebrate Paleontology (1994), wherein vertebrate fossils are considered significant.

8.16.1 Affected Environment

8.16.1.1 Overview

The southern San Joaquin Valley region contains a diverse record of geologic and biologic history that spans more than 30 million years, dating from the Miocene period. Fossils

of marine and terrestrial organisms have accumulated to produce a significant record of prehistoric life, based on the Tertiary- and Quaternary-age deposition of sedimentary sequences. Regional tectonic events ranging from creation of the Tertiary age marine basins to uplift of the southern Sierra Nevada foothill region, as well as fluctuating worldwide sea level changes, have significantly affected the geologic setting of the region.

Much of the paleontological interest in the HPP vicinity stems from the well known discoveries of Pleistocene-age fossil vertebrate faunas derived from undifferentiated Quaternary-age units in other parts of northern and southern California, particularly the San Francisco Bay Region. Scientific description of diverse fossil vertebrate assemblages provides one of the best-known records of Pleistocene faunas in California (see Miller, 1971; Stirton, 1939, 1951; Savage, 1951; Wolf, 1971, 1973, 1975; and Jefferson, 1991). Abundant continental and lacustrine (freshwater) deposits have provided favorable conditions for preserving vertebrate fossil remains in these geologic units.

8.16.1.2 Paleontological Literature and Locality Records Review

Data for the following descriptions of paleontological resources within the HPP area were obtained from published records of previous geologic and paleontological investigations, unpublished paleontological research papers, museum records, and interviews conducted with individuals who have first-hand knowledge of resources within the HPP vicinity. No other projects with a designated paleontological component are known to have conducted previous field or literature surveys or produced sensitivity maps or reports for areas within or adjacent to the HPP.

Sources consulted on the general geology of the area included regional geologic maps compiled by the California Division of Mines and Geology (CDMG) and the U.S. Geological Survey (USGS). More specific geologic information was obtained from 1:24,000- to 1:250,000-scale USGS and CDMG maps.

Fossil locality records were reviewed and fossil specimens inspected (when possible) at the University of California Museum of Paleontology, which provided most of the data concerning distribution of known fossil resources. Data collected in May and June, 2001

were reviewed to assess the potential for each geologic unit to contain significant paleontological resources and to determine appropriate field survey coverage.

8.16.1.3 Overview of Lithologic Units

Surficial sedimentary units of predominantly Pleistocene and Holocene to Recent age underlie the entire HPP area. These sediments include deposition that ranges from continental alluvial, fluvial, lacustrine, fan-derived sediments to subaerial floodplain deposits. Lithologies include sand, gravel, silt, and clay, all of which can be favorable to the preservation of paleontological resources.

Rock outcrops of Pleistocene age occur as surficial and subsurface deposits along the east side of the San Joaquin Valley area. These sedimentary units have been described and mapped previously by Bartow (1991), CDMG (1966), Croft (1967, 1968), and Marchand and Allwardt (1981).

In addition, Bartow (1991) described the geomorphic development of a series of Pleistocene lake deposits, known as the Corcoran and Tulare Lakes, which were subsequently buried by the major westward-flowing alluvial fan sediment drainage. The lateral extent of these Quaternary alluvial (*Qal*) subunits have been extrapolated from unpublished geological subsurface mapping data on the HPP area. The Quaternary rock units vary in facies type from sandstone to unconsolidated siltstone and clays, all of which are either fossiliferous or potentially fossiliferous.

Gradual, long-term erosion and previous construction activity have removed parts of the recent soil cover, so that these Quaternary rock units and their contained fossils are now at or near the surface throughout most of the HPP area. However, these formations or parts of the formations are obscured in most areas by soil, vegetation, or thin deposits of surficial sediment. Thus, visual detection of fossils is possible in those areas where natural erosion or man-made excavations (during road, pipeline, or building site excavation or grading operations) have removed this cover.

Portions of the HPP area appear overlain by shallow, imported fill material. Given this fact, the potential paleontological sensitivity of undisturbed portions of the HPP site

has been determined from the distribution of known vertebrate fossil localities in the region, and available geological mapping of the Quaternary alluvium (*Qal*) and/or Quaternary undifferentiated (*Qu*) outcrops (Croft, 1968).

Cenozoic Rock Units

Quaternary Alluvium Deposits (Qal/Qu). While Quaternary alluvium deposits of Pleistocene age occur locally within the HPP area, usage of the *Qal/Qu* designation on available geologic maps of the HPP region is highly variable. Geologic units ranging from Quaternary-age stream, terrace, fluvial, and alluvial fan and floodplain deposits may be grouped under this designation, particularly where geologic data have been scarce due to industrial or agricultural development.

These units outcrop extensively in the HPP–southern San Joaquin Valley region. Bartow (1991) and Croft (1967, 1968, 1969) note that these geological units may exceed several hundred feet in thickness and consist of poorly consolidated coarse sands and gravels, silts, and clay units. The clay units in part reflect the existence of the sizable Tulare and Corcoran Lakes; both originated in Pleistocene times, and Tulare Lake survived until agricultural impacts over the last 100 years terminated its existence.

While no known paleontological sites exist within one-quarter mile of the HPP area, fossil mammal assemblages have been collected from the Tulare Lake–Corcoran area to the south and west. These locality data are included in the confidential Appendix L. Both Tulare Lake margin areas have produced large fossil mammal specimens, such as proboscidian (elephant), camel, sloth, and bison (buffalo).

Paleontological localities outside the one-quarter-mile radius of the HPP area, but within a 10-mile radius, contain scientifically important resources that represent a wide variety of terrestrial vertebrate taxa, including mammoth, giant ground sloth, camel, bison, horse, wolf, and rodent terrestrial mammalian taxa. The sandstone, silt, and clay lithologies of the geologic units are favorable for exceptional preservation of vertebrate and microvertebrate fossil resources. Three paleontological localities are present within a 10-mile radius of the HPP area; these data

are included in the confidential Appendix L. Stratigraphic occurrences of all localities have been assigned to the Pleistocene Quaternary alluvium (*Qal*) unit.

Earth-fill and cement materials as well as other existing industrial facilities infrastructure are expected to have either removed or obscured surface exposures of the older *Qal* sediments (or Tulare Lake deposit equivalents) in some areas. Occurrences of these stratigraphic units at near-surface depths are quite probable.

Holocene and Post-Holocene-Age Sediments. Sediments of probable Holocene or post-Holocene age that form the thin, surficial cover in the HPP area are considered to be of limited paleontological interest and thus considered inconsequential.

8.16.1.4 Method of Assessing Sensitivity

The assessment of paleontological sensitivity of the proposed HPP plant site and associated linear facilities is based both on known paleontological sites near the HPP area, as well as extrapolated biostratigraphic information derived from rock units in adjacent areas or areas of regional context. The sensitivity of each project component was determined through archival research into the distribution of known fossil localities, fossil-bearing geologic units, exposures of non-fossiliferous rocks, and surface outcrops of the different rock units. Paleontological field surveys were conducted as appropriate. Survey results are provided in Section 8.16.1.6.

Geologic units (mappable rock formations) within a one-half-mile radius of the HPP area and their paleontological sensitivity are shown on Figure 8.16-3 and Tables 8.16-1 and 8.16-2 as geologic contacts and specific sensitivity ratings. Known paleontological sites within or near the HPP area are detailed in Appendix L.

Three categories of paleontological potential are used in this report, according to CEC standards. Rating categories are considered interpretive and are subject to change as new information is obtained. High potential, moderate potential, and low potential ratings are defined below.

High Potential Rating. Rock units with a high potential for significant paleontological resources are known to have yielded vertebrate fossils within the HPP area or region. Such a rating does not imply that additional vertebrate fossils will be recovered from this rock unit, but that previous occurrences have been recorded. Additional factors that are considered in making a determination pertain to inferred depositional environment and lithology.

Moderate Potential Rating. A moderate potential rating is applied to rock units that possess some degree of potential, such as a favorable depositional environment for resource preservation or characteristics of lithologically similar rock units in the region that have yielded vertebrate fossils. All rock units rated as having moderate potential are recommended for field survey and construction monitoring.

Low Potential Rating. A low potential rating is applied to rock units with lithologies that do not commonly preserve significant fossil resources, such as coarse boulder conglomerates or welded (ignimbrite) volcanic ash deposits. Igneous rocks, such as the granodiorite outcrops, do not preserve paleontological resources due to their genesis within a magmatic environment.

8.16 1.5 Field Survey Methods

Mr. David Lawler, project paleontologist, conducted a site visit on May 26–27, 2001. The proposed HPP components were subjected to a pedestrian survey in areas where open exposures afforded the possibility of observing undisturbed native substrate. The project paleontologist walked a systematic pattern of 50-foot-wide transects of the proposed plant site, inspecting soils and exposures such as agricultural plowed land, rodent burrow tailings, gullies, and drainages for evidence of fossiliferous materials. Each proposed linear facility was also subjected to a pedestrian survey to a distance of 200 feet on each side of the right-of-way centerline, with approximately 50 feet between transects. Where pavement or elements of the built environment precluded full coverage of the corridor, the survey corridor was narrowed to exposed surfaces. The investigation focused on discerning whether sensitive fossil materials were evident in native soils derived from the *Qal/Qu* (Quaternary alluvium) geologic unit. See Table 8.16-3 for field survey coverage by HPP component and field conditions.

8.16.1.6 Findings

The sensitivity ratings determined through archival research and field survey are shown in Tables 8.16-1 and 8.16-2. It should be noted that sensitivity ratings can change as new paleontological surveys are undertaken and add to the existing database. Identification of vertebrate or microvertebrate sites and materials of scientific significance can elevate a particular rock unit's paleontological rating. All of the project sites were determined to be underlain by Quaternary alluvium, which has moderate to high paleontological sensitivity.

Plant Site. There is minimal topographic relief at the proposed plant site. The undifferentiated Quaternary alluvial sediments (*Qal/Qu*) underlying the site are assigned a high sensitivity rating. Ground visibility is approximately 95 percent in the plant site area.

Transmission Route. The proposed transmission line segment is entirely within *Qal* and is assigned a high sensitivity rating. Ground visibility is approximately 95 percent in the transmission route area.

Gas Pipeline Route. The natural gas pipeline will be constructed entirely within the *Qal* unit and is assigned a high sensitivity rating. A maximum excavation depth of 6 feet for the majority of the proposed underground pipeline route is estimated. No fossil materials were observed during the field survey.

Ground visibility is approximately 95 percent from the proposed plant site south to the New Star Facility. At the New Star Facility, ground visibility is reduced to zero percent because of artificial fill/ground cover such as paving. Ground cover south of the New Star Facility is approximately 95 percent, with the exception of 25th Avenue, which is paved and therefore has zero visibility. South of the Avenal Cutoff, 25th Avenue changes from paving to dirt. On the west side of 25th Avenue, commercially grown barley obscures visibility to zero percent. On the east side of the 25th Avenue, south of the Avenal Cutoff, visibility is approximately 95 percent.

8.16.2 Environmental Consequences

Often, only monitoring during excavation can reveal the paleontological content of a formation at a specific impact location. However, for the purposes of this analysis, and in keeping with CEC guidance, the assumption is made that "if the rock units in the geologic formations which are to be disturbed have a high or moderate potential to contain fossil materials, these formations are considered likely to incur impacts" (CEC, 1992).

Excavation activities have the highest potential to unearth and affect paleontological resources. With implementation of the mitigation measures proposed in Section 8.16.3, no significant impacts on paleontological resources are anticipated. With proper mitigation, the HPP could result in recordation of new paleontological resources in the project region.

8.16.2.1 Direct Impacts

Plant Site. The *Qal/Qu* formation underlying the proposed plant site is assigned a high sensitivity rating. Paleontological resources could be adversely affected by excavation activity.

Transmission Route. The proposed interconnecting transmission line is underlain by *Qal/Qu* sedimentary deposits of a high sensitivity rating. Paleontological resources could be adversely affected by excavation activity.

Gas Pipeline Route. The formation traversed by the proposed gas pipeline route is assigned a high sensitivity rating, where pipeline excavations are not within artificial fill or disturbed soil material. Paleontological resources could be adversely affected by excavation activity.

8.16.2.2 Indirect Impacts

The construction, operation, and maintenance of the HPP are not expected to result in significant indirect impacts to paleontological resources. As noted above, paleontological resources typically derive their importance from the physical remains and/or association with geologic strata or other fossils, which would not be indirectly affected.

8.16.2.3 Cumulative Impacts

Cumulative impacts on regional paleontological resources due to the proposed HPP are limited, because implementation of mitigation will reduce impacts to a less-than-significant level. The HPP will not contribute to cumulative impacts associated with past, present, or reasonably foreseeable future projects in the region. Scientifically controlled recovery at significant paleontological sites and/or site avoidance will ensure that the information content of such sites is retained.

8.16.3 Mitigation Measures

8.16.3.1 General Measures

The literature review did not identify any known fossil localities that appear to be affected by the proposed HPP. The greatest potential for a discovery will occur during new ground-disturbing activities associated with construction. Based on the sensitivity of the underlying formations, the most prudent course involves paleontological monitoring during construction coupled with the following mitigation measures and monitoring recommendations:

- Prior to the start of construction, the HPP owner will provide the CEC with the name and qualifications of its designated paleontological resources specialist and mitigation team members. The paleontologist will be responsible for implementing the following measures and for using qualified personnel for these tasks.

- Prior to the start of HPP construction, the designated paleontological resource specialist will prepare a draft paleontological resource monitoring and mitigation plan to identify general and specific measures to minimize potential impacts to sensitive paleontological resources. Upon approval by the CEC Compliance Project Manager (CPM), the paleontological resource specialist will implement the plan.

- If a paleontological locality is discovered in a direct impact area, an attempt will be made to modify the facility design or placement to avoid the impact. Modifications could include minor rerouting of onsite subsurface utility alignments.

- If a significant paleontological locality is discovered near a direct impact area, the resource will be protected during the construction period through temporary or permanent measures, which may include construction period

covenants against vehicular traffic and excavation within the locality, and/or permanent or temporary fencing. Measures of this type will be incorporated in the mitigation and monitoring plan noted above, for review by the CEC prior to construction.

- Prior to construction, a paleontologist will meet with contractor personnel to provide them with information on the appearance of fossils, research values, and regulatory responsibilities. The crew will also be briefed on procedures to follow in the event that a potentially significant fossil locality or fossil find is uncovered during construction. The contractor briefing will be videotaped for the education of new personnel, as applicable.

- In the event that fossils are uncovered during construction, and a paleontologist is not on site, work in the vicinity will halt and a paleontologist will be called. The paleontologist will examine the find and assess its significance in accordance with the resource significance criteria discussed above (Section 8.16.2). If the resource is determined to be significant, impacts that cannot be avoided will be mitigated through data recovery or other means, in consultation with the CEC.

- A paleontologist will perform field inspections during initial ground-breaking, and then monitor excavation at facility locations in areas that have been confirmed through field inspection to have high or moderate sensitivity. If excavations bring paleontological materials to the surface, a paleontologist will collect samples for data recovery and analysis. In the event that a major significant find is uncovered, the emergency discovery procedures described above will also apply.

- The HPP owner will ensure preparation of a Paleontological Resources Report by the designated paleontological resources specialist if significant fossils are found and recovered during HPP activity.

8.16.3.2 Site-Specific Measures

Plant Site. Due to the high sensitivity rating of the formation underlying the proposed plant site, there is the potential for significant paleontological resources to occur below surface. Previously unidentified paleontological resources present on the plant site could be disturbed or destroyed during excavation activity. It is recommended that a paleontologist monitor the initial excavation activities and periodically inspect any deep excavation. Monitoring will be conducted in compliance with the monitoring and mitigation plan described above.

Transmission Route. Due to the high sensitivity rating of the formation underlying this proposed transmission route, there is a high potential for significant paleontological resources to occur below surface. Previously unidentified paleontological resources present along the route could be disturbed or destroyed during excavation activity. It is recommended that a paleontologist monitor initial excavation activities and periodically inspect any deep excavation. Monitoring will be conducted in compliance with the monitoring and mitigation plan described above.

Gas Pipeline Route. Due to the high sensitivity rating of the formation traversed by the proposed gas pipeline, there is potential for significant paleontological resources to occur below surface. Previously unidentified paleontological resources present along the proposed gas pipeline route could be disturbed or destroyed during excavation activity. It is recommended that a paleontologist monitor initial excavation activities and periodically inspect any deep excavation. Monitoring will be conducted in compliance with the monitoring and mitigation plan described above.

8.16.4 Proposed Conditions of Certification

Proposed conditions of certification are contained in Appendix K. These conditions are proposed in order to ensure compliance with applicable LORS and/or to reduce potentially significant impacts to less-than-significant levels.

8.16.5 Laws, Ordinances, Regulations, and Standards

Implementation of the mitigation measures described above will result in HPP conformance with the applicable LORS. The applicable LORS for the evaluation and protection of paleontological resources are described below and summarized in Table 8.16-4.

8.16.5.1 Federal Authorities and Administering Agencies

National Environmental Policy Act of 1968 (NEPA), as amended; United States Code (USC), Section 4321 4327; 40 Code of Federal Regulations (CFR), Section 1502.25: NEPA requires analysis of potential environmental impacts to important historic,

cultural, and natural aspects of our national heritage. Federal involvement has not been identified for this project.

1978 Memorandum from Acting Director of Bureau of Land Management: This memorandum provides significance criteria for paleontological resources. Federal involvement has not been identified for this project.

8.16.5.2 State Authorities and Administering Agencies

California Environmental Quality Act (CEQA), Section 15064.5; California Public Resources Code, Sections 5024, 5024.5, and 21083.2; Title 14, California Code of Regulations, Section 15126: CEQA addresses the treatment of significant cultural resources (which under CEQA include fossils, paleontological localities, and formations with a high potential to contain unique fossils or paleontological deposits) that could be affected by the project. CEQA provides a framework for evaluating the significance of the resources, assessing project impacts to important resources, and developing a plan to avoid or address adverse effects to these resources. Formal findings of resource significance (for state purposes, eligibility to the California Register of Historic Resources) and assessment of project impacts are made by the lead state regulatory agency. The administering agency for this authority is the CEC.

California Public Resources Code, Section 5097.5: This section of the code makes it a misdemeanor to remove, without authorization, archaeological resources or paleontological remains from sites located on public lands. The administering agency for the this authority is the Kings County Planning Department.

8.16.5.3 Local Authorities and Administering Agencies

Kings County General Plan: The Kings County General Plan encourages identification and protection of cultural heritage resources including historic, prehistoric, architectural, and paleontological resources. Kings County supports the mitigation of damage to archaeological and paleontological resources after the Historical Commission has identified resources that warrant further recognition and preservation. The County protects and enhances cultural heritage resources through land use regulations, historic district zoning, registration in

the National Register, designation of County Historic Landmarks, and private or public acquisition. Kings County is the administering agency and follows all provisions of CEQA.

8.16.5.4 Industry Codes and Standards

No industry codes or standards are applicable to the HPP.

8.16.5.5 Agencies and Agency Contacts

The pertinent agency contact is provided below.

Agency	Contact	Title	Telephone
Kings County Planning Department	Mr. Chuck Kinney	Planner	(559) 582-3211 ext. 2674

8.16.5.6 Applicable Permits

No permit requirements have been identified at the federal, state, or local level for this project.

8.16.6 References

Bartow, J.A. 1987. Cenozoic Stratigraphy of the Northern San Joaquin Valley, Central California, *In - Structural Geology of the Sacramento Basin, SEPM Geologic Guidebook Series.*117 p.

Bartow, J.A. 1991. Cenozoic Evolution of the San Joaquin Valley, California *U. S. Geol. Surv. Professional Paper 1501.*

California Division of Mines and Geology (CDMG). 1966. Fresno Sheet. Regional Geological Map Series, Scale 1:250,000.

Croft, M.G. 1967. Basic Data for Three Lacustrine Clay Deposits in the Southern Part of the San Joaquin Valley. *U. S. Geol. Surv. Open File Report.*

Croft, M.G. 1968. Geology, Hydrology, and Water Quality in the Hanford-Visalia Area, San Joaquin Valley, California. *U. S. Geol. Surv.- Water Resources Div., Open File Report.*

Croft, M.G. 1969. Subsurface geology of the Late Tertiary and Quaternary water-bearing deposits of the San Joaquin Valley, California. *U. S. Geol. Surv.- Water Resources Div., Open File Report.*

Lawler, David. 2001. *Paleontological Resources –GWF Henrietta Peaker Project, Kings County, California.*

Marchand, D.E. and Allwardt, A.O. 1981. Late Cenozoic Stratigraphic Units, Northeast San Joaquin Valley, California. California *U. S. Geol. Surv. Professional Paper 1470,* 70p.

Miller, W.E. 1971. Pleistocene Vertebrates of the Los Angeles Basin and Vicinity (Exclusive of Rancho La Brea). *Los Angeles Co. Mus. Nat Hist. Sci. Bull.* Vol. 10, No. 4, pp. 47-142.

Savage, D.E. 1951. Late Cenozoic Vertebrates of the San Francisco Bay Region. *Univ. Calif. Public. Geol. Sci.*, Vol. 28, No. 10, pp.215-314, 51 figs.

Stirton, R.A. 1939. Late Cenozoic Vertebrates of the San Francisco Bay Region. *Univ. Calif. Public. Geol. Sci.*, Vol. 24, pp.339-410, 95 figs.

Stirton, R.A. 1951. Prehistoric Land Mammals of the San Francisco Bay Region. *In - Geologic Guidebook of the San Francisco Bay Counties, Calif. Div. Mines Geol., Regional Map Series,* Bulletin 154, pp.177-186.

Wolf, R.G. 1971. Paleoecology of a Late Pleistocene (Rancholabrean) Vertebrate Fauna from Rodeo, California, Ph.D. dissertation, University of California, Berkeley, 136 p., unpublished.

Wolf, R.G. 1973. Hydrodynamic Sorting and Ecology of Late Pleistocene Mammalian Assemblage from California (USA). *Paleogeog., Paleoclimatol., Paleoecol.,* Vol. 13, pp. 91-102.

Wolf, R.G. 1975. Sampling and Sample Size in Ecological Analyses of Fossil Mammals, *Paleobiology*, Vol. 1, No. 2, pp. 195-202.

TABLES

Table 8.16-1
Geologic Units Within HPP Area

Symbol	Rock Unit	Age	Sensitivity Rating
(*Qal/Qu*) *	Alluvium	Pleistocene	High-Known vertebrate fauna

* Usage of the *Qal* designation on available geologic maps of the Kings County region is highly variable. Geologic units ranging from Quaternary stream, terrace, fluvial, alluvial fan, and floodplain deposits, including older alluvium or Tulare Lake units, may be grouped under this designation, particularly where geologic data have been scarce due to agricultural or urban development.

Table 8.16-2
Paleontological Sensitivity and Geologic Units for the HPP

Area	Rock Formation	Sensitivity Rating
Plant Site		
20 acres	*Qal/Qu*	High
Transmission Route		
550 feet	*Qal/Qu*	High
Gas Pipeline Route		
2.2 miles	*Qal/Qu*	High

Table 8.16-3
Survey Coverage by Project Component and Field Conditions

Project Component	Field Conditions	Comments
Plant Site (includes 16.5-foot water supply line)	95 percent ground visibility, area spans agricultural lands, which at the time of the survey had small cotton seedlings growing affording good ground visibility.	Pedestrian field inspection, good ground visibility.
Transmission Route	95 percent ground visibility, area spans a dirt farm road, a portion of the Henrietta Substation, and agricultural lands, which at the time of the survey supported growth of small cotton seedlings, affording good ground visibility.	Pedestrian field inspection, good ground visibility.
Natural Gas Pipeline Route	0–95 percent ground visibility, area spans a paved road, agricultural lands and a wide dirt road. Within the paved portion of 25th Avenue and in the agricultural field south of the Avenal Cutoff and west of 25th Avenue (where dense barley was growing at the time of the survey) there was zero ground visibility. The New Star facility area was not inspected.	Pedestrian field inspection, good ground visibility, except along the paved road and in one agricultural parcel with dense barley growth.

Table 8.16-4
LORS Applicable to Paleontological Resources

Jurisdiction	Authority	Requirements/Compliance	Administering Agency	AFC Compliance Section
Federal †	NEPA; 42 USC 4321–4327; 40 CFR § 1502.25.	Analysis of potential environmental impacts on federal lands.	Lead federal agency †	Section 8.16-13
†	1978 Memorandum from the Bureau of Land Management	Implements significance criteria for paleontological resources.	Lead federal agency †	Section: 8.16-13
State	CEQA § 15064.5; California Public Resources Code §§ 5024, 5024.5, and 21083.2; Title 14, CCR § 15126.4	Formal findings by the project lead agency regarding project-related effects to important paleontological resources.	CEC	Sections: 8.16-2, 8.16-9, 8.16-13, 8.16-14
	California Public Resources Code § 5097.5	This code section makes it a misdemeanor to remove, without authorization, paleontological remains fromes located on public lands.	Kings County Planning Department	Section: 8.16-14
Local	Kings County Planning Department	The county follows all provisions of CEQA.	Kings County Planning Department	Section: 8.16-14
Industry	None applicable.	--	--	Section: 8.16-14

† This project is not a federal undertaking at this time and is not expected to trigger any of the federal LORS described herein.

FIGURES

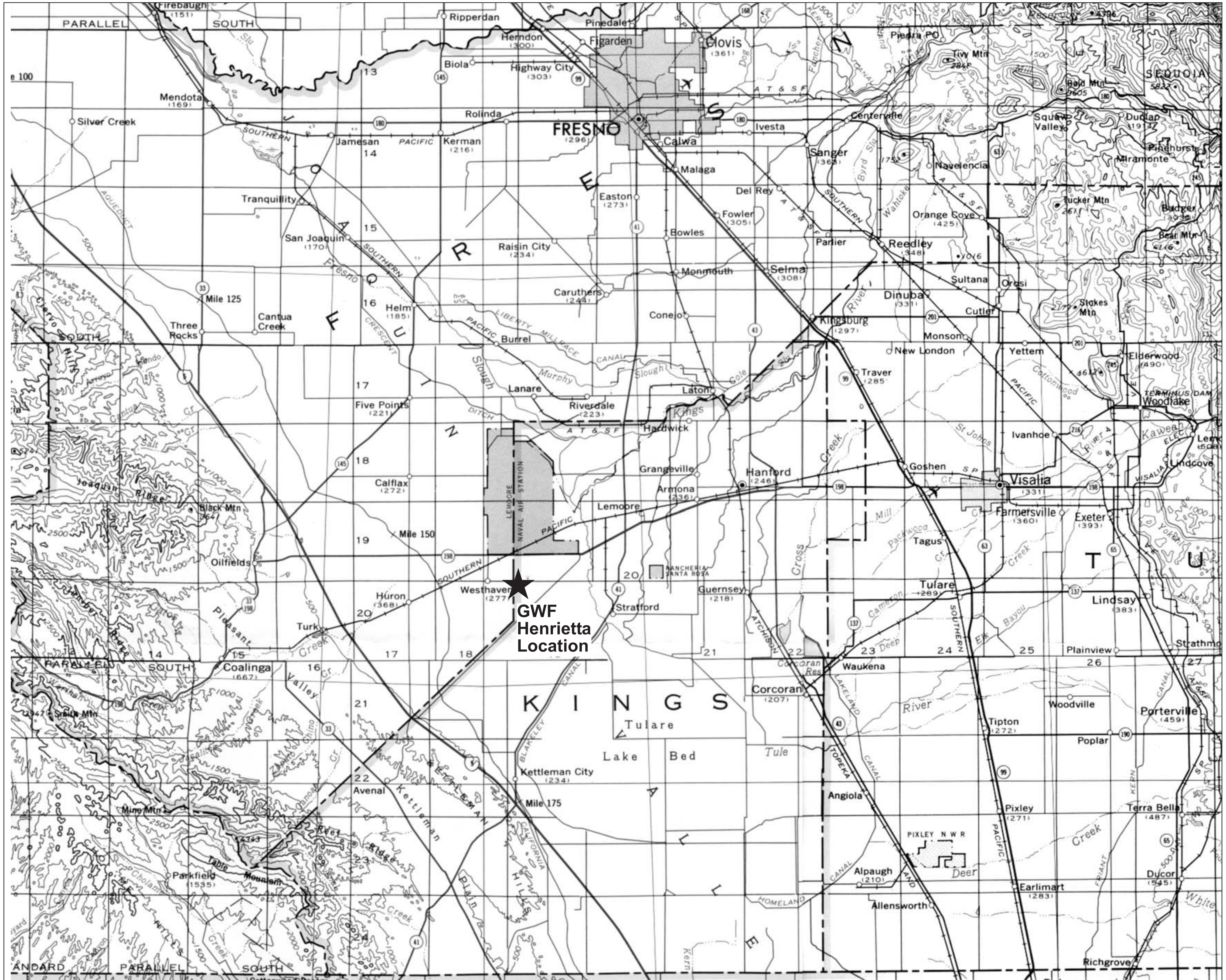

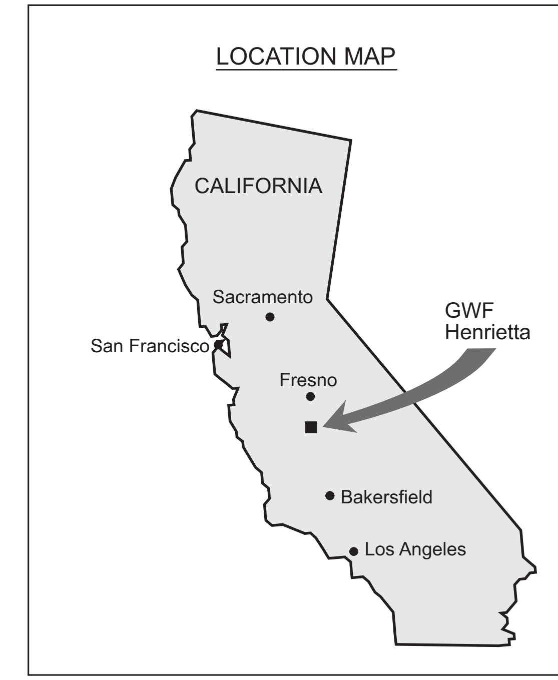

N

0 4 8
Scale in Miles

Source: USGS 1:500,000 Scale Topographic Map of California-South Half

URS	Project No. 51-00167032.00
	GWF Henrietta Peaker Project
SITE LOCATION MAP	Figure 8.16-1

51-00167032.00-01011/082301/gos

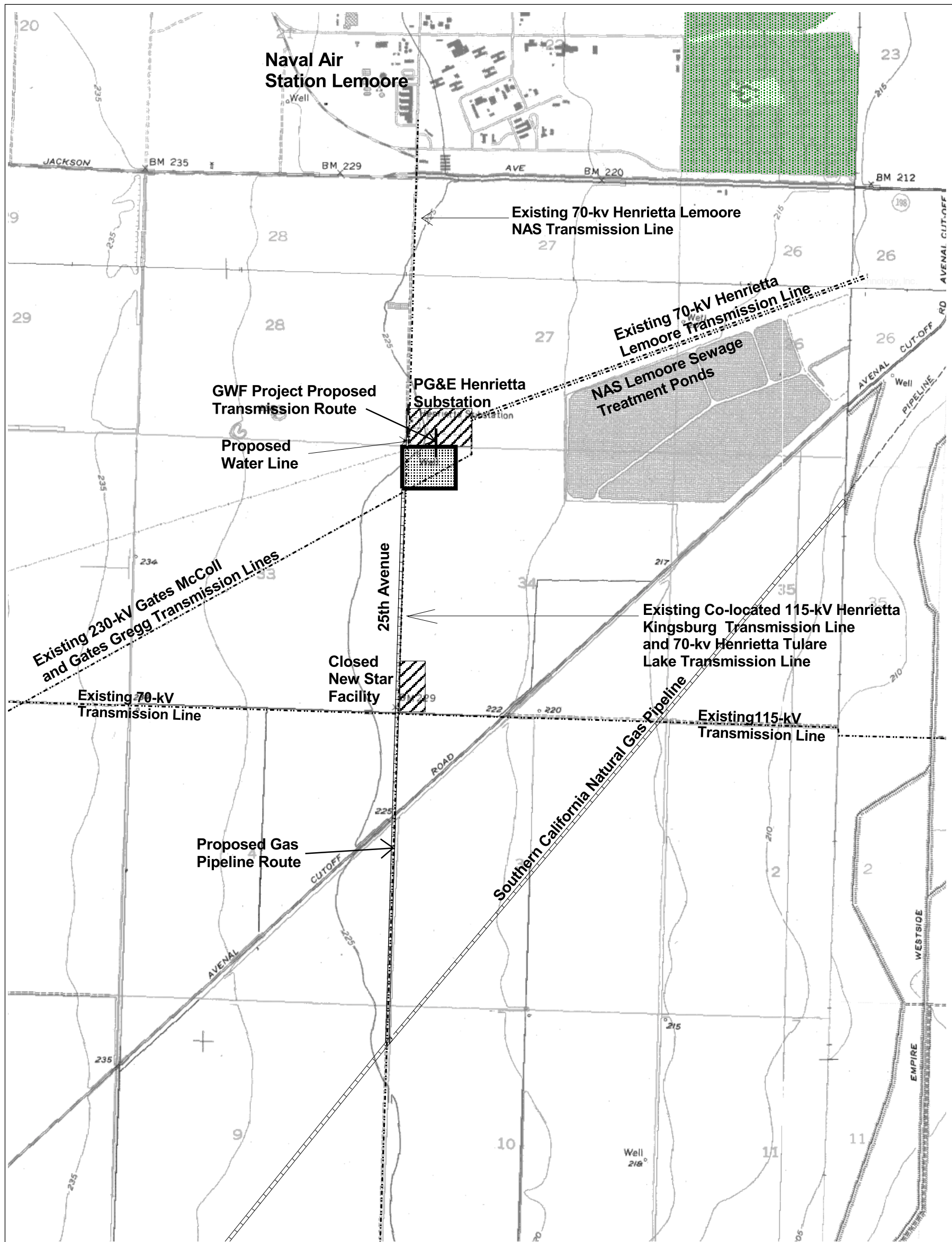

N

0 0.2 0.4 0.6 0.8 Miles

1000 0 1000 2000 Feet

Scale 1:24,000

Source:
Base Maps from U.S.G.S.
7.5 Minute Quadrangles
Westhaven, Calif., (Photorevised 1981),
Stratford, Calif. (1954), Lemoore (1954) and
Vanguard (1956, Photorevised 1981)

Existing Transmission Lines

Transmission Route

Gas Pipeline Routes

Water Line

Plant Site

Developed Industrial

URS	GWF Henrietta Peaker Project	Project Location Map	Figure 8.16-2
	Project No. 51-00167032.00		

L:\Projects\GWF_Henrietta\Apr\proj1dhw.apr

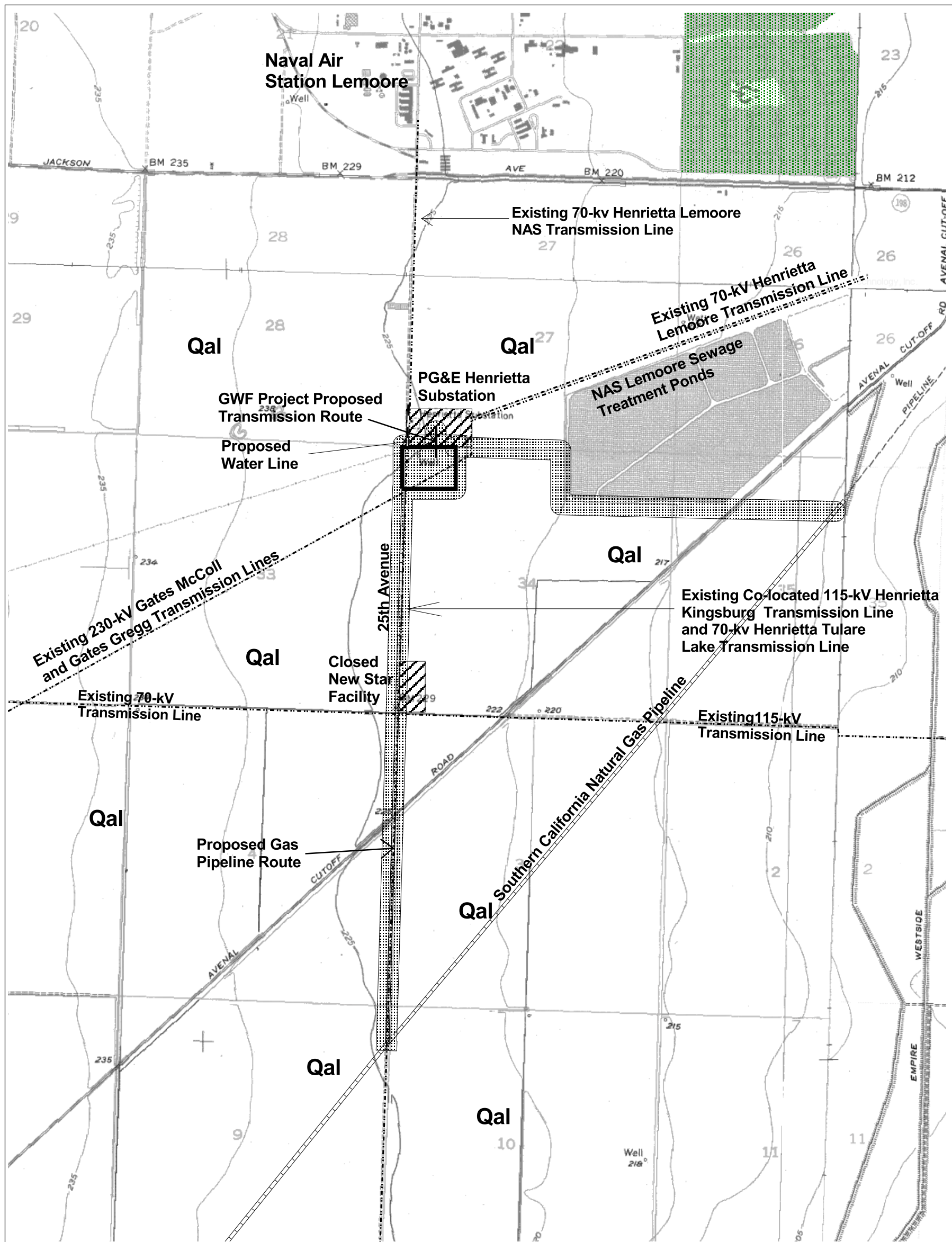

N

0 0.2 0.4 0.6 0.8 1 Miles

1000 0 1000 2000 Feet

Scale 1:24,000

Source:
Base Maps from U.S.G.S.
7.5 Minute Quadrangles
Westhaven, Calif., (Photorevised 1981),
Stratford, Calif. (1954), Lemoore (1954) and
Vanguard (1956, Photorevised 1981)

Existing Transmission Lines
Transmission Route
Gas Pipeline Routes
Water Line
Plant Site
Areas Surveyed
Developed Industrial

Qal - Quaternary Alluvium (Sensitivity Rating High)

URS	GWF Henrietta Peaker Project Project No. 51-00167032.00	Paleontological Sensitivity Map	Figure 8.16-3

L:\Projects\GWF_Henrietta\Apr\proj1dhw.apr

9.0 ENGINEERING

The GWF Energy LLC Henrietta Peaker Project (HPP) would be designed for high reliability and efficiency. The engineering standards and requirements are provided in Appendix H. The details of the transmission system design, including information on the safety and reliability of the transmission system, are provided in Section 6.0 (Electric Transmission) and Appendix A.

A detailed description of the HPP and its design and operation can be found in Section 2.0 (Project Description). Design and engineering information for the HPP is located throughout in this Application for Certification (AFC), as follows:

Power generation	Section 2.2.4 (Combustion Turbine Generators). Additional information is also contained in Appendix H.
Water supply system	The HPP would utilize water injection to reduce nitrogen oxide generation and water for evaporative inlet air cooling in the CTGs. Water would be supplied by the Westlands Water District and Kings County, as described in Section 2.2.7 (Water Supply and Use).
Atmospheric emission control system	Section 2.2.4.2 (Air Pollution Control Systems), Section 2.2.11 (Emissions Control and Monitoring), and Section 8.1 (Air Quality).
Waste disposal system	Section 2.2.9 (Waste Management), Section 8.13 (Waste Management), and Appendix H.
Noise abatement	Section 2.2.4.1 (Combustion Turbine Generator), Section 8.5 (Noise), and Appendix H.
Switchyard/transformer systems	Section 2.2.5 (Major Electrical Equipment and Systems), Section 6.0 (Electric Transmission), and Appendix H.
Transmission system design	Section 6.0 (Electric Transmission) and Appendix A.
Reliability	Section 2.4 (Facility Reliability).
Efficiency	Figures 2.2-4 and Appendix H.

Information regarding design measures to ensure safe facility operation is contained in Section 2.3 (Facility Safety Design). Applicable engineering laws, ordinances, regulations, and standards (LORS) are summarized in Appendix H. Throughout this AFC and Appendix H, references to the Uniform Building Code should be understood to be inclusive of the corresponding provisions of the California Building Code.

A geotechnical investigation of the HPP site was conducted, including foundation core borings, and is provided in Appendix H. Additional engineering information, including information on mechanical engineering, electrical engineering, civil engineering, structural engineering, system controls, and an equipment summary, is also contained in Appendix H.

The HPP will comply with all applicable LORS. A summary of the LORS is provided in the appropriate sections of Appendix H.

Involved Agency:

Agency	Contact/Title	Telephone
Kings County Public Works Department 1400 W. Lacey Blvd. Hanford, CA 93230	Harry Verhuel, Public Works Director	(559) 582-3211

APPLICATION FOR CERTIFICATION

HENRIETTA PEAKER PROJECT

KINGS COUNTY, CALIFORNIA

VOLUME II – APPENDICES

Prepared for:

GWF Energy LLC
4300 Railroad Avenue
Pittsburg, CA 94565

Contact: Doug Wheeler (925) 431-1443

Prepared by

URS Corporation
500 12th Street, Suite 200
Oakland, CA 94607-4014

Contact: David Stein (510) 874-3143

August 2001

Appendix A

Electrical Transmission

Facilities Cost Report

Generation Interconnection

GWF Power Systems

Henrietta Peaking Plant Project

Final

Revision 1
Includes Results from Supplemental SIS

August 7, 2001

Executive Summary

GWF Power Systems is evaluating the feasibility of a 95.8 MW[1] generating facility in Lemoore, California. The proposed generation project will be called the Henrietta Peaking Plant Project. PG&E had previously performed a Generation Transmission Interconnection Study (GTIS) for this Project based upon an interconnection date in Summer 2001. The GTIS is a preliminary study that determines the project's impact on PG&E's grid in a limited number of outages. GWF Power Systems has requested that PG&E conduct a Facilities Cost Report (FCR) for this project with a revised on-line operation date of the proposed project is Summer 2002.

The FCR is will determine:

1) The facilities necessary to interconnect the generating facility to the grid.

2) The transmission system impacts caused solely by the addition of the Henrietta Peaking Plant Project.

3) The system reinforcements, if any, necessary to mitigate the impact of the proposed project under all system conditions.

To determine the system impacts caused by Henrietta Peaking Plant Project, studies were performed using the 2002 Summer and 2003 Spring Full Loop Base Cases. The studies performed included:

- Steady State Power Flow.
- Dynamic Stability Analysis.
- System Protection.

The results of these studies were used in the transmission line and substation evaluations.

PG&E's evaluation has concluded that the addition of Henrietta Peaking Plant Project will cause no normal or emergency transmission line overloads. During summer peak hours, there are no facilities with Category B or Category C overloads. However, under the T-1 outage of the 230/70 kV Henrietta Bank, the Henrietta Peaking Plant Project would be islanded from the system with the 70 kV load at Henrietta. A Special Protection Scheme would be needed to ensure that the Henrietta Peaking Plant Project would be tripped when it is islanded from the rest of the grid.

[1] This is the nominal rating of the generating facility.

The addition of Henrietta Peaking Plant Project will not affect the transmission grid stability and will not cause any added overstress due to increased short circuit duties.

The facilities costs for interconnecting Henrietta Peaking Plant Project to PG&E's grid will are estimated to be $1,804,980[2].

This revision 1 of the FCR includes the results of a Supplemental System Impact Study performed evaluate the impact of the Henrietta Peaking Plant Project during Summer Off-Peak conditions. The results of the Summer Off-Peak study indicated that this project would have no additional impacts requiring mitigation.

[2] These costs are not final and will need to be reconciled with actual costs upon the signing of the interconnection agreements

Table of Contents

1. Project Information 1
2. Study Summary 2
   2.1 Steady State Power Flow Study 2
   2.1.1 Normal Overloads (NERC Category A – No Contingencies) 2
   2.1.2 Emergency Overloads (CAISO Category B) 3
   2.1.3 Emergency Overloads (CAISO Category C) 3
   2.2 Dynamic Stability Study 3
   2.3 System Protection Study 3
   2.4 Substation Evaluation 3
   2.5 Transmission Line Evaluation 3
3. Cost Estimate Summary 4
   3.1 Interconnection Cost Summary 4
4. Interconnection Study Assumptions 5
5. Base Case Assumptions Used for Power Flow Study 6
   5.1 Study Criteria Summary 6
   5.2 Steady State Study Criteria – Normal Overloads 6
   5.3 Steady State Study Criteria – Emergency Overloads 6
   5.4 Dynamic Stability Study Criteria 7
6. Steady State Power Flow Study 7
   6.1 Results 7
   6.1.1 2002 Summer Peak Steady State Power Flow Results 8
   6.1.2 2003 Spring Steady State Power Flow Results 8
   6.1.3 2003 Summer Off Peak Steady State Power Flow Results 8
7. Dynamic Stability Study 8
   7.1 Results 9
   7.2 Dynamic Stability Study Scenarios 9
   7.2.1 NERC/CAISO Category “B” Contingencies: 9
   7.2.2 NERC/CAISO Category “C” Contingencies: 9
   7.3 Parameters Monitored to Evaluate System Stability Performance 9
   7.3.1 Rotor Angle 9
   7.3.2 Bus Voltage 10
   7.3.3 Bus Frequency 10
   7.3.4 Other Parameters 10
8. System Protection Study 10

8.1 Fault Duties 10
9. Transmission Line Evaluation 11
10. Substation Evaluation 11
11. Land Evaluation 12

Appendices

A. FCR Study Plan
B. Contingency Lists for Outages – Autocon Input Files
C. Steady State Power Flow Results – Autocon Comparison Files
D. Steady State Power Flow Diagrams
E. Generator Machine Dynamic Data
F. Dynamic Stability Plots
G. Work Scope
H. Supplemental System Impact Study Plan

1. Project Information

Based upon information provided by GWF Power Systems, the proposed Henrietta Peaking Plant Project will be located Lemoore, California. Figure 1 shows the area in which the project will be constructed.

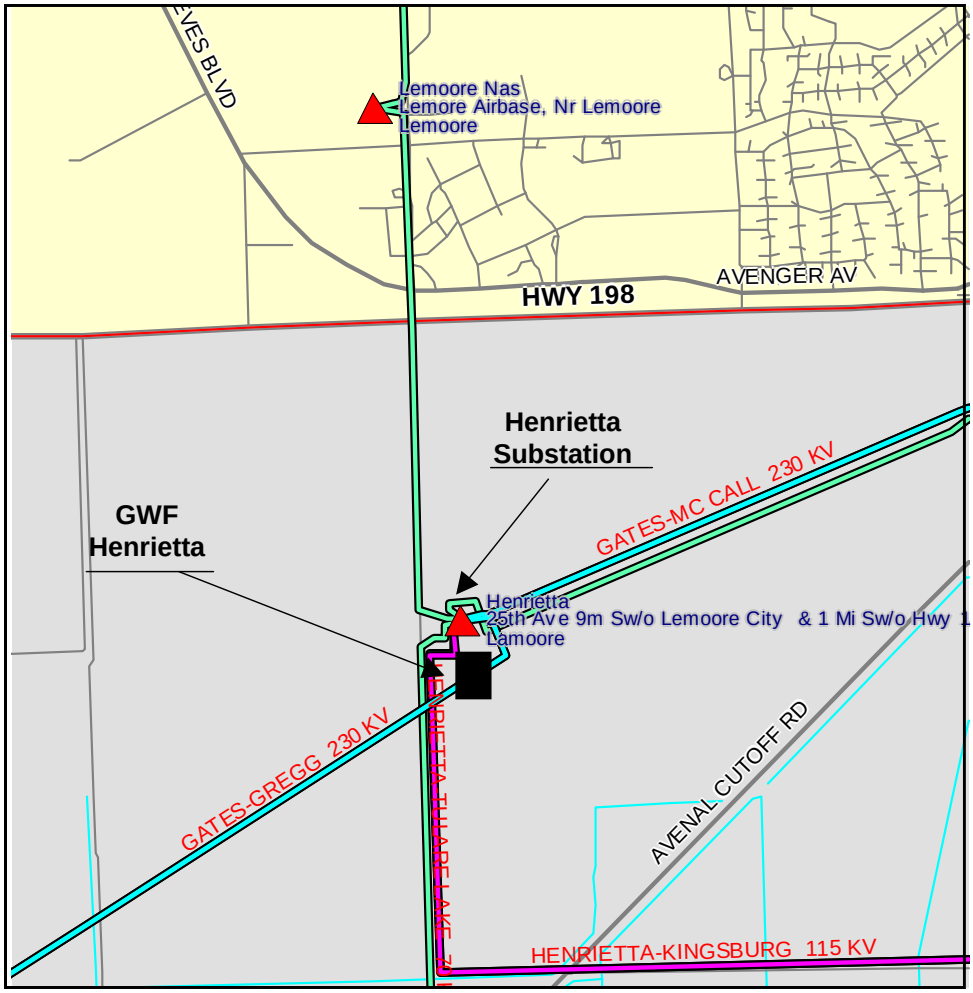

Figure 1: GWF Power Systems Henrietta Peaking General Vicinity

The Project will have a maximum output of 95.8 MW to PG&E's grid. The project will consist of two (2) combustion/turbine generators (CTG) rated 71.2 MVA (nominal) each. The power factor range of these units is 85% (lag) to 95% (lead). Each CTG will have its own 13.8/70 kV step-up transformer.

The Henrietta Peaking Plant will be connected to PG&E's system via an express line connecting directly to PG&E's Henrietta Substation 70 kV bus. The express line is assumed to be approximately 1000 feet. PG&E will own, operate and maintain the express line.

A single-line diagram for the Henrietta Peaking Plant Project is shown in Figure 2.

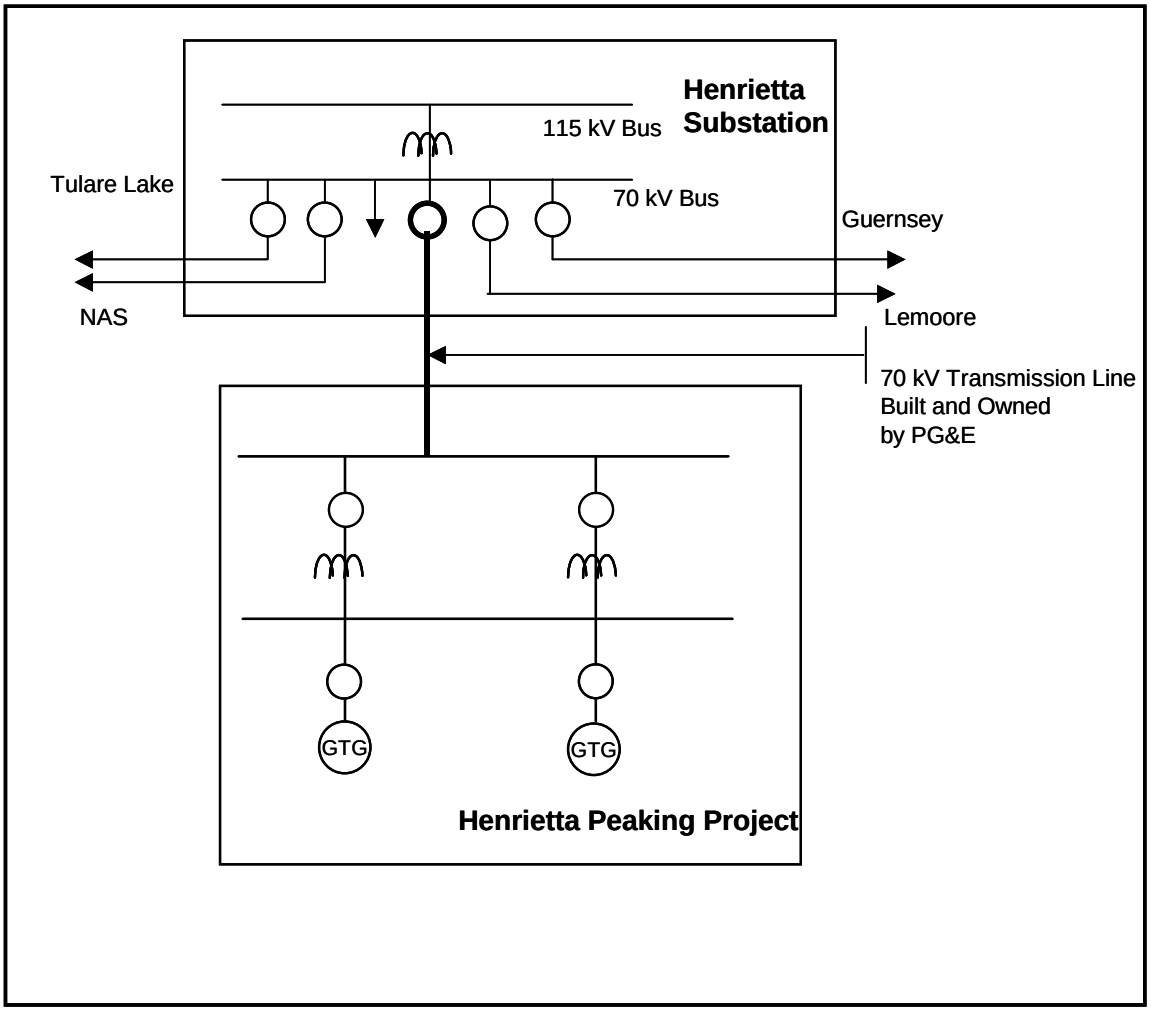

Figure 2: Single Line Diagram – Henrietta Peaking Plant Project Generation Project

2. Study Summary

2.1 Steady State Power Flow Study

Steady state power flow studies were conducted using 2002 Summer Full Loop and 2003 Spring Full Loop base cases. A supplemental study was performed using a 2002 Summer Off-Peak Full Loop Base Case. The following is a summary of the results.

2.1.1 Normal Overloads (NERC Category A – No Contingencies)

During the summer peak, summer off peak, and spring hours, no facilities are loaded above 100% of their normal ratings as a

result of the addition of Henrietta Peaking Plant Project's 95.8 MW of generation.

2.1.2 Emergency Overloads (CAISO Category B)

During the summer peak, summer off-peak, and spring hours, no facilities are overloaded above their emergency ratings due to Category B contingencies as a result of the addition of Henrietta Peaking Plant Project's 95.8 MW of generation.

2.1.3 Emergency Overloads (CAISO Category C)

During the summer peak, summer off-peak, and spring hours, no facilities are overloaded above their emergency ratings due to Category C contingencies as a result of the addition of Henrietta Peaking Plant Project's 95.8 MW of generation.

2.2 Dynamic Stability Study

Dynamic stability studies were conducted to determine whether the Henrietta Peaking Plant Project would create instability following certain outages. Section 7 outlines the outage scenarios assumed for this analysis and provides a complete analysis of the results.

Dynamic Stability Study results indicated that the Henrietta Peaking Plant Project would have no adverse impact on the stable operation of the transmission system following the selected disturbances.

2.3 System Protection Study

Short circuit studies were conducted to determine whether the Henrietta Peaking Plant Project would result in overstressing of the existing substation facilities. Section 8 describes the results of the system protection study in detail.

2.4 Substation Evaluation

The substation evaluation identified no existing equipment requiring upgrades to mitigate problems caused by overstress or overloading.

2.5 Transmission Line Evaluation

The Transmission Line Evaluation was conducted in conjunction with the Steady State Power Flow Study. Henrietta Peaking Plant Project causes no transmission line overloads during Category A (normal), B or C contingencies.

3. Cost Estimate Summary

The following table provides a summary of the facilities cost estimates[3] for interconnecting the Project with PG&E's transmission system. Appendix G includes the scope of the required work. Please note that these costs are not final and will need to be reconciled with actual costs upon GWF Power System's signing of the interconnection agreements.

3.1 Interconnection Cost Summary

Substation Work		
Station Equipment, Engineering, Project Management	*$ 954,000*	
Substation Subtotal		$ 954,000
Telecommunications Work		
Telecommunications Work	*$109,000*	
Land Work Subtotal		$ 109,000
Land Work		
Land and Land Rights Evaluation [4]	*$ 18,000*	
Land Work Subtotal		$ 18,000
Transmission Line Work		
Engineering, Maintenance. Construction, and Operations[5]	*$ 233,000*	
Install Fiber Optic Cable	*$ 30,000*	
Transmission Line Work Subtotal		$ 266,000
Subtotal Interconnection Cost		**$ 1,347,000**
ITCC Tax[6] @ 34 %		**$ 457,980**
Total		***$ 1,804,980***

[3] The PG&E interconnection engineering cost estimates are developed with a theoretical confidence level of 25 percent. Billing will be based on an actual cost basis.

[4] Land costs include surveying, mapping, document preparation, title searching, engineering support, staking of structures, easement grant to GWF and 131d compliance. Permitting and CEQA compliance will be the responsibility of GWF, including any mitigation for endangered species. Land cost estimates were developed with a 30 percent confidence level.

[5] Transmission Line cost estimates were developed with a 50 percent confidence level.

[6] Both the Federal Government and the State of California consider funds and property received by the Utility in order to provide utility service as income. From IRS Notice 87-82, Section III on Fair Market Value of Income Tax Component of Contribution (ITCC), "[a] Utility shall include as income the amount of any cash received as a CIAC (Contribution in aid of construction) and the fair marketing value of all property received as a CIAC." ITCC charge is collected from a customer to keep PG&E's ratepayers from being negatively impacted by the customer's service. The ITCC tax charge represents the current tax rates that PG&E must pay on its revenue to the Federal Government and the State of California. PG&E's current tax rate for electric revenue is 34%.

4. Interconnection Study Assumptions

PG&E conducted the FCR under the following assumptions:

1) The maximum net delivery from the proposed project to the PG&E transmission grid will be 95.8 MW modeled at 0.85 lagging power factor.

2) The project will be on line at the above capacity by Summer 2002.

3) The new generating facility will be connected to PG&E's grid via an express line to the Henrietta Substation 70 kV bus. GWF Power Systems will design, build, own, and maintain its generation facility and step-up substation.

4) GWF Hanford 96 MW generation project will be connected to the Henrietta – Kingsburg 115 kV circuit.

5) The study will take into account all the approved PG&E reliability projects that will be operational by Summer 2002.

6) The Summer-Off Peak Base Case will model the following generation projects in Fresno/Yosemite areas to reflect the proper generator queuing position of this project:

   - Dinuba Energy Generation Facility
   - Fresno Peaker Project
   - Chowchilla #2 Project
   - Madera Power Project
   - GWF Hanford Project
   - Cal Peak's Panoche Peaker Project
   - Wellhead's Los Banos Peaker Project
   - Wellhead's Panoche Peaker Project
   - Wellhead's Gates Peaker Project
   - Wellhead's Panoche Peaker #2 Project

5. Base Case Assumptions Used for Power Flow Study

Power flow analyses were performed using PG&E's 2002 Summer Full Loop and 2003 Spring Full Loop Base Cases (in General Electric Powerflow format). These base cases were developed from PG&E's 2001 base case series. A supplemental study was performed using a 2002 Summer Off-Peak base case developed by CAISO.

5.1 Study Criteria Summary

The CAISO Controlled Grid Reliability Criteria, which incorporate the Western Systems Coordinating Council (WSCC) and the North American Electric Reliability Council (NERC) planning criteria, were used to evaluate the impact of the project on the PG&E transmission system. Table 1 provides a summary of the CAISO Controlled Grid Reliability Criteria.

	Loading [7]	Transient Voltage Dip & Frequency
All Lines in Service Category "A"	≤ Normal Ratings	----
ISO Category "B" Contingency[8]	≤ Emergency Ratings	≤ 25% at load buses, ≤ 30% at non-load buses, > 20% voltage, ≤ 20 cycles at load buses, > 59.6 Hz < 59.6 Hz for 6 cycles
ISO Category "C" Contingency[9]	≤ Emergency Ratings	≤ 30% at any bus > 20% voltage, ≤ 40 cycles, > 59 Hz < 59 Hz for 6 cycles

Table 1: CAISO Controlled Grid Reliability Criteria

5.2 Steady State Study Criteria – Normal Overloads

Normal overloads are those that exceed 100 percent of normal ratings. The CAISO Controlled Grid Reliability Criteria requires the loading of all transmission system facilities to be within their normal summer ratings.

5.3 Steady State Study Criteria – Emergency Overloads

Emergency overloads are those that exceed 100 percent of emergency ratings. The emergency overloads refer to overloads that occur during single element contingencies (CAISO Category "B") and multiple element contingencies (CAISO Category "C").

[7] The ratings are listed in the CAISO Transmission Register.
[8] CAISO Category "B" contingency refers to all single component outages such as the loss of a transmission line (L-1), a generator (G-1), a transformer (T-1). Also, it refers to the loss of the combination of a single transmission line and a single generator unit.
[9] CAISO Category "C" contingency refers to outages resulted from the loss of two or more (multiple) components except the loss of the combination of a single transmission line and a single generator unit.

5.4 Dynamic Stability Study Criteria

According to the WSCC Disturbance-Performance Table of Allowable Effects on Other Systems10, after a Category "B" disturbance, the transmission system performance should meet the following criteria:

- Transient voltage dip should not be below 25 percent at load buses or 30 percent at non-load buses at any time.
- The duration of the transient voltage dip greater than 20 percent should not exceed 20 cycles at load buses.
- The minimum transient frequency should not fall below 59.6 Hz for more than 6 cycles at load buses.

After a Category "C" disturbance, the transmission system performance should meet the following criteria:

- Transient voltage dip should not be below 30 percent at any bus at any time.
- The duration of a transient voltage dip greater than 20 percent should not exceed 40 cycles at load buses.
- The minimum transient frequency should not fall below 59.0 Hz for more than 6 cycles at load buses.

6. Steady State Power Flow Study

The 2002 Summer Peak Full Loop and 2003 Spring Full Loop Base Cases were used to simulate the impact of the new facility during normal operating conditions, as well as, selected single (ISO Categories "B") outages. The study will cover the transmission facilities within PG&E's Yosemite, Fresno, and Kern planning area.

The 2002 Summer Off-Peak Full Loop Base Case was used to simulate the impact of the new facility during normal operating conditions and all single (CAISO Categories "B") outages in the PG&E's Fresno and Yosemite planning areas.

6.1 Results

Appendix D includes selected power flow plots for summer peak and spring operating conditions.

[10] Cited from Draft Western System Coordinating Council (WSCC) Planning Standards published in December 2, 1999.

6.1.1 2002 Summer Peak Steady State Power Flow Results

Power flow studies were conducted with and without the Henrietta Peaking Plant Project connected to the PG&E's grid under 2002 Summer Full Loop operating conditions. The results showed no normal overloads due to the addition of the Henrietta Peaking Plant Project under normal system conditions (Category A).

For CAISO Category B outage conditions no transmission facilities were overloaded above their emergency ratings. However, during the T-1 outage of the 230/70 kV Henrietta Bank the Henrietta Peaking Plant Project would be islanded.

For CAISO Category C outages, no transmission facilities are overloaded above their emergency ratings.

6.1.2 2003 Spring Steady State Power Flow Results

Power flow studies were conducted with and without the Henrietta Peaking Plant Project connected to PG&E's grid under 2003 Spring operating conditions. The results showed no normal or emergency overloads due to the addition of the Henrietta Peaking Plant Project under normal system conditions (Category A) or under CAISO Category B, and CAISO Category C outage conditions.

During the T-1 outage of the 230/70 kV Henrietta Bank the Henrietta Peaking Plant Project would be islanded.

6.1.3 2003 Summer Off Peak Steady State Power Flow Results

Power flow studies were conducted with and without the Henrietta Peaking Plant Project connected to PG&E's grid under 2002 Summer Off Peak operating conditions. The results showed no normal or emergency overloads due to the addition of the Henrietta Peaking Plant Project under normal system conditions (Category A) or under CAISO Category B outage conditions.

During the T-1 outage of the 230/70 kV Henrietta Bank the Henrietta Peaking Plant Project would be islanded.

7. Dynamic Stability Study

Dynamic stability studies were conducted using the base cases described in Section 5 and the generator models shown in Appendix E to determine whether the transmission system would attain operating equilibrium following selected outages.

7.1 Results

The results indicated that the transmission system performed within the CAISO reliability guidelines following the disturbances outlined below. It was determined that the Henrietta Peaking Plant Project would have no adverse impact on the stable operation of the transmission system.

The results of the study are provided in the form of plots in Appendix F. A switch-deck script describing the switching sequence precedes each group of plots.

7.2 Dynamic Stability Study Scenarios

The following outage scenarios were simulated for a study period of up to 20 seconds:

7.2.1 NERC/CAISO Category "B" Contingencies:

a) Full load rejection of the proposed 95.8 MW facility.

A three-phase fault with normal clearing time at:

b) The GWF Henrietta Peaking Plant 70 kV bus followed by the loss of the Guernsey – Henrietta 70 kV Circuit.

c) The GWF Henrietta Peaking Plant 70 kV bus followed by the loss of the Henrietta – Lemoore 70 kV Circuit.

d) The GWF Henrietta Peaking Plant 70 kV bus followed by the loss of the Henrietta 230/70 kV Transformer Bank #2.

7.2.2 NERC/CAISO Category "C" Contingencies:

A three-phase fault with normal clearing time at:

e) The Henrietta Substation 70 kV bus.

7.3 Parameters Monitored to Evaluate System Stability Performance

7.3.1 Rotor Angle

The rotor angle plots shown in Appendix F provide a measure for determining how the proposed generation units would swing with respect to one another. The plots also provide a measure of how the units would swing with respect to other generation units in the area.

7.3.2 Bus Voltage

The bus voltage plots, in conjunction with the relative rotor angle plots, also shown in Appendix F, provide a means of detecting out-of-step conditions. The bus voltage plots are useful in assessing the magnitude and the duration of post disturbance voltage dips and peak-to-peak voltage oscillations. The bus voltage plots also give an indication of system damping and the level to which voltages are expected to recover in steady state conditions.

7.3.3 Bus Frequency

The bus frequency plots provide information on the magnitude and the duration of post fault frequency swings with the project in service. These plots indicate the extent of possible over-frequency or under-frequency, which can occur because of the imbalance between the generation and load within an area.

7.3.4 Other Parameters

- Generator Terminal Power
- Generator Terminal Voltage
- Generator Rotor Speed
- Generator Field Voltage
- Bus Angle
- Line Flow
- Voltage Spread
- Frequency Spread

8. System Protection Study

Short circuit studies were performed for the Generation Transmission Interconnection Study. They are repeated here.

8.1 Fault Duties

Short circuit studies were performed to determine the impact of adding the Project to PG&E's transmission system. The fault duties were calculated before and after the addition of the Project. Included are

duties with the GWF Hanford 130 MW cogen on the Henrietta - Kingsburg 115kV that is being built this year.

Table 3 summarizes the results of the short circuit study. Only the Henrietta 70, 115, and 230 kV buses and all other buses showing an increase of greater than 10% are included in the table.

		Existing System		GWF 70kV Peaker and GWF 115kV 130MW			
Substation	kV	3 phase	slg	3 phase	increase	slg	increase
Contadina	115	6,377	4,029	8,841	39%	8,787	118%
Guardian	115	11,666	8,324	12,052	3%	11,701	41%
Henrietta	70	6,371	7,506	10,494	65%	12,692	69%
Henrietta	115	7,530	7,912	8,367	11%	8,752	11%
Henrietta	230	11,584	8,896	12,537	8%	9,776	10%
Lemoore	70	3,413	3,584	4,230	24%	4,154	16%
Lemoore NAS	70	5,188	5,190	7,560	46%	7,140	38%
Leprino	70	3,354	3,383	4,137	23%	3,883	15%

Table 3: Short Circuit Fault Duty Results

All circuit breakers at Henrietta have a minimum interrupting rating of 20,000 Amps. The other stations are not owned by PG&E. If the Henrietta Peaking Project were to cause overstressed equipment at the non-PG&E substations, GWF would be responsible for the replacement of this equipment.

9. Transmission Line Evaluation

Cost estimates for the transmission line facilities necessary to interconnect the Henrietta Peaking Plant Project to PG&E's Grid are provided in Section 3. These costs include rearranging the existing facilities to allow installation of the tie line into the new bus extension and construction of the new line. This estimate includes the installation of one engineered structure to hold the existing 70 kV lines just outside of the substation and installation of the fiber optic cable.

10. Substation Evaluation

As shown by the System Protection Study, the addition of Henrietta Peaking Plant Project would not create a sufficient increase in the short circuit fault duties to overstress existing breakers at PG&E owned facilities. However, relaying changes would be necessary.

Appendix G provides a preliminary outline of the substation work that would be required to add Henrietta Peaking Plant Project to the transmission grid.

11. Land Evaluation

The Land Evaluation Costs provided in the Summary in Section 3 include surveying, mapping, document preparation, title searching, engineering support, staking of structures, and easement grant to GWF and General Order 131-D compliance. Permitting and CEQA compliance will be the responsibility of GWF, including any mitigation for endangered species.

The California Public Utilities Commission (CPUC) has jurisdiction over the construction and operation of electric transmission facilities by Pacific Gas and Electric Company. The CPUC's General Order 131-D provides for the construction of needed electric transmission lines or substations to interconnect electric generation plants. In cases where the utility owned electric transmission line or substation is part of a larger project that that has undergone environmental review by a local agency, General Order 131-D exempts PG&E Company from obtaining a Permit to Construct (PTC) from the CPUC. In order to be exempted from the PTC, the final California Environmental Quality Act (CEQA) document issued by the local agency must find no significant unavoidable environmental impacts caused by PG&E's facility. Obtaining a PTC can take as much as 18 months because the CPUC is the lead agency under CEQA and may require an environmental impact report (EIR).

PG&E Company recommends that the generator include PG&E Co.'s work to interconnect the generator to the grid in its CEQA application to the local agency. The local agency must consider the environmental impacts of the PG&E Co. electric facility, whether built by the developer or PG&E Co., and make a finding of no significant unavoidable environmental impacts. Once an authorizing document is issued by the local agency with this finding, PG&E Co. can then file an advice letter with the CPUC and claim an exemption from a Permit to Construct because the facilities have undergone environmental review. With the advice letter filing, PG&E Co. must advertise a notice of construction and invite the public to review the authorizing document and describe how to file a protest against PG&E Company's part of the project. The process can be as short as 50 days, (includes preparation of the notice) or as long as 90 days if a protest is filed and the CPUC determines whether or not a PTC is required.

Please see Section III, B.1. (f) in General Order 131-D. This document can be found in the CPUC's web page at:
http://www.cpuc.ca.gov/published/index_pages/general_orders_index.htm

Appendix A

Study Plan

Facilities Cost Report

Study Plan

Generation Interconnection

GWF Power Systems

Henrietta Peaking Plant

Revision 2

Pacific Gas and Electric Company

May 16, 2001

Table of Contents

Introduction 1

Study Fee 1

Schedule 1

Cost Estimates 1

Project Information & Interconnection Plan 2

Study Assumptions 4

Study Scope 5

- Steady State Power Flow Studies 5
- Post Transient Power Flow Studies 5
- Dynamic Stability Study 5
- Post Transient Analysis 6
- Transmission Line Evaluation 6
- Substation Evaluation 6
- Land Evaluation 6
- Environmental Evaluation 6
- Permitting 6
- Stand-by Power 6

Introduction

At the request of GWF Power Systems (Applicant), Pacific Gas & Electric (PG&E) will perform a Facilities Cost Report (FCR) for the proposed Henrietta Peaking Plant (Project). The FCR will provide:

1) The facilities necessary to interconnect these generators to the grid,

2) A further evaluation of the transmission system impacts caused by the addition of the Project, if required.

3) The system reinforcement necessary to mitigate the adverse impact of the projects under various system conditions, if any.

This Study Plan will form the basis for the Facilities Cost Report Agreement by defining the scope, content, assumptions, and terms of reference of the FCR.

Study Fee

A one-time study fee for performing the FCR is $30,000. If the Applicant chooses not to continue with the FCR after receiving this Study Plan, a fee of $2,500 shall be assessed to reimburse PG&E the cost of processing the Study Request.[1]

Schedule

The following schedule shows the milestones associated with the FCR.

Task	Milestone Description	Target Date
1	Establish study commencement date based on receipt of study fee	4/18/01
2	Send draft report to Applicant and CAISO for review and comments	6/14/01
3	Receive comments from Applicant and CAISO	6/21/01
4	Issue Final FCR	6/29/01

PG&E must receive a completed Facilities Cost Report Agreement (FCRA) from the Applicant (including the study fee) by April 18, 2001. If PG&E does not receive the completed FCRA and study fee by this date, the Interconnection Application will be considered as withdrawn and the Applicant's position in the generation interconnection queue shall be lost.

Cost Estimates

The following cost estimates will be provided, based upon an interconnection operation date in Summer 2002:

[1] Refer to PG&E's Transmission Owner Tariff TO4 Terms and Conditions.

- A decision quality cost estimate[2] for PG&E to interconnect the Project to the PG&E transmission grid will be provided. This estimate includes any substation and transmission line facilities required to interconnect the proposed generation project. The estimate will not include any facilities constructed, owned and operated by the Applicant.

- A preliminary cost estimate[3] of transmission reliability upgrades needed to mitigate any system impacts to PG&E's existing facilities that are caused solely by the interconnection of the Project's new facility will be provided.

Charges will be made based upon the actual costs incurred. All costs will be provided as estimates only.

Project Information & Interconnection Plan

The GWF Henrietta Peaking Plant is located Adjacent to Henrietta Substation at 25th Avenue, south of Highway 198 in Lemoore, California. Figure 1 provides an overview of the vicinity of the proposed projects as well as the transmission facilities in the area.

[2] A PG&E decision quality cost estimate is developed with a theoretical confidence level of 25%.
[3] A PG&E preliminary estimate is developed with a theoretical confidence level of 50%.

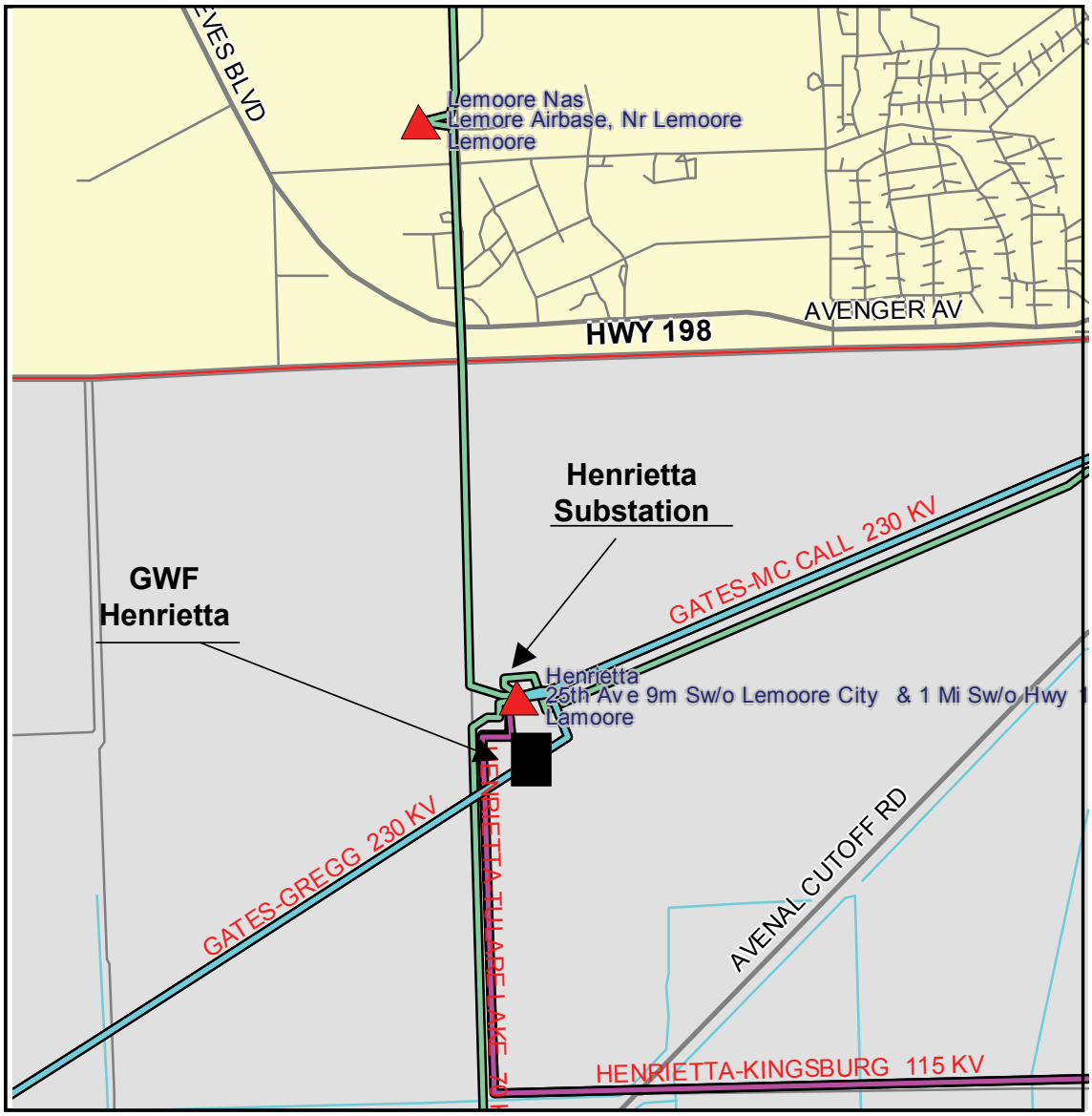

Figure 1: Vicinity Map

The Project will have a maximum output of 95.8 MW to PG&E's grid. The project will consist of two (2) combustion/turbine generators (CTG) rated 71.2 MVA (nominal) each. The power factor range of these units is 85% (lag) to 95% (lead). Each CTG will have its own 13.8/70 kV step-up transformer.

The Henrietta Peaking Plant will be connected to PG&E's system via an express line connecting directly to PG&E's Henrietta Substation 70 kV bus. The express line is assumed to be approximately 1000 feet.

A single-line diagram for the Project is shown in Figure 2.

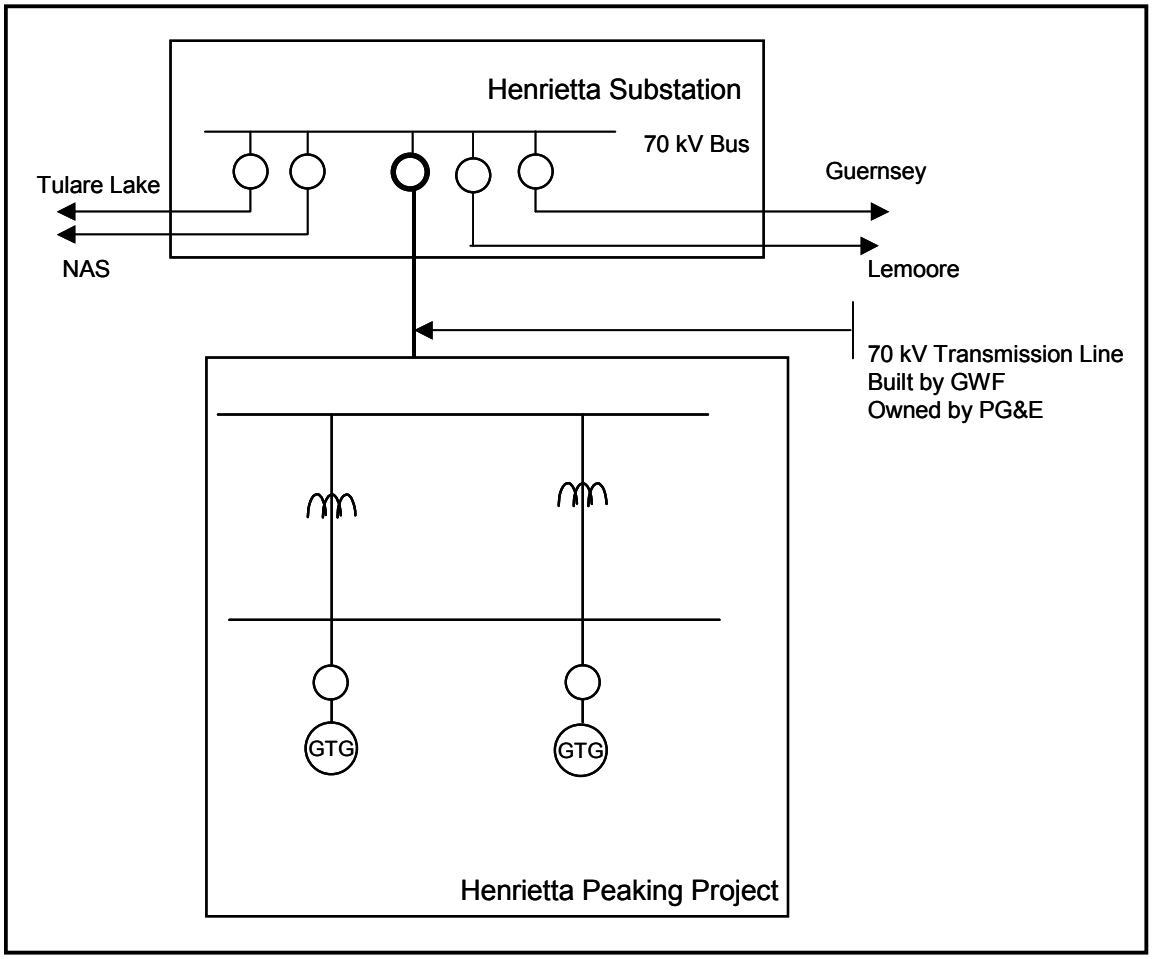

Figure 2: Single Line Diagram

Study Assumptions[4]

PG&E will conduct the FCR using the following assumptions:

1) The gross MW output from the Project to the PG&E transmission grid will be 95.8 MW.

2) The project will be on line in June 2002.

3) GWF Hanford 96 MW generation project will be connected to the Henrietta – Kingsburg 115 kV circuit.

[4] Study assumptions must be review and approved by Applicant prior to commencing with the FCR.

Study Scope

The following studies will be conducted for the FCR:

Steady State Power Flow Studies

The FCR will investigate the system reinforcements needed, if any, to mitigate normal system overloads and emergency thermal overload and voltage problems caused by the proposed Project. The 2002 Summer Full Loop Base Case and relevant 2003 Spring Full Loop Base Case will be used to simulate the impact of the new facility during the following:

a) Normal operating conditions.

b) Selected N-1 outages in close proximity to the Project. Between five and ten outages will be selected based upon PG&E's knowledge of the area.

Post Transient Power Flow Studies

A post transient study will be performed on any outages that cause greater than 5% bus voltage drops as indicated in the power flow analysis.

Dynamic Stability Study

Dynamic stability study will be conducted using 2002 Summer Full Loop Base Case to determine if the addition of the Project would result in any adverse impact on system stability. Disturbance simulations will be performed for a study period of 20 seconds to determine whether the new facility will create any system instability during the following line and generator outages:

NERC/CAISO Category "B" Contingencies:

a) Full load rejection of the proposed 95.8 MW facility.

A three-phase fault with normal clearing time at:

b) The GWF Henrietta Peaking Plant 70 kV bus followed by the loss of the Guernsey – Henrietta 70 kV Circuit.

c) The GWF Henrietta Peaking Plant 70 kV bus followed by the loss of the Henrietta – Lemoore 70 kV Circuit.

d) The GWF Henrietta Peaking Plant 70 kV bus followed by the loss of the Henrietta 230/70 kV Transformer Bank #2.

NERC/CAISO Category "C" Contingencies:

A three-phase fault with normal clearing time at:

e) The Henrietta Substation 70 kV bus.

Post Transient Analysis

Post transient study will be performed on outages that cause greater than 5% bus voltage drops as indicated in the power flow analysis.

Transmission Line Evaluation

The Transmission Line evaluation will identify new facilities required to interconnect the Project with the transmission grid. Costs and a scope of work will be provided.

Substation Evaluation

The Substation evaluation will identify new protection requirements together with protection modification at the nearby transmission substations. Costs and a scope of work will be provided.

Land Evaluation

PG&E's land department will perform an evaluation to determine if any new land rights are necessary to install new facilities that might be required by the interconnection.

Environmental Evaluation

The Applicant will be responsible for including any new facilities required for interconnecting the Project to PG&E's transmission grid that are built and owned by PG&E when the Applicant files for the local permit application. PG&E will provide routing and design information to support this filing. PG&E will not be responsible for obtaining any permitting to build the interconnection facilities.

Permitting

The Applicant will be responsible for including work at all new and existing transmission facilities as part of the project's Application For Certification (AFC) filing to the California Energy Commission (CEC). PG&E will not apply for any permits from the CPUC for any interconnection work. PG&E will submit an advice letter to CPCU in the form of a Notice of Construction (NOC), as required by General Order (GO) 131-D. The environmental impact component of these substation and transmission line work will be addressed in a broader-scope California Environmental Quality Act (CEQA) analysis that is part of the project's AFC filing.

Stand-by Power

This study does not address any requirements for stand-by power that the project may require. The Applicant should contact their local PG&E service office regarding this service.

Note: The developer is urged to contact their local service office promptly regarding stand-by service in order to ensure its availability for the project's start-up date.

Appendix B

Contingency Lists for Outages

Autocon Input Files

APPENDIX B – ISO CATEGORY B AUTOCON INPUT FILES

```
# Program: autocon_make.p   Tue May 29 00:29:51 2001
# Input Case: "c:\upslf112\files\sum2002a6_henrietta_after.sav"
# Input File: "c:\upslf112\files\2001-master-list_02-07-01.in"
# area_numbers  ""
# zone_numbers  "314 344"
# voltage_range  "60"
# bus_fault_opt  "no"
# Output File (this output): "c:\upslf112\files\henrietta_B.in"

#PG&E 2001 TRANSMISSION ASSESSMENT STUDY
#2002SUMPK AREA 6 CASE: COI=4880MW (n2s), P26=2500MW (n2s)
#1-IN-10 FORECAST; PG&E AREA LOADS/LOSSES=25,500MW; 3/6/2001
#    ##########################################################################
#
#
#  First seven outages same contingcies tested in 7-day Peaker Study
#
# (1)  B2 LINE OUTAGE (BREAKER-TO-BREAKER) Guernsey-Henrietta 70 kV
#
1  34460 34462  "1 "    0     # line from  GUERNSEY  70.00  BRKR to (3)   GUR3TPT   70.00
1  34462 34542  "1 "    0     # line from  GUR3TPT   70.00   (3) to (2)   JCBSCRNR  70.00
1  34462 34554  "1 "    0     # line from  GUR3TPT   70.00   (3) to BRKR  AMSTG SW  70.00
1  34542 34540  "1 "    0     # line from  JCBSCRNR  70.00   (2) to BRKR  HENRITTA  70.00
4  34460     0  "1 "    0    # LOAD-DROP    GUERNSEY  70.00  LOAD==13.94(2.61)
4  34542     0  "2 "    0    # LOAD-DROP    JCBSCRNR  70.00  LOAD==9.37(2.63)
4  34542     0  "1 "    0    # LOAD-DROP    JCBSCRNR  70.00  LOAD==4.73(-2.07)
1  34528 34460  "1 "    1      # Switches in Guernsey CB52 to transfer load
4  34460     0  "**"    1      # Restore load at Guernsey
0
#
#
#
# (2)  B2 LINE OUTAGE (BREAKER-TO-BREAKER) Henrietta-Lemoore 70 kV
#
1  34516 34520  "1 "    0     # line from  LEPRINO   70.00   (1) to (4)   LPRNO TP  70.00
1  34520 34518  "1 "    0     # line from  LPRNO TP  70.00   (4) to BRKR  LEMOORE   70.00
1  34520 34540  "1 "    0     # line from  LPRNO TP  70.00   (4) to BRKR  HENRITTA  70.00
1  34520 34524  "1 "    0     # line from  LPRNO TP  70.00   (4) to (1)   CANDLEWK  70.00
4  34516     0  "1 "    0    # LOAD-DROP    LEPRINO   70.00  LOAD==5.84(3.31)
4  34518     0  "2 "    0    # LOAD-DROP    LEMOORE   70.00  LOAD==10.06(2.48)
4  34518     0  "1 "    0    # LOAD-DROP    LEMOORE   70.00  LOAD==25.04(8.06)
4  34524     0  "1 "    0    # LOAD-DROP    CANDLEWK  70.00  LOAD==2.93(2.66)
0
#
#
#
# (3)  B2 LINE OUTAGE (BREAKER-TO-BREAKER) Henrietta-Kingsburg 115 kV
#
1  34429 34428  "1 "    0     # line from  GWF_HEP  115.00   (4) to (2)   CONTADNA 115.00
1  34429 34430  "1 "    0     # line from  GWF_HEP  115.00   (4) to BRKR  HENRETTA 115.00
2  34429 34431  "1 "    0     # TRAN from  GWF_HEP  115.00   (4) to (1)   GWF_C     13.80
2  34429 34433  "1 "    0     # TRAN from  GWF_HEP  115.00   (4) to (1)   GWF_S     13.80
1  34428 34418  "1 "    0     # line from  CONTADNA 115.00   (2) to BRKR  KINGSBRG 115.00
4  34429     0  "1 "    0    # LOAD-DROP    GWF_HEP  115.00  LOAD==3.00(0.68)
4  34428     0  "1 "    0    # LOAD-DROP    CONTADNA 115.00  LOAD==7.27(5.45)
3  34431     0  "1 "    0    # GEN-DROP    GWF_C     13.80  GEN==49.50(-6.35)
3  34433     0  "1 "    0    # GEN-DROP    GWF_S     13.80  GEN==49.50(-6.35)
0
#
# (4)  B2 LINE OUTAGE (BREAKER-TO-BREAKER) Gates-Gregg 230 kV
#
1  30810 30879  "1 "    0     # line from  GREGG    230.00  BRKR to (3)   HENTAP1  230.00
1  30879 30881  "1 "    0     # line from  HENTAP1  230.00   (3) to BRKR  HENRIETA 230.00
1  30879 30900  "1 "    0     # line from  HENTAP1  230.00   (3) to BRKR  GATES    230.00
1  30880 30881  "1 "    1      # Henrietta flip flop (Henrietta CB 222)
0
#
#
# (5)  B2 LINE OUTAGE (BREAKER-TO-BREAKER) Gates-McCall 230 kV
```

```
 #
1  30875 30880  "1 "    0     # line from  MC CALL  230.00  BRKR to (2)   HENTAP2  230.00
1  30880 30900  "1 "    0     # line from  HENTAP2  230.00   (2) to BRKR  GATES    230.00
0
 #
 # (6)  B3 TRANSFORMER OUTAGE (BREAKER-TO-BREAKER) Henrietta 230/115 kV XFMR #3
 #
2  30881 34430  "3 "    0     # TRAN from  HENRIETA 230.00  BRKR to BRKR  HENRETTA 115.00
0
 #
 #
 # (7)  B3 TRANSFORMER OUTAGE (BREAKER-TO-BREAKER)  Henrietta 230/70 kV XFMR #2
 #
2  34540 30881  "2 "    0     # TRAN from  HENRITTA  70.00  BRKR to BRKR  HENRIETA 230.00
0
 #

##########################################################################################
###
 #
 # (8)  B2 LINE OUTAGE (BREAKER-TO-BREAKER)
 #
1  34356 34358  "2 "    0     # line from  KERCKHF1 115.00  BRKR to BRKR  KERCKHF2 115.00
0
 #
 #
 # (9)  B2 LINE OUTAGE (BREAKER-TO-BREAKER)
 #
1  32112 32114  "1 "    0     # line from  MAINE-PR  60.00   (1) to (2)   MNPR_JCT  60.00
1  32114 32113  "1 "    0     # line from  MNPR_JCT  60.00   (2) to (3)   BTAV-JCT  60.00
1  32113 32111  "1 "    0     # line from  BTAV-JCT  60.00   (3) to (1)   BATAVIA   60.00
1  32113 32107  "1 "    0     # line from  BTAV-JCT  60.00   (3) to (2)   CACHSTAP  60.00
1  32107 32109  "1 "    0     # line from  CACHSTAP  60.00   (2) to (3)   CACHSLJ2  60.00
1  32109 32094  "1 "    0     # line from  CACHSLJ2  60.00   (3) to (2)   VACA-JT2  60.00
1  32109 32101  "1 "    0     # line from  CACHSLJ2  60.00   (3) to (2)   DIXON-J2  60.00
1  32094 32088  "1 "    0     # line from  VACA-JT2  60.00   (2) to BRKR  VACA-DXN  60.00
1  32101 32100  "1 "    0     # line from  DIXON-J2  60.00   (2) to BRKR  DIXON     60.00
4  32112     0  "1 "    0     # LOAD-DROP    MAINE-PR  60.00  LOAD==0.01(0.00)
4  32111     0  "1 "    0     # LOAD-DROP    BATAVIA   60.00  LOAD==0.01(0.00)
0
 #
 #
 # (10)  B2 LINE OUTAGE (BREAKER-TO-BREAKER)
 #
1  32102 32116  "1 "    0     # line from  CAMPUS    60.00   (2) to (3)   UCDAVSJ1  60.00
2  32102 32166  "1 "    0     # TRAN from  CAMPUS    60.00   (2) to (1)   UC DAVIS   9.11
1  32116 32106  "1 "    0     # line from  UCDAVSJ1  60.00   (3) to (1)   DIXONCAN  60.00
1  32116 32104  "1 "    0     # line from  UCDAVSJ1  60.00   (3) to BRKR  DAVIS     60.00
4  32102     0  "1 "    0     # LOAD-DROP    CAMPUS    60.00  LOAD==38.00(8.66)
4  32106     0  "1 "    0     # LOAD-DROP    DIXONCAN  60.00  LOAD==5.04(1.15)
3  32166     0  "1 "    0     # GEN-DROP    UC DAVIS   9.11  GEN==3.50(-1.20)
0
 #
 #
 # (11)  B2 LINE OUTAGE (BREAKER-TO-BREAKER)
 #
1  32100 32105  "1 "    0     # line from  DIXON     60.00  BRKR to (2)   DIXON-J1  60.00
1  32105 32108  "1 "    0     # line from  DIXON-J1  60.00   (2) to (2)   CACHSLJ1  60.00
1  32108 32096  "1 "    0     # line from  CACHSLJ1  60.00   (2) to (3)   VACA-JT1  60.00
1  32096 32098  "1 "    0     # line from  VACA-JT1  60.00   (3) to (3)   TRAVISJT  60.00
1  32096 32088  "1 "    0     # line from  VACA-JT1  60.00   (3) to BRKR  VACA-DXN  60.00
1  32098 32099  "1 "    0     # line from  TRAVISJT  60.00   (3) to (1)   TRVS_HPT  60.00
1  32098 32097  "1 "    0     # line from  TRAVISJT  60.00   (3) to (1)   TRAVIS    60.00
4  32099     0  "1 "    0     # LOAD-DROP    TRVS_HPT  60.00  LOAD==6.00(3.72)
4  32097     0  "1 "    0     # LOAD-DROP    TRAVIS    60.00  LOAD==18.67(5.59)
0
 #
 #
 # (12)  B2 LINE OUTAGE (BREAKER-TO-BREAKER)
```

```
 #
1  34388 34389  "1 "    0    # line from  RAINBOW  115.00   (1) to (3)   RAINBWTP 115.00
1  34389 34366  "1 "    0    # line from  RAINBWTP 115.00   (3) to BRKR  SANGER   115.00
1  34389 34394  "1 "    0    # line from  RAINBWTP 115.00   (3) to (3)   PIEDRA 1 115.00
1  34394 34380  "1 "    0    # line from  PIEDRA 1 115.00   (3) to BRKR  REEDLEY  115.00
1  34394 34400  "1 "    0    # line from  PIEDRA 1 115.00   (3) to BRKR  KNGS RVR 115.00
4  34388     0  "1 "    0    # LOAD-DROP    RAINBOW  115.00  LOAD==18.21(6.48)
0
 #
 #
 # (13)  B2 LINE OUTAGE (BREAKER-TO-BREAKER)
 #
1  34391 34392  "1 "    0    # line from  QUEBECTP 115.00   (3) to (1)   QUEBEC   115.00
1  34391 34420  "1 "    0    # line from  QUEBECTP 115.00   (3) to BRKR  CORCORAN 115.00
1  34391 34426  "1 "    0    # line from  QUEBECTP 115.00   (3) to BRKR  ALPAUGH  115.00
4  34392     0  "1 "    0    # LOAD-DROP    QUEBEC   115.00  LOAD==11.60(8.10)
0
 #
 #
 # (14)  B2 LINE OUTAGE (BREAKER-TO-BREAKER)
 #
1  34409 34416  "1 "    0    # line from  PNDLJ2   115.00   (3) to BRKR  BULLARD  115.00
1  34409 34413  "1 "    0    # line from  PNDLJ2   115.00   (3) to BRKR  PNEDLE   115.00
1  34409 34412  "1 "    0    # line from  PNDLJ2   115.00   (3) to BRKR  HERNDON  115.00
0
 #
 #
 # (15)  B2 LINE OUTAGE (BREAKER-TO-BREAKER)
 #
1  34411 34416  "1 "    0    # line from  PNDLJ1   115.00   (3) to BRKR  BULLARD  115.00
1  34411 34413  "1 "    0    # line from  PNDLJ1   115.00   (3) to BRKR  PNEDLE   115.00
1  34411 34412  "1 "    0    # line from  PNDLJ1   115.00   (3) to BRKR  HERNDON  115.00
0
 #
 #
 # (16)  B2 LINE OUTAGE (BREAKER-TO-BREAKER)
 #
1  34491 34493  "1 "    0    # line from  AUBRYTP   70.00   (3) to (1)   AUBERRY   70.00
1  34491 34452  "1 "    0    # line from  AUBRYTP   70.00   (3) to BRKR  WISHON    70.00
1  34491 34464  "1 "    0    # line from  AUBRYTP   70.00   (3) to BRKR  COPPRMNE  70.00
4  34493     0  "1 "    0    # LOAD-DROP    AUBERRY   70.00  LOAD==4.63(0.29)
4  34493     0  "2 "    0    # LOAD-DROP    AUBERRY   70.00  LOAD==6.30(0.40)
0
 #
 #
 # (17)  B2 LINE OUTAGE (BREAKER-TO-BREAKER)
 #
1  34452 34260  "1 "    0    # line from  WISHON    70.00  BRKR to (3)   SJNO2     70.00
1  34260 34259  "1 "    0    # line from  SJNO2     70.00   (3) to (3)   NRTHFORK  70.00
2  34260 34631  "1 "    0    # TRAN from  SJNO2     70.00   (3) to (1)   SJ2GEN     9.11
1  34259 34261  "1 "    0    # line from  NRTHFORK  70.00   (3) to (2)   SJNO3     70.00
2  34259 34340  "1 "    0    # TRAN from  NRTHFORK  70.00   (3) to (1)   N.FORK E   9.11
2  34261 34633  "1 "    0    # TRAN from  SJNO3     70.00   (2) to (1)   SJ3GEN     9.11
4  34260     0  "2 "    0    # LOAD-DROP    SJNO2     70.00  LOAD==2.75(0.63)
4  34261     0  "2 "    0    # LOAD-DROP    SJNO3     70.00  LOAD==6.12(1.32)
3  34631     0  "1 "    0    # GEN-DROP    SJ2GEN     9.11  GEN==2.05(-1.00)
3  34633     0  "1 "    0    # GEN-DROP    SJ3GEN     9.11  GEN==1.00(-1.00)
0
 #
 #
 # (18)  B2 LINE OUTAGE (BREAKER-TO-BREAKER)
 #
1  34475 34484  "1 "    0    # line from  AGRCJCT   70.00   (3) to BRKR  KERMAN    70.00
1  34475 34476  "1 "    0    # line from  AGRCJCT   70.00   (3) to (2)   AGRICO    70.00
1  34475 34473  "1 "    0    # line from  AGRCJCT   70.00   (3) to (2)   SNJQTP    70.00
2  34476 34608  "1 "    0    # TRAN from  AGRICO    70.00   (2) to (1)   AGRICO    13.80
1  34473 34474  "1 "    0    # line from  SNJQTP    70.00   (2) to BRKR  HELM      70.00
3  34608     0  "1 "    0    # GEN-DROP    AGRICO    13.80  GEN==20.24(-3.07)
0
```

```
#
#
# (19)  B2 LINE OUTAGE (BREAKER-TO-BREAKER)
#
1  34469 34271  "1 "    0    # line from  GFFNJCT   70.00   (3) to (3)   WSTLDJCT  70.00
1  34469 34470  "1 "    0    # line from  GFFNJCT   70.00   (3) to (1)   GIFFEN    70.00
1  34469 34471  "1 "    0    # line from  GFFNJCT   70.00   (3) to (3)   SNJQJCT   70.00
1  34271 34269  "1 "    0    # line from  WSTLDJCT  70.00   (3) to (3)   BIOMSJCT  70.00
1  34271 34172  "1 "    0    # line from  WSTLDJCT  70.00   (3) to (2)   WESTLAND  70.00
1  34471 34472  "1 "    0    # line from  SNJQJCT   70.00   (3) to BRKR  SAN JOQN  70.00
1  34471 34474  "1 "    0    # line from  SNJQJCT   70.00   (3) to BRKR  HELM      70.00
1  34269 34268  "1 "    0    # line from  BIOMSJCT  70.00   (3) to BRKR  MENDOTA   70.00
1  34269 34270  "1 "    0    # line from  BIOMSJCT  70.00   (3) to (2)   BIOMASS   70.00
2  34270 34334  "1 "    0    # TRAN from  BIOMASS   70.00   (2) to (1)   BIO PWR    9.11
1  34172 34170  "1 "    0    # line from  WESTLAND  70.00   (2) to (1)   WESIX     70.00
4  34470     0  "1 "    0    # LOAD-DROP    GIFFEN    70.00  LOAD==8.42(1.21)
4  34172     0  "1 "    0    # LOAD-DROP    WESTLAND  70.00  LOAD==3.20(0.73)
4  34472     0  "2 "    0    # LOAD-DROP    SAN JOQN  70.00  LOAD==3.87(1.70)
4  34472     0  "1 "    0    # LOAD-DROP    SAN JOQN  70.00  LOAD==4.84(-0.38)
4  34170     0  "1 "    0    # LOAD-DROP    WESIX     70.00  LOAD==1.60(0.36)
3  34334     0  "1 "    0    # GEN-DROP    BIO PWR    9.11  GEN==21.88(-8.00)
4  34472 34473  "1 "    1     # Switches in San Joaquin CB22 to transfer load
4  34472     0  "**"    1     # Restore Load at San Joaquin
0
#
#
# (20)  B2 LINE OUTAGE (BREAKER-TO-BREAKER)
#
1  34497 34499  "1 "    0    # line from  DNUBAJCT  70.00   (3) to (2)   DNUBAEGY  70.00
1  34497 34492  "1 "    0    # line from  DNUBAJCT  70.00   (3) to BRKR  REEDLEY   70.00
1  34497 34500  "1 "    0    # line from  DNUBAJCT  70.00   (3) to BRKR  DINUBA    70.00
2  34499 34648  "1 "    0    # TRAN from  DNUBAEGY  70.00   (2) to (1)   DINUBA E  13.80
4  34648     0  "1 "    0    # LOAD-DROP    DINUBA E  13.80  LOAD==1.50(0.00)
3  34648     0  "1 "    0    # GEN-DROP    DINUBA E  13.80  GEN==13.50(-1.26)
0
#
#
# (21)  B2 LINE OUTAGE (BREAKER-TO-BREAKER)
#
1  34487 34489  "1 "    0    # line from  SNGRJCT   70.00   (3) to (2)   SNGRCOGN  70.00
1  34487 34490  "1 "    0    # line from  SNGRJCT   70.00   (3) to (2)   PARLIER   70.00
1  34487 34488  "1 "    0    # line from  SNGRJCT   70.00   (3) to BRKR  SANGER    70.00
2  34489 34646  "1 "    0    # TRAN from  SNGRCOGN  70.00   (2) to (1)   SANGERCO   9.11
1  34490 34492  "1 "    0    # line from  PARLIER   70.00   (2) to BRKR  REEDLEY   70.00
4  34490     0  "1 "    0    # LOAD-DROP    PARLIER   70.00  LOAD==10.78(2.46)
3  34646     0  "1 "    0    # GEN-DROP    SANGERCO   9.11  GEN==37.50(-9.75)
0
#
#
# (22)  B2 LINE OUTAGE (BREAKER-TO-BREAKER)
#
1  34149 34354  "1 "    0    # line from  CHENYT   115.00   (3) to BRKR  SCHINDLR 115.00
1  34149 34158  "1 "    0    # line from  CHENYT   115.00   (3) to BRKR  PANOCHE  115.00
1  34149 34148  "1 "    0    # line from  CHENYT   115.00   (3) to BRKR  CHENY    115.00
4  34148     0  "1 "    0    # LOAD-DROP    CHENY    115.00  LOAD==13.17(0.00)
0
#
#
# (23)  B2 LINE OUTAGE (BREAKER-TO-BREAKER)
#
1  34387 34425  "1 "    0    # line from  SUNMAID  115.00   (2) to (3)   KCOGNJCT 115.00
1  34387 34386  "1 "    0    # line from  SUNMAID  115.00   (2) to (2)   KNGSCOGN 115.00
1  34425 34385  "1 "    0    # line from  KCOGNJCT 115.00   (3) to (3)   KINGSJCT 115.00
1  34425 34427  "1 "    0    # line from  KCOGNJCT 115.00   (3) to (1)   GRDNGLS2 115.00
2  34386 34642  "1 "    0    # TRAN from  KNGSCOGN 115.00   (2) to BRKR  KINGSBUR   9.11
1  34385 34370  "1 "    0    # line from  KINGSJCT 115.00   (3) to BRKR  MC CALL  115.00
1  34385 34418  "1 "    0    # line from  KINGSJCT 115.00   (3) to BRKR  KINGSBRG 115.00
4  34387     0  "1 "    0    # LOAD-DROP    SUNMAID  115.00  LOAD==3.00(2.89)
3  34642     0  "1 "    0    # GEN-DROP    KINGSBUR   9.11  GEN==34.00(-2.14)
```

```
0
 #
 #
 # (24)  B2 LINE OUTAGE (BREAKER-TO-BREAKER)
 #
1  34375 34377  "1 "    0     # line from  ULTPWRJ  115.00   (3) to (2)   AIRPROD  115.00
1  34375 34372  "1 "    0     # line from  ULTPWRJ  115.00   (3) to BRKR  MALAGA   115.00
2  34375 34640  "1 "    0     # TRAN from  ULTPWRJ  115.00   (3) to (1)   ULTR.PWR   9.11
1  34377 34370  "1 "    0     # line from  AIRPROD  115.00   (2) to BRKR  MC CALL  115.00
4  34377     0  "1 "    0    # LOAD-DROP    AIRPROD  115.00  LOAD==4.50(1.78)
3  34640     0  "1 "    0    # GEN-DROP    ULTR.PWR   9.11  GEN==14.46(-7.99)
1  34373 34371  "1 "    0      # Must include line from  SCWAXJCT 115.00   (3) to (1)   SCWAX    11
1  34373 34374  "1 "    0      # Must include line from  SCWAXJCT 115.00   (3) to (1)   RANCHERS 11
1  34373 34372  "1 "    0      # Must include line from  SCWAXJCT 115.00   (3) to BRKR  MALAGA   11
4  34371     0  "**"    0      # Must include LOAD-DROP  SCWAX    115.00  LOAD==4.334(2.099052)
4  34374     0  "**"    0      # Must include LOAD-DROP  RANCHERS 115.00  LOAD==7.591285(1.730213)
0
 #
 #
 # (25)  B2 LINE OUTAGE (BREAKER-TO-BREAKER)
 #
1  30790 30825  "1 "    0     # line from  PANOCHE  230.00  BRKR to (2)   MCMULLN1 230.00
1  30825 30830  "1 "    0     # line from  MCMULLN1 230.00   (2) to BRKR  KEARNEY  230.00
4  30825     0  "1 "    0    # LOAD-DROP    MCMULLN1 230.00  LOAD==12.50(2.48)
0
 #
 #
 # (26)  B2 LINE OUTAGE (BREAKER-TO-BREAKER)
 #
1  30790 30873  "1 "    0     # line from  PANOCHE  230.00  BRKR to BRKR  HELM     230.00
0
 #
 #
 # (27)  B2 LINE OUTAGE (BREAKER-TO-BREAKER)
 #
1  30790 30900  "1 "    0     # line from  PANOCHE  230.00  BRKR to BRKR  GATES    230.00
0
 #
 #
 # (28)  B2 LINE OUTAGE (BREAKER-TO-BREAKER)
 #
1  30790 30900  "2 "    0     # line from  PANOCHE  230.00  BRKR to BRKR  GATES    230.00
0
 #
 #
 # (29)  B2 LINE OUTAGE (BREAKER-TO-BREAKER)
 #
1  30796 30810  "1 "    0     # line from  STOREY 1 230.00   (2) to BRKR  GREGG    230.00
1  30796 30800  "1 "    0     # line from  STOREY 1 230.00   (2) to BRKR  WILSON   230.00
4  30796     0  "1 "    0    # LOAD-DROP    STOREY 1 230.00  LOAD==24.53(0.00)
0
 #
 #
 # (30)  B2 LINE OUTAGE (BREAKER-TO-BREAKER)
 #
1  30805 30810  "1 "    0     # line from  BORDEN   230.00  BRKR to BRKR  GREGG    230.00
0
 #
 #
 # (31)  B2 LINE OUTAGE (BREAKER-TO-BREAKER)
 #
1  30810 30820  "1 "    0     # line from  GREGG    230.00  BRKR to BRKR  HELMS PP 230.00
3  34604     0  "**"    0      # Drop 3rd unit with a loss either Gates - Gregg line
0
 #
 #
 # (32)  B2 LINE OUTAGE (BREAKER-TO-BREAKER)
 #
1  30810 30820  "2 "    0     # line from  GREGG    230.00  BRKR to BRKR  HELMS PP 230.00
```

```
3  34604     0  "**"    0      # Drop 3rd unit with a loss either Gates - Gregg line
0
 #
 #
 # (33)  B2 LINE OUTAGE (BREAKER-TO-BREAKER)
 #
1  30810 30835  "1 "    0     # line from  GREGG    230.00  BRKR to BRKR  HERNDON  230.00
0
 #
 #
 # (34)  B2 LINE OUTAGE (BREAKER-TO-BREAKER)
 #
1  30810 30835  "2 "    0     # line from  GREGG    230.00  BRKR to BRKR  HERNDON  230.00
0
 #
 #
 # (35)  B2 LINE OUTAGE (BREAKER-TO-BREAKER)
 #
1  30810 30845  "1 "    0     # line from  GREGG    230.00  BRKR to (3)   FGRDN T2 230.00
1  30845 30846  "1 "    0     # line from  FGRDN T2 230.00   (3) to BRKR  FIGRDN 2 230.00
1  30845 30850  "1 "    0     # line from  FGRDN T2 230.00   (3) to BRKR  ASHLAN   230.00
4  30846     0  "2 "    0    # LOAD-DROP    FIGRDN 2 230.00  LOAD==47.78(0.00)
1 30841  30846  "1 "    1      # Switches in Figarden SW 286 to transfer load
4 30846      0  "**"    1      # Restore Load at Figarden 2
0
 #
 #
 # (36)  B2 LINE OUTAGE (BREAKER-TO-BREAKER)
 #
1  30830 30835  "1 "    0     # line from  KEARNEY  230.00  BRKR to BRKR  HERNDON  230.00
0
 #
 #
 # (37)  B2 LINE OUTAGE (BREAKER-TO-BREAKER)
 #
1  30835 30840  "1 "    0     # line from  HERNDON  230.00  BRKR to (3)   FGRDN T1 230.00
1  30840 30841  "1 "    0     # line from  FGRDN T1 230.00   (3) to BRKR  FIGRDN 1 230.00
1  30840 30850  "1 "    0     # line from  FGRDN T1 230.00   (3) to BRKR  ASHLAN   230.00
4  30841     0  "1 "    0    # LOAD-DROP    FIGRDN 1 230.00  LOAD==59.79(3.78)
1 30841  30846  "1 "    1      # Switches in Figarden SW 286 to transfer load
4 30841      0  "**"    1      # Restore Load at Figarden 1
0
 #
 #
 # (38)  B2 LINE OUTAGE (BREAKER-TO-BREAKER)
 #
1  30855 30860  "1 "    0     # line from  HAAS     230.00   (2) to (3)   BALCH3TP 230.00
2  30855 34610  "1 "    0     # TRAN from  HAAS     230.00   (2) to (1)   HAAS      13.80
1  30860 30875  "1 "    0     # line from  BALCH3TP 230.00   (3) to BRKR  MC CALL  230.00
2  30860 34614  "1 "    0     # TRAN from  BALCH3TP 230.00   (3) to (1)   BLCH 2-3  13.80
3  34610     0  "1 "    0    # GEN-DROP    HAAS      13.80  GEN==70.00(13.83)
3  34610     0  "2 "    0    # GEN-DROP    HAAS      13.80  GEN==70.00(13.83)
3  34614     0  "1 "    0    # GEN-DROP    BLCH 2-3  13.80  GEN==50.00(10.30)
0
 #
 #
 # (39)  B2 LINE OUTAGE (BREAKER-TO-BREAKER)
 #
1  30865 30870  "1 "    0     # line from  BALCH    230.00   (2) to (3)   PINE FLT 230.00
2  30865 34612  "1 "    0     # TRAN from  BALCH    230.00   (2) to (1)   BLCH 2-2  13.80
1  30870 30875  "1 "    0     # line from  PINE FLT 230.00   (3) to BRKR  MC CALL  230.00
2  30870 38720  "1 "    0     # TRAN from  PINE FLT 230.00   (3) to (1)   PINE FLT  13.80
3  34612     0  "1 "    0    # GEN-DROP    BLCH 2-2  13.80  GEN==50.00(9.37)
3  38720     0  "1 "    0    # GEN-DROP    PINE FLT  13.80  GEN==60.00(15.29)
3  38720     0  "2 "    0    # GEN-DROP    PINE FLT  13.80  GEN==60.00(15.29)
3  38720     0  "3 "    0    # GEN-DROP    PINE FLT  13.80  GEN==60.00(15.29)
0
 #
 #
```

```
# (40)  B2 LINE OUTAGE (BREAKER-TO-BREAKER)
#
1  30873 30875  "1 "    0     # line from  HELM     230.00  BRKR to BRKR  MC CALL  230.00
0
#
#
# (41)  B2 LINE OUTAGE (BREAKER-TO-BREAKER)
#
1  30900 30905  "1 "    0     # line from  GATES    230.00  BRKR to BRKR  TEMPLETN 230.00
0
#
#
# (42)  B2 LINE OUTAGE (BREAKER-TO-BREAKER)
#
1  30900 30915  "1 "    0     # line from  GATES    230.00  BRKR to BRKR  MORROBAY 230.00
0
#
#
# (43)  B2 LINE OUTAGE (BREAKER-TO-BREAKER)
#
1  30900 30935  "1 "    0     # line from  GATES    230.00  BRKR to BRKR  ARCO     230.00
0
#
#
# (44)  B2 LINE OUTAGE (BREAKER-TO-BREAKER)
#
1  34128 34356  "1 "    0     # line from  OAKH_JCT 115.00   (3) to BRKR  KERCKHF1 115.00
1  34128 34121  "1 "    0     # line from  OAKH_JCT 115.00   (3) to (3)   SHARON T 115.00
1  34128 34126  "1 "    0     # line from  OAKH_JCT 115.00   (3) to (2)   CORSGOLD 115.00
1  34121 34105  "1 "    0     # line from  SHARON T 115.00   (3) to (2)   CERTANJ1 115.00
1  34121 34120  "1 "    0     # line from  SHARON T 115.00   (3) to (1)   SHARON   115.00
1  34105 34100  "1 "    0     # line from  CERTANJ1 115.00   (2) to BRKR  CHWCHLLA 115.00
1  34126 34122  "1 "    0     # line from  CORSGOLD 115.00   (2) to (1)   OAKHURST 115.00
4  34126     0  "2 "    0     # LOAD-DROP    CORSGOLD 115.00  LOAD==6.53(0.00)
4  34126     0  "1 "    0     # LOAD-DROP    CORSGOLD 115.00  LOAD==10.70(2.23)
4  34120     0  "1 "    0     # LOAD-DROP    SHARON   115.00  LOAD==7.11(4.78)
4  34122     0  "2 "    0     # LOAD-DROP    OAKHURST 115.00  LOAD==8.87(-1.50)
4  34122     0  "1 "    0     # LOAD-DROP    OAKHURST 115.00  LOAD==12.74(5.20)
0
#
#
# (45)  B2 LINE OUTAGE (BREAKER-TO-BREAKER)
#
1  34158 34350  "1 "    0     # line from  PANOCHE  115.00  BRKR to (2)   KAMM     115.00
1  34350 34352  "1 "    0     # line from  KAMM     115.00   (2) to (2)   CANTUA   115.00
1  34352 34432  "1 "    0     # line from  CANTUA   115.00   (2) to (2)   WESTLNDS 115.00
1  34432 34354  "1 "    0     # line from  WESTLNDS 115.00   (2) to BRKR  SCHINDLR 115.00
4  34350     0  "1 "    0     # LOAD-DROP    KAMM     115.00  LOAD==3.76(1.71)
4  34352     0  "1 "    0     # LOAD-DROP    CANTUA   115.00  LOAD==15.62(2.44)
4  34432     0  "18"    0     # LOAD-DROP    WESTLNDS 115.00  LOAD==1.21(0.32)
4  34432     0  "16"    0     # LOAD-DROP    WESTLNDS 115.00  LOAD==0.94(0.23)
0
#
#
# (46)  B2 LINE OUTAGE (BREAKER-TO-BREAKER)
#
1  34262 34454  "1 "    0     # line from  CASSIDY   70.00   (2) to (2)   RIVERROC  70.00
1  34262 34256  "1 "    0     # line from  CASSIDY   70.00   (2) to BRKR  BORDEN    70.00
1  34454 34464  "1 "    0     # line from  RIVERROC  70.00   (2) to BRKR  COPPRMNE  70.00
4  34262     0  "1 "    0     # LOAD-DROP    CASSIDY   70.00  LOAD==10.10(0.79)
4  34454     0  "1 "    0     # LOAD-DROP    RIVERROC  70.00  LOAD==2.21(2.01)
0
#
#
# (47)  B2 LINE OUTAGE (BREAKER-TO-BREAKER)
#
1  34264 34466  "1 "    0     # line from  EL PECO   70.00   (2) to BRKR  BIOLA     70.00
1  34264 34254  "1 "    0     # line from  EL PECO   70.00   (2) to (2)   TRIGO     70.00
1  34254 34255  "1 "    0     # line from  TRIGO     70.00   (2) to (3)   TRIGO J   70.00
```

```
1  34255 34237  "1 "    0     # line from  TRIGO J   70.00   (3) to (2)   CANANDGA  70.00
1  34255 34238  "1 "    0     # line from  TRIGO J   70.00   (3) to BRKR  BONITA    70.00
1  34237 34240  "1 "    0     # line from  CANANDGA  70.00   (2) to BRKR  GLASS     70.00
4  34264     0  "1 "    0    # LOAD-DROP    EL PECO   70.00  LOAD==7.88(0.00)
4  34237     0  "1 "    0    # LOAD-DROP    CANANDGA  70.00  LOAD==6.74(5.06)
# 4  34238     0  "1 "    0    # LOAD-DROP    BONITA    70.00  LOAD==12.52(1.25)
1  34238 34236  "1 "    1      # Switches in Bonita SW23 to transfer load
# 1  34238     0  "1 "    1      # Restore Load at Bonita
0
 #
 #
 # (48)  B2 LINE OUTAGE (BREAKER-TO-BREAKER)
 #
1  34356 34358  "1 "    0     # line from  KERCKHF1 115.00  BRKR to BRKR  KERCKHF2 115.00
0
 #
 #
 # (49)  B2 LINE OUTAGE (BREAKER-TO-BREAKER)
 #
1  34358 34360  "1 "    0     # line from  KERCKHF2 115.00  BRKR to (3)   WWARD JT 115.00
1  34360 34414  "1 "    0     # line from  WWARD JT 115.00   (3) to BRKR  WOODWARD 115.00
1  34360 34363  "1 "    0     # line from  WWARD JT 115.00   (3) to (3)   CLOVISJ1 115.00
1  34363 34362  "1 "    0     # line from  CLOVISJ1 115.00   (3) to BRKR  CLOVIS-1 115.00
1  34363 34366  "1 "    0     # line from  CLOVISJ1 115.00   (3) to BRKR  SANGER   115.00
4  34362     0  "2 "    0    # LOAD-DROP    CLOVIS-1 115.00  LOAD==40.11(2.54)
4  34362     0  "1 "    0    # LOAD-DROP    CLOVIS-1 115.00  LOAD==40.93(14.31)
1 34362  34364  "1 "    1      # Switches in Clovis SW 387 to transfer load
4 34362      0  "**"    1      # Restore Load at Clovis 1
0
 #
 #
 # (50)  B2 LINE OUTAGE (BREAKER-TO-BREAKER)
 #
1  34364 34365  "1 "    0     # line from  CLOVIS-2 115.00  BRKR to (3)   CLOVISJ2 115.00
1  34365 34358  "1 "    0     # line from  CLOVISJ2 115.00   (3) to BRKR  KERCKHF2 115.00
1  34365 34366  "1 "    0     # line from  CLOVISJ2 115.00   (3) to BRKR  SANGER   115.00
4  34364     0  "3 "    0    # LOAD-DROP    CLOVIS-2 115.00  LOAD==49.55(6.31)
1 34362  34364  "1 "    1      # Switches in Clovis SW 387 to transfer load
4 34364      0  "**"    1      # Restore Load at Clovis 2
0
 #
 #
 # (51)  B2 LINE OUTAGE (BREAKER-TO-BREAKER)
 #
1  34366 34368  "1 "    0     # line from  SANGER   115.00  BRKR to (2)   LASPALMS 115.00
1  34368 34410  "1 "    0     # line from  LASPALMS 115.00   (2) to BRKR  MANCHSTR 115.00
4  34368     0  "1 "    0    # LOAD-DROP    LASPALMS 115.00  LOAD==12.63(10.80)
0
 #
 #
 # (52)  B2 LINE OUTAGE (BREAKER-TO-BREAKER)
 #
1  34366 34370  "1 "    0     # line from  SANGER   115.00  BRKR to BRKR  MC CALL  115.00
0
 #
 #
 # (53)  B2 LINE OUTAGE (BREAKER-TO-BREAKER)
 #
1  34366 34370  "2 "    0     # line from  SANGER   115.00  BRKR to BRKR  MC CALL  115.00
0
 #
 #
 # (54)  B2 LINE OUTAGE (BREAKER-TO-BREAKER)
 #
1  34366 34370  "3 "    0     # line from  SANGER   115.00  BRKR to BRKR  MC CALL  115.00
0
 #
 #
 # (55)  B2 LINE OUTAGE (BREAKER-TO-BREAKER)
```

```
 #
1  34366 34372  "1 "    0     # line from  SANGER   115.00  BRKR to BRKR  MALAGA   115.00
0
 #
 #
 # (56)  B2 LINE OUTAGE (BREAKER-TO-BREAKER)
 #
1  34366 34396  "1 "    0     # line from  SANGER   115.00  BRKR to (2)   PIEDRA 2 115.00
1  34396 34398  "1 "    0     # line from  PIEDRA 2 115.00   (2) to (2)   BALCH    115.00
2  34398 34624  "1 "    0     # TRAN from  BALCH    115.00   (2) to (1)   BALCH 1   13.20
4  34624     0  "1 "    0    # LOAD-DROP    BALCH 1   13.20  LOAD==0.38(0.00)
3  34624     0  "1 "    0    # GEN-DROP    BALCH 1   13.20  GEN==27.00(-8.43)
0
 #
 #
 # (57)  B2 LINE OUTAGE (BREAKER-TO-BREAKER)
 #
1  34366 34408  "1 "    0     # line from  SANGER   115.00  BRKR to BRKR  BARTON   115.00
0
 #
 #
 # (58)  B2 LINE OUTAGE (BREAKER-TO-BREAKER)
 #
1  34370 34382  "1 "    0     # line from  MC CALL  115.00  BRKR to BRKR  WAHTOKE  115.00
0
 #
 #
 # (59)  B2 LINE OUTAGE (BREAKER-TO-BREAKER)
 #
1  34370 34404  "2 "    0     # line from  MC CALL  115.00  BRKR to BRKR  WST FRSO 115.00
0
 #
 #
 # (60)  B2 LINE OUTAGE (BREAKER-TO-BREAKER)
 #
1  34370 34406  "1 "    0     # line from  MC CALL  115.00  BRKR to (3)   W FRES J 115.00
1  34406 34390  "1 "    0     # line from  W FRES J 115.00   (3) to (2)   DANISHCM 115.00
1  34406 34404  "1 "    0     # line from  W FRES J 115.00   (3) to BRKR  WST FRSO 115.00
1  34390 34402  "1 "    0     # line from  DANISHCM 115.00   (2) to BRKR  CAL AVE  115.00
4  34390     0  "1 "    0    # LOAD-DROP    DANISHCM 115.00  LOAD==3.93(3.36)
4  34402     0  "3 "    0    # LOAD-DROP    CAL AVE  115.00  LOAD==33.09(7.22)
0
 #
 #
 # (61)  B2 LINE OUTAGE (BREAKER-TO-BREAKER)
 #
1  34370 34423  "1 "    0     # line from  MC CALL  115.00  BRKR to (3)   GAURD J1 115.00
1  34423 34418  "1 "    0     # line from  GAURD J1 115.00   (3) to BRKR  KINGSBRG 115.00
1  34423 34424  "1 "    0     # line from  GAURD J1 115.00   (3) to (1)   GRDN GLS 115.00
4  34424     0  "1 "    0    # LOAD-DROP    GRDN GLS 115.00  LOAD==7.25(2.38)
4  34418     0  "3 "    0     # Kingsburg Bank #3 will also be dropped on this outage
0
 #
 #
 # (62)  B2 LINE OUTAGE (BREAKER-TO-BREAKER)
 #
1  34372 34376  "1 "    0     # line from  MALAGA   115.00  BRKR to (1)   PPG      115.00
4  34376     0  "1 "    0    # LOAD-DROP    PPG      115.00  LOAD==5.22(3.24)
0
 #
 #
 # (63)  B2 LINE OUTAGE (BREAKER-TO-BREAKER)
 #
1  34380 34384  "1 "    0     # line from  REEDLEY  115.00  BRKR to (2)   GERAWAN  115.00
1  34384 34382  "1 "    0     # line from  GERAWAN  115.00   (2) to BRKR  WAHTOKE  115.00
0
 #
 #
 # (64)  B2 LINE OUTAGE (BREAKER-TO-BREAKER)
```

```
 #
1  34408 34412  "1 "    0     # line from  BARTON   115.00  BRKR to BRKR  HERNDON  115.00
0
 #
 #
 # (65)  B2 LINE OUTAGE (BREAKER-TO-BREAKER)
 #
1  34410 34412  "1 "    0     # line from  MANCHSTR 115.00  BRKR to BRKR  HERNDON  115.00
0
 #
 #
 # (66)  B2 LINE OUTAGE (BREAKER-TO-BREAKER)
 #
1  34412 34422  "1 "    0     # line from  HERNDON  115.00  BRKR to (2)   CHLDHOSP 115.00
1  34422 34414  "1 "    0     # line from  CHLDHOSP 115.00   (2) to BRKR  WOODWARD 115.00
4  34422     0  "1 "    0     # LOAD-DROP    CHLDHOSP 115.00  LOAD==3.86(1.76)
0
 #
 #
 # (67)  B2 LINE OUTAGE (BREAKER-TO-BREAKER)
 #
1  34418 34420  "1 "    0     # line from  KINGSBRG 115.00  BRKR to BRKR  CORCORAN 115.00
0
 #
 #
 # (68)  B2 LINE OUTAGE (BREAKER-TO-BREAKER)
 #
1  34418 34420  "2 "    0     # line from  KINGSBRG 115.00  BRKR to BRKR  CORCORAN 115.00
0
 #
 #
 # (69)  B2 LINE OUTAGE (BREAKER-TO-BREAKER)
 #
1  34426 34700  "1 "    0     # line from  ALPAUGH  115.00  BRKR to BRKR  SMYRNA   115.00
0
 #
 #
 # (70)  B2 LINE OUTAGE (BREAKER-TO-BREAKER)
 #
1  34456 34458  "1 "    0     # line from  HRDWK TP  70.00   (3) to (1)   HARDWICK  70.00
1  34456 34522  "1 "    0     # line from  HRDWK TP  70.00   (3) to (1)   HNFRD SW  70.00
1  34456 34576  "1 "    0     # line from  HRDWK TP  70.00   (3) to BRKR  KNGLOBUS  70.00
4  34458     0  "1 "    0     # LOAD-DROP    HARDWICK  70.00  LOAD==8.16(1.38)
0
 #
 #
 # (71)  B2 LINE OUTAGE (BREAKER-TO-BREAKER)
 #
1  34464 34478  "1 "    0     # line from  COPPRMNE  70.00  BRKR to BRKR  TVY VLLY  70.00
0
 #
 #
 # (72)  B2 LINE OUTAGE (BREAKER-TO-BREAKER)
 #
1  34466 34482  "1 "    0     # line from  BIOLA     70.00  BRKR to BRKR  OLDKERN   70.00
0
 #
 #
 # (73)  B2 LINE OUTAGE (BREAKER-TO-BREAKER)
 #
1  34468 34482  "1 "    0     # line from  BOWLES    70.00   (1) to BRKR  OLDKERN   70.00
4  34468     0  "1 "    0     # LOAD-DROP    BOWLES    70.00  LOAD==16.46(2.34)
0
 #
 #
 # (74)  B2 LINE OUTAGE (BREAKER-TO-BREAKER)
 #
1  34474 34556  "1 "    0     # line from  HELM      70.00  BRKR to BRKR  STRD JCT  70.00
0
```

```
 #
 #
 # (75)  B2 LINE OUTAGE (BREAKER-TO-BREAKER)
 #
1  34474 34568  "1 "    0    # line from  HELM      70.00  BRKR to BRKR  VLY NTRN  70.00
4  34568     0  "1 "    0    # LOAD-DROP    VLY NTRN  70.00  LOAD==0.95(0.76)
0
 #
 #
 # (76)  B2 LINE OUTAGE (BREAKER-TO-BREAKER)
 #
1  34478 34492  "1 "    0    # line from  TVY VLLY  70.00  BRKR to BRKR  REEDLEY   70.00
0
 #
 #
 # (77)  B2 LINE OUTAGE (BREAKER-TO-BREAKER)
 #
1  34480 34482  "1 "    0    # line from  KEARNEY   70.00  BRKR to (3)   OLDKERN   70.00
1  34482 34466  "1 "    0    # line from  OLDKERN   70.00  BRKR to BRKR  BIOLA     70.00
1  34482 34468  "1 "    0    # line from  OLDKERN   70.00  BRKR to (1)   BOWLES    70.00
4  34482     0  "3 "    0    # LOAD-DROP    OLDKERN   70.00  LOAD==12.79(0.57)
4  34482     0  "1 "    0    # LOAD-DROP    OLDKERN   70.00  LOAD==12.98(0.82)
4  34468     0  "1 "    0    # LOAD-DROP    BOWLES    70.00  LOAD==16.46(2.34)
0
 #
 #
 # (78)  B2 LINE OUTAGE (BREAKER-TO-BREAKER)
 #
1  34480 34484  "1 "    0    # line from  KEARNEY   70.00  BRKR to BRKR  KERMAN    70.00
0
 #
 #
 # (79)  B2 LINE OUTAGE (BREAKER-TO-BREAKER)
 #
1  34480 34512  "1 "    0    # line from  KEARNEY   70.00  BRKR to BRKR  CARUTHRS  70.00
0
 #
 #
 # (80)  B2 LINE OUTAGE (BREAKER-TO-BREAKER)
 #
1  34486 34488  "1 "    0    # line from  CALIFRNV  70.00  BRKR to BRKR  SANGER    70.00
0
 #
 #
 # (81)  B2 LINE OUTAGE (BREAKER-TO-BREAKER)
 #
1  34486 34488  "2 "    0    # line from  CALIFRNV  70.00  BRKR to BRKR  SANGER    70.00
0
 #
 #
 # (82)  B2 LINE OUTAGE (BREAKER-TO-BREAKER)
 #
1  34492 34526  "1 "    0    # line from  REEDLEY   70.00  BRKR to (3)   ORSI JCT  70.00
1  34526 34495  "1 "    0    # line from  ORSI JCT  70.00   (3) to (2)   SANDCRK   70.00
1  34526 34502  "1 "    0    # line from  ORSI JCT  70.00   (3) to BRKR  OROSI     70.00
1  34495 34494  "1 "    0    # line from  SANDCRK   70.00   (2) to (1)   DUNLAP    70.00
4  34495     0  "1 "    0    # LOAD-DROP    SANDCRK   70.00  LOAD==1.85(0.42)
4  34494     0  "1 "    0    # LOAD-DROP    DUNLAP    70.00  LOAD==3.79(0.87)
0
 #
 #
 # (83)  B2 LINE OUTAGE (BREAKER-TO-BREAKER)
 #
1  34496 34498  "1 "    0    # line from  STCRRL J  70.00   (3) to (1)   STONCRRL  70.00
1  34496 34500  "1 "    0    # line from  STCRRL J  70.00   (3) to BRKR  DINUBA    70.00
1  34496 34502  "1 "    0    # line from  STCRRL J  70.00   (3) to (2)   OROSI     70.00
1  34502 34526  "1 "    0    # line from  OROSI     70.00  BRKR to (1)   ORSI JCT  70.00
4  34498     0  "3 "    0    # LOAD-DROP    STONCRRL  70.00  LOAD==2.82(0.00)
4  34498     0  "2 "    0    # LOAD-DROP    STONCRRL  70.00  LOAD==3.01(0.00)
```

```
4  34502    0  "2 "   0    # LOAD-DROP    OROSI    70.00  LOAD==6.87(1.56)
4  34502    0  "1 "   0    # LOAD-DROP    OROSI    70.00  LOAD==5.84(1.34)
0
 #
 #
 # (84)  B2 LINE OUTAGE (BREAKER-TO-BREAKER)
 #
1  34508 34510  "1 "   0    # line from  CAMDEN    70.00   (2) to (2)   CMDN JCT  70.00
1  34508 34576  "1 "   0    # line from  CAMDEN    70.00   (2) to BRKR  KNGLOBUS  70.00
1  34510 34512  "1 "   0    # line from  CMDN JCT  70.00   (2) to BRKR  CARUTHRS  70.00
4  34508    0  "2 "   0    # LOAD-DROP    CAMDEN    70.00  LOAD==7.02(0.00)
4  34508    0  "1 "   0    # LOAD-DROP    CAMDEN    70.00  LOAD==8.16(0.82)
0
 #
 #
 # (85)  B2 LINE OUTAGE (BREAKER-TO-BREAKER)
 #
1  34514 34540  "1 "   0    # line from  MUSLSLGH  70.00   (1) to BRKR  HENRITTA  70.00
4  34514    0  "1 "   0    # LOAD-DROP    MUSLSLGH  70.00  LOAD==22.00(13.63)
0
 #
 #
 # (86)  B2 LINE OUTAGE (BREAKER-TO-BREAKER)
 #
1  34528 34530  "1 "   0    # line from  CORCORAN  70.00  BRKR to (3)   BSWLL TP  70.00
1  34530 34536  "1 "   0    # line from  BSWLL TP  70.00   (3) to (1)   ANGIOLA   70.00
1  34530 34538  "1 "   0    # line from  BSWLL TP  70.00   (3) to (1)   BOSWELL   70.00
4  34536    0  "1 "   0    # LOAD-DROP    ANGIOLA   70.00  LOAD==4.42(0.00)
4  34538    0  "1 "   0    # LOAD-DROP    BOSWELL   70.00  LOAD==0.77(0.50)
0
 #
 #
 # (87)  B2 LINE OUTAGE (BREAKER-TO-BREAKER)
 #
1  34532 34554  "1 "   0    # line from  ARMSTRNG  70.00   (1) to (4)   AMSTG SW  70.00
1  34554 34462  "1 "   0    # line from  AMSTG SW  70.00  BRKR to (1)   GUR3TPT   70.00
1  34554 34534  "1 "   0    # line from  AMSTG SW  70.00   (4) to (1)   RESERVE   70.00
2  34554 34650  "1 "   0    # TRAN from  AMSTG SW  70.00  BRKR to (1)   GWF-PWR.   9.11
4  34532    0  "1 "   0    # LOAD-DROP    ARMSTRNG  70.00  LOAD==8.49(7.49)
4  34534    0  "1 "   0    # LOAD-DROP    RESERVE   70.00  LOAD==2.66(0.24)
3  34650    0  "1 "   0    # GEN-DROP    GWF-PWR.   9.11  GEN==23.00(12.00)
0
 #
 #
 # (88)  B2 LINE OUTAGE (BREAKER-TO-BREAKER)
 #
1  34544 34550  "1 "   0    # line from  TLRE LKE  70.00  BRKR to (2)   CHEVPLIN  70.00
1  34550 34546  "1 "   0    # line from  CHEVPLIN  70.00   (2) to (2)   AVENAL    70.00
1  34546 34548  "1 "   0    # line from  AVENAL    70.00   (2) to BRKR  KETTLEMN  70.00
4  34550    0  "1 "   0    # LOAD-DROP    CHEVPLIN  70.00  LOAD==1.87(1.35)
4  34546    0  "1 "   0    # LOAD-DROP    AVENAL    70.00  LOAD==9.81(4.00)
0
 #
 #
 # (89)  B2 LINE OUTAGE (BREAKER-TO-BREAKER)
 #
1  34544 34580  "1 "   0    # line from  TLRE LKE  70.00  BRKR to (2)   BDGR HLL  70.00
1  34580 34942  "1 "   0    # line from  BDGR HLL  70.00   (2) to (2)   LST HLLS  70.00
1  34942 34582  "1 "   0    # line from  LST HLLS  70.00   (2) to BRKR  ARCO      70.00
4  34580    0  "2 "   0    # LOAD-DROP    BDGR HLL  70.00  LOAD==3.00(0.00)
4  34580    0  "1 "   0    # LOAD-DROP    BDGR HLL  70.00  LOAD==6.00(0.00)
4  34942    0  "1 "   0    # LOAD-DROP    LST HLLS  70.00  LOAD==3.25(1.07)
0
 #
 #
 # (90)  B2 LINE OUTAGE (BREAKER-TO-BREAKER)
 #
1  34548 34552  "1 "   0    # line from  KETTLEMN  70.00   (2) to BRKR  GATES     70.00
1  34548 34546  "1 "   0    # line from  KETTLEMN  70.00  BRKR to (1)   AVENAL    70.00
```

```
4  34548     0  "1 "    0     # LOAD-DROP    KETTLEMN  70.00  LOAD==5.39(0.41)
0
 #
 #
 # (91)  B2 LINE OUTAGE (BREAKER-TO-BREAKER)
 #
1  34552 34558  "1 "    0     # line from  GATES     70.00  BRKR to BRKR  HURON     70.00
0
 #
 #
 # (92)  B2 LINE OUTAGE (BREAKER-TO-BREAKER)
 #
1  34552 34570  "1 "    0     # line from  GATES     70.00  BRKR to BRKR  COLNGA 2  70.00
0
 #
 #
 # (93)  B2 LINE OUTAGE (BREAKER-TO-BREAKER)
 #
1  34552 34578  "1 "    0     # line from  GATES     70.00  BRKR to (2)   JACALITO  70.00
1  34578 34574  "1 "    0     # line from  JACALITO  70.00   (2) to BRKR  COLNGA 1  70.00
4  34578     0  "1 "    0     # LOAD-DROP    JACALITO  70.00  LOAD==4.04(2.71)
0
 #
 #
 # (94)  B2 LINE OUTAGE (BREAKER-TO-BREAKER)
 #
1  34556 34562  "1 "    0     # line from  STRD JCT  70.00  BRKR to BRKR  SCHLNDLR  70.00
0
 #
 #
 # (95)  B2 LINE OUTAGE (BREAKER-TO-BREAKER)
 #
1  34556 34564  "1 "    0     # line from  STRD JCT  70.00   (3) to BRKR  STROUD    70.00
1  34556 34474  "1 "    0     # line from  STRD JCT  70.00  BRKR to BRKR  HELM      70.00
1  34556 34562  "1 "    0     # line from  STRD JCT  70.00  BRKR to BRKR  SCHLNDLR  70.00
4  34564     0  "1 "    0     # LOAD-DROP    STROUD    70.00  LOAD==8.62(4.25)
0
 #
 #
 # (96)  B2 LINE OUTAGE (BREAKER-TO-BREAKER)
 #
1  34558 34560  "1 "    0     # line from  HURON     70.00  BRKR to (2)   CALFLAX   70.00
1  34560 34562  "1 "    0     # line from  CALFLAX   70.00   (2) to BRKR  SCHLNDLR  70.00
4  34560     0  "1 "    0     # LOAD-DROP    CALFLAX   70.00  LOAD==9.72(1.52)
1  34552 34558  "2 "    0      # Must include Gates - Huron in this outage
0
 #
 #
 # (97)  B2 LINE OUTAGE (BREAKER-TO-BREAKER)
 #
1  34562 34566  "1 "    0     # line from  SCHLNDLR  70.00  BRKR to (2)   PLSNTVLY  70.00
1  34566 34570  "1 "    0     # line from  PLSNTVLY  70.00   (2) to BRKR  COLNGA 2  70.00
4  34566     0  "1 "    0     # LOAD-DROP    PLSNTVLY  70.00  LOAD==10.00(6.20)
0
 #
 #
 # (98)  B2 LINE OUTAGE (BREAKER-TO-BREAKER)
 #
1  34570 34572  "1 "    0     # line from  COLNGA 2  70.00  BRKR to (3)   TORNADO   70.00
1  34572 34574  "1 "    0     # line from  TORNADO   70.00   (3) to BRKR  COLNGA 1  70.00
2  34572 34654  "1 "    0     # TRAN from  TORNADO   70.00   (3) to (1)   COLNGAGN   9.11
4  34572     0  "1 "    0     # LOAD-DROP    TORNADO   70.00  LOAD==1.66(1.37)
3  34654     0  "1 "    0     # GEN-DROP    COLNGAGN   9.11  GEN==34.21(-13.50)
2  34570 34652  "1 "    0      # Must include Colinga2 - Chv.coal in this outage - modeled on bus,
0
 #
 #
 # (99)  B2 LINE OUTAGE (BREAKER-TO-BREAKER)
 #
```

```
1  36354 34574  "1 "    0     # line from  SAN MIGL  70.00  BRKR to BRKR  COLNGA 1  70.00
0
 #
 #
 # (100)  B3 TRANSFORMER OUTAGE (BREAKER-TO-BREAKER)
 #
#     **** 3-WINDING TRANSFORMER  30055  (34607)  30900  34606 :
2  30055 30900  "11"    0     # TRAN from  GATES    500.00  BRKR to (1)   GATES    230.00
0
 #
 #
 # (101)  B3 TRANSFORMER OUTAGE (BREAKER-TO-BREAKER)
 #
#     **** 3-WINDING TRANSFORMER  30835  (30882)  34412  34630 :
2  30835 34412  "1 "    0     # TRAN from  HERNDON  230.00  BRKR to (1)   HERNDON  115.00
0
 #
 #
 # (102)  B3 TRANSFORMER OUTAGE (BREAKER-TO-BREAKER)
 #
#     **** 3-WINDING TRANSFORMER  30835  (30883)  34412  34632 :
2  30835 34412  "2 "    0     # TRAN from  HERNDON  230.00  BRKR to (1)   HERNDON  115.00
0
 #
 #
 # (103)  B3 TRANSFORMER OUTAGE (BREAKER-TO-BREAKER)
 #
#     **** 3-WINDING TRANSFORMER  30875  (30876)  34370  34618 :
2  30875 34370  "1 "    0     # TRAN from  MC CALL  230.00  BRKR to (1)   MC CALL  115.00
0
 #
 #
 # (104)  B3 TRANSFORMER OUTAGE (BREAKER-TO-BREAKER)
 #
#     **** 3-WINDING TRANSFORMER  30875  (30877)  34370  34620 :
2  30875 34370  "2 "    0     # TRAN from  MC CALL  230.00  BRKR to (1)   MC CALL  115.00
0
 #
 #
 # (105)  B3 TRANSFORMER OUTAGE (BREAKER-TO-BREAKER)
 #
#     **** 3-WINDING TRANSFORMER  30875  (30878)  34370  34621 :
2  30875 34370  "3 "    0     # TRAN from  MC CALL  230.00  BRKR to (1)   MC CALL  115.00
0
 #
 #
 #
 # (106)  B3 TRANSFORMER OUTAGE (BREAKER-TO-BREAKER)
 #
2  30900 30901  "1 "    0     # TRAN from  GATES    230.00  BRKR to (3)   GATES 1M 230.00
2  30901 34378  "1 "    0     # TRAN from  GATES 1M 230.00   (3) to BRKR  GATES    115.00
2  30901 34622  "1 "    0     # TRAN from  GATES 1M 230.00   (3) to (1)   GATES 1T  13.20
4 34378      0  "3 "    0      # Drop Gates Bank #3
0
 #
 #
 #
 # (107)  B3 TRANSFORMER OUTAGE (BREAKER-TO-BREAKER)
 #
2  34358 34308  "1 "    0     # TRAN from  KERCKHF2 115.00  BRKR to (1)   KERCKHOF  13.80
3  34308     0  "1 "    0     # GEN-DROP    KERCKHOF  13.80  GEN==128.00(39.09)
0
 #
 #
 # (108)  B3 TRANSFORMER OUTAGE (BREAKER-TO-BREAKER)
 #
2  34400 34616  "1 "    0     # TRAN from  KNGS RVR 115.00  BRKR to (1)   KINGSRIV  13.80
3  34616     0  "1 "    0     # GEN-DROP    KINGSRIV  13.80  GEN==47.00(2.00)
0
```

```
 #
 #
 # (109)  B3 TRANSFORMER OUTAGE (BREAKER-TO-BREAKER)
 #
#     **** 3-WINDING TRANSFORMER  34418  (34505)  34576  34626 :
 2  34418 34576  "1 "    0     # TRAN from  KINGSBRG 115.00  BRKR to (1)   KNGLOBUS  70.00
 1  34456 34576  "1 "    0      # Must include Kingsburg - Hardwick (Kingsburg CB 22) in this outage
 0
 #
 #
 # (110)  B3 TRANSFORMER OUTAGE (BREAKER-TO-BREAKER)
 #
#     **** 3-WINDING TRANSFORMER  34418  (34507)  34576  34628 :
 2  34418 34576  "2 "    0     # TRAN from  KINGSBRG 115.00  BRKR to (1)   KNGLOBUS  70.00
 1  34508 34576  "1 "    0      # Must include Kingsburg - Camden (Kingsburg CB 32) in this outage
 1  34423 34418  "1 "    0      # Must include Kingsburg - Mc Call #2 (Kingsburg CB 122) in this out
 4  34418     0  "3 "    0     # Drop Kingsburg Bk#3 (modeled as load on Kingburg 115kV bus)
 1  34418 34420  "1 "    0      # Must include Kingsburg - Corcoran #1 (Kingsburg CB 132) in this ou
 0
 #
 #
 # (111)  B3 TRANSFORMER OUTAGE (BREAKER-TO-BREAKER)
 #
 2  34474 30873  "1 "    0     # TRAN from  HELM      70.00  BRKR to BRKR  HELM     230.00
 0
 #
 #
 # (112)  B3 TRANSFORMER OUTAGE (BREAKER-TO-BREAKER)
 #
 2  34480 30830  "2 "    0     # TRAN from  KEARNEY   70.00  BRKR to BRKR  KEARNEY  230.00
 0
 #
 #
 # (113)  B3 TRANSFORMER OUTAGE (BREAKER-TO-BREAKER)
 #
 2  34488 34366  "1 "    0     # TRAN from  SANGER    70.00  BRKR to BRKR  SANGER   115.00
 0
 #
 #
 # (114)  B3 TRANSFORMER OUTAGE (BREAKER-TO-BREAKER)
 #
 2  34488 34366  "2 "    0     # TRAN from  SANGER    70.00  BRKR to BRKR  SANGER   115.00
 0
 #
 #
 # (115)  B3 TRANSFORMER OUTAGE (BREAKER-TO-BREAKER)
 #
 2  34488 34366  "3 "    0     # TRAN from  SANGER    70.00  BRKR to BRKR  SANGER   115.00
 0
 #
 #
 # (116)  B3 TRANSFORMER OUTAGE (BREAKER-TO-BREAKER)
 #
 2  34492 34380  "2 "    0     # TRAN from  REEDLEY   70.00  BRKR to BRKR  REEDLEY  115.00
 0
 #
 #
 # (117)  B3 TRANSFORMER OUTAGE (BREAKER-TO-BREAKER)
 #
 2  34528 34420  "2 "    0     # TRAN from  CORCORAN  70.00  BRKR to BRKR  CORCORAN 115.00
# 1  34420 34392  "1 "    0      # Must include Corcoran - Quebec   (Corcoran CB 142) in this outage
 1  34420 34418  "2 "    0      # Must include Corcoran - Kingburg (Corcoran CB 162) in this outage
 1  34528 34460  "1 "    0      # Must include Corcorna - Guernsey (Corcoran CB  42) in this outage
 0
 #
 #
 # (118)  B3 TRANSFORMER OUTAGE (BREAKER-TO-BREAKER)
 #
 2  34552 34378  "2 "    0     # TRAN from  GATES     70.00  BRKR to BRKR  GATES    115.00
```

```
0
 #
 #
 # (119)  B3 TRANSFORMER OUTAGE (BREAKER-TO-BREAKER)
 #
2  34562 34354  "1 "    0     # TRAN from  SCHLNDLR  70.00  BRKR to (3)   SCHINDLR 115.00
1  34354 34149  "1 "    0     # line from  SCHINDLR 115.00  BRKR to (1)   CHENYT   115.00
1  34354 34432  "1 "    0     # line from  SCHINDLR 115.00  BRKR to (1)   WESTLNDS 115.00
0
 #
 #
 # (120)  B3 TRANSFORMER OUTAGE (BREAKER-TO-BREAKER)
 #
2  34604 30820  "1 "    0     # TRAN from  HELMS 3   18.00   (1) to BRKR  HELMS PP 230.00
3  34604     0  "1 "    0     # GEN-DROP    HELMS 3   18.00  GEN==310.25(73.56)
0
 #
 #
 # (121)  B3 TRANSFORMER OUTAGE (BREAKER-TO-BREAKER)
 #
2  34636 34464  "1 "    0     # TRAN from  FRIANTDM   9.11   (1) to BRKR  COPPRMNE  70.00
3  34636     0  "1 "    0     # GEN-DROP    FRIANTDM   9.11  GEN==22.54(-2.60)
0
 #
 #
 # (122)  B3 TRANSFORMER OUTAGE (BREAKER-TO-BREAKER)
 #
2  34650 34554  "1 "    0     # TRAN from  GWF-PWR.   9.11   (1) to BRKR  AMSTG SW  70.00
3  34650     0  "1 "    0     # GEN-DROP    GWF-PWR.   9.11  GEN==23.00(12.00)
0
 #
 #
 # (123)  B3 TRANSFORMER OUTAGE (BREAKER-TO-BREAKER)
 #
2  34652 34570  "1 "    0     # TRAN from  CHV.COAL   9.11   (1) to BRKR  COLNGA 2  70.00
4  34652     0  "2 "    0     # LOAD-DROP    CHV.COAL   9.11  LOAD==17.50(10.85)
3  34652     0  "1 "    0     # GEN-DROP    CHV.COAL   9.11  GEN==16.00(7.37)
3  34652     0  "2 "    0     # GEN-DROP    CHV.COAL   9.11  GEN==7.97(3.67)
0
 #
 #
-1
 # EOF
```

Appendix C

Steady State Power Flow Results

Autocon Comparison Files

APPENDIX C

STEADY STATE POWER FLOW RESULTS - AUTOCON COMPARISON FILES FOR SUMMER PEAK NORMAL OPERATING CONDITIONS

From Bus				To Bus										
Bus No.	Name	kV	Area	Bus No	Name	kV	Area	ID	MW	MVAR	Loading PU	Flow	Rating	Case
30790	PANOCHE	230	30	30792	PNCHE 2M	230	30	2	125	38	1.07	131 MVA	121.80 MVA	Henrietta_Sum02_BP
30790	PANOCHE	230	30	30792	PNCHE 2M	230	30	2	124	38	1.07	130 MVA	121.80 MVA	Henrietta_Sum02_AP
30792	PNCHE 2M	230	30	34158	PANOCHE	115	30	2	125	32	1.06	129 MVA	121.80 MVA	Henrietta_Sum02_BP
30792	PNCHE 2M	230	30	34158	PANOCHE	115	30	2	124	32	1.05	128 MVA	121.80 MVA	Henrietta_Sum02_AP
30881	HENRIETA	230	30	34540	HENRITTA	70	30	2	88	51	0.95	102 MVA	107.50 MVA	Henrietta_Sum02_BP
No violation in Case 2														
34158	PANOCHE	115	30	34159	PANOCHEJ	115	30	1	-88	-13	0.93	407 AMPS	437.78 AMPS	Henrietta_Sum02_BP
34158	PANOCHE	115	30	34159	PANOCHEJ	115	30	1	-88	-13	0.93	408 AMPS	437.78 AMPS	Henrietta_Sum02_AP
No violation in Case 1														
34540	HENRITTA	70	30	34587	GWF_HENR	70	30	1	96	-36	0.98	810 AMPS	824.79 AMPS	Henrietta_Sum02_AP
34582	ARCO	70	30	34968	TWISSLMN	70	30	1	23	13	0.98	199 AMPS	202.90 AMPS	Henrietta_Sum02_BP
34582	ARCO	70	30	34968	TWISSLMN	70	30	1	23	13	0.98	198 AMPS	202.90 AMPS	Henrietta_Sum02_AP
34746	GANSO	115	30	34774	MIDWAY	115	30	1	-69	12	1.03	335 AMPS	326.33 AMPS	Henrietta_Sum02_BP
34746	GANSO	115	30	34774	MIDWAY	115	30	1	-67	11	1	326 AMPS	326.33 AMPS	Henrietta_Sum02_AP
34886	MAGNDN J	70	30	34892	LIGHTNER	70	30	1	39	5	0.99	317 AMPS	321.67 AMPS	Henrietta_Sum02_BP
34886	MAGNDN J	70	30	34892	LIGHTNER	70	30	1	39	5	0.99	318 AMPS	321.67 AMPS	Henrietta_Sum02_AP
34890	WEEDPTCH	70	30	34892	LIGHTNER	70	30	1	-38	-4	0.99	318 AMPS	321.67 AMPS	Henrietta_Sum02_BP
34890	WEEDPTCH	70	30	34892	LIGHTNER	70	30	1	-38	-4	0.99	318 AMPS	321.67 AMPS	Henrietta_Sum02_AP

APPENDIX C

STEADY STATE POWER FLOW RESULTS - AUTOCON COMPARISON FILES FOR ISO CATEGORY B SUMMER PEAK OPERATING CONDITIONS

From Bus				To Bus												
Bus No.	Name	kV	Area	Bus No	Name	kV	Area	ID	Base	Outage	MW	MVAR	Flow	Rating	Case	Cont
30790	PANOCHE	230	30	30792	PNCHE 2M	230	30	2	1.07	0.9	126.27	37.05	131.59 MVA	146.20 MVA	Henrietta_Sum02_BP	100
No violation in Case 2																
30790	PANOCHE	230	30	30792	PNCHE 2M	230	30	2	1.07	0.9	126.32	37.89	131.88 MVA	146.20 MVA	Henrietta_Sum02_BP	104
No violation in Case 2																
30790	PANOCHE	230	30	30792	PNCHE 2M	230	30	2	1.07	0.91	126.74	37.98	132.31 MVA	146.20 MVA	Henrietta_Sum02_BP	105
No violation in Case 2																
30790	PANOCHE	230	30	30792	PNCHE 2M	230	30	2	1.07	0.98	135.86	46.17	143.49 MVA	146.20 MVA	Henrietta_Sum02_BP	106
30790	PANOCHE	230	30	30792	PNCHE 2M	230	30	2	1.07	0.98	135.24	46.19	142.91 MVA	146.20 MVA	Henrietta_Sum02_AP	106
30790	PANOCHE	230	30	30792	PNCHE 2M	230	30	2	1.07	0.94	131.54	38.12	136.95 MVA	146.20 MVA	Henrietta_Sum02_BP	107
30790	PANOCHE	230	30	30792	PNCHE 2M	230	30	2	1.07	0.93	130.69	38.22	136.16 MVA	146.20 MVA	Henrietta_Sum02_AP	107
30790	PANOCHE	230	30	30792	PNCHE 2M	230	30	2	1.07	0.97	135.48	43.1	142.17 MVA	146.20 MVA	Henrietta_Sum02_BP	111
30790	PANOCHE	230	30	30792	PNCHE 2M	230	30	2	1.07	0.97	134.58	43.21	141.35 MVA	146.20 MVA	Henrietta_Sum02_AP	111
30790	PANOCHE	230	30	30792	PNCHE 2M	230	30	2	1.07	0.92	129.18	38.31	134.75 MVA	146.20 MVA	Henrietta_Sum02_BP	112
30790	PANOCHE	230	30	30792	PNCHE 2M	230	30	2	1.07	0.92	128.34	38.37	133.95 MVA	146.20 MVA	Henrietta_Sum02_AP	112
30790	PANOCHE	230	30	30792	PNCHE 2M	230	30	2	1.07	0.98	135.81	45.86	143.34 MVA	146.20 MVA	Henrietta_Sum02_BP	118
30790	PANOCHE	230	30	30792	PNCHE 2M	230	30	2	1.07	0.98	135.19	45.89	142.76 MVA	146.20 MVA	Henrietta_Sum02_AP	118
30790	PANOCHE	230	30	30792	PNCHE 2M	230	30	2	1.07	0.94	132.45	36.39	137.36 MVA	146.20 MVA	Henrietta_Sum02_BP	120
30790	PANOCHE	230	30	30792	PNCHE 2M	230	30	2	1.07	0.93	131.59	36.5	136.56 MVA	146.20 MVA	Henrietta_Sum02_AP	120
30790	PANOCHE	230	30	30792	PNCHE 2M	230	30	2	1.07	0.94	132.27	36.87	137.31 MVA	146.20 MVA	Henrietta_Sum02_BP	19
30790	PANOCHE	230	30	30792	PNCHE 2M	230	30	2	1.07	0.93	131.49	36.93	136.58 MVA	146.20 MVA	Henrietta_Sum02_AP	19
30790	PANOCHE	230	30	30792	PNCHE 2M	230	30	2	1.07	0.94	131.45	37.54	136.71 MVA	146.20 MVA	Henrietta_Sum02_BP	25
30790	PANOCHE	230	30	30792	PNCHE 2M	230	30	2	1.07	0.93	130.08	37.66	135.42 MVA	146.20 MVA	Henrietta_Sum02_AP	25
30790	PANOCHE	230	30	30792	PNCHE 2M	230	30	2	1.07	0.95	133.32	40.03	139.21 MVA	146.20 MVA	Henrietta_Sum02_BP	26
30790	PANOCHE	230	30	30792	PNCHE 2M	230	30	2	1.07	0.94	131.9	40.12	137.87 MVA	146.20 MVA	Henrietta_Sum02_AP	26
30790	PANOCHE	230	30	30792	PNCHE 2M	230	30	2	1.07	1.03	145.78	38.92	150.88 MVA	146.20 MVA	Henrietta_Sum02_BP	29

APPENDIX C

STEADY STATE POWER FLOW RESULTS - AUTOCON COMPARISON FILES FOR ISO CATEGORY B SUMMER PEAK OPERATING CONDITIONS

From Bus				To Bus												
Bus No.	Name	kV	Area	Bus No	Name	kV	Area	ID	Base	Outage	MW	MVAR	Flow	Rating	Case	Cont
30790	PANOCHE	230	30	30792	PNCHE 2M	230	30	2	1.07	1.03	145.77	39.01	150.90 MVA	146.20 MVA	Henrietta_Sum02_AP	29
30790	PANOCHE	230	30	30792	PNCHE 2M	230	30	2	1.07	0.9	126.52	37.52	131.96 MVA	146.20 MVA	Henrietta_Sum02_BP	3
No violation in Case 2																
30790	PANOCHE	230	30	30792	PNCHE 2M	230	30	2	1.07	0.94	132.99	37.02	138.04 MVA	146.20 MVA	Henrietta_Sum02_BP	31
30790	PANOCHE	230	30	30792	PNCHE 2M	230	30	2	1.07	0.94	132.14	37.14	137.26 MVA	146.20 MVA	Henrietta_Sum02_AP	31
30790	PANOCHE	230	30	30792	PNCHE 2M	230	30	2	1.07	0.94	132.99	37.02	138.04 MVA	146.20 MVA	Henrietta_Sum02_BP	32
30790	PANOCHE	230	30	30792	PNCHE 2M	230	30	2	1.07	0.94	132.14	37.14	137.26 MVA	146.20 MVA	Henrietta_Sum02_AP	32
30790	PANOCHE	230	30	30792	PNCHE 2M	230	30	2	1.07	0.91	127.79	37.19	133.09 MVA	146.20 MVA	Henrietta_Sum02_BP	38
30790	PANOCHE	230	30	30792	PNCHE 2M	230	30	2	1.07	0.9	126.94	37.3	132.31 MVA	146.20 MVA	Henrietta_Sum02_AP	38
30790	PANOCHE	230	30	30792	PNCHE 2M	230	30	2	1.07	0.91	128.39	36.99	133.61 MVA	146.20 MVA	Henrietta_Sum02_BP	39
30790	PANOCHE	230	30	30792	PNCHE 2M	230	30	2	1.07	0.91	127.54	37.11	132.83 MVA	146.20 MVA	Henrietta_Sum02_AP	39
30790	PANOCHE	230	30	30792	PNCHE 2M	230	30	2	1.07	0.91	127.89	37.24	133.20 MVA	146.20 MVA	Henrietta_Sum02_BP	4
30790	PANOCHE	230	30	30792	PNCHE 2M	230	30	2	1.07	0.91	127.33	37.26	132.67 MVA	146.20 MVA	Henrietta_Sum02_AP	4
30790	PANOCHE	230	30	30792	PNCHE 2M	230	30	2	1.07	0.91	127.27	38.71	133.02 MVA	146.20 MVA	Henrietta_Sum02_BP	44
30790	PANOCHE	230	30	30792	PNCHE 2M	230	30	2	1.07	0.91	126.56	38.77	132.36 MVA	146.20 MVA	Henrietta_Sum02_AP	44
30790	PANOCHE	230	30	30792	PNCHE 2M	230	30	2	1.07	0.9	126.13	38.17	131.78 MVA	146.20 MVA	Henrietta_Sum02_BP	47
No violation in Case 2																
30790	PANOCHE	230	30	30792	PNCHE 2M	230	30	2	1.07	0.9	126.63	37.56	132.08 MVA	146.20 MVA	Henrietta_Sum02_BP	5
No violation in Case 2																
30790	PANOCHE	230	30	30792	PNCHE 2M	230	30	2	1.07	0.9	126.74	37.89	132.29 MVA	146.20 MVA	Henrietta_Sum02_BP	66
No violation in Case 2																
30790	PANOCHE	230	30	30792	PNCHE 2M	230	30	2	1.07	0.9	126.23	39.32	132.22 MVA	146.20 MVA	Henrietta_Sum02_BP	74
No violation in Case 2																
30790	PANOCHE	230	30	30792	PNCHE 2M	230	30	2	1.07	0.92	130.21	35.93	135.08 MVA	146.20 MVA	Henrietta_Sum02_BP	98
30790	PANOCHE	230	30	30792	PNCHE 2M	230	30	2	1.07	0.92	129.36	36.02	134.28 MVA	146.20 MVA	Henrietta_Sum02_AP	98

APPENDIX C

STEADY STATE POWER FLOW RESULTS - AUTOCON COMPARISON FILES FOR ISO CATEGORY B SUMMER PEAK OPERATING CONDITIONS

From Bus				To Bus												
Bus No.	Name	kV	Area	Bus No	Name	kV	Area	ID	Base	Outage	MW	MVAR	Flow	Rating	Case	Cont
30792	PNCHE 2M	230	30	34158	PANOCHE	115	30	2	1.06	0.96	135.68	38.49	141.03 MVA	146.20 MVA	Henrietta_Sum02_BP	106
30792	PNCHE 2M	230	30	34158	PANOCHE	115	30	2	1.05	0.96	135.05	38.57	140.45 MVA	146.20 MVA	Henrietta_Sum02_AP	106
30792	PNCHE 2M	230	30	34158	PANOCHE	115	30	2	1.06	0.92	131.36	31.1	134.99 MVA	146.20 MVA	Henrietta_Sum02_BP	107
30792	PNCHE 2M	230	30	34158	PANOCHE	115	30	2	1.05	0.92	130.51	31.27	134.20 MVA	146.20 MVA	Henrietta_Sum02_AP	107
30792	PNCHE 2M	230	30	34158	PANOCHE	115	30	2	1.06	0.96	135.3	35.58	139.90 MVA	146.20 MVA	Henrietta_Sum02_BP	111
30792	PNCHE 2M	230	30	34158	PANOCHE	115	30	2	1.05	0.95	134.4	35.76	139.07 MVA	146.20 MVA	Henrietta_Sum02_AP	111
30792	PNCHE 2M	230	30	34158	PANOCHE	115	30	2	1.06	0.91	129.01	31.53	132.81 MVA	146.20 MVA	Henrietta_Sum02_BP	112
30792	PNCHE 2M	230	30	34158	PANOCHE	115	30	2	1.05	0.9	128.16	31.66	132.01 MVA	146.20 MVA	Henrietta_Sum02_AP	112
30792	PNCHE 2M	230	30	34158	PANOCHE	115	30	2	1.06	0.96	135.62	38.2	140.90 MVA	146.20 MVA	Henrietta_Sum02_BP	118
30792	PNCHE 2M	230	30	34158	PANOCHE	115	30	2	1.05	0.96	135	38.28	140.32 MVA	146.20 MVA	Henrietta_Sum02_AP	118
30792	PNCHE 2M	230	30	34158	PANOCHE	115	30	2	1.06	0.93	132.27	29.34	135.49 MVA	146.20 MVA	Henrietta_Sum02_BP	120
30792	PNCHE 2M	230	30	34158	PANOCHE	115	30	2	1.05	0.92	131.42	29.53	134.69 MVA	146.20 MVA	Henrietta_Sum02_AP	120
30792	PNCHE 2M	230	30	34158	PANOCHE	115	30	2	1.06	0.93	132.09	29.85	135.42 MVA	146.20 MVA	Henrietta_Sum02_BP	19
30792	PNCHE 2M	230	30	34158	PANOCHE	115	30	2	1.05	0.92	131.31	29.97	134.69 MVA	146.20 MVA	Henrietta_Sum02_AP	19
30792	PNCHE 2M	230	30	34158	PANOCHE	115	30	2	1.06	0.92	131.28	30.57	134.79 MVA	146.20 MVA	Henrietta_Sum02_BP	25
30792	PNCHE 2M	230	30	34158	PANOCHE	115	30	2	1.05	0.91	129.91	30.81	133.51 MVA	146.20 MVA	Henrietta_Sum02_AP	25
30792	PNCHE 2M	230	30	34158	PANOCHE	115	30	2	1.06	0.94	133.14	32.84	137.13 MVA	146.20 MVA	Henrietta_Sum02_BP	26
30792	PNCHE 2M	230	30	34158	PANOCHE	115	30	2	1.05	0.93	131.72	33.06	135.80 MVA	146.20 MVA	Henrietta_Sum02_AP	26
30792	PNCHE 2M	230	30	34158	PANOCHE	115	30	2	1.06	1.02	145.58	30.45	148.73 MVA	146.20 MVA	Henrietta_Sum02_BP	29
30792	PNCHE 2M	230	30	34158	PANOCHE	115	30	2	1.05	1.02	145.58	30.52	148.75 MVA	146.20 MVA	Henrietta_Sum02_AP	29
30792	PNCHE 2M	230	30	34158	PANOCHE	115	30	2	1.06	0.93	132.81	29.86	136.12 MVA	146.20 MVA	Henrietta_Sum02_BP	31
30792	PNCHE 2M	230	30	34158	PANOCHE	115	30	2	1.05	0.93	131.96	30.06	135.34 MVA	146.20 MVA	Henrietta_Sum02_AP	31
30792	PNCHE 2M	230	30	34158	PANOCHE	115	30	2	1.06	0.93	132.81	29.86	136.12 MVA	146.20 MVA	Henrietta_Sum02_BP	32
30792	PNCHE 2M	230	30	34158	PANOCHE	115	30	2	1.05	0.93	131.96	30.06	135.34 MVA	146.20 MVA	Henrietta_Sum02_AP	32

APPENDIX C

STEADY STATE POWER FLOW RESULTS - AUTOCON COMPARISON FILES FOR ISO CATEGORY B SUMMER PEAK OPERATING CONDITIONS

From Bus				To Bus													
Bus No.	Name	kV	Area	Bus No	Name	kV	Area	ID	Base	Outage	MW	MVAR	Flow	Rating	Case	Cont
30792	PNCHE 2M	230	30	34158	PANOCHE	115	30	2	1.06	0.9	128.22	30.29	131.75 MVA	146.20 MVA	Henrietta_Sum02_BP	39
No violation in Case 2																
30792	PNCHE 2M	230	30	34158	PANOCHE	115	30	2	1.06	0.91	130.04	29.12	133.26 MVA	146.20 MVA	Henrietta_Sum02_BP	98
30792	PNCHE 2M	230	30	34158	PANOCHE	115	30	2	1.05	0.91	129.19	29.28	132.46 MVA	146.20 MVA	Henrietta_Sum02_AP	98
30805	BORDEN	230	30	34256	BORDEN	70	30	1	0.85	1.06	105.3	42.78	113.66 MVA	107.00 MVA	Henrietta_Sum02_BP	112
30805	BORDEN	230	30	34256	BORDEN	70	30	1	0.85	1.06	105.41	42.63	113.70 MVA	107.00 MVA	Henrietta_Sum02_AP	112
30805	BORDEN	230	30	34256	BORDEN	70	30	1	0.85	0.97	97.78	35.12	103.90 MVA	107.00 MVA	Henrietta_Sum02_BP	116
30805	BORDEN	230	30	34256	BORDEN	70	30	1	0.85	0.97	97.83	34.97	103.90 MVA	107.00 MVA	Henrietta_Sum02_AP	116
30805	BORDEN	230	30	34256	BORDEN	70	30	1	0.85	0.98	97.68	36.95	104.44 MVA	107.00 MVA	Henrietta_Sum02_BP	121
30805	BORDEN	230	30	34256	BORDEN	70	30	1	0.85	0.98	97.72	36.85	104.44 MVA	107.00 MVA	Henrietta_Sum02_AP	121
30805	BORDEN	230	30	34256	BORDEN	70	30	1	0.85	0.92	91.86	34.13	98.00 MVA	107.00 MVA	Henrietta_Sum02_BP	58
30805	BORDEN	230	30	34256	BORDEN	70	30	1	0.85	0.92	91.91	33.98	97.99 MVA	107.00 MVA	Henrietta_Sum02_AP	58
30805	BORDEN	230	30	34256	BORDEN	70	30	1	0.85	1.1	110.23	42.06	117.98 MVA	107.00 MVA	Henrietta_Sum02_BP	72
30805	BORDEN	230	30	34256	BORDEN	70	30	1	0.85	1.1	110.23	41.94	117.94 MVA	107.00 MVA	Henrietta_Sum02_AP	72
30805	BORDEN	230	30	34256	BORDEN	70	30	1	0.85	1.1	110.36	42.28	118.18 MVA	107.00 MVA	Henrietta_Sum02_BP	77
30805	BORDEN	230	30	34256	BORDEN	70	30	1	0.85	1.1	110.35	42.16	118.13 MVA	107.00 MVA	Henrietta_Sum02_AP	77
30881	HENRIETA	230	30	34540	HENRITTA	70	30	2	0.95	1	112.68	63.67	129.43 MVA	129.00 MVA	Henrietta_Sum02_BP	122
No violation in Case 2																
34158	PANOCHE	115	30	34159	PANOCHEJ	115	30	1	0.93	0.97	- 106.84	- 12.04	495.19 AMPS	512.08 AMPS	Henrietta_Sum02_BP	29
34158	PANOCHE	115	30	34159	PANOCHEJ	115	30	1	0.93	0.98	- 107.74	- 11.99	499.63 AMPS	512.08 AMPS	Henrietta_Sum02_AP	29
34240	GLASS	70	30	34252	MADERA	70	30	1	0.74	1.09	-47.29	- 17.85	412.01 AMPS	377.75 AMPS	Henrietta_Sum02_BP	112
34240	GLASS	70	30	34252	MADERA	70	30	1	0.74	1.09	-47.39	- 17.76	412.80 AMPS	377.75 AMPS	Henrietta_Sum02_AP	112
34240	GLASS	70	30	34252	MADERA	70	30	1	0.74	1.19	-53.14	- 14.2	447.98 AMPS	377.75 AMPS	Henrietta_Sum02_BP	72
34240	GLASS	70	30	34252	MADERA	70	30	1	0.74	1.19	-53.15	- 14.21	448.28 AMPS	377.75 AMPS	Henrietta_Sum02_AP	72
34240	GLASS	70	30	34252	MADERA	70	30	1	0.74	1.18	-53.14	- 14.2	447.35 AMPS	377.75 AMPS	Henrietta_Sum02_BP	77

APPENDIX C

STEADY STATE POWER FLOW RESULTS - AUTOCON COMPARISON FILES FOR ISO CATEGORY B SUMMER PEAK OPERATING CONDITIONS

From Bus				To Bus													
Bus No.	Name	kV	Area	Bus No	Name	kV	Area	ID	Base	Outage	MW	MVAR	Flow	Rating	Case	Cont
34240	GLASS	70	30	34252	MADERA	70	30	1	0.74	1.19	-53.14	- 14.2	447.65 AMPS	377.75 AMPS	Henrietta_Sum02_AP	77
34366	SANGER	115	30	34488	SANGER	70	30	1	0.66	0.94	28.43	18.34	33.84 MVA	36.00 MVA	Henrietta_Sum02_BP	115
34366	SANGER	115	30	34488	SANGER	70	30	1	0.66	0.94	28.44	18.31	33.82 MVA	36.00 MVA	Henrietta_Sum02_AP	115
34366	SANGER	115	30	34488	SANGER	70	30	2	0.65	0.94	28.43	18.1	33.70 MVA	36.00 MVA	Henrietta_Sum02_BP	115
34366	SANGER	115	30	34488	SANGER	70	30	2	0.65	0.94	28.43	18.07	33.69 MVA	36.00 MVA	Henrietta_Sum02_AP	115
34366	SANGER	115	30	34488	SANGER	70	30	3	0.69	1.07	49.05	21.36	53.50 MVA	50.00 MVA	Henrietta_Sum02_BP	116
34366	SANGER	115	30	34488	SANGER	70	30	3	0.69	1.07	49.06	21.33	53.50 MVA	50.00 MVA	Henrietta_Sum02_AP	116
34380	REEDLEY	115	30	34394	PIEDRA 1	115	30	1	0.39	0.95	-94.97	- 11.39	484.95 AMPS	512.08 AMPS	Henrietta_Sum02_BP	58
34380	REEDLEY	115	30	34394	PIEDRA 1	115	30	1	0.39	0.95	-94.97	- 11.36	485.06 AMPS	512.08 AMPS	Henrietta_Sum02_AP	58
34409	PNDLJ2	115	30	34412	HERNDON	115	30	1	0.57	0.99	153.86	38.29	737.44 AMPS	743.03 AMPS	Henrietta_Sum02_BP	15
34409	PNDLJ2	115	30	34412	HERNDON	115	30	1	0.57	0.99	153.86	38.31	737.81 AMPS	743.03 AMPS	Henrietta_Sum02_AP	15
34409	PNDLJ2	115	30	34416	BULLARD	115	30	1	0.55	0.96	147.38	29.52	715.22 AMPS	743.03 AMPS	Henrietta_Sum02_BP	15
34409	PNDLJ2	115	30	34416	BULLARD	115	30	1	0.55	0.96	147.38	29.53	715.58 AMPS	743.03 AMPS	Henrietta_Sum02_AP	15
34411	PNDLJ1	115	30	34412	HERNDON	115	30	1	0.57	0.99	153.86	38.29	737.44 AMPS	743.03 AMPS	Henrietta_Sum02_BP	14
34411	PNDLJ1	115	30	34412	HERNDON	115	30	1	0.57	0.99	153.86	38.31	737.81 AMPS	743.03 AMPS	Henrietta_Sum02_AP	14
34411	PNDLJ1	115	30	34416	BULLARD	115	30	1	0.55	0.96	147.38	29.52	715.22 AMPS	743.03 AMPS	Henrietta_Sum02_BP	14
34411	PNDLJ1	115	30	34416	BULLARD	115	30	1	0.55	0.96	147.38	29.53	715.58 AMPS	743.03 AMPS	Henrietta_Sum02_AP	14
34466	BIOLA	70	30	34482	OLDKERN	70	30	1	0.63	0.94	-45.62	3.93	373.39 AMPS	395.90 AMPS	Henrietta_Sum02_BP	30
34466	BIOLA	70	30	34482	OLDKERN	70	30	1	0.63	0.96	-46.49	4.3	381.21 AMPS	395.90 AMPS	Henrietta_Sum02_AP	30
34473	SNJQTP	70	30	34474	HELM	70	30	1	0.41	1.05	52.15	10.38	398.80 AMPS	379.40 AMPS	Henrietta_Sum02_BP	112
34473	SNJQTP	70	30	34474	HELM	70	30	1	0.4	1.05	51.81	10.42	396.51 AMPS	379.40 AMPS	Henrietta_Sum02_AP	112
34473	SNJQTP	70	30	34475	AGRCJCT	70	30	1	0.41	1.05	51.77	9.58	398.88 AMPS	379.40 AMPS	Henrietta_Sum02_BP	112
34473	SNJQTP	70	30	34475	AGRCJCT	70	30	1	0.4	1.05	51.44	9.63	396.60 AMPS	379.40 AMPS	Henrietta_Sum02_AP	112
34475	AGRCJCT	70	30	34484	KERMAN	70	30	1	0.86	1.48	70.67	13.05	562.34 AMPS	379.40 AMPS	Henrietta_Sum02_BP	112
34475	AGRCJCT	70	30	34484	KERMAN	70	30	1	0.84	1.48	70.35	13.2	560.23 AMPS	379.40 AMPS	Henrietta_Sum02_AP	112

APPENDIX C

STEADY STATE POWER FLOW RESULTS - AUTOCON COMPARISON FILES FOR ISO CATEGORY B SUMMER PEAK OPERATING CONDITIONS

From Bus				To Bus												
Bus No.	Name	kV	Area	Bus No	Name	kV	Area	ID	Base	Outage	MW	MVAR	Flow	Rating	Case	Cont
34480	KEARNEY	70	30	34484	KERMAN	70	30	1	0.26	0.95	-42.56	-4.96	361.60 AMPS	379.40 AMPS	Henrietta_Sum02_BP	112
34480	KEARNEY	70	30	34484	KERMAN	70	30	1	0.25	0.95	-42.27	-5.18	359.52 AMPS	379.40 AMPS	Henrietta_Sum02_AP	112
34487	SNGRJCT	70	30	34490	PARLIER	70	30	1	0.54	1.32	64.88	16.03	523.39 AMPS	395.90 AMPS	Henrietta_Sum02_BP	116
34487	SNGRJCT	70	30	34490	PARLIER	70	30	1	0.54	1.32	64.89	16.03	523.56 AMPS	395.90 AMPS	Henrietta_Sum02_AP	116
34487	SNGRJCT	70	30	34490	PARLIER	70	30	1	0.54	0.92	45.85	10.42	365.77 AMPS	395.90 AMPS	Henrietta_Sum02_BP	58
34487	SNGRJCT	70	30	34490	PARLIER	70	30	1	0.54	0.92	45.86	10.42	365.87 AMPS	395.90 AMPS	Henrietta_Sum02_AP	58
34490	PARLIER	70	30	34492	REEDLEY	70	30	1	0.3	1.09	51.73	8.87	432.73 AMPS	398.37 AMPS	Henrietta_Sum02_BP	116
34490	PARLIER	70	30	34492	REEDLEY	70	30	1	0.3	1.09	51.74	8.87	432.88 AMPS	398.37 AMPS	Henrietta_Sum02_AP	116
34746	GANSO	115	30	34774	MIDWAY	115	30	1	1.03	0.96	-74.47	10.04	360.00 AMPS	376.53 AMPS	Henrietta_Sum02_BP	1
34746	GANSO	115	30	34774	MIDWAY	115	30	1	1	0.93	-72.63	9.33	350.89 AMPS	376.53 AMPS	Henrietta_Sum02_AP	1
34746	GANSO	115	30	34774	MIDWAY	115	30	1	1.03	1.01	-78.68	13.67	382.11 AMPS	376.53 AMPS	Henrietta_Sum02_BP	100
34746	GANSO	115	30	34774	MIDWAY	115	30	1	1	0.97	-75.07	12.6	364.25 AMPS	376.53 AMPS	Henrietta_Sum02_AP	100
34746	GANSO	115	30	34774	MIDWAY	115	30	1	1.03	0.93	-72.41	12.26	351.48 AMPS	376.53 AMPS	Henrietta_Sum02_BP	101
34746	GANSO	115	30	34774	MIDWAY	115	30	1	1	0.91	-70.53	11.6	342.12 AMPS	376.53 AMPS	Henrietta_Sum02_AP	101
34746	GANSO	115	30	34774	MIDWAY	115	30	1	1.03	0.93	-71.99	12.38	349.54 AMPS	376.53 AMPS	Henrietta_Sum02_BP	102
34746	GANSO	115	30	34774	MIDWAY	115	30	1	1	0.9	-70.11	11.72	340.17 AMPS	376.53 AMPS	Henrietta_Sum02_AP	102
34746	GANSO	115	30	34774	MIDWAY	115	30	1	1.03	0.9	-70.09	11.79	340.10 AMPS	376.53 AMPS	Henrietta_Sum02_BP	103
No violation in Case 2																
34746	GANSO	115	30	34774	MIDWAY	115	30	1	1.03	0.96	-74.41	11.03	360.29 AMPS	376.53 AMPS	Henrietta_Sum02_BP	104
34746	GANSO	115	30	34774	MIDWAY	115	30	1	1	0.93	-72.49	10.36	350.74 AMPS	376.53 AMPS	Henrietta_Sum02_AP	104
34746	GANSO	115	30	34774	MIDWAY	115	30	1	1.03	0.98	-75.8	12.09	367.50 AMPS	376.53 AMPS	Henrietta_Sum02_BP	105
34746	GANSO	115	30	34774	MIDWAY	115	30	1	1	0.95	-73.86	11.43	357.88 AMPS	376.53 AMPS	Henrietta_Sum02_AP	105
34746	GANSO	115	30	34774	MIDWAY	115	30	1	1.03	0.99	-77.16	12.91	374.60 AMPS	376.53 AMPS	Henrietta_Sum02_BP	107
34746	GANSO	115	30	34774	MIDWAY	115	30	1	1	0.97	-75.25	12.27	365.10 AMPS	376.53 AMPS	Henrietta_Sum02_AP	107

APPENDIX C

STEADY STATE POWER FLOW RESULTS - AUTOCON COMPARISON FILES FOR ISO CATEGORY B SUMMER PEAK OPERATING CONDITIONS

From Bus				To Bus												
Bus No.	Name	kV	Area	Bus No	Name	kV	Area	ID	Base	Outage	MW	MVAR	Flow	Rating	Case	Cont
34746	GANSO	115	30	34774	MIDWAY	115	30	1	1.03	0.94	-72.6	12.69	352.68 AMPS	376.53 AMPS	Henrietta_Sum02_BP	108
34746	GANSO	115	30	34774	MIDWAY	115	30	1	1	0.91	-70.71	12.03	343.22 AMPS	376.53 AMPS	Henrietta_Sum02_AP	108
34746	GANSO	115	30	34774	MIDWAY	115	30	1	1.03	0.93	-72.02	11.9	349.36 AMPS	376.53 AMPS	Henrietta_Sum02_BP	112
34746	GANSO	115	30	34774	MIDWAY	115	30	1	1	0.9	-70.13	11.24	339.98 AMPS	376.53 AMPS	Henrietta_Sum02_AP	112
34746	GANSO	115	30	34774	MIDWAY	115	30	1	1.03	0.92	-71.37	12.46	346.65 AMPS	376.53 AMPS	Henrietta_Sum02_BP	12
No violation in Case 2																
34746	GANSO	115	30	34774	MIDWAY	115	30	1	1.03	1.03	-79.48	15	387.02 AMPS	376.53 AMPS	Henrietta_Sum02_BP	120
34746	GANSO	115	30	34774	MIDWAY	115	30	1	1	1	-77.55	14.38	377.44 AMPS	376.53 AMPS	Henrietta_Sum02_AP	120
34746	GANSO	115	30	34774	MIDWAY	115	30	1	1.03	0.91	-70.26	12.14	341.12 AMPS	376.53 AMPS	Henrietta_Sum02_BP	121
No violation in Case 2																
34746	GANSO	115	30	34774	MIDWAY	115	30	1	1.03	0.91	-70.27	12.21	341.22 AMPS	376.53 AMPS	Henrietta_Sum02_BP	18
No violation in Case 2																
34746	GANSO	115	30	34774	MIDWAY	115	30	1	1.03	0.9	-70.14	11.96	340.45 AMPS	376.53 AMPS	Henrietta_Sum02_BP	20
No violation in Case 2																
34746	GANSO	115	30	34774	MIDWAY	115	30	1	1.03	0.92	-70.95	12.58	344.73 AMPS	376.53 AMPS	Henrietta_Sum02_BP	21
No violation in Case 2																
34746	GANSO	115	30	34774	MIDWAY	115	30	1	1.03	0.93	-72.65	8.62	350.59 AMPS	376.53 AMPS	Henrietta_Sum02_BP	23
34746	GANSO	115	30	34774	MIDWAY	115	30	1	1	0.9	-70.59	7.92	340.43 AMPS	376.53 AMPS	Henrietta_Sum02_AP	23
34746	GANSO	115	30	34774	MIDWAY	115	30	1	1.03	0.92	-71.16	12.37	345.60 AMPS	376.53 AMPS	Henrietta_Sum02_BP	25
No violation in Case 2																
34746	GANSO	115	30	34774	MIDWAY	115	30	1	1.03	0.95	-73.6	12.59	357.35 AMPS	376.53 AMPS	Henrietta_Sum02_BP	26
34746	GANSO	115	30	34774	MIDWAY	115	30	1	1	0.92	-71.39	11.85	346.36 AMPS	376.53 AMPS	Henrietta_Sum02_AP	26
34746	GANSO	115	30	34774	MIDWAY	115	30	1	1.03	1.08	-82.78	18.11	405.23 AMPS	376.53 AMPS	Henrietta_Sum02_BP	3
34746	GANSO	115	30	34774	MIDWAY	115	30	1	1	1.06	-81.66	17.77	399.70 AMPS	376.53 AMPS	Henrietta_Sum02_AP	3
34746	GANSO	115	30	34774	MIDWAY	115	30	1	1.03	1.04	-80.38	14.34	390.92 AMPS	376.53 AMPS	Henrietta_Sum02_BP	31

APPENDIX C

STEADY STATE POWER FLOW RESULTS - AUTOCON COMPARISON FILES FOR ISO CATEGORY B SUMMER PEAK OPERATING CONDITIONS

From Bus				To Bus												
Bus No.	Name	kV	Area	Bus No	Name	kV	Area	ID	Base	Outage	MW	MVAR	Flow	Rating	Case	Cont
34746	GANSO	115	30	34774	MIDWAY	115	30	1	1	1.01	-78.44	13.72	381.27 AMPS	376.53 AMPS	Henrietta_Sum02_AP	31
34746	GANSO	115	30	34774	MIDWAY	115	30	1	1.03	1.04	-80.38	14.34	390.92 AMPS	376.53 AMPS	Henrietta_Sum02_BP	32
34746	GANSO	115	30	34774	MIDWAY	115	30	1	1	1.01	-78.44	13.72	381.27 AMPS	376.53 AMPS	Henrietta_Sum02_AP	32
34746	GANSO	115	30	34774	MIDWAY	115	30	1	1.03	1.06	-82.01	14.63	398.89 AMPS	376.53 AMPS	Henrietta_Sum02_BP	38
34746	GANSO	115	30	34774	MIDWAY	115	30	1	1	1.03	-80.1	14	389.37 AMPS	376.53 AMPS	Henrietta_Sum02_AP	38
34746	GANSO	115	30	34774	MIDWAY	115	30	1	1.03	1.1	-85.02	14.77	413.36 AMPS	376.53 AMPS	Henrietta_Sum02_BP	39
34746	GANSO	115	30	34774	MIDWAY	115	30	1	1	1.07	-83.1	14.16	403.82 AMPS	376.53 AMPS	Henrietta_Sum02_AP	39
34746	GANSO	115	30	34774	MIDWAY	115	30	1	1.03	0.95	-73.76	12.88	358.38 AMPS	376.53 AMPS	Henrietta_Sum02_BP	4
34746	GANSO	115	30	34774	MIDWAY	115	30	1	1	0.92	-71.14	11.96	345.31 AMPS	376.53 AMPS	Henrietta_Sum02_AP	4
34746	GANSO	115	30	34774	MIDWAY	115	30	1	1.03	0.92	-71.17	12.07	345.45 AMPS	376.53 AMPS	Henrietta_Sum02_BP	40
No violation in Case 2																
34746	GANSO	115	30	34774	MIDWAY	115	30	1	1.03	0.92	-71.18	12.65	346.07 AMPS	376.53 AMPS	Henrietta_Sum02_BP	41
No violation in Case 2																
34746	GANSO	115	30	34774	MIDWAY	115	30	1	1.03	0.93	-71.94	12.95	349.97 AMPS	376.53 AMPS	Henrietta_Sum02_BP	42
34746	GANSO	115	30	34774	MIDWAY	115	30	1	1	0.9	-69.98	12.27	340.18 AMPS	376.53 AMPS	Henrietta_Sum02_AP	42
34746	GANSO	115	30	34774	MIDWAY	115	30	1	1.03	1	-77.42	13.64	376.29 AMPS	376.53 AMPS	Henrietta_Sum02_BP	5
34746	GANSO	115	30	34774	MIDWAY	115	30	1	1	0.97	-75.57	13.03	367.11 AMPS	376.53 AMPS	Henrietta_Sum02_AP	5
34746	GANSO	115	30	34774	MIDWAY	115	30	1	1.03	0.92	-70.96	12.45	344.69 AMPS	376.53 AMPS	Henrietta_Sum02_BP	56
No violation in Case 2																
34746	GANSO	115	30	34774	MIDWAY	115	30	1	1.03	0.92	-71.82	11.71	348.27 AMPS	376.53 AMPS	Henrietta_Sum02_BP	64
34746	GANSO	115	30	34774	MIDWAY	115	30	1	1	0.9	-69.95	11.06	338.98 AMPS	376.53 AMPS	Henrietta_Sum02_AP	64
34746	GANSO	115	30	34774	MIDWAY	115	30	1	1.03	0.93	-72.16	12.11	350.19 AMPS	376.53 AMPS	Henrietta_Sum02_BP	65
34746	GANSO	115	30	34774	MIDWAY	115	30	1	1	0.91	-70.29	11.45	340.84 AMPS	376.53 AMPS	Henrietta_Sum02_AP	65
34746	GANSO	115	30	34774	MIDWAY	115	30	1	1.03	0.93	-71.95	12.01	349.12 AMPS	376.53 AMPS	Henrietta_Sum02_BP	66
34746	GANSO	115	30	34774	MIDWAY	115	30	1	1	0.9	-70.08	11.35	339.79 AMPS	376.53 AMPS	Henrietta_Sum02_AP	66

APPENDIX C

STEADY STATE POWER FLOW RESULTS - AUTOCON COMPARISON FILES FOR ISO CATEGORY B SUMMER PEAK OPERATING CONDITIONS

From Bus				To Bus												
Bus No.	Name	kV	Area	Bus No	Name	kV	Area	ID	Base	Outage	MW	MVAR	Flow	Rating	Case	Cont
34746	GANSO	115	30	34774	MIDWAY	115	30	1	1.03	0.91	-70.93	11.43	343.85 AMPS	376.53 AMPS	Henrietta_Sum02_BP	79

APPENDIX C

STEADY STATE POWER FLOW RESULTS - AUTOCON COMPARISON FILES FOR SPRING NORMAL OPERATING CONDITIONS

From Bus				To Bus										
Bus No.	Name	kV	Area	Bus No	Name	kV	Area	ID	MW	MVAR	Loading PU	Flow	Rating	Case
30515	WARNERVL	230	30	30795	STOREY 2	230	30	1	234	-3	0.91	579 AMPS	636.09 AMPS	Henrietta_Spr03_BP
No violation in Case 2.														
34540	HENRITTA	70	30	34587	GWF_HENR	70	30	1	98	-24	0.98	805 AMPS	824.79 AMPS	Henrietta_Spr03_AP
No violation in Case 1.														

APPENDIX C

STEADY STATE POWER FLOW RESULTS - AUTOCON COMPARISON FILES FOR ISO CATEGORY B SPRING OPERATING CONDITIONS

From Bus				To Bus												
Bus No.	Name	kV	Area	Bus No	Name	kV	Area	ID	Base	Outage	MW	MVAR	Flow	Rating	Case	Cont

No violations in Case 1.
No violations in Case2.

APPENDIX C

STEADY STATE POWER FLOW RESULTS - AUTOCON COMPARISON FILES FOR NORMAL SUMMER OFF PEAK OPERATING CONDITIONS

From Bus				To Bus										
Bus No.	Name	kV	Area	Bus No	Name	kV	Area	ID	MW	MVAR	P.U.	Flow	Rating	Case
31636	BURNEY	60	30	31638	BURNEYQF	60	30	1	-10	3	0.94**	95 AMPS	101.04 AMPS	Henrietta_Sum02OP_BP
31636	BURNEY	60	30	31638	BURNEYQF	60	30	1	-10	3	0.94**	95 AMPS	101.04 AMPS	Henrietta_Sum02OP_AP
35907	PAUL SWT	115	30	36218	M	115	30	1	0	40	0.92**	40 MVA	43.00 MVA	Henrietta_Sum02OP_BP
35907	PAUL SWT	115	30	36218	M	115	30	1	0	40	0.93**	40 MVA	43.00 MVA	Henrietta_Sum02OP_AP

APPENDIX C

STEADY STATE POWER FLOW RESULTS - AUTOCON COMPARISON FILES FOR ISO CATEGORY B SUMMER OFF PEAK OPERATING CONDITIONS

	From Bus				To Bus											
Bus No.	Name	kV	Area	Bus No	Name	kV	Area	ID	Base	Outage	MW	MVAR	Flow	Rating	Case	Cont

No violations in Case 1.
No violations in Case2.

Appendix D

Steady State Power Flow Plots

Plot	**Description**
Plot #1	Without GWF Henrietta –Summer '02, MW/MVAR Base case, all facilities in service.
Plot #2	Without GWF Henrietta –Summer '02, Amps/ %(of MVA1 rating) Base case, all facilities in service.
Plot #3	With GWF Henrietta –Summer '02, MW/MVAR Base case, all facilities in service.
Plot #4	With GWF Henrietta –Summer '02, Amps/ %(of MVA1 rating) Base case, all facilities in service.
Plot #5	Without GWF Henrietta –Spring '03, MW/MVAR Base case, all facilities in service.
Plot #6	Without GWF Henrietta –Spring '03, Amps/ %(of MVA1 rating) Base case, all facilities in service.
Plot #7	With GWF Henrietta –Spring '03, MW/MVAR Base case, all facilities in service.
Plot #8	With GWF Henrietta –Spring '03, Amps/ %(of MVA1 rating) Base case, all facilities in service.
Plot #9	With GWF Henrietta –Summer '02, Amps/ %(of MVA2 rating) B outage: Guernsey-Henrietta 70 kV (no overloads).
Plot #10	With GWF Henrietta –Summer '02, Amps/ %(of MVA2 rating) B outage: Henrietta-Lemoore 70 kV (no overloads).
Plot #11	With GWF Henrietta –Summer '02, Amps/ %(of MVA2 rating) B outage: Henrietta-Kingsburg 115 kV (no overloads).
Plot #12	With GWF Henrietta –Summer '02, Amps/ %(of MVA2 rating) B outage: Gates-Gregg 230 kV (no overloads).
Plot #13	With GWF Henrietta –Summer '02, Amps/ %(of MVA2 rating) B outage: Gates-McCall 230 kV (no overloads).
Plot #14	With GWF Henrietta –Summer '02, Amps/ %(of MVA2 rating) B outage: Henrietta 230/115 kV #3 (no overloads).
Plot #15	Without GWF Henrietta –Summer Off Peak' 02, MW/MVAR Base case, all facilities in service.
Plot #16	Without GWF Henrietta –Summer Off Peak '02, Amps/ %(of MVA1 rating) Base case, all facilities in service.
Plot #17	With GWF Henrietta –Summer Off Peak '02, MW/MVAR Base case, all facilities in service.
Plot #18	With GWF Henrietta –Summer Off Peak '02, Amps/ %(of MVA1 rating) Base case, all facilities in service.

GWF Henrietta Peaker Project S.I.S.

Before-Project

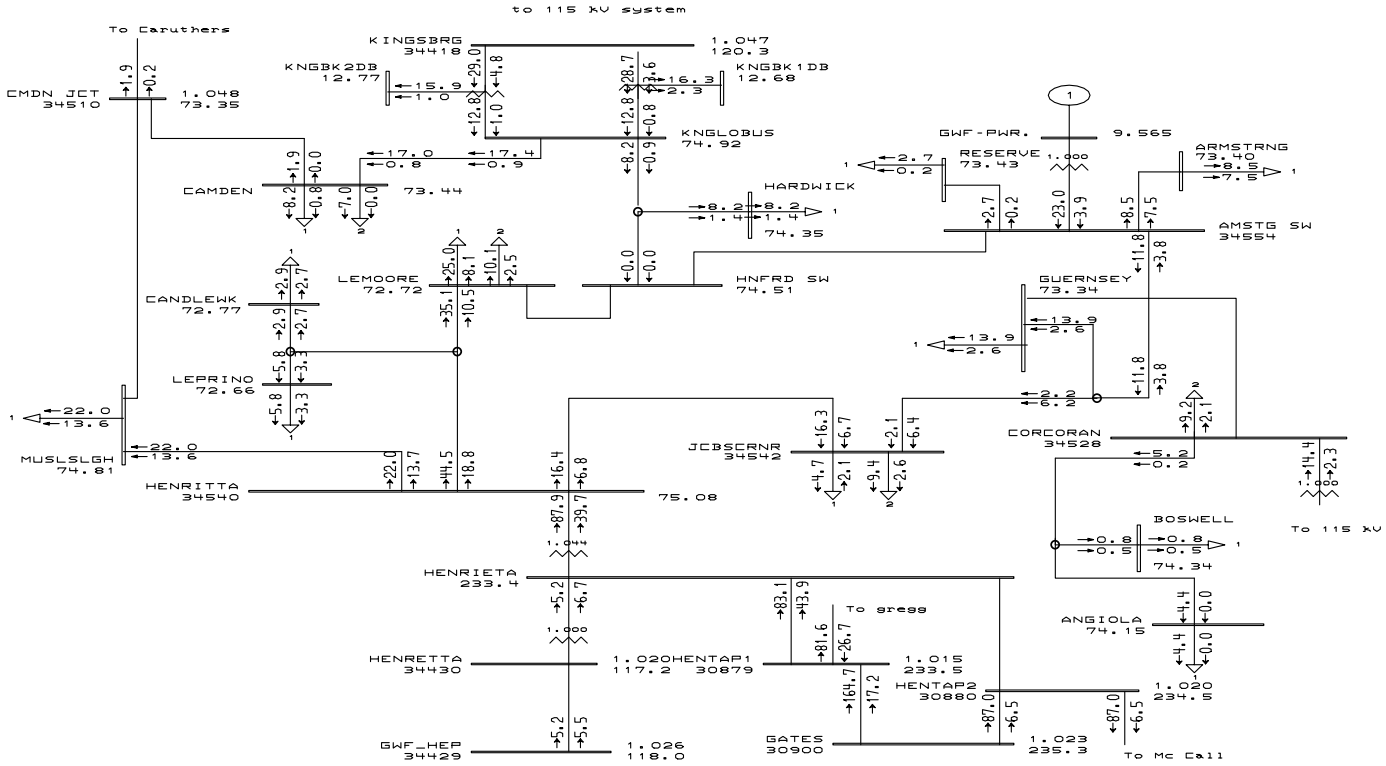

GWF Henrietta Peaker Project S. I. S.

Before-Project

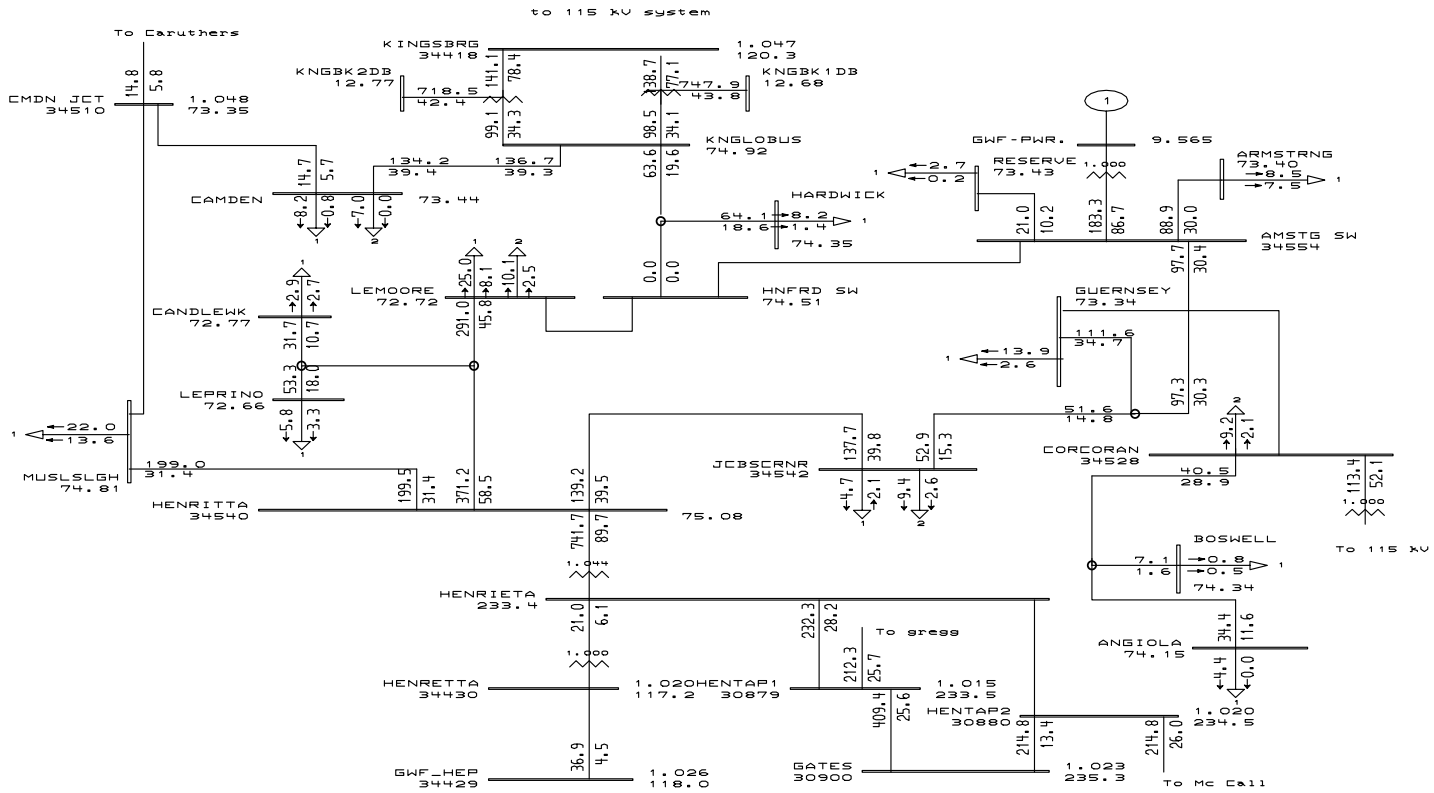

PLOT #2

General Electric International, Inc. PSLF Program AMPS/Pct Tue Jun 12 22:19:05 2001

GENERAL ELECTRIC COMPANY

PG&E 2001 TRANSMISSION ASSESSMENT STUDY
2002SUMPK AREA 6 CASE: COI=4880MW (n2s), P26=2500MW (n2s)
1-IN-10 FORECAST; PG&E AREA LOADS/LOSSES=25,500MW; 3/6/2001

files\henrietta_bp.drw
files\sum2002a6_henrietta_befo
Rating = 1

GWF Henrietta Peaker Project S. I. S.

After-Project

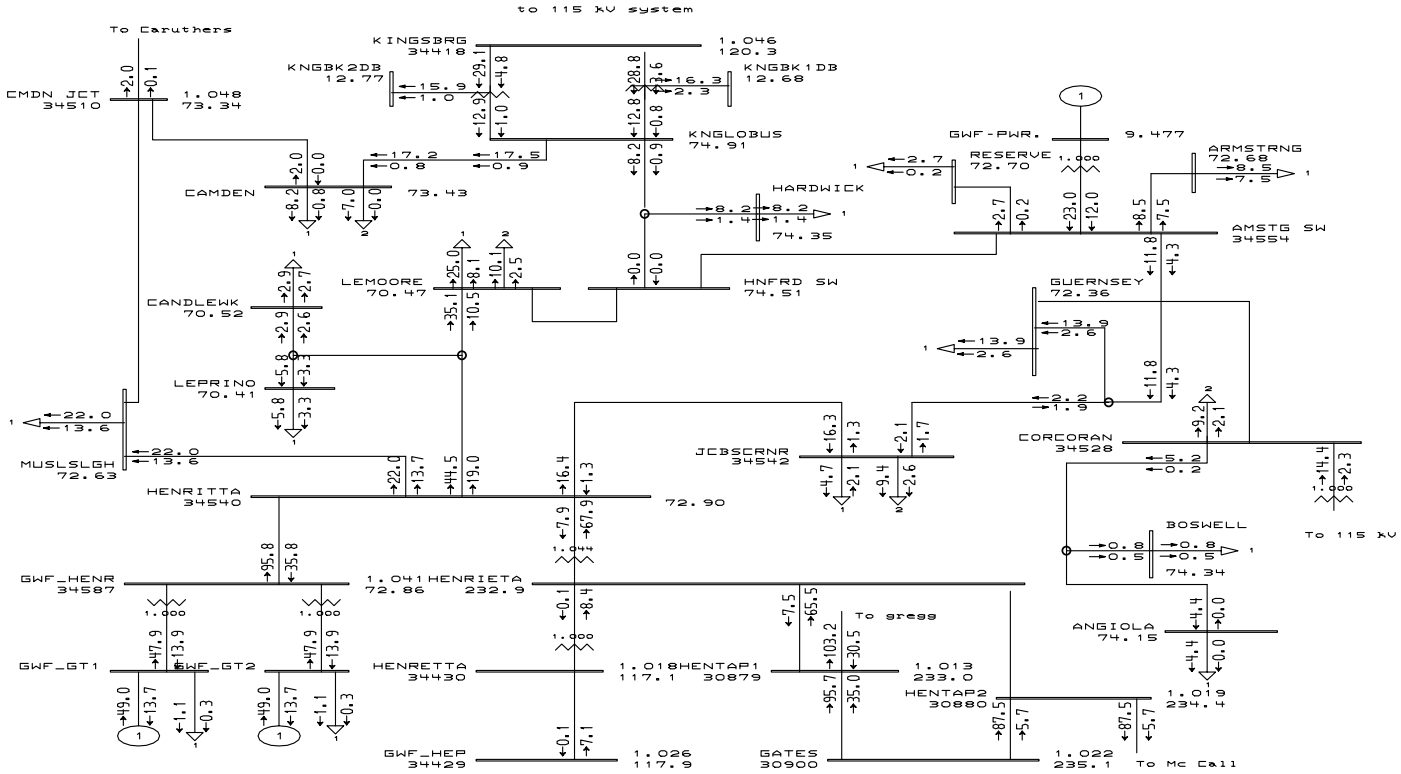

PLOT #3

General Electric International, Inc. PSLF Program MW/MVAR Tue Jun 12 22:29:27 2001

GENERAL ELECTRIC COMPANY

PG&E 2001 TRANSMISSION ASSESSMENT STUDY
2002SUMPK AREA 6 CASE: COI=4880MW (n2s), P26=2500MW (n2s)
1-IN-10 FORECAST; PG&E AREA LOADS/LOSSES=25,500MW; 3/6/2001

files\henrietta_ap.drw
files\sum2002a6_henrietta_afte
Rating = 1

GWF Henrietta Peaker Project S. I. S.

After-Project

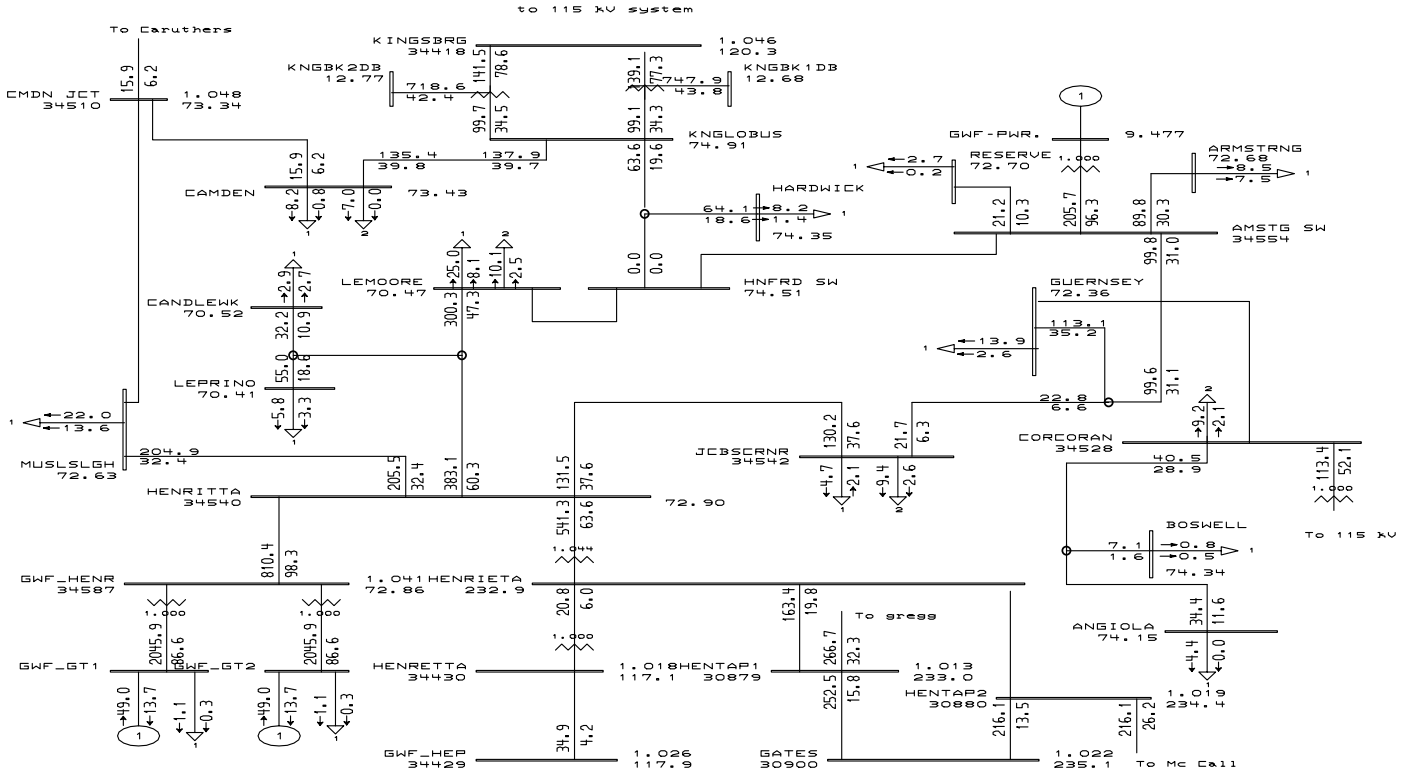

PLOT #4

General Electric International, Inc. PSLF Program AMPS/Pct Tue Jun 12 22:32:37 2001

GENERAL ELECTRIC COMPANY

PG&E 2001 TRANSMISSION ASSESSMENT STUDY
2002SUMPK AREA 6 CASE: COI=4880MW (n2s), P26=2500MW (n2s)
1-IN-10 FORECAST; PG&E AREA LOADS/LOSSES=25,500MW; 3/6/2001

files\henrietta_ap.drw
files\sum2002a6_henrietta_afte
Rating = 1

GWF Henrietta Peaker Project S. I. S.

Before-Project

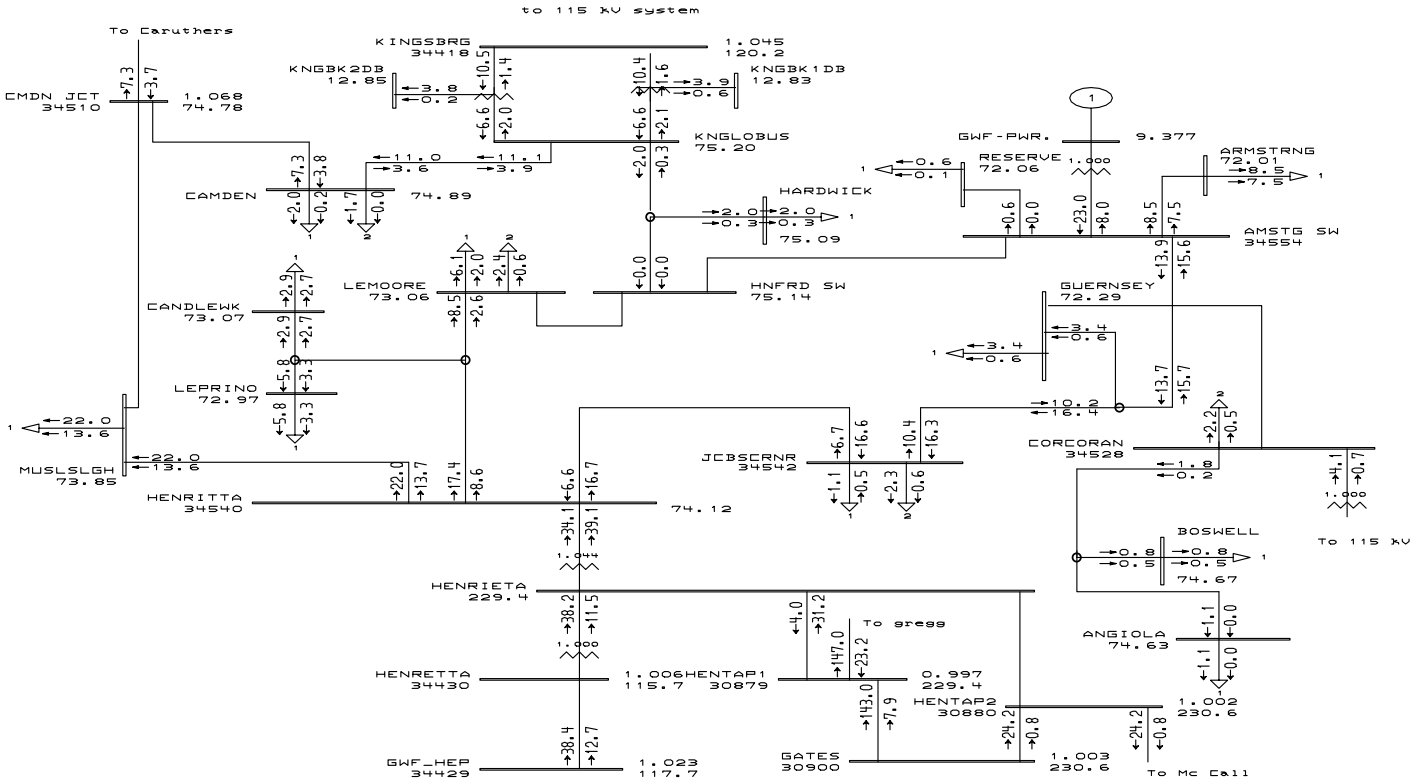

PLOT #5

General Electric International, Inc. PSLF Program MW/MVAR Tue Jun 12 22:35:20 2001

GENERAL ELECTRIC COMPANY

PG&E 2001 TRANSMISSION ASSESSMENT STUDY
2003 SPRING OFF PEAK CASE

files\henrietta_bp.drw
files\spop2003_henrietta_befor
Rating = 1

GWF Henrietta Peaker Project S. I. S.

Before-Project

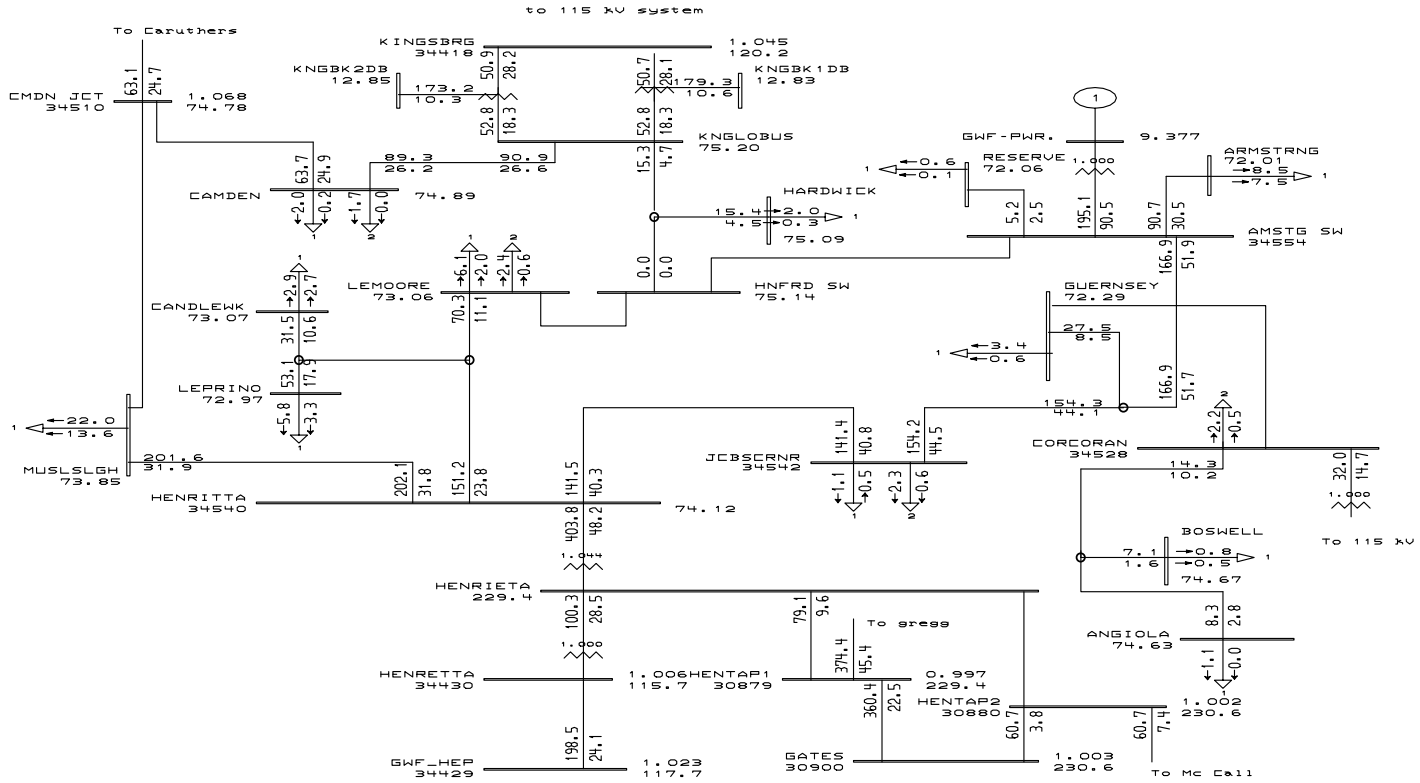

PLOT #6

General Electric International, Inc. PSLF Program AMPS/Pct Tue Jun 12 22:36:35 2001

GENERAL ELECTRIC COMPANY

PG&E 2001 TRANSMISSION ASSESSMENT STUDY
2003 SPRING OFF PEAK CASE

files\henrietta_bp.drw
files\spop2003_henrietta_befor
Rating = 1

GWF Henrietta Peaker Project S. I. S.

After-Project

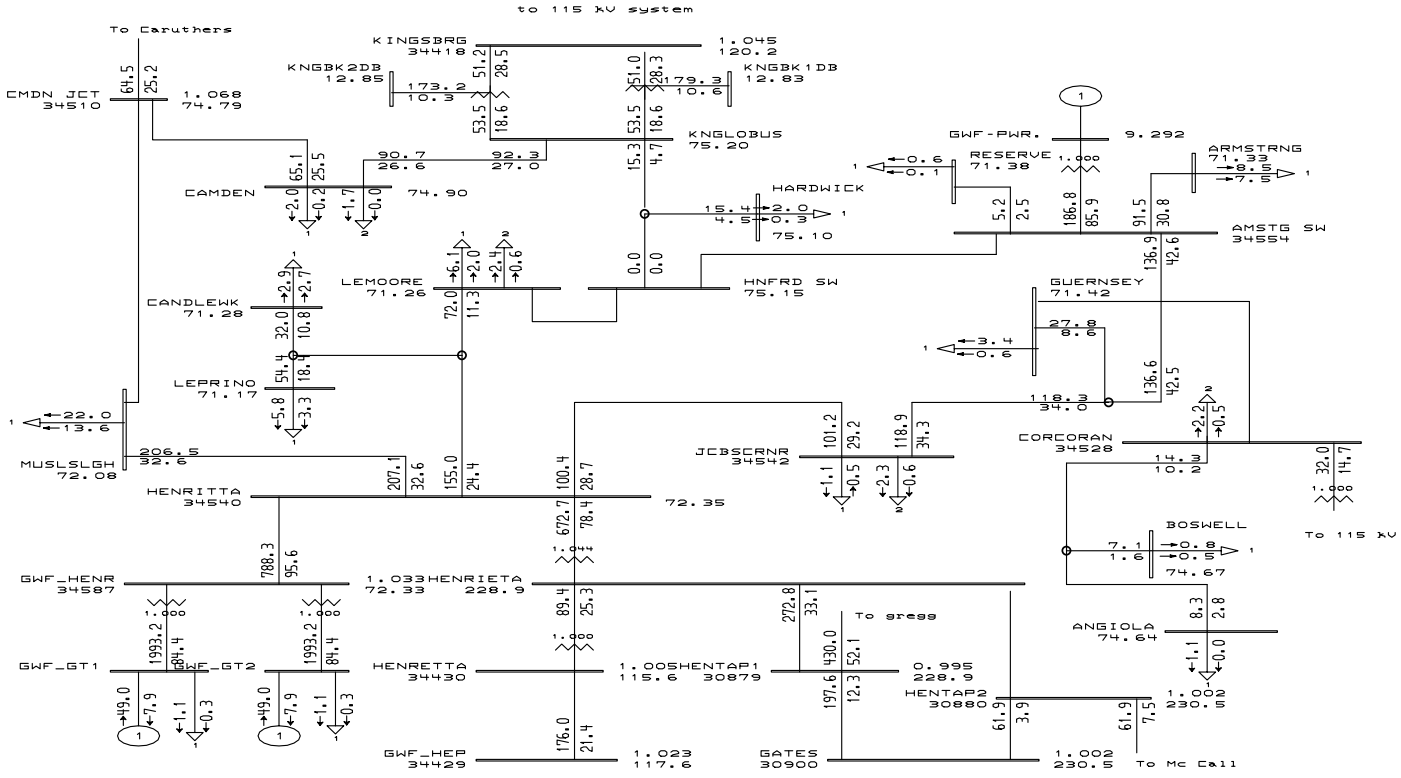

PLOT #7

General Electric International, Inc. PSLF Program AMPS/Pct Tue Jun 12 22:39:14 2001

GENERAL ELECTRIC COMPANY

PG&E 2001 TRANSMISSION ASSESSMENT STUDY
2003 SPRING OFF PEAK CASE

files\henrietta_ap.drw
files\spop2003_henrietta_after
Rating = 1

GWF Henrietta Peaker Project S. I. S.

After-Project

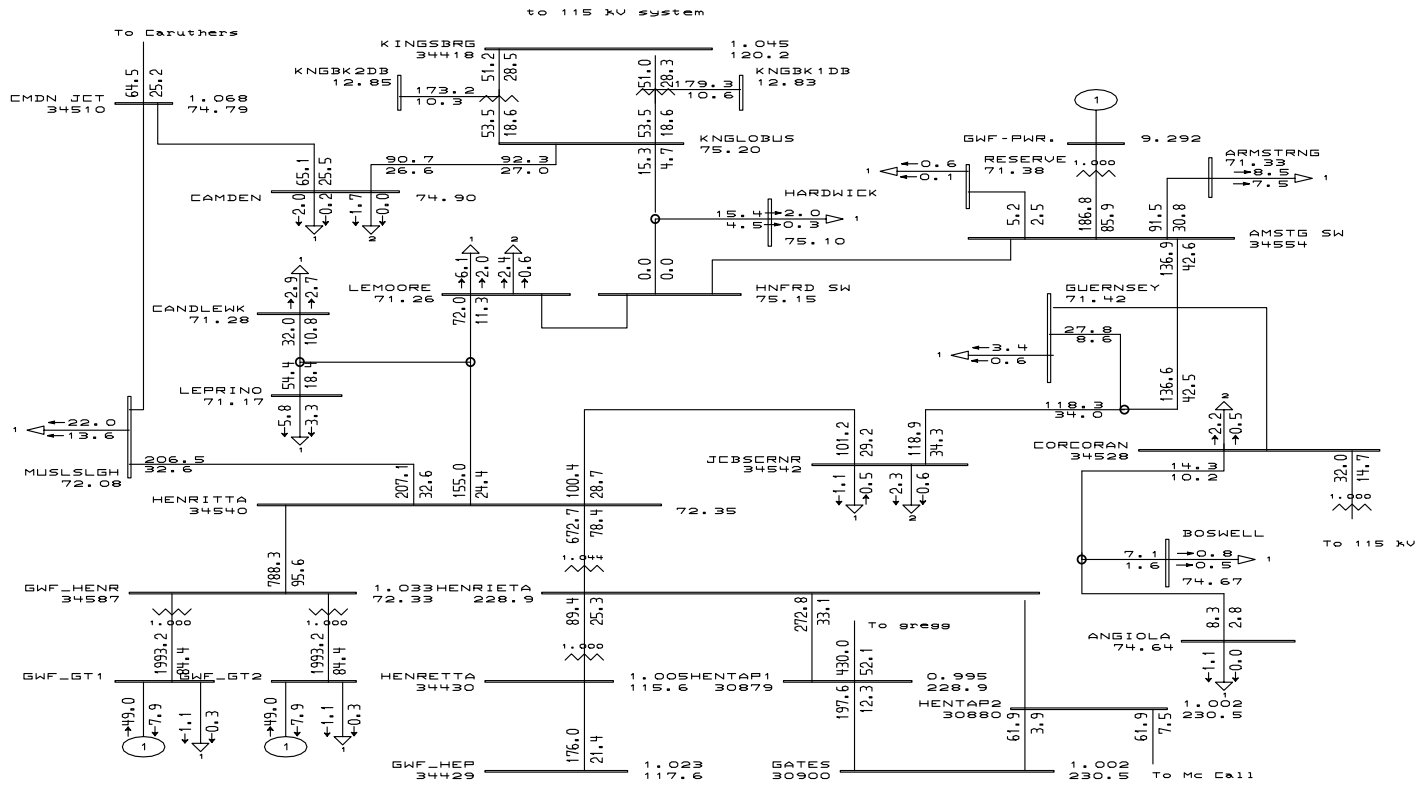

PLOT #8

General Electric International, Inc. PSLF Program AMPS/Pct Tue Jun 12 22:40:32 2001

GENERAL ELECTRIC COMPANY

PG&E 2001 TRANSMISSION ASSESSMENT STUDY
2003 SPRING OFF PEAK CASE

files\henrietta_ap.drw
files\spop2003_henrietta_after
Rating = 1

GWF Henrietta Peaker Project S. I. S.

After-Project

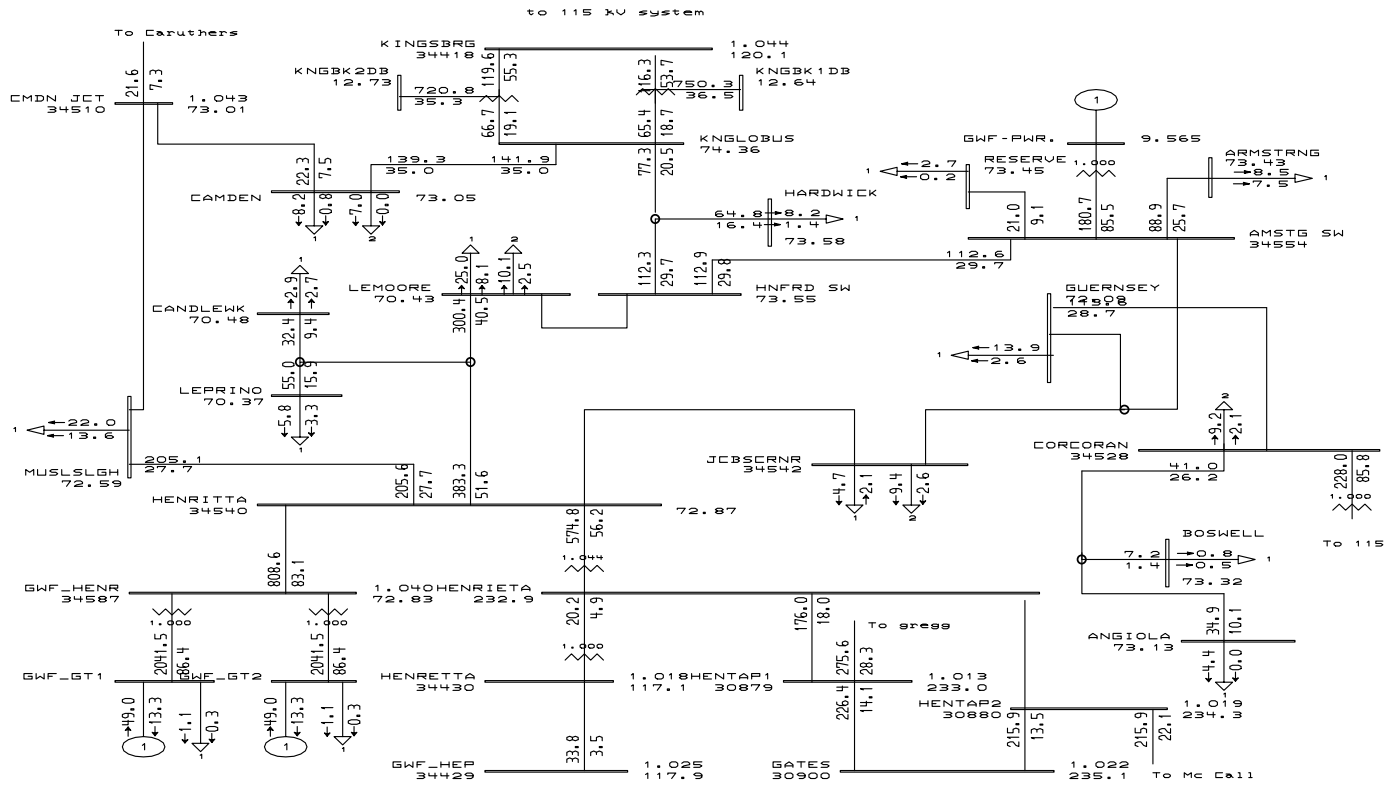

PLOT #9

General Electric International, Inc. PSLF Program AMPS/Pct Tue Jun 12 22:45:27 2001

GENERAL ELECTRIC COMPANY

PG&E 2001 TRANSMISSION ASSESSMENT STUDY
2002SUMPK AREA 6 CASE: C01=4880MW (n2s), P26=2500MW (n2s)
1-IN-10 FORECAST; PG&E AREA LOADS/LOSSES=25,500MW; 3/6/2001

files\henrietta_ap.drw
files\sum2002a6_henrietta_afte
Rating = 2

GWF Henrietta Peaker Project S. I. S.

After-Project

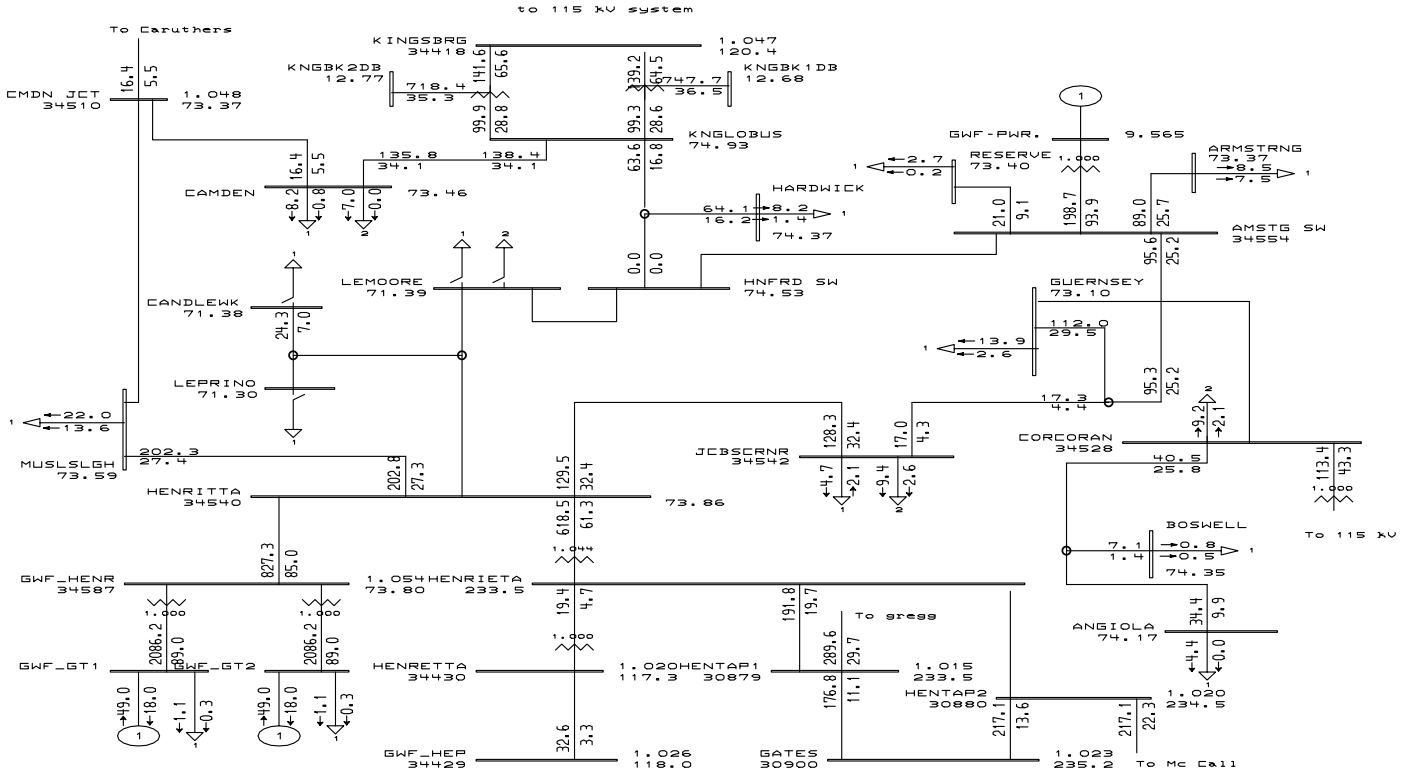

PLOT # 10

General Electric International, Inc. PSLF Program AMPS/Pct Tue Jun 12 22:50:44 2001

GENERAL ELECTRIC COMPANY

PG&E 2001 TRANSMISSION ASSESSMENT STUDY
2002SUMPK AREA 6 CASE: COI=4880MW (n2s), P26=2500MW (n2s)
1-IN-10 FORECAST; PG&E AREA LOADS/LOSSES=25,500MW; 3/6/2001

files\henrietta_ap.drw
files\sum2002a6_henrietta_afte
Rating = 2

GWF Henrietta Peaker Project S. I. S.

After-Project

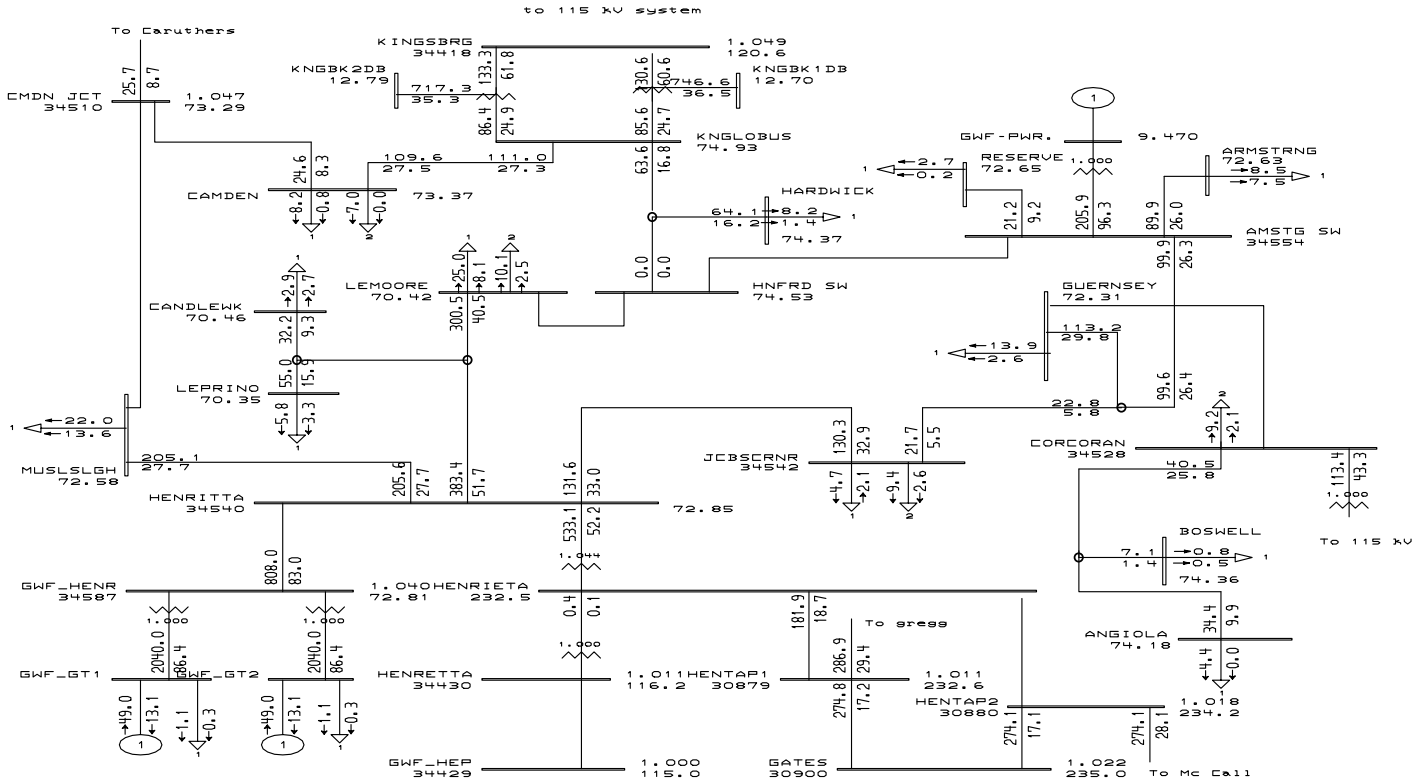

PLOT # 11

General Electric International, Inc. PSLF Program AMPS/Pct Tue Jun 12 22:55:24 2001

GENERAL ELECTRIC COMPANY

PG&E 2001 TRANSMISSION ASSESSMENT STUDY
2002SUMPK AREA 6 CASE: COI=4880MW (n2s), P26=2500MW (n2s)
1-IN-10 FORECAST; PG&E AREA LOADS/LOSSES=25,500MW; 3/6/2001

files\henrietta_ap.drw
files\sum2002a6_henrietta_afte
Rating = 2

GWF Henrietta Peaker Project S. I. S.

After-Project

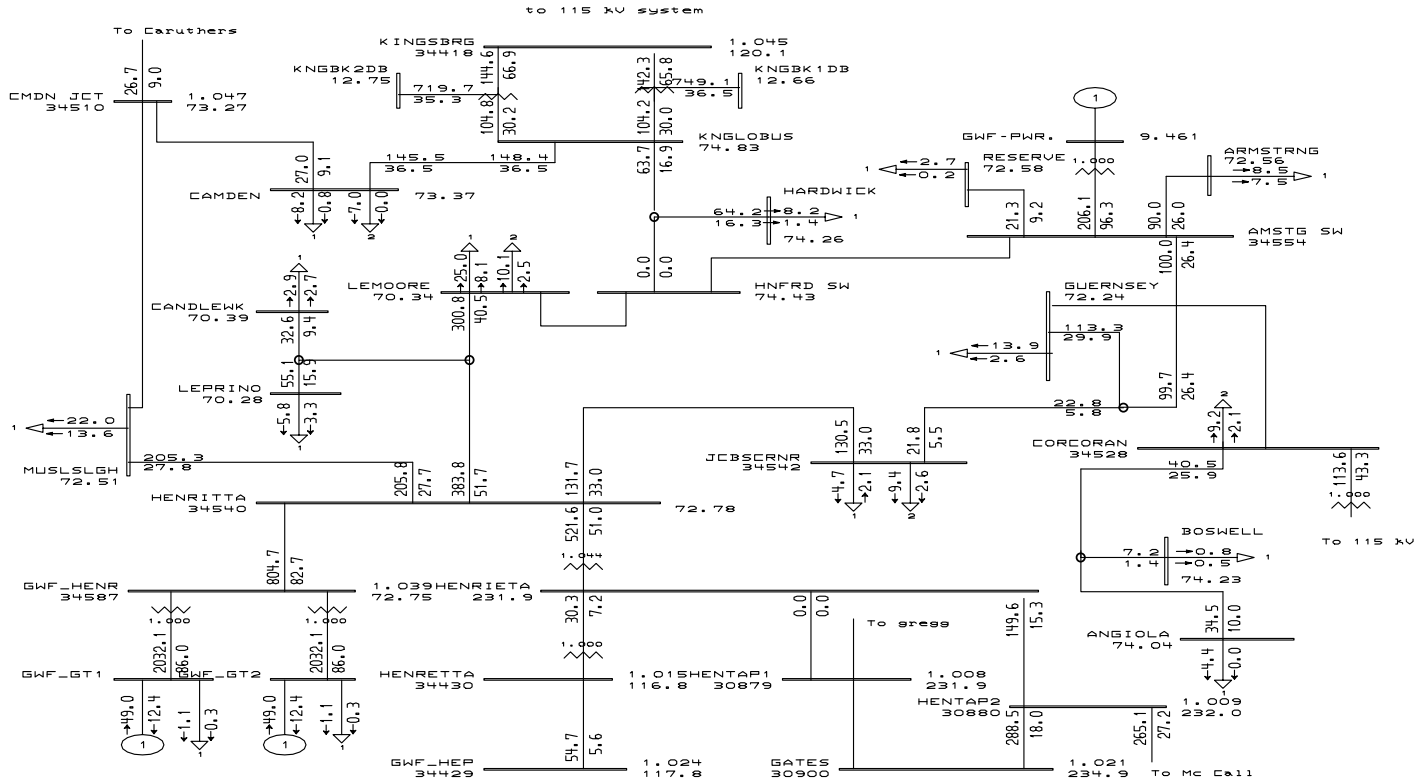

PLOT # 12

General Electric International, Inc. PSLF Program AMPS/Pct Tue Jun 12 23:01:20 2001

GENERAL ELECTRIC COMPANY

PG&E 2001 TRANSMISSION ASSESSMENT STUDY
2002SUMPK AREA 6 CASE: EOI=4880MW (n2s), P26=2500MW (n2s)
1-IN-10 FORECAST; PG&E AREA LOADS/LOSSES=25,500MW; 3/6/2001

files\henrietta_ap.drw
files\sum2002a6_henrietta_afte
Rating = 2

GWF Henrietta Peaker Project S. I. S.

After-Project

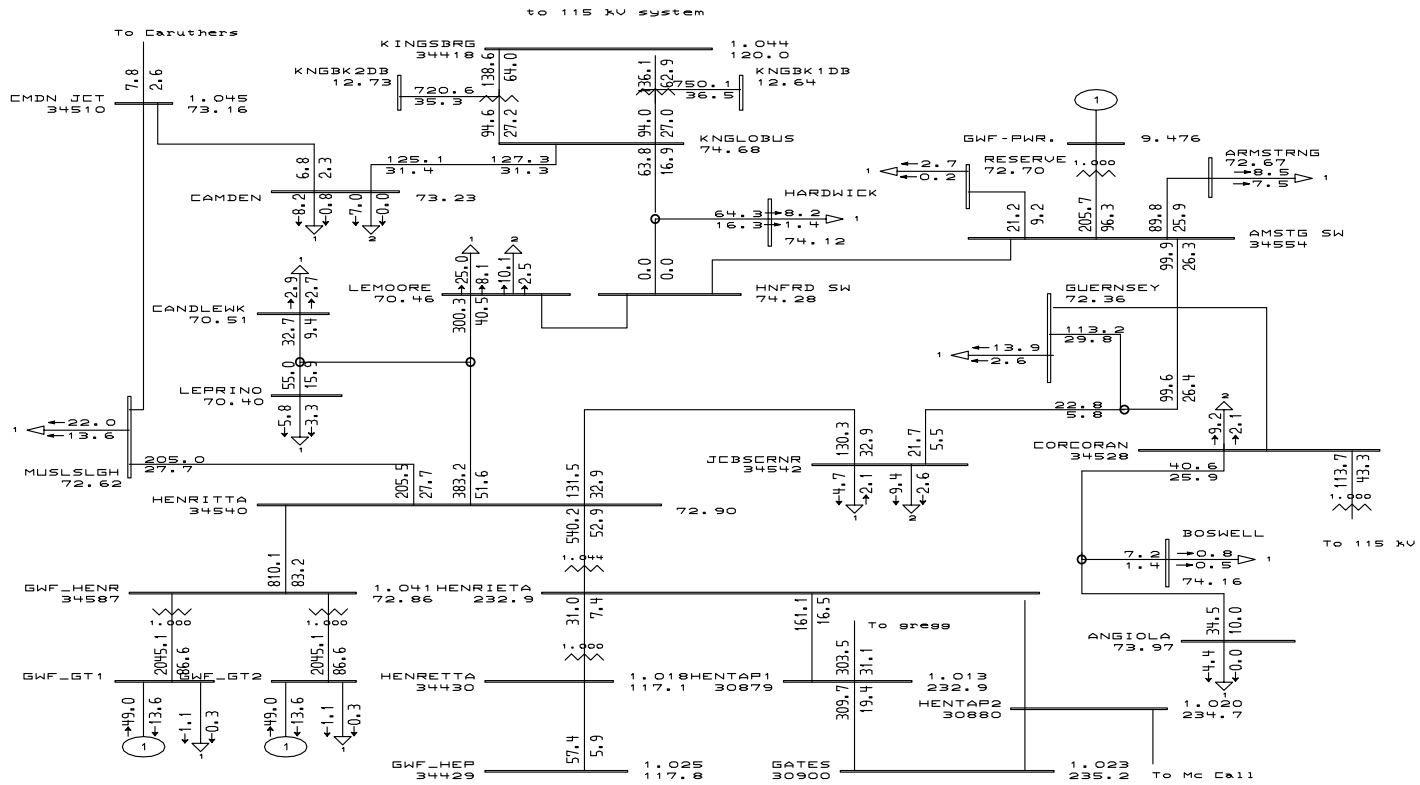

PLOT # 13

General Electric International, Inc. PSLF Program AMPS/Pct Tue Jun 12 23:03:50 2001

GENERAL ELECTRIC COMPANY

PG&E 2001 TRANSMISSION ASSESSMENT STUDY
2002SUMPK AREA 6 CASE: CO1=4880MW (n2s), P26=2500MW (n2s)
1-IN-10 FORECAST; PG&E AREA LOADS/LOSSES=25,500MW; 3/6/2001

files\henrietta_ap.drw
files\sum2002a6_henrietta_afte
Rating = 2

GWF Henrietta Peaker Project S. I. S.

After-Project

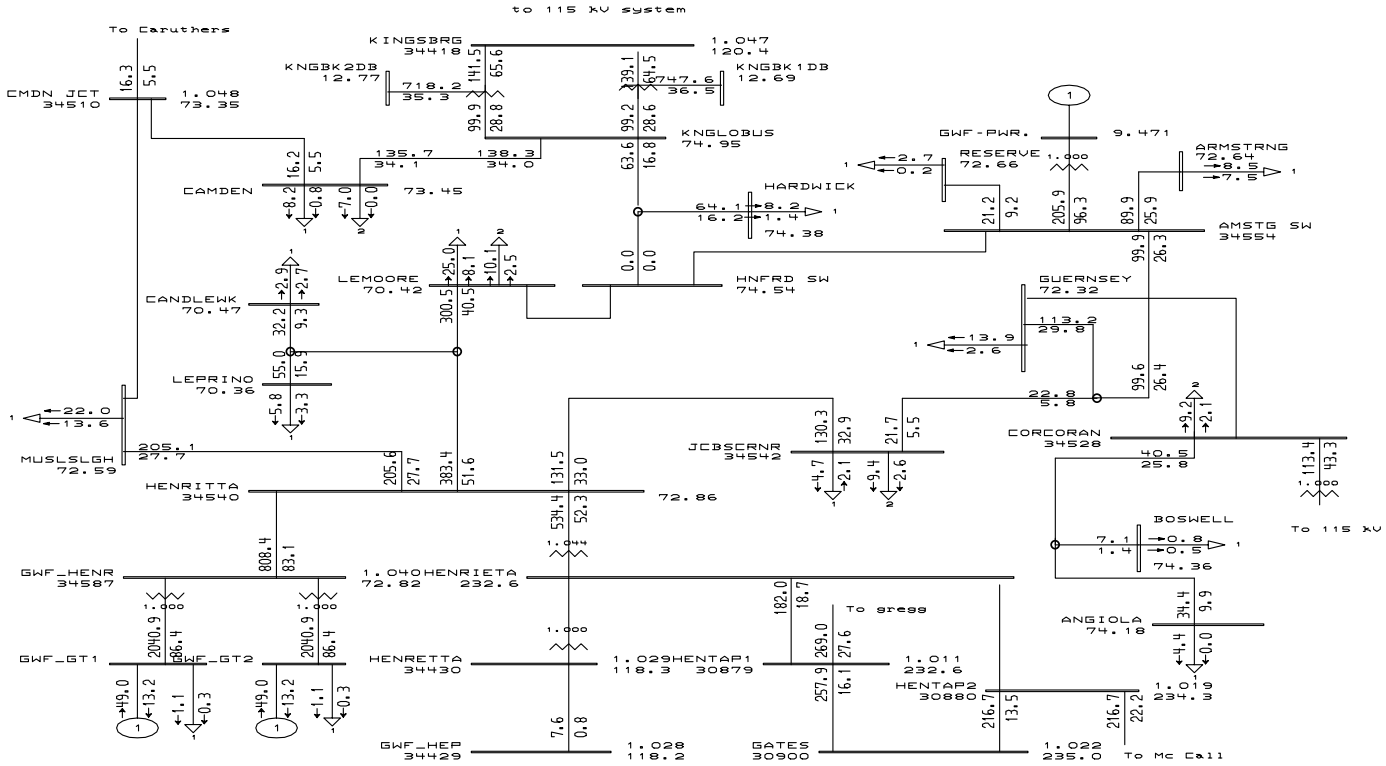

PLOT # 14

General Electric International, Inc. PSLF Program AMPS/Pct Tue Jun 12 23:07:23 2001

GENERAL ELECTRIC COMPANY

PG&E 2001 TRANSMISSION ASSESSMENT STUDY
2002SUMPK AREA 6 CASE: COI=4880MW (n2s), P26=2500MW (n2s)
1-IN-10 FORECAST; PG&E AREA LOADS/LOSSES=25,500MW; 3/6/2001

files\henrietta_ap.drw
files\sum2002a6_henrietta_afte
Rating = 2

GWF Henrietta Peaker Project S. I. S.

Before-Project

PG&E Gen MW 12884.04
PG&E Load MW 12496.67

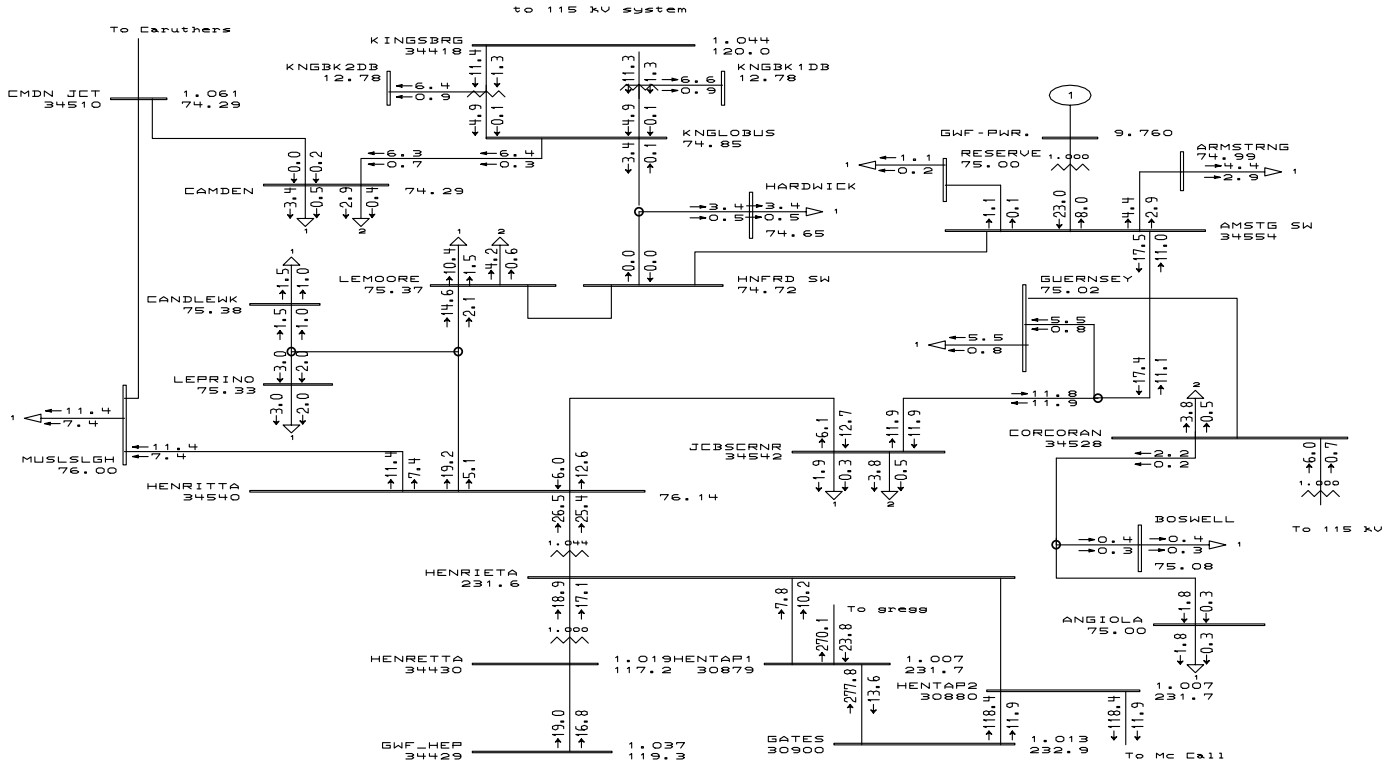

General Electric International, Inc. PSLF Program MW/MVAR Sun Aug 05 20:31:27 2001

GENERAL ELECTRIC COMPANY

PG&E 2001 SUMMER OFF-PEAK CASE
GWF HENRIETTA PEAKER PROJECT 96 MW - SUMMER OFF-PEAK - BEFORE PROJECT

files\henrietta_bp.drw
files\2001sumoffpk_gwfhenriett
Rating = 1

GWF Henrietta Peaker Project S. I. S.

Before-Project

PG&E Gen MW 12884.04
PG&E Load MW 12496.67

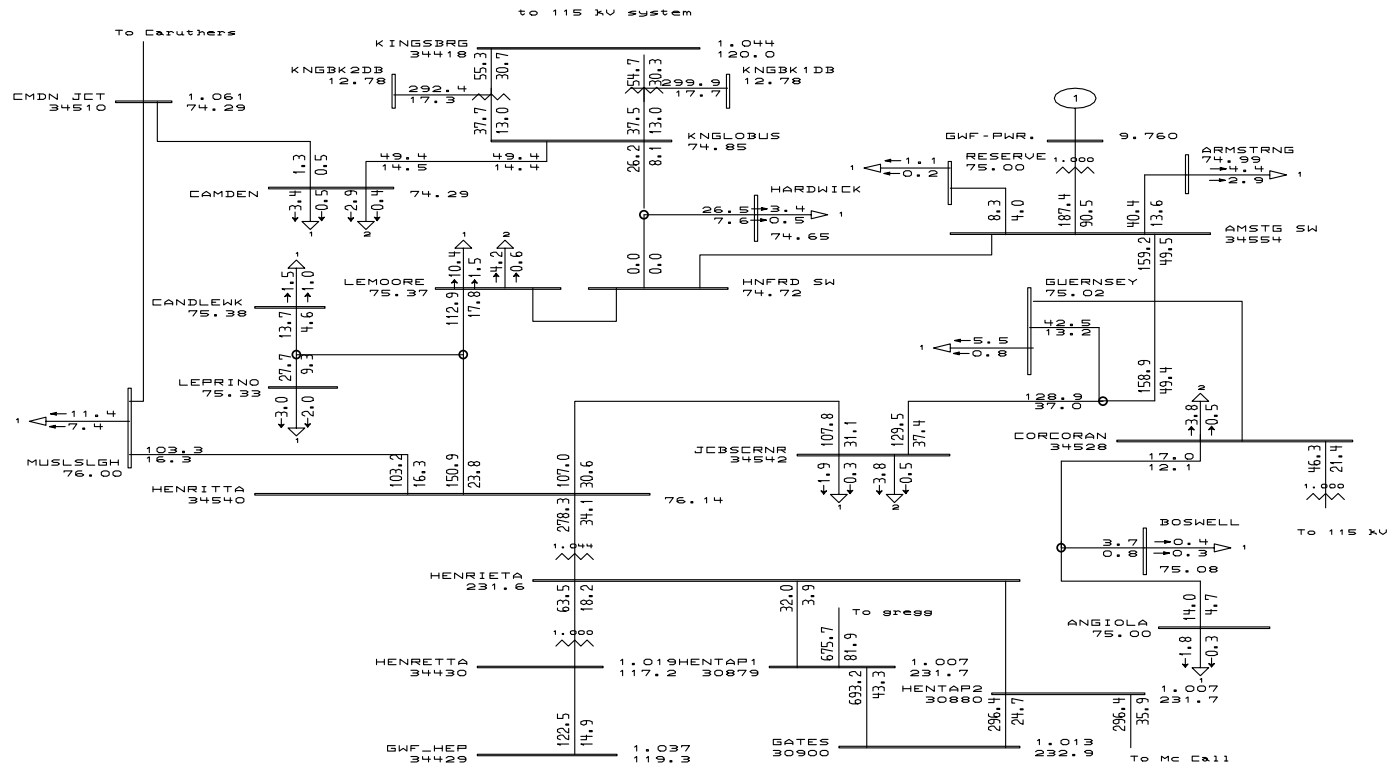

General Electric International, Inc. PSLF Program AMPS/Pct Sun Aug 05 20:34:02 2001

GENERAL ELECTRIC COMPANY

PG&E 2001 SUMMER OFF-PEAK CASE
GWF HENRIETTA PEAKER PROJECT 96 MW - SUMMER OFF-PEAK - BEFORE PROJECT

files\henrietta_bp.drw
files\2001sumoffpk_gwfhenriett
Rating = 1

GWF Henrietta Peaker Project S. I. S.

PG&E Gen MW 12887.56
PG&E Load MW 12498.87

After-Project

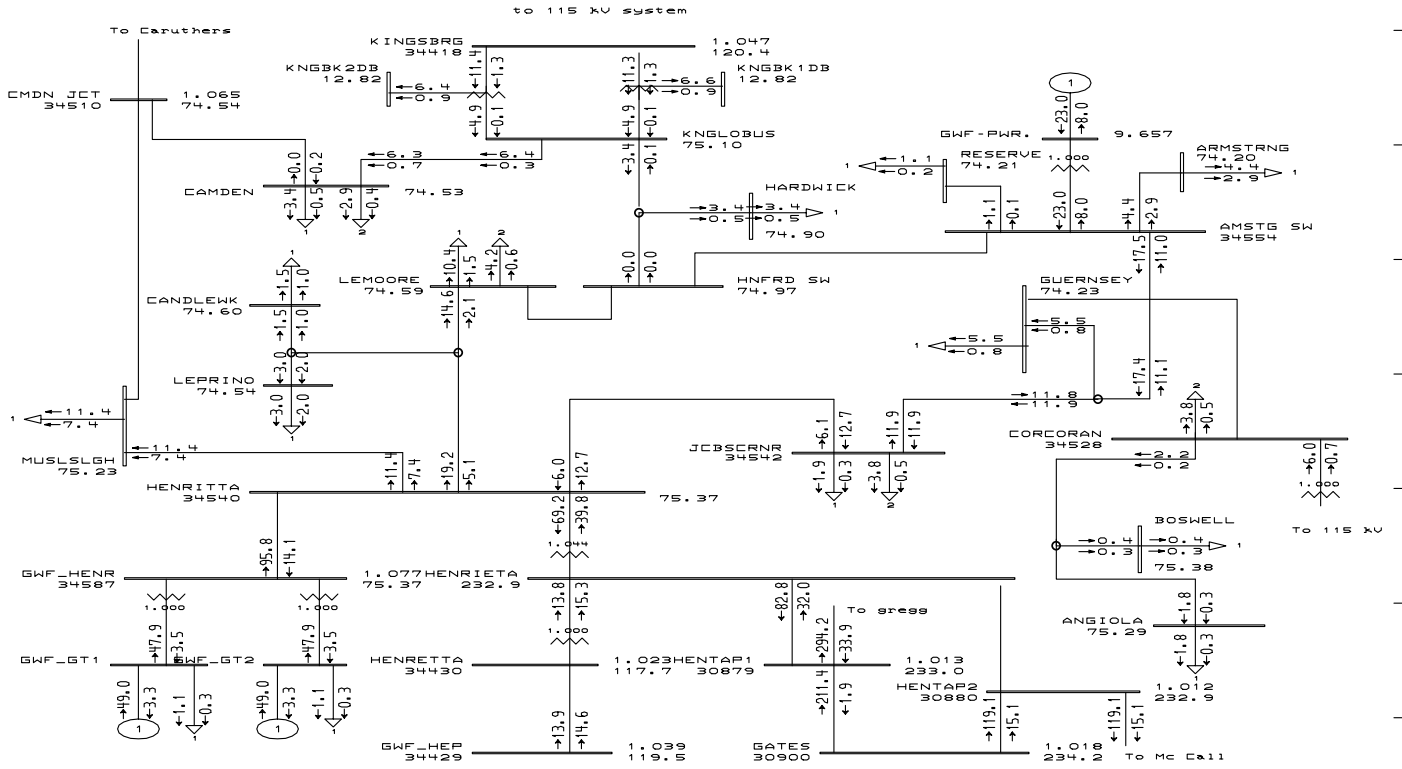

General Electric International, Inc. PSLF Program MW/MVAR Sun Aug 05 20:07:41 2001

GENERAL ELECTRIC COMPANY

PG&E 2001 SUMMER OFF-PEAK CASE
GWF HENRIETTA PEAKER PROJECT 96 MW - SUMMER OFF-PEAK - AFTER PROJECT

files\henrietta_ap.drw
files\2001sumoffpk_gwfhenriett
Rating = 1

GWF Henrietta Peaker Project S. I. S.

PG&E Gen MW 12887.56
PG&E Load MW 12498.87

After-Project

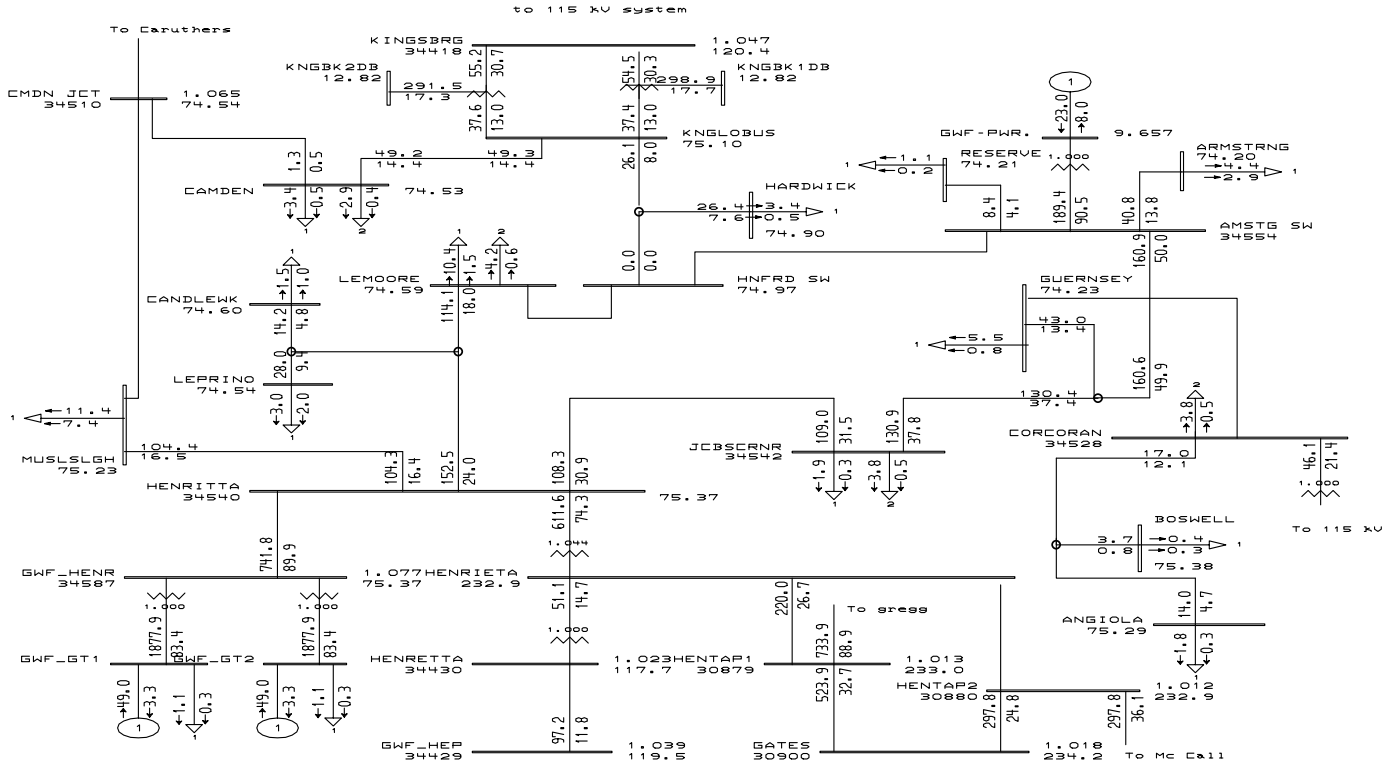

General Electric International, Inc. PSLF Program AMPS/Pct Sun Aug 05 20:09:01 2001

GENERAL ELECTRIC COMPANY

PG&E 2001 SUMMER OFF-PEAK CASE
GWF HENRIETTA PEAKER PROJECT 96 MW - SUMMER OFF-PEAK - AFTER PROJECT

files\henrietta_ap.drw
files\2001sumoffpk_gwfhenriett
Rating = 1

Appendix E

Generator Machine Dynamic Data

Model Name: gast

Description: Single shaft gas turbine

Invocation: gast [<n>] {<name> <kv>} <id> : [mwcap=<value>]

Parameters:

Variable	*Description*	***PROJECT DATA*** *(see note 1)*
r	Permanent droop, pu	**0.0500**
t1	Governor mechanism time constant, sec	0.4000
t2	Turbine power time constant, sec	0.5000
t3	Turbine exhaust temp. time constant, sec	3.0000
lmax	Ambient temperature load limit	1.0000
kt	Temperature limiter gain	3.0000
vmax	Maximum turbine power, pu of mwcap	1.5000
vmin	Minimum turbine power, pu of mwcap	0.0000
dturb	Turbine damping coefficient, pu [NOT USED}	
fidle	Fuel flow at zero power output, pu	0.2000
rmax	Maximum fuel valve opening rate, pu/sec	0.0100
linc	Valve position change allowed at fast rate,pu	0.0500
tltr	Valve pos. averaging time constant, sec	5.000
ltrate	Max. long term fuel valve rate,pu/sec	0.0050
a	Turb.pwr t-const. numerator scale factor	0.0000
b	Turb.pwr t-const. denominator scale factor	1.0000
db1	Intentional deadband width, Hz.	0.0000
eps	Intentional db hysteresis, Hz.	0.0000
db2	Unintentional deadband, MW	0.0000
gv1	Nonlinear gain point 1, p.u. gv	0.0000
pgv1	Nonlinear gain point 1, p.u. power	0.0000
gv2	Nonlinear gain point 2, p.u. gv	0.0000
pgv2	Nonlinear gain point 2, p.u. power	0.0000
gv3	Nonlinear gain point 3, p.u. gv	0.0000
pgv3	Nonlinear gain point 3, p.u. power	0.0000
gv4	Nonlinear gain point 4, p.u. gv	0.0000
pgv4	Nonlinear gain point 4, p.u. power	0.0000
gv5	Nonlinear gain point 5, p.u. gv	0.0000
pgv5	Nonlinear gain point 5, p.u. power	0.0000
gv6	Nonlinear gain point 6, p.u. gv	0.0000
pgv6	Nonlinear gain point 6, p.u. power	0.0000
ka	Governor gain	0.0000
t4	Governor lead time constant, sec	0.0000
t5	Governor lag time constant, sec	0.0000

Notes:
Bold text are customer data from application. All remaining values are representative values for a 'generic' LM6000 based project. Data provided by GE-PSEC staff. (data provided at GE PSLF User's Group Meeting, FLA, 4/5-6/2001)

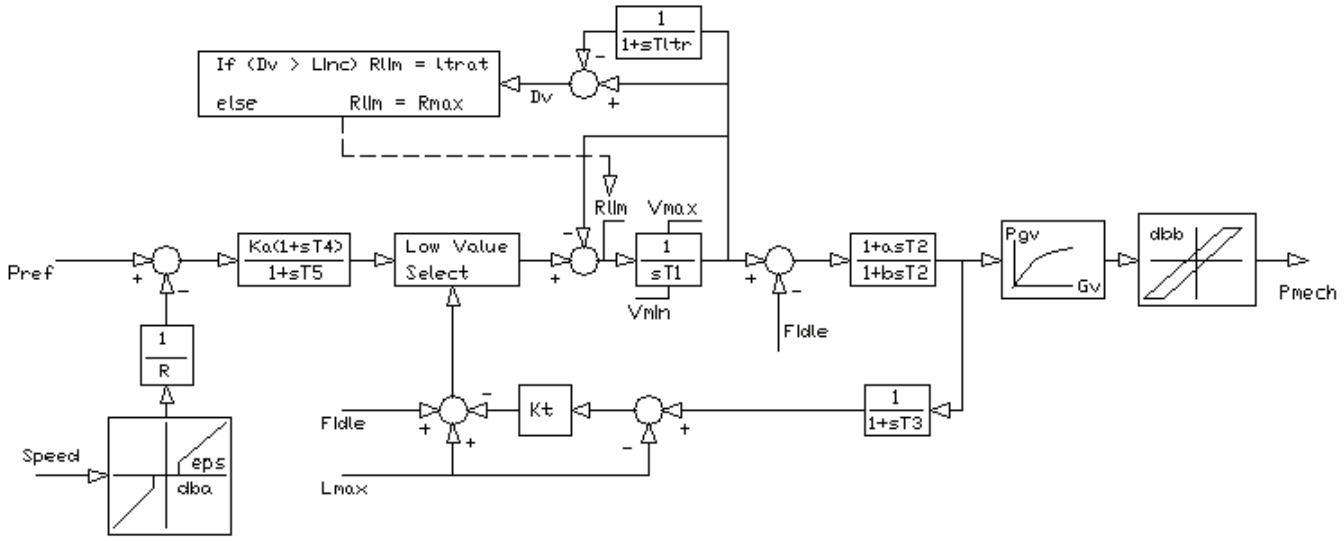
1
1+sTltr
If (Dv > Linc) Rlim = ltrat
else Rlim = Rmax
Dv
Rlim
Vmax
Pref
Ka(1+sT4)
1+sT5
Low Value
Select
1
sT1
Vmin
1+asT2
1+bsT2
Pgv
Gv
dbb
Pmech
Fidle
1
R
Speed
eps
dba
Fidle
Kt
1
1+sT3
Lmax

APPENDIX E
GENERATOR MACHINE DYNAMIC DATA

Model Name: genrou

Description: Solid rotor generator represented by Equal mutual inductance rotor modeling

Invocation: genrou [<n>] {<name> <kv>} <id> :

Parameters:

Parameters:

Variable	*Description*	***PROJECT DATA***
tpdo	D-axis transient rotor time constant	**9.7000**
tppdo	D-axis subtransient rotor time constant	**0.0400**
tpqo	Q-axis transient rotor time constant	**0.5300**
tppqo	Q-axis subtransient rotor time constant	**0.0400**
h	Inertia constant, sec	**1.1760**
d	Damping factor, pu	0.0000
ld	D-axis synchronous reactance	**2.3500**
lq	Q-axis synchronous reactance	**2.1500**
lpd	D-axis transient reactance	**0.2450**
lpq	Q-axis transient reactance	**0.3500**
lppd	D-axis subtransient reactance	**0.1810**
ll	Stator leakage reactance, pu	**0.1300**
s1	Saturation factor at 1 pu flux	0.0500
s12	Saturation factor at 1.2 pu flux	0.4000
ra	Stator resistance, pu	**0.0053**
rcomp	Compounding resistance voltage control, pu	0.0000
xcomp	Compounding reactance voltage control, pu	0.0000

Notes:

Bold text are customer data from application. All remaining values are default values from GE-PSLF/PSDS version 11.2.

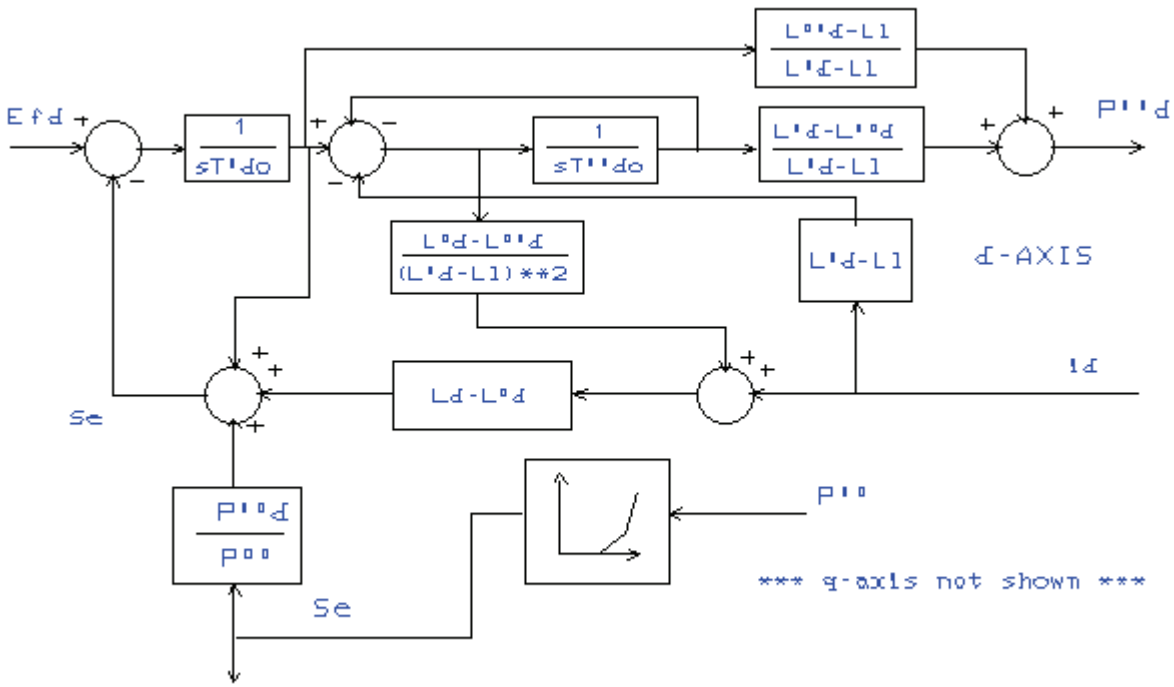
Efd
1
sT'do
1
sT''do
L''d-Ll
L'd-Ll
L'd-L''d
L'd-Ll
P''d
L''d-L'd
(L'd-Ll)**2
L'd-Ll
d-AXIS
Id
Ld-L''d
Se
P''d
P''o
P''
*** q-axis not shown ***
Se

Model Name: exac2

Descriptions: Mod IEEE type AC2 excitation system

Invocation: exac1a [<n>] {<name> <kv>} <id>

Parameters:

Variable	*Description*	***PROJECT DATA***
tr	Filter time constant, sec	**0.0220**
tb	Time constant, sec	0.0000
tc	Time constant, sec	0.0000
ka	Voltage regulator gain	**2894**
ta	Time constant, sec	**0.1000**
vamax	Maximum control element output, p.u.	**47.000**
vamin	Minimum control element output, p.u.	**-47.00**
kb	Exciter fld current controller gain, p.u.	1.0000
vrmax	Maximum exciter control signal, p.u.	**47.000**
vrmin	Minimum exciter control signal, p.u.	**0.0000**
te	Exciter time constant, sec	**1.2000**
kl	Exciter field current limiter gain, p.u.	1.0000
kh	Exciter field current feedback gain, p.u.	0.0000
kf	Rate feedback gain, p.u.	**0.0170**
tf	Rate feedback time constant, sec	**1.2000**
kc	Rectifier regulation factor, p.u.	0.0000
kd	Exciter internal reactance, p.u.	0.0000
ke	Exciter field resistance constant, p.u.	**1.0000**
vlr	Maximum exciter field current, p.u.	**10.000**
e1	Field voltage value, 1	**3.0000**
se1	Saturation factor at E1	**2.4400**
e2	Field voltage value, 2	**4.0000**
se2	Saturation factor at E2	**5.2400**

Notes:
1- Bold text is data taken or calculated from customer application.
2- Unused feedforward control blocks set to 1, unused feedback blocks set to 0.

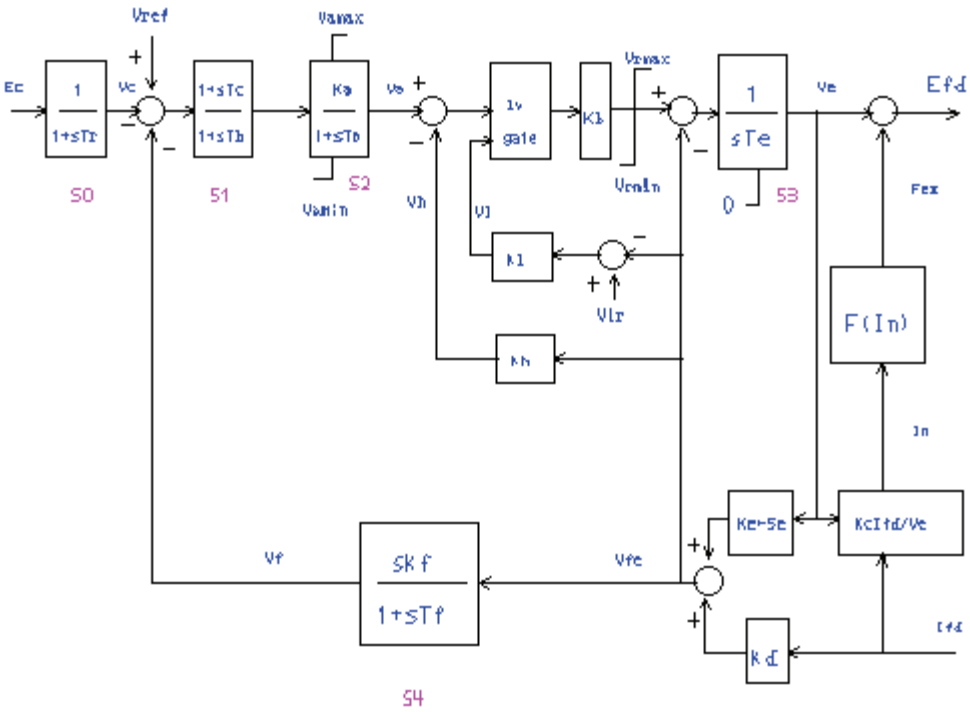
Vref
Vamax
Ec
1
1+sTr
Vc
1+sTc
1+sTb
Ka
1+sTb
Va
1v
gate
Kb
Vrmax
1
sTe
Ve
Efd
S0
S1
S2
Vamin
Vh
Vl
Vrmin
0
S3
Fex
Kl
Vlr
Kh
F(In)
In
Kc-Se
KcItd/Ve
Vf
SKf
1+sTf
Vfe
Kd
Itd
S4

Appendix F

Dynamic Stability Plots

Note 1: The switch deck script describing each operating scenario is noted on the sheet preceding each series of plots.

Note 2: These plots are not available in the electronic version of this document. Please refer to the paper version.

```
sum2002a6_henrietta_after.sav
henrietta_dyd_rev1.dyd
TITLE
2002 SUMMER PEAK, AFTER PROJECT
DYNAMIC STABILITY STUDY CASES - HenriettaPeaking Plant SIS
B Contingency Case a)  fault proj 70 kV bus
Drop project CT units
sum2002a6_henrietta_after.sav + henrietta_dyd_rev1.dyd + Henri_caseBa.swt
RUN 20.0
CC
CC  **********************Henrietta SIS*********************
CC
CC
CC      FAULT BUS
FB  0.0 "GWF_HENR" 70
CC      CLEAR FAULT
CFB 6.0 "GWF_HENR" 70
CC  TRIP project generators at T=0
TG  0.0 "GWF_GT2 " 13.80 "1 "
TG  0.0 "GWF_GT1 " 13.80 "1 "
CC
```

```
sum2002a6_henrietta_after.sav
henrietta_dyd_rev1.dyd
TITLE
2002 SUMMER PEAK, AFTER PROJECT
DYNAMIC STABILITY STUDY CASES - HenriettaPeaking Plant SIS
B Contingency Case b)  3-phase fault Henrietta Proj 70 kV bus
Drop Guernsey-Henrietta 70 kV line
sum2002a6_henrietta_after.sav + henrietta_dyd_rev1.dyd + Henri_caseBb.swt
RUN 15.0
CC
CC  **********************Henrietta SIS*********************
CC
CC      FAULT BUS
FB  0.0 "GWF_HENR" 70
CC  CLEAR FAULT
CFB 6.0 "GWF_HENR" 70
CC  Drop Guernsey-Henrietta 70 kV line
DL  6.0 "HENRITTA" 70. "JCBSCRNR" 70. "1 "
DL  6.0 "GUR3TPT " 70. "JCBSCRNR" 70. "1 "
DL  6.0 "GUERNSEY" 70. "GUR3TPT " 70. "1 "
CC
CC   drop islanded load
MBL 6.0 "GUERNSEY" 70. "1 " "D"
MBL 6.0 "JCBSCRNR" 70. "1 " "D"
MBL 6.0 "JCBSCRNR" 70. "2 " "D"
CC
```

```
sum2002a6_henrietta_after.sav
henrietta_dyd_rev1.dyd
TITLE
2002 SUMMER PEAK, AFTER PROJECT
DYNAMIC STABILITY STUDY CASES - HenriettaPeaking Plant SIS
B Contingency Case c)  3-phase fault Henrietta Proj 70 kV bus
Drop Henrietta-Lemoore 70 kV line
sum2002a6_henrietta_after.sav + henrietta_dyd_rev1.dyd + Henri_caseBc.swt
RUN 15.0
CC
CC  **********************Henrietta SIS*********************
CC
CC      FAULT BUS
FB  0.0 "GWF_HENR" 70
CC  CLEAR FAULT
CFB 6.0 "GWF_HENR" 70
CC  Drop Henrietta-Lemoore 70 kV line
DL  6.0 "LPRNO TP" 70. "HENRITTA" 70. "1 "
DL  6.0 "LEMOORE " 70. "LPRNO TP" 70. "1 "
CC
CC  drop islanded load
MBL 6.0 "LEMOORE " 70. "1 " "D"
MBL 6.0 "LEMOORE " 70. "2 " "D"
MBL 6.0 "LEPRINO " 70. "1 " "D"
MBL 6.0 "CANDLEWK" 70. "1 " "D"
CC
```

```
sum2002a6_henrietta_after.sav
henrietta_dyd_rev1.dyd
TITLE
2002 SUMMER PEAK, AFTER PROJECT
DYNAMIC STABILITY STUDY CASES - HenriettaPeaking Plant SIS
B Contingency Case d)  3-phase fault Henrietta Proj 70 kV bus
Drop Henrietta 230/70 kV bank
sum2002a6_henrietta_after.sav + henrietta_dyd_rev1.dyd + Henri_caseBd.swt
RUN 15.0
CC
CC  **********************Henrietta SIS********************
CC
CC      FAULT BUS
FB  0.0 "GWF_HENR" 70
CC  CLEAR FAULT
CFB 6.0 "GWF_HENR" 70
CC  Drop Henrietta 230/70 kV bank
DL  6.0 "HENRITTA" 70. "HENRIETA" 230. "2 "
CC
CC
CC  project dropped (assume at 12 cycles) after system is "islanded"
TG  12.0 "GWF_GT2 " 13.80 "1 "
TG  12.0 "GWF_GT1 " 13.80 "1 "
CC
```

```
sum2002a6_henrietta_after.sav
henrietta_dyd_rev1.dyd
TITLE
2002 SUMMER PEAK, AFTER PROJECT
DYNAMIC STABILITY STUDY CASES - HenriettaPeaking Plant SIS
C Contingency Case a)  3-phase fault Henrietta Substation70 kV bus
Open all connected 70 kV lines at Henrietta end. Leave gen tie and 230 kV bank online
sum2002a6_henrietta_after.sav + henrietta_dyd_rev1.dyd + Henri_caseCa.swt
RUN 15.0
CC
CC  ***********************Henrietta SIS*********************
CC
CC      FAULT BUS
FB  0.0 "GWF_HENR" 70
CC  CLEAR FAULT
CFB 6.0 "GWF_HENR" 70
CC  Drop Henrietta-Lemoore 70 kV line
DL  6.0 "LPRNO TP" 70. "HENRITTA" 70. "1 "
DL  6.0 "HENRITTA" 70. "JCBSCRNR" 70. "1 "
DL  6.0 "MUSLSLGH" 70. "HENRITTA" 70. "1 "
CC
CC   drop islanded load
CC
MBL 6.0 "GUERNSEY" 70. "1 " "D"
MBL 6.0 "JCBSCRNR" 70. "1 " "D"
MBL 6.0 "JCBSCRNR" 70. "2 " "D"
CC
MBL 6.0 "LEMOORE " 70. "1 " "D"
MBL 6.0 "LEMOORE " 70. "2 " "D"
MBL 6.0 "LEPRINO " 70. "1 " "D"
MBL 6.0 "CANDLEWK" 70. "1 " "D"
CC
MBL 6.0 "MUSLSLGH" 70. "1 " "D"
```

APPENDIX G

WORK SCOPE

APPENDIX G
WORK SCOPE

Preliminary Protection Requirements & Substation Work

These are the preliminary protection requirements for the 95.8 MW generator connection on the 70 KV bus at Henrietta Substation. The protection requirements for the generation entity to interconnect with PG&E system are detailed in the Interconnection Handbook and are not included here. Protections for generating equipment beyond that were required in the Interconnection Handbook are at the Generator's entity discretion.

Henrietta Substation (work performed by PG&E)

- The maximum Fault Duty (SLGF) available at 70 KV Bus is approximately 12,692 Amps. This includes the 70 KV (Henrietta) and 115 KV (Hanford) GWF cogen units on line. New breakers shall be rated above the maximum fault duty.

- For the new breakers that will be provided, two sets of Current Transformers should be provided on each side of the bushing. The standard 2000/5 or better, Multi-Ratio, C400 breaker CT's should be adequate.

- Provide Set "A" & Set "B" Current Differential Relays with Fiber Optic connection for communication. Current Differential Relays must have provisions to convert to a 3 terminal scheme. These relays will provide protection for very short transmission line connected radially to a Generation Unit. PG&E approved recommended relays for this application are GE L-90 and LFCB 103. Refer to EDS drawing 4010024 & 4010025.

- Install Schweitzer SEL-279 as reclosing relay.

- Install Basler BEI-BPR as breaker failure relay.

- Install Schweitzer SEL-2020 communications processor for remote relay communications.

- Provide a single-phase potential device, "C Phase", on the line side of the new Circuit Breaker for Station Automatics.

- Include the current contribution of the new 70KV breaker into the existing 70 kV bus differential scheme.

- The new circuit breaker should also be tripped by the existing 70kV bus differential protection. Tripping is accomplished by differential tripping relay. Please refer to Henrietta substation drawing nos. 425901 and 425920. For T-1 outage contingency of Bank # 2, the dedicated 70 KV breaker should be tripped by Bank #2 tripping relay, 294TT-2 and also Bank #2 Lock Out relay 286T-2. Direct transfer Trip from PG&E Set "A" and Set "B" relays should be initiated subsequently to trip GWF owned 70

kV breaker. Refer to Henrietta Drawing Nos. 4004387 (Bank #2 DC), 4004397 (Bank #2 Panel C), 497599 & 428491 (CB242 DC, AC) and 425920 (CB 82 DC).

Henrietta Peaking Plant Facility (Work to be performed by GWF)

- Install new 70 KV Circuit Breaker. The generator step up transformer relays and the line relays specified below will trip the 70KV Circuit Breaker.
- Install Set A & Set B current differential relays with Fiber Optic line communication to match with the Current Differential relays at Henrietta Substation. Current differential relays must have provisions to convert to a 3-terminal scheme.

Adjustments to existing relays at Henrietta Substation 70 KV bus may be required.

APPENDIX H

SUPPLEMENTAL SYSTEM IMPACT STUDY: STUDY PLAN

Supplemental System Impact Study

Study Plan

GWF Power Systems

Henrietta Peaking Plant

Pacific Gas and Electric Company

July 18, 2001

Table of Contents

Introduction 1

Study Fee 1

Schedule 1

Cost Estimates 1

Project Information 2

Interconnection 3

Power Flow Study Base Case Assumptions 3

Study Scope 4

Steady State Power Flow Analysis 4

Introduction

Pacific Gas and Electric Company (PG&E) had performed the System Impact/ Facilities Study (ESI/FS) for Henrietta Peaking Plant (Project) for GWF Power Systems (GWF). The study report was issued on July 3, 2001. The ISO has requested that PG&E conduct a Supplemental System Impact Study (SSIS) to determine the impacts caused by the Project during Off-Peak conditions. This study plan will form the basis for the SSIS Agreement by defining the scope, content, assumptions, and terms of reference of the SSIS. The SSIS will supplement the previously issued SI/FS. The SSIS will:

1) Supplement the existing report,

2) Evaluate any additional transmission system impacts, and

3) Provide limitations to the generator's output to mitigate the transmission system impact, if any, caused solely by the project during the Spring Peak and Off-Peak system conditions.

Study Fee

No additional charges are assessed for this study. The study is now ongoing

Schedule

The following Table 1 shows the milestones/schedules associated with the study.

Task	Milestone Description	Target Date
1	Issue SSIS final report	8/10/2001

Table 1: Study Schedule

Cost Estimates

The cost estimate for interconnecting the project to PG&E system was provided in the original ESI/FS. No additional cost estimate will be provided in this supplemental study.

Project Information

The Table 2 shows the Project information.

Project Location	25th Avenue south of Highway 198 in Lemoore and adjacent to Henrietta Sub.
PG&E Planning Area Where Project Will Be Located	Area 6
Number Of Generators	2
Type Of Generator(s)	Gas Turbine (LM 6000)
Total Project Output (Maximum)	95.8 MW
Power Factor (Will Be Used For Modeling)	85% (Lag) – 95% (Lead)
Description Of Interconnection Configuration	Connected to Henrietta Sub 70 kV bus through own 70 kV breakers.
Voltage At Which Project Is Connected To PG&E's Grid	70 kV

Table 2: Project Information

Interconnection

Figure 1 provides a single line of the project.

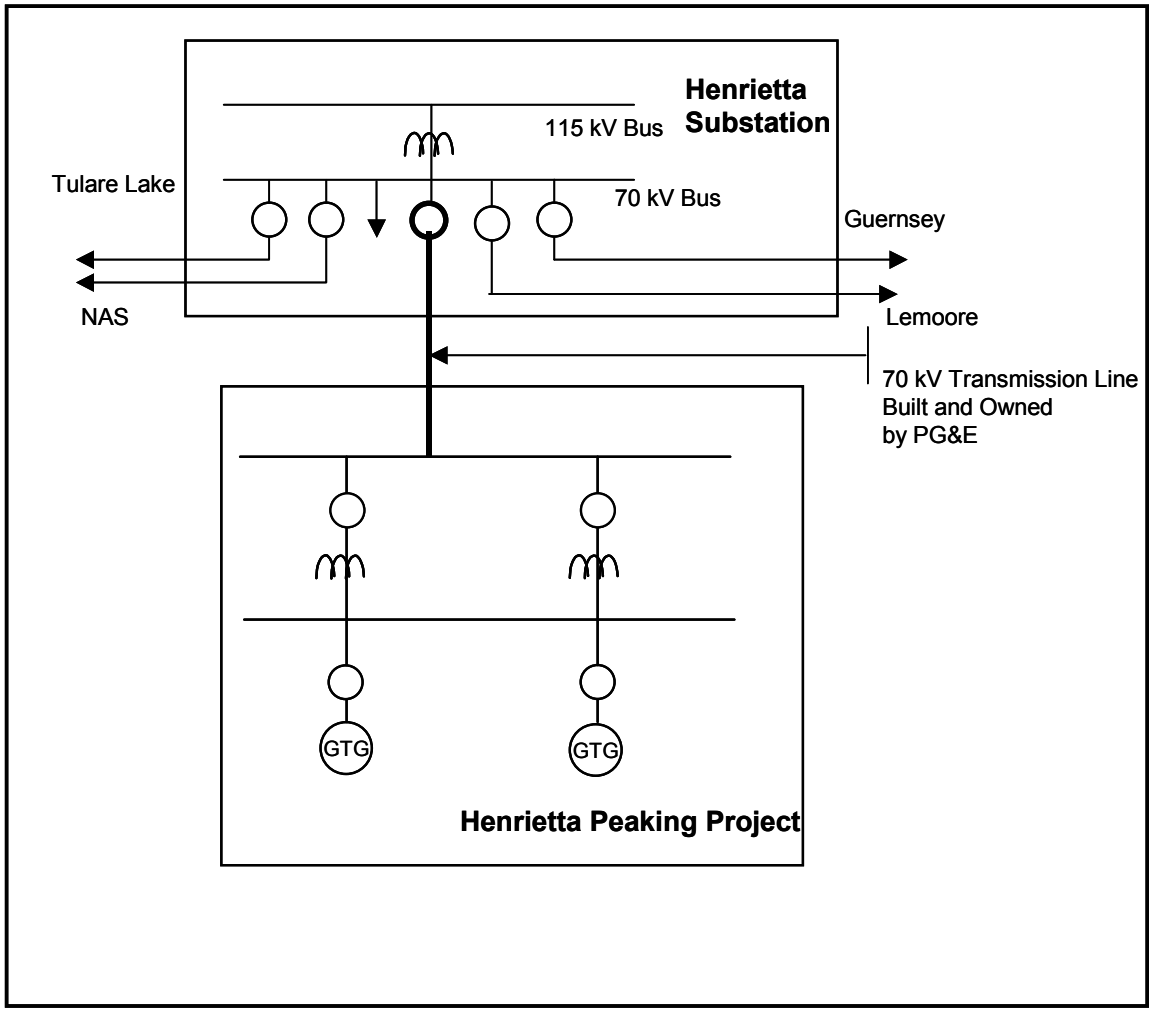

Figure 1: Single line Diagram of Panoche Peaker # 2 Project

Power Flow Study Base Case Assumptions

Power flow analysis will be performed using three base cases:

- **2002 Summer Off-Peak Base Case:**

  Power flow analysis will also be performed using a 2002 Summer Off-Peak base case in order to evaluate potential congestion on transmission facilities during the Off-Peak system condition. CAISO's System Operations group has provided the Summer Off-Peak base case. The Summer Off-peak load will be about 1200 MW in

the Fresno/Yosemite areas. The Path 15 flows will be around 2700 MW south-to-north direction. One unit at Helms PGP will be assumed in pumping mode, and the Exchequer PH is generating only at 10 MW level.

The study will take into account all the approved PG&E transmission reliability projects that will be operational by summer 2002. The following generation projects in Fresno / Yosemite areas will be modeled in the base cases to reflect the proper generator queuing position of this project:

- Dinuba Energy Generation Facility
- Fresno Peaker Project
- Chowchilla #2 Project
- Madera Power Project
- GWF Hanford Project
- Cal Peak's Panoche Peaker Project
- Wellhead's Los Banos Peaker Project
- Wellhead's Panoche Peaker Project
- Wellhead's Gates Peaker Project
- Wellhead's Panoche Peaker #2 Project

Study Scope

The SSIS will determine the impact of the project on PG&E's transmission system. The specific studies conducted are outlined below:

Steady State Power Flow Analysis

Power Flow analysis will be performed using the Off Peak base case. In this SSIS, the base case will be used to simulate the impact of the project during normal operating conditions and with all single (CAISO Categories "B") outages in the PG&E's Fresno/Yosemite planning areas.

Pacific Gas and Electric Company

WE DELIVER ENERGY.

Supplemental System Impact Study Agreement

_____ (GWF) has reviewed the study plan for the interconnection of GWF's electric generating plant with PG&E's system at _____[1], State of California and agrees with the proposed plan.

GWF hereby submits the proposed study fee.

Dated this _____ day of _____, 2001

GWF:

BY: _____
(Signature)

_____
(Type or Print Name)

TITLE: _____

MAILING ADDRESS:

_____

_____

_____

_____

PG&E confirms receipt of the study fee and agrees to perform the system impact study in accordance with the procedures set forth in the Henrietta Peaking Plant dated July 18, 2001.

Received by PACIFIC GAS AND ELECTRIC COMPANY

Name_____

Date_____

Time_____

[1] Enter city and county location of proposed facility.

Appendix B

Air Quality

ESTIMATION OF 1-HOUR NOx IMPACT FROM CONSTRUCTION

Estimation of the 1-hour NO_2 impact from construction activities was based on the assumption that the actual NO_2 emission rates are 10% of total emissions of NOx. The NO_2/NO_x ratio of 10% is a conservative assumption for the actual ratio of NO_2 to total NO_x emissions for internal combustion engines (Flagan and Seinfeld, 1988). In addition, it was assumed that the remaining 90% of NO_x is emitted as NO and would not have sufficient time to be completely converted to NO_2 near the facility boundaries where the maximum impacts occur. Transport times to the areas of maximum construction impacts are on the order of 1 to 2 minutes, while half-life for NO in the atmosphere is estimated to be 5 days (Williamson, 1973). Assuming a first-order exponential decay, the portion of the directly emitted NO that converts from NO to NO_2 in 2 minutes can be estimated as follows:

Conversion equation: $NO_{2min.}/NO_o = \exp(-kt)$

$NO_{2min.}/NO_o$ = ratio of NO remaining to original NO concentration
k, rate constant = 9.63×10^{-5} min^{-1}
t, reaction time = 2 minutes

$NO_{2min.}/NO_o = \exp(-9.63 \times 10^{-5}\ min^{-1} * 2\ minutes) = 0.9998$

Amount of NO converted to NO_2 = 1 - $NO_{2min.}/NO_o$ = 1 – 0.9998 = 0.0002

The modeled NO_x impact was multiplied by 0.1 to account for the NO_2 fraction (10%) that is directly emitted as described above. The fraction of directly emitted NO (90%) that is estimated to convert to NO_2 in the short travel time (2 min) to the point of maximum impact was estimated by multiplying the conversion fraction estimated above. The converted NO_2 was then added to the directly emitted NO_2 contribution to obtain the 1-hour modeled NO_2 impact. A sample calculation of the estimated worst-case NO_2 impact is shown below. NO_2 concentrations for different distances and transport times from the construction site are shown in table following the sample calculation.

Modeled 1-hour NO_x impact:
2,518.1 $\mu g/m^3$

Impact of directly emitted NO_2 (10% of total NO_x):
2,518.1 $\mu g/m^3$ * 0.10 = 251.8 $\mu g/m^3$

Conversion of NO to NO_2 in the atmosphere at the point of maximum impact:

Conversion equation: $NO/NO_o = \exp(-kt)$
NO/NO_o = ratio of NO remaining to original NO concentration
Given a half life of 5 days (7,200 minutes), $NO/NO_o = 0.5 = \exp(-k*7{,}200\ min.)$
Solving for the rate constant, $k = -\ln(0.5)/7{,}200\ min = 9.63 \times 10^{-5}\ min^{-1}$
t reaction time = 2 minutes

$NO_{2min.}/NO_o = \exp(-9.63x10^{-5}\ min^{-1} * 2\ minutes) = 0.9998$

Amount of NO_2 created = (1 – 0.9998) * (1 – 0.1) * 2,518.1 $\mu g/m^3$ = 0.45 $\mu g/m^3$

Total 1-hour NO_2 impact:

Impact of NO_2 directly emitted + Amount of NO_2 created

= 251.8 $\mu g/m^3$ + 0.45 $\mu g/m^3$ = 252.3 $\mu g/m^3$

Estimated NO2 Concentration versus Distance from Construction Area

Approximate Center of Construction Area

UTM X 239122

UTM Y 4014291

Rate Constant (min. $^{-1}$) = 9.63E-05

Transit time based on 1 m/s wind speed

Receptor Location			ISCST3 NOx	Distance from	Transit	NO_2/NO_x	Adjusted NO_2
UTM X	UTM Y	Elev. (m)	Conc. (μg/m3)	Source (m)	Time (min.)	Ratio	Conc. (μg/m3)
238975	4014325	68.60	2518.1	151	2.52	2.43E-04	252.3
239600	4013900	67.40	1257.5	617	10.29	9.90E-04	126.8
239800	4013300	67.00	659.0	1,201	20.01	1.93E-03	67.04
240000	4012000	66.40	383.0	2,453	40.89	3.93E-03	39.65
242000	4012000	62.80	322.0	3,678	61.30	5.89E-03	33.90
234000	4019500	75.00	113.4	7,306	121.76	1.17E-02	12.53

References:

Flagan, R.C. and Seinfeld, J.H., 1988. Fundamentals of Air Pollution Engineering. Prentice-Hall, Inc.

Williamson, S.J., 1973. Fundamentals of Air Pollution. Addison-Wesley Publishing Company, Inc.

SJVUAPCD AUTHORITY TO CONSTRUCT PERMIT APPLICATION FORMS FOR GWF HENRIETTA

San Joaquin Valley Air Pollution Control District

www.valleyair.org

Permit Application For:

[X] AUTHORITY TO CONSTRUCT (ATC) - New Emission Unit.
[ ] AUTHORITY TO CONSTRUCT (ATC) - Modification Of Emission Unit With Valid PTO/Valid ATC.
[ ] AUTHORITY TO CONSTRUCT (ATC) - Renewal of Valid Authority to Construct.
[ ] PERMIT TO OPERATE (PTO) - Existing Emission Unit Now Requiring a Permit to Operate.

1. PERMIT TO BE ISSUED TO: GWF Energy LLC – Henrietta Peaker Project (Power Plant)

2. MAILING ADDRESS: 4300 Railroad Avenue
STREET/P.O. BOX: _____
CITY: Pittsburg STATE: CA 9-DIGIT ZIP CODE: 94565-6006

3. LOCATION WHERE THE EQUIPMENT WILL BE OPERATED:
STREET: 25th Avenue, 1 mile south of SR 198 CITY: Lemoore, CA
NW /4 SECTION 34 TOWNSHIP 19 S RANGE 19 E

WITHIN 1,000 FT OF A SCHOOL? [ ] YES [X] NO

S.I.C. CODE(S) OF FACILITY (If known): 4911

4. GENERAL NATURE OF BUSINESS: Power Generation

INSTALL DATE: 6/02

5. TITLE V PERMIT HOLDERS ONLY: Do you request a COC (EPA Review) prior to receiving your ATC? [ ] YES [X] NO

6. DESCRIPTION OF EQUIPMENT OR MODIFICATION FOR WHICH APPLICATION IS MADE (include Permit #"s if known, and use additional sheets if necessary): Two G.E. 46.9 MW LM6000 PC Sprint natural gas turbine, simple cycle, PEAKER unit.

7. HAVE YOU EVER APPLIED FOR AN ATC OR PTO IN THE PAST? [ ] YES [X] NO
If yes, ATC/PTO #: _____
See Section 1.0

8. IS THIS PROPERTY ZONED PROPERLY FOR THE PROPOSED USE? [X] YES [ ] NO

9. IS THIS APPLICATION SUBMITTED AS THE RESULT OF EITHER A NOTICE OF VIOLATION OR A NOTICE TO COMPLY? [ ] YES [X] NO
If yes, NOV/NTC #: _____

Optional Section

10 CHECK WHETHER YOU ARE A PARTICIPANT IN EITHER OF THESE VOLUNTARY PROGRAMS:

"SPARE THE AIR"
[ ]Yes [ ]No [ ]Send info

"INSPECT"
[ ]Yes [ ]No [ ]Send info

11. TYPE OR PRINT NAME OF APPLICANT: Douglas Wheeler

TITLE OF APPLICANT: Vice President

12. SIGNATURE OF APPLICANT: DATE: 8/23/01

PHONE #: (925) 431-1443
FAX #: (925) 431-0518
E-MAIL: dwheeler@gwfpower.com

FOR APCD USE ONLY:

DATE STAMP	FILING FEE RECEIVED: $ _____ CHECK #: _____ DATE PAID: _____ PROJECT #: _____ FACILITY ID: _____

San Joaquin Valley Unified Air Pollution Control District
Supplemental Application Form

BOILERS, STEAM GENERATORS, DRYERS, & PROCESS HEATERS

This form must be accompanied by a completed Application for Authority to Construct and Permit to Operate form.

PERMIT TO BE ISSUED TO: GWF Energy LLC - Henrietta Peaker Project (Power Plant) Unit 1
LOCATION WHERE THE EQUIPMENT WILL BE OPERATED: 25th Avenue, 1 mile south of SR 198, Lemoore, CA

EQUIPMENT DESCRIPTION

Type of Equipment	[ ] Boiler [X] Other: Gas Turbine Generator Unit #1			
Equipment Data	Manufacturer: General Electric			
	Model: LM6000 PC Sprint		Serial No.:	
	Boilers Only	Steam: PPH	at: psig	bhp

Gaseous Fuel Burner	Manufacturer: General Electric			
	Model: LM6000 PC Sprint		Serial No.:	
	Maximum Heat Input Rating: 459.6 MMBtu/hr HHV , 63°F & 60% humidity			
	Flue Gas Recirculation: [ ] Yes [ ] No [ ] Forced [ ] Induced %			
	O_2 Controller: [ ] Yes [ ] No		Manufacturer:	
Source 1 Emissions details.	Type: Natural Gas		*(Omit Sulfur Content for Public Utility Natural Gas)*	
	Higher Heating Value: 1030 Btu/scf		Sulfur Content: <0.25 gr/100 scf	
	Exhaust Data	Flow: 135,00 (wet) acfm	Temp: 822 °F	O_2, dry: %
	Emission Data *(If corrected to other than 3% O_2, dry basis, indicate at right)*			O_2, dry: 15 %
	Nitrogen Oxides (as NO_2)		3.6 ppmvd	0.014 lb/MMBtu
	Carbon Monoxide		6 ppmvd	0.013 lb/MMBtu
	Volatile Organic Compounds (as CH_4)		2 ppmvd	0.003 lb/MMBtu
	Type: Natural gas			
	Higher Heating Value: Btu/scf		Sulfur Content: <0.25 gr/100 scf	
	Exhaust Data	Flow: acfm	Temp: F	O_2, dry: %
	Emission Data *(If corrected to other than 3% O_2, dry basis, indicate at right)*			O_2, dry: 15 %
	Nitrogen Oxides (as NO_2)		ppmvd	lb/MMBtu
	Carbon Monoxide		ppmvd	lb/MMBtu
	Volatile Organic Compounds (as CH_4)		ppmvd	lb/MMBtu

Please Continue on Reverse Side

Liquid Fuel Burner	Manufacturer:			
	Model:		Serial No.:	
	Maximum Heat Input Rating:			Btu/hr
	Flue Gas Recirculation: [ ] Yes [ ] No [ ] Forced		[ ] Induced	%
	O_2 Controller: [ ] Yes [ ] No		Manufacturer:	
Primary Fuel	Type:		API Gravity:	
	Higher Heating Value:	Btu/gal	Sulfur Content:	% by Wt
	Exhaust Data	Flow: acfm	Temp: °F	O_2, dry: %
	Emission Data *(If corrected to other than 3% O_2, dry basis, indicate at right)*			O_2, dry: %
	Nitrogen Oxides (as NO_2)		ppmvd	lb/MMBtu
	Carbon Monoxide		ppmvd	lb/MMBtu
	Volatile Organic Compounds (as CH_4)		ppmvd	lb/MMBtu
Secondary Fuel	Type:		API Gravity:	
	Higher Heating Value:	Btu/gal	Sulfur Content:	% by Wt
	Exhaust Data	Flow: acfm	Temp: °F	O_2, dry: %
	Emission Data *(If corrected to other than 3% O_2, dry basis, indicate at right)*			O_2, dry: %
	Nitrogen Oxides (as NO_2)		ppmvd	lb/MMBtu
	Carbon Monoxide		ppmvd	lb/MMBtu
	Volatile Organic Compounds (as CH_4)		ppmvd	lb/MMBtu

ADDITIONAL INFORMATION

1. **Operating Schedule:** 24 Hours per day 7 Days per week 52 Weeks per year. 8,000 hours/year
2. **Fuel Flow Meter(s):** [X] Gaseous Fuel [ ] Liquid Fuel
3. **Nearest Receptor:**

Distance to nearest Residence[1] 7920 feet
Distance to nearest Business[2] 3696 feet

[1] Examples of Residences includes apartments, houses, dormitories, etc.
[2] Examples of Businesses includes office buildings, guard posts, factories, etc.

4. **Stack Parameters:** Height 85 feet Inside diameter 126 inches

Is a rain cap present on exhaust stack? [ ] Yes [X] No

Direction of exhaust from structure or device: [X] Vertical [ ] Horizontal

5. **Facility Location:** [ ] Urban (area of dense population) [X] Rural (area of sparse population)
6. **Describe any additional air pollution control equipment or technologies, including control efficiencies, on a separate sheet and submit it along with this form.**

See CEC Application For Certification – Henrietta Peaker Project, submitted August 27, 2001

San Joaquin Valley Unified Air Pollution Control District
Supplemental Application Form

BOILERS, STEAM GENERATORS, DRYERS, & PROCESS HEATERS

This form must be accompanied by a completed Application for Authority to Construct and Permit to Operate form.

PERMIT TO BE ISSUED TO: GWF Energy LLC - Henrietta Peaker Project (Power Plant) Unit 2
LOCATION WHERE THE EQUIPMENT WILL BE OPERATED: 25th Avenue, 1 mile south of SR 198, Lemoore, CA

EQUIPMENT DESCRIPTION

Type of Equipment	[ ] Boiler [X] Other: Gas Turbine Generator Unit #2			
Equipment Data	Manufacturer: General Electric			
	Model: LM6000 PC Sprint		Serial No.:	
	Boilers Only	Steam: PPH	at: psig	bhp

Gaseous Fuel Burner	Manufacturer: General Electric			
	Model: LM6000 PC Sprint		Serial No.:	
	Maximum Heat Input Rating: 459.6 MMBtu/hr HHV , 63°F & 60% humidity			
	Flue Gas Recirculation: [ ] Yes [ ] No [ ] Forced [ ] Induced %			
	O_2 Controller: [ ] Yes [ ] No		Manufacturer:	
Source 1 Emissions details.	Type: Natural Gas		*(Omit Sulfur Content for Public Utility Natural Gas)*	
	Higher Heating Value: 1030 Btu/scf		Sulfur Content: <0.25 gr/100 scf	
	Exhaust Data	Flow: 135,00 (wet) acfm	Temp: 822 °F	O_2, dry: %
	Emission Data *(If corrected to other than 3% O_2, dry basis, indicate at right)*			O_2, dry: 15 %
	Nitrogen Oxides (as NO_2)		3.6 ppmvd	0.014 lb/MMBtu
	Carbon Monoxide		6 ppmvd	0.013 lb/MMBtu
	Volatile Organic Compounds (as CH_4)		2 ppmvd	0.003 lb/MMBtu
	Type: Natural gas			
	Higher Heating Value: Btu/scf		Sulfur Content: <0.25 gr/100 scf	
	Exhaust Data	Flow: acfm	Temp: F	O_2, dry: %
	Emission Data *(If corrected to other than 3% O_2, dry basis, indicate at right)*			O_2, dry: 15 %
	Nitrogen Oxides (as NO_2)		ppmvd	lb/MMBtu
	Carbon Monoxide		ppmvd	lb/MMBtu
	Volatile Organic Compounds (as CH_4)		ppmvd	lb/MMBtu

Please Continue on Reverse Side

Liquid Fuel Burner	Manufacturer:			
	Model:		Serial No.:	
	Maximum Heat Input Rating:			Btu/hr
	Flue Gas Recirculation: [ ] Yes [ ] No [ ] Forced		[ ] Induced	%
	O_2 Controller: [ ] Yes [ ] No		Manufacturer:	
Primary Fuel	Type:		API Gravity:	
	Higher Heating Value:	Btu/gal	Sulfur Content:	% by Wt
	Exhaust Data	Flow: acfm	Temp: °F	O_2, dry: %
	Emission Data *(If corrected to other than 3% O_2, dry basis, indicate at right)*			O_2, dry: %
	Nitrogen Oxides (as NO_2)		ppmvd	lb/MMBtu
	Carbon Monoxide		ppmvd	lb/MMBtu
	Volatile Organic Compounds (as CH_4)		ppmvd	lb/MMBtu
Secondary Fuel	Type:		API Gravity:	
	Higher Heating Value:	Btu/gal	Sulfur Content:	% by Wt
	Exhaust Data	Flow: acfm	Temp: °F	O_2, dry: %
	Emission Data *(If corrected to other than 3% O_2, dry basis, indicate at right)*			O_2, dry: %
	Nitrogen Oxides (as NO_2)		ppmvd	lb/MMBtu
	Carbon Monoxide		ppmvd	lb/MMBtu
	Volatile Organic Compounds (as CH_4)		ppmvd	lb/MMBtu

ADDITIONAL INFORMATION

1. **Operating Schedule:** 24 Hours per day 7 Days per week 52 Weeks per year. 8,000 hours/year
2. **Fuel Flow Meter(s):** [X] Gaseous Fuel [ ] Liquid Fuel
3. **Nearest Receptor:**

   Distance to nearest Residence[1] 7920 feet
   Distance to nearest Business[2] 3696 feet

   [1] Examples of Residences includes apartments, houses, dormitories, etc.
   [2] Examples of Businesses includes office buildings, guard posts, factories, etc.

4. **Stack Parameters:** Height 85 feet Inside diameter 126 inches

   Is a rain cap present on exhaust stack? [ ] Yes [X] No

   Direction of exhaust from structure or device: [X] Vertical [ ] Horizontal

5. **Facility Location:** [ ] Urban (area of dense population) [X] Rural (area of sparse population)
6. **Describe any additional air pollution control equipment or technologies, including control efficiencies, on a separate sheet and submit it along with this form.**

   See CEC Application For Certification – Henrietta Peaker Project, submitted August 27, 2001

San Joaquin Valley Unified Air Pollution Control District
Supplemental Application Form
LIQUID FUELED
INTERNAL COMBUSTION ENGINES

This form must be accompanied by a completed Application for Authority to Construct and Permit to Operate form.

PERMIT TO BE ISSUED TO: GWF Energy LLC	
LOCATION WHERE THE EQUIPMENT WILL BE OPERATED: 25th AVE, 1 mile south of SR 198	NW 34 19S 19E

PROCESS DESCRIPTION

Type of Use	[ ] Full Time (not limited to any operating schedule) [ ] Low Use (limited to <1000 hrs/yr for all operation, including maintenance and testing) [ ] Standby Emergency (limited to non-utility electric power generation or other emergency use as approved by the APCO, except for up to 200 hrs/yr for maintenance and testing) Will this equipment be used in an electric utility rate reduction program? [ ] YES [X] NO	
Process Data	Process the Engine Serves: EMERGENCY BACK-UP POWER FOR HEP	
	Electrical Power Generation Only	Generator Make and Model: CATERPILLAR
		Power Output: 250 kW

EQUIPMENT DESCRIPTION

Engine Data	Manufacturer: CATERPILLAR OR EQUAL	Number of Cylinders: 6
	Model Number: 3306 ATAAC OR EQUAL	Serial Number:
	Maximum Rated Power Output 382 HP B	
Fuel Data	Type: [x] Diesel [ ] Gasoline [ ] Other (please specify):	
	Higher Heating Value: 137,000 BTU/gal	Sulfur Content: 0.05 % by Weight
	Fuel Consumption at Rated Output: 19 gals/hr	Fuel Flow Meter? [ ] YES [X] NO

Engine Design and Emission Control Equipment ***(Check all applicable boxes)***

[ ] Turbocharger
[ ] Intercooler/Aftercooler
[ ] Positive Crankcase Ventilation System
[ ] Exhaust Particulate Control Device: Specify manuf. and model _____
[ ] Oxidation Catalyst (VOC & CO Reduction) _____ % VOC control _____ % CO control
[ ] Reduction Catalyst (NOx Reduction) _____ % NOx control
[ ] Other (please specify): ENGINE WILL BE DESIGNED TO COMPLY WITH DISTRICT BACT

Please Continue on Reverse Side

Exhaust Emission Data (at maximum rated power output) *(If corrected to other than 15% O_2, dry basis, indicate at right)*			O_2, dry: 10.1 %	
Nitrogen Oxides (as NO_2)	853	ppmvd	5.09	g/BHP-hr
Carbon Monoxide	310	ppmvd	1.13	g/BHP-hr
Volatile Organic Compounds (as CH_4)	69	ppmvd	0.14	g/BHP-hr
Particulate Matter Emissions	0.02	gr/dscf	0.13	g/BHP-hr
Sulfur Oxides (as SO_2)	2.26	ppmvd	0.02	g/BHP-hr

Source of Emission Factor [ ] Emission Tests [x] Manufacturer's Guarantee [ ] EPA Certified
[ ] Other:

ADDITIONAL INFORMATION

1. Normal Operating Schedule: (for emergency equipment, identify normal testing and maintenance schedule)

   24* Hours per day 7* Days per week 52* Weeks per year.
   *Not to exceed 13 hrs/year

2. Nearest Receptor:

   Distance to nearest Residence[1] 7920 feet
   Distance to nearest Business[2] 3696 feet
   Distance to nearest property line[3] _____ feet

   [1] Examples of Residences includes apartments, houses, dormitories, K-12 school, etc.
   [2] Examples of Businesses includes office buildings, guard posts, factories, etc.
   [3] Distance from the exhaust stack to the property line

3. Stack Parameters:
   Height above grade: 7.5 feet
   Inside diameter: 5 inches
   Exhaust temperature: 994 °F
   Stack gas flow rate: 655 dscfm
   Is a rain cap (other than a flapper) present on exhaust stack? [ ] Yes [x] No
   Exhaust direction: [x] Vertical [ ] Horizontal

4. Facility Location: [ ] Urban (area of dense population) [x] Rural (area of sparse population)

5. If available, include the manufacturer's specifications and/or documented exhaust emissions data for the proposed engine.

DISTRICT USE ONLY
Date: _____ Facility ID #: _____

Engineer Name: _____ Project #: _____

Public Notice: [ ] Yes [ ] No
Comments:

CALCULATION OF ANNUAL EMISSIONS FOR GWF HENRIETTA PEAKER PROJECT

A. Normal Operations: 100% load, 63F, 60% RH case, Evaporative Cooler On

Pollutant	Hourly Emissions (lb/hr)
NOx	5.9
CO	2.44
VOC	0.33
SO2	0.30
PM10	3.3

B. Start-Up/Shutdown Emissions (Emissions per Combined Startup and Shutdown Event)

Pollutant	Emissions (lb)
NOx	7.7
CO	7.7
VOC	0.68
SO2	0.33
PM10	3.14

C. Annual Average Emissions for Turbines

(Assume 2 turbines, each 8000 base hours, plus 300 startups and 300 shutdowns each)

Pollutant		Annual Emissions		Stack Concentration	
		lb/yr	tpy		
NOx	2*((A*8000) + (B*300))	99,020	**49.5**	3.60	ppmvd@15%O_2
CO	2*((A*8000) + (B*300))	43,660	**21.8**	2.40	ppmvd@15%O_2
VOC	2*((A*8000) + (B*300))	5,688	**2.8**	0.60	ppmvd@15%O_2
SO2	2*((A*8000) + (B*300))	4,998	**2.5**	0.14	ppmvd@15%O_2
PM10	2*((A*8000) + (B*300))	54,684	**27.3**	--	

D. Annual Maximum Emissions for Offsets Calculation

(Assume 2 turbines, each 8000 base hours, plus 300 startups and 300 shutdowns each; prorate annual VOC emissions to permit limit of 2 ppm.)

Pollutant		Annual Emissions		Stack Concentration	
		lb/yr	tpy		
NOx	2*((A*8000) + (B*300))	99,020	**49.5**	3.6	ppmvd@15%O_2
CO	2*((A*8000) + (B*300))*(6ppm/2.4ppm)	109,150	**54.6**	6.0	ppmvd@15%O_3
VOC	2*((A*8000) + (B*300))*(2ppm/0.6ppm)	18,960	**9.5**	2.0	ppmvd@15%O_2
SO2	2*((A*8000) + (B*300))	4,998	**2.5**	0.14	ppmvd@15%O_2
PM10	2*((A*8000) + (B*300))	54,684	**27.3**	--	

E. Annual Maximum Emissions for Emergency Generator

(Assume 13 hours per year, and use 100% load emission values)

Pollutant		Annual Emissions	
		lb/yr	tpy
NOx	4.29 lb/hr*13	55.8	**0.028**
CO	0.95 lb/hr*13	12.4	**0.0062**
VOC	0.12 lb/hr*13	1.6	**0.00078**
SO2	Footnote	0.1	**0.000065**
PM10	0.11 lb/hr*13	1.4	**0.00072**

Footnote:

(18.9 gal/hr fuel*7.1 lb/gal*0.0005 lbS/lb fuel*2lbSO2/lbS)

CALCULATION OF QUARTERLY OFFSETS FOR GWF HENRIETTA PEAKER PROJECT

Henrietta Peaker Plant (TPP)

Project Emissions 2x GE LM6000	Qtr 1	Qtr 2	Qtr 3	Qtr 4	Total
NOx	24,769	24,769	24,769	24,769	99,076
VOC	4,740	4,741	4,741	4,740	18,962
PM-10	13,671	13,671	13,672	13,671	54,685
SO2	1,249	1,250	1,250	1,249	4,998

(1) Project turbine emissions calculated from 63F, 100% load (annual average conditions) and include 300 start-up and 300 shutdown events
(2) Turbine is assumed to operate 8000 hours/yr
(3) Project emissions assumed with Evaporative Cooler on
(4) VOC emissions from average conditions (0.60 ppmvd @ 15%02) ratioed up to permit limit of 2 ppmvd @15%O2 for calculation of offsets burden.
(5) CO emissions not included because maximum project CO emissions are below offsets thresholds, and CO is an attainment, non-precursor pollutant.
(6) Annual project emissions include planned emergency generator testing (13 hours/year).

Emission Reduction Credits

NOx	Location of Reduction	How Created						
			SJVUAPCD NSR NOx Offset Allowance per Rule 2201.6.8.2.2:	**5,000.0**	**5,000.0**	**5,000.0**	**5,000.0**	**20,000**
C-410-2	525 W. Third St., Hanford	Source Shutdown		22,510.0	0.0	0.0	5,708.0	
C-411-2	525 W. Third St., Hanford	Source Shutdown		5,205.0	4,562.0	4,562.0	7,991.0	
C-412-2	525 W. Third St., Hanford	Source Shutdown		0.0	0.0	0.0	1,915.0	
Source A*	Elk Hills (Kern County)	Process Modification		20,010.0	39,450.0	40,330.0	40,330.0	
	NOx Offset Credit Calculations							
C-410-2	Distance Ratio 1.5			15,006.7	0.0	0.0	3,805.3	
C-411-2	Distance Ratio 1.5			3,470.0	3,041.3	3,041.3	5,327.3	
C-412-2	Distance Ratio 1.5			0.0	0.0	0.0	1,276.7	
Source A*	Distance Ratio 1.5			13,340.0	26,300.0	26,886.7	26,886.7	
			Total	**31,816.7**	**29,341.3**	**29,928.0**	**37,296.0**	**128,382.0**
			NOx Offsets Needed	19,769.0	19,769.0	19,769.0	19,769.0	79,076.0
Source A*	ERC's Remaining on Certificate		(Factor Back Applied 1.5 Ratio)	18,071.5	14,358.5	15,238.5	26,290.5	
VOC	**Location of Reduction**	**How Created**						
S-1567-1	20807 Stockdale Hwy, Bakersfield	Source Shutdown		2,728.0	2,626.0	2,626.0	2,728.0	
S-1537-1	2512 Coffee Road, Bakersfield	Source Shutdown		1,306.0	1,709.0	1,829.0	1,157.0	
S-1538-1	2512 Coffee Road, Bakersfield	Source Shutdown		12,029.0	13,701.0	14,447.0	13,112.0	
	VOC Offset Credit Calculations							
S-1567-1	Distance Ratio 1.5			1,818.7	1,750.7	1,750.7	1,818.7	
S-1537-1	Distance Ratio 1.5			870.7	1,139.3	1,219.3	771.3	
S-1538-1	Distance Ratio 1.5			8,019.3	9,134.0	9,631.3	8,741.3	
			Total	**10,708.7**	**12,024.0**	**12,601.3**	**11,331.3**	**46,665.3**
			VOC Offsets Needed	4,740.0	4,741.0	4,741.0	4,740.0	18,962.0
S-1538-1	ERC's Remaining on Certificate		(Factor Back Applied 1.5 Ratio)	8,953.0	10,924.5	11,790.5	9,887.0	
PM-10	**Location of Reduction**	**How Created**						
C-0366-4	710 Bainum Ave., Corcoran	Source Shutdown		5,699.0	5,087.0	7,081.0	6,732.0	
C-414-5**	525 W. Third St., Hanford	Source Shutdown		23,108.0	12,872.0	8,356.0	16,579.0	
C-415-5**	525 W. Third St., Hanford	Source Shutdown		6,832.6	0.0	0.0	6,466.6	
C-413-5**	525 W. Third St., Hanford	Source Shutdown		10,000.0	10,000.0	10,000.0	10,000.0	
	PM-10 Offset Credit Calculations							
C-0366-4	Distance Ratio 1.5			3,799.3	3,391.3	4,720.7	4,488.0	16,399.3
C-414-5**	Distance Ratio 1.5/Interpollutant Ratio 1.4 = 1.9			12,162.1	6,774.7	4,397.9	8,725.8	
C-415-5**	Distance Ratio 1.5/Interpollutant Ratio 1.4 = 1.9			3,596.1	0.0	0.0	3,403.5	
C-413-5**	Distance Ratio 1.5/Interpollutant Ratio 1.4 = 1.9			5,263.2	5,263.2	5,263.2	5,263.2	
			Total	**24,820.7**	**15,429.2**	**14,381.7**	**21,880.4**	**76,512.1**
			PM-10 Offsets Needed	13,671.0	13,671.0	13,672.0	13,671.0	54,685.0
C-414-5**	ERC's Remaining on Certificate		(Factor Back Applied 1.9 Ratio)	21,184.4	3,340.6	1,348.5	15,597.9	
SO2	**Location of Reduction**	**How Created**						
C-392-5	525 W. Third St.,Hanford	Source Shutdown		2,500.0	2,500.0	2,500.0	2,500.0	
	SO2 Offset Credit Calculation							
C-392-5	Distance Ratio 1.5			1,666.7	1,666.7	1,666.7	1,666.7	
			Total	**1,666.7**	**1,666.7**	**1,666.7**	**1,666.7**	**6,666.7**
			SO2 Offsets Needed	1,249.0	1,250.0	1,250.0	1,249.0	4,998.0
C-392-5	ERC's Remaining on Certificate		(Factor Back Applied 1.5 Ratio)	626.5	625.0	625.0	626.5	

Footnote:
* Certificate transfer to GWF is not completed at time of AFC submittal
** SO2 used for PM-10 at ratio of 1.9:1 (see analysis attached in Appendix)

APPENDIX B: AIR QUALITY

CONTENTS

- Meteorological Data for Lemoore (1968)

  Annual Frequency Distributions
  Annual Frequency Windrose
  Quarterly Frequency Distribution (Spring, Summer, Fall, Winter)
  Stability Class Frequency Tables (A,B,C,D,E,F)
  Stability Windrose (A,B,C,D,E,F)

- Turbine Vendor Data
- Emergency Generator Vendor Data
- Building Wake Effects (BPIP Output File)
- Refined Modeling Parameters
- Operational Impact Modeling Files
- Construction Emission Calculations
- Construction Impacts Modeling Files
- Turbine Commissioning Impacts Modeling Files
- SJVUAPCD Authority to Construct Permit Application Forms For GWF Henrietta
- Potential to Emit and Emission Offset Calculations

METEOROLOGICAL DATA FOR LEMOORE (1968)

TURBINE VENDOR DATA

EMERGENCY GENERATOR VENDOR DATA

BUILDING WAKE EFFECTS (BPIP Output File)

OPERATIONAL IMPACT MODELING FILES

REFINED MODELING PARAMETERS

CO

Source Group Identification

1-Hour	**1HR[1]**
1-Hour	**EGEN1[2]**
8-Hour	**8HR[1]**
8-Hour	**EGEN8[2]**

[1] **Includes start-up**
[2] **Includes emergency generator, but no start-up**

NO_2

Source Group Identification

1-Hour	**1HR[1]**
1-Hour	**EGEN1[2]**
Annual	**ALL_ANN**

[1] **Includes start-up**
[2] **Includes emergency generator, but no start-up**

PM_{10}

Source Group Identification

24-Hour	**24HR[1]**
24-Hour	**EGEN24[2]**
Annual	**ALL_ANN**

[1] **Includes start-up**
[2] **Includes emergency generator, but no start-up**

SO_2

Source Group Identification

1-Hour	**1HR[1]**
1-Hour	**EGEN1[2]**
3-Hour	**3HR[1]**
3-Hour	**EGEN3[2]**
24-Hour	**24HR[1]**
24-Hour	**EGEN24[2]**
Annual	**ALL_ANN**

[1] **Includes start-up**
[2] **Includes emergency generator, but no start-up**

CONSTRUCTION EMISSION CALCULATIONS

CONSTRUCTION EMISSION CALCULATIONS -- LINEARS

CONSTRUCTION EMISSION CALCULATIONS -- ONSITE

CONSTRUCTION IMPACTS MODELING FILES

1-HOUR CO

1-HOUR CO

8-HOUR CO

1-HOUR NO_2

ANNUAL NO_2

24-HOUR PM_{10}

ANNUAL PM_{10}

1-HOUR SO_2

3-HOUR SO_2

24-HOUR SO_2

ANNUAL SO_2

TURBINE COMMISSIONING IMPACTS MODELING FILES

1 & 8-HOUR CO

1-HOUR NO_2

SJVUAPCD AUTHORITY TO CONSTRUCT PERMIT APPLICATION FORMS FOR GWF HENRIETTA

POTENTIAL TO EMIT AND EMISSION OFFSET CALCULATIONS

The following sections of Appendix B (Air Quality) are available on the CD containing the air quality and public health modeling files for the Henrietta Peaker Project: Building Wake Effects (BPIP Output File), Operational Impact Modeling Files, Construction Impacts Modeling Files (except "Estimation of 1-Hour NOx Impact from Construction" discussion), and Turbine Commissioning Impacts Modeling Files.

METEOROLOGICAL DATA FOR LEMOORE (1968)

Station ID : 23110

RUN ID :

Years : 1968

Start Date : January 1

End Date : December 31

Start Time : Midnight

End Time : 11 PM

Frequency Distribution
(Count)

Wind Direction (Blowing From) / Wind Speed (m/s)

	0.51-2.06	2.06-3.60	3.60-5.66	5.66-8.75	8.75-10.80	>10.80	Total
N	195	348	299	113	4	1	960
NNE	107	172	136	31	0	0	446
NE	62	90	35	1	0	0	188
ENE	49	59	10	0	0	0	118
E	88	66	16	0	0	0	170
ESE	88	88	25	5	0	0	206
SE	122	117	75	15	0	0	329
SSE	104	106	51	7	1	0	269
S	97	74	26	10	1	0	208
SSW	63	43	19	5	1	0	131
SW	79	35	14	7	2	0	137
WSW	132	76	9	9	0	0	226
W	213	124	16	5	0	0	358
WNW	181	249	44	6	1	0	481
NW	200	536	338	101	9	2	1186
NNW	224	671	628	255	16	1	1795
Total	2004	2854	1741	570	35	4	

Frequency of Calm Winds : 1576

Average Wind Speed : 2.94 m/s

Station ID : 23110

RUN ID :

Years : 1968

Start Date : January 1

End Date : December 31

Start Time : Midnight

End Time : 11 PM

Frequency Distribution
(Normalized)

Wind Direction (Blowing From) / Wind Speed (m/s)

	0.51-2.06	2.06-3.60	3.60-5.66	5.66-8.75	8.75-10.80	>10.80	Total
N	0.022199	0.039617	0.034039	0.012864	0.000455	0.000114	0.109290
NNE	0.012181	0.019581	0.015483	0.003529	0.000000	0.000000	0.050774
NE	0.007058	0.010246	0.003985	0.000114	0.000000	0.000000	0.021403
ENE	0.005578	0.006717	0.001138	0.000000	0.000000	0.000000	0.013434
E	0.010018	0.007514	0.001821	0.000000	0.000000	0.000000	0.019353
ESE	0.010018	0.010018	0.002846	0.000569	0.000000	0.000000	0.023452
SE	0.013889	0.013320	0.008538	0.001708	0.000000	0.000000	0.037454
SSE	0.011840	0.012067	0.005806	0.000797	0.000114	0.000000	0.030624
S	0.011043	0.008424	0.002960	0.001138	0.000114	0.000000	0.023679
SSW	0.007172	0.004895	0.002163	0.000569	0.000114	0.000000	0.014913
SW	0.008994	0.003985	0.001594	0.000797	0.000228	0.000000	0.015597
WSW	0.015027	0.008652	0.001025	0.001025	0.000000	0.000000	0.025729
W	0.024249	0.014117	0.001821	0.000569	0.000000	0.000000	0.040756
WNW	0.020606	0.028347	0.005009	0.000683	0.000114	0.000000	0.054759
NW	0.022769	0.061020	0.038479	0.011498	0.001025	0.000228	0.135018
NNW	0.025501	0.076389	0.071494	0.029030	0.001821	0.000114	0.204349
Total	0.228142	0.324909	0.198201	0.064891	0.003985	0.000455	

Frequency of Calm Winds : 17.94%

Average Wind Speed : 2.94 m/s

WIND ROSE PLOT

Lemoore

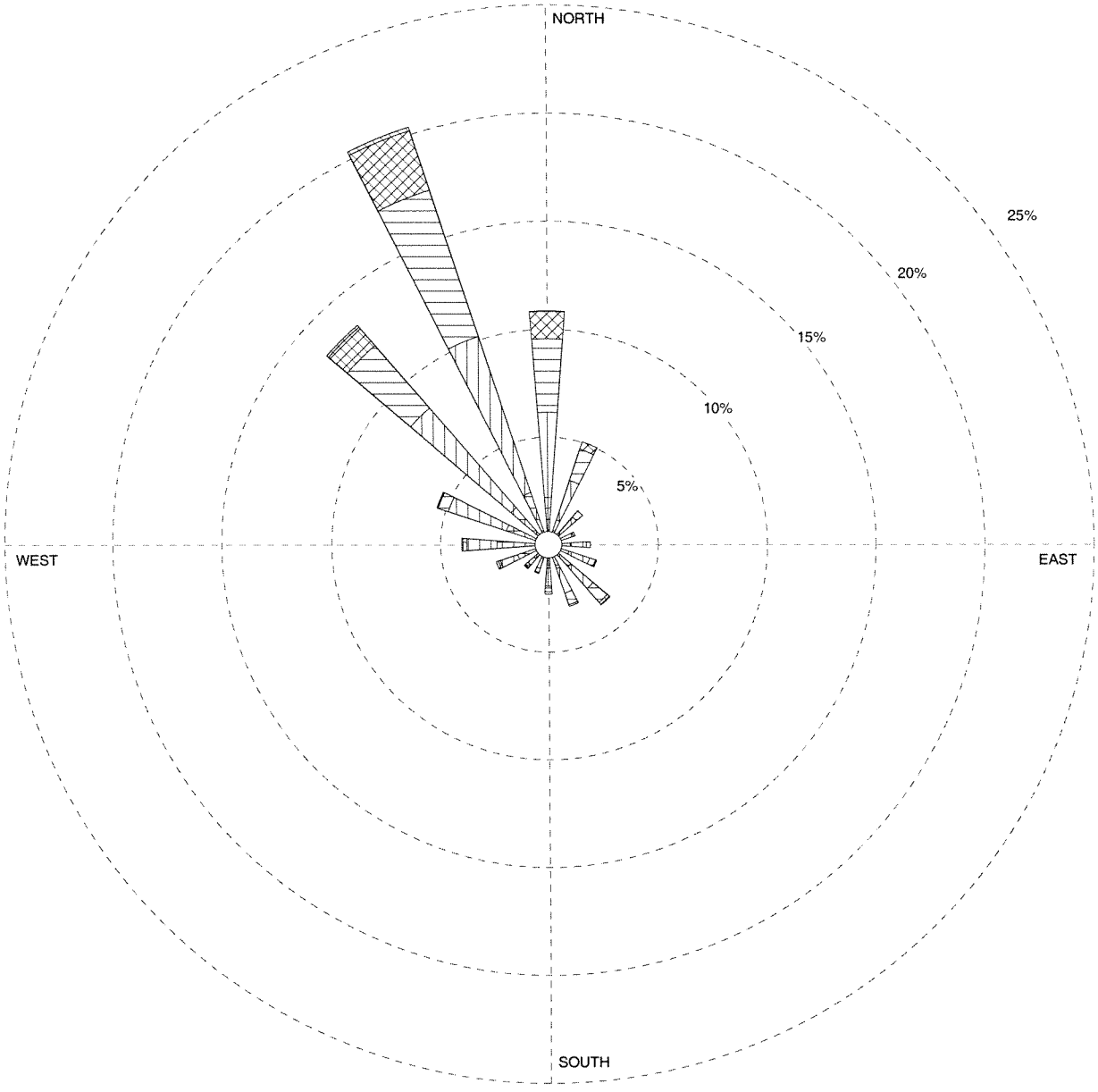

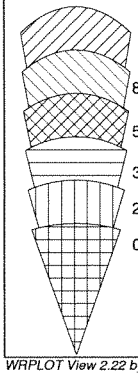

MODELER	DATE	COMPANY NAME
vjh	**8/22/01**	**URS Corporation**
DISPLAY	UNIT	COMMENTS
Wind Speed	**m/s**	**Annualy Wind Rose 1968**
AVG. WIND SPEED	CALM WINDS	
2.94 m/s	**17.94%**	
ORIENTATION	PLOT YEAR-DATE-TIME	PROJECT/PLOT NO.
Direction (blowing from)	**68 January 1 - December 31 Midnight - 11 PM**	

WRPLOT View 2.22 by Lakes Environmental Software - www.lakes-environmental.com

Station ID : 23110

RUN ID :

Years : 1968

Start Date : January 1

End Date : March 31

Start Time : Midnight

End Time : 11 PM

Frequency Distribution
(Count)

Wind Direction (Blowing From) / Wind Speed (m/s)

	0.51-2.06	2.06-3.60	3.60-5.66	5.66-8.75	8.75-10.80	>10.80	Total
N	42	52	29	9	0	0	132
NNE	24	29	12	1	0	0	66
NE	15	12	1	0	0	0	28
ENE	15	20	2	0	0	0	37
E	35	32	9	0	0	0	76
ESE	43	52	13	1	0	0	109
SE	49	60	38	10	0	0	157
SSE	37	44	27	5	1	0	114
S	40	27	8	4	1	0	80
SSW	13	16	8	2	0	0	39
SW	29	13	3	1	0	0	46
WSW	45	37	1	1	0	0	84
W	57	49	5	0	0	0	111
WNW	49	38	11	0	0	0	98
NW	34	91	58	13	0	0	196
NNW	45	91	71	32	1	0	240
Total	572	663	296	79	3	0	

Frequency of Calm Winds : 571

Average Wind Speed : 2.54 m/s

Station ID : 23110

RUN ID :

Years : 1968

Start Date : January 1

End Date : March 31

Start Time : Midnight

End Time : 11 PM

Frequency Distribution
(Normalized)

Wind Direction (Blowing From) / Wind Speed (m/s)

	0.51-2.06	2.06-3.60	3.60-5.66	5.66-8.75	8.75-10.80	>10.80	Total
N	0.019231	0.023810	0.013278	0.004121	0.000000	0.000000	0.060440
NNE	0.010989	0.013278	0.005495	0.000458	0.000000	0.000000	0.030220
NE	0.006868	0.005495	0.000458	0.000000	0.000000	0.000000	0.012821
ENE	0.006868	0.009158	0.000916	0.000000	0.000000	0.000000	0.016941
E	0.016026	0.014652	0.004121	0.000000	0.000000	0.000000	0.034799
ESE	0.019689	0.023810	0.005952	0.000458	0.000000	0.000000	0.049908
SE	0.022436	0.027473	0.017399	0.004579	0.000000	0.000000	0.071886
SSE	0.016941	0.020147	0.012363	0.002289	0.000458	0.000000	0.052198
S	0.018315	0.012363	0.003663	0.001832	0.000458	0.000000	0.036630
SSW	0.005952	0.007326	0.003663	0.000916	0.000000	0.000000	0.017857
SW	0.013278	0.005952	0.001374	0.000458	0.000000	0.000000	0.021062
WSW	0.020604	0.016941	0.000458	0.000458	0.000000	0.000000	0.038462
W	0.026099	0.022436	0.002289	0.000000	0.000000	0.000000	0.050824
WNW	0.022436	0.017399	0.005037	0.000000	0.000000	0.000000	0.044872
NW	0.015568	0.041667	0.026557	0.005952	0.000000	0.000000	0.089744
NNW	0.020604	0.041667	0.032509	0.014652	0.000458	0.000000	0.109890
Total	0.261905	0.303571	0.135531	0.036172	0.001374	0.000000	

Frequency of Calm Winds : 26.14%

Average Wind Speed : 2.54 m/s

Station ID : 23110

Years : 1968

Start Date : April 1

Start Time : Midnight

RUN ID :

End Date : June 30

End Time : 11 PM

Frequency Distribution

(Count)

Wind Direction (Blowing From) / Wind Speed (m/s)

	0.51-2.06	2.06-3.60	3.60-5.66	5.66-8.75	8.75-10.80	>10.80	Total
N	32	90	103	42	2	0	269
NNE	15	42	29	12	0	0	98
NE	7	14	8	0	0	0	29
ENE	11	8	2	0	0	0	21
E	5	10	1	0	0	0	16
ESE	6	3	3	0	0	0	12
SE	14	8	7	2	0	0	31
SSE	11	5	1	0	0	0	17
S	5	3	4	2	0	0	14
SSW	14	9	2	2	0	0	27
SW	16	7	6	2	0	0	31
WSW	37	22	3	2	0	0	64
W	43	34	7	2	0	0	86
WNW	35	107	27	5	1	0	175
NW	44	163	183	71	9	2	472
NNW	39	189	260	149	10	1	648
Total	334	714	646	291	22	3	

Frequency of Calm Winds : 174

Average Wind Speed : 3.60 m/s

Station ID : 23110

RUN ID :

Years : 1968

Start Date : April 1

End Date : June 30

Start Time : Midnight

End Time : 11 PM

Frequency Distribution
(Normalized)

Wind Direction (Blowing From) / Wind Speed (m/s)

	0.51-2.06	2.06-3.60	3.60-5.66	5.66-8.75	8.75-10.80	>10.80	Total
N	0.014652	0.041209	0.047161	0.019231	0.000916	0.000000	0.123168
NNE	0.006868	0.019231	0.013278	0.005495	0.000000	0.000000	0.044872
NE	0.003205	0.006410	0.003663	0.000000	0.000000	0.000000	0.013278
ENE	0.005037	0.003663	0.000916	0.000000	0.000000	0.000000	0.009615
E	0.002289	0.004579	0.000458	0.000000	0.000000	0.000000	0.007326
ESE	0.002747	0.001374	0.001374	0.000000	0.000000	0.000000	0.005495
SE	0.006410	0.003663	0.003205	0.000916	0.000000	0.000000	0.014194
SSE	0.005037	0.002289	0.000458	0.000000	0.000000	0.000000	0.007784
S	0.002289	0.001374	0.001832	0.000916	0.000000	0.000000	0.006410
SSW	0.006410	0.004121	0.000916	0.000916	0.000000	0.000000	0.012363
SW	0.007326	0.003205	0.002747	0.000916	0.000000	0.000000	0.014194
WSW	0.016941	0.010073	0.001374	0.000916	0.000000	0.000000	0.029304
W	0.019689	0.015568	0.003205	0.000916	0.000000	0.000000	0.039377
WNW	0.016026	0.048993	0.012363	0.002289	0.000458	0.000000	0.080128
NW	0.020147	0.074634	0.083791	0.032509	0.004121	0.000916	0.216117
NNW	0.017857	0.086538	0.119048	0.068223	0.004579	0.000458	0.296703
Total	0.152930	0.326923	0.295788	0.133242	0.010073	0.001374	

Frequency of Calm Winds : 7.97%

Average Wind Speed : 3.60 m/s

Station ID : 23110

RUN ID :

Years : 1968

Start Date : July 1

End Date : September 30

Start Time : Midnight

End Time : 11 PM

Frequency Distribution
(Count)

Wind Direction (Blowing From) / Wind Speed (m/s)

	0.51-2.06	2.06-3.60	3.60-5.66	5.66-8.75	8.75-10.80	>10.80	Total
N	64	133	108	34	0	0	339
NNE	32	63	81	13	0	0	189
NE	11	43	21	1	0	0	76
ENE	7	16	4	0	0	0	27
E	9	9	2	0	0	0	20
ESE	5	6	0	0	0	0	11
SE	5	5	0	0	0	0	10
SSE	8	6	0	0	0	0	14
S	10	7	1	0	0	0	18
SSW	11	1	0	0	0	0	12
SW	8	4	0	1	1	0	14
WSW	27	4	3	3	0	0	37
W	63	23	3	2	0	0	91
WNW	55	77	4	0	0	0	136
NW	67	209	76	10	0	0	362
NNW	91	282	212	52	3	0	640
Total	473	888	515	116	4	0	

Frequency of Calm Winds : 212

Average Wind Speed : 2.91 m/s

Station ID : 23110

RUN ID :

Years : 1968

Start Date : July 1

End Date : September 30

Start Time : Midnight

End Time : 11 PM

Frequency Distribution
(Normalized)

Wind Direction (Blowing From) / Wind Speed (m/s)

	0.51-2.06	2.06-3.60	3.60-5.66	5.66-8.75	8.75-10.80	>10.80	Total
N	0.028986	0.060236	0.048913	0.015399	0.000000	0.000000	0.153533
NNE	0.014493	0.028533	0.036685	0.005888	0.000000	0.000000	0.085598
NE	0.004982	0.019475	0.009511	0.000453	0.000000	0.000000	0.034420
ENE	0.003170	0.007246	0.001812	0.000000	0.000000	0.000000	0.012228
E	0.004076	0.004076	0.000906	0.000000	0.000000	0.000000	0.009058
ESE	0.002264	0.002717	0.000000	0.000000	0.000000	0.000000	0.004982
SE	0.002264	0.002264	0.000000	0.000000	0.000000	0.000000	0.004529
SSE	0.003623	0.002717	0.000000	0.000000	0.000000	0.000000	0.006341
S	0.004529	0.003170	0.000453	0.000000	0.000000	0.000000	0.008152
SSW	0.004982	0.000453	0.000000	0.000000	0.000000	0.000000	0.005435
SW	0.003623	0.001812	0.000000	0.000453	0.000453	0.000000	0.006341
WSW	0.012228	0.001812	0.001359	0.001359	0.000000	0.000000	0.016757
W	0.028533	0.010417	0.001359	0.000906	0.000000	0.000000	0.041214
WNW	0.024909	0.034873	0.001812	0.000000	0.000000	0.000000	0.061594
NW	0.030344	0.094656	0.034420	0.004529	0.000000	0.000000	0.163949
NNW	0.041214	0.127717	0.096014	0.023551	0.001359	0.000000	0.289855
Total	0.214221	0.402174	0.233243	0.052536	0.001812	0.000000	

Frequency of Calm Winds : 9.60%

Average Wind Speed : 2.91 m/s

Station ID : 23110

RUN ID :

Years : 1968

Start Date : October 1

End Date : December 31

Start Time : Midnight

End Time : 11 PM

Frequency Distribution
(Count)

Wind Direction (Blowing From) / Wind Speed (m/s)

	0.51-2.06	2.06-3.60	3.60-5.66	5.66-8.75	8.75-10.80	>10.80	Total
N	57	73	59	28	2	1	220
NNE	36	38	14	5	0	0	93
NE	29	21	5	0	0	0	55
ENE	16	15	2	0	0	0	33
E	39	15	4	0	0	0	58
ESE	34	27	9	4	0	0	74
SE	54	44	30	3	0	0	131
SSE	48	51	23	2	0	0	124
S	42	37	13	4	0	0	96
SSW	25	17	9	1	1	0	53
SW	26	11	5	3	1	0	46
WSW	23	13	2	3	0	0	41
W	50	18	1	1	0	0	70
WNW	42	27	2	1	0	0	72
NW	55	73	21	7	0	0	156
NNW	49	109	85	22	2	0	267
Total	625	589	284	84	6	1	

Frequency of Calm Winds : 619

Average Wind Speed : 2.56 m/s

Station ID : 23110

RUN ID :

Years : 1968

Start Date : October 1

End Date : December 31

Start Time : Midnight

End Time : 11 PM

Frequency Distribution
(Normalized)

Wind Direction (Blowing From) / Wind Speed (m/s)

	0.51-2.06	2.06-3.60	3.60-5.66	5.66-8.75	8.75-10.80	>10.80	Total
N	0.025815	0.033062	0.026721	0.012681	0.000906	0.000453	0.099638
NNE	0.016304	0.017210	0.006341	0.002264	0.000000	0.000000	0.042120
NE	0.013134	0.009511	0.002264	0.000000	0.000000	0.000000	0.024909
ENE	0.007246	0.006793	0.000906	0.000000	0.000000	0.000000	0.014946
E	0.017663	0.006793	0.001812	0.000000	0.000000	0.000000	0.026268
ESE	0.015399	0.012228	0.004076	0.001812	0.000000	0.000000	0.033514
SE	0.024457	0.019928	0.013587	0.001359	0.000000	0.000000	0.059330
SSE	0.021739	0.023098	0.010417	0.000906	0.000000	0.000000	0.056159
S	0.019022	0.016757	0.005888	0.001812	0.000000	0.000000	0.043478
SSW	0.011322	0.007699	0.004076	0.000453	0.000453	0.000000	0.024004
SW	0.011775	0.004982	0.002264	0.001359	0.000453	0.000000	0.020833
WSW	0.010417	0.005888	0.000906	0.001359	0.000000	0.000000	0.018569
W	0.022645	0.008152	0.000453	0.000453	0.000000	0.000000	0.031703
WNW	0.019022	0.012228	0.000906	0.000453	0.000000	0.000000	0.032609
NW	0.024909	0.033062	0.009511	0.003170	0.000000	0.000000	0.070652
NNW	0.022192	0.049366	0.038496	0.009964	0.000906	0.000000	0.120924
Total	0.283062	0.266757	0.128623	0.038043	0.002717	0.000453	

Frequency of Calm Winds : 28.03%

Average Wind Speed : 2.56 m/s

Station ID : 23110

RUN ID :

Years : 1968

Start Date : January 1

End Date : December 31

Start Time : Midnight

End Time : 11 PM

Frequency Distribution
(Count)

Wind Direction (Blowing From) / Stability Classes

	A	B	C	D	E	F	Total
N	41	165	216	304	107	127	960
NNE	28	103	127	130	29	29	446
NE	18	54	50	38	19	9	188
ENE	11	20	29	32	10	16	118
E	12	37	27	42	19	33	170
ESE	2	30	25	70	32	47	206
SE	4	32	47	146	43	57	329
SSE	2	26	29	119	33	60	269
S	1	21	17	81	23	65	208
SSW	6	4	10	40	12	59	131
SW	1	8	7	29	19	73	137
WSW	9	11	3	24	26	153	226
W	7	12	10	31	52	246	358
WNW	19	33	24	61	75	269	481
NW	27	96	115	241	292	415	1186
NNW	42	214	296	551	344	348	1795
Total	230	866	1032	1939	1135	2006	

Frequency of Calm Winds : 1576

Average Wind Speed : 2.94 m/s

Station ID : 23110

Years : 1968

Start Date : January 1

Start Time : Midnight

RUN ID :

End Date : December 31

End Time : 11 PM

Frequency Distribution
(Normalized)

Wind Direction (Blowing From) / Stability Classes

	A	B	C	D	E	F	Total
N	0.004668	0.018784	0.024590	0.034608	0.012181	0.014458	0.109290
NNE	0.003188	0.011726	0.014458	0.014800	0.003301	0.003301	0.050774
NE	0.002049	0.006148	0.005692	0.004326	0.002163	0.001025	0.021403
ENE	0.001252	0.002277	0.003301	0.003643	0.001138	0.001821	0.013434
E	0.001366	0.004212	0.003074	0.004781	0.002163	0.003757	0.019353
ESE	0.000228	0.003415	0.002846	0.007969	0.003643	0.005351	0.023452
SE	0.000455	0.003643	0.005351	0.016621	0.004895	0.006489	0.037454
SSE	0.000228	0.002960	0.003301	0.013547	0.003757	0.006831	0.030624
S	0.000114	0.002391	0.001935	0.009221	0.002618	0.007400	0.023679
SSW	0.000683	0.000455	0.001138	0.004554	0.001366	0.006717	0.014913
SW	0.000114	0.000911	0.000797	0.003301	0.002163	0.008311	0.015597
WSW	0.001025	0.001252	0.000342	0.002732	0.002960	0.017418	0.025729
W	0.000797	0.001366	0.001138	0.003529	0.005920	0.028005	0.040756
WNW	0.002163	0.003757	0.002732	0.006944	0.008538	0.030624	0.054759
NW	0.003074	0.010929	0.013092	0.027436	0.033242	0.047245	0.135018
NNW	0.004781	0.024362	0.033698	0.062728	0.039162	0.039617	0.204349
Total	0.026184	0.098588	0.117486	0.220742	0.129212	0.228370	

Frequency of Calm Winds : 17.94%

Average Wind Speed : 2.94 m/s

WIND ROSE PLOT

Lemoore

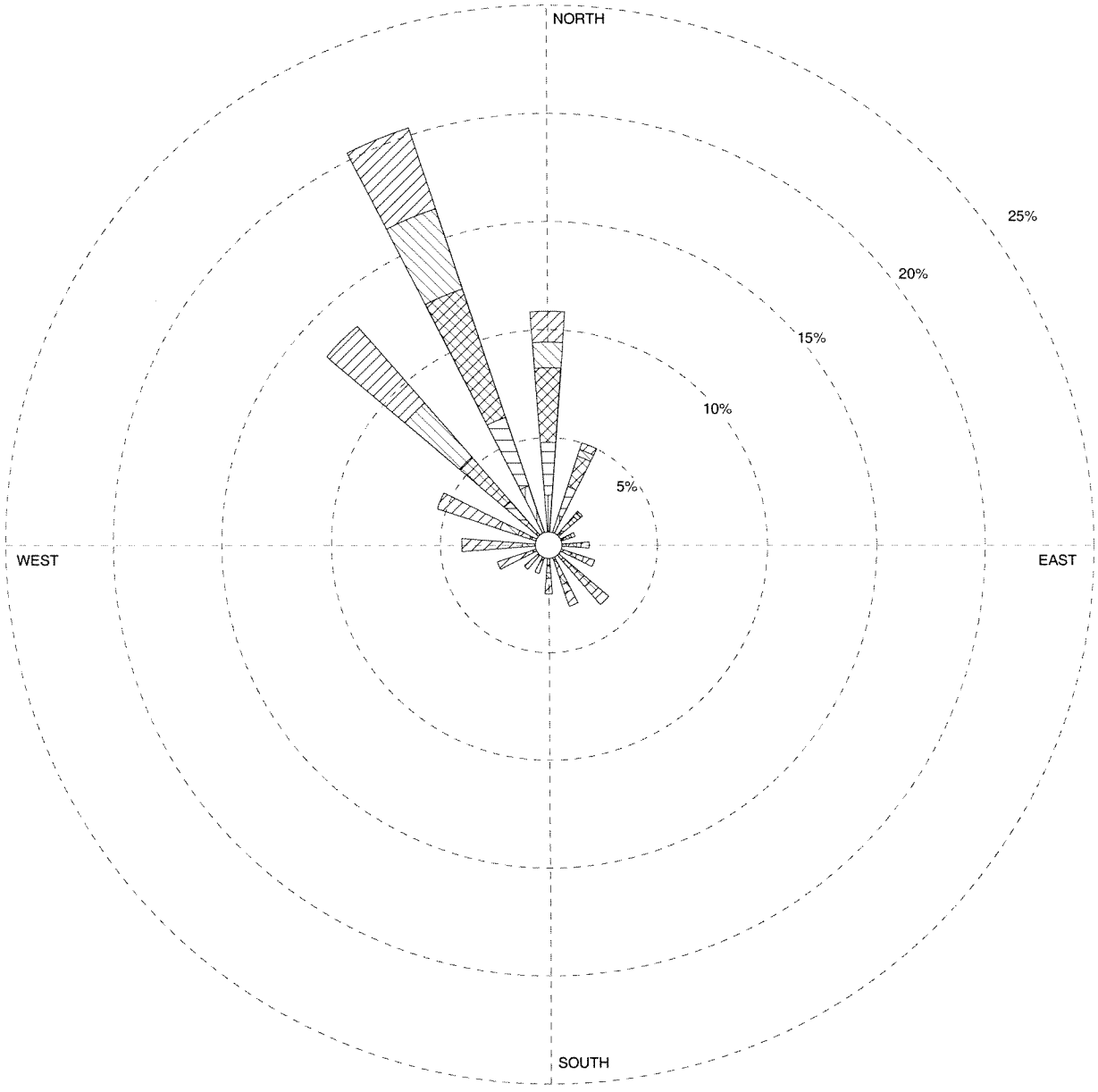

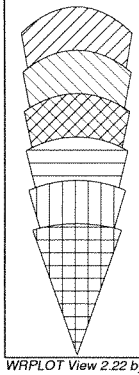

MODELER **vjh**	DATE **8/22/01**	COMPANY NAME **URS Corporation**	
DISPLAY **Stability Classes**	UNIT **N/A**	COMMENTS **Annualy Stability Rose 1968**	
AVG. WIND SPEED **2.94 m/s**	CALM WINDS **17.94%**		
ORIENTATION **Direction (blowing from)**	PLOT YEAR-DATE-TIME **68 January 1 - December 31 Midnight - 11 PM**	PROJECT/PLOT NO.	

WRPLOT View 2.22 by Lakes Environmental Software - www.lakes-environmental.com

9-Aug-01
CED
Henrietta
69381
Simple Cycle Plant Emissions Estimate, Revision 1

Case Number	1	2	3	4	5	6	7
CTG Model	LM6000	LM6000	LM6000	LM6000	LM6000	LM6000	LM6000
Diluent	DN 9/42	DN 9/42	DN 9/42	DN 9/42	DN 9/42	DN 9/42	DN 9/42
CTG Fuel Type	Cust Gas	Cust Gas	Cust Gas	Cust Gas	Cust Gas	Cust Gas	Cust Gas
CTG Load	100%	60%	100%	60%	100%	60%	100%
CTG Inlet Air Conditioning In Operation?	No	No	No	No	No	No	Evap. Cooler
Ambient Temperature, F	15	15	25	25	36	36	59
HRSG Firing	Unfired	Unfired	Unfired	Unfired	Unfired	Unfired	Unfired
Fuel Sulfur Content (grains/100 standard cubic feet)	0.25	0.25	0.25	0.25	0.25	0.25	0.25
Ambient Temperature, F	15.0	15.0	25.0	25.0	36.0	36.0	59.0
Ambient Relative Humidity, %	92.0	92.0	60.0	60.0	75.0	75.0	60.0
Atmospheric Pressure, psia	14.569	14.569	14.569	14.569	14.569	14.569	14.569
CTG Inlet Air Conditioning Effectiveness, %	0	0	0	0	0	0	85
CTG Compressor Inlet Dry Bulb Temperature, F	15.0	15.0	25.0	25.0	36.0	36.0	52.6
CTG Compr. Inlet Relative Humidity, %	92.1	92.1	60.3	60.3	75.2	75.2	92.9
Inlet Loss, in. H2O	4.5	4.5	4.5	4.5	4.5	4.5	4.5
Exhaust Loss, in. H2O	6.0	6.0	6.0	6.0	6.0	6.0	6.0
CTG Performance Reference	GE AERO ENERGY	GE AERO ENERGY	GE AERO ENERGY	GE AERO ENERGY	GE AERO ENERGY	GE AERO ENERGY	GE AERO ENERGY
CTG Load Level (percent of Base Load)	100%	60%	100%	60%	100%	60%	100%
Gross CTG Output, kW	50,448	30,136	50,804	30,492	50,345	30,074	47,447
Gross CTG Heat Rate, Btu/kWh (LHV)	8,317	9,497	8,362	9,463	8,440	9,548	8,659
Gross CTG Heat Rate, Btu/kWh (HHV)	9,204	10,510	9,254	10,472	9,340	10,566	9,583
CTG Heat Input, MBtu/h (LHV)	419.6	286.2	424.8	288.6	424.9	287.2	410.8
CTG Heat Input, MBtu/h (HHV)	464.3	316.7	470.1	319.3	470.2	317.8	454.7
CTG Water Injection Flow, lb/h	22,574	11,901	23,860	12,480	24,084	12,385	21,793
CTG Steam Injection Flow, lb/h	0	0	0	0	0	0	0
Injection Fluid/Fuel Ratio	0.0	0.0	0.0	0.0	0.0	0.0	0.0
CTG Exhaust Flow, lb/h	1,130,760	947,880	1,110,240	936,720	1,082,880	914,400	1,041,480
CTG Exhaust Temperature, F	764	682	793	702	819	722	848
Total CTG Fuel Flow, lb/h	22,100	15,080	22,380	15,200	22,390	15,130	21,640
CTG Fuel Temperature, F	76	76	76	76	76	76	76
CTG Fuel LHV, Btu/lb	18,981	18,981	18,981	18,981	18,981	18,981	18,981
CTG Fuel HHV, Btu/lb	21,006	21,006	21,006	21,006	21,006	21,006	21,006
HHV/LHV Ratio	1.1067	1.1067	1.1067	1.1067	1.1067	1.1067	1.1067
CTG Fuel Composition (Ultimate Analysis by Weight)							
Ar	0.00%	0.00%	0.00%	0.00%	0.00%	0.00%	0.00%
C	68.44%	68.44%	68.44%	68.44%	68.44%	68.44%	68.44%
H2	21.38%	21.38%	21.38%	21.38%	21.38%	21.38%	21.38%
N2	8.80%	8.80%	8.80%	8.80%	8.80%	8.80%	8.80%
O2	1.37%	1.37%	1.37%	1.37%	1.37%	1.37%	1.37%
S	0.00072%	0.00072%	0.00072%	0.00072%	0.00072%	0.00072%	0.00072%
Total	100.00%	100.00%	100.00%	100.00%	100.00%	100.00%	100.00%
Fuel Sulfur Content (grains/100 standard cubic feet)	0.25	0.25	0.25	0.25	0.25	0.25	0.25

9-Aug-01
CED
Henrietta
69381
Simple Cycle Plant Emissions Estimate, Revision 1

Case Number	1	2	3	4	5	6	7
CTG Model	LM6000	LM6000	LM6000	LM6000	LM6000	LM6000	LM6000
Diluent	DN 9/42	DN 9/42	DN 9/42	DN 9/42	DN 9/42	DN 9/42	DN 9/42
CTG Fuel Type	Cust Gas	Cust Gas	Cust Gas	Cust Gas	Cust Gas	Cust Gas	Cust Gas
CTG Load	100%	60%	100%	60%	100%	60%	100%
CTG Inlet Air Conditioning In Operation?	No	No	No	No	No	No	Evap. Cooler
Ambient Temperature, F	15	15	25	25	36	36	59
HRSG Firing	Unfired	Unfired	Unfired	Unfired	Unfired	Unfired	Unfired
Fuel Sulfur Content (grains/100 standard cubic feet)	0.25	0.25	0.25	0.25	0.25	0.25	0.25
Combustion Turbine Exhaust Emissions							
CTG Exhaust Analysis (Volume Basis - Wet)							
Ar	0.92%	0.93%	0.91%	0.93%	0.91%	0.93%	0.90%
CO2	3.15%	2.58%	3.24%	2.63%	3.32%	2.68%	3.33%
H2O	9.22%	7.02%	9.65%	7.25%	10.14%	7.62%	10.62%
N2	73.14%	74.44%	72.87%	74.30%	72.54%	74.05%	72.18%
O2	13.58%	15.03%	13.32%	14.89%	13.08%	14.73%	12.97%
SO2	0.00001%	0.00001%	0.00001%	0.00001%	0.00001%	0.00001%	0.00001%
Total	100.0%	100.0%	100.0%	100.0%	100.0%	100.0%	100.0%
NOx, ppmvd @15% O2	25.00	25.00	25.00	25.00	25.00	25.00	25.00
NOx, ppmvd	25.18	20.15	26.06	20.58	26.83	21.05	27.06
NOx, ppmvw (wet - uncorrected exhaust gas)	22.86	18.73	23.54	19.09	24.11	19.44	24.18
NOx, lb/h as NO2	43.1	29.7	43.6	30.0	43.7	29.8	42.2
NOx, lb/MBtu (LHV)	0.1027	0.1039	0.1027	0.1038	0.1027	0.1039	0.1028
NOx, lb/MBtu (HHV)	0.0928	0.0939	0.0928	0.0938	0.0928	0.0938	0.0929
CO, ppmvd @ 15% O2	60.00	56.00	52.00	50.00	41.99	41.00	27.00
CO, ppmvd	60.43	45.13	54.20	41.17	45.07	34.52	29.22
CO, ppmvw (wet - uncorrected exhaust gas)	54.86	41.96	48.97	38.18	40.50	31.89	26.12
CO, lb/h	62.5	40.2	55.0	36.3	44.6	29.8	28.1
CO, lb/MBtu (LHV)	0.1490	0.1404	0.1294	0.1256	0.1050	0.1037	0.0684
CO, lb/MBtu (HHV)	0.1346	0.1268	0.1170	0.1135	0.0949	0.0937	0.0618
NOTE: SO2 estimate does not include the effects of SO2 oxidation							
SO2, ppmvd @ 15% O2 (with no SO2 oxidation)	0.14	0.14	0.14	0.14	0.14	0.14	0.14
SO2, ppmvd (with no SO2 oxidation)	0.14	0.11	0.14	0.11	0.15	0.11	0.15
SO2, ppmvw (with no SO2 oxidation)(wet - uncorrected exhaust gas)	0.12	0.10	0.13	0.10	0.13	0.11	0.13
SO2, lb/h (with no SO2 oxidation)	0.32	0.22	0.32	0.22	0.32	0.22	0.31
SO2, lb/MBtu (LHV) (with no SO2 oxidation)	0.0008	0.0008	0.0008	0.0008	0.0008	0.0008	0.0008
SO2, lb/MBtu (HHV) (with no SO2 oxidation)	0.0007	0.0007	0.0007	0.0007	0.0007	0.0007	0.0007

9-Aug-01
CED
Henrietta
69381
Simple Cycle Plant Emissions Estimate, Revision 1

Case Number	1	2	3	4	5	6	7
CTG Model	LM6000	LM6000	LM6000	LM6000	LM6000	LM6000	LM6000
Diluent	DN 9/42	DN 9/42	DN 9/42	DN 9/42	DN 9/42	DN 9/42	DN 9/42
CTG Fuel Type	Cust Gas	Cust Gas	Cust Gas	Cust Gas	Cust Gas	Cust Gas	Cust Gas
CTG Load	100%	60%	100%	60%	100%	60%	100%
CTG Inlet Air Conditioning In Operation?	No	No	No	No	No	No	Evap. Cooler
Ambient Temperature, F	15	15	25	25	36	36	59
HRSG Firing	Unfired	Unfired	Unfired	Unfired	Unfired	Unfired	Unfired
Fuel Sulfur Content (grains/100 standard cubic feet)	0.25	0.25	0.25	0.25	0.25	0.25	0.25
Combustion Turbine Exhaust Emissions - continued							
UHC, ppmvd @ 15% O2	10.00	9.00	8.00	7.00	5.00	5.00	3.00
UHC, ppmvd	10.07	7.25	8.34	5.76	5.37	4.21	3.25
UHC, ppmvw (wet - uncorrected exhaust gas)	9.14	6.74	7.53	5.35	4.82	3.89	2.90
UHC, lb/h as CH4	6.4	4.1	5.3	3.3	3.5	2.5	2.2
UHC, lb/MBtu as CH4 (LHV)	0.0152	0.0143	0.0124	0.0115	0.0082	0.0087	0.0054
UHC, lb/MBtu as CH4 (HHV)	0.0137	0.0130	0.0112	0.0104	0.0074	0.0079	0.0049
VOC percentage of UHC	20%	20%	20%	20%	20%	20%	20%
VOC, ppmvd @ 15% O2	2.0	1.8	1.6	1.4	1.0	1.0	0.6
VOC, ppmvd	2.01	1.45	1.67	1.15	1.07	0.84	0.65
VOC, ppmvw (wet - uncorrected exhaust flow)	1.83	1.35	1.51	1.07	0.96	0.78	0.58
VOC, lb/h as CH4	1.2	0.7	1.0	0.6	0.6	0.4	0.3
VOC, lb/MBtu as CH4 (LHV)	0.0030	0.0029	0.0025	0.0023	0.0016	0.0017	0.0011
VOC, lb/MBtu as CH4 (HHV)	0.0027	0.0026	0.0022	0.0021	0.0015	0.0016	0.0010
Particulates, lb/h (front half catch only)	1.5	1.5	1.5	1.5	1.5	1.5	1.5
Particulates, lb/h (front and back half catch)	3.0	3.0	3.0	3.0	3.0	3.0	3.0
Particulates, lb/MBtu (LHV) (front half catch only)	0.0036	0.0052	0.0035	0.0052	0.0035	0.0052	0.0037
Particulates, lb/MBtu (HHV) (front half catch only)	0.0032	0.0047	0.0032	0.0047	0.0032	0.0047	0.0033
PM10, lb/h (front half catch only)	1.5	1.5	1.5	1.5	1.5	1.5	1.5
PM10, lb/h (front and back half catch)	3.0	3.0	3.0	3.0	3.0	3.0	3.0
PM10, lb/MBtu (LHV) (front and back half catch)	0.0072	0.0105	0.0071	0.0104	0.0071	0.0104	0.0073
PM10, lb/MBtu (HHV) (front and back half catch)	0.0065	0.0095	0.0064	0.0094	0.0064	0.0094	0.0066
CTG Wet (Total) Exhaust Gas Analysis							
Molecular Wt, lb/mol	28.25	28.44	28.21	28.42	28.16	28.38	28.11
Gas Constant, ft-lbf/lbm-R	54.700	54.330	54.770	54.370	54.860	54.440	54.960
Specific Volume, ft^3/lb	31.43	29.13	32.22	29.66	32.95	30.21	33.76
Exhaust Gas Flow, acfm	592,330	460,196	596,199	463,052	594,682	460,400	586,006
Specific Volume, scf/lb	13.43	13.34	13.45	13.35	13.47	13.37	13.50
Exhaust Gas Flow, scfm	253,102	210,745	248,879	208,420	243,107	203,759	234,333

9-Aug-01
CED
Henrietta
69381
Simple Cycle Plant Emissions Estimate, Revision 1

Case Number	1	2	3	4	5	6	7
CTG Model	LM6000	LM6000	LM6000	LM6000	LM6000	LM6000	LM6000
Diluent	DN 9/42	DN 9/42	DN 9/42	DN 9/42	DN 9/42	DN 9/42	DN 9/42
CTG Fuel Type	Cust Gas	Cust Gas	Cust Gas	Cust Gas	Cust Gas	Cust Gas	Cust Gas
CTG Load	100%	60%	100%	60%	100%	60%	100%
CTG Inlet Air Conditioning In Operation?	No	No	No	No	No	No	Evap. Cooler
Ambient Temperature, F	15	15	25	25	36	36	59
HRSG Firing	Unfired	Unfired	Unfired	Unfired	Unfired	Unfired	Unfired
Fuel Sulfur Content (grains/100 standard cubic feet)	0.25	0.25	0.25	0.25	0.25	0.25	0.25
Stack Emissions							
NOTE: Exhaust Analysis does not include the effects of post combustion control							
Stack Exhaust Analysis (Volume Basis - Wet)							
Ar	0.92%	0.93%	0.91%	0.93%	0.91%	0.93%	0.90%
CO2	3.15%	2.58%	3.24%	2.63%	3.32%	2.68%	3.33%
H2O	9.22%	7.02%	9.65%	7.25%	10.14%	7.62%	10.62%
N2	73.14%	74.44%	72.87%	74.30%	72.54%	74.05%	72.18%
O2	13.58%	15.03%	13.32%	14.89%	13.08%	14.73%	12.97%
SO2	0.00001%	0.00001%	0.00001%	0.00001%	0.00001%	0.00001%	0.00001%
Total	100.0%	100.0%	100.0%	100.0%	100.0%	100.0%	100.0%
Stack Emissions							
NOx, ppmvd @15% O2 w/o SCR (does not account for added margin	25.00	25.00	25.00	25.00	25.00	25.00	25.00
NOx, ppmvd w/o SCR	25.18	20.15	26.06	20.58	26.83	21.05	27.06
NOx, ppmvw w/o SCR	22.86	18.73	23.54	19.09	24.11	19.44	24.18
NOx, lb/h as NO2 w/o SCR (includes correction adder)	43.10	29.73	43.63	29.95	43.65	29.82	42.22
NOx, lb/MBtu (LHV) as NO2 w/o SCR	0.1027	0.1039	0.1027	0.1038	0.1027	0.1039	0.1028
NOx, lb/MBtu (HHV) as NO2 w/o SCR	0.0928	0.0939	0.0928	0.0938	0.0928	0.0938	0.0929
NOx, ppmvd @15% O2 w/ SCR	3.60	3.60	3.60	3.60	3.60	3.60	3.60
NOx, ppmvd w SCR	3.63	2.90	3.75	2.96	3.86	3.03	3.90
NOx, ppmvw w SCR	3.29	2.70	3.39	2.75	3.47	2.80	3.48
NOx, lb/h as NO2 w/ SCR (includes NOx margin applied to CTG)	6.21	4.28	6.28	4.31	6.29	4.29	6.08
NOx, lb/MBtu (LHV) as NO w SCR	0.0148	0.0150	0.0148	0.0149	0.0148	0.0150	0.0148
NOx, lb/MBtu (HHV) as NO2 w SCR	0.0134	0.0135	0.0134	0.0135	0.0134	0.0135	0.0134
SCR NH3 slip, ppmvd @15% O2	10.00	10.00	10.00	10.00	10.00	10.00	10.00
SCR NH3 slip, lb/h	6.23	4.25	6.31	4.29	6.32	4.27	6.10
CO, ppmvd @ 15% O2 w/o Catalyst	60.00	56.00	52.00	50.00	41.99	41.00	27.00
CO, ppmvd w/o Catalyst	60.43	45.13	54.20	41.17	45.07	34.52	29.22
CO, ppmvw w/o Catalyst	54.86	41.96	48.97	38.18	40.50	31.89	26.12
CO, lb/h w/o Catalyst (includes CO correction as applied to CTG and margin)	62.51	40.18	54.98	36.25	44.62	29.78	28.10
CO, lb/MBtu (LHV) w/o SCR	0.1490	0.1404	0.1294	0.1256	0.1050	0.1037	0.0684
CO, lb/MBtu (HHV) w/o SCR	0.1346	0.1268	0.1170	0.1135	0.0949	0.0937	0.0618
CO Reduction % w/ Catalyst	90%	90%	90%	90%	90%	90%	90%
CO, ppmvd @ 15% O2 w/ Catalyst	6.00	5.60	5.20	5.00	4.20	4.10	2.70
CO, ppmvd w/ Catalyst	6.04	4.51	5.42	4.12	4.51	3.45	2.92
CO, ppmvw w/ Catalyst	5.49	4.20	4.90	3.82	4.05	3.19	2.61
CO, lb/h w/ Catalyst (includes CO margin applied to CTG)	6.25	4.02	5.50	3.63	4.46	2.98	2.81
CO, lb/MBtu (LHV) w SCR	0.0149	0.0140	0.0129	0.0126	0.0105	0.0104	0.0068
CO, lb/MBtu (HHV) w SCR	0.0135	0.0127	0.0117	0.0114	0.0095	0.0094	0.0062
SO2, ppmvd@15% O2 w/o scrubber (with no SO2 oxidation)	0.136	0.136	0.136	0.136	0.136	0.136	0.136
SO2, ppmvd w/o scrubber (with no SO2 oxidation)	0.14	0.11	0.14	0.11	0.15	0.11	0.15

9-Aug-01
CED
Henrietta
69381
Simple Cycle Plant Emissions Estimate, Revision 1

Case Number	1	2	3	4	5	6	7
CTG Model	LM6000	LM6000	LM6000	LM6000	LM6000	LM6000	LM6000
Diluent	DN 9/42	DN 9/42	DN 9/42	DN 9/42	DN 9/42	DN 9/42	DN 9/42
CTG Fuel Type	Cust Gas	Cust Gas	Cust Gas	Cust Gas	Cust Gas	Cust Gas	Cust Gas
CTG Load	100%	60%	100%	60%	100%	60%	100%
CTG Inlet Air Conditioning In Operation?	No	No	No	No	No	No	Evap. Cooler
Ambient Temperature, F	15	15	25	25	36	36	59
HRSG Firing	Unfired	Unfired	Unfired	Unfired	Unfired	Unfired	Unfired
Fuel Sulfur Content (grains/100 standard cubic feet)	0.25	0.25	0.25	0.25	0.25	0.25	0.25
SO2, ppmvw w/o scrubber (with no SO2 oxidation)	0.12	0.10	0.13	0.10	0.13	0.11	0.13
SO2, lb/h w/o scrubber (with no SO2 oxidation)	0.32	0.22	0.32	0.22	0.32	0.22	0.31
SO2, lb/MBtu (LHV) w/o scrubber	0.0008	0.0008	0.0008	0.0008	0.0008	0.0008	0.0008
SO2, lb/MBtu (HHV) w/o scrubber	0.0007	0.0007	0.0007	0.0007	0.0007	0.0007	0.0007

9-Aug-01
CED
Henrietta
69381
Simple Cycle Plant Emissions Estimate, Revision 1

Case Number	1	2	3	4	5	6	7
CTG Model	LM6000	LM6000	LM6000	LM6000	LM6000	LM6000	LM6000
Diluent	DN 9/42	DN 9/42	DN 9/42	DN 9/42	DN 9/42	DN 9/42	DN 9/42
CTG Fuel Type	Cust Gas	Cust Gas	Cust Gas	Cust Gas	Cust Gas	Cust Gas	Cust Gas
CTG Load	100%	60%	100%	60%	100%	60%	100%
CTG Inlet Air Conditioning In Operation?	No	No	No	No	No	No	Evap. Cooler
Ambient Temperature, F	15	15	25	25	36	36	59
HRSG Firing	Unfired	Unfired	Unfired	Unfired	Unfired	Unfired	Unfired
Fuel Sulfur Content (grains/100 standard cubic feet)	0.25	0.25	0.25	0.25	0.25	0.25	0.25
Stack Emissions - continued							
NOTE: UHC calculations do NOT include the effect of any oxidation in the CO catalyst.							
UHC, ppmvd @ 15% O2	10.00	9.00	8.00	7.00	5.00	5.00	3.00
UHC, ppmvd	10.07	7.25	8.34	5.76	5.37	4.21	3.25
UHC, ppmvw	9.14	6.74	7.53	5.35	4.82	3.89	2.90
UHC, lb/h as CH4	6.37	4.11	5.26	3.33	3.47	2.51	2.22
UHC, lb/MBtu (LHV)	0.0152	0.0143	0.0124	0.0115	0.0082	0.0087	0.0054
UHC, lb/MBtu (HHV)	0.0137	0.0130	0.0112	0.0104	0.0074	0.0079	0.0049
VOC, ppmvd @ 15% O2 w/o Catalyst	2.00	1.80	1.60	1.40	1.00	1.00	0.60
VOC, ppmvd w/o Calatyst	2.01	1.45	1.67	1.15	1.07	0.84	0.65
VOC, ppmvw w/o Catalyst	1.83	1.35	1.51	1.07	0.96	0.78	0.58
VOC, lb/h as CH4 w/o Catalyst (includes correction adder)	1.17	0.72	0.95	0.57	0.59	0.40	0.35
VOC, lb/MBtu (LHV) w/o CO catalyst	0.0028	0.0025	0.0022	0.0020	0.0014	0.0014	0.0008
VOC, lb/MBtu (HHV) w/o CO catalyst	0.0025	0.0023	0.0020	0.0018	0.0013	0.0013	0.0008
VOC Reduction % w/ Catalyst	0%	0%	0%	0%	0%	0%	0%
VOC, ppmvd @ 15% O2 w/ Catalyst	2.00	1.80	1.60	1.40	1.00	1.00	0.60
VOC, ppmvd w/ Calatyst	2.01	1.45	1.67	1.15	1.07	0.84	0.65
VOC, ppmvw w/ Catalyst	1.83	1.35	1.51	1.07	0.96	0.78	0.58
VOC, lb/h as CH4 w/ Catalyst (includes VOC correction as applied to CTG)	1.17	0.72	0.95	0.57	0.59	0.40	0.35
VOC, lb/MBtu (LHV) w CO catalyst	0.0028	0.0025	0.0022	0.0020	0.0014	0.0014	0.0008
VOC, lb/MBtu (HHV) w CO catalyst	0.0025	0.0023	0.0020	0.0018	0.0013	0.0013	0.0008
Particulate without the effect of SO2 oxidation and SCR catalysts							
Particulates, lb/h (front half catch only)	1.5	1.5	1.5	1.5	1.5	1.5	1.5
Particulates, lb/MBtu (front half catch only)	0.0036	0.0052	0.0035	0.0052	0.0035	0.0052	0.0037
Particulates, lb/h (front and back half catch)	3.0	3.0	3.0	3.0	3.0	3.0	3.0
Particulates, lb/MBtu (front and back half catch)	0.0072	0.0105	0.0071	0.0104	0.0071	0.0104	0.0073
PM10, lb/h (front half catch only)	1.5	1.5	1.5	1.5	1.5	1.5	1.5
PM10, lb/MBtu (front half catch only)	0.0036	0.0052	0.0035	0.0052	0.0035	0.0052	0.0037
PM10, lb/h (front and back half catch)	3.0	3.0	3.0	3.0	3.0	3.0	3.0
PM10, lb/MBtu (front and back half catch)	0.0072	0.0105	0.0071	0.0104	0.0071	0.0104	0.0073
Particulate including the effect of SO2 oxidation and SCR catalysts [includes (NH4)2-(SO4)]							
Particulates, lb/h (front half catch only)	1.8	1.7	1.8	1.7	1.8	1.7	1.8
Particulates, lb/MBtu(front half catch only)	0.0042	0.0059	0.0042	0.0058	0.0042	0.0058	0.0043
Particulates, lb/h (front and back half catch)	3.3	3.2	3.3	3.2	3.3	3.2	3.3
Particulates, lb/MBtu(front and back half catch)	0.0078	0.0111	0.0077	0.0110	0.0077	0.0111	0.0079
PM10, lb/h (front half catch only)	1.8	1.7	1.8	1.7	1.8	1.7	1.8
PM10, lb/MBtu(front half catch only)	0.0042	0.0059	0.0042	0.0058	0.0042	0.0058	0.0043
PM10, lb/h (front and back half catch)	3.3	3.2	3.3	3.2	3.3	3.2	3.3
PM10, lb/MBtu(front and back half catch)	0.0078	0.0111	0.0077	0.0110	0.0077	0.0111	0.0079
NOTE: SO2 to SO3 conversion rate (assumed), wt%	40.0%	40.0%	40.0%	40.0%	40.0%	40.0%	40.0%
Remaining SO2 in Exhaust Gas, lb/h	0.19	0.13	0.19	0.13	0.19	0.13	0.19
Amount of SO2 converted to SO3, lb/h	0.13	0.09	0.13	0.09	0.13	0.09	0.12
Maximum Exhaust Gas ammonium sulfate [(NH4)2-(SO4)] (assuming 100% conversion from SO3), lb/h	0.26	0.18	0.27	0.18	0.27	0.18	0.26
Maximum H2SO4 (assuming 100% conversion from SO3 to H2SO4), lb/hr	0.20	0.13	0.20	0.13	0.20	0.13	0.19
Stack							

9-Aug-01
CED
Henrietta
69381
Simple Cycle Plant Emissions Estimate, Revision 1

Case Number	1	2	3	4	5	6	7
CTG Model	LM6000	LM6000	LM6000	LM6000	LM6000	LM6000	LM6000
Diluent	DN 9/42	DN 9/42	DN 9/42	DN 9/42	DN 9/42	DN 9/42	DN 9/42
CTG Fuel Type	Cust Gas	Cust Gas	Cust Gas	Cust Gas	Cust Gas	Cust Gas	Cust Gas
CTG Load	100%	60%	100%	60%	100%	60%	100%
CTG Inlet Air Conditioning In Operation?	No	No	No	No	No	No	Evap. Cooler
Ambient Temperature, F	15	15	25	25	36	36	59
HRSG Firing	Unfired	Unfired	Unfired	Unfired	Unfired	Unfired	Unfired
Fuel Sulfur Content (grains/100 standard cubic feet)	0.25	0.25	0.25	0.25	0.25	0.25	0.25
Stack Exit Temperature, F	764	682	793	702	819	722	848
Stack Diameter, ft (estimated)	10.0	10.0	10.0	10.0	10.0	10.0	10.0
Stack Flow, lb/h	1,130,760	947,880	1,110,240	936,720	1,082,880	914,400	1,041,480
Stack Flow, scfm	253,102	210,745	248,879	208,420	243,107	203,759	234,333
Stack Flow, acfm	601,187	467,147	605,081	470,077	603,525	467,258	594,685
Stack Exit Velocity, ft/s	128.0	99.0	128.0	100.0	128.0	99.0	126.0

9-Aug-01
CED
Henrietta
69381
Simple Cycle Plant Emissions Estimate, Revision 1

Case Number	1	2	3	4	5	6	7
CTG Model	LM6000	LM6000	LM6000	LM6000	LM6000	LM6000	LM6000
Diluent	DN 9/42	DN 9/42	DN 9/42	DN 9/42	DN 9/42	DN 9/42	DN 9/42
CTG Fuel Type	Cust Gas	Cust Gas	Cust Gas	Cust Gas	Cust Gas	Cust Gas	Cust Gas
CTG Load	100%	60%	100%	60%	100%	60%	100%
CTG Inlet Air Conditioning In Operation?	No	No	No	No	No	No	Evap. Cooler
Ambient Temperature, F	15	15	25	25	36	36	59
HRSG Firing	Unfired	Unfired	Unfired	Unfired	Unfired	Unfired	Unfired
Fuel Sulfur Content (grains/100 standard cubic feet)	0.25	0.25	0.25	0.25	0.25	0.25	0.25
Post Combustion Emissions Control							
CO Catalyst							
CO removed in CO Catalyst, %wt	90%	90%	90%	90%	90%	90%	90%
CO removed in CO Catalyst, lb/h (includes CO correction as applied to CTG)	56.26	36.16	49.49	32.63	40.16	26.80	25.29
Selective Catalytic Reduction (SCR)							
NOx Removed, lb/h as NO2	36.89	25.45	37.35	25.64	37.36	25.53	36.14
NOx Removed, percent	85.6%	85.6%	85.6%	85.6%	85.6%	85.6%	85.6%
NH3 Slip, lb/h	6.2	4.3	6.3	4.3	6.3	4.3	6.1
Stack Exhaust Gas Analysis (Wet)							
Molecular Wt, lb/mol	28.2	28.4	28.2	28.4	28.2	28.4	28.1
Specific Volume, ft^3/lb	31.9	29.6	32.7	30.1	33.4	30.7	34.3
Specific Volume, scf/lb	13.4	13.3	13.5	13.4	13.5	13.4	13.5

Notes:
1. The emissions estimates shown in the table above are per stack.
2. The dry air composition used is 0.98% Ar, 78.03% N2 and 20.99%O2
3. Standard conditions are defined as 60 F, 14.696 psia, Norm conditions are defined as 0 C, 1.103 bar
4. The CTG performance is a GE AERO ENERGY PRODUCTS estimate.
5. The VOC oxidation rates are Black & Veatch estimates based on typical data.
6. UHC calculations do not include the effects of oxidation in the CO catalyst. The VOC/UHC ratio is assumed to be 20% for natural gas firing (typical for GE turbines).
7. The front half catch of particulate emissions is assumed to be half the amount of the front and back half catch.
8. Ammonium sulfates created downstream of the SCR are included in front half particulates and front&back half particulates. The assumption that 100% SO3 is converted to ammonium sulfates results in "worst case" particulate
9. The SO2 oxidation rate was assumed to be 40%.

SR4/2 Preparer: J.Arthur Filepath: c:\bv-users_proj\hanford\[emission.xls]input Reviewer: P.Elrod

9-Aug-01
CED
Henrietta
69381
Simple Cycle Plant Emissions Estimate, Revision 1

Case Number	8	9	10	11	12	13	14
CTG Model	LM6000	LM6000	LM6000	LM6000	LM6000	LM6000	LM6000
Diluent	DN 9/42	DN 9/42	DN 9/42	DN 9/42	DN 9/42	DN 9/42	DN 9/42
CTG Fuel Type	Cust Gas	Cust Gas	Cust Gas	Cust Gas	Cust Gas	Cust Gas	Cust Gas
CTG Load	100%	100%	60%	100%	60%	100%	60%
CTG Inlet Air Conditioning In Operation?	No	Evap. Cooler	Evap. Cooler	Evap. Cooler	Evap. Cooler	Evap. Cooler	Evap. Cooler
Ambient Temperature, F	59	63	63	98	98	115	115
HRSG Firing	Unfired	Unfired	Unfired	Unfired	Unfired	Unfired	Unfired
Fuel Sulfur Content (grains/100 standard cubic feet)	0.25	0.25	0.25	0.25	0.25	0.25	0.25
Ambient Temperature, F	59.0	63.0	63.0	98.0	98.0	115.0	115.0
Ambient Relative Humidity, %	60.0	60.0	60.0	36.0	36.0	21.0	21.0
Atmospheric Pressure, psia	14.569	14.569	14.569	14.569	14.569	14.569	14.569
CTG Inlet Air Conditioning Effectiveness, %	0	85	85	85	85	85	85
CTG Compressor Inlet Dry Bulb Temperature, F	59.0	56.1	56.1	78.9	78.9	84.6	84.6
CTG Compr. Inlet Relative Humidity, %	60.2	92.9	92.9	85.9	85.9	79.4	79.4
Inlet Loss, in. H2O	4.5	4.5	4.5	4.5	4.5	4.5	4.5
Exhaust Loss, in. H2O	6.0	6.0	6.0	6.0	6.0	6.0	6.0
CTG Performance Reference	GE AERO ENERGY	GE AERO ENERGY	GE AERO ENERGY	GE AERO ENERGY	GE AERO ENERGY	GE AERO ENERGY	GE AERO ENERGY
CTG Load Level (percent of Base Load)	100%	100%	60%	100%	60%	100%	60%
Gross CTG Output, kW	46,573	46,859	27,972	42,075	25,091	40,923	24,396
Gross CTG Heat Rate, Btu/kWh (LHV)	8,706	8,499	9,797	8,664	10,213	8,712	10,317
Gross CTG Heat Rate, Btu/kWh (HHV)	9,635	9,406	10,842	9,588	11,302	9,641	11,417
CTG Heat Input, MBtu/h (LHV)	405.5	398.3	274.0	364.5	256.3	356.5	251.7
CTG Heat Input, MBtu/h (HHV)	448.7	440.7	303.3	403.4	283.6	394.6	278.5
CTG Water Injection Flow, lb/h	21,910	20,985	11,045	16,402	8,629	15,578	8,180
CTG Steam Injection Flow, lb/h	0	0	0	0	0	0	0
Injection Fluid/Fuel Ratio	0.0	0.0	0.0	0.0	0.0	0.0	0.0
CTG Exhaust Flow, lb/h	1,029,240	1,035,000	863,280	972,720	801,000	956,520	785,160
CTG Exhaust Temperature, F	851	822	749	826	776	829	784
Total CTG Fuel Flow, lb/h	21,360	20,980	14,440	19,210	13,500	18,780	13,260
CTG Fuel Temperature, F	76	76	76	76	76	76	76
CTG Fuel LHV, Btu/lb	18,981	18,981	18,981	18,981	18,981	18,981	18,981
CTG Fuel HHV, Btu/lb	21,006	21,006	21,006	21,006	21,006	21,006	21,006
HHV/LHV Ratio	1.1067	1.1067	1.1067	1.1067	1.1067	1.1067	1.1067
CTG Fuel Composition (Ultimate Analysis by Weight)							
Ar	0.00%	0.00%	0.00%	0.00%	0.00%	0.00%	0.00%
C	68.44%	68.44%	68.44%	68.44%	68.44%	68.44%	68.44%
H2	21.38%	21.38%	21.38%	21.38%	21.38%	21.38%	21.38%
N2	8.80%	8.80%	8.80%	8.80%	8.80%	8.80%	8.80%
O2	1.37%	1.37%	1.37%	1.37%	1.37%	1.37%	1.37%
S	0.00072%	0.00072%	0.00072%	0.00072%	0.00072%	0.00072%	0.00072%
Total	100.00%	100.00%	100.00%	100.00%	100.00%	100.00%	100.00%
Fuel Sulfur Content (grains/100 standard cubic feet)	0.25	0.25	0.25	0.25	0.25	0.25	0.25

9-Aug-01
CED
Henrietta
69381
Simple Cycle Plant Emissions Estimate, Revision 1

Case Number	8	9	10	11	12	13	14
CTG Model	LM6000	LM6000	LM6000	LM6000	LM6000	LM6000	LM6000
Diluent	DN 9/42	DN 9/42	DN 9/42	DN 9/42	DN 9/42	DN 9/42	DN 9/42
CTG Fuel Type	Cust Gas	Cust Gas	Cust Gas	Cust Gas	Cust Gas	Cust Gas	Cust Gas
CTG Load	100%	100%	60%	100%	60%	100%	60%
CTG Inlet Air Conditioning In Operation?	No	Evap. Cooler	Evap. Cooler	Evap. Cooler	Evap. Cooler	Evap. Cooler	Evap. Cooler
Ambient Temperature, F	59	63	63	98	98	115	115
HRSG Firing	Unfired	Unfired	Unfired	Unfired	Unfired	Unfired	Unfired
Fuel Sulfur Content (grains/100 standard cubic feet)	0.25	0.25	0.25	0.25	0.25	0.25	0.25
Combustion Turbine Exhaust Emissions							
CTG Exhaust Analysis (Volume Basis - Wet)							
Ar	0.91%	0.90%	0.92%	0.90%	0.91%	0.90%	0.91%
CO2	3.33%	3.25%	2.70%	3.15%	2.71%	3.13%	2.71%
H2O	10.46%	10.53%	8.37%	11.22%	9.48%	11.37%	9.72%
N2	72.30%	72.19%	73.47%	71.59%	72.61%	71.45%	72.43%
O2	13.00%	13.13%	14.54%	13.14%	14.29%	13.15%	14.23%
SO2	0.00001%	0.00001%	0.00001%	0.00001%	0.00001%	0.00001%	0.00001%
Total	100.0%	100.0%	100.0%	100.0%	100.0%	100.0%	100.0%
NOx, ppmvd @15% O2	25.00	25.00	25.00	25.00	25.00	25.00	25.00
NOx, ppmvd	26.99	26.37	21.39	25.81	21.72	25.69	21.81
NOx, ppmvw (wet - uncorrected exhaust gas)	24.17	23.59	19.60	22.92	19.66	22.77	19.68
NOx, lb/h as NO2	41.7	41.0	28.5	37.6	26.7	36.8	26.3
NOx, lb/MBtu (LHV)	0.1028	0.1029	0.1040	0.1031	0.1043	0.1031	0.1043
NOx, lb/MBtu (HHV)	0.0929	0.0929	0.0940	0.0932	0.0942	0.0932	0.0943
CO, ppmvd @ 15% O2	30.00	24.00	23.00	10.00	9.00	8.00	8.00
CO, ppmvd	32.40	25.32	19.68	10.33	7.82	8.23	6.98
CO, ppmvw (wet - uncorrected exhaust gas)	29.01	22.65	18.03	9.17	7.08	7.29	6.30
CO, lb/h	30.7	24.4	16.4	9.9	6.6	8.0	5.9
CO, lb/MBtu (LHV)	0.0758	0.0612	0.0599	0.0272	0.0259	0.0224	0.0235
CO, lb/MBtu (HHV)	0.0685	0.0553	0.0541	0.0246	0.0234	0.0202	0.0213
NOTE: SO2 estimate does not include the effects of SO2 oxidation							
SO2, ppmvd @ 15% O2 (with no SO2 oxidation)	0.14	0.14	0.14	0.14	0.14	0.14	0.14
SO2, ppmvd (with no SO2 oxidation)	0.15	0.14	0.12	0.14	0.12	0.14	0.12
SO2, ppmvw (with no SO2 oxidation)(wet - uncorrected exhaust gas)	0.13	0.13	0.11	0.12	0.11	0.12	0.11
SO2, lb/h (with no SO2 oxidation)	0.31	0.30	0.21	0.28	0.19	0.27	0.19
SO2, lb/MBtu (LHV) (with no SO2 oxidation)	0.0008	0.0008	0.0008	0.0008	0.0008	0.0008	0.0008
SO2, lb/MBtu (HHV) (with no SO2 oxidation)	0.0007	0.0007	0.0007	0.0007	0.0007	0.0007	0.0007

9-Aug-01
CED
Henrietta
69381
Simple Cycle Plant Emissions Estimate, Revision 1

Case Number	8	9	10	11	12	13	14
CTG Model	LM6000	LM6000	LM6000	LM6000	LM6000	LM6000	LM6000
Diluent	DN 9/42	DN 9/42	DN 9/42	DN 9/42	DN 9/42	DN 9/42	DN 9/42
CTG Fuel Type	Cust Gas	Cust Gas	Cust Gas	Cust Gas	Cust Gas	Cust Gas	Cust Gas
CTG Load	100%	100%	60%	100%	60%	100%	60%
CTG Inlet Air Conditioning In Operation?	No	Evap. Cooler	Evap. Cooler	Evap. Cooler	Evap. Cooler	Evap. Cooler	Evap. Cooler
Ambient Temperature, F	59	63	63	98	98	115	115
HRSG Firing	Unfired	Unfired	Unfired	Unfired	Unfired	Unfired	Unfired
Fuel Sulfur Content (grains/100 standard cubic feet)	0.25	0.25	0.25	0.25	0.25	0.25	0.25
Combustion Turbine Exhaust Emissions - continued							
UHC, ppmvd @ 15% O2	3.00	3.00	2.00	2.00	2.00	2.00	2.00
UHC, ppmvd	3.24	3.16	1.71	2.07	1.74	2.06	1.74
UHC, ppmvw (wet - uncorrected exhaust gas)	2.90	2.83	1.57	1.83	1.57	1.82	1.57
UHC, lb/h as CH4	2.2	2.2	1.3	1.5	1.2	1.5	1.2
UHC, lb/MBtu as CH4 (LHV)	0.0054	0.0055	0.0046	0.0042	0.0048	0.0042	0.0048
UHC, lb/MBtu as CH4 (HHV)	0.0049	0.0049	0.0042	0.0038	0.0043	0.0038	0.0043
VOC percentage of UHC	20%	20%	20%	20%	20%	20%	20%
VOC, ppmvd @ 15% O2	0.6	0.6	0.4	0.4	0.4	0.4	0.4
VOC, ppmvd	0.65	0.63	0.34	0.41	0.35	0.41	0.35
VOC, ppmvw (wet - uncorrected exhaust flow)	0.58	0.57	0.31	0.37	0.31	0.36	0.32
VOC, lb/h as CH4	0.3	0.3	0.2	0.2	0.1	0.2	0.1
VOC, lb/MBtu as CH4 (LHV)	0.0011	0.0011	0.0009	0.0008	0.0010	0.0008	0.0010
VOC, lb/MBtu as CH4 (HHV)	0.0010	0.0010	0.0008	0.0008	0.0009	0.0008	0.0009
Particulates, lb/h (front half catch only)	1.5	1.5	1.5	1.5	1.5	1.5	1.5
Particulates, lb/h (front and back half catch)	3.0	3.0	3.0	3.0	3.0	3.0	3.0
Particulates, lb/MBtu (LHV) (front half catch only)	0.0037	0.0038	0.0055	0.0041	0.0059	0.0042	0.0060
Particulates, lb/MBtu (HHV) (front half catch only)	0.0033	0.0034	0.0049	0.0037	0.0053	0.0038	0.0054
PM10, lb/h (front half catch only)	1.5	1.5	1.5	1.5	1.5	1.5	1.5
PM10, lb/h (front and back half catch)	3.0	3.0	3.0	3.0	3.0	3.0	3.0
PM10, lb/MBtu (LHV) (front and back half catch)	0.0074	0.0075	0.0109	0.0082	0.0117	0.0084	0.0119
PM10, lb/MBtu (HHV) (front and back half catch)	0.0067	0.0068	0.0099	0.0074	0.0106	0.0076	0.0108
CTG Wet (Total) Exhaust Gas Analysis							
Molecular Wt, lb/mol	28.13	28.11	28.30	28.03	28.18	28.01	28.15
Gas Constant, ft-lbf/lbm-R	54.930	54.960	54.600	55.120	54.830	55.160	54.880
Specific Volume, ft^3/lb	33.81	33.08	30.99	33.28	31.82	33.38	32.06
Exhaust Gas Flow, acfm	579,977	570,630	445,884	539,535	424,797	532,144	419,537
Specific Volume, scf/lb	13.49	13.50	13.41	13.54	13.46	13.54	13.48
Exhaust Gas Flow, scfm	231,407	232,875	192,943	219,510	179,691	215,855	176,399

9-Aug-01
CED
Henrietta
69381
Simple Cycle Plant Emissions Estimate, Revision 1

Case Number	8	9	10	11	12	13	14
CTG Model	LM6000	LM6000	LM6000	LM6000	LM6000	LM6000	LM6000
Diluent	DN 9/42	DN 9/42	DN 9/42	DN 9/42	DN 9/42	DN 9/42	DN 9/42
CTG Fuel Type	Cust Gas	Cust Gas	Cust Gas	Cust Gas	Cust Gas	Cust Gas	Cust Gas
CTG Load	100%	100%	60%	100%	60%	100%	60%
CTG Inlet Air Conditioning In Operation?	No	Evap. Cooler	Evap. Cooler	Evap. Cooler	Evap. Cooler	Evap. Cooler	Evap. Cooler
Ambient Temperature, F	59	63	63	98	98	115	115
HRSG Firing	Unfired	Unfired	Unfired	Unfired	Unfired	Unfired	Unfired
Fuel Sulfur Content (grains/100 standard cubic feet)	0.25	0.25	0.25	0.25	0.25	0.25	0.25
Stack Emissions							
NOTE: Exhaust Analysis does not include the effects of post combustion control							
Stack Exhaust Analysis (Volume Basis - Wet)							
Ar	0.91%	0.90%	0.92%	0.90%	0.91%	0.90%	0.91%
CO2	3.33%	3.25%	2.70%	3.15%	2.71%	3.13%	2.71%
H2O	10.46%	10.53%	8.37%	11.22%	9.48%	11.37%	9.72%
N2	72.30%	72.19%	73.47%	71.59%	72.61%	71.45%	72.43%
O2	13.00%	13.13%	14.54%	13.14%	14.29%	13.15%	14.23%
SO2	0.00001%	0.00001%	0.00001%	0.00001%	0.00001%	0.00001%	0.00001%
Total	100.0%	100.0%	100.0%	100.0%	100.0%	100.0%	100.0%
Stack Emissions							
NOx, ppmvd @15% O2 w/o SCR (does not account for added margin	25.00	25.00	25.00	25.00	25.00	25.00	25.00
NOx, ppmvd w/o SCR	26.99	26.37	21.39	25.81	21.72	25.69	21.81
NOx, ppmvw w/o SCR	24.17	23.59	19.60	22.92	19.66	22.77	19.68
NOx, lb/h as NO2 w/o SCR (includes correction adder)	41.69	40.96	28.51	37.59	26.72	36.77	26.26
NOx, lb/MBtu (LHV) as NO2 w/o SCR	0.1028	0.1029	0.1040	0.1031	0.1043	0.1031	0.1043
NOx, lb/MBtu (HHV) as NO2 w/o SCR	0.0929	0.0929	0.0940	0.0932	0.0942	0.0932	0.0943
NOx, ppmvd @15% O2 w/ SCR	3.60	3.60	3.60	3.60	3.60	3.60	3.60
NOx, ppmvd w SCR	3.89	3.80	3.08	3.72	3.13	3.70	3.14
NOx, ppmvw w SCR	3.48	3.40	2.82	3.30	2.83	3.28	2.83
NOx, lb/h as NO2 w/ SCR (includes NOx margin applied to CTG)	6.00	5.90	4.10	5.41	3.85	5.30	3.78
NOx, lb/MBtu (LHV) as NO w SCR	0.0148	0.0148	0.0150	0.0148	0.0150	0.0149	0.0150
NOx, lb/MBtu (HHV) as NO2 w SCR	0.0134	0.0134	0.0135	0.0134	0.0136	0.0134	0.0136
SCR NH3 slip, ppmvd @15% O2	10.00	10.00	10.00	10.00	10.00	10.00	10.00
SCR NH3 slip, lb/h	6.03	5.92	4.07	5.42	3.81	5.30	3.74
CO, ppmvd @ 15% O2 w/o Catalyst	30.00	24.00	23.00	10.00	9.00	8.00	8.00
CO, ppmvd w/o Catalyst	32.40	25.32	19.68	10.33	7.82	8.23	6.98
CO, ppmvw w/o Catalyst	29.01	22.65	18.03	9.17	7.08	7.29	6.30
CO, lb/h w/o Catalyst (includes CO correction as applied to CTG and margin)	30.73	24.36	16.41	9.92	6.63	7.97	5.92
CO, lb/MBtu (LHV) w/o SCR	0.0758	0.0612	0.0599	0.0272	0.0259	0.0224	0.0235
CO, lb/MBtu (HHV) w/o SCR	0.0685	0.0553	0.0541	0.0246	0.0234	0.0202	0.0213
CO Reduction % w/ Catalyst	90%	90%	90%	90%	90%	90%	90%
CO, ppmvd @ 15% O2 w/ Catalyst	3.00	2.40	2.30	1.00	0.90	0.80	0.80
CO, ppmvd w/ Catalyst	3.24	2.53	1.97	1.03	0.78	0.82	0.70
CO, ppmvw w/ Catalyst	2.90	2.27	1.80	0.92	0.71	0.73	0.63
CO, lb/h w/ Catalyst (includes CO margin applied to CTG)	3.07	2.44	1.64	0.99	0.66	0.80	0.59
CO, lb/MBtu (LHV) w SCR	0.0076	0.0061	0.0060	0.0027	0.0026	0.0022	0.0024
CO, lb/MBtu (HHV) w SCR	0.0068	0.0055	0.0054	0.0025	0.0023	0.0020	0.0021
SO2, ppmvd@15% O2 w/o scrubber (with no SO2 oxidation)	0.136	0.136	0.136	0.136	0.136	0.136	0.136
SO2, ppmvd w/o scrubber (with no SO2 oxidation)	0.15	0.14	0.12	0.14	0.12	0.14	0.12

9-Aug-01
CED
Henrietta
69381
Simple Cycle Plant Emissions Estimate, Revision 1

Case Number	8	9	10	11	12	13	14
CTG Model	LM6000	LM6000	LM6000	LM6000	LM6000	LM6000	LM6000
Diluent	DN 9/42	DN 9/42	DN 9/42	DN 9/42	DN 9/42	DN 9/42	DN 9/42
CTG Fuel Type	Cust Gas	Cust Gas	Cust Gas	Cust Gas	Cust Gas	Cust Gas	Cust Gas
CTG Load	100%	100%	60%	100%	60%	100%	60%
CTG Inlet Air Conditioning In Operation?	No	Evap. Cooler	Evap. Cooler	Evap. Cooler	Evap. Cooler	Evap. Cooler	Evap. Cooler
Ambient Temperature, F	59	63	63	98	98	115	115
HRSG Firing	Unfired	Unfired	Unfired	Unfired	Unfired	Unfired	Unfired
Fuel Sulfur Content (grains/100 standard cubic feet)	0.25	0.25	0.25	0.25	0.25	0.25	0.25
SO2, ppmvw w/o scrubber (with no SO2 oxidation)	0.13	0.13	0.11	0.12	0.11	0.12	0.11
SO2, lb/h w/o scrubber (with no SO2 oxidation)	0.31	0.30	0.21	0.28	0.19	0.27	0.19
SO2, lb/MBtu (LHV) w/o scrubber	0.0008	0.0008	0.0008	0.0008	0.0008	0.0008	0.0008
SO2, lb/MBtu (HHV) w/o scrubber	0.0007	0.0007	0.0007	0.0007	0.0007	0.0007	0.0007

9-Aug-01
CED
Henrietta
69381
Simple Cycle Plant Emissions Estimate, Revision 1

Case Number	8	9	10	11	12	13	14
CTG Model	LM6000	LM6000	LM6000	LM6000	LM6000	LM6000	LM6000
Diluent	DN 9/42	DN 9/42	DN 9/42	DN 9/42	DN 9/42	DN 9/42	DN 9/42
CTG Fuel Type	Cust Gas	Cust Gas	Cust Gas	Cust Gas	Cust Gas	Cust Gas	Cust Gas
CTG Load	100%	100%	60%	100%	60%	100%	60%
CTG Inlet Air Conditioning In Operation?	No	Evap. Cooler	Evap. Cooler	Evap. Cooler	Evap. Cooler	Evap. Cooler	Evap. Cooler
Ambient Temperature, F	59	63	63	98	98	115	115
HRSG Firing	Unfired	Unfired	Unfired	Unfired	Unfired	Unfired	Unfired
Fuel Sulfur Content (grains/100 standard cubic feet)	0.25	0.25	0.25	0.25	0.25	0.25	0.25
Stack Emissions - continued							
NOTE: UHC calculations do NOT include the effect of any oxidation in the CO catalyst.							
UHC, ppmvd @ 15% O2	3.00	3.00	2.00	2.00	2.00	2.00	2.00
UHC, ppmvd	3.24	3.16	1.71	2.07	1.74	2.06	1.74
UHC, ppmvw	2.90	2.83	1.57	1.83	1.57	1.82	1.57
UHC, lb/h as CH4	2.20	2.17	1.27	1.52	1.22	1.50	1.20
UHC, lb/MBtu (LHV)	0.0054	0.0055	0.0046	0.0042	0.0048	0.0042	0.0048
UHC, lb/MBtu (HHV)	0.0049	0.0049	0.0042	0.0038	0.0043	0.0038	0.0043
VOC, ppmvd @ 15% O2 w/o Catalyst	0.60	0.60	0.40	0.40	0.40	0.40	0.40
VOC, ppmvd w/o Calatyst	0.65	0.63	0.34	0.41	0.35	0.41	0.35
VOC, ppmvw w/o Catalyst	0.58	0.57	0.31	0.37	0.31	0.36	0.32
VOC, lb/h as CH4 w/o Catalyst (includes correction adder)	0.34	0.33	0.15	0.20	0.14	0.20	0.14
VOC, lb/MBtu (LHV) w/o CO catalyst	0.0008	0.0008	0.0006	0.0006	0.0006	0.0006	0.0006
VOC, lb/MBtu (HHV) w/o CO catalyst	0.0008	0.0008	0.0005	0.0005	0.0005	0.0005	0.0005
VOC Reduction % w/ Catalyst	0%	0%	0%	0%	0%	0%	0%
VOC, ppmvd @ 15% O2 w/ Catalyst	0.60	0.60	0.40	0.40	0.40	0.40	0.40
VOC, ppmvd w/ Calatyst	0.65	0.63	0.34	0.41	0.35	0.41	0.35
VOC, ppmvw w/ Catalyst	0.58	0.57	0.31	0.37	0.31	0.36	0.32
VOC, lb/h as CH4 w/ Catalyst (includes VOC correction as applied to CTG)	0.34	0.33	0.15	0.20	0.14	0.20	0.14
VOC, lb/MBtu (LHV) w CO catalyst	0.0008	0.0008	0.0006	0.0006	0.0006	0.0006	0.0006
VOC, lb/MBtu (HHV) w CO catalyst	0.0008	0.0008	0.0005	0.0005	0.0005	0.0005	0.0005
Particulate without the effect of SO2 oxidation and SCR catalysts							
Particulates, lb/h (front half catch only)	1.5	1.5	1.5	1.5	1.5	1.5	1.5
Particulates, lb/MBtu (front half catch only)	0.0037	0.0038	0.0055	0.0041	0.0059	0.0042	0.0060
Particulates, lb/h (front and back half catch)	3.0	3.0	3.0	3.0	3.0	3.0	3.0
Particulates, lb/MBtu (front and back half catch)	0.0074	0.0075	0.0109	0.0082	0.0117	0.0084	0.0119
PM10, lb/h (front half catch only)	1.5	1.5	1.5	1.5	1.5	1.5	1.5
PM10, lb/MBtu (front half catch only)	0.0037	0.0038	0.0055	0.0041	0.0059	0.0042	0.0060
PM10, lb/h (front and back half catch)	3.0	3.0	3.0	3.0	3.0	3.0	3.0
PM10, lb/MBtu (front and back half catch)	0.0074	0.0075	0.0109	0.0082	0.0117	0.0084	0.0119
Particulate including the effect of SO2 oxidation and SCR catalysts [includes (NH4)2-(SO4)]							
Particulates, lb/h (front half catch only)	1.8	1.8	1.7	1.7	1.7	1.7	1.7
Particulates, lb/MBtu(front half catch only)	0.0043	0.0044	0.0061	0.0047	0.0065	0.0048	0.0066
Particulates, lb/h (front and back half catch)	3.3	3.3	3.2	3.2	3.2	3.2	3.2
Particulates, lb/MBtu(front and back half catch)	0.0080	0.0082	0.0116	0.0089	0.0123	0.0090	0.0125
PM10, lb/h (front half catch only)	1.8	1.8	1.7	1.7	1.7	1.7	1.7
PM10, lb/MBtu(front half catch only)	0.0043	0.0044	0.0061	0.0047	0.0065	0.0048	0.0066
PM10, lb/h (front and back half catch)	3.3	3.3	3.2	3.2	3.2	3.2	3.2
PM10, lb/MBtu(front and back half catch)	0.0080	0.0082	0.0116	0.0089	0.0123	0.0090	0.0125
NOTE: SO2 to SO3 conversion rate (assumed), wt%	40.0%	40.0%	40.0%	40.0%	40.0%	40.0%	40.0%
Remaining SO2 in Exhaust Gas, lb/h	0.18	0.18	0.13	0.17	0.12	0.16	0.11
Amount of SO2 converted to SO3, lb/h	0.12	0.12	0.08	0.11	0.08	0.11	0.08
Maximum Exhaust Gas ammonium sulfate [(NH4)2-(SO4)] (assuming 100% conversion from SO3), lb/h	0.25	0.25	0.17	0.23	0.16	0.22	0.16
Maximum H2SO4 (assuming 100% conversion from SO3 to H2SO4), lb/hr	0.19	0.19	0.13	0.17	0.12	0.17	0.12
Stack							

9-Aug-01
CED
Henrietta
69381
Simple Cycle Plant Emissions Estimate, Revision 1

Case Number	8	9	10	11	12	13	14
CTG Model	LM6000	LM6000	LM6000	LM6000	LM6000	LM6000	LM6000
Diluent	DN 9/42	DN 9/42	DN 9/42	DN 9/42	DN 9/42	DN 9/42	DN 9/42
CTG Fuel Type	Cust Gas	Cust Gas	Cust Gas	Cust Gas	Cust Gas	Cust Gas	Cust Gas
CTG Load	100%	100%	60%	100%	60%	100%	60%
CTG Inlet Air Conditioning In Operation?	No	Evap. Cooler	Evap. Cooler	Evap. Cooler	Evap. Cooler	Evap. Cooler	Evap. Cooler
Ambient Temperature, F	59	63	63	98	98	115	115
HRSG Firing	Unfired	Unfired	Unfired	Unfired	Unfired	Unfired	Unfired
Fuel Sulfur Content (grains/100 standard cubic feet)	0.25	0.25	0.25	0.25	0.25	0.25	0.25
Stack Exit Temperature, F	851	822	749	826	776	829	784
Stack Diameter, ft (estimated)	10.0	10.0	10.0	10.0	10.0	10.0	10.0
Stack Flow, lb/h	1,029,240	1,035,000	863,280	972,720	801,000	956,520	785,160
Stack Flow, scfm	231,407	232,875	192,943	219,510	179,691	215,855	176,399
Stack Flow, acfm	588,725	579,083	452,503	547,641	431,072	540,115	425,688
Stack Exit Velocity, ft/s	125.0	123.0	96.0	116.0	91.0	115.0	90.0

9-Aug-01
CED
Henrietta
69381
Simple Cycle Plant Emissions Estimate, Revision 1

Case Number	8	9	10	11	12	13	14
CTG Model	LM6000	LM6000	LM6000	LM6000	LM6000	LM6000	LM6000
Diluent	DN 9/42	DN 9/42	DN 9/42	DN 9/42	DN 9/42	DN 9/42	DN 9/42
CTG Fuel Type	Cust Gas	Cust Gas	Cust Gas	Cust Gas	Cust Gas	Cust Gas	Cust Gas
CTG Load	100%	100%	60%	100%	60%	100%	60%
CTG Inlet Air Conditioning In Operation?	No	Evap. Cooler	Evap. Cooler	Evap. Cooler	Evap. Cooler	Evap. Cooler	Evap. Cooler
Ambient Temperature, F	59	63	63	98	98	115	115
HRSG Firing	Unfired	Unfired	Unfired	Unfired	Unfired	Unfired	Unfired
Fuel Sulfur Content (grains/100 standard cubic feet)	0.25	0.25	0.25	0.25	0.25	0.25	0.25
Post Combustion Emissions Control							
CO Catalyst							
CO removed in CO Catalyst, %wt	90%	90%	90%	90%	90%	90%	90%
CO removed in CO Catalyst, lb/h (includes CO correction as applied to CTG)	27.66	21.92	14.77	8.92	5.97	7.18	5.33
Selective Catalytic Reduction (SCR)							
NOx Removed, lb/h as NO2	35.69	35.07	24.40	32.18	22.87	31.48	22.48
NOx Removed, percent	85.6%	85.6%	85.6%	85.6%	85.6%	85.6%	85.6%
NH3 Slip, lb/h	6.0	5.9	4.1	5.4	3.8	5.3	3.7
Stack Exhaust Gas Analysis (Wet)							
Molecular Wt, lb/mol	28.1	28.1	28.3	28.0	28.2	28.0	28.2
Specific Volume, ft^3/lb	34.3	33.6	31.5	33.8	32.3	33.9	32.5
Specific Volume, scf/lb	13.5	13.5	13.4	13.5	13.5	13.5	13.5

Notes:
1. The emissions estimates shown in the table above are per stack.
2. The dry air composition used is 0.98% Ar, 78.03% N2 and 20.99%O2
3. Standard conditions are defined as 60 F, 14.696 psia, Norm conditions are defined as 0 C, 1.103 bar
4. The CTG performance is a GE AERO ENERGY PRODUCTS estimate.
5. The VOC oxidation rates are Black & Veatch estimates based on typical data.
6. UHC calculations do not include the effects of oxidation in the CO catalyst. The VOC/UHC ratio is assumed to be 20% for natural gas firing (typical for GE turbines).
7. The front half catch of particulate emissions is assumed to be half the amount of the front and back half catch.
8. Ammonium sulfates created downstream of the SCR are included in front half particulates and front&back half particulates. The assumption that 100% SO3 is converted to ammonium sulfates results in "worst case" particulate
9. The SO2 oxidation rate was assumed to be 40%.

SR4/2 Preparer: J.Arthur Filepath: c:\bv-users_proj\hanford\[emission.xls]input Reviewer: P.Elrod

URS / Black Veatch
GWF Henrietta
Turbine Emission Calculations

CASE #	1	2	9	10	13	14
Load	**Full**	**60%**	**Full**	**60%**	**Full**	**60%**
Outlet temp °F	764	682	822	749	829	784
DB, °F	**15**	**15**	**63.0**	**63.0**	**115.0**	**115.0**
acfm	601187	467147	579083	452503	540115	425688
controlled NOx, lb/hr	6.21	4.28	5.90	4.10	5.30	3.78
Controlled CO, lb/hr	6.25	4.02	2.44	1.64	0.80	0.59
SO2, lb/hr	0.32	0.22	0.30	0.21	0.27	0.19
PM_{10}, lb/hr	3.26	3.18	3.25	3.17	3.22	3.16

300 startups and 300 shutdowns per year.
300 total for year
8000 base hours of operation

525600	Startup/Shudown Emissions	
18000		(lb/hr)
	NOx	7.7
	CO	7.7
	PM10	3.14
	SO2	0.33

Emissions @ 15°F

	Load	Emission Rate (lb/hr)	Time (min)	**1-hr Averaged**	Time (min)	**3-hr Averaged**	Time (min)	**8-hr Averaged**	Time (min)	**24-hr Averaged**	Time (min)	**Annual Averaged**
NO_X	Full	6.21	0	**7.700**	120	**6.707**	420	**6.396**	1320	**6.334**	507600	**6.261**
	Start/Shut	7.70	60		60		60		120		18000	
CO	Full	6.25	0	**7.700**	120	**6.733**	420	**6.431**	1320	**6.371**	507600	**6.300**
	Start/Shut	7.70	60		60		60		120		18000	
SO_2	Full	0.32	0	**0.330**	120	**0.322**	420	**0.319**	1320	**0.319**	507600	**0.318**
	Start/Shut	0.33	60		60		60		120		18000	
PM_{10}	Full	3.26	0	**3.140**	120	**3.220**	420	**3.245**	1320	**3.250**	507600	**3.256**
	Start/Shut	3.14	60		60		60		120		18000	

Emissions @ 63°F

	Load	Emission Rate (lb/hr)	Time (min)	**1-hr Averaged**	Time (min)	**3-hr Averaged**	Time (min)	**8-hr Averaged**	Time (min)	**24-hr Averaged**	Time (min)	**Annual Averaged**
NO_X	Full	5.9	0	**7.700**	120	**6.500**	420	**6.125**	1320	**6.050**	507600	**5.962**
	Start/Shut	7.7	60		60		60		120		18000	
CO	Full	2.44	0	**7.700**	120	**4.193**	420	**3.098**	1320	**2.878**	507600	**2.620**
	Start/Shut	7.70	60		60		60		120		18000	
SO_2	Full	0.30	0	**0.330**	120	**0.311**	420	**0.305**	1320	**0.304**	507600	**0.302**
	Start/Shut	0.33	60		60		60		120		18000	
PM_{10}	Full	3.25	0	**3.140**	120	**3.213**	420	**3.236**	1320	**3.241**	507600	**3.246**
	Start/Shut	3.14	60		60		60		120		18000	

Emissions @ 115°F

	Load	Emission Rate (lb/hr)	Time (min)	**1-hr Averaged**	Time (min)	**3-hr Averaged**	Time (min)	**8-hr Averaged**	Time (min)	**24-hr Averaged**	Time (min)	**Annual Averaged**
NO_X	Full	5.3	0	**7.700**	120	**6.100**	420	**5.600**	1320	**5.500**	507600	**5.382**
	Start/Shut	7.7	60		60		60		120		18000	
CO	Full	0.80	0	**7.700**	120	**3.100**	420	**1.663**	1320	**1.375**	507600	**1.036**
	Start/Shut	7.70	60		60		60		120		18000	
SO_2	Full	0.27	0	**0.330**	120	**0.290**	420	**0.277**	1320	**0.275**	507600	**0.272**
	Start/Shut	0.33	60		60		60		120		18000	
PM_{10}	Full	3.22	0	**3.140**	120	**3.193**	420	**3.210**	1320	**3.213**	507600	**3.217**
	Start/Shut	3.14	60		60		60		120		18000	

Flow Rates and Oulet Temps @ 15°F

Load	Flow Rate (acfm)	Time (min)	**1-hr Averaged**	Time (min)	**3-hr Averaged**	Time (min)	**8-hr Averaged**	Time (min)	**24-hr Averaged**	Time (min)	**Annual Averaged**
Full	601187	50	**578847**	170	**593740**	470	**598395**	1420	**599325**	522600	**600422**
60%	467147	10		10		10		20		3000	
Load	Temp (°F)										
Full	764	50	**750**	170	**759**	470	**762**	1420	**758**	522600	**764**
60%	682	10		10		10		120		3000	

Flow Rates and Outlet Temps @ 63°F

Load	Flow Rate (acfm)	Time (min)	**1-hr Averaged**	Time (min)	**3-hr Averaged**	Time (min)	**8-hr Averaged**	Time (min)	**24-hr Averaged**	Time (min)	**Annual Averaged**
Full	579083	50	**557986**	170	**572051**	470	**576446**	1420	**577325**	522600	**578361**
60%	452503	10		10		10		20		3000	
Load	Temp (°F)										
Full	822	50	**810**	170	**818**	470	**820**	1420	**816**	522600	**822**
60%	749	10		10		10		120		3000	

Flow Rates and Outlet Temps @ 115°F

Load	Flow Rate (acfm)	Time (min)	**1-hr Averaged**	Time (min)	**3-hr Averaged**	Time (min)	**8-hr Averaged**	Time (min)	**24-hr Averaged**	Time (min)	**Annual Averaged**
Full	540115	50	**521044**	170	**533758**	470	**537731**	1420	**538526**	522600	**539462**
60%	425688	10		10		10		20		3000	
Load	Temp (°F)										
Full	829	50	**822**	170	**827**	470	**828**	1420	**825**	522600	**829**
60%	784	10		10		10		120		3000	

EMERGENCY GENERATOR VENDOR DATA

250 kW GENERATOR SET

CATERPILLAR

TECHNICAL DATA

250 kW/313 kV•A Standby Power Generator Set – 1800 rpm/60 Hz

Package Performance		
Power rating @ 0.8 PF with fan	kW	250
Power rating @ 0.8 PF with fan	kV•A	313
Fuel Consumption		
100% Load with Fan	gph	18.9
75% Load with Fan	gph	13.4
Cooling System		
Ambient Air Temperature (Consult T.M.I.)		
Designed for operation up to	Deg F	122
Air Flow Restriction (After Radiator)	in water	.25
Standard Radiator Arrangement Data		
Air Flow (Max @ Rated Speed)	cfm	13 500
Engine Coolant Capacity with Radiator	gal	17.4
Engine Coolant Capacity without Radiator	gal	4.2
Exhaust System		
Combustion Air Inlet Flow Rate	cfm	775
Exhaust Gas Stack Temperature	Deg F	1020
Exhaust Gas Flow Rate	cfm	2050
Exhaust Flange Size — (Internal Diameter)	in	6.0
System Backpressure (Max. Allowable)	in water	27
Heat Rejection		
Heat Rejection to Coolant (Total)	BTU/min	5971
Heat Rejection to Exhaust (Total)	BTU/min	16 265
Heat Rejection to Atmosphere from Engine	BTU/min	3469
Heat Rejection to Atmosphere from Generator	BTU/min	1267

Deration: Generator set is designed to operate in ambient temperatures up to 122° F (50° C) and at higher altitudes. Please consult factory for available outputs.

CAT® 446 FRAME GENERATOR SPECIFICATIONS

Type .... Self excited, static regulated, brushless
Construction..... Single bearing, close coupled
Three phase..... 12 lead reconnectable
Insulation..... Class H with tropicalization and antiabrasion
Enclosure ..... Drip proof IP22
Alignment ..... Pilot shaft
Overspeed capability 150%
Wave form ..... Less than 5% deviation
Paralleling capability ..... With optional droop transformer
Voltage regulator..... 3-phase sensing with Volts-per-Hertz
Voltage regulation.. Less than ± 1/2% (steady state)
Less than ± 1% (no load to full load)
Voltage gain..... Adjustable to compensate for engine speed droop and line loss
TIF ..... Less than 50
THD ..... Less than 5%

CAT® 3306 ATAAC ENGINE SPECIFICATIONS

I-6, 4-stroke-cycle watercooled diesel
Bore — in (mm) 4.75 (121)
Stroke — in (mm) 6.0 (152)
Displacement — cu in (L) 638 (10.5)
Compression ratio..... 15:1
Aspiration..... Air-to-Air Aftercooled

CAT® CONTROL PANEL

24 Volt DC Control
NEMA 1, IP22 enclosure
Electrically dead front
Lockable hinged door
Generator instruments meet ANSI C-39-1
Terminal box mounted
Single location customer connector point
EC compliant — segregated AC/DC connection

Consult your Caterpillar dealer for available voltages.

CATERPILLAR

250 kW GENERATOR SET

FACTORY INSTALLED STANDARD & OPTIONAL EQUIPMENT

SYSTEM	STANDARD	OPTIONAL
Air inlet	modular air cleaner, single element with dust evacuator service indicator	dual element air cleaner heavy-duty air cleaner air inlet shutoff
Cooling	radiator with guard coolant drain line with valve fan and belt guards Caterpillar Extended Life Coolant	radiator duct flange jacket water heater with isolation valves low coolant level alarm and shutdown heat exchanger and expansion tank
Exhaust	stainless steel exhaust flex with mating weld flange industrial grade muffler	residential muffler critical muffler muffler mounting kit, through-wall installation kit engine exhaust guarding
Fuel	primary fuel filter secondary fuel filter fuel priming pump fuel pressure gauge flexible fuel lines	water separator manual transfer pump automatic transfer systems, 3 configurations low fuel level alarm and shutdown
Generator	self excited class F temperature rise 266° F (130° C) standby circuit breaker, IEC compliant 3-pole with shunt trip	permanent magnet excitation 2:1 Volts/Hz AVR Digital Voltage Regulator (D.V.R.) D.V.R. with KVAR/PF control space heater reactive droop kit oversize and premium generators circuit breaker, IEC compliant, 4-pole with shunt trip
Governor	hydra-mechanical	electronic isochronous and load sharing
Control panels	EMCP II	electromechanical auto start/stop panel switchgear conversion EMCP II+ system expansion modules
Lube	lubricating oil oil drain line with valves fumes disposal	manual sump pump
Mounting	formed steel base with integral fuel tank, 8 hour capacity – minimum linear vibration isolators between base and engine-generator	wide base with integral fuel tank extended capacity fuel tank base skid base
Starting/ charging	45 amp charging alternator Energize To Run (ETR) fuel shutoff solenoid 24 volt starting motor batteries with rack and cables	integral 5 amp battery charger oversize batteries ether starting aid battery disconnect
Other		enclosures – sound attenuated, weather protective automatic transfer switch CE certification

STANDBY POWER GENERATOR SET PACKAGE — TOP VIEW

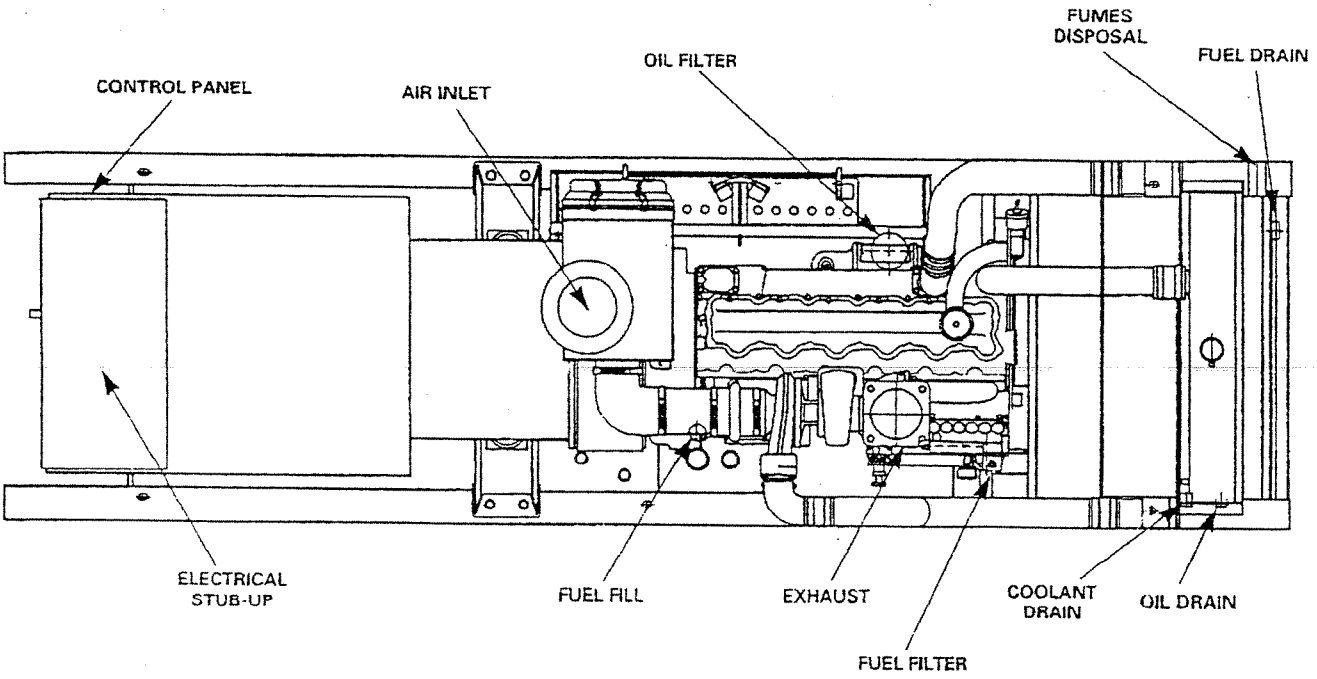

PACKAGE DIMENSIONS		
Length	in	150
Width	in	43
Height	in	76
Shipping Weight	lb	6977

Note: General configuration not to be used for installation. See general dimension drawings for detail.

RATING DEFINITIONS AND CONDITIONS

Standby — Output available with varying load for the duration of the interruption of the normal source power. Fuel stop power in accordance with ISO3046/1, AS2789, DIN6271, and BS5514.

Ratings are based on SAE J1349 standard conditions. These ratings also apply at ISO3046/1, DIN6271, and BS5514 standard conditions.

Fuel rates are based on fuel oil of 35° API (60° F or 16° C) gravity having an LHV of 18 390 Btu/lb (42 780 kJ/kg) when used at 85° F (29° C) and weighing 7.001 lbs/U.S. gal. (838.9 g/liter).

Additional ratings may be available for specific customer requirements. Consult your Caterpillar representative for details.

© 1998 Caterpillar Inc.

Emissions Data for CAT 3306 - 250 kW Genset

DM3400-00 PGS STANDBY 60 HERTZ
GEN 250.0 W/F EKW 263.0 W/O F EKW W/F BHP 382 W/O F BHP 1800 @ RPM

EXH STK DIA 5.0 IN

INFO CODE 05 - EMISSIONS DATA * * REFERENCE NOTES * * * * * *

EMISSIONS DATA MEASUREMENT IS CONSISTENT WITH THOSE DESCRIBED IN EPA CFR 40 PART 86 SUBPART D AND ISO 8178-1 FOR MEASURING HC, CO, CO2 AND NOX. THESE PROCEDURES ARE VERY SIMILAR TO THE METHODS DESCRIBED IN EPA CFR 40 PART 60 APPENDIX A METHOD 25A FOR HYDROCARBONS, METHOD 10 FOR CO, METHOD 7E FOR NOX.

DATA SHOWN IS BASED ON STEADY STATE ENGINE OPERATING CONDITIONS OF 77 DEG F, 28.42 IN HG AND NUMBER 2 DIESEL FUEL WITH 35 DEG API AND LHV OF 18,390 BTU/LB.

TO PROPERLY APPLY THIS DATA YOU MUST REFER TO PERFORMANCE PARAMETER DM1176 FOR ADDITIONAL INFORMATION, (APPLICATION GKN402, PROGRAM 03).

-GKGPE1 TMI - ENGINE AND COMP PERF

20 - PACKAGE SET PERFORMANCE DATE: 03/31/2000
3306B DI TA AA DRY MANF TURBO QTY 1 TIME: 12:11:13
CAT 3 GOV
DM3400-00 PGS STANDBY 60 HERTZ EXH STK DIA 5.0 IN
GEN 250.0 W/F EKW 263.0 W/O F EKW W/F BHP 382 W/O F BHP 1800 @ RPM
CERTIFICATION YEAR CERT AGENCY

INFO CODE 05 - EMISSIONS DATA * * * * * RATED SPEED * * * * STANDARD TIMING
"NOT TO EXCEED DATA"

GEN PWR EKW	% LOAD	ENG PWR BHP	NOX (AS NO2) * * * * * * * *	CO	TOTAL HC LB/HR	PART MATTER * * * * * * * *	O2 (DRY) IN EXH (VOL) %	SMOKE OPAC %	BOSCH SMOKE NO.
250.0	100	382.2	4.29	.95	.12	.110	10.10	1.7	1.29
187.5	75	289.0	3.64	.41	.15	.060	10.90	1.1	1.27
125.0	50	198.3	2.83	.46	.17	.060	12.20	1.4	1.30
62.5	25	110.1	1.56	.49	.11	.060	14.10	1.9	1.35
25.0	10	55.1	.78	.74	.17	.060	15.80	2.1	1.35

-GKGPE2 TMI - ENGINE AND COMP PERF

20 - PACKAGE SET PERFORMANCE DATE: 03/31/2000
3306B DI TA AA DRY MANF TURBO QTY 1 TIME: 12:14:13
CAT 3 GOV
DM3400-00 PGS STANDBY 60 HERTZ EXH STK DIA 5.0 IN
GEN 250.0 W/F EKW 263.0 W/O F EKW W/F BHP 382 W/O F BHP 1800 @ RPM
CERTIFICATION YEAR CERT AGENCY

INFO CODE 05 - EMISSIONS DATA * * * * * RATED CONDITIONS * * STANDARD TIMING
"NOMINAL DATA"

AT RATED:

WET EXHAUST MASS	3497 LB/HR
WET EXHAUST FLOW (994 DEG F STACK TEMP)	2175 CFM
WET EXHAUST FLOW RATE (32 DEG F AND 29.98 IN HG)...	735 STD CFM
DRY EXHAUST FLOW RATE (32 DEG F AND 29.98 IN HG)...	655 STD CFM
FUEL FLOW RATE	19.0 GAL/HR

Refined Modeling Inputs - GWF Henrietta
BEEST file name GWF_Henry_Final.BST

I-hr NO_X

BEEST Source Group EMGEN1

Source ID	Easting (m)	Northing (m)	Base Elevation (ft above MSL)	Stack Height (ft)	Temp. (^{O}F)	Exit Vel. (ft/s)	Stack Diam. (ft)	Emission Rate (lb/hr)
1S1HRFUL	239101	4014255.6	68.3	85	764	127.6	10	6.2
2S1HRFUL	239066	4014255.6	68.5	85	764	127.6	10	6.2
EMGEN_1	239096.96	4014250.3	68.3	8	822	570.9	2	1.1

BEEST Source Group 1HR

Source ID	Easting (m)	Northing (m)	Base Elevation (ft above MSL)	Stack Height (ft)	Temp. (^{O}F)	Exit Vel. (ft/s)	Stack Diam. (ft)	Emission Rate (lb/hr)
1S1HR115	239101	4014255.6	68.3	85	822	110.6	10	7.7
2S1HR115	239066	4014255.6	68.5	85	822	110.6	10	7.7

1-hr CO

BEEST Source Group EGEN1

Source ID	Easting (m)	Northing (m)	Base Elevation (ft, MSL)	Stack Height (ft)	Temp. (^{O}F)	Exit Vel. (ft/s)	Stack Diam. (ft)	Emission Rate (lb/hr)
1S1HRFUL	239101	4014255.6	68.3	85	764	127.6	10	6.3
2S1HRFUL	239066	4014255.6	68.5	85	764	127.6	10	6.3
EMGEN_1	239096.96	4014250.3	68.3	8	822	570.9	2	0.24

BEEST Source Group 1HR

Source ID	Easting (m)	Northing (m)	Base Elevation (ft, MSL)	Stack Height (ft)	Temp. (^{O}F)	Exit Vel. (ft/s)	Stack Diam. (ft)	Emission Rate (lb/hr)
1S1HR115	239101	4014255.6	68.3	85	822	110.6	10	7.7
2S1HR115	239066	4014255.6	68.5	85	822	110.6	10	7.7

1-hr SO_2

BEEST Source Group EMGEN1

Source ID	Easting (m)	Northing (m)	Base Elevation (ft, MSL)	Stack Height (ft)	Temp. (^{O}F)	Exit Vel. (ft/s)	Stack Diam. (ft)	Emission Rate (lb/hr)
1S1HRFUL	239101	4014255.6	68.3	85	764	127.6	10	0.32
2S1HRFUL	239066	4014255.6	68.5	85	764	127.6	10	0.32
EMGEN_1	239096.96	4014250.3	68.3	8	822	570.9	2	0.17

BEEST Source Group 1HR

Source ID	Easting (m)	Northing (m)	Base Elevation (ft, MSL)	Stack Height (ft)	Temp. (^{O}F)	Exit Vel. (ft/s)	Stack Diam. (ft)	Emission Rate (lb/hr)
1S1HR115	239101	4014255.6	68.3	85	822	110.6	10	0.33
2S1HR115	239066	4014255.6	68.5	85	822	110.6	10	0.33

3-hr SO_2

BEEST Source Group EMGEN3

Source ID	Easting (m)	Northing (m)	Base Elevation (ft, MSL)	Stack Height (ft)	Temp. (^{O}F)	Exit Vel. (ft/s)	Stack Diam. (ft)	Emission Rate (lb/hr)
1S1HRFUL	239101	4014255.6	68.3	85	764.0	127.6	10	0.32
2S1HRFUL	239066	4014255.6	68.5	85	764.0	127.6	10	0.32
EMGEN_3	239096.96	4014250.3	68.3	8	822.0	570.9	1.64	0.06

BEEST Source Group 3HR

Source ID	Easting (m)	Northing (m)	Base Elevation (ft, MSL)	Stack Height (ft)	Temp. (^{O}F)	Exit Vel. (ft/s)	Stack Diam. (ft)	Emission Rate (lb/hr)
1S3HR115	239101	4014255.6	68.3	85	827.01	113.255	10	0.29
2S3HR115	239066	4014255.6	68.5	85	827.01	113.255	10	0.29

8-hr CO

BEEST Source Group EGEN8

Source ID	Easting (m)	Northing (m)	Base Elevation (ft, MSL)	Stack Height (ft)	Temp. (^{O}F)	Exit Vel. (ft/s)	Stack Diam. (ft)	Emission Rate (lb/hr)

1S8HRFUL	239101	4014255.6	68.3	85	764.01	127.576	10	6.3
2S8HRFUL	239066	4014255.6	68.3	85	764.01	127.576	10	6.3
EMGEN_8	239096.96	4014250.3	68.3	8	822.04	570.897	2	3.00E-02

BEEST Source Group 8HR

Source ID	Easting (m)	Northing (m)	Base Elevation (ft, MSL)	Stack Height (ft)	Temp. (^{O}F)	Exit Vel. (ft/s)	Stack Diam. (ft)	Emission Rate (lb/hr)
1S8HR15	239101	4014255.6	68.3	85	762	127.0	10	6.4
2S8HR15	239066	4014255.6	68.3	85	762	127.0	10	6.4

24-hr SO_2

BEEST Source Group EMGEN24

Source ID	Easting (m)	Northing (m)	Base Elevation (ft, MSL)	Stack Height (ft)	Temp. (^{O}F)	Exit Vel. (ft/s)	Stack Diam. (ft)	Emission Rate (lb/hr)
1S224115	239101	4014255.6	68.5	85	825	114.3	10	0.28
2S224115	239066	4014255.6	68.5	85	825	114.3	10	0.28
EMGEN_24	239096.96	4014250.3	68.3	8	822	570.897	2	7.00E-03

BEEST Source Group24HR

Source ID	Easting (m)	Northing (m)	Base Elevation (ft, MSL)	Stack Height (ft)	Temp. (^{O}F)	Exit Vel. (ft/s)	Stack Diam. (ft)	Emission Rate (lb/hr)
1S224115	239101	4014255.6	68.5	85	825	114.3	10	0.28
2S224115	239066	4014255.6	68.5	85	825	114.3	10	0.28

24-hr PM_{10}

BEEST Source Group EMGEN24

Source ID	Easting (m)	Northing (m)	Base Elevation (ft, MSL)	Stack Height (ft)	Temp. (^{O}F)	Exit Vel. (ft/s)	Stack Diam. (ft)	Emission Rate (lb/hr)
1S224FUL	239101	4014255.6	68.5	85	764	127.6	10	3.3
2S224FUL	239066	4014255.6	68.5	85	764	127.6	10	3.3
EMGEN_24	239096.96	4014250.3	68.3	8	822	570.9	2	1.15E-03

BEEST Source Group 24HR

Source ID	Easting (m)	Northing (m)	Base Elevation (ft, MSL)	Stack Height (ft)	Temp. (^{O}F)	Exit Vel. (ft/s)	Stack Diam. (ft)	Emission Rate (lb/hr)
1S224115	239101	4014255.6	68.5	85	825	114.3	10	3.21
2S224115	239066	4014255.6	68.5	85	825	114.3	10	3.21

Annual SO_2, CO, NO_X & PM_{10}

BEEST Source Group ALL_ANN

Source ID	Easting (m)	Northing (m)	Base Elevation (ft, MSL)	Stack Height (ft)	Temp. (^{O}F)	Exit Vel. (ft/s)	Stack Diam. (ft)	NO_X Emission Rate (lb/hr)	CO Emission Rate (lb/hr)	SO_2 Emission Rate (lb/hr)	PM_{10} Emission Rate (lb/hr)
1SANN63	239101	4014255.6	68.3	85	822	122.7	10	6.0		0.30	3.2
2SANN63	239066	4014255.6	68.5	85	822	122.7	10	6.0		0.30	3.2
EMGEN_AN	239096.96	4014250.3	68.3	8	822	570.897	1.6404	6.00E-03		1.00E-03	1.63E-04

Assumptions:

1 Turbine source name convention is as follows:
(Averaging period)_(Ambient Temperature)_(% load)_(turbine number)

2 Emergency Generator name convention is as follows:
E-GEN_(Averaging period)

3 Emergency generator operates 15 continuous minutes per week for testing while turbines are at 100% load.

4 Turbine startups last 20 minutes and turbine shutdowns last 30 minutes

5 Annual emissions consider 300 startups, 300 shutdowns, and 8000 hours of 100% operation at 59 oF

6 1-, 3-, 8-, and 24-hr emissions consider 1 startup occurring within the period for each turbine.

7 Stack parameters for each source are based on the temperature and averaging period indicated.

8 Two source groups are listed to account for emissions during emergency generator testing.

GWF -Construction Equipment Emission Factors

			Emission Rate (lb/hr)				
Construction Equipment	Equipment Catagory	SCAQMD Table[1]	CO	ROC	NOx	SOx	PM10
Transmission Line							
Cable Tensioner Truck	Miscellaneous	A9-8-A	0.675	0.150	1.700	0.143	0.140
Cable Drum Puller Truck	Miscellaneous	A9-8-A	0.675	0.150	1.700	0.143	0.140
Pole Delivery Truck	Miscellaneous	A9-8-A	0.675	0.150	1.700	0.143	0.140
Cable Delivery Truck	Miscellaneous	A9-8-A	0.675	0.150	1.700	0.143	0.140
Boring Vehicle	Miscellaneous	A9-8-A	0.675	0.150	1.700	0.143	0.140
Gas Pipeline							
Compressor	Miscellaneous	A9-8-A	0.675	0.150	1.700	0.143	0.140
Asphalt Paver	Miscellaneous	A9-8-A	0.675	0.150	1.700	0.143	0.140
Asphalt Compactor	Roller	A9-8-A	0.300	0.065	0.870	0.067	0.050
Compactor	Roller	A9-8-A	0.300	0.065	0.870	0.067	0.050
Bulldozer	Tracked Tractor	A9-8-A	0.350	0.120	1.260	0.140	0.112
Backhoe	Wheeled Tractor	A9-8-A	3.580	0.180	1.270	0.090	0.140
Pipe Crane	Trucks:Off-Hwy	A9-8-A	1.800	0.190	4.170	0.450	0.260
Welding Machinge	Miscellaneous	A9-8-A	0.675	0.150	1.700	0.143	0.140
Dump Truck	Trucks:Off-Hwy	A9-8-A	1.800	0.190	4.170	0.450	0.260
Flatbed Truck	Miscellaneous	A9-8-A	0.675	0.150	1.700	0.143	0.140
Pickup Truck	Miscellaneous	A9-8-A	0.675	0.150	1.700	0.143	0.140

[1] South Coast Air Quality Management District CEQA Air Quality Handbook, 1993.

GWF - Construction Equipment Utilization

Sitework	1	2	3	4	5	Work Days Per Month[1]	Hours Per Work Day	Total Equip. Actual % Use
Transmission Line								
Cable Tensioner Truck		0.3				26.07	20	5%
Cable Drum Puller Truck		0.3				26.07	20	5%
Pole Delivery Truck		0.3				26.07	20	2%
Cable Delivery Truck		0.3				26.07	20	2%
Boring Vehicle		0.3				26.07	20	2%
Gas Pipeline								
Compressor		1	1	1		26.07	20	85%
Asphalt Paver		1				26.07	20	85%
Asphalt Compactor		1				26.07	20	85%
Compactor		2	2	2		26.07	20	85%
Bulldozer		1	0.5			26.07	20	85%
Backhoe		1	1	1		26.07	20	85%
Pipe Crane		1	1	1		26.07	20	85%
Welding Machinge		1	1	1		26.07	20	85%
Dump Truck		1	1	1		26.07	20	85%
Flatbed Truck		1	1	1		26.07	20	85%
Pickup Truck		1	1	1		26.07	20	85%
Total	39	56	41	36	14			

[1] A six day work week is assumed

GWF - Hourly Construction Equipment Emissions

Carbon Monoxide

Pounds Per Hour

	1	2	3	4	5
Transmission Line					
Cable Tensioner Truck	0.0	0.0	0.0	0.0	0.0
Cable Drum Puller Truck	0.0	0.0	0.0	0.0	0.0
Pole Delivery Truck	0.0	0.0	0.0	0.0	0.0
Cable Delivery Truck	0.0	0.0	0.0	0.0	0.0
Boring Vehicle	0.0	0.0	0.0	0.0	0.0
Gas Pipeline					
Compressor	0.0	0.6	0.6	0.6	0.0
Asphalt Paver	0.0	0.6	0.0	0.0	0.0
Asphalt Compactor	0.0	0.3	0.0	0.0	0.0
Compactor	0.0	0.5	0.5	0.5	0.0
Bulldozer	0.0	0.3	0.1	0.0	0.0
Backhoe	0.0	3.0	3.0	3.0	0.0
Pipe Crane	0.0	1.5	1.5	1.5	0.0
Welding Machinge	0.0	0.6	0.6	0.6	0.0
Dump Truck	0.0	1.5	1.5	1.5	0.0
Flatbed Truck	0.0	0.6	0.6	0.6	0.0
Pickup Truck	0.0	0.6	0.6	0.6	0.0
Sitework lbs/hr:	15.3	18.4	13.8	12.3	5.4
Transmission Line lbs/hr:	0.0	0.0	0.0	0.0	0.0
Gas Pipeline lbs/hr:	0.0	10.0	9.1	8.9	0.0

GWF - Hourly Construction Equipment Emissions

Reactive Organic Compounds

Pounds Per Hour

	1	2	3	4	5
Transmission Line					
Cable Tensioner Truck	0.0	0.0	0.0	0.0	0.0
Cable Drum Puller Truck	0.0	0.0	0.0	0.0	0.0
Pole Delivery Truck	0.0	0.0	0.0	0.0	0.0
Cable Delivery Truck	0.0	0.0	0.0	0.0	0.0
Boring Vehicle	0.0	0.0	0.0	0.0	0.0
Gas Pipeline					
Compressor	0.0	0.1	0.1	0.1	0.0
Asphalt Paver	0.0	0.1	0.0	0.0	0.0
Asphalt Compactor	0.0	0.1	0.0	0.0	0.0
Compactor	0.0	0.1	0.1	0.1	0.0
Bulldozer	0.0	0.1	0.1	0.0	0.0
Backhoe	0.0	0.2	0.2	0.2	0.0
Pipe Crane	0.0	0.2	0.2	0.2	0.0
Welding Machinge	0.0	0.1	0.1	0.1	0.0
Dump Truck	0.0	0.2	0.2	0.2	0.0
Flatbed Truck	0.0	0.1	0.1	0.1	0.0
Pickup Truck	0.0	0.1	0.1	0.1	0.0
Sitework lbs/hr:	2.8	3.3	2.3	2.1	1.0
Transmission Line lbs/hr:	0.0	0.0	0.0	0.0	0.0
Gas Pipeline lbs/hr:	0.0	1.4	1.2	1.1	0.0

GWF - Hourly Construction Equipment Emissions

Nitrogen Oxides

Pounds Per Hour

	1	2	3	4	5
Transmission Line					
Cable Tensioner Truck	0.0	0.0	0.0	0.0	0.0
Cable Drum Puller Truck	0.0	0.0	0.0	0.0	0.0
Pole Delivery Truck	0.0	0.0	0.0	0.0	0.0
Cable Delivery Truck	0.0	0.0	0.0	0.0	0.0
Boring Vehicle	0.0	0.0	0.0	0.0	0.0
Gas Pipeline					
Compressor	0.0	1.4	1.4	1.4	0.0
Asphalt Paver	0.0	1.4	0.0	0.0	0.0
Asphalt Compactor	0.0	0.7	0.0	0.0	0.0
Compactor	0.0	1.5	1.5	1.5	0.0
Bulldozer	0.0	1.1	0.5	0.0	0.0
Backhoe	0.0	1.1	1.1	1.1	0.0
Pipe Crane	0.0	3.5	3.5	3.5	0.0
Welding Machinge	0.0	1.4	1.4	1.4	0.0
Dump Truck	0.0	3.5	3.5	3.5	0.0
Flatbed Truck	0.0	1.4	1.4	1.4	0.0
Pickup Truck	0.0	1.4	1.4	1.4	0.0
Sitework lbs/hr:	39.2	45.9	34.0	30.4	13.3
Transmission Line lbs/hr:	0.0	0.1	0.0	0.0	0.0
Gas Pipeline lbs/hr:	0.0	18.7	16.0	15.4	0.0

GWF - Hourly Construction Equipment Emissions

Sulfur Dioxide

Pounds Per Hour

	1	2	3	4	5
Transmission Line					
Cable Tensioner Truck	0.0	0.0	0.0	0.0	0.0
Cable Drum Puller Truck	0.0	0.0	0.0	0.0	0.0
Pole Delivery Truck	0.0	0.0	0.0	0.0	0.0
Cable Delivery Truck	0.0	0.0	0.0	0.0	0.0
Boring Vehicle	0.0	0.0	0.0	0.0	0.0
Gas Pipeline					
Compressor	0.0	0.1	0.1	0.1	0.0
Asphalt Paver	0.0	0.1	0.0	0.0	0.0
Asphalt Compactor	0.0	0.1	0.0	0.0	0.0
Compactor	0.0	0.1	0.1	0.1	0.0
Bulldozer	0.0	0.1	0.1	0.0	0.0
Backhoe	0.0	0.1	0.1	0.1	0.0
Pipe Crane	0.0	0.4	0.4	0.4	0.0
Welding Machinge	0.0	0.1	0.1	0.1	0.0
Dump Truck	0.0	0.4	0.4	0.4	0.0
Flatbed Truck	0.0	0.1	0.1	0.1	0.0
Pickup Truck	0.0	0.1	0.1	0.1	0.0
Sitework lbs/hr:	3.8	4.4	3.3	2.9	1.2
Transmission Line lbs/hr:	0.0	0.0	0.0	0.0	0.0
Gas Pipeline lbs/hr:	0.0	1.7	1.5	1.4	0.0

GWF - Hourly Construction Equipment Emissions

Particulate Matter <10um

Pounds Per Hour

	1	2	3	4	5
Transmission Line					
Cable Tensioner Truck	0.0	0.0	0.0	0.0	0.0
Cable Drum Puller Truck	0.0	0.0	0.0	0.0	0.0
Pole Delivery Truck	0.0	0.0	0.0	0.0	0.0
Cable Delivery Truck	0.0	0.0	0.0	0.0	0.0
Boring Vehicle	0.0	0.0	0.0	0.0	0.0
Gas Pipeline					
Compressor	0.0	0.1	0.1	0.1	0.0
Asphalt Paver	0.0	0.1	0.0	0.0	0.0
Asphalt Compactor	0.0	0.0	0.0	0.0	0.0
Compactor	0.0	0.1	0.1	0.1	0.0
Bulldozer	0.0	0.1	0.0	0.0	0.0
Backhoe	0.0	0.1	0.1	0.1	0.0
Pipe Crane	0.0	0.2	0.2	0.2	0.0
Welding Machinge	0.0	0.1	0.1	0.1	0.0
Dump Truck	0.0	0.2	0.2	0.2	0.0
Flatbed Truck	0.0	0.1	0.1	0.1	0.0
Pickup Truck	0.0	0.1	0.1	0.1	0.0
Sitework lbs/hr:	2.9	3.4	2.5	2.2	1.0
Transmission Line lbs/hr:	0.0	0.0	0.0	0.0	0.0
Gas Pipeline lbs/hr:	0.0	1.4	1.2	1.1	0.0

GWF - Daily Construction Equipment Emissions

Carbon Monoxide

Pounds Per Day

	1	2	3	4	5
Transmission Line					
Cable Tensioner Truck	0.0	0.2	0.0	0.0	0.0
Cable Drum Puller Truck	0.0	0.2	0.0	0.0	0.0
Pole Delivery Truck	0.0	0.1	0.0	0.0	0.0
Cable Delivery Truck	0.0	0.1	0.0	0.0	0.0
Boring Vehicle	0.0	0.1	0.0	0.0	0.0
Gas Pipeline					
Compressor	0.0	11.5	11.5	11.5	0.0
Asphalt Paver	0.0	11.5	0.0	0.0	0.0
Asphalt Compactor	0.0	5.1	0.0	0.0	0.0
Compactor	0.0	10.2	10.2	10.2	0.0
Bulldozer	0.0	6.0	3.0	0.0	0.0
Backhoe	0.0	60.9	60.9	60.9	0.0
Pipe Crane	0.0	30.6	30.6	30.6	0.0
Welding Machinge	0.0	11.5	11.5	11.5	0.0
Dump Truck	0.0	30.6	30.6	30.6	0.0
Flatbed Truck	0.0	11.5	11.5	11.5	0.0
Pickup Truck	0.0	11.5	11.5	11.5	0.0
Sitework lbs/day:	306.4	367.0	276.4	245.8	107.4
Transmission Line lbs/hr:	0.0	0.5	0.0	0.0	0.0
Gas Pipeline lbs/hr:	0.0	200.7	181.1	178.2	0.0

GWF - Daily Construction Equipment Emissions

Reactive Organic Compounds

Pounds Per Day

	1	2	3	4	5
Transmission Line					
Cable Tensioner Truck	0.0	0.0	0.0	0.0	0.0
Cable Drum Puller Truck	0.0	0.0	0.0	0.0	0.0
Pole Delivery Truck	0.0	0.0	0.0	0.0	0.0
Cable Delivery Truck	0.0	0.0	0.0	0.0	0.0
Boring Vehicle	0.0	0.0	0.0	0.0	0.0
Gas Pipeline					
Compressor	0.0	2.6	2.6	2.6	0.0
Asphalt Paver	0.0	2.6	0.0	0.0	0.0
Asphalt Compactor	0.0	1.1	0.0	0.0	0.0
Compactor	0.0	2.2	2.2	2.2	0.0
Bulldozer	0.0	2.0	1.0	0.0	0.0
Backhoe	0.0	3.1	3.1	3.1	0.0
Pipe Crane	0.0	3.2	3.2	3.2	0.0
Welding Machinge	0.0	2.6	2.6	2.6	0.0
Dump Truck	0.0	3.2	3.2	3.2	0.0
Flatbed Truck	0.0	2.6	2.6	2.6	0.0
Pickup Truck	0.0	2.6	2.6	2.6	0.0
Sitework lbs/day:	56.8	65.8	46.4	42.5	20.6
Transmission Line lbs/hr:	0.0	0.1	0.0	0.0	0.0
Gas Pipeline lbs/hr:	0.0	27.6	23.0	21.9	0.0

GWF - Daily Construction Equipment Emissions

Nitrogen Oxides

Pounds Per Day

	1	2	3	4	5
Transmission Line					
Cable Tensioner Truck	0.0	0.4	0.0	0.0	0.0
Cable Drum Puller Truck	0.0	0.4	0.0	0.0	0.0
Pole Delivery Truck	0.0	0.1	0.0	0.0	0.0
Cable Delivery Truck	0.0	0.1	0.0	0.0	0.0
Boring Vehicle	0.0	0.1	0.0	0.0	0.0
Gas Pipeline					
Compressor	0.0	28.9	28.9	28.9	0.0
Asphalt Paver	0.0	28.9	0.0	0.0	0.0
Asphalt Compactor	0.0	14.8	0.0	0.0	0.0
Compactor	0.0	29.6	29.6	29.6	0.0
Bulldozer	0.0	21.4	10.7	0.0	0.0
Backhoe	0.0	21.6	21.6	21.6	0.0
Pipe Crane	0.0	70.9	70.9	70.9	0.0
Welding Machinge	0.0	28.9	28.9	28.9	0.0
Dump Truck	0.0	70.9	70.9	70.9	0.0
Flatbed Truck	0.0	28.9	28.9	28.9	0.0
Pickup Truck	0.0	28.9	28.9	28.9	0.0
Sitework lbs/day:	784.5	918.2	680.1	608.1	266.0
Transmission Line lbs/hr:	0.0	1.2	0.0	0.0	0.0
Gas Pipeline lbs/hr:	0.0	373.7	319.3	308.6	0.0

GWF - Daily Construction Equipment Emissions

Sulfur Dioxide

Pounds Per Day

	1	2	3	4	5
Transmission Line					
Cable Tensioner Truck	0.0	0.0	0.0	0.0	0.0
Cable Drum Puller Truck	0.0	0.0	0.0	0.0	0.0
Pole Delivery Truck	0.0	0.0	0.0	0.0	0.0
Cable Delivery Truck	0.0	0.0	0.0	0.0	0.0
Boring Vehicle	0.0	0.0	0.0	0.0	0.0
Gas Pipeline					
Compressor	0.0	2.4	2.4	2.4	0.0
Asphalt Paver	0.0	2.4	0.0	0.0	0.0
Asphalt Compactor	0.0	1.1	0.0	0.0	0.0
Compactor	0.0	2.3	2.3	2.3	0.0
Bulldozer	0.0	2.4	1.2	0.0	0.0
Backhoe	0.0	1.5	1.5	1.5	0.0
Pipe Crane	0.0	7.7	7.7	7.7	0.0
Welding Machinge	0.0	2.4	2.4	2.4	0.0
Dump Truck	0.0	7.7	7.7	7.7	0.0
Flatbed Truck	0.0	2.4	2.4	2.4	0.0
Pickup Truck	0.0	2.4	2.4	2.4	0.0
Sitework lbs/day:	76.1	87.7	65.5	58.0	23.5
Transmission Line lbs/hr:	0.0	0.1	0.0	0.0	0.0
Gas Pipeline lbs/hr:	0.0	34.8	30.0	28.8	0.0

GWF - Daily Construction Equipment Emissions

Particulate Matter <10um

Pounds Per Day

	1	2	3	4	5
Transmission Line					
Cable Tensioner Truck	0.0	0.0	0.0	0.0	0.0
Cable Drum Puller Truck	0.0	0.0	0.0	0.0	0.0
Pole Delivery Truck	0.0	0.0	0.0	0.0	0.0
Cable Delivery Truck	0.0	0.0	0.0	0.0	0.0
Boring Vehicle	0.0	0.0	0.0	0.0	0.0
Gas Pipeline					
Compressor	0.0	2.4	2.4	2.4	0.0
Asphalt Paver	0.0	2.4	0.0	0.0	0.0
Asphalt Compactor	0.0	0.9	0.0	0.0	0.0
Compactor	0.0	1.7	1.7	1.7	0.0
Bulldozer	0.0	1.9	1.0	0.0	0.0
Backhoe	0.0	2.4	2.4	2.4	0.0
Pipe Crane	0.0	4.4	4.4	4.4	0.0
Welding Machinge	0.0	2.4	2.4	2.4	0.0
Dump Truck	0.0	4.4	4.4	4.4	0.0
Flatbed Truck	0.0	2.4	2.4	2.4	0.0
Pickup Truck	0.0	2.4	2.4	2.4	0.0
Sitework lbs/day:	58.6	67.8	49.4	44.7	20.2
Transmission Line lbs/hr:	0.0	0.1	0.0	0.0	0.0
Gas Pipeline lbs/hr:	0.0	27.6	23.4	22.4	0.0

GWF - Monthly Construction Equipment Emissions

Carbon Monoxide

Pounds Per Month

	1	2	3	4	5
Transmission Line					
Cable Tensioner Truck	0.0	4.1	0.0	0.0	0.0
Cable Drum Puller Truck	0.0	4.1	0.0	0.0	0.0
Pole Delivery Truck	0.0	1.4	0.0	0.0	0.0
Cable Delivery Truck	0.0	1.4	0.0	0.0	0.0
Boring Vehicle	0.0	1.4	0.0	0.0	0.0
Gas Pipeline					
Compressor	0.0	299.2	299.2	299.2	0.0
Asphalt Paver	0.0	299.2	0.0	0.0	0.0
Asphalt Compactor	0.0	133.0	0.0	0.0	0.0
Compactor	0.0	265.9	265.9	265.9	0.0
Bulldozer	0.0	155.1	77.6	0.0	0.0
Backhoe	0.0	1,586.6	1,586.6	1,586.6	0.0
Pipe Crane	0.0	797.7	797.7	797.7	0.0
Welding Machinge	0.0	299.2	299.2	299.2	0.0
Dump Truck	0.0	797.7	797.7	797.7	0.0
Flatbed Truck	0.0	299.2	299.2	299.2	0.0
Pickup Truck	0.0	299.2	299.2	299.2	0.0
Sitework lbs/month:	7,987.0	9,567.7	7,205.8	6,408.0	2,799.9
Transmission Line lbs/hr:	0.0	12.2	0.0	0.0	0.0
Gas Pipeline lbs/hr:	0.0	5,231.9	4,722.2	4,644.6	0.0

GWF - Monthly Construction Equipment Emissions

Reactive Organic Compounds

Pounds Per Month

	1	2	3	4	5
Transmission Line					
Cable Tensioner Truck	0.0	0.9	0.0	0.0	0.0
Cable Drum Puller Truck	0.0	0.9	0.0	0.0	0.0
Pole Delivery Truck	0.0	0.3	0.0	0.0	0.0
Cable Delivery Truck	0.0	0.3	0.0	0.0	0.0
Boring Vehicle	0.0	0.3	0.0	0.0	0.0
Gas Pipeline					
Compressor	0.0	66.5	66.5	66.5	0.0
Asphalt Paver	0.0	66.5	0.0	0.0	0.0
Asphalt Compactor	0.0	28.8	0.0	0.0	0.0
Compactor	0.0	57.6	57.6	57.6	0.0
Bulldozer	0.0	53.2	26.6	0.0	0.0
Backhoe	0.0	79.8	79.8	79.8	0.0
Pipe Crane	0.0	84.2	84.2	84.2	0.0
Welding Machinge	0.0	66.5	66.5	66.5	0.0
Dump Truck	0.0	84.2	84.2	84.2	0.0
Flatbed Truck	0.0	66.5	66.5	66.5	0.0
Pickup Truck	0.0	66.5	66.5	66.5	0.0
Sitework lbs/month:	1,479.5	1,715.9	1,209.0	1,108.4	537.4
Transmission Line lbs/hr:	0.0	2.7	0.0	0.0	0.0
Gas Pipeline lbs/hr:	0.0	720.2	598.3	571.7	0.0

GWF - Monthly Construction Equipment Emissions

Nitrogen Oxides

Pounds Per Month

	1	2	3	4	5
Transmission Line					
Cable Tensioner Truck	0.0	10.2	0.0	0.0	0.0
Cable Drum Puller Truck	0.0	10.2	0.0	0.0	0.0
Pole Delivery Truck	0.0	3.4	0.0	0.0	0.0
Cable Delivery Truck	0.0	3.4	0.0	0.0	0.0
Boring Vehicle	0.0	3.4	0.0	0.0	0.0
Gas Pipeline					
Compressor	0.0	753.4	753.4	753.4	0.0
Asphalt Paver	0.0	753.4	0.0	0.0	0.0
Asphalt Compactor	0.0	385.6	0.0	0.0	0.0
Compactor	0.0	771.2	771.2	771.2	0.0
Bulldozer	0.0	558.4	279.2	0.0	0.0
Backhoe	0.0	562.9	562.9	562.9	0.0
Pipe Crane	0.0	1,848.1	1,848.1	1,848.1	0.0
Welding Machinge	0.0	753.4	753.4	753.4	0.0
Dump Truck	0.0	1,848.1	1,848.1	1,848.1	0.0
Flatbed Truck	0.0	753.4	753.4	753.4	0.0
Pickup Truck	0.0	753.4	753.4	753.4	0.0
Sitework lbs/month:	20,451.0	23,937.2	17,730.7	15,854.2	6,935.7
Transmission Line lbs/hr:	0.0	30.6	0.0	0.0	0.0
Gas Pipeline lbs/hr:	0.0	9,741.3	8,323.1	8,043.9	0.0

GWF - Monthly Construction Equipment Emissions

Sulfur Dioxide

Pounds Per Month

	1	2	3	4	5
Transmission Line					
Cable Tensioner Truck	0.0	0.9	0.0	0.0	0.0
Cable Drum Puller Truck	0.0	0.9	0.0	0.0	0.0
Pole Delivery Truck	0.0	0.3	0.0	0.0	0.0
Cable Delivery Truck	0.0	0.3	0.0	0.0	0.0
Boring Vehicle	0.0	0.3	0.0	0.0	0.0
Gas Pipeline					
Compressor	0.0	63.4	63.4	63.4	0.0
Asphalt Paver	0.0	63.4	0.0	0.0	0.0
Asphalt Compactor	0.0	29.7	0.0	0.0	0.0
Compactor	0.0	59.4	59.4	59.4	0.0
Bulldozer	0.0	62.0	31.0	0.0	0.0
Backhoe	0.0	39.9	39.9	39.9	0.0
Pipe Crane	0.0	199.4	199.4	199.4	0.0
Welding Machinge	0.0	63.4	63.4	63.4	0.0
Dump Truck	0.0	199.4	199.4	199.4	0.0
Flatbed Truck	0.0	63.4	63.4	63.4	0.0
Pickup Truck	0.0	63.4	63.4	63.4	0.0
Sitework lbs/month:	1,984.8	2,285.3	1,707.2	1,513.1	613.0
Transmission Line lbs/hr:	0.0	2.6	0.0	0.0	0.0
Gas Pipeline lbs/hr:	0.0	906.8	782.7	751.7	0.0

GWF - Monthly Construction Equipment Emissions

Particulate Matter <10um

Pounds Per Month

	1	2	3	4	5
Transmission Line					
Cable Tensioner Truck	0.0	0.8	0.0	0.0	0.0
Cable Drum Puller Truck	0.0	0.8	0.0	0.0	0.0
Pole Delivery Truck	0.0	0.3	0.0	0.0	0.0
Cable Delivery Truck	0.0	0.3	0.0	0.0	0.0
Boring Vehicle	0.0	0.3	0.0	0.0	0.0
Gas Pipeline					
Compressor	0.0	62.0	62.0	62.0	0.0
Asphalt Paver	0.0	62.0	0.0	0.0	0.0
Asphalt Compactor	0.0	22.2	0.0	0.0	0.0
Compactor	0.0	44.3	44.3	44.3	0.0
Bulldozer	0.0	49.6	24.8	0.0	0.0
Backhoe	0.0	62.0	62.0	62.0	0.0
Pipe Crane	0.0	115.2	115.2	115.2	0.0
Welding Machinge	0.0	62.0	62.0	62.0	0.0
Dump Truck	0.0	115.2	115.2	115.2	0.0
Flatbed Truck	0.0	62.0	62.0	62.0	0.0
Pickup Truck	0.0	62.0	62.0	62.0	0.0
Sitework lbs/month:	1,526.7	1,768.0	1,288.1	1,164.0	527.7
Transmission Line lbs/hr:	0.0	2.5	0.0	0.0	0.0
Gas Pipeline lbs/hr:	0.0	718.9	609.8	585.0	0.0

GWF - Quarterly Construction Equipment Emissions

Carbon Monoxide

Quarterly Emissions

	1	2	3	4	5	6
Transmission Line						
Cable Tensioner Truck	0.0	4.1	0.0	0.0	0.0	- -
Cable Drum Puller Truck	0.0	4.1	0.0	0.0	0.0	- -
Pole Delivery Truck	0.0	1.4	0.0	0.0	0.0	- -
Cable Delivery Truck	0.0	1.4	0.0	0.0	0.0	- -
Boring Vehicle	0.0	1.4	0.0	0.0	0.0	- -
Gas Pipeline						
Compressor	0.0	299.2	299.2	299.2	0.0	- -
Asphalt Paver	0.0	299.2	0.0	0.0	0.0	- -
Asphalt Compactor	0.0	133.0	0.0	0.0	0.0	- -
Compactor	0.0	265.9	265.9	265.9	0.0	- -
Bulldozer	0.0	155.1	77.6	0.0	0.0	- -
Backhoe	0.0	1,586.6	1,586.6	1,586.6	0.0	- -
Pipe Crane	0.0	797.7	797.7	797.7	0.0	- -
Welding Machinge	0.0	299.2	299.2	299.2	0.0	- -
Dump Truck	0.0	797.7	797.7	797.7	0.0	- -
Flatbed Truck	0.0	299.2	299.2	299.2	0.0	- -
Pickup Truck	0.0	299.2	299.2	299.2	0.0	- -
Sitework lbs/month:	7,987.0	9,567.7	7,205.8	6,408.0	2,799.9	0.0
Sitework Tons/Qtr:			12.4			4.6
Transmission Line lbs/month:	0.0	12.2	0.0	0.0	0.0	0.0
Transmission Line Tons/Qtr:			0.0			0.0
Gas Pipeline lbs/month:	0.0	5,231.9	4,722.2	4,644.6	0.0	0.0
Gas Pipeline Tons/Qtr:			5.0			2.3

GWF - Quarterly Construction Equipment Emissions

Reactive Organic Compounds

Quarterly Emissions

	1	2	3	4	5	6
Transmission Line						
Cable Tensioner Truck	0.0	0.9	0.0	0.0	0.0	- -
Cable Drum Puller Truck	0.0	0.9	0.0	0.0	0.0	- -
Pole Delivery Truck	0.0	0.3	0.0	0.0	0.0	- -
Cable Delivery Truck	0.0	0.3	0.0	0.0	0.0	- -
Boring Vehicle	0.0	0.3	0.0	0.0	0.0	- -
Gas Pipeline						
Compressor	0.0	66.5	66.5	66.5	0.0	- -
Asphalt Paver	0.0	66.5	0.0	0.0	0.0	- -
Asphalt Compactor	0.0	28.8	0.0	0.0	0.0	- -
Compactor	0.0	57.6	57.6	57.6	0.0	- -
Bulldozer	0.0	53.2	26.6	0.0	0.0	- -
Backhoe	0.0	79.8	79.8	79.8	0.0	- -
Pipe Crane	0.0	84.2	84.2	84.2	0.0	- -
Welding Machinge	0.0	66.5	66.5	66.5	0.0	- -
Dump Truck	0.0	84.2	84.2	84.2	0.0	- -
Flatbed Truck	0.0	66.5	66.5	66.5	0.0	- -
Pickup Truck	0.0	66.5	66.5	66.5	0.0	- -
Sitework lbs/month:	1,479.5	1,715.9	1,209.0	1,108.4	537.4	0.0
Sitework Tons/Qtr:			2.2			0.8
Transmission Line lbs/month:	0.0	2.7	0.0	0.0	0.0	0.0
Transmission Line Tons/Qtr:			0.0			0.0
Gas Pipeline lbs/month:	0.0	720.2	598.3	571.7	0.0	0.0
Gas Pipeline Tons/Qtr:			0.7			0.3

GWF - Quarterly Construction Equipment Emissions

Nitrogen Oxides

Quarterly Emissions

	1	2	3	4	5	6
Transmission Line						
Cable Tensioner Truck	0.0	10.2	0.0	0.0	0.0	- -
Cable Drum Puller Truck	0.0	10.2	0.0	0.0	0.0	- -
Pole Delivery Truck	0.0	3.4	0.0	0.0	0.0	- -
Cable Delivery Truck	0.0	3.4	0.0	0.0	0.0	- -
Boring Vehicle	0.0	3.4	0.0	0.0	0.0	- -
Gas Pipeline						
Compressor	0.0	753.4	753.4	753.4	0.0	- -
Asphalt Paver	0.0	753.4	0.0	0.0	0.0	- -
Asphalt Compactor	0.0	385.6	0.0	0.0	0.0	- -
Compactor	0.0	771.2	771.2	771.2	0.0	- -
Bulldozer	0.0	558.4	279.2	0.0	0.0	- -
Backhoe	0.0	562.9	562.9	562.9	0.0	- -
Pipe Crane	0.0	1,848.1	1,848.1	1,848.1	0.0	- -
Welding Machinge	0.0	753.4	753.4	753.4	0.0	- -
Dump Truck	0.0	1,848.1	1,848.1	1,848.1	0.0	- -
Flatbed Truck	0.0	753.4	753.4	753.4	0.0	- -
Pickup Truck	0.0	753.4	753.4	753.4	0.0	- -
Sitework lbs/month:	20,451.0	23,937.2	17,730.7	15,854.2	6,935.7	0.0
Sitework Tons/Qtr:			31.1			11.4
Transmission Line lbs/month:	0.0	30.6	0.0	0.0	0.0	0.0
Transmission Line Tons/Qtr:			0.0			0.0
Gas Pipeline lbs/month:	0.0	9,741.3	8,323.1	8,043.9	0.0	0.0
Gas Pipeline Tons/Qtr:			9.0			4.0

GWF - Quarterly Construction Equipment Emissions

Sulfur Dioxide

Quarterly Emissions

	1	2	3	4	5	6
Transmission Line						
Cable Tensioner Truck	0.0	0.9	0.0	0.0	0.0	- -
Cable Drum Puller Truck	0.0	0.9	0.0	0.0	0.0	- -
Pole Delivery Truck	0.0	0.3	0.0	0.0	0.0	- -
Cable Delivery Truck	0.0	0.3	0.0	0.0	0.0	- -
Boring Vehicle	0.0	0.3	0.0	0.0	0.0	- -
Gas Pipeline						
Compressor	0.0	63.4	63.4	63.4	0.0	- -
Asphalt Paver	0.0	63.4	0.0	0.0	0.0	- -
Asphalt Compactor	0.0	29.7	0.0	0.0	0.0	- -
Compactor	0.0	59.4	59.4	59.4	0.0	- -
Bulldozer	0.0	62.0	31.0	0.0	0.0	- -
Backhoe	0.0	39.9	39.9	39.9	0.0	- -
Pipe Crane	0.0	199.4	199.4	199.4	0.0	- -
Welding Machinge	0.0	63.4	63.4	63.4	0.0	- -
Dump Truck	0.0	199.4	199.4	199.4	0.0	- -
Flatbed Truck	0.0	63.4	63.4	63.4	0.0	- -
Pickup Truck	0.0	63.4	63.4	63.4	0.0	- -
Sitework lbs/month:	1,984.8	2,285.3	1,707.2	1,513.1	613.0	0.0
Sitework Tons/Qtr:			3.0			1.1
Transmission Line lbs/month:	0.0	2.6	0.0	0.0	0.0	0.0
Transmission Line Tons/Qtr:			0.0			0.0
Gas Pipeline lbs/month:	0.0	906.8	782.7	751.7	0.0	0.0
Gas Pipeline Tons/Qtr:			0.8			0.4

GWF - Quarterly Construction Equipment Emissions

Particulate Matter <10um

Quarterly Emissions

	1	2	3	4	5	6
Transmission Line						
Cable Tensioner Truck	0.0	0.8	0.0	0.0	0.0	- -
Cable Drum Puller Truck	0.0	0.8	0.0	0.0	0.0	- -
Pole Delivery Truck	0.0	0.3	0.0	0.0	0.0	- -
Cable Delivery Truck	0.0	0.3	0.0	0.0	0.0	- -
Boring Vehicle	0.0	0.3	0.0	0.0	0.0	- -
Gas Pipeline						
Compressor	0.0	62.0	62.0	62.0	0.0	- -
Asphalt Paver	0.0	62.0	0.0	0.0	0.0	- -
Asphalt Compactor	0.0	22.2	0.0	0.0	0.0	- -
Compactor	0.0	44.3	44.3	44.3	0.0	- -
Bulldozer	0.0	49.6	24.8	0.0	0.0	- -
Backhoe	0.0	62.0	62.0	62.0	0.0	- -
Pipe Crane	0.0	115.2	115.2	115.2	0.0	- -
Welding Machinge	0.0	62.0	62.0	62.0	0.0	- -
Dump Truck	0.0	115.2	115.2	115.2	0.0	- -
Flatbed Truck	0.0	62.0	62.0	62.0	0.0	- -
Pickup Truck	0.0	62.0	62.0	62.0	0.0	- -
Sitework lbs/month:	1,526.7	1,768.0	1,288.1	1,164.0	527.7	0.0
Sitework Tons/Qtr:			2.3			0.8
Transmission Line lbs/month:	0.0	2.5	0.0	0.0	0.0	0.0
Transmission Line Tons/Qtr:			0.0			0.0
Gas Pipeline lbs/month:	0.0	718.9	609.8	585.0	0.0	0.0
Gas Pipeline Tons/Qtr:			0.7			0.3

GWF - Annual Construction Equipment Emissions

	Maximum Annual Emissions				
Construction Equipment	**CO**	**ROC**	**NOx**	**SOx**	**PM10**
Transmission Line Tons/Qtr:	-	-	-	-	-
Gas Pipeline Tons/Qtr:	7.3	0.9	13.1	1.2	1.0
Total	24.3	3.9	55.6	5.3	4.1

GWF -Construction Equipment Emission Factors

		Emission Factor (Table A9-8-A: lb/hr)					
Construction Equipment	**Equipment Catagory**	**SCAQMD Table[1]**	**CO**	**ROC**	**NOx**	**SOx**	**PM10**
Sitework (Earthwork and Civil)							
Backhoe, 1.0 Cy	Wheeled Tractor	A9-8-A	3.580	0.180	1.270	0.090	0.140
Front End Loader, 2 Cyd	Wheeled Loader	A9-8-A	0.572	0.230	1.900	0.182	0.170
Grader, 200 Hp 14 Ft	Motor Grader	A9-8-A	0.151	0.039	0.713	0.086	0.061
Vibratory Plate (hand held)	Miscellaneous	A9-8-A	17.020	0.543	0.412	0.023	0.026
Rammer/Jumping Jack (hand held)	Miscellaneous	A9-8-A	17.020	0.543	0.412	0.023	0.026
Riding Vibratory Compactor	Miscellaneous	A9-8-A	0.675	0.150	1.700	0.143	0.140
Asphalt Paver	Miscellaneous	A9-8-A	0.675	0.150	1.700	0.143	0.140
Asphalt Cutter/Grinder	Miscellaneous	A9-8-A	0.675	0.150	1.700	0.143	0.140
Asphalt Compactor, Tandem Steel Drum Roller	Roller	A9-8-A	0.300	0.065	0.870	0.067	0.050
Erection Support Equipment							
Air Compressor, 185 CFM	Miscellaneous	A9-8-A	0.675	0.150	1.700	0.143	0.140
Air Compressor, 185 CFM	Miscellaneous	A9-8-A	0.675	0.150	1.700	0.143	0.140
Concrete Pump	Miscellaneous	A9-8-A	0.675	0.150	1.700	0.143	0.140
Scissors Lift	Miscellaneous	A9-8-A	0.675	0.150	1.700	0.143	0.140
JLG 60 Ft	Miscellaneous	A9-8-A	0.675	0.150	1.700	0.143	0.140
JLG 60 Ft	Miscellaneous	A9-8-A	0.675	0.150	1.700	0.143	0.140
JLG 60 Ft	Miscellaneous	A9-8-A	0.675	0.150	1.700	0.143	0.140
Forklift Extended Boom	Fork Lift - 175 Hp	A9-8-A	0.180	0.053	0.441	---	0.031
Crane 110 Ton	Trucks:Off-Hwy	A9-8-A	1.800	0.190	4.170	0.450	0.260
Hydraulic Truck Crane 55 Ton	Trucks:Off-Hwy	A9-8-A	1.800	0.190	4.170	0.450	0.260
Hydraulic Truck Crane 55 Ton	Trucks:Off-Hwy	A9-8-A	1.800	0.190	4.170	0.450	0.260
Hydraulic Truck Crane 35 Ton	Trucks:Off-Hwy	A9-8-A	1.800	0.190	4.170	0.450	0.260
Hydraulic Truck Crane 22 Ton	Trucks:Off-Hwy	A9-8-A	1.800	0.190	4.170	0.450	0.260
Hydraulic Truck Crane 22 Ton	Trucks:Off-Hwy	A9-8-A	1.800	0.190	4.170	0.450	0.260
7000 Watt Portable Generator	Miscellaneous	A9-8-A	17.020	0.543	0.412	0.023	0.026
Welder - Miller 400d	Miscellaneous	A9-8-A	0.675	0.150	1.700	0.143	0.140
Welder - Miller 400d	Miscellaneous	A9-8-A	0.675	0.150	1.700	0.143	0.140
Highway Tractor	Miscellaneous	A9-8-A	0.675	0.150	1.700	0.143	0.140
Flat Bed Truck w/ Rails	Miscellaneous	A9-8-A	17.020	0.543	0.412	0.023	0.026
Water Truck	Trucks:Off-Hwy	A9-8-A	1.800	0.190	4.170	0.450	0.260

[1] South Coast Air Quality Management District CEQA Air Quality Handbook, 1993.

GWF -Construction Equipment Emission Factors

		Emission Factor (Table A9-8-A: lb/hr)					
Construction Equipment	Equipment Catagory	SCAQMD Table[1]	CO	ROC	NOx	SOx	PM10

GWF - Construction Equipment Utilization

Sitework (Earthwork and Civil)	1	2	3	4	5	Work Days Per Month[1]	Hours Per Work Day	Total Equip. Actual % Use
Backhoe, 1.0 Cy	1	1	1	1	1	26.07	20	35%
Front End Loader, 2 Cyd	1	1	1	1	1	26.07	20	35%
Grader, 200 Hp 14 Ft	1	1	1	1	1	26.07	20	25%
Vibratory Plate (hand held)	1	1	1	1	1	26.07	20	30%
Rammer/Jumping Jack (hand held)	1	1	1	1	1	26.07	20	30%
Riding Vibratory Compactor		1	1			26.07	20	20%
Asphalt Paver						26.07	20	60%
Asphalt Cutter/Grinder						26.07	20	60%
Asphalt Compactor, Tandem Steel Drum Roller						26.07	20	60%
Erection Support Equipment								
Air Compressor, 185 CFM	1	1	1	1	1	26.07	20	75%
Air Compressor, 185 CFM			1	1	1	26.07	20	75%
Concrete Pump	1	1	1	1		26.07	20	90%
Scissors Lift		1	1	1		26.07	20	40%
JLG 60 Ft		1	1	1	1	26.07	20	50%
JLG 60 Ft			1	1	1	26.07	20	50%
JLG 60 Ft				1	1	26.07	20	50%
Forklift Extended Boom	1	1	1	1	1	26.07	20	25%
Crane 110 Ton			1	1	1	26.07	20	40%
Hydraulic Truck Crane 55 Ton	1	1	1	1	1	26.07	20	60%
Hydraulic Truck Crane 55 Ton		1	1	1	1	26.07	20	60%
Hydraulic Truck Crane 35 Ton		1	1	1	1	26.07	20	60%
Hydraulic Truck Crane 22 Ton	1	1	1	1	1	26.07	20	60%
Hydraulic Truck Crane 22 Ton					1	26.07	20	70%
7000 Watt Portable Generator	1	1	1	1	1	26.07	20	40%
Welder - Miller 400d		1	1	1	1	26.07	20	70%
Welder - Miller 400d			1	1	1	26.07	20	70%
Highway Tractor		1	1	1	1	26.07	20	30%
Flat Bed Truck w/ Rails		1	1	1	1	26.07	20	40%
Water Truck	1	1	1	1	1	26.07	20	50%

GWF - Hourly Construction Equipment Emissions

Carbon Monoxide

Pounds Per Hour

	1	2	3	4	5
Sitework (Earthwork and Civil)					
Backhoe, 1.0 Cy	1.3	1.3	1.3	1.3	1.3
Front End Loader, 2 Cyd	0.2	0.2	0.2	0.2	0.2
Grader, 200 Hp 14 Ft	0.0	0.0	0.0	0.0	0.0
Vibratory Plate (hand held)	5.1	5.1	5.1	5.1	5.1
Rammer/Jumping Jack (hand held)	5.1	5.1	5.1	5.1	5.1
Riding Vibratory Compactor	0.0	0.1	0.1	0.0	0.0
Asphalt Paver	0.0	0.0	0.0	0.0	0.0
Asphalt Cutter/Grinder	0.0	0.0	0.0	0.0	0.0
Asphalt Compactor, Tandem Steel Drum Roller	0.0	0.0	0.0	0.0	0.0
Erection Support Equipment					
Air Compressor, 185 CFM	0.5	0.5	0.5	0.5	0.5
Air Compressor, 185 CFM	0.0	0.0	0.5	0.5	0.5
Concrete Pump	0.6	0.6	0.6	0.6	0.0
Scissors Lift	0.0	0.3	0.3	0.3	0.0
JLG 60 Ft	0.0	0.3	0.3	0.3	0.3
JLG 60 Ft	0.0	0.0	0.3	0.3	0.3
JLG 60 Ft	0.0	0.0	0.0	0.3	0.3
Forklift Extended Boom	0.0	0.0	0.0	0.0	0.0
Crane 110 Ton	0.0	0.0	0.7	0.7	0.7
Hydraulic Truck Crane 55 Ton	1.1	1.1	1.1	1.1	1.1
Hydraulic Truck Crane 55 Ton	0.0	1.1	1.1	1.1	1.1
Hydraulic Truck Crane 35 Ton	0.0	1.1	1.1	1.1	1.1
Hydraulic Truck Crane 22 Ton	1.1	1.1	1.1	1.1	1.1
Hydraulic Truck Crane 22 Ton	0.0	0.0	0.0	0.0	1.3
7000 Watt Portable Generator	6.8	6.8	6.8	6.8	6.8
Welder - Miller 400d	0.0	0.5	0.5	0.5	0.5
Welder - Miller 400d	0.0	0.0	0.5	0.5	0.5
Highway Tractor	0.0	0.2	0.2	0.2	0.2
Flat Bed Truck w/ Rails	0.0	6.8	6.8	6.8	6.8
Water Truck	0.9	0.9	0.9	0.9	0.9
Sitework (Earthwork and Civil) lbs/hr:	11.7	11.8	11.8	11.7	11.7
Erection Support Equipment lbs/hr:	11.0	21.3	23.3	23.7	24.0

GWF - Hourly Construction Equipment Emissions

Reactive Organic Compounds

Pounds Per Hour

	1	2	3	4	5
Sitework (Earthwork and Civil)					
Backhoe, 1.0 Cy	0.1	0.1	0.1	0.1	0.1
Front End Loader, 2 Cyd	0.1	0.1	0.1	0.1	0.1
Grader, 200 Hp 14 Ft	0.0	0.0	0.0	0.0	0.0
Vibratory Plate (hand held)	0.2	0.2	0.2	0.2	0.2
Rammer/Jumping Jack (hand held)	0.2	0.2	0.2	0.2	0.2
Riding Vibratory Compactor	0.0	0.0	0.0	0.0	0.0
Asphalt Paver	0.0	0.0	0.0	0.0	0.0
Asphalt Cutter/Grinder	0.0	0.0	0.0	0.0	0.0
Asphalt Compactor, Tandem Steel Drum Roller	0.0	0.0	0.0	0.0	0.0
Erection Support Equipment					
Air Compressor, 185 CFM	0.1	0.1	0.1	0.1	0.1
Air Compressor, 185 CFM	0.0	0.0	0.1	0.1	0.1
Concrete Pump	0.1	0.1	0.1	0.1	0.0
Scissors Lift	0.0	0.1	0.1	0.1	0.0
JLG 60 Ft	0.0	0.1	0.1	0.1	0.1
JLG 60 Ft	0.0	0.0	0.1	0.1	0.1
JLG 60 Ft	0.0	0.0	0.0	0.1	0.1
Forklift Extended Boom	0.0	0.0	0.0	0.0	0.0
Crane 110 Ton	0.0	0.0	0.1	0.1	0.1
Hydraulic Truck Crane 55 Ton	0.1	0.1	0.1	0.1	0.1
Hydraulic Truck Crane 55 Ton	0.0	0.1	0.1	0.1	0.1
Hydraulic Truck Crane 35 Ton	0.0	0.1	0.1	0.1	0.1
Hydraulic Truck Crane 22 Ton	0.1	0.1	0.1	0.1	0.1
Hydraulic Truck Crane 22 Ton	0.0	0.0	0.0	0.0	0.1
7000 Watt Portable Generator	0.2	0.2	0.2	0.2	0.2
Welder - Miller 400d	0.0	0.1	0.1	0.1	0.1
Welder - Miller 400d	0.0	0.0	0.1	0.1	0.1
Highway Tractor	0.0	0.0	0.0	0.0	0.0
Flat Bed Truck w/ Rails	0.0	0.2	0.2	0.2	0.2
Water Truck	0.1	0.1	0.1	0.1	0.1
Sitework (Earthwork and Civil) lbs/hr:	0.5	0.5	0.5	0.5	0.5
Erection Support Equipment lbs/hr:	0.8	1.5	1.9	2.0	1.9

GWF - Hourly Construction Equipment Emissions

Nitrogen Oxides

Pounds Per Hour

	1	2	3	4	5
Sitework (Earthwork and Civil)					
Backhoe, 1.0 Cy	0.4	0.4	0.4	0.4	0.4
Front End Loader, 2 Cyd	0.7	0.7	0.7	0.7	0.7
Grader, 200 Hp 14 Ft	0.2	0.2	0.2	0.2	0.2
Vibratory Plate (hand held)	0.1	0.1	0.1	0.1	0.1
Rammer/Jumping Jack (hand held)	0.1	0.1	0.1	0.1	0.1
Riding Vibratory Compactor	0.0	0.3	0.3	0.0	0.0
Asphalt Paver	0.0	0.0	0.0	0.0	0.0
Asphalt Cutter/Grinder	0.0	0.0	0.0	0.0	0.0
Asphalt Compactor, Tandem Steel Drum Roller	0.0	0.0	0.0	0.0	0.0
Erection Support Equipment					
Air Compressor, 185 CFM	1.3	1.3	1.3	1.3	1.3
Air Compressor, 185 CFM	0.0	0.0	1.3	1.3	1.3
Concrete Pump	1.5	1.5	1.5	1.5	0.0
Scissors Lift	0.0	0.7	0.7	0.7	0.0
JLG 60 Ft	0.0	0.9	0.9	0.9	0.9
JLG 60 Ft	0.0	0.0	0.9	0.9	0.9
JLG 60 Ft	0.0	0.0	0.0	0.9	0.9
Forklift Extended Boom	0.1	0.1	0.1	0.1	0.1
Crane 110 Ton	0.0	0.0	1.7	1.7	1.7
Hydraulic Truck Crane 55 Ton	2.5	2.5	2.5	2.5	2.5
Hydraulic Truck Crane 55 Ton	0.0	2.5	2.5	2.5	2.5
Hydraulic Truck Crane 35 Ton	0.0	2.5	2.5	2.5	2.5
Hydraulic Truck Crane 22 Ton	2.5	2.5	2.5	2.5	2.5
Hydraulic Truck Crane 22 Ton	0.0	0.0	0.0	0.0	2.9
7000 Watt Portable Generator	0.2	0.2	0.2	0.2	0.2
Welder - Miller 400d	0.0	1.2	1.2	1.2	1.2
Welder - Miller 400d	0.0	0.0	1.2	1.2	1.2
Highway Tractor	0.0	0.5	0.5	0.5	0.5
Flat Bed Truck w/ Rails	0.0	0.2	0.2	0.2	0.2
Water Truck	2.1	2.1	2.1	2.1	2.1
Sitework (Earthwork and Civil) lbs/hr:	1.5	1.9	1.9	1.5	1.5
Erection Support Equipment lbs/hr:	10.2	18.6	23.6	24.4	25.1

GWF - Hourly Construction Equipment Emissions

Sulfur Dioxide

Pounds Per Hour

	1	2	3	4	5
Sitework (Earthwork and Civil)					
Backhoe, 1.0 Cy	0.0	0.0	0.0	0.0	0.0
Front End Loader, 2 Cyd	0.1	0.1	0.1	0.1	0.1
Grader, 200 Hp 14 Ft	0.0	0.0	0.0	0.0	0.0
Vibratory Plate (hand held)	0.0	0.0	0.0	0.0	0.0
Rammer/Jumping Jack (hand held)	0.0	0.0	0.0	0.0	0.0
Riding Vibratory Compactor	0.0	0.0	0.0	0.0	0.0
Asphalt Paver	0.0	0.0	0.0	0.0	0.0
Asphalt Cutter/Grinder	0.0	0.0	0.0	0.0	0.0
Asphalt Compactor, Tandem Steel Drum Roller	0.0	0.0	0.0	0.0	0.0
Erection Support Equipment					
Air Compressor, 185 CFM	0.1	0.1	0.1	0.1	0.1
Air Compressor, 185 CFM	0.0	0.0	0.1	0.1	0.1
Concrete Pump	0.1	0.1	0.1	0.1	0.0
Scissors Lift	0.0	0.1	0.1	0.1	0.0
JLG 60 Ft	0.0	0.1	0.1	0.1	0.1
JLG 60 Ft	0.0	0.0	0.1	0.1	0.1
JLG 60 Ft	0.0	0.0	0.0	0.1	0.1
Forklift Extended Boom	---	---	---	---	---
Crane 110 Ton	0.0	0.0	0.2	0.2	0.2
Hydraulic Truck Crane 55 Ton	0.3	0.3	0.3	0.3	0.3
Hydraulic Truck Crane 55 Ton	0.0	0.3	0.3	0.3	0.3
Hydraulic Truck Crane 35 Ton	0.0	0.3	0.3	0.3	0.3
Hydraulic Truck Crane 22 Ton	0.3	0.3	0.3	0.3	0.3
Hydraulic Truck Crane 22 Ton	0.0	0.0	0.0	0.0	0.3
7000 Watt Portable Generator	0.0	0.0	0.0	0.0	0.0
Welder - Miller 400d	0.0	0.1	0.1	0.1	0.1
Welder - Miller 400d	0.0	0.0	0.1	0.1	0.1
Highway Tractor	0.0	0.0	0.0	0.0	0.0
Flat Bed Truck w/ Rails	0.0	0.0	0.0	0.0	0.0
Water Truck	0.2	0.2	0.2	0.2	0.2
Sitework (Earthwork and Civil) lbs/hr:	0.1	0.2	0.2	0.1	0.1
Erection Support Equipment lbs/hr:	1.0	1.8	2.3	2.4	2.5

GWF - Hourly Construction Equipment Emissions

Particulate Matter <10um

Pounds Per Hour

	1	2	3	4	5
Sitework (Earthwork and Civil)					
Backhoe, 1.0 Cy	0.0	0.0	0.0	0.0	0.0
Front End Loader, 2 Cyd	0.1	0.1	0.1	0.1	0.1
Grader, 200 Hp 14 Ft	0.0	0.0	0.0	0.0	0.0
Vibratory Plate (hand held)	0.0	0.0	0.0	0.0	0.0
Rammer/Jumping Jack (hand held)	0.0	0.0	0.0	0.0	0.0
Riding Vibratory Compactor	0.0	0.0	0.0	0.0	0.0
Asphalt Paver	0.0	0.0	0.0	0.0	0.0
Asphalt Cutter/Grinder	0.0	0.0	0.0	0.0	0.0
Asphalt Compactor, Tandem Steel Drum Roller	0.0	0.0	0.0	0.0	0.0
Erection Support Equipment					
Air Compressor, 185 CFM	0.1	0.1	0.1	0.1	0.1
Air Compressor, 185 CFM	0.0	0.0	0.1	0.1	0.1
Concrete Pump	0.1	0.1	0.1	0.1	0.0
Scissors Lift	0.0	0.1	0.1	0.1	0.0
JLG 60 Ft	0.0	0.1	0.1	0.1	0.1
JLG 60 Ft	0.0	0.0	0.1	0.1	0.1
JLG 60 Ft	0.0	0.0	0.0	0.1	0.1
Forklift Extended Boom	0.0	0.0	0.0	0.0	0.0
Crane 110 Ton	0.0	0.0	0.1	0.1	0.1
Hydraulic Truck Crane 55 Ton	0.2	0.2	0.2	0.2	0.2
Hydraulic Truck Crane 55 Ton	0.0	0.2	0.2	0.2	0.2
Hydraulic Truck Crane 35 Ton	0.0	0.2	0.2	0.2	0.2
Hydraulic Truck Crane 22 Ton	0.2	0.2	0.2	0.2	0.2
Hydraulic Truck Crane 22 Ton	0.0	0.0	0.0	0.0	0.2
7000 Watt Portable Generator	0.0	0.0	0.0	0.0	0.0
Welder - Miller 400d	0.0	0.1	0.1	0.1	0.1
Welder - Miller 400d	0.0	0.0	0.1	0.1	0.1
Highway Tractor	0.0	0.0	0.0	0.0	0.0
Flat Bed Truck w/ Rails	0.0	0.0	0.0	0.0	0.0
Water Truck	0.1	0.1	0.1	0.1	0.1
Sitework (Earthwork and Civil) lbs/hr:	0.1	0.2	0.2	0.1	0.1
Erection Support Equipment lbs/hr:	0.7	1.3	1.7	1.7	1.7

GWF - Daily Construction Equipment Emissions

Carbon Monoxide

Pounds Per Day

	1	2	3	4	5
Sitework (Earthwork and Civil)					
Backhoe, 1.0 Cy	25.1	25.1	25.1	25.1	25.1
Front End Loader, 2 Cyd	4.0	4.0	4.0	4.0	4.0
Grader, 200 Hp 14 Ft	0.8	0.8	0.8	0.8	0.8
Vibratory Plate (hand held)	102.1	102.1	102.1	102.1	102.1
Rammer/Jumping Jack (hand held)	102.1	102.1	102.1	102.1	102.1
Riding Vibratory Compactor	0.0	2.7	2.7	0.0	0.0
Asphalt Paver	0.0	0.0	0.0	0.0	0.0
Asphalt Cutter/Grinder	0.0	0.0	0.0	0.0	0.0
Asphalt Compactor, Tandem Steel Drum Roller	0.0	0.0	0.0	0.0	0.0
Erection Support Equipment					
Air Compressor, 185 CFM	10.1	10.1	10.1	10.1	10.1
Air Compressor, 185 CFM	0.0	0.0	10.1	10.1	10.1
Concrete Pump	12.2	12.2	12.2	12.2	0.0
Scissors Lift	0.0	5.4	5.4	5.4	0.0
JLG 60 Ft	0.0	6.8	6.8	6.8	6.8
JLG 60 Ft	0.0	0.0	6.8	6.8	6.8
JLG 60 Ft	0.0	0.0	0.0	6.8	6.8
Forklift Extended Boom	0.9	0.9	0.9	0.9	0.9
Crane 110 Ton	0.0	0.0	14.4	14.4	14.4
Hydraulic Truck Crane 55 Ton	21.6	21.6	21.6	21.6	21.6
Hydraulic Truck Crane 55 Ton	0.0	21.6	21.6	21.6	21.6
Hydraulic Truck Crane 35 Ton	0.0	21.6	21.6	21.6	21.6
Hydraulic Truck Crane 22 Ton	21.6	21.6	21.6	21.6	21.6
Hydraulic Truck Crane 22 Ton	0.0	0.0	0.0	0.0	25.2
7000 Watt Portable Generator	136.2	136.2	136.2	136.2	136.2
Welder - Miller 400d	0.0	9.5	9.5	9.5	9.5
Welder - Miller 400d	0.0	0.0	9.5	9.5	9.5
Highway Tractor	0.0	4.1	4.1	4.1	4.1
Flat Bed Truck w/ Rails	0.0	136.2	136.2	136.2	136.2
Water Truck	18.0	18.0	18.0	18.0	18.0
Sitework (Earthwork and Civil) lbs/day:	234.1	236.8	236.8	234.1	234.1
Erection Support Equipment lbs/day:	220.5	425.6	466.3	473.0	480.7

GWF - Daily Construction Equipment Emissions

Reactive Organic Compounds

Pounds Per Day

	1	2	3	4	5
Sitework (Earthwork and Civil)					
Backhoe, 1.0 Cy	1.3	1.3	1.3	1.3	1.3
Front End Loader, 2 Cyd	1.6	1.6	1.6	1.6	1.6
Grader, 200 Hp 14 Ft	0.2	0.2	0.2	0.2	0.2
Vibratory Plate (hand held)	3.3	3.3	3.3	3.3	3.3
Rammer/Jumping Jack (hand held)	3.3	3.3	3.3	3.3	3.3
Riding Vibratory Compactor	0.0	0.6	0.6	0.0	0.0
Asphalt Paver	0.0	0.0	0.0	0.0	0.0
Asphalt Cutter/Grinder	0.0	0.0	0.0	0.0	0.0
Asphalt Compactor, Tandem Steel Drum Roller	0.0	0.0	0.0	0.0	0.0
Erection Support Equipment					
Air Compressor, 185 CFM	2.3	2.3	2.3	2.3	2.3
Air Compressor, 185 CFM	0.0	0.0	2.3	2.3	2.3
Concrete Pump	2.7	2.7	2.7	2.7	0.0
Scissors Lift	0.0	1.2	1.2	1.2	0.0
JLG 60 Ft	0.0	1.5	1.5	1.5	1.5
JLG 60 Ft	0.0	0.0	1.5	1.5	1.5
JLG 60 Ft	0.0	0.0	0.0	1.5	1.5
Forklift Extended Boom	0.3	0.3	0.3	0.3	0.3
Crane 110 Ton	0.0	0.0	1.5	1.5	1.5
Hydraulic Truck Crane 55 Ton	2.3	2.3	2.3	2.3	2.3
Hydraulic Truck Crane 55 Ton	0.0	2.3	2.3	2.3	2.3
Hydraulic Truck Crane 35 Ton	0.0	2.3	2.3	2.3	2.3
Hydraulic Truck Crane 22 Ton	2.3	2.3	2.3	2.3	2.3
Hydraulic Truck Crane 22 Ton	0.0	0.0	0.0	0.0	2.7
7000 Watt Portable Generator	4.3	4.3	4.3	4.3	4.3
Welder - Miller 400d	0.0	2.1	2.1	2.1	2.1
Welder - Miller 400d	0.0	0.0	2.1	2.1	2.1
Highway Tractor	0.0	0.9	0.9	0.9	0.9
Flat Bed Truck w/ Rails	0.0	4.3	4.3	4.3	4.3
Water Truck	1.9	1.9	1.9	1.9	1.9
Sitework (Earthwork and Civil) lbs/day:	9.6	10.2	10.2	9.6	9.6
Erection Support Equipment lbs/day:	16.0	30.6	38.0	39.5	38.3

GWF - Daily Construction Equipment Emissions

Nitrogen Oxides

Pounds Per Day

	1	2	3	4	5
Sitework (Earthwork and Civil)					
Backhoe, 1.0 Cy	8.9	8.9	8.9	8.9	8.9
Front End Loader, 2 Cyd	13.3	13.3	13.3	13.3	13.3
Grader, 200 Hp 14 Ft	3.6	3.6	3.6	3.6	3.6
Vibratory Plate (hand held)	2.5	2.5	2.5	2.5	2.5
Rammer/Jumping Jack (hand held)	2.5	2.5	2.5	2.5	2.5
Riding Vibratory Compactor	0.0	6.8	6.8	0.0	0.0
Asphalt Paver	0.0	0.0	0.0	0.0	0.0
Asphalt Cutter/Grinder	0.0	0.0	0.0	0.0	0.0
Asphalt Compactor, Tandem Steel Drum Roller	0.0	0.0	0.0	0.0	0.0
Erection Support Equipment					
Air Compressor, 185 CFM	25.5	25.5	25.5	25.5	25.5
Air Compressor, 185 CFM	0.0	0.0	25.5	25.5	25.5
Concrete Pump	30.6	30.6	30.6	30.6	0.0
Scissors Lift	0.0	13.6	13.6	13.6	0.0
JLG 60 Ft	0.0	17.0	17.0	17.0	17.0
JLG 60 Ft	0.0	0.0	17.0	17.0	17.0
JLG 60 Ft	0.0	0.0	0.0	17.0	17.0
Forklift Extended Boom	2.2	2.2	2.2	2.2	2.2
Crane 110 Ton	0.0	0.0	33.4	33.4	33.4
Hydraulic Truck Crane 55 Ton	50.0	50.0	50.0	50.0	50.0
Hydraulic Truck Crane 55 Ton	0.0	50.0	50.0	50.0	50.0
Hydraulic Truck Crane 35 Ton	0.0	50.0	50.0	50.0	50.0
Hydraulic Truck Crane 22 Ton	50.0	50.0	50.0	50.0	50.0
Hydraulic Truck Crane 22 Ton	0.0	0.0	0.0	0.0	58.4
7000 Watt Portable Generator	3.3	3.3	3.3	3.3	3.3
Welder - Miller 400d	0.0	23.8	23.8	23.8	23.8
Welder - Miller 400d	0.0	0.0	23.8	23.8	23.8
Highway Tractor	0.0	10.2	10.2	10.2	10.2
Flat Bed Truck w/ Rails	0.0	3.3	3.3	3.3	3.3
Water Truck	41.7	41.7	41.7	41.7	41.7
Sitework (Earthwork and Civil) lbs/day:	30.7	37.5	37.5	30.7	30.7
Erection Support Equipment lbs/day:	203.4	371.4	471.0	488.0	502.2

GWF - Daily Construction Equipment Emissions

Sulfur Dioxide

Pounds Per Day

	1	2	3	4	5
Sitework (Earthwork and Civil)					
Backhoe, 1.0 Cy	0.6	0.6	0.6	0.6	0.6
Front End Loader, 2 Cyd	1.3	1.3	1.3	1.3	1.3
Grader, 200 Hp 14 Ft	0.4	0.4	0.4	0.4	0.4
Vibratory Plate (hand held)	0.1	0.1	0.1	0.1	0.1
Rammer/Jumping Jack (hand held)	0.1	0.1	0.1	0.1	0.1
Riding Vibratory Compactor	0.0	0.6	0.6	0.0	0.0
Asphalt Paver	0.0	0.0	0.0	0.0	0.0
Asphalt Cutter/Grinder	0.0	0.0	0.0	0.0	0.0
Asphalt Compactor, Tandem Steel Drum Roller	0.0	0.0	0.0	0.0	0.0
Erection Support Equipment					
Air Compressor, 185 CFM	2.1	2.1	2.1	2.1	2.1
Air Compressor, 185 CFM	0.0	0.0	2.1	2.1	2.1
Concrete Pump	2.6	2.6	2.6	2.6	0.0
Scissors Lift	0.0	1.1	1.1	1.1	0.0
JLG 60 Ft	0.0	1.4	1.4	1.4	1.4
JLG 60 Ft	0.0	0.0	1.4	1.4	1.4
JLG 60 Ft	0.0	0.0	0.0	1.4	1.4
Forklift Extended Boom	---	---	---	---	---
Crane 110 Ton	0.0	0.0	3.6	3.6	3.6
Hydraulic Truck Crane 55 Ton	5.4	5.4	5.4	5.4	5.4
Hydraulic Truck Crane 55 Ton	0.0	5.4	5.4	5.4	5.4
Hydraulic Truck Crane 35 Ton	0.0	5.4	5.4	5.4	5.4
Hydraulic Truck Crane 22 Ton	5.4	5.4	5.4	5.4	5.4
Hydraulic Truck Crane 22 Ton	0.0	0.0	0.0	0.0	6.3
7000 Watt Portable Generator	0.2	0.2	0.2	0.2	0.2
Welder - Miller 400d	0.0	2.0	2.0	2.0	2.0
Welder - Miller 400d	0.0	0.0	2.0	2.0	2.0
Highway Tractor	0.0	0.9	0.9	0.9	0.9
Flat Bed Truck w/ Rails	0.0	0.2	0.2	0.2	0.2
Water Truck	4.5	4.5	4.5	4.5	4.5
Sitework (Earthwork and Civil) lbs/day:	2.6	3.2	3.2	2.6	2.6
Erection Support Equipment lbs/day:	20.2	36.6	45.8	47.2	49.8

GWF - Daily Construction Equipment Emissions

Particulate Matter <10um

Pounds Per Day

	1	2	3	4	5
Sitework (Earthwork and Civil)					
Backhoe, 1.0 Cy	1.0	1.0	1.0	1.0	1.0
Front End Loader, 2 Cyd	1.2	1.2	1.2	1.2	1.2
Grader, 200 Hp 14 Ft	0.3	0.3	0.3	0.3	0.3
Vibratory Plate (hand held)	0.2	0.2	0.2	0.2	0.2
Rammer/Jumping Jack (hand held)	0.2	0.2	0.2	0.2	0.2
Riding Vibratory Compactor	0.0	0.6	0.6	0.0	0.0
Asphalt Paver	0.0	0.0	0.0	0.0	0.0
Asphalt Cutter/Grinder	0.0	0.0	0.0	0.0	0.0
Asphalt Compactor, Tandem Steel Drum Roller	0.0	0.0	0.0	0.0	0.0
Erection Support Equipment					
Air Compressor, 185 CFM	2.1	2.1	2.1	2.1	2.1
Air Compressor, 185 CFM	0.0	0.0	2.1	2.1	2.1
Concrete Pump	2.5	2.5	2.5	2.5	0.0
Scissors Lift	0.0	1.1	1.1	1.1	0.0
JLG 60 Ft	0.0	1.4	1.4	1.4	1.4
JLG 60 Ft	0.0	0.0	1.4	1.4	1.4
JLG 60 Ft	0.0	0.0	0.0	1.4	1.4
Forklift Extended Boom	0.2	0.2	0.2	0.2	0.2
Crane 110 Ton	0.0	0.0	2.1	2.1	2.1
Hydraulic Truck Crane 55 Ton	3.1	3.1	3.1	3.1	3.1
Hydraulic Truck Crane 55 Ton	0.0	3.1	3.1	3.1	3.1
Hydraulic Truck Crane 35 Ton	0.0	3.1	3.1	3.1	3.1
Hydraulic Truck Crane 22 Ton	3.1	3.1	3.1	3.1	3.1
Hydraulic Truck Crane 22 Ton	0.0	0.0	0.0	0.0	3.6
7000 Watt Portable Generator	0.2	0.2	0.2	0.2	0.2
Welder - Miller 400d	0.0	2.0	2.0	2.0	2.0
Welder - Miller 400d	0.0	0.0	2.0	2.0	2.0
Highway Tractor	0.0	0.8	0.8	0.8	0.8
Flat Bed Truck w/ Rails	0.0	0.2	0.2	0.2	0.2
Water Truck	2.6	2.6	2.6	2.6	2.6
Sitework (Earthwork and Civil) lbs/day:	2.8	3.4	3.4	2.8	2.8
Erection Support Equipment lbs/day:	13.8	25.6	33.1	34.5	34.5

GWF - Monthly Construction Equipment Emissions

Carbon Monoxide

Pounds Per Month

	1	2	3	4	5
Sitework (Earthwork and Civil)					
Backhoe, 1.0 Cy	653.4	653.4	653.4	653.4	653.4
Front End Loader, 2 Cyd	104.4	104.4	104.4	104.4	104.4
Grader, 200 Hp 14 Ft	19.7	19.7	19.7	19.7	19.7
Vibratory Plate (hand held)	2,662.4	2,662.4	2,662.4	2,662.4	2,662.4
Rammer/Jumping Jack (hand held)	2,662.4	2,662.4	2,662.4	2,662.4	2,662.4
Riding Vibratory Compactor	0.0	70.4	70.4	0.0	0.0
Asphalt Paver	0.0	0.0	0.0	0.0	0.0
Asphalt Cutter/Grinder	0.0	0.0	0.0	0.0	0.0
Asphalt Compactor, Tandem Steel Drum Roller	0.0	0.0	0.0	0.0	0.0
Erection Support Equipment					
Air Compressor, 185 CFM	264.0	264.0	264.0	264.0	264.0
Air Compressor, 185 CFM	0.0	0.0	264.0	264.0	264.0
Concrete Pump	316.8	316.8	316.8	316.8	0.0
Scissors Lift	0.0	140.8	140.8	140.8	0.0
JLG 60 Ft	0.0	176.0	176.0	176.0	176.0
JLG 60 Ft	0.0	0.0	176.0	176.0	176.0
JLG 60 Ft	0.0	0.0	0.0	176.0	176.0
Forklift Extended Boom	23.5	23.5	23.5	23.5	23.5
Crane 110 Ton	0.0	0.0	375.4	375.4	375.4
Hydraulic Truck Crane 55 Ton	563.1	563.1	563.1	563.1	563.1
Hydraulic Truck Crane 55 Ton	0.0	563.1	563.1	563.1	563.1
Hydraulic Truck Crane 35 Ton	0.0	563.1	563.1	563.1	563.1
Hydraulic Truck Crane 22 Ton	563.1	563.1	563.1	563.1	563.1
Hydraulic Truck Crane 22 Ton	0.0	0.0	0.0	0.0	657.0
7000 Watt Portable Generator	3,549.9	3,549.9	3,549.9	3,549.9	3,549.9
Welder - Miller 400d	0.0	246.4	246.4	246.4	246.4
Welder - Miller 400d	0.0	0.0	246.4	246.4	246.4
Highway Tractor	0.0	105.6	105.6	105.6	105.6
Flat Bed Truck w/ Rails	0.0	3,549.9	3,549.9	3,549.9	3,549.9
Water Truck	469.3	469.3	469.3	469.3	469.3
Sitework (Earthwork and Civil) lbs/month:	6,102.3	6,172.7	6,172.7	6,102.3	6,102.3
Erection Support Equipment lbs/month:	5,749.7	11,094.6	12,156.3	12,332.3	12,531.8

GWF - Monthly Construction Equipment Emissions

Reactive Organic Compounds

Pounds Per Month

	1	2	3	4	5
Sitework (Earthwork and Civil)					
Backhoe, 1.0 Cy	32.9	32.9	32.9	32.9	32.9
Front End Loader, 2 Cyd	42.0	42.0	42.0	42.0	42.0
Grader, 200 Hp 14 Ft	5.1	5.1	5.1	5.1	5.1
Vibratory Plate (hand held)	84.9	84.9	84.9	84.9	84.9
Rammer/Jumping Jack (hand held)	84.9	84.9	84.9	84.9	84.9
Riding Vibratory Compactor	0.0	15.6	15.6	0.0	0.0
Asphalt Paver	0.0	0.0	0.0	0.0	0.0
Asphalt Cutter/Grinder	0.0	0.0	0.0	0.0	0.0
Asphalt Compactor, Tandem Steel Drum Roller	0.0	0.0	0.0	0.0	0.0
Erection Support Equipment					
Air Compressor, 185 CFM	58.7	58.7	58.7	58.7	58.7
Air Compressor, 185 CFM	0.0	0.0	58.7	58.7	58.7
Concrete Pump	70.4	70.4	70.4	70.4	0.0
Scissors Lift	0.0	31.3	31.3	31.3	0.0
JLG 60 Ft	0.0	39.1	39.1	39.1	39.1
JLG 60 Ft	0.0	0.0	39.1	39.1	39.1
JLG 60 Ft	0.0	0.0	0.0	39.1	39.1
Forklift Extended Boom	6.9	6.9	6.9	6.9	6.9
Crane 110 Ton	0.0	0.0	39.6	39.6	39.6
Hydraulic Truck Crane 55 Ton	59.4	59.4	59.4	59.4	59.4
Hydraulic Truck Crane 55 Ton	0.0	59.4	59.4	59.4	59.4
Hydraulic Truck Crane 35 Ton	0.0	59.4	59.4	59.4	59.4
Hydraulic Truck Crane 22 Ton	59.4	59.4	59.4	59.4	59.4
Hydraulic Truck Crane 22 Ton	0.0	0.0	0.0	0.0	69.4
7000 Watt Portable Generator	113.3	113.3	113.3	113.3	113.3
Welder - Miller 400d	0.0	54.8	54.8	54.8	54.8
Welder - Miller 400d	0.0	0.0	54.8	54.8	54.8
Highway Tractor	0.0	23.5	23.5	23.5	23.5
Flat Bed Truck w/ Rails	0.0	113.3	113.3	113.3	113.3
Water Truck	49.5	49.5	49.5	49.5	49.5
Sitework (Earthwork and Civil) lbs/month:	249.8	265.4	265.4	249.8	249.8
Erection Support Equipment lbs/month:	417.6	798.4	990.5	1,029.6	997.3

GWF - Monthly Construction Equipment Emissions

Nitrogen Oxides

Pounds Per Month

	1	2	3	4	5
Sitework (Earthwork and Civil)					
Backhoe, 1.0 Cy	231.8	231.8	231.8	231.8	231.8
Front End Loader, 2 Cyd	346.8	346.8	346.8	346.8	346.8
Grader, 200 Hp 14 Ft	92.9	92.9	92.9	92.9	92.9
Vibratory Plate (hand held)	64.4	64.4	64.4	64.4	64.4
Rammer/Jumping Jack (hand held)	64.4	64.4	64.4	64.4	64.4
Riding Vibratory Compactor	0.0	177.3	177.3	0.0	0.0
Asphalt Paver	0.0	0.0	0.0	0.0	0.0
Asphalt Cutter/Grinder	0.0	0.0	0.0	0.0	0.0
Asphalt Compactor, Tandem Steel Drum Roller	0.0	0.0	0.0	0.0	0.0
Erection Support Equipment					
Air Compressor, 185 CFM	664.8	664.8	664.8	664.8	664.8
Air Compressor, 185 CFM	0.0	0.0	664.8	664.8	664.8
Concrete Pump	797.8	797.8	797.8	797.8	0.0
Scissors Lift	0.0	354.6	354.6	354.6	0.0
JLG 60 Ft	0.0	443.2	443.2	443.2	443.2
JLG 60 Ft	0.0	0.0	443.2	443.2	443.2
JLG 60 Ft	0.0	0.0	0.0	443.2	443.2
Forklift Extended Boom	57.5	57.5	57.5	57.5	57.5
Crane 110 Ton	0.0	0.0	869.7	869.7	869.7
Hydraulic Truck Crane 55 Ton	1,304.6	1,304.6	1,304.6	1,304.6	1,304.6
Hydraulic Truck Crane 55 Ton	0.0	1,304.6	1,304.6	1,304.6	1,304.6
Hydraulic Truck Crane 35 Ton	0.0	1,304.6	1,304.6	1,304.6	1,304.6
Hydraulic Truck Crane 22 Ton	1,304.6	1,304.6	1,304.6	1,304.6	1,304.6
Hydraulic Truck Crane 22 Ton	0.0	0.0	0.0	0.0	1,522.1
7000 Watt Portable Generator	85.9	85.9	85.9	85.9	85.9
Welder - Miller 400d	0.0	620.5	620.5	620.5	620.5
Welder - Miller 400d	0.0	0.0	620.5	620.5	620.5
Highway Tractor	0.0	265.9	265.9	265.9	265.9
Flat Bed Truck w/ Rails	0.0	85.9	85.9	85.9	85.9
Water Truck	1,087.2	1,087.2	1,087.2	1,087.2	1,087.2
Sitework (Earthwork and Civil) lbs/month:	800.4	977.7	977.7	800.4	800.4
Erection Support Equipment lbs/month:	5,302.4	9,681.8	12,280.1	12,723.3	13,093.0

GWF - Monthly Construction Equipment Emissions

Sulfur Dioxide

Pounds Per Month

	1	2	3	4	5
Sitework (Earthwork and Civil)					
Backhoe, 1.0 Cy	16.4	16.4	16.4	16.4	16.4
Front End Loader, 2 Cyd	33.2	33.2	33.2	33.2	33.2
Grader, 200 Hp 14 Ft	11.2	11.2	11.2	11.2	11.2
Vibratory Plate (hand held)	3.6	3.6	3.6	3.6	3.6
Rammer/Jumping Jack (hand held)	3.6	3.6	3.6	3.6	3.6
Riding Vibratory Compactor	0.0	14.9	14.9	0.0	0.0
Asphalt Paver	0.0	0.0	0.0	0.0	0.0
Asphalt Cutter/Grinder	0.0	0.0	0.0	0.0	0.0
Asphalt Compactor, Tandem Steel Drum Roller	0.0	0.0	0.0	0.0	0.0
Erection Support Equipment					
Air Compressor, 185 CFM	55.9	55.9	55.9	55.9	55.9
Air Compressor, 185 CFM	0.0	0.0	55.9	55.9	55.9
Concrete Pump	67.1	67.1	67.1	67.1	0.0
Scissors Lift	0.0	29.8	29.8	29.8	0.0
JLG 60 Ft	0.0	37.3	37.3	37.3	37.3
JLG 60 Ft	0.0	0.0	37.3	37.3	37.3
JLG 60 Ft	0.0	0.0	0.0	37.3	37.3
Forklift Extended Boom	---	---	---	---	---
Crane 110 Ton	0.0	0.0	93.9	93.9	93.9
Hydraulic Truck Crane 55 Ton	140.8	140.8	140.8	140.8	140.8
Hydraulic Truck Crane 55 Ton	0.0	140.8	140.8	140.8	140.8
Hydraulic Truck Crane 35 Ton	0.0	140.8	140.8	140.8	140.8
Hydraulic Truck Crane 22 Ton	140.8	140.8	140.8	140.8	140.8
Hydraulic Truck Crane 22 Ton	0.0	0.0	0.0	0.0	164.3
7000 Watt Portable Generator	4.8	4.8	4.8	4.8	4.8
Welder - Miller 400d	0.0	52.2	52.2	52.2	52.2
Welder - Miller 400d	0.0	0.0	52.2	52.2	52.2
Highway Tractor	0.0	22.4	22.4	22.4	22.4
Flat Bed Truck w/ Rails	0.0	4.8	4.8	4.8	4.8
Water Truck	117.3	117.3	117.3	117.3	117.3
Sitework (Earthwork and Civil) lbs/month:	68.1	83.0	83.0	68.1	68.1
Erection Support Equipment lbs/month:	526.7	954.8	1,194.0	1,231.3	1,298.6

GWF - Monthly Construction Equipment Emissions

Particulate Matter <10um

Pounds Per Month

	1	2	3	4	5
Sitework (Earthwork and Civil)					
Backhoe, 1.0 Cy	25.6	25.6	25.6	25.6	25.6
Front End Loader, 2 Cyd	31.0	31.0	31.0	31.0	31.0
Grader, 200 Hp 14 Ft	8.0	8.0	8.0	8.0	8.0
Vibratory Plate (hand held)	4.1	4.1	4.1	4.1	4.1
Rammer/Jumping Jack (hand held)	4.1	4.1	4.1	4.1	4.1
Riding Vibratory Compactor	0.0	14.6	14.6	0.0	0.0
Asphalt Paver	0.0	0.0	0.0	0.0	0.0
Asphalt Cutter/Grinder	0.0	0.0	0.0	0.0	0.0
Asphalt Compactor, Tandem Steel Drum Roller	0.0	0.0	0.0	0.0	0.0
Erection Support Equipment					
Air Compressor, 185 CFM	54.8	54.8	54.8	54.8	54.8
Air Compressor, 185 CFM	0.0	0.0	54.8	54.8	54.8
Concrete Pump	65.7	65.7	65.7	65.7	0.0
Scissors Lift	0.0	29.2	29.2	29.2	0.0
JLG 60 Ft	0.0	36.5	36.5	36.5	36.5
JLG 60 Ft	0.0	0.0	36.5	36.5	36.5
JLG 60 Ft	0.0	0.0	0.0	36.5	36.5
Forklift Extended Boom	4.0	4.0	4.0	4.0	4.0
Crane 110 Ton	0.0	0.0	54.2	54.2	54.2
Hydraulic Truck Crane 55 Ton	81.3	81.3	81.3	81.3	81.3
Hydraulic Truck Crane 55 Ton	0.0	81.3	81.3	81.3	81.3
Hydraulic Truck Crane 35 Ton	0.0	81.3	81.3	81.3	81.3
Hydraulic Truck Crane 22 Ton	81.3	81.3	81.3	81.3	81.3
Hydraulic Truck Crane 22 Ton	0.0	0.0	0.0	0.0	94.9
7000 Watt Portable Generator	5.4	5.4	5.4	5.4	5.4
Welder - Miller 400d	0.0	51.1	51.1	51.1	51.1
Welder - Miller 400d	0.0	0.0	51.1	51.1	51.1
Highway Tractor	0.0	21.9	21.9	21.9	21.9
Flat Bed Truck w/ Rails	0.0	5.4	5.4	5.4	5.4
Water Truck	67.8	67.8	67.8	67.8	67.8
Sitework (Earthwork and Civil) lbs/month:	72.7	87.3	87.3	72.7	72.7
Erection Support Equipment lbs/month:	360.4	667.2	863.8	900.3	900.3

GWF - Quarterly Construction Equipment Emissions

Carbon Monoxide

Quarterly Emissions

	1	2	3	4	5	6
Sitework (Earthwork and Civil)						
Backhoe, 1.0 Cy	653.4	653.4	653.4	653.4	653.4	- -
Front End Loader, 2 Cyd	104.4	104.4	104.4	104.4	104.4	- -
Grader, 200 Hp 14 Ft	19.7	19.7	19.7	19.7	19.7	- -
Vibratory Plate (hand held)	2,662.4	2,662.4	2,662.4	2,662.4	2,662.4	- -
Rammer/Jumping Jack (hand held)	2,662.4	2,662.4	2,662.4	2,662.4	2,662.4	- -
Riding Vibratory Compactor	0.0	70.4	70.4	0.0	0.0	- -
Asphalt Paver	0.0	0.0	0.0	0.0	0.0	- -
Asphalt Cutter/Grinder	0.0	0.0	0.0	0.0	0.0	- -
Asphalt Compactor, Tandem Steel Drum Roller	0.0	0.0	0.0	0.0	0.0	- -
Erection Support Equipment						
Air Compressor, 185 CFM	264.0	264.0	264.0	264.0	264.0	- -
Air Compressor, 185 CFM	0.0	0.0	264.0	264.0	264.0	- -
Concrete Pump	316.8	316.8	316.8	316.8	0.0	- -
Scissors Lift	0.0	140.8	140.8	140.8	0.0	- -
JLG 60 Ft	0.0	176.0	176.0	176.0	176.0	- -
JLG 60 Ft	0.0	0.0	176.0	176.0	176.0	- -
JLG 60 Ft	0.0	0.0	0.0	176.0	176.0	- -
Forklift Extended Boom	23.5	23.5	23.5	23.5	23.5	- -
Crane 110 Ton	0.0	0.0	375.4	375.4	375.4	- -
Hydraulic Truck Crane 55 Ton	563.1	563.1	563.1	563.1	563.1	- -
Hydraulic Truck Crane 55 Ton	0.0	563.1	563.1	563.1	563.1	- -
Hydraulic Truck Crane 35 Ton	0.0	563.1	563.1	563.1	563.1	- -
Hydraulic Truck Crane 22 Ton	563.1	563.1	563.1	563.1	563.1	- -
Hydraulic Truck Crane 22 Ton	0.0	0.0	0.0	0.0	657.0	- -
7000 Watt Portable Generator	3,549.9	3,549.9	3,549.9	3,549.9	3,549.9	- -
Welder - Miller 400d	0.0	246.4	246.4	246.4	246.4	- -
Welder - Miller 400d	0.0	0.0	246.4	246.4	246.4	- -
Highway Tractor	0.0	105.6	105.6	105.6	105.6	- -
Flat Bed Truck w/ Rails	0.0	3,549.9	3,549.9	3,549.9	3,549.9	- -
Water Truck	469.3	469.3	469.3	469.3	469.3	- -
Sitework (Earthwork and Civil) lbs/month:	6,102.3	6,172.7	6,172.7	6,102.3	6,102.3	0.0
Sitework (Earthwork and Civil) Tons/Qtr:			9.2			6.1
Erection Support Equipment lbs/month:	5,749.7	11,094.6	12,156.3	12,332.3	12,531.8	0.0
Erection Support Equipment Tons/Qtr:			14.5			12.4

GWF - Quarterly Construction Equipment Emissions

Reactive Organic Compounds

Quarterly Emissions

	1	2	3	4	5	6
Sitework (Earthwork and Civil)						
Backhoe, 1.0 Cy	32.9	32.9	32.9	32.9	32.9	- -
Front End Loader, 2 Cyd	42.0	42.0	42.0	42.0	42.0	- -
Grader, 200 Hp 14 Ft	5.1	5.1	5.1	5.1	5.1	- -
Vibratory Plate (hand held)	84.9	84.9	84.9	84.9	84.9	- -
Rammer/Jumping Jack (hand held)	84.9	84.9	84.9	84.9	84.9	- -
Riding Vibratory Compactor	0.0	15.6	15.6	0.0	0.0	- -
Asphalt Paver	0.0	0.0	0.0	0.0	0.0	- -
Asphalt Cutter/Grinder	0.0	0.0	0.0	0.0	0.0	- -
Asphalt Compactor, Tandem Steel Drum Roller	0.0	0.0	0.0	0.0	0.0	- -
Erection Support Equipment						
Air Compressor, 185 CFM	58.7	58.7	58.7	58.7	58.7	- -
Air Compressor, 185 CFM	0.0	0.0	58.7	58.7	58.7	- -
Concrete Pump	70.4	70.4	70.4	70.4	0.0	- -
Scissors Lift	0.0	31.3	31.3	31.3	0.0	- -
JLG 60 Ft	0.0	39.1	39.1	39.1	39.1	- -
JLG 60 Ft	0.0	0.0	39.1	39.1	39.1	- -
JLG 60 Ft	0.0	0.0	0.0	39.1	39.1	- -
Forklift Extended Boom	6.9	6.9	6.9	6.9	6.9	- -
Crane 110 Ton	0.0	0.0	39.6	39.6	39.6	- -
Hydraulic Truck Crane 55 Ton	59.4	59.4	59.4	59.4	59.4	- -
Hydraulic Truck Crane 55 Ton	0.0	59.4	59.4	59.4	59.4	- -
Hydraulic Truck Crane 35 Ton	0.0	59.4	59.4	59.4	59.4	- -
Hydraulic Truck Crane 22 Ton	59.4	59.4	59.4	59.4	59.4	- -
Hydraulic Truck Crane 22 Ton	0.0	0.0	0.0	0.0	69.4	- -
7000 Watt Portable Generator	113.3	113.3	113.3	113.3	113.3	- -
Welder - Miller 400d	0.0	54.8	54.8	54.8	54.8	- -
Welder - Miller 400d	0.0	0.0	54.8	54.8	54.8	- -
Highway Tractor	0.0	23.5	23.5	23.5	23.5	- -
Flat Bed Truck w/ Rails	0.0	113.3	113.3	113.3	113.3	- -
Water Truck	49.5	49.5	49.5	49.5	49.5	- -
Sitework (Earthwork and Civil) lbs/month:	249.8	265.4	265.4	249.8	249.8	0.0
Sitework (Earthwork and Civil) Tons/Qtr:			0.4			0.2
Erection Support Equipment lbs/month:	417.6	798.4	990.5	1,029.6	997.3	0.0
Erection Support Equipment Tons/Qtr:			1.1			1.0

GWF - Quarterly Construction Equipment Emissions

Nitrogen Oxides

Quarterly Emissions

	1	2	3	4	5	6
Sitework (Earthwork and Civil)						
Backhoe, 1.0 Cy	231.8	231.8	231.8	231.8	231.8	- -
Front End Loader, 2 Cyd	346.8	346.8	346.8	346.8	346.8	- -
Grader, 200 Hp 14 Ft	92.9	92.9	92.9	92.9	92.9	- -
Vibratory Plate (hand held)	64.4	64.4	64.4	64.4	64.4	- -
Rammer/Jumping Jack (hand held)	64.4	64.4	64.4	64.4	64.4	- -
Riding Vibratory Compactor	0.0	177.3	177.3	0.0	0.0	- -
Asphalt Paver	0.0	0.0	0.0	0.0	0.0	- -
Asphalt Cutter/Grinder	0.0	0.0	0.0	0.0	0.0	- -
Asphalt Compactor, Tandem Steel Drum Roller	0.0	0.0	0.0	0.0	0.0	- -
Erection Support Equipment						
Air Compressor, 185 CFM	664.8	664.8	664.8	664.8	664.8	- -
Air Compressor, 185 CFM	0.0	0.0	664.8	664.8	664.8	- -
Concrete Pump	797.8	797.8	797.8	797.8	0.0	- -
Scissors Lift	0.0	354.6	354.6	354.6	0.0	- -
JLG 60 Ft	0.0	443.2	443.2	443.2	443.2	- -
JLG 60 Ft	0.0	0.0	443.2	443.2	443.2	- -
JLG 60 Ft	0.0	0.0	0.0	443.2	443.2	- -
Forklift Extended Boom	57.5	57.5	57.5	57.5	57.5	- -
Crane 110 Ton	0.0	0.0	869.7	869.7	869.7	- -
Hydraulic Truck Crane 55 Ton	1,304.6	1,304.6	1,304.6	1,304.6	1,304.6	- -
Hydraulic Truck Crane 55 Ton	0.0	1,304.6	1,304.6	1,304.6	1,304.6	- -
Hydraulic Truck Crane 35 Ton	0.0	1,304.6	1,304.6	1,304.6	1,304.6	- -
Hydraulic Truck Crane 22 Ton	1,304.6	1,304.6	1,304.6	1,304.6	1,304.6	- -
Hydraulic Truck Crane 22 Ton	0.0	0.0	0.0	0.0	1,522.1	- -
7000 Watt Portable Generator	85.9	85.9	85.9	85.9	85.9	- -
Welder - Miller 400d	0.0	620.5	620.5	620.5	620.5	- -
Welder - Miller 400d	0.0	0.0	620.5	620.5	620.5	- -
Highway Tractor	0.0	265.9	265.9	265.9	265.9	- -
Flat Bed Truck w/ Rails	0.0	85.9	85.9	85.9	85.9	- -
Water Truck	1,087.2	1,087.2	1,087.2	1,087.2	1,087.2	- -
Sitework (Earthwork and Civil) lbs/month:	800.4	977.7	977.7	800.4	800.4	0.0
Sitework (Earthwork and Civil) Tons/Qtr:			1.4			0.8
Erection Support Equipment lbs/month:	5,302.4	9,681.8	12,280.1	12,723.3	13,093.0	0.0
Erection Support Equipment Tons/Qtr:			13.6			12.9

GWF - Quarterly Construction Equipment Emissions

Sulfur Dioxide

Quarterly Emissions

	1	2	3	4	5	6
Sitework (Earthwork and Civil)						
Backhoe, 1.0 Cy	16.4	16.4	16.4	16.4	16.4	- -
Front End Loader, 2 Cyd	33.2	33.2	33.2	33.2	33.2	- -
Grader, 200 Hp 14 Ft	11.2	11.2	11.2	11.2	11.2	- -
Vibratory Plate (hand held)	3.6	3.6	3.6	3.6	3.6	- -
Rammer/Jumping Jack (hand held)	3.6	3.6	3.6	3.6	3.6	- -
Riding Vibratory Compactor	0.0	14.9	14.9	0.0	0.0	- -
Asphalt Paver	0.0	0.0	0.0	0.0	0.0	- -
Asphalt Cutter/Grinder	0.0	0.0	0.0	0.0	0.0	- -
Asphalt Compactor, Tandem Steel Drum Roller	0.0	0.0	0.0	0.0	0.0	- -
Erection Support Equipment						
Air Compressor, 185 CFM	55.9	55.9	55.9	55.9	55.9	- -
Air Compressor, 185 CFM	0.0	0.0	55.9	55.9	55.9	- -
Concrete Pump	67.1	67.1	67.1	67.1	0.0	- -
Scissors Lift	0.0	29.8	29.8	29.8	0.0	- -
JLG 60 Ft	0.0	37.3	37.3	37.3	37.3	- -
JLG 60 Ft	0.0	0.0	37.3	37.3	37.3	- -
JLG 60 Ft	0.0	0.0	0.0	37.3	37.3	- -
Forklift Extended Boom	---	---	---	---	---	- -
Crane 110 Ton	0.0	0.0	93.9	93.9	93.9	- -
Hydraulic Truck Crane 55 Ton	140.8	140.8	140.8	140.8	140.8	- -
Hydraulic Truck Crane 55 Ton	0.0	140.8	140.8	140.8	140.8	- -
Hydraulic Truck Crane 35 Ton	0.0	140.8	140.8	140.8	140.8	- -
Hydraulic Truck Crane 22 Ton	140.8	140.8	140.8	140.8	140.8	- -
Hydraulic Truck Crane 22 Ton	0.0	0.0	0.0	0.0	164.3	- -
7000 Watt Portable Generator	4.8	4.8	4.8	4.8	4.8	- -
Welder - Miller 400d	0.0	52.2	52.2	52.2	52.2	- -
Welder - Miller 400d	0.0	0.0	52.2	52.2	52.2	- -
Highway Tractor	0.0	22.4	22.4	22.4	22.4	- -
Flat Bed Truck w/ Rails	0.0	4.8	4.8	4.8	4.8	- -
Water Truck	117.3	117.3	117.3	117.3	117.3	- -
Sitework (Earthwork and Civil) lbs/month:	68.1	83.0	83.0	68.1	68.1	0.0
Sitework (Earthwork and Civil) Tons/Qtr:			0.1			0.1
Erection Support Equipment lbs/month:	526.7	954.8	1,194.0	1,231.3	1,298.6	0.0
Erection Support Equipment Tons/Qtr:			1.3			1.3

GWF - Quarterly Construction Equipment Emissions

Particulate Matter <10um

Quarterly Emissions

	1	2	3	4	5	6
Sitework (Earthwork and Civil)						
Backhoe, 1.0 Cy	25.6	25.6	25.6	25.6	25.6	- -
Front End Loader, 2 Cyd	31.0	31.0	31.0	31.0	31.0	- -
Grader, 200 Hp 14 Ft	8.0	8.0	8.0	8.0	8.0	- -
Vibratory Plate (hand held)	4.1	4.1	4.1	4.1	4.1	- -
Rammer/Jumping Jack (hand held)	4.1	4.1	4.1	4.1	4.1	- -
Riding Vibratory Compactor	0.0	14.6	14.6	0.0	0.0	- -
Asphalt Paver	0.0	0.0	0.0	0.0	0.0	- -
Asphalt Cutter/Grinder	0.0	0.0	0.0	0.0	0.0	- -
Asphalt Compactor, Tandem Steel Drum Roller	0.0	0.0	0.0	0.0	0.0	- -
Erection Support Equipment						
Air Compressor, 185 CFM	54.8	54.8	54.8	54.8	54.8	- -
Air Compressor, 185 CFM	0.0	0.0	54.8	54.8	54.8	- -
Concrete Pump	65.7	65.7	65.7	65.7	0.0	- -
Scissors Lift	0.0	29.2	29.2	29.2	0.0	- -
JLG 60 Ft	0.0	36.5	36.5	36.5	36.5	- -
JLG 60 Ft	0.0	0.0	36.5	36.5	36.5	- -
JLG 60 Ft	0.0	0.0	0.0	36.5	36.5	- -
Forklift Extended Boom	4.0	4.0	4.0	4.0	4.0	- -
Crane 110 Ton	0.0	0.0	54.2	54.2	54.2	- -
Hydraulic Truck Crane 55 Ton	81.3	81.3	81.3	81.3	81.3	- -
Hydraulic Truck Crane 55 Ton	0.0	81.3	81.3	81.3	81.3	- -
Hydraulic Truck Crane 35 Ton	0.0	81.3	81.3	81.3	81.3	- -
Hydraulic Truck Crane 22 Ton	81.3	81.3	81.3	81.3	81.3	- -
Hydraulic Truck Crane 22 Ton	0.0	0.0	0.0	0.0	94.9	- -
7000 Watt Portable Generator	5.4	5.4	5.4	5.4	5.4	- -
Welder - Miller 400d	0.0	51.1	51.1	51.1	51.1	- -
Welder - Miller 400d	0.0	0.0	51.1	51.1	51.1	- -
Highway Tractor	0.0	21.9	21.9	21.9	21.9	- -
Flat Bed Truck w/ Rails	0.0	5.4	5.4	5.4	5.4	- -
Water Truck	67.8	67.8	67.8	67.8	67.8	- -
Sitework (Earthwork and Civil) lbs/month:	72.7	87.3	87.3	72.7	72.7	0.0
Sitework (Earthwork and Civil) Tons/Qtr:			0.1			0.1
Erection Support Equipment lbs/month:	360.4	667.2	863.8	900.3	900.3	0.0
Erection Support Equipment Tons/Qtr:			0.9			0.9

GWF - Annual Construction Equipment Emissions

	Maximum Annual Emissions				
Construction Equipment	**CO**	**ROC**	**NOx**	**SOx**	**PM10**
Sitework (Earthwork and Civil) (ton/year):	15.3	0.6	2.2	0.2	0.2
Erection Support Equipment (tons/year)	26.9	2.1	26.5	2.6	1.8
Total	42.2	2.7	28.7	2.8	2.0

Construction Maximum Total Hourly Emission Rates

TAIL PIPE EMISSIONS ("EXHAUST")	NO_x		CO		PM_{10}		SO_2	
	(lb/hr)	(g/s) [1]	(lb/hr)	(g/s) [1]	(lb/hr)	(g/s) [1]	(lb/hr)	(g/s) [1]
Sitework (Earthwork and Civil) Equipment Construction Emissions								
Maximum Hourly	1.9	0.236	11.8	1.492	----	----	0.16	0.020
Maximum 3-Hour [2]	----	----	----	----	----	----	0.16	0.020
Maximum 8-Hour [2]	----	----	11.8	1.492	----	----	----	----
Maximum 24-Hour [3]	----	----	----	----	0.14	0.018	0.13	0.016
Annual [4]	0.50	0.063	----	----	0.05	0.0060	0.05	0.006
Erection Support Equipment Construction Emissions								
Maximum Hourly	25.1	3.164	24.0	3.028	----	----	2.49	0.314
Maximum 3-Hour [2]	----	----	----	----	----	----	2.49	0.314
Maximum 8-Hour [2]	----	----	24.0	3.028	----	----	----	----
Maximum 24-Hour [3]	----	----	----	----	1.44	0.181	2.08	0.262
Annual [4]	6.05	0.762	----	----	0.41	0.052	0.59	0.074
TOTAL EMISSIONS (used as model input)								
Maximum Hourly	27.0	3.399	35.9	4.520	----	----	2.7	0.334
Maximum 3-Hour [2]	----	----	----	----	----	----	2.7	0.334
Maximum 8-Hour [2]	----	----	35.9	4.520	----	----	----	----
Maximum 24-Hour [3]	----	----	----	----	1.6	0.199	2.2	0.278
Annual [4]	6.6	0.825	----	----	0.5	0.058	0.6	0.081

FUGITIVE DUST EMISSIONS (Onsite Construction)	PM_{10} (lb/hr)	PM_{10} (g/s) [1]
Construction Dust (PM_{10}) Emissions- Plant Site		
Maximum 24-Hour [5]	0.48	0.060
Construction Dust (PM_{10}) Emissions - Plant Site		
Annual [6]	0.17	0.021

[1] Grams per second (g/s) = lbs/hr * 0.126

[2] 3-hour Lbs/Hr and 8-hour Lbs/Hr = Maximum Lbs/Hr

[3] 24-hour lbs/hr = Maximum daily PM_{10} emissions (lb/day) divided by 24 hours.

[4] Annual Tail Pipe (Exhaust) Lbs/Hr = Annual emissions (TPY) * (2000 hrs/yr) * (1 yr/8760 hours).

[5] 24-hour fugitive dust emissions are based on 7.33 lbs/acre/day (0.11 ton/acre/month) (Midwest Research Institute 1996) PM_{10}, 20-hour workdays and 50% control efficiency.

[6] Annual fugitive dust emissions are based on 5 months disturbance, assume one half of the plant site disturbed at any given time, 6 days per week, 20-hour workdays and assume a 50% control efficiency.

Construction Activities Emission Rates - Model Input

TAIL PIPE EMISSIONS ("EXHAUST")	NO_x [5] (g/s)	CO [5] (g/s)	PM_{10} [5,6] (g/s)	SO_2 [5,6] (g/s)
Sitework (Earthwork and Civil) Equipment Construction Emissions				
Maximum Hourly	0.039	0.249	----	0.003
Maximum 3-Hour	----	----	----	0.003
Maximum 8-Hour	----	0.249	----	----
Maximum 24-Hour	----	----	0.003	0.003
Annual	0.011	----	0.001	0.001
Erection Support Equipment Construction Emissions				
Maximum Hourly	0.527	0.505	----	0.052
Maximum 3-Hour	----	----	----	0.052
Maximum 8-Hour	----	0.505	----	----
Maximum 24-Hour	----	----	0.030	0.044
Annual	0.127	----	0.009	0.012
TOTAL EMISSIONS (used as model input)				
Maximum Hourly	0.566	0.754	----	0.055
Maximum 3-Hour	----	----	----	0.055
Maximum 8-Hour	----	0.754	----	----
Maximum 24-Hour	----	----	0.033	0.047
Annual	0.138	----	0.010	0.013

FUGITIVE DUST EMISSIONS [2]	PM_{10} (g/s)
Construction Dust (PM10) Emissions- Plant Site	
Maximum 24-Hour	0.060
Construction Dust (PM10) Emissions - Plant Site	
Annual	0.021

[1] For modeling purposes, the tailpipe ("Exhaust") emissions were split evenly between six point sources.

[2] Fugitive dust PM_{10} emissions were modeled as a single volume source within the proposed plant construction site.

sierra
research

1801 J Street
Sacramento, CA 95814
(916) 444-6666
Fax: (916) 444-8373

August 8, 2001

Memo To: Doug Wheeler
GWF Power Systems Company

From: David Deckman

Subject: Interpollutant Offset Ratio Analysis for GWF Henrietta Project

As you requested, attached is an analysis of the interpollutant offset ratio for using sulfur oxides (SOx) Emission Reduction Credits to offset emissions of respirable particulate matter (PM_{10}). GWF Energy LLC is proposing to use SOx ERCs, which were generated from the shutdown of a facility in Hanford, to offset PM_{10} from the proposed Henrietta Peaker Plant (HPP). The distance between the source of the ERCs and the proposed power plant project is 16.2 miles. Our analysis indicates that the appropriate interpollutant ratio is 1.4 to 1.0, and that the overall offset ratio, including the adjustment for distance between the proposed project and the source of the ERCs, would be 1.9 to 1.0. This analysis is consistent with those approved by the San Joaquin Valley Unified Air Pollution Control District for other projects.

Please be aware that Section 4.2.5.3 of SJVUAPCD Rule 2201 (New and Modified Stationary Source Review) allows the use of interpollutant offsets only if the project will not cause violations of the ambient air quality standards. Because ambient PM_{10} concentrations in the San Joaquin Valley currently exceed the state and federal standards, the SJVUAPCD is accepting a demonstration that the project would not cause PM_{10} ambient concentrations in excess of the significance criteria in Title 40 Code of Federal Regulations Part 51.165(b)(2). These thresholds are 5 micrograms per cubic meter ($\mu g/m^3$) and 1.0 $\mu g/m^3$ for the 24-hour and annual averaging periods, respectively. The air quality impact analysis and modeling will be prepared and submitted as part of the Application for Certification for this project.

If you have any questions regarding this analysis, please feel free to contact us.

attachment

INTERPOLLUTANT OFFSET RATIO ANALYSIS
FOR THE
GWF ENERGY LLC HENRIETTA PEAKER PLANT

GWF Energy LLC (GWF) proposes to use sulfur oxides (SOx) Emission Reduction Credits (ERCs) to offset emissions of respirable particulate matter (PM_{10}) from its proposed Henrietta Peaker Plant in Kings County, California. The SOx ERCs will supplement PM_{10} ERCs from Certificate No. C-366-4. GWF also owns SOx ERC Certificate Nos. N-414-5 and N-415-5. The two SOx ERC certificates were issued by the San Joaquin Valley Unified Air Pollution Control District (SJVUAPCD) for emission reductions that were originally generated by the shutdown of a facility located at 525 West Third Street in Hanford, California. SJVUAPCD Rule 2201, Section 4.2.5.3 provides:

> *Interpollutant offsets may be approved by the APCO on a case-by-case basis, provided that the applicant demonstrates to the satisfaction of the APCO, in accordance with the provisions of Section 4.3.2 of this rule, that the emission increases from the new or modified source will not cause or contribute to a violation of an ambient air quality standard. In such cases, the APCO shall, based on an air quality analysis, impose offset ratios equal to or greater than the requirements, of this rule.*

GWF will provide a demonstration that the emission increases associated with the project will not cause or contribute to a violation of an ambient air quality standard. This analysis does not address those impacts.

This analysis provides a technical rationale for an appropriate SOx-to-PM_{10} interpollutant ratio, as well as the overall offset ratio to reflect the distance between the source providing the offsets and the proposed project.

Interpollutant Ratio

To develop an interpollutant offset ratio for SOx and PM_{10}, this analysis uses (1) a speciated linear rollback analysis using ambient monitoring data from Kings County, in which both the proposed GWF project and the ERC source are located; (2) emission inventory data in Kings County; and (3) the results of Chemical Mass Balance (CMB) modeling at a location in Kings County. The approach is based on a simple box model that ignores transport and deposition; assumes that the box is the size of Kings County; and assumes that the ambient pollutant concentrations in the box (Kings County) can be represented by the values reported for the South Irwin Street monitoring station in Hanford and the Patterson Avenue and Van Dorsten Avenue monitoring stations in Corcoran. These are the only monitoring stations in Kings County that have the data required for this analysis. The interpollutant ratio calculations described below are shown in Attachment 1.

The actual, annual average nitrate, sulfate, chloride, and total PM_{10} ambient air measurements were used to partially speciate the PM_{10}. The ambient monitoring data were reported by the Air Resources Board (ARB) for monitoring stations located on South Irwin Street in Hanford and on Patterson Avenue and Van Dorsten Avenue in Corcoran for 1997 and 1998, the most recent years for which the speciated PM_{10} were available. According to ARB staff, speciation of the PM_{10} samples was discontinued at these monitoring stations at the end of 1998.

The unspeciated balance of the PM_{10} (after subtracting the ammonium sulfate, ammonium nitrate, and ammonium chloride from total PM_{10}) is split between direct-combustion-related PM_{10} (fuel combustion and mobile sources) and other direct PM_{10} sources. The contribution from direct-combustion-related PM_{10} is based on Chemical Mass Balance (CMB) modeling performed for the District's PM_{10} Attainment Demonstration Plan. CMB modeling was conducted by the ARB for several locations within the San Joaquin Valley for annual average conditions in support of the District's attainment plan. Annual analyses were performed for locations in Bakersfield, Corcoran, Fresno, and Visalia. The nearest modeled site to the proposed GWF project is Corcoran. The CMB modeling evaluated the contribution of specific source categories. The "mobile" category represents the contribution from mobile and other combustion sources, such as those proposed for the GWF project. In this case, the CMB modeling for the Corcoran location found that the mobile category contributed 5.39 micrograms per cubic meter ($\mu g/m^3$) out of the total annual average PM_{10} concentration of 59 $\mu g/m^3$ for 1993. A table from the attainment plan showing these values is attached (see Attachment 2). Thus, the direct-combustion contribution was assumed to be 9.1 percent (i.e., 5.39/59).

Next, since direct PM_{10} emissions from combustion sources (gas turbines) are being offset, it was determined how many $\mu g/m^3$ of ambient PM_{10} are associated with 1 ton/year of direct combustion PM_{10} emissions by dividing the annual average direct-combustion PM_{10} concentration by the total annual PM_{10} emissions in Kings County. A similar calculation was performed for sulfur dioxide by dividing the annual average sulfate concentration by the annual SO_2 emissions in Kings County. The inventory data were obtained from the ARB website (http://www.arb.ca.gov/app/emsinv/emssumcat.php). The daily values from this inventory were multiplied by 365 to compute the annual values. Total PM_{10} and SOx inventories were calculated for the years considered in this analysis. Inventory data were available from the ARB website for 1996 and 1998, but not for 1997. The 1997 inventory was computed by interpolating between 1996 and 1997. The inventory data for Kings County are shown in Attachment 3. The ratio of the $\mu g/m^3$ per ton/year values indicates the number of tons of sulfur dioxide emissions that it takes to create the same number of $\mu g/m^3$ of PM_{10} that would be created by 1 ton/year of direct-combustion PM_{10} emissions. As shown in Attachment 1, this calculation results in interpollutant offset ratios of 1.17 to 1 and 1.64 to 1 for the two years evaluated, or an average of 1.4 to 1. The results were relatively consistent between the three monitoring stations for each year, and differ slightly between the two calendar years of data on which these analyses were based.

Offset Ratio

Rule 2201 does not indicate specifically how the interpollutant ratio (described above) and the distance ratio (pursuant to Section 4.2.4 of Rule 2201) should be applied. Leonard Scandura of the District's Southern Region office provided a description of how the District computes the overall offset ratio. The methodology provided by Mr. Scandura addresses sources of NOx offsets within 15 miles of the new source and more than
15 miles from the new source. Because the ERC source in this case is more than 15 miles from the GWF facility and is providing SOx ERCs, this description has been modified to address only this case. The methodology provided by Mr. Scandura is as follows (with revisions to reflect the distance relationship, transfer of SOx ERCs, and a 1.4 to 1 interpollutant offset ratio):

> *Rule 2201 includes provisions for including distance offset ratios and interpollutant offset ratios to determine the quantity of offsets required. These two offset ratios are applied independently to determine the quantity of offset required.*
>
> *The distance ratio specifies the excess amount of offsets required due to the distance between the increase in emissions and the location at which the emission reductions occurred. For example, if the distance offset ratio is 1.5:1, 100% of the fraction of the emission increase to be offset at this distance is required plus an additional 50% to account for the distance between the increase in emissions and the location of the emissions reductions.*
>
> *The interpollutant offset ratio specifies excess amount of offsets required when the emission increases and the offsets being provided are not the same pollutant. Specifically, the interpollutant offset ratio quantifies the relationship between the pollutant being emitted and the emission reductions being provided. In this case [the analysis described in this report], the interpollutant offset ratio is 1.4:1, i.e., 100% of the emission increase is required to be offset plus an additional 40% to account for the relationship between the pollutant being emitted and the emissions reduction.*
>
> *When both the distance and interpollutant offset ratios apply, the overall offset quantity required is equal to the sum of the amount being emitted and the excess amount(s) required due to the distance offset ratio plus the excess amount due to the interpollutant offset ratio. The computation of the resulting overall SOx for PM_{10} offset ratio is as follows:*
>
> *SOx req'd ton/year = PM_{10} ton/year + PM_{10} ton/year to be offset by SOx ERCs >15 miles away * 0.5 + PM_{10} ton/year to be offset by SOx reductions * 0.4*
>
> *SOx req'd ton/year =PM_{10} ton/year + PM_{10} ton/year (0.5) + PM_{10} ton/year (0.4)*
>
> *SOx req'd ton/year = PM_{10} ton/year (1 + 0.5 + 0.4)*

Thus, the combined distance and interpollutant ratio is:

$SOx/PM10 = 1 + 0.5 + 0.4$

Using this methodology, the overall distance and interpollutant offset ratio is as follows:

$SOx/PM_{10} = 1 + 0.5 + 0.4 = 1.9$

ATTACHMENT 1

INTERPOLLUTANT OFFSET RATIO
CALCULATIONS

GWF - Henrietta Peaker Plant
PM10 Interpollutant Offset Ratio Analysis

07-Aug-01

1997 Annual Average Concentrations (AAM)

Station	Total PM10 ug/m3	PM10 Nitrate ug/m3	PM10 Sulfate ug/m3	PM10 Chloride ug/m3
Hanford - So Irwin St	46.5	5.42	1.79	0.046
Corcoran - Patterson	48.1	4.89	1.66	0.061
Corcoran - VanDorsten	44.8	5.24	1.62	0.052

Ion Form	NO3	SO4	Cl
Ion Molecular Weight	62.005	96.062	35.453
Combined Form	NH4NO3	(NH4)2SO4	NH4Cl
Combined Molecular Wt	80.043	132.139	53.492

Direct Combustion PM10 fraction of total ambient PM10 (source apportionment): 9.1%

Station	Total PM10 ug/m3	PM10 NH4NO3 ug/m3	PM10 (NH4)2SO4 ug/m3	PM10 NH4Cl ug/m3	PM10 Direct Combustion ug/m3	PM10 Other ug/m3
Hanford - So Irwin St	46.5	7.00	2.46	0.07	4.23	32.74
Corcoran - Patterson	48.1	6.31	2.28	0.09	4.38	35.03
Corcoran - VanDorsten	44.8	6.76	2.23	0.08	4.08	31.65

1997 Annual Emissions (tons/year) - Kings County

Total PM10	NOx	SOx	Combustion PM10	Other Direct PM10
13,291	9,769	529	588	12,704

		Hanford So Irwin St	Corcoran Patterson	Corcoran VanDorsten	
Direct Combustion PM10:					
588	tons/yr =	4.23	4.38	4.08	
1	ton/yr =	0.00720	0.00745	0.00694	
SO2 -> Sulfates:					
529	tons/yr =	2.46	2.28	2.23	
1	ton/yr =	0.00465	0.00431	0.00421	
					Average
SO2:PM10 ratio =		1.55	1.73	1.65	1.64

GWF - Henrietta Peaker Plant
PM10 Interpollutant Offset Ratio Analysis

07-Aug-01

1998 Annual Average Concentrations (AAM)

Station	Total PM10 ug/m3	PM10 Nitrate ug/m3	PM10 Sulfate ug/m3	PM10 Chloride ug/m3
Hanford - So Irwin St	38.9	3.33	2.00	0.028
Corcoran - Patterson	38.2	4.08	1.86	0.031
Corcoran - VanDorsten	29.0	1.30	1.74	0.027

Ion Form	NO3	SO4	Cl
Ion Molecular Weight	62.005	96.062	35.453
Combined Form	NH4NO3	(NH4)2SO4	NH4Cl
Combined Molecular Wt	80.043	132.139	53.492

Direct Combustion PM10 fraction of total ambient PM10 (source apportionment): 9.1%

Station	Total PM10 ug/m3	PM10 NH4NO3 ug/m3	PM10 (NH4)2SO4 ug/m3	PM10 NH4Cl ug/m3	PM10 Direct Combustion ug/m3	PM10 Other ug/m3
Hanford - So Irwin St	38.9	4.30	2.75	0.04	3.54	28.27
Corcoran - Patterson	38.2	5.27	2.56	0.05	3.48	26.85
Corcoran - VanDorsten	29.0	1.68	2.39	0.04	2.64	22.25

1998 Annual Emissions (tons/year) - Kings County

Total PM10	NOx	SOx	Combustion PM10	Other Direct PM10
13,363	9,815	533	569	12,793

		Hanford So Irwin St	Corcoran Patterson	Corcoran VanDorsten	
Direct Combustion PM10:					
569	tons/yr =	3.54	3.48	2.64	
1	ton/yr =	0.00622	0.00611	0.00463	
SO2 -> Sulfates:					
533	tons/yr =	2.75	2.56	2.39	
1	ton/yr =	0.00516	0.00480	0.004491	
					Average
SO2:PM10 ratio =		1.20	1.27	1.03	1.17

ATTACHMENT 2

CMB MODELING RESULTS FOR CORCORAN

CORCORAN	TOTAL	Geologic	Construction	Mobile	Organic Carbon	Vegetative Burning	Ammonium Nitrate	Associated Water	Ammonium Sulfate	Unassigned	Marine
CMB Annual	59.00	32.44	0.35	5.39	0.00	0.70	7.41	2.00	2.32	8.09	0.30
CMB Percents		54.98%	0.59%	9.13%	0.00%	1.19%	12.56%	3.39%	3.93%	13.71%	0.52%
Adjusted Concentrations	52.00	28.59	0.31	4.75	0.00	0.62	6.53	1.76	2.04	7.13	0.27
Natural Background %		5%	0%	0%	0%	0%	0%	0%	0%	10%	100%
Natural Background Value	2.41	1.43	0.00	0.00	0.00	0.00	0.00	0.00	0.00	0.71	0.27
Local Contribution (Adjusted Concentration - Background)	49.59	27.16	0.31	4.75	0.00	0.62	6.53	1.76	2.04	6.42	0.00
Ammonia Emission Estimate (%)							15%				
Ammonia Emission Estimate (ug/m3)	0.98						0.98				
Local Contribution (Without Ammonia)	48.61	27.16	0.31	4.75	0.00	0.62	5.55	1.76	2.04	6.42	0.00
Base Year 1993 Emission Inventory PM10	457.80	378.22	18.45	16.54		36.82				457.80	
ROG	538.87				538.87						
NOx	578.14						578.14	578.14			
SOx	34.88								34.88		
Future Year Emission Inventory 2001 PM	435.27	340.93	14.80	9.98		56.05				435.27	
ROG	387.58				387.58						
NOx	456.87						456.87	456.87			
SOx	33.70								33.70		
Ef/Eb Ratio for Local Rollback Projection	0.81	0.90	0.80	0.60	0.72	1.52	0.79	0.79	0.97	0.95	1.00
Projected Local	42.39	24.48	0.25	2.86	0.00	0.94	4.39	1.39	1.97	6.10	0.00
Natural Background	2.41	1.43	0.00	0.00	0.00	0.00	0.00	0.00	0.00	0.71	0.27
Ammonia Emission Estimate	0.98						0.98				
2001 Projected Annual (Result)	45.78	25.91	0.25	2.86	0.00	0.94	5.37	1.39	1.97	6.81	0.27
Future Year Emission Inventory 2006 PM	446.21	348.57	16.26	9.71		58.28				446.21	
ROG	328.21				328.21						
NOx	402.95						402.95	402.95			
SOx	35.15								35.15		
Ef/Eb Ratio for Local Rollback Projection	0.75	0.92	0.88	0.59	0.61	1.58	0.70	0.70	1.01	0.97	1.00
Projected Local	42.48	25.03	0.27	2.79	0.00	0.98	3.87	1.23	2.06	6.25	0.00
Natural Background	2.41	1.43	0.00	0.00	0.00	0.00	0.00	0.00	0.00	0.71	0.27
Ammonia Emission Estimate	0.98						0.98				
2006 Projected Annual (Result)	45.87	26.46	0.27	2.79	0.00	0.98	4.85	1.23	2.06	6.97	0.27

ATTACHMENT 3

EMISSIONS INVENTORY
FOR
KINGS COUNTY

1997 EMISSION INVENTORY FOR KINGS COUNTY

CATEGORY	SUBCATEGORY	EMISSIONS (TONS PER DAY) TOG	ROG	CO	NOX	SOX	PM	PM10
FUEL COMBUSTION	ELECTRIC UTILITIES	0.00	0.00	0.00	0.00	0.00	0.00	0.00
FUEL COMBUSTION	COGENERATION	0.02	0.00	0.07	0.08	0.19	0.02	0.01
FUEL COMBUSTION	OIL AND GAS PRODUCTION (COMBUSTION)	0.21	0.02	0.08	0.54	0.01	0.01	0.01
FUEL COMBUSTION	PETROLEUM REFINING (COMBUSTION)	0.00	0.00	0.00	0.00	0.00	0.00	0.00
FUEL COMBUSTION	MANUFACTURING AND INDUSTRIAL	0.04	0.01	0.63	5.24	0.22	0.11	0.09
FUEL COMBUSTION	FOOD AND AGRICULTURAL PROCESSING	0.21	0.18	1.11	3.68	0.33	0.39	0.37
FUEL COMBUSTION	SERVICE AND COMMERCIAL	0.03	0.02	0.30	1.32	0.03	0.04	0.04
FUEL COMBUSTION	OTHER (FUEL COMBUSTION)	0.00	0.00	0.00	0.00	0.00	0.00	0.00
WASTE DISPOSAL	SEWAGE TREATMENT	0.00	0.00	0.00	0.00	0.00	0.00	0.00
WASTE DISPOSAL	LANDFILLS	0.03	0.02	0.00	0.00	0.00	0.00	0.00
WASTE DISPOSAL	INCINERATORS	0.00	0.00	0.00	0.00	0.00	0.00	0.00
WASTE DISPOSAL	SOIL REMEDIATION	0.02	0.01	0.00	0.00	0.00	0.00	0.00
WASTE DISPOSAL	OTHER (WASTE DISPOSAL)	2.18	1.06	0.00	0.00	0.00	0.00	0.00
CLEANING AND SURFACE COATINGS	LAUNDERING	0.02	0.00	0.00	0.00	0.00	0.00	0.00
CLEANING AND SURFACE COATINGS	DEGREASING	0.31	0.28	0.00	0.00	0.00	0.00	0.00
CLEANING AND SURFACE COATINGS	COATINGS AND RELATED PROCESS SOLVENTS	0.42	0.39	0.00	0.00	0.00	0.00	0.00
CLEANING AND SURFACE COATINGS	PRINTING	0.03	0.03	0.00	0.00	0.00	0.00	0.00
CLEANING AND SURFACE COATINGS	ADHESIVES AND SEALANTS	0.06	0.05	0.00	0.00	0.00	0.00	0.00
CLEANING AND SURFACE COATINGS	OTHER (CLEANING AND SURFACE COATINGS)	0.02	0.00	0.00	0.00	0.00	0.00	0.00
PETROLEUM PRODUCTION AND MARKETING	OIL AND GAS PRODUCTION	0.73	0.41	0.00	0.01	0.00	0.00	0.00
PETROLEUM PRODUCTION AND MARKETING	PETROLEUM REFINING	0.00	0.00	0.00	0.00	0.00	0.00	0.00
PETROLEUM PRODUCTION AND MARKETING	PETROLEUM MARKETING	0.18	0.17	0.00	0.00	0.00	0.00	0.00
PETROLEUM PRODUCTION AND MARKETING	OTHER (PETROLEUM PRODUCTION AND MARKETING)	0.00	0.00	0.00	0.00	0.00	0.00	0.00
INDUSTRIAL PROCESSES	CHEMICAL	0.15	0.13	0.00	0.00	0.00	0.00	0.00
INDUSTRIAL PROCESSES	FOOD AND AGRICULTURE	1.24	0.75	0.00	0.00	0.00	1.78	0.98
INDUSTRIAL PROCESSES	MINERAL PROCESSES	0.00	0.00	0.00	0.00	0.00	0.13	0.08
INDUSTRIAL PROCESSES	METAL PROCESSES	0.00	0.00	0.00	0.00	0.00	0.00	0.00
INDUSTRIAL PROCESSES	WOOD AND PAPER	0.00	0.00	0.00	0.00	0.00	0.01	0.01
INDUSTRIAL PROCESSES	GLASS AND RELATED PRODUCTS	0.00	0.00	0.00	0.00	0.00	0.00	0.00
INDUSTRIAL PROCESSES	ELECTRONICS	0.00	0.00	0.00	0.00	0.00	0.00	0.00
INDUSTRIAL PROCESSES	OTHER (INDUSTRIAL PROCESSES)	0.00	0.00	0.00	0.00	0.00	0.01	0.01
SOLVENT EVAPORATION	CONSUMER PRODUCTS	1.20	0.99	0.00	0.00	0.00	0.00	0.00
SOLVENT EVAPORATION	ARCHITECTURAL COATINGS AND RELATED PROCESS SOLVENTS	0.44	0.42	0.00	0.00	0.00	0.00	0.00
SOLVENT EVAPORATION	PESTICIDES/FERTILIZERS	2.65	2.65	0.00	0.00	0.00	0.00	0.00
SOLVENT EVAPORATION	ASPHALT PAVING / ROOFING	0.08	0.07	0.00	0.00	0.00	0.00	0.00
SOLVENT EVAPORATION	REFRIGERANTS	0.00	0.00	0.00	0.00	0.00	0.00	0.00
SOLVENT EVAPORATION	OTHER (SOLVENT EVAPORATION)	0.00	0.00	0.00	0.00	0.00	0.00	0.00
MISCELLANEOUS PROCESSES	RESIDENTIAL FUEL COMBUSTION	0.31	0.13	1.77	0.09	0.00	0.30	0.28
MISCELLANEOUS PROCESSES	FARMING OPERATIONS	93.93	7.51	0.00	0.00	0.00	27.84	12.66
MISCELLANEOUS PROCESSES	CONSTRUCTION AND DEMOLITION	0.00	0.00	0.00	0.00	0.00	1.80	0.88
MISCELLANEOUS PROCESSES	PAVED ROAD DUST	0.00	0.00	0.00	0.00	0.00	4.18	1.91
MISCELLANEOUS PROCESSES	UNPAVED ROAD DUST	0.00	0.00	0.00	0.00	0.00	12.90	7.67
MISCELLANEOUS PROCESSES	FUGITIVE WINDBLOWN DUST	0.00	0.00	0.00	0.00	0.00	17.37	7.91
MISCELLANEOUS PROCESSES	FIRES	0.01	0.00	0.05	0.00	0.00	0.01	0.01
MISCELLANEOUS PROCESSES	WASTE BURNING AND DISPOSAL	2.94	1.68	18.64	0.18	0.00	2.70	2.65
MISCELLANEOUS PROCESSES	UTILITY EQUIPMENT	0.00	0.00	0.00	0.00	0.00	0.00	0.00
MISCELLANEOUS PROCESSES	COOKING	0.02	0.02	0.00	0.00	0.00	0.07	0.05

1997 EMISSION INVENTORY FOR KINGS COUNTY

CATEGORY	SUBCATEGORY	EMISSIONS (TONS PER DAY) TOG	ROG	CO	NOX	SOX	PM	PM10
MISCELLANEOUS PROCESSES	OTHER (MISCELLANEOUS PROCESSES)	0.00	0.00	0.00	0.00	0.00	0.00	0.00
ON-ROAD MOTOR VEHICLES	LIGHT DUTY PASSENGER (LDA)	3.93	3.58	30.85	2.47	0.03	0.08	0.08
ON-ROAD MOTOR VEHICLES	LIGHT AND MEDIUM DUTY TRUCKS	0.00	0.00	0.00	0.00	0.00	0.00	0.00
ON-ROAD MOTOR VEHICLES	LIGHT DUTY TRUCKS - 1 (LDT1)	1.31	1.20	12.95	0.92	0.01	0.02	0.02
ON-ROAD MOTOR VEHICLES	LIGHT DUTY TRUCKS - 2 (LDT2)	0.95	0.85	9.90	1.22	0.01	0.05	0.05
ON-ROAD MOTOR VEHICLES	MEDIUM DUTY TRUCKS (MDV)	0.99	0.90	10.39	0.91	0.01	0.03	0.03
ON-ROAD MOTOR VEHICLES	HEAVY DUTY GAS TRUCKS (ALL)	0.00	0.00	0.00	0.00	0.00	0.00	0.00
ON-ROAD MOTOR VEHICLES	LIGHT HEAVY DUTY GAS TRUCKS - 1 (LHDV1)	0.61	0.56	9.41	0.40	0.00	0.00	0.00
ON-ROAD MOTOR VEHICLES	LIGHT HEAVY DUTY GAS TRUCKS - 2 (LHDV2)	0.03	0.02	0.30	0.05	0.00	0.00	0.00
ON-ROAD MOTOR VEHICLES	MEDIUM HEAVY DUTY GAS TRUCKS (MHDV)	0.45	0.41	7.86	0.25	0.00	0.00	0.00
ON-ROAD MOTOR VEHICLES	HEAVY HEAVY DUTY GAS TRUCKS (HHDV)	0.21	0.19	3.86	0.09	0.00	0.00	0.00
ON-ROAD MOTOR VEHICLES	HEAVY DUTY DIESEL TRUCKS (ALL)	0.00	0.00	0.00	0.00	0.00	0.00	0.00
ON-ROAD MOTOR VEHICLES	LIGHT HEAVY DUTY DIESEL TRUCKS - 1 (LHDV1)	0.00	0.00	0.01	0.03	0.00	0.00	0.00
ON-ROAD MOTOR VEHICLES	LIGHT HEAVY DUTY DIESEL TRUCKS - 2 (LHDV2)	0.00	0.00	0.01	0.06	0.00	0.00	0.00
ON-ROAD MOTOR VEHICLES	MEDIUM HEAVY DUTY DIESEL TRUCKS (MHDV)	0.04	0.03	0.23	0.65	0.02	0.03	0.03
ON-ROAD MOTOR VEHICLES	HEAVY HEAVY DUTY DIESEL TRUCKS (HHDV)	0.30	0.26	1.27	2.49	0.08	0.13	0.13
ON-ROAD MOTOR VEHICLES	MOTORCYCLES (MCY)	0.11	0.10	0.42	0.02	0.00	0.00	0.00
ON-ROAD MOTOR VEHICLES	HEAVY DUTY DIESEL URBAN BUSES (UB)	0.01	0.01	0.03	0.11	0.00	0.00	0.00
ON-ROAD MOTOR VEHICLES	HEAVY DUTY GAS URBAN BUSES (UB)	0.00	0.00	0.10	0.00	0.00	0.00	0.00
ON-ROAD MOTOR VEHICLES	SCHOOL BUSES (SB)	0.03	0.02	0.57	0.10	0.00	0.00	0.00
ON-ROAD MOTOR VEHICLES	MOTOR HOMES (MH)	0.03	0.03	0.48	0.07	0.00	0.00	0.00
ON-ROAD MOTOR VEHICLES	OTHER (ON-ROAD MOTOR VEHICLES)	0.00	0.00	0.00	0.00	0.00	0.00	0.00
OTHER MOBILE SOURCES	AIRCRAFT	3.84	3.42	7.88	0.96	0.00	0.21	0.21
OTHER MOBILE SOURCES	TRAINS	0.01	0.01	0.03	0.24	0.00	0.00	0.00
OTHER MOBILE SOURCES	SHIPS AND COMMERCIAL BOATS	0.00	0.00	0.00	0.00	0.00	0.00	0.00
OTHER MOBILE SOURCES	RECREATIONAL BOATS	0.05	0.05	0.16	0.00	0.00	0.00	0.00
OTHER MOBILE SOURCES	OFF-ROAD RECREATIONAL VEHICLES	0.12	0.11	0.71	0.01	0.00	0.00	0.00
OTHER MOBILE SOURCES	OFF-ROAD EQUIPMENT	0.36	0.31	3.36	0.90	0.09	0.06	0.06
OTHER MOBILE SOURCES	FARM EQUIPMENT	0.56	0.50	3.32	3.74	0.44	0.24	0.24
OTHER MOBILE SOURCES	FUEL STORAGE AND HANDLING	0.00	0.00	0.00	0.00	0.00	0.00	0.00
OTHER MOBILE SOURCES	OTHER (OTHER MOBILE SOURCES)	0.00	0.00	0.00	0.00	0.00	0.00	0.00
NATURAL SOURCES	GEOGENIC SOURCES	0.01	0.01	0.00	0.00	0.00	0.00	0.00
NATURAL SOURCES	WILDFIRES	0.00	0.00	0.00	0.00	0.00	0.00	0.00
NATURAL SOURCES	WINDBLOWN DUST	0.00	0.00	0.00	0.00	0.00	0.00	0.00
NATURAL SOURCES	OTHER (NATURAL SOURCES)	0.00	0.00	0.00	0.00	0.00	0.00	0.00
ALL SOURCES		121.33	29.49	126.67	26.77	1.45	70.47	36.42
	PM10 - FUEL COMBUSTION							0.78
	PM10 - MOBILE SOURCES							0.83
	PM10 - ALL SOURCES							36.42

1998 EMISSION INVENTORY FOR KINGS COUNTY

CATEGORY	SUBCATEGORY	EMISSIONS (TONS PER DAY) TOG	ROG	CO	NOX	SOX	PM	PM10
FUEL COMBUSTION	ELECTRIC UTILITIES	0.00	0.00	0.00	0.00	0.00	0.00	0.00
FUEL COMBUSTION	COGENERATION	0.02	0.00	0.06	0.07	0.19	0.02	0.01
FUEL COMBUSTION	OIL AND GAS PRODUCTION (COMBUSTION)	0.24	0.02	0.09	0.63	0.01	0.01	0.01
FUEL COMBUSTION	PETROLEUM REFINING (COMBUSTION)	0.00	0.00	0.00	0.00	0.00	0.00	0.00
FUEL COMBUSTION	MANUFACTURING AND INDUSTRIAL	0.03	0.02	0.64	5.38	0.22	0.10	0.06
FUEL COMBUSTION	FOOD AND AGRICULTURAL PROCESSING	0.21	0.18	1.08	3.67	0.33	0.39	0.36
FUEL COMBUSTION	SERVICE AND COMMERCIAL	0.02	0.02	0.42	1.72	0.03	0.03	0.03
FUEL COMBUSTION	OTHER (FUEL COMBUSTION)	0.00	0.00	0.00	0.00	0.00	0.00	0.00
WASTE DISPOSAL	SEWAGE TREATMENT	0.00	0.00	0.00	0.00	0.00	0.00	0.00
WASTE DISPOSAL	LANDFILLS	0.06	0.04	0.00	0.00	0.00	0.00	0.00
WASTE DISPOSAL	INCINERATORS	0.00	0.00	0.00	0.00	0.00	0.00	0.00
WASTE DISPOSAL	SOIL REMEDIATION	0.00	0.00	0.00	0.00	0.00	0.00	0.00
WASTE DISPOSAL	OTHER (WASTE DISPOSAL)	2.11	1.01	0.00	0.00	0.00	0.00	0.00
CLEANING AND SURFACE COATINGS	LAUNDERING	0.02	0.00	0.00	0.00	0.00	0.00	0.00
CLEANING AND SURFACE COATINGS	DEGREASING	0.32	0.29	0.00	0.00	0.00	0.00	0.00
CLEANING AND SURFACE COATINGS	COATINGS AND RELATED PROCESS SOLVENTS	0.38	0.36	0.00	0.00	0.00	0.00	0.00
CLEANING AND SURFACE COATINGS	PRINTING	0.03	0.03	0.00	0.00	0.00	0.00	0.00
CLEANING AND SURFACE COATINGS	ADHESIVES AND SEALANTS	0.05	0.04	0.00	0.00	0.00	0.00	0.00
CLEANING AND SURFACE COATINGS	OTHER (CLEANING AND SURFACE COATINGS)	0.00	0.00	0.00	0.00	0.00	0.00	0.00
PETROLEUM PRODUCTION AND MARKETING	OIL AND GAS PRODUCTION	0.71	0.40	0.00	0.01	0.00	0.00	0.00
PETROLEUM PRODUCTION AND MARKETING	PETROLEUM REFINING	0.00	0.00	0.00	0.00	0.00	0.00	0.00
PETROLEUM PRODUCTION AND MARKETING	PETROLEUM MARKETING	0.17	0.17	0.00	0.00	0.00	0.00	0.00
PETROLEUM PRODUCTION AND MARKETING	OTHER (PETROLEUM PRODUCTION AND MARKETING)	0.00	0.00	0.00	0.00	0.00	0.00	0.00
INDUSTRIAL PROCESSES	CHEMICAL	0.14	0.12	0.00	0.00	0.00	0.00	0.00
INDUSTRIAL PROCESSES	FOOD AND AGRICULTURE	1.16	0.94	0.00	0.00	0.00	1.76	1.01
INDUSTRIAL PROCESSES	MINERAL PROCESSES	0.00	0.00	0.00	0.00	0.00	0.13	0.09
INDUSTRIAL PROCESSES	METAL PROCESSES	0.00	0.00	0.00	0.00	0.00	0.00	0.00
INDUSTRIAL PROCESSES	WOOD AND PAPER	0.00	0.00	0.00	0.00	0.00	0.01	0.01
INDUSTRIAL PROCESSES	GLASS AND RELATED PRODUCTS	0.00	0.00	0.00	0.00	0.00	0.00	0.00
INDUSTRIAL PROCESSES	ELECTRONICS	0.00	0.00	0.00	0.00	0.00	0.00	0.00
INDUSTRIAL PROCESSES	OTHER (INDUSTRIAL PROCESSES)	0.00	0.00	0.00	0.00	0.00	0.00	0.00
SOLVENT EVAPORATION	CONSUMER PRODUCTS	1.19	1.00	0.00	0.00	0.00	0.00	0.00
SOLVENT EVAPORATION	ARCHITECTURAL COATINGS AND RELATED PROCESS SOLVENTS	0.45	0.43	0.00	0.00	0.00	0.00	0.00
SOLVENT EVAPORATION	PESTICIDES/FERTILIZERS	2.20	2.20	0.00	0.00	0.00	0.00	0.00
SOLVENT EVAPORATION	ASPHALT PAVING / ROOFING	0.08	0.07	0.00	0.00	0.00	0.00	0.00
SOLVENT EVAPORATION	REFRIGERANTS	0.00	0.00	0.00	0.00	0.00	0.00	0.00
SOLVENT EVAPORATION	OTHER (SOLVENT EVAPORATION)	0.00	0.00	0.00	0.00	0.00	0.00	0.00
MISCELLANEOUS PROCESSES	RESIDENTIAL FUEL COMBUSTION	0.31	0.13	1.75	0.09	0.00	0.29	0.27
MISCELLANEOUS PROCESSES	FARMING OPERATIONS	93.93	7.51	0.00	0.00	0.00	27.84	12.66
MISCELLANEOUS PROCESSES	CONSTRUCTION AND DEMOLITION	0.00	0.00	0.00	0.00	0.00	1.85	0.91
MISCELLANEOUS PROCESSES	PAVED ROAD DUST	0.00	0.00	0.00	0.00	0.00	4.26	1.95
MISCELLANEOUS PROCESSES	UNPAVED ROAD DUST	0.00	0.00	0.00	0.00	0.00	12.85	7.64
MISCELLANEOUS PROCESSES	FUGITIVE WINDBLOWN DUST	0.00	0.00	0.00	0.00	0.00	17.37	7.91
MISCELLANEOUS PROCESSES	FIRES	0.01	0.00	0.05	0.00	0.00	0.01	0.01
MISCELLANEOUS PROCESSES	WASTE BURNING AND DISPOSAL	3.09	1.76	19.67	0.18	0.00	2.86	2.81
MISCELLANEOUS PROCESSES	UTILITY EQUIPMENT	0.00	0.00	0.00	0.00	0.00	0.00	0.00
MISCELLANEOUS PROCESSES	COOKING	0.02	0.02	0.00	0.00	0.00	0.07	0.05

1998 EMISSION INVENTORY FOR KINGS COUNTY

CATEGORY	SUBCATEGORY	EMISSIONS (TONS PER DAY) TOG	ROG	CO	NOX	SOX	PM	PM10
MISCELLANEOUS PROCESSES	OTHER (MISCELLANEOUS PROCESSES)	0.00	0.00	0.00	0.00	0.00	0.00	0.00
ON-ROAD MOTOR VEHICLES	LIGHT DUTY PASSENGER (LDA)	3.71	3.37	29.09	2.37	0.03	0.08	0.08
ON-ROAD MOTOR VEHICLES	LIGHT AND MEDIUM DUTY TRUCKS	0.00	0.00	0.00	0.00	0.00	0.00	0.00
ON-ROAD MOTOR VEHICLES	LIGHT DUTY TRUCKS - 1 (LDT1)	1.25	1.14	12.30	0.88	0.01	0.02	0.02
ON-ROAD MOTOR VEHICLES	LIGHT DUTY TRUCKS - 2 (LDT2)	0.94	0.83	9.56	1.22	0.01	0.05	0.05
ON-ROAD MOTOR VEHICLES	MEDIUM DUTY TRUCKS (MDV)	0.97	0.87	9.98	0.92	0.01	0.03	0.03
ON-ROAD MOTOR VEHICLES	HEAVY DUTY GAS TRUCKS (ALL)	0.00	0.00	0.00	0.00	0.00	0.00	0.00
ON-ROAD MOTOR VEHICLES	LIGHT HEAVY DUTY GAS TRUCKS - 1 (LHDV1)	0.55	0.50	8.39	0.38	0.00	0.00	0.00
ON-ROAD MOTOR VEHICLES	LIGHT HEAVY DUTY GAS TRUCKS - 2 (LHDV2)	0.02	0.02	0.27	0.04	0.00	0.00	0.00
ON-ROAD MOTOR VEHICLES	MEDIUM HEAVY DUTY GAS TRUCKS (MHDV)	0.40	0.36	7.02	0.23	0.00	0.00	0.00
ON-ROAD MOTOR VEHICLES	HEAVY HEAVY DUTY GAS TRUCKS (HHDV)	0.18	0.16	3.31	0.08	0.00	0.00	0.00
ON-ROAD MOTOR VEHICLES	HEAVY DUTY DIESEL TRUCKS (ALL)	0.00	0.00	0.00	0.00	0.00	0.00	0.00
ON-ROAD MOTOR VEHICLES	LIGHT HEAVY DUTY DIESEL TRUCKS - 1 (LHDV1)	0.00	0.00	0.01	0.03	0.00	0.00	0.00
ON-ROAD MOTOR VEHICLES	LIGHT HEAVY DUTY DIESEL TRUCKS - 2 (LHDV2)	0.00	0.00	0.01	0.06	0.00	0.00	0.00
ON-ROAD MOTOR VEHICLES	MEDIUM HEAVY DUTY DIESEL TRUCKS (MHDV)	0.04	0.03	0.22	0.62	0.02	0.03	0.03
ON-ROAD MOTOR VEHICLES	HEAVY HEAVY DUTY DIESEL TRUCKS (HHDV)	0.26	0.23	1.11	2.25	0.07	0.11	0.11
ON-ROAD MOTOR VEHICLES	MOTORCYCLES (MCY)	0.08	0.08	0.34	0.01	0.00	0.00	0.00
ON-ROAD MOTOR VEHICLES	HEAVY DUTY DIESEL URBAN BUSES (UB)	0.01	0.01	0.03	0.11	0.00	0.00	0.00
ON-ROAD MOTOR VEHICLES	HEAVY DUTY GAS URBAN BUSES (UB)	0.00	0.00	0.10	0.00	0.00	0.00	0.00
ON-ROAD MOTOR VEHICLES	SCHOOL BUSES (SB)	0.02	0.02	0.50	0.10	0.00	0.00	0.00
ON-ROAD MOTOR VEHICLES	MOTOR HOMES (MH)	0.03	0.02	0.46	0.06	0.00	0.00	0.00
ON-ROAD MOTOR VEHICLES	OTHER (ON-ROAD MOTOR VEHICLES)	0.00	0.00	0.00	0.00	0.00	0.00	0.00
OTHER MOBILE SOURCES	AIRCRAFT	3.84	3.42	7.88	0.96	0.00	0.21	0.21
OTHER MOBILE SOURCES	TRAINS	0.01	0.01	0.03	0.23	0.00	0.00	0.00
OTHER MOBILE SOURCES	SHIPS AND COMMERCIAL BOATS	0.00	0.00	0.00	0.00	0.00	0.00	0.00
OTHER MOBILE SOURCES	RECREATIONAL BOATS	0.05	0.05	0.16	0.00	0.00	0.00	0.00
OTHER MOBILE SOURCES	OFF-ROAD RECREATIONAL VEHICLES	0.12	0.11	0.68	0.01	0.00	0.00	0.00
OTHER MOBILE SOURCES	OFF-ROAD EQUIPMENT	0.35	0.30	3.34	0.90	0.09	0.06	0.06
OTHER MOBILE SOURCES	FARM EQUIPMENT	0.55	0.49	3.28	3.68	0.44	0.23	0.23
OTHER MOBILE SOURCES	FUEL STORAGE AND HANDLING	0.00	0.00	0.00	0.00	0.00	0.00	0.00
OTHER MOBILE SOURCES	OTHER (OTHER MOBILE SOURCES)	0.00	0.00	0.00	0.00	0.00	0.00	0.00
NATURAL SOURCES	GEOGENIC SOURCES	0.01	0.01	0.00	0.00	0.00	0.00	0.00
NATURAL SOURCES	WILDFIRES	0.00	0.00	0.00	0.00	0.00	0.00	0.00
NATURAL SOURCES	WINDBLOWN DUST	0.00	0.00	0.00	0.00	0.00	0.00	0.00
NATURAL SOURCES	OTHER (NATURAL SOURCES)	0.00	0.00	0.00	0.00	0.00	0.00	0.00
ALL SOURCES		120.34	28.79	121.83	26.89	1.46	70.67	36.61

PM10 - FUEL COMBUSTION	0.74
PM10 - MOBILE SOURCES	0.82
PM10 - ALL SOURCES	36.61

Appendix C

Cultural Resources

Note: This appendix has been submitted under a separate cover to the CEC with an application to request confidentiality pursuant to Title 20, California Code of Regulations, Section 2501 et seq.

Appendix D

Land Use

Appendix D: Land Use

Contents

D1 Property Owners within 1,000 Feet of the GWF Henrietta Peaker Project and within 500 Feet of Associated Linear Facilities

D2 Discretionary Reviews within the Past 18 Months

D3 Williamson Act Contract Cancellation

D4 Parcel Map Waiver

D5 Natural Gas Line Easement

Appendix D1

Property Owners within 1,000 Feet of the GWF Henrietta Peaker Project and within 500 Feet of Associated Linear Facilities

Property Owners within 1,000 Feet of the GWF Henrietta Peaker Project and within 500 Feet of Associated Linear Facilities

Assessor's Parcel No.	Property Owner	Address
024-190-065 APN for project site TBD	John D. & Sally L. Oliveira	8519 24th Avenue Lemoore, CA 93245
024-190-002	Pacific Gas & Electric	One Market, Spear Tower, Suite 2400 San Francisco, CA 94105
024-190-023	John D. & Sally L. Oliveira	8519 24th Avenue Lemoore, CA 93245
024-190-066	John D. & Sally L. Oliveira	8519 24th Avenue Lemoore, CA 93245
024-190-069	Newstar Fresh Foods LLC	126 Sun Street Salinas, CA 93901
024-260-004	Nancy L. Oliveira Revocable Trust	9235 24th Avenue Lemoore, CA 93245
024-260-018	John D. & Sally L. Oliveira	8519 24th Avenue Lemoore, CA 93245
024-270-006	Nancy L. Oliveira Revocable Trust	9235 24th Avenue Lemoore, CA 93245
024-270-007	Nancy L. Oliveira Revocable Trust	9235 24th Avenue Lemoore, CA 93245
024-270-008	Nancy L. Oliveira Revocable Trust	9235 24th Avenue Lemoore, CA 93245
024-270-009	Jack R. Clinton, et al	1718 Marion Drive Glendale, CA 91205
024-270-010	Nancy L. Oliveira Revocable Trust	9235 24th Avenue Lemoore, CA 93245
024-270-011	Robert & Eleanor M Sawyer	Star Rt, 1 Box 273 Posey, CA 93260
024-270-012	Dr. Seymour, et al	716 N. Palm Drive Beverly Hills, CA 90212
024-270-013	Helen J. Carey	2 Isabella Avenue Atherton, CA 94027
024-270-014	Arthur B. Moss	37586 Medjool Avenue Palm Desert, CA 92211
024-270-015	Nancy L. Oliveira Revocable Trust	9235 24th Avenue Lemoore, CA 93245
024-270-016	Nancy L. Oliveira Revocable Trust	9235 24th Avenue Lemoore, CA 93245
026-001-038	West Grand Partners	724 S. Lemoore Avenue Lemoore, CA 93245

Assessor's Parcel No.	Property Owner	Address
026-001-041	John D. & Sally L. Oliveira	8519 24th Avenue Lemoore, CA 93245
026-001-042	West Grand Partners	724 S. Lemoore Avenue Lemoore, CA 93245
026-020-010	Rancho Naranja	23311 Newton Avenue Stratford, CA 93266
026-020-015	John D. & Sally L. Oliveira	8519 24th Avenue Lemoore, CA 93245
026-020-016	K J C Farms	23311 Newton Avenue Stratford, CA 93266

Appendix D2

Discretionary Reviews within the Past 18 Months

Discretionary Reviews within the Past 18 Months

Proponent	Location	Description
Industrial		
Tim Quinn/Nextel Comm	038-240-050	Communications site (unmanned) radio antenna
AT&T Wireless/Liz Johnson	8459 Kansas Ave	200-foot Cellular communication tower & lightning rod & prefabricated equipment shelter
Central Wireless Partners	13758 18th Ave, Lemoore	Wireless Communication Facility
SBA Properties, Inc.	050-210-014	Construct 250' self support tower for wireless communication
Jimmy Dean McIntyre	028-120-018	Surface Mining
TowerCom West Coast/LLC/ Clann	10522 15th Ave	Unmanned wireless communication facility
	Residential	
Ruben Salinas		Mobile home for elderly relations
Public		
Housing Authority/Co of Kings	435 9th St, Kettleman City	Daycare/Comm Multi-use bldg.
Kiononia	12536 Hanford, Armona	Church/Christian school
Commercial		
Waukena Flying Service/ Dennis Bernsen	028-270-031 & 032	Airport for commercial crop dusting
Ali "Mike" Shaw	14020 Grangeville	Existing market/adding fueling facility
Holmes-Jones, Gerald & Stephanie, Dr.		Veterinary Office
K. P. Sidhu, Inc.	13981 Ada Street	Sales of Alcohol
Agricultural		
Delphy/Gerdes/Baker Comm	7480 Hanford, Armona	Renovation of existing dead livestock management facility
Darin Clagg	18039 Lakeview,	Cattle Feed Lot

Proponent	Location	Description
	Stratford	
Robin Martella	805 acres	2 Dairy Projects each with 200 milk cows and 1050 animal units in replacements
James S. Lowe	762 Kevin Ct, Lemoore	Farming & Feed Lot with Reservoir
Manuel L. Coelho	6873 20th Ave, Lemoore	Ranch for 1225 heifers
Kings Fertilizer Corp.	20431 Lincoln Ave	Fertilizer blending facility
Sanchez Brothers Farming	11808 12th Ave	Extension of Existing Dairy
Pires Farms	21734 Fremont Ave	Land leveling/ Borrow pit
Richard Westra	7305 Jersey Ave	New Dairy
Elick/Hewett/Fialho	7380 18th Ave	Establish Small aircraft private landing strip
Arioto-Bosio Trust		Dairy site w/ 3 employee housing
Arioto-Bosio Trust		Dairy site w/3 employee housing
E & B Trucking, Inc.	12451 12th Avenue	Storage yard for gravel/stone
Vineyard Oak Farms/Elick	7380 18th Ave	Small aircraft private landing strip.
Tulare Lake Drainage District	1107 Norboe Ave, Corcoran	Flood Storage, drainage facility

Appendix D3

Williamson Act Contract Cancellation

BEFORE THE BOARD OF SUPERVISORS
COUNTY OF KINGS, STATE OF CALIFORNIA

IN THE MATTER OF TENTATIVE	)	RESOLUTION NO. 01-081
CANCELLATION OF LAND	)	
CONSERVATION CONTRACT NO. 1853	)	Re: CDBG APPLICATION

WHEREAS, John and Sally Oliveira are the present owners of property identified as Assessor's Parcel Number 024-190-065; and

WHEREAS, said parcel is located within Agricultural Preserve No. 712/83 and subject to Land Conservation Contract No. 1853; and

WHEREAS, on May 30, 2001, the owners filed a petition to cancel a portion of Land Conservation Contract No. 1853 for said property; and

WHEREAS, on July 2, 2001, a Notice of Partial Non-Renewal of Land Conservation Contract No. 1853 was recorded for said parcel; and

WHEREAS, pursuant to California Government Code Section 51284, this Board of Supervisors held a public hearing on July 31, 2001, where evidence was received from Kings County Staff, the applicant and interested persons in attendance; and

WHEREAS, pursuant to Government Code Section 51283, the County Assessor has certified to this Board the cancellation valuation of such property for the purpose of determining the cancellation fee.

NOW, THEREFORE BE IT RESOLVED AS FOLLOWS:

1. The Board finds that the cancellation of Land Conservation Contract No. 1853 is in the public interest and makes the following sub-findings:

   a) Other public concerns substantially outweigh the objectives of Title 5, Division 1, Part 1, Chapter 7 of the California Government Code beginning with Section 51200.

   Evidence: The purpose of the cancellation is to allow GWF Power Systems to construct an electrical generation plant. At this time, the State of California is facing a severe electricity shortage and the Governor has declared a statewide emergency. The state is interested in the construction of as many generation facilities as possible. This parcel is contiguous to a Pacific Gas and Electric substation and is a logical place to construct such a facility.

   The Board finds that public concerns substantially outweigh the objectives of the Williamson Act because it is in the public interest to allow the construction of an electrical generation facility at this particular location.

b) There is no proximate non-contracted land which is both available and suitable for the use to which it is proposed the contracted land be put, or, that development of the contracted land would provide more contiguous patterns of urban development than development of proximate non-contracted land.

Evidence: The parcel is located on the east side of 25th Avenue south of Highway 198. There is a non-contracted parcel near the site but it is located approximately a quarter mile east of the Pacific Gas & Electric sub-station. The power generation facility will need to be located adjacent to the sub-station in order to distribute power to the system.

2. The Board also makes the following findings:

a) The landowner's petition shall be accompanied by a proposal for a specific alternative use of the land. The proposal for the specific alternative use shall list those governmental agencies known by the landowner to have permit authority related to the proposed alternative use.

Evidence: The alternative use proposed is to develop the parcel into an electrical generation plant. The lead agency for the application is the California Energy Commission. The only action Kings County is required to take is to cancel the Williamson Act contract and complete a parcel split. No other governmental agencies are known to have permit authority over this project.

3. Based upon the above findings, this Board of Supervisors hereby consents to and tentatively approves the cancellation of a portion of Land Conservation Contract No.1853, affecting a portion of the parcel known as Assessor's Parcel Number 024-190-065.

4. Based upon the cancellation valuation of the property determined by the County Board of Supervisors under Government Code Section 51203 and the evidence in the record, this Board determines and certifies to the County Auditor that the cancellation value of the parcel is $250,000 and the cancellation fee is $31,250. The cancellation fee shall be paid to the County Treasurer within one year of the recording of the Certificate of Tentative Cancellation of a portion of Land Conservation Contract No. 1853. The fee shall be paid before the Clerk of the Board records the final Certificate of Cancellation.

5. The owner shall also pay all cancellation processing fees to the County before the Clerk of the Board records the final Certificate of Cancellation.

6. Before the final cancellation is recorded the Kings County Board of Supervisors must review and certify as a responsible agency the final California Environmental Quality Act document prepared by the California Energy Commission.

7. The Clerk to the Board is hereby directed to record in the office of the Recorder of the County of Kings a Certificate of Tentative Cancellation as required by the provisions of California Government Code Section 51283.4, said certificate to include the conditions and contingencies found by this Board to be appropriate herein above.

The foregoing Resolution was approved on a motion by Supervisor Neves, seconded by Supervisor Rachford, at a regular meeting of the Kings County Board of Supervisors, held on the 31st day of July, 2001, by the following roll call vote:

AYES: Neves, Rachford, Barba, Taylor, Oliveira – Aye.
NOES: None.
ABSENT: None.
ABSTAIN: None.

/s/ *Tony Oliveira*
Tony Oliveira, Chairman

WITNESS my hand and seal this 31st day of July, 2001.

/s/ *Rose Martinez*
Clerk of Said Board of Supervisors

h:ord-gp/wmson/gwf-canc/tent-resolution.doc

STATE OF CALIFORNIA,)
COUNTY OF KINGS) ss.

I, ROSE MARTINEZ, Clerk of the Board of Supervisors of said County and State, do hereby certify the foregoing to be a full, true and correct copy of the original thereof on file in my office.

Witness my hand and Seal of said Board, this 31ST day of JULY 20 01

ROSE MARTINEZ
Clerk of the Board of Supervisors

By _____ Deputy Clerk

Appendix D4

Parcel Map Waiver

RECORDING REQUESTED BY

ZUMWALT-HANSEN, INC.

AND WHEN RECORDED MAIL TO:

KINGS COUNTY PLANNING
KINGS GOVERNMENT CENTER
HANFORD, CA 93230

Doc Nbr: 0115417
Doc Type: 22

Titles: 01 Pages: 004
Fees: 16.00
Taxes: 0.00
Paid: $16.00

Kings County Clerk Recorder 08/06/2001
George J Misner 14:11:01

r007

SPACE ABOVE THIS LINE FOR RECORDER'S USE

CERTIFICATE OF PARCEL MAP WAIVER
FOR TENTATIVE PARCEL MAP NO. 01-10

This document is to certify that JOHN D. OLIVEIRA AND SALLY L. OLIVEIRA are the owners of that real property situated in the County of Kings, State of California, more particularly described as follows:

The Northeast Quarter and the Northwest Quarter of Section 34, Township 19 South, Range 19 East, Mount Diablo Base and Meridian, in the County of Kings, State of California, according to United State Government Township Plat thereof;

EXCEPTING therefrom the interest in and to the following described property conveyed to the County of Kings for road purposes by deed recorded May 18, 1936 in Book 151 at Page 7 of Official Records; said land is described as follows:

A strip of land 80 feet in width lying 40 feet on each side of the following described centerline:

BEGINNING at a point on the East section line and 439.1 feet North of the East Quarter corner of Section 34, Township 19 South, Range 19 East, Mount Diablo Base and Meridian;
Thence South 45°56'30" West, 611.0 feet to a point on the South line of the Northeast Quarter and 453.8 feet West of the East Quarter corner of said Section 34;

ALSO EXCEPTING therefrom the West 30 feet of said Northwest Quarter;

ALSO EXCEPTING therefrom that portion taken by the United States of America by declaration of taking recorded October 27, 1972 in Book 998 at Page 1 of Official Records as Document No. 5068;

AND ALSO EXCEPTING and reserving unto the herein grantors and undivided ½ interest of their present interest in and to all oil, gas, minerals and other hydrocarbon substances in and under said land, as excepted and reserved in deed dated December 30, 1980, executed by John Tashjian and Ilene Tashjian, Husband and Wife, to Nancy L. Oliveira and Sally Oliveira, both married women, each as to an undivided ½ interest, and recorded December 31, 1980 in Book 1190 at Page 544, Official Records, as Document No. 15190.

The above described real property is proposed for division along those division lines set forth in Exhibit "A" attached hereto and described as follows:

2

The North Half of the Northwest Quarter of the Northwest Quarter of Section 34, Township 19 South, Range 19 East, Mount Diablo Base and Meridian, in the County of Kings, State of California.

PROFESSIONAL LAND SURVEYOR
JAMES F. HANSEN
Exp. 9-30-01
No. 4375
STATE OF CALIFORNIA

KINGS COUNTY ADVISORY AGENCY STATEMENT

On August 6, 2001, the Kings County Planning Director, acting as Division one of the Kings County Advisory Agency, approved Tentative Parcel Map No. 01-10, waiving a parcel map under provisions of Article VI, Section 21-92 of the Kings County Land Division Ordinance (Chapter 21 of the Kings County Code of Ordinances).

8/6/01
Dated

William R. Zumwalt
Kings County Planning Director

KINGS COUNTY SURVEYOR'S STATEMENT

This certificate conforms with the requirements of the subdivision map act and local ordinance.

8/6/01
Dated

Harry W. Verheul, R.C.E. 16401
County Surveyor

REGISTERED PROFESSIONAL ENGINEER
H. W. VERHEUL
No. 16401
Exp. 6-30-05
CIVIL
STATE OF CALIFORNIA

KINGS COUNTY TREASURER-TAX COLLECTOR'S STATEMENT

This is to certify that the provisions of Article 8 of Chapter 4 of the Government Code have been complied with regarding deposits.

July 25, 2001
Dated

Vee-Jay Brann by Isabel Klock deputy
Vee-Jay Brann
Kings County Treasurer/Tax Collector

SUBDIVIDER STATEMENT

The undersigned being parties having record title interest in the land within this subdivision hereby consent to the preparation and recordation of this certificate:

Signature: _____ Date: 8-3-01
John D. Oliveira

Signature: _____ Date: 8-3-01
Sally L. Oliveira

NOTARY STATEMENT
State of California, County of KINGS, on AUGUST 3, 2001, before me, MARY K. JONES a notary public, appeared JOHN D. OLIVEIRA AND SALLY L. OLIVEIRA, personally known to me (or proved to me on the basis of satisfactory evidence) to be the person(s) whose name(s) is/are subscribed to the within instrument and acknowledged to me that he/she/they executed the same in his/her/their authorized capacity(ies), and that by his/her/their signature(s) on the instrument the person(s), or the entity upon behalf of which the person(s) acted, executed the instrument.

WITNESS my hand and official seal.

Signature: _____

MARY K. JONES
COMM. #1298097
NOTARY PUBLIC - CALIFORNIA
KINGS COUNTY
My Comm. Expires Apr. 2, 2005

EXHIBIT "A"

TENTATIVE PARCEL MAP

OF

A PORTION OF THE NORTH HALF OF SECTION 34, T.19S., R. 18E, M.D.B. & M., IN THE COUNTY OF KINGS, STATE OF CALIFORNIA.

OWNERS
John O. Dilworth
8518 24th Ave.
Lemoore, Ca. 93245

APPLICANT
GWF Power Systems
Attn. Ray Jones
10598 Idaho Ave.
Hanford, Ca. 93230

GENERAL INFORMATION

EXISTING ZONE	AX 40
EXISTING USE	AG
PROPOSED USE	PI ELECTRIC GENERATING FACILITY P2 AG
SEWER	SEPTIC SYSTEM
WATER	DOMESTIC WELL
A.P.N.	024-180-065

NOTE:
Request Waiver of Parcel Map Per Sec. 21-82-(1) of Kings Co. Sub. Ord.

PROFESSIONAL LAND SURVEYOR
JAMES F. HANSEN
Exp. 9-30-01
No. 4375
STATE OF CALIFORNIA

NORTH
SCALE: 1"=300'

VICINITY MAP
NO SCALE

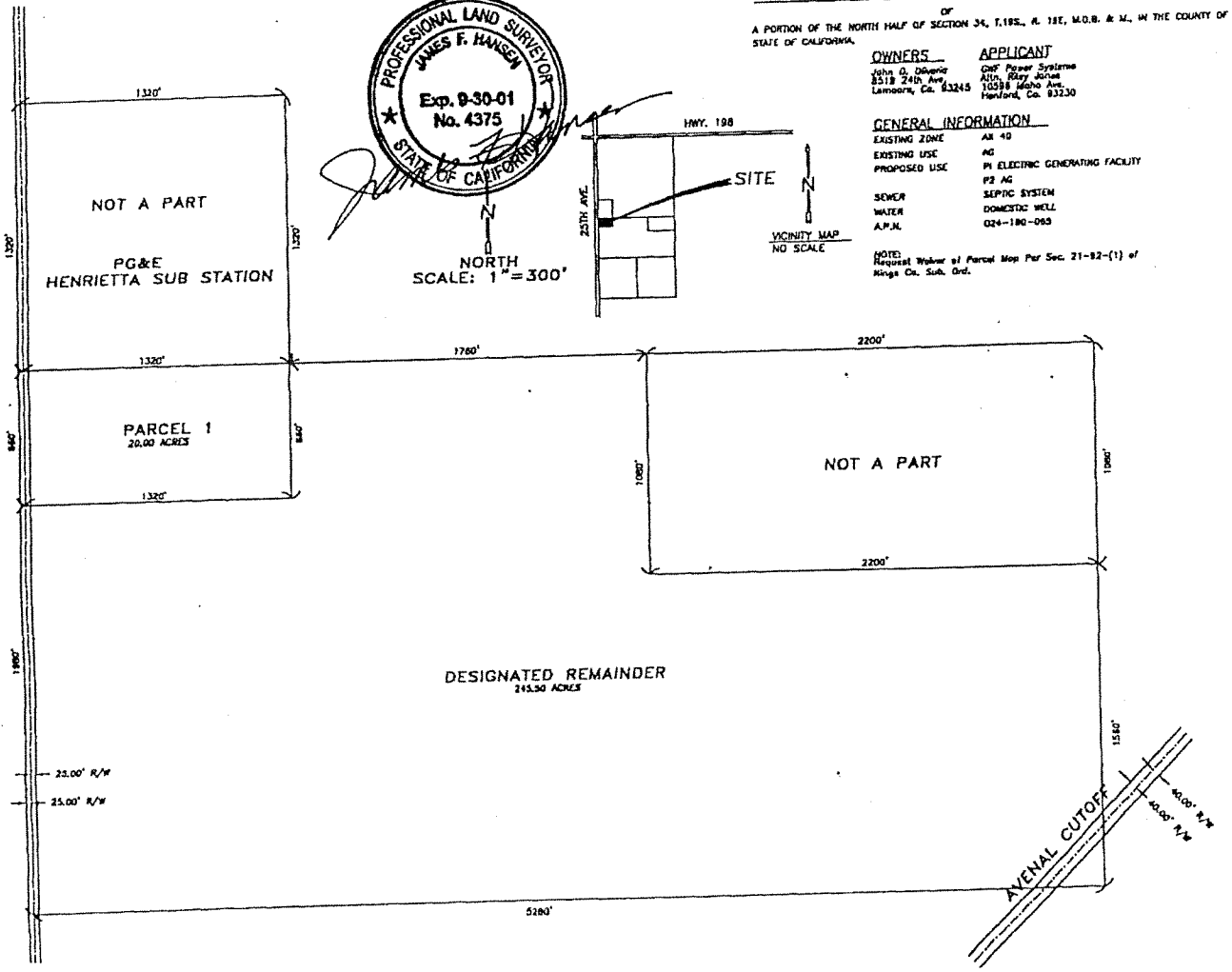

TENATIVE PARCEL MAP
for
GWF POWER SYSTEMS

ZUMWALT
HANSEN

END OF DOCUMENT

Appendix D5

Natural Gas Line Easement

Appendix D5

Natural Gas Line Easement

Recording Requested by and when
Recorded return to:

GWF Energy, LLC
10596 Idaho
Hanford, CA 93230

Doc Nbr: 0116240
Doc Type: 03

Titles: 01 Pages: 003
Fees: 13.00
Taxes: 0.00
Paid: $13.00

Kings County Clerk Recorder
George J. Misner

08/17/2001
14:37:26

R009

EASEMENT AGREEMENT

Preamble and Recitals

This Agreement is entered into on August 16, 2001 by and between **K J C Farms, a Partnership**, (hereafter referred to as Grantor), and **GWF Energy, LLC**, (hereafter referred to as Grantee).

A. Grantor is the owner of certain real property situated in an unincorporated area of the County of Kings, State of California.

B. Grantee is the owner of a certain Power Generation facility located in the City of Hanford, County of Kings, State of California. The business of Grantee requires a certain pipeline traverse and be buried beneath ground owned by Grantor. Grantor and Grantee agree that said pipeline, at the sole cost and expense of Grantee, may traverse the Real Property of Grantor, but beneath the surface by a depth of at least four feet.

For Recorders Use Only

Grant of Easement

1. Grantor and Grantee agree the consideration for the granting of this Easement is the mutual covenants herein contained and the payment of $500.00 from Grantee to Grantor,

Description of Easement

2. The easement granted in this Agreement is an easement to allow a pipeline to traverse Real Property owned by Grantor and buried beneath ground owned by Grantor so that Natural Gas can be moved through the Pipeline for the benefit of the business of Grantee. The Legal Description of the portion of the Land of Grantor through which the Easement will operate is as follows:

"The West 40.00 feet of that portion of Section 3, Township 20 South, Range 19 East, Mount Diablo Base and Meridian, in the County of Kings, State of California, shown as Parcel 2 on Parcel Map recorded in Book 10 at Page 83 of Parcel Maps.

EXCEPTING THEREFROM all minerals and mineral ores of every kind and character as contained in the Deed to Bravo Oil Company, recorded December 29, 1965 in Book 883 at Page 116 of Official Records as Document No. 16704."

Secondary Easement

3. The easement granted in this Agreement includes incidental rights of ingress and egress over and across a portion of the property adjacent to the Easement so as to, if required, service or maintain the pipeline buried beneath the surface of the ground of Grantor. These rights of ingress and egress

shall exist over that portion of said Easement and adjacent thereto so that reasonable access may be exercised. In exercising these rights, Grantee must use reasonable care and may not unreasonably increase the burden on Ground of Grantor immediately above or next to the Easement granted herein. Grantee must compensate Grantor for any damage resulting from the exercise of these rights of ingress and egress.

Term

4. The easement granted in this Agreement shall be a perpetual Easement.

Nonexclusive Easement

5. The easement granted in this Agreement is nonexclusive. Grantor retains the right to grant concurrent easements to third parties that does not interfere unreasonably with Grantee's free use and enjoyment of the easement.

Agreement Assignable

6. This Agreement shall be assignable by either party. It is the intent of Grantee, subject to consent of the Utility involved, to transfer and assign its rights and duties as contained herein to the Utility providing Natural Gas to Grantee as a result of the pipeline being installed on the Easement created herein. Grantor consents to such Assignment of rights and such delegation of duties.

Attorneys' Fees

7. If any legal action or proceeding arising out of or relating to this Agreement is brought by either party to this Agreement, the prevailing party shall be entitled to receive from the other party, in addition to any other relief that may be granted, the reasonable attorneys' fees, costs, and expenses incurred in the action or proceeding by the prevailing party.

Entire Agreement

8. This Agreement constitutes the entire agreement between Grantor and Grantee relating to the above easement. Any prior agreements, promises, negotiations, or representations not expressly set forth in this Agreement are of no force and effect. Any amendment to this Agreement shall be of no force and effect unless it is in writing and signed by Grantor and Grantee.

Binding Effect

9. This Agreement shall be binding on and shall inure to the benefit of the heirs, executors, administrators, successors, and assigns of Grantor and Grantee.

Executed on 08 15, 2001

GRANTOR
K J C Farms, A Partnership

By Kristine M. Howe
Its Partner

Executed on 8 16, 2001

GRANTEE
GWF Engery, LLC

By Duane Nelsen
Its President

STATE OF CALIFORNIA)
) ss.
COUNTY OF KINGS)

On 8-15-01, before me, Suzanne Anderson personally appeared Kristine M. Howe, on behalf of **K J C Farms, A partnership**, personally known to me (or proved to me on the basis of satisfactory evidence) to be the person(s) whose name(s) is subscribed to the within instrument and acknowledged to me that they executed the same in their authorized capacity, and that by their signature(s) on the instrument the entity upon behalf of which the person(s) acted, executed the instrument.

WITNESS my hand and official seal.

Signature Suzanne Anderson

SUZANNE ANDERSON
COMM. #1187224
NOTARY PUBLIC-CALIFORNIA
KINGS COUNTY
COMM. EXP. JUNE 16, 2002

Seal

STATE OF CALIFORNIA)
) ss
COUNTY OF ~~KINGS~~ CONTRA COSTA)

On 16th AUG 2001, before me, MIAO-JU SLIMP personally appeared DUANE H. NELSEN, on behalf of **GWF Energy, LLC**, ~~personally known to me~~ (or) proved to me on the basis of satisfactory evidence) to be the person(~~s~~) whose name(~~s~~) is subscribed to the within instrument and acknowledged to me that ~~they~~ he executed the same in ~~their~~ his authorized capacity, and that by ~~their~~ his signature(~~s~~) on the instrument the entity upon behalf of which the person(~~s~~) acted, executed the instrument.

WITNESS my hand and official seal.

Signature Miao-Ju Slimp

MIAO-JU SLIMP
Commission # 1258179
Notary Public - California
Contra Costa County
My Comm. Expires Mar 25, 2004

Seal

END OF DOCUMENT

Appendix E

Public Health

APPENDIX E: PUBLIC HEALTH

CONTENTS

- ACE2588 Output Excerpts for Maximum Cancer Risk and Chronic Hazard Index (1968) (Ignore Acute Hazard Index Calculation)
- ISCST3 Output Excerpts for Cancer Risk and Chronic Hazard Index Run (1968)
- ACE2588 Output Excerpts for Acute Hazard Index Only (1968) (Ignore Cancer Risk and Chronic Hazard Index Calculations)
- ISCST3 Output Excerpts for Acute Hazard Index Run (1968)
- Ammonia Offsite Consequence Analysis (SCREEN3 Model Outputs)
- Figure 8.6-1a. Terrain Above Stack Height within a 10-Mile Radius of the GWF Henrietta Peaker Plant (West Half) (1:24,000 Scale)
- Figure 8.6-1b. Terrain Above Stack Height within a 10-Mile Radius of the GWF Henrietta Peaker Plant (East Half) (1:24,000 Scale)
- Figure 8.6-2. Census Tracts, Population Density and Sensitive Receptors

ACE2588 Output Excerpts for Maximum Cancer Risk and Chronic Hazard Index (1968) (Ignore Acute Hazard Index Calculation)

ISCST3 Output Excerpts for Cancer Risk and Chronic Hazard Index Run (1968)

ACE2588 Output Excerpts for Acute Hazard Index Only (1968) (Ignore Cancer Risk and Chronic Hazard Index Calculations)

ISCST3 Output Excerpts for Acute Hazard Index Run (1968)

Ammonia Offsite Consequence Analysis (SCREEN3 Model Outputs)

All sections of Appendix E (Public Health) except the last one (Ammonia Offsite Consequence Analysis [SCREEN3 Model Outputs]) and the figures are available on the CD containing the air quality and public health modeling files for the Henrietta Peaker Project.

08/21/01
12:36:47

```
 ***  SCREEN3 MODEL RUN  ***
 *** VERSION DATED 96043 ***

GWF Henrietta OCA -- Ammonia Unloading Accident (D, 2.5 m/s)

SIMPLE TERRAIN INPUTS:
   SOURCE TYPE                =         AREA
   EMISSION RATE (G/(S-M**2)) =      1.00000
   SOURCE HEIGHT (M)          =        .0000
   LENGTH OF LARGER SIDE (M)  =        .2252
   LENGTH OF SMALLER SIDE (M) =        .2252
   RECEPTOR HEIGHT (M)        =        .0000
   URBAN/RURAL OPTION         =        RURAL
THE REGULATORY (DEFAULT) MIXING HEIGHT OPTION WAS SELECTED.
THE REGULATORY (DEFAULT) ANEMOMETER HEIGHT OF 10.0 METERS WAS ENTERED.

   MODEL ESTIMATES DIRECTION TO MAX CONCENTRATION


BUOY. FLUX =     .000 M**4/S**3;  MOM. FLUX =     .000 M**4/S**2.

*** STABILITY CLASS  4 ONLY ***
*** ANEMOMETER HEIGHT WIND SPEED OF   2.50 M/S ONLY ***

**********************************
*** SCREEN AUTOMATED DISTANCES ***
**********************************

*** TERRAIN HEIGHT OF    0. M ABOVE STACK BASE USED FOR FOLLOWING DISTANCES ***
```

DIST (M)	CONC (UG/M**3)	STAB	U10M (M/S)	USTK (M/S)	MIX HT (M)	PLUME HT (M)	MAX DIR (DEG)
1.	.2513E+06	4	2.5	2.5	800.0	.00	32.
100.	168.9	4	2.5	2.5	800.0	.00	29.
200.	48.70	4	2.5	2.5	800.0	.00	33.
300.	23.56	4	2.5	2.5	800.0	.00	27.
400.	14.33	4	2.5	2.5	800.0	.00	38.
500.	9.741	4	2.5	2.5	800.0	.00	28.
600.	7.113	4	2.5	2.5	800.0	.00	38.
700.	5.451	4	2.5	2.5	800.0	.00	38.
800.	4.330	4	2.5	2.5	800.0	.00	38.
900.	3.535	4	2.5	2.5	800.0	.00	38.
1000.	3.473	4	2.5	2.5	800.0	.00	7.
1100.	2.543	4	2.5	2.5	800.0	.00	41.
1200.	2.220	4	2.5	2.5	800.0	.00	33.
1300.	1.960	4	2.5	2.5	800.0	.00	33.
1400.	1.748	4	2.5	2.5	800.0	.00	41.
1500.	1.570	4	2.5	2.5	800.0	.00	33.
1600.	1.421	4	2.5	2.5	800.0	.00	41.
1700.	1.293	4	2.5	2.5	800.0	.00	33.
1800.	1.183	4	2.5	2.5	800.0	.00	33.
1900.	1.088	4	2.5	2.5	800.0	.00	41.
2000.	1.716	4	2.5	2.5	800.0	.00	11.
2100.	.9320	4	2.5	2.5	800.0	.00	35.

2200.	.8679	4	2.5	2.5	800.0	.00	31.
2300.	.8101	4	2.5	2.5	800.0	.00	31.
2400.	.7579	4	2.5	2.5	800.0	.00	38.
2500.	.7115	4	2.5	2.5	800.0	.00	35.
2600.	.6695	4	2.5	2.5	800.0	.00	35.
2700.	.6319	4	2.5	2.5	800.0	.00	31.
2800.	.5974	4	2.5	2.5	800.0	.00	31.
2900.	.5655	4	2.5	2.5	800.0	.00	35.
3000.	.5366	4	2.5	2.5	800.0	.00	38.
3500.	.4253	4	2.5	2.5	800.0	.00	35.
4000.	.8295	4	2.5	2.5	800.0	.00	8.
4500.	.2918	4	2.5	2.5	800.0	.00	40.
5000.	.2490	4	2.5	2.5	800.0	.00	27.

MAXIMUM 1-HR CONCENTRATION AT OR BEYOND 1. M:

1.	.4175E+06	4	2.5	2.5	800.0	.00	41.

****
*** SCREEN DISCRETE DISTANCES ***
****

*** TERRAIN HEIGHT OF 0. M ABOVE STACK BASE USED FOR FOLLOWING DISTANCES ***

DIST (M)	CONC (UG/M**3)	STAB	U10M (M/S)	USTK (M/S)	MIX HT (M)	PLUME HT (M)	MAX DIR (DEG)
5.	.3716E+05	4	2.5	2.5	800.0	.00	41.
10.	.1067E+05	4	2.5	2.5	800.0	.00	27.
15.	5139.	4	2.5	2.5	800.0	.00	29.
20.	3059.	4	2.5	2.5	800.0	.00	31.
25.	2046.	4	2.5	2.5	800.0	.00	29.
30.	1473.	4	2.5	2.5	800.0	.00	29.
35.	1116.	4	2.5	2.5	800.0	.00	31.
40.	877.3	4	2.5	2.5	800.0	.00	39.
50.	587.1	4	2.5	2.5	800.0	.00	31.
60.	423.0	4	2.5	2.5	800.0	.00	31.
70.	320.6	4	2.5	2.5	800.0	.00	29.
80.	252.2	4	2.5	2.5	800.0	.00	39.
90.	204.1	4	2.5	2.5	800.0	.00	39.
110.	142.3	4	2.5	2.5	800.0	.00	39.
120.	121.7	4	2.5	2.5	800.0	.00	29.
130.	105.5	4	2.5	2.5	800.0	.00	29.
140.	92.33	4	2.5	2.5	800.0	.00	39.
150.	81.58	4	2.5	2.5	800.0	.00	29.
160.	72.66	4	2.5	2.5	800.0	.00	29.
170.	65.18	4	2.5	2.5	800.0	.00	39.
180.	58.83	4	2.5	2.5	800.0	.00	29.
190.	53.40	4	2.5	2.5	800.0	.00	29.
225.	39.44	4	2.5	2.5	800.0	.00	29.
250.	32.66	4	2.5	2.5	800.0	.00	29.
275.	27.53	4	2.5	2.5	800.0	.00	38.
325.	20.52	4	2.5	2.5	800.0	.00	31.
350.	18.05	4	2.5	2.5	800.0	.00	27.
375.	16.02	4	2.5	2.5	800.0	.00	31.
425.	12.90	4	2.5	2.5	800.0	.00	31.
450.	11.69	4	2.5	2.5	800.0	.00	27.
475.	10.64	4	2.5	2.5	800.0	.00	27.

```
***************************************
*** SUMMARY OF SCREEN MODEL RESULTS ***
***************************************

 CALCULATION        MAX CONC    DIST TO   TERRAIN
  PROCEDURE        (UG/M**3)    MAX (M)    HT (M)
--------------    -----------   -------   -------
SIMPLE TERRAIN      .4175E+06        1.        0.


**************************************************
** REMEMBER TO INCLUDE BACKGROUND CONCENTRATIONS **
**************************************************
```

08/21/01
12:21:38

```
 ***  SCREEN3 MODEL RUN  ***
 *** VERSION DATED 96043 ***

GWF Henrietta OCA -- Ammonia Unloading Accident (F, 1 m/s)

SIMPLE TERRAIN INPUTS:
   SOURCE TYPE                =        AREA
   EMISSION RATE (G/(S-M**2)) =     1.00000
   SOURCE HEIGHT (M)          =       .0000
   LENGTH OF LARGER SIDE (M)  =       .2252
   LENGTH OF SMALLER SIDE (M) =       .2252
   RECEPTOR HEIGHT (M)        =       .0000
   URBAN/RURAL OPTION         =       RURAL
THE REGULATORY (DEFAULT) MIXING HEIGHT OPTION WAS SELECTED.
THE REGULATORY (DEFAULT) ANEMOMETER HEIGHT OF 10.0 METERS WAS ENTERED.

   MODEL ESTIMATES DIRECTION TO MAX CONCENTRATION


BUOY. FLUX =     .000 M**4/S**3;  MOM. FLUX =     .000 M**4/S**2.

*** STABILITY CLASS  6 ONLY ***
*** ANEMOMETER HEIGHT WIND SPEED OF   1.00 M/S ONLY ***

**********************************
*** SCREEN AUTOMATED DISTANCES ***
**********************************

*** TERRAIN HEIGHT OF    0. M ABOVE STACK BASE USED FOR FOLLOWING DISTANCES ***
```

DIST (M)	CONC (UG/M**3)	STAB	U10M (M/S)	USTK (M/S)	MIX HT (M)	PLUME HT (M)	MAX DIR (DEG)
1.	.1426E+07	6	1.0	1.0	10000.0	.00	45.
100.	1702.	6	1.0	1.0	10000.0	.00	43.
200.	509.2	6	1.0	1.0	10000.0	.00	33.
300.	254.9	6	1.0	1.0	10000.0	.00	31.
400.	156.1	6	1.0	1.0	10000.0	.00	38.
500.	106.8	6	1.0	1.0	10000.0	.00	36.
600.	78.34	6	1.0	1.0	10000.0	.00	38.
700.	60.30	6	1.0	1.0	10000.0	.00	38.
800.	48.68	6	1.0	1.0	10000.0	.00	38.
900.	40.33	6	1.0	1.0	10000.0	.00	38.
1000.	34.08	6	1.0	1.0	10000.0	.00	35.
1100.	29.43	6	1.0	1.0	10000.0	.00	41.
1200.	25.72	6	1.0	1.0	10000.0	.00	33.
1300.	22.73	6	1.0	1.0	10000.0	.00	33.
1400.	20.28	6	1.0	1.0	10000.0	.00	41.
1500.	18.23	6	1.0	1.0	10000.0	.00	33.
1600.	16.51	6	1.0	1.0	10000.0	.00	41.
1700.	15.03	6	1.0	1.0	10000.0	.00	33.
1800.	13.76	6	1.0	1.0	10000.0	.00	33.
1900.	12.67	6	1.0	1.0	10000.0	.00	41.
2000.	11.71	6	1.0	1.0	10000.0	.00	35.
2100.	10.91	6	1.0	1.0	10000.0	.00	35.

2200.	10.20	6	1.0	1.0	10000.0	.00	31.
2300.	9.565	6	1.0	1.0	10000.0	.00	31.
2400.	8.988	6	1.0	1.0	10000.0	.00	35.
2500.	8.471	6	1.0	1.0	10000.0	.00	35.
2600.	8.003	6	1.0	1.0	10000.0	.00	35.
2700.	7.582	6	1.0	1.0	10000.0	.00	31.
2800.	7.192	6	1.0	1.0	10000.0	.00	31.
2900.	6.831	6	1.0	1.0	10000.0	.00	35.
3000.	6.503	6	1.0	1.0	10000.0	.00	38.
3500.	5.267	6	1.0	1.0	10000.0	.00	35.
4000.	4.389	6	1.0	1.0	10000.0	.00	35.
4500.	3.742	6	1.0	1.0	10000.0	.00	40.
5000.	3.241	6	1.0	1.0	10000.0	.00	40.

MAXIMUM 1-HR CONCENTRATION AT OR BEYOND 1. M:

1.	.2609E+07	6	1.0	1.0	10000.0	.00	42.

****
*** SCREEN DISCRETE DISTANCES ***
****

*** TERRAIN HEIGHT OF 0. M ABOVE STACK BASE USED FOR FOLLOWING DISTANCES ***

DIST (M)	CONC (UG/M**3)	STAB	U10M (M/S)	USTK (M/S)	MIX HT (M)	PLUME HT (M)	MAX DIR (DEG)
5.	.3116E+06	6	1.0	1.0	10000.0	.00	44.
10.	.9461E+05	6	1.0	1.0	10000.0	.00	41.
15.	.4672E+05	6	1.0	1.0	10000.0	.00	42.
20.	.2827E+05	6	1.0	1.0	10000.0	.00	31.
25.	.1914E+05	6	1.0	1.0	10000.0	.00	31.
30.	.1392E+05	6	1.0	1.0	10000.0	.00	31.
35.	.1063E+05	6	1.0	1.0	10000.0	.00	31.
40.	8421.	6	1.0	1.0	10000.0	.00	39.
50.	5703.	6	1.0	1.0	10000.0	.00	31.
60.	4148.	6	1.0	1.0	10000.0	.00	31.
70.	3170.	6	1.0	1.0	10000.0	.00	43.
80.	2511.	6	1.0	1.0	10000.0	.00	39.
90.	2045.	6	1.0	1.0	10000.0	.00	39.
110.	1442.	6	1.0	1.0	10000.0	.00	39.
120.	1239.	6	1.0	1.0	10000.0	.00	43.
130.	1078.	6	1.0	1.0	10000.0	.00	39.
140.	947.1	6	1.0	1.0	10000.0	.00	39.
150.	839.9	6	1.0	1.0	10000.0	.00	39.
160.	750.7	6	1.0	1.0	10000.0	.00	39.
170.	675.5	6	1.0	1.0	10000.0	.00	39.
180.	611.6	6	1.0	1.0	10000.0	.00	39.
190.	556.7	6	1.0	1.0	10000.0	.00	39.
225.	416.4	6	1.0	1.0	10000.0	.00	39.
250.	347.9	6	1.0	1.0	10000.0	.00	31.
275.	295.7	6	1.0	1.0	10000.0	.00	38.
325.	222.4	6	1.0	1.0	10000.0	.00	31.
350.	196.0	6	1.0	1.0	10000.0	.00	38.
375.	174.3	6	1.0	1.0	10000.0	.00	31.
425.	140.8	6	1.0	1.0	10000.0	.00	31.
450.	127.8	6	1.0	1.0	10000.0	.00	31.
475.	116.5	6	1.0	1.0	10000.0	.00	38.

```
***************************************
*** SUMMARY OF SCREEN MODEL RESULTS ***
***************************************

 CALCULATION        MAX CONC    DIST TO   TERRAIN
  PROCEDURE        (UG/M**3)    MAX (M)    HT (M)
--------------    -----------   -------   -------
SIMPLE TERRAIN      .2609E+07        1.        0.


**************************************************
** REMEMBER TO INCLUDE BACKGROUND CONCENTRATIONS **
**************************************************
```

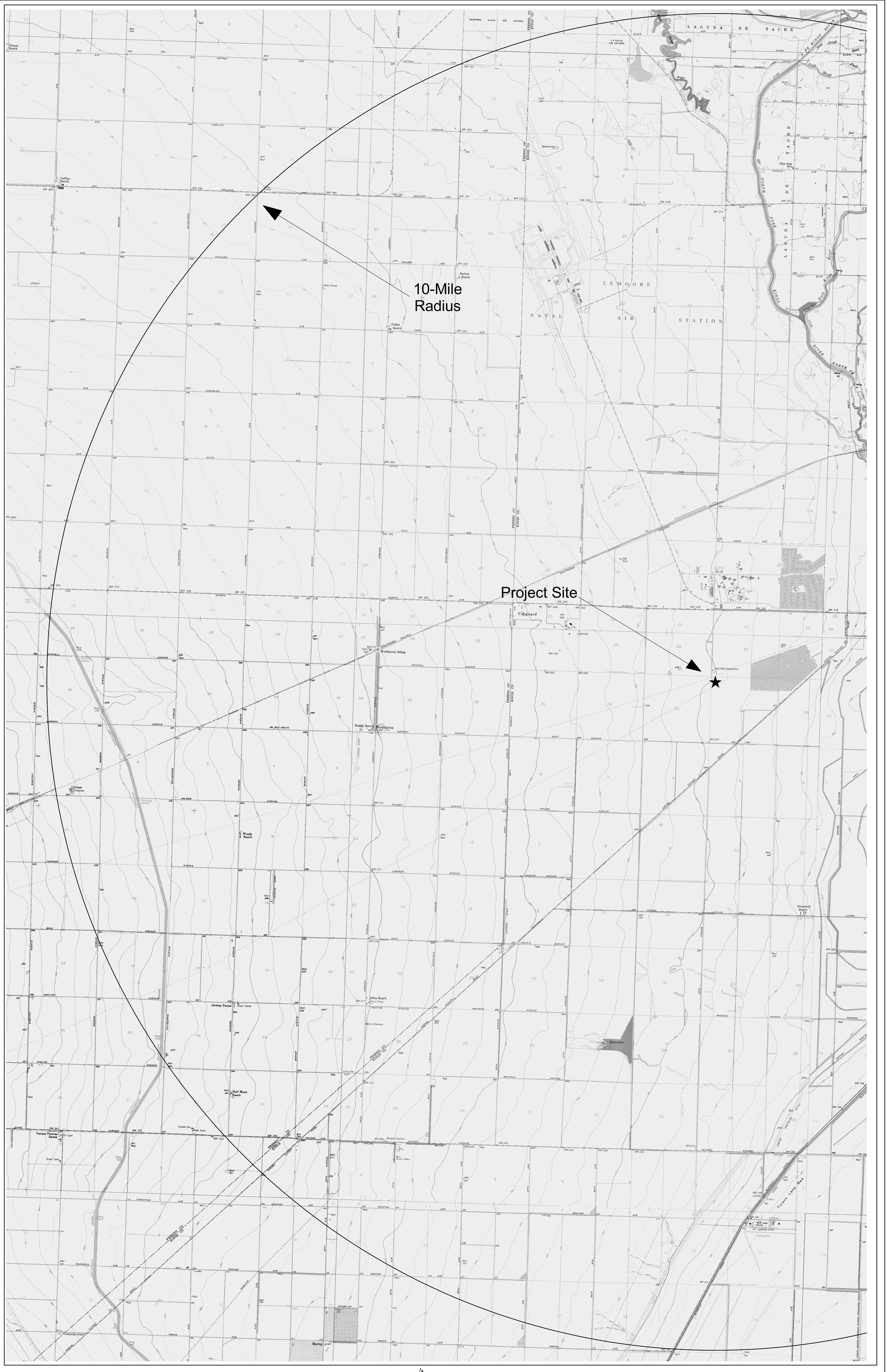

GWF Henrietta Peaker Project	TERRAIN ABOVE STACK HEIGHT WITHIN A 10-MILE RADIUS OF THE GWF HENRIETTA PEAKER PLANT (West Half)	Figure 8.6-1a

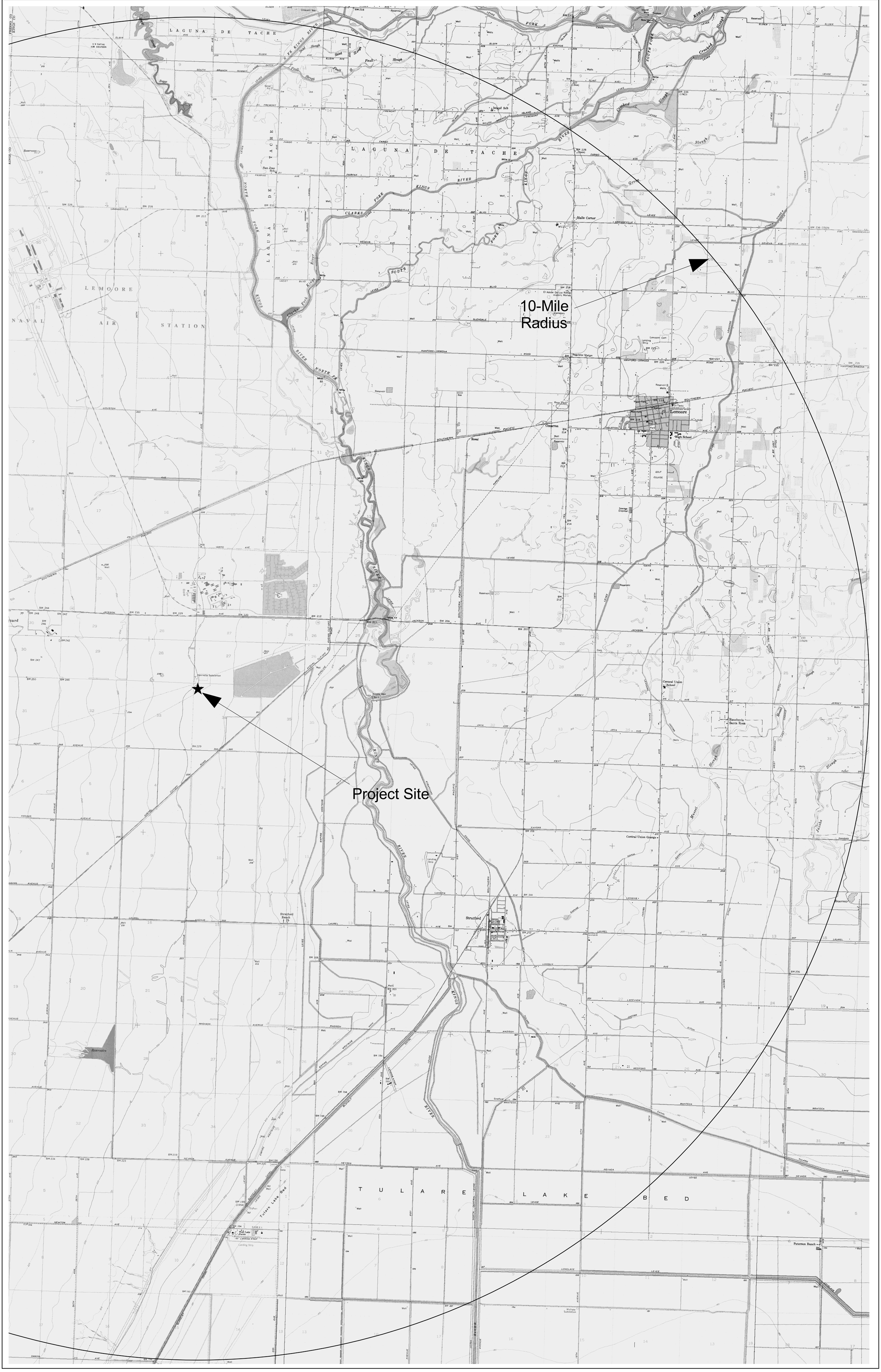

GWF Henrietta Peaker Project	TERRAIN ABOVE STACK HEIGHT WITHIN A 10-MILE RADIUS OF THE GWF HENRIETTA PEAKER PLANT (East Half)	Figure 8.6-1b

Tract	Population De (people/sq.
78	42
1	34
2	36
3	212
4.02	147
4.03	2992
4.04	3522
4.05	3550
5	363
12	16
16.01	7

LEGEND

- Proposed Power Pla
- Convalescent
- Day Care
- Hospital
- Park
- School
- Unknown Receptor

Sources:
1) U.S. Census 2000 California Census Data Center
2) Environmental Data Resources, Inc.

URS

GWF Henrietta Peaker Project

Project No. 51-00167032.00

CENSUS TRACTS, POPULATION DENSITY AND SENSITIVE RECEPTORS

L:\Projects\gwf_henriet

Appendix F

Environmental Site Assessment

Phase I Environmental Site Assessment
GWF Power Systems
Henrietta Peaker
25th Avenue
Henrietta, California

Prepared for

GWF Power Systems
4300 Railroad Avenue
Pittsburg, California 94565

Harding ESE Project No. 53581 001

Jason T. House
Staff Environmental Scientist

Susan D. Lewos, M.S.
Project Environmental Scientist

June 1, 2001

Harding ESE
A MACTEC COMPANY

Engineering and Environmental Services
90 Digital Drive
Novato, CA 94949 - (415) 883-0112

Phase I Environmental Site Assessment
GWF Power Systems
Henrietta Peaker
25th Avenue
Henrietta, California

Harding ESE Project No. 53581 001

This Phase I Environmental Site Assessment was prepared by Harding ESE Inc. (Harding ESE) for the use of GWF Power Systems Inc (GWF). No other party should rely on the information contained herein without the prior written consent of GWF and Harding ESE. This report and the interpretations, conclusions, and recommendations contained within are based in part on information presented in other documents that are cited in the text and listed in the references. Therefore, this report is subject to the limitations and qualifications presented in the referenced documents.

CONTENTS

1.0 EXECUTIVE SUMMARY 1

2.0 INTRODUCTION 3

- 2.1 Purpose and Scope of Work 3
- 2.2 Special Terms and Conditions 3
- 2.3 Report Organization 4

3.0 SITE DESCRIPTION 5

- 3.1 Location 5
- 3.2 Physical Setting 5
- 3.3 Site and Vicinity General Characteristics, History, and Planned Uses 6
- 3.4 Site Improvements 6
- 3.5 Current Use of the Property 6

4.0 SITE HISTORICAL REVIEW 7

- 4.1 Past Uses of the Site 7
- 4.2 Previous Environmental Studies Involving the Site 7
- 4.3 Historical Topographic Maps and Aerial Photographs 7

5.0 SITE RECONNAISSANCE 8

- 5.1 Site Visit Observations 8
- 5.2 General Observations 8
- 5.3 Adjacent Properties 9

6.0 REGULATORY AGENCY DATABASE REPORT REVIEW 10

- 6.1 The Site 10
- 6.2 Federal Environmental Record Sources 10
- 6.3 California Environmental Record Sources 11
- 6.4 State or Local ASTM Supplemental 13
- 6.5 Non-ASTM Databases 13
- 6.6 Orphan Sites 14

7.0 CONCLUSIONS AND RECOMMENDATIONS 15

8.0 REFERENCES 16

PLATES

1 Site Vicinity Map

APPENDIXES

A SITE PHOTOGRAPHS

B ENVIRONMENTAL DATA RESOURCES, INC., DATABASE REPORT

DISTRIBUTION

1.0 EXECUTIVE SUMMARY

Project Details

This report presents the results of Harding ESE, Inc.'s (Harding ESE) Phase I Environmental Site Assessment (ESA) for the future construction of a peaker power plant for GWF Power Systems (GWF) property located on 25th Street, south and adjacent to the Henrietta Substation, Henrietta, Kings County, California (Site). Harding ESE conducted this ESA for GWF Power Systems (GWF), who are considering constructing a peaker power facility on the Site. Mr. Jason House and Ms. Susan Lewos of Harding ESE conducted the ESA.

The purpose of the Phase I ESA was to identify environmental conditions at the Site using guidance provided by the American Society for Testing and Materials (ASTM) Standard E 1527-00, *Standard Practice for Environmental Site Assessments.*

The scope of work for the Phase I ESA included conducting a Site visit and area reconnaissance; obtaining and reviewing an environmental regulatory agency database report; reviewing historical aerial photographs; reviewing site-specific documents provided by GWF; evaluating the data; and preparing this report.

Site Summary

- The Site is approximately 20 acres and is located on the east-side of 25th Avenue, south and adjacent to the Henrietta Substation, approximately 0.70 miles south of Highway 198, and north of Avenal Cutoff Road.
- The Site is undeveloped and currently used as a cotton field.
- Historical information for the Site shows that it has used for agricultural purposes since at least 1943 (the date of earliest available United States Geological Survey (USGS) topographic map from Environmental Data Resources Inc. [EDR]).
- According to the United States Department of Agriculture Soil Surveys for Kings County, soils in the area of the Site (upper 5 feet) are listed as "Lethents", clay loam soils with very slow infiltration rates, and moderately well drained.
- Information from the California Department of Water Resources indicate that ground water in the vicinity is approximately 80-100 feet below ground surface (bgs). However, the soil survey indicates that the ground water table may be located 3-6 feet below ground surface.
- The Site was not listed under any category in the environmental regulatory agency database report.

Status of Electrical Transformers

- No transformers or other electrical equipment with potentially polychlorinated biphenyls (PCBs) containing oils were observed on the Site, however the Henrietta Substation is located north and adjacent to the Site. No reported releases or spills have occurred at the substation.

Asbestos-Containing Materials and Lead-Based Paint

- No structures were observed on the Site. Therefore, asbestos containing materials (ACM) and lead-based paint (LBP) are not an environmental concern at the Site.

Radon

- The EPA has established an "action level" for radon designated as 4 picoCuries per liter of air (pCi/L). EPA sponsored studies of average radon values measured in Kings County indicate average radon levels are approximately 0.775 pCi/L in the region. Therefore, it is unlikely that radon poses a significant environmental concern at the Site.

Pesticides

- Because the Site has historically been used for agricultural purposes, the likelihood for low levels of persistent pesticides to be present in soil is high.

Offsite Issues

- Review of the environmental regulatory agency database report indicates that no offsite properties pose a significant environmental threat to the Site.

2.0 INTRODUCTION

This report presents the results of Harding ESE's Phase I ESA for GWF Power Systems, Henrietta Peaker, 25th Avenue, Henrietta, Kings County, California (Site; Plate 1)

2.1 Purpose and Scope of Work

The purpose of the Phase I ESA is to identify recognized environmental conditions at the Site, as defined by the American Society for Testing and Materials (ASTM) Standard E 1527-00, *Standard Practice for Environmental Site Assessments: Phase I Environmental Site Assessment Process*:

> The term *recognized environmental conditions* means the presence or likely presence of any *hazardous substances* or *petroleum products* on a *property* under conditions that indicate an existing release, a past release, or a material threat of a release of any *hazardous substances* or *petroleum products* into structures on the *property* or into the ground, groundwater, or surface water of the *property*. The term includes *hazardous substances* or *petroleum products* even under conditions in compliance with laws. The term is not intended to include *de minimis* conditions that generally do not present a material risk of harm to public health or the environment and that generally would not be the subject of an enforcement action if brought to the attention of appropriate governmental agencies. Conditions determined to be *de minimis* are not *recognized environmental conditions*.

The objective of the Phase I ESA was to identify environmental conditions at the Site using as guidance ASTM Standard E 1527-00. The scope of work for the Phase I ESA included the following activities:

- Completing a Site visit on May 23, 2001. Site photographs are in Appendix A
- Obtaining and reviewing historical topographic maps from EDR.
- Attempting review of historical aerial photographs of the Site and its vicinity. At the time of this report we were unable to obtain historical aerial photographs
- Obtaining and reviewing an environmental regulatory agency database report from EDR (Appendix B)
- Evaluating the data from the above activities
- Preparing this report.

2.2 Special Terms and Conditions

This document was prepared for the use of GWF. No other party should rely on the information contained herein without the prior written consent of GWF, and Harding ESE. The interpretation, discussion and conclusions presented in this report are based on the Site visit and review of the database report, aerial photographs, and other documents.

Specific to the ESA, lack of evidence of the presence of recognized environmental conditions following completion of the tasks of a reasonable and mutually agreed-upon scope of work does not guarantee the absence of such conditions; rather, it indicates only that none were found as a result of the services provided. Although the limited nature of Harding ESE's scope of work precludes us from providing a

warranty or guarantee regarding the presence or absence of recognized environmental conditions that could potentially affect the Site, Harding ESE has provided its best professional judgment of possible environmental issues and performed the practices and procedures generally accepted in the consulting engineering field. No other warranty is given or implied by this report. Harding ESE has made no attempt to address future financial impacts to the Site (e.g., reduced property value, difficulty selling the property) from the potential presence of any environmental contamination onsite.

This ESA was conducted in accordance with practices and procedures generally accepted in the environmental consulting field. A more extensive assessment that includes surface and/or subsurface investigation and chemical analysis of soil and/or groundwater samples from the Site would provide more definitive information concerning site-specific conditions.

2.3 Report Organization

The following sections are included in this report, together with supporting plates and appendices:

- Section 1.0 – Executive Summary
- Section 2.0 – Introduction
- Section 3.0 – Site Description
- Section 4.0 – Site Historical Review
- Section 5.0 – Site Reconnaissance
- Section 6.0 – Regulatory Agency Database Review
- Section 7.0 – Conclusions
- Section 8.0 – References.

3.0 SITE DESCRIPTION

This section presents information regarding the physiognomy of the Site. Site photos are presented in Appendix A.

3.1 Location

The Site is approximately 20 acres and is located on the east-side of 25th Avenue, adjacent to the Henrietta Substation, approximately 0.70 miles south of Highway 198, and 2 miles north of Avenal Cutoff Road.

3.2 Physical Setting

Topography. The U.S. Geological survey (USGS) 7.5-minute Westhaven quadrangle map identifies topography in the Site vicinity (*USGS, 1977*). As seen on the map, a portion of which is reproduced as Plate 1, the Site is at an elevation of approximately 225 feet above mean sea level (MSL). The area is relatively flat with little topographic relief. Regionally, land slopes gently to the east.

Surface Water/Hydrology. The nearest surface water bodies are irrigation canals, running north to south approximately 1000 feet from the east boundary of the property and west to east approximately 2000 feet from the south boundary of the property. Additionally, the Lemoore Naval Air Station wastewater pond located approximately 3,500 feet to the east of the Site. In addition, there are numerous unnamed irrigation canals in the area, which seems to be the standard. There is a dry irrigation canal running along the north boundary of the property, which doesn't appear to be in use any longer.

Wetlands. National Wetland Inventory Maps compiled by the US Fish and Wildlife Service did not identify any wetlands on the Site. Soils expected to be on the Site are not listed in federal "hydric soil" lists. The Site does not appear to have the characteristics of a wetland. However, a more thorough evaluation by a qualified individual using the methods prescribed in the 1987 *US Army Corps of Engineers Wetland Delineation Manual* would be required to determine the presence or absence of wetlands at the Site.

Regional Geology. The Site is in the San Joaquin Valley, the southern half of California's Central Valley. The Central Valley is a large elongated northwest-trending, asymmetric structural trough that has been filled with a sequence of sediments, in some areas up to 60,000 feet thick (*DWR, 1958*). The geologic map of the area shows that near-surface deposits in the area near the Site are composed of flood basin deposits.

Soils. The soils at the Site (upper 5 feet) are listed as "Lethents", clay loam soils with very slow infiltration rates, and moderately well drained.

Radon. The EPA was directed to list and identify areas of the US with the potential for elevated indoor radon levels under Sections 307 and 309 of the Indoor Radon Abatement Act of 1988. The EPA has established a "action level" for radon gas designated as 4 picoCuries per liter (pCi/L) of air. The environmental database report in Appendix C (page A-53) presents radon data for Kings County, where the Site is located. According to the information presented in the EDR report, the average concentration for first floor living areas is 0.775 pCi/L. Kings County is categorized as "Zone 3", a designation for areas with the lowest potential for harmful radon accumulations.

Seismology. There are no major faults in the Site vicinity. The nearest fault Zone is the San Andreas Fault, approximately 75 miles to the west. A moderate to major earthquake on the San Andreas would generate low to moderate ground shaking in the Site vicinity *(California Division of Mines and Geology, 1999)*.

Groundwater. The Site is in the Tulare Groundwater Basin. Based on a Spring 1999 basin groundwater elevation map produced by the California Department of Water Resources *(DWR, 2001)* groundwater in the region appears to flow in a west-southwest direction. However, it should be noted that the gradient can vary locally. The GeoCheck® portion of the EDR report in Appendix B lists five wells within a mile radius of the Site that report. Based on DWR Groundwater Basin Contour Maps, the depth to groundwater in the Site vicinity may range from approximately 80 to 100 feet. However, the USDA Soil Survey for Kings County, indicates that ground water may between three to six feet in areas that poses the types of soil present at the Site.

3.3 Site and Vicinity General Characteristics, History, and Planned Uses

The Site covers approximately 20 acres on the eastern side of 25th Avenue. The Site is bordered on the north by a Pacific Gas & Electric (PG&E) substation, and on the east and south by a cotton field. The property west across 25th Avenue is also used for the cultivation of cotton.

It is Harding ESE's understanding that the planned development for the Site is a peaker power plant facility.

3.4 Site Improvements

The Site is currently utilized for the cultivation of cotton. There is one irrigation pipe located at the northwest corner of the property.

3.5 Current Use of the Property

The property is currently used for agricultural purposes for growing cotton. Cotton is cultivated on approximately 90 to 95 percent of the Site. A dirt road runs east to west along the northern boundary of the property. The northeast corner of the property extends into a wheat field.

4.0 SITE HISTORICAL REVIEW

4.1 Past Uses of the Site

The Site is on the eastern side of 25th Avenue, north of the intersection of Avenal Cutoff Road, and south of State Road 198, Henrietta, Kings County, California (Plate 1).

The Site has been used for harvesting cotton for at least 30 years. Prior to that time, the Site was not developed or utilized.

4.2 Previous Environmental Studies Involving the Site

Harding ESE is not aware of any previous environmental studies related to the Site.

4.3 Historical Topographic Maps and Aerial Photographs

Harding ESE reviewed historical USGS topographic maps obtained through EDR. Harding ESE conducted an exhaustive search for aerial photographs and was unable to obtain them prior to the due date of this report. Harding ESE will provide an addendum to this report if any additional information is found from review of historical aerial photographs.

Topographic Map. 1956. Westhaven 7.5-minute quadrangle. No buildings or structures are shown on the Site. The symbol for agricultural land of green dots are not shown on the Site. The Henrietta Substation is shown north of and adjacent to the Site. A water well is also shown just south of the Site.

The symbol for commercial and residential structures are not shown on the map. With the exception of the Lemoore Naval Air Field located approximately one mile west/northwest of the Site, no other development is shown.

Topographic Map. 1981. Westhaven 7.5-minute quadrangle. No change onsite is apparent Adjacent land appears unchanged as well.

The wastewater pond for the Lemoore Naval Air Station is present approximately 3,500 feet east of the Site. With the exception of a corner of the Lemoore Naval Air Station not being shown, overall, the region appears the same.

5.0 SITE RECONNAISSANCE

Mr. Jason House of Harding ESE conducted a Site visit on May 23, 2001. Following the Site visit, he interviewed Mr. Riley Jones, Business Manager/Community Relations for GWF Power Systems. Mr. Jones informed Harding ESE, that to his knowledge, no spills or accidents have occurred at the substation north of the property that would impact the Site.

Mr. Jones informed Harding ESE that the Site has been used for agricultural purposes for approximately 30 years and before that it was vacant land. According to Mr. Jones, no structures, USTs, or development other than agricultural have existed on the property. Site photos are presented in Appendix A.

5.1 Site Visit Observations

At the time of the Site visit, the entire Site was used for agricultural purposes. The site was predominantly used for the purpose of growing cotton, with the exception of the northeast corner of the site, which extends into a wheat field.

Agricultural equipment and fertilizers consisting of heavy farm equipment, irrigation piping, tanks of liquid fertilizers and stockpiled manure are stored north of the Site on PG&E's property.. A crystalline residue located approximately two to three inches below the surface was also observed in this area, where the soil had been recently been disturbed by tilling. ,. The source of the residue is unknown, but likely associated with the fertilizer usage/storage.

5.2 General Observations

During the Site visit, Harding ESE looked for but saw no evidence of the following onsite other than as described above in this section:

- Remnants of former buildings
- Underground storage tanks
- Chemical or petroleum smells or foul odors
- Landfilling or burial activities
- Surface impoundments or holding ponds
- Current air emissions or wastewater discharges
- Industrial or manufacturing activities
- Groundwater monitoring wells or remedial activities
- Stained or discolored soils
- Leachate or seeps
- Distressed, discolored, or stained vegetation

- Chemical spills or releases
- Groundwater or surface water contamination
- Oil well or gas exploration, production, or refinery activities
- Discharges, leachate, migration or runoff of potential contaminants from offsite sources.

5.3 Adjacent Properties

The property to the north of the Site is a substation owned by PG&E. The PG&E property fence line is about fifty yards north of the property line. This space is used for the storage of agricultural equipment and fertilizers. The West boundary of the Site runs along 25th Avenue. Cotton is grown to the east, west and south of the property.

6.0 REGULATORY AGENCY DATABASE REPORT REVIEW

The ASTM Standard E 1527-00 identifies standard federal and state environmental "record sources" (e.g., the federal Superfund list, a list of registered underground storage tanks [USTs]) that should be reviewed to identify "recognized environmental conditions." The standard defines approximate minimum search distances from the Site being assessed for the types of properties listed in these records. The search radii are identified in Sections 6.2 and 6.3 for each list described. The principal criterion is whether offsite properties could impact environmental conditions on the Site, although the appearance of a property in an environmental database does not necessarily mean that it has hazardous materials/wastes problems.

Harding ESE obtained and evaluated an environmental regulatory agency database report from Environmental Data Resources, Inc. (EDR). The EDR report identifies properties listed in ASTM-recommended databases within recommended search distances from the Site and provides information on listed properties. The EDR report is included as Appendix B.

Harding ESE checked the location and status of the listed properties and evaluated the potential for the properties to affect the Site. The Site's location relative to identified properties is described in terms of the expected groundwater flow direction, that is, toward the southwest, based on Tulare Lake Groundwater Basin (1999) lines of equal elevation of water wells in unconfined aquifer, from the California Water Resources Board. Upgradient properties are presumed to be those northeast of the Site.

6.1 The Site

The Site was not identified in the EDR report, indicating the Site has not been listed in regulatory environmental agency databases.

6.2 Federal Environmental Record Sources

ASTM E 1527-00 guidance requires review of the following federal databases:

- **Comprehensive Environmental Response, Compensation, and Liability Information System (CERCLIS, 1/2 mile), April 30, 2001** - CERCLIS contains data on potentially hazardous waste sites that have been reported to the U.S. Environmental Protection Agency (EPA) by states, municipalities, private companies, and private persons pursuant to the Comprehensive Environmental Response, Compensation, and Liability Act (CERCLA). The CERCLIS List includes sites that are either proposed for the National Priorities List (NPL) or in the screening and assessment phase for possible inclusion on the NPL. Source: EPA/National Technical Information Service (NTIS).

  No CERCLIS properties are listed within ½ mile of the Site.

- **CERCLIS-NFRAP (1/4 mile), April 30, 2001** – No-further-remedial-action-planned (NFRAP) sites are those removed from CERCLIS because, following an initial investigation, no contamination was found, contamination was removed quickly without the need for the site to be placed on the NPL, or the contamination was not serious enough to require federal Superfund action or NPL consideration. The purpose of the NFRAP is to remove unintended barriers to the redevelopment of the properties as part of EPA's Brownfields program to promote economic development of unproductive urban sites. Source: EPA.

  No properties within 1/4 mile of the Site are listed in this database.

- **National Priorities List (1 mile), June 13, 2000** - The NPL is a subset of CERCLIS and identifies over 1,200 sites for priority cleanup under the Superfund program. An NPL (i.e., Superfund) site must meet or surpass a predetermined hazard ranking system score, be chosen as a state's top priority site, or meet three specific criteria set jointly by the U.S. Department of Health and Human Services and the EPA. Source: EPA.

  There are no federal Superfund sites within 1 mile of the Site.

- **Emergency Response Notification System (ERNS, target property), August 8, 2000** - ERNS is a national database that records and stores information on reported releases of oil and hazardous substances. The database contains information on spill reports made to federal authorities including the EPA, U.S. Coast Guard, National Response Center, and Department of Transportation. Source: EPA/NTIS.

  The Site is not identified on this list.

- **Resource Conservation and Recovery Information System (RCRIS), June 21, 2000** - RCRIS includes selected information on facilities that generate, transport, store, treat and/or dispose of hazardous waste, as defined by the Resource Conservation and Recovery Act (RCRA). Source: EPA/NTIS. RCRIS includes the following databases:

  RCRIS Treatment, Storage, and Disposal (TSD) Facilities (1/2 mile) - Facilities that treat, store, and/or dispose of hazardous wastes.

  No treatment, storage, and/or disposal facilities are listed within 1/2 mile of the Site.

  RCRIS Generators Lists (1/4 mile) - RCRIS large quantity generators (LQG) are those facilities that generate at least 1,000 kilograms per month of non-acutely hazardous waste or meet other applicable RCRA requirements. RCRIS small quantity generators (SQG) generate less than 1,000 kg/month of non-acutely hazardous waste or meet other applicable RCRA requirements.

  No RCRIS properties are listed within ¼ mile of the Site.

- **Corrective Action Report (CORRACTS, 1 mile), October 1, 2000** - CORRACTS identifies hazardous waste handlers with RCRA corrective action activity. Source: EPA.

  No properties within 1 mile of the Site are listed in the CORRACTS database.

6.3 California Environmental Record Sources

ASTM E 1527-00 requires review of the following state databases:

- **Bond Expenditure Plan (BEP, 1 mile), January 1, 1989** - California Department of Health Services (DHS) developed a site-specific expenditure plan as the basis for an appropriation of Hazardous Substance Cleanup Bond Act funds. The BEP is not updated. Source: DHS

  No properties within 1 mile of the Site are identified on the BEP list

- **Cal-Sites Annual Workplan (AWP, 1 mile), November 8, 2000** - This database (formerly BEP), provided by Cal/EPA's Department of Toxic Substances Control (DTSC), identifies known hazardous substance sites that have been targeted for cleanup. Source: California Environmental

Protection Agency (Cal/EPA).

No properties within 1 mile of the Site are listed on the AWP list.

- **Cal-Sites (formerly known as ASPIS) (1 mile), October 1, 2000** - The Cal-Sites database lists potential or confirmed hazardous substance release properties. In 1996, Cal/EPA reevaluated and significantly reduced the number of sites in this database. Source: Cal/EPA DTSC.

  No properties within 1 mile of the Site are identified on the Cal-Sites list.

- **Leaking Underground Storage Tank Information System (LUST, 1/2 mile), March 31, 2001** - The LUST database lists reported leaking underground storage tank incidents. Source: State Water Resources Control Board (SWRCB).

  No properties within 1 mile of the Site are listed on the LUST list.

- **Proposition 65 Notification Records (NOTIFY 65, 1 mile), October 21, 1993** - The NOTIFY 65 database contains facility notifications about any release that could impact drinking water and thereby expose the public to a potential health risk. No update of this list is planned. Source: SWRCB.

  No properties within 1 mile of the Site are on the NOTIFY 65 list.

- **SWF/LF, Solid Waste Information System (SWIS, 1/2 mile), February 21, 2001** - This database is an inventory of solid waste disposal facilities or landfills. These may be active or inactive facilities or open dumps that failed to meet RCRA Section 2004 criteria for solid waste landfills or disposal sites. Source: California Integrated Waste Management Board.

  No properties within ½ mile of the Site are on the SWIS list.

- **Cortese List (1 mile), April 1, 1998** - This database contains summary information pertaining to contaminated sites in California. The sites on the list are designated by the State Water Resources Control Board (from the LUST list, discussed above), the California Integrated Waste Management Board (the SWF/LF list discussed above), and the DTSC (the Cal-Sites list, above). Source: Cal/EPA Office of Emergency Information.

  No properties within 1 mile of the Site are listed on the Cortese Database.

- **California Hazardous Material Incident Report System (CHMIRS, 1 mile), December 31, 1994** - CHMIRS contains information on reported hazardous material incidents (accidental releases or spills). No update of this list is planned. Source: California Office of Emergency Services (OES).

  No properties were listed in the CHMIRS database within 1 mile of the Site.

- **Toxic Pits Cleanup Act Sites (Toxic Pits, 1 mile), July 1, 1995** - This list identifies sites suspected of containing hazardous substances where cleanup has not yet been completed. No update of this list is planned. Source: SWRCB.

  No properties within 1 mile of the Site are listed in this database.

- **Hazardous Substance Storage Container Database (UST, 1/4 mile), October 15, 1990, and Facility Inventory Database (FID, 1/4 mile), October 31, 1994**- These databases are historical listings of facilities that have (or had) underground storage tanks. Local and county sources have current UST information. No updates of these lists are planned. Sources: SWRCB for UST, Cal/EPA for FID.

  No UST or FID properties are listed as being within ¼ mile of the Site.

- **Waste Management Unit Database System (WMUDS/SWAT, 1/2 mile), April 1, 2000** - This system is used by the SWRCB to track and inventory waste management units. WMUDS comprises the following databases: facility information, scheduled inspections information, waste management unit information, Solid Waste Assessment Test (SWAT) program information, SWAT report summary information, SWAT report summary data, Chapter 15 information and monitoring parameters, TPCA program information, RCRA program information, closure information, and interested parties information. Source: SWRCB.

  No properties within the ASTM search distance are listed in this database.

6.4 State or Local ASTM Supplemental

- **Cal/EPA Hazardous Waste Information System (HAZNET, 1/4 mile), December 31, 1999** - HAZNET provides hazardous waste manifest data extracted from copies of hazardous waste manifests. Inclusion in HAZNET implies that a facility properly disposed of hazardous waste.

  There are no HAZNET listings in the EDR report within ½ mile of the site. Facilities on the list include, in general, properties that have properly disposed of hazardous waste. The presence of these properties on the list does not imply that offsite disposal of wastes from these properties could have affected the Site.

6.5 Non-ASTM Databases

The following non-ASTM databases were checked by EDR. These databases are described on pages GR1 – GR15 of the EDR report.

- EPA Regional Offices Superfund Consent Decrees (1 mile)
- NTIS Records of Decision (1 mile)
- Delisted NPL Sites (1 mile)
- EPA Facility Index System/Facility Identification Initiative Program Summary Report (FINDS; target property)
- U.S. Department of Transportation Hazardous Materials Information Reporting System (target property)
- U.S. Nuclear Regulatory Commission Material Licensing Tracking System (target property)
- Department of Labor Mine Safety and Health Administration Mines Master Index File (1/4 mile)
- EPA Federal Superfund Liens (target property)

- EPA PCB Activity Database System (target property)
- EPA RCRA Administrative Action Tracking System (target property)
- EPA/NTIS Toxic Chemical Release Inventory System (target property)
- EPA Toxic Substances Control Act (target property)
- SWRCB Aboveground Petroleum Storage Tank Facilities (target property)
- SWRCB Waste Discharge System (target property)
- San Jose HAZMAT facilities
- Former Manufactures Gas (Coal Gas) Sites

These lists did not include any properties within the search distances given.

6.6 Orphan Sites

The EDR report lists "orphan" sites, that is, properties for which address information is insufficient to map, although addresses are frequently available. Five "orphans" are listed. These properties, based on their probable location or regulatory listing, are not expected to affect subsurface conditions at the Site.

7.0 CONCLUSIONS AND RECOMMENDATIONS

Harding ESE has performed this Phase I ESA for the GWF Power Systems using the ASTM Standard Practice E 1527-00. On the basis of our Site visit and document reviews, we conclude the following:

- The Site comprises an approximately 20-acre parcel used for cotton cultivation.
- Pesticides have most likely been utilized at the Site.
- No recorded spills have occurred at the Henrietta Substation located north of and adjacent to the Site.
- Review of the environmental regulatory agency database report and other documents indicates that no offsite properties are believed to have the potential to affect environmental conditions at the Site
- Harding will continue the search for aerial photographs dating back to 1940. If any additional information is discarded, we will provide an addendum to this report.

This assessment has revealed no evidence of recognized environmental conditions as defined by ASTM.

8.0 REFERENCES

California Division of Mines and Geology, 1999. *Seismic Shaking Maps of California.*

California Department of Water Resources (DWR), Division of Planning and Local Assistance, San Joaquin District, 2001. *Tulare Lake Groundwater Basin, Spring 1999, Lines of Equal Elevation of Water in Wells, Unconfined Aquifer.* http://wwwdpla.water.ca.gov/sjd/

_____, 1958. *Subsurface Geology of the late Tertiary and Quaternary Water-Bearing Deposits of the Southern Part of the San Joquain valley, California. Geological Survey Water- Supply Paper 1999-H.*

Environmental Data Resources, 2001. *The EDR-Radius Map with GeoCheck®, Henerietta Peaker, 25th Avenue, Henrietta, California, 93245.* Inquiry Number 0634349.3r. May 21.

_____, 2001. *The EDR-Historical Topographic Map Report.*

U.S. Geological Survey, 1956 (photorevised 1981). Westhaven, Calif., 7.5-minute quadrangle.

PLATE

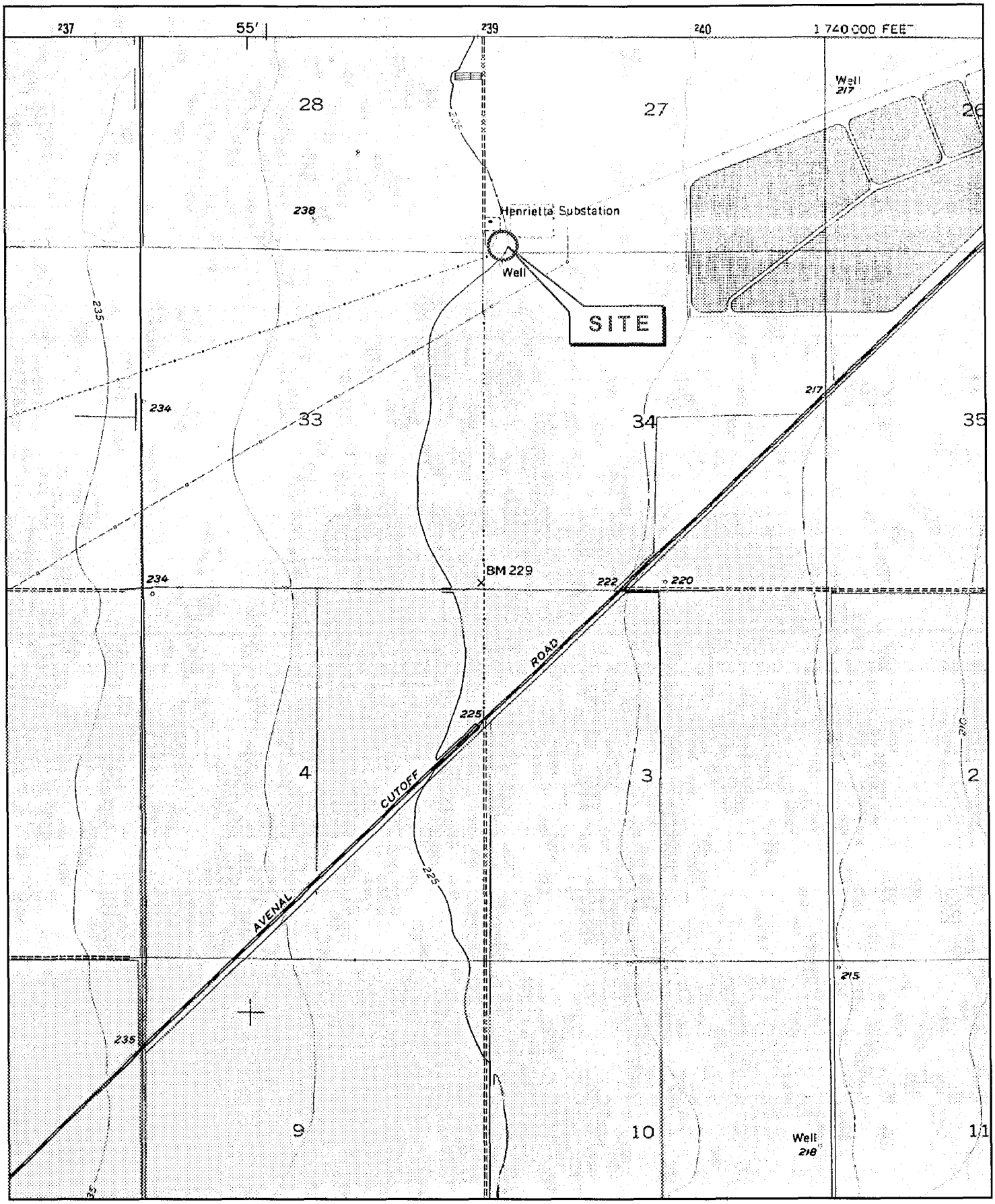

Harding ESE
A MACTEC COMPANY

Site Vicinity Map
Henrietta Peaker Project
25th Avenue
Henrietta, California

PLATE
1

DRAWN	JOB NUMBER	APPROVED	DATE	REVISED
DjP	53581 001		06/01	

APPENDIX A

SITE PHOTOGRAPHS

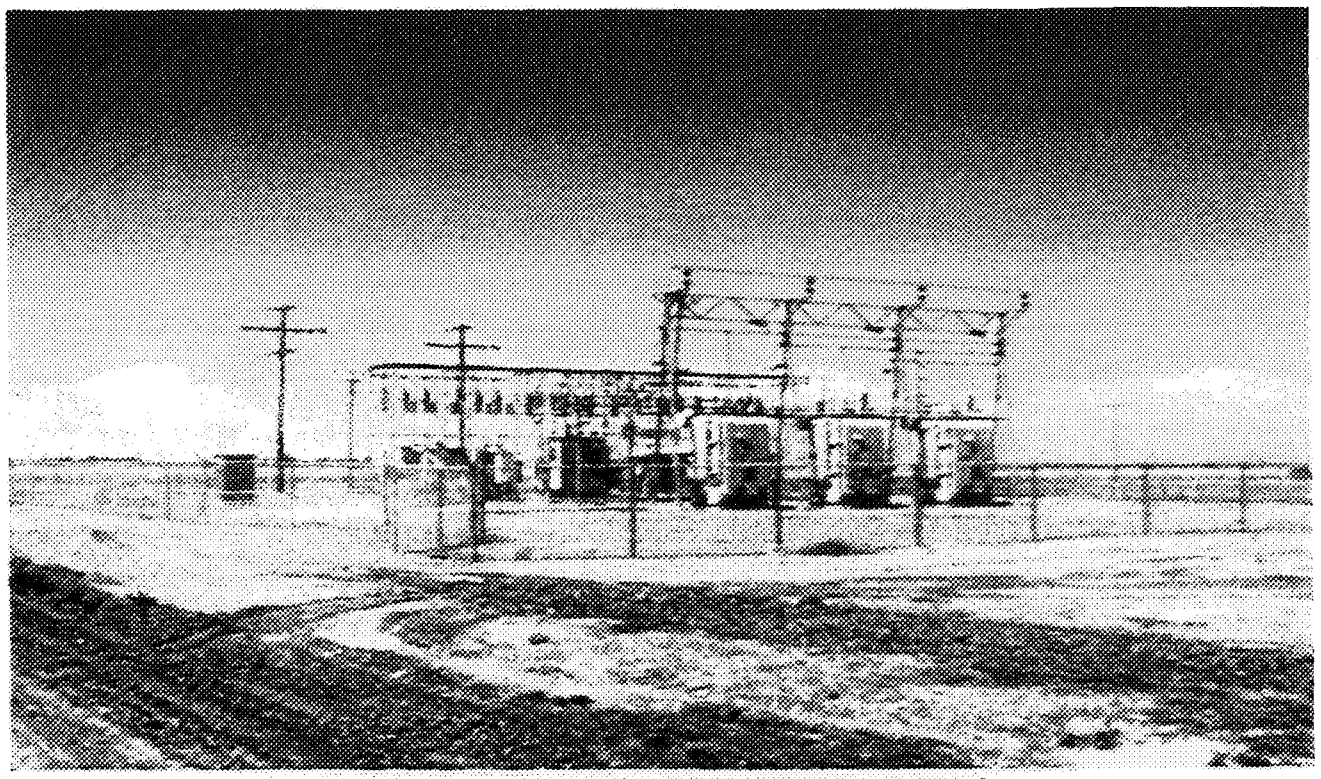

Photo 1 - West end of PG&E Substation, located near 25th Avenue

Photo 2 - View of PG&E Substation from NE corner of Property

Harding ESE
A MACTEC Company

Project Photographs

Phase I Site Visit
Henrietta Peaker
Henrietta, CA

Photos

1 & 2

TAKEN BY	JOB NUMBER	DATE OF PHOTOGRAPHY	REVISED DATE
JTH	650052.2009	5/23/01	

Photo 3 - View of PG&E Substation from North Property Boundary

Photo 4 - View of PG&E Substation from NW Corner of Property

Harding ESE
A MACTEC COMPANY

Project Photographs

Phase I Site Visit
Henrietta Peaker
Henrietta, CA

Photos

3 & 4

TAKEN BY	JOB NUMBER	DATE OF PHOTOGRAPHY	REVISED DATE
JTH	650052.2009	5/23/01	

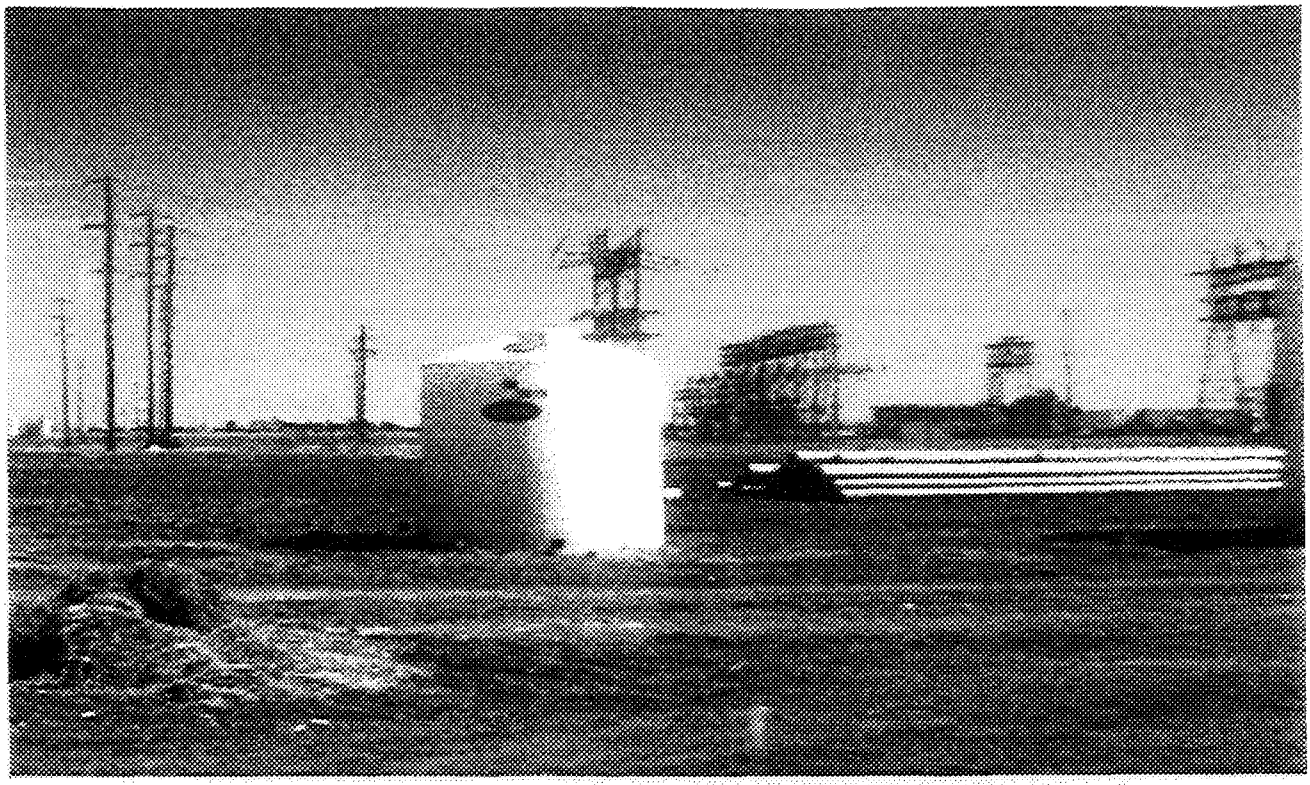

Photo 5 - Fertilizer Tank and Irrigation Piping located North of Property

Photo 6 - Irrigation Piping and Farm Equipment located North of Property

Harding ESE
A MACTEC COMPANY

Project Photographs

Phase I Site Visit
Henrietta Peaker
Henrietta, CA

Photos

5 & 6

TAKEN BY	JOB NUMBER	DATE OF PHOTOGRAPHY	REVISED DATE
JTH	650052.2009	5/23/01	

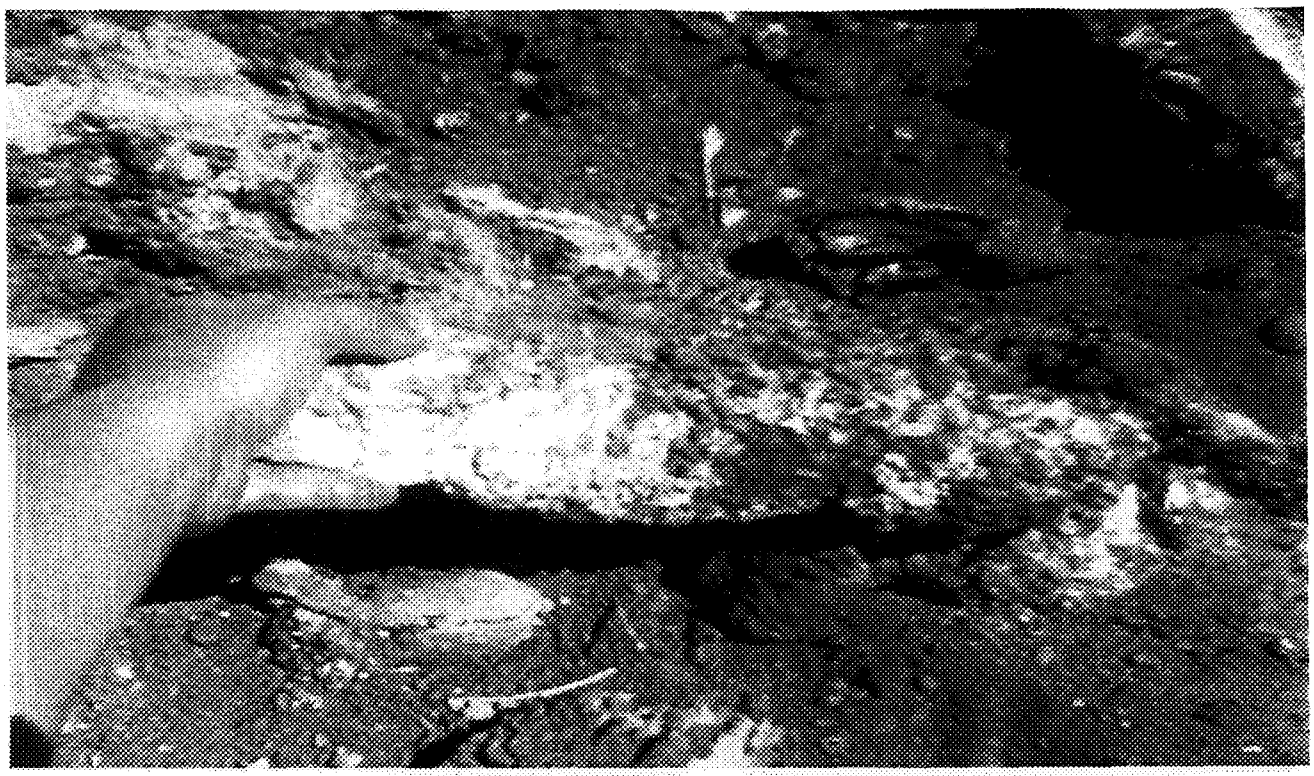

Photo 7 - Disturbed soil located in the Equipment Storage Area North of Property

Photo 8 - Irrigation Pipe located in Northwest corner of Property

Harding ESE
A MACTEC Company

Project Photographs

Phase I Site Visit
Henrietta Peaker
Henrietta, CA

Photos
7 & 8

TAKEN BY	JOB NUMBER	DATE OF PHOTOGRAPHY	REVISED DATE
JTH	650052.2009	5/23/01	

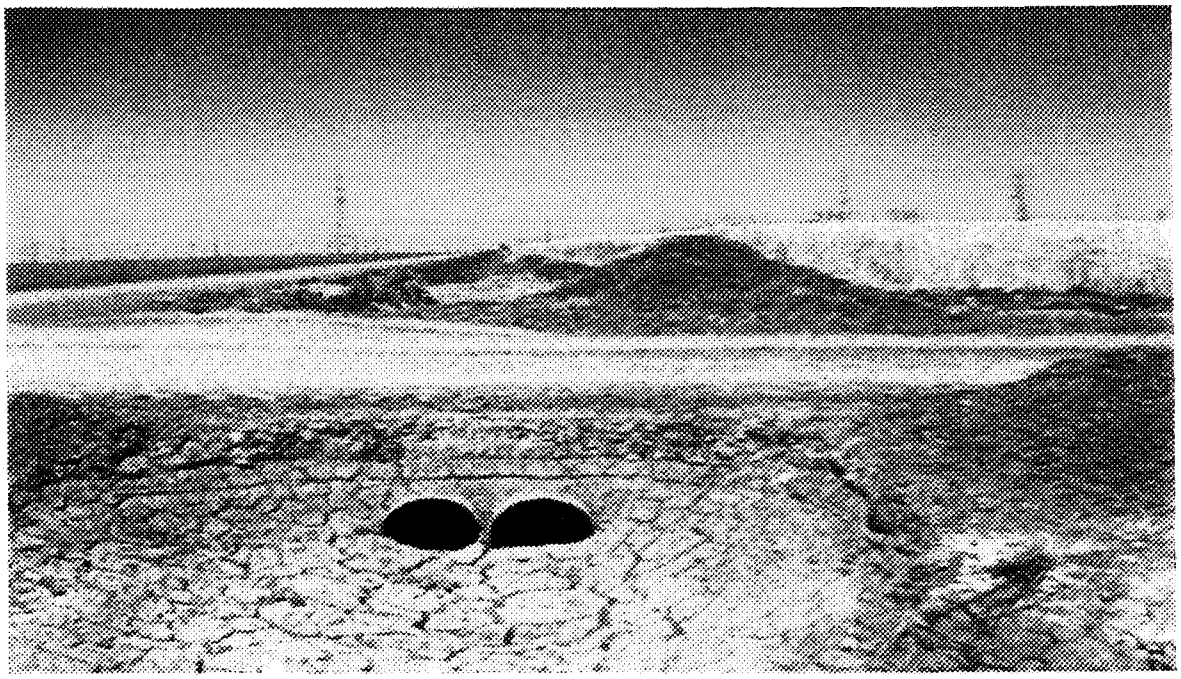

Photo 9 - Irrigation Canal running along North end of Property (not in use)

Photo 10 - Irrigation canal running North to South, East of Property

Harding ESE A MACTEC COMPANY	**Project Photographs** Phase I Site Visit Henrietta Peaker Henrietta, CA		**Photos** **9&10**
TAKEN BY JTH	JOB NUMBER 650052.2009	DATE OF PHOTOGRAPHY 5/23/01	REVISED DATE

Photo 11 - Irrigation Piping Southeast of Property

Photo 12 - Fence and Berm surrounding LNAS Wastewater Pond, North and Northeast of Property

Harding ESE
A MACTEC COMPANY

Project Photographs

Phase I Site Visit
Henrietta Peaker
Henrietta, CA

Photos

11&12

TAKEN BY	JOB NUMBER	DATE OF PHOTOGRAPHY	REVISED DATE
JTH	650052.2009	5/23/01	

Photo 13 - View of Property from Southeast Corner

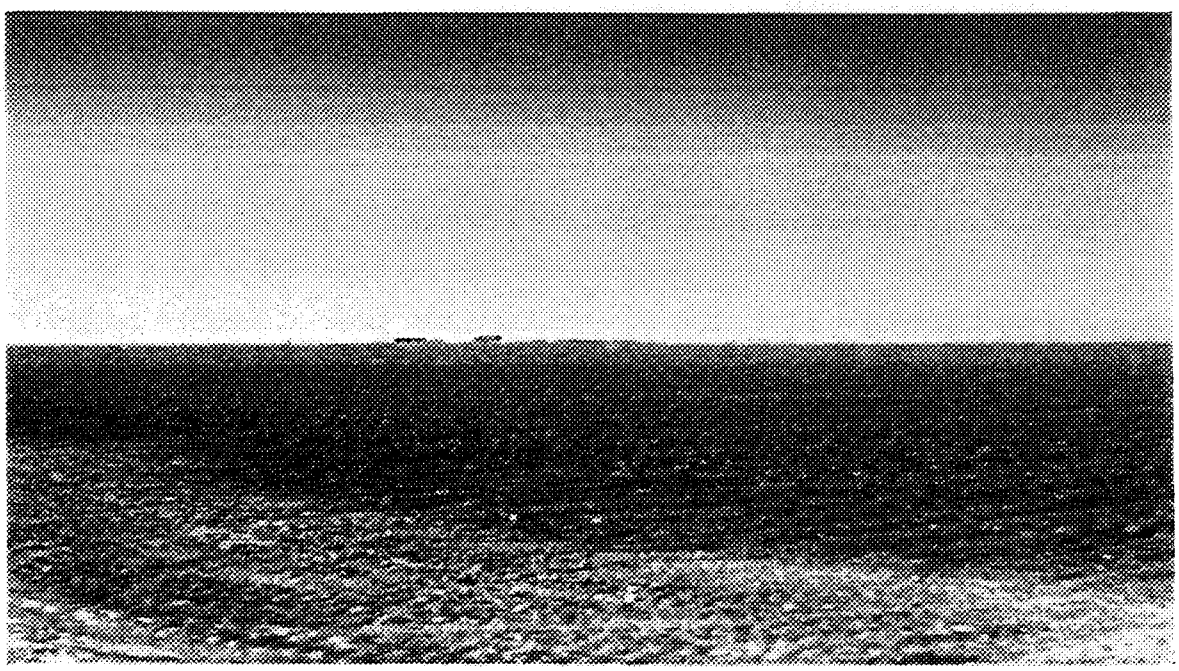

Photo 14 - Cotton field South of Property and Former Vegetable Processing Building from SE corner of property

Harding ESE A MACTEC Company	**Project Photographs** Phase I Site Visit Henrietta Peaker Henrietta, CA		**Photos** **13&14**
TAKEN BY JTH	JOB NUMBER 650052.2009	DATE OF PHOTOGRAPHY 5/23/01	REVISED DATE

APPENDIX B

ENVIRONMENTAL DATA RESOURCES, INC., DATABASE REPORT

The EDR Radius Map
with GeoCheck®

Henrietta Peaker
25th Avenue
Henrietta, CA 93245

Inquiry Number: 0634349.3r

May 21, 2001

Environmental Data Resources, Inc.

***The* Source For Environmental Risk Management Data**

3530 Post Road
Southport, Connecticut 06490

Nationwide Customer Service

Telephone: 1-800-352-0050
Fax: 1-800-231-6802
Internet: www.edrnet.com

FORM-RJC

TABLE OF CONTENTS

SECTION	PAGE
Executive Summary	ES1
Overview Map	2
Detail Map	3
Map Findings Summary	4
Map Findings	6
Orphan Summary	7
Government Records Searched/Data Currency Tracking	GR-1

GEOCHECK ADDENDUM

Physical Setting Source Addendum	A-1
Physical Setting Source Summary	A-2
Physical Setting Source Map	A-7
Physical Setting Source Map Findings	A-8
Physical Setting Source Records Searched	A-54

Thank you for your business.
Please contact EDR at 1-800-352-0050
with any questions or comments.

Disclaimer
Copyright and Trademark Notice

This report contains information obtained from a variety of public and other sources. NO WARRANTY EXPRESSED OR IMPLIED, IS MADE WHATSOEVER IN CONNECTION WITH THIS REPORT. ENVIRONMENTAL DATA RESOURCES INC. SPECIFICALLY DISCLAIMS THE MAKING OF ANY SUCH WARRANTIES, INCLUDING WITHOUT LIMITATION, MERCHANTABILITY OR FITNESS FOR A PARTICULAR USE OR PURPOSE. ALL RISK IS ASSUMED BY THE USER. IN NO EVENT SHALL EDR BE LIABLE TO ANYONE, WHETHER ARISING OUT OF ERRORS OR OMISSIONS, NEGLIGENCE, ACCIDENT OR ANY OTHER CAUSE, FOR ANY LOSS OR DAMAGE, INCLUDING, WITHOUT LIMITATION, SPECIAL, INCIDENTAL, CONSEQUENTIAL, OR EXEMPLARY DAMAGES.

Entire contents copyright 2001 by Environmental Data Resources, Inc. All rights reserved. Reproduction in any media or format, in whole or in part, of any report or map of Environmental Data Resources, Inc., or its affiliates, is prohibited without prior written permission.

EDR and the edr logos are trademarks of Environmental Data Resources, Inc. or its affiliates. All other trademarks used herein are the property of their respective owners.

EXECUTIVE SUMMARY

A search of available environmental records was conducted by Environmental Data Resources, Inc. (EDR). The report meets the government records search requirements of ASTM Standard Practice for Environmental Site Assessments, E 1527-00. Search distances are per ASTM standard or custom distances requested by the user.

TARGET PROPERTY INFORMATION

ADDRESS

25TH AVENUE
HENRIETTA, CA 93245

COORDINATES

Latitude (North):	36.246700 - 36˚ 14' 48.1"
Longitude (West):	119.904000 - 119˚ 54' 14.4"
Universal Tranverse Mercator:	Zone 11
UTM X (Meters):	239046.9
UTM Y (Meters):	4015022.5

USGS TOPOGRAPHIC MAP ASSOCIATED WITH TARGET PROPERTY

Target Property:	2436119-B8 WESTHAVEN, CA
Source:	USGS 7.5 min quad index

TARGET PROPERTY SEARCH RESULTS

The target property was not listed in any of the databases searched by EDR.

DATABASES WITH NO MAPPED SITES

No mapped sites were found in EDR's search of available ("reasonably ascertainable ") government records either on the target property or within the ASTM E 1527-00 search radius around the target property for the following databases:

FEDERAL ASTM STANDARD

NPL..... National Priority List
CERCLIS..... Comprehensive Environmental Response, Compensation, and Liability Information System
CERC-NFRAP..... CERCLIS No Further Remedial Action Planned
CORRACTS..... Corrective Action Report
RCRIS-TSD..... Resource Conservation and Recovery Information System
RCRIS-LQG..... Resource Conservation and Recovery Information System
RCRIS-SQG..... Resource Conservation and Recovery Information System
ERNS..... Emergency Response Notification System

STATE ASTM STANDARD

AWP..... Annual Workplan Sites
Cal-Sites..... Calsites Database
CHMIRS..... California Hazardous Material Incident Report System
Cortese..... "Cortese" Hazardous Waste & Substances Sites List
Notify 65..... Proposition 65 Records

EXECUTIVE SUMMARY

Toxic Pits..... Toxic Pits Cleanup Act Sites
SWF/LF..... Solid Waste Information System
WMUDS/SWAT..... Waste Management Unit Database
LUST..... Leaking Underground Storage Tank Information System
UST..... Hazardous Substance Storage Container Database
CA BOND EXP. PLAN..... Bond Expenditure Plan
CA FID UST..... Facility Inventory Database

FEDERAL ASTM SUPPLEMENTAL

CONSENT..... Superfund (CERCLA) Consent Decrees
ROD..... Records Of Decision
Delisted NPL..... National Priority List Deletions
FINDS..... Facility Index System/Facility Identification Initiative Program Summary Report
HMIRS..... Hazardous Materials Information Reporting System
MLTS..... Material Licensing Tracking System
MINES..... Mines Master Index File
NPL Liens..... Federal Superfund Liens
PADS..... PCB Activity Database System
RAATS..... RCRA Administrative Action Tracking System
TRIS..... Toxic Chemical Release Inventory System
TSCA..... Toxic Substances Control Act
FTTS..... FIFRA/ TSCA Tracking System - FIFRA (Federal Insecticide, Fungicide, & Rodenticide Act)/TSCA (Toxic Substances Control Act)

STATE OR LOCAL ASTM SUPPLEMENTAL

AST..... Aboveground Petroleum Storage Tank Facilities
CA WDS..... Waste Discharge System
CA SLIC..... Spills, Leaks, Investigation & Cleanup Cost Recovery Listing
HAZNET..... Hazardous Waste Information System

EDR PROPRIETARY DATABASES

Coal Gas..... Former Manufactured Gas (Coal Gas) Sites

SURROUNDING SITES: SEARCH RESULTS

Surrounding sites were not identified.

EXECUTIVE SUMMARY

Due to poor or inadequate address information, the following sites were not mapped:

Site Name	Database(s)
CINNAMON DRIVE SCHOOL SITE - PROPOSED	Cal-Sites
CURRY BROS. EXXON	LUST
NEW STAR FRESH FOOD LLC	HAZNET
BOSTON RANCH COMPANY	HAZNET
PACIFIC BELL	RCRIS-SQG, FINDS

OVERVIEW MAP - 0634349.3r - Harding Lawson Associates

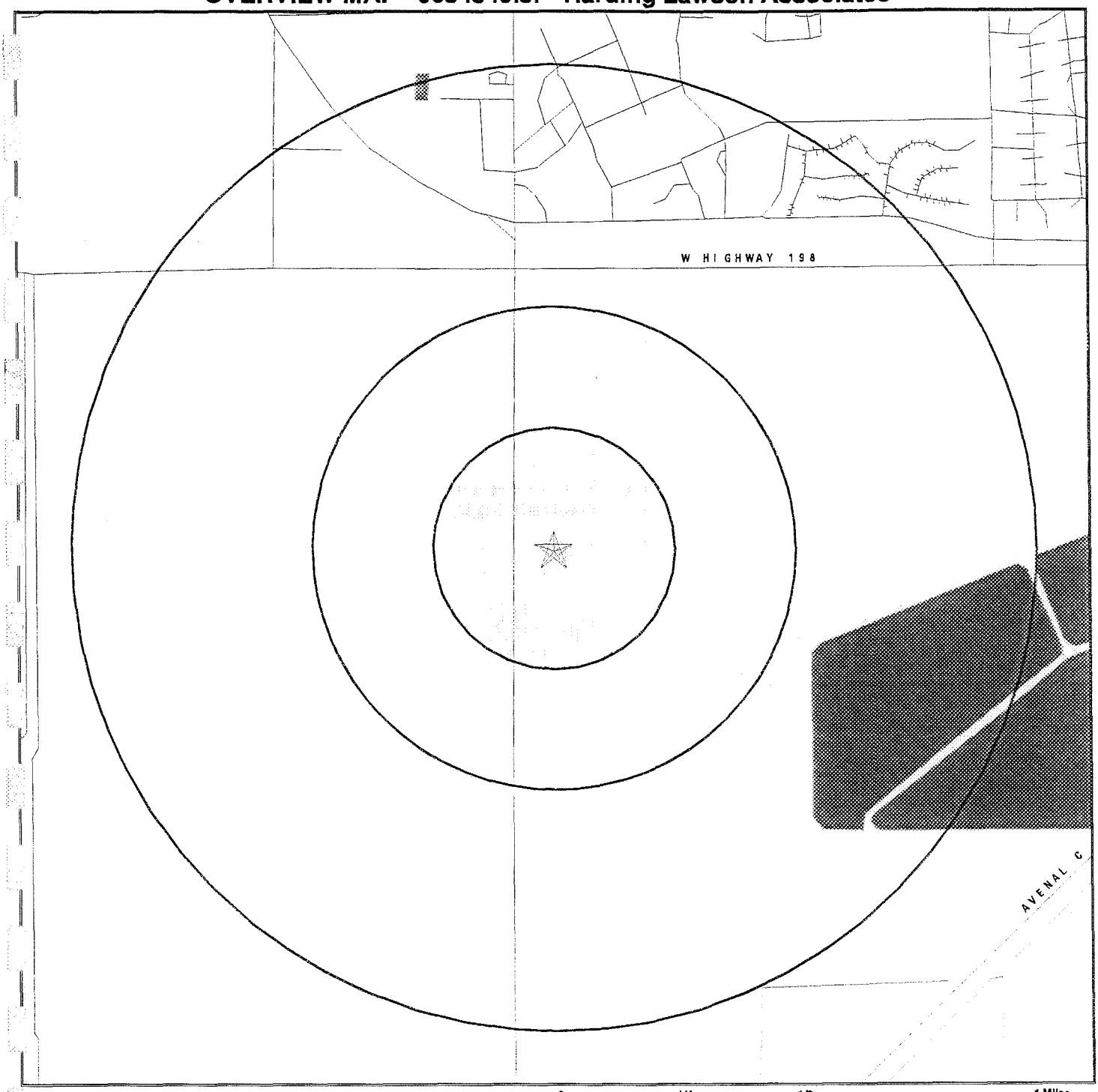

0 1/4 1/2 1 Miles

- Target Property
- Sites at elevations higher than or equal to the target property
- Sites at elevations lower than the target property
- Coal Gasification Sites (if requested)
- National Priority List Sites
- Landfill Sites
- Power transmission lines
- Oil & Gas pipelines
- 100-year flood zone
- 500-year flood zone
- Wetlands
- Areas of Concern

TARGET PROPERTY:	Henrietta Peaker	CUSTOMER:	Harding Lawson Associates
ADDRESS:	25th Avenue	CONTACT:	Susan Lewos
CITY/STATE/ZIP:	Henrietta CA 93245	INQUIRY #:	0634349.3r
LAT/LONG:	36.2467 / 119.9040	DATE:	May 21, 2001 1:45 pm

DETAIL MAP - 0634349.3r - Harding Lawson Associates

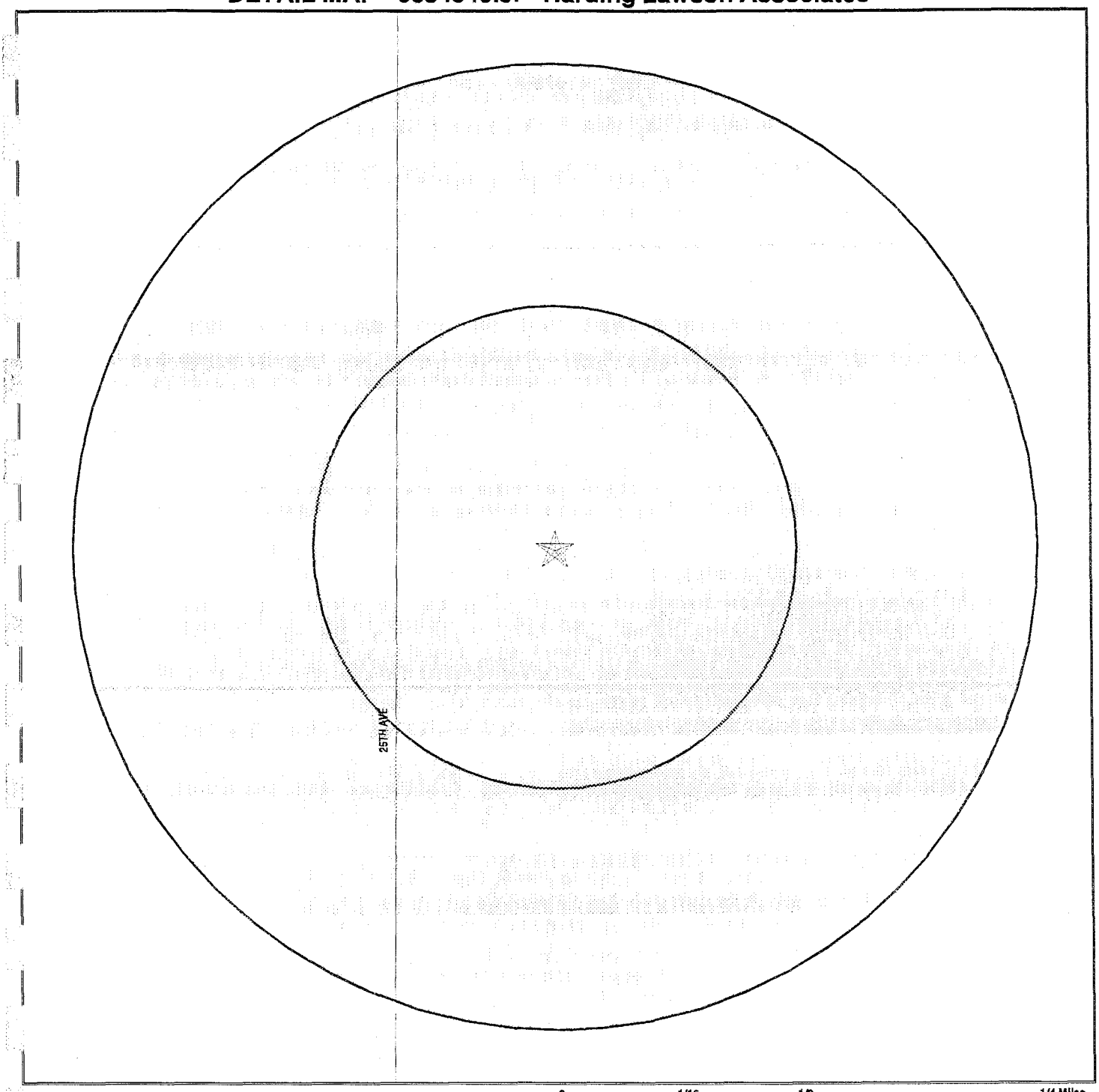

0 1/16 1/8 1/4 Miles

- Target Property
- Sites at elevations higher than or equal to the target property
- Sites at elevations lower than the target property
- Coal Gasification Sites (if requested)
- Sensitive Receptors
- National Priority List Sites
- Landfill Sites
- Power transmission lines
- Oil & Gas pipelines
- 100-year flood zone
- 500-year flood zone
- Areas of Concern

TARGET PROPERTY:	Henrietta Peaker	CUSTOMER:	Harding Lawson Associates
ADDRESS:	25th Avenue	CONTACT:	Susan Lewos
CITY/STATE/ZIP:	Henrietta CA 93245	INQUIRY #:	0634349.3r
LAT/LONG:	36.2467 / 119.9040	DATE:	May 21, 2001 1:45 pm

MAP FINDINGS SUMMARY

Database	Target Property	Search Distance (Miles)	< 1/8	1/8 - 1/4	1/4 - 1/2	1/2 - 1	> 1	Total Plotted
FEDERAL ASTM STANDARD								
NPL		1.000	0	0	0	0	NR	0
CERCLIS		0.500	0	0	0	NR	NR	0
CERC-NFRAP		0.250	0	0	NR	NR	NR	0
CORRACTS		1.000	0	0	0	0	NR	0
RCRIS-TSD		0.500	0	0	0	NR	NR	0
RCRIS Lg. Quan. Gen.		0.250	0	0	NR	NR	NR	0
RCRIS Sm. Quan. Gen.		0.250	0	0	NR	NR	NR	0
ERNS		TP	NR	NR	NR	NR	NR	0
STATE ASTM STANDARD								
AWP		1.000	0	0	0	0	NR	0
Cal-Sites		1.000	0	0	0	0	NR	0
CHMIRS		1.000	0	0	0	0	NR	0
Cortese		1.000	0	0	0	0	NR	0
Notify 65		1.000	0	0	0	0	NR	0
Toxic Pits		1.000	0	0	0	0	NR	0
State Landfill		0.500	0	0	0	NR	NR	0
WMUDS/SWAT		0.500	0	0	0	NR	NR	0
LUST		0.500	0	0	0	NR	NR	0
UST		0.250	0	0	NR	NR	NR	0
CA Bond Exp. Plan		1.000	0	0	0	0	NR	0
CA FID UST		0.250	0	0	NR	NR	NR	0
FEDERAL ASTM SUPPLEMENTAL								
CONSENT		1.000	0	0	0	0	NR	0
ROD		1.000	0	0	0	0	NR	0
Delisted NPL		1.000	0	0	0	0	NR	0
FINDS		TP	NR	NR	NR	NR	NR	0
HMIRS		TP	NR	NR	NR	NR	NR	0
MLTS		TP	NR	NR	NR	NR	NR	0
MINES		0.250	0	0	NR	NR	NR	0
NPL Liens		TP	NR	NR	NR	NR	NR	0
PADS		TP	NR	NR	NR	NR	NR	0
RAATS		TP	NR	NR	NR	NR	NR	0
TRIS		TP	NR	NR	NR	NR	NR	0
TSCA		TP	NR	NR	NR	NR	NR	0
FTTS		TP	NR	NR	NR	NR	NR	0
STATE OR LOCAL ASTM SUPPLEMENTAL								
AST		TP	NR	NR	NR	NR	NR	0
CA WDS		TP	NR	NR	NR	NR	NR	0
CA SLIC		0.500	0	0	0	NR	NR	0
HAZNET		0.250	0	0	NR	NR	NR	0

MAP FINDINGS SUMMARY

Database	Target Property	Search Distance (Miles)	< 1/8	1/8 - 1/4	1/4 - 1/2	1/2 - 1	> 1	Total Plotted
EDR PROPRIETARY DATABASES								
Coal Gas		1.000	0	0	0	0	NR	0
AQUIFLOW - see EDR Physical Setting Source Addendum								

TP = Target Property

NR = Not Requested at this Search Distance

* Sites may be listed in more than one database

Map ID Direction Distance Distance (ft.) Elevation	Site	Database(s)	EDR ID Number EPA ID Number

Coal Gas Site Search: No site was found in a search of Real Property Scan's ENVIROHAZ database.

NO SITES FOUND

ORPHAN SUMMARY

City	EDR ID	Site Name	Site Address	Zip	Database(s)	Facility ID
CUTOFF, LEMOORE	1000251773	PACIFIC BELL	ST. HWY.198, 1/2MI.W/0 AVENAL	93245	RCRIS-SQG, FINDS	
LEMOORE	S104404430	CURRY BROS. EXXON	9445 HWY 41 S	93245	LUST	5T16000082
LEMOORE	S103635247	NEW STAR FRESH FOOD LLC	16885 25TH AVE	93245	HAZNET	CAL000187885
LEMOORE	S104549051	CINNAMON DRIVE SCHOOL SITE - PROPOSED	500 E. CINNAMON DRIVE	93245	Cal-Sites	16010002
WESTHAVEN	S102808177	BOSTON RANCH COMPANY	HWY 198 / JAMISON AVE	93245	HAZNET	CAD982324790

GOVERNMENT RECORDS SEARCHED / DATA CURRENCY TRACKING

To maintain currency of the following federal and state databases, EDR contacts the appropriate governmental agency on a monthly or quarterly basis, as required.

Elapsed ASTM days: Provides confirmation that this EDR report meets or exceeds the 90-day updating requirement of the ASTM standard.

FEDERAL ASTM STANDARD RECORDS

NPL: National Priority List
Source: EPA
Telephone: N/A
National Priorities List (Superfund). The NPL is a subset of CERCLIS and identifies over 1,200 sites for priority cleanup under the Superfund Program. NPL sites may encompass relatively large areas. As such, EDR provides polygon coverage for over 1,000 NPL site boundaries produced by EPA's Environmental Photographic Interpretation Center (EPIC).

Date of Government Version: 01/23/01
Date Made Active at EDR: 02/16/01
Database Release Frequency: Semi-Annually
Date of Data Arrival at EDR: 02/05/01
Elapsed ASTM days: 11
Date of Last EDR Contact: 02/05/01

Proposed NPL: Proposed National Priority List Sites
Source: EPA
Telephone: N/A

Date of Government Version: 01/23/01
Date Made Active at EDR: 02/16/01
Database Release Frequency: Semi-Annually
Date of Data Arrival at EDR: 02/05/01
Elapsed ASTM days: 11
Date of Last EDR Contact: 02/05/01

CERCLIS: Comprehensive Environmental Response, Compensation, and Liability Information System
Source: EPA
Telephone: 703-413-0223
CERCLIS contains data on potentially hazardous waste sites that have been reported to the USEPA by states, municipalities, private companies and private persons, pursuant to Section 103 of the Comprehensive Environmental Response, Compensation, and Liability Act (CERCLA). CERCLIS contains sites which are either proposed to or on the National Priorities List (NPL) and sites which are in the screening and assessment phase for possible inclusion on the NPL.

Date of Government Version: 03/16/01
Date Made Active at EDR: 04/30/01
Database Release Frequency: Quarterly
Date of Data Arrival at EDR: 03/26/01
Elapsed ASTM days: 35
Date of Last EDR Contact: 03/26/01

CERCLIS-NFRAP: CERCLIS No Further Remedial Action Planned
Source: EPA
Telephone: 703-413-0223
As of February 1995, CERCLIS sites designated "No Further Remedial Action Planned" (NFRAP) have been removed from CERCLIS. NFRAP sites may be sites where, following an initial investigation, no contamination was found, contamination was removed quickly without the need for the site to be placed on the NPL, or the contamination was not serious enough to require Federal Superfund action or NPL consideration. EPA has removed approximately 25,000 NFRAP sites to lift the unintended barriers to the redevelopment of these properties and has archived them as historical records so EPA does not needlessly repeat the investigations in the future. This policy change is part of the EPA's Brownfields Redevelopment Program to help cities, states, private investors and affected citizens to promote economic redevelopment of unproductive urban sites.

Date of Government Version: 03/16/01
Date Made Active at EDR: 04/30/01
Database Release Frequency: Quarterly
Date of Data Arrival at EDR: 03/26/01
Elapsed ASTM days: 35
Date of Last EDR Contact: 03/26/01

CORRACTS: Corrective Action Report
Source: EPA
Telephone: 800-424-9346
CORRACTS identifies hazardous waste handlers with RCRA corrective action activity.

Date of Government Version: 04/20/00
Date Made Active at EDR: 08/01/00
Database Release Frequency: Semi-Annually
Date of Data Arrival at EDR: 06/12/00
Elapsed ASTM days: 50
Date of Last EDR Contact: 03/14/01

RCRIS: Resource Conservation and Recovery Information System
Source: EPA/NTIS
Telephone: 800-424-9346
Resource Conservation and Recovery Information System. RCRIS includes selective information on sites which generate, transport, store, treat and/or dispose of hazardous waste as defined by the Resource Conservation and Recovery Act (RCRA).

Date of Government Version: 06/21/00
Date Made Active at EDR: 07/31/00
Database Release Frequency: Semi-Annually
Date of Data Arrival at EDR: 07/10/00
Elapsed ASTM days: 21
Date of Last EDR Contact: 01/30/01

ERNS: Emergency Response Notification System
Source: EPA/NTIS
Telephone: 202-260-2342
Emergency Response Notification System. ERNS records and stores information on reported releases of oil and hazardous substances.

Date of Government Version: 08/08/00
Date Made Active at EDR: 09/06/00
Database Release Frequency: Quarterly
Date of Data Arrival at EDR: 08/11/00
Elapsed ASTM days: 26
Date of Last EDR Contact: 04/19/01

FEDERAL ASTM SUPPLEMENTAL RECORDS

BRS: Biennial Reporting System
Source: EPA/NTIS
Telephone: 800-424-9346
The Biennial Reporting System is a national system administered by the EPA that collects data on the generation and management of hazardous waste. BRS captures detailed data from two groups: Large Quantity Generators (LQG) and Treatment, Storage, and Disposal Facilities.

Date of Government Version: 12/31/97
Database Release Frequency: Biennially
Date of Last EDR Contact: 03/19/01
Date of Next Scheduled EDR Contact: 06/18/01

CONSENT: Superfund (CERCLA) Consent Decrees
Source: EPA Regional Offices
Telephone: Varies
Major legal settlements that establish responsibility and standards for cleanup at NPL (Superfund) sites. Released periodically by United States District Courts after settlement by parties to litigation matters.

Date of Government Version: N/A
Database Release Frequency: Varies
Date of Last EDR Contact: N/A
Date of Next Scheduled EDR Contact: N/A

ROD: Records Of Decision
Source: NTIS
Telephone: 703-416-0223
Record of Decision. ROD documents mandate a permanent remedy at an NPL (Superfund) site containing technical and health information to aid in the cleanup.

Date of Government Version: 09/30/99
Database Release Frequency: Annually
Date of Last EDR Contact: 04/10/01
Date of Next Scheduled EDR Contact: 07/09/01

DELISTED NPL: National Priority List Deletions
Source: EPA
Telephone: N/A
The National Oil and Hazardous Substances Pollution Contingency Plan (NCP) establishes the criteria that the EPA uses to delete sites from the NPL. In accordance with 40 CFR 300.425.(e), sites may be deleted from the NPL where no further response is appropriate.

Date of Government Version: 01/23/01
Database Release Frequency: Semi-Annually

Date of Last EDR Contact: 02/05/01
Date of Next Scheduled EDR Contact: 05/07/01

FINDS: Facility Index System/Facility Identification Initiative Program Summary Report
Source: EPA
Telephone: N/A
Facility Index System. FINDS contains both facility information and 'pointers' to other sources that contain more detail. EDR includes the following FINDS databases in this report: PCS (Permit Compliance System), AIRS (Aerometric Information Retrieval System), DOCKET (Enforcement Docket used to manage and track information on civil judicial enforcement cases for all environmental statutes), FURS (Federal Underground Injection Control), C-DOCKET (Criminal Docket System used to track criminal enforcement actions for all environmental statutes), FFIS (Federal Facilities Information System), STATE (State Environmental Laws and Statutes), and PADS (PCB Activity Data System).

Date of Government Version: 07/07/00
Database Release Frequency: Quarterly

Date of Last EDR Contact: 04/09/01
Date of Next Scheduled EDR Contact: 07/09/01

HMIRS: Hazardous Materials Information Reporting System
Source: U.S. Department of Transportation
Telephone: 202-366-4526
Hazardous Materials Incident Report System. HMIRS contains hazardous material spill incidents reported to DOT.

Date of Government Version: 05/31/00
Database Release Frequency: Annually

Date of Last EDR Contact: 04/24/01
Date of Next Scheduled EDR Contact: 07/23/01

MLTS: Material Licensing Tracking System
Source: Nuclear Regulatory Commission
Telephone: 301-415-7169
MLTS is maintained by the Nuclear Regulatory Commission and contains a list of approximately 8,100 sites which possess or use radioactive materials and which are subject to NRC licensing requirements. To maintain currency, EDR contacts the Agency on a quarterly basis.

Date of Government Version: 01/30/01
Database Release Frequency: Quarterly

Date of Last EDR Contact: 04/09/01
Date of Next Scheduled EDR Contact: 07/09/01

MINES: Mines Master Index File
Source: Department of Labor, Mine Safety and Health Administration
Telephone: 303-231-5959

Date of Government Version: 08/01/98
Database Release Frequency: Semi-Annually

Date of Last EDR Contact: 04/02/01
Date of Next Scheduled EDR Contact: 07/02/01

NPL LIENS: Federal Superfund Liens
Source: EPA
Telephone: 205-564-4267
Federal Superfund Liens. Under the authority granted the USEPA by the Comprehensive Environmental Response, Compensation and Liability Act (CERCLA) of 1980, the USEPA has the authority to file liens against real property in order to recover remedial action expenditures or when the property owner receives notification of potential liability. USEPA compiles a listing of filed notices of Superfund Liens.

Date of Government Version: 10/15/91
Database Release Frequency: No Update Planned

Date of Last EDR Contact: 02/20/01
Date of Next Scheduled EDR Contact: 05/21/01

PADS: PCB Activity Database System
Source: EPA
Telephone: 202-260-3936
PCB Activity Database. PADS Identifies generators, transporters, commercial storers and/or brokers and disposers of PCB's who are required to notify the EPA of such activities.

Date of Government Version: 12/11/00
Database Release Frequency: Annually

Date of Last EDR Contact: 02/12/01
Date of Next Scheduled EDR Contact: 05/14/01

RAATS: RCRA Administrative Action Tracking System
Source: EPA
Telephone: 202-564-4104
RCRA Administration Action Tracking System. RAATS contains records based on enforcement actions issued under RCRA pertaining to major violators and includes administrative and civil actions brought by the EPA. For administration actions after September 30, 1995, data entry in the RAATS database was discontinued. EPA will retain a copy of the database for historical records. It was necessary to terminate RAATS because a decrease in agency resources made it impossible to continue to update the information contained in the database.

Date of Government Version: 04/17/95
Database Release Frequency: No Update Planned
Date of Last EDR Contact: 03/13/01
Date of Next Scheduled EDR Contact: 06/11/01

TRIS: Toxic Chemical Release Inventory System
Source: EPA
Telephone: 202-260-1531
Toxic Release Inventory System. TRIS identifies facilities which release toxic chemicals to the air, water and land in reportable quantities under SARA Title III Section 313.

Date of Government Version: 12/31/97
Database Release Frequency: Annually
Date of Last EDR Contact: 03/26/01
Date of Next Scheduled EDR Contact: 06/25/01

TSCA: Toxic Substances Control Act
Source: EPA
Telephone: 202-260-1444
Toxic Substances Control Act. TSCA identifies manufacturers and importers of chemical substances included on the TSCA Chemical Substance Inventory list. It includes data on the production volume of these substances by plant site.

Date of Government Version: 12/31/98
Database Release Frequency: Every 4 Years
Date of Last EDR Contact: 03/30/01
Date of Next Scheduled EDR Contact: 06/12/01

FTTS: FIFRA/ TSCA Tracking System - FIFRA (Federal Insecticide, Fungicide, & Rodenticide Act)/TSCA (Toxic Substances Control Act)
Source: EPA/Office of Prevention, Pesticides and Toxic Substances
Telephone: 202-564-2501
FTTS tracks administrative cases and pesticide enforcement actions and compliance activities related to FIFRA, TSCA and EPCRA (Emergency Planning and Community Right-to-Know Act). To maintain currency, EDR contacts the Agency on a quarterly basis.

Date of Government Version: 08/30/00
Database Release Frequency: Quarterly
Date of Last EDR Contact: 03/26/01
Date of Next Scheduled EDR Contact: 06/25/01

FTTS INSP: FIFRA/ TSCA Tracking System - FIFRA (Federal Insecticide, Fungicide, & Rodenticide Act)/TSCA (Toxic Substances Control Act)
Source: EPA
Telephone: 202-564-2501

Date of Government Version: 08/10/00
Database Release Frequency: Quarterly
Date of Last EDR Contact: 03/26/01
Date of Next Scheduled EDR Contact: 06/25/01

STATE OF CALIFORNIA ASTM STANDARD RECORDS

CAL-SITES (AWP): Annual Workplan Sites
Source: California Environmental Protection Agency
Telephone: 916-323-3400
Known Hazardous Waste Sites. California DTSC's Annual Workplan (AWP), formerly BEP, identifies known hazardous substance sites targeted for cleanup.

Date of Government Version: 11/08/00
Date Made Active at EDR: 03/02/01
Database Release Frequency: Annually
Date of Data Arrival at EDR: 01/31/01
Elapsed ASTM days: 30
Date of Last EDR Contact: 04/30/01

CAL-SITES (ASPIS): Calsites Database
Source: Department of Toxic Substance Control
Telephone: 916-323-3400
The Calsites database contains potential or confirmed hazardous substance release properties. In 1996, California EPA reevaluated and significantly reduced the number of sites in the Calsites database.

Date of Government Version: 10/01/00
Date Made Active at EDR: 11/22/00
Database Release Frequency: Quarterly
Date of Data Arrival at EDR: 10/30/00
Elapsed ASTM days: 23
Date of Last EDR Contact: 04/09/01

CHMIRS: California Hazardous Material Incident Report System
Source: Office of Emergency Services
Telephone: 916-464-3283
California Hazardous Material Incident Reporting System. CHMIRS contains information on reported hazardous material incidents (accidental releases or spills).

Date of Government Version: 12/31/94
Date Made Active at EDR: 04/24/95
Database Release Frequency: No Update Planned
Date of Data Arrival at EDR: 03/13/95
Elapsed ASTM days: 42
Date of Last EDR Contact: 02/26/01

CORTESE: "Cortese" Hazardous Waste & Substances Sites List
Source: CAL EPA/Office of Emergency Information
Telephone: 916-327-1848
The sites for the list are designated by the State Water Resource Control Board (LUST), the Integrated Waste Board (SWF/LS), and the Department of Toxic Substances Control (Cal-Sites).

Date of Government Version: 04/01/98
Date Made Active at EDR: 09/23/98
Database Release Frequency: Varies
Date of Data Arrival at EDR: 08/26/98
Elapsed ASTM days: 28
Date of Last EDR Contact: 01/30/01

NOTIFY 65: Proposition 65 Records
Source: State Water Resources Control Board
Telephone: 916-657-0696
Proposition 65 Notification Records. NOTIFY 65 contains facility notifications about any release which could impact drinking water and thereby expose the public to a potential health risk.

Date of Government Version: 10/21/93
Date Made Active at EDR: 11/19/93
Database Release Frequency: No Update Planned
Date of Data Arrival at EDR: 11/01/93
Elapsed ASTM days: 18
Date of Last EDR Contact: 04/26/01

TOXIC PITS: Toxic Pits Cleanup Act Sites
Source: State Water Resources Control Board
Telephone: 916-227-4364
Toxic PITS Cleanup Act Sites. TOXIC PITS identifies sites suspected of containing hazardous substances where cleanup has not yet been completed.

Date of Government Version: 07/01/95
Date Made Active at EDR: 09/26/95
Database Release Frequency: No Update Planned
Date of Data Arrival at EDR: 08/30/95
Elapsed ASTM days: 27
Date of Last EDR Contact: 02/06/01

SWF/LF (SWIS): Solid Waste Information System
Source: Integrated Waste Management Board
Telephone: 916-341-6320
Active, Closed and Inactive Landfills. SWF/LF records typically contain an inve ntory of solid waste disposal facilities or landfills. These may be active or i nactive facilities or open dumps that failed to meet RCRA Section 4004 criteria for solid waste landfills or disposal sites.

Date of Government Version: 02/21/01
Date Made Active at EDR: 04/13/01
Database Release Frequency: Quarterly
Date of Data Arrival at EDR: 03/19/01
Elapsed ASTM days: 25
Date of Last EDR Contact: 03/19/01

WMUDS/SWAT: Waste Management Unit Database
Source: State Water Resources Control Board
Telephone: 916-227-4448
Waste Management Unit Database System. WMUDS is used by the State Water Resources Control Board staff and the Regional Water Quality Control Boards for program tracking and inventory of waste management units. WMUDS is composed of the following databases: Facility Information, Scheduled Inspections Information, Waste Management Unit Information, SWAT Program Information, SWAT Report Summary Information, SWAT Report Summary Data, Chapter 15 (formerly Subchapter 15) Information, Chapter 15 Monitoring Parameters, TPCA Program Information, RCRA Program Information, Closure Information, and Interested Parties Information.

Date of Government Version: 04/01/00
Date Made Active at EDR: 05/10/00
Database Release Frequency: Quarterly
Date of Data Arrival at EDR: 04/10/00
Elapsed ASTM days: 30
Date of Last EDR Contact: 03/16/01

LUST: Leaking Underground Storage Tank Information System
Source: State Water Resources Control Board
Telephone: 916-445-6532
Leaking Underground Storage Tank Incident Reports. LUST records contain an inventory of reported leaking underground storage tank incidents. Not all states maintain these records, and the information stored varies by state.

Date of Government Version: 03/31/01
Date Made Active at EDR: 05/07/01
Database Release Frequency: Quarterly
Date of Data Arrival at EDR: 04/12/01
Elapsed ASTM days: 25
Date of Last EDR Contact: 04/12/01

CA UST:

UST: Hazardous Substance Storage Container Database
Source: State Water Resources Control Board
Telephone: 916-227-4408
The Hazardous Substance Storage Container Database is a historical listing of UST sites. Refer to local/county source for current data.

Date of Government Version: 10/15/90
Date Made Active at EDR: 02/12/91
Database Release Frequency: No Update Planned
Date of Data Arrival at EDR: 01/25/91
Elapsed ASTM days: 18
Date of Last EDR Contact: 04/05/01

CA BOND EXP. PLAN: Bond Expenditure Plan
Source: Department of Health Services
Telephone: 916-255-2118
Department of Health Services developed a site-specific expenditure plan as the basis for an appropriation of Hazardous Substance Cleanup Bond Act funds. It is not updated.

Date of Government Version: 01/01/89
Date Made Active at EDR: 08/02/94
Database Release Frequency: No Update Planned
Date of Data Arrival at EDR: 07/27/94
Elapsed ASTM days: 6
Date of Last EDR Contact: 05/31/94

CA FID UST: Facility Inventory Database
Source: California Environmental Protection Agency
Telephone: 916-445-6532
The Facility Inventory Database (FID) contains a historical listing of active and inactive underground storage tank locations from the State Water Resource Control Board. Refer to local/county source for current data.

Date of Government Version: 10/31/94
Date Made Active at EDR: 09/29/95
Database Release Frequency: No Update Planned
Date of Data Arrival at EDR: 09/05/95
Elapsed ASTM days: 24
Date of Last EDR Contact: 12/28/98

STATE OF CALIFORNIA ASTM SUPPLEMENTAL RECORDS

AST: Aboveground Petroleum Storage Tank Facilities
Source: State Water Resources Control Board
Telephone: 916-227-4382
Registered Aboveground Storage Tanks.

Date of Government Version: 03/01/01
Database Release Frequency: Quarterly

Date of Last EDR Contact: 02/05/01
Date of Next Scheduled EDR Contact: 05/07/01

CA WDS: Waste Discharge System
Source: State Water Resources Control Board
Telephone: 916-657-1571
Sites which have been issued waste discharge requirements.

Date of Government Version: 02/14/01
Database Release Frequency: Quarterly

Date of Last EDR Contact: 03/26/01
Date of Next Scheduled EDR Contact: 06/25/01

HAZNET: Hazardous Waste Information System
Source: California Environmental Protection Agency
Telephone: 916-255-1136
Facility and Manifest Data. The data is extracted from the copies of hazardous waste manifests received each year by the DTSC. The annual volume of manifests is typically 700,000 - 1,000,000 annually, representing approximately 350,000 - 500,000 shipments. Data are from the manifests submitted without correction, and therefore many contain some invalid values for data elements such as generator ID, TSD ID, waste category, and disposal method.

Date of Government Version: 12/31/99
Database Release Frequency: Annually

Date of Last EDR Contact: 02/14/01
Date of Next Scheduled EDR Contact: 05/14/01

LOCAL RECORDS

ALAMEDA COUNTY:

Local Oversight Program Listing of UGT Cleanup Sites
Source: Alameda County Environmental Health Services
Telephone: 510-567-6700

Date of Government Version: 08/01/00
Database Release Frequency: Semi-Annually

Date of Last EDR Contact: 01/30/01
Date of Next Scheduled EDR Contact: 04/30/01

Underground Tanks
Source: Alameda County Environmental Health Services
Telephone: 510-567-6700

Date of Government Version: 12/01/00
Database Release Frequency: Semi-Annually

Date of Last EDR Contact: 01/30/00
Date of Next Scheduled EDR Contact: 04/30/01

CONTRA COSTA COUNTY:

Site List
Source: Contra Costa Health Services Department
Telephone: 925-646-2286
List includes sites from the underground tank, hazardous waste generator and business plan/2185 programs.

Date of Government Version: 09/01/00
Database Release Frequency: Semi-Annually

Date of Last EDR Contact: 03/05/01
Date of Next Scheduled EDR Contact: 06/04/01

FRESNO COUNTY:

CUPA Resources List
Source: Dept. of Community Health
Telephone: 559-445-3271
Certified Unified Program Agency. CUPA's are responsible for implementing a unified hazardous materials and hazardous waste management regulatory program. The agency provides oversight of businesses that deal with hazardous materials, operate underground storage tanks or aboveground storage tanks.

Date of Government Version: 01/22/01
Database Release Frequency: N/A

Date of Last EDR Contact: 01/22/01
Date of Next Scheduled EDR Contact: 05/14/01

KERN COUNTY:

Underground Storage Tank Sites & Tanks Listing
Source: Kern County Environment Health Services Department
Telephone: 661-862-8700
Kern County Sites and Tanks Listing.

Date of Government Version: 01/23/01
Database Release Frequency: Quarterly

Date of Last EDR Contact: 03/05/01
Date of Next Scheduled EDR Contact: 06/04/01

LOS ANGELES COUNTY:

List of Solid Waste Facilities
Source: La County Department of Public Works
Telephone: 818-458-5185

Date of Government Version: 09/16/98
Database Release Frequency: Varies

Date of Last EDR Contact: 03/19/01
Date of Next Scheduled EDR Contact: 06/18/01

City of El Segundo Underground Storage Tank
Source: City of El Segundo Fire Department
Telephone: 310-607-2239

Date of Government Version: 02/01/01
Database Release Frequency: Semi-Annually

Date of Last EDR Contact: 02/19/01
Date of Next Scheduled EDR Contact: 05/21/01

City of Long Beach Underground Storage Tank
Source: City of Long Beach Fire Department
Telephone: 562-570-2543

Date of Government Version: 10/01/99
Database Release Frequency: Annually

Date of Last EDR Contact: 02/27/01
Date of Next Scheduled EDR Contact: 05/28/01

City of Torrance Underground Storage Tank
Source: City of Torrance Fire Department
Telephone: 310-618-2973

Date of Government Version: 02/01/01
Database Release Frequency: Semi-Annually

Date of Last EDR Contact: 02/19/01
Date of Next Scheduled EDR Contact: 05/21/01

City of Los Angeles Landfills
Source: Engineering & Construction Division
Telephone: 213-473-7869

Date of Government Version: 08/31/99
Database Release Frequency: Semi-Annually

Date of Last EDR Contact: 03/19/01
Date of Next Scheduled EDR Contact: 06/18/01

Street Number List
Source: Department of Public Works
Telephone: 626-458-3517
Industrial Waste and Underground Storage Tank Sites.

Date of Government Version: 11/30/00
Database Release Frequency: Semi-Annually

Date of Last EDR Contact: 02/19/01
Date of Next Scheduled EDR Contact: 05/21/01

Site Mitigation List
Source: Community Health Services
Telephone: 323-890-7806
Industrial sites that have had some sort of spill or complaint.

Date of Government Version: 06/02/00
Database Release Frequency: Annually
Date of Last EDR Contact: 02/19/01
Date of Next Scheduled EDR Contact: 05/21/01

San Gabriel Valley Areas of Concern
Source: EPA Region 9
Telephone: 415-744-2407
San Gabriel Valley areas where VOC contamination is at or above the MCL as designated by region 9 EPA office.

Date of Government Version: 12/31/98
Database Release Frequency: N/A
Date of Last EDR Contact: 06/29/99
Date of Next Scheduled EDR Contact: N/A

MARIN COUNTY:

Underground Storage Tank Sites
Source: Public Works Department Waste Management
Telephone: 415-499-6647
Currently permitted USTs in Marin County.

Date of Government Version: 03/05/01
Database Release Frequency: Semi-Annually
Date of Last EDR Contact: 02/05/01
Date of Next Scheduled EDR Contact: 05/07/01

NAPA COUNTY:

Sites With Reported Contamination
Source: Napa County Department of Environmental Management
Telephone: 707-253-4269

Date of Government Version: 10/23/00
Database Release Frequency: Semi-Annually
Date of Last EDR Contact: 04/02/01
Date of Next Scheduled EDR Contact: 07/02/01

Closed and Operating Underground Storage Tank Sites
Source: Napa County Department of Environmental Management
Telephone: 707-253-4269

Date of Government Version: 08/30/00
Database Release Frequency: Annually
Date of Last EDR Contact: 04/02/01
Date of Next Scheduled EDR Contact: 07/02/01

ORANGE COUNTY:

List of Underground Storage Tank Cleanups
Source: Health Care Agency
Telephone: 714-834-3446
Orange County Underground Storage Tank Cleanups (LUST).

Date of Government Version: 11/29/00
Database Release Frequency: Quarterly
Date of Last EDR Contact: 03/13/01
Date of Next Scheduled EDR Contact: 06/11/01

List of Underground Storage Tank Facilities
Source: Health Care Agency
Telephone: 714-834-3446
Orange County Underground Storage Tank Facilities (UST).

Date of Government Version: 11/29/00
Database Release Frequency: Quarterly

Date of Last EDR Contact: 03/13/01
Date of Next Scheduled EDR Contact: 06/11/01

List of Industrial Site Cleanups
Source: Health Care Agency
Telephone: 714-834-3446
Petroleum and non-petroleum spills.

Date of Government Version: 10/24/00
Database Release Frequency: Annually

Date of Last EDR Contact: 03/13/01
Date of Next Scheduled EDR Contact: 06/11/01

PLACER COUNTY:

Master List of Facilities
Source: Placer County Health and Human Services
Telephone: 530-889-7335
List includes aboveground tanks, underground tanks and cleanup sites.

Date of Government Version: 01/18/01
Database Release Frequency: Semi-Annually

Date of Last EDR Contact: 03/26/01
Date of Next Scheduled EDR Contact: 06/25/01

RIVERSIDE COUNTY:

Listing of Underground Tank Cleanup Sites
Source: Department of Public Health
Telephone: 909-358-5055
Riverside County Underground Storage Tank Cleanup Sites (LUST).

Date of Government Version: 01/24/01
Database Release Frequency: Quarterly

Date of Last EDR Contact: 04/23/01
Date of Next Scheduled EDR Contact: 07/23/01

Underground Storage Tank Tank List
Source: Health Services Agency
Telephone: 909-358-5055

Date of Government Version: 12/05/00
Database Release Frequency: Quarterly

Date of Last EDR Contact: 04/23/01
Date of Next Scheduled EDR Contact: 07/23/01

SACRAMENTO COUNTY:

CS - Contaminated Sites
Source: Sacramento County Environmental Management
Telephone: 916-875-8450

Date of Government Version: 02/06/01
Database Release Frequency: Quarterly

Date of Last EDR Contact: 02/06/01
Date of Next Scheduled EDR Contact: 05/07/01

ML - Regulatory Compliance Master List
Source: Sacramento County Environmental Management
Telephone: 916-875-8450
Any business that has hazardous materials on site - hazardous material storage sites, underground storage tanks, waste generators.

Date of Government Version: 02/06/01
Database Release Frequency: Quarterly

Date of Last EDR Contact: 02/06/01
Date of Next Scheduled EDR Contact: 05/07/01

SAN BERNARDINO COUNTY:

Hazardous Material Permits
Source: San Bernardino County Fire Department Hazardous Materials Division
Telephone: 909-387-3041
This listing includes underground storage tanks, medical waste handlers/generators, hazardous materials handlers, hazardous waste generators, and waste oil generators/handlers.

Date of Government Version: 10/02/00
Database Release Frequency: Quarterly
Date of Last EDR Contact: 03/13/01
Date of Next Scheduled EDR Contact: 06/11/01

SAN DIEGO COUNTY:

Solid Waste Facilities
Source: Department of Health Services
Telephone: 619-338-2209
San Diego County Solid Waste Facilities.

Date of Government Version: 07/01/98
Database Release Frequency: Annually
Date of Last EDR Contact: 02/27/01
Date of Next Scheduled EDR Contact: 05/28/01

Hazardous Materials Management Division Database
Source: Hazardous Materials Management Division
Telephone: 619-338-2268
The database includes: HE58 - This report contains the business name, site address, business phone number, establishment 'H' permit number, type of permit, and the business status. HE17 - In addition to providing the same information provided in the HE58 listing, HE17 provides inspection dates, violations received by the establishment, hazardous waste generated, the quantity, method of storage, treatment/disposal of waste and the hauler, and information on underground storage tanks. Unauthorized Release List - Includes a summary of environmental contamination cases in San Diego County (underground tank cases, non-tank cases, groundwater contamination, and soil contamination are included.)

Date of Government Version: 04/08/01
Database Release Frequency: Quarterly
Date of Last EDR Contact: 04/09/01
Date of Next Scheduled EDR Contact: 07/09/01

SAN FRANCISCO COUNTY:

Local Oversite Facilities
Source: Department Of Public Health San Francisco County
Telephone: 415-252-3920

Date of Government Version: 03/30/01
Database Release Frequency: Quarterly
Date of Last EDR Contact: 03/13/01
Date of Next Scheduled EDR Contact: 06/11/01

Underground Storage Tank Information
Source: Department of Public Health
Telephone: 415-252-3920

Date of Government Version: 12/01/00
Database Release Frequency: Quarterly
Date of Last EDR Contact: 03/13/01
Date of Next Scheduled EDR Contact: 06/11/01

SAN MATEO COUNTY:

Fuel Leak List
Source: San Mateo County Environmental Health Services Division
Telephone: 650-363-1921

Date of Government Version: 10/05/00
Database Release Frequency: Semi-Annually

Date of Last EDR Contact: 04/30/01
Date of Next Scheduled EDR Contact: 07/30/01

Business Inventory
Source: San Mateo County Environmental Health Services Division
Telephone: 650-363-1921
List includes Hazardous Materials Business Plan, hazardous waste generators, and underground storage tanks.

Date of Government Version: 06/24/99
Database Release Frequency: Annually

Date of Last EDR Contact: 04/17/01
Date of Next Scheduled EDR Contact: 07/16/01

SANTA CLARA COUNTY:

Fuel Leak Site Activity Report
Source: Santa Clara Valley Water District
Telephone: 408-927-0710

Date of Government Version: 12/31/00
Database Release Frequency: Semi-Annually

Date of Last EDR Contact: 04/02/01
Date of Next Scheduled EDR Contact: 07/02/01

Hazaroud Material Facilities
Source: City of San Jose Fire Department
Telephone: 408-277-4659

Date of Government Version: 09/28/00
Database Release Frequency: Quarterly

Date of Last EDR Contact: 03/13/01
Date of Next Scheduled EDR Contact: 06/11/01

SOLANO COUNTY:

Leaking Undergroung Storage Tanks
Source: Solano County Department of Environmental Management
Telephone: 707-421-6770

Date of Government Version: 02/06/01
Database Release Frequency: Quarterly

Date of Last EDR Contact: 03/19/01
Date of Next Scheduled EDR Contact: 06/18/01

Underground Storage Tanks
Source: Solano County Department of Environmental Management
Telephone: 707-421-6770

Date of Government Version: 02/06/01
Database Release Frequency: Quarterly

Date of Last EDR Contact: 03/19/01
Date of Next Scheduled EDR Contact: 06/18/01

SONOMA COUNTY:

Leaking Underground Storage Tank Sites
Source: Department of Health Services
Telephone: 707-525-6565

Date of Government Version: 12/01/00
Database Release Frequency: Quarterly

Date of Last EDR Contact: 04/30/01
Date of Next Scheduled EDR Contact: 07/30/01

SUTTER COUNTY:

Underground Storage Tanks
Source: Sutter County Department of Agriculture
Telephone: 530-822-7500

Date of Government Version: 01/02/01
Database Release Frequency: Semi-Annually

Date of Last EDR Contact: 04/09/01
Date of Next Scheduled EDR Contact: 07/09/01

VENTURA COUNTY:

Inventory of Illegal Abandoned and Inactive Sites
Source: Environmental Health Division
Telephone: 805-654-2813
Ventura County Inventory of Closed, Illegal Abandoned, and Inactive Sites.

Date of Government Version: 06/01/99
Database Release Frequency: Annually

Date of Last EDR Contact: 03/01/01
Date of Next Scheduled EDR Contact: 05/28/01

Listing of Underground Tank Cleanup Sites
Source: Environmental Health Division
Telephone: 805-654-2813
Ventura County Underground Storage Tank Cleanup Sites (LUST).

Date of Government Version: 07/26/00
Database Release Frequency: Quarterly

Date of Last EDR Contact: 03/19/01
Date of Next Scheduled EDR Contact: 06/18/01

Underground Tank Closed Sites List
Source: Environmental Health Division
Telephone: 805-654-2813
Ventura County Operating Underground Storage Tank Sites (UST)/Underground Tank Closed Sites List.

Date of Government Version: 11/22/00
Database Release Frequency: Quarterly

Date of Last EDR Contact: 04/16/01
Date of Next Scheduled EDR Contact: 07/16/01

Business Plan, Hazardous Waste Producers, and Operating Underground Tanks
Source: Ventura County Environmental Health Division
Telephone: 805-654-2813
The BWT list indicates by site address whether the Environmental Health Division has Business Plan (B), Waste Producer (W), and/or Underground Tank (T) information.

Date of Government Version: 02/07/01
Database Release Frequency: Quarterly

Date of Last EDR Contact: 03/19/01
Date of Next Scheduled EDR Contact: 06/18/01

YOLO COUNTY:

Underground Storage Tank Comprehensive Facility Report
Source: Yolo County Department of Health
Telephone: 530-666-8646

Date of Government Version: 01/23/01
Database Release Frequency: Annually

Date of Last EDR Contact: 04/23/01
Date of Next Scheduled EDR Contact: 07/23/01

California Regional Water Quality Control Board (RWQCB) LUST Records

LUST REG 1: Active Toxic Site Investigation
Source: California Regional Water Quality Control Board North Coast (1)
Telephone: 707-576-2220

Date of Government Version: 02/01/01
Database Release Frequency: Quarterly

Date of Last EDR Contact: 02/28/01
Date of Next Scheduled EDR Contact: 05/28/01

LUST REG 2: Fuel Leak List
Source: California Regional Water Quality Control Board San Francisco Bay Region (2)
Telephone: 510-286-0457

Date of Government Version: 12/01/00
Database Release Frequency: Quarterly

Date of Last EDR Contact: 04/16/01
Date of Next Scheduled EDR Contact: 07/16/01

LUST REG 3: Leaking Underground Storage Tank Database
Source: California Regional Water Quality Control Board Central Coast Region (3)
Telephone: 805-549-3147

Date of Government Version: 02/20/01
Database Release Frequency: Quarterly

Date of Last EDR Contact: 02/19/01
Date of Next Scheduled EDR Contact: 05/21/01

LUST REG 4: Underground Storage Tank Leak List
Source: California Regional Water Quality Control Board Los Angeles Region (4)
Telephone: 213-266-6600

Date of Government Version: 11/01/00
Database Release Frequency: Quarterly

Date of Last EDR Contact: 04/02/01
Date of Next Scheduled EDR Contact: 07/02/01

LUST REG 5: Leaking Underground Storage Tank Database
Source: California Regional Water Quality Control Board Central Valley Region (5)
Telephone: 916-255-3125

Date of Government Version: 01/02/01
Database Release Frequency: Quarterly

Date of Last EDR Contact: 04/09/01
Date of Next Scheduled EDR Contact: 07/09/01

LUST REG 6L: Leaking Underground Storage Tank Case Listing
Source: California Regional Water Quality Control Board Lahontan Region (6)
Telephone: 916-542-5424

Date of Government Version: 01/02/01
Database Release Frequency: Quarterly

Date of Last EDR Contact: 04/09/01
Date of Next Scheduled EDR Contact: 07/09/01

LUST REG 6V: Leaking Underground Storage Tank Case Listing
Source: California Regional Water Quality Control Board Victorville Branch Office (6)
Telephone: 760-346-7491

Date of Government Version: 01/02/01
Database Release Frequency: Quarterly

Date of Last EDR Contact: 04/09/01
Date of Next Scheduled EDR Contact: 07/09/01

LUST REG 7: Leaking Underground Storage Tank Case Listing
Source: California Regional Water Quality Control Board Colorado River Basin Region (7)
Telephone: 760-346-7491

Date of Government Version: 01/24/01
Database Release Frequency: Semi-Annually

Date of Last EDR Contact: 04/02/01
Date of Next Scheduled EDR Contact: 07/02/01

LUST REG 8: Leaking Underground Storage Tanks
Source: California Regional Water Quality Control Board Santa Ana Region (8)
Telephone: 909-782-4498

Date of Government Version: 11/22/00
Database Release Frequency: Semi-Annually

Date of Last EDR Contact: 02/15/01
Date of Next Scheduled EDR Contact: 05/14/01

LUST REG 9: Leaking Underground Storage Tank Report
Source: California Regional Water Quality Control Board San Diego Region (9)
Telephone: 619-467-2952

Date of Government Version: 12/05/00
Database Release Frequency: Quarterly

Date of Last EDR Contact: 04/23/01
Date of Next Scheduled EDR Contact: 07/23/01

California Regional Water Quality Control Board (RWQCB) SLIC Records

SLIC REG 1: Active Toxic Site Investigations
Source: California Regional Water Quality Control Board, North Coast Region (1)
Telephone: 707-576-2220

Date of Government Version: 02/01/01
Database Release Frequency: Semi-Annually
Date of Last EDR Contact: 02/28/01
Date of Next Scheduled EDR Contact: 05/28/01

SLIC REG 2: Spills, Leaks, Investigation & Cleanup Cost Recovery Listing
Source: Regional Water Quality Control Board San Francisco Bay Region (2)
Telephone: 510-286-0457
Any contaminated site that impacts groundwater or has the potential to impact groundwater.

Date of Government Version: 12/01/00
Database Release Frequency: Quarterly
Date of Last EDR Contact: 04/16/01
Date of Next Scheduled EDR Contact: 07/16/01

SLIC REG 3: Spills, Leaks, Investigation & Cleanup Cost Recovery Listing
Source: California Regional Water Quality Control Board Central Coast Region (3)
Telephone: 805-549-3147
Any contaminated site that impacts groundwater or has the potential to impact groundwater.

Date of Government Version: 02/20/01
Database Release Frequency: Semi-Annually
Date of Last EDR Contact: 02/19/01
Date of Next Scheduled EDR Contact: 05/21/01

SLIC REG 4: Spills, Leaks, Investigation & Cleanup Cost Recovery Listing
Source: Region Water Quality Control Board Los Angeles Region (4)
Telephone: 213-576-6600
Any contaminated site that impacts groundwater or has the potential to impact groundwater.

Date of Government Version: 02/01/01
Database Release Frequency: Quarterly
Date of Last EDR Contact: 04/30/01
Date of Next Scheduled EDR Contact: 07/30/01

SLIC REG 5: Spills, Leaks, Investigation & Cleanup Cost Recovery Listing
Source: Regional Water Quality Control Board Central Valley Region (5)
Telephone: 916-855-3075
Unregulated sites that impact groundwater or have the potential to impact groundwater.

Date of Government Version: 12/30/00
Database Release Frequency: Semi-Annually
Date of Last EDR Contact: 04/11/01
Date of Next Scheduled EDR Contact: 07/09/01

SLIC REG 6V: Spills, Leaks, Investigation & Cleanup Cost Recovery Listing
Source: Regional Water Quality Control Board, Victorville Branch
Telephone: 619-241-6583

Date of Government Version: 10/01/00
Database Release Frequency: Semi-Annually
Date of Last EDR Contact: 04/09/01
Date of Next Scheduled EDR Contact: 07/09/01

SLIC REG 8: Spills, Leaks, Investigation & Cleanup Cost Recovery Listing
Source: California Region Water Quality Control Board Santa Ana Region (8)
Telephone: 909-782-3298

Date of Government Version: 06/01/00
Database Release Frequency: Semi-Annually
Date of Last EDR Contact: 04/11/01
Date of Next Scheduled EDR Contact: 07/09/01

SLIC REG 9: Spills, Leaks, Investigation & Cleanup Cost Recovery Listing
Source: California Regional Water Quality Control Board San Diego Region (9)
Telephone: 858-467-2980

GOVERNMENT RECORDS SEARCHED / DATA CURRENCY TRACKING

Date of Government Version: 02/01/01
Database Release Frequency: Annually

Date of Last EDR Contact: 03/05/01
Date of Next Scheduled EDR Contact: 06/04/01

EDR PROPRIETARY DATABASES

Former Manufactured Gas (Coal Gas) Sites: The existence and location of Coal Gas sites is provided exclusively to EDR by Real Property Scan, Inc. ©Copyright 1993 Real Property Scan, Inc. For a technical description of the types of hazards which may be found at such sites, contact your EDR customer service representative.

Disclaimer Provided by Real Property Scan, Inc.

The information contained in this report has predominantly been obtained from publicly available sources produced by entities other than Real Property Scan. While reasonable steps have been taken to insure the accuracy of this report, Real Property Scan does not guarantee the accuracy of this report. Any liability on the part of Real Property Scan is strictly limited to a refund of the amount paid. No claim is made for the actual existence of toxins at any site. This report does not constitute a legal opinion.

HISTORICAL AND OTHER DATABASE(S)

Depending on the geographic area covered by this report, the data provided in these specialty databases may or may not be complete. For example, the existence of wetlands information data in a specific report does not mean that all wetlands in the area covered by the report are included. Moreover, the absence of any reported wetlands information does not necessarily mean that wetlands do not exist in the area covered by the report.

Oil/Gas Pipelines/Electrical Transmission Lines: This data was obtained by EDR from the USGS in 1994. It is referred to by USGS as GeoData Digital Line Graphs from 1:100,000-Scale Maps. It was extracted from the transportation category including some oil, but primarily gas pipelines and electrical transmission lines.

Sensitive Receptors: There are individuals deemed sensitive receptors due to their fragile immune systems and special sensitivity to environmental discharges. These sensitive receptors typically include the elderly, the sick, and children. While the location of all sensitive receptors cannot be determined, EDR indicates those buildings and facilities - schools, daycares, hospitals, medical centers, and nursing homes - where individuals who are sensitive receptors are likely to be located.

Flood Zone Data: This data, available in select counties across the country, was obtained by EDR in 1999 from the Federal Emergency Management Agency (FEMA). Data depicts 100-year and 500-year flood zones as defined by FEMA.

NWI: National Wetlands Inventory. This data, available in select counties across the country, was obtained by EDR in 1999 from the U.S. Fish and Wildlife Service.

GEOCHECK®- PHYSICAL SETTING SOURCE ADDENDUM

TARGET PROPERTY ADDRESS

HENRIETTA PEAKER
25TH AVENUE
HENRIETTA, CA 93245

TARGET PROPERTY COORDINATES

Latitude (North):	36.246700 - 36° 14' 48.1"
Longitude (West):	119.903999 - 119° 54' 14.4"
Universal Tranverse Mercator:	Zone 11
UTM X (Meters):	239046.9
UTM Y (Meters):	4015022.5

EDR's GeoCheck Physical Setting Source Addendum has been developed to assist the environmental professional with the collection of physical setting source information in accordance with ASTM 1527-00, Section 7.2.3. Section 7.2.3 requires that a current USGS 7.5 Minute Topographic Map (or equivalent, such as the USGS Digital Elevation Model) be reviewed. It also requires that one or more additional physical setting sources be sought when (1) conditions have been identified in which hazardous substances or petroleum products are likely to migrate to or from the property, and (2) more information than is provided in the current USGS 7.5 Minute Topographic Map (or equivalent) is generally obtained, pursuant to local good commercial or customary practice, to assess the impact of migration of recognized environmental conditions in connection with the property. Such additional physical setting sources generally include information about the topographic, hydrologic, hydrogeologic, and geologic characteristics of a site, and wells in the area.

Assessment of the impact of contaminant migration generally has two principle investigative components:

1. Groundwater flow direction, and
2. Groundwater flow velocity.

Groundwater flow direction may be impacted by surface topography, hydrology, hydrogeology, characteristics of the soil, and nearby wells. Groundwater flow velocity is generally impacted by the nature of the geologic strata. EDR's GeoCheck Physical Setting Source Addendum is provided to assist the environmental professional in forming an opinion about the impact of potential contaminant migration.

GEOCHECK® - PHYSICAL SETTING SOURCE SUMMARY

GROUNDWATER FLOW DIRECTION INFORMATION

Groundwater flow direction for a particular site is best determined by a qualified environmental professional using site-specific well data. If such data is not reasonably ascertainable, it may be necessary to rely on other sources of information, such as surface topographic information, hydrologic information, hydrogeologic data collected on nearby properties, and regional groundwater flow information (from deep aquifers).

TOPOGRAPHIC INFORMATION

Surface topography may be indicative of the direction of surficial groundwater flow. This information can be used to assist the environmental professional in forming an opinion about the impact of nearby contaminated properties or, should contamination exist on the target property, what downgradient sites might be impacted.

USGS TOPOGRAPHIC MAP ASSOCIATED WITH THIS SITE

Target Property: 2436119-B8 WESTHAVEN, CA
Source: USGS 7.5 min quad index

GENERAL TOPOGRAPHIC GRADIENT AT TARGET PROPERTY

Target Property: Undeterminable

Source: General Topographic Gradient has been determined from the USGS 1 Degree Digital Elevation Model and should be evaluated on a relative (not an absolute) basis. Relative elevation information between sites of close proximity should be field verified.

HYDROLOGIC INFORMATION

Surface water can act as a hydrologic barrier to groundwater flow. Such hydrologic information can be used to assist the environmental professional in forming an opinion about the impact of nearby contaminated properties or, should contamination exist on the target property, what downgradient sites might be impacted.

Refer to the Physical Setting Source Map following this summary for hydrologic information (major waterways and bodies of water).

FEMA FLOOD ZONE

Target Property County	FEMA Q3 Flood Data Electronic Coverage
KINGS, CA	YES - refer to the Overview Map and Detail Map

Flood Plain Panel at Target Property: 0600860125B / CBPP
Additional Panels in search area: Not Reported

NATIONAL WETLAND INVENTORY

NWI Quad at Target Property	NWI Electronic Coverage
WESTHAVEN	YES - refer to the Overview Map and Detail Map

HYDROGEOLOGIC INFORMATION

Hydrogeologic information obtained by installation of wells on a specific site can often be an indicator of groundwater flow direction in the immediate area. Such hydrogeologic information can be used to assist the environmental professional in forming an opinion about the impact of nearby contaminated properties or, should contamination exist on the target property, what downgradient sites might be impacted.

GEOCHECK® - PHYSICAL SETTING SOURCE SUMMARY

Site-Specific Hydrogeological Data*:

Search Radius:	2.0 miles
Status:	Not found

AQUIFLOW®

Search Radius: 2.000 Miles.

EDR has developed the AQUIFLOW Information System to provide data on the general direction of groundwater flow at specific points. EDR has reviewed reports submitted by environmental professionals to regulatory authorities at select sites and has extracted the date of the report, groundwater flow direction as determined hydrogeologically, and the depth to water table.

MAP ID	LOCATION FROM TP	GENERAL DIRECTION GROUNDWATER FLOW
Not Reported		

GROUNDWATER FLOW VELOCITY INFORMATION

Groundwater flow velocity information for a particular site is best determined by a qualified environmental professional using site specific geologic and soil strata data. If such data are not reasonably ascertainable, it may be necessary to rely on other sources of information, including geologic age identification, rock stratigraphic unit and soil characteristics data collected on nearby properties and regional soil information. In general, contaminant plumes move more quickly through sandy-gravelly types of soils than silty-clayey types of soils.

GEOLOGIC INFORMATION IN GENERAL AREA OF TARGET PROPERTY

Geologic information can be used by the environmental professional in forming an opinion about the relative speed at which contaminant migration may be occurring.

GEOLOGIC AGE IDENTIFICATION

Geologic Code:	Q
Era:	Cenozoic
System:	Quaternary
Series:	Quaternary

ROCK STRATIGRAPHIC UNIT

Category: Stratifed Sequence

Geologic Age and Rock Stratigraphic Unit Source: P.G. Schruben, R.E. Arndt and W.J. Bawiec, Geology of the Conterminous U.S. at 1:2,500,000 Scale - a digital representation of the 1974 P.B. King and H.M. Beikman Map, USGS Digital Data Series DDS - 11 (1994).

DOMINANT SOIL COMPOSITION IN GENERAL AREA OF TARGET PROPERTY

The U.S. Department of Agriculture's (USDA) Soil Conservation Service (SCS) leads the National Cooperative Soil Survey (NCSS) and is responsible for collecting, storing, maintaining and distributing soil survey information for privately owned lands in the United States. A soil map in a soil survey is a representation of soil patterns in a landscape. Soil maps for STATSGO are compiled by generalizing more detailed (SSURGO) soil survey maps. The following information is based on Soil Conservation Service STATSGO data.

* ©1996 Site-specific hydrogeological data gathered by CERCLIS Alerts, Inc., Bainbridge Island, WA. All rights reserved. All of the information and opinions presented are those of the cited EPA report(s), which were completed under a Comprehensive Environmental Response Compensation and Liability Information System (CERCLIS) investigation.

GEOCHECK® - PHYSICAL SETTING SOURCE SUMMARY

Soil Component Name: LETHENT

Soil Surface Texture: clay loam

Hydrologic Group: Class D - Very slow infiltration rates. Soils are clayey, have a high water table, or are shallow to an impervious layer.

Soil Drainage Class: Moderately well drained. Soils have a layer of low hydraulic conductivity, wet state high in the profile. Depth to water table is 3 to 6 feet.

Hydric Status: Soil does not meet the requirements for a hydric soil.

Corrosion Potential - Uncoated Steel: HIGH

Depth to Bedrock Min: > 60 inches

Depth to Bedrock Max: > 60 inches

Soil Layer Information

	Boundary			Classification			
Layer	**Upper**	**Lower**	**Soil Texture Class**	**AASHTO Group**	**Unified Soil**	**Permeability Rate (in/hr)**	**Soil Reaction (pH)**
1	0 inches	6 inches	clay loam	Silt-Clay Materials (more than 35 pct. passing No. 200), Clayey Soils.	FINE-GRAINED SOILS, Silts and Clays (liquid limit less than 50%), Lean Clay	Max: 0.20 Min: 0.06	Max: 9.60 Min: 7.80
2	6 inches	24 inches	clay loam	Silt-Clay Materials (more than 35 pct. passing No. 200), Clayey Soils.	FINE-GRAINED SOILS, Silts and Clays (liquid limit less than 50%), Lean Clay	Max: 0.06 Min: 0.00	Max: 9.00 Min: 7.90
3	24 inches	31 inches	clay loam	Silt-Clay Materials (more than 35 pct. passing No. 200), Clayey Soils.	FINE-GRAINED SOILS, Silts and Clays (liquid limit less than 50%), Lean Clay	Max: 0.06 Min: 0.00	Max: 9.00 Min: 7.90
4	31 inches	60 inches	sandy loam	Silt-Clay Materials (more than 35 pct. passing No. 200), Silty Soils.	SC-SM	Max: 0.20 Min: 0.06	Max: 9.00 Min: 7.90

OTHER SOIL TYPES IN AREA

Based on Soil Conservation Service STATSGO data, the following additional subordinant soil types may appear within the general area of target property.

Soil Surface Textures:	clay silt loam silty clay loam fine sandy loam sandy loam
Surficial Soil Types:	clay silt loam silty clay loam fine sandy loam sandy loam
Shallow Soil Types:	sandy clay loam
Deeper Soil Types:	stratified clay

ADDITIONAL ENVIRONMENTAL RECORD SOURCES

According to ASTM E 1527-00, Section 7.2.2, "one or more additional state or local sources of environmental records may be checked, in the discretion of the environmental professional, to enhance and supplement federal and state sources... Factors to consider in determining which local or additional state records, if any, should be checked include (1) whether they are reasonably ascertainable, (2) whether they are sufficiently useful, accurate, and complete in light of the objective of the records review (see 7.1.1), and (3) whether they are obtained, pursuant to local, good commercial or customary practice." One of the record sources listed in Section 7.2.2 is water well information. Water well information can be used to assist the environmental professional in assessing sources that may impact groundwater flow direction, and in forming an opinion about the impact of contaminant migration on nearby drinking water wells.

WELL SEARCH DISTANCE INFORMATION

DATABASE	SEARCH DISTANCE (miles)
Federal USGS	1.000
Federal FRDS PWS	Nearest PWS within 1 mile
State Database	1.000

FEDERAL USGS WELL INFORMATION

MAP ID	WELL ID	LOCATION FROM TP
No Wells Found		

GEOCHECK® - PHYSICAL SETTING SOURCE SUMMARY

FEDERAL FRDS PUBLIC WATER SUPPLY SYSTEM INFORMATION

MAP ID	WELL ID	LOCATION FROM TP
No PWS System Found		

Note: PWS System location is not always the same as well location.

STATE DATABASE WELL INFORMATION

MAP ID	WELL ID	LOCATION FROM TP
A1	23492	1/2 - 1 Mile North
A2	23493	1/2 - 1 Mile North
3	23494	1/2 - 1 Mile NNE
B4	23502	1/2 - 1 Mile NNW
B5	23503	1/2 - 1 Mile NNW

PHYSICAL SETTING SOURCE MAP - 0634349.3r

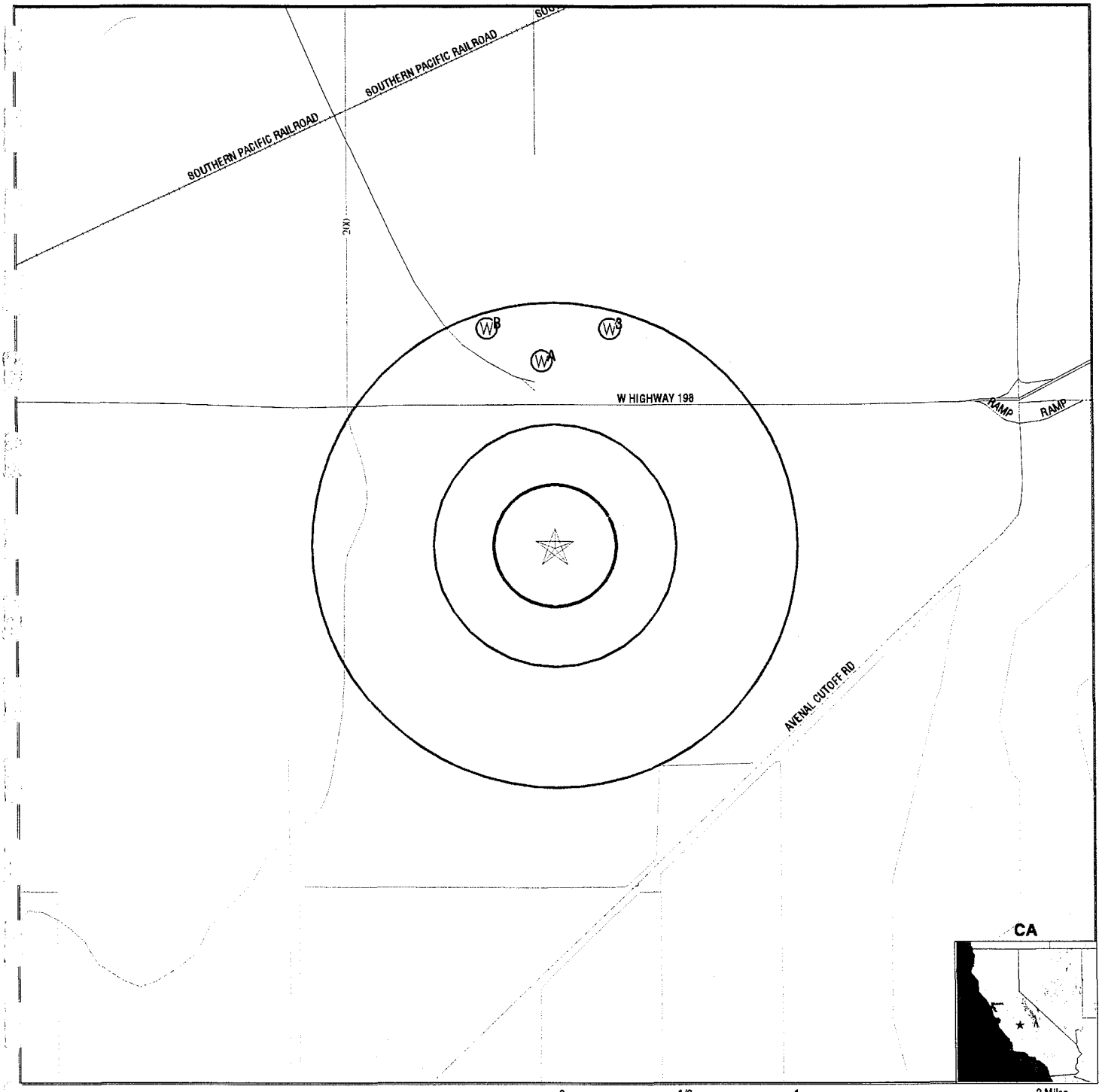

0 1/2 1 2 Miles

- Major Roads
- Contour Lines
- Earthquake Fault Lines
- Water Wells
- Public Water Supply Wells
- Groundwater Flow Direction
- GI Indeterminate Groundwater Flow at Location
- GV Groundwater Flow Varies at Location
- Cluster of Multiple Icons
- Earthquake epicenter, Richter 5 or greater
- HD Closest Hydrogeological Data
- Oil, gas or related wells

TARGET PROPERTY:	Henrietta Peaker	CUSTOMER:	Harding Lawson Associates
ADDRESS:	25th Avenue	CONTACT:	Susan Lewos
CITY/STATE/ZIP:	Henrietta CA 93245	INQUIRY #:	0634349.3r
LAT/LONG:	36.2467 / 119.9040	DATE:	May 21, 2001 1:45 pm

Map ID Direction Distance Elevation	Database	EDR ID Number
A1 **North** **1/2 - 1 Mile** **Higher**	**CA WELLS**	**23492**

Water System Information:

Prime Station Code:	L16/700-BLD0700	User ID:	CYA
FRDS Number:	1610700012	County:	Kings
District Number:	12	Station Type:	CANAL/AMBNT
Water Type:	Surface Water	Well Status:	Distribution System Sample Point Treated
Source Lat/Long:	361528.0 1195410.8	Precision:	1,000 Feet (10 Seconds)
Source Name:	THM SAMPLE SITE - BLDG 0700 (ADM)		
System Number:	1610700		
System Name:	LEMOORE NAS		
Organization That Operates System:	BUILDING 722 NAS LEMOORE LEMOORE 93246-5001		
Pop Served:	10450	Connections:	1686
Area Served:	NAVAL AIR STATION		

Sample Information: * Only Findings Above Detection Level Are Listed

Sample Collected:	07/13/1994	Findings:	32.000 UG/L
Chemical:	BROMODICHLORMETHANE (THM)		
Sample Collected:	07/13/1994	Findings:	7.000 UG/L
Chemical:	BROMOFORM (THM)		
Sample Collected:	07/13/1994	Findings:	36.000 UG/L
Chemical:	DIBROMOCHLOROMETHANE (THM)		
Sample Collected:	07/13/1994	Findings:	14.000 UG/L
Chemical:	CHLOROFORM (THM)		
Sample Collected:	07/13/1994	Findings:	89.000 UG/L
Chemical:	TOTAL TRIHALOMETHANES		
Sample Collected:	09/07/1994	Findings:	35.000 UG/L
Chemical:	BROMODICHLORMETHANE (THM)		
Sample Collected:	09/07/1994	Findings:	26.000 UG/L
Chemical:	BROMOFORM (THM)		
Sample Collected:	09/07/1994	Findings:	56.000 UG/L
Chemical:	DIBROMOCHLOROMETHANE (THM)		
Sample Collected:	09/07/1994	Findings:	10.000 UG/L
Chemical:	CHLOROFORM (THM)		
Sample Collected:	09/07/1994	Findings:	128.000 UG/L
Chemical:	TOTAL TRIHALOMETHANES		
Sample Collected:	11/02/1994	Findings:	24.000 UG/L
Chemical:	BROMODICHLORMETHANE (THM)		
Sample Collected:	11/02/1994	Findings:	70.000 UG/L
Chemical:	BROMOFORM (THM)		
Sample Collected:	11/02/1994	Findings:	76.000 UG/L
Chemical:	DIBROMOCHLOROMETHANE (THM)		
Sample Collected:	11/02/1994	Findings:	4.000 UG/L
Chemical:	CHLOROFORM (THM)		
Sample Collected:	11/02/1994	Findings:	174.000 UG/L
Chemical:	TOTAL TRIHALOMETHANES		

Sample Collected:	03/08/1995	Findings:	46.000 UG/L
Chemical:	BROMODICHLORMETHANE (THM)		
Sample Collected:	03/08/1995	Findings:	7.200 UG/L
Chemical:	BROMOFORM (THM)		
Sample Collected:	03/08/1995	Findings:	24.000 UG/L
Chemical:	DIBROMOCHLOROMETHANE (THM)		
Sample Collected:	03/08/1995	Findings:	54.000 UG/L
Chemical:	CHLOROFORM (THM)		
Sample Collected:	03/08/1995	Findings:	131.000 UG/L
Chemical:	TOTAL TRIHALOMETHANES		
Sample Collected:	06/07/1995	Findings:	24.000 UG/L
Chemical:	BROMODICHLORMETHANE (THM)		
Sample Collected:	06/07/1995	Findings:	1.700 UG/L
Chemical:	BROMOFORM (THM)		
Sample Collected:	06/07/1995	Findings:	9.400 UG/L
Chemical:	DIBROMOCHLOROMETHANE (THM)		
Sample Collected:	06/07/1995	Findings:	41.000 UG/L
Chemical:	CHLOROFORM (THM)		
Sample Collected:	06/07/1995	Findings:	76.000 UG/L
Chemical:	TOTAL TRIHALOMETHANES		
Sample Collected:	09/06/1995	Findings:	12.000 UG/L
Chemical:	BROMODICHLORMETHANE (THM)		
Sample Collected:	09/06/1995	Findings:	3.700 UG/L
Chemical:	BROMOFORM (THM)		
Sample Collected:	09/06/1995	Findings:	15.000 UG/L
Chemical:	DIBROMOCHLOROMETHANE (THM)		
Sample Collected:	09/06/1995	Findings:	5.000 UG/L
Chemical:	CHLOROFORM (THM)		
Sample Collected:	09/06/1995	Findings:	36.000 UG/L
Chemical:	TOTAL TRIHALOMETHANES		
Sample Collected:	01/04/1996	Findings:	8.200 UG/L
Chemical:	BROMODICHLORMETHANE (THM)		
Sample Collected:	01/04/1996	Findings:	1.100 UG/L
Chemical:	BROMOFORM (THM)		
Sample Collected:	01/04/1996	Findings:	7.000 UG/L
Chemical:	DIBROMOCHLOROMETHANE (THM)		
Sample Collected:	01/04/1996	Findings:	7.900 UG/L
Chemical:	CHLOROFORM (THM)		
Sample Collected:	01/04/1996	Findings:	24.200 UG/L
Chemical:	TOTAL TRIHALOMETHANES		
Sample Collected:	02/07/1996	Findings:	16.000 UG/L
Chemical:	BROMODICHLORMETHANE (THM)		
Sample Collected:	02/07/1996	Findings:	.800 UG/L
Chemical:	BROMOFORM (THM)		
Sample Collected:	02/07/1996	Findings:	8.200 UG/L
Chemical:	DIBROMOCHLOROMETHANE (THM)		
Sample Collected:	02/07/1996	Findings:	19.000 UG/L
Chemical:	CHLOROFORM (THM)		
Sample Collected:	02/07/1996	Findings:	44.000 UG/L
Chemical:	TOTAL TRIHALOMETHANES		

Sample Collected:	05/01/1996	Findings:	150.000 UG/L
Chemical:	COPPER		
Sample Collected:	05/01/1996	Findings:	24.000 UG/L
Chemical:	BROMODICHLORMETHANE (THM)		
Sample Collected:	05/01/1996	Findings:	3.400 UG/L
Chemical:	BROMOFORM (THM)		
Sample Collected:	05/01/1996	Findings:	17.000 UG/L
Chemical:	DIBROMOCHLOROMETHANE (THM)		
Sample Collected:	05/01/1996	Findings:	21.000 UG/L
Chemical:	CHLOROFORM (THM)		
Sample Collected:	05/01/1996	Findings:	65.400 UG/L
Chemical:	TOTAL TRIHALOMETHANES		
Sample Collected:	08/01/1996	Findings:	29.000 UG/L
Chemical:	BROMODICHLORMETHANE (THM)		
Sample Collected:	08/01/1996	Findings:	4.200 UG/L
Chemical:	BROMOFORM (THM)		
Sample Collected:	08/01/1996	Findings:	22.000 UG/L
Chemical:	DIBROMOCHLOROMETHANE (THM)		
Sample Collected:	08/01/1996	Findings:	20.000 UG/L
Chemical:	CHLOROFORM (THM)		
Sample Collected:	08/01/1996	Findings:	75.200 UG/L
Chemical:	TOTAL TRIHALOMETHANES		

A2
North
1/2 - 1 Mile
Higher

CA WELLS **23493**

Water System Information:

Prime Station Code:	L16/700-BLD0736	User ID:	CYA
FRDS Number:	1610700008	County:	Kings
District Number:	12	Station Type:	CANAL/AMBNT
Water Type:	Surface Water	Well Status:	Distribution System Sample Point Treated
Source Lat/Long:	361528.0 1195418.0	Precision:	1,000 Feet (10 Seconds)
Source Name:	THM SAMPLE SITE - BLDG 0736 (ADM)		
System Number:	1610700		
System Name:	LEMOORE NAS		
Organization That Operates System:			
	BUILDING 722 NAS LEMOORE LEMOORE 93246-5001		
Pop Served:	10450	Connections:	1686
Area Served:	NAVAL AIR STATION		

Sample Information: * Only Findings Above Detection Level Are Listed

Sample Collected:	07/13/1994	Findings:	7.800 UG/L
Chemical:	LEAD		
Sample Collected:	07/13/1994	Findings:	40.000 UG/L
Chemical:	BROMODICHLORMETHANE (THM)		
Sample Collected:	07/13/1994	Findings:	7.000 UG/L
Chemical:	BROMOFORM (THM)		
Sample Collected:	07/13/1994	Findings:	39.000 UG/L
Chemical:	DIBROMOCHLOROMETHANE (THM)		
Sample Collected:	07/13/1994	Findings:	17.000 UG/L
Chemical:	CHLOROFORM (THM)		

Sample Collected:	07/13/1994	Findings:	103.000 UG/L
Chemical:	TOTAL TRIHALOMETHANES		
Sample Collected:	08/03/1994	Findings:	52.000 UG/L
Chemical:	BROMODICHLORMETHANE (THM)		
Sample Collected:	08/03/1994	Findings:	13.000 UG/L
Chemical:	BROMOFORM (THM)		
Sample Collected:	08/03/1994	Findings:	58.000 UG/L
Chemical:	DIBROMOCHLOROMETHANE (THM)		
Sample Collected:	08/03/1994	Findings:	21.000 UG/L
Chemical:	CHLOROFORM (THM)		
Sample Collected:	08/03/1994	Findings:	144.000 UG/L
Chemical:	TOTAL TRIHALOMETHANES		
Sample Collected:	09/07/1994	Findings:	770.000 UG/L
Chemical:	COPPER		
Sample Collected:	09/07/1994	Findings:	36.000 UG/L
Chemical:	BROMODICHLORMETHANE (THM)		
Sample Collected:	09/07/1994	Findings:	26.000 UG/L
Chemical:	BROMOFORM (THM)		
Sample Collected:	09/07/1994	Findings:	57.000 UG/L
Chemical:	DIBROMOCHLOROMETHANE (THM)		
Sample Collected:	09/07/1994	Findings:	11.000 UG/L
Chemical:	CHLOROFORM (THM)		
Sample Collected:	09/07/1994	Findings:	130.000 UG/L
Chemical:	TOTAL TRIHALOMETHANES		
Sample Collected:	12/07/1994	Findings:	31.000 UG/L
Chemical:	BROMODICHLORMETHANE (THM)		
Sample Collected:	12/07/1994	Findings:	49.000 UG/L
Chemical:	BROMOFORM (THM)		
Sample Collected:	12/07/1994	Findings:	64.000 UG/L
Chemical:	DIBROMOCHLOROMETHANE (THM)		
Sample Collected:	12/07/1994	Findings:	7.000 UG/L
Chemical:	CHLOROFORM (THM)		
Sample Collected:	12/07/1994	Findings:	151.000 UG/L
Chemical:	TOTAL TRIHALOMETHANES		
Sample Collected:	01/11/1995	Findings:	1600.000 UG/L
Chemical:	COPPER		
Sample Collected:	01/11/1995	Findings:	33.000 UG/L
Chemical:	BROMODICHLORMETHANE (THM)		
Sample Collected:	01/11/1995	Findings:	45.000 UG/L
Chemical:	BROMOFORM (THM)		
Sample Collected:	01/11/1995	Findings:	65.000 UG/L
Chemical:	DIBROMOCHLOROMETHANE (THM)		
Sample Collected:	01/11/1995	Findings:	8.900 UG/L
Chemical:	CHLOROFORM (THM)		
Sample Collected:	01/11/1995	Findings:	152.000 UG/L
Chemical:	TOTAL TRIHALOMETHANES		
Sample Collected:	05/03/1995	Findings:	250.000 UG/L
Chemical:	COPPER		
Sample Collected:	05/03/1995	Findings:	27.000 UG/L
Chemical:	BROMODICHLORMETHANE (THM)		

Sample Collected:	05/03/1995	Findings:	2.800 UG/L
Chemical:	BROMOFORM (THM)		
Sample Collected:	05/03/1995	Findings:	9.300 UG/L
Chemical:	DIBROMOCHLOROMETHANE (THM)		
Sample Collected:	05/03/1995	Findings:	48.000 UG/L
Chemical:	CHLOROFORM (THM)		
Sample Collected:	05/03/1995	Findings:	87.100 UG/L
Chemical:	TOTAL TRIHALOMETHANES		
Sample Collected:	09/06/1995	Findings:	70.000 UG/L
Chemical:	COPPER		
Sample Collected:	09/06/1995	Findings:	32.000 UG/L
Chemical:	BROMODICHLORMETHANE (THM)		
Sample Collected:	09/06/1995	Findings:	8.200 UG/L
Chemical:	BROMOFORM (THM)		
Sample Collected:	09/06/1995	Findings:	35.000 UG/L
Chemical:	DIBROMOCHLOROMETHANE (THM)		
Sample Collected:	09/06/1995	Findings:	19.000 UG/L
Chemical:	CHLOROFORM (THM)		
Sample Collected:	09/06/1995	Findings:	94.000 UG/L
Chemical:	TOTAL TRIHALOMETHANES		
Sample Collected:	01/04/1996	Findings:	3750.000 UG/L
Chemical:	COPPER		
Sample Collected:	01/04/1996	Findings:	10.000 UG/L
Chemical:	BROMODICHLORMETHANE (THM)		
Sample Collected:	01/04/1996	Findings:	4.700 UG/L
Chemical:	BROMOFORM (THM)		
Sample Collected:	01/04/1996	Findings:	12.000 UG/L
Chemical:	DIBROMOCHLOROMETHANE (THM)		
Sample Collected:	01/04/1996	Findings:	7.300 UG/L
Chemical:	CHLOROFORM (THM)		
Sample Collected:	01/04/1996	Findings:	34.000 UG/L
Chemical:	TOTAL TRIHALOMETHANES		
Sample Collected:	05/03/1996	Findings:	820.000 UG/L
Chemical:	COPPER		
Sample Collected:	05/03/1996	Findings:	26.000 UG/L
Chemical:	BROMODICHLORMETHANE (THM)		
Sample Collected:	05/03/1996	Findings:	8.400 UG/L
Chemical:	BROMOFORM (THM)		
Sample Collected:	05/03/1996	Findings:	23.000 UG/L
Chemical:	DIBROMOCHLOROMETHANE (THM)		
Sample Collected:	05/03/1996	Findings:	22.000 UG/L
Chemical:	CHLOROFORM (THM)		
Sample Collected:	05/03/1996	Findings:	79.400 UG/L
Chemical:	TOTAL TRIHALOMETHANES		
Sample Collected:	10/02/1996	Findings:	27.000 UG/L
Chemical:	BROMODICHLORMETHANE (THM)		
Sample Collected:	10/02/1996	Findings:	3.300 UG/L
Chemical:	BROMOFORM (THM)		
Sample Collected:	10/02/1996	Findings:	22.000 UG/L
Chemical:	DIBROMOCHLOROMETHANE (THM)		

Sample Collected:	10/02/1996	Findings:	18.000 UG/L
Chemical:	CHLOROFORM (THM)		
Sample Collected:	10/02/1996	Findings:	70.300 UG/L
Chemical:	TOTAL TRIHALOMETHANES		

3
NNE
1/2 - 1 Mile
Higher

CA WELLS 23494

Water System Information:

Prime Station Code:	L16/700-BLD0823	User ID:	CYA
FRDS Number:	1610700009	County:	Kings
District Number:	12	Station Type:	CANAL/AMBNT
Water Type:	Surface Water	Well Status:	Distribution System Sample Point Treated
Source Lat/Long:	361535.1 1195356.8	Precision:	1,000 Feet (10 Seconds)
Source Name:	THM SAMPLE SITE - BLDG 0823 (ADM)		
System Number:	1610700		
System Name:	LEMOORE NAS		
Organization That Operates System:	BUILDING 722 NAS LEMOORE LEMOORE 93246-5001		
Pop Served:	10450	Connections:	1686
Area Served:	NAVAL AIR STATION		

Sample Information: * Only Findings Above Detection Level Are Listed

Sample Collected:	10/06/1993	Findings:	36.000 UG/L
Chemical:	BROMODICHLORMETHANE (THM)		
Sample Collected:	10/06/1993	Findings:	3.000 UG/L
Chemical:	BROMOFORM (THM)		
Sample Collected:	10/06/1993	Findings:	18.000 UG/L
Chemical:	DIBROMOCHLOROMETHANE (THM)		
Sample Collected:	10/06/1993	Findings:	41.000 UG/L
Chemical:	CHLOROFORM (THM)		
Sample Collected:	10/06/1993	Findings:	98.000 UG/L
Chemical:	TOTAL TRIHALOMETHANES		
Sample Collected:	10/05/1994	Findings:	30.000 UG/L
Chemical:	BROMODICHLORMETHANE (THM)		
Sample Collected:	10/05/1994	Findings:	61.000 UG/L
Chemical:	BROMOFORM (THM)		
Sample Collected:	10/05/1994	Findings:	88.000 UG/L
Chemical:	DIBROMOCHLOROMETHANE (THM)		
Sample Collected:	10/05/1994	Findings:	5.000 UG/L
Chemical:	CHLOROFORM (THM)		
Sample Collected:	10/05/1994	Findings:	184.000 UG/L
Chemical:	TOTAL TRIHALOMETHANES		
Sample Collected:	01/11/1995	Findings:	36.000 UG/L
Chemical:	BROMODICHLORMETHANE (THM)		
Sample Collected:	01/11/1995	Findings:	37.000 UG/L
Chemical:	BROMOFORM (THM)		
Sample Collected:	01/11/1995	Findings:	70.000 UG/L
Chemical:	DIBROMOCHLOROMETHANE (THM)		
Sample Collected:	01/11/1995	Findings:	9.700 UG/L
Chemical:	CHLOROFORM (THM)		

Sample Collected:	01/11/1995	Findings:	153.000 UG/L
Chemical:	TOTAL TRIHALOMETHANES		
Sample Collected:	04/05/1995	Findings:	51.000 UG/L
Chemical:	BROMODICHLORMETHANE (THM)		
Sample Collected:	04/05/1995	Findings:	6.800 UG/L
Chemical:	BROMOFORM (THM)		
Sample Collected:	04/05/1995	Findings:	32.000 UG/L
Chemical:	DIBROMOCHLOROMETHANE (THM)		
Sample Collected:	04/05/1995	Findings:	45.000 UG/L
Chemical:	CHLOROFORM (THM)		
Sample Collected:	04/05/1995	Findings:	135.000 UG/L
Chemical:	TOTAL TRIHALOMETHANES		
Sample Collected:	08/02/1995	Findings:	16.000 UG/L
Chemical:	BROMODICHLORMETHANE (THM)		
Sample Collected:	08/02/1995	Findings:	3.900 UG/L
Chemical:	BROMOFORM (THM)		
Sample Collected:	08/02/1995	Findings:	17.000 UG/L
Chemical:	DIBROMOCHLOROMETHANE (THM)		
Sample Collected:	08/02/1995	Findings:	8.200 UG/L
Chemical:	CHLOROFORM (THM)		
Sample Collected:	08/02/1995	Findings:	45.000 UG/L
Chemical:	TOTAL TRIHALOMETHANES		
Sample Collected:	12/07/1995	Findings:	8.100 UG/L
Chemical:	BROMODICHLORMETHANE (THM)		
Sample Collected:	12/07/1995	Findings:	1.400 UG/L
Chemical:	BROMOFORM (THM)		
Sample Collected:	12/07/1995	Findings:	7.000 UG/L
Chemical:	DIBROMOCHLOROMETHANE (THM)		
Sample Collected:	12/07/1995	Findings:	5.900 UG/L
Chemical:	CHLOROFORM (THM)		
Sample Collected:	12/07/1995	Findings:	22.400 UG/L
Chemical:	TOTAL TRIHALOMETHANES		
Sample Collected:	04/03/1996	Findings:	18.000 UG/L
Chemical:	BROMODICHLORMETHANE (THM)		
Sample Collected:	04/03/1996	Findings:	.900 UG/L
Chemical:	BROMOFORM (THM)		
Sample Collected:	04/03/1996	Findings:	8.000 UG/L
Chemical:	DIBROMOCHLOROMETHANE (THM)		
Sample Collected:	04/03/1996	Findings:	27.000 UG/L
Chemical:	CHLOROFORM (THM)		
Sample Collected:	04/03/1996	Findings:	53.900 UG/L
Chemical:	TOTAL TRIHALOMETHANES		
Sample Collected:	08/01/1996	Findings:	33.000 UG/L
Chemical:	BROMODICHLORMETHANE (THM)		
Sample Collected:	08/01/1996	Findings:	4.500 UG/L
Chemical:	BROMOFORM (THM)		
Sample Collected:	08/01/1996	Findings:	24.000 UG/L
Chemical:	DIBROMOCHLOROMETHANE (THM)		
Sample Collected:	08/01/1996	Findings:	24.000 UG/L
Chemical:	CHLOROFORM (THM)		

Sample Collected:	08/01/1996	Findings:	85.500 UG/L
Chemical:	TOTAL TRIHALOMETHANES		

B4
NNW
1/2 - 1 Mile
Higher

CA WELLS 23502

Water System Information:

Prime Station Code:	L16/700-LNASRAW	User ID:	CYA
FRDS Number:	1610700006	County:	Kings
District Number:	12	Station Type:	STREAM/AMBNT/MUN/INTAKE
Water Type:	Surface Water	Well Status:	Active Raw
Source Lat/Long:	361535.0 1195428.0	Precision:	100 Feet (one Second)
Source Name:	RAW SURFACE WATER		
System Number:	1610700		
System Name:	LEMOORE NAS		
Organization That Operates System:	BUILDING 722 NAS LEMOORE LEMOORE 93246-5001		
Pop Served:	10450	Connections:	1686
Area Served:	NAVAL AIR STATION		

Sample Information: * Only Findings Above Detection Level Are Listed

Sample Collected:	05/03/1989	Findings:	1.200 PCI/L
Chemical:	GROSS ALPHA		
Sample Collected:	05/03/1989	Findings:	2.100 PCI/L
Chemical:	GROSS ALPHA COUNTING ERROR		
Sample Collected:	01/22/1990	Findings:	1.300 PCI/L
Chemical:	GROSS ALPHA		
Sample Collected:	01/22/1990	Findings:	1.100 PCI/L
Chemical:	GROSS ALPHA COUNTING ERROR		
Sample Collected:	01/22/1990	Findings:	1.300 PCI/L
Chemical:	GROSS ALPHA		
Sample Collected:	01/22/1990	Findings:	1.100 PCI/L
Chemical:	GROSS ALPHA COUNTING ERROR		
Sample Collected:	04/03/1990	Findings:	2.040 PCI/L
Chemical:	GROSS ALPHA COUNTING ERROR		
Sample Collected:	07/13/1994	Findings:	15.000 UNITS
Chemical:	COLOR		
Sample Collected:	07/13/1994	Findings:	500.000 UMHO
Chemical:	SPECIFIC CONDUCTANCE		
Sample Collected:	07/13/1994	Findings:	7.300
Chemical:	PH (LABORATORY)		
Sample Collected:	07/13/1994	Findings:	84.000 MG/L
Chemical:	TOTAL ALKALINITY (AS CACO3)		
Sample Collected:	07/13/1994	Findings:	100.000 MG/L
Chemical:	BICARBONATE ALKALINITY		
Sample Collected:	07/13/1994	Findings:	120.000 MG/L
Chemical:	TOTAL HARDNESS (AS CACO3)		
Sample Collected:	07/13/1994	Findings:	23.000 MG/L
Chemical:	CALCIUM		
Sample Collected:	07/13/1994	Findings:	14.000 MG/L
Chemical:	MAGNESIUM		

Sample Collected:	07/13/1994	Findings:	55.000 MG/L
Chemical:	SODIUM		
Sample Collected:	07/13/1994	Findings:	3.100 MG/L
Chemical:	POTASSIUM		
Sample Collected:	07/13/1994	Findings:	72.000 MG/L
Chemical:	CHLORIDE		
Sample Collected:	07/13/1994	Findings:	.130 MG/L
Chemical:	FLUORIDE (TEMPERATURE DEPENDENT)		
Sample Collected:	07/13/1994	Findings:	3.900 UG/L
Chemical:	ARSENIC		
Sample Collected:	07/13/1994	Findings:	450.000 UG/L
Chemical:	IRON		
Sample Collected:	07/13/1994	Findings:	24.000 UG/L
Chemical:	MANGANESE		
Sample Collected:	07/13/1994	Findings:	520.000 UG/L
Chemical:	ALUMINUM		
Sample Collected:	07/13/1994	Findings:	320.000 MG/L
Chemical:	TOTAL DISSOLVED SOLIDS		
Sample Collected:	07/13/1994	Findings:	3.400 MG/L
Chemical:	NITRATE (AS NO3)		
Sample Collected:	07/13/1994	Findings:	3.200 NTU
Chemical:	TURBIDITY (LAB)		
Sample Collected:	08/03/1994	Findings:	4.900 UG/L
Chemical:	ARSENIC		
Sample Collected:	08/03/1994	Findings:	550.000 UG/L
Chemical:	IRON		
Sample Collected:	08/03/1994	Findings:	32.000 UG/L
Chemical:	MANGANESE		
Sample Collected:	08/03/1994	Findings:	540.000 UG/L
Chemical:	ALUMINUM		
Sample Collected:	08/03/1994	Findings:	3.800 NTU
Chemical:	TURBIDITY (LAB)		
Sample Collected:	09/07/1994	Findings:	6.100 UG/L
Chemical:	ARSENIC		
Sample Collected:	09/07/1994	Findings:	110.000 UG/L
Chemical:	IRON		
Sample Collected:	09/07/1994	Findings:	18.000 UG/L
Chemical:	THALLIUM		
Sample Collected:	09/07/1994	Findings:	110.000 UG/L
Chemical:	ALUMINUM		
Sample Collected:	09/07/1994	Findings:	1.300 NTU
Chemical:	TURBIDITY (LAB)		
Sample Collected:	10/05/1994	Findings:	12.000 UNITS
Chemical:	COLOR		
Sample Collected:	10/05/1994	Findings:	2.000 TON
Chemical:	ODOR THRESHOLD @ 60 C		
Sample Collected:	10/05/1994	Findings:	740.000 UMHO
Chemical:	SPECIFIC CONDUCTANCE		
Sample Collected:	10/05/1994	Findings:	6.600
Chemical:	PH (LABORATORY)		

Sample Collected:	10/05/1994	Findings:	79.000 MG/L
Chemical:	TOTAL ALKALINITY (AS CACO3)		
Sample Collected:	10/05/1994	Findings:	96.000 MG/L
Chemical:	BICARBONATE ALKALINITY		
Sample Collected:	10/05/1994	Findings:	120.000 MG/L
Chemical:	TOTAL HARDNESS (AS CACO3)		
Sample Collected:	10/05/1994	Findings:	22.000 MG/L
Chemical:	CALCIUM		
Sample Collected:	10/05/1994	Findings:	15.000 MG/L
Chemical:	MAGNESIUM		
Sample Collected:	10/05/1994	Findings:	100.000 MG/L
Chemical:	SODIUM		
Sample Collected:	10/05/1994	Findings:	3.500 MG/L
Chemical:	POTASSIUM		
Sample Collected:	10/05/1994	Findings:	110.000 MG/L
Chemical:	CHLORIDE		
Sample Collected:	10/05/1994	Findings:	.140 MG/L
Chemical:	FLUORIDE (TEMPERATURE DEPENDENT)		
Sample Collected:	10/05/1994	Findings:	3.700 UG/L
Chemical:	ARSENIC		
Sample Collected:	10/05/1994	Findings:	69.000 UG/L
Chemical:	ALUMINUM		
Sample Collected:	10/05/1994	Findings:	430.000 MG/L
Chemical:	TOTAL DISSOLVED SOLIDS		
Sample Collected:	10/05/1994	Findings:	.480 NTU
Chemical:	TURBIDITY (LAB)		
Sample Collected:	11/02/1994	Findings:	11.000 UG/L
Chemical:	ARSENIC		
Sample Collected:	11/02/1994	Findings:	57.000 UG/L
Chemical:	ALUMINUM		
Sample Collected:	11/02/1994	Findings:	.430 NTU
Chemical:	TURBIDITY (LAB)		
Sample Collected:	01/11/1995	Findings:	5.000 UNITS
Chemical:	COLOR		
Sample Collected:	01/11/1995	Findings:	715.000 UMHO
Chemical:	SPECIFIC CONDUCTANCE		
Sample Collected:	01/11/1995	Findings:	7.360
Chemical:	PH (LABORATORY)		
Sample Collected:	01/11/1995	Findings:	79.000 MG/L
Chemical:	TOTAL ALKALINITY (AS CACO3)		
Sample Collected:	01/11/1995	Findings:	79.000 MG/L
Chemical:	BICARBONATE ALKALINITY		
Sample Collected:	01/11/1995	Findings:	124.000 MG/L
Chemical:	TOTAL HARDNESS (AS CACO3)		
Sample Collected:	01/11/1995	Findings:	25.000 MG/L
Chemical:	CALCIUM		
Sample Collected:	01/11/1995	Findings:	15.000 MG/L
Chemical:	MAGNESIUM		
Sample Collected:	01/11/1995	Findings:	114.000 MG/L
Chemical:	SODIUM		

Sample Collected:	01/11/1995	Findings:	6.000 MG/L
Chemical:	POTASSIUM		
Sample Collected:	01/11/1995	Findings:	120.000 MG/L
Chemical:	CHLORIDE		
Sample Collected:	01/11/1995	Findings:	300.000 UG/L
Chemical:	IRON		
Sample Collected:	01/11/1995	Findings:	270.000 UG/L
Chemical:	ZINC		
Sample Collected:	01/11/1995	Findings:	780.000 MG/L
Chemical:	TOTAL DISSOLVED SOLIDS		
Sample Collected:	01/11/1995	Findings:	- .650
Chemical:	LANGELIER INDEX @ 60 C		
Sample Collected:	01/11/1995	Findings:	1.200 NTU
Chemical:	TURBIDITY (LAB)		
Sample Collected:	02/01/1995	Findings:	80.000 UG/L
Chemical:	COPPER		
Sample Collected:	02/01/1995	Findings:	1200.000 UG/L
Chemical:	IRON		
Sample Collected:	02/01/1995	Findings:	30.000 UG/L
Chemical:	MANGANESE		
Sample Collected:	02/01/1995	Findings:	12.000 NTU
Chemical:	TURBIDITY (LAB)		
Sample Collected:	03/08/1995	Findings:	600.000 UG/L
Chemical:	ALUMINUM		
Sample Collected:	03/08/1995	Findings:	5.840 NTU
Chemical:	TURBIDITY (LAB)		
Sample Collected:	04/05/1995	Findings:	50.000 UNITS
Chemical:	COLOR		
Sample Collected:	04/05/1995	Findings:	489.000 UMHO
Chemical:	SPECIFIC CONDUCTANCE		
Sample Collected:	04/05/1995	Findings:	7.990
Chemical:	PH (LABORATORY)		
Sample Collected:	04/05/1995	Findings:	71.000 MG/L
Chemical:	TOTAL ALKALINITY (AS CACO3)		
Sample Collected:	04/05/1995	Findings:	71.000 MG/L
Chemical:	BICARBONATE ALKALINITY		
Sample Collected:	04/05/1995	Findings:	113.000 MG/L
Chemical:	TOTAL HARDNESS (AS CACO3)		
Sample Collected:	04/05/1995	Findings:	24.000 MG/L
Chemical:	CALCIUM		
Sample Collected:	04/05/1995	Findings:	13.000 MG/L
Chemical:	MAGNESIUM		
Sample Collected:	04/05/1995	Findings:	47.000 MG/L
Chemical:	SODIUM		
Sample Collected:	04/05/1995	Findings:	5.000 MG/L
Chemical:	POTASSIUM		
Sample Collected:	04/05/1995	Findings:	52.000 MG/L
Chemical:	CHLORIDE		
Sample Collected:	04/05/1995	Findings:	940.000 UG/L
Chemical:	IRON		

Sample Collected:	04/05/1995	Findings:	30.000 UG/L
Chemical:	MANGANESE		
Sample Collected:	04/05/1995	Findings:	60.000 UG/L
Chemical:	ZINC		
Sample Collected:	04/05/1995	Findings:	610.000 UG/L
Chemical:	ALUMINUM		
Sample Collected:	04/05/1995	Findings:	320.000 MG/L
Chemical:	TOTAL DISSOLVED SOLIDS		
Sample Collected:	04/05/1995	Findings:	33.000 NTU
Chemical:	TURBIDITY (LAB)		
Sample Collected:	04/05/1995	Findings:	- .110
Chemical:	LANGELIER INDEX @ 60 C		
Sample Collected:	04/05/1995	Findings:	3.000 PCI/L
Chemical:	GROSS ALPHA		
Sample Collected:	04/05/1995	Findings:	- 1.000 PCI/L
Chemical:	GROSS ALPHA COUNTING ERROR		
Sample Collected:	05/03/1995	Findings:	7.150
Chemical:	PH (LABORATORY)		
Sample Collected:	05/03/1995	Findings:	50.000 MG/L
Chemical:	TOTAL ALKALINITY (AS CACO3)		
Sample Collected:	05/03/1995	Findings:	80.000 MG/L
Chemical:	TOTAL HARDNESS (AS CACO3)		
Sample Collected:	05/03/1995	Findings:	14.000 MG/L
Chemical:	CALCIUM		
Sample Collected:	05/03/1995	Findings:	1230.000 UG/L
Chemical:	IRON		
Sample Collected:	05/03/1995	Findings:	18.000 UG/L
Chemical:	LEAD		
Sample Collected:	05/03/1995	Findings:	30.000 UG/L
Chemical:	NICKEL		
Sample Collected:	05/03/1995	Findings:	80.000 UG/L
Chemical:	ZINC		
Sample Collected:	05/03/1995	Findings:	870.000 UG/L
Chemical:	ALUMINUM		
Sample Collected:	05/03/1995	Findings:	2.000 UG/L
Chemical:	MERCURY		
Sample Collected:	05/03/1995	Findings:	12.400 NTU
Chemical:	TURBIDITY (LAB)		
Sample Collected:	06/07/1995	Findings:	7.750
Chemical:	PH (LABORATORY)		
Sample Collected:	06/07/1995	Findings:	40.000 MG/L
Chemical:	TOTAL ALKALINITY (AS CACO3)		
Sample Collected:	06/07/1995	Findings:	66.000 MG/L
Chemical:	TOTAL HARDNESS (AS CACO3)		
Sample Collected:	06/07/1995	Findings:	10.000 MG/L
Chemical:	CALCIUM		
Sample Collected:	06/07/1995	Findings:	1000.000 UG/L
Chemical:	IRON		
Sample Collected:	06/07/1995	Findings:	30.000 UG/L
Chemical:	NICKEL		

Sample Collected:	06/07/1995	Findings:	18.000 NTU
Chemical:	TURBIDITY (LAB)		
Sample Collected:	07/06/1995	Findings:	40.000 UNITS
Chemical:	COLOR		
Sample Collected:	07/06/1995	Findings:	324.000 UMHO
Chemical:	SPECIFIC CONDUCTANCE		
Sample Collected:	07/06/1995	Findings:	7.940
Chemical:	PH (LABORATORY)		
Sample Collected:	07/06/1995	Findings:	50.000 MG/L
Chemical:	TOTAL ALKALINITY (AS CACO3)		
Sample Collected:	07/06/1995	Findings:	50.000 MG/L
Chemical:	CARBONATE ALKALINITY		
Sample Collected:	07/06/1995	Findings:	73.000 MG/L
Chemical:	TOTAL HARDNESS (AS CACO3)		
Sample Collected:	07/06/1995	Findings:	16.000 MG/L
Chemical:	CALCIUM		
Sample Collected:	07/06/1995	Findings:	8.000 MG/L
Chemical:	MAGNESIUM		
Sample Collected:	07/06/1995	Findings:	32.000 MG/L
Chemical:	SODIUM		
Sample Collected:	07/06/1995	Findings:	2.000 MG/L
Chemical:	POTASSIUM		
Sample Collected:	07/06/1995	Findings:	46.000 MG/L
Chemical:	CHLORIDE		
Sample Collected:	07/06/1995	Findings:	500.000 UG/L
Chemical:	IRON		
Sample Collected:	07/06/1995	Findings:	30.000 UG/L
Chemical:	MANGANESE		
Sample Collected:	07/06/1995	Findings:	330.000 UG/L
Chemical:	ALUMINUM		
Sample Collected:	07/06/1995	Findings:	1.200 UG/L
Chemical:	FOAMING AGENTS (MBAS)		
Sample Collected:	07/06/1995	Findings:	230.000 MG/L
Chemical:	TOTAL DISSOLVED SOLIDS		
Sample Collected:	07/06/1995	Findings:	- .450
Chemical:	LANGELIER INDEX @ 60 C		
Sample Collected:	07/06/1995	Findings:	3.100 MG/L
Chemical:	NITRATE (AS NO3)		
Sample Collected:	07/06/1995	Findings:	15.000 NTU
Chemical:	TURBIDITY (LAB)		
Sample Collected:	07/06/1995	Findings:	700.000 UG/L
Chemical:	NITRATE + NITRITE (AS N)		
Sample Collected:	08/02/1995	Findings:	7.940
Chemical:	PH (LABORATORY)		
Sample Collected:	08/02/1995	Findings:	50.000 MG/L
Chemical:	TOTAL ALKALINITY (AS CACO3)		
Sample Collected:	08/02/1995	Findings:	64.000 MG/L
Chemical:	TOTAL HARDNESS (AS CACO3)		
Sample Collected:	08/02/1995	Findings:	14.000 MG/L
Chemical:	CALCIUM		

Sample Collected:	08/02/1995	Findings:	670.000 UG/L
Chemical:	IRON		
Sample Collected:	08/02/1995	Findings:	80.000 UG/L
Chemical:	MANGANESE		
Sample Collected:	08/02/1995	Findings:	120.000 UG/L
Chemical:	ZINC		
Sample Collected:	08/02/1995	Findings:	4.400 NTU
Chemical:	TURBIDITY (LAB)		
Sample Collected:	09/06/1995	Findings:	7.960
Chemical:	PH (LABORATORY)		
Sample Collected:	09/06/1995	Findings:	60.000 MG/L
Chemical:	TOTAL ALKALINITY (AS CACO3)		
Sample Collected:	09/06/1995	Findings:	68.000 MG/L
Chemical:	TOTAL HARDNESS (AS CACO3)		
Sample Collected:	09/06/1995	Findings:	14.000 MG/L
Chemical:	CALCIUM		
Sample Collected:	09/06/1995	Findings:	670.000 UG/L
Chemical:	IRON		
Sample Collected:	09/06/1995	Findings:	80.000 UG/L
Chemical:	MANGANESE		
Sample Collected:	09/06/1995	Findings:	430.000 UG/L
Chemical:	ALUMINUM		
Sample Collected:	09/06/1995	Findings:	2.800 NTU
Chemical:	TURBIDITY (LAB)		
Sample Collected:	10/04/1995	Findings:	20.000 UNITS
Chemical:	COLOR		
Sample Collected:	10/04/1995	Findings:	264.000 UMHO
Chemical:	SPECIFIC CONDUCTANCE		
Sample Collected:	10/04/1995	Findings:	7.940
Chemical:	PH (LABORATORY)		
Sample Collected:	10/04/1995	Findings:	60.000 MG/L
Chemical:	TOTAL ALKALINITY (AS CACO3)		
Sample Collected:	10/04/1995	Findings:	60.000 MG/L
Chemical:	CARBONATE ALKALINITY		
Sample Collected:	10/04/1995	Findings:	42.000 MG/L
Chemical:	TOTAL HARDNESS (AS CACO3)		
Sample Collected:	10/04/1995	Findings:	12.000 MG/L
Chemical:	CALCIUM		
Sample Collected:	10/04/1995	Findings:	3.000 MG/L
Chemical:	MAGNESIUM		
Sample Collected:	10/04/1995	Findings:	27.000 MG/L
Chemical:	SODIUM		
Sample Collected:	10/04/1995	Findings:	28.000 MG/L
Chemical:	CHLORIDE		
Sample Collected:	10/04/1995	Findings:	20.000 UG/L
Chemical:	MANGANESE		
Sample Collected:	10/04/1995	Findings:	160.000 MG/L
Chemical:	TOTAL DISSOLVED SOLIDS		
Sample Collected:	10/04/1995	Findings:	- .570
Chemical:	LANGELIER INDEX @ 60 C		

Sample Collected:	10/04/1995	Findings:	7.100 NTU
Chemical:	TURBIDITY (LAB)		
Sample Collected:	11/08/1995	Findings:	7.740
Chemical:	PH (LABORATORY)		
Sample Collected:	11/08/1995	Findings:	50.000 MG/L
Chemical:	TOTAL ALKALINITY (AS CACO3)		
Sample Collected:	11/08/1995	Findings:	52.000 MG/L
Chemical:	TOTAL HARDNESS (AS CACO3)		
Sample Collected:	11/08/1995	Findings:	11.000 MG/L
Chemical:	CALCIUM		
Sample Collected:	11/08/1995	Findings:	200.000 UG/L
Chemical:	IRON		
Sample Collected:	11/08/1995	Findings:	2.800 NTU
Chemical:	TURBIDITY (LAB)		
Sample Collected:	12/07/1995	Findings:	7.870
Chemical:	PH (LABORATORY)		
Sample Collected:	12/07/1995	Findings:	80.000 MG/L
Chemical:	TOTAL ALKALINITY (AS CACO3)		
Sample Collected:	12/07/1995	Findings:	91.000 MG/L
Chemical:	TOTAL HARDNESS (AS CACO3)		
Sample Collected:	12/07/1995	Findings:	19.000 MG/L
Chemical:	CALCIUM		
Sample Collected:	12/07/1995	Findings:	2000.000 UG/L
Chemical:	IRON		
Sample Collected:	12/07/1995	Findings:	90.000 UG/L
Chemical:	MANGANESE		
Sample Collected:	12/07/1995	Findings:	83.000 UG/L
Chemical:	ZINC		
Sample Collected:	12/07/1995	Findings:	1910.000 UG/L
Chemical:	ALUMINUM		
Sample Collected:	12/07/1995	Findings:	119.000 NTU
Chemical:	TURBIDITY (LAB)		
Sample Collected:	01/04/1996	Findings:	20.000 UNITS
Chemical:	COLOR		
Sample Collected:	01/04/1996	Findings:	457.000 UMHO
Chemical:	SPECIFIC CONDUCTANCE		
Sample Collected:	01/04/1996	Findings:	7.950
Chemical:	PH (LABORATORY)		
Sample Collected:	01/04/1996	Findings:	80.000 MG/L
Chemical:	TOTAL ALKALINITY (AS CACO3)		
Sample Collected:	01/04/1996	Findings:	80.000 MG/L
Chemical:	CARBONATE ALKALINITY		
Sample Collected:	01/04/1996	Findings:	93.000 MG/L
Chemical:	TOTAL HARDNESS (AS CACO3)		
Sample Collected:	01/04/1996	Findings:	19.000 MG/L
Chemical:	CALCIUM		
Sample Collected:	01/04/1996	Findings:	11.000 MG/L
Chemical:	MAGNESIUM		
Sample Collected:	01/04/1996	Findings:	48.000 MG/L
Chemical:	SODIUM		

Sample Collected:	01/04/1996	Findings:	3.000 MG/L
Chemical:	POTASSIUM		
Sample Collected:	01/04/1996	Findings:	60.000 MG/L
Chemical:	CHLORIDE		
Sample Collected:	01/04/1996	Findings:	2.000 UG/L
Chemical:	CADMIUM		
Sample Collected:	01/04/1996	Findings:	130.000 UG/L
Chemical:	IRON		
Sample Collected:	01/04/1996	Findings:	20.000 UG/L
Chemical:	NICKEL		
Sample Collected:	01/04/1996	Findings:	140.000 UG/L
Chemical:	ALUMINUM		
Sample Collected:	01/04/1996	Findings:	300.000 MG/L
Chemical:	TOTAL DISSOLVED SOLIDS		
Sample Collected:	01/04/1996	Findings:	- .140
Chemical:	LANGELIER INDEX @ 60 C		
Sample Collected:	01/04/1996	Findings:	3.100 NTU
Chemical:	TURBIDITY (LAB)		
Sample Collected:	01/05/1996	Findings:	60.000 UG/L
Chemical:	ZINC		
Sample Collected:	01/05/1996	Findings:	170.000 UG/L
Chemical:	ALUMINUM		
Sample Collected:	01/05/1996	Findings:	410.000 UG/L
Chemical:	ALUMINUM		
Sample Collected:	01/08/1996	Findings:	70.000 UG/L
Chemical:	ZINC		
Sample Collected:	01/08/1996	Findings:	190.000 UG/L
Chemical:	ALUMINUM		
Sample Collected:	02/07/1996	Findings:	7.720
Chemical:	PH (LABORATORY)		
Sample Collected:	02/07/1996	Findings:	70.000 MG/L
Chemical:	TOTAL ALKALINITY (AS CACO3)		
Sample Collected:	02/07/1996	Findings:	89.000 MG/L
Chemical:	TOTAL HARDNESS (AS CACO3)		
Sample Collected:	02/07/1996	Findings:	19.000 MG/L
Chemical:	CALCIUM		
Sample Collected:	02/07/1996	Findings:	1200.000 UG/L
Chemical:	IRON		
Sample Collected:	02/07/1996	Findings:	700.000 UG/L
Chemical:	ALUMINUM		
Sample Collected:	02/07/1996	Findings:	10.400 NTU
Chemical:	TURBIDITY (LAB)		
Sample Collected:	03/01/1996	Findings:	7.830
Chemical:	PH (LABORATORY)		
Sample Collected:	03/01/1996	Findings:	70.000 MG/L
Chemical:	TOTAL ALKALINITY (AS CACO3)		
Sample Collected:	03/01/1996	Findings:	91.000 MG/L
Chemical:	TOTAL HARDNESS (AS CACO3)		
Sample Collected:	03/01/1996	Findings:	20.000 MG/L
Chemical:	CALCIUM		

Sample Collected:	03/01/1996	Findings:	520.000 UG/L
Chemical:	IRON		
Sample Collected:	03/01/1996	Findings:	380.000 UG/L
Chemical:	ALUMINUM		
Sample Collected:	03/01/1996	Findings:	2.600 NTU
Chemical:	TURBIDITY (LAB)		
Sample Collected:	04/03/1996	Findings:	30.000 UNITS
Chemical:	COLOR		
Sample Collected:	04/03/1996	Findings:	336.000 UMHO
Chemical:	SPECIFIC CONDUCTANCE		
Sample Collected:	04/03/1996	Findings:	7.840
Chemical:	PH (LABORATORY)		
Sample Collected:	04/03/1996	Findings:	60.000 MG/L
Chemical:	TOTAL ALKALINITY (AS CACO3)		
Sample Collected:	04/03/1996	Findings:	60.000 MG/L
Chemical:	BICARBONATE ALKALINITY		
Sample Collected:	04/03/1996	Findings:	65.000 MG/L
Chemical:	TOTAL HARDNESS (AS CACO3)		
Sample Collected:	04/03/1996	Findings:	13.000 MG/L
Chemical:	CALCIUM		
Sample Collected:	04/03/1996	Findings:	8.000 MG/L
Chemical:	MAGNESIUM		
Sample Collected:	04/03/1996	Findings:	30.000 MG/L
Chemical:	SODIUM		
Sample Collected:	04/03/1996	Findings:	2.000 MG/L
Chemical:	POTASSIUM		
Sample Collected:	04/03/1996	Findings:	42.000 MG/L
Chemical:	CHLORIDE		
Sample Collected:	04/03/1996	Findings:	150.000 UG/L
Chemical:	BARIUM		
Sample Collected:	04/03/1996	Findings:	560.000 UG/L
Chemical:	IRON		
Sample Collected:	04/03/1996	Findings:	50.000 UG/L
Chemical:	MANGANESE		
Sample Collected:	04/03/1996	Findings:	290.000 UG/L
Chemical:	ALUMINUM		
Sample Collected:	04/03/1996	Findings:	200.000 MG/L
Chemical:	TOTAL DISSOLVED SOLIDS		
Sample Collected:	04/03/1996	Findings:	- .530
Chemical:	LANGELIER INDEX @ SOURCE TEMP.		
Sample Collected:	04/03/1996	Findings:	11.000 NTU
Chemical:	TURBIDITY (LAB)		
Sample Collected:	04/03/1996	Findings:	2.000 PCI/L
Chemical:	GROSS ALPHA		
Sample Collected:	04/03/1996	Findings:	- 1.000 PCI/L
Chemical:	GROSS ALPHA COUNTING ERROR		
Sample Collected:	05/03/1996	Findings:	8.030
Chemical:	PH (LABORATORY)		
Sample Collected:	05/03/1996	Findings:	70.000 MG/L
Chemical:	TOTAL ALKALINITY (AS CACO3)		

Sample Collected:	05/03/1996	Findings:	103.000 MG/L
Chemical:	TOTAL HARDNESS (AS CACO3)		
Sample Collected:	05/03/1996	Findings:	20.000 MG/L
Chemical:	CALCIUM		
Sample Collected:	05/03/1996	Findings:	200.000 UG/L
Chemical:	IRON		
Sample Collected:	05/03/1996	Findings:	90.000 UG/L
Chemical:	ZINC		
Sample Collected:	05/03/1996	Findings:	360.000 UG/L
Chemical:	ALUMINUM		
Sample Collected:	05/03/1996	Findings:	3.300 NTU
Chemical:	TURBIDITY (LAB)		
Sample Collected:	06/05/1996	Findings:	7.760
Chemical:	PH (LABORATORY)		
Sample Collected:	06/05/1996	Findings:	50.000 MG/L
Chemical:	TOTAL ALKALINITY (AS CACO3)		
Sample Collected:	06/05/1996	Findings:	56.000 MG/L
Chemical:	TOTAL HARDNESS (AS CACO3)		
Sample Collected:	06/05/1996	Findings:	11.000 MG/L
Chemical:	CALCIUM		
Sample Collected:	06/05/1996	Findings:	1300.000 UG/L
Chemical:	IRON		
Sample Collected:	06/05/1996	Findings:	120.000 UG/L
Chemical:	MANGANESE		
Sample Collected:	06/05/1996	Findings:	190.000 UG/L
Chemical:	ZINC		
Sample Collected:	06/05/1996	Findings:	1000.000 UG/L
Chemical:	ALUMINUM		
Sample Collected:	06/05/1996	Findings:	29.800 NTU
Chemical:	TURBIDITY (LAB)		

B5
NNW
1/2 - 1 Mile
Higher

CA WELLS 23503

Water System Information:

Prime Station Code:	L16/700-LNASTRD	User ID:	CYA
FRDS Number:	1610700007	County:	Kings
District Number:	12	Station Type:	STREAM/AMBNT/MUN/INTAKE
Water Type:	Surface Water	Well Status:	Active Treated
Source Lat/Long:	361535.0 1195429.0	Precision:	100 Feet (one Second)
Source Name:	TREATED SURFACE WATER		
System Number:	1610700		
System Name:	LEMOORE NAS		
Organization That Operates System:			
	BUILDING 722 NAS LEMOORE		
	LEMOORE 93246-5001		
Pop Served:	10450	Connections:	1686
Area Served:	NAVAL AIR STATION		

Sample Information: * Only Findings Above Detection Level Are Listed

Sample Collected:	07/05/1990	Findings:	640.000 UMHO
Chemical:	SPECIFIC CONDUCTANCE		
Sample Collected:	07/05/1990	Findings:	7.300
Chemical:	PH (LABORATORY)		
Sample Collected:	07/05/1990	Findings:	47.000 MG/L
Chemical:	TOTAL ALKALINITY (AS CACO3)		
Sample Collected:	07/05/1990	Findings:	57.000 MG/L
Chemical:	BICARBONATE ALKALINITY		
Sample Collected:	07/05/1990	Findings:	220.000 MG/L
Chemical:	TOTAL HARDNESS (AS CACO3)		
Sample Collected:	07/05/1990	Findings:	21.000 MG/L
Chemical:	CALCIUM		
Sample Collected:	07/05/1990	Findings:	15.000 MG/L
Chemical:	MAGNESIUM		
Sample Collected:	07/05/1990	Findings:	74.000 MG/L
Chemical:	SODIUM		
Sample Collected:	07/05/1990	Findings:	3.200 MG/L
Chemical:	POTASSIUM		
Sample Collected:	07/05/1990	Findings:	120.000 MG/L
Chemical:	CHLORIDE		
Sample Collected:	07/05/1990	Findings:	.200 MG/L
Chemical:	FLUORIDE (TEMPERATURE DEPENDENT)		
Sample Collected:	07/05/1990	Findings:	340.000 MG/L
Chemical:	TOTAL DISSOLVED SOLIDS		
Sample Collected:	07/05/1990	Findings:	2.800 MG/L
Chemical:	NITRATE (AS NO3)		
Sample Collected:	07/05/1990	Findings:	640.000 UMHO
Chemical:	SPECIFIC CONDUCTANCE		
Sample Collected:	07/05/1990	Findings:	7.300
Chemical:	PH (LABORATORY)		
Sample Collected:	07/05/1990	Findings:	47.000 MG/L
Chemical:	TOTAL ALKALINITY (AS CACO3)		
Sample Collected:	07/05/1990	Findings:	57.000 MG/L
Chemical:	BICARBONATE ALKALINITY		
Sample Collected:	07/05/1990	Findings:	220.000 MG/L
Chemical:	TOTAL HARDNESS (AS CACO3)		
Sample Collected:	07/05/1990	Findings:	21.000 MG/L
Chemical:	CALCIUM		
Sample Collected:	07/05/1990	Findings:	15.000 MG/L
Chemical:	MAGNESIUM		
Sample Collected:	07/05/1990	Findings:	74.000 MG/L
Chemical:	SODIUM		
Sample Collected:	07/05/1990	Findings:	3.200 MG/L
Chemical:	POTASSIUM		
Sample Collected:	07/05/1990	Findings:	120.000 MG/L
Chemical:	CHLORIDE		
Sample Collected:	07/05/1990	Findings:	.200 MG/L
Chemical:	FLUORIDE (TEMPERATURE DEPENDENT)		

Sample Collected:	07/05/1990	Findings:	120.000 UG/L
Chemical:	BROMODICHLORMETHANE (THM)		
Sample Collected:	07/05/1990	Findings:	130.000 UG/L
Chemical:	BROMOFORM (THM)		
Sample Collected:	07/05/1990	Findings:	68.000 UG/L
Chemical:	DIBROMOCHLOROMETHANE (THM)		
Sample Collected:	07/05/1990	Findings:	18.000 UG/L
Chemical:	CHLOROFORM (THM)		
Sample Collected:	07/05/1990	Findings:	340.000 MG/L
Chemical:	TOTAL DISSOLVED SOLIDS		
Sample Collected:	07/05/1990	Findings:	2.800 MG/L
Chemical:	NITRATE (AS NO3)		
Sample Collected:	07/01/1991	Findings:	720.000 UMHO
Chemical:	SPECIFIC CONDUCTANCE		
Sample Collected:	07/01/1991	Findings:	7.100
Chemical:	PH (LABORATORY)		
Sample Collected:	07/01/1991	Findings:	35.000 MG/L
Chemical:	BICARBONATE ALKALINITY		
Sample Collected:	07/01/1991	Findings:	190.000 MG/L
Chemical:	TOTAL HARDNESS (AS CACO3)		
Sample Collected:	07/01/1991	Findings:	30.000 MG/L
Chemical:	CALCIUM		
Sample Collected:	07/01/1991	Findings:	17.000 MG/L
Chemical:	MAGNESIUM		
Sample Collected:	07/01/1991	Findings:	100.000 MG/L
Chemical:	SODIUM		
Sample Collected:	07/01/1991	Findings:	5.100 MG/L
Chemical:	POTASSIUM		
Sample Collected:	07/01/1991	Findings:	140.000 MG/L
Chemical:	CHLORIDE		
Sample Collected:	07/01/1991	Findings:	.110 MG/L
Chemical:	FLUORIDE (TEMPERATURE DEPENDENT)		
Sample Collected:	07/01/1991	Findings:	430.000 MG/L
Chemical:	TOTAL DISSOLVED SOLIDS		
Sample Collected:	07/01/1991	Findings:	1.600 PCI/L
Chemical:	GROSS ALPHA COUNTING ERROR		
Sample Collected:	07/01/1991	Findings:	1.600 PCI/L
Chemical:	GROSS ALPHA COUNTING ERROR		
Sample Collected:	10/01/1991	Findings:	2.400 PCI/L
Chemical:	GROSS ALPHA COUNTING ERROR		
Sample Collected:	10/01/1991	Findings:	60.000 MG/L
Chemical:	BICARBONATE ALKALINITY		
Sample Collected:	10/01/1991	Findings:	130.000 MG/L
Chemical:	TOTAL HARDNESS (AS CACO3)		
Sample Collected:	10/01/1991	Findings:	19.000 MG/L
Chemical:	CALCIUM		
Sample Collected:	10/01/1991	Findings:	13.000 MG/L
Chemical:	MAGNESIUM		
Sample Collected:	10/01/1991	Findings:	88.000 MG/L
Chemical:	SODIUM		

Sample Collected:	10/01/1991	Findings:	2.900 MG/L
Chemical:	POTASSIUM		
Sample Collected:	10/01/1991	Findings:	120.000 MG/L
Chemical:	CHLORIDE		
Sample Collected:	10/01/1991	Findings:	.140 MG/L
Chemical:	FLUORIDE (TEMPERATURE DEPENDENT)		
Sample Collected:	10/01/1991	Findings:	20.000 UNITS
Chemical:	COLOR		
Sample Collected:	10/01/1991	Findings:	690.000 UMHO
Chemical:	SPECIFIC CONDUCTANCE		
Sample Collected:	10/01/1991	Findings:	7.000
Chemical:	PH (LABORATORY)		
Sample Collected:	10/01/1991	Findings:	440.000 MG/L
Chemical:	TOTAL DISSOLVED SOLIDS		
Sample Collected:	10/01/1991	Findings:	65.000 UG/L
Chemical:	BROMODICHLORMETHANE (THM)		
Sample Collected:	10/01/1991	Findings:	30.000 UG/L
Chemical:	BROMOFORM (THM)		
Sample Collected:	10/01/1991	Findings:	87.000 UG/L
Chemical:	DIBROMOCHLOROMETHANE (THM)		
Sample Collected:	10/01/1991	Findings:	21.000 UG/L
Chemical:	CHLOROFORM (THM)		
Sample Collected:	01/06/1992	Findings:	2.900 PCI/L
Chemical:	GROSS ALPHA		
Sample Collected:	01/06/1992	Findings:	3.200 PCI/L
Chemical:	GROSS ALPHA COUNTING ERROR		
Sample Collected:	01/06/1992	Findings:	7.800 PCI/L
Chemical:	GROSS ALPHA COUNTING ERROR		
Sample Collected:	01/06/1992	Findings:	140.000 MG/L
Chemical:	TOTAL HARDNESS (AS CACO3)		
Sample Collected:	01/06/1992	Findings:	28.000 MG/L
Chemical:	CALCIUM		
Sample Collected:	01/06/1992	Findings:	16.000 MG/L
Chemical:	MAGNESIUM		
Sample Collected:	01/06/1992	Findings:	89.000 MG/L
Chemical:	SODIUM		
Sample Collected:	01/06/1992	Findings:	3.700 MG/L
Chemical:	POTASSIUM		
Sample Collected:	01/06/1992	Findings:	69.000 MG/L
Chemical:	TOTAL ALKALINITY (AS CACO3)		
Sample Collected:	01/06/1992	Findings:	69.000 MG/L
Chemical:	BICARBONATE ALKALINITY		
Sample Collected:	01/06/1992	Findings:	140.000 MG/L
Chemical:	CHLORIDE		
Sample Collected:	01/06/1992	Findings:	.140 MG/L
Chemical:	FLUORIDE (TEMPERATURE DEPENDENT)		
Sample Collected:	01/06/1992	Findings:	790.000 UMHO
Chemical:	SPECIFIC CONDUCTANCE		
Sample Collected:	01/06/1992	Findings:	7.100
Chemical:	PH (LABORATORY)		

Sample Collected:	01/06/1992	Findings:	480.000 MG/L
Chemical:	TOTAL DISSOLVED SOLIDS		
Sample Collected:	01/06/1992	Findings:	32.000 UG/L
Chemical:	BROMODICHLORMETHANE (THM)		
Sample Collected:	01/06/1992	Findings:	34.000 UG/L
Chemical:	BROMOFORM (THM)		
Sample Collected:	01/06/1992	Findings:	57.000 UG/L
Chemical:	DIBROMOCHLOROMETHANE (THM)		
Sample Collected:	01/06/1992	Findings:	6.500 UG/L
Chemical:	CHLOROFORM (THM)		
Sample Collected:	01/06/1992	Findings:	129.500 UG/L
Chemical:	TOTAL TRIHALOMETHANES		
Sample Collected:	04/02/1992	Findings:	160.000 MG/L
Chemical:	TOTAL HARDNESS (AS CACO3)		
Sample Collected:	04/02/1992	Findings:	36.000 MG/L
Chemical:	CALCIUM		
Sample Collected:	04/02/1992	Findings:	17.000 MG/L
Chemical:	MAGNESIUM		
Sample Collected:	04/02/1992	Findings:	100.000 MG/L
Chemical:	SODIUM		
Sample Collected:	04/02/1992	Findings:	4.400 MG/L
Chemical:	POTASSIUM		
Sample Collected:	04/02/1992	Findings:	160.000 MG/L
Chemical:	TOTAL HARDNESS (AS CACO3)		
Sample Collected:	04/02/1992	Findings:	37.000 MG/L
Chemical:	CALCIUM		
Sample Collected:	04/02/1992	Findings:	18.000 MG/L
Chemical:	MAGNESIUM		
Sample Collected:	04/02/1992	Findings:	100.000 MG/L
Chemical:	SODIUM		
Sample Collected:	04/02/1992	Findings:	4.500 MG/L
Chemical:	POTASSIUM		
Sample Collected:	04/02/1992	Findings:	15.000 UNITS
Chemical:	COLOR		
Sample Collected:	04/02/1992	Findings:	680.000 UMHO
Chemical:	SPECIFIC CONDUCTANCE		
Sample Collected:	04/02/1992	Findings:	7.000
Chemical:	PH (LABORATORY)		
Sample Collected:	04/02/1992	Findings:	65.000 MG/L
Chemical:	TOTAL ALKALINITY (AS CACO3)		
Sample Collected:	04/02/1992	Findings:	65.000 MG/L
Chemical:	BICARBONATE ALKALINITY		
Sample Collected:	04/02/1992	Findings:	130.000 MG/L
Chemical:	CHLORIDE		
Sample Collected:	04/02/1992	Findings:	.160 MG/L
Chemical:	FLUORIDE (TEMPERATURE DEPENDENT)		
Sample Collected:	04/02/1992	Findings:	520.000 MG/L
Chemical:	TOTAL DISSOLVED SOLIDS		
Sample Collected:	04/02/1992	Findings:	15.000 UNITS
Chemical:	COLOR		

Sample Collected:	04/02/1992	Findings:	660.000 UMHO
Chemical:	SPECIFIC CONDUCTANCE		
Sample Collected:	04/02/1992	Findings:	7.100
Chemical:	PH (LABORATORY)		
Sample Collected:	04/02/1992	Findings:	- 3.100 PCI/L
Chemical:	GROSS ALPHA		
Sample Collected:	04/02/1992	Findings:	2.500 PCI/L
Chemical:	GROSS ALPHA COUNTING ERROR		
Sample Collected:	04/02/1992	Findings:	480.000 MG/L
Chemical:	TOTAL DISSOLVED SOLIDS		
Sample Collected:	04/02/1992	Findings:	2.900 PCI/L
Chemical:	GROSS ALPHA COUNTING ERROR		
Sample Collected:	04/02/1992	Findings:	67.000 MG/L
Chemical:	TOTAL ALKALINITY (AS CACO3)		
Sample Collected:	04/02/1992	Findings:	67.000 MG/L
Chemical:	BICARBONATE ALKALINITY		
Sample Collected:	04/02/1992	Findings:	120.000 MG/L
Chemical:	CHLORIDE		
Sample Collected:	04/02/1992	Findings:	.140 MG/L
Chemical:	FLUORIDE (TEMPERATURE DEPENDENT)		
Sample Collected:	04/02/1992	Findings:	83.000 UG/L
Chemical:	BROMODICHLORMETHANE (THM)		
Sample Collected:	04/02/1992	Findings:	39.000 UG/L
Chemical:	BROMOFORM (THM)		
Sample Collected:	04/02/1992	Findings:	110.000 UG/L
Chemical:	DIBROMOCHLOROMETHANE (THM)		
Sample Collected:	04/02/1992	Findings:	30.000 UG/L
Chemical:	CHLOROFORM (THM)		
Sample Collected:	04/02/1992	Findings:	262.000 UG/L
Chemical:	TOTAL TRIHALOMETHANES		
Sample Collected:	06/30/1992	Findings:	680.000 UMHO
Chemical:	SPECIFIC CONDUCTANCE		
Sample Collected:	06/30/1992	Findings:	6.900
Chemical:	PH (LABORATORY)		
Sample Collected:	06/30/1992	Findings:	240.000 MG/L
Chemical:	TOTAL HARDNESS (AS CACO3)		
Sample Collected:	06/30/1992	Findings:	28.000 MG/L
Chemical:	CALCIUM		
Sample Collected:	06/30/1992	Findings:	17.000 MG/L
Chemical:	MAGNESIUM		
Sample Collected:	06/30/1992	Findings:	79.000 MG/L
Chemical:	SODIUM		
Sample Collected:	06/30/1992	Findings:	4.300 MG/L
Chemical:	POTASSIUM		
Sample Collected:	06/30/1992	Findings:	20.000 UG/L
Chemical:	CHROMIUM (TOTAL)		
Sample Collected:	06/30/1992	Findings:	160.000 UG/L
Chemical:	IRON		
Sample Collected:	06/30/1992	Findings:	330.000 UG/L
Chemical:	ZINC		

Sample Collected:	06/30/1992	Findings:	260.000 UG/L
Chemical:	ALUMINUM		
Sample Collected:	06/30/1992	Findings:	- 1.800 PCI/L
Chemical:	GROSS ALPHA		
Sample Collected:	06/30/1992	Findings:	2.600 PCI/L
Chemical:	GROSS ALPHA COUNTING ERROR		
Sample Collected:	06/30/1992	Findings:	67.000 UG/L
Chemical:	BROMODICHLORMETHANE (THM)		
Sample Collected:	06/30/1992	Findings:	22.000 UG/L
Chemical:	BROMOFORM (THM)		
Sample Collected:	06/30/1992	Findings:	75.000 UG/L
Chemical:	DIBROMOCHLOROMETHANE (THM)		
Sample Collected:	06/30/1992	Findings:	28.000 UG/L
Chemical:	CHLOROFORM (THM)		
Sample Collected:	06/30/1992	Findings:	370.000 MG/L
Chemical:	TOTAL DISSOLVED SOLIDS		
Sample Collected:	06/30/1992	Findings:	192.000 UG/L
Chemical:	TOTAL TRIHALOMETHANES		
Sample Collected:	06/30/1992	Findings:	- 2.000 PCI/L
Chemical:	GROSS ALPHA		
Sample Collected:	06/30/1992	Findings:	2.600 PCI/L
Chemical:	GROSS ALPHA COUNTING ERROR		
Sample Collected:	07/01/1992	Findings:	43.000 MG/L
Chemical:	TOTAL ALKALINITY (AS CACO3)		
Sample Collected:	07/01/1992	Findings:	43.000 MG/L
Chemical:	BICARBONATE ALKALINITY		
Sample Collected:	07/01/1992	Findings:	110.000 MG/L
Chemical:	CHLORIDE		
Sample Collected:	07/01/1992	Findings:	.110 MG/L
Chemical:	FLUORIDE (TEMPERATURE DEPENDENT)		
Sample Collected:	10/01/1992	Findings:	170.000 MG/L
Chemical:	TOTAL HARDNESS (AS CACO3)		
Sample Collected:	10/01/1992	Findings:	26.000 MG/L
Chemical:	CALCIUM		
Sample Collected:	10/01/1992	Findings:	18.000 MG/L
Chemical:	MAGNESIUM		
Sample Collected:	10/01/1992	Findings:	99.000 MG/L
Chemical:	SODIUM		
Sample Collected:	10/01/1992	Findings:	6.900 MG/L
Chemical:	POTASSIUM		
Sample Collected:	10/01/1992	Findings:	30.000 MG/L
Chemical:	TOTAL ALKALINITY (AS CACO3)		
Sample Collected:	10/01/1992	Findings:	30.000 MG/L
Chemical:	BICARBONATE ALKALINITY		
Sample Collected:	10/01/1992	Findings:	140.000 MG/L
Chemical:	CHLORIDE		
Sample Collected:	10/01/1992	Findings:	120.000 UG/L
Chemical:	IRON		
Sample Collected:	10/01/1992	Findings:	710.000 UG/L
Chemical:	ZINC		

Sample Collected:	10/01/1992	Findings:	580.000 UMHO
Chemical:	SPECIFIC CONDUCTANCE		
Sample Collected:	10/01/1992	Findings:	7.000
Chemical:	PH (LABORATORY)		
Sample Collected:	10/01/1992	Findings:	50.000 UG/L
Chemical:	BROMODICHLORMETHANE (THM)		
Sample Collected:	10/01/1992	Findings:	38.000 UG/L
Chemical:	BROMOFORM (THM)		
Sample Collected:	10/01/1992	Findings:	73.000 UG/L
Chemical:	DIBROMOCHLOROMETHANE (THM)		
Sample Collected:	10/01/1992	Findings:	15.000 UG/L
Chemical:	CHLOROFORM (THM)		
Sample Collected:	10/01/1992	Findings:	550.000 MG/L
Chemical:	TOTAL DISSOLVED SOLIDS		
Sample Collected:	10/01/1992	Findings:	176.000 UG/L
Chemical:	TOTAL TRIHALOMETHANES		
Sample Collected:	01/05/1993	Findings:	70.000 MG/L
Chemical:	TOTAL ALKALINITY (AS CACO3)		
Sample Collected:	01/05/1993	Findings:	70.000 MG/L
Chemical:	BICARBONATE ALKALINITY		
Sample Collected:	01/05/1993	Findings:	200.000 MG/L
Chemical:	TOTAL HARDNESS (AS CACO3)		
Sample Collected:	01/05/1993	Findings:	29.000 MG/L
Chemical:	CALCIUM		
Sample Collected:	01/05/1993	Findings:	18.000 MG/L
Chemical:	MAGNESIUM		
Sample Collected:	01/05/1993	Findings:	120.000 MG/L
Chemical:	SODIUM		
Sample Collected:	01/05/1993	Findings:	5.900 MG/L
Chemical:	POTASSIUM		
Sample Collected:	01/05/1993	Findings:	50.000 MG/L
Chemical:	CHLORIDE		
Sample Collected:	01/05/1993	Findings:	.150 MG/L
Chemical:	FLUORIDE (TEMPERATURE DEPENDENT)		
Sample Collected:	01/05/1993	Findings:	1000.000 UMHO
Chemical:	SPECIFIC CONDUCTANCE		
Sample Collected:	01/05/1993	Findings:	7.200
Chemical:	PH (LABORATORY)		
Sample Collected:	01/05/1993	Findings:	970.000 UG/L
Chemical:	ZINC		
Sample Collected:	01/05/1993	Findings:	840.000 MG/L
Chemical:	TOTAL DISSOLVED SOLIDS		
Sample Collected:	01/05/1993	Findings:	27.000 UG/L
Chemical:	BROMODICHLORMETHANE (THM)		
Sample Collected:	01/05/1993	Findings:	43.000 UG/L
Chemical:	BROMOFORM (THM)		
Sample Collected:	01/05/1993	Findings:	61.000 UG/L
Chemical:	DIBROMOCHLOROMETHANE (THM)		
Sample Collected:	01/05/1993	Findings:	8.000 UG/L
Chemical:	CHLOROFORM (THM)		

Sample Collected:	01/05/1993	Findings:	139.000 UG/L
Chemical:	TOTAL TRIHALOMETHANES		
Sample Collected:	01/05/1993	Findings:	23.000 UG/L
Chemical:	BROMODICHLORMETHANE (THM)		
Sample Collected:	01/05/1993	Findings:	29.000 UG/L
Chemical:	BROMOFORM (THM)		
Sample Collected:	01/05/1993	Findings:	45.000 UG/L
Chemical:	DIBROMOCHLOROMETHANE (THM)		
Sample Collected:	01/05/1993	Findings:	8.000 UG/L
Chemical:	CHLOROFORM (THM)		
Sample Collected:	01/05/1993	Findings:	105.000 UG/L
Chemical:	TOTAL TRIHALOMETHANES		
Sample Collected:	04/01/1993	Findings:	60.000 MG/L
Chemical:	TOTAL ALKALINITY (AS CACO3)		
Sample Collected:	04/01/1993	Findings:	60.000 MG/L
Chemical:	BICARBONATE ALKALINITY		
Sample Collected:	04/01/1993	Findings:	97.000 MG/L
Chemical:	CHLORIDE		
Sample Collected:	04/01/1993	Findings:	70.000 MG/L
Chemical:	TOTAL ALKALINITY (AS CACO3)		
Sample Collected:	04/01/1993	Findings:	70.000 MG/L
Chemical:	BICARBONATE ALKALINITY		
Sample Collected:	04/01/1993	Findings:	97.000 MG/L
Chemical:	CHLORIDE		
Sample Collected:	04/01/1993	Findings:	80.000 UG/L
Chemical:	BROMODICHLORMETHANE (THM)		
Sample Collected:	04/01/1993	Findings:	17.000 UG/L
Chemical:	BROMOFORM (THM)		
Sample Collected:	04/01/1993	Findings:	55.000 UG/L
Chemical:	DIBROMOCHLOROMETHANE (THM)		
Sample Collected:	04/01/1993	Findings:	87.000 UG/L
Chemical:	CHLOROFORM (THM)		
Sample Collected:	04/01/1993	Findings:	1.500 UG/L
Chemical:	1,1,1-TRICHLOROETHANE		
Sample Collected:	04/01/1993	Findings:	239.000 UG/L
Chemical:	TOTAL TRIHALOMETHANES		
Sample Collected:	04/01/1993	Findings:	780.000 UMHO
Chemical:	SPECIFIC CONDUCTANCE		
Sample Collected:	04/01/1993	Findings:	7.200
Chemical:	PH (LABORATORY)		
Sample Collected:	04/01/1993	Findings:	470.000 MG/L
Chemical:	TOTAL DISSOLVED SOLIDS		
Sample Collected:	04/01/1993	Findings:	780.000 UMHO
Chemical:	SPECIFIC CONDUCTANCE		
Sample Collected:	04/01/1993	Findings:	7.000
Chemical:	PH (LABORATORY)		
Sample Collected:	04/01/1993	Findings:	470.000 MG/L
Chemical:	TOTAL DISSOLVED SOLIDS		
Sample Collected:	07/06/1993	Findings:	3.000 TON
Chemical:	ODOR THRESHOLD @ 60 C		

Sample Collected:	07/06/1993	Findings:	520.000 UMHO
Chemical:	SPECIFIC CONDUCTANCE		
Sample Collected:	07/06/1993	Findings:	6.600
Chemical:	PH (LABORATORY)		
Sample Collected:	07/06/1993	Findings:	50.000 MG/L
Chemical:	TOTAL ALKALINITY (AS CACO3)		
Sample Collected:	07/06/1993	Findings:	50.000 MG/L
Chemical:	BICARBONATE ALKALINITY		
Sample Collected:	07/06/1993	Findings:	100.000 MG/L
Chemical:	TOTAL HARDNESS (AS CACO3)		
Sample Collected:	07/06/1993	Findings:	30.400 MG/L
Chemical:	CALCIUM		
Sample Collected:	07/06/1993	Findings:	16.300 MG/L
Chemical:	MAGNESIUM		
Sample Collected:	07/06/1993	Findings:	63.800 MG/L
Chemical:	SODIUM		
Sample Collected:	07/06/1993	Findings:	3.000 MG/L
Chemical:	POTASSIUM		
Sample Collected:	07/06/1993	Findings:	74.000 MG/L
Chemical:	CHLORIDE		
Sample Collected:	07/06/1993	Findings:	.120 MG/L
Chemical:	FLUORIDE (TEMPERATURE DEPENDENT)		
Sample Collected:	07/06/1993	Findings:	254.000 UG/L
Chemical:	ZINC		
Sample Collected:	07/06/1993	Findings:	309.000 UG/L
Chemical:	ALUMINUM		
Sample Collected:	07/06/1993	Findings:	73.000 UG/L
Chemical:	BROMODICHLORMETHANE (THM)		
Sample Collected:	07/06/1993	Findings:	7.000 UG/L
Chemical:	BROMOFORM (THM)		
Sample Collected:	07/06/1993	Findings:	40.000 UG/L
Chemical:	DIBROMOCHLOROMETHANE (THM)		
Sample Collected:	07/06/1993	Findings:	66.000 UG/L
Chemical:	CHLOROFORM (THM)		
Sample Collected:	07/06/1993	Findings:	300.000 MG/L
Chemical:	TOTAL DISSOLVED SOLIDS		
Sample Collected:	07/06/1993	Findings:	186.000 UG/L
Chemical:	TOTAL TRIHALOMETHANES		
Sample Collected:	10/06/1993	Findings:	42.000 UG/L
Chemical:	BROMODICHLORMETHANE (THM)		
Sample Collected:	10/06/1993	Findings:	3.000 UG/L
Chemical:	BROMOFORM (THM)		
Sample Collected:	10/06/1993	Findings:	20.000 UG/L
Chemical:	DIBROMOCHLOROMETHANE (THM)		
Sample Collected:	10/06/1993	Findings:	50.000 UG/L
Chemical:	CHLOROFORM (THM)		
Sample Collected:	10/06/1993	Findings:	115.000 UG/L
Chemical:	TOTAL TRIHALOMETHANES		
Sample Collected:	10/06/1993	Findings:	3.000 PCI/L
Chemical:	GROSS ALPHA		

Sample Collected:	10/06/1993	Findings:	2.000 PCI/L
Chemical:	GROSS ALPHA COUNTING ERROR		
Sample Collected:	10/06/1993	Findings:	67.000 MG/L
Chemical:	TOTAL HARDNESS (AS CACO3)		
Sample Collected:	10/06/1993	Findings:	19.100 MG/L
Chemical:	CALCIUM		
Sample Collected:	10/06/1993	Findings:	10.400 MG/L
Chemical:	MAGNESIUM		
Sample Collected:	10/06/1993	Findings:	31.900 MG/L
Chemical:	SODIUM		
Sample Collected:	10/06/1993	Findings:	1.980 MG/L
Chemical:	POTASSIUM		
Sample Collected:	10/06/1993	Findings:	37.000 UG/L
Chemical:	BROMODICHLORMETHANE (THM)		
Sample Collected:	10/06/1993	Findings:	4.000 UG/L
Chemical:	BROMOFORM (THM)		
Sample Collected:	10/06/1993	Findings:	19.000 UG/L
Chemical:	DIBROMOCHLOROMETHANE (THM)		
Sample Collected:	10/06/1993	Findings:	45.000 UG/L
Chemical:	CHLOROFORM (THM)		
Sample Collected:	10/06/1993	Findings:	105.000 UG/L
Chemical:	TOTAL TRIHALOMETHANES		
Sample Collected:	10/06/1993	Findings:	50.000 MG/L
Chemical:	TOTAL ALKALINITY (AS CACO3)		
Sample Collected:	10/06/1993	Findings:	50.000 MG/L
Chemical:	BICARBONATE ALKALINITY		
Sample Collected:	10/06/1993	Findings:	31.700 MG/L
Chemical:	CHLORIDE		
Sample Collected:	10/06/1993	Findings:	.300 MG/L
Chemical:	FLUORIDE (TEMPERATURE DEPENDENT)		
Sample Collected:	10/06/1993	Findings:	492.000 UG/L
Chemical:	ZINC		
Sample Collected:	10/06/1993	Findings:	109.000 UG/L
Chemical:	ALUMINUM		
Sample Collected:	10/06/1993	Findings:	3.000 TON
Chemical:	ODOR THRESHOLD @ 60 C		
Sample Collected:	10/06/1993	Findings:	300.000 UMHO
Chemical:	SPECIFIC CONDUCTANCE		
Sample Collected:	10/06/1993	Findings:	7.000
Chemical:	PH (LABORATORY)		
Sample Collected:	10/06/1993	Findings:	165.000 MG/L
Chemical:	TOTAL DISSOLVED SOLIDS		
Sample Collected:	01/05/1994	Findings:	61.000 MG/L
Chemical:	TOTAL ALKALINITY (AS CACO3)		
Sample Collected:	01/05/1994	Findings:	61.000 MG/L
Chemical:	BICARBONATE ALKALINITY		
Sample Collected:	01/05/1994	Findings:	63.000 MG/L
Chemical:	CHLORIDE		
Sample Collected:	01/05/1994	Findings:	969.000 UG/L
Chemical:	ZINC		

Sample Collected:	01/05/1994	Findings:	477.000 UMHO
Chemical:	SPECIFIC CONDUCTANCE		
Sample Collected:	01/05/1994	Findings:	7.100
Chemical:	PH (LABORATORY)		
Sample Collected:	01/05/1994	Findings:	320.000 MG/L
Chemical:	TOTAL DISSOLVED SOLIDS		
Sample Collected:	01/05/1994	Findings:	162.000 MG/L
Chemical:	TOTAL HARDNESS (AS CACO3)		
Sample Collected:	01/05/1994	Findings:	23.700 MG/L
Chemical:	CALCIUM		
Sample Collected:	01/05/1994	Findings:	14.100 MG/L
Chemical:	MAGNESIUM		
Sample Collected:	01/05/1994	Findings:	3.200 MG/L
Chemical:	SODIUM		
Sample Collected:	01/05/1994	Findings:	52.700 MG/L
Chemical:	POTASSIUM		
Sample Collected:	01/05/1994	Findings:	48.000 UG/L
Chemical:	BROMODICHLORMETHANE (THM)		
Sample Collected:	01/05/1994	Findings:	7.000 UG/L
Chemical:	BROMOFORM (THM)		
Sample Collected:	01/05/1994	Findings:	40.000 UG/L
Chemical:	DIBROMOCHLOROMETHANE (THM)		
Sample Collected:	01/05/1994	Findings:	31.000 UG/L
Chemical:	CHLOROFORM (THM)		
Sample Collected:	01/05/1994	Findings:	126.000 UG/L
Chemical:	TOTAL TRIHALOMETHANES		
Sample Collected:	01/05/1994	Findings:	53.000 UG/L
Chemical:	BROMODICHLORMETHANE (THM)		
Sample Collected:	01/05/1994	Findings:	8.000 UG/L
Chemical:	BROMOFORM (THM)		
Sample Collected:	01/05/1994	Findings:	43.000 UG/L
Chemical:	DIBROMOCHLOROMETHANE (THM)		
Sample Collected:	01/05/1994	Findings:	33.000 UG/L
Chemical:	CHLOROFORM (THM)		
Sample Collected:	01/05/1994	Findings:	137.000 UG/L
Chemical:	TOTAL TRIHALOMETHANES		
Sample Collected:	01/05/1994	Findings:	6.000 PCI/L
Chemical:	GROSS ALPHA		
Sample Collected:	01/05/1994	Findings:	5.000 PCI/L
Chemical:	GROSS ALPHA COUNTING ERROR		
Sample Collected:	01/05/1994	Findings:	5.000 PCI/L
Chemical:	GROSS ALPHA		
Sample Collected:	01/05/1994	Findings:	4.000 PCI/L
Chemical:	GROSS ALPHA COUNTING ERROR		
Sample Collected:	04/06/1994	Findings:	613.000 UMHO
Chemical:	SPECIFIC CONDUCTANCE		
Sample Collected:	04/06/1994	Findings:	6.900
Chemical:	PH (LABORATORY)		
Sample Collected:	04/06/1994	Findings:	335.000 MG/L
Chemical:	TOTAL DISSOLVED SOLIDS		

Sample Collected:	04/06/1994	Findings:	616.000 UMHO
Chemical:	SPECIFIC CONDUCTANCE		
Sample Collected:	04/06/1994	Findings:	7.000
Chemical:	PH (LABORATORY)		
Sample Collected:	04/06/1994	Findings:	345.000 MG/L
Chemical:	TOTAL DISSOLVED SOLIDS		
Sample Collected:	04/06/1994	Findings:	57.000 UG/L
Chemical:	BROMODICHLORMETHANE (THM)		
Sample Collected:	04/06/1994	Findings:	5.100 UG/L
Chemical:	BROMOFORM (THM)		
Sample Collected:	04/06/1994	Findings:	37.000 UG/L
Chemical:	DIBROMOCHLOROMETHANE (THM)		
Sample Collected:	04/06/1994	Findings:	48.000 UG/L
Chemical:	CHLOROFORM (THM)		
Sample Collected:	04/06/1994	Findings:	147.100 UG/L
Chemical:	TOTAL TRIHALOMETHANES		
Sample Collected:	04/06/1994	Findings:	57.000 MG/L
Chemical:	TOTAL ALKALINITY (AS CACO3)		
Sample Collected:	04/06/1994	Findings:	57.000 MG/L
Chemical:	BICARBONATE ALKALINITY		
Sample Collected:	04/06/1994	Findings:	89.000 MG/L
Chemical:	CHLORIDE		
Sample Collected:	04/06/1994	Findings:	52.000 UG/L
Chemical:	BROMODICHLORMETHANE (THM)		
Sample Collected:	04/06/1994	Findings:	5.500 UG/L
Chemical:	BROMOFORM (THM)		
Sample Collected:	04/06/1994	Findings:	35.000 UG/L
Chemical:	DIBROMOCHLOROMETHANE (THM)		
Sample Collected:	04/06/1994	Findings:	43.000 UG/L
Chemical:	CHLOROFORM (THM)		
Sample Collected:	04/06/1994	Findings:	135.500 UG/L
Chemical:	TOTAL TRIHALOMETHANES		
Sample Collected:	04/06/1994	Findings:	61.000 MG/L
Chemical:	TOTAL ALKALINITY (AS CACO3)		
Sample Collected:	04/06/1994	Findings:	61.000 MG/L
Chemical:	BICARBONATE ALKALINITY		
Sample Collected:	04/06/1994	Findings:	89.100 MG/L
Chemical:	CHLORIDE		
Sample Collected:	07/13/1994	Findings:	3.000 TON
Chemical:	ODOR THRESHOLD @ 60 C		
Sample Collected:	07/13/1994	Findings:	520.000 UMHO
Chemical:	SPECIFIC CONDUCTANCE		
Sample Collected:	07/13/1994	Findings:	6.300
Chemical:	PH (LABORATORY)		
Sample Collected:	07/13/1994	Findings:	58.000 MG/L
Chemical:	TOTAL ALKALINITY (AS CACO3)		
Sample Collected:	07/13/1994	Findings:	71.000 MG/L
Chemical:	BICARBONATE ALKALINITY		
Sample Collected:	07/13/1994	Findings:	120.000 MG/L
Chemical:	TOTAL HARDNESS (AS CACO3)		

Sample Collected:	07/13/1994	Findings:	24.000 MG/L
Chemical:	CALCIUM		
Sample Collected:	07/13/1994	Findings:	14.000 MG/L
Chemical:	MAGNESIUM		
Sample Collected:	07/13/1994	Findings:	56.000 MG/L
Chemical:	SODIUM		
Sample Collected:	07/13/1994	Findings:	3.000 MG/L
Chemical:	POTASSIUM		
Sample Collected:	07/13/1994	Findings:	76.000 MG/L
Chemical:	CHLORIDE		
Sample Collected:	07/13/1994	Findings:	81.000 UG/L
Chemical:	ZINC		
Sample Collected:	07/13/1994	Findings:	120.000 UG/L
Chemical:	ALUMINUM		
Sample Collected:	07/13/1994	Findings:	41.000 UG/L
Chemical:	BROMODICHLORMETHANE (THM)		
Sample Collected:	07/13/1994	Findings:	8.000 UG/L
Chemical:	BROMOFORM (THM)		
Sample Collected:	07/13/1994	Findings:	43.000 UG/L
Chemical:	DIBROMOCHLOROMETHANE (THM)		
Sample Collected:	07/13/1994	Findings:	17.000 UG/L
Chemical:	CHLOROFORM (THM)		
Sample Collected:	07/13/1994	Findings:	280.000 MG/L
Chemical:	TOTAL DISSOLVED SOLIDS		
Sample Collected:	07/13/1994	Findings:	2.800 MG/L
Chemical:	NITRATE (AS NO3)		
Sample Collected:	07/13/1994	Findings:	.180 NTU
Chemical:	TURBIDITY (LAB)		
Sample Collected:	07/13/1994	Findings:	109.000 UG/L
Chemical:	TOTAL TRIHALOMETHANES		
Sample Collected:	08/03/1994	Findings:	460.000 UG/L
Chemical:	ZINC		
Sample Collected:	08/03/1994	Findings:	120.000 UG/L
Chemical:	ALUMINUM		
Sample Collected:	08/03/1994	Findings:	45.000 UG/L
Chemical:	BROMODICHLORMETHANE (THM)		
Sample Collected:	08/03/1994	Findings:	12.000 UG/L
Chemical:	BROMOFORM (THM)		
Sample Collected:	08/03/1994	Findings:	51.000 UG/L
Chemical:	DIBROMOCHLOROMETHANE (THM)		
Sample Collected:	08/03/1994	Findings:	19.000 UG/L
Chemical:	CHLOROFORM (THM)		
Sample Collected:	08/03/1994	Findings:	.230 NTU
Chemical:	TURBIDITY (LAB)		
Sample Collected:	08/03/1994	Findings:	127.000 UG/L
Chemical:	TOTAL TRIHALOMETHANES		
Sample Collected:	08/03/1994	Findings:	130.000 UG/L
Chemical:	COPPER		
Sample Collected:	08/03/1994	Findings:	52.000 UG/L
Chemical:	BROMODICHLORMETHANE (THM)		

Sample Collected:	08/03/1994	Findings:	13.000 UG/L
Chemical:	BROMOFORM (THM)		
Sample Collected:	08/03/1994	Findings:	58.000 UG/L
Chemical:	DIBROMOCHLOROMETHANE (THM)		
Sample Collected:	08/03/1994	Findings:	21.000 UG/L
Chemical:	CHLOROFORM (THM)		
Sample Collected:	08/03/1994	Findings:	144.000 UG/L
Chemical:	TOTAL TRIHALOMETHANES		
Sample Collected:	08/03/1994	Findings:	54.000 UG/L
Chemical:	BROMODICHLORMETHANE (THM)		
Sample Collected:	08/03/1994	Findings:	13.000 UG/L
Chemical:	BROMOFORM (THM)		
Sample Collected:	08/03/1994	Findings:	58.000 UG/L
Chemical:	DIBROMOCHLOROMETHANE (THM)		
Sample Collected:	08/03/1994	Findings:	19.000 UG/L
Chemical:	CHLOROFORM (THM)		
Sample Collected:	08/03/1994	Findings:	144.000 UG/L
Chemical:	TOTAL TRIHALOMETHANES		
Sample Collected:	08/03/1994	Findings:	42.000 UG/L
Chemical:	BROMODICHLORMETHANE (THM)		
Sample Collected:	08/03/1994	Findings:	12.000 UG/L
Chemical:	BROMOFORM (THM)		
Sample Collected:	08/03/1994	Findings:	49.000 UG/L
Chemical:	DIBROMOCHLOROMETHANE (THM)		
Sample Collected:	08/03/1994	Findings:	15.000 UG/L
Chemical:	CHLOROFORM (THM)		
Sample Collected:	08/03/1994	Findings:	118.000 UG/L
Chemical:	TOTAL TRIHALOMETHANES		
Sample Collected:	08/03/1994	Findings:	74.000 UG/L
Chemical:	BROMODICHLORMETHANE (THM)		
Sample Collected:	08/03/1994	Findings:	18.000 UG/L
Chemical:	BROMOFORM (THM)		
Sample Collected:	08/03/1994	Findings:	76.000 UG/L
Chemical:	DIBROMOCHLOROMETHANE (THM)		
Sample Collected:	08/03/1994	Findings:	31.000 UG/L
Chemical:	CHLOROFORM (THM)		
Sample Collected:	08/03/1994	Findings:	199.000 UG/L
Chemical:	TOTAL TRIHALOMETHANES		
Sample Collected:	09/07/1994	Findings:	2.500 UG/L
Chemical:	ARSENIC		
Sample Collected:	09/07/1994	Findings:	500.000 UG/L
Chemical:	ZINC		
Sample Collected:	09/07/1994	Findings:	6.100 UG/L
Chemical:	ANTIMONY		
Sample Collected:	09/07/1994	Findings:	37.000 UG/L
Chemical:	BROMODICHLORMETHANE (THM)		
Sample Collected:	09/07/1994	Findings:	22.000 UG/L
Chemical:	BROMOFORM (THM)		
Sample Collected:	09/07/1994	Findings:	54.000 UG/L
Chemical:	DIBROMOCHLOROMETHANE (THM)		

Sample Collected:	09/07/1994	Findings:	11.000 UG/L
Chemical:	CHLOROFORM (THM)		
Sample Collected:	09/07/1994	Findings:	.100 NTU
Chemical:	TURBIDITY (LAB)		
Sample Collected:	09/07/1994	Findings:	124.000 UG/L
Chemical:	TOTAL TRIHALOMETHANES		
Sample Collected:	10/05/1994	Findings:	4.000 UNITS
Chemical:	COLOR		
Sample Collected:	10/05/1994	Findings:	2.000 TON
Chemical:	ODOR THRESHOLD @ 60 C		
Sample Collected:	10/05/1994	Findings:	760.000 UMHO
Chemical:	SPECIFIC CONDUCTANCE		
Sample Collected:	10/05/1994	Findings:	6.000
Chemical:	PH (LABORATORY)		
Sample Collected:	10/05/1994	Findings:	55.000 MG/L
Chemical:	TOTAL ALKALINITY (AS CACO3)		
Sample Collected:	10/05/1994	Findings:	67.000 MG/L
Chemical:	BICARBONATE ALKALINITY		
Sample Collected:	10/05/1994	Findings:	110.000 MG/L
Chemical:	TOTAL HARDNESS (AS CACO3)		
Sample Collected:	10/05/1994	Findings:	22.000 MG/L
Chemical:	CALCIUM		
Sample Collected:	10/05/1994	Findings:	14.000 MG/L
Chemical:	MAGNESIUM		
Sample Collected:	10/05/1994	Findings:	100.000 MG/L
Chemical:	SODIUM		
Sample Collected:	10/05/1994	Findings:	3.500 MG/L
Chemical:	POTASSIUM		
Sample Collected:	10/05/1994	Findings:	120.000 MG/L
Chemical:	CHLORIDE		
Sample Collected:	10/05/1994	Findings:	.160 MG/L
Chemical:	FLUORIDE (TEMPERATURE DEPENDENT)		
Sample Collected:	10/05/1994	Findings:	190.000 UG/L
Chemical:	ZINC		
Sample Collected:	10/05/1994	Findings:	63.000 UG/L
Chemical:	ALUMINUM		
Sample Collected:	10/05/1994	Findings:	19.000 UG/L
Chemical:	BROMODICHLORMETHANE (THM)		
Sample Collected:	10/05/1994	Findings:	45.000 UG/L
Chemical:	BROMOFORM (THM)		
Sample Collected:	10/05/1994	Findings:	60.000 UG/L
Chemical:	DIBROMOCHLOROMETHANE (THM)		
Sample Collected:	10/05/1994	Findings:	3.000 UG/L
Chemical:	CHLOROFORM (THM)		
Sample Collected:	10/05/1994	Findings:	440.000 MG/L
Chemical:	TOTAL DISSOLVED SOLIDS		
Sample Collected:	10/05/1994	Findings:	127.000 UG/L
Chemical:	TOTAL TRIHALOMETHANES		
Sample Collected:	11/02/1994	Findings:	2.300 UG/L
Chemical:	ARSENIC		

Sample Collected:	11/02/1994	Findings:	890.000 UG/L
Chemical:	IRON		
Sample Collected:	11/02/1994	Findings:	530.000 UG/L
Chemical:	ZINC		
Sample Collected:	11/02/1994	Findings:	63.000 UG/L
Chemical:	ALUMINUM		
Sample Collected:	11/02/1994	Findings:	19.000 UG/L
Chemical:	BROMODICHLORMETHANE (THM)		
Sample Collected:	11/02/1994	Findings:	55.000 UG/L
Chemical:	BROMOFORM (THM)		
Sample Collected:	11/02/1994	Findings:	63.000 UG/L
Chemical:	DIBROMOCHLOROMETHANE (THM)		
Sample Collected:	11/02/1994	Findings:	4.000 UG/L
Chemical:	CHLOROFORM (THM)		
Sample Collected:	11/02/1994	Findings:	4.600 NTU
Chemical:	TURBIDITY (LAB)		
Sample Collected:	11/02/1994	Findings:	141.000 UG/L
Chemical:	TOTAL TRIHALOMETHANES		
Sample Collected:	12/07/1994	Findings:	27.000 UG/L
Chemical:	BROMODICHLORMETHANE (THM)		
Sample Collected:	12/07/1994	Findings:	36.000 UG/L
Chemical:	BROMOFORM (THM)		
Sample Collected:	12/07/1994	Findings:	57.000 UG/L
Chemical:	DIBROMOCHLOROMETHANE (THM)		
Sample Collected:	12/07/1994	Findings:	5.000 UG/L
Chemical:	CHLOROFORM (THM)		
Sample Collected:	12/07/1994	Findings:	125.000 UG/L
Chemical:	TOTAL TRIHALOMETHANES		
Sample Collected:	01/11/1995	Findings:	31.000 UG/L
Chemical:	BROMODICHLORMETHANE (THM)		
Sample Collected:	01/11/1995	Findings:	31.000 UG/L
Chemical:	BROMOFORM (THM)		
Sample Collected:	01/11/1995	Findings:	55.000 UG/L
Chemical:	DIBROMOCHLOROMETHANE (THM)		
Sample Collected:	01/11/1995	Findings:	9.400 UG/L
Chemical:	CHLOROFORM (THM)		
Sample Collected:	01/11/1995	Findings:	26.000 UG/L
Chemical:	TOTAL TRIHALOMETHANES		
Sample Collected:	01/11/1995	Findings:	716.000 UMHO
Chemical:	SPECIFIC CONDUCTANCE		
Sample Collected:	01/11/1995	Findings:	6.430
Chemical:	PH (LABORATORY)		
Sample Collected:	01/11/1995	Findings:	51.000 MG/L
Chemical:	TOTAL ALKALINITY (AS CACO3)		
Sample Collected:	01/11/1995	Findings:	51.000 MG/L
Chemical:	BICARBONATE ALKALINITY		
Sample Collected:	01/11/1995	Findings:	115.000 MG/L
Chemical:	TOTAL HARDNESS (AS CACO3)		
Sample Collected:	01/11/1995	Findings:	23.000 MG/L
Chemical:	CALCIUM		

Sample Collected:	01/11/1995	Findings:	14.000 MG/L
Chemical:	MAGNESIUM		
Sample Collected:	01/11/1995	Findings:	105.000 MG/L
Chemical:	SODIUM		
Sample Collected:	01/11/1995	Findings:	6.000 MG/L
Chemical:	POTASSIUM		
Sample Collected:	01/11/1995	Findings:	118.000 MG/L
Chemical:	CHLORIDE		
Sample Collected:	01/11/1995	Findings:	400.000 UG/L
Chemical:	IRON		
Sample Collected:	01/11/1995	Findings:	840.000 UG/L
Chemical:	ZINC		
Sample Collected:	01/11/1995	Findings:	560.000 MG/L
Chemical:	TOTAL DISSOLVED SOLIDS		
Sample Collected:	01/11/1995	Findings:	- 1.800
Chemical:	LANGELIER INDEX @ 60 C		
Sample Collected:	01/11/1995	Findings:	.400 NTU
Chemical:	TURBIDITY (LAB)		
Sample Collected:	02/01/1995	Findings:	60.000 UG/L
Chemical:	COPPER		
Sample Collected:	02/01/1995	Findings:	200.000 UG/L
Chemical:	IRON		
Sample Collected:	02/01/1995	Findings:	390.000 UG/L
Chemical:	ZINC		
Sample Collected:	02/01/1995	Findings:	42.000 UG/L
Chemical:	BROMODICHLORMETHANE (THM)		
Sample Collected:	02/01/1995	Findings:	12.000 UG/L
Chemical:	BROMOFORM (THM)		
Sample Collected:	02/01/1995	Findings:	36.000 UG/L
Chemical:	DIBROMOCHLOROMETHANE (THM)		
Sample Collected:	02/01/1995	Findings:	31.000 UG/L
Chemical:	CHLOROFORM (THM)		
Sample Collected:	02/01/1995	Findings:	.190 NTU
Chemical:	TURBIDITY (LAB)		
Sample Collected:	02/01/1995	Findings:	121.000 UG/L
Chemical:	TOTAL TRIHALOMETHANES		
Sample Collected:	02/01/1995	Findings:	80.000 UG/L
Chemical:	COPPER		
Sample Collected:	02/01/1995	Findings:	53.000 UG/L
Chemical:	BROMODICHLORMETHANE (THM)		
Sample Collected:	02/01/1995	Findings:	16.000 UG/L
Chemical:	BROMOFORM (THM)		
Sample Collected:	02/01/1995	Findings:	44.000 UG/L
Chemical:	DIBROMOCHLOROMETHANE (THM)		
Sample Collected:	02/01/1995	Findings:	42.000 UG/L
Chemical:	CHLOROFORM (THM)		
Sample Collected:	02/01/1995	Findings:	155.000 UG/L
Chemical:	TOTAL TRIHALOMETHANES		
Sample Collected:	03/08/1995	Findings:	310.000 UG/L
Chemical:	COPPER		

Sample Collected:	03/08/1995	Findings:	570.000 UG/L
Chemical:	ZINC		
Sample Collected:	03/08/1995	Findings:	40.000 UG/L
Chemical:	BROMODICHLORMETHANE (THM)		
Sample Collected:	03/08/1995	Findings:	10.000 UG/L
Chemical:	BROMOFORM (THM)		
Sample Collected:	03/08/1995	Findings:	29.000 UG/L
Chemical:	DIBROMOCHLOROMETHANE (THM)		
Sample Collected:	03/08/1995	Findings:	37.000 UG/L
Chemical:	CHLOROFORM (THM)		
Sample Collected:	03/08/1995	Findings:	.220 NTU
Chemical:	TURBIDITY (LAB)		
Sample Collected:	03/08/1995	Findings:	116.000 UG/L
Chemical:	TOTAL TRIHALOMETHANES		
Sample Collected:	04/05/1995	Findings:	480.000 UMHO
Chemical:	SPECIFIC CONDUCTANCE		
Sample Collected:	04/05/1995	Findings:	6.880
Chemical:	PH (LABORATORY)		
Sample Collected:	04/05/1995	Findings:	48.000 MG/L
Chemical:	TOTAL ALKALINITY (AS CACO3)		
Sample Collected:	04/05/1995	Findings:	48.000 MG/L
Chemical:	BICARBONATE ALKALINITY		
Sample Collected:	04/05/1995	Findings:	118.000 MG/L
Chemical:	TOTAL HARDNESS (AS CACO3)		
Sample Collected:	04/05/1995	Findings:	24.000 MG/L
Chemical:	CALCIUM		
Sample Collected:	04/05/1995	Findings:	14.000 MG/L
Chemical:	MAGNESIUM		
Sample Collected:	04/05/1995	Findings:	58.000 MG/L
Chemical:	SODIUM		
Sample Collected:	04/05/1995	Findings:	4.000 MG/L
Chemical:	POTASSIUM		
Sample Collected:	04/05/1995	Findings:	60.000 MG/L
Chemical:	CHLORIDE		
Sample Collected:	04/05/1995	Findings:	130.000 UG/L
Chemical:	ZINC		
Sample Collected:	04/05/1995	Findings:	40.000 UG/L
Chemical:	BROMODICHLORMETHANE (THM)		
Sample Collected:	04/05/1995	Findings:	6.600 UG/L
Chemical:	BROMOFORM (THM)		
Sample Collected:	04/05/1995	Findings:	27.000 UG/L
Chemical:	DIBROMOCHLOROMETHANE (THM)		
Sample Collected:	04/05/1995	Findings:	39.000 UG/L
Chemical:	CHLOROFORM (THM)		
Sample Collected:	04/05/1995	Findings:	320.000 MG/L
Chemical:	TOTAL DISSOLVED SOLIDS		
Sample Collected:	04/05/1995	Findings:	- 1.320
Chemical:	LANGELIER INDEX @ 60 C		
Sample Collected:	04/05/1995	Findings:	.240 NTU
Chemical:	TURBIDITY (LAB)		

Sample Collected:	04/05/1995	Findings:	113.000 UG/L
Chemical:	TOTAL TRIHALOMETHANES		
Sample Collected:	05/03/1995	Findings:	5.710
Chemical:	PH (LABORATORY)		
Sample Collected:	05/03/1995	Findings:	20.000 MG/L
Chemical:	TOTAL ALKALINITY (AS CACO3)		
Sample Collected:	05/03/1995	Findings:	87.000 MG/L
Chemical:	TOTAL HARDNESS (AS CACO3)		
Sample Collected:	05/03/1995	Findings:	15.000 MG/L
Chemical:	CALCIUM		
Sample Collected:	05/03/1995	Findings:	380.000 UG/L
Chemical:	IRON		
Sample Collected:	05/03/1995	Findings:	20.000 UG/L
Chemical:	NICKEL		
Sample Collected:	05/03/1995	Findings:	430.000 UG/L
Chemical:	ZINC		
Sample Collected:	05/03/1995	Findings:	30.000 UG/L
Chemical:	BROMODICHLORMETHANE (THM)		
Sample Collected:	05/03/1995	Findings:	3.400 UG/L
Chemical:	BROMOFORM (THM)		
Sample Collected:	05/03/1995	Findings:	13.000 UG/L
Chemical:	DIBROMOCHLOROMETHANE (THM)		
Sample Collected:	05/03/1995	Findings:	44.000 UG/L
Chemical:	CHLOROFORM (THM)		
Sample Collected:	05/03/1995	Findings:	.200 NTU
Chemical:	TURBIDITY (LAB)		
Sample Collected:	05/03/1995	Findings:	90.400 UG/L
Chemical:	TOTAL TRIHALOMETHANES		
Sample Collected:	06/07/1995	Findings:	6.350
Chemical:	PH (LABORATORY)		
Sample Collected:	06/07/1995	Findings:	20.000 MG/L
Chemical:	TOTAL ALKALINITY (AS CACO3)		
Sample Collected:	06/07/1995	Findings:	66.000 MG/L
Chemical:	TOTAL HARDNESS (AS CACO3)		
Sample Collected:	06/07/1995	Findings:	10.000 MG/L
Chemical:	CALCIUM		
Sample Collected:	06/07/1995	Findings:	200.000 UG/L
Chemical:	IRON		
Sample Collected:	06/07/1995	Findings:	20.000 UG/L
Chemical:	NICKEL		
Sample Collected:	06/07/1995	Findings:	51.000 UG/L
Chemical:	ZINC		
Sample Collected:	06/07/1995	Findings:	22.000 UG/L
Chemical:	BROMODICHLORMETHANE (THM)		
Sample Collected:	06/07/1995	Findings:	1.700 UG/L
Chemical:	BROMOFORM (THM)		
Sample Collected:	06/07/1995	Findings:	8.000 UG/L
Chemical:	DIBROMOCHLOROMETHANE (THM)		
Sample Collected:	06/07/1995	Findings:	41.000 UG/L
Chemical:	CHLOROFORM (THM)		

Sample Collected:	06/07/1995	Findings:	.200 NTU
Chemical:	TURBIDITY (LAB)		
Sample Collected:	06/07/1995	Findings:	73.000 UG/L
Chemical:	TOTAL TRIHALOMETHANES		
Sample Collected:	07/06/1995	Findings:	5.000 UNITS
Chemical:	COLOR		
Sample Collected:	07/06/1995	Findings:	355.000 UMHO
Chemical:	SPECIFIC CONDUCTANCE		
Sample Collected:	07/06/1995	Findings:	6.730
Chemical:	PH (LABORATORY)		
Sample Collected:	07/06/1995	Findings:	20.000 MG/L
Chemical:	TOTAL ALKALINITY (AS CACO3)		
Sample Collected:	07/06/1995	Findings:	20.000 MG/L
Chemical:	CARBONATE ALKALINITY		
Sample Collected:	07/06/1995	Findings:	73.000 MG/L
Chemical:	TOTAL HARDNESS (AS CACO3)		
Sample Collected:	07/06/1995	Findings:	16.000 MG/L
Chemical:	CALCIUM		
Sample Collected:	07/06/1995	Findings:	8.000 MG/L
Chemical:	MAGNESIUM		
Sample Collected:	07/06/1995	Findings:	33.000 MG/L
Chemical:	SODIUM		
Sample Collected:	07/06/1995	Findings:	2.000 MG/L
Chemical:	POTASSIUM		
Sample Collected:	07/06/1995	Findings:	56.000 MG/L
Chemical:	CHLORIDE		
Sample Collected:	07/06/1995	Findings:	770.000 UG/L
Chemical:	ZINC		
Sample Collected:	07/06/1995	Findings:	32.000 UG/L
Chemical:	BROMODICHLORMETHANE (THM)		
Sample Collected:	07/06/1995	Findings:	.800 UG/L
Chemical:	CARBON TETRACHLORIDE		
Sample Collected:	07/06/1995	Findings:	2.800 UG/L
Chemical:	BROMOFORM (THM)		
Sample Collected:	07/06/1995	Findings:	19.000 UG/L
Chemical:	DIBROMOCHLOROMETHANE (THM)		
Sample Collected:	07/06/1995	Findings:	31.000 UG/L
Chemical:	CHLOROFORM (THM)		
Sample Collected:	07/06/1995	Findings:	220.000 MG/L
Chemical:	TOTAL DISSOLVED SOLIDS		
Sample Collected:	07/06/1995	Findings:	- 2.060
Chemical:	LANGELIER INDEX @ 60 C		
Sample Collected:	07/06/1995	Findings:	2.800 MG/L
Chemical:	NITRATE (AS NO3)		
Sample Collected:	07/06/1995	Findings:	.260 NTU
Chemical:	TURBIDITY (LAB)		
Sample Collected:	07/06/1995	Findings:	85.000 UG/L
Chemical:	TOTAL TRIHALOMETHANES		
Sample Collected:	07/06/1995	Findings:	600.000 UG/L
Chemical:	NITRATE + NITRITE (AS N)		

Sample Collected:	08/02/1995	Findings:	6.520
Chemical:	PH (LABORATORY)		
Sample Collected:	08/02/1995	Findings:	20.000 MG/L
Chemical:	TOTAL ALKALINITY (AS CACO3)		
Sample Collected:	08/02/1995	Findings:	61.000 MG/L
Chemical:	TOTAL HARDNESS (AS CACO3)		
Sample Collected:	08/02/1995	Findings:	13.000 MG/L
Chemical:	CALCIUM		
Sample Collected:	08/02/1995	Findings:	170.000 UG/L
Chemical:	IRON		
Sample Collected:	08/02/1995	Findings:	17.000 UG/L
Chemical:	MANGANESE		
Sample Collected:	08/02/1995	Findings:	590.000 UG/L
Chemical:	ZINC		
Sample Collected:	08/02/1995	Findings:	11.000 UG/L
Chemical:	BROMODICHLORMETHANE (THM)		
Sample Collected:	08/02/1995	Findings:	3.900 UG/L
Chemical:	BROMOFORM (THM)		
Sample Collected:	08/02/1995	Findings:	16.000 UG/L
Chemical:	DIBROMOCHLOROMETHANE (THM)		
Sample Collected:	08/02/1995	Findings:	4.300 UG/L
Chemical:	CHLOROFORM (THM)		
Sample Collected:	08/02/1995	Findings:	.300 NTU
Chemical:	TURBIDITY (LAB)		
Sample Collected:	08/02/1995	Findings:	35.000 UG/L
Chemical:	TOTAL TRIHALOMETHANES		
Sample Collected:	09/06/1995	Findings:	6.700
Chemical:	PH (LABORATORY)		
Sample Collected:	09/06/1995	Findings:	35.000 MG/L
Chemical:	TOTAL ALKALINITY (AS CACO3)		
Sample Collected:	09/06/1995	Findings:	72.000 MG/L
Chemical:	TOTAL HARDNESS (AS CACO3)		
Sample Collected:	09/06/1995	Findings:	14.000 MG/L
Chemical:	CALCIUM		
Sample Collected:	09/06/1995	Findings:	30.000 UG/L
Chemical:	MANGANESE		
Sample Collected:	09/06/1995	Findings:	480.000 UG/L
Chemical:	ZINC		
Sample Collected:	09/06/1995	Findings:	90.000 UG/L
Chemical:	ALUMINUM		
Sample Collected:	09/06/1995	Findings:	16.000 UG/L
Chemical:	BROMODICHLORMETHANE (THM)		
Sample Collected:	09/06/1995	Findings:	4.900 UG/L
Chemical:	BROMOFORM (THM)		
Sample Collected:	09/06/1995	Findings:	20.000 UG/L
Chemical:	DIBROMOCHLOROMETHANE (THM)		
Sample Collected:	09/06/1995	Findings:	6.200 UG/L
Chemical:	CHLOROFORM (THM)		
Sample Collected:	09/06/1995	Findings:	.220 NTU
Chemical:	TURBIDITY (LAB)		

Sample Collected:	09/06/1995	Findings:	47.000 UG/L
Chemical:	TOTAL TRIHALOMETHANES		
Sample Collected:	10/04/1995	Findings:	302.000 UMHO
Chemical:	SPECIFIC CONDUCTANCE		
Sample Collected:	10/04/1995	Findings:	6.720
Chemical:	PH (LABORATORY)		
Sample Collected:	10/04/1995	Findings:	30.000 MG/L
Chemical:	TOTAL ALKALINITY (AS CACO3)		
Sample Collected:	10/04/1995	Findings:	30.000 MG/L
Chemical:	CARBONATE ALKALINITY		
Sample Collected:	10/04/1995	Findings:	58.000 MG/L
Chemical:	TOTAL HARDNESS (AS CACO3)		
Sample Collected:	10/04/1995	Findings:	12.000 MG/L
Chemical:	CALCIUM		
Sample Collected:	10/04/1995	Findings:	7.000 MG/L
Chemical:	MAGNESIUM		
Sample Collected:	10/04/1995	Findings:	31.000 MG/L
Chemical:	SODIUM		
Sample Collected:	10/04/1995	Findings:	30.000 MG/L
Chemical:	CHLORIDE		
Sample Collected:	10/04/1995	Findings:	200.000 UG/L
Chemical:	IRON		
Sample Collected:	10/04/1995	Findings:	15.000 UG/L
Chemical:	MANGANESE		
Sample Collected:	10/04/1995	Findings:	440.000 UG/L
Chemical:	ZINC		
Sample Collected:	10/04/1995	Findings:	2.200 UG/L
Chemical:	BROMODICHLORMETHANE (THM)		
Sample Collected:	10/04/1995	Findings:	.800 UG/L
Chemical:	BROMOFORM (THM)		
Sample Collected:	10/04/1995	Findings:	2.800 UG/L
Chemical:	DIBROMOCHLOROMETHANE (THM)		
Sample Collected:	10/04/1995	Findings:	1.100 UG/L
Chemical:	CHLOROFORM (THM)		
Sample Collected:	10/04/1995	Findings:	190.000 MG/L
Chemical:	TOTAL DISSOLVED SOLIDS		
Sample Collected:	10/04/1995	Findings:	- 1.980
Chemical:	LANGELIER INDEX @ 60 C		
Sample Collected:	10/04/1995	Findings:	.400 NTU
Chemical:	TURBIDITY (LAB)		
Sample Collected:	10/04/1995	Findings:	6.900 UG/L
Chemical:	TOTAL TRIHALOMETHANES		
Sample Collected:	11/08/1995	Findings:	2.200 UG/L
Chemical:	BROMODICHLORMETHANE (THM)		
Sample Collected:	11/08/1995	Findings:	.700 UG/L
Chemical:	BROMOFORM (THM)		
Sample Collected:	11/08/1995	Findings:	2.800 UG/L
Chemical:	DIBROMOCHLOROMETHANE (THM)		
Sample Collected:	11/08/1995	Findings:	1.400 UG/L
Chemical:	CHLOROFORM (THM)		

Sample Collected:	11/08/1995	Findings:	7.100 UG/L
Chemical:	TOTAL TRIHALOMETHANES		
Sample Collected:	12/07/1995	Findings:	6.770
Chemical:	PH (LABORATORY)		
Sample Collected:	12/07/1995	Findings:	50.000 MG/L
Chemical:	TOTAL ALKALINITY (AS CACO3)		
Sample Collected:	12/07/1995	Findings:	95.000 MG/L
Chemical:	TOTAL HARDNESS (AS CACO3)		
Sample Collected:	12/07/1995	Findings:	20.000 MG/L
Chemical:	CALCIUM		
Sample Collected:	12/07/1995	Findings:	10.000 UG/L
Chemical:	CADMIUM		
Sample Collected:	12/07/1995	Findings:	13.000 UG/L
Chemical:	CHROMIUM (TOTAL)		
Sample Collected:	12/07/1995	Findings:	130.000 UG/L
Chemical:	IRON		
Sample Collected:	12/07/1995	Findings:	450.000 UG/L
Chemical:	ZINC		
Sample Collected:	12/07/1995	Findings:	6.200 UG/L
Chemical:	BROMODICHLORMETHANE (THM)		
Sample Collected:	12/07/1995	Findings:	1.200 UG/L
Chemical:	BROMOFORM (THM)		
Sample Collected:	12/07/1995	Findings:	5.700 UG/L
Chemical:	DIBROMOCHLOROMETHANE (THM)		
Sample Collected:	12/07/1995	Findings:	4.900 UG/L
Chemical:	CHLOROFORM (THM)		
Sample Collected:	12/07/1995	Findings:	.260 NTU
Chemical:	TURBIDITY (LAB)		
Sample Collected:	12/07/1995	Findings:	18.000 UG/L
Chemical:	TOTAL TRIHALOMETHANES		
Sample Collected:	01/04/1996	Findings:	5.000 UNITS
Chemical:	COLOR		
Sample Collected:	01/04/1996	Findings:	45.000 UMHO
Chemical:	SPECIFIC CONDUCTANCE		
Sample Collected:	01/04/1996	Findings:	6.590
Chemical:	PH (LABORATORY)		
Sample Collected:	01/04/1996	Findings:	50.000 MG/L
Chemical:	TOTAL ALKALINITY (AS CACO3)		
Sample Collected:	01/04/1996	Findings:	50.000 MG/L
Chemical:	CARBONATE ALKALINITY		
Sample Collected:	01/04/1996	Findings:	116.000 MG/L
Chemical:	TOTAL HARDNESS (AS CACO3)		
Sample Collected:	01/04/1996	Findings:	25.000 MG/L
Chemical:	CALCIUM		
Sample Collected:	01/04/1996	Findings:	13.000 MG/L
Chemical:	MAGNESIUM		
Sample Collected:	01/04/1996	Findings:	52.000 MG/L
Chemical:	SODIUM		
Sample Collected:	01/04/1996	Findings:	4.000 MG/L
Chemical:	POTASSIUM		

Sample Collected:	01/04/1996	Findings:	70.000 MG/L
Chemical:	CHLORIDE		
Sample Collected:	01/04/1996	Findings:	560.000 UG/L
Chemical:	ZINC		
Sample Collected:	01/04/1996	Findings:	9.100 UG/L
Chemical:	BROMODICHLORMETHANE (THM)		
Sample Collected:	01/04/1996	Findings:	1.700 UG/L
Chemical:	BROMOFORM (THM)		
Sample Collected:	01/04/1996	Findings:	9.200 UG/L
Chemical:	DIBROMOCHLOROMETHANE (THM)		
Sample Collected:	01/04/1996	Findings:	7.800 UG/L
Chemical:	CHLOROFORM (THM)		
Sample Collected:	01/04/1996	Findings:	300.000 MG/L
Chemical:	TOTAL DISSOLVED SOLIDS		
Sample Collected:	01/04/1996	Findings:	- 1.590
Chemical:	LANGELIER INDEX @ SOURCE TEMP.		
Sample Collected:	01/04/1996	Findings:	.760 NTU
Chemical:	TURBIDITY (LAB)		
Sample Collected:	01/04/1996	Findings:	27.800 UG/L
Chemical:	TOTAL TRIHALOMETHANES		
Sample Collected:	01/06/1996	Findings:	710.000 UG/L
Chemical:	ZINC		
Sample Collected:	01/06/1996	Findings:	330.000 UG/L
Chemical:	ZINC		
Sample Collected:	01/08/1996	Findings:	580.000 UG/L
Chemical:	ZINC		
Sample Collected:	02/07/1996	Findings:	6.710
Chemical:	PH (LABORATORY)		
Sample Collected:	02/07/1996	Findings:	40.000 MG/L
Chemical:	TOTAL ALKALINITY (AS CACO3)		
Sample Collected:	02/07/1996	Findings:	89.000 MG/L
Chemical:	TOTAL HARDNESS (AS CACO3)		
Sample Collected:	02/07/1996	Findings:	19.000 MG/L
Chemical:	CALCIUM		
Sample Collected:	02/07/1996	Findings:	220.000 UG/L
Chemical:	IRON		
Sample Collected:	02/07/1996	Findings:	300.000 UG/L
Chemical:	ZINC		
Sample Collected:	02/07/1996	Findings:	340.000 UG/L
Chemical:	ALUMINUM		
Sample Collected:	02/07/1996	Findings:	11.000 UG/L
Chemical:	BROMODICHLORMETHANE (THM)		
Sample Collected:	02/07/1996	Findings:	1.100 UG/L
Chemical:	BROMOFORM (THM)		
Sample Collected:	02/07/1996	Findings:	6.000 UG/L
Chemical:	DIBROMOCHLOROMETHANE (THM)		
Sample Collected:	02/07/1996	Findings:	14.000 UG/L
Chemical:	CHLOROFORM (THM)		
Sample Collected:	02/07/1996	Findings:	.200 NTU
Chemical:	TURBIDITY (LAB)		

Sample Collected:	02/07/1996	Findings:	32.100 UG/L
Chemical:	TOTAL TRIHALOMETHANES		
Sample Collected:	03/01/1996	Findings:	6.450
Chemical:	PH (LABORATORY)		
Sample Collected:	03/01/1996	Findings:	30.000 MG/L
Chemical:	TOTAL ALKALINITY (AS CACO3)		
Sample Collected:	03/01/1996	Findings:	45.000 MG/L
Chemical:	TOTAL HARDNESS (AS CACO3)		
Sample Collected:	03/01/1996	Findings:	10.000 MG/L
Chemical:	CALCIUM		
Sample Collected:	03/01/1996	Findings:	460.000 UG/L
Chemical:	IRON		
Sample Collected:	03/01/1996	Findings:	530.000 UG/L
Chemical:	ZINC		
Sample Collected:	03/01/1996	Findings:	300.000 UG/L
Chemical:	ALUMINUM		
Sample Collected:	03/01/1996	Findings:	5.200 UG/L
Chemical:	BROMODICHLORMETHANE (THM)		
Sample Collected:	03/01/1996	Findings:	.600 UG/L
Chemical:	BROMOFORM (THM)		
Sample Collected:	03/01/1996	Findings:	2.700 UG/L
Chemical:	DIBROMOCHLOROMETHANE (THM)		
Sample Collected:	03/01/1996	Findings:	11.000 UG/L
Chemical:	CHLOROFORM (THM)		
Sample Collected:	03/01/1996	Findings:	.100 NTU
Chemical:	TURBIDITY (LAB)		
Sample Collected:	03/01/1996	Findings:	19.500 UG/L
Chemical:	TOTAL TRIHALOMETHANES		
Sample Collected:	04/03/1996	Findings:	342.000 UMHO
Chemical:	SPECIFIC CONDUCTANCE		
Sample Collected:	04/03/1996	Findings:	6.560
Chemical:	PH (LABORATORY)		
Sample Collected:	04/03/1996	Findings:	30.000 MG/L
Chemical:	TOTAL ALKALINITY (AS CACO3)		
Sample Collected:	04/03/1996	Findings:	30.000 MG/L
Chemical:	BICARBONATE ALKALINITY		
Sample Collected:	04/03/1996	Findings:	64.000 MG/L
Chemical:	TOTAL HARDNESS (AS CACO3)		
Sample Collected:	04/03/1996	Findings:	14.000 MG/L
Chemical:	CALCIUM		
Sample Collected:	04/03/1996	Findings:	7.000 MG/L
Chemical:	MAGNESIUM		
Sample Collected:	04/03/1996	Findings:	30.000 MG/L
Chemical:	SODIUM		
Sample Collected:	04/03/1996	Findings:	2.000 MG/L
Chemical:	POTASSIUM		
Sample Collected:	04/03/1996	Findings:	38.000 MG/L
Chemical:	CHLORIDE		
Sample Collected:	04/03/1996	Findings:	260.000 UG/L
Chemical:	IRON		

Sample Collected:	04/03/1996	Findings:	130.000 UG/L
Chemical:	ZINC		
Sample Collected:	04/03/1996	Findings:	200.000 UG/L
Chemical:	ALUMINUM		
Sample Collected:	04/03/1996	Findings:	200.000 MG/L
Chemical:	TOTAL DISSOLVED SOLIDS		
Sample Collected:	04/03/1996	Findings:	- 1.800
Chemical:	LANGELIER INDEX @ SOURCE TEMP.		
Sample Collected:	04/03/1996	Findings:	.200 NTU
Chemical:	TURBIDITY (LAB)		
Sample Collected:	04/03/1996	Findings:	19.000 UG/L
Chemical:	BROMODICHLORMETHANE (THM)		
Sample Collected:	04/03/1996	Findings:	.600 UG/L
Chemical:	BROMOFORM (THM)		
Sample Collected:	04/03/1996	Findings:	6.500 UG/L
Chemical:	DIBROMOCHLOROMETHANE (THM)		
Sample Collected:	04/03/1996	Findings:	30.000 UG/L
Chemical:	CHLOROFORM (THM)		
Sample Collected:	04/03/1996	Findings:	56.100 UG/L
Chemical:	TOTAL TRIHALOMETHANES		
Sample Collected:	05/03/1996	Findings:	6.980
Chemical:	PH (LABORATORY)		
Sample Collected:	05/03/1996	Findings:	45.000 MG/L
Chemical:	TOTAL ALKALINITY (AS CACO3)		
Sample Collected:	05/03/1996	Findings:	102.000 MG/L
Chemical:	TOTAL HARDNESS (AS CACO3)		
Sample Collected:	05/03/1996	Findings:	21.000 MG/L
Chemical:	CALCIUM		
Sample Collected:	05/03/1996	Findings:	490.000 UG/L
Chemical:	ZINC		
Sample Collected:	05/03/1996	Findings:	200.000 UG/L
Chemical:	ALUMINUM		
Sample Collected:	05/03/1996	Findings:	26.000 UG/L
Chemical:	BROMODICHLORMETHANE (THM)		
Sample Collected:	05/03/1996	Findings:	3.200 UG/L
Chemical:	BROMOFORM (THM)		
Sample Collected:	05/03/1996	Findings:	17.000 UG/L
Chemical:	DIBROMOCHLOROMETHANE (THM)		
Sample Collected:	05/03/1996	Findings:	24.000 UG/L
Chemical:	CHLOROFORM (THM)		
Sample Collected:	05/03/1996	Findings:	.300 NTU
Chemical:	TURBIDITY (LAB)		
Sample Collected:	05/03/1996	Findings:	70.200 UG/L
Chemical:	TOTAL TRIHALOMETHANES		
Sample Collected:	06/05/1996	Findings:	6.700
Chemical:	PH (LABORATORY)		
Sample Collected:	06/05/1996	Findings:	30.000 MG/L
Chemical:	TOTAL ALKALINITY (AS CACO3)		
Sample Collected:	06/05/1996	Findings:	61.000 MG/L
Chemical:	TOTAL HARDNESS (AS CACO3)		

Sample Collected:	06/05/1996	Findings:	13.000 MG/L
Chemical:	CALCIUM		
Sample Collected:	06/05/1996	Findings:	200.000 UG/L
Chemical:	IRON		
Sample Collected:	06/05/1996	Findings:	610.000 UG/L
Chemical:	ZINC		
Sample Collected:	06/05/1996	Findings:	180.000 UG/L
Chemical:	ALUMINUM		
Sample Collected:	06/05/1996	Findings:	21.000 UG/L
Chemical:	BROMODICHLORMETHANE (THM)		
Sample Collected:	06/05/1996	Findings:	2.600 UG/L
Chemical:	BROMOFORM (THM)		
Sample Collected:	06/05/1996	Findings:	16.000 UG/L
Chemical:	DIBROMOCHLOROMETHANE (THM)		
Sample Collected:	06/05/1996	Findings:	16.000 UG/L
Chemical:	CHLOROFORM (THM)		
Sample Collected:	06/05/1996	Findings:	.500 NTU
Chemical:	TURBIDITY (LAB)		
Sample Collected:	06/05/1996	Findings:	55.600 UG/L
Chemical:	TOTAL TRIHALOMETHANES		
Sample Collected:	07/03/1996	Findings:	24.000 UG/L
Chemical:	BROMODICHLORMETHANE (THM)		
Sample Collected:	07/03/1996	Findings:	4.200 UG/L
Chemical:	BROMOFORM (THM)		
Sample Collected:	07/03/1996	Findings:	22.000 UG/L
Chemical:	DIBROMOCHLOROMETHANE (THM)		
Sample Collected:	07/03/1996	Findings:	15.000 UG/L
Chemical:	CHLOROFORM (THM)		
Sample Collected:	07/03/1996	Findings:	65.200 UG/L
Chemical:	TOTAL TRIHALOMETHANES		
Sample Collected:	08/01/1996	Findings:	28.000 UG/L
Chemical:	BROMODICHLORMETHANE (THM)		
Sample Collected:	08/01/1996	Findings:	3.900 UG/L
Chemical:	BROMOFORM (THM)		
Sample Collected:	08/01/1996	Findings:	22.000 UG/L
Chemical:	DIBROMOCHLOROMETHANE (THM)		
Sample Collected:	08/01/1996	Findings:	20.000 UG/L
Chemical:	CHLOROFORM (THM)		
Sample Collected:	08/01/1996	Findings:	73.900 UG/L
Chemical:	TOTAL TRIHALOMETHANES		
Sample Collected:	10/02/1996	Findings:	27.000 UG/L
Chemical:	BROMODICHLORMETHANE (THM)		
Sample Collected:	10/02/1996	Findings:	3.200 UG/L
Chemical:	BROMOFORM (THM)		
Sample Collected:	10/02/1996	Findings:	22.000 UG/L
Chemical:	DIBROMOCHLOROMETHANE (THM)		
Sample Collected:	10/02/1996	Findings:	19.000 UG/L
Chemical:	CHLOROFORM (THM)		
Sample Collected:	10/02/1996	Findings:	71.200 UG/L
Chemical:	TOTAL TRIHALOMETHANES		

GEOCHECK®- PHYSICAL SETTING SOURCE MAP FINDINGS
RADON

AREA RADON INFORMATION

Federal EPA Radon Zone for KINGS County: 3

Note: Zone 1 indoor average level > 4 pCi/L.
: Zone 2 indoor average level >= 2 pCi/L and <= 4 pCi/L.
: Zone 3 indoor average level < 2 pCi/L.

Zip Code: 93245

Number of sites tested: 4

Area	Average Activity	% <4 pCi/L	% 4-20 pCi/L	% >20 pCi/L
Living Area - 1st Floor	0.775 pCi/L	100%	0%	0%
Living Area - 2nd Floor	Not Reported	Not Reported	Not Reported	Not Reported
Basement	Not Reported	Not Reported	Not Reported	Not Reported

PHYSICAL SETTING SOURCE RECORDS SEARCHED

HYDROLOGIC INFORMATION

Flood Zone Data: This data, available in select counties across the country, was obtained by EDR in 1999 from the Federal Emergency Management Agency (FEMA). Data depicts 100-year and 500-year flood zones as defined by FEMA.

NWI: National Wetlands Inventory. This data, available in select counties across the country, was obtained by EDR in 1999 from the U.S. Fish and Wildlife Service.

HYDROGEOLOGIC INFORMATION

AQUIFLOW[R] Information System
Source: EDR proprietary database of groundwater flow information
EDR has developed the AQUIFLOW Information System (AIS) to provide data on the general direction of groundwater flow at specific points. EDR has reviewed reports submitted to regulatory authorities at select sites and has extracted the date of the report, hydrogeologically determined groundwater flow direction and depth to water table information.

GEOLOGIC INFORMATION

Geologic Age and Rock Stratigraphic Unit
Source: P.G. Schruben, R.E. Arndt and W.J. Bawiec, Geology of the Conterminous U.S. at 1:2,500,000 Scale - A digital representation of the 1974 P.B. King and H.M. Beikman Map, USGS Digital Data Series DDS - 11 (1994).

STATSGO: State Soil Geographic Database
The U.S. Department of Agriculture's (USDA) Soil Conservation Service (SCS) leads the national Cooperative Soil Survey (NCSS) and is responsible for collecting, storing, maintaining and distributing soil survey information for privately owned lands in the United States. A soil map in a soil survey is a representation of soil patterns in a landscape. Soil maps for STATSGO are compiled by generalizing more detailed (SSURGO) soil survey maps.

ADDITIONAL ENVIRONMENTAL RECORD SOURCES

FEDERAL WATER WELLS

PWS: Public Water Systems
Source: EPA/Office of Drinking Water
Telephone: 202-260-2805
Public Water System data from the Federal Reporting Data System. A PWS is any water system which provides water to at least 25 people for at least 60 days annually. PWSs provide water from wells, rivers and other sources.

PWS ENF: Public Water Systems Violation and Enforcement Data
Source: EPA/Office of Drinking Water
Telephone: 202-260-2805
Violation and Enforcement data for Public Water Systems from the Safe Drinking Water Information System (SDWIS) after August 1995. Prior to August 1995, the data came from the Federal Reporting Data System (FRDS).

USGS Water Wells: In November 1971 the United States Geological Survey (USGS) implemented a national water resource information tracking system. This database contains descriptive information on sites where the USGS collects or has collected data on surface water and/or groundwater. The groundwater data includes information on more than 900,000 wells, springs, and other sources of groundwater.

PHYSICAL SETTING SOURCE RECORDS SEARCHED

STATE RECORDS

California Drinking Water Quality Database
Source: Department of Health Services
Telephone: 916-324-2319
The database includes all drinking water compliance and special studies monitoring for the state of California since 1984. It consists of over 3,200,000 individual analyses along with well and water system information.

California Oil and Gas Well Locations for District 2 and 6
Source: Department of Conservation
Telephone: 916-323-1779

RADON

Area Radon Information: The National Radon Database has been developed by the U.S. Environmental Protection Agency (USEPA) and is a compilation of the EPA/State Residential Radon Survey and the National Residential Radon Survey. The study covers the years 1986 - 1992. Where necessary data has been supplemented by information collected at private sources such as universities and research institutions.

EPA Radon Zones: Sections 307 & 309 of IRAA directed EPA to list and identify areas of U.S. with the potential for elevated indoor radon levels.

OTHER

Epicenters: World earthquake epicenters, Richter 5 or greater
Source: Department of Commerce, National Oceanic and Atmospheric Administration

California Earthquake Fault Lines: The fault lines displayed on EDR's Topographic map are digitized quaternary fault lines, prepared in 1975 by the United State Geological Survey. Additional information (also from 1975) regarding activity at specific fault lines comes from California's Preliminary Fault Activity Map prepared by the California Division of Mines and Geology.

DISTRIBUTION

Phase I Environmental Site Assessment
GWF Power Systems
Henrietta, California

June 1, 2001

Copy No. 1

Copies 1-2:	Mr. Mark Kehoe GWF Power Systems Real Estate Investors 4300 Railroad Avenue Pittsburg, California 94565
Copies 3 - 5:	Harding ESE Project Files

Quality Control Reviewer

Gary A. Lieberman
Senior Project Geologist

JTH/SDL;klb/KB57456.DOC.OFS

Appendix G

Will-Serve Letter/Site Control

Appendix G: Will-Serve Letters/Site Control

Contents

G1 Will-Serve Letters

G2 Site Control

Appendix G1

Will-Serve Letters

OFFICE OF COUNTY ADMINISTRATOR

COUNTY OF KINGS
GOVERNMENT CENTER

LARRY SPIKES
COUNTY ADMINISTRATIVE OFFICER

August 23, 2001

Doug Wheeler, Vice President
GWF Energy, L.L.C.
4300 Railroad Avenue
Pittsburgh, CA 94565

Re: State Water Project Entitlement

Dear Mr. Wheeler:

This "will serve" letter is in response to your request to the County of Kings to dedicate and assign 200 acre feet of the County's State Water project (SWP) Entitlement right to GWF Energy, LLC (GWF) for use in GWF's proposed Henrietta Peaker Project (HPP). We understand the HPP will be constructed near the Lemoore Naval Air Station. The SWP water to HPP will be wheeled to the project site by the Westlands Water District pursuant to a Wheeling Agreement with Westlands. The water will be conveyed from the California Aqueduct to the project site.

This letter shall serve to confirm that the County intends to assign and dedicate 200 acre feet of its State Water Project Entitlement right to GWF for use at the HPP. As you are aware, this entitlement right will yield 200 acre feet in a year in which the Department of Water Resources has a 100% allocation. In dry years, the subject right will yield less than the 200 acre feet of entitlement. This assignment and dedication of the entitlement shall be subject to GWF obtaining all the other necessary approvals for the HPP to become operational. The assignment will also be subject to an amendment of a present contract between the County and certain water users in Kings County which presently have contractual entitlement to the 200 acre feet, which we believe will be forthcoming.

A formal agreement between GWF and the County will have to be developed to effectuate the assignment and dedication of the entitlement right. GWF shall be responsible for reimbursing the County for all the costs and charges imposed by the Department of Water Resources relating to the subject entitlement.

Very truly yours,

LARRY SPIKES
County Administrative Officer
County of Kings

h\westland\200acre

1400 W. LACEY BOULEVARD, HANFORD, CALIFORNIA 93230, (209) 582-3211, FAX 585-6047

Westlands Water District

3130 N. Fresno Street, P.O. Box 6056, Fresno, California 93703-6056, (559) 224-1523, FAX (559) 241-6277

August 23, 2001

Doug Wheeler
Vice President
GWF Energy LLC
4300 Railroad Avenue
Pittsburg, CA 94565

Subject: Wheeling of State Project Water

Dear Mr. Wheeler:

I am writing to confirm the Westlands Water District will negotiate with GWF Energy, LLC (GWF) a long-term agreement for the purpose of wheeling State Water Project (SWP) water from the California Aqueduct to GWF's Henrietta Peaker Project (HPP). Such an agreement would be executed pursuant to section 1810 of the California Water Code, which requires that the District make available to water transferors up to 75% of any excess capacity in its distribution system. Our analysis indicates that sufficient capacity exists to convey water on your behalf, subject to terms and conditions that will be set forth in the agreement, which must be approved by the District's Board of Directors.

We anticipate that the SWP water will be delivered through a District meter located near the northwest corner of the proposed HPP site. Currently, the HPP site has an agricultural CVP allocation of up to 52 acre-feet associated with the 20 acre project site parcel. As you know, the allocation of CVP water to this parcel could be reduced based on water year type.

Please contact Thaddeus Bettner, at (559) 241-6215, to arrange the negotiation of the terms of the wheeling agreement. If you have any questions or comments, please contact me at your convenience.

Sincerely,

Dave Ciapponi
Assistant General Manager

Appendix G2

Site Control

RECORDING REQUESTED BY
CHICAGO TITLE COMPANY
AND WHEN RECORDED MAIL TO

GWF ENERGY LLC, A DELAWARE LLC
10596 Idaho Ave.
Hanford, Ca 93230

Doc Nbr: 0115420
Doc Type: 07

Titles: 01 Pages: 002
Fees: 40.00
Taxes: 88.00
PAID: $128.00

Kings County Clerk Recorder
George J. Misner
Chicago Title Company

08/06/2001
14:15:22

r007

Escrow No. 1022036 - CF
Order No. 1022036 - GC

SPACE ABOVE THIS LINE FOR RECORDER'S USE

GRANT DEED

Assessor's Parcel No:
20 ACRE PTN. 024-190-065

THE UNDERSIGNED GRANTOR(S) DECLARE(S)
DOCUMENTARY TRANSFER TAX IS $88.00
[ ] unincorporated area [X] City of LEMOORE
[X] computed on the full value of the interest or property conveyed, or is
[ ] computed on the full value less the value of liens or encumbrances remaining at time of sale, and

FOR A VALUABLE CONSIDERATION, receipt of which is hereby acknowledged,
JOHN D. OLIVEIRA AND SALLY L. OLIVEIRA, BY DEED TO THEM WHICH RECITES "HUSBAND AND WIFE, AS COMMUNITY PROPERTY, AS TO AN UNDIVIDED INTEREST"

hereby GRANT(S) to
GWF ENERGY LLC, A DELAWARE LLC

the following described real property in the City of LEMOORE
County of KINGS, State of California:
LEGAL DESCRIPTION ATTACHED HERETO AND MADE A PART HEREOF BY REFERENCE

Dated August 3, 2001

STATE OF CALIFORNIA
COUNTY OF Kings } SS.
On August 3, 2001 before me, JOHN D. OLIVEIRA
THE UNDERSIGNED
a Notary Public in and for said County and State, personally appeared
JOHN D. OLIVEIRA AND SALLY L. OLIVEIRA

SALLY L. OLIVEIRA

personally known to me (or proved to me on the basis of satisfactory evidence) to be the person(s) whose name(s) is/are subscribed to the within instrument and acknowledged to me that he/she/they executed the same in his/her/their authorized capacity(ies), and that by his/her/their signature(s) on the instrument the person(s), or the entity upon behalf of which the person(s) acted, executed the instrument.

MARY K. JONES
COMM. #1298097
NOTARY PUBLIC - CALIFORNIA
KINGS COUNTY
My Comm. Expires Apr. 2, 2005

WITNESS my hand and official seal.

Signature of Notary

April 2, 2005
Date My Commission Expires

FOR NOTARY SEAL OR STAMP

MAIL TAX STATEMENTS TO PARTY SHOWN ON FOLLOWING LINE: IF NO PARTY SO SHOWN, MAIL AS DIRECTED ABOVE

Name | Street Address | City, State & Zip

GD1 -05/30/97bk

Escrow No. 1022036 -CF

LEGAL DESCRIPTION EXHIBIT

PARCEL 1

THE NORTH HALF OF THE NORTHWEST QUARTER OF THE NORTHWEST QUARTER OF SECTION 34, TOWNSHIP 19 SOUTH, RANGE 19 EAST, MOUNT DIABLO BASE AND MERIDIAN, IN THE COUNTY OF KINGS, STATE OF CALIFORNIA, ACCORDING TO THE OFFICIAL PLAT THEREOF.

ALSO EXCEPTING THEREFROM THAT PORTION TAKEN BY THE UNITED STATES OF AMERICA BY DOCUMENT ENTITLED, DECLARATION OF TAKING, RECORDED OCTOBER 27, 1972 IN BOOK 998, PAGE 1 OF OFFICIAL RECORDS, AS DOCUMENT NO. 5068.

AND ALSO EXCEPTING AND RESERVING UNTO THE HEREIN GRANTORS AN UNDIVIDED 1/2 INTEREST OF THEIR PRESENT INTEREST IN AND TO ALL OIL, GAS, MINERALS AND OTHER HYDROCARBON SUBSTANCES IN AND UNDER SAID LAND, AS EXCEPTED AND RESERVED IN DEED DATED DECEMBER 30, 1980, EXECUTED BY JOHN TASHJIAN AND ILENE TASHJIAN, HUSBAND AND WIFE, TO NANCY L. OLIVEIRA AND SALLY OLIVEIRA, BOTH MARRIED WOMEN, EACH AS TO AN UNDIVIDED 1/2 INTEREST, AND RECORDED DECEMBER 31, 1980 IN BOOK 1190, PAGE 544 OF OFFICIAL RECORDS, AS DOCUMENT NO. 15190.

RESERVING TO GRANTOR AN EASEMENT OVER THE EAST 30.00 FEET OF THE WEST 60.00 FEET THEREOF, FOR THE FOLLOWING PURPOSES: CONSTRUCTION AND INSTALLATION OF AN UNDERGROUND IRRIGATION PIPLINE AND FOR THE OPERATION, MAINTENANCE, REPAIR, AND REPLACEMENT OF SUCH PIPELINE.

THIS DESCRIPTION IS TO DESCRIBE PARCEL ONE OF TENTATIVE PARCEL MAP FILED WITH KINGS COUNTY. PER SECTION 21-92 (A) (1) OF THE KINGS COUNTY SUBDIVISION ORDINANCE, A PARCEL MAP WAIVER WILL BE RECORDED IN LIEU OF A PARCEL MAP.

PARCEL 2

AN EASEMENT FOR THE CONSTRUCTION, INSTALLATION, OPERATION, MAINTENANCE, REPAIR AND REPLACEMENT OF AN UNDERGROUND PIPELINE FOR WATER AND OTHER USES RELATED TO GRANTEE'S ELECTRICITY GENERATING FACILITY, BEING 30 FEET IN WIDTH, DESCRIBED AS FOLLOWS:

THE NORTH 30 FEET OF SECTION 34, TOWNSHIP 19 SOUTH, RANGE 19 EAST, MOUNT DIABLO BASE AND MERIDIAN, IN THE COUNTY OF KINGS, STATE OF CALIFORNIA, EXCEPTING THE EAST 2200 FEET THEREOF AND THAT PORTION LYING WITHIN THE NORTHWEST QUARTER OF THE NORHTWEST QUARTER OF SAID SECTION.

A PORTION OF **APN:** 024-190-065

END OF DOCUMENT

Appendix H

Engineering

Appendix H: Engineering

Contents

H1 Foundation and Civil Engineering Design Criteria

H2 Structure and Seismic Engineering Design Criteria

H3 Mechanical Engineering Design Criteria

H4 Control Engineering Design Criteria

H5 Electrical Engineering Design Criteria

H6 Major Equipment List

Appendix H1

Foundation and Civil Engineering Design Criteria

Appendix H1: Foundation and Civil Engineering Design Criteria

Contents

H1-1 Foundation and Civil Engineering Design Criteria

H1-2 Drainage and Grading Plan

H1-3 Geotechnical Investigation

Appendix H1-1

Foundation and Civil Engineering Design Criteria

FOUNDATION AND CIVIL ENGINEERING DESIGN CRITERIA

1.0 INTRODUCTION

The design, engineering, procurement, and construction activities on the project will be in accordance with various predetermined standards and project-specific practices. This appendix summarizes the civil engineering codes and standards, design criteria, and practices that will be used during design and construction. These criteria form the basis of the design for the foundations and civil systems of the project. More specific design information will be developed during the detailed design phase to support equipment procurement and construction specifications. It is not the intent of this appendix to present the detailed design information for each component and system, but rather to summarize the codes, standards, and general criteria that will be used.

Section 2.0 summarizes the applicable codes and standards, and Section 3.0 includes the general criteria for foundations, design loads, and sitework.

2.0 DESIGN CODES AND STANDARDS

2.1 General Requirements

The design and specification of work will be in accordance with all applicable laws and regulations of the Federal Government, the State of California, and the applicable local codes and ordinances. Except where noted otherwise, the latest issue of all codes and standards, including addenda, in effect at the start of the project will be used. The codes and standards, including all addenda, in effect at the time of purchase will be used for material and equipment procurement.

A summary of the codes and the standards to be used in the design and construction follows:

- Seismic standards and criteria will follow the California Building Code (CBC).

- Specifications for materials will follow the standard specifications of the American Society for Testing and Materials (ASTM) and the American National Standards Institute (ANSI), unless noted otherwise.

- Field and laboratory testing procedures for materials will follow ASTM standards.

- Design and placement of structural concrete and reinforcing steel will be in accordance with the codes, guides, and standards of the American Concrete Institute (ACI) and the Concrete Reinforcing Steel Institute (CRSI).

- Specifications for materials for roads will follow the State of California Department of Transportation Standard Specifications.

- Design and construction of roads will follow the American Association of State Highway and Transportation Officials (AASHTO) and the State of California Department of Transportation standards.

- Design and construction of the sanitary sewer system will conform to the Uniform Plumbing Code (UPC).

- Design and construction will conform to federal and California Occupational Safety and Health Administration (OSHA and CAL-OSHA) requirements.

Other recognized standards will be used where required to serve as guidelines for the design, fabrication, and construction. Where no other code or standard governs, the CBC, 1998 Edition, will govern.

2.2 Government Rules and Regulations

The following laws, ordinances, regulations, and standards (LORS) are applicable to the civil engineering design and construction. In cases where conflicts between cited codes (or standards) exist, the requirements of the more stringent code will govern.

2.2.1 Federal

- Title 29, Code of Federal Regulations (CFR), Part 1910, Occupational Safety and Health Standards

- Title 29, CFR, Part 1926, National Safety and Health Regulations for Construction

- Walsh-Healy Public Contracts Act (Public Law [PL] 50-204.10)

- National Pollutant Discharge Elimination System (NPDES) (US Environmental Protection Agency [EPA])

2.2.2 State

- California Building Code
- Business and Professions Code Section 6704 et seq., Sections 6730 and 6736 – requires state registration to practice as a Civil Engineer or Structural Engineer in California
- Labor Code Section 6500, et seq. – requires a permit for construction of trenches or excavations 5 feet or deeper into which personnel have to descend; also applies to construction or demolition of any building, structure, false work, or scaffolding that is more than three stories high or equivalent
- Title 24, California Code of Regulations (CCR) – adopts current edition of CBC as minimum legal building standards
- State of California Department of Transportation, Standard Specifications
- Title 8, CCR, Section 1500 et seq., Section 2300 et seq., and Section 3200 et seq. – describes general construction safety orders, industrial safety orders, and work safety requirements and procedures
- Regulations of the following state agencies as applicable:
  - Department of Labor and Industry Regulations
  - Bureau of Fire Protection
  - Department of Public Health
  - Water and Power Resources
- Vehicle Code, Section 35780, et seq. Requires a permit from Caltrans to transport heavy loads on state roads.

2.2.3 Local

- California Building Code, 1998 edition
- City of Lemoore Engineering Services – Erosion Control and Storm Drain Design Standards

2.2.4 Engineering Geology Codes and Standards

The design and specification of work will be in accordance with all applicable laws and regulations of the Federal Government, the State of California, and with the applicable local codes and ordinances.

The site development activities will require certification during and following construction. The Geotechnical Engineer and Engineering Geologist will certify the placement of fills and adequacy of the site for structural improvements in accordance with the CBC. Additionally, the Engineering Geologist will present findings and conclusions pursuant to PRC Section 25523 (a) and (c) 20 CCR Section 1752 (b) and (c).

The following laws, ordinances, codes, and standards have been identified as applying to engineering geology design and construction. In cases where conflicts between cited codes (or standards) exist, the requirements of the more conservative code will be met.

2.2.4.1 Federal

None are applicable.

2.2.4.2 State – California Building Code

The Warren-Alquist Act (PRC Section 25000, et seq.) and the CEC Siting Regulations (20 CCR, Chapter 2) require that Applications for Certification address geologic and seismic issues. Detailed geologic and seismic information must be provided with respect to safety and reliability concerns and environmental impacts.

The California Environmental Quality Act (CEQA) (PRC Section 21000, et seq.) and the CEQA Guidelines also require that potential significant effects, including geologic hazards, be identified and a determination made as to whether they can be substantially reduced.

2.2.4.3 County

California State Planning Law, Government Code Section 65302, requires each city and county to adopt a general plan, consisting of nine mandatory elements, to guide its

physical development. Section 65302 (f) requires that a seismic safety element be included in the general plan. Seismic and geologic hazard plans and regulations are often addressed under the seismic safety elements of general plans or in local building and grading ordinances.

2.2.4.4 Industry Codes and Standards

In addition to the California Codes discussed above, other laws, standards, and ordinances, which typically pertain to engineering geology, include the following:

- California Business and Professions Code Section 7835. Requires registration for geologists (including engineering geologists) who practice for others.

The codes and industry standards used for design, fabrication, and construction will be the codes and industry standards, including all addenda, in effect as stated in equipment and construction purchase or contract documents. Where no other standard or code governs, the CBC will be used.

2.3 Industry Codes and Standards

2.3.1 American Association of State Highway and Transportation Officials (AASHTO)

- A Policy on Geometric Design of Highways and Streets

2.3.2 American Concrete Institute (ACI)

- ACI 117 – Standard Specification for Tolerances for Concrete Construction and Materials
- ACI 211.1 – Standard Practice for Selecting Proportions of Normal, Heavyweight, and Mass Concrete
- ACI 301 – Specifications for Structural Concrete for Buildings
- ACI 302.1R – Guide for Concrete Floor and Slab Construction
- ACI 304R – Guide for Measuring, Mixing, Transporting, and Placing Concrete
- ACI 305R – Hot Weather Concreting

- ACI 306R – Cold Weather Concreting
- ACI 308 – Standard Practice for Curing Concrete
- ACI 309R – Guide for Consolidation of Concrete
- ACI 311AR – Guide for Concrete Inspection
- ACI 318 – Building Code Requirements for Reinforced Concrete
- ACI 318.1 – Building Code Requirements for Structural Plain Concrete
- ACI 347R – Guide to Formwork for Concrete

2.3.3 American Society for Testing and Materials (ASTM)

- ASTM A82 – Standard Specification for Steel Wire, Plain, for Concrete Reinforcement
- ASTM A116 – Standard Specification for Zinc-Coated (Galvanized) Steel Woven Wire Fence Fabric
- ASTM A121 – Standard Specification for Zinc-Coated (Galvanized) Steel Barbed Wire
- ASTM A185 – Standard Specification for Steel Welded Wire Fabric, Plain, for Concrete Reinforcement
- ASTM A392 – Standard Specification for Zinc-Coated Steel Chain-Link Fence Fabric
- ASTM A615 – Standard Specification for Deformed and Plain Billet-Steel Bars for Concrete Reinforcement
- ASTM C31 – Standard Practice for Making and Curing Concrete Test Specimens in the Field
- ASTM C33 – Standard Specification for Concrete Aggregates
- ASTM C39 – Standard Test Method for Compressive Strength of Cylindrical Concrete Specimens
- ASTM C76 – Standard Specification for Reinforced Concrete Culvert, Storm Drain, and Sewer Pipe
- ASTM C94 – Standard Specification for Ready-Mixed Concrete

- ASTM C109 – Standard Test Method for Compressive Strength of Hydraulic Cement Mortars (Using 2 in. or 50 mm Cube Specimens)
- ASTM C136 – Standard Test Method for Sieve Analysis of Fine and Coarse Aggregates
- ASTM C138 – Standard Test Method for Unit Weight, Yield, and Air Content (Gravimetric) of Concrete
- ASTM C143 – Standard Test Method for Slump of Hydraulic Cement Concrete
- ASTM C150 – Standard Specification for Portland Cement
- ASTM C172 – Standard Practice for Sampling Freshly Mixed Concrete.
- ASTM C231 – Standard Test Method for Air Content of Freshly Mixed Concrete by the Pressure Method
- ASTM C260 – Standard Specification for Air-Entraining Admixtures for Concrete
- ASTM C289 – Standard Test Method for Potential Reactivity of Aggregates (Chemical Method)
- ASTM C443 – Standard Specification for Joints for Circular Concrete Sewer and Culvert Pipe, Using Rubber Gaskets
- ASTM C478 – Standard Specification for Precast Reinforced Concrete Manhole Sections
- ASTM C494 – Standard Specification for Chemical Admixtures for Concrete
- ASTM C586 – Standard Test Method for Potential Alkali Reactivity of Carbonate Rocks for Concrete Aggregates (Rock Cylinder Method)
- ASTM C618 – Standard Specification for Coal Fly Ash and Raw or Calcinated Natural Pozzolan for Use as a Mineral Admixture in Portland Cement Concrete
- ASTM C1064 – Standard Test Method for Temperature of Freshly Mixed Portland Cement Concrete
- ASTM C1107 – Standard Specification for Packaged Dry, Hydraulic Cement Grout (Nonshrink)
- ASTM D422 – Standard Test Method for Particle-Size Analysis of Soils

- ASTM D698 – Test Method for Laboratory Compaction Characteristics of Soil Using Standard Effort (12,400 ft-lbf/ft [600 kN-m/m])
- ASTM D1556 – Standard Test Method for Density and Unit Weight of Soil in Place by the Sand-Cone Method
- ASTM D1752 – Standard Specification for Preformed Sponge Rubber and Cork Expansion Joint Fillers for Concrete Paving and Structural Construction
- ASTM D2216 – Standard Test Method for Laboratory Determination of Water (Moisture) Content of Soil and Rock
- ASTM D2922 – Standard Test Methods for Density of Soil and Soil Aggregate in Place by Nuclear Methods (Shallow Depth)
- ASTM D3017 – Standard Test Method for Water Content of Soil and Rock in Place by Nuclear Methods (Shallow Depth)
- ASTM D3034 – Standard Specification for Type PSM Poly (Vinyl Chloride) (PVC) Sewer Pipe and Fittings
- ASTM D3740 – Standard Practice for Evaluation of Agencies Engaged in the Testing and/or Inspection of Soil and Rock as Used in Engineering Design and Construction
- ASTM D4318 – Standard Test Method for Liquid Limit, Plastic Limit, and Plasticity Index of Soils
- ASTM E329 – Standard Specification for Agencies Engaged in the Testing and/or Inspection of Materials Used in Construction

2.3.4 Concrete Reinforcing Steel Institute (CRSI)

- Manual of Standard Practice

2.3.5 International Association of Plumbing and Mechanical Officials

- UPC – Uniform Plumbing Code

2.3.6 International Conference of Building Officials

- CBC – California Building Code

3.0 CIVIL DESIGN CRITERIA

3.1 Foundations

3.1.1 General

Geotechnical exploration, testing, and analysis determine the most suitable bearing methods for foundations. Criteria will be established to permit design of the most economical foundation compatible with the life expectancy and service of the structure.

A summary of subsurface investigations, laboratory testing programs, and a geotechnical assessment of the proposed site are presented in the Preliminary Geotechnical Investigation prepared by Hultgren – Tillis Engineers, dated June 26, 2001.

3.1.2 Foundation Design Criteria

Allowable settlements for all foundations (based on predicted elastic or short-term, and consolidation or long-term settlements) will be limited as follows:

Major and minor foundations except as otherwise indicated:

- Total settlement: 1.5 inches
- Differential settlement: 0.1 percent between adjacent foundations

Large field erected tanks:

- Total settlement: 6.0 inches
- Differential settlement: 3.0 inches

Foundations for all critical structure and equipment will be supported on reinforced concrete mat foundations. Noncritical or lightly loaded structures and equipment will be founded on individual spread footings. The design of reinforced concrete foundations will satisfy the requirements of ACI 318.

Spread footings will have a minimum width of 3 feet, and a minimum width of 2 feet will be provided for wall footings. The bottom of footings will be located a minimum of 12 inches below finished grade.

Detailed foundation design criteria, including allowable bearing pressures, will be developed based on the results of additional subsurface investigations performed during the detailed design phase of the project. Allowable bearing pressures will include a safety factor of at least 3 against bearing failures.

3.1.3 Equipment Foundations

Each piece of equipment will be supplied with a reinforced concrete foundation suitable to its operation. Where the equipment could induce excessive vibration, the foundation will be provided with adequate mass to dampen vibratory motions. Special consideration will be given to vibration and stiffness criteria where specified by an equipment manufacturer. Equipment located within an enclosed building with a grade slab will generally be placed on a concrete pad that is raised above the grade slab to keep the equipment off the floor surface.

Minimum temperature and shrinkage reinforcing steel will be provided for equipment foundations unless additional reinforcement is required for the equipment loads. Anchor bolts designed to develop their yield strength will be provided for critical equipment. For noncritical or lightly loaded equipment, concrete expansion anchors may be used to secure equipment to foundations.

3.1.4 Rotating Equipment Foundations

Dynamic behavior will be considered in the design of foundations subjected to significant rotating equipment loads, such as foundations for the combustion turbine, steam turbine, and the boiler feedwater pumps. A dynamic analysis will be performed to determine the natural frequencies and dynamic responses of the foundation. To account for soil and structure interaction, geotechnical data will be used to determine the soil stiffnesses and damping coefficients used in the dynamic analysis.

Dynamic responses will satisfy the equipment manufacturer's criteria and/or industry standards in terms of maximum velocity/displacement amplitudes that are considered acceptable for machine and human tolerances. To avoid resonance during machine operation, the resonant frequency of the foundation will typically be less than 80 percent or greater than 120 percent of the machine operating speed.

3.2 Design Loads

3.2.1 General

Design loads for structures and equipment foundations are discussed in Appendix H2 of the AFC. Design loads for pavements and buried items will be determined according to the criteria described below, unless the applicable building code requires more severe design conditions.

3.2.2 Wheel Loads

Loads exerted on roadway pavements, buried piping, electrical duct banks, and culverts will be reviewed and selected prior to design of the underlying items. As a minimum, these items will be designed for HS20-44 loadings in accordance with AASHTO Standard Specifications. Loadings exceeding the HS20-44 loadings will be considered where found applicable during the detailed design phase.

A surcharge load of 250 psf will be applied to plant structures accessible to truck traffic.

3.3 Site

3.3.1 Site Arrangement

The site arrangement will conform to all applicable laws, regulations, and environmental standards. The principal elements to be considered in selection of the site arrangement are the physical space requirements and relationships dictated by each of the major plant systems, and the constraints imposed by the physical size and existing topography of the

site. Distances from the main plant to various systems will be minimized for economy. However, adequate clearance between various plant systems will be provided as needed for construction, operations, maintenance, and fire protection. The plant will be configured to minimize construction costs and visual impacts while remaining operationally effective. Utility interconnections will be optimized as much as practical.

3.3.2 Site Preparation

Site preparation will consist of clearing and grubbing, excavating soils to design grade, and preparing fill slopes and embankments designed so as to be stable and capable of carrying anticipated loads from either equipment or structures.

Root mats or stumps, if any, will be removed to a depth of not less than 2 feet below existing grade, and holes will be refilled with material suitable for embankment and compacted. Materials from clearing and grubbing operations will either be removed from the site or, if suitable, reused onsite.

3.3.3 Earthwork

Excavation work will consist of the removal, storage, and/or disposal of earth, sand, gravel, vegetation, organic matter, loose rock, boulders, and debris to the lines and grades necessary for construction. Material suitable for backfill will be stored in stockpiles at designated locations using proper erosion protection methods. Excess material will be removed from the site and disposed of at an acceptable location. If contaminated material is encountered during excavation, its disposal will comply with applicable federal, state, and local regulations.

The site is currently a grass-covered field. The surface slopes gently down at a 1 to 1-1/2 percent grade to the northeast.

Graded areas will be smooth, compacted, free from irregular surface changes, and sloped to drain. Cut and fill slopes for permanent embankments will be designed to withstand horizontal ground accelerations for Seismic Zone 4. For slopes requiring soil reinforcement to resist seismic loading, geogrid reinforcement will be used for fills and soil nailing for cuts.

Slopes for embankments will be no steeper than 2:1 (horizontal:vertical). Construction will be at the existing plant grade, which is fairly level; therefore, major cuts and fills are not anticipated.

Areas to be backfilled will be prepared by removing unsuitable material and rocks. The bottom of an excavation will be examined for loose or soft areas. Such areas will be excavated fully and backfilled with compacted fill.

Backfilling will be done in layers of uniform, specified thickness. Soil in each layer will be properly moistened to facilitate compaction to achieve the specified density. To verify compaction, representative field density and moisture-content tests will be taken during compaction. Structural fill supporting foundations, roads, parking areas, etc., will be compacted to at least 95 percent of the maximum dry density as determined by ASTM D698. Embankments, dikes, bedding for buried piping, and backfill surrounding structures will be compacted to a minimum of 90 percent of the maximum dry density. General backfill placed in remote and/or unsurfaced areas will be compacted to at least 85 percent of the maximum dry density.

Where fills are to be placed on subgrades sloped at 6:1 (horizontal:vertical) or greater, keys into the existing subgrade may be provided to help withstand horizontal seismic ground accelerations.

The subgrade (original ground), subbases, and base courses of roads will be prepared and compacted in accordance with California Department of Transportation (Caltrans) standards. Testing will be in accordance with ASTM and Caltrans standards.

3.3.4 Site Drainage

The site drainage system will be designed to comply with all applicable federal, state, and local regulations.

Runoff from possible oil contamination areas, such as the lube oil storage area and transformer areas, will be contained and routed to an oil/water separator.

3.3.4.1 Storm Sewer System

The storm sewer system within the limits of the power block will consist of a system of drop inlets and storm drain pipes. Inlets will be constructed of cast-in-place or precast concrete with top grates. The minimum cover requirement, loading, and material selection for pipes will be adequate for HS20 truck loading. The storm drain piping will discharge to ditches along the perimeter of the power block area and then to an onsite detention pond.

3.3.4.2 Pre- and Post-Development Runoff Conditions

The existing site is a grass-covered field. The additional runoff from the proposed development will be routed to the onsite stormwater detention pond.

Erosion and Sedimentation Control. Erosion and sedimentation control will be provided to retain sediment onsite and prevent violations of water quality standards.

Permanent erosion and sedimentation control measures within the plant site will include the runoff collection system (inlets and drainage piping) and surfaced traffic areas. Final grading within the limits of the new facilities will include aggregate surfacing. These measures will minimize the possibility of any appreciable erosion, and the resulting sedimentation, occurring on the site.

Temporary erosion and sediment control measures which comply with the state and local requirements will be used during the construction phase.

3.3.5 Roads

Access to the plant site will be from an existing public street to the west of the power block facility.

Access within the plant site will be provided by a loop road consisting of two 10-foot asphalt-paved lanes.

All roads will be surfaced with aggregate during the construction period. Periodic watering or applications of a dust palliative material will be used to minimize the dust problem during the dry seasons.

The minimum radius to the inside edge of pavement (EOP) or aggregate surface at intersections of the roads will be 40 feet.

Because of the flat terrain of the plant site, grades for all roads will be minimal.

3.3.6 Fencing and Security

Chain-link security fencing, topped with barbed wire, will be provided around the power plant facility site, substation, and other areas requiring controlled access.

Fencing heights will be in accordance with applicable codes and regulatory requirements.

A controlled access gate will be located at the main entrance to the secured area.

3.3.7 Sanitary Waste System

Sanitary wastes will be conveyed to a county-approved onsite sanitary waste disposal system consisting of a septic tank and a leaching field. If required, because of the proximity of the ground water, a mounded septic system will be used.

3.3.8 Spill Protection

Spill containment measures will be provided for chemical storage tanks and chemical additive/lube oil skid areas. The containment structure for the aqueous ammonia storage tank will be sized for 125 percent of the tank capacity. All other chemical storage tanks will be provided with a containment structure with a volume equal to at least 110 percent of the tank capacity. In addition, all outdoor containment structures will have a volume equal to at least the capacity of the tank plus the volume of rainfall from a 25-year storm event. Concrete curbs will be provided for chemical additive/lube oil skid areas. Where required for protection of the containment structure, appropriate surface coatings will be provided.

3.4 Geotechnical Investigation

A Preliminary Geotechnical Investigation for the project has been prepared by Hultgren-Tillis Engineers and is dated June 26, 2001.

Appendix H1-2

Drainage and Grading Plan

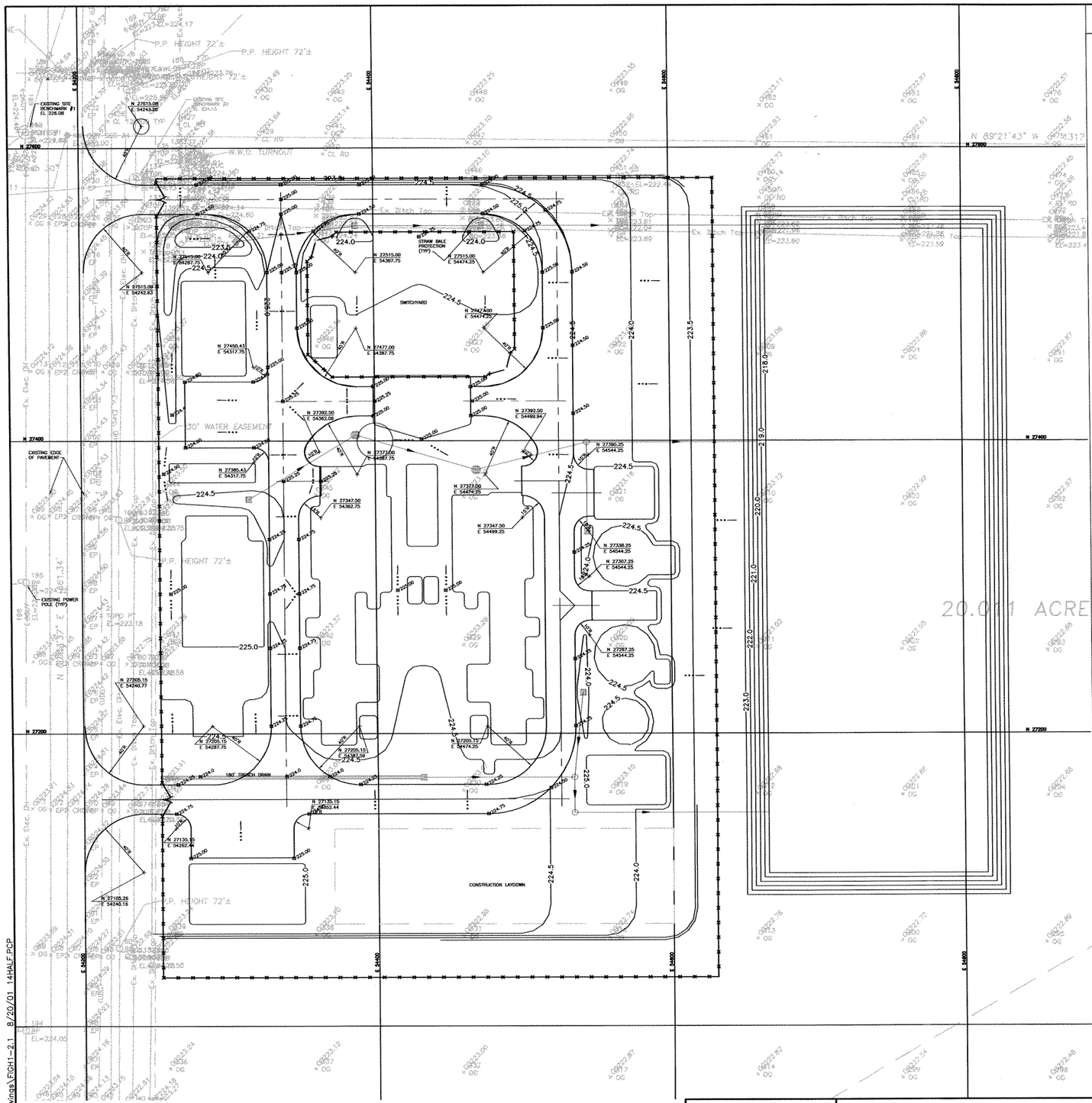

LEGEND

- NEW ASPHALT PAVEMENT
- EXISTING STRUCTURE
- NEW STRUCTURE
- SUBGRADE
- 10 — EXISTING CONTOUR
- 10 — NEW CONTOUR
- × 9.2 — EXISTING SPOT ELEVATION
- + 172.50 — NEW SPOT ELEVATION
- PROPERTY LINE
- MATCH LINE
- NEW FENCE
- TEMPORARY CHAIN LINK FENCE
- EXISTING FENCE
- SILT FENCE
- STRAW BALES
- STRAW BALE EROSION PROTECTION AT CATCH BASIN
- SURFACE DRAINAGE FLOW INDICATOR
- PERSONNEL GATE
- SWING GATE
- CB-01 — CATCH BASIN
- MH-01 — MANHOLE
- C-1 — CULVERT
- NEW DRAINAGE PIPING
- EXISTING DRAINAGE PIPING
- EXISTING POWER POLE
- EXISTING LIGHT POLE
- 1 / S3000 — SECTION OR DETAIL NUMBER / DRAWING DESIGNATION NUMBER
- N 9500.00 — NORTHING COORDINATE
- E 5000.00 — EASTING COORDINATE

GENERAL NOTES

1. SEE DRAWING LATER FOR SITE ARRANGEMENT.
2. LOCATIONS OF EXISTING ROADS AND UTILITIES ARE SUBJECT TO FIELD VERIFICATION BY THE CONTRACTOR.
3. CONSTRUCTION SEQUENCE SHALL BE SCHEDULED TO MINIMIZE UNCONTROLLED RUNOFF AND OFFSITE SEDIMENTATION DURING GRADING OPERATIONS. SILT FENCE SHALL BE INSTALLED IN EACH AREA BEFORE GRADING OPERATIONS BEGIN.
6. NEW CONTOURS AND SPOT ELEVATIONS SHOWN ON THE DRAWINGS INDICATE FINISH GRADE, TOP OF SURFACING OR TOP OF ASPHALT, UNLESS NOTED OTHERWISE. SUBTRACT MATERIAL THICKNESS ACCORDINGLY WHERE TOP OF SUBGRADE ELEVATION IS REQUIRED.
7. ANY CONSTRUCTION ACTIVITIES THAT TAKE PLACE OUTSIDE THE LIMITS OF THE SILT FENCE AND HAVE THE POTENTIAL FOR ERODED SOIL TO BE WASHED AWAY FROM THE AREA SHALL BE ENTIRELY ENCLOSED BY SILT FENCE PRIOR TO THE START OF ANY SUCH ACTIVITIES.
8. GRADE SHALL SLOPE UNIFORMLY BETWEEN FINISH SPOT ELEVATIONS AND CONTOURS SHOWN ON THE PLAN.
9. A SMOOTH VERTICAL TRANSITION SHALL BE PROVIDED AT ROAD INTERSECTIONS.
10. ANY DISTURBED PORTIONS OF THE SITE WHERE CONSTRUCTION ACTIVITY TEMPORARILY CEASES FOR AT LEAST 21 DAYS SHALL BE TEMPORARILY MULCHED.
11. THE CONTRACTOR SHALL CONTROL DUST BY WATERING THROUGHOUT THE DURATION OF CONSTRUCTION.
12. SURFACE VEGETATION SHALL BE REMOVED COMPLETE WITH ROOTS TO A DEPTH OF NO LESS THAN 4 INCHES BELOW THE GROUND SURFACE.
13. THE TOP 12 INCHES OF EARTH SHALL BE REMOVED AND SHALL BE STOCKPILED ON SITE.
14. PRIOR TO FILLING, THE SUBGRADE SHALL BE SCARIFIED AND COMPACTED IN ACCORDANCE WITH THE CONSTRUCTION SPECIFICATIONS.
15. FILL MATERIAL SHALL BE PLACED TO THE FINISH ELEVATIONS INDICATED ON THE DRAWINGS.
16. ADEQUATE SHEETING AND BRACING SHALL BE PROVIDED TO PROTECT AND MAINTAIN THE STABILITY OF PREVIOUSLY CONSTRUCTED STRUCTURES AND THE SIDES OF EXCAVATION AND TRENCHES UNTIL THEY ARE BACKFILLELD.
17. ADEQUATE DEWATERING EQUIPMENT SHALL BE PROVIDED TO REMOVE AND DISPOSE OF ALL SURFACE AND GROUND WATER ENTERING EXCAVATIONS AND OTHER PARTS OF THE WORK.
18. EXCAVATION, OVEREXCAVATION AND BACKFILL FOR INDIVIDUAL EQUIPMENT FOUNDATIONS SHALL BE TO THE DIMENSIONS AND ELEVATIONS BELOW THE CONCRETE FOOTINGS AS INDICATED ON THE DRAWINGS.

ABBREVIATIONS

APPROX	– APPROXIMATE	INV	– INVERT
ASPH	– ASPHALT	MAX	– MAXIMUM
BM	– BENCH MARK	MIN	– MINIMUM
CB	– CATCH BASIN	MSL	– MEAN SEA LEVEL
CHDPE	– CORRUGATED HIGH DENSITY POLYETHYLENE	NO	– NUMBER
CCW	– COUNTERCLOCKWISE	NTS	– NOT TO SCALE
CJ	– CONTRACTION JOINT	PC	– POINT OF CURVATURE
CL	= CENTER LINE	PI	– POINT OF INTERSECTION
CONC	– CONCRETE	PL	– PROPERTY LINE
CW	– CLOCKWISE	PT	– POINT OF TANGENCY
DIA	– DIAMETER	PVI	– POINT OF VERTICAL INTERSECTION
DIP	= DUCTILE IRON PIPE	R	– RADIUS
DWG	– DRAWING	RCP	– REINFORCED CONCRETE PIPE
EL	– ELEVATION	REV	– REVISION
EJ	– EXPANSION JOINT	R/W	– RIGHT OF WAY
EXIST	– EXISTING	T/C	– TOP OF CURB
FF	– FINISHED FLOOR	T/P	– TOP OF PAVEMENT
HDPE	– HIGH DENSITY POLYETHYLENE	TOC	– TOP OF CONCRETE
HP	– HIGH POINT	T/GRATE	– TOP OF GRATE
ID	– INSIDE DIAMETER	TYP	– TYPICAL

40' 0 40' 80'
SCALE: 1"= 40'

NOT TO BE USED FOR CONSTRUCTION

Project No. 51-00167032.00	GWF ENERGY LLC HENRIETTA 230KV SWITCHYARD	DRAINAGE AND GRADING PLAN	APPENDIX H1-2

URS

X:\x_env\GWF\henrietta\drawings\FIGH1-2.1 8/20/01 14:HALF.PCP

Appendix H1-3

Geotechnical Investigation

July 12, 2001
Job No.: 21-4198-02-001

Mr. Paul Kieffer
GWF Power Systems
4300 Railroad Avenue
Pittsburg, California 94565

SUBJECT: Geotechnical Engineering Services
Proposed Henrietta Peaker Plant
One Mile South of Highway 198 on Avenue 25
Lemoore, California

Dear Mr. Kieffer:

Kleinfelder is pleased to present the this report on general geotechnical and geologic conditions for the proposed Henrietta Peaker Plant to be located one mile south of Highway 198 on Avenue 25 in Lemoore, California. We understand, the proposed project will involve construction of an electrical power plant located on an approximate 400 by 550-foot parcel. The purpose of our investigation was to explore the subsurface conditions at the site and provide comments regarding site soil and groundwater conditions, regional and local geology, site seismicity, liquefaction, and pertinent geologic hazards to aid in preparing the environmental component of a California Energy Commission application for the proposed plant. The location of the site is shown on the attached Site Vicinity Map, Plate 1.

Our scope of services was based on your request as discussed in telephone discussions and included excavating a boring to 75 feet below surrounding grade and preparation of this letter report.

FIELD EXPLORATION

The field exploration was conducted on July 2, 2001, and consisted of drilling 1 exploratory test boring and conducting a site reconnaissance by our staff engineer. The test boring was drilled with a CME 55 truck-mounted drill rig, using mud rotary drilling techniques to a depth of 76.5

Copyright 2001, Kleinfelder, Inc.
KLEINFELDER 1410 F Street, Fresno, CA 93706 (559) 486-0750 (559) 442-5081 fax

feet below the existing ground surface. Penetration rates were recorded and soil samples gathered on 5-foot intervals. The approximate location of the test boring is indicated on the attached Site Plan, Plate 2.

SITE CONDITIONS

Surface

The site is located on Avenue 25 approximately one mile south of Highway 198. The site consists of a relatively flat 5-acre parcel located adjacent to the existing PG&E Henrietta Substation. The site is bounded on the south and east by agricultural property, on the west by 25th Avenue, and on the north by the substation. The site has been used for agricultural purposes. At the time of our investigation, the site had recently been deep disced, disturbing the upper 12 to 18 inches. The surface soil is randomly cracked due to desiccation of clayey soil.

Existing utilities consisted of fiber optic cables trending along 25th Avenue and several overhead power transmission lines diagonally bisecting the site.

Subsurface

The surface soil materials encountered in our test borings consisted of soft to stiff lean clay extending to a depth of about 33 feet. These clay soils were underlain by alternating layers of medium dense silty sand and poorly graded sand extending to a depth of about 46 feet. These sand soils were underlain by medium stiff to very stiff lean clay extending to a depth of about 72 feet. Between 72 feet and the bottom of the boring (approximately 76.5 feet) the soil encountered consisted of medium dense silty sand with slight plasticity.

Groundwater was encountered in the test boring drilled for this project at a depth of about 6 feet below surrounding grade. This depth to groundwater is not uncommon, as the area is known for shallow groundwater. It is possible that groundwater conditions at the site could change at some time in the future due to variations in rainfall, agricultural activities, groundwater withdrawal, construction activities, or other factors not apparent at the time our test boring was made.

Copyright 2001, Kleinfelder, Inc.

The above is a general summary of the soil and groundwater conditions encountered in the test boring excavated for this investigation. A more detailed description of the soils encountered in the test boring is noted on the log of boring, Plate 4. All soils have been classified in general accordance with the Unified Soil Classification System described on Plate 3.

GEOLOGIC CONDITIONS

Regional Geology

The project site lies in the central portion, and near the west side of the Great Valley geomorphic province in central California. This province of California was formed by the filling of a large structural trough or downwarp in the underlying bedrock. The trough is situated between the Sierra Nevada Mountains on the east and the Coast Range Mountains on the west. Both of these mountain ranges were initially formed by uplifts, which occurred during the Jurassic and Cretaceous periods of geologic time (greater than 65 million years ago). Renewed uplift began in the Sierra Nevada during the Tertiary time, and is continuing today. The trough, which underlies the valley, is asymmetrical, with the greatest depths of sediments near the western margin. The sediments that fill the trough originated as erosional debris from the adjacent mountains and foothills.

Local Faulting

The project site and its vicinity are located in an area traditionally characterized by low to moderate seismic activity. Faulting and seismic ground shaking is usually associated with known fault systems. Based on a review of the area's Five County Seismic Safety Element (1974), and our current understanding of the geologic framework and tectonic setting of the proposed facility, there are no known faults which traverse through the local soils in or near the site, and the site is not located in an Alquist-Priolo Earthquake Fault Zone as defined by Special Publication 42 (revised 1997) published by the CDMG. The primary source of seismic shaking is anticipated to be the Coast Ranges Sierran - Block Fault zone.

Copyright 2001, Kleinfelder, Inc.

Site Seismology

A deterministic modeling procedure was used to estimate the peak ground motion corresponding to the maximum credible earthquake. The deterministic analysis is based on characteristics of the earthquake and of the causative fault associated with the earthquake. These characteristics include such items as magnitude of the earthquake, distance from the site to the causative fault, and the effects of site soil conditions. The governing event would be a Magnitude 7 earthquake on the Coast Ranges – Sierran Block Fault zone. This fault is located about 38 km westerly of the site and would produce a ground acceleration of about 0.18g. This value may be somewhat conservative, in that CDMG is presently considering this fault zone to be a series of smaller segments with associated lower magnitudes for the segments.

Liquefaction

Evaluation based on methods by Seed, Tokimatsu, Harder and Chung (1985) and NCEER (1996) indicate a maximum seismic event on the Coast Ranges Sierran - Block Fault would not likely result in liquefaction of the saturated granular sediments.

A primary potential effect of strong seismic motion is seismically induced settlement. Based on the subsurface data associated with this study and methods by Tokimatsu and Seed (1987) and the NCEER (1996), it is estimated that seismically induced settlement might occur in various granular zones between about 38 and 46 feet in depth. It is estimated this settlement would be less than 1.0-inch. Consequently, considering the significant depth, it is anticipated the seismically induced differential settlement at the surface would not be significant.

OTHER GEOLOGIC HAZARDS

Landslides and Ground Failure

Strong shaking has the potential for activating landslides on hillsides, slope failures on creek banks (lurch cracking) and tension cracking in areas underlain by loose, low density soil such as uncompacted fill. Since the site is level and there are no known areas of extensive fill or filled-in or existing creek banks, the potential for landslides or other slope failures from earthquake-induced ground shaking is low.

Copyright 2001, Kleinfelder, Inc.

Tsunamis, Seiches, and Earthquake Induced Flooding

Tsunamis are sea waves of unusual size that occur from significant earthquakes either under the ocean floor or adjacent to shorelines and can travel great distances to impact low-lying communities and developments. Since the site is protected from the sea by the Coast Range, the potential for the site to be affected by a tsunami is nil.

A seiche is a free or standing-wave oscillation that occurs in a confined body of water, such as a reservoir or lake. Earthquake-generated ground waves, which have a period that matches the natural period of the lake or reservoir, may cause the water to oscillate, which can cause damage to shore line improvements. The County General Plan does not address the potential of seiches. No nearby large bodies of water are present from which a seiche would influence the site. Potential inundation due to upstream dam failure is not addressed in the General Plan. The seismic adequacy of dams are usually governed by the U.S. Corp of Engineers and California Division of Dam Safety.

Flooding

Based on the Flood Insurance Rate Maps (No. 0600860125 B, October 4, 1988) distributed by the Federal Emergency Management Agency, the site is located in Zone X. Zone X denotes areas outside of the 500-year floodplain.

LIMITATIONS

Comments contained in this report are based on our field observations and subsurface exploration and our present knowledge of the general area.

We have prepared this report in substantial accordance with the generally accepted geotechnical engineering practice as it exists in the site area at the time of our study. No warranty is expressed or implied.

Copyright 2001, Kleinfelder, Inc.

This report is intended to be used by the client and their consultants only for the purposes stated, within a reasonable time from its issuance. Land use, site conditions (both on site and off site) or other factors may change over time. Any party other than the client or their designers who wish to use this report shall notify Kleinfelder of such intended use. Based on the intended use of the report, Kleinfelder may require that additional work be performed and that an updated report be issued. Non-compliance with any of these requirements by the client or anyone else will release Kleinfelder from any liability resulting from the use of this report by any unauthorized party.

We appreciate the opportunity to provide geotechnical engineering services to GWF Power Systems. We trust this information meets your current needs. If there are any questions concerning the information presented in this report, please contact this office at your convenience.

Sincerely,

KLEINFELDER, INC.

Stephen P. Plauson, E.I.T.
Project Engineer

David L. Pearson, P.E., G.E.
Senior Project Manager

SPP:DLP:tjg

REGISTERED PROFESSIONAL ENGINEER
DAVID L. PEARSON
No. 674
Exp. 12-31-01
GEOTECHNICAL
STATE OF CALIFORNIA

Copyright 2001, Kleinfelder, Inc.

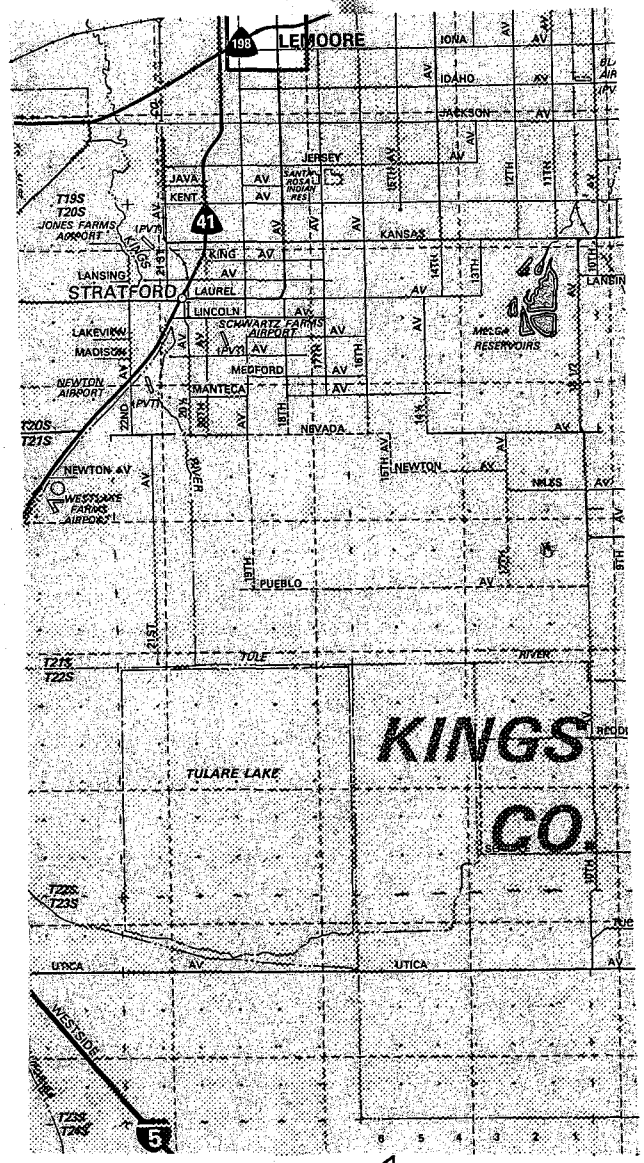

Kings County

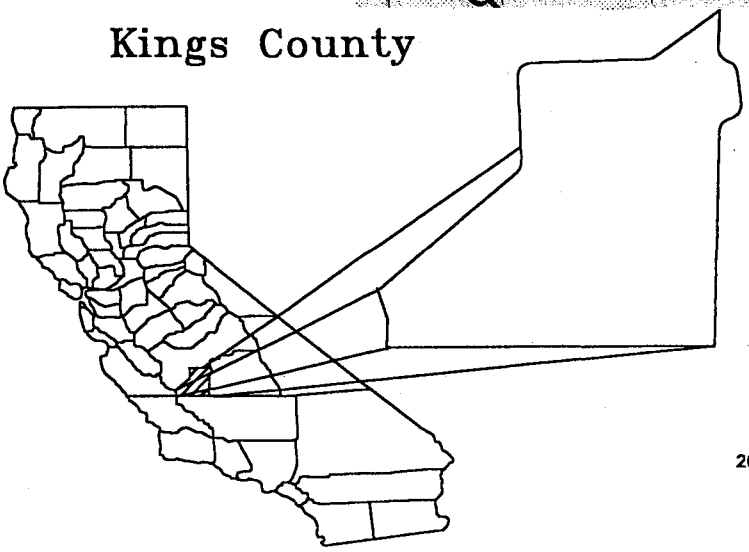

2000 0 1000 2000 4000

SCALE: 1 inch = 2000 ft.

KLEINFELDER		SITE VICINITY MAP PROPOSED HENRIETTA PEAKER PLANT POWER SYSTEM LEMOORE, CALIFORNIA	PLATE 1
DRAWN BY: D. NORMAN	DATE: 7-3-01		
PROJECT No. 21-4198-02	DWG No. site_vic		

© Kleinfelder, Inc. 2001

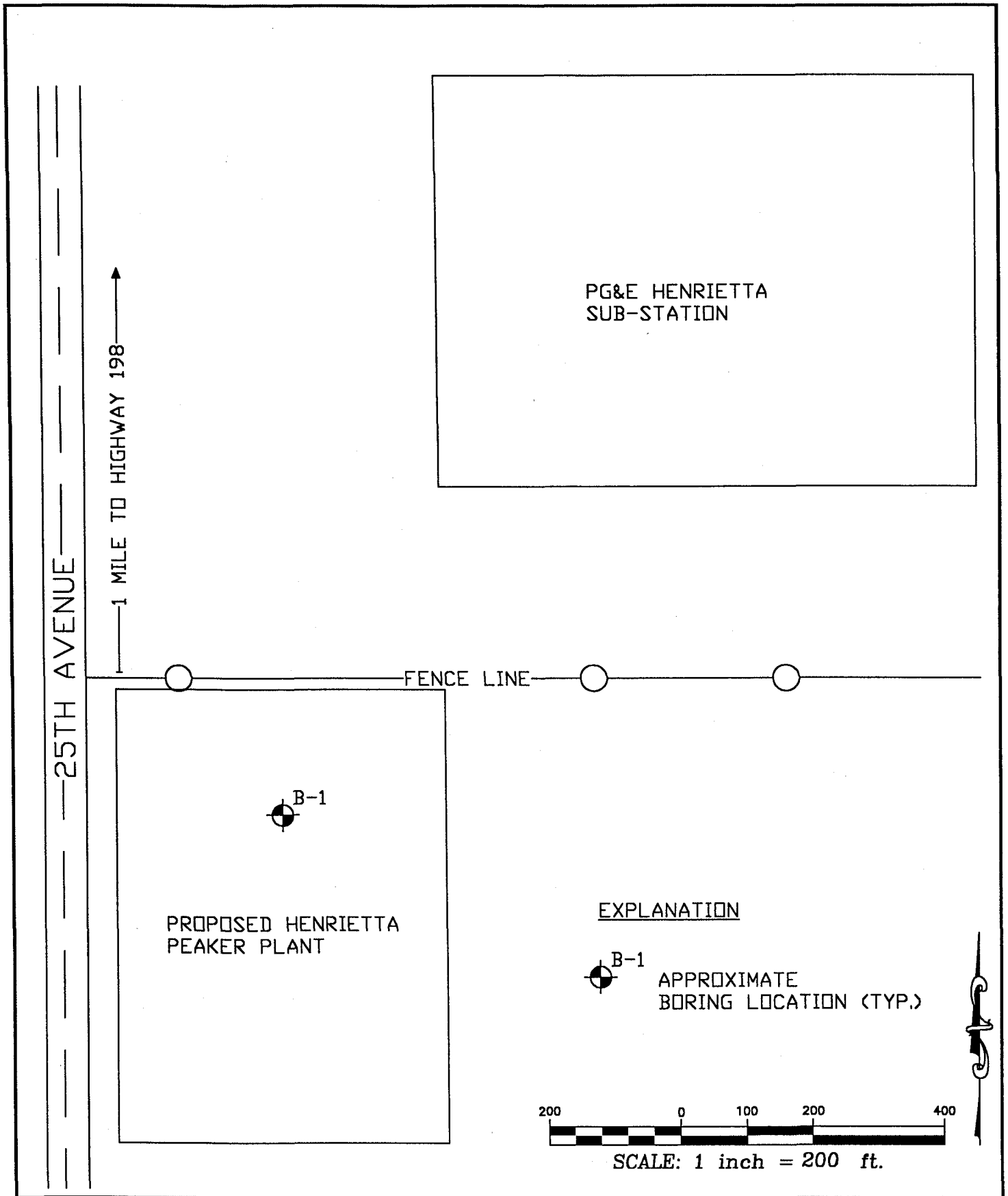

KLEINFELDER

DRAWN BY: D. NORMAN
PROJECT No. 21-4198-02

DATE: 7-3-01
DWG No. site_plan

SITE PLAN
PROPOSED HENRIETTA PEAKER PLANT
POWER SYSTEM
LEMOORE, CALIFORNIA

PLATE
2

© Kleinfelder, Inc. 2001

LOG SYMBOLS

	BULK/BAG SAMPLE	-4	PERCENT FINER THAN THE NO. 4 SIEVE (ASTM Test Method C 136)
	MODIFIED CALIFORNIA SAMPLER (2-1/2 inch outside diameter)	-200	PERCENT FINER THAN THE NO. 200 SIEVE (ASTM Test Method C 117)
	CALIFORNIA SAMPLER (3 inch outside diameter)	LL	LIQUID LIMIT (ASTM Test Method D 4318)
	STANDARD PENETRATION SPLIT SPOON SAMPLER (2 inch outside diameter)	PI	PLASTICITY INDEX (ASTM Test Method D 4318)
	SHELBY TUBE SAMPLER (3 inch outside diameter)	EI	EXPANSION INDEX (ASTM Test Method D 4829)
	CONTINUOUS SAMPLER (3 inch outside diameter)	COL	COLLAPSE POTENTIAL
	WATER LEVEL (level after completion)	UC	UNCONFINED COMPRESSION
	WATER LEVEL (level where first encountered)		
	SEEPAGE	MC	MOISTURE CONTENT

GENERAL NOTES

1. Lines separating strata on the logs represent approximate boundaries only. Actual transistions may be gradual.
2. No warranty is provided as to the continuity of soil conditions between individual sample locations.
3. Logs represent general soil conditions observed at the point of exploration on the date indicated.
4. In general, Unified Soil Classification designations presented on the logs were evaluated by visual methods only. Therefore, actual designations (based on laboratory tests) may vary.
5. A temporary benchmark for relative elevation was located at:

KEYLOG 21419802.GPJ 7/5/01

KLEINFELDER	LOG KEY PROPOSED HENRIETTA PEAKER PLANT GWF POWER SYSTEM LEMOORE, CALIFORNIA	PLATE 3
Project No.: 21-4198-02		

Copyright Kleinfelder, Inc. 2001

Date Completed: 7/2/01

Logged By: S. PLAUSON

Total Depth: 76.5 feet

Surface Conditions: OPEN FIELD- TILLED

Rig Type: CME -55 Auger Type: M/R

Groundwater: 6.0 ft.

Depth, ft	FIELD Sample	FIELD Blows/ft	LABORATORY Dry Density pcf	LABORATORY Moisture Content %	LABORATORY Approx. Saturation %	LABORATORY Sample Number	Pen, tsf	DESCRIPTION
								Approximate Relative Surface Elevation (ft):
								CLAY (CL) - olive brown, dry, soft, desicatted to about 12 to 18 inches
		3						... moist ... very moist to wet
5		5		▽				... wet, medium stiff ... groundwater observed at 6 feet
10		8						
15		16						... very stiff
20								

KLEINFELDER

PROJECT NO. 21-4198-02

LOG OF BORING B-1
PROPOSED HENRIETTA PEAKER PLANT
GWF POWER SYSTEM
LEMOORE, CALIFORNIA

PLATE 1 of 4

4

Depth, ft	FIELD Sample	FIELD Blows/ft	LABORATORY Dry Density pcf	LABORATORY Moisture Content %	LABORATORY Approx. Saturation %	LABORATORY Sample Number	Pen, tsf	DESCRIPTION
								(Continued from previous plate)
		22						... stiff
25		11						...sandy, fine to coarse grained
30		10						... with sand interbeds
								SILTY SAND (SM) - olive brown, wet, medium dense, fine grained
35		14						
								POORLY GRADED SAND (SP) - olive brown, wet, medium dense, fine to medium grained
40		13						**SILTY SAND (SP)** - oilve brown, wet, medium dense, fine grained

KLEINFELDER

PROJECT NO. 21-4198-02

LOG OF BORING B-1
PROPOSED HENRIETTA PEAKER PLANT
GWF POWER SYSTEM
LEMOORE, CALIFORNIA

Depth, ft	FIELD: Sample	FIELD: Blows/ft	LABORATORY: Dry Density pcf	LABORATORY: Moisture Content %	LABORATORY: Approx. Saturation %	LABORATORY: Sample Number	Pen, tsf	DESCRIPTION
								(Continued from previous plate)
								POORLY GRADED SAND (SP) - olive brown, wet, medium dense, fine grained
45		11						**CLAY (CL)** - olive brown, wet, medium stiff
50		20						...
55		13						...
60		24						... very stiff
65								...

KLEINFELDER

PROJECT NO. 21-4198-02

LOG OF BORING B-1
PROPOSED HENRIETTA PEAKER PLANT
GWF POWER SYSTEM
LEMOORE, CALIFORNIA

Depth, ft	FIELD: Sample	FIELD: Blows/ft	LABORATORY: Dry Density pcf	LABORATORY: Moisture Content %	LABORATORY: Approx. Saturation %	LABORATORY: Sample Number	Pen, tsf	DESCRIPTION
								(Continued from previous plate)
		27						
70								...
		16						
								SILTY SAND (SM) - olive brown, wet, medium dense, fine grained, slight plasticity
75								
		23						**Notes:** **1.) Bottom of boring at 76.5 feet.** **2.) Free groundwater encountered at 6.0 feet.** **3.) Boring backfilled with soil cuttings 7/2/01.**
80								
85								

KLEINFELDER

PROJECT NO. 21-4198-02

LOG OF BORING B-1
PROPOSED HENRIETTA PEAKER PLANT
GWF POWER SYSTEM
LEMOORE, CALIFORNIA

PLATE
4 of 4

4

Appendix H2

Structural and Seismic Engineering Design Criteria

STRUCTURAL AND SEISMIC ENGINEERING DESIGN CRITERIA

1.0 INTRODUCTION

The project design, engineering, procurement, and construction activities will be in accordance with various predetermined standards and project-specific practices. This appendix summarizes the structural and seismic engineering codes and standards, design criteria, and practices that will be used during design and construction. These criteria form the basis for the project structural design work. More specific design information will be developed during detailed design to support equipment procurement and construction specifications. It is not the intent of this appendix to present the detailed design information for each component and system, but rather to summarize the codes, standards, and general criteria that will be used.

Section 2.0 summarizes the applicable codes and standards. Section 3.0 includes the general criteria for natural phenomena, design loads, materials, seismic design, and architecture. Section 4.0 describes the structural design methodology for structures and equipment. Section 5.0 addresses project hazard mitigation.

2.0 DESIGN CODES AND STANDARDS

2.1 General Requirements

Work will be designed and specified in accordance with applicable laws and regulations of the Federal Government and the State of California and applicable local codes and ordinances. Except where noted otherwise, the latest issue of codes and standards, including addenda, in effect at the start of the project will be used. The codes and standards, including addenda, in effect at the time of purchase will be used for material and equipment procurement.

A summary of the codes and the standards to be used in design and construction follows:

- Seismic standards and criteria will follow the California Building Code (CBC).

- Specifications for materials will follow the standard specifications of the American Society for Testing and Materials (ASTM) and the American National Standards Institute (ANSI), unless noted otherwise.

- Field and laboratory testing procedures for materials will follow ASTM standards.

- Structural concrete and reinforcing steel will be designed and placed in accordance with the codes, guides, and standards of the American Concrete Institute (ACI) and the Concrete Reinforcing Steel Institute (CRSI).

- Structural steel will be designed, fabricated, and erected in accordance with the American Institute of Steel Construction (AISC) Manual of Steel Construction-Allowable Stress Design.

- Steel components for metal wall panels and roof decking will conform to the American Iron and Steel Institute (AISI) Specification for the Design of Cold-Formed Steel Structural Members.

- Welding procedures and qualifications for welders will follow the recommended practices and codes of the American Welding Society (AWS).

- Metal surfaces for coating systems will be prepared following the specifications and standard practices of the Steel Structures Painting Council (SSPC) and the specific instructions of the coatings manufacturer.

- Masonry materials will be designed and erected in accordance with the ACI Building Code Requirements for Masonry Structures.

- Roof covering design will comply with the requirements of the National Fire Protection Association (NFPA) and Factory Mutual (FM).

- Design and construction will conform to federal and California Occupational Safety and Health Administration (OSHA and CAL/OSHA) requirements.

Other recognized standards will be used where required to serve as guidelines for design, fabrication, and construction. When no other code or standard governs, the CBC, 1998 Edition will govern.

2.2 Government Rules and Regulations

The following laws, ordinances, codes, and standards are applicable to structural design and construction. In cases where conflicts between cited codes (or standards) exist, the requirements of the more stringent code will govern. The sections in the CBC have been quoted

throughout this document as reference. These sections are based on the 1998 editions of CBC. However, the latest edition of CBC at the start of the project will apply to the engineering design.

2.2.1 Federal

- Title 29, Code of Federal Regulations (CFR), Part 1910, Occupational Safety and Health Standards
- Title 29, CFR, Part 1926, National Safety and Health Regulations for Construction
- Walsh-Healy Public Contracts Act (Public Law [PL] 50-204.10)

2.2.2 State

- Business and Professions Code Section 6704 et seq., Sections 6730 and 6736 – requires state registration to practice as a Civil Engineer or Structural Engineer in California
- Labor Code Section 6500 et seq. – requires a permit for construction of trenches or excavations 5 feet or deeper into which personnel will descend; also applies to construction or demolition of any building, structure, false work, or scaffolding which is more than three stories high or equivalent
- Title 24, California Code of Regulations (CCR), Section 2-111 et seq., Section 3-100 et seq., Section 4-106 et seq., Section 5-1021 et seq., Section 6-T8-769 et seq., Section 6-T8-3233 et seq., Section 6-T8-3270 et seq., Section 6-T8-5138 et seq., Section 6-T8-5465 et seq., Section 6-T8-5531 et seq., and Section 6-T8-5545 et seq. – adopts current edition of CBC as minimum legal building standards
- Title 8 CCR, Section 450 et seq. and Section 750 et seq. – adapts American Society of Mechanical Engineers Boiler and Pressure Vessel Code (ASMEB and PVC) and other requirements for unfired and fired boilers
- Title 8, CCR, Section 1500 et seq., Section 2300 et seq., and Section 3200 et seq. – describes general construction safety orders, industrial safety orders, and work safety requirements and procedures
- Regulations of the following state agencies as applicable:
  - Department of Labor and Industry Regulations
  - Bureau of Fire Protection

- Department of Public Health
- Water and Power Resources

2.2.3 Local

- California Building Code

2.3 Industry Codes and Standards

2.3.1 American Concrete Institute (ACI)

- ACI 117 – Standard Specification for Tolerances for Concrete Construction and Materials
- ACI 211.1 – Standard Practice for Selecting Proportions of Normal, Heavyweight, and Mass Concrete
- ACI 301 – Specifications for Structural Concrete for Buildings
- ACI 302.1R – Guide for Concrete Floor and Slab Construction
- ACI 304R – Guide for Measuring, Mixing, Transporting, and Placing Concrete
- ACI 305R – Hot Weather Concreting
- ACI 306R – Cold Weather Concreting
- ACI 308 – Standard Practice for Curing Concrete
- ACI 309R – Guide for Consolidation of Concrete
- ACI 311AR – Guide for Concrete Inspection
- ACI 318 – Building Code Requirements for Reinforced Concrete
- ACI 318.1--Building Code Requirements for Structural Plain Concrete.
- ACI 347R – Guide to Formwork for Concrete
- ACI 530 – Building Code Requirements for Masonry Structures
- ACI 530.1 – Specifications for Masonry Structures

2.3.2 American Institute of Steel Construction (AISC)

- Code of Standard Practice for Steel Buildings and Bridges
- Manual of Steel Construction–Allowable Stress Design
- Specification for Structural Steel Buildings–Allowable Stress Design and Plastic Design
- Allowable Stress Design Specification for Structural Joints Using ASTM A325 or A490 Bolts

2.3.3 American Iron and Steel Institute (AISI)

- Specification for the Design of Cold-Formed Steel Structural Members

2.3.4 American Society for Testing and Materials (ASTM)

- ASTM A36 – Standard Specification for Structural Steel
- ASTM A53 – Standard Specification for Pipe, Steel, Black and Hot-Dipped, Zinc-Coated, Welded and Seamless
- ASTM A82 – Standard Specification for Steel Wire, Plain, for Concrete Reinforcement
- ASTM A106 – Standard Specification for Seamless Carbon Steel Pipe for High-Temperature Service
- ASTM A108 – Standard Specification for Steel Bars, Carbon, Cold Finished, Standard Quality
- ASTM A123 – Standard Specification for Zinc (Hot-Dip Galvanized) Coatings on Iron and Steel Products
- ASTM A153 – Standard Specification for Zinc Coating (Hot-Dip) on Iron and Steel Hardware
- ASTM A185 – Standard Specification for Steel Welded Wire Fabric, Plain, for Concrete Reinforcement
- ASTM A240 – Standard Specification for Heat-Resisting Chromium and Chromium-Nickel Stainless Steel Plate, Sheet, and Strip for Pressure Vessels

- ASTM A276 – Standard Specification for Stainless and Heat-Resisting Steel Bars and Shapes
- ASTM A307 – Standard Specification for Carbon Steel Bolts and Studs, 60,000 psi Tensile Strength
- ASTM A325 – Standard Specification for Structural Bolts, Steel, Heat Treated, 120/105 ksi Minimum Tensile Strength
- ASTM A446 – Standard Specification for Steel Sheet, Zinc-Coated (Galvanized) by the Hot-Dip Process, Structural (Physical) Quality
- ASTM A500 – Standard Specification for Cold-Formed Welded and Seamless Carbon Steel Structural Tubing in Rounds and Shapes
- ASTM A501 – Standard Specification for Hot-Formed Welded and Seamless Carbon Steel Structural Tubing
- ASTM A569 – Standard Specification for Steel, Carbon (0.15 Maximum, Percent), Hot-Rolled Sheet and Strip Commercial Quality
- ASTM A615 – Standard Specification for Deformed and Plain Billet-Steel Bars for Concrete Reinforcement
- ASTM B695 – Standard Specification for Coatings of Zinc Mechanically Deposited on Iron and Steel
- ASTM C31 – Standard Practice for Making and Curing Concrete Test Specimens in the Field
- ASTM C33 – Standard Specification for Concrete Aggregates
- ASTM C39 – Standard Test Method for Compressive Strength of Cylindrical Concrete Specimens
- ASTM C90 – Standard Specification for Load-Bearing Concrete Masonry Units
- ASTM C94 – Standard Specification for Ready-Mixed Concrete
- ASTM C109 – Standard Test Method for Compressive Strength of Hydraulic Cement Mortars (Using 2 in. or 50 mm Cube Specimens)
- ASTM C129 – Standard Specification for Non-Load-Bearing Concrete Masonry Units

- ASTM C136 – Standard Test Method for Sieve Analysis of Fine and Coarse Aggregates
- ASTM C138 – Standard Test Method for Unit Weight, Yield, and Air Content (Gravimetric) of Concrete
- ASTM C143 – Standard Test Method for Slump of Hydraulic Cement Concrete
- ASTM C150 – Standard Specification for Portland Cement
- ASTM C172 – Standard Practice for Sampling Freshly Mixed Concrete
- ASTM C231 – Standard Test Method for Air Content of Freshly Mixed Concrete by the Pressure Method
- ASTM C260 – Standard Specification for Air-Entraining Admixtures for Concrete
- ASTM C270 – Standard Specification for Mortar for Unit Masonry
- ASTM C289 – Standard Test Method for Potential Reactivity of Aggregates (Chemical Method)
- ASTM C494 – Standard Specification for Chemical Admixtures for Concrete
- ASTM C586 – Standard Test Method for Potential Alkali Reactivity of Carbonate Rocks for Concrete Aggregates (Rock Cylinder Method)
- ASTM C618 – Standard Specification for Coal Fly Ash and Raw or Calcinated Natural Pozzolan for Use as a Mineral Admixture in Portland Cement Concrete
- ASTM C1064 – Standard Test Method for Temperature of Freshly Mixed Portland Cement Concrete
- ASTM C1107 – Standard Specification for Packaged Dry, Hydraulic Cement Grout (Nonshrink)
- ASTM D1752 – Standard Specification for Preformed Sponge Rubber and Cork Expansion Joint Fillers for Concrete Paving and Structural Construction
- ASTM E329 – Standard Specification for Agencies Engaged in the Testing and/or Inspection of Materials Used in Construction

2.3.5 American Society of Mechanical Engineers (ASME)

- Boiler and Pressure Vessel Code, Section VIII, Rules for Construction of Pressure Vessels, Division 2 – Alternative Rules
- ASME/STS-1, Steel Stacks

2.3.6 American Society of Civil Engineers (ASCE)

- ASCE 7 – Minimum Design Loads for Buildings and Other Structures

2.3.7 American Water Works Association (AWWA)

- AWWA D100 – Welded Steel Tanks for Water Storage

2.3.8 American Welding Society (AWS)

- AWS DI.1 – Structural Welding Code - Steel
- AWS DI.4 – Structural Welding Code - Reinforcing Steel

2.3.9 California Energy Commission

- Recommended Seismic Design Criteria for Non-Nuclear Generating Facilities in California

2.3.10 Concrete Reinforcing Steel Institute (CRST)

- Manual of Standard Practice

2.3.11 International Conference of Building Officials

- CBC – California Building Code

2.3.12 Metal Building Manufacturers Association (MBMA)

- Low Rise Building Systems Manual

2.3.13 National Fire Protection Association (NFPA)

- NFPA 22 – Standard for Water Tanks for Private Fire Protection

- NFPA 24 – Standard for the Installation of Private Fire Service Mains and Their Appurtenances
- NFPA 80 – Standard for Fire Doors and Fire Windows
- NFPA 850 – Recommended Practice for Fire Protection for Electric Generating Plants

2.3.14 Steel Structures Painting Council (SSPC)

- Steel Structures Painting Manual, Volume 2, Systems and Specifications

3.0 STRUCTURAL DESIGN CRITERIA

3.1 Natural Phenomena

The design criteria based on natural phenomena are discussed in this section. The climatological data listed were retrieved from the Local Climatological Data, Annual Summaries for 1998, Stockton, CA. The data cover a period of record from 1937 to 1998. The detail design will be based on the latest available data at the start of the project.

3.1.1 Rainfall

- Maximum 24 Hour: 3.01 inches
- Maximum Monthly: 8.22 inches
- Normal Annual: 13.95 inches

The rainfall design basis may vary for the different systems and system components. Precipitation amounts and intensities to be used with each design basis for various durations and return periods will be obtained from TR-25.

3.1.2 Wind Speed

The maximum recorded 5-second wind speed for 1998 is 54 mph. The maximum recorded 2-minute wind speed is 41 mph. The Annual Summary for Local Climatological Data

recently introduced 5-second and 2-minute measurements for wind speed. As a result, the Period of Record (POR) for these measurements is only 2 years.

The design basic wind speed will be 70 miles per hour, as determined from Figure No. 16-1 of California Building Code. This design wind speed will be used to determine wind loads for all structures as discussed in Section 3.2.3, Wind Loads.

3.1.3 Temperature

- Maximum: 114° F (1972)
- Minimum: 17° F (1990)
- Normal Dry Bulb: 61.6° F

3.1.4 Relative Humidity

The relative humidity ranges from 26 to 90 percent.

3.1.5 Seismicity

The plant site is located in Seismic Zone 4, as determined from Figure 16-2 of the CBC.

3.1.6 Snow

The plant site is located in a zero ground snow load area.

3.2 Design Loads

3.2.1 Dead Loads

Dead loads include the weight of all components forming the permanent parts of structures and all permanent equipment. The dead load of permanent plant equipment will be based on actual equipment weights. For major equipment, structural members and foundations will be specifically located and designed to carry the equipment load into the structural system.

For equipment weighing less than the uniform live load, the structural system will be designed for the uniform live load.

The contents of tanks and bins at full operating capacity will be considered as dead loads. The contents of tanks and bins will not be considered effective in resisting uplift due to wind forces, but will be considered effective for seismic forces.

A uniform load of 50 psf will be used to account for piping and cable trays, except in administration building areas, and will be carried to the columns and foundations as dead loads. Uniform piping and cable tray loads will not be considered effective in resisting uplift due to wind forces, but will be considered effective for seismic forces. Additional piping loads will be considered in the design of areas with heavy piping concentrations. After critical and/or heavy piping hanger loads and locations are established, the supporting members will be reviewed for structural adequacy.

For piperacks, the weight of piping and cable trays will be treated as live load.

3.2.2 Live Loads

Live loads are the loads superimposed by the use and occupancy of the building or structure. They do not include wind loads, snow loads, or seismic loads.

Uniformly distributed live loads are specified to provide for movable and transitory loads, such as the weight of people, office furniture and partitions, portable equipment and tools, and other nonpermanent materials. These uniform live loads will not be applied to floor areas permanently occupied by equipment, with no access beneath. Uniform live loads for equipment lay-down areas will be based on the actual weight and size of the equipment and parts that may be temporarily placed on floors during dismantling, maintenance, installation, or removal.

The design live loads will be as follows:

- **Ground Floor (Grade Slab)** – A uniform load of 250 psf, nonpermanent equipment weights, storage weights, or lay-down weights, whichever is greater, will be used.

- **Grating Floors, Platforms, Walkways, and Stairs** – A uniform live load of 100 psf will be used. In addition, a concentrated load of 2 kips will be applied concurrently to the supporting beams to maximize stresses in the members, but the reactions from the concentrated load will not be carried to columns. Maximum deflection of the grating will be limited to 1/200 of the span.

- **Elevated Concrete Slabs** – A uniform load of 100 psf, nonpermanent equipment weights, storage weights, or lay-down weights, whichever is greater, will be used.

Elevated concrete slabs will be designed to support either the prescribed live load or a single concentrated load of 2 kips, whichever produces the greater stresses. The concentrated load will be treated as a uniformly distributed load acting over an area of 2.5 square feet and will be located to produce the maximum stress conditions in the slab.

Metal decking for concrete slabs will be designed for a load during construction equal to the weight of concrete plus 50 psf (no increase in allowable stress).

- **Roof** – Roof areas will be designed for a minimum live load of 20 psf. Ponding loading effect due to roof deck and framing deflections will be investigated in accordance with Section K2 of the AISC Specification for Structural Steel Buildings, Allowable Stress Design and Plastic Design.

- **Piperacks** – A minimum uniform load of 100 psf will be used for each level of the piperacks, except that, where piping and cable tray loads exceed 100 psf, the actual loads will be used. In addition, a concentrated load of 5 kips will be applied concurrently to the supporting beams to maximum stresses in the members, but the reactions from the concentrated loads will not be carried to columns.

- **Truck Loads** – A surcharge load of 250 psf will be applied to plant structures accessible to truck traffic.

Roads pavements, underground piping, conduits, sumps, and foundations subject to truck traffic will be designed for wheel loadings in accordance with Appendix H1, Section 3.2.2.

- **Thermal Forces** – Thermal forces caused by thermal expansion of equipment and piping under all operating conditions will be considered.

- **Dynamic Loads –** Dynamic loads will be considered and applied in accordance with the manufacturer's criteria/recommendations and industry standards.

3.2.3 Wind Loads

Wind loads for structures and their components will be determined in accordance with the California Building Code, using a basic wind speed of 70 mph at 33 feet above grade. Category 3 and an Importance Factor of 1.0 will be used.

3.2.4 Seismic Loads

Seismic loads will be determined in accordance with the requirements specified in Section 3.4.

3.2.5 Other Loads

Other expected loads required to predict the structural response of structures will be considered where appropriate (i.e., water hammer, test loads, etc.).

3.2.6 Load Combinations

Applicable code-prescribed load combinations will be considered in the design of structures. As a minimum, the following load combinations will be considered:

- Dead load
- Dead load + live load + operating loads
- Dead load + live load + operating loads + wind load
- Dead load + live load + operating loads + seismic load
- Dead load + construction loads
- Dead load + live load + emergency loads
- Dead load + wind load
- Dead load + seismic load

Operating loads include all loads associated with normal operation of the equipment (e.g., temperature and pressure loads, piping loads, normal torque loads, impact loads, etc.).

3.2.7 Strength Requirements

Each load combination will not exceed the stress or strength levels permitted by the appropriate code for that combination.

3.2.7.1 Concrete Structures

The required strength (U) of concrete structures will be at least equal to the following:

- U = 1.4 Dead + 1.7 Live
- U = 0.75 (1.4 Dead + 1.7 Live + 1.7 Wind)
- U = 0.9 Dead + 1.3 Wind
- U = 0.75 (1.4 Dead + 1.7 Live + 1.87 Seismic)
- U = 0.9 Dead + 1.43 Seismic
- U = 1.4 Dead + 1.7 Live + 1.7 Earth Pressure
- U = 0.9 Dead + 1.7 Earth Pressure

3.2.7.2 Steel Structures

The required strength (S) based on elastic design methods and allowable stresses (without 1/3 increase allowed for wind or seismic loading) defined in the AISC Specification for Structural Steel Buildings, Allowable Stress Design and Plastic Design, will be at least equal to the following:

- S = Dead
- S = Dead + Live
- S = 0.75 (Dead + Wind)

- S = 0.75 (Dead + Seismic)
- S = 0.75 (Dead + Live + Wind)
- S = 0.75 (Dead + Live + Seismic)

For load combinations including seismic loading, frame members and connections will conform to the additional requirements of Sections 1633 and 2213 of the CBC.

3.2.8 Factors of Safety

Minimum factors of safety for foundations supporting structures, tanks, and equipment supports will be as follows:

- Overturning – 1.50
- Sliding:
  - 1.10 for seismic load
  - 1.50 for wind load
- Buoyancy – 1.25
- Uplift due to wind – 1.50

3.3 <u>Materials</u>

3.3.1 Structural Steel

3.3.1.1 General

Structural steel will conform to ASTM A36 or other materials as required and accepted for use by the AISC Specification for Structural Steel Buildings, Allowable Stress Design and Plastic Design.

High strength bolts for connections will conform to ASTM A325. Bolts other than high strength bolts will conform to ASTM A307, Grade A. Nonheaded anchor bolts will conform to ASTM A36, unless higher strength bolting materials are required by design. Drilled-in expansion bolts for concrete will be Hilti-Kwik Bolts or equivalent.

Structural steel will be detailed and fabricated in accordance with the AISC Code of Standard Practice and the AISC Specification for Structural Steel Buildings. Structural material will be fabricated and assembled in the shop to the greatest extent possible. Structural members will be welded in accordance with AWS D1.1. Columns will be milled to bear on the baseplate or cap plate. Connections will have a minimum of two bolts.

Exterior structural steel will be either hot-dip galvanized or shop primed and finish painted after installation. Interior structural steel will be shop primed after fabrication. Surface preparation and painting will be in accordance with SSPC standards. Galvanizing will be in accordance with the requirements of ASTM standards.

3.3.1.2 Design and Testing

Steel structures will be designed by the Working Stress Method in accordance with the CBC and the AISC Specification for Structural Steel Buildings, Allowable Stress Design and Plastic Design. Connections will be in accordance with the AISC Manual of Steel Construction and the AISC Allowable Stress Design Specification for Structural Joints Using ASTM A325 or A490 Bolts.

Steel structures will be designed as “rigid frame” (AISC Specification Type 1) or “simple framing” (AISC Specification Type 2), using single-span beam systems, vertical diagonal bracing at main column lines, and horizontal bracing at the roof and major floor levels.

Type 1 rigid frames will be generally limited to prefabricated metal buildings. All other framed structures will use Type 2 design and construction.

Metal roof and floor decking attached with appropriate welding or fasteners may be considered effective as horizontal diaphragms, provided they are previously qualified by the manufacturer. Grating floors will not be considered as providing horizontal rigidity.

Mill test reports or certificates of conformance certifying that material is in conformance with the applicable ASTM specification will be required. In addition, the fabricator will be required to provide an affidavit stating that steel has been furnished in

accordance with the requirements of the drawings and the specifications, including specified minimum yield strength.

3.3.1.3 Handrails, Guardrails, and Toe Plates

Handrails and/or guardrails, except for preengineered equipment, will be fabricated from standard weight steel pipe and fittings, either galvanized or painted. Handrails will have toe plates where there is no curb.

3.3.1.4 Steel Grating and Grating Stair Treads

The steel to be used for grating and grating treads will conform to either ASTM A36 or ASTM A569. Grating will be rectangular and consist of welded steel construction. Grating will be hot-dip galvanized after fabrication.

Stair treads will have nonslip abrasive nosing and will have end plates for attaching to stringers. Outdoor grating will have a serrated surface.

The Hilti Grating Disk system, or equivalent, will be used for fastening. Grating will have at least a 1-inch bearing support.

Floor and platform openings necessitated by expansion and movement requirements around piping and equipment will be protected as follows:

- Openings more than 1-1/2 inches wide around penetrating objects will be protected by toe plates.
- Openings more than 8 inches wide around penetrating objects will be protected by toe plates and handrails.

3.3.1.5 Stairs and Ladders

Stairs will be the means of travel from one elevation to another. Vertical ladders, ship ladders, etc., will be installed only where personnel access is infrequent.

Fixed ladders will have safety cages and/or other fall prevention devices as required by the applicable codes and regulations. Stairs will have handrails on both sides.

3.3.2 Concrete and Reinforcing Steel

3.3.2.1 General

Materials for concrete will comply with ACI 301. Cement will be portland cement meeting the requirements of ASTM C150. Fine aggregates will be clean natural sand. Coarse aggregates will be crushed stone or gravel. Aggregates will conform to the chemical and physical requirements of ASTM C33. Only clean water of potable quality and satisfying the requirements of ASTM C94 will be used.

Admixtures such as plasticizers and retarders may be used to improve workability and control setting time. Concrete will have an entrained air content between 3 and 6 percent by volume. Air-entraining admixtures will meet ASTM C260 requirements. Water reducing admixtures will conform to ASTM C494, Type A. Calcium chloride or admixtures containing calcium chloride will not be used.

Concrete reinforcing will be deformed bars of intermediate grade billet steel conforming to ASTM A615, Grade 60, or welded wire fabric conforming to ASTM A185.

3.3.2.2 Mix Design

Concrete mix designs will be proportioned and furnished in accordance with ACI 211.1, ASTM C94, and CBC Section 1905. Proportions for the concrete mixture will be selected to meet the strength requirements specified in design documents. Generally, a minimum concrete compressive strength of 4,000 psi at 28 days will be required for structural concrete. Final concrete mix designs will be established based on historical strength performance data or trial mixtures meeting the requirements of Section 1905 of the CBC.

3.3.2.3 Testing and Material Certification

Certified mill test reports on chemical and physical properties confirming compliance with ASTM C150 will be required for each shipment of cement used.

Certificates of Conformance will be obtained from the supplier, certifying that aggregates used comply with the chemical and physical requirements of ASTM C33. Gradation analyses of fine and coarse aggregates, performed in accordance with ASTM C136, will also be provided.

The manufacturer will certify that the admixture provided conforms to the specified ASTM standard and that it contains no chlorides except those that may be contained in the water used in manufacturing the admixture.

The slump, air content, and temperature of the concrete at the point of discharge from the conveying vehicle will be tested in accordance with specified minimum testing frequencies. Concrete strength will be evaluated in accordance with ASTM C94 and CBC Section 1905.

Mill test reports certifying that reinforcing steel is in accordance with ASTM and project specifications will be required.

3.3.2.4 Design

Reinforced concrete structures will be designed by the Ultimate Strength Method in accordance with the CBC and ACI 318, Building Code Requirements for Reinforced Concrete.

3.4 Seismic Design Criteria

This section provides the general criteria and procedures to be used for the seismic design of buildings, structures, and structural components.

3.4.1 Seismic Performance Objectives

- The seismic performance objectives for this facility are as follows:
- Resist minor levels of earthquake ground motion without damage.
- Resist moderate levels of earthquake ground motion without structural damage, but with some nonstructural damage.

- Resist major levels of earthquake ground motion without collapse, but with some structural as well as nonstructural damage.

To achieve these objectives and to meet the requirements of the California Energy Commission (CEC) and local codes, the facility will be designed in accordance with the CBC.

3.4.2 General Criteria

The plant site is located in Seismic Zone 4 according to CBC Figure 16-2, Seismic Zone Map of the United States. For seismic load calculations, the Importance Factor for Category 3 structures (power plants) is 1.00 based on the 1998 CBC (Table 16-K).

Buildings and structures conforming to CBC Section 1629.8.3 will be designed using the static lateral force procedure of CBC Section 1630. Nonbuilding structures will be designed in accordance with CBC Section 1634.

Buildings and structures conforming to CBC Section 1629.8.4 will be designed using the dynamic lateral force procedure of CBC Section 1631. The ground motion representation used will be the elastic design response spectrum constructed in accordance with CBC Figure 16-3.

Lateral forces on elements of structures and nonstructural components supported by structures will be determined in accordance with CBC Section 1632 requirements.

Water storage tanks will meet the seismic design requirements of AWWA D100, Appendix H1.

3.5 Architecture

3.5.1 General

Architectural work will be in accordance with the applicable laws, ordinances, codes and industry standards, design criteria, guidelines, general requirements, and material selection specified in this section.

The plant will be laid out to accommodate the spaces required for plant equipment and operations. Aisles and clearances will provide access for operation, minor maintenance, and equipment removal. Personnel walkways to equipment (for routine maintenance only), doors, stairs, and other access points will be provided. Plant security and life safety features will also be considered in the plant layout.

3.5.2 Criteria

These criteria are intended to govern the architectural design of structures and facilities.

Safety, construction, fire protection and fire walls, and requirements for the physically handicapped will be in accordance with the requirements of the applicable local, state, and national codes and standards. Requirements of the Americans with Disabilities Act will also be included in the design where applicable.

Plant buildings will be single story preengineered buildings with insulated siding. For sloping roofs, roofing will be standing seam metal with insulation and a vapor barrier; for flat roofs, roofing will be single-ply membrane over metal decking with insulation. The Administration/Maintenance Building will house the control room, administrative offices, men's and women's toilets, conference room, lunchroom, utility rooms, and a warehouse/maintenance shop. The warehouse/maintenance shop, electrical rooms, and HVAC equipment spaces will have exposed structure. The remaining areas will have suspended acoustical ceilings.

Reinforced concrete grade slabs will be treated with a sealer and/or floor hardener, as applicable, to accommodate maintenance or laydown. Interior wall partitions will be concrete block masonry, concrete, or gypsum wallboard on metal studs. Stairs will be concrete, galvanized grating, or checkered plate. Floor drains will be provided as necessary.

3.5.3 Materials

Asbestos- and lead-containing materials will not be used in the facility.

3.5.3.1 Concrete Masonry

Concrete masonry unit (CMU) partitions will generally be used in traffic and spillage areas, in toilets and locker rooms, in the battery and electrical rooms, and as fire boundaries where required by code.

CMU will be both hollow, normal weight, nonload-bearing Type I conforming to ASTM C129, and load-bearing Grade N, Type I conforming to ASTM C90. Mortar will conform to ASTM C270, Type M. CMU will be reinforced as required.

Masonry structures will be designed and constructed in accordance with ACI 530, Building Code Requirements for Masonry Structures; ACI 530.1, Specifications for Masonry Structures; and Chapter 21 of the CBC.

3.5.3.2 Preformed Metal Siding

Exterior siding will be either an insulated or an uninsulated field assembled system. Exterior face panels will be 24 gauge minimum; interior face panels will be 22 gauge minimum. Panels will be fabricated from galvanized sheet steel.

The wall system will be designed to withstand the specified wind loading with practical and economical support girt spacing.

Wall insulation will be noncombustible glass fiber to produce a maximum U-factor of 0.08 Btu/h/ft/F.

3.5.3.3 Metal Studwall Partitions

Except when CMU partitions are required, ceiling height interior partitions will generally be of metal stud and painted gypsum board construction.

3.5.3.4 Roofing

Roofing will be either single-ply membrane over rigid insulation board, mechanically fastened to the metal roof deck, or standing seam metal with insulation and vapor

barrier. The completed roofing system will conform to UL requirements for Class A roofs and to Factory Mutual wind uplift Class 90. The completed roof will have an overall maximum U-factor of 0.05 Btu/h/ft/F.

3.5.3.5 Metal Roll-Up Doors

Roll-up doors will have insulated door curtains constructed of interlocking roll-formed galvanized steel slats to withstand the specified wind pressure. Doors will be manually operated.

3.5.3.6 Hollow Metal Doors, Frames, and Hardware

Personnel doors will be flush hollow metal on pressed steel door frames, with hinges, locksets, closers, weatherstripping, and accessory hardware. Fire doors and frames will conform to NFPA 80 for the class of door furnished.

3.5.3.7 Louvers

Louvers will be operable, extruded aluminum section alloy, with stainless steel fastenings and removable aluminum bird screen. Blades will be stormproof. Louver free area will be a minimum of 50 percent of louver face area. Louvers will be designed for manual or gravity operation.

3.5.3.8 Floor Finish

Floor finishes will generally be concrete with curing and sealing protection.

The battery room and other chemical areas will generally receive special coatings.

3.5.4 Painting

Generally, exposed wall surface, structures, and structural components will be prime painted or otherwise treated to protect them from corrosion in accordance with the applicable codes, industry standards, and manufacturer's recommendations.

3.5.4.1 Structural and Miscellaneous Steel

Structural and miscellaneous steel will receive shop applied inorganic zinc primer. Field touchup will be performed after erection. Structural steel requiring fireproofing will either receive no painting or a primer compatible with the selected fireproofing material.

3.5.4.2 Masonry Walls and Concrete Walls and Floors

Concrete floors in areas not exposed to chemical contaminants will not be coated. Indoor masonry walls in areas requiring paint but not exposed to chemical contaminants will be painted with one coat of acrylic filler and a compatible finish coat.

3.5.4.3 Gypsum Wallboard

Exposed surfaces will receive one coat each of sealer and compatible acrylic finish.

4.0 STRUCTURAL DESIGN METHODOLOGY

This section describes the structural aspects of the design of the proposed facility. Each major structural component of the plant is addressed by defining the design criteria and analytical techniques that will be employed.

4.1 <u>Structures</u>

4.1.1 Combustion Turbine Foundations

The combustion turbine foundations will be designed to support the turbine and generator components.

Each foundation will be designed to resist the loadings furnished by the manufacturer plus loadings from natural phenomena and structural framing, if applicable, and will be constructed of reinforced concrete.

4.1.1.1 Foundation Loads

Equipment foundation loads will be furnished by the combustion turbine manufacturer and will be combined with the other loads imposed on the foundation. Typical loading data supplied by the manufacturer include the following. The combustion turbine foundations will be designed for these loads:

- Dead loads
- Live loads
- Wind loads.
- Seismic loads
- Normal torque loads
- Normal machine unbalance loads
- Emergency loads, such as turbine accident or generator short circuit
- Thermal loads due to thermal expansion or contraction of the machines, connected piping, and turbine pedestal components
- Shrinkage and creep loads

4.1.1.2 Induced Forces

The combustion turbines and associated equipment will be securely anchored to their foundations using cast-in-place steel anchor bolts designed to resist the equipment forces and seismic or wind loads.

4.1.1.3 Structural System

The combustion turbine foundation system will consist of a reinforced concrete mat bearing directly on undisturbed soil or compacted fill.

4.1.1.4 Structural Criteria

Each foundation will be designed and constructed as a monolithic reinforced concrete structure using the criteria from Section 3.0 and Appendix H1, Section 3.1. The foundation design will address the following considerations:

- Allowable soil pressures
- Allowable settlements
- Equipment, structure, and environmental loads
- Factors of safety against overturning and sliding
- Equipment performance criteria
- Natural frequencies and dynamic effects of rotating equipment
- Access and maintenance

Soil pressures will satisfy the allowable bearing pressure criteria that will be developed during project detailed design to provide a minimum safety factor of 3 against bearing failure. Total and differential settlements will be limited to the values specified in Appendix H1, Section 3.1.2.

Environmental loadings will be determined in accordance with Sections 3.1 and 3.2. Foundation seismic loading will be calculated as specified in Section 3.4. Seismic forces will be applied at the center of gravity of the equipment.

Load combinations and their respective strength requirements for the foundation design will be as indicated in Sections 3.2.6 and 3.2.7. Factors of safety against overturning and sliding will satisfy the requirements of Section 3.2.8.

4.1.1.5 Analytical Techniques

Combustion Turbine Foundation. The mat foundation for the combustion turbine will be designed using static analysis techniques. If adequate rigidity is provided, the mat will be analyzed as a rigid mat foundation to determine the resulting soil pressures and

internal forces and moments. The foundation will be analyzed assuming a linear soil pressure distribution.

If its rigidity is in question, the foundation mat will be considered as a flexible system and modeled as a plate structure using 3-D plate bending elements. The interaction between the mat and supporting soil will be modeled using a system of vertical and horizontal springs attached to a fixed boundary. A computer analysis will be performed using finite element techniques.

The foundation will be checked for dynamic response to the operating turbine. A dynamic analysis will typically be performed by considering the mat foundation as rigid and using a lumped mass model. The lumped mass model will include soil springs and dashpots to account for soil and structure interaction. An analysis will be performed to determine the natural frequencies of the foundation using the lumped mass model. When the rigidity of the mat foundation is in question, the mat will be considered flexible and will be modeled by plate elements, and a dynamic analysis will be performed using finite element computer analysis.

To avoid resonance during machine operation, the resonant frequency of the foundation will typically be less than 80 percent or greater than 120 percent of the machine operating speed.

4.1.2 Stacks and Foundations

Each stack will be carbon steel with a separate reinforced concrete mat foundation bearing directly on undisturbed soil or compacted fill.

4.1.2.1 Foundation Loads

Foundation loads will be determined using project-specific design criteria. The design will include the following loads:

- Dead load
- Live loads

- Wind loads
- Seismic loads
- Temperature and pressure loads

4.1.2.2 Induced Forces

The stack will be securely anchored to its foundation using cast-in-place steel anchor bolts designed to resist the stack-induced forces.

4.1.2.3 Structural System

The steel stack will consist of a cylindrical steel shell that resists lateral loading as a fixed-base, cantilevered structure. The stack foundation system will consist of a reinforced concrete mat bearing directly on undisturbed soil or compacted fill.

4.1.2.4 Structural Criteria

The predominant forces acting on the stack will result from wind or seismic loading. The stack will be designed as indicated in this section.

The steel stack and supports will be capable of enduring specified normal and abnormal design operating conditions in combination with wind or seismic loads for the design life of the facility. The design will be in accordance with the design methods of ASME STS-1, Steel Stacks, and the AISC Manual of Steel Construction - Allowable Stress Design, except that increased allowable stresses for wind or seismic loadings will not be used.

Design values for yield strength and modulus of elasticity of the stack material will depend on the composition of the material and the maximum temperature of the metal at design operating conditions and will be as prescribed by the ASME Pressure Vessel Code, Section VIII, Division 2, Part AM.

Wind loads will be determined from the CBC, using Exposure Category C. Consideration will be given to along-wind and across-wind responses, ovalling, and interference

effects. Seismic loads will be determined in accordance with CBC Section 1634, Nonbuilding Structures.

The allowable longitudinal, circumferential, and shear stresses for the design of the stack shell will be determined in accordance with ASME STS-1.

The minimum shell thickness will be 1/4 inch plus 1/16 inch corrosion allowance. The corrosion allowance will be considered in the generation of seismic loads but not in the resistance to seismic or wind loads. Allowable stresses for stiffeners, platform members, and other miscellaneous steel components will be in accordance with the AISC Specification for Structural Steel Buildings, Allowable Stress Design and Plastic Design. Allowable stresses for the shell will not be increased for wind or seismic loadings.

Each foundation will be designed and constructed as a monolithic reinforced concrete structure using the criteria from Section 3.0 and Appendix H1, Section 3.1. The foundation design will address the following considerations:

- Allowable soil pressures
- Allowable settlements
- Structure and environmental loads
- Factors of safety against overturning and sliding

Soil pressures will satisfy the allowable bearing pressure criteria that will be developed during project detailed design to provide a minimum safety factor of 3 against bearing failure. Total and differential settlements will be limited to the values specified in Appendix H1, Section 3.1.2.

Load combinations and their respective strength requirements for the foundation design will be as indicated in Sections 3.2.6 and 3.2.7. Factors of safety against overturning and sliding will satisfy the requirements of Section 3.2.8.

4.1.2.5 Analytical Techniques

Stack moments, shears, and axial forces will be calculated using static analysis procedures on a cantilevered member. Longitudinal stresses resulting from axial loads and flexure will be combined and compared to a single allowable stress.

Circumferential stresses will also be compared to a single allowable value. Interaction between longitudinal and circumferential stresses will be considered.

The stack foundation will typically be designed using static analysis techniques assuming a rigid mat.

4.1.3 Buildings and Enclosures

The various plant buildings and enclosures will provide support, protection, and access to the systems contained within their boundaries. Generally, each building and enclosure will be one story and preengineered.

4.1.3.1 Foundation Loads

Foundation loads will be determined from the analysis and design of the superstructure and from the support of the equipment contained within the structure. The following loads will be considered:

- Dead loads
- Live loads
- Equipment and piping loads
- Wind loads
- Seismic loads

4.1.3.2 Induced Forces

Each building and enclosure will be securely anchored to its foundation using cast-in-place steel anchor bolts designed to resist any induced forces.

4.1.3.3 Structural System

Buildings and enclosures will be designed as AISC Type 1 rigid frames or as Type 2 simple braced frames. For the purpose of resisting seismic lateral loads, the structures will be classified as regular structures with a concentric braced frame, an ordinary moment-resisting frame, or a special moment-resisting frame, in accordance with the definitions of the CBC Chapters 16 to 22.

The foundation systems for buildings and enclosures will consist of individual spread footings to resist the column loads with an isolated slab-on-grade floor system.

4.1.3.4 Structural Criteria

Building and enclosure steel frames will be designed and constructed using the materials and criteria set forth in Section 3.0.

Environmental loading will be determined in accordance with Sections 3.1 and 3.2. Seismic loading for the buildings and enclosures will be calculated using equivalent static lateral forces applied to the structure in accordance with the procedures of CBC Section 1630 or dynamic lateral forces in accordance with CBC Section 1631.

Building and enclosure foundations will be designed and constructed using reinforced concrete according to the criteria set forth in Section 3.0 and Appendix H1, Section 3.1. The foundation design will address the following considerations:

- Allowable soil pressures
- Allowable settlements
- Equipment, structure, and environmental loads
- Factors of safety against overturning and sliding
- Equipment performance criteria
- Access and maintenance

Soil pressures will satisfy the allowable bearing pressure criteria that will be developed during project detailed design to provide a minimum safety factor of 3 against bearing failure. Total and differential settlements will be limited to the values specified in Appendix H1, Section 3.1.2.

Load combinations and their respective strength requirements for the foundation design will be as indicated in Sections 3.2.6 and 3.2.7. Factors of safety against overturning and sliding will satisfy the requirements of Section 3.2.8.

4.1.3.5 Analytical Techniques

Building and enclosure foundations will be designed as simple spread footings or mat foundations, using static analysis techniques. The foundations will be analyzed assuming a linear soil pressure distribution.

4.2 Tanks

4.2.1 Field-Erected Storage Tanks

Field-erected storage tanks will typically be vertical, cylindrical shells of stainless steel or carbon steel construction with a protective interior coating. Tank roofs will be either self-supported domes or cones. Tank bottoms will be ground-supported, flat-bottomed, with a slope of 1 percent. Tanks will have ladders, landing platforms, and handrails to provide access to working areas. Vents, manholes, overflow piping, and grounding lugs will be provided as necessary.

4.2.1.1 Foundation Loads

Foundation loads will be determined using project-specific design criteria. Tank and foundation design will include the following loads:

- Dead loads (including contained fluid load)
- Live loads
- Wind loads

- Seismic loads (including hydrodynamic loads)

4.2.1.2 Induced Forces

Storage tanks will be securely anchored to their foundations using cast-in-place steel anchor bolts designed to resist tank-induced forces.

4.2.1.3 Structural System

Each tank will be a cylindrical steel shell that resists lateral loading through shear in the tank wall. Anchor bolts connecting the tank wall to the foundation will resist overturning.

The tank foundation system will typically consist of a reinforced concrete ringwall or mat foundation. The interior of the ring will consist of compacted backfill with a layer of compacted sand to serve as a bearing surface for the tank bottom. If soil conditions could result in excessive settlements or soil overstress, a complete concrete mat may be required.

4.2.1.4 Structural Criteria

Tank structures will be designed and constructed using the criteria established in AWWA D100 or NFPA 22, as applicable.

Foundations will be designed and constructed as reinforced concrete structures using the criteria from Section 3.0 and Appendix H1, Section 3.1. Foundation design will address the following considerations:

- Allowable soil pressures
- Allowable settlements
- Fluid, structure, and environmental loads
- Factors of safety against overturning and sliding

Soil pressures will satisfy the allowable bearing pressure criteria that will be developed during project detailed design to provide a minimum safety factor of 3 against bearing

failure. Total and differential settlements will be limited to the values specified in Appendix H1, Section 3.1.2.

Environmental loadings will be determined in accordance with Sections 3.1 and 3.2. Seismic loads will be determined in accordance with Section 3.4 and AWWA D100, Section 13.

Load combinations and their respective strength requirements for the foundation design will be as indicated in Sections 3.2.6 and 3.2.7 and in Section 3 of AWWA D100. Factors of safety against overturning and sliding will satisfy the requirements of Section 3.2.8.

Tank foundation design will include the moment resulting from lateral displacement (hydrodynamics) of the tank contents in accordance with AWWA D100, Section 13.3.3.2.

4.2.1.5 Analytical Techniques

Tank foundations will typically be designed as circular ringwalls using static analysis techniques. Each ringwall will be proportioned to resist the design load of the tank and the maximum overturning moment due to wind or seismic loading. The ringwall will also be proportioned to resist maximum anchor bolt uplift force. Circumferential reinforcing steel will be provided in the ringwall to develop the hoop stress produced by the lateral soil pressure within the ringwall.

Tank structures will be designed and proportioned so that during the application of any load, or combination of loads, the allowable stresses stipulated in AWWA D100 are not exceeded.

4.2.2 Shop Fabricated Storage Tanks

Shop fabricated storage tanks will be either vertical or horizontal, cylindrical, carbon steel shells. The tanks will have ladders, landing platforms, and handrails, to provide access to working areas. Each tank will have nozzles for fill connection, fill drain, overflow, vent connections, manholes, and grounding lugs as necessary.

4.2.2.1 Foundation Loads

Foundation loads will be furnished by the tank manufacturer and will be superimposed with loads for the foundation itself.

Typical loadings supplied by the manufacturer include the following:

- Dead loads
- Live loads
- Wind loads
- Seismic loads (including hydrodynamic loads)
- Temperature and pressure loads

4.2.2.2 Induced Forces

Each tank will be securely anchored to its foundation using cast-in-place steel anchor bolts or concrete expansion anchors designed to resist tank-induced forces.

4.2.2.3 Structural System

Each tank will consist of a cylindrical steel shell, either supported by integral legs or saddle supports, or with a flat bottom bearing directly on the foundation.

Foundations will typically consist of individual pads bearing directly on undisturbed soil or compacted fill. For tanks located in buildings, the pads may be constructed integrally with the grade slab.

4.2.2.4 Structural Criteria

Tanks will be designed by a tank manufacturer in accordance with the relevant ASME code, ANSI code, and ASTM standards.

Foundations will be designed and constructed as monolithic reinforced concrete structures using the criteria from Section 3.0 and Appendix H1, Section 3.1. Foundation design will address the following considerations:

- Allowable soil pressures
- Allowable settlements
- Fluid, structure, and environmental loads
- Factors of safety against overturning and sliding

Soil pressures will satisfy the allowable bearing pressure criteria that will be developed during project detailed design to provide a minimum safety factor of 3 against bearing failure. Total and differential settlements will be limited to the values specified in Appendix H1, Section 3.1.2.

Environmental loadings will be determined in accordance with Sections 3.1 and 3.2. Seismic loading will be calculated using equivalent static lateral forces applied at the center of gravity of the tank or tank component in accordance with the criteria specified in Section 3.4.

Load combinations and their respective strength requirements for the foundation design will be as indicated in Sections 3.2.6 and 3.2.7. Factors of safety against overturning and sliding will satisfy the requirements of Section 3.2.8.

4.2.2.5 Analytical Techniques

The tank foundations will typically be designed using static analysis techniques assuming a rigid mat. The foundations will be analyzed assuming a linear soil pressure distribution. The mats will be proportioned so that the resultant of the soil pressure coincides as nearly as possible with the resultant of the vertical loading.

The tanks will be designed and analyzed by a tank manufacturer to satisfy the requirements of the relevant ASME code, ANSI code, and ASTM standards.

4.3 Equipment and Equipment Foundations

Plant equipment will be designed in accordance with manufacturers' standards and applicable codes and industry standards. Equipment will be designed to resist project-specific environmental loadings, as applicable.

Foundations will be designed to resist the loadings furnished by the manufacturers and will be constructed of reinforced concrete.

Specific criteria for the combustion turbine foundations are addressed in Section 4.1.1.

4.3.1 Equipment/Foundation Loads

Equipment and foundation loads will be determined by the manufacturers using project-specific design criteria. Typical loadings used for design will include the following:

- Dead loads
- Live loads
- Operating loads
- Wind loads
- Seismic loads
- Emergency loads

Foundation loads furnished by the equipment manufacturers will be superimposed with loads for the foundation itself.

4.3.2 Induced Forces

The equipment will use steel anchor bolts, concrete expansion anchors, welds, and other equipment anchorage devices to resist equipment-induced forces.

4.3.3 Structural System

Foundations will typically consist of individual pads bearing directly on undisturbed soil or compacted fill. For equipment located in buildings, the pads may be constructed integrally with the grade slab.

4.3.4 Structural Criteria

Plant equipment will be designed to resist project-specific criteria in accordance with the manufacturers' standards and applicable codes and industry standards.

Environmental loading will be determined in accordance with Sections 3.1 and 3.2. Seismic loading will be calculated using equivalent static lateral forces applied at the center of gravity of the equipment or component in accordance with the criteria specified in Section 3.4.

Seismic lateral forces on equipment supported by structures will be determined in accordance with CBC Section 1632, with Z equal to 0.4, Ip equal to 1.5 for fire equipment and 1.0 for other equipment, and Ca in accordance with CBC Table 16-Q. Equipment bases, foundations, support frames, and structural members used to transfer equipment seismic forces to the main lateral load-resisting system will be designed for the same seismic load as the equipment.

Integral support structures provided by manufacturers with their equipment, such as the combustion turbine air inlet support structure, will be designed to resist, at a minimum, the lateral forces specified in CBC Section 1634, Nonbuilding Structures, and the applicable criteria of Section 3.4.

Load combinations will be as indicated in Section 3.2.6. These load combinations are in addition to those normally used in design and those specified in applicable codes and standards.

Equipment foundations will be designed and constructed as monolithic reinforced concrete structures using the criteria from Section 3.0 and Appendix H1, Section 3.1. The foundation design will address the following considerations:

- Allowable soil pressures
- Allowable settlements
- Equipment and environmental loads
- Factors of safety against overturning and sliding
- Equipment performance criteria
- Access and maintenance

Soil pressures will satisfy the allowable bearing pressure criteria that will be developed during project detailed design to provide a minimum safety factor of 3 against bearing failure. Total and differential settlements will be limited to the values specified in Appendix H1, Section 3.1.2.

Load combinations and their respective strength requirements for the foundation design will be as indicated in Sections 3.2.6 and 3.2.7. Factors of safety against overturning and sliding will satisfy the requirements of Section 3.2.8.

4.3.5 Analytical Techniques

Equipment foundations will typically be designed using static analysis techniques assuming a rigid mat. Foundations will be analyzed assuming a linear soil pressure distribution. Mats will be proportioned so that the resultant of the soil pressure coincides as nearly as possible with the resultant of the vertical loading.

Equipment will be designed and analyzed by the manufacturer to satisfy the requirements of the relevant codes and industry standards.

5.0 HAZARD MITIGATION

The project will be designed to mitigate natural and environmental hazards caused by seismic and meteorological events. This section addresses the structural design criteria used to mitigate these hazards.

5.1 Seismic Hazard Mitigation Criteria

Appendix H1 and this appendix describe the civil and structural design criteria that will be applied to the project.

Project seismic design criteria were selected based on the following considerations:

- Compliance with applicable laws, ordinances, regulations, codes, and life safety
- Structural behavior and performance
- Reliability of the plant
- Financial impacts from seismically induced outages
- Seismic probability and magnitude

The project seismic design criteria were developed to incorporate these considerations using a systematic approach to correlate performance criteria with assumed risk level. The following procedure was used to establish the design criteria:

- The seismic hazards were assessed by studying the geologic features of the surrounding area. Major faults were identified, and information was collected regarding each fault's proximity, capability, recurrence, and magnitude.
- The seismic risk associated with each source was assessed considering historical magnitudes.
- Appropriate design criteria and analysis methods consistent with the seismic performance criteria were established for each major plant structure, equipment, and component.
- A site seismic Zone 4 was determined to be appropriate for structural design.

- CBC Figure 16-3 was selected to provide acceleration levels when using the CBC dynamic lateral force procedure. Acceleration levels for various structural frequencies will be based on CBC Figure 16-3, Design Response Spectra Shapes.

Specific design features that will be incorporated into the plant to mitigate the identified seismic hazards include the following:

- Appropriate analysis techniques will be employed to calculate structure-specific seismic loads.
- Plant structures, equipment, piping, and other components will be designed to resist the project-specific seismic loads.
- Critical equipment will be positively anchored to its supporting structure.
- Anchorages will be designed to resist project-specific seismic loadings.
- Adequate factors of safety against overturning and sliding due to seismic loads will be provided.
- The design of piping connections to structures, tanks, and equipment will consider differential seismic displacements between components.
- Adjacent structures will be seismically isolated from one another.
- Structural elements will be designed to comply with special detailing requirements intended to provide ductility.
- Connections for steel structures will have a minimum load carrying capability without regard to the calculated load.
- Lateral and vertical displacements of structures and elements of structures will be limited to specified values.
- Appropriate measures will be taken to prevent saturation of foundation soils and eliminate the potential for soil liquefaction.

The foregoing design features are intended to provide the degrees of safety for structures and equipment as follows:

- Resist minor earthquakes without damage. Plant remains operational.

- Resist moderate earthquakes without structural damage but with some nonstructural damage. Plant remains operational or is returned to service following visual inspection and/or minor repairs.

- Resist major earthquakes without collapse but with some structural and nonstructural damage. Plant is returned to service following visual inspection and/or moderate repairs.

5.2 Meteorological and Climatic Hazard Mitigation

Meteorological and climatic data were used to establish the project design basis. Portions of the data and the design bases that pertain to structural engineering are provided in this appendix.

Specific design features which will be incorporated into the plant to mitigate meteorological and climatic hazards include the following:

- Structures and cladding will be designed to resist the wind forces.

- Sensitive structures will be designed for wind-induced vibration excitation.

- Roofs will be sloped and equipped with drains to prevent accumulation of rainfall.

- Site drainage systems will be designed to convey the runoff from a 25 year storm event with a time of concentration of 10 minutes.

- Ground floor levels of structures will be placed above probable flood levels.

- Building drainlines will be installed with backflow prevention devices where necessary.

- The bases of plant equipment will be placed above probable flood levels.

- The plant site will be graded to convey runoff away from structures and equipment.

The foregoing design features will be incorporated in accordance with the applicable codes and standards identified in this appendix.

The degree of safety offered by these features is consistent with the requirements of the applicable codes and standards and the economic benefits these features provide.

Appendix H3

Mechanical Engineering Design Criteria

MECHANICAL ENGINEERING DESIGN CRITERIA

1.0 INTRODUCTION

This section covers the design criteria which will be used for all mechanical work related to this project.

2.0 DESIGN CODES AND STANDARDS

The design and specification of all work shall be in accordance with all applicable federal and state laws and regulations of California, and with the applicable local codes and ordinances. A summary of the codes and industry standards to be used in design and construction are listed below with clarifications where necessary.

- ASME B1.1 – Unified Inch Screw Threads (GE complies at the customer's connection)
- ANSI B1.20.1 – Pipe Threads, General Purpose (inch)
- ASME B16.5 – Pipe Flanges and Flanged Fittings NPS 1/2 through NPS 24
- ASME B16.9 – Factory-Made Wrought Steel Butt Welding Fittings
- ASME B31.1 – Power Piping
- ASME, Boiler and Pressure Vessel Code/Sec. VIII, Div. 1 – Pressure Vessels
- NFPA30 – Flammable and Combustible Liquids Code Handbook
- ANSI B133.2 – Basic Gas Turbine (GE complies, with the exceptions of paragraph: Loose items such as jackscrews and eyebolts are not furnished. Provisions for use of such items are not included in the design.)
- ANSI B133.3 – Procurement Standard for Gas Turbine Auxiliary Equipment (GE complies fully with design portions only. GE uses its own lube oil flushing procedure. Atomizing air receiver is not applicable.)
- ANSI B133.4 – Gas Turbine Control and Protection Systems
- UBC – Uniform Building Code (used for wind loads and seismic design)
- AISC – Structural Steel

Other recognized standards will be used as required to serve as design, fabrication, and construction guidelines when not in conflict with the above listed standards.

The codes and industry standards used for design, fabrication, and construction will be the codes and industry standards, including all addenda, in effect as stated in equipment and construction purchase or contract documents.

3.0 PIPING

Piping will be designed, selected, and fabricated in accordance with the following criteria.

3.1 Design Temperature and Pressure

The design pressure and temperature for piping will be consistent with conditions established for the design of the associated system.

The design pressure of a piping system generally will be based on the maximum sustained pressure that may act on the system plus 25 psi. All design pressure values will be rounded up to the next 10 psi increment.

The design temperature of a piping system generally will be based on the maximum sustained temperature which may act on the system plus 10° F. The piping design temperature will be rounded up to the next 5° F increment.

Fire water piping will be designed and tested in accordance with NFPA requirements.

3.2 General Design and Selection Criteria

Piping will be designed in accordance with the requirements of the Code for Pressure Piping, ASME B31.1--Power Piping, or other codes and standards referenced in Section 2.2 of this appendix, as applicable.

Minimum wall thicknesses of straight steel pipe under internal pressure will be designed in accordance with Paragraph 104.1.2 of ASME B31.1.

Allowance for variations from normal operation, consideration for local conditions, and transients will be in accordance with Paragraphs 102.2.4 and 102.2.5 of ASME B31.1.

The value of A (thickness allowance) must be selected to compensate for material removed in threading, corrosion, and erosion, and to provide mechanical strength. The following minimum allowances should be applied:

- Special wall piping 2-1/2 inches and larger – The value of A will be 0.0625 inch.
- Schedule wall piping 2-1/2 inches and larger – The value of A will generally be zero except when additional thickness is considered necessary for a specific service.
- Schedule wall piping 2 inches and smaller – The value of A should be selected to provide adequate mechanical strength. An A value of 0.0625 inch is suggested, but is not mandatory.
- Threaded piping – The value of A will equal the depth of thread.

The pressure temperature ratings for plain end seamless schedule wall pipe will be based on minimum wall values which are 87-1/2 percent of the nominal pipe wall thicknesses with the value of A equal to zero. This will make allowance for the minus 12-1/2 percent manufacturing tolerance on wall thickness.

The pressure temperature ratings for fusion welded, or forged and bored, schedule wall pipe will be based on the appropriate manufacturing tolerances and the required A value.

Material selection will generally be based on the design temperature and service conditions in accordance with the following:

- Carbon steel piping materials will be used for design temperatures less than or equal to 750° F.

- Stainless steel piping materials will be used for piping generally subjected to highly corrosive service applications.

- Fiberglass reinforced plastic piping materials will be used only in applications requiring corrosion-resistant materials.

- Plastic piping having a high coefficient of thermal expansion will be used only after a thorough analysis of the piping system thermal expansion parameters.

The above listed materials, or other suitable piping materials listed in Section 2.3, will be used where required for special service to meet specific requirements.

3.3 Miscellaneous Piping Design and Selection Criteria

The minimum pipe size and wall thickness for miscellaneous piping, other than instrument primary piping, will generally be in accordance with the following criteria:

- The pipe size for piping, except as described above, with a design pressure of 600 psi or less, and with a design temperature of 750° F or less, will be 1/2 inch minimum.

- The wall thickness for piping 2 inch nominal size and smaller will be Schedule 80 for carbon steel and alloy pipe, and Schedule 40S for stainless steel pipe minimum.

3.4 Instrument Primary Piping Design and Selection Criteria

Instrument primary piping will generally be designed in accordance with the following criteria:

- Piping and instrument diagrams will indicate the size and selection information for piping through the root valves. The line sizes and selection information of tubing piping after the root valves will not be called out on the piping and instrument diagram. The size requirements for instrument primary piping are stated in Appendix H4.

- Pressure connections and piping through the root valves for all pressure indicators, pressure switches, pressure transmitters, etc., will be 3/4 inch.

- Temperature indicators, temperature controllers, temperature switches, temperature detectors, and test well connections will be 3/4 inch NPT.

- Flow transmitter connections and piping through the root valves will be 1 inch for all piping except orifice flanges, where 1/2 inch piping and valves will be used.

- Level switch connections and piping through root valves will be 1 inch.

- Level controllers and level transmitters of the displacement type will have connections and piping through root valves of 2 inches.

- Level controllers and level transmitters of the differential pressure type will have connections and piping through root valves conforming to the requirements for miscellaneous piping in Subsection 2.3.3.

- Level transmitters on tanks and vessels will be installed with isolation valves.

- Instrument columns at tanks and pressure vessels will generally be 2 inch minimum.

3.5 Vent and Drain Piping Design Criteria

Vent and drain piping will generally be in accordance with the following criteria:

- Vent connections will be provided at all high points in water and oil piping, and all high points in other piping which will be hydrostatically tested.

- Drain connections will be provided at all nondrainable points in water and oil piping, and all other piping which will be hydrostatically tested.

- All vent and drain connections will be provided with isolation valves. Vent and drains will use full ported valves where practical to resist pluggage. Low-pressure water systems with design pressures of 150 psi or less will use ball valves. Other systems will use gate valves. Alternatively, if the use of full-ported valves is not possible, gate valves will be used.

- Vent and drain connections that require frequent operation or which may discharge significant quantities of fluid will be piped to a suitable drain. Vent or drain connections that will normally require operation at a time when hot fluids will be discharged will be piped to a safe termination point (drain funnel or floor area discharge). All other vent and drain connections will be capped.

3.6 Piping Materials

Piping materials will be in accordance with applicable ASTM and ANSI standards. Materials to be incorporated in permanent systems will be new, unused, and undamaged. Piping materials will generally be in accordance with the following criteria:

- Steel and Iron Pipe – Carbon steel piping through 18 inch nominal size will be A106 Grade B seamless with the indicated grades as a minimum.

Stainless steel pipe will be ASTM A3l2 Grades TP 304, TP 304L, TP 316, or TP 316L piping. All stainless steel piping materials will be seamless and fully solution annealed prior to fabrication. The Type 316 materials will be utilized for high resistance to corrosion. The Type 316L materials will be utilized for applications requiring hot working (welding, etc.), when the piping will handle solutions that are high in chlorides.

Schedule numbers, sizes, and dimensions of all carbon steel pipe will conform to ASME B36.10. Sizes and dimensions of stainless steel pipe designated as Schedule 10S, 40S, or 80S will conform to ANSI B36.19. Schedule numbers, sizes, and dimensions of stainless steel pipe not designated as 10S, 40S, or 80S will conform to ASME B36.10.

Steel plate piping will be of the welded straight seam type.

- Ductile Iron Pipe – Mechanical joint or push-on joint ductile iron pipe will conform to ANSI/AWWA C151/A21.51. Flanged ductile iron pipe will conform to ANSI/AWWA C115/A21.15.

- Copper Alloy Pipe – Copper alloy pipe will conform to ASTM B43, Seamless Red Brass Pipe.

- Fiberglass Reinforced Plastic (FRP) Pipe – FRP pipe will be chosen in accordance with the specific service requirements.

- Polyvinyl Chloride (PVC) Pipe – PVC pipe will conform to ASTM D1785 or ASTM D2241.

- Chlorinated Polyvinyl Chloride (CPVC) Pipe – CPVC pipe will conform to ASTM F441 or ASTM F442.

3.7 Tubing Materials

Tubing materials will generally be in accordance with the following criteria:

- Stainless Steel Tubing – Stainless steel tubing will conform to ASTM A213, Type 316 seamless. All stainless steel tubing will be of the fully annealed type, with a carbon content greater than 0.04 percent. Stainless steel tubing for use with tubing fittings will not exceed Rockwell B80 hardness.

- Tubing Wall Thickness – Wall thickness for tubing 3/4 inch and smaller, not protected by enclosures, will not be less than the following. Heavier wall tubing will be used where required for specific design pressure and temperature conditions:

Wall Thickness

Outside Diameter of Tubing inch	Stainless Steel inch
1/4	0.035
3/8	0.035
1/2	0.049

3.8 Fitting Materials

Fittings will be constructed of materials equivalent to the pipe with which they are used:

- Steel Fittings – Steel fittings 2-1/2 inches and larger will be of the butt welding type, and steel fittings 2 inches and smaller will be of the socket welding type.

- Butt Welding Fittings – The wall thicknesses of butt welding fittings will be equal to the pipe wall thickness with which they are used. The fittings will be manufactured in accordance with ASME B16.9, ASME B16.28, and ASTM A234 or ASTM A403.

- Forged Steel Fittings – Forged steel fittings will be used for socket-weld and steel threaded connections and will conform to ASME B16.11. The metal thicknesses in the fittings will be adequate to provide actual bursting strengths equal to or greater than those of the pipe with which they are used.

The minimum class rating of socket-weld and threaded fittings used with various pipe schedules will be as follows:

	Minimum Fitting Class Ratings	
Pipe Schedule No.	Threaded	Socket Welding
80 or less	2,000	3,000
120 or 160	3,000	6,000
Double extra strong	6,000	9,000

- Cast Steel Flanged Fittings – Cast carbon steel flanged fittings will conform to ASME B16.5 and will be of materials conforming to ASTM A216 WCB.

- Adapters – Specially designed adapters may be used in lieu of reducing outlet tees for the run and branch sizes specified. Specially designed adapters must be postweld heat treated as specified in ASME B31.1. Specially designed adapters will be Weldolets or Sweepolets as manufactured by Bonney Forge and Tool Works, WFI, or equal.

Branch connections 2 inches and smaller will be made with special reinforced welding adapters, Bonney Forge and Tool Works Thredolets or Sockolets or equal, or will be special welded and drilled pads.

- Ductile Iron Fittings – Mechanical joint or push-on joint ductile iron fittings will conform to ANSI/AWWA C110/A21.10 and ANSI/AWWA C111/A21.11. Flanged ductile iron fittings will conform to ANSI/AWWA C110/A21.10.

- Cast Iron Fittings – Cast iron fittings will conform to ASTM A126, Class B.

- Brass and Bronze Fittings – Screwed brass and bronze pipe fittings will conform to ASME B16.15. Flanged brass and bronze pipe fittings will conform to ASME B16.24.

- Fiberglass Reinforced Plastic (FRP) Fittings – Fittings for use with FRP pipe will be manufactured from material of the same type as the pipe. Joints will be as required by the application. Filament wound or molded fittings will be used as required by the application.

- Polyvinyl Chloride (PVC) Fittings – PVC pipe fittings will be manufactured from PVC material of the same type as the pipe with which they are used.

The fittings will have socket ends with internal shoulders designed for solvent cementing.

- Chlorinated Polyvinyl Chloride (CPVC) Fittings – CPVC pipe fittings will be manufactured from CPVC material of the same type as the pipe with which they are used. The fittings will have socket ends with internal shoulders designed for solvent cementing.

- Tubing Fittings – Stainless steel fittings will be used with stainless steel tubing. Fittings for use with stainless steel tubing in sizes smaller than 3/4 inch will be of the flareless "bite" type. Fittings for use with tubing in sizes 3/4 inch and larger will be socket-weld type conforming in general design to ASME B16.11. Fitting material and bursting strength will be equivalent to the tubing with which they are used.

3.9 Flanges, Gaskets, and Unions

Flanges mating with flanges on piping, valves, and equipment will be of sizes, drillings, and facings that match the connecting flanges of the piping, valves, and equipment.

Flange class ratings will be adequate to meet the design pressure and temperature values specified for the piping with which they are used.

Flanges will be constructed of materials equivalent to the pipe with which they are used.

Flanges for orifices will be of the orifice flange type.

Flanges 2-1/2 inches and larger will be of the weld neck or slip-on type and all steel flanges 2 inches and smaller will be of the socket type. Slip-on flanges will generally be used only when the use of weld neck flanges is impracticable. Steel flanges will have raised face flange preparation. Flat face flanges will be used to mate with cast iron, ductile iron, fiberglass reinforced plastic, polyvinyl chloride, chlorinated polyvinyl chloride, or bronze flanges.

Flanges and fittings manufactured in the People's Republic of China shall be in accordance with the 1994 quality assurance program that has been implemented by the Chinese Center of Boiler and Pressure Vessel Inspection and Research of the Ministry of Labor (CBPVI). Flanges and fittings manufactured under the control of this program shall:

- Be stamped with the mark of the CBPVI
- Have markings as required by ASME B16.5
- Bear the official stamp of CBPVI on all relevant quality inspection reports

Compressed fiber gaskets will be used with flat face flanges. Flexitallic Spiral Wound Gaskets will be used with all Class 150 socket weld flanges and raised face flanges. Gaskets containing asbestos will not be used.

Gaskets will be suitable for the design pressures and temperatures.

Piping unions will be of the ground joint type constructed of materials equivalent in alloy composition and strength to other fittings in the piping systems in which they are installed. Union class ratings and end connections will be the same as the fittings in the piping systems in which they are installed.

3.10 Cathodic Protection

Underground carbon steel, stainless steel, copper, or brass piping will be electrically isolated from aboveground piping and other metallic components, and will be provided with a bonded, dielectric coating system to allow the underground piping to be cathodically protected. Isolation from aboveground piping will be achieved by installation of isolation flanges with insulating gaskets, sleeves, and washers. For piping 2 inches and smaller, insulating unions may be used for isolation from aboveground piping. Cathodically protected piping routed into concrete foundations will be isolated from reinforcing steel with a wrapping of polyethylene mesh over the coating system.

3.11 Inspection and Testing

Inspection and testing of piping will be performed in accordance with the requirements of the applicable code, and in accordance with the following criteria.

Pressure testing of piping assemblies, including hydrostatic, pneumatic, and in-service leak testing, will be performed on the system assemblies upon the completion of erection. Shop leak testing of piping will not be required. All underground piping to be tested will be

given the test prior to covering the line. Testing will be performed in accordance with the following methods:

- Hydrostatic testing of all piping, except as otherwise discussed herein or for which a pneumatic leak test will be provided, will be performed with cold water at 1-1/2 times the design pressure of the piping.

Piping for which isolation by valving or blanking is impractical (open ended vents and drains after the last valve, safety valve vent stacks, etc.) will not be hydrostatically tested. Piping between isolation valves and connected equipment that is not leak tested will not be hydrostatically tested. Piping connected to equipment that is leak tested will be hydrostatically tested at the lowest test pressure of items involved in that test (pumps and discharge piping to the first isolation valve will be tested at the pump suction piping test conditions, if the suction test conditions are lower). Temporary piping for use only during construction will not be hydrostatically tested.

- Pneumatic testing will be provided for all pressure piping that should not be subject to water filling. This will generally include the following piping:
  - Lube oil piping
  - Low-pressure (design pressure less than or equal to l50 psi) compressed gas piping conveying natural gas and ammonia
  - Compressed air piping

Instruments will be carefully protected against overpressure during testing of piping.

- In-service leak testing will be performed for all pressure piping that is not hydrostatically or pneumatically tested by tests that are in full accordance with the applicable code.

Nondestructive testing of piping will be performed in accordance with applicable codes.

3.12 Pipe Supports and Hangers

The term "pipe supports" includes all assemblies such as hangers, floorstands, anchors, guides, brackets, sway braces, vibration dampeners, positioners, and any supplementary steel required to attach pipe supports.

3.12.1 Design and Selection Criteria

All support materials and their design will be in accordance with the latest applicable provisions of the Power Piping Code, ASME B31.1.

Structure attachment components will be fastened by welding or bolting. Pipe supports will be attached to concrete by cast-in-place anchor bolts, studs, expansion bolts, or plates. Expansion bolts with a minimum pullout safety factor of five will be used.

Expansion bolts will be cone-expansion type, conforming to Federal Specification FF-S-325, Group II, Type 4, Class l or 2. Minimum thickness of cast-in-place steel plate bearing against concrete will be as follows:

Supported Pipe Size nominal inches	Plate Thickness inch
4 and smaller	1/4
6	3/8
8	1/2
10 through 18	3/4
20 and larger	1

Pipe attachments will be rigid relative to the piping and insulation and will extend sufficiently outside insulation, if any, to permit free installation and operation of other support components. Insulation protection saddles or components will be used where required to prevent damage to insulation. On piping other than steel or iron, the piping manufacturer's recommendations will be followed.

Material for clamps, lugs, bolts, studs, and nuts will be carbon steel for piping 750° F or less, and will be alloy steel for piping more than 750° F. Piping attachments for nonmetallic pipe will meet the following minimum requirements:

- The minimum recommendations of the piping manufacturer will be met.
- Piping attachments will not bear load by a point. Their width will equal or exceed the square root of the outside diameter of the piping (thus, 4 inch OD piping minimum clamp width equals 2 inches), and they will bear around 120 degrees or more of the circumference.
- In general, clamps will not be clamped tight and hard on the piping. Where piping attachment must grip the piping by clamping, a soft, Shore 50-60 rubber pad will be provided between the clamp and the piping, and the clamp will be formed to fit the padding.

The top surface of riser clamps will be flat and normal to the pipe.

Riser lugs will be sized in accordance with Welding Research Council Bulletin No. 198 and the requirements of ASME B31.1.

Trapezes will be constructed from structural tubing or from double channels positioned back-to-back with space between for the hanger rods and with washer plates welded to channel tops and bottoms. Washer plates shall be used at all hanger rod attachment points.

Hanger rods will be constructed of solid round steel bars. Maximum allowable stress in a rod will be 9,000 psi average at the thread root cross-sectional area, or 12,000 psi in nonthreaded rods. Pipe, strap, chain, or other similar materials will not be permitted in place of rods.

Screw threads will be in conformance with ASME B1.1. Stress areas for threaded rods will be equal to or larger than the following American National Standard Unified Inch Screw Thread Series:

Nominal Rod Diameter inches	Thread Series
3/8 through 4	UNC
4-1/4 and larger	4 UN

Bolting will consist of either studs and nuts or bolts and nuts. Minimum thread engagement will be 100 percent of the nut thread. Nuts for each stud will be installed equidistant from the ends of the stud. Middle portions of studs and shank portions of bolts will not be threaded. Bolt heads and nuts will be hexagonal type, conforming to ASME B18.2. Where no axial load is to be carried, pins with washers and cotter pin retainers will be permitted in place of bolts.

Restraints, struts, and anchors will have the following features:

- Restraints fabricated of structural steel will have a clearance of 1/8 inch, with respect to the restrained component, in the directions of the restrained movement unless otherwise noted.
- All restraints will be designed to withstand the static and kinematic friction due to relative movement of the pipe with respect to the restraints.

- All restraints and anchors will withstand the design loading indicated without buckling.
- All struts will be provided with means for locking the length adjustment. The length adjustment lock will be on the right-hand thread end, if both right- and left-hand threads are used.

Exposed components of shop fabricated pipe supports will be shop painted before shipment to the jobsite. Before painting, surfaces will be suitably cleaned and prepared in accordance with the paint manufacturer's instructions. Bearing surfaces and nameplates will not be painted. These surfaces will be coated with an easily removable rust-preventive compound.

3.12.2 Pipe Support and Hanger Materials

Support component materials will be suitable for service at the operating temperature of the pipe to which they are attached. Where support component temperature is below 750° F, component material will be carbon steel or of an ASTM type having a minimum yield strength of 35,000 psi, and a minimum ultimate strength of 58,000 psi.

4.0 VALVES

Valve pressure classes, sizes, types, body materials, and end preparations will generally be as described herein. Special features and special application valves will be utilized where required.

Valves specified to have flanged, socket-welded, or screwed connections will have ends prepared in accordance with the applicable ANSI standards. Steel flanges will be raised face type unless otherwise required. Cast iron and bronze flanges will be flat faced type. Butt welding ends will be prepared in accordance with ASME B16.25 and ASME B31.1.

Steel body gate, globe, angle, plug, and check valves will be designed and constructed in accordance with ASME B16.34 as applicable. Valve bodies and bonnets will be designed to support the valve operators (handwheel, gear, or motor) with the valve in any position, without external support.

4.1 Steel Body Valves 2 Inches and Smaller

Steel body valves 2 inches and smaller will have forged steel bodies. Forged steel valves complying with the standards and specifications listed in Table 126.1 of ASME B31.1 will be used within the manufacturer's specified pressure temperature ratings and will be limited in accordance with the pressure temperature ratings specified in ANSI B16.34.

- Valve ends will be socket-weld type unless otherwise required.
- Except as otherwise required, check valves will be of the guided piston or swing disk type. All check valves will be designed for installation in either horizontal piping or vertical piping with upward flow.

4.2 Steel Body Valves 2-1/2 Inches and Larger

Steel body valves 2-1/2 inches and larger will have cast or forged steel bodies. The face-to-face and end-to-end dimensions will conform to ASME B16.10. Selection of these valves will be in accordance with the pressure temperature ratings specified in ASME B16.34 as applicable:

- Body ends will be butt weld or flanged type.
- Check valves will be of the guided piston, swing disk, or double disk spring check type. The use of double disk spring check valves will be limited to cold water services. All check valves will be designed for installation in either horizontal or vertical piping with upward flow.

4.3 Iron Body Valves

Iron body gate, globe, and check valves will have iron bodies and will be bronze mounted.

The face-to-face dimensions will be in accordance with ASME B16.10. These valves will have flanged bonnet joints. Gate and globe valves will be of the outside screw and yoke (OS&Y) construction. Body seats will be of the renewable type. Gate valves will be of the wedge disk type.

4.4 Butterfly Valves

Rubber-seated butterfly valves will be generally constructed in accordance with AWWA C504 Standard for Rubber-Seated Butterfly Valves. The valves will also generally conform to the requirements of MSS Standard Practice SP-67, Butterfly Valves. Valves of the wafer or lugwafer type will be designed for installation between two ANSI flanges. Valves with flanged ends will be faced and drilled in accordance with ASME B16.1. The selected use of butterfly valves will be in accordance with the pressure temperature ratings specified in AWWA C504, the pressure temperature ratings specified by the manufacturer, and as specified in the following criteria:

- Butterfly valves will generally be used for 4 inch and larger cold water services only.
- Butterfly valves for buried service will be of cast iron body material and will be equipped with flanged ends.
- Cast iron butterfly valves will have pressure classes selected based on the piping design pressure as follows:

Piping Design Pressure	Valve Class
25 psi and below	Class 25
Above 25 psi to 75 psi	Class 75
Above 75 psi to 150 psi	Class 150

Cast iron butterfly valves will be limited to use with piping systems having a design temperature of 125°F or less.

- Butterfly valves for other than buried service will be of carbon steel or cast iron body material depending on the service application. Valves will be of the wafer type, or lugwafer type, if used with steel or alloy steel piping.
- Carbon steel butterfly valves will be limited to use with piping systems having a design temperature of 150°F or less. Carbon steel butterfly valves will have pressure classes selected in accordance with the pressure temperature ratings specified in ASME B16.34 for 24 inch and smaller valves.

Metal seated or teflon seal ring seated butterfly valves for special service applications will be of the wafer or lugwafer type and will be designed for installation between ANSI flanges. The use of these valves will be in accordance with the pressure temperature ratings specified by the manufacturer.

4.5 Bronze Body Valves

Bronze gate and globe valves 2 inches and smaller will have union bonnet joints and screwed ends. Gate valves will be inside screw, rising stem type with solid wedge disks. Globe valves will have renewable seats and disks.

Bronze check valves 2 inches and smaller will be Y-pattern swing disk type or guided piston type designed for satisfactory operation in both horizontal piping and vertical piping with upward flow.

Bronze valves 2-1/2 inches and larger will have bolted flange bonnet joints and flanged ends. Gate and globe valves will be of the outside screw rising stem construction. Gate valves will have either integral or renewable seats. Globe valves will have renewable seats.

The use of these valves will be in accordance with the pressure temperature ratings specified by the manufacturer. Bronze valves will be limited to service with piping systems having design pressures of 200 psi or less, and design temperatures of 150° F or less.

Bronze valves will generally be limited to a size of 3 inches or less.

4.6 Ball Valves

All ball valves will be in accordance with the pressure temperature ratings specified by the manufacturer. Ball valve bodies 2 inches and smaller will have threaded end or socket-weld connections. Ball valves 2-1/2 inches and larger will have flanged ends. The valves will not require lubrication. Ball valves for use with copper piping shall have brazed or screwed ends. Ball valves for natural gas service shall have renewable seats and be firesafe per API 601 as a minimum.

4.7 Diaphragm Valves

Diaphragm valves will be straightaway or weir bodies with flanged ends faced and drilled for installation between ANSI flanges. The use of these valves will be in accordance with the pressure temperature ratings specified by the manufacturer.

4.8 Plug Valves

Plug valves will be in accordance with the pressure temperature ratings specified by the manufacturer. All valves will be suitable for the intended service. Plug valve bodies 2 inches and smaller will be socket weld, screwed, or flanged. Plug valves 2-1/2 inches and larger will be butt weld or flanged.

4.9 Polyvinyl Chloride (PVC) and Chlorinated Polyvinyl Chloride (CPVC) Valves

PVC and CPVC valves will be constructed entirely from polyvinyl chloride, chlorinated polyvinyl chloride, and teflon. The use of these valves will be in accordance with the pressure temperature ratings specified by the manufacturer.

4.10 Valve Materials

Valve bodies will generally be constructed of materials equivalent to the pipe with which they are used. Valve body and trim materials of construction will be in accordance with applicable ASTM and AISI standards. Valve body materials will generally be as follows:

Material Name	Description	
Cast Iron	ASTM A126 Class B	
Bronze	ASTM B61 or ASTM B62	
	Forged	Cast
Carbon Steel	ASTM A105	ASTM A216 Grade WCB
Stainless Steel	ASTM A182 Grade F316L or Grade F316	ASTM A351 Grade CF3M or Grade CF8M

4.11 Valve Operators

Valves will be provided with manual or automatic operators as required for the service application and system control philosophy. Automatic operators will be motor, piston, or diaphragm type.

Manual operators will be lever, handwheel, or gear type, with the use of lever operators to be limited to valves requiring a maximum of 90 degree stem rotation from full open to full closed position on valve sizes 6 inches and smaller. All operators will be sized to operate the valve with the valve exposed to maximum differential pressure.

4.12 Branch Line Isolation Valves

An isolation valve will be provided in 2 inch and smaller branch lines from major headers.

4.13 Valve Special Features

Valves will be provided with locking devices, handwheel extensions, vacuum service packings, limit switches, and other special features as required. Locking devices, when furnished, will allow the valve to be locked either open or closed with a standard padlock. Limit switches, when furnished, will be provided for the open and closed position of the valve.

Valves (control) will not be equipped with bypasses unless specifically required.

5.0 INSULATION AND LAGGING

The insulation and lagging to be applied to piping, equipment, and ductwork for the purposes of reducing heat loss, reducing sweating, and personnel protection will be in accordance with the following criteria.

5.1 Insulation Materials and Installation

Insulation materials will be inhibited and of a low halogen content so that the insulation meets the requirements of MIL-I-24244 Amendment 3 regarding stress-corrosion cracking of austenitic stainless steel. Insulation materials will contain no asbestos.

All piping operating above 140°F will be insulated with calcium silicate molded insulation in accordance with ASTM C533, fiberglass, or mineral fiber, dependent on the application.

Equipment and ductwork operating at elevated temperatures will be insulated with calcium silicate block fiberglass, or mineral fiber block insulation dependent on the application.

5.2 Lagging Materials and Installation

All insulated surfaces of equipment, ductwork, piping, and valves will be lagged.

All aluminum lagging will be ASTM B209 Alclad 3004 or acceptable equal. All aluminum lagging will be stucco pattern embossed.

5.3 Insulation Supports for Piping

Vertical runs of piping, which will be insulated, will utilize support lugs and collars to prevent slippage of the insulation.

5.4 Insulation Classes for Piping and Equipment

Piping and equipment insulation classes and corresponding thicknesses are designated by letters, which will be indicated in the design documents.

The insulation for piping accessories will be of the same class as is indicated for the piping. Insulation materials for miscellaneous piping and equipment will be suitable for the actual operating temperatures.

For piping systems operating above 140° F where the retention of heat is not necessary for proper operation, such as vents and various drains, the insulation thickness shall be

reduced to that necessary to maintain the surface temperature of the insulation at approximately 140° F.

5.5 Freeze Protection

(Not Applicable).

5.6 Antisweat Insulation

All aboveground cold water and air piping will be provided with antisweat insulation.

Appendix H4

Control Engineering Design Criteria

CONTROL ENGINEERING DESIGN CRITERIA

1.0 INTRODUCTION

This section covers the design criteria which will be used for all control work related to this project. Variations from the design criteria are expected to support unique design applications or to accept manufacturers' standard equipment packages. The lead control engineer will authorize all variations in design criteria.

2.0 DESIGN CODES AND STANDARDS

The design specification of all work will be in accordance with the applicable laws and regulations of the federal government and the State of California, and applicable local codes and ordinances. The federal and state codes and standards requiring compliance under penalty of law are outlined in the Regulatory Requirements Manual. A summary of codes and industry standards applicable to design and construction follows:

- American National Standards Institute (ANSI)
- American Society of Mechanical Engineers (ASME)
- The Institute of Electrical and Electronics Engineers (IEEE)
- Instrument Society of America (ISA)
- National Electrical Manufacturers Association (NEMA)
- National Electrical Safety Code (NESC)
- National Fire Protection Association (NFPA)
- Scientific Apparatus Makers Association (SAMA)

Other recognized standards will be utilized as required to serve as design, fabrication, and construction guidelines when not in conflict with the above listed standards.

The codes and industry standards used for design, fabrication, and construction will be the codes and industry standards, including all addenda, in effect as stated in equipment and construction purchase or contract documents.

3.0 GENERAL REQUIREMENTS

3.1 Ambient Conditions

All instruments and control devices will be designed to withstand ambient conditions appropriate to their mounting location or be suitably protected.

The evaluated operating conditions for instruments and control devices installed in heated/air-conditioned areas will include air conditioning failure.

3.2 Power Supplies

All instruments and control devices will be designed to operate on power supplies as follows:

- Electric:
  - 120 volt ac, 60 hertz, single-phase for motor control center (MCC), solenoid valve, and low torque drives with guaranteed satisfactory operation when equipment is continuously energized at any voltage from 100 to 132 volts ac
  - 125 volt dc for control (switchgear) and low torque drives
  - 120 volt ac, 60 hertz, for control logic (digital input interrogation voltage)
  - 480 volt ac, 60 hertz, three-phase for high torque drives

  Any voltage required other than the above will be furnished by the equipment supplier.

- Pneumatic – Clean, dry, and oil free instrument air at 70 to 125 psig. All necessary pressure reducing controls (pressure regulators), where required, will be furnished by the equipment supplier.

3.3 Standard Ranges of Analog Signals

The ranges of analog signals will normally be as follows:

- Electric – 4 to 20 mA dc

- Pneumatic – 3 to 15 psig
- Thermocouple – Type K
- RTD – 100 ohm platinum

The use of any signal range other than the above will be avoided.

3.4 Contact Ratings

The ratings of all instrument contacts used for alarm and interlocking will be coordinated to meet the requirements of the interfacing/interlocking system. The ratings of all solid-state control system output contacts will be coordinated to meet the requirements of the driven device/equipment. Consideration will be given to the voltage and current rating, continuous rating, maximum rating (break), and switch rating (break).

4.0 INSTRUMENTS

Instrument housings will be in accordance with the NEMA, or other project designated authority rating for the area in which the instrument is located.

4.1 Instrument Primary Piping (Impulse Lines)

Instrument primary piping/tubing is defined as the piping or tubing directly connected to the process, beginning at the outlet of the root valve and terminating at the blow-down valve, and at the point of connection to the instrument itself.

4.1.1 Instrument Primary Piping/Tubing

The preferred material for installation of instrument primary tubing is stainless steel tubing using grip type fittings. Socket weld fittings will be used on tubing having 0.083 inch or greater wall thickness. Changes in instrument primary tubing direction will utilize tube fittings, or for 0.065 or less wall thickness, tubing may be bent.

4.1.1.1 Design Pressure and Temperature

Instrument primary tubing design pressure and temperature will be selected consistent with the requirements discussed in Section 11.0 of this manual for the process pipe to which the instrument primary tubing is connected.

4.1.1.2 Sizes of Instrument Primary Tubing

Instrument primary tubing size will be as follows:

- Pressure measurement tubing will be 0.500 inch outside diameter with minimum wall sizes of 0.049 inch or 0.065 inch, depending on the pressure and temperature of the process.
- Flow and level measurement by differential pressure will also use primary tubing conforming to the above requirements.
- When instrument manifolds are furnished, 0.25 inch outside diameter stainless steel flexible metal hoses may be used as a flex line (less than 18 inch length) between the instrument manifold and the instrument. Direct manifold mounting of the instrument to the manifold is preferred.

4.1.1.3 Materials for Instrument Primary Tubing

Only one material for instrument primary tubing is recommended:

- ASTM A269, GR TP316 seamless tubing

Other types of stainless steel materials may be required by design due to environmental considerations or client preference.

4.1.1.4 Support of Instrument Tubing

Instrument primary tubing will be supported in accordance with ANSI B31.1. In general, 0.500 inch OD stainless steel tubing will be supported continuously. The support system will allow for thermal expansion of tubing and equipment.

4.1.2 Instrument Primary Piping/Pipe

Pipe will be used for instrument primary piping only when physically required to support the instrument and will normally be all socket welded.

4.1.2.1 Design Pressure and Temperature

Instrument primary piping design pressure and temperature will be selected consistent with the requirements discussed in Section 11.0 of this manual for the process pipe to which the instrument primary piping is connected. The following criteria will also apply:

- Instrument primary piping for steam systems will be designed for the maximum sustained process pressure (plus 25 psi) and the maximum sustained process system temperature (plus 10° F).
- Instrument primary piping for other than steam systems will be designed for the maximum sustained process system pressure (plus 25 psi) and the maximum sustained process system temperature (plus 10° F).

4.1.2.2 Sizes of Instrument Primary Pipe

Instrument primary piping will not be smaller than the connection at the process pipe root valve and/or the following:

- 1/2 inch for pressure measurement piping with a design pressure equal to or less than 600 psig and a design temperature equal to or less than 750° F.
- 3/4 inch for pressure measurement piping with a design pressure greater than 600 psig or a design temperature greater than 750° F.
- Flow and level measurement by differential pressure will also use primary piping conforming to the above requirements; however, flange tap connections for flow measurements may be of 1/2 inch size.
- Float actuated level switch devices will be supported on connecting piping not smaller than 1 inch.
- Level controllers and transmitters of the displacement float type will be supported on connecting piping not smaller than 2 inches.
- Instrument columns for float actuated level switches and displacement float devices will normally be piping of not less than 2-1/2 inches.

- Primary piping internal diameter shall not be less than 0.30 inch between the process connection and instrument blowdown valve.

4.1.2.3 Materials for Instrument Primary Pipe

Material for instrument primary piping connecting to the root valve will preferably be the same as that used between the system process header and the root valve. Higher strength materials may be substituted in the interest of standardization; however, welding procedures at the point of joining the instrument primary piping to the root valve must be appropriate to the combination of materials involved. Copper or brass may be used only for water services that use copper, brass, or nonmetallic process piping.

4.1.2.4 Support of Instrument Pipe

Instrument primary piping will be supported consistent with the requirements discussed in Section 11.0 of this manual. Preinsulated, heat traced, tubing bundles may also be used.

4.1.3 Insulation of Instrument Primary Piping/Tubing

Instrument primary piping/tubing connecting to high temperature systems, which might become hot enough to injure personnel during blowdown of the instrument line, will be insulated where such hazard exists. Insulation materials, exterior finish, and metal lagging will conform to the standards adopted for the process piping as discussed in Section 11.5 of this manual.

4.1.4 Criteria for Routing Instrument Primary Piping/Tubing

Routing of instrument primary piping/tubing, including piping from the process connection through the root valve and the instrument primary piping/tubing, will be in accordance with the following criteria.

Special fittings such as reservoirs and other devices shall be installed at differential pressure connections as required by the process parameter to be measured and the design of the instrument.

Pressure sensed by the instrument will differ from pressure in the process if there is a head of liquid in the instrument line. This effect may be significant if the instrument line static head is large in comparison with the pressure being sensed. This effect can be accounted for in calibration of the instrument if the static head is constant. To assure a constant static head, the connections from low-pressure steam and low-pressure liquid filled lines should preferably slope downward continuously from the primary element connection to the instrument. Horizontal runs should have a slope of not less than 1/2 inch per foot and must be adequately supported to maintain a constant slope. If downward slope is not feasible, the line should slope upward continuously and a loop seal (steam service only) should be installed at the instrument to assure a water seal for temperature protection. Upward sloping liquid lines should be used only if the process pressure is sufficient to assure a head of liquid at the instrument. Provision for venting of air should be provided in the high point of the line, preferably at the instrument. Upward sloping steam lines should not be less than 1 inch in size. Vacuum connections should always slope upward to the instrument.

Instrument primary piping/tubing for steam flow, liquid flow, and manometer level measurement systems should preferably slope downward from the primary element connections to the instrument. Instrument primary piping/tubing for fuel gas, compressed air, flue gas, and airflow measurement systems should preferably slope upward from the primary element connections to the instrument. If these requirements cannot be met, special venting or drain provisions will be required.

Pressure taps will be located on the top or side of gas, or air piping, and on the top (if pressure is high enough to vent any air in the instrument line) or side of liquid filled or steam piping. Pressure taps on boiler gas and air ducts will be located on the top or side to permit draining condensation.

4.1.5 Support of Instrument Piping

Instrument primary piping will be supported at intervals not exceeding 6 feet. Usage of seamless stainless steel tubing and its installation as an alternative to pipe must be in accordance with ASME B31.1 or other codes and standards referenced in Section 11.2 of this

manual as applicable. Intermittently supported tubing must be the same or larger OD than the nominal pipe size it replaces. Usage of smaller OD tubing dictates continuous support to assure maintaining proper slope.

4.2 Thermowells and Protecting Tubes

The selection, construction, and location of thermowells will be in accordance with the recommendations and standards set forth in the following references:

- ASME PTC19.3 – Temperature Measurement
- ASME B31.1 – Code for Pressure Piping
- ASME Boiler and Pressure Vessel Code, Section VIII, Division 1

Thermowells will be selected to provide the insertion lengths recommended in the ASME Performance Test Codes appropriate to the process being monitored. For applications not covered by PTC recommendations, the tip of the thermowell should normally extend into flowing pipelines not less than 3 inches. The maximum insertion length should be chosen such that the tip does not extend beyond the pipe center line.

Two methods are generally used to install thermowells in pipe:

- Perpendicular to the pipe
- Parallel to the pipe in an elbow or tee

Thermowells will generally be installed into welded forged steel screw end adapters, such as Bonney Forge “Threadolets” and “Elbolets,” or equivalent. Pipe couplings will not be used.

Fluid system temperature sensors will be equipped with thermowells and will be made of one piece, solid bored Type 316 stainless steel of stepless tapered design in accordance with ASME PTC 19.3. The sizes of the connections will be as defined in Section 11.0. Threaded temperature wells in lines operating above 600 psi will be seal welded after installation. Normal bore diameter will be sized to accommodate 0.25 inch sheaths. Maximum bore internal diameter will be 0.387 inch.

Thermowells in main steam and feedwater piping will be designed to prevent damage caused by vortex-induced vibration over the range of velocities encountered in normal service in accordance with ASME Performance Test Code 19.3, Temperature Measurements.

All thermowells in steam piping will be permanently installed and welded after steam blow to avoid exposure to vibration damage. For steam blow, the connections will be plugged by screwed plugs after assuring thermowells can be properly inserted. All other thermowells will be installed prior to hydrostatic testing.

Test wells will be provided on main steam, feedwater, and other piping as required to meet ASME or other project designated test requirements.

Temperature detectors in boiler gas and air ducts will be mounted in protecting tubes to provide mechanical support and to permit replacement while in operation. Protecting tubes will be made of Type 316 stainless steel pipe not smaller than 1/2 inch size, with screwed pipe bushings welded to the tubes for attachment to the ducts. Duct connections will consist of screwed couplings or adapter flanges welded to the ducts, into which the bushings on the protecting tubes can be threaded. Duct connections will be located to minimize the effect of temperature stratification within the ducts. Protecting tubes exceeding 3 feet in length shall be provided with additional supports within the boiler casing or duct.

4.3 Thermocouples and Resistance Temperature Detectors

Project temperature measurements for remote use will be by temperature detectors.

Temperature detectors will preferably be thermocouples. Thermocouples will be of the chromel-alumel type (ISA Type K) with Type KX extension wire. Thermocouples and extension wire will comply with the standard limits of error in accordance with ANSI MC96.1-1975. The elements as a rule will be separate from ground (ungrounded).

Resistance temperature detectors (RTDs) will be of the 3 wire platinum type. The nominal resistance of the platinum detectors will be 100 ohms at 0° C. All RTDs for

measurement of fluid system temperature will be ungrounded, metal sheathed, ceramic packed, and suitable for the design temperature, pressure, and velocity of the fluid system.

Thermocouples and RTDs will have sheathed elements spring-loaded to provide good thermal contact with the well or protecting tube. The sheath will be made of stainless steel having swaged type magnesium oxide insulation. All connection heads will be weatherproof, made of cast iron with screwed covers, and supported from the well by a stainless steel extension nipple.

4.4 Transmitters

Transmitters will generally be used to provide the required signals (4 to 20 mA dc) for control and monitoring by operators in remote control center areas. Where possible, transmitters will be of the electronic 2 wire type, capable of driving a load up to 750 ohms, designed with provisions for zero and span adjustments, and will have 0.25 percent accuracy.

4.4.1 Static Pressure and Differential Pressure Transmitters

Sensing elements for static pressure and differential pressure transmitters will be of the capacitance type.

For steam and water services, static pressure transmitters will be equipped with a two-valve manifold, and differential pressure transmitters will be equipped with a three-valve manifold. Manifolds will be constructed in accordance with ASME B31.1.

4.4.2 Level Transmitters

Sensing elements for level transmitters will be of the following types:

- Static head devices for vessels exposed to atmospheric pressure; air bubbler type devices may be used if absorption of air by the liquid is not objectionable. (Level transmitters of this type are the same as static pressure transmitters.)
- Displacement float type for feedwater heaters and enclosed vessels (where practical).

- Differential pressure type with constant head chamber for high-pressure and temperature applications where installation of float cage becomes impractical. (Level transmitters of this type are the same as differential pressure transmitters.) Tank level installations will include flanged isolation valves.

- Moving float type for fuel oil storage tanks.

- Admittance probe type or ultrasonic type for specialized applications.

4.4.3 Flow Transmitters

Flow transmitters for general applications will be of the differential pressure type:

- Primary Elements – Flow nozzles will be used for feedwater flow, steam flow, and other critical measurements where weld-in construction is required. Flow nozzles will be made of stainless steel with dual sets of pressure taps installed in the pipe wall where required. Installation of flow nozzles and pressure taps will be made in the flow nozzle manufacturer's shop or in the pipe fabricator's shop. Feedwater flow and steam flow nozzles will be calibrated.

Paddle type orifice plates will be used for other flow measurements where flanged construction and higher pressure loss are acceptable. Orifice plates will be made of stainless steel. Orifice flanges will be of the raised face weld neck type with dual sets of taps unless design dictates otherwise.

Construction and installation of flow nozzles and orifices will conform to the requirements of ASME Performance Test Code PTC 19.5, and discharge coefficients will be predicted in accordance with data published in ASME Research Report on Fluid Meters.

Airfoil or venturi flow sections, or averaging type pitot tubes, may be used for measuring boiler combustion airflow.

Annubars, piezometers, and pitot tubes will be used for measuring flows in large pipes or ducts where installation of flow nozzles, orifice plates, or airfoils is impractical.

- Secondary Elements – Secondary elements for differential type flow sensors will be capacitance type differential pressure transmitters.

- Positive displacement type flowmeters will be used for measuring fuel oil flows.

- Turbine flowmeters or orifice type flow sections will be used for measuring gas flows.

4.5 Process Measurement Switches

Process measurement switches will generally have double-pole, double-throw or two single-pole, double-throw (two Form C) contacts (if deadband is not a factor) for each actuation point, and will be equipped with screw type or compression type terminal connections on a terminal block for terminating field wiring. Switches for use with programmable control systems may utilize SPDT construction. Switch set point will be adjustable. Contacts will be of the snap-acting type.

4.5.1 Temperature Switches

Temperature switches will be actuated by filled-bulb type elements equipped with standard length armored capillary tubing.

4.5.2 Pressure Switches

Pressure switches will be actuated by diaphragm type elements. Pressure switches will be classified into the following types:

- General static pressure switches and general differential pressure switches for normal static pressure ranges
- Low differential pressure switches for low static pressure ranges
- Low differential pressure switches for high static pressure and/or applications requiring both indication and pressure switch contacts

4.5.3 Level Switches

Level switches will be actuated by elements of the following types:

- Static head devices for vessels exposed to atmospheric pressure; air bubbler type devices may be used if absorption of air by the liquid is not objectionable (Level switches of this type are the same as static pressure switches.)

- Differential type for high-pressure and high temperature applications (Level switches of this type are the same as differential pressure switches.)
- Moving float type for enclosed vessels and sumps
- Displacement float type for open tanks and sumps
- Capacitance, RF/admittance, or ultrasonic type for specialized applications

Switching elements of moving float and displacement float type level switches will have float and body construction appropriate to the service conditions of the systems to which they are connected. Switch elements shall be of the vibration resistant, snap-acting type magnetically coupled to the float. Two switch elements or one DPDT switch element will be available at each level point monitored.

Each switch element will be reversible for NC or NO operation, or will be double-throw construction. Switch element leads will be of high temperature construction as required, and terminated on terminal blocks within the switch housing. Switch housings will be NEMA 4 construction, unless otherwise specified.

4.5.4 Flow Switches

Variable area or differential pressure type actuating elements will be used for low flow and low-pressure applications.

4.6 Local Indicators

4.6.1 Local Temperature Indicators (Thermometers)

Thermometers for local mounting will be 4-1/2 inch dial, bi-metal. Thermometers for panel mounting will be gas-actuated with stainless steel armored capillary tubing of the length required for installation with 4-1/2 inch minimum dial size. Dial scales shall be such that the normal operating range is in the middle third of the dial range. The dials will be engraved with service legends, or separate nameplates will be furnished to identify the service. Separate nameplates shall be engraved phenolic attached to the dial face or stamped stainless steel

attached to the thermometer by stainless steel wire. Thermowells or protection tubes (for boiler gas and air ducts) will be furnished for all thermometers.

4.6.2 Local Pressure Indicators (Pressure Gauges)

Gauges for control air supply and signal pressures integral to an instrument will be in accordance with the instrument manufacturer's standards. All other gauges shall be 4-1/2 inch minimum dial size. Dial scales shall be such that the normal operating range is in the middle third of the dial range. Separate nameplates shall be engraved phenolic attached to the dial face or stamped stainless steel attached to the gauge by stainless steel wire. All gauges will have stainless steel movements. Gauges for panel mounting shall be of the flush mounting type. Gauges for separate mountings shall have 1/2 inch NPT bottom connections. Gauges that are expected to pulse more than ±5 percent of scale shall be furnished with a pulsation dampener made of the same material as the Bourdon tube or stainless steel. Gauges used in compressed gas applications or those equipped with diaphragm seals will not be furnished with pulsation dampeners. Gauges for fluids which may be corrosive to the gauge internals will be furnished with glycerine filled cases and diaphragm seals. Gauges required by a specific code (NFPA 20) will be supplied in accordance with the code.

4.7 Solenoid Valves

Solenoid coils will be Class H high temperature construction and will be designed for continuous duty. Three-way solenoid valves will be designed for universal operation so that the air supply may be connected to any port.

5.0 CONTROL AND INFORMATION SYSTEMS

5.1 General Design Criteria

The objective of the control and information systems is to facilitate plant operations by ensuring personnel safety, equipment protection, adequate operation, and plant availability. The control and information systems will ensure these criteria are met by incorporating the following design features:

- Centralized control location(s)
- Reasonably consistent operator interface
- Redundancy of key critical components
- Fail-safe design of protective systems
- Cost-effective design

The principal functions provided by the control and information systems are listed below and discussed in the following sections:

- Discrete control
- Protection
- Information
- Annunciation

These functions will be provided by systems which utilize programmable micro-processor based hardware. System control strategies will be implemented using software programmable, digital computing techniques.

All combustion turbine controls and monitoring will be performed in the GE furnished control system. The balance-of-plant modulating controls and process monitoring will also be performed in the GE furnished control system.

The primary operator interface to the balance-of-plant modulating controls, the combustion turbine generator, and the balance-of-plant motor controls will be through the GE operator interface.

5.2 Discrete Control

Discrete control logic will be provided for motors (pumps, fans, compressors, and similar equipment), motor and solenoid operated valves, and auxiliary electric breakers. Discrete control logic will also be provided to coordinate the actions of a group of equipment. The logic

may be as simple as operating two motor-operated valves in tandem, or as complex as automatic startup logic for slaved auxiliaries for fan control.

5.2.1 Equipment Control

The logic provided for individual pieces of plant equipment will be designed to minimize the requirement for operator interface. The logic will be designed to incorporate permissives which ensure that the prerequisite conditions for safe operation are met prior to allowing the equipment to start, open, or close, as appropriate. Similarly, the logic will incorporate interlocks to prevent equipment from operating in an unsafe or potentially damaging condition.

Equipment control will generally be classified into three modes: manual (operator control), automatic, and standby.

In the manual mode, the operator is required to start and stop or open and close the equipment in response to plant operating needs. Equipment that is not frequently operated, such as auxiliary electric system feeder breakers, or equipment which is normally not started without supervision will only be provided with the manual control mode.

The automatic control mode will be provided for equipment which must start and stop frequently to maintain process control. An example of automatic control logic is a tank fill pump which is automatically started at a low tank level and stopped at a high tank level. As a general rule, actions initiated by automatic logic will not be annunciated. Failure of an automatic action to occur will be annunciated if initiated by a protective interlock.

The standby control mode will be provided for redundant equipment, or equipment which has a designated backup. Examples of equipment which will be capable of standby operation are redundant closed cycle cooling water pumps (2 times 100 percent or 3 times 50 percent) and turbine lube oil pumps. If equipment is in the standby mode, it will be started automatically when the operating equipment trips or a process parameter indicates that the operating equipment has failed. Following a standby start, the equipment will continue to

operate until stopped by the operator, or until tripped by a protective interlock. An alarm will be provided to alert the operator that the equipment has standby started.

All equipment will be provided with the manual control mode. Automatic and standby control modes will be provided for equipment as appropriate.

5.3 Protection

Protection logic will be implemented at two levels. Individual equipment will be protected by logic contained within the processors or control system implementing the equipment control logic.

Individual equipment will be protected against conditions such as abnormal temperature, pressure, level, and/or flow as appropriate. This protection will be incorporated into the discrete control logic provided for the equipment and will exist in the form of permissives and interlocks. Proprietary control systems provided with equipment such as the turbine generators contain the protective logic necessary to guard against conditions such as high vibration, abnormal oil temperature, low oil pressure, overspeed, and other potentially dangerous or damaging conditions.

A system of hard-wired protective and lockout relays will be provided to protect the generators and transformers. These devices are discussed in Section 12.0 of this Appendix H.

5.4 Information

The control systems will provide real-time information to the operators in several formats as follows:

- Process graphic displays – The process graphic displays present information to the operator in formats similar to simplified Piping and Instrument Diagrams or equipment pictorials. Process information and equipment status are presented as dynamic text values and symbol colors. Operator control actions may be affected through the process graphic displays.

- Faceplate displays – Faceplate displays consist of an intelligent grouping of manual/auto stations or control “faceplates” associated with a given piece of equipment or process. Operator control actions will be affected through the faceplate displays.

- Bar chart displays – Bar chart displays consist of a grouping of vertical or horizontal dynamic bar graphs associated with a particular process. Bar charts provide an analog representation of process parameters for quick operator recognition and comparison.

- Trend displays – Trend displays provide a dynamic graphical representation of analog (or discrete) values versus time. Trend displays replace the function of ink type "strip chart" recorders. Trend displays provide the capability to scroll backwards in time to review performance or process trends, thereby assisting in troubleshooting and post-trip analysis.

5.5 Annunciation

The control systems will annunciate the occurrence of abnormal events in the form of CRT alarm summaries, printed alarm logs, and audible tones.

The operators will be alerted to the occurrence of abnormal events and the return of abnormal events to normal operating conditions. The conditions to be annunciated include those that are potentially dangerous to personnel or damaging to equipment, those that may affect the plant's load carrying capability, and those indicative of processes or equipment that are operating in an abnormal or inefficient condition. Return-to-normal operating conditions will not be annunciated.

The alarm printer will provide a hard copy printout of the alarm conditions that appear on the operator work stations.

5.6 Control Hardware

The combustion turbine control hardware and balance-of-plant control hardware for this Project will be supplied by GE.

5.7 Location of Control Equipment

Control equipment refers to the equipment and devices necessary to implement the modulating and discrete control strategies, and the equipment provided for operator interface with the control systems.

Control equipment will be located according to the following criteria:

- Pneumatic controllers will be field mounted in close proximity to the controlled process.

- Control devices such as switches and transmitters will be located on local instrument support structures.
- Control system input and output devices (I/O) will be located in environments compatible with the hardware. I/O hardware will be physically distributed where practical to reduce cable costs.
- Equipment provided for the primary operator interface will be located in the main control room. Local control areas may be established in conjunction with packaged equipment or as necessary to meet specific project requirements.

5.7.1 Local Control Areas

Local control areas will be established for systems where it is advantageous to have control hardware or provisions for operator control in the vicinity of the equipment being controlled. Operator interface stations will be located in the control modules.

Each of these areas will be provided with sufficient local control devices for an operator to initiate a startup or shutdown of the controlled equipment with provisions for operator manual control of the process.

6.0 FINAL CONTROL DEVICES

6.1 General Design Criteria

Final control devices will be supplied with the necessary signal conditioning and sensing devices to adequately interface with the control system.

6.2 Modulating Valves and Drives

6.2.1 Control Valves

Air-operated modulating valves controlled from an electronic control system will be provided with a valve positioner capable of receiving a 4 to 20 mA signal and converting the signal to an air pressure signal corresponding to the force required to move the valve diaphragm to the adjusted position. In certain instances when an electronic-to-pneumatic positioner is not

commercially available, a combination of an signal converter (electropneumatic) and pneumatic valve positioner will be supplied.

6.2.2 Control Drives

Control drives modulating boiler process dampers and other process related equipment will be capable of receiving a 4 to 20 mA signal. The drive will include integral position switches and/or a position transmitter. The drives and associated linkages will be sized to accommodate the maximum operating force required by the damper or driven equipment. Drive operating speeds will accommodate the process dynamics of the system.

6.3 Open/Close Valves and Operators

6.3.1 Air-Operated Valves and Operators

Air-operated open/close valves and operators controlled from the electronic control system will include solenoid valves and open/close position switches. Failure mode will be determined during detailed design.

6.3.2 Electrically Operated Valves and Operators

Electrically operated open/close/jog valves and operators controlled from the electronic control system will include integral position switches. Valves and operators required to jog (stop in an undetermined, intermediated position) will include position transmitters.

7.0 OPERATOR INTERFACE

Operator interface devices will be designed in accordance with ISA Recommended Practice 60.3 and, in particular, the following human factors design criteria:

- Safety – Consideration will be given to safety, including minimization of potential human error in the operation or maintenance of plant equipment using the DCS control equipment.
- Standardization – Controls, displays, nomenclature, color selection, and arrangement schemes will be consistent for common functions of all equipment.

- Allocation of Functions – The allocation of control functions between man and machine will be optimized based on study or prior successful experience.

- Ergonomics – The physical design and construction of equipment will give consideration to human engineering ergonomics.

- Interaction – The operator will have all control devices and displays necessary to fulfill his assignment at his disposal and within his reach and visual range.

In consideration of the above criteria, provisions will be made for remote (control room) operator interaction with plant systems and equipment, which are routinely started and stopped, adjusted, or require hourly monitoring.

Appendix H5

Electrical Engineering Design Criteria

ELECTRICAL ENGINEERING DESIGN CRITERIA

1.0 INTRODUCTION

This section describes the design criteria which will be used for all electrical work related to this project.

2.0 DESIGN CODES AND STANDARDS

The design and specification of all work shall be in accordance with all applicable laws and regulations of the Federal Government and the State of California, and applicable local codes and ordinances. A listing of the codes and industry standards to be used in design and construction follows:

- California State Building Code
- American National Standards Institute (ANSI)
- American Society for Testing and Materials (ASTM)
- Insulated Cable Engineers Association (ICEA)
- Institute of Electrical and Electronics Engineers (IEEE)
- Illuminating Engineering Society (IES)
- National Electrical Code (NEC)
- National Electrical Manufacturers Association (NEMA)
- National Electrical Safety Code (NESC)
- National Fire Protection Association (NFPA)
- Occupational Safety and Health Act (OSHA)
- Underwriters Laboratories Inc (UL)

Other recognized standards will be used as required to serve as design, fabrication, and construction guidelines when not in conflict with the above-listed standards.

The codes and industry standards used for design, fabrication, and construction will be the codes and industry standards, including all addenda, in effect as stated in equipment and construction purchase or contract documents.

3.0 ELECTRIC MOTORS

3.1 General Motor Design Criteria

These paragraphs outline basic motor design guide parameters for selection and purchase of electric motors.

The following design parameters shall be considered:

- Environment
- Voltage utilization and phases
- Frequency
- Horsepower and starting requirements and limitations
- Motor type (synchronous, induction, dc, etc) and construction
- Power factor
- Service factor
- Speed and direction of rotation
- Insulation
- Temperature limitations of winding insulation and enclosures
- Duty cycle time
- Accessory devices
- Enclosure
- Bearing construction, rating life of rolling elements, and external lube oil system for sleeve or plate bearings
- Cooling requirements

- Ambient noise level and noise level for motor and driven equipment
- Frame size
- Termination provisions for power, grounding, and accessories
- Installation, testing, and maintenance requirements
- Special features (shaft grounding, temperature and vibration monitoring, etc)

3.1.1 Codes and Standards

All motors will be designed, manufactured, and tested in accordance with the latest applicable standards, codes, and technical definitions of ANSI, IEEE, NEMA, and ABMA, and where supplemented by requirements of the specifications.

3.1.2 Electrical Design Criteria

Special requirements for individual motors and specifications for special application motors are to be included in individual specification technical sections and will have precedence over these general motor requirements.

3.1.2.1 Rating

The motor nameplate horsepower multiplied by the motor nameplate service factor will be at least 10 percent greater than the driven equipment operating range maximum brake horsepower.

Motor operating voltages (excluding motor-operated valves) are tabulated below:

Horsepower	Nominal System Voltage	Motor Nameplate Voltage	Frequency Hz	Phases
Less than 3/4	120	115	60	1
Greater than or equal to 3/4 and less than or equal to 250 (except for special applications)	480	460	60	3
Greater than 250	4160	4000	60	3

Horsepower	Nominal System Voltage	Motor Nameplate Voltage	Frequency Hz	Phases
Dc motors	125	120	dc	--

This table is intended as a general guide; however, individual conditions such as distance from power source, voltage drop, motor availability, and cost may dictate deviations from the stated horsepower/voltage criteria.

Motors will be designed for full voltage starting and frequent starting where required and will be suitable for continuous duty in the specified ambient conditions. Intermittent-duty motors will be selected where recognized and defined as standard by the equipment standards and codes.

The torque characteristics of all induction motors will be as required to accelerate the inertia loads of the motor and driven equipment to full speed without damage to the motor or the equipment at any voltage from 90 percent to 110 percent of motor nameplate voltage except those to be individually considered. A voltage drop greater than 10 percent from the specified motor nameplate rating will be individually considered for proper motor starting and operating.

3.1.2.2 Allowable Noise

The motor sound level will conform with the motor driven equipment assembly overall sound level requirements. In no case will the average no-load sound pressure level, reference level 20 micropascals, produced by the motor exceed 85 dBA free field at 1 meter for motors rated 200 horsepower and less, and at 2 meters for motors rated above 200 horsepower.

3.1.2.3 Temperature Considerations

Integral horsepower motors will be designed for an ambient temperature of 40□ C. Motors located in areas where the ambient temperature exceeds 40□ C will be designed for that ambient condition.

3.1.2.4 Windings and Insulation

All insulated windings will have Class B nonhygroscopic insulation systems rated for temperature rise and ambient temperature in accordance with NEMA MG 1 standards. When ambient temperatures greater than 40□ C are specified, the allowable temperature rise will be reduced in accordance with NEMA MG 1 standards.

Motors rated 460V and lower will have Class B or Class F insulation systems. Motors rated above 460V shall have Class F insulation systems. Motors furnished with Class F insulation will have temperature rise in accordance with NEMA MG 1 values for Class B insulation.

All insulated stator winding conductors and wound-rotor motor secondary windings will be copper.

Sealed insulation for formed-coil windings will be in accordance with the requirements of NEMA MG 1 standards.

The insulation resistance corrected to 40□ C will be not less than motor rated kV+1 megohms for all windings.

Where required, the windings will be treated with a resilient, abrasion resistant material.

3.1.2.5 Space Heaters

Space heaters will be furnished for all motors 25 hp and larger. Space heaters will be sized as required to maintain the motor internal temperature above the dew point when the motor is idle. Motor space heaters will not cause winding temperatures to exceed rated limiting values nor cause thermal protective device over temperature indication when the motor is not energized.

Where required above, 460 volt motors space heaters shall 120 volt, single-phase, 60 hertz. All 4000 volt motors will have space heaters. Space heaters rated 1,200 watts and less

will be suitable for operation on 120 volts, single-phase, 60 hertz. Heaters rated above 1,200 watts will be suitable for operation on 208 volts, 3-phase, 60 hertz.

Space heaters will be either replaceable metal sheathed type or fixed flexible silastic wraparound type. Heaters will be located and insulated so they do not damage motor components or finish.

Space heater leads will be stranded copper cable with 600 volt insulation and shall include terminal connectors. Space heater leads will be wired to a separate terminal housing on 4000 volt motors.

3.1.2.6 Nameplates

All motor nameplate data will conform to NEMA MG 1-20.60 requirements.

3.2 4000 Volt Motors

3.2.1 Design and Construction

Design and construction of 4000 volt motors will be coordinated with the driven equipment requirements.

All motor power lead terminal housings will be adequately sized to terminate the power conductors. For 4000 volt motors, the power lead terminal housing will also be large enough to provide working space for field fabrication of stress cones within the housing in addition to containing the stress cones after installation. The terminal housing of motors 1,500 horsepower and larger will also have sufficient room to accommodate current transformers and neutral connections.

Separate terminal housings will be provided for the following:

- Motor power leads
- Motor accessory leads
- Motor temperature detector leads

All leads will be wired into their respective terminal housings.

Motor enclosures will normally be fully guarded, open dripproof for indoor service, and weather protected NEMA Type II for outdoor service.

3.2.2 Bearings

All horizontal motors will be provided with sleeve bearings unless required otherwise.

On vertical motors, antifriction or plate type thrust bearings will be furnished, and antifriction type guide bearings will be furnished. Whenever a plate type thrust bearing is required, it shall be a Kingsbury self-adjusting type.

Grease or oil lubricated antifriction bearings will be designed and fabricated in accordance with ABMA standards to have a minimum L-l0 rating life of not less than 100,000 hours under the load, speed, and thrust requirements for direct coupled service and not less than 17,500 hours for belt or chain connected service.

3.2.3 Temperature Detectors

Bearing temperature detectors, complete with detector head and holder assemblies as required, will be furnished on motors with sleeve bearings when specified on the Motor Specification and Data Sheets.

Winding temperature detectors will be furnished, installed, and wired complete when specified on the Motor Specification and Data Sheets.

3.3 <u>460 Volt Integral Horsepower Motors</u>

3.3.1 Design and Construction

Design and construction of each 460 volt integral horsepower motor will be coordinated with the driven equipment requirements and the requirements of NEMA MG 1 Standards.

Motors will normally have TEFC enclosures.

3.3.2 Bearings

For horizontal motors, antifriction bearings will be provided for NEMA frame size 449 and below, and sleeve bearings will be provided above NEMA frame size 449.

For vertical motors, antifriction or plate type thrust bearings and antifriction type guide bearings will be furnished. Whenever a plate type thrust bearing is required, it shall be of the Kingsbury self-adjusting type.

Grease lubricated or oil lubricated antifriction radial and thrust bearings will be designed and fabricated in accordance with ABMA standards to have a minimum L-10 rating life of not less than 100,000 hours under the load, speed, and thrust requirements for direct coupled service and not less than 17,500 hours for belt or chain connected service.

3.4 Direct Current Machines

All direct current machines will be designed and constructed for continuous operation and in accordance with the requirements of NEMA MG 1.

3.5 Fractional Horsepower Motors

Type, design, and construction of each general, special, and definite purpose fractional horsepower motor will be coordinated with the driven equipment requirements and will be in accordance with the requirements of NEMA MG 1.

3.6 Motor Operators for Nonmodulating Valve, Gate, or Damper Service

Motors will be designed for high torque, reversing service in a 50□ C ambient temperature and will be in accordance with the requirements of NEMA MG 1 and MG 2.

3.6.1 Bearings

Antifriction bearings having an ABMA minimum L-10 rating life of not less than 15,000 hours will be furnished.

3.6.2 Space Heaters

All motor operators will be supplied with 120 volt ac, single-phase space heaters located in the limit switch compartment and in the motor.

3.7 Hoist, HVAC, and Miscellaneous Motors

Motors not related to power production will conform to applicable requirements of NEMA MG 1 and will otherwise be manufacturer's standard.

4.0 POWER AND CONTROL WIRING

4.1 Design Conditions

Cable feeders from 13.8 kV and 4.16 kV power equipment will be sized so that a short-circuit fault at the terminals of the load will not result in damage to the cable prior to normal operation of fault interrupting devices.

Single conductor cables for service above 2 kV will be shielded, thereby accomplishing the following results:

- Confinement of the dielectric field within the cable
- Obtaining a symmetrical radial distribution of voltage stress within the dielectric
- Compliance with ICEA recommendations for shielding
- Reducing the hazard of shock to personnel
- Allowing circuits to be dc high potential tested after installation

Instrument cable will be shielded to minimize electrical noise attenuation as follows:

- Aluminum-polyester tape and copper drain wire will be used for shielding.
- Low level analog signal cables will be made up of twisted and shielded pairs.
- Digital signal cables will be twisted and shielded pairs.

- Except where specific reasons dictate otherwise, cable shields will be electrically continuous. When two lengths of shielded cable are connected together at a terminal block, a point on the terminal block will be used for connecting the shields.

- For multipair cables using individual pair shields, the shields will be electrically isolated from each other.

To be effective, instrument cable shields should be grounded on one end as follows:

- The shield on instrument circuits will typically be grounded at the power supply end, unless dictated otherwise by the control equipment supplier.

- The shields on grounded as well as ungrounded thermocouple circuits will be grounded at the thermocouple well, unless dictated otherwise by the control equipment supplier.

- Multipair cables used with thermocouples will have individually isolated shields so that each shield will be maintained at the particular thermocouple ground potential.

- Each RTD (resistance temperature detector) system, consisting of one power supply and one or more RTDs, will be grounded at only one point.

- RTDs embedded in windings of transformers and rotating machines will be grounded at the frame of the respective equipment. The shields will also be grounded at the equipment, unless dictated otherwise by the control equipment supplier.

- The low or negative potential side of a signal pair will be grounded at the same point where the shield is grounded. Where a common power supply is used, the low side of each signal pair and its shield will be grounded at the power supply.

4.2 Conductors

All current carrying conductors, except for thermocouple wiring, will be copper.

The maximum ampacity for any cable will depend upon the worst case in which the cable will be routed (tray, conduit, duct, or direct buried). In addition to ampacity, special requirements such as voltage drop and available fault current will be taken into consideration in the sizing of cable.

The allowable ampacity of power cables will be in accordance with NEC requirements.

4.3 Cable Constructions

Cable insulation and construction will be as follows.

4.3.1 Flame Retardance

To minimize the damage that can be caused by a fire, insulated conductors installed in cable tray shall have nonpropagating and self-extinguishing characteristics. These cables shall meet the flame test requirements of IEEE 383, using a 70,000 Btu/h gas burner flame source.

4.3.2 Medium Voltage Power Cable

Single conductor shielded power cable, with stranded copper conductor, cross-linked polyethylene (XLPE) or ethylene propylene rubber (EPR) insulation, and flame retardant polyvinyl chloride (FRPVC), flame retardant chlorinated polyethylene (CPE), or flame retardant chlorosulfonated polyethylene (CSP) jacket will be used on service above 2400 volts. The insulation level versus service voltage will be as follows:

Service Voltage	Insulation Level
13.8 kV grounded	15 kV 133 percent
4.16 kV grounded	5 kV 133 percent

4.3.3 600 Volt Power Cable

Cable with 600 volt rated thermosetting insulation will be used to feed 600 volt ac, 125 volt dc power loads, and 600 volt ac motor loads.

Loads requiring 3-phase, 12 to 2 AWG conductors will be fed with NEC type TC power cable which utilizes three insulated copper conductors, XLPE or EPR insulation, a bare ground wire, and an FRPVC, CPE, or CSP overall jacket.

Loads requiring 1 AWG and larger conductors will be fed with single conductor power cable which uses stranded copper conductor, XLPE or EPR insulation without an overall jacket.

These cables may be routed in trays, conduits, or ducts.

4.3.4 600 Volt Control Cable

Cable with 600 volt rated insulation will be used in 120 volt ac and all dc control, metering, and relaying applications.

Direct current circuits, which are routed underground, shall utilize multiple conductor control cable having 10, 12, or 14 AWG stranded copper conductors, XLPE or EPR insulation, and with an FRPVC, CPE, or CSP overall jacket.

Direct current circuits which are routed aboveground, and all 120 volt ac circuits, will utilize the same construction as below grade dc circuits, as stated above, or may utilize multiple conductor control cable having 10, 12, or 14 AWG stranded copper conductors, NEC Type TC with THHN or THWN (PVC/nylon) insulated conductors, and with an FRPVC overall jacket.

The conductor size for current transformer circuits will be 10 AWG or larger.

Cables may be routed in trays, conduits, or ducts with the constructions indicated.

4.3.5 600 Volt Instrument Cable

Instrument cable will be used for circuits that require shielding to avoid induced currents and voltages. Cables may be routed in trays, conduits, or ducts and will be routed separate from 480 volt power circuits. The following cable constructions will be utilized:

- 600 volt, single pair and single triad shielded instrument cable, 16 AWG stranded copper conductors, XLPE or EPR insulation, FRPVC, CPE, or CSP jacket overall

- 600 volt multiple pair, shielded instrument cable with individually shielded pairs and overall shield, 16 AWG stranded copper conductors, XLPE or EPR insulation, FRPVC, CPE, or CSP jacket overall

4.3.6 Thermocouple Extension Cable

Thermocouple extension cable will be used for extension leads from thermocouples to junction boxes and to instruments for measurements of temperature. Cables may be routed in trays, conduits, or ducts. The following cable construction will be utilized:

- 600 volt, single pair, solid alloy conductor with the same material as the thermocouples, with shield over each pair (except for one pair construction) and with an overall shield, l6 AWG XLPE or EPR insulation; FRPVC, CPE, or CSP jacket overall

4.3.7 High Temperature Cable

High temperature cable will be used for wiring to devices located in areas with ambient temperatures above 75° C. Cables may be routed in conduit. Cable lengths will be minimized by terminating the cable at terminal boxes or conduit outlet fittings located outside the high temperature area and continuing the circuit with control or thermocouple extension cable. The following cable construction will be used:

- Single-conductor control cable; NEC Type SF-2 12 AWG; stranded copper conductor; silicone rubber insulation; braided glass jacket
- Single pair shielded thermocouple extension cable; solid alloy conductor with the same material as the thermocouples; 16 AWG; FEP teflon insulation; FEP teflon jacket overall

4.3.8 Lighting and Fixture Cable

Lighting and fixture cable with 600 volt insulation will be used as follows:

- NEC Type XHHW with copper conductor for 120 volt circuits in outdoor or unheated areas or 208 volt circuits in all areas All circuit runs totally in conduit
- Circuit runs for roadway or outdoor area lighting enclosed in PVC duct, stranded copper conductors, NEC Type XHHW conductor insulation

- Fixture wire, NEC Type SF-2, with copper conductor, silicone rubber insulation, braided glass jacket

Lighting and fixture cable designations and conductor sizes will be identified on the drawings. Minimum conductor size will be 12 AWG.

4.3.9 Grounding Cable

Grounding cable will be NEC Type THW or THHN insulated and uninsulated copper conductors sized as required.

4.3.10 Switchboard and Panelboard Cable

Switchboard and panelboard cable will be insulated for 600 volts with flame retardant XLPE or EPR moisture resistant insulation.

4.3.11 Special Cable

This type of cable will include cable supplied with equipment, prefabricated cable, coaxial cable, communication cable, etc. This cable will normally be supplied by a particular manufacturer.

Special cable will be routed in accordance with manufacturer's recommendations.

4.3.12 Miscellaneous Cable

If other types and construction of cable are required as design and construction of the unit progress, they will be designated and routed as required.

4.4 Testing Requirements

Testing of installed cable will be performed by the Construction Contractor in accordance with the contract requirements.

4.5 Installation

Cable installation will be performed by the Construction Contractor in accordance with the contract requirements.

4.6 Connectors

All cable connector requirements will be specified by Black & Veatch and provided by the Construction Contractor.

5.0 PROTECTIVE RELAYING

The selection and application of protective relays are discussed in the following paragraphs. These relays protect equipment in the Auxiliary Power Supply System, Generator Terminal System, Primary Power Supply System, Turbine Generator System, and the electrical loads powered from these systems.

The following general requirements apply to all protective relay applications:

- The protective relaying scheme will be designed to remove or alarm abnormal occurrences on equipment designed for electrical power generation, voltage transformation, energy conversion, and transmission and distribution of electrical power.
- The protective relaying scheme will also achieve the following:
  - Limit damage to faulted equipment.
  - Minimize possibility of fire or explosion.
  - Minimize hazards to personnel.
- The protective relaying system will be a coordinated application of individual relays. For each monitored abnormal condition, there will exist a designated primary device for detection of that condition. A failure of any primary relay will result in the action of a secondary overlapping scheme to detect the effect of the same abnormal occurrence. The secondary relay may be the primary relay for a different abnormal condition. Alternate relays may exist which detect the initial abnormal condition but which have an inherent time delay so that the alternate relays will operate after the primary and secondary relays. Similar to secondary relays, the alternate relays may be primary relays for other abnormal conditions. All protective relays will be selected to coordinate with protective devices supplied by manufacturers of major items and the thermal limits of electrical equipment, such as transformers and motors. Where selective coordination cannot be achieved, protection will be maintained.

- Secondary current produced by current transformers will be in the 5 ampere range, and voltage signals produced by potential transformers will be in the 120 volt range.

5.1 Generator Protective Relays

A protective relay and monitoring system, including generator differential protection, will be provided to minimize the effects from generator faults and malfunctions and will be interfaced with the utility's protection scheme.

Protective relaying and monitoring will be selected to provide, as a minimum, detection and corrective/isolation action as required for faults and malfunctions.

5.2 Power Transformer Relays

5.2.1 Generator Step-up Transformer

The generator step-up transformer is protected against the effects of the following conditions:

- Phase faults
- Ground faults
- Sudden pressure
- Excessive tank pressure
- Combustible gas
- Oil level
- High temperature
- Excessive volts per hertz (Protection is from the volts per hertz relay used with the generator.)

5.3 Metal-Clad Switchgear

A summary of the protective functions used in the 4160 volt metal-clad switchgear lineups is discussed in the following paragraphs. The relays for the auxiliary

electrical protective relay system will be selected and set to provide coordinated tripping to mitigate the faulted connection.

5.3.1 Bus and Incoming (Source) Breakers and/or High Voltage Contractors

Each incoming (source) breaker and/or contactor will be provided with protective relay type devices. These devices may be single element type or multifunction relays. The incoming breakers and/or contactors and bus will be provided with devices to detect and take appropriate action against the effects of the following conditions:

- Phase faults
- Ground faults
- Overloads
- Undervoltage

Each medium voltage switchgear bus will be provided with two undervoltage relays (Device 27) which will, when bus voltage drops to a preset level, trip load feeder circuit breakers.

5.3.2 Remote Switchgear Feeder(s)

Each remote switchgear feeder will be provided with protective devices to detect and take appropriate action against the effects of the following conditions:

- Phase faults
- Ground faults
- Overloads

5.3.3 Secondary Unit Substation Feeder(s)

Auxiliary transformers, including the excitation transformer, shall be supplied from NEMA Class E2 fused motor starters. Each secondary unit substation transformer will be

provided with protective devices, consisting of GE Mulitlin, or equivalent, relays, to detect and take appropriate action against the effects of the following conditions:

- Phase faults
- Ground faults
- Overloads

5.3.4 Motor Feeder(s)

Medium voltage motors will be supplied from NEMA Class E2 fused motor starters. Each motor feeder will be provided with protective devices, consisting of GE Mulitlin protective relays, to detect and take appropriate action against the effects of the following conditions:

- Phase faults
- Ground faults
- Overloads

5.4 480 Volt Secondary Unit Substations

Overload and phase-to-phase fault protection for loads connected to the 480 volt secondary unit substations (SUS) will be provided by solid-state trip devices (SSTD) which are an integral part of the drawout type air circuit breakers.

Breakers supplying motors of other devices which do not require coordination with downstream trip devices will have adjustable long-time and instantaneous elements for phase protection.

Main breakers, tie breakers, and breakers supplying motor control centers (MCC) or other loads which contain trip devices will have adjustable long-time and short-time SSTD elements for phase protection. The pickup point and time settings will be adjustable to allow for proper coordination with all downstream trip devices.

Ground fault detection will be provided.

5.4.1 480 Volt Motor Control Centers

Each magnetic starter within an MCC which supplies power to a motor will be equipped with a magnetic-only molded case circuit breaker and thermal overload protection in the starter to protect motors against overload.

Certain loads will be fed from MCC feeder circuit breakers. The breakers will be thermal magnetic molded case breakers sized to protect supply cable and individual loads.

5.4.2 480 Volt Power Panels

Power panels will be supplied with thermal-magnetic circuit breakers sized to protect supply cable and individual loads.

6.0 CLASSIFICATION OF HAZARDOUS AREAS

Areas where flammable and combustible liquids, gases, and dusts are handled and stored will be classified for the purpose of determining the minimum criteria for design and installation of electrical equipment to minimize the possibility of ignition. The criteria for determining the appropriate classification are specified in Article 500 of the National Electrical Code (NFPA 70). The application of these criteria to specific areas at generating stations is provided in the following subsections and in Article 127 of the National Electrical Safety Code (ANSI C2).

In addition to defining hazardous areas by class and division, each hazardous element is also assigned a group classification (A, B, C, etc.). The group classifications of hazardous elements are specified in Article 500 of the National Electrical Code and in NFPA Standard 497M.

Electrical equipment in areas classified as hazardous will be constructed and installed in accordance with the requirements of Articles 501 and 502 of the National Electrical Code.

References for use in classification of areas, as well as specification of requirements for electrical installation in such areas, include the following:

- National Electrical Safety Code, ANSI C2
- National Electrical Code, NFPA 70/ANSI C1
- National Fire Codes, and National Fire Protection Association codes, standards, and recommendations
- American Petroleum Institute Recommended Practices
- American Gas Association, Publication XFO277

6.1 Flammable and Combustible Liquid Storage and Handling

Areas where flammable and combustible liquids are stored and handled will be classified as indicated in the following subsections.

6.1.1 Flammable Liquids

Flammable liquids (flash point below 100° F/38° C), which include gasoline (Group D hazard), will be considered hazardous wherever they are handled or stored. The areas where gasoline is handled or stored will be classified as specified in Section 127.E of the National Electrical Safety Code.

6.1.2 Combustible Liquids

Combustible liquids (flash point of 100° F/38° C or higher) include fuel oil, diesel fuel, and lubrication oil (Group D hazards). Areas where these liquids are handled or stored will not be classified because they will not be handled or stored at temperatures which will produce sufficient vapors to form an ignitable mixture with air beyond the surface of the liquid within the piping or vessel in which they are normally contained.

6.2 Gaseous Hydrogen Systems

(Not Applicable.)

6.3 Natural Gas Systems

Natural gas systems used as a fuel source for combustion turbine generators will be classified as follows. Classification of areas within the combustion turbine equipment is as follows:

- Outdoor areas within 5 feet (1.5 m) of vents from relief valves will be Class I, Division 1, Group D. The area from 5 feet (1.5 m) to 15 feet (4.5 m) from the vent will be classified as Class I, Division 2, Group D.

- Enclosed areas which are adequately ventilated and contain equipment such as gas compressors, valves, regulators, etc., where natural gas will be present outside of the contained equipment only upon equipment failure will be classified Class I, Division 2, Group D. An area extending 5 feet (1.5 m) from the ridge vents for such enclosures shall also be classified Class I, Division 2, Group D.

- Outdoor areas within 15 feet (4.5 m) of gas compressors, regulators, valves, etc., will be classified Class I, Division 2, Group D.

- Enclosed areas which are not adequately ventilated and where bleed gas or gas leakage is anticipated will be classified Class I, Division 1, Group D. Adequately ventilated areas within 10 feet (3 m) of these enclosures, unless separated by a vaportight barrier, will be classified as Class I, Division 2, Group D. Areas separated by a vaportight barrier will be classified as nonhazardous.

- Enclosed areas which are adequately ventilated and contain equipment such as valves, pipe flanges, instruments, screwed pipe connections, etc., where natural gas will be present outside of the contained equipment only upon equipment failure, and which contain natural gas detectors which shut off the supply of natural gas outside the enclosed area, will be classified as nonhazardous except for within 15 feet (4.5 m) of the valve, flange, instrument, or screwed connection (potential source of gas), which shall be classified as Class I, Division 2, Group D.

- Indoor areas such as burner fronts where flames, heat, or other such sources of ignition are present will not be classified as hazardous.

- The use of low-pressure natural gas for building heating systems will not in itself be considered a cause for classifying an adequately ventilated area as hazardous.

6.4 Liquid Hydrogen Systems

(Not Applicable.)

6.5 Sewage Lift Stations

Sewage lift station wet wells and any enclosed nonventilated area above the wet well will be classified Class I, Division 1, Group D.

7.0 GROUNDING

The station grounding system will be an interconnected network of bare copper conductor and copper-clad ground rods. The system will be provided to protect plant personnel and equipment from the hazards which can occur during power system faults, and to provide the ability to detect line-to-ground faults.

7.1 Design Basis

The station grounding grid will be designed for adequate capacity to dissipate heat from ground current under the most severe conditions in areas of high ground fault current concentrations, with grid spacing so that safe voltage gradients are maintained.

Bare conductors to be installed below grade will be spaced in a grid pattern to be indicated on the construction drawings. Each junction of the grid will be bonded together by an exothermal welding process.

In the plant area, grounding stingers will be connected to selected equipment. The grounding system will be extended, by way of stingers and conductors installed in raceway, to the remaining plant equipment. Equipment grounds will conform to the following general guidelines:

- Grounds will conform to the NEC and NESC.
- Major items of equipment, such as switchgear, secondary unit substations, motor control centers, relay panels, and control panels, will be connected to the station ground grid.

- Electronic panels and equipment, where required, will be grounded using an insulated ground wire connected in accordance with the manufacturer's recommendations.

- Distributed control system cabinets and equipment will be grounded according to manufacturer's requirements or recommendations.

- Motor supply circuits to 480 volt motors, which utilize three-conductor cable with a ground in the interstices, will utilize this ground for the motor ground. For 480 volt motor supply circuits which use three single-conductor cables, the ground conductor will be sized in accordance with the applicable codes.

- All 2300 volt and higher voltage rated motors will have a minimum of one 4/0 AWG bare copper ground conductor connected between the motor frame and the station ground grid.

- A copper grounding conductor will be routed parallel to all power conductors operating above 208/120 volts in accordance with the applicable codes.

- All ground wires installed in conduit will be insulated.

Remote buildings and outlying areas with electrical equipment will be grounded by establishing local subgrade ground grids and equipment grounding systems in a manner similar to the plant area. Remote grids, where practical, will be interconnected with the station ground grid.

7.2 Materials

Grounding materials will be as follows:

- Rods will be copper-clad.

- Cable will be soft-drawn copper with Class B stranding or copper-clad steel.

- Exothermal welds will use molds, cartridges, and materials as manufactured by Cadweld or equivalent.

- Clamps, connectors, and other hardware used with the grounding system will be made of copper.

- Ground wires installed in conduit will be soft-drawn copper with Class B stranding, and green colored 600 volt PVC insulation.

8.0 LIGHTING

The lighting system will provide personnel with illumination of plant equipment and roads under normal conditions. The power supply for the lighting system will be from 208/120 volt, 3-phase, four-wire panelboards located in the unit and BOP 480V distribution switchgear.

8.1 Light Sources

The lighting system will be designed in accordance with the Illuminating Engineering Society (IES) to provide illumination levels recommended by the following standards and organizations:

- ANSI/IES RP-8, Roadway Lighting
- Design Guide for GE and Black & Veatch

Table 8-1 summarizes the illumination levels.

Table 8-1
Illumination Levels

Location	Maintained Foot-Candles	Illumination LUX
Outdoor Catwalks and Platforms	2	20
Roadway		
Between or along buildings	1	10
Not bordered by buildings	0.5	5

Light sources and fixture selections will be based on the applicability of the luminaries for the area under consideration.

Generally, high-pressure sodium lamps will be used outdoors.

For design purposes, lighting is categorized by the following areas:

- Outdoor areas

- Roadway and area

8.2 Outdoor Areas

This category includes lighting of equipment located outdoors and outdoor platforms. High-pressure sodium fixtures suitable for use in wet locations will be used.

8.3 Roadway and Area

Roadway and perimeter fence lighting will be designed using high-pressure sodium light sources. The light fixtures will be installed on tapered steel poles.

8.4 Lighting Control

Electric power to light fixtures located outdoors will be switched with photo-electric controllers.

8.5 Wiring Devices

Convenience outlets located outdoors will be provided with weatherproof snap-action covers. In hazardous locations, convenience outlets will be suitable for the NEC class and group requirements.

9.0 FREEZE PROTECTION

(Not Applicable.)

10.0 LIGHTNING PROTECTION

(Not Applicable.)

11.0 RACEWAY AND CONDUIT

The design and specifications for the raceway and conduit systems used in supporting and protecting electrical cable will be in accordance with the provisions of the NEC.

11.1 Cable Tray

All cable trays will be of trough or ladder type construction with a maximum rung spacing of 9 inches, nominal depths of 4 to 6 inches, and various widths as required. There will be a maximum spacing of 8 feet between cable tray supports, except fittings (elbows, tees, etc.) which shall be supported in accordance with NEMA standards.

Cable tray fittings will have a radius equal to or greater than the minimum bending radius of the cables they contain.

Individual tray systems will be established for the following services:

- Medium voltage power cables
- 480 volt power cables equal to or greater than 2/0 AWG
- 120 volt ac, 125 volt dc, and 24 volt dc power, control, and multiconductor 480 volt power cables
- Special noise sensitive circuits or instrument cables

Further division will be provided where required by the equipment manufacturer.

The summation of the cross-sectional areas of cable in tray will generally be limited to 50 percent for control and instrument cables, and in accordance with the NEC for power cables.

The minimum design vertical spacing for trays will be 9 inches measured from the bottom of the upper tray to the top of the lower tray. At least a 9 inch clearance will also be maintained between the top of a tray and beams, piping, or other obstacles, to facilitate installation of cables in the tray. A working space of not less than 24 inches will be maintained on at least one side of each tray.

Ventilated covers will be provided for vertical trays. Solid covers will be provided for all solid bottom tray. Solid covers will also be provided for the top tray of horizontal tray runs located under grating floor or insulated piping.

11.2 Conduit

Conduit will be used to protect conductors to individual devices, in hazardous areas, and where the quantity of cable does not economically justify the use of cable tray.

PVC conduit will be used for duct banks and for some below grade concrete encased conduit.

Liquidtight flexible metallic conduit will be used for connections to accessory devices such as solenoid valves, limit switches, pressure switches, etc., for connections to motors or other vibrating equipment, and across areas where expansion or movement of the conduit is required.

All other conduit, unless specific environmental requirements dictate the use of plastic or aluminum conduit, will be rigid galvanized steel.

Exposed conduit will be routed parallel or perpendicular to dominant surfaces with right angle turns made of symmetrical conduit bends or fittings.

Conduit will be sized in accordance with the National Electrical Code.

Conduit will be securely supported within 3 feet of connections to boxes and cabinet and in accordance with the following:

Conduit Size	Maximum Distance Between Supports
1/2 up to 1-1/2 inch	8 feet
1-1/2 inch and larger	10 feet

11.3 Duct Banks

Underground duct banks will be used for cable routed between buildings and other remote areas as necessary.

All underground duct banks will consist of Type EB plastic conduit encased in concrete. Galvanized steel conduits will also be installed where required for digital and analog low-level circuits requiring noise immunity from adjacent power circuits.

Duct bank risers and conduit from manholes to the equipment at remote locations will be changed to rigid steel prior to emerging from below grade. All below grade conduit will be encased in concrete.

Ducts will be sloped to manholes to provide adequate drainage. Low spots in duct runs will be avoided.

Concrete manholes, handholes, and vaults will be provided, where required, so that cable may be installed without exceeding allowable pulling tensions and cable sidewall pressures. Each manhole will have the following provisions:

- Provisions for attachment of cable pulling devices
- Provisions for racking of cables
- Manhole covers of sufficient size to loop feed the largest diameter cable through the manhole without splicing
- Sealed bottoms
- Water stops at duct bank entrances

Appendix H6

Major Equipment List

MAJOR EQUIPMENT LIST

1.0 INTRODUCTION

The following equipment descriptions are based on conceptual design and are representative of the proposed scope.

2.0 COMBUSTION TURBINE GENERATOR (CTG)

Quantity	Capacity	Description
2	100%	General Electric Model PG7121(EA) combustion (gas) turbine generator, suitable for firing natural gas, nominally rated at 83.2 MW at ISO conditions. There will be no steam injection. A dry low NO_x combustor is used to control NO_x.
2	100%	Evaporative cooler.
2	100%	General Electric Model 87A6 Packaged Air Cooled Generator.
2	100%	Compressor water wash system (on/off-line).
2	100%	Acoustical enclosure.
2	100%	CO_2 or FM-200 fire protection system.

3.0 COMPRESSED AIR SYSTEM

Quantity	Capacity	Description
2	100%	Air compressors - air-cooled.
1	100%	Air receiver tank.
2	100%	Air dryers.

4.0 WATER TREATMENT SYSTEM

Quantity	Capacity	Description
1	100%	Fire/service water storage tank - 200,000 gal.
2	100%	Oil/water separators with duplex pumps.
1	100%	RO System.
1	100%	RO product tank - 10,000 gal.
2	100%	RO product tank pumps.
2	100%	Raw water pumps.
1	100%	Wastewater filter package.
1	100%	Wastewater RO package.

5.0 FUEL SYSTEM

Quantity	Capacity	Description
1	100%	Metering station.
2	100%	Fuel gas scrubber/filter.

6.0 FIRE PUMPS

Quantity	Capacity	Description
2	100%	2,500 gpm electric motor-driven fire pumps.
1	100%	Electric motor-driven jockey pump (pressure maintenance).

7.0 ELECTRICAL EQUIPMENT

Quantity	Capacity	Description
2	100%	CT generator step-up transformer (Later) MVA, OA/FA/FA, 230 kV - 13.8 kV.
2	100%	Unit auxiliary transformer (Later) MVA, OA/FA, 13.8 kV - 480 V.
2	100%	CT generator circuit breaker, 5,000 amp, 1,500 MVA at 40° C, rated for operation on a 13.8 kV system.
2	100%	Electrical equipment including 480 V secondary unit substations and MCCs.
1	3-phase 460 V 250 kW	Emergency generator.

8.0 EMISSION CONTROL EQUIPMENT

Quantity	Capacity	Description
2	100%	SCR System for NO_x control.
2	100%	Catalyst for CO control.
2	100%	Blowers for air dilution of CTG gases. 375 kW motors 105,500 acfm, static pressure 17.85 in. wc.
2		Aqueous ammonia injection skid.
1	9,000 gallons	Aqueous ammonia storage tank.
2	17’ dia., 100’ tall	CTG stack.
1	8,000 gallon	Sub surface ammonia spill collection tank

9.0 SIZE (APPROXIMATE) OF MAJOR EQUIPMENT

Quantity	Description	Length (ft)	Width (ft)	Height (ft)
2	Combustion gas turbine with cranking motor package	50	45	20
2	CT air inlet filter with air cooling	57	20	57
2	CT generator with enclosure	40	20	25
2	Fuel gas filter separator	10	10	40
2	CTG stack	--	17.0 dia	100
2	Aqueous ammonia vaporizer skid (SCR)	20	15	10
2	CT generator breakers	20	15	15
2	Auxiliary transformer	15	10	20
2	Step-up transformer	35	20	25
2	Double-ended secondary unit substation/ transformer	28	20	15
1	Fire/service water storage tank (200,000 gallons)	--	30 dia	38
1	Aqueous ammonia storage tank (9,000 gallons)	--	30 dia	16
1	Administration/maintenance building	100	50	25
1	Fire pump structure	30	15	12
1	Electrical switchgear structure	36	12	15
1	Emergency generator structure	14	12	--
1	Sub surface ammonis spill collection tank (8,000 gallons)	17	9 dia	--

Appendix I

Socioeconomics

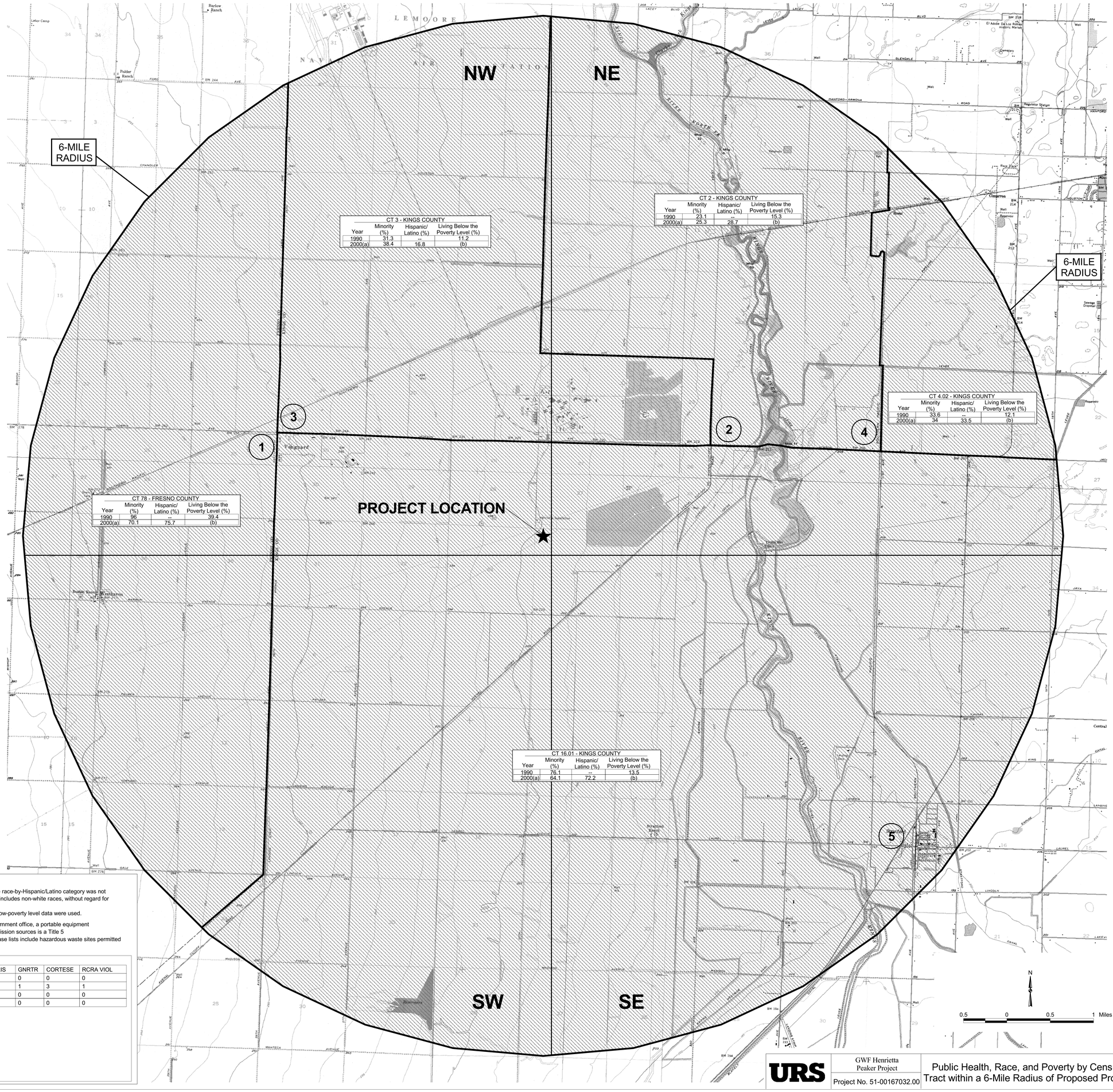

Notes:

(a) The 1990 percentage of minority residents includes all residents except white non-Hispanics. Since the race-by-Hispanic/Latino category was not available from the 2000 Census for California census tracts in July 2001, the minority percentage for 2000 includes non-white races, without regard for ethnicity. Ethnicity (Hispanic/Latino) is presented as a separate percentage.

(b) Below-poverty level statistics were not available in July 2001 from the 2000 Census; therefore 1990 below-poverty level data were used.

Permitted air emission sources within 6 miles of the project site include two cotton-ginning facilities, a government office, a portable equipment facility, and a concrete batching facility (labeled No. 1 through No. 5 on Figure 8.8-1). None of the 5 air emission sources is a Title 5 permitted facility. VISTA reported the sites listed in the table below and labeled on the map. VISTA database lists include hazardous waste sites permitted by U.S. EPA (Toxic Release Inventory Sites) and the California Department of Toxic Substances Control.

			Database Category:						
Map Label	Number of Hazardous Site Locations	Number of Sites	LUST	SWLF	ERNS	TRIS	GNRTR	CORTESE	RCRA VIOL
NW	23	35	0	0	0	0	0	0	0
NE	28	85	23	1	16	0	1	3	1
SW	19	28	0	0	0	0	0	0	0
SE	26	40	0	0	0	0	0	0	0

Key:
LUST = leaking underground storage tank
SWLF = solid waste landfill
ERNS = emergency response notification of spills
TRIS = toxic release inventory database
GNRTR = RCRA registered small or large generators of hazardous waste
CORTESE = state index of properties with hazardous waste
RCRA VIOL = RCRA violation/enforcement actions
Sources :
VISTA, 2001; SJVAPCD, 2001
US Census 1990; US Census 2000

URS

GWF Henrietta Peaker Project

Project No. 51-00167032.00

Public Health, Race, and Poverty by Census Tract within a 6-Mile Radius of Proposed Projec

L:\Projects\GWF-HENRI

Appendix J

Natural Gas

ZALCO LABORATORIES, INC.
Analytical & Consulting Services

4309 Armour Avenue
Bakersfield, California 93308

(661) 395-0539
FAX (661) 395-3069

GWF Power
4300 Railroad Avenue
Pittsburg CA 94565

Attention: Bob Okubo
CC:
Sample Description:
Natural Gas Main To Plant (stainless steel sample cylinder)
Sampled 08/21/00 @ 13:00 by S. Howard

Laboratory No: 0008313-1
Date Received: 08/22/2000
Date Analyzed: 08/22/2000
Purchase Order: Q0005010
Date Reprinted: 08/22/2000
Test Code: 1635

CHONS Chromatographic Analysis, ASTM D-1945-81, ASTM D-3588-89, GPA 2145-94

Constituent:	Norm Mol%	Norm Wt%	GPM	CHONS%
				Carbon, C
Oxygen	2.467	3.930		60.85
Nitrogen	9.463	13.198		
				Hydrogen, H
Carbon Dioxide	2.128	4.663		18.63
Carbon Monoxide	0.000	0.000		
				Oxygen, O
Methane	75.465	60.276		7.32
Ethane	7.954	11.907		
Propane	2.008	4.409	0.552	Nitrogen, N
IsoButane	0.124	0.359	0.041	13.20
n-Butane	0.267	0.773	0.084	
IsoPentane	0.038	0.136	0.014	Sulfur, S
n-Pentane	0.034	0.121	0.012	0.00
Hexanes +	0.053	0.226	0.023	
Totals:	100.000	100.000	0.726	100.00

Gas Properties calculated at STP: degrees F.	60.00	H/C Ratio:
Measurement Base Pressure at STP: psia	14.696	0.31

Gross Btu/Cu.Ft.,	Dry Gas HHV	973.9	Relative Gas Density; Ideal gas:	0.6935
Ideal Gross Btu/Lb.	Dry Gas HHV	18357.2	Specific Gravity, (Air = 1) Real gas:	0.6947
Net Btu/Cu.Ft.	Dry Gas LHV	880.3	Real Gas Density, Lb/Cu.Ft.	0.05305
Ideal Net Btu/Lb	Dry Gas LHV	16593.4	Specific Volume, Cu.Ft./Lb	18.8491
Gross Btu/Cu.Ft.,	water saturated	954.7	Compressibility, 'z'	0.9977

		Gross or HHV:	Net or LHV:
"F" Factor,	DSCF/MMBtu at 60F.	8552.3	9461.4
"F" Factor,	DSCF/MMBtu at 68F.	8682.6	9605.5
"F" Factor,	DSCF/MMBtu at 70F.	8715.5	9642.0
"FC" Factor,	DSCF CO2/MMBtu60F.	1048.2	1159.6
"FC" Factor,	DSCF CO2/MMBtu68F.	1064.1	1177.2

Jim Etherton
Laboratory Operations Manager

This report is furnished for the exclusive use of our Customer and applies only to the samples tested. Zalco is not responsible for report alteration or detachment.

ZALCO LABORATORIES, INC.
Analytical & Consulting Services

4309 Armour Avenue
Bakersfield, California 93308

(661) 395-0539
FAX (661) 395-3069

GWF Power
4300 Railroad Avenue
Pittsburg, CA 945656006

Attention: Bob Okubo

Sample Type: Gas/NGL/LPG

Description: Natural Gas Main to Plant
Sampled by Steve Howard

Laboratory No: 0008313-1
Date Received: 08/22/00
Date Reported: 08/24/00
Contract No. : 00-0534
Date Sampled : 08/21/00
Time Sampled : 13:00

REPORT OF ANALYTICAL RESULTS

Constituents	Results	Units	DLR	Method/Ref
Total Sulfur				
Hydrogen Sulfide, Total H2S	1.6	ppmv	1.0	D 3246/3
Total Sulfur, S	0.10	Gr/100 SCF	0.06	D-3246/3

Date Analyzed: 08/23/00 JAH

Jim Etherton, Lab Operations Manager

cc:

Method Reference
A. Annual Book of A.S.T.M. Standards

mg/L : milligrams per liter (parts per million)
ug/L : micrograms per liter (parts per billion)
umhos/cm : micromhos/cm at 25 C
mmhos/cm : millimhos/cm at 25 C
ND : None detected
N/A : Not Applicable
DLR : Detection Limit for Reporting Purposes
MBAS : Methylene Blue Active Substances

This report is furnished for the exclusive use of our Customer and applies only to the samples tested. Zalco is not responsible for report alteration or detachment.

ZALCO LABORATORIES, INC.
Analytical & Consulting Services

4309 Armour Avenue
Bakersfield, California 93308

(661) 395-0539
FAX (661) 395-3069

GWF Power
4300 Railroad Avenue
Pittsburg CA 94565

Attention: Bob Okubo
cc:
Sample Description:
Natural Gas Main To Plant
Sampled 07/31/00 @ 10:50 by T. Mason

Laboratory No: 0007433-1
Date Received: 07/31/2000
Date Analyzed: 08/02/2000
Purchase Order:
Q0005010

Date Reprinted: 08/02/2000

Test Code: 1635

GC1 Chromatographic Analysis, ASTM D-1945-81, ASTM D-3588-89, GPA 2145-94

Constituent:	Norm Mol%	Norm Wt%	GPM Gallons/1000 Cu.F
Oxygen	0.061	0.105	GPM, (C3....C3) = 0.499
Nitrogen	0.549	0.825	(C3....C4) = 0.585
Carbon Dioxide	2.167	5.117	(C3....C5) = 0.603
Carbon Monoxide	0.000	0.000	(C3....C6+) = 0.638
Methane	86.396	74.361	
Ethane	8.612	13.894	
Propane	1.814	4.292	0.499
IsoButane	0.089	0.277	0.029
n-Butane	0.180	0.562	0.057
IsoPentane	0.028	0.108	0.010
n-Pentane	0.024	0.092	0.009
Hexanes +	0.079	0.367	0.034
Totals:	100.000	100.000	0.638
Total Flammable Gases:	97.22	93.95	

Gas Properties calculated @STP: degrees F. 60
Measurement Base Pressure @STP: psia 14.696

Gross Btu/Cu.Ft.,	Dry Gas	1088.1
Ideal Gross Btu/Lb.	Dry Gas	22095.5
Net Btu/Cu.Ft.	Dry Gas	983.2
Ideal Net Btu/Lb	Dry Gas	19964.2
Gross Btu/Cu.Ft.,	water saturated	1066.3

Relative Gas Density; [Air=1] Ideal	0.6436
Specific Gravity, [Air=1] Real gas	0.6449
Real Gas Density, Lb/Cu.Ft.	0.04925
Specific Volume, Cu.Ft./Lb	20.3056
Relative Liquid Density @ 60F/60F	0.3278
Compressibility, 'z'	0.9974
Molecular Weight of gas	18.64

Jim Etherton
Laboratory Operations Manager

This report is furnished for the exclusive use of our Customer and applies only to the samples tested. Zalco is not responsible for report alteration or detachment

ZALCO LABORATORIES, INC.
Analytical & Consulting Services

4309 Armour Avenue
Bakersfield, California 93308

(661) 395-0539
FAX (661) 395-3069

GWF Power
4300 Railroad Avenue
Pittsburg, CA 945656006

Attention: Bob Okubo

Sample Type: Gas/NGL/LPG

Description: Natrual Gas Main to Plant
Sampled by Tim Mason

Laboratory No: 0007433-1
Date Received: 07/31/00
Date Reported: 08/17/00
Contract No. :
Date Sampled : 07/31/00
Time Sampled : 10:50

REPORT OF ANALYTICAL RESULTS

Constituents	Results	Units	DLR	Method/Ref
Total Sulfur				
Hydrogen Sulfide, Total H2S	1.3	ppmv	1.0	D-3246/3
Total Sulfur, S	0.08	Gr/100 SCF	0.06	D-3246/3

Date Analyzed: 08/04/00 JAR

Jim Epperton, Lab Operations Manager

cc.

Method References
3. Annual Book of A.S.T.M. Standards
41 South Coast AQMD

mg/L : milligrams per Liter (parts per million)
ug/L : micrograms per Liter (parts per billion)
umhos/cm : micromhos/cm at 25 C
mmhos/cm : millimhos/cm at 25 C
ND : None Detected
N/A : Not Applicable
DLR : Detection Limit for Reporting Purposes
MBAS : Methylene Blue Active Substances

This report is furnished for the exclusive use of our Customer and applies only to the samples tested. Zalco is not responsible for report alteration or detachment.

Atmospheric Analysis & Consulting, Inc.

LABORATORY ANALYSIS REPORT

CLIENT	: Zalco Laboratories, Inc.	SAMPLING DATE	: 7/31/2000
PROJECT NUMBER	: 300-02-2295	RECEIVING DATE	: 8/1/2000
UNITS	: PPBV	ANALYSIS DATE	: 8/2/2000
DETECTION LIMIT	: 50 PPBV	REPORT DATE	: 8/16/2000

	Client ID	Sample 1
Compounds	AAC-ID	22140-1
H_2S		<50
Carbonyl Sulfide + SO2		403
Methyl Mercaptan		<50
Ethyl Mercaptan		<50
Propyl Mercaptan		<50
Carbon Disulfide		<50
Dimethyl Sulfide		<50
Allyl Sulfide		<50
Propyl Sulfide		<50
Allyl disulfide		<50
Butyl Sulfide		<50
Isopropyl Mercaptan		<50
t-Butyl mercaptan		<50
Ethyl methyl sulfide		<50
Thiophene		<50
Isobutyl mercaptan		<50
Dimethyl disulfide		<50
Diethyl sulfide		<50
n-Butyl mercaptan		<50
Allyl mercaptan		<50
3-Methylthiophene		<50
Tetrahydrothiophene		<50
2-Ethylthiophene		<50
2,5-Dimethylthiophene		<50
Diethyl disulfide		<50

Dr. Sucha Parmar
President

4572 Telephone Road • Suite 920 • Ventura, California 93003 (805) 650-1642 • FAX (805) 650-1644

Appendix K1

Compliance Plan

COMPLIANCE PLAN

CONDITIONS OF CERTIFICATION

COMPLIANCE PROJECT MANAGER (CPM) RESPONSIBILITIES

A CPM will oversee the compliance monitoring and shall be responsible for:

1. Ensuring that the design, construction, operation, and closure of the project facilities is in compliance with the terms and conditions of the Commission Decision;

2. Resolving complaints;

3. Processing post-certification changes to the conditions of certification, project description, and ownership or operational control;

4. Documenting and tracking compliance filings; and,

5. Ensuring that the compliance files are maintained and accessible.

The CPM is the contact person for the Commission and will consult with appropriate responsible agencies and the Commission when handling disputes, complaints and amendments.

All project compliance submittals are submitted to the CPM for processing. Where a submittal required by a condition of certification requires CPM approval, it should be understood that the approval would involve all appropriate staff and management.

The Commission has established a toll free 800 number for the public to use for notifying the Commission about power plant construction and operation related complaints or events of concern. The telephone number is **1-800-858-0784.**

Pre-Construction and Pre-Operation Compliance Meeting

The CPM may schedule pre-construction and pre-operation compliance meetings prior to the projected start-dates of construction, plant operation, or both. The purpose of these meetings will be to assemble both the Commission's and the project owner's technical staff to review the status of all pre-construction or pre-operation requirements contained in the Commission's Conditions of Certification to confirm that they have been met or, if they have not been met, to ensure that the proper action is taken. In addition, these meetings shall ensure, to the extent possible, that Commission conditions will not delay the construction and operation of the plant due to oversight or inadvertence and to preclude any last minute, unforeseen issues from arising.

Commission Record

The Commission shall maintain as a public record in either the Compliance file or Docket file for the life of the project (or other period as required):

1) All documents demonstrating compliance with any legal requirements relating to the construction and operation of the facility;

2) All monthly and annual compliance reports filed by the project owner;

3) All complaints of noncompliance filed with the Commission; and,

4) All petitions for project or condition changes and the resulting staff or Commission action taken.

PROJECT OWNER RESPONSIBILITIES

It is the responsibility of the project owner and any successors in interest to ensure that the general compliance conditions and the Conditions of Certification are satisfied. The general compliance conditions regarding post-certification changes specify measures that the project owner and any successors in interest must take when requesting changes in the project design, compliance conditions, or ownership. Failure to comply with any of the Conditions of Certification or the general compliance conditions may result in revocation of Commission certification, an administrative fine, or other action as appropriate.

Access

The CPM, designated staff, and delegated agencies or consultants, shall be guaranteed and granted access to the power plant site, related facilities, project-related staff, and the records maintained on site, for the purpose of conducting audits, surveys, inspections, or general site visits. Although the CPM will normally schedule site visits on dates and time agreeable to the project owner, the CPM reserves the right to make unannounced visits.

Compliance Record

The project owner shall maintain project files on-site or at an alternative site approved by the CPM, for the life of the project. The files shall contain copies of all “as-built” drawings, all documents submitted as verification for conditions, and all other project-related documents for the life of the project, unless a lesser period is specified by the Conditions of Certification.

Commission staff and delegate agencies shall, upon request to the project owner, be given access to the files.

Start of Operations

The HPP shall be on line not later than December 31, 2002. If the HPP is not operational by that date, the CEC shall conduct a hearing to determine whether due diligence was exercised by the project owner. If the CEC determines that due diligence was not exercised, the CEC shall set a specific date by which the project must be brought on line as a condition precedent to continue the certification.

Three Year Review (Project will request "project life" request, will this effect 3-year review)

No later than 15 days after the completion of the first three years of operation, the project owner shall submit to the CEC a report of operations that contains a review of the project's compliance with the terms and conditions of certification, the number of hours of operation and the demand for power from the facility during the three year period.

Compliance Verifications

A cover letter from the project owner or authorized agent is required for all compliance submittals and correspondence pertaining to compliance matters. **The cover letter subject line shall identify the involved condition(s) of certification by condition number and include a brief description of the subject of the submittal**. The project owner shall also identify those submittals **not** required by a condition of certification with a statement such as: "This submittal is for information only and is not required by a specific condition of certification." When submitting supplementary or corrected information, the project owner shall reference the date of the previous submittal.

The project owner is responsible for the delivery and content of all verification submittals to the CPM, whether such condition was satisfied by work performed by the project owner or an agent of the project owner.

All submittals shall be addressed as follows:

Compliance Project Manager
Henrietta Peaker Project (HPP)
California Energy Commission
1516 Ninth Street (MS-2000)
Sacramento, CA 95814

If the project owner desires Commission staff action by a specific date, it shall so state in its submittal and include a detailed explanation of the effects on the project if this date is not met.

Each Condition of Certification is followed by a means of verification. The verification describes the Commission's procedure(s) to ensure post-certification compliance with

adopted conditions. The verification procedures, unlike the conditions, may be modified, as necessary, by the CPM, in most cases without Commission approval. [See Title 20, California Code of Regulations, §1760.]

Verification of compliance with the Conditions of Certification can be accomplished by:

1) Reporting on the work done and providing the pertinent documentation in monthly and/or annual compliance reports filed by the project owner or authorized agent as required by the specific Conditions of Certification;

2) Appropriate letters from delegate agencies verifying compliance;

3) Commission staff audit of project records; and/or

4) Commission staff inspection of mitigation and/or other evidence of mitigation.

Compliance Reporting

There are two different compliance reports that the project owner must submit to assist the CPM in tracking activities and monitoring compliance with the terms and conditions of the Commission Decision. During construction, the project owner or authorized agent shall submit Monthly Compliance Reports. During operation, an Annual Compliance Report must be submitted. These reports, and the requirement for an accompanying compliance matrix, are described below. The majority of the Conditions of Certification require that compliance submittals be submitted to the CPM in the monthly compliance reports.

Compliance Matrix

A compliance matrix shall be submitted by the project owner to the CPM along with each monthly and annual compliance report. The compliance matrix is intended to provide the CPM with the current status of compliance conditions in a spreadsheet format. The compliance matrix must identify:

1) The technical area;

2) The condition number;

3) A brief description of the verification action or submittal required by the condition;

4) The date the submittal is required (e.g., sixty (60) days prior to construction, after final inspection, etc.);

5) The expected or actual submittal date;

6) The date a submittal or action was approved by the Chief Building Official (CBO), CPM, or delegate agency, if applicable; and

7) An indication of the compliance status for each condition (e.g., “not started”, “in progress” or “completed date”).

Completed or satisfied conditions do not need to be included in the compliance matrix after they have been identified as completed/satisfied in at least one monthly or annual compliance report.

Monthly Compliance Report

During construction of the project, the project owner or authorized agent shall submit Monthly Compliance Reports within 10 working days after the end of each reporting month. Monthly Compliance Reports shall be clearly identified for the month being reported. The reports shall contain, at a minimum:

1) A summary of the current project construction status, a revised/updated schedule if there are significant delays, and an explanation of any significant changes to the schedule;

2) Documents required by specific conditions to be submitted along with the Monthly Compliance Report. Each of these items must be identified in the transmittal letter, and should be submitted as attachments to the Monthly Compliance Report;

3) An initial, and thereafter updated, compliance matrix which shows the status of all Conditions of Certification (fully satisfied and/or closed conditions do not need to be included in the matrix after they have been reported as closed);

4) A list of conditions which have been satisfied during the reporting period, and a description or reference to the actions which satisfied the condition;

5) A list of any submittal deadlines that were missed accompanied by an explanation and an estimate of when the information will be provided;

6) A cumulative listing of any approved changes to Conditions of Certification;

7) A listing of any filings with, or permits issued by, other governmental agencies during the month;

8) A projection of project compliance activities scheduled during the next two months;

9) A listing of the month’s additions to the on-site compliance file; and

10) Any requests to dispose of items that are required to be maintained in the project owner's compliance file.

The first Monthly Compliance Report is due the month following the Commission business meeting date that the project was approved, unless the project owner notifies the CPM in writing that a delay is warranted. The first Monthly Compliance Report shall include an initial list of dates for each of the events identified on the Key Events List. *(The Key Events List is located at the end of this section.)*

Annual Compliance Report

After the air district has issued a Permit to Operate, the project owner shall submit Annual Compliance Reports instead of Monthly Compliance Reports. The Permit to Operate is issued following the satisfactory completion of the required source test.

The annual reports are for each calendar year of commercial operation and are due to the CPM each year on a date designated by the CPM. Annual Compliance Reports shall be submitted over the life of the project unless otherwise specified by the CPM. Each Annual Compliance Report shall identify the reporting period and shall contain the following:

1) An updated compliance matrix which shows the status of all Conditions of Certification (fully satisfied and/or closed conditions do not need to be included in the matrix after they have been reported as closed);

2) A summary of the current project operating status and an explanation of any significant changes to facility operations during the year (e.g., total hours of operation, scheduled and unscheduled maintenance and any major repairs);

3) Documents required by specific conditions to be submitted along with the Annual Compliance Report. Each of these items must be identified in the transmittal letter, and should be submitted as attachments to the Annual Compliance Report;

4) A cumulative listing of all post-certification changes approved by the Commission or cleared by the CPM;

5) An explanation for any submittal deadlines that were missed, accompanied by an estimate of when the information will be provided;

6) A listing of filings made to, or permits issued by, other governmental agencies during the year;

7) A projection of project compliance activities scheduled during the next year;

8) A listing of the year's additions to the on-site compliance file, and

9) An evaluation of the on-site contingency plan for unexpected facility closure, including any suggestions necessary for bringing the plan up to date [see General Conditions for Facility Closure addressed later in this section].

Confidential Information

Any information deemed confidential by the project owner shall be submitted to the Commission's Docket with an application for confidentiality pursuant to Title 20, California Code of Regulations, § 2505(a). Any information determined to be confidential shall be kept confidential as provided for in Title 20, California Code of Regulations, § 2501 et seq.

Department of Fish and Game Filing Fee

Pursuant to the provisions of Fish and Game Code, § 711.4, the project owner shall pay a filing fee in the amount of eight hundred and fifty dollars ($850) to the Department of Fish and Game. The payment instrument shall be provided to the Commission's Project Manager at the time of project certification and shall be made payable to the California Department of Fish and Game. The Commission's Project Manager will submit the payment to the Office of Planning and Research as payment to the Secretary of the Resources Agency at the time of filing of the notice of decision pursuant to Public Resources Code, § 21080.5.

FACILITY CLOSURE

Introduction

At some point in the future, the project will cease operation and close down. At that time, it will be necessary to ensure that the closure occurs in such a way that public health and safety and the environment are protected from adverse impacts. Although the project setting for this project does not appear, at this time, to present any special or unusual closure problems, it is impossible to foresee what the situation will be in 30 years or more when the project ceases operation. Therefore, provisions must be made which provide the flexibility to deal with the specific situation and project setting which will exist at the time of closure. Laws, ordinances, regulations and standards (LORS) pertaining to facility closure are identified in the sections dealing with each technical area. Facility closure will be consistent with LORS in effect at the time of closure.

There are at least three circumstances in which a facility closure can take place: planned closure, unexpected temporary closure and unexpected permanent closure.

Planned Closure

This planned closure occurs at the end of a project's life, when the facility is closed in an anticipated, orderly manner, at the end of its useful economic or mechanical life, or due to gradual obsolescence.

Unexpected Temporary Closure

This unplanned closure occurs when the facility is closed suddenly and/or unexpectedly, on a short-term basis, due to unforeseen circumstances such as a natural disaster or an emergency.

Unexpected Permanent Closure

This unplanned closure occurs if the project owner closes the facility suddenly and/or unexpectedly, on a permanent basis. This includes unexpected closure where the owner remains accountable for implementing the on-site contingency plan. It can also include unexpected closure where the project owner is unable to implement the contingency plan and the project is essentially abandoned.

General Conditions for Facility Closure

Planned Closure

In order that a planned facility closure does not create adverse impacts, a closure process that provides for careful consideration of available options, applicable laws, ordinances, regulations, standards, and local/regional plans in existence at the time of closure, will be undertaken. To ensure adequate review of a planned project closure, the project owner shall submit a proposed facility closure plan to the Commission for review and approval at least twelve months prior to commencement of closure activities (or other period of time agreed to by the CPM). The project owner shall file 120 copies (or other number of copies agreed upon by the CPM) of a proposed facility closure plan with the Commission.

The plan shall:

1. Identify and discuss any impacts and mitigation to address significant adverse impacts associated with proposed closure activities and to address facilities, equipment, or other project related remnants that will remain at the site.

2. Identify a schedule of activities for closure of the power plant site, transmission line corridor, and all other appurtenant facilities constructed as part of the project.

3. Identify all facilities and equipment that will a) be immediately removed from the site after closure (e.g., hazardous materials); b) temporarily remain on the site after closure (e.g., until the item is sold or scrapped); and c) permanently remain on the site after closure. The plan must explain both why the item cannot be removed and why it does not present a risk of harm to the environment and the public health and safety to remain *in situ* for an indefinite period.

4. Address conformance of the plan with all applicable laws, ordinances, regulations, standards, local/regional plans in existence at the time of facility closure, and applicable Conditions of Certification.

Workshops and/or hearings may be conducted as part of the Commission's approval procedure if there are significant issues associated with the proposed facility closure plan, or the desires of local officials or interested parties are inconsistent with the plan.

In addition, prior to submittal of the proposed facility closure plan, a meeting shall be held between the project owner and the Commission CPM for the purpose of discussing the specific contents of the plan.

As necessary, prior to or during the closure plan process, the project owner shall take appropriate steps to eliminate any immediate threats to public health and safety or the environment, but shall not commence any other closure activities, until Commission approval of the facility closure plan is obtained.

Unexpected Temporary Closure

In order to ensure that public health and safety and the environment are protected in the event of an unexpected temporary facility closure, it is essential to have an on-site contingency plan in place. The on-site contingency plan will help to ensure that all necessary steps to mitigate public health and safety, and environmental impacts, are taken in a timely manner.

The project owner shall submit an on-site contingency plan for CPM review and approval. The plan shall be submitted no less that sixty (60) days (or other time agreed to by the CPM) before commencement of commercial operation. The approved plan must be in place prior to commercial operation of the facilities and shall be kept at the site at all times.

The project owner, in consultation with the CPM, shall update the on-site contingency plan as necessary. The CPM may recommend revisions to the on-site contingency plan over the life of the project. In the annual compliance reports submitted to the Commission, the project owner shall review the on-site contingency plan and

recommend changes to bring the plan up to date. Any changes to the plan must be approved by the CPM.

The on-site contingency plan shall provide for taking immediate steps to secure the facility from trespassing and encroachment. In addition, for temporary closures of more than 90 days (unless other arrangements are agreed to by the CPM), the plan shall provide for removal of hazardous materials and hazardous wastes, draining of all chemicals from storage tanks and other equipment and the safe shutdown of all equipment.

In addition, consistent with requirements under unexpected permanent closure addressed below, the nature and extent of insurance coverage, and major equipment warranties must be included in the on-site contingency plan. The status of the insurance coverage and major equipment warranties must also be updated in the annual compliance reports.

In the event of an unexpected temporary closure, the project owner shall notify the CPM, as well as other responsible agencies, by telephone, fax, and e-mail, within 24 hours and shall take all necessary steps to implement the on-site contingency plan. The project owner shall keep the CPM informed of circumstances and the expected duration of the closure.

If a temporary closure is likely to be permanent, or of a duration of more than twelve months, a closure plan consistent with that for a planned closure shall be submitted to the CPM within 90 days of the determination. The CPM and project owner may agree to a period of time other than 90 days.

Unexpected Permanent Closure

In order to ensure that public health and safety and the environment are protected in the event of an unexpected permanent facility closure, it is essential to have an on-site contingency plan in place for unexpected permanent closure. This may be a part of the on-site contingency plan for unexpected temporary closure. The on-site contingency plan will help to ensure that all necessary steps to mitigate public health and safety, and environmental impacts, are taken in a timely manner (even in an unlikely abandonment scenario).

The project owner shall submit the on-site contingency plan for CPM review and approval. The plan shall be submitted no less that sixty (60) days (or other time agreed to by the CPM) prior to commencement of commercial operation. The approved plan must be in place prior to commercial operation of the facilities and shall be kept at the site at all times.

The project owner, in consultation with the CPM, shall update the on-site contingency plan as necessary. The CPM may recommend revisions to the on-site contingency plan over the life of the project. In the annual compliance reports submitted to the Commission, the project owner shall review the on-site contingency plan and

recommend changes to bring the plan up to date. Any changes to the plan must be approved by the CPM.

The on-site contingency plan shall provide for taking immediate steps to secure the facility from trespassing and encroachment. In addition, the plan shall provide for removal of hazardous materials and hazardous wastes, draining of all chemicals from storage tanks and other equipment and the safe shutdown of all equipment.

Furthermore, the on-site contingency plan shall address how the project owner will ensure that all required closure steps will be successfully completed in the event of abandonment. The nature and extent of insurance coverage and major equipment warranties must also be included in the on-site contingency plan. In addition, the status of the insurance coverage and major equipment warranties must be updated in the annual compliance reports.

In the event of an unexpected permanent closure, the project owner shall notify the CPM, as well as other responsible agencies, by telephone, fax, and e-mail, within twenty-four (24) hours and shall take all necessary steps to implement the on-site contingency plan. The project owner shall keep the CPM informed of the status of all closure activities.

DELEGATE AGENCIES

To the extent permitted by law, the Commission may delegate authority for compliance verification and enforcement to various state and local agencies that have expertise in subject areas where specific requirements have been established as a Condition of Certification. If a delegate agency does not participate in this program, the Commission staff will establish an alternative method of verification and enforcement. The Commission reserves the right to direct Staff to independently verify compliance.

In performing construction and operation monitoring of the project, the Commission staff acts as, and has the authority of, the Chief Building Official (CBO). The Commission staff retains this authority when delegating to a local CBO. Delegation of authority for compliance verification includes the authority for enforcing codes, the responsibility for code interpretation as necessary, and the authority to use discretion as necessary in implementing the various codes and standards.

Whenever an agency's responsibility for a particular area is transferred by law to another entity, all references to the original agency shall be interpreted to apply to the successor entity.

ENFORCEMENT

The Commission's legal authority to enforce the terms and conditions of its Decision is specified in Public Resources Code, §§ 25534 and 25900. The Commission may

amend or revoke the certification for any facility, and may impose a civil penalty for any significant failure to comply with the terms or conditions of the Commission Decision.

Moreover, to ensure compliance with the terms and Conditions of Certification and applicable laws, ordinances, regulations, and standards, delegate agencies are authorized to take any action allowed by law in accordance with their statutory authority, regulations, and administrative procedures.

NONCOMPLIANCE COMPLAINT PROCEDURES

Any person or agency may file a complaint alleging noncompliance with the Conditions of Certification. Such a complaint will be subject to review by the Commission pursuant to Title 20, California Code of Regulations, § 1230 et seq., but in many instances the noncompliance can be resolved by using the informal dispute resolution process. Both the informal and formal complaint procedure are described below:

Informal Dispute Resolution Procedure

The following procedure is designed to informally resolve disputes concerning the interpretation of this compliance plan. The project owner, the Commission, or any other party, including members of the public, may initiate this procedure for resolving a dispute. Disputes may pertain to actions, inactions or decisions made by any party, including the Commission's delegate agents.

This procedure may precede the more formal complaint and investigation procedure specified in Title 20, California Code of Regulations, § 1230 et seq., but is not intended to be a substitute for, or prerequisite to, it. This informal procedure may not be used to change the terms and Conditions of Certification as approved by the Commission, although the agreed upon resolution may result in a project owner, or in some cases the Commission staff, proposing an amendment.

The procedure encourages all parties involved in a dispute to discuss the matter and to reach an agreement resolving the dispute. If a dispute cannot be resolved, then the matter must be referred to the full Commission for consideration via the complaint and investigation process. The procedure for informal dispute resolution is as follows:

Request for Informal Investigation

Any individual, group, or agency may request the Commission to conduct an informal investigation of alleged noncompliance with the Commission's terms and Conditions of Certification. All requests for informal investigations shall be made to the designated CPM.

Upon receipt of a request for informal investigation, the CPM shall promptly notify the project owner of the allegation by telephone and letter. All known and relevant information of the alleged noncompliance shall be provided to the project owner and to the Commission staff. The CPM will evaluate the request and the information to determine if further investigation is necessary. If the CPM finds that further investigation is necessary, the project owner will be required to promptly investigate the matter and, within seven (7) working days of the CPM's request, provide a written report to the CPM of the results of the investigation, including corrective measures proposed or undertaken. Depending on the urgency of the noncompliance matter, the CPM may conduct a site visit and/or request the project owner to provide an initial report, within forty-eight (48) hours, followed by a written report filed within seven (7) working days.

Request for Informal Meeting

If either the party requesting an investigation or the Commission staff is not satisfied with the project owner's report, investigation of the event, or corrective measures undertaken, either party may submit a written request to the CPM for a meeting with the project owner. Such request shall be made within fourteen (14) days of the project owner's filing of its written report. Upon receipt of such a request, the CPM shall:

1) Immediately schedule a meeting with the requesting party and the project owner, to be held at a mutually convenient time and place;

2) Secure the attendance of appropriate Commission staff and staff of any other agency with expertise in the subject area of concern as necessary;

3) Conduct such meeting in an informal and objective manner so as to encourage the voluntary settlement of the dispute in a fair and equitable manner; and,

4) After the conclusion of such a meeting, promptly prepare a summary memorandum which fairly and accurately identifies the positions of all parties and any conclusions reached. Copies shall be distributed to all in attendance and to the project file, If an agreement has not been reached, the CPM shall inform the complainant of the formal complaint process and requirements provided under Title 20, California Code of Regulations, section 1230 et seq.

Formal Dispute Resolution Procedure-Complaints and Investigations

The project owner, Commission staff, or any other party may file a complaint or a request for an investigation with the Commission's Chief Counsel. Disputes may pertain to actions or decisions made by any party including the Commission's delegate agents. Requirements for filing a complaint or a request for investigation and a description of how they are processed are in Title 20, California Code of Regulations,

section 1230 et seq. The formal process may be in lieu of or in addition to the informal process.

Within thirty (30) days after receipt of a written complaint or a request for investigation, the Chairperson or, if one is assigned, the Committee may grant a hearing on the matter, consistent with the requirements of noticing provisions. The Commission shall have the authority to consider all relevant facts involved and make any appropriate orders consistent with its jurisdiction (Title 20, California Code of Regulations, sections 1232 - 1236).

POST CERTIFICATION CHANGES TO THE COMMISSION DECISION: AMENDMENTS, STAFF CHANGES AND VERIFICATION CHANGES

The project owner must petition the Commission, pursuant to Title 20, California Code of Regulations, section 1769, to 1) delete or change a Condition of Certification; 2) modify the project design or operational requirements; 3) transfer ownership or operational control of the facility; or 4) change a condition verification requirement.

The petition for a change must be submitted to the Commission's Docket in accordance with Title 20, California Code of Regulations, section 1209. The criteria under Section 1769 that determine which type of change process applies are explained below.

Executive Order

Executive Order D-25-01, issued by the Governor of the State of California, which accelerates processing of certain modifications, will be applied to all qualifying project amendments requested until December 31, 2001.

Amendment

A proposed change will be processed as an amendment requiring Commission approval if it involves a change to the requirement or protocol (and in some cases the verification) portion of a Condition of Certification, an ownership or operator change, or a potential significant environmental impact.

Insignificant Staff Change

The proposed change will be processed as an insignificant staff change, not requiring Commission approval, if it does not require changing the language in a Condition of Certification, does not have a potential significant environmental impact, and will not cause the project to violate laws, ordinances, regulations or standards.

Verification Change

The proposed change will be processed as a verification or insignificant change if it involves only the language in the verification portion of the Condition of Certification. This procedure can only be used to change verification requirements that are of an administrative nature, usually the timing of a required action. In the event that verification language contains technical requirements, the proposed change must be processed as an amendment requiring Commission approval.

KEY EVENT LIST

PROJECT _____ DATE ENTERED _____

DOCKET # _____ PROJECT MANAGER _____

EVENT DESCRIPTION	***DATE ASSIGNED***
Date of Certification	
Start of Construction	
Completion of Construction	
Start of Operation (1st Turbine Roll)	
Start of Rainy Season	
End of Rainy Season	
Start T/L Construction	
Complete T/L Construction	
Start Fuel Supply Line Construction	
Complete Fuel Supply Line Construction	
Start Rough Grading	
Complete Rough Grading	
Start of Water Supply Line Construction	
Complete Water Supply Line Construction	
Start Implementing Erosion Control Measures	
Complete Implementing Erosion Control Measures	

Appendix K2

Facility Design

FACILITY DESIGN

CONDITIONS OF CERTIFICATION

GEN-1 The project owner shall design, construct and inspect the project in accordance with the 1998 California Building Code (CBC)[6] and all other applicable LORS in effect at the time initial design plans are submitted to the Chief Building Official (CBO) for review and approval. The CBC in effect is that edition that has been adopted by the California Building Standards Commission and published at least 180 days previously.

In the event that the SCPP is submitted to the CBO when a successor to the 1998 CBC is in effect, the 1998 CBC provisions identified herein shall be replaced with the applicable successor provisions. Where, in any specific case, different sections of the code specify different materials, methods of construction, or other requirements, the most restrictive shall govern. Where there is a conflict between a general requirement and a specific requirement, the specific requirement shall govern.

Verification: Within 30 days (or a lesser number of days mutually agreed to by the project owner and the CBO) after receipt of the Certificate of Occupancy, the project owner shall submit to the CPM a statement of verification, signed by the responsible design engineer, attesting that all designs, construction, installation and inspection requirements of the applicable LORS and the Energy Commission's Decision have been met for facility design. The project owner shall provide the CPM a copy of the Certificate of Occupancy within 30 days of receipt from the CBO [1998 CBC, Section 109 – Certificate of Occupancy.]

GEN-2 The project owner shall furnish to the Energy Commission CPM and to the CBO a schedule of facility design submittals, a Master Drawing List, and a Master Specifications List. The schedule shall contain a description and list of proposed submittal packages for design, calculations, and specifications for major structures and equipment. To facilitate audits by Energy Commission staff, the project owner shall provide designated packages to the CPM when requested.

---

[6] The Sections, Chapters, Appendices and Tables, unless otherwise stated, refer to the Sections, Chapters, Appendices and Tables of the 1998 California Building Code (CBC).

Verification: At least (30) thirty days (or a lesser number of days mutually agreed to by the project owner and the CBO) prior to the start of rough grading, the project owner shall submit the schedule, a Master Drawing List, and a Master Specifications List to the CBO and to the CPM. The project owner shall provide schedule updates in the Monthly Compliance Report.

GEN-3 The project owner shall make payments to the CBO for design review, plan check and construction inspection, equivalent to the fees listed in the 1998 CBC, Chapter 1, Section 107 and Table 1-A, Building Permit Fees; Appendix Chapter 33, Section 3310 and Table A-33-A, Grading Plan Review Fees; and Table A-33-B, Grading Permit Fees. If Kings County has adjusted the CBC fees for design review, plan check and construction inspection, the project owner shall pay the adjusted fees.

Verification: The project owner shall make the required payments to the CBO at the time of submittal of the plans, design calculations, specifications, or soil reports. The project owner shall send a copy of the CBO's receipt of payment to the CPM in the next Monthly Compliance Report indicating that the applicable fee has been paid.

GEN-4 Prior to the start of rough grading, the project owner shall assign a California registered architect, structural engineer or civil engineer, as a resident engineer (RE), to be in general responsible charge of the project. [Building Standards Administrative Code (Cal. Code of Regs., tit. 24, § 4-209, Designation of Responsibilities).]

The RE may delegate responsibility for portions of the project to other registered engineers. Registered mechanical and electrical engineers may be delegated responsibility for mechanical and electrical portions of the project respectively. A project may be divided into parts, provided each part is clearly defined as a distinct unit. Separate assignment of general responsible charge may be made for each designated part.

Protocol: The RE shall:

1. Monitor construction progress to ensure compliance with LORS;

2. Ensure that construction of all the facilities conforms in every material respect to the applicable LORS, these Conditions of Certification, approved plans, and specifications;

3. Prepare documents to initiate changes in the approved drawings and specifications when directed by the project owner or as required by conditions on the project;

4. Be responsible for providing the project inspectors and testing agency(ies) with complete and up-to-date set(s) of stamped drawings, plans, specifications and any other required documents;

5. Be responsible for the timely submittal of construction progress reports to the CBO from the project inspectors, the contractor, and other engineers who have been delegated responsibility for portions of the project; and

6. Be responsible for notifying the CBO of corrective action or the disposition of items noted on laboratory reports or other tests as not conforming to the approved plans and specifications.

The RE shall have the authority to halt construction and to require changes or remedial work, if the work does not conform to applicable requirements.

If the RE or the delegated engineers are reassigned or replaced, the project owner shall submit the name, qualifications and registration number of the newly assigned engineer to the CBO for review and approval. The project owner shall notify the CPM of the CBO's approval of the new engineer.

Verification: At least 30 days (or a lesser number of days mutually agreed to by the project owner and the CBO) prior to the start of rough grading, the project owner shall submit to the CBO for review and approval, the name, qualifications and registration number of the RE and any other delegated engineers assigned to the project. The project owner shall notify the CPM of the CBO's approvals of the RE and other delegated engineer(s) within five days of the approval.

If the RE or the delegated engineer(s) are subsequently reassigned or replaced, the project owner has five days in which to submit the name, qualifications, and registration number of the newly assigned engineer to the CBO for review and approval. The project owner shall notify the CPM of the CBO's approval of the new engineer within five days of the approval.

GEN-5 Prior to the start of rough grading, the project owner shall assign at least one of each of the following California registered engineers to the project: A) a civil engineer; B) a geotechnical engineer or a civil engineer experienced and knowledgeable in the practice of soils engineering; C) a design engineer who is either a structural engineer or a civil engineer who is fully competent and proficient in the design of power plant structures and equipment supports; D) a mechanical engineer; and E) an electrical engineer. [California Business and Professions Code, section 6704 et seq., and sections 6730 and 6736. Requires state registration to practice as a civil engineer or structural engineer in California.]

The tasks performed by the civil, mechanical, electrical or design engineers may be divided between two or more engineers, as long as each engineer is responsible for a particular segment of the project (e.g., proposed earthwork, civil structures, power plant structures, equipment support). No segment of the project shall have more than one responsible engineer. The transmission line may be the responsibility of a separate California registered electrical engineer.

The project owner shall submit to the CBO for review and approval, the names, qualifications and registration numbers of all engineers assigned to the project. [1998 CBC, Section 104.2, Powers and Duties of Building Official.]

If any one of the designated engineers is subsequently reassigned or replaced, the project owner shall submit the name, qualifications and registration number of the newly assigned engineer to the CBO for review and approval. The project owner shall notify the CPM of the CBO's approval of the new engineer.

Protocol: A: The civil engineer shall:

1. Design, or be responsible for design, stamp, and sign all plans, calculations, and specifications for proposed site work, civil works, and related facilities. At a minimum, these include: grading, site preparation, excavation, compaction, construction of secondary containment, foundations, erosion and sedimentation control structures, drainage facilities, underground utilities, culverts, site access roads, and sanitary sewer systems; and

2. Provide consultation to the RE during the construction phase of the project, and recommend changes in the design of the civil works facilities and changes in the construction procedures.

Protocol: B: The geotechnical engineer or civil engineer, experienced and knowledgeable in the practice of soils engineering, shall:

1. Review all the engineering geology reports, and prepare final soils grading report;

2. Prepare the soils engineering reports required by the 1998 CBC, Appendix Chapter 33, Section 3309.5 – Soils Engineering Report, and Section 3309.6 – Engineering Geology Report;

3. Be present, as required, during site grading and earthwork to provide consultation and monitor compliance with the requirements set forth in the 1998 CBC, Appendix Chapter 33, section 3317, Grading Inspections;

4. Recommend field changes to the civil engineer and RE;

5. Review the geotechnical report, field exploration report, laboratory tests, and engineering analyses detailing the nature and extent of the site soils that may be susceptible to liquefaction, rapid settlement or collapse when saturated under load; and

6. Prepare reports on foundation investigation to comply with the 1998 CBC, Chapter 18 section 1804, Foundation Investigations.

This engineer shall be authorized to halt earthwork and to require changes; if site conditions are unsafe or do not conform to predicted conditions used as a basis for design of earthwork or foundations. [1998 CBC, section 104.2.4, Stop orders.]

Protocol: C: The design engineer shall:

1. Be directly responsible for the design of the proposed structures and equipment supports;

2. Provide consultation to the RE during design and construction of the project;

3. Monitor construction progress to ensure compliance with LORS;

4. Evaluate and recommend necessary changes in design; and

5. Prepare and sign all major building plans, specifications and calculations.

Protocol: D: The mechanical engineer shall be responsible for, and sign and stamp a statement with, each mechanical submittal to the CBO, stating that the proposed final design plans, specifications, and calculations conform with all of the mechanical engineering design requirements set forth in the Energy Commission's Decision.

Protocol: E: The electrical engineer shall:

1. Be responsible for the electrical design of the project; and

2. Sign and stamp electrical design drawings, plans, specifications, and calculations.

Verification: At least 30 days (or a lesser number of days mutually agreed to by the project owner and the CBO) prior to the start of rough grading, the project owner shall submit to the CBO for review and approval, the names, qualifications

and registration numbers of all the responsible engineers assigned to the project. The project owner shall notify the CPM of the CBO's approvals of the engineers within five days of the approval.

If the designated responsible engineer is subsequently reassigned or replaced, the project owner has five days in which to submit the name, qualifications, and registration number of the newly assigned engineer to the CBO for review and approval. The project owner shall notify the CPM of the CBO's approval of the new engineer within five days of the approval.

GEN-6 Prior to the start of an activity requiring special inspection, the project owner shall assign to the project, qualified and certified special inspector(s) who shall be responsible for the special inspections required by the 1998 CBC, Chapter 17, Section 1701, Special Inspections, Section, 1701.5 Type of Work (requiring special inspection), and Section 106.3.5, Inspection and observation program.

Protocol: The special inspector shall:

1. Be a qualified person who shall demonstrate competence, to the satisfaction of the CBO, for inspection of the particular type of construction requiring special or continuous inspection;

2. Observe the work assigned for conformance with the approved design drawings and specifications;

3. Furnish inspection reports to the CBO and RE. All discrepancies shall be brought to the immediate attention of the RE for correction, then, if uncorrected, to the CBO and the CPM; and

4. Submit a final signed report to the RE, CBO, and CPM, stating whether the work requiring special inspection was, to the best of the inspector's knowledge, in conformance with the approved plans and specifications and the applicable provisions of the applicable edition of the CBC.

A certified weld inspector, certified by the American Welding Society (AWS), and/or American Society of Mechanical Engineers (ASME), as applicable, shall inspect welding performed on-site requiring special inspection (including structural, piping, tanks and pressure vessels).

Verification: At least 15 days prior to the start of an activity requiring special inspection, the project owner shall submit to the CBO for review and approval, with a copy to the CPM, the name(s) and qualifications of the certified weld inspector(s), or other certified special inspector(s) assigned to the project to perform one or more of the duties set forth above. The project owner shall also

submit to the CPM a copy of the CBO's approval of the qualifications of all special inspectors in the next Monthly Compliance Report.

If the special inspector is subsequently reassigned or replaced, the project owner has five days in which to submit the name and qualifications of the newly assigned special inspector to the CBO for approval. The project owner shall notify the CPM of the CBO's approval of the newly assigned inspector within five days of the approval.

GEN-7 The project owner shall keep the CBO informed regarding the status of engineering and construction. If any discrepancy in design and/or construction is discovered, the project owner shall document the discrepancy and recommend the corrective action required. The discrepancy documentation shall become a controlled document and shall be submitted to the CBO for review and approval. The discrepancy documentation shall reference this condition of certification and, if appropriate, the applicable sections of the CBC and/or other LORS.

Verification: The project owner shall submit monthly construction progress reports to the CBO and CPM. The project owner shall transmit a copy of the CBO's approval or disapproval of any corrective action taken to resolve a discrepancy to the CPM within 15 days. If disapproved, the project owner shall advise the CPM, within five days, the reason for disapproval, and the revised corrective action to obtain CBO's approval.

GEN-8 The project owner shall obtain the CBO's final approval of all completed work. The project owner shall request the CBO to inspect the completed structure and review the submitted documents. When the work and the "as-built" and "as graded" plans conform to the approved final plans, the project owner shall notify the CPM regarding the CBO's final approval. The marked up "as-built" drawings for the construction of structural and architectural work shall be submitted to the CBO. Changes approved by the CBO shall be identified on the "as-built" drawings. [1998 CBC, Section 108, Inspections.]

Verification: Within 15 days of the completion of any work, the project owner shall submit to the CBO, with a copy to the CPM, (a) a written notice that the completed work is ready for final inspection, and (b) a signed statement that the work conforms to the final approved plans.

GEN-9 The project owner shall file a closure/decommissioning plan with Kings County and the CPM for review and approval at least 12 months (or other mutually agreed to time) prior to commencing the closure activities. If the project is abandoned before construction is completed, the project owner shall return the site to its original condition.

Protocol: The closure plan shall include a discussion of the following:

1. The proposed closure/decommissioning activities for the project and all appurtenant facilities constructed as part of the project;

2. All applicable LORS, all local/regional plans, and a discussion of the conformance of the proposed decommissioning activities to the applicable LORS and local/regional plans;

3. Activities necessary to restore the site if the SCPP decommissioning plan requires removal of all equipment and appurtenant facilities; and

4. Closure/decommissioning alternatives, other than complete restoration of the site.

Verification: At least 12 months prior to closure or decommissioning activities, the project owner shall file a copy of the closure/decommissioning plan with Kings County and the CPM for review and approval. Prior to the submittal of the closure plan, a meeting shall be held between the project owner and the CPM for discussing the specific contents of the plan.

CIVIL-1 Prior to the start of site grading, the project owner shall submit to the CBO for review and approval the following:

1. Design of the proposed drainage structures and the grading plan;
2. An erosion and sedimentation control plan;
3. Related calculations and specifications, signed and stamped by the responsible civil engineer; and
4. Soils report as required by the 1998 CBC, Appendix Chapter 33, Section 3309.5, Soils Engineering Report and Section 3309.6, Engineering Geology Report.

Verification: At least 15 days prior to the start of site grading, the project owner shall submit the documents described above to the CBO for review and approval. In the next Monthly Compliance Report following the CBO's approval, the project owner shall submit a written statement certifying that the documents have been approved by the CBO.

CIVIL-2 The resident engineer shall, if appropriate, stop all earthwork and construction in the affected areas when the responsible geotechnical engineer or civil engineer experienced and knowledgeable in the practice of soils engineering identifies unforeseen adverse soil or geologic conditions. The project owner shall submit modified plans, specifications and calculations to the CBO based on these new conditions. The project owner shall obtain approval from the CBO

before resuming earthwork and construction in the affected area. [1998 CBC, Section 104.2.4, Stop orders.]

Verification: The project owner shall notify the CPM, within five days, when earthwork and construction is stopped as a result of unforeseen adverse geologic/soil conditions. Within five days of the CBO's approval, the project owner shall provide to the CPM a copy of the CBO's approval to resume earthwork and construction in the affected areas.

CIVIL-3 The project owner shall perform inspections in accordance with the 1998 CBC, Chapter 1, Section 108, Inspections, Chapter 17, Section 1701.6, Continuous and Periodic Special Inspection and Appendix Chapter 33, Section 3317, Grading Inspection. All plant site-grading operations shall be subject to inspection by the CBO and the CPM.

If, in the course of inspection, it is discovered that the work is not being done in accordance with the approved plans, the discrepancies shall be reported immediately to the resident engineer, the CBO, and the CPM. The project owner shall prepare a written report detailing all discrepancies and non-compliance items, and the proposed corrective action, and send copies to the CBO and the CPM.

Verification: Within five days of the discovery of any discrepancies, the resident engineer shall transmit to the CBO and the CPM a Non-Conformance Report (NCR), and the proposed corrective action. Within five days of resolution of the NCR, the project owner shall submit the details of the corrective action to the CBO and the CPM. A list of NCRs, for the reporting month, shall also be included in the following Monthly Compliance Report.

CIVIL-4 After completion of finished grading and erosion and sedimentation control and drainage facilities, the project owner shall obtain the CBO's approval of the final "as-graded" grading plans, and final "as-built" plans for the erosion and sedimentation control facilities. [1998 CBC, Section 109, Certificate of Occupancy.]

Within 30 days of the completion of the erosion and sediment control mitigation and drainage facilities, the project owner shall submit to the CBO the responsible civil engineer's signed statement that the installation of the facilities and all erosion control measures were completed in accordance with the final approved combined grading plans, and that the facilities are adequate for their intended purposes. The project owner shall submit a copy of this report to the CPM in the next Monthly Compliance Report.

STRUC-1 Prior to the start of any increment of construction, the project owner shall submit to the CBO for review and approval the applicable designs, plans

and drawings, and a list of those project structures, components and major equipment items that will undergo dynamic structural analysis. Designs, plans and drawings shall be those for:

1. Major project structures;
2. Major foundations, equipment supports and anchorage;
3. Large field fabricated tanks;
4. Turbine/generator pedestal; and
5. Switchyard structures.

Protocol: The project owner shall:

1. Obtain agreement with the CBO and California Energy Commission staff on the list of those structures, components and major equipment items to undergo dynamic structural analysis;

2. Meet the pile design requirements of the 1998 CBC. Specifically, Section 1807, General Requirements, Section 1808, Specific Pile Requirements, and Section 1809, Foundation Construction (in seismic zones 3 and 4);

3. Obtain approval from the CBO for the final design plans, specifications, calculations, soils reports, and applicable quality control procedures. If there are conflicting requirements, the more stringent shall govern (i.e., highest loads, or lowest allowable stresses shall govern). All plans, calculations, and specifications for foundations that support structures shall be filed concurrently with the structure plans, calculations, and specifications, [1998 CBC, Section 108.4, Approval Required];

4. Submit to the CBO the required number of copies of the structural plans, specifications, calculations, and other required documents of the designated major structures at least 90 days (or a lesser number of days mutually agreed to by the project owner and the CBO), prior to the start of on-site fabrication and installation of each structure, equipment support, or foundation, [1998 CBC, Section 106.4.2, Retention of plans and Section 106.3.2, Submittal documents.]; and

5. Ensure that the final plans, calculations, and specifications clearly reflect the inclusion of approved criteria, assumptions, and methods used to develop the design. The final designs, plans, calculations and specifications shall be signed and stamped by the responsible design engineer. [1998 CBC, Section 106.3.4, Architect or Engineer of Record.]

Verification: At least 30 days (or a lesser number of days mutually agreed to by the project owner and the CBO) prior to the start of any increment of construction, the project owner shall submit to the CBO, with a copy to the CPM, the responsible design engineer's signed statement that the final design plans, specifications and calculations conform with all of the requirements set forth in the Energy Commission's Decision.

If the CBO discovers non-conformance with the stated requirements, the project owner shall resubmit the corrected plans to the CBO within 20 days of receipt of the nonconforming submittal with a copy of the transmittal letter to the CPM.

The project owner shall submit to the CPM a copy of a statement from the CBO that the proposed structural plans, specifications, and calculations have been approved and are in conformance with the requirements set forth in the applicable LORS.

STRUC-2 The project owner shall submit to the CBO the required number of sets of the following:

1. Concrete cylinder strength test reports (including date of testing, date sample taken, design concrete strength, tested cylinder strength, age of test, type and size of sample, location and quantity of concrete placement from which sample was taken, and mix design designation and parameters);

2. Concrete pour sign-off sheets;

3. Bolt torque inspection reports (including location of test, date, bolt size, and recorded torques);

4. Field weld inspection reports (including type of weld, location of weld, inspection of non-destructive testing (NDT) procedure and results, welder qualifications, certifications, qualified procedure description or number (ref: AWS); and

5. Reports covering other structure activities requiring special inspections shall be in accordance with the 1998 CBC, Chapter 17, Section 1701, Special Inspections, Section 1701.5, Type of Work (requiring special inspection), Section 1702, Structural Observation and Section 1703, Nondestructive Testing.

Verification: If a discrepancy is discovered in any of the above data, the project owner shall, within five days, prepare and submit an NCR describing the nature of the discrepancies to the CBO, with a copy of the transmittal letter to the CPM. The NCR shall reference the Condition(s) of Certification and the applicable CBC chapter and section. Within five days of resolution of the NCR,

the project owner shall submit a copy of the corrective action to the CBO and the CPM.

The project owner shall transmit a copy of the CBO's approval or disapproval of the corrective action to the CPM within 15 days. If disapproved, the project owner shall advise the CPM, within five days, the reason for disapproval, and the revised corrective action to obtain CBO's approval.

STRUC-3 The project owner shall submit to the CBO design changes to the final plans required by the 1998 CBC, Chapter 1, Section 106.3.2, Submittal documents, and Section 106.3.3, Information on plans and specifications, including the revised drawings, specifications, calculations, and a complete description of, and supporting rationale for, the proposed changes, and shall give the CBO prior notice of the intended filing.

Verification: On a schedule suitable to the CBO, the project owner shall notify the CBO of the intended filing of design changes, and shall submit the required number of sets of revised drawings and the required number of copies of the other above-mentioned documents to the CBO, with a copy of the transmittal letter to the CPM. The project owner shall notify the CPM, via the Monthly Compliance Report, when the CBO has approved the revised plans.

STRUC-4 Tanks and vessels containing quantities of toxic or hazardous materials exceeding amounts specified in Chapter 3, Table 3-E of the 1998 CBC shall, at a minimum, be designed to comply with Occupancy Category 2 of the 1998 CBC. Chapter 16, Table 16–K of the 1998 CBC requires use of the following seismic design criteria: $I = 1.25$, $I_p = 1.5$ and $I_w = 1.15$.

Verification: At least 30 days (or a lesser number of days mutually agreed to by the project owner and the CBO) prior to the start of installation of the tanks or vessels containing the above specified quantities of highly toxic or explosive substances that would be hazardous to the safety of the general public if released, the project owner shall submit to the CBO for review and approval, final design plans, specifications, and calculations, including a copy of the signed and stamped engineer's certification.

The project owner shall send copies of the CBO approvals of plan checks to the CPM in the following Monthly Compliance Report. The project owner shall also transmit a copy of the CBO's inspection approvals to the CPM in the Monthly Compliance Report following completion of any inspection.

MECH-1 Prior to the start of any increment of piping construction, the project owner shall submit, for CBO review and approval, the proposed final design drawings, specifications and calculations for each plant piping system (exclude

domestic water, refrigeration systems, and small bore piping, i.e., piping and tubing with a diameter equal to or less than two and one-half inches). The submittal shall also include the applicable QA/QC procedures. The project owner shall design and install all piping, other than domestic water, refrigeration, and small bore piping to the applicable edition of the CBC. Upon completion of construction of any piping system, the project owner shall request the CBO's inspection approval of said construction. [1998 CBC, Section 106.3.2, Submittal documents, Section 108.3, Inspection Requests.]

Protocol: The responsible mechanical engineer shall submit a signed and stamped statement to the CBO when:

1. The proposed final design plans, specifications and calculations conform with all of the piping requirements set forth in the Energy Commission's Decision; and

2. All of the other piping systems, except domestic water, refrigeration systems and small bore piping have been designed, fabricated and installed in accordance with all applicable ordinances, regulations, laws and industry standards, including, as applicable:

   - American National Standards Institute (ANSI) B31.1 (Power Piping Code);
   - ANSI B31.2 (Fuel Gas Piping Code);
   - ANSI B31.3 (Chemical Plant and Petroleum Refinery Piping Code);
   - ANSI B31.8 (Gas Transmission and Distribution Piping Code); and
   - Specific City/County code.

The CBO may require the project owner to employ special inspectors to report directly to the CBO to monitor shop fabrication or equipment installation. [1998 CBC, Section 104.2.2, Deputies.]

Verification: At least 30 days (or a lesser number of days mutually agreed to by the project owner and the CBO) prior to the start of any increment of piping construction, the project owner shall submit to the CBO for approval, with a copy of the transmittal letter to the CPM, the proposed final design plans, specifications, calculations and quality control procedures for that increment of construction of piping systems, including a copy of the signed and stamped engineer's certification of conformance with the Energy Commission's Decision. The project owner shall transmit a copy of the CBO's inspection approvals to the CPM in the Monthly Compliance Report following completion of any inspection.

MECH-2 For all pressure vessels installed in the plant, the project owner shall submit to the CBO and California Occupational Safety and Health Administration (Cal-OSHA), prior to operation, the code certification papers and

other documents required by the applicable LORS. Upon completion of the installation of any pressure vessel, the project owner shall request the appropriate CBO and/or Cal-OSHA inspection of said installation. [1998 CBC, Section 108.3 – Inspection Requests.]

Protocol: The project owner shall:

1. Ensure that all boilers and fired and unfired pressure vessels are designed, fabricated and installed in accordance with the appropriate section of the American Society of Mechanical Engineers (ASME) Boiler and Pressure Vessel Code, or other applicable code. Vendor certification, with identification of applicable code, shall be submitted for prefabricated vessels and tanks; and

2. Have the responsible design engineer submit a statement to the CBO that the proposed final design plans, specifications and calculations conform to all of the requirements set forth in the appropriate ASME Boiler and Pressure Vessel Code or other applicable codes.

Verification: At least 30 days (or a lesser number of days mutually agreed to by the project owner and the CBO) prior to the start of on-site fabrication or installation of any pressure vessel, the project owner shall submit to the CBO for review and approval, the documents listed above, with a copy of the transmittal letter to the CPM.

The project owner shall send copies of the CBO plan check approvals to the CPM in the following Monthly Compliance Report. The project owner shall also transmit a copy of the CBO's and/or Cal-OSHA inspection approvals to the CPM in the Monthly Compliance Report following completion of any inspection.

MECH-3 Prior to the start of construction of any heating, ventilating, air conditioning (HVAC) or refrigeration system, the project owner shall submit to the CBO for review and approval the design plans, specifications, calculations and quality control procedures for that system. Packaged HVAC systems, where used, shall be identified with the appropriate manufacturer's data sheets.

The project owner shall design and install all HVAC and refrigeration systems within buildings and related structures in accordance with the applicable edition of the CBC. Upon completion of any increment of construction, the project owner shall request the CBO's inspection and approval of said construction. The final plans, specifications and calculations shall include approved criteria, assumptions and methods used to develop the design. In addition, the

responsible mechanical engineer shall sign and stamp all plans, drawings and calculations and submit a signed statement to the CBO that the proposed final design plans, specifications and calculations conform with the applicable LORS. [1998 CBC, Section 108.7, Other Inspections; Section 106.3.4, Architect or Engineer of Record.]

Verification: At least 30 days (or a lesser number of days mutually agreed to by the project owner and the CBO) prior to the start of construction of any HVAC or refrigeration system, the project owner shall submit to the CBO the required HVAC and refrigeration calculations, plans and specifications, including a copy of the signed and stamped statement from the responsible mechanical engineer certifying compliance with the applicable edition of the CBC, with a copy of the transmittal letter to the CPM.

The project owner shall send copies of CBO comments and approvals to the CPM in the next Monthly Compliance Report. The project owner shall transmit a copy of the CBO's inspection approvals to the CPM in the Monthly Compliance Report following completion of any inspection.

MECH-4 Prior to the start of each increment of plumbing construction, the project owner shall submit for CBO's approval the final design plans, specifications, calculations, and QA/QC procedures for all plumbing systems, potable water systems, drainage systems (including sanitary drain and waste), toilet rooms, building energy conservation systems, and temperature control and ventilation systems, including water and sewer connection permits issued by the local agency. Upon completion of any increment of construction, the project owner shall request the CBO's inspection approval of said construction. [1998 CBC, Section 108.3, Inspection Requests, Section 108.4, Approval Required.]

Protocol: The project owner shall design, fabricate and install:

1. Plumbing, potable water, all drainage systems, and toilet rooms in accordance with Title 24, California Code of Regulations, Division 5, Part 5 and the California Plumbing Code (or other relevant section(s) of the currently adopted California Plumbing Code and Title 24, California Code of Regulations); and

2. Building energy conservation systems and temperature control and ventilation systems in accordance with Title 24, California Code of Regulations, Division 5, Chapter 2-53, Part 2.

The final plans, specifications and calculations shall clearly reflect the inclusion of approved criteria, assumptions and methods used to develop the design. In addition, the responsible mechanical engineer shall stamp and sign all plans, drawings and calculations and submit a signed statement to the CBO that the

proposed final design plans, specifications and calculations conform with all of the requirements set forth in the Energy Commission's Decision.

Verification: At least 30 days (or a lesser number of days mutually agreed to by the project owner and the CBO) prior to the start of construction of any of the above systems, the project owner shall submit to the CBO the final design plans, specifications and calculations, including a copy of the signed and stamped statement from the responsible mechanical engineer certifying compliance with the applicable edition of the CBC, and send the CPM a copy of the transmittal letter in the next Monthly Compliance Report.

The project owner shall transmit a copy of the CBO's inspection approvals to the CPM in the next Monthly Compliance Report following completion of that increment of construction.

ELEC-1 For the 480 volts and higher systems, the project owner shall not begin any increment of electrical construction until plans for that increment have been approved by the CBO. These plans, together with design changes and design change notices, shall remain on the site for one year after completion of construction. The project owner shall request that the CBO inspect the installation to ensure compliance with the requirements of applicable LORS. [1998 CBC, Section 108.4, Approval Required, and Section 108.3, Inspection Requests.]

Protocol: The following activities shall be reported in the Monthly Compliance Report:

1. Receipt or delay of major electrical equipment;
2. Testing or energization of major electrical equipment; and
3. The number of electrical drawings approved, submitted for approval, and still to be submitted.

Verification: At least 30 days (or a lesser number of days mutually agreed to by the project owner and the CBO) prior to the start of each increment of electrical construction, the project owner shall submit to the CBO for review and approval the final design plans, specifications and calculations for electrical equipment and systems 480 volts and greater, including a copy of the signed and stamped statement from the responsible electrical engineer attesting compliance with the applicable LORS, and send the CPM a copy of the transmittal letter in the next Monthly Compliance Report.

ELEC-2 The project owner shall submit to the CBO the required number of copies of items A and B for review and approval and one copy of item C [CBC 1998, Section 106.3.2, Submittal documents.]

A. Final plant design plans to include:

1. One-line diagrams for the 13.8 kV, 4.16 kV and 480 V systems;
2. System grounding drawings;
3. General arrangement or conduit drawings; and
4. Other plans as required by the CBO.

B. Final plant calculations to establish:
1. Short-circuit ratings of plant equipment;
2. Ampacity of feeder cables;
3. Voltage drop in feeder cables;
4. System grounding requirements;
5. Coordination study calculations for fuses, circuit breakers and protective relay settings for the 13.8 kV, 4.16 kV and 480 V systems;
6. System grounding requirements;
7. Lighting energy calculations; and
8. Other reasonable calculations as customarily required by the CBO.

C. A signed statement by the registered electrical engineer certifying that the proposed final design plans and specifications conform to requirements set forth in the Energy Commission Decision.

At least 30 days (or a lesser number of days mutually agreed to by the project owner and the CBO) prior to the start of each increment of electrical equipment installation, the project owner shall submit to the CBO for review and approval the final design plans, specifications and calculations, for electrical equipment and systems 480 volts and greater enumerated above, including a copy of the signed and stamped statement from the responsible electrical engineer certifying compliance with the applicable LORS. The project owner shall send the CPM a copy of the transmittal letter in the next Monthly Compliance Report.

Appendix K3

Transmission System Engineering

TRANSMISSION SYSTEM ENGINEERING

CONDITIONS OF CERTIFICATION

TSE-1: The project owner shall ensure that the design, construction and operation of the proposed transmission facilities will conform to requirements listed below:

The power plant switchyard, outlet line and termination shall meet or exceed the electrical, mechanical, civil and structural requirements of CPUC General Order 95, CPUC Rule 21, Title 8, California Code of Regulations, Articles 35, 36 and 37 of the "High Voltage Electric Safety Orders", Title 8 CCR, Sections 2700-2974, CPUC Decision 93-11-013, Federal Communications Commission Part 15, Public Resources Code 4292-4296, and National Electric Code (NEC).

Verification: Within 15 days after cessation of construction the project owner shall provide a statement to the CPM from the registered engineer in responsible charge (signed and sealed) that the switchyard and transmission facilities conform to the above-listed requirements.

Appendix K4

Transmission Line Safety and Nuisance

TRANSMISSION LINE SAFETY AND NUISANCE

CONDITIONS OF CERTIFICATION

TLSN-1 The project owner shall construct the proposed transmission line according to the requirements of GO-95, GO-52 and Title 8, Section 2700 et seq. of the California Code of Regulations.

Verification: Thirty days before start of transmission line construction, or a shorter time period as mutually agreed to by the project owner and the Project Compliance Manager (CPM), the project owner shall submit to the Commission's CPM a letter signed by a California registered engineer affirming that the transmission line will be constructed according the requirements of GO-95, and Title 8, Section 2700 et seq. of the California Code of Regulations.

TLSN-2 The project owner shall make every reasonable effort to identify and correct, on a case-specific basis, all complaints of interference with radio or television signals from operation of the line and related facilities. In addition to any transmission repairs, the relevant corrective actions should include, but shall not be limited to, adjusting or modifying receivers, repairing, replacing or adding antennas, signal amplifiers, filters, or lead-in cables.

The project owner shall maintain written records for a period of five years, of all complaints of radio or television interference attributable to operation together with the corrective action taken in response to each complaint. All complaints shall be recorded to include notations on the corrective action taken. Complaints not leading to a specific action, or for which there was no resolution should be noted and explained. The record shall be signed by the project owner and also the complainant, if possible, to indicate concurrence with the corrective action or agreement, with the justification for a lack of action.

Verification: All reports of line-related complaints shall be summarized and included in the Annual Compliance Report to the CPM.

TLSN-3 The project owner shall engage a qualified consultant to measure the strengths of the line electric and magnetic fields before and after the line is energized. Measurements should be made at appropriate points along the route to allow verification of design assumptions relative to field strengths. Measurements shall be completed 6 months after the line is energized. The areas to be measured should include the facility switchyard and any residences within 100 feet of the right-of-way.

Verification: The project owner shall file copies of the pre-and post-energization measurements with the CPM within 60 days after measurements are completed.

TLSN-4 The project owner shall ensure that combustible material in close proximity to the energized conductors (e.g., tree branches) is cleared from the right-of-way as required under the provisions of GO 95 and Title 14, Section 1250 of the California Code of Regulations.

Verification: The project owner shall provide a summary of inspection results and any fire prevention activities carried out along the right-of-way, in a report to be filed at completion of construction and yearly after that, for a period of five years.

TLSN-5 The project owner shall send a letter to all owners of property within 100 feet or adjacent to the right-of-way at least 60 days prior to first transmission of electricity.

Protocol: The letter shall consist of the following:

- A discussion of the nature and operation of a transmission line.
- A discussion of the project owner's responsibility for grounding existing fences, gates and other large permanent chargeable objects identified during transmission line construction within the right-of-way regardless of ownership.
- A discussion of the property owner's responsibility for grounding and to notify the project whenever the property owner adds or installs a metallic object.
- A statement recommending against fueling motor vehicles or other mechanical equipment underneath the line.

Verification: The project owner shall submit the proposed letter to the CPM for review and approval 30 days prior to mailing to the property owners and shall maintain a record of correspondence (notification and response) related to this requirement, in a compliance file at the plant site. The project owner shall notify the CPM in the first Monthly Compliance Report that letters have been mailed and that copies are on file.

TLSN-6 The project owner shall ensure the grounding of any ungrounded permanent metallic objects identified during transmission line construction within the right-of-way, regardless of ownership. Such objects shall include fences, gates, and other large permanent chargeable objects. These objects shall be

grounded according to procedures specified in the National Electrical Safety Code.

In the event of a refusal by the property owner to permit such grounding, the project owner shall so notify the CPM. Such notification shall Include, when possible, the owner's written objection. Upon receipt of such notice, the CPM may waive the requirement for grounding the object involved.

Verification: At least 10 days before the line is energized, the project owner shall transmit to the CPM a letter confirming compliance with this condition.

Appendix K5

Air Quality

AIR QUALITY

CONDITIONS OF CERTIFICATION

AQ-C1 Prior to the commencement of project construction, the project owner shall prepare a Construction Fugitive Dust Mitigation Plan that will specifically identify fugitive dust mitigation measures that will be employed for the construction of the HPP project.

a) The Construction Fugitive Dust Mitigation Plan shall specifically identify measures to limit fugitive dust emissions from construction of the project site. Measures that should be addressed include the following:

- The identification of the employee parking area(s) and surface of the parking area(s);
- The frequency of watering of unpaved roads and disturbed areas;
- The application of chemical dust suppressants;
- The stabilization of storage piles and disturbed areas;
- The use of gravel in high traffic areas;
- The use of paved access aprons;
- The use of posted speed limit signs;
- The use of wheel washing areas prior to large trucks leaving the project site; and,
- The methods that will be used to clean tracked-out mud and dirt from the project site onto public roads.

b) The following measures should be addressed for the transportation of the borrow fill material to the HPP project if any borrow is transported from offsite: the use of covers on the vehicles, the wetting of the material and insuring appropriate freeboard of material in the vehicles.

Verification: Sixty (60) days prior to the start of construction, the project owner shall provide the CPM with a copy of the Construction Fugitive Dust Mitigation Plan for approval.

AQ-C2 The project owner shall require as a condition of its construction contracts that its contractors/subcontractors ensure that all heavy earthmoving equipment, that includes but is not limited to bulldozers, backhoes, compactors, loaders, motor graders and trenchers, and cranes, dump trucks and other heavy duty construction related trucks, have been properly maintained and the engines tuned to the engine manufacturer's specifications. The Project owner shall further require as a condition of its construction contracts that all heavy

construction equipment to the extent practical shall shut down during times of non-use that are expected to exceed 20 minutes.

Verification: The project owner shall submit to the CPM, via the Monthly Compliance Report, documentation which demonstrates that the contractor's/subcontractor's heavy earthmoving equipment is properly maintained and that the engines are tuned to the manufacturer's specifications. The project owner shall maintain construction contracts on the site for six months following the start of commercial operation.

AQ-C3 The project owner shall comply with all conditions in the Determination of Compliance issued by the San Joaquin Valley Unified Air Pollution Control District. These conditions include at a minimum:

- Submission to inspection from appropriate air quality regulatory agencies
- Application of Best Available Control Technology (BACT)
- Provision of emission reduction credits as required under district regulations
- Monitoring of emissions as required by district , state and federal law
- Compliance with operating hours, start-up and shut down, and emissions limitations as set forth by the district.

Henrietta Peaker Power Plant

Draft Biological Resources Mitigation Implementation and Monitoring Plan

August 2001

TABLE OF CONTENTS

1.0 PURPOSE 1

2.0 BACKGROUND 3

2.1 BACKGROUND DOCUMENTS 3
2.2 PROJECT DESCRIPTION 3
2.3 CONSTRUCTION SCHEDULE 3

3.0 RESPONSIBILITIES, QUALIFICATIONS, AND LINES OF COMMUNICATIONS 4

3.1 RESPONSIBILITIES OF PARTICIPANTS 4
3.1.1 Agency Responsibilities 4
3.1.2 Qualifications/ Responsibilities of Designated Biologist 5
3.1.3 Responsibilities of HPP and Contractors 6
3.2 AUTHORITY AND LINES OF COMMUNICATIONS 6
3.2.1 Regulatory Agencies 7
3.2.2 Role and Authority of Designated Biologist 7
3.2.3 Roles and Authority of HPP and Project Contractors 8

4.0 PRE-ACTIVITY SURVEYS AND REPORTING 9

4.1 MAPPING 9
4.2 SENSITIVE WILDLIFE SURVEYS 11
4.3 STAKING AND FLAGGING OF AVOIDANCE AREAS 11
4.4 SPECIFIC TAKE AVOIDANCE FOR SAN JOAQUIN KIT FOX 12
4.4.1 Den Excavation 12
4.4.2 Den Replacement 13
4.5 MEASURES TO PROTECT BURROWING OWLS AND NESTING RAPTORS 13
4.6 GENERAL IMPACT MINIMIZATION MEASURES 15
4.7 REPORTING OF PRE-ACTIVITY SURVEY RESULTS 16

5.0 BIOLOGICAL RESOURCE MONITORING AND REPORTING 17

5.1 SCOPE OF COMPLIANCE MONITORING 17
5.2 FOLLOW-UP TO PROBLEMS 17
5.3 MONTHLY MONITORING REPORTS, AND POST-ACTIVITY COMPLIANCE REPORT 17
5.4 REPORTING PROCEDURES FOR INJURED WILDLIFE 18

6.0 POST-CONSTRUCTION CLEAN-UP AND RECLAMATION 19

6.1 CLEAN-UP 19

7.0 COMPENSATION 20

7.1 ACREAGE AND HABITAT TYPES IMPACTED 20
7.2 DESCRIPTION OF CONSERVATION EFFORTS 20

8.0 MEASURES REQUIRED DURING ONGOING PROJECT OPERATION 22

8.1 MEASURES REQUIRED DURING THE OPERATIONAL PHASE 22
8.2 MEASURES REQUIRED DURING MAINTENANCE 22
8.3 RECORD KEEPING 22

9.0 MEASURES REQUIRED FOR CLOSURE 23

10.0 REPORTING, MONITORING, PERFORMANCE STANDARDS, AND REMEDIAL ACTIONS 24

List of Tables

1 Regulating Agencies and Instruments They will Grant or Agreements They will Enter Into with HPP 5
2 Special Status Species with Potential to Occur at the HPP Site 10
3 Duration of Impact, Impacted Acres, Applicable Ratio, and Amount of Compensation in Acres 21
4 Mitigation Measures, Performance Standards, Monitoring and Reporting 25

List of Appendices

Appendix A: Mitigation Measures

Appendix B: Aerial Photographs of Project Area

Appendix C: Resume of Designated Biologist

Appendix D: Protocols for Temporary Closure of Kit Fox Dens and Construction of Artificial Dens and Burrows

1.0 PURPOSE

The purpose of the Henrietta Peaker Project (HPP) Biological Resources Mitigation Implementation Monitoring Plan (BRMIMP) is to identify means by which HPP intends to minimize impacts, protect and conserve biological resources, and comply with federal and state requirements for the project. The following agencies have regulatory authority with regards to biological issues and the HPP :

- U.S. Fish and Wildlife Service (USFWS);
- California Energy Commission (CEC);
- California Department of Fish and Game (CDFG)

This BRMIMP describes measures that will be implemented to ensure and document compliance with all regulatory requirements of the HPP during both the construction and operational phases. The BRMIMP is being implemented to ensure that the project is accomplished in a manner that minimizes impacts to the natural environment by appropriate compliance with terms and conditions of various permits and approvals.

The BRMIMP establishes protocols that will accomplish the following goals:

- Identify biological resources at or near work zones;
- Avoid biological resource impacts when ever possible;
- Establish procedures to remedy conflicts when impacts are unavoidable; and
- Document, for the public record, compliance with the entire impact mitigation package.

The components of the HPP BRMIMP include:

- Project description; construction schedules
- Responsibilities of project participants;

- Qualifications of the project Designated Biologist;
- Pre-activity surveys and reporting;
- Construction monitoring;
- Post-construction reclamation measures;
- Compensation; and
- Power generation operational phase mitigation measures.

2.0 BACKGROUND

2.1 Background Documents

Documents prepared by regulatory agencies that will be issuing permits, rights-of-way, and licenses for the HPP will contain mitigation requirements that avoid or minimize impacts to biological resources that are expected during construction and operation. Those documents include: conditions of certification issued by CEC and conditions contained in the Kern Water Bank Master Endangered Species Permit.

2.2 Project Description

The Henrietta Peaker Project (HPP) consists of a 91.4-megawatt (MW) (net), natural-gas-fired, simple-cycle power plant located approximately 10 miles southwest of Lemoore, California, on a seven-acre portion of a 20-acre parcel owned by GWF Energy LLC. The HPP will interconnect to the existing adjacent Pacific Gas and Electric Company (PG&E) Henrietta Substation through a new 550-foot 70-kilovolt (kV) transmission line supported on two new transmission poles. Other linear facilities include an approximately 16.5-foot water interconnection pipeline (from the site property boundary) and a 2.2-mile Southern California Gas Company natural gas interconnection pipeline. Additionally, approximately five acres will be used for temporary construction laydown and parking.

2.3 Construction Schedule

Plant Construction FILL in dates

Plant Construction

Natural Gas Pipeline

Transmission Line

3.0 RESPONSIBILITIES, QUALIFICATIONS, AND LINES OF COMMUNICATIONS

This section describes responsibilities of participating agencies; the project's Designated Biologist, HPP, and its contractors during construction of the HPP Project. The qualifications of the Designated Biologist and lines of communication are also detailed.

3.1 Responsibilities of Participants

Responsibilities of all participants in the HPP are connected through the permitting/licensing process. Each participant, through legally binding instruments, agree to abide by requirements designed to minimize impacts and document compliance to federal and state laws that protect or conserve biological resources.

3.1.1 Agency Responsibilities

The agencies mentioned in Section 1.0 are responsible for implementing federal and state laws concerning protection of biological resources. In issuing Conditions of Certification, the CEC will include conditions that will ensure that HPP also complies with these laws or risk revocation of its license. The agencies will aid HPP by being responsive to requests for guidance should the need arise. Agency representatives will monitor the success of the project's compliance with federal and state laws by monitoring reports prepared by the Designated Biologist. Table 1 lists the regulating agencies and the various instruments that they will grant or agreements they will enter into with the HPP .

Table 1

Regulating Agencies and Instruments They will Grant or Agreements They will Enter Into with HPP.

Agency	Instrument/Agreement
USFWS	Conditions of the Biological Opinion
CEC	Certification
Kings County	Building Permit, Encroachment Permits

3.1.2 Qualifications/ Responsibilities of Designated Biologist

The HPP will designate a qualified biologist and CEC will approve their qualifications to supervise pre-activity surveys and to supervise or advise how to best implement the other elements of this plan. The Designated Biologist will meet the following minimum requirements:

- Bachelor's degree in biological science, zoology, botany, ecology or other closely related field;
- At least three years of experience as a professional biologist or a current certification from a nationally recognized professional society, such as the Ecological Society of America, or the Wildlife Society; and
- At least one full year of field experience with biological resources found in or near the project area.
- An ability to demonstrate to the satisfaction of the CEC Compliance Project Manager (CPM) the appropriate education and experience for the biological resources tasks that must be addressed during project construction and operation.

Responsibilities of the Designated Biologist include the following:

- Conduct pre-activity biological surveys and report results;
- Mark, define and post exclusion zones for sensitive biological resources;
- Excavate unavoidable dens and burrows;
- Monitor construction activities in areas where sensitive biological resources exist;
- Advise construction personnel in accordance with permit conditions;
- Report noncompliance to HPP and responsible government agencies concurrently;
- Maintain log and prepare incident reports;
- Prepare weekly and final compliance reports;
- Monitor the HPP operational phase; and
- Prepare annual compliance report.

3.1.3 Responsibilities of HPP and Contractors

The Project Manager retains final responsibility for compliance with environmental mitigation measures. HPP will insure compliance with mitigation measures by making the agency-mandated conditions part of contracts issued to the contractors. It will then be the responsibility of HPP to revoke or suspend their contract to remedy situations of noncompliance.

3.2 Authority and Lines Of Communications

The Designated Biologist will communicate regularly with the HPP Project Manager, HPP Supervisor of Compliance, field personnel, construction supervisors, and agency representatives to insure all parties are kept informed as to the status of compliance with elements of this plan. During construction, a weekly compliance report will document compliance with this BRMIMP and incidents of a biological nature such as wildlife sightings, etc. During the operation phase of the project, HPP will submit an annual compliance report verifying compliance with the BRMIMP.

3.2.1 Regulatory Agencies

The HPP Designated Biologist will summarize weekly monitoring activities in the Monthly Compliance Report. The Monthly Compliance Report will be provided to the CEC , CDFG, and USFWS representatives within 10 working days after each reporting month during construction of the project. Agency representatives will be welcome to make site visits to assess the success of mitigation compliance first hand. Any questions regarding weekly reports or other issues can be answered during site visits or by telephone or electronic mail. If there are problems with compliance during any phase of the project, agency representatives will discuss the issue with HPP and its contractors. If violations are persistent, then work can be stopped or the whole project or portions of it by the revocation of permits.

3.2.2 Role and Authority of Designated Biologist

The Designated Biologist, although contracted by HPP, will act independently and responsibly in verifying that all elements of this BRMIMP or other approved mitigation are carried out in totality and in a timely manner. As the Designated Biologist, he/she in communication with HPP, has authority to:

- Hire other qualified biologists to complete pre-activity surveys;
- Hire other qualified biologists to assist in construction monitoring;
- Hire species specialists to carry out capturing and holding mitigation;
- Communicate directly to construction crews and supervisors about compliance issues;
- Communicate with agency personnel and HPP on matters of noncompliance;
- Suspend any activity if deemed essential for the protection of biological resources; and
- Coordinate implementation of remedial measures for non-compliance issues.

3.2.3 Roles and Authority of HPP and Project Contractors

The HPP, by signing agreements attached to the various regulatory instruments, is committed to implementing measures to ensure compliance with all elements of this BRMIMP. Contractors hired by HPP will also commit to compliance by signing contracts with language that makes adherence to mitigation measures mandatory by all personnel. HPP will have authority to suspend contracts of crews for noncompliance and contractors can remove individual workers who refuse to comply.

4.0 Pre-Activity Surveys and Reporting

No less than 5 days and no more than 30 days prior to commencement of construction activities, the Designated Biologist shall conduct pre-activity surveys of proposed work zones and a maximum 1000 foot buffer area. During pre-activity surveys, the status of resources identified by previous surveys shall be reviewed and updated as necessary. Results of pre-activity surveys will be included in the Post-Construction Compliance Report

4.1 MAPPING

All sensitive resources found during pre-activity surveys will be mapped on alignment sheets and drawings prepared prior to the construction phase of the project. Sensitive biological resources will be referenced to known points in the field that will be located by survey crews using Geographic Positioning System (GPS) technology. Biologists will record direction and distance from these known points and accurately map all sensitive biological resources in the project vicinity.

Table 2
Special Status Species with Potential to Occur at the HPP Site

Species	Status* Federal/State/CNPS	Habitat
Branchinecta longiantenna Longhorn fairy shrimp	-/E	Intermittent wetlands, vernal pools
Branchinecta lynchi Vernal pool fairy shrimp	-/E	Intermittent wetlands, vernal pools
Lepidurus packardi Vernal pool tadpole shrimp	-/T	Intermittent wetlands, vernal pools
Ambystoma californiense Claifornia tiger salamander	-/CSC	Intermittent wetlands, vernal pools
Gambelia sila blunt-nosed leopard lizard	E/E	Open saltbush scrub and grassland habitats, roads, and open washes
Athene cunicularia burrowing owl	- / CSC	Valley grasslands and open saltbush scrub
Lanius ludovicianus loggerhead shrike	- / CSC	Valley grasslands and saltbush scrub
Buteo swainsoni Swainson's hawk	- / T	Open grassland or cropland with scattered trees
Dipodomys nitratoides exilis Fresno kangaroo rat	E/E	Western and southern side of the San Joaquin Valley, saltbush scrub, and other alluvial plain and low foothill habitats
Onychomys torridus tularensis Tulare grasshopper mouse	- / CSC	Scrub and grassland habitats on the west side of the San Joaquin Valley
Perognathus inornatus San Joaquin pocket mouse	- / CSC	Open habitats in the San Joaquin Valley
Taxidae taxus American badger	- / CSC	Grassland and scrub habitats of the San Joaquin Valley and surrounding foothills
Vulpes macrotis mutica San Joaquin kit fox	E/T	Grassland and scrub habitats of the San Joaquin Valley and surrounding foothills
Cirsium crassicaule slough thistle	FSC/-/1B	Wet areas
Delphinium recurvatum Recurved larkspur	FSC/CSC/1B	Alkali sink, frequently with spiny saltbush
Caulanthus californicus California jewelflower	E/ - /4	Open, sparsely vegetated areas in saltbush scrub and grassland

E = Endangered
T = Threatened
FSC = Federal Species of Concern
CSC = California Species of Concern
CNPS= California Native Plant Society
1B = Rare or endangered in California and elsewhere
4 = Plants of limited distribution

4.2 Sensitive Wildlife Surveys

Pre-activity wildlife surveys will include 100% coverage of the work area and a 150-foot buffer zone for surveys conducted during June-January. During the San Joaquin kit fox natal/pupping season (February-May) the buffer zone survey area will be expanded to 1000 feet. The buffer zone for active raptor nest surveys will be 1320 feet. All pre-activity surveys will follow CDFG and USFWS approved methodologies. Target species are contained in Table 3. All new occurrences identified will be reported to the California Natural Diversity Data Base (CNDDB) on field survey forms. Copies of CNDDB approved field survey forms will be included in the Monthly Compliance Reports.

San Joaquin kit fox dens and Tipton kangaroo rat, burrows will be mapped and flagged for avoidance or other special treatment described later in this section. All raptor nests, and burrowing owl burrow locations will be handled in the same manner. Findings of other sensitive wildlife resources will be noted, mapped, and avoided.

4.3 Staking and Flagging of Avoidance Areas

The perimeter of the avoidance areas adjacent to work areas will be marked by wooden or metal stakes, at least 3 feet high, and no more than 10 feet apart. Each stake will be flagged with red and white candy-striped flagging and the resource being protected will be identified on one of the stakes. When a resource avoidance zone begins more than 10 feet from the work area, the resource will be marked with a single flagged stake. All project-related flagging shall be collected and removed following the construction phase of the project.

Avoidance criteria for sensitive wildlife and botanical resources:

- 1000 feet from occupied San Joaquin kit fox natal or pupping dens;
- 150 feet from known San Joaquin kit fox natal or pupping dens;
- 100 feet from known San Joaquin kit fox dens;
- 50 feet from potential San Joaquin kit fox dens;
- 50 feet from Tipton kangaroo rat burrow systems;

- 100 feet from active burrowing owl burrows, 200 from active nest burrows;
- 1320 feet from nesting raptors; and
- 30 feet from natural vernal pools and natural ponded waters.

Ground-disturbing activities will be restricted during the following time periods to protect the indicated species:

- Kit foxes: if occupied natal dens are found, surface-disturbing activities within a quarter mile of natal dens shall not occur between December and May.

4.4 Specific Take Avoidance for San Joaquin Kit Fox

The HPP and its contractors will make every reasonable effort to prevent the collapse of dens and burrows by relocating temporary access roads and lay down areas to avoid dens or other means as determined to be appropriate. Implementing the following procedures shall protect all known and potential San Joaquin kit foxes dens. Such protection will help prevent incidental take of dens in excess of the take limits allowed by the resource agencies.

If, after following all procedures in the standardized recommendations, the Designated Biologist is unable to successfully ensure protection of individual kit foxes, he/she will contact CEC, CDFG, and USFWS for further guidance.

4.4.1 Den Excavation

All known or potential kit fox dens that do not meet the avoidance criteria above will be monitored for three consecutive nights, and if kit foxes are not using the dens they may be temporarily plugged with paper and a layer of soil so they will not be used during construction (Appendix D). The same procedure may be followed for dens in the temporary construction areas if workers can work around them. If damage or destruction to a known or potential San Joaquin kit fox den(s) in the work area cannot be avoided during construction, the den shall be monitored for three consecutive days (or thoroughly inspected with a *VanTrac 2000*

Burrow Cam) and excavated according to agency approved guidelines to preclude later use by foxes during the construction period (Appendix D). Any kit foxes found inside the den during excavation will be allowed to escape unharmed. All den excavations shall be performed or supervised by a qualified biologist. Destruction of all kit fox dens shall be reported in the post-activity compliance report. The USFWS and CDFG will be notified of active pupping dens in the vicinity of construction. No active pupping dens will be excavated.

4.4.2 Den Replacement

All known excavated dens will be replaced with artificial dens at a ratio of 2:1, potential den replacement will be at a ratio of 1:1. Artificial dens will be placed near the excavated den and will have the same aspect, depth, and number of openings as the den that is replaced. The dens will be constructed of 8-inch polyethylene drainpipe connected to commercially available polyethylene valve boxes, which will act as den chambers (Appendix D). In consultation with the oversight agencies, artificial kit fox dens in the vicinity of the plant site will be protected for the life of the project.

Specific Take Avoidance for Tipton Kangaroo Rats:

All unavoidable potential Tipton kangaroo rat burrows will be excavated no sooner than seven days prior to ground disturbing activities. Tipton kangaroo rats found in the burrows will be captured and released into artificial burrows outside the work area immediately

4.5 Measures to Protect Burrowing Owls and Nesting Raptors

Active Burrowing owl burrows will be avoided by 100 feet; active nest burrows will be avoided by 200 feet. If nesting raptors along the proposed transmission line cannot be avoided by 1320 feet, construction in these areas will be delayed until the young have fledged or the nest is voluntarily abandoned. Construction will also be delayed until fledging.

The avoidance areas, as described above, will be staked where burrowing owl burrows are located outside the impact area. Where the avoidance areas cannot be fully implemented, the following measures (Toyon, 1999) will be implemented:

- Occupied burrows will not be disturbed during the nesting season (February 1 through August 31) unless a qualified biologist verifies through non-invasive methods that either: (1) the birds have not begun egg-laying and incubation; or (2) that juveniles from occupied burrows are foraging independently and are capable of independent survival.
- When destruction of occupied burrows is unavoidable, existing unsuitable burrows will be enhanced (enlarged or cleared of debris) or new burrows created (by installing artificial burrows, Appendix D) at a ration of 2:1 on lands nearby.
- If owls must be moved away from the disturbance area, passive relocation techniques will be used, rather than trapping. At least one week will be necessary to accomplish this and allow the owls to acclimate to alternate burrows.

Passive relocation with one-way doors: Owls are excluded from burrows in the immediate impact zone and within a 160-foot buffer zone by installing one-way doors in burrow entrances. One-way doors (e.g. modified dryer vents) will be left in place 48 hours to insure owls have left the burrows before excavation. Two natural or artificial burrows will be provided for each burrow in the project area that will be rendered unsuitable for use. The project area will be monitored daily for one week to confirm that owls are using the new burrows, before excavating burrows in the impact zone. Whenever possible, each burrow will be excavated using hand tools and refilled to prevent reoccupation. Section of flexible plastic pipe will be inserted into the tunnels during excavation to maintain an escape route for any animals inside the burrow.

Passive relocation without one-way doors: Two natural or artificial burrows will be provided for each burrow in the project area that will be rendered unsuitable for use. The project area will be monitored daily until the owls have relocated to the new burrows. The formerly occupied burrows may then be excavated. Whenever possible, each burrow will be excavated using hand tools and refilled to prevent reoccupation. Section of flexible plastic pipe will be inserted into the tunnels during excavation to maintain an escape route for any animals inside the burrow.

4.6 General Impact Minimization Measures

1. Pets shall not be permitted on the project site during construction activities.

2. All food-related trash such as wrappers, cans, bottles, and food scraps shall be disposed of in closed containers only and regularly removed from the project site.

3. All spills of hazardous materials within endangered species habitats shall be cleaned up immediately.

4. No firearms will be allowed in the project area.

5. All construction activities conducted during the project shall be confined to daylight hours unless circumstances warrant night work and CDFG and USFWS approve.

6. All project-related vehicles shall observe a speed limit of 20 mph or less on all routes that traverse endangered species habitat, except on State and County highways and road.

7. Project related vehicles shall be confined to existing primary or secondary roads or to specifically delineated corridors or project areas (i.e., areas that have been surveyed and described in existing documentation). Otherwise, no off-road vehicle travel shall be permitted.

8. All open trenches and footing holes shall be covered each night or ramped in such a way as to allow wildlife that may enter to escape unharmed. Ramps will be no more than 1,000 feet apart and no more than 45°. Biological monitors will inspect open trenches before construction begins each morning and during the day, to rescue animals that might have been entrapped.

9. All uncapped pipes, left at the site over night, will be inspected for animals before they are moved. If animals are found inside the pipe(s) they will be allowed to escape unharmed.

10. All open ends of pipelines under construction will be capped at the end of each work day to prevent animals from being entrapped.

4.7 Reporting of Pre-activity Survey Results

Pre-activity survey results will be included in Monthly Biological Monitoring Reports that will be sent to the CEC, CDFG, and USFWS representatives. A summary of these reports will also included in the post-compliance report discussed below.

5.0 BIOLOGICAL RESOURCE MONITORING AND REPORTING

5.1 Scope of Compliance Monitoring

Biological monitors will accompany initial grading crews throughout the project area at all times that activities with the potential to affect listed species are being conducted. Biological monitors may conduct pre-activity surveys as described above; shall aid project crews in satisfying avoidance criteria and implementing project mitigation as described in this plan; shall aid in relocating access roads and lay down areas as necessary; shall inspect open trenches and footing holes for stranded wildlife and remove as necessary; shall observe and note all pertinent information concerning project effects on listed species; and in general shall assist project personnel in conducting the proposed project in such a manner as to minimize adverse effects on endangered and threatened species.

5.2 Follow-up to Problems

The Designated Biologist will attend regular weekly construction meetings that are routinely conducted during construction projects like HPP. These meetings will be the ideal forum for supervisors, construction crew members, and the biologist to interact and discuss problems they have had or may be having with biological resource compliance issues. The advantage of regular meetings is that small problems can be solved before they become large ones in the future.

5.3 Monthly Monitoring Reports, and Post-activity Compliance Report

Monthly monitoring reports will be provided to the CEC, CDFG, and USFWS, contractors, and HPP management every on or before the tenth day of the following month during construction. These reports will include the following information:

- Areas and activities monitored during the prior month;
- Incident reports and outcome of remediation;
- An account of all rescued/released animals;

- a detailed account of any takes, harassments, or injuries to listed species; and
- Results of pre-activity surveys conducted.

5.4 Reporting Procedures for Injured Wildlife

Project personnel that injure or kill or find any of the following species injured or killed: San Joaquin kit fox, Tipton kangaroo rat, and any hawk or owl will report the incident to their supervisor who will in turn inform the HPP Supervisor of Compliance and the Designated Biologist immediately. Dead animals will be frozen as soon as possible so that CDFG approved biologists may later determine the cause of death. Injured animals will be transported, by the Designated Biologist, to an agency approved veterinary hospital. All deaths or injuries involving listed species will be reported to USFWS and/or CDFG within 24 hours of the incident. All notifications will include species, time, date, the name(s) of person(s) involved, exact location of the finding or incident, and any other pertinent circumstances.

Contact information:

The USFWS contact for Kern County is Chief, Endangered Species Division at (916) 414-6600. The address is Sacramento Fish and Wildlife Office, 2800 Cottage Way, W-2605, Sacramento, California 95825.

The CDFG contact for immediate assistance is State Dispatch at (916) 445-0045 (24 hours) or the San Joaquin Valley/Southern Sierra Regional Office at (559) 243-4014.

6.0 POST-CONSTRUCTION CLEAN-UP AND RECLAMATION

All construction areas, permanent and temporary, will be completely cleaned-up of all debris upon completion of activities at each site. Construction areas that will be temporarily disturbed, transmission line pole sites, staging areas and pulling sites will be completely recontoured to original grade.

6.1 Clean-up

Smaller construction debris and other trash will be cleaned up on a daily basis during the construction phase; larger items such as wire spools, etc., and perimeter stakes and flagging will be removed within 15 days of completion. Construction crews will be responsible for their own clean up and all sites will be inspected by the Construction Supervisor.

7.0 COMPENSATION

7.1 Acreage and Habitat Types Impacted

The HPP will provide monetary compensation or acquire agency approved lands containing habitat similar to the habitat being disturbed during construction and operation of the proposed facilities (that will be preserved and managed for sensitive wildlife and plant species into perpetuity) or purchase credits in an established preserve using the following ratios:

1.0 acres for each acre of habitat permanently disturbed
0.5 acres for each acre of habitat temporarily disturbed

Table 4 summarizes the length and amount of disturbance associated with the HPP and amounts of compensation to be made.

7.2 Description of Conservation Efforts

The HPP will purchase credits in the Kern Water Bank Endangered Species Mitigation Bank to mitigate for disturbances to marginal listed species habitats.

Table 3

Duration of impact, impacted acres, applicable ratio, and amount of compensation in acres.

Duration of Impact/ Habitat Type	Impact Acres	Applicable Ratio	Amount of Compensation (acres)
Permanent			
Temporary			
TOTAL			

Habitat compensation will be required for _____ acres. The Kern Water Bank requires $2,375 per acre and a $5,000 up-front fee per certificate. The HPP will pay $_____ for compensation lands.

8.0 MEASURES REQUIRED DURING ONGOING PROJECT OPERATION

The HPP is situated in a highly disturbed agricultural area, accordingly operation of the plant will not add significant impacts to listed wildlife in the area, however, HPP intends to implement the same applicable procedures designed for construction during the operation phase to minimize impacts.

8.1 MEASURES REQUIRED DURING THE OPERATIONAL PHASE

Measures contained in the following sections of this document will apply to the operational phase:

- Section 4.0,
- Section 5.0, and
- Section 6.0.

8.2 Measures Required During Maintenance

HPP does not expect maintenance of the facilities to result in any new disturbance, however, should the need arise measures contained in Sections 6.0 and 7.0 of this document will be implemented.

8.3 Record Keeping

All employee training records, pre-activity survey reports, incident reports, and compliance reports will be kept on file and will be made available to regulatory agencies at any time by contacting the HPP Supervisor of Compliance.

9.0 MEASURES REQUIRED FOR CLOSURE

Both temporary and permanent closure scenarios are addressed in this section. Permanent closure will occur at the end of the facility's operational phase, temporary closures may be necessary in the event of disastrous events or unfavorable economic conditions.

In the case of temporary closure, measures to protect biological resources would be needed only if there were surface disturbances or releases of harmful materials during a disaster. In such an event occurs, HPP will consult with responsible agencies to plan clean-up and mitigation of impacts to biological resources.

A permanent closure plan will be prepared six months prior to closure activities. It will include take avoidance and mitigation requirements applicable to the sensitive biological resources in the area at that time. The plan will also include reclamation of areas where facilities would be removed. Measures similar to those contained in Section 7.3 along with other appropriate measures will be included in the closure plan.

Compliance reporting for closure activities will be similar to those contained in Section 6.3.

10.0 REPORTING, MONITORING, PERFORMANCE STANDARDS, AND REMEDIAL ACTIONS

The following discussion first describes the array of reporting and record keeping requirements. To satisfy some of the mitigation measures, the CEC, CDFG, BLM, and USFWS evaluated the design and siting characteristics of the HPP Project during the permit process. Other measures, especially some of those implemented during and after construction, will be monitored and evaluated for success. Table 4 identifies how mitigation measures will be monitored, describes performance standards, and proposes remedial actions if performance standards are not satisfied.

Before the start of any ground disturbance activities, HPP will submit to the CEC CPM copies of the Kern Water Bank Master Endangered Species Permit Certificate.

During construction activities, reporting requirements may include the following, depending on the nature of the activity and where it is located:

- pre-activity survey report: The Designated Biologist will prepare a report describing the pre-activity surveys and will be submitted with the Monthly Compliance report to the CPM;
- incident report forms;

Records maintained by the Designated Biologist at the project site will include:

- pre-activity survey data forms,
- project maps with sensitive species occurrence locations.;
- copies of incident reports;
- copies of all reports prepared for environmental compliance activities;
- copies of permits and approvals with conditions monitored by the Designated Biologist;
- background biological information: the Biological Assessment, the BRMIMP and its revisions; and
- current names and ways to contact the CPM and representatives for HPP project and the contractors.

Table 4

Mitigation measures, performance standards, monitoring and reporting

Action	Responsible Party	Timing	Reporting Mechanism	Performance Standard	Remedial Actions
Install, monitor, and maintain flagging/ fencing at avoidance areas	Designated Biologist	Install no more than 14 days before construction; inspect weekly; remove after construction	Logs to record all monitoring; incident reports for violations	No entry into avoidance areas	Repair or replace flagging and fencing; retrain workers in the area
Delineate construction areas at transmission line structure sites and pulling areas by stakes and flagging	Survey Crew/Designated Biologist/All project personnel	Install before construction/ inspect periodically; remove after construction	Logs to record all monitoring; incident reports for violations	Stay within construction areas	Repair or replace flagging and fencing;
Restrict project traffic to established roads and designated project work areas	Construction Manager	On-going	Not applicable	Stay within construction areas	Improve signage; retrain workers in the area
Monitor activities that may result in incidental take of listed species or their habitat	Designated Biologist will establish monitoring frequency and assign monitors as needed	Daily monitoring in sensitive areas; weekly monitoring in less sensitive areas	Logs to record all monitoring; incident reports for violations	Comply with take avoidance measures	Increase frequency of monitoring; enforce permit conditions
Limit construction activities on transmission line to daylight hours unless approved by oversight agencies	Scheduled by contractors; monitored by Designated Biologist	On-going	Logs to record all monitoring; incident reports for violations	No road kill of nocturnal species	Add night-time monitoring; enforce permit conditions

Table 4 (continued)

Mitigation measures, performance standards, monitoring and reporting

Action	Responsible Party	Timing	Reporting Mechanism	Performance Standard	Remedial Actions
Do not use rodenticides and herbicides during construction unless approved by oversight agencies	HPP; contractors	On-going	Monthly reports	rodenticide or herbicide use during construction shall be approved by agencies	Retrain contractors and workers
Notify CEC,USFWS, and CDFG as required by permit conditions	HPP; Designated Biologist	Immediately	Phone calls; incident reports	Prompt resolution of problem	Increase frequency of monitoring; enforce contract conditions; retrain workers

Appendix A

Mitigation Measures

California Energy Commission, Biological Conditions of Certification
Kern Water Bank Master Endangered Species Permit Certificate

Appendix B

Aerial Photographs of Project Area

Appendix C

Resume of Designated Biologist

RESUME

William J. Vanherweg
Certified Wildlife Biologist

332 North Stine Rd.
Bakersfield, California 93309
Email- bvan@ncinternet.net

- Biological Surveys - Impact Analysis - Regulatory Agency Consultation - Mitigation Design - Habitat Management & Conservation Planning

(805) 839-0375, FAX - (661) 324-7308

PROFESSIONAL HISTORY

1993-Present
Senior Biological Consultant
Self-employed

1991-1993
Senior Biologist/Regional Manager BioSystems Analysis, Inc.

1990-1991
Wildlife Biologist/Botanist
QUAD Consultants

1977-1990
Agronomist
Self-employed

1971-1977
Range/Biological Technician
Bureau of Land Management

1974-1974
Biological Technician
California Department of Fish and Game

As a Certified Biologist, Mr. Vanherweg is responsible for wildlife and botanical surveys, environmental project coordination, including study design and implementation, impact analysis, mitigation design, technical report preparation, and daily project coordination for a variety of projects. Those projects include but are not limited to pipelines, geophysical exploration, various urban development proposals, public works projects and petroleum cogeneration facilities.

William is experienced with the Endangered Species Act, NEPA, CEQA and many special techniques used for sensitive species surveys. He has supervised the excavation of numerous kit fox dens and burrowing owl burrow systems. Some of these excavations included transporting owl chicks and eggs to a rehabilitation center under special permit issued by the United States Fish and Wildlife Service. He has supervised furbearer surveys using the latest tracking and remote camera placement techniques and has supervised California spotted owl surveys for the Sequoia National Forest. He has prepared numerous Biological Assessments, Biological Evaluations and Environmental Assessments for review by California Department of Fish and Game, United States Fish and Wildlife Service, the Bureau of Land Management, the United States Forest Service and other public agencies.

Mr. Vanherweg has reported "new location" sightings of the following sensitive species to the California Natural Diversity Data Base, San Joaquin kit fox, Oval-leaved snapdragon, Wilkinson's campanula, Shasta arnica, Pacific fisher, Blunt-nosed leopard lizard, Ferruginous hawk, Sierra Nevada red fox, and California spotted owl.

EDUCATION

Bachelor's Degree
Range Wildlife Ecology,
1975 California State University, Chico & Humboldt State University

Graduate Studies
Environmental Biology

William J. Vanherweg
Certified Wildlife Biologist

332 North Stine Rd.
Bakersfield, California 93309
Email- bvan@ncinternet.net
California State University, Bakersfield

(805) 839-0375, FAX - (661) 324-7308

- Biological Surveys - Impact Analysis - Regulatory Agency Consultation - Mitigation Design - Habitat Management & Conservation Planning

PERMITS AND MEMORANDA OF UNDERSTANDING

State of California **Scientific Collectors Permit**

Federal Permit to live-trap endangered:
Tipton kangaroo rats
Stephen's kangaroo rats
Pacific pocket mice
San Bernardino kangaroo rats

State **Memorandum of Understanding** to live-trap:
Tipton kangaroo rats
Stephen's kangaroo rats
Pacific pocket mice
San Bernardino kangaroo rats
Mojave ground squirrels

Authorized to handle **desert tortoise** (threatened species) and **San Joaquin kit fox** (endangered species).

SPECIALIZED TRAINING

Endangered Species Workshop, 1990; Taft, California
Mojave Ground Squirrel Human Impact Habitat Evaluation Seminar, 1991; Barstow, California
Hazardous Waste Operations and Emergency Response Training, 1992, 1995, 1996, 1997, 1998; San Jose, California
Emergency **First Aid/CPR**, 1994, Paso Robles, California
Habitat Conservation Planning Seminar, 1994; Sacramento, California
Fairy Shrimp Identification, 1995; Bakersfield, California
Great Basin Wildlife Habitats Seminar 1995; North Lake Tahoe,Nevada
San Joaquin Kit Fox Handling and Radio Collaring Training, Enterprise Advisory Services, Inc. 1997.

PROFESSIONAL AFFILIATIONS

San Joaquin Chapter of **The Wildlife Society**

Kern Chapter of the **California Native Plants Society**

American Society of Mammalogists

San Joaquin Valley Wildlife Species

Chevron Belridge 3-D Seismic Survey - **Biological Evaluation*** & Lead Monitor
San Emigdio Seismic Survey - **Biological Assessment*** & Lead Monitor
Enron, Kern County Seismic Survey **Biological Assessment** & Lead Monitor
Quatal Canyon Seismic Survey **Biological Assessment**
Santa Barbara Canyon Seismic Survey **Biological Assessment**
Bakersfield 3-D Arch Seismic Survey- **Biological Assessment** & Monitor
Cymric 3-D Seismic Survey - **Pre-activity Surveys**
South Coles Levee Natural Gas Pipeline Repair - **Pre-activity Surveys**
Coastal Aqueduct, Reaches 2,3 & 4 - **Water, Air, Traffic, and Fire Prevention Plans***
Delano State Prison Site - **Blunt-nosed Leopard Lizard Survey**
D.L. Griffiths Ski Park Project - **Construction Monitoring**
California State University, Bakersfield - **Ground Squirrel Eradication Program**
Bakersfield Air Park **Biological Assessment** - City of Bakersfield
Chandler Ranch **Environmental Impact Report** - City of Paso Robles*
P.S.E. - **Artificial Den Installation***
Paso Robles Airport - **Environmental Impact Report***
SemiTropic Ridge Water District - **Biological Assessment**
Tejon Oil field - **Natural Environment Study***
McFarland/Delano Landfill - **Natural Environment Study***
Mojave Pipeline - San Joaquin Valley **Preconstruction Surveys***
Midway Sunset Cogeneration Facility - **Artificial Kit Fox Den Installation***
Dexel Natural Gas Pipeline - **Biological Assessment***
Frito Lay/Highway 58 Expansion **Biological Assessment***
Shafter/Wasco Landfill **Tipton Kangaroo Rat Salvage Program***
Kern Fan Element Water Bank, Stages 1 & 2 - **Biological Assessment**
RioRock Gravel Company - **Biological Assessment***
Taft Landfill - **Biological Assessment***
Lost Hills Landfill - **Biological Assessment***
Lost Hills Waterline Rehabilitation Project - **Biological Assessment***
Bena Landfill - **Biological Assessment***
Arvin Landfill - **Biological Assessment***
McFarland/Delano Landfill - **Biological Assessment***
Kern Water Bank **Sensitive Species Monitoring Program***
Bear Mountain Road Properties, **Small Mammal Trapping Survey***
Golden Valley Produce Highway **Highway 58 Expansion Biological Assessment***
Urban Kit Fox **Home Range and Movement Study**
Torch - Cymric/Belridge 3-D Seismic Survey **Preactivity Survey and Nonitoring**
Mobil South Belridge Seismic Survey **Preactivity Survey***

35R to 17Z Natural Gas Pipeline Replacement **Preactivity Survey and Nonitoring***
Sunrise Cogeneration Facility **Biological Assessment***
Oakland Petroleum Maricopa Natural Gas Pipeline **Biological Evaluation***

Appendix D

Protocols for Temporary Closure of Kit Fox Dens and Construction of Artificial Dens and Burrows

This appendix describes procedures for temporary closure of kit fox dens and construction of artificial dens burrows for San Joaquin kit foxes, Tipton kangaroo rats, and burrowing owls.

SAN JOAQUIN KIT FOX DENS

Our objective is to avoid kit fox dens whenever possible, however, some dens may be unavoidable. Dens are a significant resource to San Joaquin kit foxes and the loss of individual dens may adversely affect the kit fox habitat in the project area.

Temporary Closure

All unoccupied kit fox dens in the temporary work area or within avoidance zone limits contained in Section 4.3, will be monitored for three days or explored thoroughly with a *VanCam burrow rover.* When dens are determined to be inactive, they will be plugged with wadded paper or other suitable material. The plug will be placed 8-12 inches inside the burrow opening and the remaining opening will be covered with soil. After construction is complete all dens will be unplugged.

Artificial Den Construction

Prior to the destruction of a known or potential den in areas to be permanently disturbed, dens will be monitored as above, after dens are determined to be unoccupied, dens will be fully excavated, diagrammed, and backfilled. The HPP will install replacement dens within 30 days after construction is completed as close to the original den site as possible. The artificial dens will be placed at similar depth, aspect, position on slope, and have similar configuration as the original den. Siting of dens will take into account the presence of other sensitive resources; dens will not be sited closer than 100 feet from active burrows of sensitive rodents.

Den passages will be constructed of 8 inch corrugated polyethylene drain pipe connected to 24 inch x 12 inch x 18 inch (approximate dimensions) plastic valve boxes that will serve as den chambers.

SMALL MAMMAL BURROWS

In suitable habitat of Tipton and giant kangaroo rats all small mammal burrows in work areas will be fully excavated prior to ground disturbance. If suitable natural burrows do not exist outside the work area for animals to to be placed in, artificial burrows will be constructed at a ratio of 2:1prior to excavation. The burrows will be placed no closer than 50 feet to the work area.

Specifications for Burrow Construction (Toyon, 1999)

Previous artificial burrows constructed for Tipton kangaroo rats and giant kangaroo rats have had high rates of occupancy (Uptain 1995; Williams *et al.* 1993). The artificial burrow systems used in those studies were of a relatively simple design, with single or double entrances and, in one case, a nest chamber. The design presented below is based upon these two effective configurations.

Supplies needed for burrow construction include 24-inch long sections of 1.5 to 2 inch diameter cardboard tubing, lightweight cardboard boxes 4 x 4 inches on a side and 2 inches high, and duct tape. The tubing will be used to fashion the entrance culverts, the boxes will be used as nest chambers, and the duct tape will be used to assemble the pieces. Two holes 2-inches in diameter will be cut in opposite sides of the cardboard box. One section of the tubing will be taped into each hole. At 12 inches from the end of the tubing, it will be cut and bent at a 45-degree angle. The bend will be taped with duct tape. The entire structure will be placed into a hole and the box, which acts as a nest chamber, will be buried 6 inches deep, with the ends of the tubing exposed above ground. Soil is mounded over the portions of the tubing near the den entrances. Paper towels will be placed in each nest chamber to provide nesting material and seed will be supplied.

BURROWING OWL BURROWS (Toyon, 1999)

Active burrowing owl burrows will be avoided by construction activities to the extent possible, but some burrows may be unavoidable because of construction activities. Two artificial burrows will be provided for each burrow that is destroyed.

Artificial nest burrows were constructed according to the following specifications, as described by Bruce Olenick (1987) Nest burrows like these have been used successfully.

These nest burrows consist of a 12-inch by 12-inch by 8-inch wood nesting chamber with a removable top and a 6-foot corrugated and perforated plastic drainage pipe 6 inches in diameter (Figure E-1). The entire unit, including the nest chamber, is buried 12 to 18 inches below ground to provide thermal stability in the nest chamber. A perch is provided near the burrow entrance.

Figure E-1. Artificial burrowing owl burrow design (Olenick, 1987).

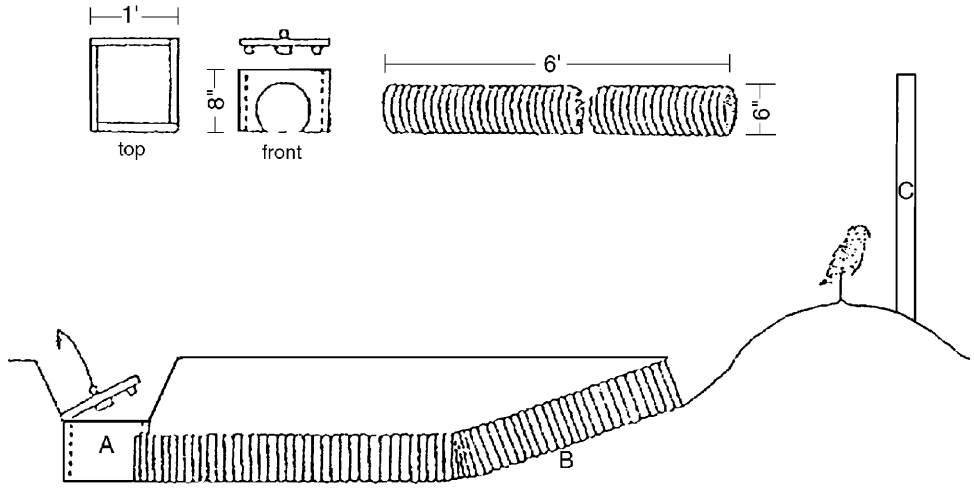

References Cited

Biosystems, 1991. Endangered Species Alert Program Manual, Prepared for Southern California Edison Environmental Affairs Division. 125 pp.

Olenick, Bruce, 1987. Reproductive success of burrowing owls using artificial nest burrows in southeastern Idaho. Eyas 19 (1): 38 Spring 1987.

Toyon, 1999. Biological Resources Mitigation Implementation and Monitoring Plan, La Paloma Generating Project.

Uptain, C.E., 1995. Habitat recovery on the North Kern Prison site: a summary of six seasons of monitoring. Unpublished report to the Calif. Dept. of Corrections, Sacramento, CA. 49 pp.

Williams, D. F., D. J. Germano, and W. Tordoff III, 1993. Population studies of endangered kangaroo rats and blunt-nosed leopard lizards in the Carrizo Plain Natural Area, California. 115 pp.

BIOLOGICAL RESOURCES

CONDITIONS OF CERTIFICATION

BIO-1 The project will avoid all impacts to legally protected species and their habitat on site, adjacent to the site and along the right-of-way for linear facilities.

BIO-2 The project will avoid all impacts to designated critical habitat (wetlands, vernal pools, riparian habitat, preserves) on site or adjacent to the site.

BIO-3 The project will avoid all impacts to locally designated sensitive species and protected areas.

BIO-4 The project will reduce risk of large bird electrocution by electric transmission lines and any interconnection between structures, substations and transmission lines by using construction methods identified in "Suggested Practices for Raptor Protection on Power Lines: The State of the Art in 1996" (APLIC 1996).

BIO-5 The project biologist, a person knowledgeable of the local/regional biological resources, and CPM will have access to the site and linear rights-of-way at any time prior to and during construction and have the authority to halt construction in an area necessary to protect a sensitive biological resource at any time.

BIO-6 Upon decommissioning the site, the biological resource values will be reestablished at pre-construction levels or better.

Verification: If the Designated Biologist halts construction, the action will be reported immediately to the CPM along with the recommended implementation actions to resolve the situation or decide that additional consultation is needed. Throughout construction, the project owner shall report on items one through six above if identified resources are found or impacted.

BIO-7 A minimum of 5 days and no more than 30 days prior to the beginning of site mobilization, the project site, the natural gas pipeline route, and the electrical transmission line route must be surveyed by a qualified biologist in accordance with US Fish and Wildlife Service (USFWS) and California Department of Fish & Game (CDFG) protocol for nesting raptors and the sensitive species listed in of the HPP Project AFC.

BIO-8 All construction pipes, culverts, or similar structures with a diameter of 4-inches or greater that are stored at a construction site for one or more

overnight periods should be thoroughly inspected for kit foxes before the pipe is subsequently buried, capped, or otherwise used or moved in any way. If a kit fox is discovered inside a pipe, that section of pipe should not be moved until the USFWS has been consulted.

BIO-9 **Designated Biologist**: Site mobilization shall not begin until a Staff approved Designated Biologist is available to be onsite.

Protocol: The Designated Biologist must meet the following minimum qualifications:

- A Bachelor's Degree in biological sciences, zoology, botany, ecology, or a closely related field;
- At least three years of experience in field biology or current certification of a nationally recognized biological society, such as The Ecological Society of American or The Wildlife Society;
- At least one year of field experience with biological resources found in or near the project area; and
- An ability to demonstrate to the satisfaction of the Staff are appropriate education and experience for the biological resources tasks that must be addressed during project construction.

If the Staff determines the proposed Designated Biologist to be unacceptable, the project owner shall submit another individual's name and qualifications for consideration. If the approved Designated Biologist needs to be replaced, the project owner shall obtain approval of a new Designated Biologist by submitting to the CPM the name, qualifications, address, and telephone number of the proposed replacement. No disturbance will be allowed in any designated sensitive areas until the CPM approves a new Designated Biologist and the new biologist is onsite.

Verification: Prior to the start of any site mobilization activities the project owner shall submit to the CPM for approval, the name, qualifications, address and telephone number of the individual selected by the project owner as the Designated Biologist. If a Designated Biologist is replaced, the information of the proposed replacement, as specified in the condition, must be submitted in writing prior to the termination or release of the preceding Designated Biologist.

BIO-10 The CPM approved Designated Biologist shall perform the following during project construction:

- Advise the Applicant's Construction Manager on the implementation of the Biological Resources Conditions;

- Supervise or conduct mitigation, monitoring and other biological resources compliance efforts, particularly in areas requiring avoidance or containing sensitive biological resources, such as, wetlands and special status species; and

- Notify the Applicants and the CPM of non-compliance with any Biological Resources Conditions.

Verification: During project construction, the Designated Biologist shall maintain written records of the tasks described above, and summaries of these records shall be submitted along with the Monthly Compliance Reports to the CPM.

BIO-11 BIOLOGICAL RESOURCES MITIGATION IMPLEMENTATION AND MONITORING PLAN: The Applicant shall submit to the CPM for review and approval a copy of the final Biological Resources Mitigation Implementation and Monitoring Plan (BRMIMP) and shall implement the measures identified in the plan. Any changes made to the adopted BRMIMP must be made in consultation with the CPM and USFWS.

Protocol: The final BRMIMP shall identify:

- All biological resources mitigation, monitoring, and compliance conditions included in the Energy Commission's Final Decision;

- All sensitive biological resources to be impacted, avoided, or mitigated by project construction, operation and closure;
- All mitigation measures identified through consultation with the USFWS;

- All required mitigation measures/avoidance strategies for each sensitive biological resource;

- Required habitat compensation strategy, including provisions for acquisition, enhancement and management, for any temporary and permanent loss of habitat for sensitive biological resources;

- All locations, on a map of suitable scale, of laydown areas and areas requiring temporary protection and avoidance during construction;

- Aerial photographs of all areas to be disturbed during project construction activities – one set prior to site disturbance and one set after completion of mitigation measures. Include planned

timing of aerial photography and a description of why times were chosen;

- Performance standards to be used to help decide if/when proposed mitigation is or is not successful;

- All performance standards and remedial measures to be implemented if performance standards are not met;

- A process for proposing plan modifications to the CPM and appropriate agencies for review and approval.

Verification: Prior to the start of any project-related ground disturbance activities, the project owner shall provide the CMP with the final version of the BRMIMP, and the CPM will determine the plan's acceptability. All modifications to the approved BRMIMP must be made only after consultation with the CPM, USFWS and CDFG. The project owner shall notify the CPM before implementing any CPM approved modifications to the BRMIMP.

Within 30 days after completion of project construction, the applicant shall provide to the CPM for review and approval, a written report identifying which items of the BRMIMP have been completed, a summary of all modifications to mitigation measures made during the project's construction phase, and which mitigation and monitoring plan items are still outstanding.

BIO-12 HABITAT COMPENSATION: To compensate for temporary, permanent, and incremental impacts to sensitive species habitat, the project owner will provide suitable habitat compensation funds to the Kern Water Bank HCP at a ratio of 1:1 for all permanent disturbance and a ratio of 0.2:1 for all temporary disturbance to habitats.

Verification: To account for inflation and other anticipated changes in habitat compensation costs, the project owner will consult with Kern Water Bank and the CPM prior to the start of any project related ground disturbance, and the Kern Water Bank will identify the final cost per acre and total compensation amount. Once the final compensatory mitigation amount has been determined and prior to the start of any project related ground disturbance activities, the project owner will provide a Conservation Credit Certificate to the CPM that all habitat compensation funds have been provided to the Kern Water Bank HCP.

Within 90 days after completion of project related construction, the project owner shall provide aerial photographs to the CPM that were taken after construction. The project owner will also provide an analysis of the amount of any additional habitat disturbance. The CPM will notify the project owner of any additional funds required to compensate for any additional habitat disturbances

at the adjusted market value at the time of construction to acquire additional credits if necessary.

Appendix K6

Biological Resources Including Draft Biological Resources Mitigation Implementation and Monitoring Plans

Appendix K7

Cultural Resources

CULTURAL RESOURCES

CONDITIONS OF CERTIFICATION

CUL-1 The project shall not cause any significant impact to cultural resources on the power plant site or linear rights-of-way.

CUL-2 The project has been determined to have the potential to adversely affect significant cultural resources and the project owner shall ensure the completion of the following actions/activities:

1. Provide a cultural specialist who will have access to the site and linear rights-of-way at any time prior to and during ground disturbance.

2. The cultural specialist will provide training to appropriate construction personnel at the site, will install avoidance measures (as necessary), and will be present during appropriate ground disturbing activities. The cultural specialist has the authority to half construction at a location if a significant cultural resource is found. If resources are discovered and the cultural specialist is not present, the project owner will halt construction at that location and will contact the specialist immediately. The specialist will consult with the CPM and a decision will be made by the CPM within 24-hours as to how to proceed.

Appendix K8

Land Use

LAND USE

CONDITIONS OF CERTIFICATION

LAND USE-1 The project shall conform to all applicable local, state and federal land use requirements, including general plan policies, zoning regulations, local development standards, easement requirements, encroachment permits, truck and vehicle circulation plan requirements, Federal Aviation Administration approval, and the Federal Emergency Management Agency National Flood Insurance Program.

Verification: Prior to start of construction, the project owner will submit to the CPM documentation verifying compliance with the above -referenced land use requirements.

LAND USE-2 If offsite laydown areas are required, prior to occupying any off-site laydown or storage facilities the applicant shall provide detailed plans indicating the location of existing and proposed use of the sites to the CPM. Such sites shall be previously disturbed and shall not require any clearing or grading to accommodate the proposed use. To prevent possible impacts to sensitive resources, the applicant shall coordinate with the CPM to determine if biological or cultural surveys are required. This submission shall include written landowner approval and must comply with all local land use requirements. If the proposed site is located within public rights-of-way, appropriate traffic control plans and encroachment permits will be provided to the CPM.

Verification: Prior to the start of construction, the project owner will submit to the CPM documentation verifying compliance with he above-referenced land use requirements.

LAND USE-3 The project owner shall ensure that local gas, electric and telephone companies are contacted regarding the exact location of their services. Any alternations or relocation of the utilities shall be the responsibility of the project owner.

Verification: The project owner shall provide written evidence to the CPM to indicate that all utility companies have been notified regarding proposed construction and that these utilities have identified the location of these facilities in the area of construction.

Appendix K9

Noise

NOISE

CONDITIONS OF CERTIFICATION

NOISE-1 At least 15 days prior to the start of rough grading, the project owner shall notify all residents within one-half miles of the project boundaries by mail or other effective means, of the commencement of the HPP project construction. The project owner shall establish a telephone number for use by the public to report any undesirable noise conditions associated with the construction and operation of the HPP project. If the telephone is not staffed 24 hours per day, the project owner shall include an automatic answering feature, with date and time stamp recording, to answer calls when the phone is unattended. This telephone number shall also be posted at the HPP project site during construction in a manner visible to passersby. This telephone number shall be maintained until the HPP project has been operational for at least one year.

Verification: The project owner shall transmit to the Compliance Project Manager (CPM) in the first monthly construction report following the start of rough grading, a statement signed by the project manager attesting that the above notification has been performed, describing the method of that notification, and including a sample letter, poster or other notice, as appropriate. This statement shall also attest that the telephone number has been established and posted at the site, and also provide the telephone number.

NOISE-2 Throughout the construction and operation of the HPP project, the project owner shall document, investigate, evaluate, and attempt to resolve all project related noise complaints.

Protocol: The project owner shall:

1. Use the Noise Complaint Resolution Form (see below for an example), or functionally equivalent procedure acceptable to the CPM, to document and respond to each noise complaint;

2. Attempt to contact the person(s) making the noise complaint within 24 hours;

3. Conduct an investigation to determine the source of noise related to the complaint;

4. If the noise is project related, take all feasible measures to reduce the noise at its source; and

5. Submit a report documenting the complaint and the actions taken. The report shall include: a complaint summary, including results of noise reduction efforts; and if obtainable, a signed statement by the complainant, stating that the noise problem is resolved to complainant's satisfaction.

Verification: Within 30 days of receiving a noise complaint, the project owner shall file a copy of the Noise Complaint Resolution Form, or similar instrument approved by the CPM, with Kings County and with the CPM documenting the resolution of the complaint. If mitigation is required to resolve a complaint, and the complaint is not resolved within a 30-day period, the project owner shall submit an updated Noise Complaint Resolution Form when the mitigation is finally implemented.

NOISE-3 Prior to the start of the project construction, the project owner shall submit to the CPM for review a noise control program. The noise control program shall be used to reduce employee exposure to high noise levels during construction and also to comply with applicable OSHA standards.

Verification: At least 30 days prior to the start of rough grading, the project owner shall submit to the CPM the above referenced program. The project owner shall make the program available to OSHA upon request.

NOISE-4 Upon the HPP project first achieving an output of 80 percent or greater of rated capacity, the project owner shall conduct a 25-hour community noise survey, utilizing the same monitoring sites employed in the pre-project ambient noise survey as a minimum. The survey shall also include the octave band pressure levels to ensure that no new pure-tone noise components have been introduced. No single piece of equipment shall be allowed to stand out as a dominant source of noise that draws complaints. Steam relief valves shall be adequately muffled to preclude noise that draws complaints. The noise contributed by the project operation at the nearest residence shall not exceed 50 dBA L_{50} under normal operating conditions. If the results from the survey indicate that power plant noise levels are in excess of 50 dBA L_{50} (check noise section for predicted noise levels) at the nearest residence, additional mitigation measures shall be implemented to reduce noise to a level of compliance with this limit. The mitigation measures (to be employed as required) may include:

1. Provide standard outdoor/weather enclosures for the combustion turbine generator packages;

2. Provide air inlet silencers for the combustion turbines;

Protocol: The measurement of power plant noise for purposes of demonstrating compliance with this Condition may alternatively be made

at an acceptable location closer to the plant (e.g., 400 to 1,000 feet from the plant boundary) and this measured level then mathematically extrapolated to determine the plant noise contribution at the nearest sensitive receptor. However, notwithstanding the use of this alternative method for determining the noise level, the character of plant noise shall be evaluated at the nearest sensitive receptor to determine the presence of pure tones or other dominant sources of plant noise.

Verification: Within 30 days after first achieving an output of 80 percent or greater of rated output, the project owner shall conduct the above described noise survey. Within 30 days after completing the survey, the project owner shall submit a summary report of the survey to Kings County and the CPM. Included in the report will be a description of any additional mitigation measures necessary to achieve compliance with the above listed noise limits, and a schedule, subject to CPM approval, for implementing these measures. Within 30 days of completion of installation of these measures, the project owner shall submit to the CPM a summary report of a new noise survey, performed as described above and showing compliance with this condition.

NOISE-5 The project owner shall conduct an occupational noise survey to identify the noise hazardous areas in the facility. The survey shall be conducted within thirty (30) days after the facility is operating at an output of 80% of rated capacity or greater, and shall be conducted by a qualified person in accordance with the provisions of Title 8, California Code of Regulations sections 5095-5100 (Article 105) and Title 29, Code of Federal Regulations, Part 1910. The survey results shall be used to determine the magnitude of employee noise exposure. The project owner shall prepare a report of the survey results and, if necessary, identify proposed mitigation measures that will be employed to comply with the applicable state and federal regulations.

Verification: Within 30 days after completing the survey, the project owner shall submit the noise survey report to the CPM. The project owner shall make the report available to OSHA upon request.

NOISE-6 Night construction activities may be authorized by the CPM if they are consistent with local noise ordinances. Night construction, or specific night construction activities may be disallowed by the CPM if it results in significant impact to the surrounding community.

Verification: Noise monitoring and surveys may be conducted if complaints are reported by residence in the surrounding area of project site.

NOISE COMPLAINT RESOLUTION FORM

NOISE COMPLAINT LOG NUMBER _____

Complainant's name and address:

Phone number: _____

Date complaint received: _____
Time complaint received: _____

Nature of noise complaint:

Definition of problem after investigation by plant personnel:

Date complainant first contacted: _____

Initial noise levels at 3 feet from noise source _____ dBA Date: _____
Initial noise levels at complainant's property: _____ dBA Date: _____

Final noise levels at 3 feet from noise source: _____ dBA Date: _____
Final noise levels at complainant's property: _____ dBA Date: _____

Description of corrective measures taken:

Complainant's signature: _____ Date: _____

Approximate installed cost of corrective measures: $ _____
Date installation completed: _____
Date first letter sent to complainant: _____ (copy attached)
Date final letter sent to complainant: _____(copy attached)

This information is certified to be correct:

Plant Manager's Signature: _____

(Attach additional pages and supporting documentation, as required).

Appendix K

Conditions of Certification and Data Adequacy Worksheets

Appendix K: Conditions of Certification and Data Adequacy Worksheets

Contents

K1 Compliance Plan

K2 Facility Design

K3 Transmission System Engineering

K4 Transmission Line Safety and Nuisance

K5 Air Quality

K6 Biological Resources

Draft Biological Resources Mitigation Implementation and Monitoring Plan

K7 Cultural Resources

K8 Land Use

K9 Noise

K10 Public Health

K11 Worker Safety

K12 Socioeconomics

K13 Soil and Water Resources

K14 Traffic and Transportation

K15 Visual Resources

K16 Hazardous Materials Management

K17 Waste Management

K18 Hydrology and Water

K19 Geological and Paleontological Resources

K20 Data Adequacy Worksheets

K20-1 Project Overview
K20-2 Efficiency
K20-3 Facility Design
K20-4 Reliability
K20-5 Transmission System
K20-6 Air Quality
K20-7 Biological Resources
K20-8 Cultural Resources
K20-9 Land Use

Appendix K: Conditions of Certification and Data Adequacy Worksheets

Contents (Continued)

K20-10 Noise
K20-11 Public Health
K20-12 Worker Health and Safety
K20-13 Socioeconomics
K20-14 Agriculture and Soils
K20-15 Traffic and Transportation
K20-16 Visual Resources
K20-17 Hazardous Materials Handling
K20-18 Waste Management
K20-19 Water Resources
K20-20 Geologic Resources and Hazards
K20-21 Paleontological Resources

Appendix K10

Public Health

PUBLIC HEALTH

CONDITIONS OF CERTIFICATION

NONE REQUIRED

Appendix K11

Worker Safety

WORKER SAFETY

CONDITIONS OF CERTIFICATION

WORKER SAFETY-1 The project owner must comply with all requirements in Title 8 of the California Code of Regulations, beginning with Part 450 (8 CCR Part 450 et. Seq).

Verification: The project owner shall submit to the CPM a letter attesting to compliance with the above and shall report any violations to the CPM

Appendix K12

Socioeconomics

SOCIOECONOMICS

CONDITIONS OF CERTIFICATION

NONE REQUIRED

Appendix K13

Soil and Water Resources

SOIL AND WATER RESOURCES

CONDITIONS OF CERTIFICATION

SOIL&WATER 1 Prior to beginning any clearing, grading or excavation activities associated with project construction, the project owner will develop and implement a Storm Water Pollution Prevention Plan (SWPPP).

Verification: Two weeks prior to the start of construction, the project owner will submit to the Energy Commission Compliance Project Manager (CPM) a copy of the Storm Water Pollution Prevention Plan (SWPPP).

SOIL&WATER 2 Prior to the initiation of any earth moving activities, the project owner shall submit an erosion control and revegetation plan for staff approval. The final plan shall contain all the elements of the draft plan with changes made to address the final design of the project.

Verification: The final erosion control and revegetation plan shall be submitted to the Energy Commission CPM for approval 30 days prior to the initiation of any earth moving activities.

Appendix K14

Traffic and Transportation

TRAFFIC AND TRANSPORTATION

CONDITIONS OF CERTIFICATION

TRANS-1 The project owner shall comply with Caltrans and Kings County limitation on vehicle sizes and weights for vehicles owned by the project owner. In addition, the project owner or its contractor shall obtain necessary transportation permits from Caltrans and all relevant jurisdictions for roadway use.

Verification: In the Monthly Compliance Reports, the project owner shall submit copies of any oversize and overweight transportation permits received during that reporting period. In addition, the project owner shall retain copies of these permits and supporting documentation in its compliance file for at least six months after the start of commercial operation.

TRANS-2 The project owner or its contractor shall comply with Caltrans and Kings County limitations for encroachment into public rights-of-way and shall obtain necessary encroachment permits from Caltrans and all relevant jurisdictions, including the Union Pacific Railroad if required.

Verification: In Monthly Compliance Reports, the project owner shall submit copies of any encroachment permits received during the reporting period. In addition, the project owner shall retain copies of these permits and supporting documentation in its compliance file for at least six months after the start of commercial operation.

TRANS-3 Prior to the start of construction, the project owner shall consult with Kings County, and prepare and submit to the Compliance Project Manager (CPM) a construction traffic control plan and implementation program which addresses the following issues:

- Timing of heavy equipment and building materials deliveries;
- Signing, lighting, and traffic control device placement;
- Establishing construction work hours outside of peak traffic periods;
- Emergency access;
- Temporary travel lane closures;
- Maintaining access to adjacent residential and commercial property; and
- Off-street employee parking in construction areas during peak construction.

Verification: Thirty (30) days prior to start of construction, or a lesser period of time as mutually agreed to by the project owner and the CPM, the

project owner shall provide to the CPM for review and approval, a copy of its construction traffic control plan and implementation program.

TRANS-4 The project owner or its contractor shall install crossing structures and netting, if required by Caltrans across major thoroughfares as a safety precaution and to reduce the potential for damage from falling construction materials or equipment during cable-stringing activities. Thirty days prior to cable stringing, the project owner shall consult with Caltrans, and prepare and submit to the CPM a safety plan and implementation program.

Verification: Thirty (30) days prior to wire stringing, or a lesser period of time as mutually agreed to by the project owner and the CPM, the project owner shall provide to the CPM for review and approval, a copy of its safety plan and implementation program.

TRANS-5 The project owner shall provide a Traffic Control Plan to Caltrans for review prior to their issuance of an encroachment permit.

Protocol: The Traffic Control Plan shall include the following element:

- If appropriate, provide timeframes for flagman and/or sheriff assignments during the peak construction.

Verification: The Traffic Control Plan shall be submitted to Caltrans for review at least 30 days prior to start of project construction. The project owner shall provide a copy of a letter from Caltrans acknowledging acceptance of the Traffic Control Plan in a Monthly Compliance Report within 30 days of receipt of the letter.

Appendix K15

Visual Resources

VISUAL RESOURCES

CONDITIONS OF CERTIFICATION

VIS-1 Project structures treated during manufacture and all structures treated in the field that are visible to the public, shall be painted in a neutral color consistent with the surrounding environment.

Verification: Prior to painting exposed services, the project owner shall identify the selected color for CPM approval.

VIS-2 Any fencing for the project shall be galvanized with a non-reflective finish.

> Protocol: At least 60 days prior to ordering the fencing the project owner shall submit to the CPM for review and approval the specifications for the fencing documenting that such fencing finish will be galvanized and non-reflective.
>
> If the CPM notifies the project owner that revisions of the finish specifications are needed before the CPM will approve the submittal, the project owner shall submit to the CPM revised specifications.
>
> The project owner shall not order the fencing until the project owner receives approval of the fencing submittal from the CPM.
>
> The project owner shall notify the CPM within one week after the fencing has been installed and is ready for inspection.

Verification: At least 60 days prior to ordering the galvanized non-reflective fencing, or a lesser period of time as mutually agreed to by the project owner and the CPM, the project owner shall submit the specifications to the CPM for review and approval.

If the CPM notifies the project owner that revisions of the submittal are needed before the CPM will approve the submittal, within 30 days of receiving that notification, the project owner shall prepare and submit to the CPM a revised submittal.

The project owner shall notify the CPM within seven days after completing installation of the fencing that the fencing is ready for inspection.

VIS-3 The project owner shall prepare and submit to the local planning department for review and comment, and to the CPM for review and

approval a landscaping plan which provides for any or all of the following, as appropriate, to screen the project from view: berms, vegetation and trees, and slats in fencing.

Verification: Within 30 days of certification, the project owner shall submit the landscaping plan to the local planning department and the CPM.

VIS-4 The project owner shall ensure that the power plant is enclosed in a 6-foor tall solid wall or a 6-foot fence with slats.

Verification: Prior to operation of the proposed project the CPM shall inspect the project sire to ensure that a block wall or slatted fence has been installed.

VIS-5 Night Lighting. The project owner shall design and install all new project lighting to minimize potential night lighting impacts, as follows:

a. All new night lighting shall be of minimum necessary brightness consistent with operational safety.

b. All new lighting shall be shielded and directed downward to prevent all uplighting and all direct light trespass (direct lighting extending outside the boundaries of the facility).

c. Wherever feasible and safe, lighting shall be kept off when not in use.

d. A lighting complaint resolution form shall be maintained by plant operations, to record all lighting complaints received and to document the resolution of that complaint.

e. Lighting shall be installed consistent with local requirements.

Verification: The project owner shall develop a lighting plan for the project incorporating the above-measures and submit it to the CPM for review and approval. If the CPM notifies the project owner that revisions of the plan are needed before the CPM will approve the plan, the project owner shall prepare and submit to the CPM a revised plan. Lighting shall not be installed before the plan is approved. The project owner shall notify the CPM when the lighting has been installed and is ready for inspection. Before ordering the exterior lighting, the project owner shall provide the lighting plan to the CPM for review and approval. If the CPM notifies the project owner that any revisions of the plan are needed before the CPM will approve of the plan, within seven days of receiving that notification the project owner shall submit to the CPM a revised plan.

The project owner shall notify the CPM within seven days of completing exterior lighting installation that the lighting is ready for inspection.

Appendix K16

Hazardous Materials Management

HAZARDOUS MATERIALS MANAGEMENT

CONDITIONS OF CERTIFICATION

HAZ-1 The project owner shall not use any hazardous material in reportable quantities, as specified in Title 40, C.F.R., Part 355, Subpart J, section 355.50, not listed in Appendix B, unless approved in advance by the CPM.

Verification: The project owner shall provide to the CPM, in the Annual Compliance Report, a list of hazardous materials contained at the facility in reportable quantities.

HAZ-2 The project owner shall require as a condition of its contract with carriers for the transport and delivery of ammonia that all such carriers are certified by the California Fertilizer Association (CFA).

Verification: The project owner shall include in its Monthly Compliance Report copies of all regulatory permits/licenses acquired by the project owner and/or subcontractors concerning the transport of hazardous substances. Evidence will also be provided that CFA certified transporters would be used.

HAZ-3 The project owner shall prepare a Risk Management Plan (RMP). The RPM shall be submitted to USEPA and the CPM and shall reflect the comments of the Kings County CUPA. The project owner shall also prepare a safety management plan for the delivery of ammonia. The plan shall include procedures, protective equipment requirements, training and a checklist.

Verification: At least sixty (60) days, or a lesser period of time as mutually agreed to, the project owner shall provide the final RMP and the safety plan to the CPM.

Appendix K17

Waste Management

WASTE MANAGEMENT

CONDITIONS OF CERTIFICATION

WASTE-1 The project owner shall obtain a hazardous waste generator identification number from the Cal EPA Department of Toxic Substances Control prior to generating any hazardous waste.

Verification: The project owner shall keep its copy of the identification number on file at the project site and notify the CPM via the monthly compliance report of its receipt.

WASTE-2 The project owner, upon becoming aware of any waste management-related enforcement action taken or proposed to be taken against it, or against any waste hauler or disposal facility or treatment operator with which it contracts, shall notify the CPM.

Verification: The project owner shall notify the CPM in writing within 10 days of becoming aware of an impending enforcement action.

WASTE-3 Prior to the start of both construction and operation, the project owner shall prepare and submit to the CPM a waste management plan, including revisions based on the CPM's comments, for all wastes generated during construction and operation of the facility, respectively. The plans shall contain, at a minimum, the following:

- A description of all waste streams, including projections of frequency, amounts generated and hazard classifications; and

- Methods of managing each waste, including treatment methods and companies contracted with for treatment services, waste testing methods to assure correct classification, methods of transportation, disposal requirements and sites, and recycling and waste minimization/reduction plans.

Verification: No less than 60 days prior to the start of construction, or a lesser time as mutually agreed upon by the project owner and the CPM, the project owner shall submit the construction waste management plan to the CPM for review. The operation waste management plan shall be submitted no less than 60 days prior to the start of project operation, or a lesser time as mutually agreed upon by the project owner and CPM. The project owner shall submit any required revisions within 30 days of notification by the CPM (or mutually agreed

upon date). In the Annual Compliance Reports, the project owner shall document the actual waste management methods used during the year compared to planned management methods.

Appendix K18

Hydrology and Water

HYDROLOGY AND WATER

CONDITIONS OF CERTIFICATION

HYRDO&WATER-1 The project owner will not discharge any waste water off-site , except as delivered to licensed haulers as described in Section 2.2.8.1 of the AFC.

Verification: The project owner shall keep and retain records of waste water hauled off-site.

Appendix K19

Geological and Paleontological Resources

GEOLOGICAL AND PALEONTOLOGICAL RESOURCES

CONDITIONS OF CERTIFICATION

GEO-1 Prior to the start of construction, the project owner shall assign to the project an engineering geologist(s), certified by the State of California, to carry out the duties required by the 1998 edition of the California Building Code (CBC) Appendix Chapter 33, Section 3309.4. The certified engineering geologist(s) assigned must be approved by the CPM (the functions of the engineering geologist can be performed by the responsible geotechnical engineer, if that person has the appropriate California license).

Verification: At least 30 days (or a lesser number of days mutually agreed to by the project owner and the Chief Building Official (CBO) prior to the start of construction, the project owner shall submit to the CPM the name(s) and license number(s) of the certified engineering geologist(s) assigned to the project. The submittal should include a statement that CPM approval is needed. The CPM will approve or disapprove of the engineering geologist(s) and will notify the project owner of its findings within 15 days of receipt of the submittal. If the engineering geologist(s) is subsequently replaced, the project owner shall submit for approval the name(s) and license number(s) of the newly assigned individual(s) to the CPM. The CPM will approve or disapprove of the engineering geologist(s) and will notify the project owner of the findings within 15 days of receipt of the notice of personnel change.

GEO-2 The assigned engineering geologist(s) shall carry out the duties required by the 1998 CBC, Appendix Chapter 33, Section 3309.4 – Engineered Grading Requirement, and Section 3318.1 - Final Reports. Those duties are:

1. Prepare the Engineering Geology Report. This report shall accompany the Plans and Specifications when applying to the CBO for the grading permit. The report and project Plans and Specifications shall also be submitted to the Energy Commission's CPM at the same time that the report submittal is made to the CBO.

2. Monitor geologic conditions during construction.

3. Prepare the Final Engineering Geology Report.

The Engineering Geology Report required by the 1998 CBC, Appendix Chapter 33, Section 3309.3 - Grading Designation, shall include an adequate description of the geology of the site, conclusions and recommendations regarding the effect of geologic conditions on the proposed development, and an opinion on the adequacy, for the intended use, of the site as affected by geologic factors.

The Final Engineering Geology Report to be completed after completion of grading, as required by the 1998 CBC, Appendix Chapter 33, Section 3318.1, shall contain a final description of the geology of the site and any new information disclosed during grading, and a description of the effect of same on recommendations incorporated in the approved grading plan. The engineering geologist shall submit a statement that, to the best of his or her knowledge, the work within their area of responsibility is in accordance with the approved Engineering Geology Report and applicable provisions of this chapter.

Verification: (1) Within 15 days after submittal of the application(s) for grading permit(s) to the CBO, the project owner shall submit a signed statement to the CPM stating that the Engineering Geology Report has been submitted to the CBO as a supplement to the plans and specifications and that the recommendations contained in the report are incorporated into the plans and specifications. (2) Within 90 days following completion of the final grading, the project owner shall submit copies of the Final Engineering Geology Report required by the 1998 CBC, Appendix Chapter 33, Section 3318 - Completion of Work, to the CPM and the CBO.

PAL-1 Prior to the start of any project-related construction activities (defined as any construction-related vegetation clearance, ground disturbance and preparation, and site excavation activities), the project owner shall ensure that the designated paleontological resources specialist approved by the CPM is available for field activities and prepared to implement the conditions of certification.

The designated paleontological resources specialist shall be responsible for implementing all the paleontological Conditions of Certification and for using qualified personnel to assist in this work.

> Protocol: The project owner shall provide the CPM with the name and statement of qualifications for the designated paleontological resources specialist.
>
> The statement of qualifications for the designated paleontological resources specialist shall demonstrate that the specialist meets the following minimum qualifications: a degree in paleontology or geology or paleontological resource management; and at least three years of paleontological resource mitigation and field experience in California, including at least one year's experience leading paleontological resource mitigation and field activities.
>
> The statement of qualifications shall include a list of specific projects the specialist has previously worked on; the role and responsibilities of the

specialist for each project listed; and the names and phone numbers of contacts familiar with the specialist's work on these referenced projects.

If the CPM determines that the qualifications of the proposed paleontological resources specialist do not conform to the above requirements, the project owner shall submit another individual's name and qualifications for consideration.

If the approved, designated paleontological resources specialist is replaced prior to completion of project mitigation, the project owner shall obtain CPM approval of the new designated paleontological resources specialist by submitting the name and qualifications of the proposed replacement to the CPM, at least ten (10) days prior to the termination or release of the preceding designated paleontological resources specialist.

Should emergency replacement of the designated specialist become necessary, the project owner shall immediately notify the CPM to discuss the qualifications of its proposed replacement specialist.

Verification: Thirty (30) days prior to the start of construction, or a lesser period of time mutually agreed to by the project owner and the CPM, the project owner shall submit the name and resume and the availability for its designated paleontological resources specialist, to the CPM for review and approval. The CPM shall provide written approval or disapproval of the proposed paleontological resources specialist.

At least ten (10) days prior to the termination or release of a designated paleontological resources specialist, the project owner shall obtain CPM approval of the replacement specialist by submitting to the CPM the name and resume of the proposed new designated paleontological resources specialist. Should emergency replacement of the designated specialist become necessary, the project owner shall immediately notify the CPM to discuss the qualifications of its proposed replacement specialist.

PAL-2 Prior to the start of project construction, the designated paleontological resources specialist shall prepare a Paleontological Resources Monitoring and Mitigation Plan that identifies general and specific measures to minimize potential impacts to sensitive paleontological resources, and submit this plan to the CPM for review and approval. After CPM approval, the project owner's designated paleontological resources specialist shall be available to implement the Monitoring and Mitigation Plan, as needed, throughout project construction.

In addition to the project owner's adoption of the guidelines of the Society of Vertebrate Paleontologists, dated 1996, the Paleontological Resources Monitoring and Mitigation Plan shall include, but not be limited to, the following

elements and measures:

- A discussion of the sequence of project-related tasks, such as any pre-construction surveys, fieldwork, flagging or staking; construction monitoring; mapping and data recovery; fossil preparation and recovery; identification and inventory; preparation of final reports; and transmittal of materials for curation;

- Identification of the person(s) expected to assist with each of the tasks in this condition of certification and a discussion of the tasks and their responsibilities;

- Where monitoring of project construction activities is deemed necessary, the extent of the areas where monitoring is to occur and a schedule for the monitoring;

- An explanation that the designated paleontological resources specialist shall have the authority to halt or redirect construction in the immediate vicinity of a vertebrate fossil find until the significance of the find can be determined;

- A discussion of equipment and supplies necessary for recovery of fossil materials and any specialized equipment needed to prepare, remove, load, transport, and analyze large-sized fossils or extensive fossil deposits;

- Expeditious inventory, preparation, and delivery for curation into a retrievable storage collection in a public repository or museum, which meets the Society of Vertebrate Paleontologists standards and requirements for the curation of paleontological resources; and

- Identification of the institution that has agreed to receive any data and fossil materials recovered during project-related monitoring and mitigation work, discussion of any requirements or specifications for materials delivered for curation and how they will be met, and the name and phone number of the contact person at the institution.

Verification: Thirty (30) days prior to the start of construction on the project, or a lesser period of time mutually agreed to by the project owner and CPM, the project owner shall provide the CPM with a copy of the Monitoring and Mitigation Plan prepared by the designated paleontological resources specialist for review and approval. If the plan is not approved, the project owner, the designated paleontological resources specialist, and the CPM shall meet to discuss comments and negotiate necessary changes.

PAL-3 Prior to the start of construction, and throughout the project construction period as needed for all new employees, the project owner and the designated paleontological resources specialist shall prepare and conduct CPM-approved training to all project managers, construction supervisors, and workers who operate ground disturbing equipment. The project owner and construction manager shall provide the workers with the CPM-approved set of procedures for reporting any sensitive paleontological resources or deposits that may be discovered during project-related ground disturbance.

> Protocol: The paleontological training program shall discuss the potential to encounter fossil resources in the field, the sensitivity and importance of these resources, and the legal obligations to preserve and protect such resources.
>
> The training shall also include the set of reporting procedures that workers are to follow if paleontological resources are encountered during project activities. The training program shall be presented by the designated paleontological resources specialist and may be combined with other training programs prepared for cultural and biological resources, hazardous materials, or any other areas of interest or concern.

Verification: Thirty (30) days prior to the start of project construction, or a lesser period of time mutually agreed to by the project owner and the CPM, the project owner shall submit to the CPM for review, comment, and written approval, the proposed employee training program and the set of reporting procedures the workers are to follow if paleontological resources are encountered during project construction.

If the employee training program and set of procedures are not approved, the project owner, the designated paleontological resources specialist, and the CPM shall meet to discuss comments and negotiate necessary changes, before the beginning of construction.

Documentation for training of additional new employees shall be provided in subsequent Monthly Compliance Reports, as appropriate.

PAL-4 The designated paleontological resources specialist shall be present at all times he or she deems appropriate to monitor construction-related grading, excavation, trenching, and/or augering in areas where potentially fossil-bearing sediments have been identified. If the designated paleontological resources specialist determines that full-time monitoring is not necessary in certain portions of the project area or along portions of the linear facility routes, the designated specialist shall notify the project owner.

Verification: The project owner shall include in the Monthly Compliance Reports a summary of paleontological activities conducted by the designated paleontological resources specialist.

PAL-5 The project owner, through the designated paleontological resources specialist, shall ensure recovery, preparation for analysis, analysis, identification and inventory, the preparation for curation, and the delivery for curation of all significant paleontological resource materials encountered and collected during the monitoring, data recovery, mapping, and mitigation activities related to the project.

Verification: The project owner shall maintain in its compliance files copies of signed contracts or agreements with the designated paleontological resources specialist and other qualified research specialists who will ensure the necessary data and fossil recovery, mapping, preparation for analysis, analysis, identification and inventory, and preparation for and delivery of all significant paleontological resource materials collected during data recovery and mitigation for the project. The project owner shall maintain these files for a period of three years after completion and approval of the CPM-approved Paleontological Resources Report and shall keep these files available for periodic audit by the CPM.

PAL-6 The project owner shall ensure preparation of a Paleontological Resources Report by the designated paleontological resources specialist. The Paleontological Resources Report shall be completed following completion of the analysis of the recovered fossil materials and related information. The project owner shall submit the paleontological report to the CPM for approval.

> Protocol: The report shall include, but not be limited to, a description and inventory list of recovered fossil materials; a map showing the location of paleontological resources encountered; determinations of sensitivity and significance; and a statement by the paleontological resources specialist that project impacts to paleontological resources have been mitigated.

Verification: The project owner shall submit a copy of the Paleontological Resources Report to the CPM for review and approval under a cover letter stating that it is a confidential document. The report is to be prepared by the designated paleontological resources specialist within 90 days following completion of the analysis of the recovered fossil materials.

PAL-7 The project owner shall include in the facility closure plan a description regarding facility closure activity's potential to impact paleontological resources. The conditions for closure will be determined when a facility closure

plan is submitted to the CPM twelve months prior to closure of the facility. If no activities are proposed that would potentially impact paleontological resources, then no mitigation measures for paleontological resource management are required in the facility closure plan.

> Protocol: The closure requirements for paleontological resources are to be based upon the Paleontological Resources Report and the proposed grading activities for facility closure.

Verification: The project owner shall include a description of closure activities described above in the facility closure plan.

Appendix K20

Data Adequacy Worksheets

Appendix K20-1

Project Overview

DATA ADEQUACY WORKSHEET

Adequacy Issue: Adequate ____ Inadequate ____ Revision No. 0 Date 8/21/01

Technical Area: **Project Overview** Project: GWF Henrietta Peaker Project Technical Staff: ____

Project Manager: David Stein Docket: ____ Technical Senior: ____

SITING REGULATIONS	INFORMATION	AFC PAGE NUMBER AND SECTION NUMBER	ADEQUATE YES OR NO	INFORMATION REQUIRED TO MAKE AFC CONFORM WITH REGULATIONS
Cal. Code Regs., tit. 20, § 1704, (a) (3) (A)	Descriptions of all significant assumptions, methodologies, and computational methods used in arriving at conclusions in the document.	AFC in its entirety.		
Cal. Code Regs., tit. 20, § 1704, (a) (3) (B)	Descriptions, including methodologies and findings, of all major studies or research efforts undertaken and relied upon to provide information for the document; and a description of ongoing research of significance to the project (including expected completion dates; and	AFC in its entirety.		
Cal. Code Regs., tit. 20, § 1704, (a) (3) (C)	A list of all literature relied upon or referenced in the documents, along with brief discussions of the relevance of each such reference	AFC in its entirety.		
Cal. Code Regs., tit. 20, § 1704, (a) (4)	Each principle subject area covered in a notice or application shall be set forth in a separate chapter or section, each of which shall identify the person or persons responsible for its preparation.	AFC in its entirety.		
Appendix B (a) (1) (A)	A general description of the proposed site and related facilities, including the location of the site or transmission routes, the type, size and capacity of the generating or transmission facilities, fuel characteristics, fuel supply, water supply, pollution control systems, and other general characteristics.	Section 2.0.		
Appendix B (a) (1) (B)	Identification of the location of the proposed site and related facilities by section, township, range, county and assessors parcel numbers.	Section 1.5.1, pages 1-3 to 1-4.		

DATA ADEQUACY WORKSHEET

Adequacy Issue: Adequate ____ Inadequate ____ Revision No. 0 Date 8/21/01

Technical Area: **Project Overview** Project: GWF Henrietta Peaker Project Technical Staff: ____

Project Manager: David Stein Docket: ____ Technical Senior: ____

SITING REGULATIONS	INFORMATION	AFC PAGE NUMBER AND SECTION NUMBER	ADEQUATE YES OR NO	INFORMATION REQUIRED TO MAKE AFC CONFORM WITH REGULATIONS
Appendix B (a) (1) (C)	A description of and maps depicting the region, the vicinity, and the site and its immediate surroundings.	Figures 1-1 and 1-2.		
Appendix B (a) (1) (D)	A full-page color photographic reproduction depicting the visual appearance of the site prior to construction, and a full-page color simulation or artist's rendering of the site and all project components at the site, after construction.	Figures 8.11-2 through 8.11-11.		
Appendix B (a) (1) (E)	In an appendix to the application, a list of current assessor's parcel numbers and owners' names and addresses for all parcels within 500 feet of the proposed transmission line and other linear facilities, and within 1000 feet of the proposed powerplant and related facilities.	Appendix D.		
Appendix B (a) (2)	Project Schedule: Proposed dates of initiation and completion of construction, initial start-up, and full-scale operation of the proposed facilities.	Section 1.4, page 1-3.		
Appendix B (a) (3) (A)	A list of all owners and operators of the site(s), the power plant facilities, and, if applicable, thermal host, the geothermal leasehold, the geothermal resource conveyance lines, and the geothermal re-injection system, and a description of their legal interest in theses facilities.	Section 1.2, pages 1-2 to 1-3.		
Appendix B (a) (3) (B)	A list of all owners and operators of the proposed electric transmission facilities.	Section 6.0, page 6-1.		
Appendix B (a) (3) (C)	A description of the legal relationship between the applicant and each of the persons or entities specified in subsections (a)(3)(A) and (B).	Section 1.2, pages 1-2 to 1-3.		

DATA ADEQUACY WORKSHEET

Adequacy Issue: Adequate ____ Inadequate ____ Revision No. 0 Date 8/21/01

Technical Area: **Project Overview** Project: GWF Henrietta Peaker Project Technical Staff: ____

Project Manager: David Stein Docket: ____ Technical Senior: ____

SITING REGULATIONS	INFORMATION	AFC PAGE NUMBER AND SECTION NUMBER	ADEQUATE YES OR NO	INFORMATION REQUIRED TO MAKE AFC CONFORM WITH REGULATIONS
Appendix B (b) (1) (A)	Maps at a scale of 1:24,000 (1" = 2000'), along with an identification of the dedicated leaseholds by section, township, range, county, and county assessor's parcel number, showing the proposed final locations and layout of the power plant and all related facilities;	Figure 8.4-4.		
Appendix B (b) (1) (B)	Scale plan and elevation drawings depicting the relative size and location of the power plant and all related facilities;	Figures 2-3a, 2-3b, 2-4a, and 2-4b.		
Appendix B (b) (1) (C)	A detailed description of the design, construction and operation of the facilities, specifically including the power generation, cooling, water supply and treatment, waste handling and control, pollution control, fuel handling, and safety, emergency and auxiliary systems, and fuel types and fuel use scenarios; and	Section 2.2, page 2-2 to 2-17.		
Appendix B (b) (1) (D)	A description of how the site and related facilities were selected and the consideration given to engineering constraints, site geology, environmental impacts, water, waste and fuel constraints, electric transmission constraints, and any other factors considered by the applicant.	Section 5.0.		
Appendix B (b) (2) (A)	Maps at a scale of 1:24,000 of each proposed transmission line route, showing the settled areas, parks, recreational areas, scenic areas, and existing transmission lines within one mile of the proposed route(s).	Figure 8.4-3.		

DATA ADEQUACY WORKSHEET

Adequacy Issue: Adequate ____ Inadequate ____ Revision No. 0 Date 8/21/01

Technical Area: **Project Overview** Project: GWF Henrietta Peaker Project Technical Staff: ____

Project Manager: David Stein Docket: ____ Technical Senior: ____

SITING REGULATIONS	INFORMATION	AFC PAGE NUMBER AND SECTION NUMBER	ADEQUATE YES OR NO	INFORMATION REQUIRED TO MAKE AFC CONFORM WITH REGULATIONS
Appendix B (b) (2) (B)	A full-page color photographic reproduction depicting a representative above ground section of the transmission line route prior to construction and a full-page color photographic simulation of that section of the transmission line route after construction.	Figures 8.11-2 through 8.11-11.		
Appendix B (c)	In a section entitled, "Demand Conformance" provide a discussion explaining how the proposed project conforms with the requirements of Public Resources Code § 25524 or Public Resources Code § 25540.6(a)(5). If the provisions of Public Resources Code § 25523.5 are applicable, explain how the project conforms with the requirements of this section. Additional data adequacy requirements may be contained in the Electricity Report applicable pursuant to Title 20, California Code of Regulations, § 1720.5.	Section 3.0.		
Appendix B (d) (1)	A copy of any study or analysis required by the terms of the Commission's Final Decision on the NOI, and a brief summary of the results of the study or analysis.	Not applicable.		
Appendix B (d) (2)	Updates of any significant information which has changed since the Commission's Final Decision on the NOI.	Not applicable.		
Appendix B (e) (1)	A schedule for the development of a preliminary plan for closing the project facilities when the project ceases operation at the end of its useful life.	Section 4.0.		

DATA ADEQUACY WORKSHEET

Adequacy Issue: Adequate ____ Inadequate ____ Revision No. 0 Date 8/21/01

Technical Area: **Project Overview** Project: GWF Henrietta Peaker Project Technical Staff: ____

Project Manager: David Stein Docket: ____ Technical Senior: ____

SITING REGULATIONS	INFORMATION	AFC PAGE NUMBER AND SECTION NUMBER	ADEQUATE YES OR NO	INFORMATION REQUIRED TO MAKE AFC CONFORM WITH REGULATIONS
Appendix B (e) (2)	A discussion of how facility closure will be accomplished in the event of premature or unexpected cessation of operations.	Section 4.0.		
Appendix B (f) (1)	A discussion of the range of reasonable alternatives to the project, or to the location of the project, including the no project alternative, which would feasibly attain most of the basic objectives of the project but would avoid or substantially lessen any of the significant effects of the project, and an evaluation of the comparative merits of the alternatives. In accordance with Public Resources Code section 25540.6(b), a discussion of the applicant's site selection criteria, any alternative sites considered for the project, and the reasons why the applicant chose the proposed site.	Section 5.0.		
Appendix B (f) (2)	An evaluation of the comparative engineering, economic, and environmental merits of the alternatives discussed in subsection (f)(1).	Section 5.0.		
Appendix B (g) (1)	...provide a discussion of the existing site conditions, the expected direct, indirect and cumulative impacts due to the construction, operation and maintenance of the project, the measures proposed to mitigate adverse environmental impacts of the project, the effectiveness of the proposed measures, and any monitoring plans proposed to verify the effectiveness of the mitigation.	AFC in its entirety.		

Appendix K20-2

Efficiency

DATA ADEQUACY WORKSHEET

Adequacy Issue: Adequate ____ Inadequate ____ Revision No. 0 Date 8/21/01

Technical Area: **Efficiency** Project: GWF Henrietta Peaker Project Technical Staff: ____

Project Manager: ____ Docket: ____ Technical Senior: ____

File: data adeq-eff.doc

SITING REGULATIONS	INFORMATION	AFC PAGE NUMBER AND SECTION NUMBER	ADEQUATE YES OR NO	INFORMATION REQUIRED TO MAKE AFC CONFORM WITH REGULATIONS
Appendix B (i) (4) (A)	Heat and mass balance diagrams for design conditions for each mode of operation.	Section 2.2.2, pages 2-2 to 2-3; Figures 2-5, 2-6, 2-7.		
Appendix B (i) (4) (B)	Annual fuel consumption in BTUs for each mode of operation.	Figures 2-5, 2-6, 2-7. [To multiply lbs/hr (fuel) by 23,000 (HHV)]		
Appendix B (i) (4) (C)	Annual net electrical energy produced in MWh for each mode of operation.	Figures 2-5, 2-6, 2-7. [To multiply KW by 8,000 Hrs/year.]		
Appendix B (i) (4) (D)	Number of hours the plant will be operated in each mode of operation in each year.	Not specified, see Section 2.2.2, page 2-3. Generally at 100 % load.		
Appendix B (i) (4) (E)	If the project will be a cogeneration facility, calculations showing compliance with applicable efficiency and operating standards.	Not Applicable.		
Appendix B (i) (4) (F)	A discussion of alternative generating technologies available for the project, including the projected efficiency of each, and an explanation why the chosen equipment was selected over these alternatives.	Section 5.3.3, page 5.5-8.		

DATA ADEQUACY WORKSHEET

Adequacy Issue: Adequate ____ Inadequate ____ Revision No. 0 Date 8/21/01

Technical Area: **Efficiency** Project: GWF Henrietta Peaker Project Technical Staff: ____

Project Manager: ____ Docket: ____ Technical Senior: ____

File: data adeq-eff.doc

SITING REGULATIONS	INFORMATION	AFC PAGE NUMBER AND SECTION NUMBER	ADEQUATE YES OR NO	INFORMATION REQUIRED TO MAKE AFC CONFORM WITH REGULATIONS
Appendix B (h) (1) (A)	Tables which identify laws, regulations, ordinances, standards, adopted local, regional, state, and federal land use plans, and permits applicable to the proposed project, and a discussion of the applicability of each. The table or matrix shall explicitly reference pages in the application wherein conformance, with each law or standard during both construction and operation of the facility is discussed;	Section 2.5, pages 2-25 to 2-39; Table 2-6; Appendix J.		
Appendix B (h) (1) (B)	Tables which identify each agency with jurisdiction to issue applicable permits and approvals or to enforce identified laws, regulations, standards, and adopted local, regional, state and federal land use plans, and agencies which would have permit approval or enforcement authority, but for the exclusive authority of the commission to certify sites and related facilities.	As Above		
Appendix B (h) (2)	A discussion of the conformity of the project with the requirements listed in subsection (h)(1)(A).	Section 2.5.2, pages 2-25 to 2-39.		
Appendix B (h) (3)	The name, title, phone number, and address, if known, of an official within each agency who will serve as a contact person for the agency.	Not Applicable.		
Appendix B (h) (4)	A schedule indicating when permits outside the authority of the commission will be obtained and the steps the applicant has taken or plans to take to obtain such permits.	Not Applicable.		

Appendix K20-3

Facility Design

DATA ADEQUACY WORKSHEET

Adequacy Issue: Adequate ____ Inadequate ____ Revision No 0 Date 7/31/01

Technical Area: **Facility Design** Project: GWF Henrietta Peaker Project Technical Staff: ____

Project Manager: ____ Docket: ____ Technical Senior: ____

File: DataAdeqFacDesign.doc

SITING REGULATIONS	INFORMATION	AFC PAGE NUMBER AND SECTION NUMBER	ADEQUATE YES OR NO	INFORMATION REQUIRED TO MAKE AFC CONFORM WITH REGULATIONS
Appendix B (i) (1) (A)	A description of the site conditions and investigations or studies conducted to determine the site conditions used as the basis for developing design criteria. The descriptions shall include, but not be limited to, seismic and other geologic hazards, adverse conditions that could affect the project's foundation, adverse meteorological and climatic conditions, and flooding hazards, if applicable.	Appendix H1-1 and H1-3.		
Appendix B (i) (1) (B)	A discussion of any measures proposed to improve adverse site conditions.	Not Applicable.		
Appendix B (i) (1) (C)	A description of the proposed foundation types, design criteria (including derivation), analytical techniques, assumptions, loading conditions, and loading combinations to be used in the design of facility structures and major mechanical and electrical equipment.	Appendix H-1, Section 3.0; Appendix H-2, Section 3.2.		
Appendix B (i) (1) (D)	For each of the following facilities and/or systems, provide a description including drawings, dimensions, surface-area requirements, typical operating data, and performance and design criteria for protection from impacts due to adverse site conditions:	Not applicable.		
Appendix B (i) (1) (D) (i)	The power generation system;	Section 2.2, pages 2-2 to 2-17; Figures 2-3, 2-5, 2-6, 2-7, 2-8 & 2-9.		
Appendix B (i) (1) (D) (ii)	The heat dissipation system;	Section 2.2.8, pages 2-8 to 2-9.		

DATA ADEQUACY WORKSHEET

Adequacy Issue: Adequate ____ Inadequate ____ Revision No 0 Date 7/31/01

Technical Area: **Facility Design** Project: GWF Henrietta Peaker Project Technical Staff: ____

Project Manager: ____ Docket: ____ Technical Senior: ____

File: DataAdeqFacDesign.doc

SITING REGULATIONS	INFORMATION	AFC PAGE NUMBER AND SECTION NUMBER	ADEQUATE YES OR NO	INFORMATION REQUIRED TO MAKE AFC CONFORM WITH REGULATIONS
Appendix B (i) (1) (D) (iii)	The cooling water supply system, and, where applicable, pre-plant treatment procedures;	Not applicable, Section 2.2.8, pages 2-8 to 2-9; Section 2.2.7.4, page 2-8.		
Appendix B (i) (1) (D) (iv)	The atmospheric emission control system;	Section 2.2.4.1, page 2-4; Section 2.2.10, page 2-10 to 2-11.		
Appendix B (i) (1) (D) (v)	The waste disposal system and on-site disposal sites;	Section 2.2.9 to 2.2.10, pages 2-9 to 2-11; Section 8.13.2.2, page 8.13-3 to 8.13-5.		
Appendix B (i) (1) (D) (vi)	The noise emission abatement system;	Section 8.5		
Appendix B (i) (1) (D) (vii)	The geothermal resource conveyance and re-injection lines (if applicable);	Not Applicable		
Appendix B (i) (1) (D) (viii)	Switchyards/transformer systems; and	Section 2.2.5, page 2-4 to 2-7.		
Appendix B (i) (1) (D) (ix)	Other significant facilities, structures, or system components proposed by the applicant.	Not Applicable		
Appendix B (h) (1) (A)	Tables which identify laws, regulations, ordinances, standards, adopted local, regional, state, and federal land use plans, and permits applicable to the proposed project, and a discussion of the applicability of each. The table or matrix shall explicitly reference pages in the application wherein conformance, with each law or standard during both construction and operation of the facility is discussed;	Section 2.5, pages 2-25 to 2-39; Table 2-5.		

DATA ADEQUACY WORKSHEET

Adequacy Issue: Adequate ____ Inadequate ____ Revision No 0 Date 7/31/01

Technical Area: **Facility Design** Project: GWF Henrietta Peaker Project Technical Staff: ____

Project Manager: ____ Docket: ____ Technical Senior: ____

File: DataAdeqFacDesign.doc

SITING REGULATIONS	INFORMATION	AFC PAGE NUMBER AND SECTION NUMBER	ADEQUATE YES OR NO	INFORMATION REQUIRED TO MAKE AFC CONFORM WITH REGULATIONS
Appendix B (h) (1) (B)	Tables which identify each agency with jurisdiction to issue applicable permits and approvals or to enforce identified laws, regulations, standards, and adopted local, regional, state and federal land use plans, and agencies which would have permit approval or enforcement authority, but for the exclusive authority of the commission to certify sites and related facilities.	As Above.		
Appendix B (h) (2)	A discussion of the conformity of the project with the requirements listed in subsection (h)(1)(A).	As Above.		
Appendix B (h) (3)	The name, title, telephones number, and address, if known, of an official within each agency who will serve as a contact person for the agency.	Not Applicable.		
Appendix B (h) (4)	A schedule indicating when permits outside the authority of the commission will be obtained and the steps the applicant has taken or plans to take to obtain such permits.	Not Applicable.		

Appendix K20-4

Reliability

DATA ADEQUACY WORKSHEET

Adequacy Issue: Adequate ____ Inadequate ____

Revision No. 0 Date 8/21/01

Technical Area: **Reliability** Project: GWF Henrietta Peaker Project Technical Staff: ____

Project Manager: ____ Docket: ____ Technical Senior: ____

File: DataAdeqReliab.doc

SITING REGULATIONS	INFORMATION	AFC PAGE NUMBER AND SECTION NUMBER	ADEQUATE YES OR NO	INFORMATION REQUIRED TO MAKE AFC CONFORM WITH REGULATIONS
Appendix B (i) (3) (A)	A discussion of the sources and availability of the fuel or fuels to be used over the estimated service life of the facilities.	Section 2.2.6, page 2-7; Section 5.3.2, page 5-7; Section 3.0.		
Appendix B (i) (3) (B)	A discussion of the anticipated service life and degree of reliability expected to be achieved by the proposed facilities based on a consideration of:	Section 2.2.16, pages 2-16 to 2-17; Section 2.4, page 2-20 to 2-25.		
Appendix B (i) (3) (B) (i)	Expected annual and lifetime capacity factors;	Section 2.2.16, pages 2-16 to 2-17.		
Appendix B (i) (3) (B) (ii)	The demonstrated or anticipated feasibility of the technologies, systems, components, and measures proposed to be employed in the facilities, including the power generation system, the heat dissipation system, the water supply system, the reinjection system, the atmospheric emission control system, resource conveyance lines, and the waste disposal system;	Section 2.1, page 2-1; Section 2.2.2, pages 2-2 to 2-3; Section 2.2.3, 2.2.4 & 2.2.5, pages 2-3 through 2-7; Section 2.2.6 & 2.2.7, pages 2-7 to 2-8; Section 2.2.8, pages 2-8 to 2-9; Section 2.2.9 and 2.2.10, pages 2-9 to 2-11.		
Appendix B (i) (3) (B) (iii)	Geologic and flood hazards, meteorologic conditions and climatic extremes, and cooling water availability;	Section 8.15.2, page 8.10-14; Section 8.12.1.2, pages 8.12-2 to 8.12-3; Section 2.3.1, page 2-18; Section 8.1.2, pages 8.1-10 to 8.1-12. Cooling system not required for simple-cycle plant.		

DATA ADEQUACY WORKSHEET

Adequacy Issue: Adequate ____ Inadequate ____ Revision No. 0 Date 8/21/01

Technical Area: **Reliability** Project: GWF Henrietta Peaker Project Technical Staff: ____

Project Manager: ____ Docket: ____ Technical Senior: ____

File: DataAdeqReliab.doc

SITING REGULATIONS	INFORMATION	AFC PAGE NUMBER AND SECTION NUMBER	ADEQUATE YES OR NO	INFORMATION REQUIRED TO MAKE AFC CONFORM WITH REGULATIONS
Appendix B (i) (3) (B) (iv)	Special design features adopted by the applicant or resource supplier to ensure power plant reliability; and	Section 2.4, pages 2-20 to 2-25.		
Appendix B (i) (3) (B) (v)	The expected power plant maturation period.	Not Applicable.		
Appendix B (h) (1) (A)	Tables which identify laws, regulations, ordinances, standards, adopted local, regional, state, and federal land use plans, and permits applicable to the proposed project, and a discussion of the applicability of each. The table or matrix shall explicitly reference pages in the application wherein conformance, with each law or standard during both construction and operation of the facility is discussed;	Section 2.5, pages 2-25 to 2-39; Table 2-5.		
Appendix B (h) (1) (B)	Tables which identify each agency with jurisdiction to issue applicable permits and approvals or to enforce identified laws, regulations, standards, and adopted local, regional, state and federal land use plans, and agencies which would have permit approval or enforcement authority, but for the exclusive authority of the commission to certify sites and related facilities.	As Above.		
Appendix B (h) (2)	A discussion of the conformity of the project with the requirements listed in subsection (h)(1)(A).	As Above.		
Appendix B (h) (3)	The name, title, phone number, and address, if known, of an official within each agency who will serve as a contact person for the agency.	Not Applicable.		

DATA ADEQUACY WORKSHEET

Adequacy Issue: Adequate ____ Inadequate ____

Revision No. 0 Date 8/21/01

Technical Area: **Reliability** Project: GWF Henrietta Peaker Project Technical Staff: ____

Project Manager: ____ Docket: ____ Technical Senior: ____

File: DataAdeqReliab.doc

SITING REGULATIONS	INFORMATION	AFC PAGE NUMBER AND SECTION NUMBER	ADEQUATE YES OR NO	INFORMATION REQUIRED TO MAKE AFC CONFORM WITH REGULATIONS
Appendix B (h) (4)	A schedule indicating when permits outside the authority of the commission will be obtained and the steps the applicant has taken or plans to take to obtain such permits.	Not Applicable.		

Appendix K20-5

Transmission System

DATA ADEQUACY WORKSHEET

Adequacy Issue: Adequate ____ Inadequate ____ Revision No. ____ Date ____

Technical Area: **TRANSMISSION SYSTEM (& TLSN)** Project: GWF Henrietta Peaker Project Technical Staff: ____

Project Manager: ____ Docket: ____ Technical Senior: ____

SITING REGULATIONS	INFORMATION	AFC PAGE NUMBER AND SECTION NUMBER	ADEQUATE YES OR NO	INFORMATION REQUIRED TO MAKE AFC CONFORM WITH REGULATIONS
Appendix B (i) (2) (A)	A discussion of the need for the additional electric transmission lines, substations, or other equipment, the basis for selecting principal points of junction with the existing electric transmission system, and the capacity and voltage levels of the proposed lines, along with the basis for selection of the capacity and voltage levels.	Sections 2.0, 5.0, 6.1.1, and 6.1.2, pages 6.1-1 to 6-4.		
Appendix B (i) (2) (B)	A discussion of the extent to which the proposed electric transmission facilities have been designed, planned, and routed to meet the transmission requirements created by additional generating facilities planned by the applicant or any other entity.	Sections 6.2.8 and 6.3, page 6-14.		

DATA ADEQUACY WORKSHEET

Adequacy Issue: Adequate ____ Inadequate ____ Revision No. ____ Date ____

Technical Area: **TRANSMISSION SYSTEM (& TLSN)** Project: GWF Henrietta Peaker Project Technical Staff: ____

Project Manager: ____ Docket: ____ Technical Senior: ____

SITING REGULATIONS	INFORMATION	AFC PAGE NUMBER AND SECTION NUMBER	ADEQUATE YES OR NO	INFORMATION REQUIRED TO MAKE AFC CONFORM WITH REGULATIONS
Appendix B (b) (2) (C)	A detailed description of the design, construction, and operation of any electric transmission facilities, such as powerlines, substations, switchyards, or other transmission equipment, which will be constructed or modified to transmit electrical power from the proposed power plant to the load centers to be served by the facility. Such description shall include the width of rights of way and the physical and electrical characteristics of electrical transmission facilities such as towers, conductors, and insulators. This description shall include power load flow diagrams which demonstrate conformance or nonconformance with utility reliability and planning criteria at the time the facility is expected to be placed in operation and five years thereafter; and	Section 6.1.2, pages 6-2 to 6-4.		
Appendix B (b) (2) (D)	A description of how the route and additional transmission facilities were selected, and the consideration given to engineering constraints, environmental impacts, resource conveyance constraints, and electric transmission constraints.	Section 6.1, pages 6-1 to 6-4.		

DATA ADEQUACY WORKSHEET

Adequacy Issue: Adequate ____ Inadequate ____ Revision No. ____ Date ____

Technical Area: **TRANSMISSION SYSTEM (& TLSN)** Project: GWF Henrietta Peaker Project Technical Staff: ____

Project Manager: ____ Docket: ____ Technical Senior: ____

SITING REGULATIONS	INFORMATION	AFC PAGE NUMBER AND SECTION NUMBER	ADEQUATE YES OR NO	INFORMATION REQUIRED TO MAKE AFC CONFORM WITH REGULATIONS
Appendix B (g) (1)	...provide a discussion of the existing site conditions, the expected direct, indirect and cumulative impacts due to the construction, operation and maintenance of the project, the measures proposed to mitigate adverse environmental impacts of the project, the effectiveness of the proposed measures, and any monitoring plans proposed to verify the effectiveness of the mitigation.	Section 6.0, pages 6-1 to 6-15.		
Appendix B (g) (18) (A)	The locations and a description of the existing switchyards and overhead and underground transmission lines that would be affected by the proposed project.	Section 6.1.1, pages 6-1 to 6-4.		
Appendix B (g) (18) (B)	An estimate of the existing electric and magnetic fields from the facilities listed in (A) above and the future electric and magnetic fields that would be created by the proposed project, calculated at the property boundary of the site and at the edge of the rights of way for any transmission line. Also provide an estimate of the radio and television interference that could result from the project.	Section 6.2, pages 6-4 to 6-14.		
Appendix B (g) (18) (C)	Specific measures proposed to mitigate identified impacts, including a description of measures proposed to eliminate or reduce radio and television interference, and all measures taken to reduce electric and magnetic field levels.	Section 6.2, pages 6-4 to 6-14.		

DATA ADEQUACY WORKSHEET

Adequacy Issue: Adequate ____ Inadequate ____ Revision No. ____ Date ____

Technical Area: **TRANSMISSION SYSTEM (& TLSN)** Project: GWF Henrietta Peaker Project Technical Staff: ____

Project Manager: ____ Docket: ____ Technical Senior: ____

SITING REGULATIONS	INFORMATION	AFC PAGE NUMBER AND SECTION NUMBER	ADEQUATE YES OR NO	INFORMATION REQUIRED TO MAKE AFC CONFORM WITH REGULATIONS
Appendix B (h) (1) (A)	Tables which identify laws, regulations, ordinances, standards, adopted local, regional, state, and federal land use plans, and permits applicable to the proposed project, and a discussion of the applicability of each. The table or matrix shall explicitly reference pages in the application wherein conformance, with each law or standard during both construction and operation of the facility is discussed;	Tables 6-1, 6-2, 6-3, 6-4, and 6-5.		
Appendix B (h) (1) (B)	Tables which identify each agency with jurisdiction to issue applicable permits and approvals or to enforce identified laws, regulations, standards, and adopted local, regional, state and federal land use plans, and agencies which would have permit approval or enforcement authority, but for the exclusive authority of the commission to certify sites and related facilities.	Table 6-7.		
Appendix B (h) (2)	A discussion of the conformity of the project with the requirements listed in subsection (h)(1)(A).	Section 6.4, page 6-14.		
Appendix B (h) (3)	The name, title, phone number, and address, if known, of an official within each agency who will serve as a contact person for the agency.	Table 6-8.		
Appendix B (h) (4)	A schedule indicating when permits outside the authority of the commission will be obtained and the steps the applicant has taken or plans to take to obtain such permits.	Page 6-6, page 6-15.		

Appendix K20-6

Air Quality

DATA ADEQUACY WORKSHEET

Adequacy Issue: Adequate ____ Inadequate ____ Revision No. ____ Date ____

Technical Area: **Air Quality** Project: GWF Henrietta Peaker Project Technical Staff: ____

Project Manager: ____ Docket: ____ Technical Senior: ____

SITING REGULATIONS	INFORMATION	AFC PAGE NUMBER AND SECTION NUMBER	ADEQUATE YES OR NO	INFORMATION REQUIRED TO MAKE AFC CONFORM WITH REGULATIONS
Appendix B (g) (1)	...provide a discussion of the existing site conditions, the expected direct, indirect and cumulative impacts due to the construction, operation and maintenance of the project, the measures proposed to mitigate adverse environmental impacts of the project, the effectiveness of the proposed measures, and any monitoring plans proposed to verify the effectiveness of the mitigation.	Section 8.1, pages 8.1-1 to 8.1-36.		
Appendix B (g) (8) (A)	The information necessary for the air pollution control district where the project is located to complete a Determination of Compliance.	Appendix B, SJVUAPCD Authority to Construct Permit Application Forms for GWF Henrietta.		
Appendix B (g) (8) (B)	The heating value and chemical characteristics of the proposed fuels, the stack height and diameter, the exhaust velocity and temperature, the heat rate and the expected capacity factor of the proposed facility.	Appendix B, Turbine Vendor Data.		
Appendix B (g) (8) (C)	A description of the control technologies proposed to limit the emission of criteria pollutants.	Section 8.1.3.1, pages 8.1-13 to 8.1-19.		
Appendix B (g) (8) (D)	A description of the cooling system, the estimated cooling tower drift rate, the rate of water flow through the cooling tower, and the maximum concentrations of total dissolved solids.	Not applicable.		

DATA ADEQUACY WORKSHEET

Adequacy Issue: Adequate ____ Inadequate ____ Revision No. ____ Date ____

Technical Area: **Air Quality** Project: GWF Henrietta Peaker Project Technical Staff: ____

Project Manager: ____ Docket: ____ Technical Senior: ____

SITING REGULATIONS	INFORMATION	AFC PAGE NUMBER AND SECTION NUMBER	ADEQUATE YES OR NO	INFORMATION REQUIRED TO MAKE AFC CONFORM WITH REGULATIONS
Appendix B (g) (8) (E)	The emission rates of criteria pollutants from the stack, cooling towers, fuels and materials handling processes, delivery and storage systems, and from all secondary emission sources.	Section 8.1.4.2, pages 8.1-24 to 8.1-25.		
Appendix B (g) (8) (F)	A description of typical operational modes, and start-up and shutdown modes for the proposed project, including the estimated frequency of occurrence and duration of each mode, and estimated emission rate for each criteria pollutant during each mode.	Section 8.1.4.2, pages 8.1-24 to 25.		
Appendix B (g) (8) (G)	The ambient concentrations of all criteria pollutants for the previous three years as measured at the three Air Resources Board certified monitoring stations located closest to the project site, and an analysis of whether this data is representative of conditions at the project site. The applicant may substitute an explanation as to why information from one, two, or all stations is either not available or unnecessary.	Section 8.1.2, pages 8.1-10 to 13.		
Appendix B (g) (8) (H)	One year of meteorological data collected from either the Federal Aviation Administration Class 1 station nearest to the project or from the project site, or meteorological data approved by the California Air Resources Board or the local air pollution control district.	Three years of Henrietta hourly meteorological data are located on the Air Quality modeling CD.		

DATA ADEQUACY WORKSHEET

Adequacy Issue: Adequate ____ Inadequate ____ Revision No. ____ Date ____

Technical Area: **Air Quality** Project: GWF Henrietta Peaker Project Technical Staff: ____

Project Manager: ____ Docket: ____ Technical Senior: ____

SITING REGULATIONS	INFORMATION	AFC PAGE NUMBER AND SECTION NUMBER	ADEQUATE YES OR NO	INFORMATION REQUIRED TO MAKE AFC CONFORM WITH REGULATIONS
Appendix B (g) (8) (H) (i)	If the data is collected from the project site, the applicant shall demonstrate compliance with the requirements of the U.S. Environmental Protection Agency document entitled "On-Site Meteorological Program Guidance for Regulatory Modeling Applications" (EPA - 450/4-87-013 (August 1995), which is incorporated by reference in its entirety.)	Not applicable.		
Appendix B (g) (8) (H) (ii)	The data shall include quarterly wind tables and wind roses, ambient temperatures, relative humidity, stability and mixing heights, upper atmospheric air data, and an analysis of whether this data is representative of conditions at the project site.	Section 8.1.2, Air Quality Modeling CD.		
Appendix B (g) (8) (I)	An evaluation of the project's direct and cumulative air quality impacts, consisting of the following:	See below.		
Appendix B (g) (8) (I) (i)	A screening level air quality modeling analysis, or a more detailed modeling analysis if so desired by the applicant, of the direct inert pollutant impacts of project construction activities on ambient air quality conditions, including fugitive dust (PM_{10}) emissions from grading, excavation and site disturbance, as well as the combustion emissions [nitrogen oxides (NO_x), sulfur dioxide (SO_2), carbon monoxide (CO), and particulate matter less than 10 microns in diameter (PM_{10})] from construction-related equipment;	Sections 8.1.4.1; 8.1.4.3; and 8.1.4.4, pages 8.1-23 to 8.1-24 and 8.1-25 to 8.1-31.		

DATA ADEQUACY WORKSHEET

Adequacy Issue: Adequate ____ Inadequate ____ Revision No. ____ Date ____

Technical Area: **Air Quality** Project: GWF Henrietta Peaker Project Technical Staff: ____

Project Manager: ____ Docket: ____ Technical Senior: ____

SITING REGULATIONS	INFORMATION	AFC PAGE NUMBER AND SECTION NUMBER	ADEQUATE YES OR NO	INFORMATION REQUIRED TO MAKE AFC CONFORM WITH REGULATIONS
Appendix B (g) (8) (I) (ii)	A screening level air quality modeling analysis, or a more detailed modeling analysis if so desired by the applicant, of the direct inert criteria pollutant (NO_x, SO_2, CO and PM_{10}) impacts on ambient air quality conditions of the project during typical (normal) operation, and during shutdown and startup modes of operation. Identify and include in the modeling of each operating mode the estimated maximum emissions rates and the assumed meteorological conditions; and	Sections 8.1.4.2; 8.1.4.3; and 8.1.4.4, pages 8.1-24 to 8.1-31.		
Appendix B (g) (8) (I) (iii)	A protocol for a cumulative air quality modeling impacts analysis of the project's typical operating mode in combination with other stationary emissions sources within a six mile radius which have received construction permits but are not yet operational, or are in the permitting process. The cumulative inert pollutant impact analysis should assess whether estimated emissions concentrations will cause or contribute to a violation of any ambient air quality standard.	Not applicable, a cumulative modeling analysis has been included in Section 8.1.6, page 8.1-33.		
Appendix B (g) (8) (J)	If an emission offset strategy is proposed to mitigate the project's impacts under subsection (g)(1), provide the following information:	Section 8.1.7, pages 8.1-34 to 8.1-35.		
Appendix B (g) (8) (J) (i)	The quantity of offsets needed;	Section 8.1.7; Table 8.1-22.		
Appendix B (g) (8) (J) (ii)	Potential offset sources, including location, and quantity of emission reductions; and	Section 8.1.7.2; Appendix B.		

DATA ADEQUACY WORKSHEET

Adequacy Issue: Adequate ____ Inadequate ____ Revision No. ____ Date ____

Technical Area: **Air Quality** Project: GWF Henrietta Peaker Project Technical Staff: ____

Project Manager: ____ Docket: ____ Technical Senior: ____

SITING REGULATIONS	INFORMATION	AFC PAGE NUMBER AND SECTION NUMBER	ADEQUATE YES OR NO	INFORMATION REQUIRED TO MAKE AFC CONFORM WITH REGULATIONS
Appendix B (g) (8) (J) (iii)	Method of emission reduction.	Appendix B.		
Appendix B (g) (8) (K)	A topographic map containing contour and elevation data, at a scale of 1:24,000, showing the area within 6 miles of the power plant site.	Figure 8.6-1a and b.		
Appendix B (h) (1) (A)	Tables which identify laws, regulations, ordinances, standards, adopted local, regional, state, and federal land use plans, and permits applicable to the proposed project, and a discussion of the applicability of each. The table or matrix shall explicitly reference pages in the application wherein conformance, with each law or standard during both construction and operation of the facility is discussed;	Table 8.1-25.		
Appendix B (h) (1) (B)	Tables which identify each agency with jurisdiction to issue applicable permits and approvals or to enforce identified laws, regulations, standards, and adopted local, regional, state and federal land use plans, and agencies which would have permit approval or enforcement authority, but for the exclusive authority of the commission to certify sites and related facilities.	Table 8.1-24.		
Appendix B (h) (2)	A discussion of the conformity of the project with the requirements listed in subsection (h)(1)(A).	Sections 8.1.8 and 8.1.9, page 8.1-35; Tables 8.1-27 and 8.1-28; Appendix K.		
Appendix B (h) (3)	The name, title, phone number, and address, if known, of an official within each agency who will serve as a contact person for the agency.	Section 8.1.10, pages 8.1-35 to 8.1-36.		

DATA ADEQUACY WORKSHEET

Adequacy Issue: Adequate ____ Inadequate ____ Revision No. ____ Date ____

Technical Area: **Air Quality** Project: GWF Henrietta Peaker Project Technical Staff: ____

Project Manager: ____ Docket: ____ Technical Senior: ____

SITING REGULATIONS	INFORMATION	AFC PAGE NUMBER AND SECTION NUMBER	ADEQUATE YES OR NO	INFORMATION REQUIRED TO MAKE AFC CONFORM WITH REGULATIONS
Appendix B (h) (4)	A schedule indicating when permits outside the authority of the commission will be obtained and the steps the applicant has taken or plans to take to obtain such permits.	Table 8.1-24.		

Appendix K20-7

Biological Resources

DATA ADEQUACY WORKSHEET

Adequacy Issue: Adequate ____ Inadequate ____ Revision No. 0 Date 8/21/01

Technical Area: **Biological Resources** Project: GWF Henrietta Peaker Project Technical Staff: ____

Project Manager: David Stein Docket: ____ Technical Senior: ____

SITING REGULATIONS	INFORMATION	AFC PAGE NUMBER AND SECTION NUMBER	ADEQUATE YES OR NO	INFORMATION REQUIRED TO MAKE AFC CONFORM WITH REGULATIONS
Appendix B (g) (1)	...provide a discussion of the existing site conditions, the expected direct, indirect and cumulative impacts due to the construction, operation and maintenance of the project, the measures proposed to mitigate adverse environmental impacts of the project, the effectiveness of the proposed measures, and any monitoring plans proposed to verify the effectiveness of the mitigation.	Section 8.2.1 and 8.2.2, pages 8.2-1 to 8.2-2; Section 8.2.3 through 8.2.6, pages 8.2-4 to 8.2-6.		
Appendix B (g) (13) (A)	A regional overview and discussion of biological resources, with particular attention to sensitive biological resources near the project and a map at a scale of 1:100,000 (or some other suitable scale) showing their location in relation to the project.	Section 8.2.1.1, page 8.2-1; Figure 8.2-1.		
Appendix B (g) (13) (B)	A discussion and detailed maps at a scale of 1:6,000, of the biological resources at the site of the proposed project and related facilities, and in areas adjacent to them, out to a mile from the site and 1000 feet from the outer edge of linear facility corridors. Include a list of the species actually observed and those with a potential to occur. The discussion and maps shall address the distribution of community types, denning or nesting sites, population concentrations, migration corridors, breeding habitats, and the presence of sensitive biological resources.	Section 8.2.2, page 8.2-4, Figures 8.2-3 and 8.2-4.		

DATA ADEQUACY WORKSHEET

Adequacy Issue: Adequate ____ Inadequate ____ Revision No. 0 Date 8/21/01

Technical Area: **Biological Resources** Project: GWF Henrietta Peaker Project Technical Staff: ____

Project Manager: David Stein Docket: ____ Technical Senior: ____

SITING REGULATIONS	INFORMATION	AFC PAGE NUMBER AND SECTION NUMBER	ADEQUATE YES OR NO	INFORMATION REQUIRED TO MAKE AFC CONFORM WITH REGULATIONS
Appendix B (g) (13) (C)	A description of all studies and surveys used to provide biological information about the project site, including seasonal surveys and copies of the California Department of Fish and Game's Natural Diversity Data Base Survey Forms, "California Native Species Field Survey Forms", and "California Natural Community Field Survey Forms", completed by the applicant. Include the dates and duration of the studies, methods used to complete the studies, and the names and qualifications of individuals conducting the studies.	Section 8.2.1.4, page 8.2-2; Section 8.2.2, pages 8.2-3 to 8.2-4.		
Appendix B (g) (13) (D)	A discussion of all permanent and temporary impacts to biological resources from site preparation, construction activities, and plant operation. Discussion of impacts must consider impacts from cooling tower drift, and from the use and discharge of water during construction and operation. For facilities which use once-through cooling or take or discharge water directly from or to natural sources, discuss impacts resulting from entrainment, impingement, thermal discharge, effluent chemicals, type of pump (if applicable), temperature, volume and rate of flow at intake and discharge location, and plume configuration in receiving water.	Sections 8.2.3 through 8.2.5, pages 8.2-4 to 8.2-5.		
Appendix B (g) (13) (E)	A discussion of the following:			
Appendix B (g) (13) (E) (i)	All measures proposed to avoid and/or reduce any adverse impacts;	Section 8.2.6, pages 8.2-5 to 8.2-6.		

DATA ADEQUACY WORKSHEET

Adequacy Issue: Adequate ____ Inadequate ____ Revision No. 0 Date 8/21/01

Technical Area: **Biological Resources** Project: GWF Henrietta Peaker Project Technical Staff: ____

Project Manager: David Stein Docket: ____ Technical Senior: ____

SITING REGULATIONS	INFORMATION	AFC PAGE NUMBER AND SECTION NUMBER	ADEQUATE YES OR NO	INFORMATION REQUIRED TO MAKE AFC CONFORM WITH REGULATIONS
Appendix B (g) (13) (E) (ii)	All measures proposed to mitigate any adverse impacts, including any proposals for off-site mitigation; and	Section 8.2.6, pages 8.2-5 to 8.2-6.		
Appendix B (g) (13) (E) (iii)	Any educational programs proposed to enhance employee awareness in order to protect biological resources.	Section 8.2.6, pages 8.2-5 to 8.2-6.		
Appendix B (g) (13) (F)	A discussion of compliance and monitoring programs proposed to ensure the effectiveness of mitigation measures incorporated into the project.	Section 8.2.6, pages 8.2-5 to 8.2-6.		
Appendix B (g) (13) (G)	A discussion of native fish and wildlife species of commercial and/or recreational value that could be impacted by the project.	Section 8.2.6, pages 8.2-5 to 8.2-6.		
Appendix B (g) (13) (H)	For purposes of this section, sensitive biological resources are one of the following:	Section 8.2.6, pages 8.2-5 to 8.2-6.		
Appendix B (g) (13) (H) (i)	Species listed under state or federal Endangered Species Acts;	Section 8.2.6, pages 8.2-5 to 8.2-6.		
Appendix B (g) (13) (H) (ii)	Resources defined in sections 1702 (q) and (v) of Title 20 of the California Code of Regulations; and	Section 8.2.6, pages 8.2-5 to 8.2-6.		
Appendix B (g) (13) (H) (iii)	Species or habitats identified by legislative acts as requiring protection.	Section 8.2.6, pages 8.2-5 to 8.2-6.		

DATA ADEQUACY WORKSHEET

Adequacy Issue: Adequate ____ Inadequate ____ Revision No. 0 Date 8/21/01

Technical Area: **Biological Resources** Project: GWF Henrietta Peaker Project Technical Staff: ____

Project Manager: David Stein Docket: ____ Technical Senior: ____

SITING REGULATIONS	INFORMATION	AFC PAGE NUMBER AND SECTION NUMBER	ADEQUATE YES OR NO	INFORMATION REQUIRED TO MAKE AFC CONFORM WITH REGULATIONS
Appendix B (h) (1) (A)	Tables which identify laws, regulations, ordinances, standards, adopted local, regional, state, and federal land use plans, and permits applicable to the proposed project, and a discussion of the applicability of each. The table or matrix shall explicitly reference pages in the application wherein conformance, with each law or standard during both construction and operation of the facility is discussed;	Table 8.2-3.		
Appendix B (h) (1) (B)	Tables which identify each agency with jurisdiction to issue applicable permits and approvals or to enforce identified laws, regulations, standards, and adopted local, regional, state and federal land use plans, and agencies which would have permit approval or enforcement authority, but for the exclusive authority of the commission to certify sites and related facilities.	Table 8.2-3.		
Appendix B (h) (2)	A discussion of the conformity of the project with the requirements listed in subsection (h)(1)(A).	Section 8.2.3, pages 8.2-4 to 8.4-5.		
Appendix B (h) (3)	The name, title, phone number, and address, if known, of an official within each agency who will serve as a contact person for the agency.	Section 8.2.11, pages 8.2-9 to 8.2-10.		
Appendix B (h) (4)	A schedule indicating when permits outside the authority of the commission will be obtained and the steps the applicant has taken or plans to take to obtain such permits.	Section 8.2.10, page 8.2-9.		

Appendix K20-8

Cultural Resources

Adequacy Issue: Adequate_____ Inadequate _____

DATA ADEQUACY WORKSHEET

Revision No. ____ Date _____

Technical Area: **Cultural Resources**

Project: GWF Henrietta Peaker Project

Technical Staff: _____

Project Manager: _____

Docket: _____

Technical Senior: _____

SITING REGULATIONS	INFORMATION	AFC PAGE NUMBER AND SECTION NUMBER	ADEQUATE YES OR NO	INFORMATION REQUIRED TO MAKE AFC CONFORM WITH REGULATIONS
Appendix B (g) (1)	...provide a discussion of the existing site conditions, the expected direct, indirect and cumulative impacts due to the construction, operation and maintenance of the project, the measures proposed to mitigate adverse environmental impacts of the project, the effectiveness of the proposed measures, and any monitoring plans proposed to verify the effectiveness of the mitigation.	Section 8.3, pages 8.3-10 through 8.3-12.		
Appendix B (g) (2) (A)	A brief summary of the ethnology, prehistory, and history of the region in which the project site and related facilities are located and maps at a scale of 1:24,000, indicating areas of ethnographic occupation. The region may vary depending on the extent of the territory occupied or used by prehistoric cultures indigenous to the area in which the project is located.	Section 8.3, pages 8.3-2 through 8.3-8; Figures 8.3-2 and 8.3-4.		

Adequacy Issue:	Adequate_____	Inadequate _____	DATA ADEQUACY WORKSHEET	Revision No. ____	Date _____
Technical Area:	**Cultural Resources**	Project:	GWF Henrietta Peaker Project	Technical Staff:	
Project Manager:		Docket:		Technical Senior:	

SITING REGULATIONS	INFORMATION	AFC PAGE NUMBER AND SECTION NUMBER	ADEQUATE YES OR NO	INFORMATION REQUIRED TO MAKE AFC CONFORM WITH REGULATIONS
Appendix B (g) (2) (B)	A description of all literature searches and field surveys used to provide information about known cultural resources in the project vicinity. If survey records of the area potentially physically affected by the project are not available, and the area has the potential for containing significant cultural resources, the applicant shall submit a new or revised survey for any portion of the area lacking comprehensive survey data. A discussion of the dates of the surveys, methods used in completing the surveys, and the identification and qualification of the individuals conducting the surveys shall be included.	Section 8.3, pages 8.3-8 through 8.3-11.		

Adequacy Issue: Adequate_____ Inadequate _____

DATA ADEQUACY WORKSHEET

Revision No. ____ Date _____

Technical Area: **Cultural Resources**

Project: GWF Henrietta Peaker Project

Technical Staff: _____

Project Manager: _____

Docket: _____

Technical Senior: _____

SITING REGULATIONS	INFORMATION	AFC PAGE NUMBER AND SECTION NUMBER	ADEQUATE YES OR NO	INFORMATION REQUIRED TO MAKE AFC CONFORM WITH REGULATIONS
Appendix B (g) (2) (C)	A discussion of the sensitivity of the project area described in subsection (g)(2)(A) and the presence and significance of any known archeological sites and other cultural resources that may be affected by the project. Information on the specific location of archeological resources shall be included in a separate appendix to the application and submitted to the Commission under a request for confidentiality pursuant to Title 20, California Code of Regulations, § 2501 et seq.	Section 8.3, page 8.3-11; Appendix C.		
Appendix B (g) (2) (D)	A summary of contacts and communications with, and responses from, Native American representatives who may have an interest in heritage lands and/or resources potentially affected by the proposed project.	Section 8.3, pages 8.3-9; Appendix C.		

Adequacy Issue: Adequate_____ Inadequate _____

DATA ADEQUACY WORKSHEET

Revision No. ____ Date _____

Technical Area: **Cultural Resources** Project: GWF Henrietta Peaker Project Technical Staff: _____

Project Manager: _____ Docket: _____ Technical Senior: _____

SITING REGULATIONS	INFORMATION	AFC PAGE NUMBER AND SECTION NUMBER	ADEQUATE YES OR NO	INFORMATION REQUIRED TO MAKE AFC CONFORM WITH REGULATIONS
Appendix B (g) (2) (E)	In the discussion on mitigation and monitoring prepared pursuant to subsection (g)(1), a discussion of any educational programs proposed to enhance awareness of potential impacts to archeological resources by employees and contractors, measures proposed for mitigation of impacts to known cultural resources, and a set of contingency measures for mitigation of potential impacts to previously unknown cultural resources.	Section 8.3, pages 8.3-11 and 8.3-12.		
Appendix B (h) (1) (A)	Tables which identify laws, regulations, ordinances, standards, adopted local, regional, state, and federal land use plans, and permits applicable to the proposed project, and a discussion of the applicability of each. The table or matrix shall explicitly reference pages in the application wherein conformance, with each law or standard during both construction and operation of the facility is discussed;	Table 8.3-3.		

Adequacy Issue: Adequate_____ Inadequate _____

DATA ADEQUACY WORKSHEET

Revision No. ____ Date _____

Technical Area: **Cultural Resources** Project: GWF Henrietta Peaker Project Technical Staff: _____

Project Manager: _____ Docket: _____ Technical Senior: _____

SITING REGULATIONS	INFORMATION	AFC PAGE NUMBER AND SECTION NUMBER	ADEQUATE YES OR NO	INFORMATION REQUIRED TO MAKE AFC CONFORM WITH REGULATIONS
Appendix B (h) (1) (B)	Tables which identify each agency with jurisdiction to issue applicable permits and approvals or to enforce identified laws, regulations, standards, and adopted local, regional, state and federal land use plans, and agencies which would have permit approval or enforcement authority, but for the exclusive authority of the commission to certify sites and related facilities.	Table 8.3-4.		
Appendix B (h) (2)	A discussion of the conformity of the project with the requirements listed in subsection (h)(1)(A).	Section 8.3, pages 8.3-12 through 8.3-16.		
Appendix B (h) (3)	The name, title, phone number, and address, if known, of an official within each agency who will serve as a contact person for the agency.	Table 8.3-4.		
Appendix B (h) (4)	A schedule indicating when permits outside the authority of the commission will be obtained and the steps the applicant has taken or plans to take to obtain such permits.	Section 8.3, page 8.3-16.		

Appendix K20-9

Land Use

DATA ADEQUACY WORKSHEET

Adequacy Issue: Adequate ____ Inadequate ____ Revision No. 0 Date 8/21/01

Technical Area: **Land Use** Project: GWF Henrietta Peaker Project Technical Staff: ____

Project Manager: ____ Docket: ____ Technical Senior: ____

SITING REGULATIONS	INFORMATION	AFC PAGE NUMBER AND SECTION NUMBER	ADEQUATE YES OR NO	INFORMATION REQUIRED TO MAKE AFC CONFORM WITH REGULATIONS
Appendix B (g) (1)	...provide a discussion of the existing site conditions, the expected direct, indirect and cumulative impacts due to the construction, operation and maintenance of the project, the measures proposed to mitigate adverse environmental impacts of the project, the effectiveness of the proposed measures, and any monitoring plans proposed to verify the effectiveness of the mitigation.	Sections 8.4.2 to 8.4.6, pages 8.4-2 to 8.4-17.		
Appendix B (g) (3) (A)	A discussion of existing land uses and current zoning at the site, land uses and land use patterns within one mile of the proposed site and within one-quarter mile of any project-related linear facilities. Include:	Section 8.4.2 and 8.4.3, pages 8.4-2 to 8.4-11; Tables 8.4-2 to 8.4-5.		
Appendix B (g) (3) (A) (i)	An identification of residential, commercial, industrial, recreational, scenic, agricultural, natural resource protection, natural resource extraction, educational, religious, cultural, and historic areas, and any other area of unique land uses;	Sections 8.4.1 and 8.4.3, pages 8.4-1 to 8.4-2 and 8.4-5 to 8.4-11; Figure 8.4-3; Tables 8.4-1 to 8.4-7.		
Appendix B (g) (3) (A) (ii)	A discussion of any trends in recent zoning changes and potential future land use development;	Section 8.4.3, pages 8.4.5 to 8.4.11.		
Appendix B (g) (3) (A) (iii)	Identification of all discretionary reviews by public agencies initiated or completed within 18 months prior to filing the application for those changes or developments identified in subsection (g)(3)(A)(ii); and	Section 8.4.3, pages 8.4-6 to 8.4-11.		

DATA ADEQUACY WORKSHEET

Adequacy Issue: Adequate ____ Inadequate ____ Revision No. 0 Date 8/21/01

Technical Area: **Land Use** Project: GWF Henrietta Peaker Project Technical Staff: ____

Project Manager: ____ Docket: ____ Technical Senior: ____

SITING REGULATIONS	INFORMATION	AFC PAGE NUMBER AND SECTION NUMBER	ADEQUATE YES OR NO	INFORMATION REQUIRED TO MAKE AFC CONFORM WITH REGULATIONS
Appendix B (g) (3) (A) iv)	Legible maps of the areas identified in subsection (g)(3)(A) potentially affected by the project, on which existing land uses, jurisdictional boundaries, general plan designations, specific plan designations, and zoning have been clearly delineated.	Figures 8.4-1 to 8.4-4.		
Appendix B (g) (3) (B)	A discussion of the compatibility of the proposed facilities with present and expected land uses, and conformity with any long-range land use plans adopted by any federal, state, regional, or local planning agency. The discussion shall identify the need, if any, for variances or any measures that would be necessary to make the proposal conform with permitted land uses	Section 8.4.4.2 and 8.4.4.3, pages 8.4-12 to 8.4-15.		
Appendix B (g) (15) (B)	A map at a scale of 1:24,000 and written description of agricultural land uses found within all areas affected by the proposed project. The description shall include:	Figure 8.9-2.		
Appendix B (g) (15) (B) (i)	Crop types, irrigation systems, and any special cultivation practices; and	Not applicable.		
Appendix B (g) (15) (B) (ii)	Whether farmland affected by the project is prime, of statewide importance, or unique as defined by the Natural Resource Conservation Service of the California Department of Conservation.	Figure 8.9-2.		
Appendix B (g) (15) (C)	An assessment of the effects of the proposed project on soil resources and agricultural land uses. This decision shall include:	Figures 8.9-1 and 8.9-2.		

DATA ADEQUACY WORKSHEET

Adequacy Issue: Adequate ____ Inadequate ____ Revision No. 0 Date 8/21/01

Technical Area: **Land Use** Project: GWF Henrietta Peaker Project Technical Staff: ____

Project Manager: ____ Docket: ____ Technical Senior: ____

SITING REGULATIONS	INFORMATION	AFC PAGE NUMBER AND SECTION NUMBER	ADEQUATE YES OR NO	INFORMATION REQUIRED TO MAKE AFC CONFORM WITH REGULATIONS
Appendix B (g) (15) (C) (ii)	Direct and indirect effects on agricultural land uses; and	Section 8.9.		
Appendix B (h) (1) (A)	Tables which identify laws, regulations, ordinances, standards, adopted local, regional, state, and federal land use plans, and permits applicable to the proposed project, and a discussion of the applicability of each. The table or matrix shall explicitly reference pages in the application wherein conformance, with each law or standard during both construction and operation of the facility is discussed;	Table 8.4-8.		
Appendix B (h) (1) (B)	Tables which identify each agency with jurisdiction to issue applicable permits and approvals or to enforce identified laws, regulations, standards, and adopted local, regional, state and federal land use plans, and agencies which would have permit approval or enforcement authority, but for the exclusive authority of the commission to certify sites and related facilities.	Table 8.4-8.		
Appendix B (h) (2)	A discussion of the conformity of the project with the requirements listed in subsection (h)(1)(A).	Sections 8.4.3 to 8.4.6 and 8.4.9, pages 8.4-5 to 8.4-17		
Appendix B (h) (3)	The name, title, phone number, and address, if known, of an official within each agency who will serve as a contact person for the agency.	Section 8.4.8, page 8.4-17.		

DATA ADEQUACY WORKSHEET

Adequacy Issue: Adequate ____ Inadequate ____ Revision No. 0 Date 8/21/01

Technical Area: **Land Use** Project: GWF Henrietta Peaker Project Technical Staff: ____

Project Manager: ____ Docket: ____ Technical Senior: ____

SITING REGULATIONS	INFORMATION	AFC PAGE NUMBER AND SECTION NUMBER	ADEQUATE YES OR NO	INFORMATION REQUIRED TO MAKE AFC CONFORM WITH REGULATIONS
Appendix B (h) (4)	A schedule indicating when permits outside the authority of the commission will be obtained and the steps the applicant has taken or plans to take to obtain such permits.	Section 8.4.10, page 8.4-18.		

Appendix K20-10

Noise

DATA ADEQUACY WORKSHEET

Adequacy Issue: Adequate ____ Inadequate ____ Revision No. 0 Date 8/21/01

Technical Area: **Noise** Project: GWF Henrietta Peaker Project Technical Staff: ____

Project Manager: ____ Docket: ____ Technical Senior: ____

SITING REGULATIONS	INFORMATION	AFC PAGE NUMBER AND SECTION NUMBER	ADEQUATE YES OR NO	INFORMATION REQUIRED TO MAKE AFC CONFORM WITH REGULATIONS
Appendix B (g) (1)	...provide a discussion of the existing site conditions, the expected direct, indirect and cumulative impacts due to the construction, operation and maintenance of the project, the measures proposed to mitigate adverse environmental impacts of the project, the effectiveness of the proposed measures, and any monitoring plans proposed to verify the effectiveness of the mitigation.	Section 8.5.1, page 8.5-1; Section 8.5.3, page 8.5-3; Section 8.5.4, pages 8.5-3 to 8.5-6; Sections 8.5.5 and 8.5.6, pages 8.5-6 to 8.5-7.		
Appendix B (g) (4) (A)	A land use map, which identifies residences, hospitals, libraries, schools, places of worship, or other facilities where quiet, is an important attribute of the environment within the area impacted by the proposed project. The area impacted by the proposed project is that area where there is a potential increase of 5 dB(A) or more, during either construction or operation, over existing background levels.	Figure 8.5-1.		

DATA ADEQUACY WORKSHEET

Adequacy Issue: Adequate ____ Inadequate ____ Revision No. 0 Date 8/21/01

Technical Area: **Noise** Project: GWF Henrietta Peaker Project Technical Staff: ____

Project Manager: ____ Docket: ____ Technical Senior: ____

SITING REGULATIONS	INFORMATION	AFC PAGE NUMBER AND SECTION NUMBER	ADEQUATE YES OR NO	INFORMATION REQUIRED TO MAKE AFC CONFORM WITH REGULATIONS
Appendix B (g) (4) (B)	A description of the ambient noise levels at those sites identified under subsection (g)(4)(A) which the applicant believes provide a representative characterization of the ambient noise levels in the project vicinity, and a discussion of the general atmospheric conditions, including temperature, humidity, and the presence of wind and rain at the time of the measurements. The existing noise levels shall be determined by taking noise measurements for a minimum of 25 consecutive hours at a minimum of one site. Other sites may be monitored for a duration at the applicant's discretion during the same 25-hour period. The results of the noise level measurements shall be reported in L_{eq} (equivalent sound or noise level), L_{dn} (day-night sound or noise level) or CNEL (Community Noise Equivalent Level) in units of dB(A). The L_{10}, L_{50}, and L_{90} values (noise levels exceeded 10 percent, 50 percent, and 90 percent of the time, respectively) shall also be reported.	Section 8.5.3, page 8.5-3.		
Appendix B (g) (4) (C)	A description of the major noise sources of the project, including the range of noise levels and the tonal and frequency characteristics of the noise emitted.	Section 8.5.4.1, pages 8.5-3 to 8.4-5.		
Appendix B (g) (4) (D)	An estimate of the project noise levels, during both construction and operation, at residences, hospitals, libraries, schools, places of worship, or other facilities where quiet is an important attribute of the environment, within the area impacted by the proposed project.	Section 8.5.4, pages 8.5-3 to 8.5-6.		

DATA ADEQUACY WORKSHEET

Adequacy Issue: Adequate ____ Inadequate ____ Revision No. 0 Date 8/21/01

Technical Area: **Noise** Project: GWF Henrietta Peaker Project Technical Staff: ____

Project Manager: ____ Docket: ____ Technical Senior: ____

SITING REGULATIONS	INFORMATION	AFC PAGE NUMBER AND SECTION NUMBER	ADEQUATE YES OR NO	INFORMATION REQUIRED TO MAKE AFC CONFORM WITH REGULATIONS
Appendix B (g) (4) (E)	An estimate of the project noise levels within the project site boundary during both construction and operation and the impact to the workers at the site due to the estimated noise levels.	Section 8.5.4, pages 8.5-3 to 8.5-6.		
Appendix B (g) (4) (F)	The audible noise from existing switchyards and overhead transmission lines that would be affected by the project and estimates of the future audible noise levels that would result from existing and proposed switchyards and transmission lines. Noise levels shall be calculated at the property boundary for switchyards and at the edge of the rights-of-way for transmission lines.	Sections 6.2.3 to 6.2.4.2, pages 6-6 to 6-12.		
Appendix B (h) (1) (A)	Tables which identify laws, regulations, ordinances, standards, adopted local, regional, state, and federal land use plans, and permits applicable to the proposed project, and a discussion of the applicability of each. The table or matrix shall explicitly reference pages in the application wherein conformance, with each law or standard during both construction and operation of the facility is discussed;	Section 8.5.4, pages 8.5-3 to 8.5-6; Table 8.5-7.		
Appendix B (h) (1) (B)	Tables which identify each agency with jurisdiction to issue applicable permits and approvals or to enforce identified laws, regulations, standards, and adopted local, regional, state and federal land use plans, and agencies which would have permit approval or enforcement authority, but for the exclusive authority of the commission to certify sites and related facilities.	Table 8.5.7.		

DATA ADEQUACY WORKSHEET

Adequacy Issue: Adequate ____ Inadequate ____ Revision No. 0 Date 8/21/01

Technical Area: **Noise** Project: GWF Henrietta Peaker Project Technical Staff: ____

Project Manager: ____ Docket: ____ Technical Senior: ____

SITING REGULATIONS	INFORMATION	AFC PAGE NUMBER AND SECTION NUMBER	ADEQUATE YES OR NO	INFORMATION REQUIRED TO MAKE AFC CONFORM WITH REGULATIONS
Appendix B (h) (2)	A discussion of the conformity of the project with the requirements listed in subsection (h)(1)(A).	Section 8.5.7, pages 8.5-7 to 8.5-10.		
Appendix B (h) (3)	The name, title, telephones number, and address, if known, of an official within each agency who will serve as a contact person for the agency.	Section 8.5.8, page 8.5-10.		
Appendix B (h) (4)	A schedule indicating when permits outside the authority of the commission will be obtained and the steps the applicant has taken or plans to take to obtain such permits.	No noise permit required.		

Appendix K20-11

Public Health

DATA ADEQUACY WORKSHEET

Adequacy Issue: Adequate ____ Inadequate ____ Revision No. 0 Date 8/21/01

Technical Area: **Public Health** Project: GWF Henrietta Peaker Project Technical Staff: ____

Project Manager: ____ Docket: ____ Technical Senior: ____

SITING REGULATIONS	INFORMATION	AFC PAGE NUMBER AND SECTION NUMBER	ADEQUATE YES OR NO	INFORMATION REQUIRED TO MAKE AFC CONFORM WITH REGULATIONS
Appendix B (g) (1)	...provide a discussion of the existing site conditions, the expected direct, indirect and cumulative impacts due to the construction, operation and maintenance of the project, the measures proposed to mitigate adverse environmental impacts of the project, the effectiveness of the proposed measures, and any monitoring plans proposed to verify the effectiveness of the mitigation.	Section 8.6, pages 8.6-1 to 8.6-15.		
Appendix B (g) (9) (A)	A list of all toxic substances emitted by the project under normal operating conditions, which may cause an adverse public health impact as a result of acute, chronic, or sub-chronic exposure and to which members of the public may be exposed. This list should include, at a minimum, any pollutants emitted by the project that are listed pursuant to Health and Safety Code § 25249.8.	Table 8.6-1.		
Appendix B (g) (9) (B)	A protocol describing the analysis which the applicant will conduct to determine the extent of potential public exposure to substances identified in subsection (g)(9)(A) resulting from normal facility operation. The analysis itself can be submitted after the AFC is complete.	Not applicable, analysis has been completed.		
Appendix B (g) (9) (C)	A map at a scale of 1:24,000, showing all terrain areas exceeding the elevation of the stack within a 10 mile radius of the facility.	Figure 8.6-1.		

DATA ADEQUACY WORKSHEET

Adequacy Issue: Adequate ____ Inadequate ____ Revision No. 0 Date 8/21/01

Technical Area: **Public Health** Project: GWF Henrietta Peaker Project Technical Staff: ____

Project Manager: ____ Docket: ____ Technical Senior: ____

SITING REGULATIONS	INFORMATION	AFC PAGE NUMBER AND SECTION NUMBER	ADEQUATE YES OR NO	INFORMATION REQUIRED TO MAKE AFC CONFORM WITH REGULATIONS
Appendix B (g) (9) (D)	A map at a scale of 1:24,000, showing the distribution of population and sensitive receptors within the area exposed to the substances identified in subsection (g)(9)(A).	Figure 8.6-2.		
Appendix B (h) (1) (A)	Tables which identify laws, regulations, ordinances, standards, adopted local, regional, state, and federal land use plans, and permits applicable to the proposed project, and a discussion of the applicability of each. The table or matrix shall explicitly reference pages in the application wherein conformance, with each law or standard during both construction and operation of the facility is discussed;	Table 8.6-6.		
Appendix B (h) (1) (B)	Tables which identify each agency with jurisdiction to issue applicable permits and approvals or to enforce identified laws, regulations, standards, and adopted local, regional, state and federal land use plans, and agencies which would have permit approval or enforcement authority, but for the exclusive authority of the commission to certify sites and related facilities.	Table 8.6-6.		
Appendix B (h) (2)	A discussion of the conformity of the project with the requirements listed in subsection (h)(1)(A).	Section 8.6-7, pages 8.6-14.		
Appendix B (h) (3)	The name, title, phone number, and address, if known, of an official within each agency who will serve as a contact person for the agency.	Section 8.6.5, page 8.6-14.		

DATA ADEQUACY WORKSHEET

Adequacy Issue: Adequate ____ Inadequate ____ Revision No. 0 Date 8/21/01

Technical Area: **Public Health** Project: GWF Henrietta Peaker Project Technical Staff: ____

Project Manager: ____ Docket: ____ Technical Senior: ____

SITING REGULATIONS	INFORMATION	AFC PAGE NUMBER AND SECTION NUMBER	ADEQUATE YES OR NO	INFORMATION REQUIRED TO MAKE AFC CONFORM WITH REGULATIONS
Appendix B (h) (4)	A schedule indicating when permits outside the authority of the commission will be obtained and the steps the applicant has taken or plans to take to obtain such permits.	Section 8.6.6, page 8.6-14.		

Appendix K20-12

Worker Health and Safety

DATA ADEQUACY WORKSHEET

Adequacy Issue: Adequate ____ Inadequate ____ Revision No. 0 Date 8/21/01

Technical Area: **Worker Safety** Project: GWF Henrietta Peaker Project Technical Staff: ____

Project Manager: David Stein Docket: ____ Technical Senior: ____

SITING REGULATIONS	INFORMATION	AFC PAGE NUMBER AND SECTION NUMBER	ADEQUATE YES OR NO	INFORMATION REQUIRED TO MAKE AFC CONFORM WITH REGULATIONS
Appendix B (g) (1)	...provide a discussion of the existing site conditions, the expected direct, indirect and cumulative impacts due to the construction, operation and maintenance of the project, the measures proposed to mitigate adverse environmental impacts of the project, the effectiveness of the proposed measures, and any monitoring plans proposed to verify the effectiveness of the mitigation.	AFC in its entirety.		
Appendix B (g) (11) (A)	A description of the safety training programs which will be required for construction and operation personnel.	Section 8.7.4, pages 8.7-14 to 8.7-15; Tables 8.7-5 to 8.7-6.		
Appendix B (g) (11) (B)	A complete description of the fuel handling system and the fire suppression system.	Section 8.7.3.1, pages 8.7-3 to 8.7-7.		

DATA ADEQUACY WORKSHEET

Adequacy Issue: Adequate ____ Inadequate ____ Revision No. 0 Date 8/21/01

Technical Area: **Worker Safety** Project: GWF Henrietta Peaker Project Technical Staff: ____

Project Manager: David Stein Docket: ____ Technical Senior: ____

SITING REGULATIONS	INFORMATION	AFC PAGE NUMBER AND SECTION NUMBER	ADEQUATE YES OR NO	INFORMATION REQUIRED TO MAKE AFC CONFORM WITH REGULATIONS
Appendix B (g) (11) (C)	Provide draft outlines of the Construction Health and Safety Program and the Operation Health and Safety Program, as follows:			
	Construction Health and Safety Program:	Section 8.7.3.1, pages 8.7-3 to 8.7-7;		
	* Injury and Illness Prevention Plan (8 Cal. Code Regs., § 1509);			
	* Fire Protection and Prevention Plan (8 Cal. Code Regs., § 1920);			
	* Personal Protective Equipment Program (8 Cal. Code Regs., §§ 1514-1522).			
	Operation Health and Safety Program:	Section 8.7.3.2, pages 8.7-7 to 8.7-13.		
	* Injury and Illness Prevention Program (8 Cal. Code Regs., § 3203);			
	* Fire Prevention Plan (8 Cal. Code Regs., § 3221);			
	* Emergency Action Plan (8 Cal. Code Regs., § 3220);			
	* Personal Protective Equipment Program (8 Cal. Code Regs., §§ 3401-3411).			

DATA ADEQUACY WORKSHEET

Adequacy Issue: Adequate ____ Inadequate ____ Revision No. 0 Date 8/21/01

Technical Area: **Worker Safety** Project: GWF Henrietta Peaker Project Technical Staff: ____

Project Manager: David Stein Docket: ____ Technical Senior: ____

SITING REGULATIONS	INFORMATION	AFC PAGE NUMBER AND SECTION NUMBER	ADEQUATE YES OR NO	INFORMATION REQUIRED TO MAKE AFC CONFORM WITH REGULATIONS
Appendix B (h) (1) (A)	Tables which identify laws, regulations, ordinances, standards, adopted local, regional, state, and federal land use plans, and permits applicable to the proposed project, and a discussion of the applicability of each. The table or matrix shall explicitly reference pages in the application wherein conformance, with each law or standard during both construction and operation of the facility is discussed;	Table 8.7-1.		
Appendix B (h) (1) (B)	Tables which identify each agency with jurisdiction to issue applicable permits and approvals or to enforce identified laws, regulations, standards, and adopted local, regional, state and federal land use plans, and agencies which would have permit approval or enforcement authority, but for the exclusive authority of the commission to certify sites and related facilities.	Table 8.7-1.		
Appendix B (h) (2)	A discussion of the conformity of the project with the requirements listed in subsection (h)(1)(A).	Sections 8.7.2, 8.7.3.1 and 8.7.3.2, pages 8.7-2 to 8.7-13.		
Appendix B (h) (3)	The name, title, phone number, and address, if known, of an official within each agency who will serve as a contact person for the agency.	Section 8.7.7, page 8.7-16.		
Appendix B (h) (4)	A schedule indicating when permits outside the authority of the commission will be obtained and the steps the applicant has taken or plans to take to obtain such permits.	Table 8.7-7.		

Appendix K20-13

Socioeconomics

DATA ADEQUACY WORKSHEET

Adequacy Issue: Adequate ____ Inadequate ____ Revision No. 0 Date 8/21/01

Technical Area: **Socioeconomics** Project: ____ Technical Staff: ____

Project Manager: ____ Docket: ____ Technical Senior: ____

SITING REGULATIONS	INFORMATION	AFC PAGE NUMBER AND SECTION NUMBER	ADEQUATE YES OR NO	INFORMATION REQUIRED TO MAKE AFC CONFORM WITH REGULATIONS
Appendix B (g) (1)	...provide a discussion of the existing site conditions, the expected direct, indirect and cumulative impacts due to the construction, operation and maintenance of the project, the measures proposed to mitigate adverse environmental impacts of the project, the effectiveness of the proposed measures, and any monitoring plans proposed to verify the effectiveness of the mitigation.	Sections 8.8.1 Affected Environment (pages 8.8-1 through 8.8-10), 8.8.2 Environmental Consequences (pages 8.8-10 through 8.8-16), 8.8.3 Environmental Justice (pages 8.8-16 through 8.8-21), 8.8.4 Cumulative Impacts (pages 8.8-21 to 8.8-22).		
Appendix B (g) (7) (A)	A description of the socioeconomic circumstances of the vicinity and region affected by construction and operation of the project. Include:	Section 8.8.1 Affected Environment (pages 8.8-1 through 8.8-10).		
Appendix B (g) (7) (A) (i)	The economic characteristics, including the economic base, fiscal resources, and a list of the applicable local agencies with taxing powers and their most recent and projected revenues;	Section 8.8.1.1 Labor Force, Employment and Industry (pages 8.8-1 through 8.8-3), and 8.8.1.4 Public Finance and Fiscal Issues (pages 8.8-9 to 8.8-10).		
Appendix B (g) (7) (A) (ii)	The social characteristics, including population and demographic and community trends;	Section 8.8.1.2 Population and Housing (pages 8.8-4 to 8.8-6).		
Appendix B (g) (7) (A) (iii)	Existing and projected unemployment rates;	Section 8.8.1.1 Labor Force, Employment and Industry (pages 8.8-1 to 8.8-3).		

DATA ADEQUACY WORKSHEET

Adequacy Issue: Adequate ____ Inadequate ____ Revision No. 0 Date 8/21/01

Technical Area: **Socioeconomics** Project: ____ Technical Staff: ____

Project Manager: ____ Docket: ____ Technical Senior: ____

SITING REGULATIONS	INFORMATION	AFC PAGE NUMBER AND SECTION NUMBER	ADEQUATE YES OR NO	INFORMATION REQUIRED TO MAKE AFC CONFORM WITH REGULATIONS
Appendix B (g) (7) (A) (iv)	Availability of skilled workers by craft required for construction and operation of the project;	Section 8.8.1.1 Labor Force, Employment and Industry (pages 8.8-1 through 8.8-3).		
Appendix B (g) (7) (A) (v)	Availability of temporary and permanent housing; and	Section 8.8.1.2 Population and Housing (pages 8.8-4 through 8.8-6).		
Appendix B (g) (7) (A) (vi)	Capacities, existing and expected use levels, and planned expansion of utilities (gas, water and waste) and public services, including fire protection, law enforcement, emergency response, medical facilities, other assessment districts, and school districts. For projects outside metropolitan areas with a population of 500,000 or more, information for each school district shall include current enrollment and yearly expected enrollment by grade level groupings, excluding project-related changes, for the duration of the project construction schedule.	Section 8.8.1.3 Public Services and Utilities (pages 8.8-7 through 8.8-9).		
Appendix B (g) (7) (B)	A discussion of the socioeconomic impacts caused by the construction and operation of the project, including:	Section 8.8.2 Environmental Consequences (pages 8.8-10 through 8.8-16).		
Appendix B (g) (7) (B) (i)	The number of workers to be employed each month by craft during construction and operation;	Section 8.8.2.2 Economic Impacts (pages 8.8-11 through 8.8-13).		
Appendix B (g) (7) (B) (ii)	An estimate of the number and percentage of workers who will commute daily, commute weekly, or relocate in order to work on the project;	Section 8.8.2.2 Economic Impacts (pages 8.8-11 through 8.8-13).		

DATA ADEQUACY WORKSHEET

Adequacy Issue: Adequate ____ Inadequate ____ Revision No. 0 Date 8/21/01

Technical Area: **Socioeconomics** Project: ____ Technical Staff: ____

Project Manager: ____ Docket: ____ Technical Senior: ____

SITING REGULATIONS	INFORMATION	AFC PAGE NUMBER AND SECTION NUMBER	ADEQUATE YES OR NO	INFORMATION REQUIRED TO MAKE AFC CONFORM WITH REGULATIONS
Appendix B (g) (7) (B) (iii)	An estimate of the potential population increase caused directly and indirectly by the project;	Section 8.8.2.3 Population and Housing Impacts (pages 8.8-13 to 8.8-14).		
Appendix B (g) (7) (B) (iv)	The potential impact of population increase on housing during the construction and operations phases;	Section 8.8.2.3 Population and Housing Impacts (pages 8.8-13 and 8.8-14).		
Appendix B (g) (7) (B) (v)	The potential impacts, including additional costs, on utilities (gas, water and waste) and public services, including fire, law enforcement, emergency response, medical facilities, other assessment districts, and school districts. For projects outside metropolitan areas with a population of 500,000 or more, information on schools shall include project-related enrollment changes by grade level groupings and associated facility and staffing impacts by school district during the construction and operation phases;	Section 8.8.2.4 Impacts on Public Services and Utilities (pages 8.8-14 through 8.8-16).		
Appendix B (g) (7) (B) (vi)	An estimate of applicable school impact fees;	Section 8.8.2.4 Impacts on Public Services and Utilities (pages 8.8-14 through 8.8-16).		
Appendix B (g) (7) (B) (vii)	An estimate of the total construction payroll and an estimate of the total operation payroll;	Section 8.8.2.2 Economic Impacts (pages 8.8-11 through 8.8-13).		
Appendix B (g) (7) (B) (viii)	An estimate of the expenditures for locally purchased materials for the construction and operation phases of the project; and	Section 8.8.2.2 Economic Impacts (pages 8.8-11 through 8.8-13).		

DATA ADEQUACY WORKSHEET

Adequacy Issue: Adequate ____ Inadequate ____ Revision No. 0 Date 8/21/01

Technical Area: **Socioeconomics** Project: ____ Technical Staff: ____

Project Manager: ____ Docket: ____ Technical Senior: ____

SITING REGULATIONS	INFORMATION	AFC PAGE NUMBER AND SECTION NUMBER	ADEQUATE YES OR NO	INFORMATION REQUIRED TO MAKE AFC CONFORM WITH REGULATIONS
Appendix B (g) (7) (B) (ix)	An estimate of the capital cost of the project of the potential impacts on tax revenues from construction and operation of the project.	Sections 8.8.2.2 Economic Impacts (pages 8.8-11 through 8.8-13), and 8.8.2.5 Fiscal Impacts (pages 8.8-15 to 8.8-16).		
Appendix B (h) (1) (A)	Tables which identify laws, regulations, ordinances, standards, adopted local, regional, state, and federal land use plans, and permits applicable to the proposed project, and a discussion of the applicability of each. The table or matrix shall explicitly reference pages in the application wherein conformance, with each law or standard during both construction and operation of the facility is discussed;	Sections 8.8.6 Laws, Ordinances, Regulations and Standards (pages 8.8-22 and 8.8-24), 8.8.9 Compliance with Laws, Ordinances, Regulations and Standards (page 8.8-24), and Table 8.8-16.		
Appendix B (h) (1) (B)	Tables which identify each agency with jurisdiction to issue applicable permits and approvals or to enforce identified laws, regulations, standards, and adopted local, regional, state and federal land use plans, and agencies which would have permit approval or enforcement authority, but for the exclusive authority of the commission to certify sites and related facilities.	Section 8.8.8 Involved Agencies and Agency Contacts (page 8.8-24).		
Appendix B (h) (2)	A discussion of the conformity of the project with the requirements listed in subsection (h)(1)(A).	Section 8.8.9 Compliance with Laws, Ordinances, Regulations and Standards (page 8.8-24).		

DATA ADEQUACY WORKSHEET

Adequacy Issue: Adequate ____ Inadequate ____ Revision No. 0 Date 8/21/01

Technical Area: **Socioeconomics** Project: ____ Technical Staff: ____

Project Manager: ____ Docket: ____ Technical Senior: ____

SITING REGULATIONS	INFORMATION	AFC PAGE NUMBER AND SECTION NUMBER	ADEQUATE YES OR NO	INFORMATION REQUIRED TO MAKE AFC CONFORM WITH REGULATIONS
Appendix B (h) (3)	The name, title, phone number, and address, if known, of an official within each agency who will serve as a contact person for the agency.	Section 8.8.8 Involved Agencies and Agency Contacts (page 8.8-24).		
Appendix (h) (4)	A schedule indicating when permits outside the authority of the commission will be obtained and the steps the applicant has taken or plans to take to obtain such permits.	Section 8.8.10 Permits Required and Permit Schedule (page 8.8-24).		

Appendix K20-14

Agriculture and Soils

DATA ADEQUACY WORKSHEET

Adequacy Issue: Adequate ____ Inadequate ____ Revision No. 0 Date 8/21/01

Technical Area: **Soils** Project: ____ Technical Staff: ____

Project Manager: ____ Docket: ____ Technical Senior: ____

SITING REGULATIONS	INFORMATION	AFC PAGE NUMBER AND SECTION NUMBER	ADEQUATE YES OR NO	INFORMATION REQUIRED TO MAKE AFC CONFORM WITH REGULATIONS
Appendix B (g) (1)	...provide a discussion of the existing site conditions, the expected direct, indirect and cumulative impacts due to the construction, operation and maintenance of the project, the measures proposed to mitigate adverse environmental impacts of the project, the effectiveness of the proposed measures, and any monitoring plans proposed to verify the effectiveness of the mitigation.	Section 8.9, pages 8.9-1 through 8.9-7.		
Appendix B (g) (15) (A)	A map at a scale of 1:24,000 and written description of soil types and all agricultural land uses that will be affected by the proposed project. The description shall include:	Figures 8.9-1 and 8.9-2.		
Appendix B (g) (15) (A) (i)	The depth, texture, permeability, drainage, erosion hazard rating, and land capability class of the soil; and	Section 8.9-2, pages 8.9-1 through 8.9-5.		
Appendix B (g) (15) (A) (ii)	An identification of other physical and chemical characteristics of the soil necessary to allow an evaluation of soil erodibility, permeability, re-vegetation potential, and cycling of pollutants in the soil-vegetation system.	Section 8.9-2, pages 8.9-1 through 8.9-5.		
Appendix B (g) (15) (C)	An assessment of the effects of the proposed project on soil resources and agricultural land uses. This discussion shall include:	Sections 8.9-2, 8.9.4, 8.9.5, pages 8.9-1 through 8.9-5, 8.9-5 and 8.9-7.		

DATA ADEQUACY WORKSHEET

Adequacy Issue: Adequate ____ Inadequate ____ Revision No. 0 Date 8/21/01

Technical Area: **Soils** Project: ____ Technical Staff: ____

Project Manager: ____ Docket: ____ Technical Senior: ____

SITING REGULATIONS	INFORMATION	AFC PAGE NUMBER AND SECTION NUMBER	ADEQUATE YES OR NO	INFORMATION REQUIRED TO MAKE AFC CONFORM WITH REGULATIONS
Appendix B (g) (15) (C) (i)	The quantification of accelerated soil loss due to wind and water erosion;	Section 8.9-3, page 8.9-5.		
Appendix B (g) (15) (C) (iii)	The effect of power plant emissions on surrounding soil-vegetation systems.	Section 8.9-2, pages 8.9-1 through 8.9-5.		
Appendix B (h) (1) (A)	Tables which identify laws, regulations, ordinances, standards, adopted local, regional, state, and federal land use plans, and permits applicable to the proposed project, and a discussion of the applicability of each. The table or matrix shall explicitly reference pages in the application wherein conformance, with each law or standard during both construction and operation of the facility is discussed;	Table 8.9-3.		
Appendix B (h) (1) (B)	Tables which identify each agency with jurisdiction to issue applicable permits and approvals or to enforce identified laws, regulations, standards, and adopted local, regional, state and federal land use plans, and agencies which would have permit approval or enforcement authority, but for the exclusive authority of the commission to certify sites and related facilities.	Table 8.9-3; Section 8.9-7, page 8.9-9.		
Appendix B (h) (2)	A discussion of the conformity of the project with the requirements listed in subsection (h)(1)(A).	Section 8.9-6, pages 8.9-7 through 8.9-9.		
Appendix B (h) (3)	The name, title, phone number, and address, if known, of an official within each agency who will serve as a contact person for the agency.	Section 8.9-8, pages 8.9-9.		

DATA ADEQUACY WORKSHEET

Adequacy Issue: Adequate ____ Inadequate ____ Revision No. 0 Date 8/21/01

Technical Area: **Soils** Project: ____ Technical Staff: ____

Project Manager: ____ Docket: ____ Technical Senior: ____

SITING REGULATIONS	INFORMATION	AFC PAGE NUMBER AND SECTION NUMBER	ADEQUATE YES OR NO	INFORMATION REQUIRED TO MAKE AFC CONFORM WITH REGULATIONS
Appendix B (h) (4)	A schedule indicating when permits outside the authority of the commission will be obtained and the steps the applicant has taken or plans to take to obtain such permits.	Section 8.9-7, pages 8.9-9.		

Appendix K20-15

Traffic and Transportation

DATA ADEQUACY WORKSHEET

Adequacy Issue: Adequate ____ Inadequate ____ Revision No. 0 Date 8/21/01

Technical Area: **Traffic and Transportation** Project: GWF Henrietta Peaker Project Technical Staff:`

Project Manager: Docket: Technical Senior:

SITING REGULATIONS	INFORMATION	AFC PAGE NUMBER AND SECTION NUMBER	ADEQUATE YES OR NO	INFORMATION REQUIRED TO MAKE AFC CONFORM WITH REGULATIONS
Appendix B (g) (1)	...provide a discussion of the existing site conditions, the expected direct, indirect and cumulative impacts due to the construction, operation and maintenance of the project, the measures proposed to mitigate adverse environmental impacts of the project, the effectiveness of the proposed measures, and any monitoring plans proposed to verify the effectiveness of the mitigation.	Section 8.10.		
Appendix B (g) (5) (A)	A regional transportation setting, on topographic maps (scale of 1:250,000), identifying the project location and major transportation facilities. Include a reference to the transportation element of any applicable local or regional plan.	Figure 8.10-1.		
Appendix B (g) (5) (B)	An identification, on topographic maps at a scale of 1:24,000 and a description of existing and planned roads, rail lines, including light rail, bike trails, airports, bus routes serving the project vicinity, pipelines, and canals in the project area affected by or serving the proposed facility. For each road identified, include the following information, where applicable:	Figure 8.10-2.		
Appendix B (g) (5) (B) (i)	Road classification and design capacity;	Table 8.10-2 and 8.10-4.		
Appendix B (g) (5) (B) (ii)	Current daily average and peak traffic counts;	Table 8.10-2 and 8.10-4.		
Appendix B (g) (5) (B) (iii)	Current and projected levels of service before project development, during construction, and during project operation;	Tables 8.10-3, 8.10-4, 8.10-6 and 8.10-7.		

DATA ADEQUACY WORKSHEET

Adequacy Issue: Adequate ____ Inadequate ____ Revision No. 0 Date 8/21/01

Technical Area: **Traffic and Transportation** Project: GWF Henrietta Peaker Project Technical Staff:`

Project Manager: Docket: Technical Senior:

SITING REGULATIONS	INFORMATION	AFC PAGE NUMBER AND SECTION NUMBER	ADEQUATE YES OR NO	INFORMATION REQUIRED TO MAKE AFC CONFORM WITH REGULATIONS
Appendix B (g) (5) (B) (iv)	Weight and load limitations;	Section 8.10.1.2, pages 8.10-6 to 8.10-7.		
Appendix B (g) (5) (B) (v)	Estimated percentage of current traffic flows for passenger vehicles and trucks; and	Table 8.10-2.		
Appendix B (g) (5) (B) (vi)	An identification of any road features affecting public safety.	Not applicable.		
Appendix B (g) (5) (C)	A description of any new, planned, or programmed transportation facilities in the project vicinity, including those necessary for construction and operation of the proposed project. Specify the location of such facilities on topographic maps at a scale of 1:24,000.	Section 8.10.1.1, pages 8.10-2 to 8.10-6.		
Appendix B (g) (5) (D)	An assessment of the construction and operation impacts of the proposed project on the transportation facilities identified. Include anticipated project-specific traffic, estimated changes to daily average and peak traffic counts, levels of service, and traffic/truck mix, and the impact of construction of any facilities identified in subsection (g)(5)(C).	Sections 8.10.2.2 to 8.10.2.5, pages 8.10-8 to 8.10-15.		
Appendix B (g) (5) (E)	A discussion of project-related hazardous materials to be transported to or from the project during construction and operation of the project, including the types, estimated quantities, estimated number of trips, anticipated routes, means of transportation, and any transportation hazards associated with such transport.	Sections 8.10.2.2 and 8.10.2.3, pages 8.10-8 and 8.10-14.		

DATA ADEQUACY WORKSHEET

Adequacy Issue: Adequate ____ Inadequate ____ Revision No. 0 Date 8/21/01

Technical Area: **Traffic and Transportation** Project: GWF Henrietta Peaker Project Technical Staff:`

Project Manager: Docket: Technical Senior:

SITING REGULATIONS	INFORMATION	AFC PAGE NUMBER AND SECTION NUMBER	ADEQUATE YES OR NO	INFORMATION REQUIRED TO MAKE AFC CONFORM WITH REGULATIONS
Appendix B (h) (1) (A)	Tables which identify laws, regulations, ordinances, standards, adopted local, regional, state, and federal land use plans, and permits applicable to the proposed project, and a discussion of the applicability of each. The table or matrix shall explicitly reference pages in the application wherein conformance, with each law or standard during both construction and operation of the facility is discussed;	Table 8.10-8.		
Appendix B (h) (1) (B)	Tables which identify each agency with jurisdiction to issue applicable permits and approvals or to enforce identified laws, regulations, standards, and adopted local, regional, state and federal land use plans, and agencies which would have permit approval or enforcement authority, but for the exclusive authority of the commission to certify sites and related facilities.	Table 8.10-8.		
Appendix B (h) (2)	A discussion of the conformity of the project with the requirements listed in subsection (h)(1)(A).	Sections 8.10.4 and 8.10.6, pages 8.10-15 to 8.10-17.		
Appendix B (h) (3)	The name, title, phone number, and address, if known, of an official within each agency who will serve as a contact person for the agency.	Section 8.10.5, page 8.10-17.		
Appendix B (h) (4)	A schedule indicating when permits outside the authority of the commission will be obtained and the steps the applicant has taken or plans to take to obtain such permits.	Table 8.10-8.		

Appendix K20-16

Visual Resources

DATA ADEQUACY WORKSHEET

Adequacy Issue: Adequate ____ Inadequate ____ Revision No. 0 Date 8/21/01

Technical Area: **Visual Resources** Project: GWF Henrietta Peaker Project Technical Staff: ____

Project Manager: ____ Docket: ____ Technical Senior: ____

SITING REGULATIONS	INFORMATION	AFC PAGE NUMBER AND SECTION NUMBER	ADEQUATE YES OR NO	INFORMATION REQUIRED TO MAKE AFC CONFORM WITH REGULATIONS
Appendix B (g) (1)	...provide a discussion of the existing site conditions, the expected direct, indirect and cumulative impacts due to the construction, operation and maintenance of the project, the measures proposed to mitigate adverse environmental impacts of the project, the effectiveness of the proposed measures, and any monitoring plans proposed to verify the effectiveness of the mitigation.	Section 8.11.		
Appendix B (g) (6) (A)	Descriptions of the existing visual setting of the vicinity of the project, the region that can be seen from the vicinity of the project, and the proposed project site. Include:	Section 8.11.1, pages 8.11-2 to 8.11-5.		
Appendix B (g) (6) (A) (i)	Topographic maps at a scale of 1:24,000 of the areas from which the project may be seen, identification of the view areas most sensitive to the potential visual impacts of the project, and the locations where photographs were taken for (g)(6)(E);	Figure 8.11-1.		
Appendix B (g) (6) (A) (ii)	Elevations of any existing structures on the site; and	Not applicable.		
Appendix B (g) (6) (A) (iii)	The visual properties of the topography, vegetation, and any modifications to the landscape as a result of human activities.	Section 8.11.1.2, page 8.11-2.		
Appendix B (g) (6) (B)	An assessment of the visual quality of those areas that will be impacted by the proposed project.	Section 8.11.1, pages 8.11-4 to 8.11-5.		

DATA ADEQUACY WORKSHEET

Adequacy Issue: Adequate ____ Inadequate ____ Revision No. 0 Date 8/21/01

Technical Area: **Visual Resources** Project: GWF Henrietta Peaker Project Technical Staff: ____

Project Manager: ____ Docket: ____ Technical Senior: ____

SITING REGULATIONS	INFORMATION	AFC PAGE NUMBER AND SECTION NUMBER	ADEQUATE YES OR NO	INFORMATION REQUIRED TO MAKE AFC CONFORM WITH REGULATIONS
Appendix B (g) (6) (C)	After discussions with staff and community residents who live in close proximity to the proposed project, identify the scenic corridors and any visually sensitive areas potentially affected by the proposed project, including recreational and residential areas. Indicate the approximate number of people using each of these sensitive areas and the estimated number of residences with views of the project. For purposes of this section, a scenic corridor is that area of land with scenic natural beauty, adjacent to and visible from a linear feature, such as a road, or river.	Section 8.11.2.2, pages 8.11-6 to 8.11-9.		
Appendix B (g) (6) (D)	A description of the dimensions, color, and material of each major visible component of the project.	Section 8.11.2.2, pages 8.11-6 to 8.11-9.		
Appendix B (g) (6) (E)	Full-page color photographic reproductions of the existing site, and full-page color simulations of the proposed project in the existing setting from each location representative of the view areas most sensitive to the potential visual impacts of the project.	Figures 8.11-2 to 11.		
Appendix B (g) (6) (F)	An assessment of the visual impacts of the project, including light and glare, and visible plumes.	Section 8.11.2.2, pages 8.11-7 to 8.11-8.		

DATA ADEQUACY WORKSHEET

Adequacy Issue: Adequate ____ Inadequate ____ Revision No. 0 Date 8/21/01

Technical Area: **Visual Resources** Project: GWF Henrietta Peaker Project Technical Staff: ____

Project Manager: ____ Docket: ____ Technical Senior: ____

SITING REGULATIONS	INFORMATION	AFC PAGE NUMBER AND SECTION NUMBER	ADEQUATE YES OR NO	INFORMATION REQUIRED TO MAKE AFC CONFORM WITH REGULATIONS
Appendix B (h) (1) (A)	Tables which identify laws, regulations, ordinances, standards, adopted local, regional, state, and federal land use plans, and permits applicable to the proposed project, and a discussion of the applicability of each. The table or matrix shall explicitly reference pages in the application wherein conformance with each law or standard during both construction and operation of the facility is discussed.	Table 8.11-1.		
Appendix B (h) (1) (B)	Tables which identify each agency with jurisdiction to issue applicable permits and approvals or to enforce identified laws, regulations, standards, and adopted local, regional, state and federal land use plans, and agencies which would have permit approval or enforcement authority, but for the exclusive authority of the commission to certify sites and related facilities.	Table 8.11-1		
Appendix B (h) (2)	A discussion of the conformity of the project with the requirements listed in subsection (h)(1)(A).	Section 8.11-4, page 8.11-9 to 8.11-10.		
Appendix B (h) (3)	The name, title, phone number, and address, if known, of an official within each agency who will serve as a contact person for the agency.	Section 8.11.7, page 8.11-11.		
Appendix B (h) (4)	A schedule indicating when permits outside the authority of the commission will be obtained and the steps the applicant has taken or plans to take to obtain such permits.	Not applicable for Visual Resources.		

Appendix K20-17

Hazardous Materials Handling

DATA ADEQUACY WORKSHEET

Adequacy Issue: Adequate ____ Inadequate ____ Revision No. 0 Date 8/21/01

Technical Area: **Hazardous Materials Handling** Project: GWF Henrietta Peaker Project Technical Staff: ____

Project Manager: ____ Docket: ____ Technical Senior: ____

SITING REGULATIONS	INFORMATION	AFC PAGE NUMBER AND SECTION NUMBER	ADEQUATE YES OR NO	INFORMATION REQUIRED TO MAKE AFC CONFORM WITH REGULATIONS
Appendix B (g) (1)	...provide a discussion of the existing site conditions, the expected direct, indirect and cumulative impacts due to the construction, operation and maintenance of the project, the measures proposed to mitigate adverse environmental impacts of the project, the effectiveness of the proposed measures, and any monitoring plans proposed to verify the effectiveness of the mitigation.	Section 8.12.2, pages 8.12-3 to 8.12-6; Section 8.12.5 and 8.12.6, pages 8.6-15 to 8.15-18.		
Appendix B (g) (10) (A)	A list of all materials used or stored on-site which are hazardous or acutely hazardous, as defined in Title 22, California Code of Regulations, § 66261.20 et seq., and a discussion of the toxicity of each material.	Tables 8.12-1 and 8.12-2.		
Appendix B (g) (10) (B)	A map at a scale of 1:24,000 depicting the location of schools, hospitals, day-care facilities, emergency response facilities and long-term health care facilities, within the area potentially affected by any release of hazardous materials.	Figure 8.6-2.		
Appendix B (g) (10) (C)	A discussion of the storage and handling system for each hazardous material used or stored at the site.	Section 8.12.2.3, pages 8.12-5 to 8.12-6.		
Appendix B (g) (10) (D)	The protocol that will be used in modeling potential consequences of accidental releases that could result in off site impacts. Identify the model(s) to be used, a description of all input assumptions, including meteorological conditions. The results of the modeling analysis can be submitted after the AFC is complete.	Not applicable, a modeling analysis has been included in Section 8.12.3, pages 8.12-6 to 8.12-13.		

DATA ADEQUACY WORKSHEET

Adequacy Issue: Adequate ____ Inadequate ____ Revision No. 0 Date 8/21/01

Technical Area: **Hazardous Materials Handling** Project: GWF Henrietta Peaker Project Technical Staff: ____

Project Manager: ____ Docket: ____ Technical Senior: ____

SITING REGULATIONS	INFORMATION	AFC PAGE NUMBER AND SECTION NUMBER	ADEQUATE YES OR NO	INFORMATION REQUIRED TO MAKE AFC CONFORM WITH REGULATIONS
Appendix B (g) (10) (E)	A discussion of whether a risk management plan (Health and Safety Code § 25531 et seq.) will be required, and if so, the requirements that will likely be incorporated into the plan.	Section 8.12.3.6, page 8.12-13.		
Appendix B (g) (10) (F)	A discussion of measures proposed to reduce the risk of any release of hazardous materials.	Section 8.12.2.3, pages 8.12-5 to 8.12-6.		
Appendix B (g) (10) (G)	A discussion of the fire and explosion risks associated with the project.	Section 8.12.4, pages 8.12-14 to 8.12-15.		
Appendix B (h) (1) (A)	Tables which identify laws, regulations, ordinances, standards, adopted local, regional, state, and federal land use plans, and permits applicable to the proposed project, and a discussion of the applicability of each. The table or matrix shall explicitly reference pages in the application wherein conformance, with each law or standard during both construction and operation of the facility is discussed;	Table 8.12-10.		
Appendix B (h) (1) (B)	Tables which identify each agency with jurisdiction to issue applicable permits and approvals or to enforce identified laws, regulations, standards, and adopted local, regional, state and federal land use plans, and agencies which would have permit approval or enforcement authority, but for the exclusive authority of the commission to certify sites and related facilities.	Table 8.12-10.		
Appendix B (h) (2)	A discussion of the conformity of the project with the requirements listed in subsection (h)(1)(A).	Table 8.12-10.		

DATA ADEQUACY WORKSHEET

Adequacy Issue: Adequate ____ Inadequate ____ Revision No. 0 Date 8/21/01

Technical Area: **Hazardous Materials Handling** Project: GWF Henrietta Peaker Project Technical Staff: ____

Project Manager: ____ Docket: ____ Technical Senior: ____

SITING REGULATIONS	INFORMATION	AFC PAGE NUMBER AND SECTION NUMBER	ADEQUATE YES OR NO	INFORMATION REQUIRED TO MAKE AFC CONFORM WITH REGULATIONS
Appendix B (h) (3)	The name, title, phone number, and address, if known, of an official within each agency who will serve as a contact person for the agency.	Section 8.12.8, page 8.12-22.		
Appendix B (h) (4)	A schedule indicating when permits outside the authority of the commission will be obtained and the steps the applicant has taken or plans to take to obtain such permits.	Section 8.12.8.1, page 8.12-22.		

Appendix K20-18

Waste Management

DATA ADEQUACY WORKSHEET

Adequacy Issue: Adequate ____ Inadequate ____ Revision No. 0 Date 8/21/01

Technical Area: **Waste Management** Project: GWF Henrietta Peaker Project Technical Staff: ____

Project Manager: David Stein Docket: ____ Technical Senior: ____

SITING REGULATIONS	INFORMATION	AFC PAGE NUMBER AND SECTION NUMBER	ADEQUATE YES OR NO	INFORMATION REQUIRED TO MAKE AFC CONFORM WITH REGULATIONS
Appendix B (b) (1) (C)	A detailed description of the design, construction and operation of the facilities, specifically including the power generation, cooling, water supply and treatment, waste handling and control, pollution control, fuel handling, and safety, emergency and auxiliary systems, and fuel types and fuel use scenarios; and	Section 2.0.		
Appendix B (e) (2)	A discussion of how facility closure will be accomplished in the event of premature or unexpected cessation of operations.	Section 8.13.4, pages 8.13-8 and 8.13-9.		
Appendix B (g) (1)	...provide a discussion of the existing site conditions, the expected direct, indirect and cumulative impacts due to the construction, operation and maintenance of the project, the measures proposed to mitigate adverse environmental impacts of the project, the effectiveness of the proposed measures, and any monitoring plans proposed to verify the effectiveness of the mitigation.	Sections 8.13.1, 8.13.3, and 8.13.5 to 8.13.7, pages 8.13-1, 8.13-5 to 8.13-7 and 8.13-10 to 8.13-13.		

DATA ADEQUACY WORKSHEET

Adequacy Issue: Adequate ____ Inadequate ____ Revision No. 0 Date 8/21/01

Technical Area: **Waste Management** Project: GWF Henrietta Peaker Project Technical Staff: ____

Project Manager: David Stein Docket: ____ Technical Senior: ____

SITING REGULATIONS	INFORMATION	AFC PAGE NUMBER AND SECTION NUMBER	ADEQUATE YES OR NO	INFORMATION REQUIRED TO MAKE AFC CONFORM WITH REGULATIONS
Appendix B (g) (12) (A)	A Phase I Environmental Site Assessment for the proposed power plant site using methods prescribed by the American Society for Testing and Materials (ASTM) document entitled "Standard Practice for Environmental Site Assessments: Phase 1 Environmental Site Assessment Process" (Designation: E 1527-93, May 1993), which is incorporated by reference in its entirety; or an equivalent method agreed upon by the applicant and the CEC Staff that provides similar documentation of the potential level and extent of site contamination.	Appendix F.		
Appendix B (g) (12) (B)	A description of each waste stream estimated to be generated during project construction and operation, including origin, hazardous or nonhazardous classification pursuant to Title 22, California Code of Regulations, § 66261.20 et seq., chemical composition, estimated annual weight or volume generated, and estimated frequency of generation.	Section 8.13.2, pages 8.13-1 to 8.13-5; Tables 8.13-1 and 8.13-2.		
Appendix B (g) (12) (C)	A description of all waste disposal sites which may feasibly be used for disposal of project wastes. For each site, include the name, location, classification under Title 23, California Code of Regulations, § 2530 et seq., the daily or annual permitted capacity, daily or annual amounts of waste currently being accepted, the estimated closure date and remaining capacity, and a description of any enforcement action taken by local or state agencies due to waste disposal activities at the site.	Section 8.13.3, pages 8.13-5 to 8.13-7.		

DATA ADEQUACY WORKSHEET

Adequacy Issue: Adequate ____ Inadequate ____ Revision No. 0 Date 8/21/01

Technical Area: **Waste Management** Project: GWF Henrietta Peaker Project Technical Staff: ____

Project Manager: David Stein Docket: ____ Technical Senior: ____

SITING REGULATIONS	INFORMATION	AFC PAGE NUMBER AND SECTION NUMBER	ADEQUATE YES OR NO	INFORMATION REQUIRED TO MAKE AFC CONFORM WITH REGULATIONS
Appendix B (g) (12) (D)	A description of management methods for each waste stream, including methods used to minimize waste generation, length of on- and off-site waste storage, re-use and recycling opportunities, waste treatment methods used, and use of contractors for treatment.	Section 8.13.2, pages 8.13-1 to 8.13-5.		
Appendix B (h) (1) (A)	Tables which identify laws, regulations, ordinances, standards, adopted local, regional, state, and federal land use plans, and permits applicable to the proposed project, and a discussion of the applicability of each. The table or matrix shall explicitly reference pages in the application wherein conformance, with each law or standard during both construction and operation of the facility is discussed;	Table 8.13-3.		
Appendix B (h) (1) (B)	Tables which identify each agency with jurisdiction to issue applicable permits and approvals or to enforce identified laws, regulations, standards, and adopted local, regional, state and federal land use plans, and agencies which would have permit approval or enforcement authority, but for the exclusive authority of the commission to certify sites and related facilities.	Table 8.13-3.		
Appendix B (h) (2)	A discussion of the conformity of the project with the requirements listed in subsection (h)(1)(A).	Section 8.13.9, pages 8.13-13 to 8.13-15; Table 8.13-3.		
Appendix B (h) (3)	The name, title, phone number, and address, if known, of an official within each agency who will serve as a contact person for the agency.	Section 8.13.10, page 8.13-16.		

DATA ADEQUACY WORKSHEET

Adequacy Issue: Adequate ____ Inadequate ____ Revision No. 0 Date 8/21/01

Technical Area: **Waste Management** Project: GWF Henrietta Peaker Project Technical Staff: ____

Project Manager: David Stein Docket: ____ Technical Senior: ____

SITING REGULATIONS	INFORMATION	AFC PAGE NUMBER AND SECTION NUMBER	ADEQUATE YES OR NO	INFORMATION REQUIRED TO MAKE AFC CONFORM WITH REGULATIONS
Appendix B (h) (4)	A schedule indicating when permits outside the authority of the commission will be obtained and the steps the applicant has taken or plans to take to obtain such permits.	Section 8.13.11, page 8.13-16.		

Appendix K20-19

Water Resources

DATA ADEQUACY WORKSHEET

Adequacy Issue: Adequate ____ Inadequate ____ Revision No. 0 Date 8/21/01

Technical Area: **Water Resources** Project: GWF Henrietta Peaker Project Technical Staff: ____

Project Manager: ____ Docket: ____ Technical Senior: ____

SITING REGULATIONS	INFORMATION	AFC PAGE NUMBER AND SECTION NUMBER	ADEQUATE YES OR NO	INFORMATION REQUIRED TO MAKE AFC CONFORM WITH REGULATIONS
Appendix B (g) (1)	...provide a discussion of the existing site conditions, the expected direct, indirect and cumulative impacts due to the construction, operation and maintenance of the project, the measures proposed to mitigate adverse environmental impacts of the project, the effectiveness of the proposed measures, and any monitoring plans proposed to verify the effectiveness of the mitigation.	Section 8.14.1, pages 8.14-1 through 8.14-4 (existing site conditions); Sections 8.14.2 and 8.14.3, pages 8.14-5 through 8.14-9 (impacts); Section 8.14.4, pages 8.14-9 through 8.14-10 (mitigation).		
Appendix B (g) (14) (A)	All information required by the Regional Water Quality Control Board in the region where the project will be located to apply for:	N/A		
Appendix B (g) (14) (A) (i)	Waste Discharge Requirements; and	No WDRs are required as project will not discharge any materials.		
Appendix B (g) (14) (A) (ii)	a National Pollutant Discharge Elimination System Permit.	Section 8.14.2, page 8.14-6 (coverage under general NPDES permit).		
Appendix B (g) (14) (B)	A description of the hydrologic setting of the project. The information shall describe, in writing and on maps at a scale of 1:24,000, the chemical and physical characteristics of the following water bodies that may be affected by the proposed project:	Section 8.14.1, pages 8.14-1 through 8.14-4, Figure 8.2-1.		
Appendix B (g) (14) (B) (i)	Ground water bodies and related geologic structures;	Section 8.14.1, pages 8.14-2 and 8.14-3.		

DATA ADEQUACY WORKSHEET

Adequacy Issue: Adequate ____ Inadequate ____ Revision No. 0 Date 8/21/01

Technical Area: **Water Resources** Project: GWF Henrietta Peaker Project Technical Staff: ____

Project Manager: ____ Docket: ____ Technical Senior: ____

SITING REGULATIONS	INFORMATION	AFC PAGE NUMBER AND SECTION NUMBER	ADEQUATE YES OR NO	INFORMATION REQUIRED TO MAKE AFC CONFORM WITH REGULATIONS
Appendix B (g) (14) (B) (ii)	Surface water bodies; and	Section 8.14.1, pages 8.14-3 and 8.14-4.		
Appendix B (g) (14) (B) (iii)	Water inundation zones, such as the 100-year flood plain and tsunami run-up zones.	N/A – discussed on page 8.14-6 (project site not in flood zone, Figure 8.14-3).		
Appendix B (g) (14) (C)	A description of the water to be used and discharged by the project. This information shall include:	Section 8.14.1.2, pages 8.14-4 through 8.14-10.		
Appendix B (g) (14) (C) (i)	Source of the water and the rationale for its selection, and if fresh water is to be used for power plant cooling purposes, a discussion of all other potential sources and an explanation why these sources were not feasible;	Section 8.14.2, pages 8.14-8 and 8.14-9.		
Appendix B (g) (14) (C) (ii)	The physical and chemical characteristics of the source and discharge water;	Table 8.14-2 for source water; information for discharge water is discussed in Section 8.13, Waste Management.		
Appendix B (g) (14) (C) (iii)	Average and maximum daily and annual water demand and waste water discharge for both the construction and operation phases of the project; and	Section 8.14.1.2, page 8.14-4.		
Appendix B (g) (14) (C) (iv)	A description of all facilities to be used in water conveyance, treatment, and discharge. Include a water mass balance diagram.	Section 8.14.2 and 8.14.3, pages 8.14-4 through 8.14-9; Figures 8.14-1 and 8.14-2.		

DATA ADEQUACY WORKSHEET

Adequacy Issue: Adequate ____ Inadequate ____ Revision No. 0 Date 8/21/01

Technical Area: **Water Resources** Project: GWF Henrietta Peaker Project Technical Staff: ____

Project Manager: ____ Docket: ____ Technical Senior: ____

SITING REGULATIONS	INFORMATION	AFC PAGE NUMBER AND SECTION NUMBER	ADEQUATE YES OR NO	INFORMATION REQUIRED TO MAKE AFC CONFORM WITH REGULATIONS
Appendix B (g) (14) (D)	A description of pre-, and post-construction runoff and drainage patterns, including:	Section 8.14.2, pages 8.14-6 and 8.14-7.		
Appendix B (g) (14) (D) (i)	Precipitation and storm runoff patterns; and	Section 8.14.1, pages 8.14-1 to 8.14-2 (precipitation); Section 8.14.2, pages 8.14-6 to 8.14-7 (runoff).		
Appendix B (g) (14) (D) (ii)	Drainage facilities and design criteria.	Section 8.14.2, pages 8.14-6 to 8.14-7.		
Appendix B (g) (14) (E)	An assessment of the effects of the proposed project on water resources. This discussion shall include:	Section 8.14.2, pages 8.14-5 through 8.14-10.		
Appendix B (g) (14) (E) (i)	The effects of project demand on the water supply and other users of this source;	Sections 8.4.2 and 8.4.3, pages 8.14-5 to 8.14-9.		
Appendix B (g) (14) (E) (ii)	The effects of construction activities and plant operation on water quality; and	Section 8.14.2, pages 8.14-5 to 8.14-9.		
Appendix B (g) (14) (iii)	The effects of the project on the 100-year flood plain or other water inundation zones.	Section 8.14.2, page 8.14-6.		

DATA ADEQUACY WORKSHEET

Adequacy Issue: Adequate ____ Inadequate ____ Revision No. 0 Date 8/21/01

Technical Area: **Water Resources** Project: GWF Henrietta Peaker Project Technical Staff: ____

Project Manager: ____ Docket: ____ Technical Senior: ____

SITING REGULATIONS	INFORMATION	AFC PAGE NUMBER AND SECTION NUMBER	ADEQUATE YES OR NO	INFORMATION REQUIRED TO MAKE AFC CONFORM WITH REGULATIONS
Appendix B (h) (1) (A)	Tables which identify laws, regulations, ordinances, standards, adopted local, regional, state, and federal land use plans, and permits applicable to the proposed project, and a discussion of the applicability of each. The table or matrix shall explicitly reference pages in the application wherein conformance, with each law or standard during both construction and operation of the facility is discussed;	Table 8.4-3.		
Appendix B (h) (1) (B)	Tables which identify each agency with jurisdiction to issue applicable permits and approvals or to enforce identified laws, regulations, standards, and adopted local, regional, state and federal land use plans, and agencies which would have permit approval or enforcement authority, but for the exclusive authority of the commission to certify sites and related facilities.	Section 8.14.9, page 8.14-14.		
Appendix B (h) (2)	A discussion of the conformity of the project with the requirements listed in subsection (h)(1)(A).	Section 8.14.5, pages 8.14-10 through 8.14-13.		
Appendix B (h) (3)	The name, title, phone number, and address, if known, of an official within each agency who will serve as a contact person for the agency.	Section 8.14.9, page 8.14-14.		
Appendix B (h) (4)	A schedule indicating when permits outside the authority of the commission will be obtained and the steps the applicant has taken or plans to take to obtain such permits.	Section 8.14.7, page 8.14-13.		

Appendix K20-20

Geologic Resources and Hazards

DATA ADEQUACY WORKSHEET

Adequacy Issue: Adequate ____ Inadequate ____ Revision No. 0 Date 8/21/01

Technical Area: **Geological Hazards** Project: GWF Henrietta Technical Staff: ____

Project Manager: David Stein Docket: ____ Technical Senior: ____

SITING REGULATIONS	INFORMATION	AFC PAGE NUMBER AND SECTION NUMBER	ADEQUATE YES OR NO	INFORMATION REQUIRED TO MAKE AFC CONFORM WITH REGULATIONS
Appendix B (g) (1)	...provide a discussion of the existing site conditions, the expected direct, indirect and cumulative impacts due to the construction, operation and maintenance of the project, the measures proposed to mitigate adverse environmental impacts of the project, the effectiveness of the proposed measures, and any monitoring plans proposed to verify the effectiveness of the mitigation.	Sections 8.15.2 through Section 8.15.4; pages 8.15-10 through 8.15-14.		
Appendix B (g) (17) (A)	A summary of the geology, seismicity, and geologic resources of the project site and related facilities;	Section 8.15.1, pages 8.15-1 to 8.15-10.		
Appendix B (g) (17) (B)	A map at a scale of 1:24,000 and description of all recognized stratigraphic units, geologic structures, and geomorphic features within 2 miles of the project site. Include an analysis of the likelihood of ground rupture, seismic shaking, mass wasting and slope stability, liquefaction, subsidence, and expansion or collapse of soil structures.	Figures 8.15.1 to 8.15.5; Section 8.15.2, pages 8.15-10 to 8.15-14.		
Appendix B (g) (17) (C)	A map and description of geologic resources of recreational, commercial, or scientific value which may be affected by the project. Include a discussion of the techniques used to identify and evaluate these resources.	Figure 8.15-5; Section 8.15.1.4, page 8.15-9.		

DATA ADEQUACY WORKSHEET

Adequacy Issue: Adequate ____ Inadequate ____ Revision No. 0 Date 8/21/01

Technical Area: **Geological Hazards** Project: GWF Henrietta Technical Staff: ____

Project Manager: David Stein Docket: ____ Technical Senior: ____

SITING REGULATIONS	INFORMATION	AFC PAGE NUMBER AND SECTION NUMBER	ADEQUATE YES OR NO	INFORMATION REQUIRED TO MAKE AFC CONFORM WITH REGULATIONS
Appendix B (h) (1) (A)	Tables which identify laws, regulations, ordinances, standards, adopted local, regional, state, and federal land use plans, and permits applicable to the proposed project, and a discussion of the applicability of each. The table or matrix shall explicitly reference pages in the application wherein conformance, with each law or standard during both construction and operation of the facility is discussed;	Table 8.15-2.		
Appendix B (h) (1) (B)	Tables which identify each agency with jurisdiction to issue applicable permits and approvals or to enforce identified laws, regulations, standards, and adopted local, regional, state and federal land use plans, and agencies which would have permit approval or enforcement authority, but for the exclusive authority of the commission to certify sites and related facilities.	Table 8.15-2.		
Appendix B (h) (2)	A discussion of the conformity of the project with the requirements listed in subsection (h)(1)(A).	Sections 8.15.5 and 8.15.6, pages 8.15-14 and 8.15.15.		
Appendix B (h) (3)	The name, title, phone number, and address, if known, of an official within each agency who will serve as a contact person for the agency.	Section 8.15.7, page 8.15-15.		

Appendix K20-21

Paleontological Resources

Adequacy Issue: Adequate ____ Inadequate ____

DATA ADEQUACY WORKSHEET

Revision No. 0 Date 8/21/01

Technical Area: **Paleontological Resources** Project: GWF Henrietta Peaker Project Technical Staff: ____

Project Manager: ____ Docket: ____ Technical Senior: ____

SITING REGULATIONS	INFORMATION	AFC PAGE NUMBER AND SECTION NUMBER	ADEQUATE YES OR NO	INFORMATION REQUIRED TO MAKE AFC CONFORM WITH REGULATIONS
Appendix B (g) (1)	...provide a discussion of the existing site conditions, the expected direct, indirect and cumulative impacts due to the construction, operation and maintenance of the project, the measures proposed to mitigate adverse environmental impacts of the project, the effectiveness of the proposed measures, and any monitoring plans proposed to verify the effectiveness of the mitigation.	Sections 8.16.1 through 8.16.4, Page 8.16-2 through 8.16-12; Appendix L.		
Appendix B (g) (16) (A)	Identification of the physiographic province and a brief summary of the geologic setting, formations, and stratigraphy of the project area. The area may vary depending on the depositional history of the area.	Section 8.16.1.1 through 8.16.1.3, Page 8.16-2 through 8.16-6; Appendix L.		
Appendix B (g) (16) (B)	A discussion of the sensitivity of the project area described in subsection (g)(16)(A) and the presence and significance of any known paleontologic localities or other paleontologic resources within or adjacent to the project.	Pages 8.16-6 through 8.16-8; Table 8.16-2, page 8.16-17; Appendix L.		
Appendix B (g) (16) (C)	A summary of all literature searches and field surveys used to provide information about paleontologic resources in the project area described in subsection (g)(16)(A). Identify the dates of the surveys, methods used in completing the surveys, and the names and qualifications of the individuals conducting the surveys.	Section 8.16.1, Pages 8.16-3 and 8.16-4, 8.16-7; Appendix L.		

Adequacy Issue: Adequate ____ Inadequate ____

DATA ADEQUACY WORKSHEET

Revision No. 0 Date 8/21/01

Technical Area: **Paleontological Resources** Project: GWF Henrietta Peaker Project Technical Staff: ____

Project Manager: ____ Docket: ____ Technical Senior: ____

SITING REGULATIONS	INFORMATION	AFC PAGE NUMBER AND SECTION NUMBER	ADEQUATE YES OR NO	INFORMATION REQUIRED TO MAKE AFC CONFORM WITH REGULATIONS
Appendix B (g) (16) (D)	Information on the specific location of known paleontologic resources, survey reports, locality records, and maps at a scale of 1:24,000, shall be included in a separate appendix to the Application and submitted to the Commission under a request for confidentiality, pursuant to Title 20, California Code of Regulations, § 2501 et seq.	Appendix L.		
Appendix B (g) (16) (E)	A discussion of any educational programs proposed to enhance awareness of potential impacts to paleontological resources by employees, measures proposed for mitigation of impacts to known paleontologic resources, and a set of contingency measures for mitigation of potential impacts to currently unknown paleontologic resources.	Section 8.16.3, Pages 8.16-10 and 8.16-11; Appendix L.		
Appendix B (h) (1) (A)	Tables which identify laws, regulations, ordinances, standards, adopted local, regional, state, and federal land use plans, and permits applicable to the proposed project, and a discussion of the applicability of each. The table or matrix shall explicitly reference pages in the application wherein conformance, with each law or standard during both construction and operation of the facility is discussed;	Table 8.16-4		
Appendix B (h) (1) (B)	Tables which identify each agency with jurisdiction to issue applicable permits and approvals or to enforce identified laws, regulations, standards, and adopted local, regional, state and federal land use plans, and agencies which would have permit approval or enforcement authority, but for the exclusive authority of the commission to certify sites and related facilities.	Section 8.16.5, Pages 8.16-12 through 8.16-14; Table 8.16-4.		
Appendix B (h) (2)	A discussion of the conformity of the project with the requirements listed in subsection (h)(1)(A).	Section 8.16.5, Pages 8.16-12 through 8.16-14.		

Adequacy Issue: Adequate ____ Inadequate ____

DATA ADEQUACY WORKSHEET

Revision No. 0 Date 8/21/01

Technical Area: **Paleontological Resources** Project: GWF Henrietta Peaker Project Technical Staff: ____

Project Manager: ____ Docket: ____ Technical Senior: ____

SITING REGULATIONS	INFORMATION	AFC PAGE NUMBER AND SECTION NUMBER	ADEQUATE YES OR NO	INFORMATION REQUIRED TO MAKE AFC CONFORM WITH REGULATIONS
Appendix B (h) (3)	The name, title, phone number, and address, if known, of an official within each agency who will serve as a contact person for the agency.	Section 8.16.5.5, Page 8.16-14.		
Appendix B (h) (4)	A schedule indicating when permits outside the authority of the commission will be obtained and the steps the applicant has taken or plans to take to obtain such permits.	Section 8.15.5.6, Page 8.16-14.		

Appendix L

Paleontological Resources

Note: This appendix has been submitted under a separate cover to the CEC with an application to request confidentiality pursuant to Title 20, California Code of Regulations, Section 2501 et seq.

Appendix M

List of Contributors

LIST OF CONTRIBUTORS

URS

Team Leader – David Stein
Assistant Project Manager – Joe Morgan, Jim Adams
Document Production – Reinhold Dillon, Loralie Froman, Alan Lyons, Angela Liang, Jay Plano
Graphics – Vivian Gaddie, Fumiko Goss, Kenneth Hopper, Maureen Leddy, Suzanne Loadholt, Christina Somera, Lucy Trumbull, Cheri Velzy, Doug Wright

Jim Adams
Donny Allison
Krista Bartsch
Robert Carnachan
Noel Casil
Victor Chaidez
Jay Clare
Rachael Egherman
Raul Farre
Loralie Froman
Vivian Gaddie
Fumiko Goss
Dan Guido
Christopher Gurr
Vicki Hoffman
James D. Hollingshead
Kenneth Hopper
Jeffery Hruby
John Koehler, Ph.D.
Maureen Leddy
Angela Liang, Ph.D.
Jennifer Low
Alan Lyons
Katie McKinstry
Joe Morgan
Laura Perez
Jay Plano
Scott Robinson
Robyn Schapiro-Gerth
Christina Somera
David Stein
Cheri Velzy
Amy Walston
Ivan Wong
Doug Wright

GWF Power Systems Company, Inc.

Mark Kehoe
Paul Kieffer
Hal Moore
Doug Wheeler

Grattan & Galati

Scott Galati, Esq.
John Grattan, Esq.

Black and Veatch

Jacques Bellassai
Jim Butcher
Chris Campbell
Greg Germain
Arif Khan
Jim Rammell
Nazar Vakil

Bill Vanherweg

Bill Vanherweg

Lawler & Associates

David Lawler

Technical Authors

Section 1.0 - Executive Summary
Jim Adams

Section 2.0 - Project Description
Joe Morgan, David Stein, Mark Kehoe, Paul Kieffer, Hal Moore, Doug Wheeler, Jacques Bellassai, Jim Butcher, Chris Campbell, Greg Germain, Arif Khan, Jim Rammell, Nazar Vakil, John Grattan, Esq., Scott Galati, Esq.

Section 3.0 - Demand Conformance
Jim Adams

Section 4.0 - Facility Closure
Jim Adams

Section 5.0 - Alternatives
David Stein, Doug Wheeler, John Grattan, Esq.

Section 6.0 - Electric Transmission
Jacques Bellassai, Jim Butcher, Chris Campbell, Greg Germain, Arif Khan, Jim Rammell, Nazar Vakil

Section 7.0 - Natural Gas
Jim Adams

Section 8.1 - Air Quality
Dan Guido, Vicki Hoffman, Jeffery Hruby, John Koehler

Section 8.2 - Biological Resources
Bill Vanherweg

Section 8.3 - Cultural Resources
Rachael Egherman

Section 8.4 - Land Use
Jim Adams, Scott Robinson

Section 8.5 - Noise
Jacques Bellassai, Jim Butcher, Chris Campbell, Greg Germain, Arif Khan, Jim Rammell, Nazar Vakil

Section 8.6 - Public Health
Dan Guido, John Koehler

Section 8.7 - Worker Health and Safety
Angela Liang, James D. Hollingshead

Section 8.8 - Socioeconomics
Katie McKinstry

Section 8.9 - Agriculture and Soils
Jennifer Low

Section 8.10 - Traffic and Transportation
Donny Allison, Krista Bartsch, Noel Casil, Victor Chaidez, Amy Walston

Section 8.11 - Visual Resources
David Stein

Section 8.12 - Hazardous Materials Handling
Joe Morgan, John Koehler

Section 8.13 - Waste Management
Angela Liang, Joe Morgan

Section 8.14 - Water Resources
Rob Carnachan, Raul Farre

Section 8.15 - Geologic Resources and Hazards
Laura Perez, Robyn Schapiro-Gerth, Ivan Wong

Section 8.16 - Paleontologic Resources
David Lawler, Rachael Egherman

Section 9.0 - Engineering
David Stein, Jacques Bellassai, Jim Butcher, Chris Campbell, Greg Germain, Arif Khan, Jim Rammell, Nazar Vakil