8.1 Air Quality

8.1.1 Introduction

Subsection 8.1 describes the existing air quality setting, maximum potential impacts from project construction and operation, and mitigation measures to reduce these impacts below thresholds of significance. The project will use fuel-efficient simple-cycle generation technology with secondary air pollution control systems to generate electricity, which would minimize the amount of fuel needed, emissions of criteria pollutants, and potential impacts on ambient air quality. Additional project design features that would minimize adverse air quality impacts include the following:

- Using clean-burning natural gas for fuel
- Applying water injection capability to minimize oxides of nitrogen (NO_x) emissions formed during combustion
- Operating with a selective catalytic reduction system (SCR) to minimize NO_x emissions following combustion
- Operating with an oxidation catalyst to reduce carbon monoxide (CO) and volatile organic compound (VOC) emissions
- Installing appropriately-sized stacks to reduce ground-level concentrations of exhaust pollutants
- Installing a continuous emissions monitoring system (CEMS) for NO_x, CO and oxygen (O_2) to assist in maintaining and documenting compliance with emissions limits

Subsection 8.1.2 presents the air quality setting, including geography, topography, climate, and meteorology. Subsection 8.1.3 provides an overview of the ambient air quality standards. Subsection 8.1.4 discusses existing air quality in the vicinity of the project and describes each of the criteria pollutants. The laws, ordinances, regulations, and standards (LORS) that can affect the project and project conformance, as well as the air quality regulatory agencies relevant to the project are identified in Subsection 8.1.5. The environmental analysis of emissions from the construction and operation of the project, as well as, the procedures used in assessing facility emissions and air quality impacts are presented in Subsection 8.1.6. The results of the health risk assessment are also summarized in Subsection 8.1.6. Subsection 8.1.7 discusses compliance with LORS applicable to the project. An analysis of cumulative impacts is presented in Subsection 8.1.8. Mitigation for project air quality impacts is discussed in Subsection 8.1.9. A list of references used in preparing the subsection is provided in Subsection 8.1.10.

Potential public health risks posed by emissions of non-criteria pollutants are also addressed in more detail in Subsection 8.6, Public Health.

8.1.2 Air Quality Setting

8.1.2.1 Geography and Topography

The proposed AES Highgrove Project site is located in an industrially zoned area of the City of Grand Terrace, San Bernardino County. The site is located at 12700 Taylor Street, north of the intersection of Taylor and Main streets. The new facility will be located on the property of a former oil-fired power plant owned by the Applicant. The project site is relatively flat; at an elevation of approximately 940 feet above sea level. La Loma Hills are located approximately 0.5 mile to the west and rise to an elevation of approximately 1,390 feet. Blue Mountain lies approximately 1.5 miles to the east of the project site, rising to an elevation of 1,500 feet above sea level. The Box Springs Mountains are 1.7 miles to the southeast of the project site and rise to a height of 2,843 feet above sea level.

8.1.2.2 Climate and Meteorology

The semi-permanent high-pressure zone of the eastern Pacific dominates the climate of southern California including the City of Grand Terrace, where the Highgrove Project will be located. Seasonally, the high-pressure zone oscillates in a north-south direction. During the summer, the high-pressure zone moves northward over the southwest United States, including southern California, resulting in increased subsidence and clear skies inland, while the coastal sections of southern California experience increased coastal stratus and fog caused by the relatively cool ocean surface temperatures. Frequent inversions, which are caused by subsidence of air that warms when it is compressed over relatively cool, moist marine air, occur during the summer.

In winter, the high-pressure zone moves south of southern California, which allows storms originating in the Gulf of Alaska and the mid-latitudes of the Pacific Ocean to impact southern California, bringing rain and wind. The majority of the annual precipitation falls between the months of November and April.

The climate of the South Coast Air Basin, including the City of Grand Terrace, is influenced primarily by terrain and geographical location. The relative close proximity to the ocean tends to moderate air temperatures, especially near the coast. For example, daytime summer temperatures near Los Angeles average about 75 degrees Fahrenheit (°F) while cities a relatively short distance to the east, such as Grand Terrace, record average summer temperatures well above 90°F. Daytime winter temperatures average about 65°F in both locations (WRCC, 2006). A climate summary, including average annual rainfall, for the nearby city of Riverside, is included in Appendix 8.1C (Table 8.1C-9a and 9b).

A majority of the rainfall in the Grand Terrace area falls during winter and spring as frontal storms move from the northwest to southeast. Over 70 percent of the average annual rainfall of about 10 inches occurs in the winter months (WRCC, 2006). Monsoon moisture and remnants from Eastern Pacific hurricanes occasionally produce showers in the Los Angeles Basin during the summer. Rainfall amounts usually tend to be light and isolated during these events.

Wind speed and wind direction patterns in the Los Angeles Basin are dominated by diurnal cycles driven by the differences in temperature between the land and the ocean, as well as the mountainous terrain surrounding the basin. Synoptically, frontal storms and Santa Ana

flow episodes frequently tend to break the diurnal onshore/offshore wind pattern cycle during the period of September through March. Overall, the basin experiences light, average wind speeds with little seasonal variation. The South Coast Air Quality Management District's (SCAQMD) 1981 Riverside meteorological data file for dispersion modeling was used to represent typical winds at the Highgrove Project site. This data set was proposed in an air quality modeling protocol for the project that was submitted to the California Energy Commission and SCAQMD. Figures 8.1-1a to 8.1-1e (figures can be found at the end of this subsection) present the annual and quarterly wind rose plots for the Riverside monitoring station. As indicated by the plot in Figure 8.1-1a, the winds are predominantly out of the west, northwest.

8.1.3 Overview of Air Quality Standards

The U.S. Environmental Protection Agency (USEPA) has established national ambient air quality standards (NAAQS) for the following seven pollutants, termed "criteria pollutants": ozone, nitrogen dioxide (NO_2), CO, sulfur dioxide (SO_2), particulate matter with aerodynamic diameter less than or equal to 10 microns (PM_{10}), particulate matter with aerodynamic diameter less than or equal to 2.5 microns ($PM_{2.5}$) and airborne lead (Pb). The federal Clean Air Act (CAA) requires the USEPA to designate areas (counties) as attainment or nonattainment with respect to each criteria pollutant, depending on whether the areas meet the NAAQS. An area that is designated nonattainment means the area is not meeting the NAAQS and is subject to planning requirements to attain the standard.

In addition to the seven pollutants listed above, the California Air Resources Board (CARB) has also established state standards for visibility-reducing particles, sulfates, hydrogen sulfide, and vinyl chloride. Similar to the USEPA, CARB designates counties in California as attainment or nonattainment with respect to the California ambient air quality standards (CAAQS). The state standards were designed to protect the most sensitive members of the population, such as children, the elderly, and people who suffer from lung or heart diseases.

Both state and federal air quality standards were based on two variables: maximum concentration and an averaging time over which the concentration would be measured. Maximum concentrations were based on levels which may have an adverse effect to human health. The averaging times were based on whether the damage caused by the pollutant would occur during exposures to a high concentration for a short time (e.g., 1 hour), or to a relatively lower average concentration over a longer period (8 hours, 24 hours, or 1 month). For some pollutants, there is more than one air quality standard, reflecting both short-term and long-term effects. Table 8.1-1 presents the NAAQS and CAAQS.

TABLE 8.1-1
Ambient Air Quality Standards

Pollutant	Averaging Time	California	National
Ozone	1 hour	0.09 ppm (180 μg/m^3)	0.12 ppm[a]
	8 hours	0.07 ppm (137 μg/m^3)	0.08 ppm (157 μg/m^3) (3-year average of 4th-highest daily maximum 8-hour concentrations)
CO	8 hours	9.0 ppm (10 mg/m^3)	9 ppm (10 mg/m^3)
	1 hour	20 ppm (23 mg/m^3)	35 ppm (40 mg/m^3)
NO_2	Annual arithmetic mean	-	0.053 ppm (100 μg/m^3)
	1 hour	0.25 ppm (655 μg/m^3)	-
SO_2	Annual arithmetic mean	-	0.03 ppm (80 μg/m^3)
	24 hours	0.04 ppm (105 μg/m^3)	0.14 ppm (365 μg/m^3)
	3 hours	-	0.5 ppm[b] (1300 μg/m^3) (Secondary standard)
	1 hour	0.25 ppm (470 μg/m^3)	-
PM_{10}	24 hours	50 μg/m^3	150 μg/m^3
	Annual arithmetic mean	20 μg/m^3	50 μg/m^3 (3-year average of the weighted annual mean concentration)
$PM_{2.5}$	Annual arithmetic mean	12 μg/m^3	15 μg/m^3 (3-year average of the weighted annual mean concentrations)
	24 hours	-	65 μg/m^3 (3-year average of 98th percentile of 24-hour concentrations)
Sulfates	24 hours	25 μg/m^3	-
Lead	30 day average	1.5 μg/m^3	-
	Calendar quarter	-	1.5 μg/m^3
Hydrogen sulfide	1 hour	0.03 ppm (42 μg/m^3)	-
Vinyl chloride	24 hours	0.010 ppm (26 μg/m^3)	-
Visibility-reducing particles	8 hours (10am to 6pm PST)	In sufficient amount to produce an extinction coefficient of 0.23 per kilometer due to particles when the relative humidity is less than 70 percent.	-

[a] As of June 15, 2005 the federal 1-hour ozone standard is no longer used, except in Early Action Compact (EAC) areas.

[b] This is a national secondary standard, which is designed to protect public welfare.

ppm = parts per million

μg/m^3 = micrograms per cubic meter

On June 15, 2005, the federal 1-hour ozone standard was revoked for all areas except the 8-hour ozone nonattainment Early Action Compact areas (these areas do not yet have an effective date for their 8-hour designations). This means that the previous 1-hour federal standard of 0.12 ppm was replaced by the 8-hour average standard of 0.08 ppm.

On December 20, 2005, EPA proposed changes to the federal particulate matter standards. However, these standards are in the rule-making process and are not expected to be promulgated until 2008 or later. On April 14, 2006, the California Office of Environmental Health Hazard Assessment (OEHHA) and CARB staff proposed to lower the existing 1-hour average standard for NO_2 to 0.18 ppm and establish a new annual average standard for NO_2 at 0.030 ppm. Public comments on the proposal are being accepted through May 31, 2006 with the CARB Board hearing on the proposal expected at the end of 2006.

8.1.4 Existing Air Quality

The reported ambient air quality data were obtained from data published by SCAQMD, CARB (ADAM website), and the USEPA (AIRS website). The three CARB-certified monitoring stations located closest to the project site are: (1) the Metropolitan Riverside County 1 monitoring station located at 5888 Mission Boulevard, which is less than 8 kilometers (km) south-west of the project site, (2) the Metropolitan Riverside County 2 monitoring station located at 7002 Magnolia Avenue, which is approximately 10 km south-west of the project site, and (3) the Central San Bernardino Valley 2 located at 24302 East 4th Street, which is approximately 11 km north-east from the project site. Ambient concentrations of ozone, NO_2, CO, SO_2, PM_{10} and $PM_{2.5}$ are recorded at the 5888 Mission Boulevard and East 4th Street monitoring stations. The 7002 Magnolia Avenue station only monitors CO and $PM_{2.5}$.

The locations of the monitoring stations, relative to the proposed project, are such that ambient concentrations recorded at the 5888 Mission Boulevard monitoring station were assumed to represent area-wide ambient conditions rather than the localized impacts of any particular facility. Due to its proximity, the data from the 5888 Mission Boulevard monitoring station were assumed to best represent the background ambient air quality for the project. Consequently, data from this monitoring station were used to estimate background concentrations.

8.1.4.1 Ozone

Ozone is a photochemical oxidant that is formed when volatile organic compounds (VOCs) and NO_x react in the presence of ultraviolet sunlight (SCAQMD, 2001). The South Coast Air Basin is designated as a nonattainment area for ozone by both the USEPA and CARB.

Table 8.1-2 shows the annual maximum hourly ozone levels recorded at the 5888 Mission Boulevard monitoring station during the period 2002 to 2004, as well as the number of days in which the state and federal standards were exceeded. Data from the 5888 Mission Boulevard station shows that over the 3-year period, ozone concentrations have been consistently above both state and federal standards.

TABLE 8.1-2
Ozone Levels at 5888 Mission Blvd, Riverside, 2002-2004

	2002	2003	2004
Highest 1-hour Average (ppm)	0.155	0.169	0.141
Highest 1-hour Average (μg/m^3)	304.3	331.8	276.8
Highest 8-hour Average (ppm)	0.124	0.14	0.117
Highest 8-hour Average (μg/m^3)	243.4	274.8	229.7
Number of Days Exceeding			
State Standard (180 μg/m^3, 1-hour)	56	80	59
State Standard (137 μg/m^3, 8-hour)	NA	NA	75
Federal Standard (157 μg/m^3, 8-hour)	38	62	35
Federal Standard (225.8 μg/m^3, 1-hour)	12	18	8

Source: South Coast Air Quality Management District by Year: http://www.aqmd.gov/smog/historicaldata.htm.

8.1.4.2 Nitrogen Dioxide

NO_2 is a byproduct of combustion sources such as motor vehicle exhaust or stationary combustion sources (SCAQMD, 2001). The principle form of nitrogen oxide produced by combustion is nitric oxide (NO), but NO reacts quickly to form NO_2, creating a mixture of NO and NO_2 commonly called NO_x (SCAQMD, 2001). The South Coast Air Basin is designated attainment status for NO_2 by both the USEPA and CARB. As previously noted, CARB and OEHHA staff recently proposed lowering the state's 1-hour NO_2 standard and establishing an annual NO_2 standard. The CARB's board is tentatively scheduled to conduct hearings on this issue in Fall 2006.

Table 8.1-3 shows the maximum 1-hour and annual-average NO_2 levels recorded at the 5888 Mission Boulevard monitoring station between 2002 and 2004. Ambient NO_2 concentrations measured at this monitoring station did not violate either the state 1-hour standard or the NAAQS (0.053 ppm, annual average). Over the 3-year period (2002 to 2004), the measured concentrations remained well below the state standard (0.25 ppm) and indicated a downward trend in the annual average concentration.

TABLE 8.1-3
Nitrogen Dioxide Levels at 5888 Mission Blvd, Riverside, 2002-2004

	2002	2003	2004
Highest 1-hour Average (ppm)	0.10	0.09	0.09
Highest 1-hour Average (μg/m^3)	188.1	169.3	169.3
Annual Average (ppm)	0.0237	0.0217	0.0172
Annual Average (μg/m^3)	44.6	40.8	32.4
Number of Days Exceeding			
State Standard (470 μg/m^3, 1-hour)	0	0	0

Sources: SCAQMD Historical Air Quality Data by Year: http://www.aqmd.gov/smog/historicaldata.htm
CARB: http://www.arb.ca.gov/adam/welcome.html.

8.1.4.3 Carbon Monoxide

CO is a colorless, odorless gas formed by incomplete combustion of fossil fuels (SCAQMD, 2001). Industrial sources typically contribute less than 10 percent of ambient CO levels. Peak CO levels occur typically during winter months, due to a combination of higher emission rates and stagnant weather conditions. The South Coast Air Basin is designated attainment status for the state CO standards by CARB. Since there have been no recorded violations of the CO NAAQS over the required 3-year duration, in March 2005, the SCAQMD requested to have USEPA redesignate the basin as CO attainment. Action on the redesignation request is expected by the end of 2006.

Table 8.1-4 shows the California and federal air quality standards for CO, and the maximum 1- and 8-hour average levels recorded at the 5888 Mission Boulevard monitoring station during the period 2002 to 2004.

TABLE 8.1-4
Carbon Monoxide Levels at 5888 Mission Blvd Station, Riverside, 2002-2004

	2002	2003	2004
Highest 8-hour average (ppm)	3.0	3.7	3.0
Highest 8-hour average (mg/m^3)	3.436	4.237	3.436
Highest 1-hour average (ppm)	8	5	4
Highest 1-hour average (mg/m^3)	9.162	5.726	4.581
Number of Days Exceeding			
State Standard (10 mg/m^3, 8-hr)	0	0	0
State Standard (23 mg/m^3, 1-hr)	0	0	0
Federal Standard (10 mg/m^3, 8-hr)	0	0	0
Federal Standard (40 mg/m^3, 1-hr)	0	0	0

Sources: SCAQMD Historical Air Quality Data by Year: http://www.aqmd.gov/smog/historicaldata.htm
USEPA AIRS: http://www.epa.gov/air/data/monvals.html.

8.1.4.4 Sulfur Dioxide

Sulfur dioxide is a colorless, pungent gas formed primarily by the combustion of sulfur-containing fossil fuels (SCAQMD, 2001). The South Coast Air Basin is designated attainment status for SO_2 by both the USEPA and CARB.

Table 8.1-5 presents the maximum SO_2 levels recorded at the 5888 Mission Boulevard Station in Riverside. During the period shown, the annual average SO_2 concentrations have been well under the federal standard (80 µg/m^3). The state 24-hour average standard (105 µg/m^3) has not been exceeded at this location in the 3-year period, 2002 to 2004. In the past 10 years, maximum 1-hour SO_2 levels have typically been about one-tenth of the state standard (470 µg/m^3).

TABLE 8.1-5
Sulfur Dioxide Levels at 5888 Mission Blvd, Riverside 2002-2004

	2002	2003	2004
Highest 1-hour average (ppm)	0.02	0.02	0.02
Highest 1-hour average (μg/m^3)	52.4	52.4	52.4
Highest 3-hour average (ppm)	0.010	0.015	0.016
Highest 3-hour average (μg/m^3)	26.2	39.3	41.9
Highest 24-hour average (ppm)	0.002	0.012	0.015
Highest 24-hour average (μg/m^3)	5.2	31.4	39.3
Annual Average, All Hours (ppm)	0.001	0.003	0.004
Annual Average, All Hours (μg/m^3)	2.6	7.9	10.5
Number of Days Exceeding			
State Standard (655 μg/m^3, 1-hour)	0*	0*	0*
State Standard (105 μg/m^3, 24-hour)	0	0	0
Federal Standard (1300 μg/m^3, 3-hour)	0	0	0
Federal Standard (365 μg/m^3, 24-hours)	0	0	0

Sources: SCAQMD Historical Air Quality Data by Year: http://www.aqmd.gov/smog/historicaldata.htm
USEPA AIRS: http://www.epa.gov/air/data/monvals.html
CARB: http://www.arb.ca.gov/adam/welcome.html.

* Number of days exceeding the 1-hour state standard were not available via the SCAQMD, CARB, or AIRS databases. However, because the maximum 1-hour SO_2 concentration (52.4 μg/m^3) is less than 655 μg/m^3, it was assumed the number of hours exceeding 655 μg/m^3 was zero.

8.1.4.5 Particulate Sulfates

Particulate sulfates are the product of further oxidation of SO_2. The South Coast Air Basin is designated attainment status for particulate sulfates by the CARB. A federal standard has not been established for particulate sulfates.

Table 8.1-6 shows the maximum 24-hour average sulfate levels recorded at the 5888 Mission Boulevard monitoring station from 2002 through 2004. The maximum 24-hour average sulfates over this period show that the maximum levels have declined to about 50 percent of the state standard.

TABLE 8.1-6
Particulate Sulfate Levels at 5888 Mission Blvd., 2002-2004 (μg/m3)

	2002	2003	2004
Maximum 24-hour average	11.7	10.1	9.8
Number of Days Exceeding			
State Standard (25 μg/m^3, 24-hour)	0	0	0

Source: SCAQMD Historical Air Quality Data by Year: http://www.aqmd.gov/smog/historicaldata.htm.

8.1.4.6 Fine Particulates (PM_{10} and $PM_{2.5}$)

PM_{10} arises from sources such as road dust, diesel soot, combustion products, tire and brake abrasions, construction activities, and fires (SCAQMD, 2001). $PM_{2.5}$ consists mostly of products from the atmospheric reaction of NO_x and SO_2 with ammonia, as well as secondary organics, and finer dust particles (SCAQMD, 2001). The South Coast Air Basin is designated a nonattainment area for both federal and state PM_{10} and $PM_{2.5}$ standards by the USEPA and CARB.

Table 8.1-7 shows the maximum 24-hour and annual concentration of PM_{10} recorded at the 5888 Mission Boulevard monitoring station during 2002 to 2004. The maximum 24-hour PM_{10} levels exceed the state standard several times per year, but the federal 24-hour standard has only been exceeded twice over this time period.

TABLE 8.1-7
PM_{10} Levels at 5888 Mission Blvd. Station, Riverside, 2002-2004 (µg/m³)

	2002	2003	2004
Highest 24-hour average	130	164	137
Annual Arithmetic Mean (Federal Standard = 50 µg/m³)	58.5	56.9	55.5
Number of Days Exceeding[a]			
State Standard (50 µg/m³, 24-hour)	81	62	72
Federal Standard (150 µg/m³, 24-hour)	0	2	0
Maximum Expected Violation Days[a,b]			
State Standard (50 µg/m³, 24-hour)	228.1	201.4	210.1
Federal Standard (150 µg/m³, 24-hour)	0	6.2	0

[a] Based on readings every three days.

[b] Based on multiplying exceedance readings by a factor of three due to readings taken only once per three days. The actual number of violation days is expected to be less since some of the days readings not taken will be within the standards.

Sources: SCAQMD Historical Air Quality Data by Year: http://www.aqmd.gov/smog/historicaldata.htm
California Air Quality Data, CARB: http://www.arb.ca.gov/adam/welcome.html.

The reported $PM_{2.5}$ data were obtained from the 5888 Mission Boulevard monitoring station for 2002 to 2004. Table 8.1-8 presents the maximum 24-hour average concentration and annual arithmetic mean reported by CARB, and the 3-year average levels of those readings.

As previously mentioned, EPA has proposed changes to the federal 24-hr $PM_{2.5}$ standard, addition of a new $PM_{2.5-10}$ standard, elimination of the annual PM_{10} standard and partial elimination of the 24-hour PM_{10} standard. Because the outcome of this proposal is uncertain, this ambient air quality impact assessment does not include these proposed changes.

TABLE 8.1-8
$PM_{2.5}$ Levels at 5888 Mission Blvd Station, Riverside, 2002-2004 (µg/m^3)

	2002	2003	2004
Highest 24-hour Average	77.6	104.3	91.7
Number of Days Exceeding the National Standard	8	8	5
98th Percentile 24-hour Average Concentration	66.3	76.6	59.5
3-Year Average—98th Percentile of 24-hour Average Concentrations (Federal Standard = 65 µg/m^3)	73	72	67
Annual Arithmetic Mean	27.5	24.9	22.1
3-Year Average of Annual Arithmetic Mean (Federal Standard = 15 µg/m^3)	28	27	24

Sources: SCAQMD Historical Air Quality Data by Year: http://www.aqmd.gov/smog/historicaldata.htm
California Air Quality Data, CARB: http://www,arb.ca.gov/adam/welcome.html.

8.1.4.7 Airborne Lead

Lead concentrations once exceeded the state and federal air quality standards by a wide margin, but have not exceeded state or federal standards at any regular monitoring station since 1982 (SCAQMD, 2001). The South Coast Air Basin is designated attainment status for lead by both the USEPA and CARB. Table 8.1-9 lists the airborne lead levels recorded at the 5888 Mission Boulevard monitoring station between 2002 and 2004.

TABLE 8.1-9
Airborne Lead Levels at 5888 Mission Blvd, Riverside, 2002-2004 (µg/m^3)

	2002	2003	2004
Highest Monthly Average	0.03	0.02	0.02
Highest Quarterly Average	0.02	0.02	0.01

Source: SCAQMD Historical Air Quality Data by Year: http://www.aqmd.gov/smog/historicaldata.htm

8.1.5 Laws, Ordinances, Regulations, and Standards

The Clean Air Act, implemented by the USEPA, requires major new and modified stationary sources of air pollution to obtain a construction permit prior to commencing construction through a program known as Federal New Source Review (NSR). The requirements of the NSR program are dependent on whether the air quality in the area where the new source (or modified source) is being located attains the NAAQS. The program that applies in areas that are in attainment of the NAAQS is the Prevention of Significant Deterioration (PSD). The program that applies to areas where the air does not meet the NAAQS (termed nonattainment areas) is the nonattainment NSR.

The USEPA implements the NSR program through regional offices. Arizona, California, Hawaii, Nevada, and specific Pacific trust territories are administrated out of USEPA Region IX office located in San Francisco. The USEPA typically delegates its NSR, Title V, and Title IV authority to local air quality agencies that have sufficient regulatory structure to implement these programs consistent with requirements of the Clean Air Act and implementing regulations. The SCAQMD has been delegated several of these programs. However, EPA currently retains authority for administering the PSD program in SCAQMD.

The CARB was established by the state legislature in 1967 with the purpose of attaining and maintaining healthy air quality, conducting research into causes and solutions to air pollution, and addressing the impacts that motor vehicles have on air quality. To this end, the CARB implements the following programs:

- Establish and enforce motor vehicle emission standards, including fuel standards.
- Monitor, evaluate, and set health-based air quality standards.
- Conduct research to solve air pollution problems.
- Establish toxic air contaminant (TAC) control measures.
- Oversee and assist local air quality districts.

Air pollution control districts were established shortly after the CARB, based on meteorological and topographical factors. The districts were established to enforce air pollution regulations for the purpose of attaining and maintaining all state and federal ambient air quality standards. The districts regulate air emissions by issuing air permits to stationary sources of air pollution in compliance with approved regulatory programs. Each district promulgates rules and regulations specific to air quality issues within its jurisdiction. The air emissions sources regulated by each district vary. The types of air pollution sources that might be regulated include: manufacturers, power plants, refineries, gasoline service stations, and auto body shops.

Federal and state agencies and SCAQMD have specific regulations applicable to stationary combustion sources. These applicable regulations are presented in Table 8.1-10. Subsection 8.1.6 presents a detailed discussion of the project's conformance with the applicable regulations. An Authority to Construct/Title V permit will be filed with the SCAQMD within 30 days of submittal of the Application for Certification (AFC) filing with the California Energy Commission (CEC).

TABLE 8.1-10
Air Quality Agencies

Agency	Authority	Contact
USEPA Region IX	Regulatory Oversight	Gerardo Rios USEPA Region IX 75 Hawthorne Street San Francisco, CA 94105 (415) 947-3974
CARB	Regulatory oversight	Michael Tollstrup Project Assessment Branch California Air Resources Board 2020 L Street Sacramento, CA 95814 (916) 322-6026
SCAQMD	Permit issuance, enforcement	John Yee South Coast Air Quality Management District 21865 Copley Drive Diamond Bar, CA 917635 (909) 396-2531

8.1.5.1 Federal

The USEPA promulgates and enforces federal air quality laws, with Region IX administering the federal air programs in California. The federal Clean Air Act provides the legal authority to regulate air pollution from stationary sources. The applicable federal regulations are presented in below and summarized in Table 8.1-11, along with the agency responsible for administration of the regulation.

8.1.5.1.1 National Standards of Performance for New Stationary Sources

Title 40, Code of Federal Regulations, Part 60, Subparts GG - Standards of Performance for Stationary Gas Turbines, limits NO_x and SO_2 emissions from gas turbines.

Proposed 40 CFR Part 60 Subpart KKKK – NO_x Emission Limits for New Stationary Combustion Turbines, was proposed on February 18, 2005, and is expected to be promulgated shortly. It would apply to all new combustion turbines that commence construction, modification, or reconstruction after February 18, 2005. The proposed rule would require natural-gas-fired turbines greater than or equal to 30 megawatts (MW) to meet a NO_x emission limit of 50 nanograms/Joule (ng/J) (0.39 pounds per megawatt-hour [lb/MW-hr]), and an SO_2 limit of 73 ng/J (0.58 lb/MW-hr). Alternatively, a fuel sulfur limit of 500 parts per million by weight (ppmw) could be met. Stationary combustion turbines regulated under this subpart would be exempt from the requirements of Subpart GG.

The Highgrove Project facility turbines will utilize low NO_x technology along with a selective catalytic reduction (SCR), and will utilize pipeline-quality natural gas, so they will comply with both the NO_x and SO_2 limits. The NO_x and SO_2 emissions from the turbines will be 0.1 lb/MW-hr and 0.009 lb/MW-hr, respectively. The certified NO_x CEMS will ensure compliance with the standard. Records of natural gas usage will ensure compliance with the SO_2 limit.

8.1.5.1.2 National Emission Standards for Hazardous Air Pollutants

Title 40, Code of Federal Regulations, Part 63 - National Emission Standards for Hazardous Air Pollutants for Source Categories, establishes emission standards to limit emissions of hazardous air pollutants from specific source categories. Sources subject to Part 63 requirements must either use the maximum achievable control technology (MACT), be exempted under Part 63, or comply with published emission limitations. The applicable MACT standard to the project is Subpart YYYY, which sets a formaldehyde emission limit or an operational limit for subject sources

8.1.5.1.3 Prevention of Significant Deterioration Program

Title 40, Code of Federal Regulations, Parts 51 and 52 establish a pre-construction review and permitting program for new or modified major stationary sources to prevent significant deterioration of ambient air quality. As indicated above, the PSD program applies to areas where the ambient concentrations of air pollutants do not exceed the NAAQS. The program was designed to facilitate economic growth while protecting public health and welfare and Class I areas (national parks, wilderness areas, and national monuments, etc.). Although SCAQMD has adopted PSD regulations, USEPA currently retains permitting authority for the PSD program.

TABLE 8.1-11
Applicable Laws, Ordinances, Regulations, Standards (LORS), and Permits for Protection of Air Quality

LORS	Purpose	Regulating Agency	Permit or Approval	Schedule and Status of Permit
Federal				
Title 40 CFR Parts 51 and 52, NSR	Requires NSR facility permitting for construction or modification of specified stationary sources. NSR applies to pollutants for which ambient concentration levels are higher than NAAQS.	SCAQMD, with USEPA Region IX oversight	After project review, issues DOC with conditions limiting emissions	Permit application submitted by June 2006. Agency approval to be obtained before start of construction.
Title 40 CRF part 70 (Title V)	Requires reductions in NO_x and SO_2 emissions.	Permit application will be submitted 24 months prior to operation. SCAQMD, with USEPA Region IX oversight	Issues Acid Rain monitoring plan error report after review of application.	Meet compliance deadlines listed in regulations; no permit issued.
Title 40 CFR Part 64 (CAM Rule)	Establishes onsite monitoring requirements for emission control systems.	SCAQMD, with USEPA Region IX oversight	Monitoring conditions included in RECLAIM/Title V permit.	Permit application will be submitted as part of the NSR/Title V permit, June 2006.
State				
California Code of Regulations Sections 93300-93347 (Toxic "Hot Spots" Act)	Requires preparation and biennial updating of facility emission inventory of hazardous substances; risk assessments.	SCAQMD with CARB oversight	After project review, issues DOC with conditions limiting emissions.	Health Risk Assessment submitted as part of AFC.
Local				
SCAQMD Rule 201 (Permit to Construct)	Establishes an orderly procedure for the review of new and modified sources of air pollution through the issuance of permits	SCAQMD, with CARB and USEPA Region IX oversight	After project review, issues Final DOC with conditions limiting emissions.	Agency approval to be obtained before start of construction.
SCAQMD Regulation XIII (Rule 1303), Rule 2005 (NSR)	Combines federal and state NSR requirements. Establishes pre-construction requirements for new or modified facilities. Rule 2005 applies to RECLAIM facilities.	SCAQMD, with CARB and USEPA Region IX oversight	After project review, issues Final DOC with conditions limiting emissions.	Agency approval to be obtained before start of construction.
SCAQMD Rule 212 (Standards for Approving Permits)	Requires facility to distribute public notice if the source is within 1,000 feet from school, or emissions or risks exceeding applicable thresholds	SCAQMD, with CARB and USEPA Region IX oversight	Agency to prepare and publish notice prior to permit issuance.	Public notice to be published 30 days prior to permit issuance.
SCAQMD Rule 1401 (NSR of Toxic Contaminants)	Establishes allowable health risks for new or modified sources.	SCAQMD, with CARB oversight	After project review, issues Final DOC with conditions limiting emissions.	Agency approval to be obtained before start of construction.
Proposed SCAQMD Rule 1401.1 (Requirements for New and Relocated Sources Near Schools)	Establishes allowable health risks for new or modified sources near schools	SCAQMD, with CARB oversight	This rule will apply to this project. SCAQMD to assess compliance during permit review	Agency approval to be obtained before start of construction

TABLE 8.1-11
Applicable Laws, Ordinances, Regulations, Standards (LORS), and Permits for Protection of Air Quality

LORS	Purpose	Regulating Agency	Permit or Approval	Schedule and Status of Permit
SCAQMD Regulation XXX (Title V Permits)	Provides for the issuance of federal operating permits mandated by Title V of the Clean Air Act.	SCAQMD, with USEPA Region IX oversight	Agency to issue Title V Permit.	Agency approval to be obtained before start of construction.
SCAQMD Rule 401 (Visible Emissions)	Establishes limits for visible emissions from stationary sources	SCAQMD, with CARB oversight	After project review, issues Final DOC with conditions limiting emissions.	Agency approval to be obtained before start of construction.
SCAQMD Rule 402 (Nuisance)	Prohibits the discharge from a facility of air pollutants that cause injury, detriment, nuisance, or annoyance to the public, or that damage business or property.	SCAQMD, with CARB oversight	After project review, issues Final DOC with conditions limiting emissions.	Agency approval to be obtained before start of construction.
SCAQMD Rule 403 (Fugitive Dust)	Establishes requirements to reduce the amount of particulate matter entrained in the ambient air as a result of man-made fugitive dust sources.	SCAQMD, with CARB oversight	After project review, issues Final DOC with conditions limiting emissions.	Agency approval to be obtained before start of construction.
SCAQMD Rule 404 (Particulate Matter—Concentration)	Establishes limits for particulate matter emission concentrations.	SCAQMD, with CARB oversight	After project review, issues Final DOC with conditions limiting emissions.	Agency approval to be obtained before start of construction.
SCAQMD Rule 405 (Particulate Matter—Weight)	Establishes limits for particulate matter mass emission rates.	SCAQMD, with CARB oversight	After project review, issues Final DOC with conditions limiting emissions.	Agency approval to be obtained before start of construction.
SCAQMD Rule 407 (Liquid and Gaseous Air Contaminants)	Limits CO and SO_x emissions from stationary sources.	SCAQMD, with CARB oversight	After project review, issues Final DOC with conditions limiting emissions.	Agency approval to be obtained before start of construction.
SCAQMD Rule 409 (Combustion contaminants)	Establishes limits for particulate emissions from fuel combustion sources	SCAQMD, with CARB oversight	After project review, issues Final DOC with conditions limiting emissions.	Agency approval to be obtained before start of construction.
SCAQMD Rule 431.1 (Sulfur Content of Gaseous Fuels)	Establishes limits for the sulfur content of gaseous fuels to reduce SO_x emissions from stationary combustion sources.	SCAQMD, with CARB oversight	After project review, issues Final DOC with conditions limiting emissions.	Agency approval to be obtained before start of construction.
SCAQMD Rule 474, H&SC §40000 et seq., §40400 et seq. (Fuel Burning Equipment—Oxides of Nitrogen)	Limits NO_x emissions from stationary sources.	SCAQMD, with CARB oversight	Not applicable because the facility is subject to RECLAIM	Not applicable
SCAQMD Rule 475, H&SC §40000 et seq., §40400 et seq. (Electric Power Generating Equipment)	Establishes limits for combustion contaminant (i.e., PM) emissions from subject equipment.	SCAQMD, with CARB oversight	After project review, issues Final DOC with conditions limiting emissions.	Agency approval to be obtained before start of construction.

TABLE 8.1-11
Applicable Laws, Ordinances, Regulations, Standards (LORS), and Permits for Protection of Air Quality

LORS	Purpose	Regulating Agency	Permit or Approval	Schedule and Status of Permit
SCAQMD Rule 1134, H&SC §40000 et seq., §40400 et seq. (Emissions of Oxides of Nitrogen from Stationary Gas Turbines)	Limits NO_x from stationary gas turbines.	SCAQMD, with CARB oversight	Not applicable because the facility is subject to RECLAIM	Not applicable
SCAQMD Rule 1135, H&SC §40000 et seq., §40400 et seq. (Emissions of Oxides of Nitrogen from Electric Power Generating Systems)	Limits NO_x from electric power generating systems.	SCAQMD, with CARB oversight	Not applicable because the facility is subject to RECLAIM	Not applicable
SCAQMD Rule 1404, (Hexavalent Chromium Emissions from Cooling Towers)	Prohibits the use of hexavalent chromium containing water treatment chemicals	SCAQMD, with CARB oversight	After project review, issues Final DOC with conditions limiting emissions.	Agency approval to be obtained before start of construction.

As a simple-cycle gas turbine electric generating plant, the Highgrove Project facility will not be one of the 28 listed PSD source categories with an applicability threshold of 100 tons per year (tpy). Thus, the threshold for PSD review of the Highgrove Project will be 250 tpy of any criteria pollutant. Since emissions of criteria pollutants will not exceed this applicability threshold, the Highgrove Project will not be subject to PSD review.

8.1.5.1.4 Title IV—Acid Rain Program

Title 40, Code of Federal Regulations, Part 72 – Acid Rain Program, establishes emission standards for SO_2 and NO_x emissions from electric generating units through the use of market incentives, requires sources to monitor and report acid gas emissions, and requires the acquisition of SO_2 allowances sufficient to offset SO_2 emissions on an annual basis. This program is implemented through the SCAQMD's Regulation XXXI.

8.1.5.1.5 Title V—Operating Permits Program

Title 40, Code of Federal Regulations, Part 70 – Operating Permits Program, requires the issuance of operating permits that identify all applicable federal performance, operating, monitoring, recordkeeping, and reporting requirements. These requirements are implemented at the local level through SCAQMD Regulation XXX. The Title V permit is tied to the SCAQMD NSR regulations. A parallel application will be made to the SCAQMD in addition to the CEC AFC application.

8.1.5.1.6 CAM Rule

Title 40, Code of Federal Regulations, Part 64 - Compliance Assurance Monitoring (CAM), requires facilities to monitor the operation and maintenance of emissions control systems and report any control system malfunctions to the appropriate regulatory agency. If an emission control system is not working properly, the CAM rule also requires a facility to take action to correct the control system malfunction. The CAM rule applies to emissions units with uncontrolled potential to emit levels greater than applicable major source thresholds. Emission control systems governed by Title V operating permits requiring continuous compliance determination methods are generally compliant with the CAM rule.

Exemptions from CAM are presented in 40 CFR 64.2(b). Since the Highgrove Project will participate in the SCAQMD's Regional Clean Air Incentives Market (RECLAIM) Cap and Trade program, which has been submitted and approved as part of the State Implementation Plan (SIP), the Highgrove Project would qualify for the CAM exemption for NO_x emission sources provided in 40 CFR 64.2(b)(1)(iv). Thus, it is further believed that this exemption also exempts the Highgrove Project from a requirement to prepare and submit a CAM plan for NO_x emissions from the proposed fuel-fired equipment.

8.1.5.1.7 Toxic Chemical Release Inventory Program

The Emergency Planning and Community Right-to-Know Act (EPCRA), through the Toxic Chemical Release Inventory (TRI) program, establishes reporting requirements for toxic releases to the environment if the facility (1) produces more than 25,000 pounds of a listed chemical per year; (2) processes more than 25,000 pounds of a listed chemical per year; or (3) uses more than 10,000 pounds of a listed chemical per year.

Electric utilities, in Standards Industrial Classification (SIC) Codes 4911, 4931, and 4939, that combust coal and/or oil for the purpose of generating electricity for distribution in commerce must report under this regulation. The Highgrove Project falls under SIC Code 4911, which covers establishments engaged in the generation, transmission, and/or distribution of electric energy for sale. However, the Highgrove Project will not combust coal and/or oil for the purpose of generating electricity for the distribution in commerce. Therefore, the TRI program does not apply to the Highgrove Project and will not be addressed further.

8.1.5.2 State

CARB's primary responsibilities are to develop, adopt, implement, and enforce the state's motor vehicle pollution control program; to administer and coordinate the state's air pollution research program; to adopt and update, as necessary, the state's ambient air quality standards; to review the operations of the local air pollution control districts; and to review and coordinate preparation of the SIP for achievement of the federal ambient air quality standards.

The California Health and Safety Code, Section 41700 prohibits the discharge from a facility of air pollutants that cause injury, detriment, nuisance, or annoyance to the public, or which endanger the comfort, repose, health, or safety of the public, or that damage business or property.

The state has promulgated numerous laws and regulations at the state level (i.e., Toxic Air Contaminants and Air Toxic Hot Spots) that are effectuated at the local level by the air districts. A discussion of these LORS is presented in Section 8.1.5.3.

8.1.5.3 Local

When the state's air pollution statutes were reorganized in the mid-1960s, local districts were required to be established in each county of the state. There are three different types of districts: county, regional, and unified. In addition, special air quality management districts (AQMDs), with more comprehensive authority over non-vehicular sources as well as transportation and other regional planning responsibilities, have been established by the Legislature for several regions in California, including the SCAQMD. AQMDs have principal responsibility for developing plans for meeting the NAAQS and California ambient air

quality standards; for developing control measures for non-vehicular sources of air pollution necessary to achieve and maintain both state and federal air quality standards; for implementing permit programs established for the construction, modification, and operation of sources of air pollution; and for enforcing air pollution statutes and regulations governing non-vehicular sources.

8.1.5.3.1 South Coast Air Quality Management District Air Quality Plans

The SCAQMD plans define the proposed strategies, including stationary source control measures and NSR rules, whose implementation will attain the state ambient air quality standard (AAQS). The air quality plans also demonstrate a five percent annual reduction in emissions of nonattainment pollutants in the SCAQMD. The relevant stationary source control measures and NSR requirements are discussed with SCAQMD Rules and Regulations.

SCAQMD Rule 201—Permit to Construct

Rule 201 (Permit to Construct) establishes an orderly procedure for the review of new and modified sources of air pollution through the issuance of permits. Rule 201 specifies that any facility installing nonexempt equipment that causes or controls the emission of air pollutants must first obtain a Permit to Construct from the SCAQMD.

SCAQMD Preconstruction Review for Criteria Pollutants

SCAQMD has three separate preconstruction review programs for new or modified sources of criteria pollutant emissions:

- Regulation XIII (New Source Review) combines the federal and state NSR requirements into a single rule. Regulation XIII establishes pre-construction requirements for new or modified facilities to ensure that operation of such facilities does not interfere with progress towards the attainment of AAQS. For RECLAIM facilities, this rule applies only to those nonattainment pollutants, or their precursors, not regulated under the RECLAIM program. Since the Highgrove Project will be a NO_x RECLAIM facility, NSR provisions for NO_x are addressed under Rule 2005, and not under Regulation XIII.

- Regulation XVII (Prevention of Significant Deterioration) implements the PSD requirements of the federal Clean Air Act for attainment pollutants (i.e., NO_2 and SO_2). Regulation XVII establishes pre-construction review requirements for new or modified facilities to ensure that operation of such facilities does not significantly deteriorate air quality in attainment areas while maintaining a margin for future growth. The PSD requirements apply on a pollutant-specific basis to any project that is a new major stationary source or a major modification to an existing major stationary source. SCAQMD classifies an unlisted source (which is not in the specified 28 source categories) that emits or has the potential to emit 250 tpy of any pollutant regulated by the Act as a major stationary source. For listed sources, the threshold is 100 tpy. NO_x or SO_x emissions from a modified major source are subject to PSD if the cumulative emission increases for either pollutant exceeds 40 tpy. In addition, a modification at a non-major source is subject to PSD if the modification itself would be considered a major source. Although SCAQMD conducts the PSD review required by Regulation XVII, USEPA currently retains PSD permitting authority. However, as previously mentioned, the project will not be subject to PSD review.

- Rule 2005 (NSR for RECLAIM) integrates the NSR requirements of the federal and California Clean Air Acts with the SCAQMD's RECLAIM program. Rule 2005 establishes pre-construction requirements for new or modified RECLAIM facilities to ensure that operation of such facilities does not interfere with progress towards the attainment of AAQS without unnecessarily restricting economic growth. RECLAIM is a "Cap and Trade" market incentive program designed to allow facilities flexibility in achieving emission reduction requirements for NO_x and SO_x using methods that include add-on emission controls, equipment modifications, reformulated products, operational changes, shutdowns, and the purchase of excess emission reductions. Since the Highgrove Project will be a NO_x RECLAIM facility, it will be subject to the NO_x NSR requirements of Rule 2005. The proposed equipment will not be subject to the SO_x NSR requirements of Rule 2005 because the RECLAIM program does not include SO_x emissions from natural gas combustion equipment for applicability purposes.

A facility can be subject to more than one of these preconstruction review programs depending on the type of criteria pollutants and criteria pollutant precursors they will emit. The relevant criteria pollutants and precursors are summarized in Table 8.1-12. A new or modified facility can be subject to the elements of all three programs.

TABLE 8.1-12
Criteria Pollutant Precursors

Criteria Pollutants	Precursors
Ozone	VOC, NO_x
NO_2	NO_x
SO_2	SO_x
Sulfate	SO_x
PM_{10}	VOC, NO_x, SO_x

Preconstruction Air Quality Monitoring. The SCAQMD may, at its discretion, require preconstruction ambient air quality monitoring data gathered over a one-year period to characterize local ambient air quality. However, the proximity of the existing monitoring stations to the project site are believed to be representative of the ambient air potentially impacted by the project. Therefore, it is likely preconstruction monitoring will not be required.

Best Available Control Technology. Best Available Control Technology (BACT) must be applied to any new or modified source resulting in an increase in criteria pollutant, ozone depleting compound, and ammonia emissions. The SCAQMD defines BACT as the following unless the limitations are demonstrated to be unachievable:

- Most stringent emission limitation achieved in practice by a control device or technique for that category or class of sources.
- Any control device or technique determined to be technologically feasible and cost-effective.

- Most stringent emission limitation on a comparable emission source contained in any approved SIP (i.e., cannot be less stringent than the emission control required by any applicable federal, state, or SCAQMD laws, rules, or regulations).

Emission Offsets. For a new or modified facility located in SCAQMD Zone 2 ("Inland Zone") (as is the Highgrove Project), except as exempted in Rule 1304, sufficient emission reduction credits (ERCs) must be provided to offset the increase in CO, PM_{10}, SO_x, and VOC emissions at a 1.2 to 1 offset ratio. If the offsets are being obtained from the SCAQMD's Priority Reserve, the offset ratio is also 1.2 to 1 (Rule 1303).

For a new or modified facility located in SCAQMD Zone 2 (as is the Highgrove Project), sufficient RECLAIM Trading Credits (RTCs) must be provided to offset the actual anticipated NO_X emissions for the first year of operation at a 1 to 1 offset ratio (Rule 2005). NO_x RTCs will need to be provided annually prior to the beginning of each subsequent year throughout the life of the facility.

Air Quality Impact Analysis. An air quality dispersion analysis must be conducted, using a mass emissions-based analysis contained in the rule or an approved dispersion model, to evaluate impacts of increased criteria pollutant emissions from any new or modified facility on ambient air quality. The Highgrove Project emissions must not cause a significant increase in ambient concentrations of nonattainment pollutants as shown in Subsection 8.1.6.2.4.

SCAQMD Rule 212—Standards for Approving Permits

Rule 212 requires projects subjected to this rule to distribute the public notice to each address within a quarter-mile radius of the project. Additionally, if a K-12 school is located within the notice zone, then a copy of the notice must be distributed to the parents of each child attending that school. A project is required to notify the public if it will:

- Emit air contaminants within 1,000 feet from the outer boundary of a school; or
- Have onsite emission increases exceeding any of the daily maximums as specified in Rule 212 subdivision (g); or
- Have onsite increases in emissions of TACs to which a person may be exposed to an individual cancer risk greater than, or equal to, one in one million as specified in Rule 1401.

An analysis of the potential impacts to nearby schools is presented in Subsection 8.1.6.3.

SCAQMD Rule 1401—New Source Review of Toxic Air Contaminants

Rule 1401 (New Source Review of Toxic Air Contaminants) establishes allowable health risks for new or modified sources of TAC emissions. Rule 1401 specifies permit unit limits for maximum individual cancer risk (MICR), cancer burden, and noncarcinogenic acute and chronic hazard indices (HIs) for new or modified sources of TAC emissions. While Rule 1401 does not specifically require the application of best available control technology for toxics (T-BACT) to any new or modified source emitting carcinogenic TACs, the rule allows a higher MICR risk threshold when T-BACT is applied. The health risks resulting from project emissions, as demonstrated with a risk assessment, must not exceed the following risk thresholds:

- MICR and Cancer Burden

  - An increased MICR greater than one in one million at any receptor location if the permit unit is constructed without T-BACT
  - An increased MICR greater than ten in one million at any receptor location if the permit unit is constructed with T-BACT
  - A Cancer Burden greater than 0.5
- Chronic HI
  - Cumulative HI increase for any target organ system will not exceed 1.0 at any receptor location.
- Acute HI
  - Acute HI for any target organ system will not exceed 1.0 at any receptor location.

Rule 1401.1—Requirements for New and Relocated Facilities Near Schools

Rule 1401.1 specifies limits for MICR, cancer burden, and noncarcinogenic acute and chronic HIs for new or modified sources of TAC emissions that are within 1,000 feet of a school. As there is a planned high school within 1,000 feet of the site, this rule is applicable to the proposed project.

SCAQMD Regulation XXX—Federal Operating Permit

Regulation XXX (Title V Permits) provides for the issuance of federal operating permits that contain all federally enforceable requirements for stationary sources as mandated by Title V of the Clean Air Act. Regulation XXX requires major facilities and acid rain facilities undergoing modifications to obtain an operating permit containing the federally enforceable requirements mandated by Title V of the Clean Air Act. A facility shall not construct, modify, or operate equipment at a Title V facility without first obtaining a permit revision that allows such construction, modification, or operation. An application must be submitted to the SCAQMD that presents all information necessary to evaluate the subject facility and determine the applicability of all regulatory requirements.

SCAQMD Regulation XXXI—Acid Rain Permit Program

Regulation XXXI provides for the issuance of acid rain permits in accordance with Title IV of the Clean Air Act. Regulation XXXI requires a subject facility to hold emissions allowances for SO_x, and to monitor SO_x, NO_x, and CO_2 emissions and exhaust gas flow rates (monitoring of operating parameters such as fuel use and fuel consumption is an allowable alternative to exhaust continuous emission monitoring (CEM) systems). An acid rain facility, such as the Highgrove Project, must also obtain an acid rain permit as mandated by Title IV of the Clean Air Act. A permit application must be submitted to the SCAQMD at least 24 months before operation of the new units commence. The application must present all relevant sources at the facility, a compliance plan for each unit, applicable standards, and estimated commencement date of operation. The necessary Title IV applications will be included with the Title V/RECLAIM/NSR permit application submitted to the SCAQMD.

SCAQMD Regulation IX—Standards of Performance for New Stationary Sources

Regulation IX incorporates, by reference, the provisions of Part 60, Chapter 1, Title 40 of the Code of Federal Regulations. Regulation IX requires compliance with federal Standards of Performance for Stationary Gas Turbines.

Subpart GG (Standards of Performance for Stationary Gas Turbines) applies to gas turbines with a heat input at peak load equal to or greater than 10.7 gigajoules per hour (Gj/hr), or 10 million British thermal units per hour (MMBtu/hr), at the lower heating value. The New Source Performance Standards (NSPS) limits the sulfur content of fuel to 0.8 percent. For gas turbines larger than 107.2 Gj/hr or 100 MMBtu/hr, the NSPS also limits NO_x emissions as determined by the following equation:

$$STD = [0.0075 (14.4) + F]/Y$$

where:

STD = allowable NO_x emissions (percent by volume at 15 percent Oxygen (O_2) on a dry basis)

Y = manufacturer's rated heat rate at peak load (kilojoules per watt hour)

F = NO_x emission allowance for fuel-bound nitrogen (assumed to be zero for natural gas)

Proposed 40 CFR Part 60 Subpart KKKK – NO_x Emission Limits for New Stationary Combustion Turbines

The USEPA conducted a review of the NSPS for stationary combustion turbines and on February 10, 2005, the USEPA proposed new standards for new, modified, or reconstructed stationary combustion turbines constructed/modified after February 18, 2005. The proposed rule would require natural-gas-fired turbines greater than or equal to 30 MW to meet a NO_x emission limit of 50 ng/J (0.39 lb/MW-hr), and an SO_2 limit of 73 ng/J (0.58 lb/MW-hr). Alternatively, a fuel sulfur limit of 500 ppmw could be met. Stationary combustion turbines regulated under this subpart would be exempt from the requirements of Subpart GG.

SCAQMD Prohibitory Rules

Relevant prohibitory rules of the SCAQMD applicable to the project include the following:

- **Rule 401—Visible Emissions:** Establishes limits for visible emissions from stationary sources. Rule 401 prohibits visible emissions as dark as or darker than Ringlemann No. 1 for more than 3 minutes in any hour.
- **Rule 402—Nuisance:** Prohibits the discharge from a facility of air pollutants that cause injury, detriment, nuisance, or annoyance to the public, or that damage business or property.
- **Rule 403—Fugitive Dust:** Establishes requirements to reduce the amount of particulate matter entrained in the ambient air as a result of man-made fugitive dust sources. Rule 403 requires the implementation of best available control measures to minimize fugitive dust emissions and prohibits visible dust emissions beyond the property line, a 50 $\mu g/m^3$ incremental increase in PM_{10} concentrations across a facility as measured by upwind and downwind concentrations), and track-out of bulk material onto public, paved roadways.

- **Rule 404—Particulate Matter—Concentration:** Establishes limits for particulate matter emission concentrations. This rule does not apply to emissions resulting from the combustion of liquid or gaseous fuels in steam generators or gas turbines.
- **Rule 405—Particulate Matter—Weight:** Establishes limits for particulate matter mass emission rates. Emission rate limits are based upon the process weight (i.e., fuel burned) per hour.
- **Rule 407—Liquid and Gaseous Air Contaminants:** Establishes limits for CO and SO_x emissions from stationary sources. Rule 407 prohibits CO and SO_x emissions in excess of 2,000 ppm and 500 ppm, respectively, from any source. In addition, equipment that complies with the requirements of Rule 431.1 is exempt from the SO_x limit. Since the facility will comply with Rule 431.1, the SO_x provisions of Rule 407 will not be addressed further.
- **Rule 409—Combustion Contaminants:** Establishes limits for particulate emissions from fuel combustion sources. Rule 409 prohibits particulate emissions in excess of 0.1 grains per cubic foot of gas at 12 percent CO_2 at standard conditions.
- **Rule 431.1—Sulfur Content of Gaseous Fuels:** Establishes limits for the sulfur content of gaseous fuels to reduce SO_x emissions from stationary combustion sources. Rule 431.1 limits the sulfur content of natural gas calculated as hydrogen sulfide (H_2S) to be less than 16 ppmv.
- **Rule 431.2—Sulfur Content of Liquid Fuels:** Establishes limits for the sulfur content of liquid fuels to reduce SO_x emissions from stationary combustion sources. Rule 431.2 limits the sulfur content of diesel fuel purchased after June 1, 2004 to 15 ppmw.
- **Rule 474—Fuel Burning Equipment—Oxides of Nitrogen:** Establishes limits for emissions of NO_x from stationary combustion sources. However, NO_x RECLAIM facilities are exempt from the provisions of Rule 474. Since the Highgrove Project will be a NO_x RECLAIM facility, Rule 474 is not applicable and will not be addressed further.
- **Rule 475—Electric Power Generating Equipment:** Establishes limits for combustion contaminant (i.e., PM) emissions from subject equipment. Rule 475 prohibits PM emissions that exceed both 11 lbs/hr (per emission unit) and 0.01 grains per dry standard cubic foot (gr/dscf) at 3 percent O_2. These provisions do not apply to replacement equipment if such equipment reduces NO_x emissions by at least 50 percent provided that PM emissions do not exceed 0.05 gr/dscf.
- **Rule 476—Steam Generating Equipment:** Establishes limits for NO_x and PM emissions from steam generating equipment with a maximum heat input rating exceeding 50 MMBtu/hr. However, NO_x RECLAIM facilities are exempt from the NO_x requirements for this rule. Therefore, only the PM provisions of this rule will apply. The proposed Highgrove Project is not a steam generating facility and this rule would not apply.
- **Rule 53A—Specific Contaminants:** Established limits for emissions of sulfur compounds (i.e., SO_x) and combustion contaminants (i.e., PM) from stationary sources. Rule 53A prohibits SO_2 and PM emissions of 500 ppm and 0.1 gr/dscf at 12 percent CO_2, respectively.

SCAQMD Source Specific Standards

Relevant source-specific standards of the SCAQMD applicable to the project include the following:

- **Rule 1134—Emissions of Oxides of Nitrogen from Stationary Gas Turbines:** Establishes limits for emissions of NO_x from the stationary gas turbines. However, NO_x RECLAIM facilities are exempt from the provisions of Rule 1134. Therefore, Rule 1134 is not applicable to the Highgrove Project and will not be addressed further.
- **Rule 1135—Emissions of Oxides of Nitrogen from Electric Power Generating Systems:** Establishes limits for emissions of NO_x from the electricity generating systems. However, NO_x RECLAIM facilities are exempt from the provisions of Rule 1135. Therefore, Rule 1135 is not applicable to the Highgrove Project and will not be addressed further.

SCAQMD Toxics and Other Non-Criteria Pollutant Standards

Relevant toxics and other non-criteria pollutant standards of the SCAQMD applicable to the project include the following:

- **Rule 1404—Hexavalent Chromium Emissions from Cooling Towers:** Prohibits the addition of hexavalent chromium-containing water treatment chemicals to cooling tower circulating water.

Proposed SCAQMD Rules

Proposed rules of the SCAQMD applicable to the project include the following:

- **Proposed Rule 1309.1—Priority Reserve:** If approved, the provisions that authorized electric generating facilities (EGFs) access to the Priority Reserve that expired on December 31, 2003 would be re-established with a revised sunset date of December 31, 2008. This amendment would allow, as previously done, EGFs access to the AQMD Priority Reserve account for the purpose of obtaining offsets, after having first established that the required offsets are not reasonably available in the open market, paying a mitigation fee and adhering to certain other requirements of the rule. This rule is being proposed due to the shortage of ERCs, specifically SO_x and PM_{10} in the open market. It is anticipated that this rule will be on the agenda of the SCAQMD Governing Board in April 2006.

All applicable LORS are summarized in Table 8.1-11.

8.1.6 Environmental Analysis

8.1.6.1 Methodology for Estimating Facility Impacts

The proposed Highgrove Project includes the following emission sources, three gas turbines with advanced combustion controls combined with SCR and oxidation catalysts and three two-cell cooling towers, one for each combustion turbine generator. The expected operating profile for the turbines will be between 50 percent and 100 percent of their maximum rated output. Inlet air cooling will be used to increase power output under maximum output conditions, by way of evaporative cooling. The emission control systems will be fully functional during all conditions throughout the operating profile, with the exception of startups and shutdowns. The annual emissions are based on operation of the project at the

ambient average temperature firing rates and include the expected maximum number of startup periods that may occur in a year. The emissions during the turbine startup and shutdown may be higher than the steady-state operation because the emission control systems will not be capable of operating at their design efficiencies during these events.

An analysis of the project's ambient air quality impact was conducted to demonstrate compliance with the local, state, and federal air quality requirements for criteria pollutants (NO_2, CO, SO_2, PM_{10} and $PM_{2.5}$), noncriteria pollutants during operations, and construction phase impacts. The following subsections describe the facility, the project phases for which emissions have been evaluated, the ambient impact analyses results, and the evaluation of facility compliance with the applicable local, state, and federal air quality regulations.

8.1.6.1.1 Emission Estimates

The new equipment will consist of three GE LMS100 natural-gas-fired combustion turbine generators (CTG), rated at 100 MW (nominal at site design conditions), and three two-cell wet cooling towers (one for each CTG). Vendor specifications are provided in Appendix 8.1B (see Tables 8.1B-1A, -1B, and -1C in Appendix 8.1B) for the turbines and cooling tower.

Noncriteria pollutants will also be emitted by the facility, including ammonia, which will be used as a reactant by the SCR systems to control NO_x. Emissions of all of the criteria and noncriteria pollutants have been characterized and quantified in this application.

Emission Profile

There will be three discrete phases of the project, which are addressed in this air quality assessment. The first phase is the demolition of the existing power plant and construction of the new facility, the second phase is the new facility commissioning, and the final phase is the new facility operation.

Demolition/Construction. The proposed 14-month construction schedule consists of five months of demolition (months 1-5) and eleven months of power plant construction (months 4-14). To evaluate the emissions expected to occur during the construction period, the emission sources were divided into two categories: sources within the boundary of the proposed power plant site (i.e., onsite) and activities related to the project which occur outside the boundary (i.e., offsite). Onsite construction emissions would be generated during demolition of existing structures and power plant construction. During demolition, the contractor hired to demolish the existing structures would mitigate asbestos emissions by complying with all local, state, and federal laws and regulations. In addition, painted steel members, which may contain lead, would be torch cut and removed in compliance with all local, state, and federal laws and regulations. Onsite emission sources include exhaust emissions from construction equipment and motorized vehicles, and fugitive dust emissions.

Offsite construction emissions would be generated during construction of the natural gas pipeline and potable water line, and offsite motorized vehicle travel resulting from demolition and power plant construction. Offsite emission sources include the exhaust emissions from construction equipment and motorized vehicles used to install the project-related linears (i.e., the natural gas and potable water lines), as well as the exhaust emissions from motor vehicles traveling to and from the proposed work site. Minor amounts of fugitive dust would also be generated from construction activities and from

vehicle travel on roadways. Table 8.1-13 presents the total project emissions and the maximum daily emission rate for each pollutant during construction. The methodology used to estimate the construction emissions is provided in Appendix 8.1A.

TABLE 8.1-13
Total Project Construction Emissions

Total Tons for Project Construction	NO_x	CO	VOC	SO_2	PM_{10}
Onsite Demolition (tons)	2.2	0.88	0.20	0.01	1.9
Onsite Power Plant Construction (tons)	9.9	4.4	1.1	0.04	3.0
Offsite Demolition Motor Vehicles (tons)[a]	0.12	0.44	0.049	0.0004	0.28
Offsite Power Plant Construction Motor Vehicles (tons)[a]	0.83	3.8	0.41	0.003	2.0
Offsite Linear Construction (tons)[b]	3.4	2.3	0.57	0.01	1.5
Total Tons (Onsite plus Offsite)	**16.4**	**11.7**	**2.3**	**0.07**	**8.6**
Maximum Lb/day					
Onsite Demolition (lbs/day)	85.7	33.9	7.7	0.44	47.8
Onsite Power Plant Construction (lbs/day)	131.2	58.6	14.7	0.61	35.4
Offsite Demolition Motor Vehicles (lbs/day)	2.3	8.0	0.89	0.007	5.1
Offsite Power Plant Construction Motor Vehicles (lbs/day)	15.7	41.6	4.5	0.03	28.6
Offsite Linear Construction (lbs/day)	55.4	38.7	15.1	0.20	25.0
Maximum Combined Emissions (lb/day)[c]	**210.5**	**136.8**	**34.1**	**0.90**	**113.7**

[a] Offsite motor vehicles includes vehicle emissions from worker commute trips and delivery truck trips to the site.
[b] Offsite linear construction represents emissions from the construction of the natural gas and potable water lines.
[c] The combined emissions represents the month where overlap of demolition, power plant construction, offsite vehicles, and offsite linear construction results in the maximum lb/day. The maximum emissions occur in month 7 for CO and VOC, month 4 for NO_x and PM_{10}, and month 5 for SO_x.

Commissioning Phase. Prior to the plant being declared operational, the plant will undergo commissioning. During commissioning the CTGs will be operated at various loads to:

- break-in the plant equipment,
- develop water injection control parameters,
- commission the Automatic Voltage Regulator (AVR) system,
- tune the SCR system's ammonia injection grid, and
- perform final operational checks.

Air emissions during the commissioning phase were estimated based on vendor data and best engineering estimates. The emission estimates are based on the duration of each commissioning event, emission control efficiencies expected for each event, and turbine operating rates.

The maximum hourly commissioning emission rates for NO_x, CO, and VOC are presented in Table 8.1-14. An annual evaluation was not conducted since the commissioning phase is expected to occur over a 10- to 20-day period. The Highgrove Project will ensure that air pollutant emissions during commissioning are reduced to the extent practical. Appendix 8.1B

presents the commissioning schedule, turbine operating rate, and an estimate of emissions during each commissioning event.

TABLE 8.1-14
Facility Commissioning Emission Rate (per Turbine)

	NO_x	CO	VOC	SO_2	PM_{10}
Maximum Hourly, lb/hour	175	255	5	*	*
Maximum Hourly, grams/second	22.0	32.1	0.6	*	*

* Not emitted in amounts greater than normal operating rates.
See Appendix 8.1B, Table 8.1B-3.

Operational Phase. Operational emission estimates were prepared for the two expected operating modes. The first operating mode is the startup and shutdown mode and the second is the steady state operating mode. Emission estimates for these two operating modes are based on vendor data, emissions presented in other licensing cases, and engineering estimates.

The CTG operational emission rates for steady state operations have been estimated from vendor data, project design criteria, and established emission calculation procedures. Emission estimates and vendor data are provided in Appendix 8.1B. The emission rates for the combustion turbines are shown in Table 8.1-15.

TABLE 8.1-15
Maximum Pollutant Emission Rates, Each Gas Turbine[a]

Pollutant	ppmvd @ 15% O_2	Each Gas Turbine (lb/hr)[b]
NO_x	3.5	11.2
CO	6	11.7
VOC	2	2.3
PM_{10}[c]	[d]	6
SO_2[e]	<1.0	0.6
Ammonia	5	6.0

[a] Maximum values exclude startups and shutdowns.
[b] Baseload operating case at ambient temperature of 30°F without the evaporative cooler operating.
[c] 100 percent of particulate matter emissions assumed to be emitted as PM_{10} and $PM_{2.5}$; $PM_{10}/PM_{2.5}$ emissions include both front and back half as those terms are used in USEPA Method 5.
[d] Not available.
[e] Assessed using 0.25 grains of sulfur per 100 cubic feet of natural gas.
See Tables 8.1B-2 and 8.1B-6 in Appendix 8.1B.

Startup and Shutdown Emissions

During the startup and shutdown operating modes, the emission control systems are not fully functional, which may result in higher air emission rates relative to the steady-state operating model. A startup is expected to take approximately 37 minutes to full load operation. Likewise, a shutdown is also expected to take approximately 11 minutes from full load operation until the fuel flow is discontinued.

The maximum startup and shutdown emission rates are presented in Table 8.1-16, on a pounds per event and a lb/hr basis. The hourly emission rates are based on the startup/shutdown time, with the remainder of the hour consisting of steady-state operations at base load (80°F with the evaporators operating). The methodology used to estimate the startup and shutdown emissions are provided in Appendix 8.1B, Table 8.1B-5.

TABLE 8.1-16
Facility Startup/Shutdown Emission Rates*

	NO_x	CO	VOC	SO_x	PM_{10}
Startup (lb/event)	7.0	15.4	2.1	0.36	3.5
grams per event	3,175	6,985	953	163	1,588
Startup (lb/hr)	11.1	19.7	3.0	0.59	5.8
Grams per second	1.4	2.5	0.4	0.07	0.73
Shutdown (lb/event)	4.3	18.2	1.6	0.11	1.1
grams per event	1,950	8,255	726	50	499
Shutdown (lb/hr)	13.1	27.5	3.4	0.6	6.0
Grams per second	1.7	3.5	0.4	0.08	0.8

* Estimated based on vendor data and emissions per startup or shutdown event. See Appendix 8.1B, Table 8.1-5.

8.1.6.1.2 Maximum Fuel Usage

Natural gas will be the only fuel consumed during plant operation; the typical natural gas composition is shown in Table 8.1-17. There will be no distillate fuel oil firing at the Highgrove Project.

Natural gas combustion results in the formation of NO_x, CO, unburned hydrocarbons (VOC), SO_2, PM_{10}, and $PM_{2.5}$. Because natural gas is a clean-burning fuel, there will be minimal formation of combustion PM_{10}, $PM_{2.5}$, and SO_2. Advanced combustion controls that minimize the formation of NO_x and CO will be installed on the combustion turbines. In addition, NO_x and CO emissions will be further reduced by installing SCR and oxidation catalyst systems in the turbine exhaust ducts.

TABLE 8.1-17
Typical Natural Gas Specifications

Component Analysis		Chemical Analysis	
Component	Average Concentration, Volume	Molecular Weight	Weighted Average
CH_4	96.19	16.04	15.43
C_2H_6	1.67	30.07	0.50
C_3H_8	0.27	44.00	0.12
C_4H_{10}	0.098	58.12	0.057
C_5H_{12}	0.0072	72.15	0.0052
C_6H_{14}	0.022	86.18	0.019

TABLE 8.1-17
Typical Natural Gas Specifications

Component Analysis		Chemical Analysis	
Component	**Average Concentration, Volume**	**Molecular Weight**	**Weighted Average**
N_2	0.41	28.01	0.11
CO_2	1.34	44.01	0.59
		AVERAGE	**16.83**

Reference: See Table 8.1B-8 in Appendix 8.1B.

Table 8.1-18 presents the maximum fuel usage expected for each CTG and for the facility. The maximum fuel usage was estimated based on the maximum CTG firing rate and the annual operating hours for the facility. The daily fuel usage was based on 24 hours per day of operation at the maximum hourly fuel usage rate.

TABLE 8.1-18
Maximum Facility Fuel Use (MMBtu)*

Period	Gas Turbine (each)	Total Fuel Use (all units)
Per Hour	881	2,643
Per Day	21,144	63,432
Per Year	4,823,475	14,470,425

* Based on firing rates at 30ºF, 24 hours per day and 15 hours per day, 365 days per year per turbine. See Table 8.1B-8 in Appendix 8.1B.

8.1.6.1.3 Facility Emissions

Emissions from the cooling tower were calculated from the maximum design cooling water total dissolved solids (TDS) level of 280 milligrams per liter, 10 cycles of concentration (a conservative, worst-case basis used in the air quality impact analysis), and a design cooling water recirculation rate of 6,900 gallons per minute. The annual emissions reflect 15 hours per day, 365 days per year of operations per cooling tower. However, the project is expected to operate at a maximum capacity factor of 30 percent.

The facility emission estimates were based on the turbine emission rates shown in Table 8.1-15; the startup emission rates shown in Table 8.1-16, and the ambient operating conditions that result in the highest emission rates. The maximum annual, daily, and hourly emissions for the project during normal operation are shown in Table 8.1-19. Detailed emission estimates are provided in Appendix 8.1B, Tables 8.1B-2 through 8.1B-8.

TABLE 8.1-19
AES Highgrove Project Facility Emissions

	NO_x	SO_2	VOC	CO	PM_{10}
Maximum Hourly Emissions per CTG, lb/hr					
Turbines	13.1	0.60	3.4	27.5	6.0
Cooling Tower	-	-	-	-	0.048
Total Project (lb/hr)	**13.1**	**0.60**	**3.4**	**27.5**	**6.05**
Maximum Facility Daily Emissions, lb/day					
Turbines[a]	503	26.8	112	657	269
Cooling Tower	-	-	-	-	2.2
Total Project (lb/day)	**503**	**27**	**112**	**657**	**271**
Maximum Annual Emissions, lbs/year[b]					
Turbines	183,518	9,783	40,794	239,874	98,112
Cooling Tower	-	-	-	-	793
Total Project (lb/yr)	**183,518**	**9,783**	**40,794**	**239,874**	**98,905**
Total Project (tpy)	**91.76**	**4.89**	**20.4**	**119.94**	**49.45**

[a] Daily emissions include two startups and two shutdowns per day of operation, and are based on a 15-hour day of operation.

[b] Annual emissions are based on 5,475 hours per year of operation for each CTG and cooling tower.

8.1.6.1.4 Toxic Air Contaminants and Noncriteria Pollutant Emissions

The project is expected to emit small quantities of TACs and noncriteria pollutants (ammonia). The TACs are compounds that have been identified as pollutants that may pose a significant health hazard by the CARB. Some of these pollutants are also regulated under the federal NSR program. These federally regulated pollutants include lead, asbestos, beryllium, mercury, fluorides, sulfuric acid mist, hydrogen sulfide, total reduced sulfur, and reduced sulfur compounds, but since they are expected to be emitted in quantities less than their federal thresholds, they are being analyzed as TACs. The federal Clean Air Act identifies 187 substances as potential hazardous air pollutants (Clean Air Act Sec. 112(b)(1) and the SCAQMD also published a list of compounds it defines as potential TACs (Rule 1401). Any pollutant that may be emitted from the project and is on the federal NSR list, the federal Clean Air Act list, and/or the SCAQMD Rule 1401 list has been evaluated as part of the AFC. For the purpose of this section, the term noncriteria pollutants will include TAC emissions.

Noncriteria pollutant emission factors for the analysis of emissions from the gas turbines were obtained from AP-42 (Table 3.1-3, 4/00, and Table 3.4-1 of the Background Document for Section 3.1). The turbines will be equipped with oxidation catalyst systems, therefore, acrolein, benzene, and formaldehyde emission factors reflect controlled emission levels. The polyaromatic hydrocarbon (PAHs) emission factor was based on the results of two separate source tests (2002 and 2004) from the Delta Energy Center located in Pittsburg, California.

The noncriteria pollutants that may be emitted from the project are shown in Table 8.1-20. Appendix 8.1B provides the detailed emission calculations for noncriteria pollutants. As emissions of each individual HAP are below 10 tpy and total HAP emissions are below 25 tpy, the turbines are not subject to the MACT requirements of 40 CFR 63.

TABLE 8.1-20
Noncriteria Pollutant Emissions For The Project

Pollutant	Emission Factor (pounds per million standard cubic feet [lb/MMscf])[a]	Emissions	
		lb/hr (each turbine)	tpy (total 3 turbines)
Ammonia[b]	5 ppm	6.0	49.2
Noncriteria			
Acetaldehyde	0.040600	0.035	0.5
Acrolein	0.003690	0.0032	0.04
Benzene	0.003330	0.0029	0.04
1,3-Butadiene	0.000436	0.00038	0.005
Ethylbenzene	0.032480	0.028	0.4
Formaldehyde	0.365400	0.317	4.2
Naphthalene	0.001320	0.001	0.015
PAHs[c]	0.000014	0.00001	0.0002
Propylene oxide	0.029435	0.0255	0.34
Toluene	0.131950	0.115	1.5
Xylene	0.064960	0.056	0.7
Total HAP emissions			7.7
Highest Individual HAP (formaldehyde)			4.2

Source: Appendix 8.1B, Tables 8.1B-6.

[a] Obtained from AP-42 Table 3.1-3 revised April 2000 for natural-gas-fired combustion turbines. Formaldehyde, benzene, and acrolein emission factors are from the Background Document for AP-42 Section 3.1, Table 3.4-1 for a natural-gas-fired combustion turbine with an oxidation catalyst.

[b] Based on an exhaust ammonia limit of 5 ppmv @ 15 percent O_2, an F-factor of 8710, and 15 operating hours per day, 365 days per year for each turbine. However, the health risk analysis was based on 24 operating hours per day, 365 days per year for each turbine (i.e., 78.9 tpy).

[c] Carcinogenic PAHs only; naphthalene considered separately. Emission Factor based on two separate source tests (2002 and 2004) from the Delta Energy Center located in Pittsburg, California.

The health risk analysis was conducted assuming that the combustion turbines would be operated 8,760 hours per year, at the maximum heat input rating. This would be a conservative estimate of emissions as the planned operating rates are assumed to be 15 hours per day, 365 days per year.

8.1.6.2 Air Quality Impact Analysis

An ambient air quality impact analysis was conducted to compare worst-case ground-level impacts resulting from the construction and operation of the proposed Highgrove Project with established state and federal AAQSs and applicable SCAQMD significance criteria. The analysis was conducted in accordance with the air quality impact analysis guidelines developed by the USEPA (40 CFR Part 51, Appendix W: *Guideline on Air Quality Models*).

The analysis includes an evaluation of the possible effects of simple, intermediate, and complex terrain, and aerodynamic effects (downwash) due to nearby building(s) and structures on plume dispersion and ground-level concentrations. A basic Guassion plume model was used in this analysis. The model assumes that the concentrations of emissions within a plume can be characterized by a Gaussian distribution of gaseous concentrations about the plume centerline. Gaussian dispersion models are approved by the USEPA and SCAQMD for regulatory use and are based on conservative assumptions (i.e., the models tend to over predict actual impacts by assuming steady-state conditions, no pollutant loss through conservation of mass, no chemical reactions, etc.).

The following subsections present:

- Modeling methodology for evaluating the impacts on ambient air quality
- Modeling scenarios and source data used to evaluate the impacts on ambient air quality
- Results of the ambient air quality modeling analyses

8.1.6.2.1 Modeling Methodology for Evaluating Impacts on Ambient Air Quality

This section outlines the air dispersion modeling techniques used to assess the impacts from the construction, commissioning, and operation of the proposed project. The modeling methodology is consistent with the modeling protocol submitted to the CEC and SCAQMD (Appendix 8.1C) and follows the modeling guidance provided in the USEPA's *Guideline on Air Quality Models* (40 CFR Part 51, Appendix W, November 9, 2005) as well as SCAQMD's modeling guidance.

Model Selection

The construction, commissioning, and operational air quality impact analyses were performed using the Industrial Source Complex, Short-Term Model (ISCST3, Version 02035). ISCST3 is a Gaussian dispersion model capable of assessing impacts from a variety of source types in areas of simple, intermediate, and complex terrain. The model can account for area, line, and volume source types; downwash effects; and gradual plume rise as a function of downwind distance. The model is capable of estimating concentrations for averaging periods from one hour to one year. The required emission source data inputs to ISCST3 include source locations, source elevations, stack heights, stack diameters, stack exit temperatures, stack exit velocities, and pollutant emission rates. The source locations are specified for a Cartesian (x,y) coordinate system where x and y are distances east and north in meters, respectively. The Cartesian coordinate system used for these analyses is the Universal Transverse Mercator Projection (UTM), 1927 North American Datum (NAD 27).

Model Options

ISCST3 model options include use of site-specific vertical profiles of wind speed and temperature, consideration of stack and building wake effects, and time-dependent exponential decay of pollutants. Except where explicitly stated (such as the no-calm processing routine), USEPA recommended default values were used for the construction, commissioning, and operational analyses. A number of these default values are required for USEPA and SCAQMD approval and are listed below.

- Urban dispersion coefficients
- Final plume rise
- Stack tip downwash
- Buoyancy induced dispersion

- No calm processing (SCAQMD requirement)
- No missing data processing
- Default wind profile exponents
- Default vertical potential temperature gradients
- 10-meter anemometer height

Pursuant to SCAQMD guidance that urban dispersion mixing should be assumed within the SCAQMD, the urban dispersion mode was used for this air quality impact analysis.

Meteorological Data

The CEC requires one year of meteorological data approved by the CARB or the local air pollution control district to be used in the air modeling. For dispersion modeling analyses in the area of the proposed site, the SCAQMD recommended the use of the 1981 Riverside meteorological data file[1], which has been pre-formatted for use with the Industrial Source Complex – Short Term (ISCST3) model. The monitoring location is approximately seven kilometers southwest of the proposed Highgrove Project site. The terrain between the monitoring location and the proposed project site is relatively flat, at an elevation of approximately 940 feet above sea level. Moderate terrain exists to the west and east of the monitoring location and the proposed project site. For example, La Loma Hills are located approximately 0.5 mile to the west and gradually rise approximately 450 feet and Blue Mountain lies approximately 1.5 miles to the east of the project site, gradually rising approximately 1,500 feet. However, based on the annual wind rose data (Figure 8.1-1a), the large scale flow is dominated by the land-sea breeze and the northwest/southeast oriented Santa Ana mountains, which affects both locations. Based on the proximity of the monitoring location to the proposed Highgrove Project site and the terrain similarities, it is assumed the 1981 SCAQMD Riverside meteorological data is representative of the proposed Highgrove Project site. Therefore, the 1981 data set was used to model the ambient air quality impacts from construction, commissioning, and operational activities.

Background Data

The background data need not be collected onsite, as long as the data are representative of the air quality in the subject area (40 CFR 51, Appendix W, Section 9.2). The following three criteria were used for determining whether the background data would be representative: (1) location, (2) data quality, and (3) data currentness. These criteria are defined as follows:

- **Location:** The measured data must be representative of the areas where the maximum concentration occurs for the proposed stationary source, existing sources, and a combination of the proposed and existing sources.

- **Data quality:** Data must be collected and equipment must be operated in accordance with the requirements of 40 CFR Part 58, Appendices A and B, and PSD monitoring guidance.

- **Data Currentness:** The data are current if they have been collected within the preceding three years and are representative of existing conditions.

[1] The surface wind speeds and directions were collected at the SCAQMD's Riverside monitoring station (Station ID 54139), while the upper air sounding data used to estimate hourly mixing heights were collected at the Ontario (El Monte & Ontario) monitoring station.

After evaluating the list of SCAQMD and CARB monitoring stations in the vicinity of the proposed project, it was determined the Riverside-Rubidoux monitoring station at 5888 Mission Blvd (USEPA AIRS No. 060658001) is the closest to the proposed project site, which is approximately 8 km to the southwest. It is assumed the SCAQMD and CARB data meet the requirements of Appendices A and B of 40 CFR Part 58, and subsequently meets the criterion for data quality. All of the data have been collected within the preceding 3 years, and subsequently meets the criterion for currentness. Therefore, the maximum background air quality data from the Riverside-Rubidoux monitoring station (Table 8.1-21) were considered a conservative representation of the background data in the vicinity of the proposed project.

TABLE 8.1-21
Background Air Concentrations for the Highgrove Facility [a, b] 2002 – 2004

Pollutant	Averaging Time	2002		2003		2004		Average	Maximum
		ppm	µg/m³	ppm	µg/m³	ppm	µg/m³	µg/m³	µg/m³
NO_2	1-hour [c]	0.10	188	0.09	169	0.09	169	**175**	**188**
	Annual [c]	0.024	44.6	0.022	40.8	0.017	32.4	**39.3**	**44.6**
SO_2	1-hour [c]	0.02	52.4	0.02	52.4	0.02	52.4	**52.4**	**52.4**
	3-hour [d]	0.010	26.2	0.015	39.3	0.016	41.9	**35.8**	**41.9**
	24-hour [c]	0.002	5.2	0.012	31.4	0.015	39.3	**25.3**	**39.3**
	Annual [d]	0.001	2.6	0.003	7.9	0.004	10.5	**7.0**	**10.5**
CO	1-hour [c]	8	9,162	5	5,726	4	4,581	**6,490**	**9,162**
	8-hour [c]	3.0	3,436	3.7	4,237	3.0	3,436	**3,703**	**4,237**
PM_{10}	24-hour [c]	-	130	-	164	-	137	**144**	**164**
	Annual [c, e]	-	58.5	-	56.9	-	55.5	**57.0**	**58.5**
$PM_{2.5}$	24-hour [c]	-	77.6	-	104.3	-	91.7	**91.2**	**104.3**
	Annual [c, e]	-	27.5	-	24.9	-	22.1	**24.8**	**27.5**

[a] Data reported for the SCAQMD Metropolitan Riverside County 1 Station (a.k.a. 5888 Mission Blvd, Riverside-Rubidoux Monitoring Station – AIRS No. 060658001). The annual SCAQMD ambient air quality data summaries were used as the primary reference. The USEPA AIRS database was used when SCAQMD data were unavailable.

[b] Conversion from ppm to µg/m³ at 25° Celsius and 760 torr.

[c] Source of data: http://www.aqmd.gov/smog/historicaldata.htm

[d] Source of data: http://www.epa.gov/air/data/monvals.html

[e] Annual Arithmetic Mean

In evaluating the impacts of construction, commissioning and operation on ambient air quality, modeling of the ambient impacts for the project were added to the representative background concentrations in Table 8.1-21, and the results were compared to the state and federal ambient air quality standards for SO_2, NO_2, PM_{10}, and CO. The modeled PM_{10} and NO_2 concentrations for each permit unit were also compared to the allowable increase significance thresholds established by the SCAQMD in Rule 1303 and Rule 2005 (NSR for RECLAIM) thresholds, respectively.

Receptor Data

Cartesian coordinate receptor grids were used to assess the ground-level pollution concentrations surrounding the project area, identify the extent of significant impacts, and identify the maximum impact locations.

For the construction air quality impact analyses, a receptor grid was set up starting from the property boundary and extending to approximately 2 km in all directions. Receptor spacing was 30 meters along the demolition and construction boundaries out to 500 meters, and 100 meter spacing out to 2 km.

For the commissioning and operational air quality impact analyses, a fine receptor grid (i.e., 30-meter resolution) was used around the fence line and extended out 10 kilometers (km). The fine receptor grid was used for both the screening and detailed modeling analysis. Concentrations within the facility fence line were not calculated.

Receptor elevations, including those around the fenceline, were determined using the 7.5-minute U.S. Geological Survey (USGS) Digital Elevation Model (DEM) data (i.e., 30-meter spacing between grid nodes). All coordinates were referenced to the UTM Zone 11, NAD27. Source base elevations, which are used in part to determine the height of the plume relative to the receptors, were based on the engineering site grading plan.

Building Downwash and Good Engineering Practice Assessment

For the commissioning and operational analyses, the USEPA's Building Profile Input Program (BPIP) (Dated 04112) was used to calculate the projected building dimensions required for ISCST3 evaluation of impacts from building downwash. The demolition and construction sites were represented as area sources, therefore, an evaluation of the GEP or building downwash was not applicable.

GEP as used in the modeling analyses is the maximum height allowed to ensure that emissions from the stack do not result in excessive concentrations of any air pollutant in the immediate vicinity of the source as a result of atmospheric downwash, eddies, or wakes that may be created by the source itself, nearby structures, or nearby terrain obstacles. In addition, the GEP modeling restriction ensures that any required regulatory control measure is not compromised by the effect of that portion of the stack that exceeds the GEP.

The USEPA guidance ("Guideline for Determination of Good Engineering Practice Stack Height," Revised 6/85) for determining GEP stack height (H_g) is based on the height of a nearby structure(s) measured from the ground-level elevation at the base of the stack (H) and the lesser dimension, height or projected width, of the nearby structure(s) (L) as follows:

$$Hg = H + 1.5L$$

Based on the onsite and offsite building dimensions as input into BPIP, the calculated GEP height for the facility stack is 29.93 meters. The proposed turbine stack height of 24.4 meters does not exceed GEP stack height.

8.1.6.2.2 Modeling Scenarios and Source Data Used to Evaluate Impacts on Ambient Air Quality

In evaluating the impacts of the proposed project on ambient air quality, modeling of the worst case ambient impacts for the project were added to representative background concentrations, and the results compared to the state and federal ambient air quality standards. For pollutants with ambient background concentrations that exceed the most stringent ambient air quality standards (i.e., 24 hour and annual PM_{10}), the modeling results were also compared to the significant change thresholds established by SCAQMD in Rule 1303.

Demolition/Construction Impacts Analysis

Based on the 14-month construction schedule, demolition would occur during the first five months of the proposed project and power plant construction would overlap with the demolition activities for two months beginning in month four. Therefore, three modeling scenarios were evaluated to determine whether the maximum modeled pollutant concentrations would result from demolition, power plant construction, or the overlapping period. Emissions were divided into three categories: onsite exhaust, fugitive dust from vehicle and construction equipment, and windblown fugitive dust. The Localized Significance Threshold Methodology (SCAQMD, 2003) was used to convert the predicted 1-hour NO_x concentration to NO_2. For the remaining pollutants, the maximum concentrations were added to background concentrations and compared to the applicable standards. A detailed summary of the assumptions and emission factors used to estimate the emission rates and the details of the dispersion modeling approach are presented in Appendix 8.1A.

Commissioning Impacts Analysis

During the commissioning period, the CTGs are operated without the emission control systems fully operational. The water-injected combustors will be tuned towards the middle of the commissioning period and the SCR systems will be installed and tuned towards the end of the commissioning period. Because emission control systems will not be fully operational during the commissioning period, emissions of NO_x and CO will be significantly higher than during other operating conditions. Therefore, the Applicant analyzed the ambient air quality impacts during commissioning.

A screening analysis was used to predict the maximum impact for each of the commissioning scenarios. The screening analysis was based on a unit emission rate of 1 g/sec and the 1981 SCAQMD Riverside meteorological data set. Because maximum PM_{10} and SO_2 impacts are expected to occur for scenarios with maximum fuel consumption (i.e., normal base load conditions), only short-term NO_x and CO impacts were evaluated for the commissioning scenarios. An annual analysis was not conducted because the commissioning phase is expected to occur over a 10- to 20-day period. A summary of the commissioning scenarios examined in this screening analysis, along with their exhaust and emission characteristics are shown in Appendix 8.1C. The screening analysis was evaluated to determine the maximum impact from each individual unit and the maximum impact for multiple turbines operating simultaneously. Because the cooling tower emissions are not included as part of the turbine commissioning analysis, a detailed analysis was not required and the maximum impacts predicted in the screening analysis were added to background concentrations and compared to the applicable standards. The results of the turbine commissioning analysis are presented in Subsection 8.1.6.2.3 and Appendix 8.1C. Table 8.1-22 presents the "worst case" total emissions for all units. The number of units undergoing simultaneous commissioning is indicated under the "Scenario" header. It should be noted that although higher NO_x emissions are expected during the Water Injection commissioning phase (see Appendix 8.1C, Table 8.1C-3), only one unit will be commissioned at a time and, therefore, the impacts are less than the scenario listed in Table 8.1-22. The exit velocity and exhaust temperature listed are for each of the commissioning turbines.

TABLE 8.1-22
Worst Case Model Input—Commissioning Scenario

Averaging Period	Scenario	Exit Velocity (m/s)	Exhaust Temp (K)	Emission Rates*			
				NO_x		CO	
				lb/hr	g/s	lb/hr	g/s
8-hour (CO)	Complete AVR Commissioning (3 units)	35.23	693	-	-	765	96.4
1-hour (CO)	Complete AVR Commissioning (3 units)	35.23	693	-	-	765	96.4
1-hour (NO_2)	Controlled Break In Operation (3 units)	20.08	710	297	37.4	-	-

* Total for all commissioning units
See Appendix 8.1C Table 8.1C-3.
g/s = grams per second
m/s = meter per second
K = Kelvin

Operation Impacts Analysis (Including Startup/Shutdown Turbine Cycles)

The emissions used for modeling the worst-case impacts were based on maximum short term emissions that assumed the highest pollutant emission rates based on either load, temperature, or whether the turbine was in a startup or shutdown cycle. It was assumed that the maximum 1-hour emission rate would include one startup and one shutdown and the maximum 3- and 8-hour emission rates would include two startups and two shutdowns per averaging period. For the daily emissions, it was assumed that the turbine would be operating approximately 24 hours under normal operating conditions which would include two startups and two shutdowns. For the annual worst-case impacts, each turbine and cooling tower was assumed to operate 15 hours per day with two starts and two stops each day, for 365 days per year. The cooling tower was assumed to operate at the maximum water recirculation rate for 5,475 hours. To ensure the operational impacts were based on maximum emission levels and worst-case dispersion conditions, screening and detailed modeling analyses were conducted.

The screening analysis was used to predict the maximum impact for each of the normal turbine operating conditions and the startup and shutdown cycles. The screening analysis was conducted using a unit emission rate, ISCST3, and the 1981 SCAQMD Riverside meteorological data set. Turbine emissions and stack parameters, such as flow rate and exit temperature, exhibit some variation with ambient temperature and operating load. Therefore, in order to calculate the worst-case air quality impacts, dispersion modeling was conducted with and without evaporative coolers on, at base, 75, and 50 percent loads, and at 97˚F, 80˚F, and 30˚F, which represent the design high, low, and weighted annual average ambient temperatures (annual average was weighted to reflect peak operation during the summer months). For the 30˚F scenario, evaporative coolers were not evaluated because the temperature is too low for this feature. Because the cooling tower emissions (i.e., PM_{10} emissions only) were independent of the turbine conditions, the cooling tower emissions were not included as part of the screening analysis. The screening analysis predicts that the

highest pollutant impacts would occur under the operating conditions; 80˚F at 50 percent load, 30˚F at 50 percent load, and 30˚F at base load, depending on contaminant and averaging period (Table 8.1-23).

TABLE 8.1-23
"Worst Case" Model Input for Normal Turbine Operation

Averaging Period	Scenario	Exit Velocity (m/s)	Exhaust Temp (K)	Emission Rates*							
				NO_x		CO		SO_2		PM_{10}	
				lb/hr	g/s	lb/hr	g/s	lb/hr	g/s	lb/hr	g/s
Annual (PM_{10},)	80˚F 50% Load	24.12	689	-	-	-	-	-	-	2.9	0.37
Annual (NO_x, SO_2)	30˚F Base Load	36.58	668	5.7	0.72	-	-	0.30	0.04	-	-
24-hour (PM_{10})	80˚F 50% Load	24.12	689	-	-	-	-	-	-	6.0	0.75
24-hour (SO_2)	30˚F Base Load	36.58	668	-	-	-	-	0.61	0.08	-	-
8-hour (CO)	30˚F 50% Load	24.64	675	-	-	13.8	1.7	-	-	-	-
3-hour (SO_2)	30˚F Base Load	36.58	668	-	-	-	-	0.60	0.08	-	-
1-hour (NO_2 and SO_2)	30˚F 50% Load	24.64	675	12.6	1.6			0.54	0.07	-	-
1-hour (CO)	80˚F 50% Load	24.12	689	-	-	35.0	4.4	-	-	-	-
Annual (PM_{10})	Cooling Tower (2 cells; Modeled with the maximum annual PM_{10} scenario)	9.24	307	-	-	-	-	-	-	0.030	0.004
24-hour (PM_{10})	Cooling Tower (2 cells; Modeled with the maximum 24-hour PM_{10} scenario)	9.24	307	-	-	-	-	-	-	0.048	0.006

* Emissions are for each unit (See Appendix 8.1C, Tables 8.1C-3 and 8.1C-4)

A summary of the operating conditions examined in this screening analysis, along with their exhaust and emission characteristics are shown in Appendix 8.1C, Tables 8.1C-1 and 8.1C-3.

For the proposed project, the three combustion turbines would be the only sources of NO_x, SO_x, and CO. Therefore, the modeling results from the unit emission rate-based screening analysis were multiplied by the actual NO_x, SO_x, and CO emission rates for each operating scenario and averaging period to obtain projected maximum concentrations. These

maximum concentrations were added to the background concentration and compared to the respective ambient air quality standards.

The results of the unit emission rate-based screening 24-hour and annual PM_{10} modeling for each permit unit were also multiplied by the actual PM_{10} emission rate for each operating scenario to obtain projected maximum concentrations that could be compared to the SCAQMD Rule 1303 significance levels. The screening analysis predicts that the highest PM_{10} impacts would occur under the 80˚F at 50 percent load (Table 8.1-23).

For comparison to the AAQSs, a detailed modeling analysis was conducted to predict the total PM_{10} and $PM_{2.5}$ impacts from the "worst case" turbine operating scenario identified in the screening analysis and the cooling tower emissions. The detailed analysis was conducted using the actual turbine emission rates combined with the cooling tower emissions for PM_{10}. The maximum concentrations were then added to the PM_{10} and $PM_{2.5}$ background concentrations and compared to the respective ambient air quality standards.

The results of the screening and detailed modeling analysis are presented in Subsection 8.1.6.2.3 and Appendix 8.1C.

8.1.6.2.3 Results Compared to the Ambient Air Quality Standards

Demolition/Construction Impacts Analysis

The results of the analysis (Table 8.1-24) indicate that the maximum demolition/ construction impacts will be below the AAQSs for each of the criteria pollutants and averaging periods, with the exception of the 24-hour PM_{10} and $PM_{2.5}$ concentrations and the annual PM_{10} and $PM_{2.5}$ concentrations. For both pollutants and averaging periods, the annual background concentrations exceed the AAQS without adding the modeled concentrations. Because the entire SCAQMD is nonattainment for the state PM_{10} standard, the incremental 24-hour and annual PM_{10} impacts from construction were compared to the SCAQMD allowable change in 24-hour concentration threshold of 10.4 $\mu g/m^3$ (SCAQMD Rule 403 and SCAQMD LST, 2003) and annual concentration threshold of 1 $\mu g/m^3$ (SCAQMD Rule 1303).

The predicted 24-hour and annual PM_{10} concentrations exceed the SCAQMD allowable change in concentration thresholds. However, based on the results of the analysis, approximately 90 percent of the particulate concentrations would be due to fugitive dust emissions. The assumptions used to estimate the project's fugitive emissions are conservative in nature and the fugitive dust control efficiencies expected to be achieved during construction are higher than those used in the emissions estimate. Additionally, the average annual rainfall during the construction period was not factored into the calculations, which would also further reduce the fugitive dust emissions from construction. Because the demolition/construction activity is finite and best available emission control techniques will be used throughout the 14-month construction activity period, impacts from construction would be less than significant.

TABLE 8.1-24
Maximum Modeled Impacts from Demolition/Construction and the Ambient Air Quality Standards

Pollutant	Averaging Period	Maximum ISCST3 Concentration[a] ($\mu g/m^3$)	Background Concentration[b] ($\mu g/m^3$)	Total Predicted Concentration ($\mu g/m^3$)	State Standard ($\mu g/m^3$)	Federal Standard ($\mu g/m^3$)
NO_2	1-hour	150[c]	188	338	470	-
	Annual	40	45	85	-	100
PM_{10}	24-hour	122	164	286	50	150
	Annual	18	59	77	20	50
$PM_{2.5}$[d]	24-hour	32	104	137	-	65
	Annual	5.9	27.5	33.4	12	15
CO	1-hour	506	9,162	9,667	23,000 (20 ppm)	40,000
	8-hour	255	4,237	4,493	10,000 (9 ppm)	10,000
SO_2	1-hour	5.2	52.4	58	655	-
	3-hour	4.3	41.9	46	-	1,300
	24-hour	1.1	39.3	40	105	365
	Annual	0.2	10.5	11	-	80

[a] The maximum 24-hour PM_{10} and $PM_{2.5}$ concentrations are predicted to occur during demolition. The maximum 1-hour and 8-hour CO concentrations are predicted to occur during power plant construction. The maximum 1-hour NO_2, and the 1-hour, 3-hour, and 24-hour SO_2 concentrations are predicted to occur during the overlap of demolition and construction activities.

[b] Background concentrations were the highest concentrations monitored during 2002 through 2004.

[c] The maximum 1-hour NO_2 concentration was derived from the predicted 1-hour NO_x concentrations at each receptor and the NO_2 to NO_x ratios as a function of downwind distance, as discussed in the SCAQMD Localized Significance Threshold Methodology (LST), 2003.

[d] Reported $PM_{2.5}$ concentration from exhaust and fugitive sources assumes all PM from exhaust emissions are less than 2.5 micron and 21 percent of the fugitive PM emissions are less than 2.5 micron (SCAQMD LST, 2003).

Commissioning Impacts Analysis

The ambient air quality impacts of the plant commissioning were assessed based on vendor-provided schedules and emissions. Table 8.1-25 presents a comparison of the maximum modeled project commissioning impacts to the AAQS. The analysis excluded a comparison to the annual averaging period standards or thresholds because commissioning will only occur once during the project lifetime, and is expected to last approximately 10 to 20 days. As shown in Appendix 8.1C, Table 8.1C-3, there are several phases to the commissioning of the turbines. The phase with the maximum impact is presented below for NO_2 and CO. The phase that gives rise to the largest predicted off-property impact for NO_x is the Controlled Break-In Operation scenario, and for CO, it is the Complete AVR Commissioning, as presented above in Table 8.1-25. Both of these phases involve the simultaneous commissioning of, and therefore emissions from, all three units.

TABLE 8.1-25
Turbine Commissioning Impacts Analysis—Maximum Modeled Impacts Compared to the Ambient Air Quality Standards
Simultaneous Turbine Emissions

Pollutant	Averaging Time	Maximum Facility Impact ($\mu g/m^3$)	Background ($\mu g/m^3$)[a]	Total Impact ($\mu g/m^3$)	State Standard ($\mu g/m^3$)	Federal Standard ($\mu g/m^3$)
NO_2	1-hour	622.0[b,c]	188	810.0	470	-
CO	1-hour	1,232.2[b]	9,162	10,394.2	23,000	40,000
	8-hour	399.5[b]	4,237	4,636.5	10,000	10,000

[a] Background concentrations were the highest concentrations monitored during 2002-2004
[b] 1st highest modeled concentrations were used
[c] A 100 percent conversion of NO_x to NO_2 was assumed

The results of the analysis indicate the maximum NO_2 concentration would exceed the 1-hour state ambient air quality standard. However, the 1-hour NO_2 concentrations were conservatively estimated assuming that all of the emitted NO_x from the turbines during commissioning operations is converted to NO_2. It should be emphasized as well that these are predicted impacts from commissioning of the turbines only and is not indicative of normal operations. Additional dispersion modeling will also be conducted employing the Ozone-Limiting Method to reduce the predicted 1-hour NO_2 commissioning impacts.

Operation Impacts Analysis (Including Startup/Shutdown Turbine Cycles)

The highest modeled concentrations were used to demonstrate compliance with the AAQS. Table 8.1-26 presents a comparison of the maximum Highgrove Project operational impacts to the ambient air quality standards. For those pollutants and averaging periods where the background concentrations do not exceed the AAQS, the project will not cause or contribute to the violation of a standard. For those pollutants where the background data is already in excess of the standards, the project's impact plus background is above the standard, and would further contribute to an existing violation of the standard absent mitigation. The Highgrove Project will be providing such mitigation in the form of emission reduction credits. The complete list of off-property impacts for the various scenarios and contaminants is presented in Appendix 8.1C, Table 8.1C-6. (Note: the results in the Appendix 8.1C, Table 8.1C-6 do not include background concentrations). The results in Table 8.1-26 present the maximum impact from all the scenarios modeled.

TABLE 8.1-26
Normal Operation Impacts Analysis—Maximum Modeled Impacts Compared to the Ambient Air Quality Standards
Facility-Wide Emissions

Pollutant	Averaging Time	Maximum Facility Impact ($\mu g/m^3$)	Background ($\mu g/m^3$)[c]	Total Impact ($\mu g/m^3$)	State Standard ($\mu g/m^3$)	Federal Standard ($\mu g/m^3$)
NO_2	1-hour [a]	74.0	188	262.0	470	-
	annual[a]	0.56	44.6	45.2	-	100
SO_2	1-hour	3.2	52.4	55.6	655	-
	3-hour	1.9	41.9	43.8	-	1,300
	24-hour	0.37	39.3	39.7	105	365
	annual	0.029	10.5	10.5	-	80
CO	1-hour	205.8	9,162	9,368	23,000	40,000
	8-hour	28.6	4,237	4,266	10,000	10,000

TABLE 8.1-26
Normal Operation Impacts Analysis—Maximum Modeled Impacts Compared to the Ambient Air Quality Standards
Facility-Wide Emissions

Pollutant	Averaging Time	Maximum Facility Impact ($\mu g/m^3$)	Background ($\mu g/m^3$)[c]	Total Impact ($\mu g/m^3$)	State Standard ($\mu g/m^3$)	Federal Standard ($\mu g/m^3$)
PM_{10}	24-hour	4.4	164	168.4	50	150
	annual[b]	0.33	58.5	58.8	20	50
$PM_{2.5}$	24-hour	4.4	104.3	108.7	-	65
	annual[b]	0.33	27.5	27.8	12	15

[a] 1-Hour and annual NO_2 predictions are conservatively based on 100 percent conversion to NO_2. In reality, NO to NO_2 conversion is limited by the amount of ambient ozone that is available to complete the conversion.
[b] Background concentrations were the highest concentrations monitored during 2002-2004

Fumigation Impacts Analysis

Inversion breakup fumigation occurs when a plume is emitted into a stable layer of air and that layer is then mixed to the ground in a short period of time through convective heating and microscale turbulence. Under these conditions, an exhaust plume may be drawn to the ground with little diffusion, causing high ground-level pollutant concentrations, although typically for periods less than 1 hour.

The effects of fumigation on the maximum modeled impacts were evaluated using the USEPA SCREEN3 model (Version 96043). For this evaluation, only impacts from the turbine stacks were evaluated. The same worst-case scenarios identified in the operational impacts screening analysis were considered for fumigation. The fumigation concentrations shown in Table 8.1-27 are less than 7 percent of the maximum predicted impacts predicted by ISCST3. Based on this evaluation, it is concluded that fumigation will not result in the worst-case impacts.

The nearest shoreline is approximately 65 km west of the proposed Highgrove Project site. Therefore, it is concluded that an assessment of the effects of shoreline fumigation on the maximum modeled impacts is not applicable to this site.

TABLE 8.1-27
SCREEN3 1-Hour Fumigation Impacts Analysis
Inversion Breakup Fumigation

Pollutant	Scenario	SCREEN3 Fumigation Result ($\mu g/m^3$)	Maximum ISCST3 Facility Impact ($\mu g/m^3$)	Percent of ISCST3 Concentration (%)
NO_x	30 F 50% Load	5.1	74	6.9
CO	80 F 50% Load	14.1	206	6.8
SO_x	30 F 50% Load	0.22	3.2	6.9

8.1.6.2.4 Results Compared to the SCAQMD New Source Review Requirements

Two SCAQMD rules, Rule 1303 and Rule 2005, require a demonstration that a proposed project will comply with applicable ambient AAQSs and not cause a significant change in

air quality concentrations. This section demonstrates the Highgrove Project's compliance with the ambient air quality impact demonstrations required by these two rules.

Operation Impacts Analysis (Including Startup/Shutdown Turbine Cycles)

Rule 1303 Compliance. To demonstrate compliance with SCAQMD modeling requirements of Rule 1303, Table 8.1-28 presents the maximum ambient air quality impacts for the Highgrove Project compared to the SCAQMD's significance thresholds for PM_{10}. Table 8.1-28 shows the maximum Highgrove Project modeled impacts for PM_{10} from any individual CTG will not exceed the SCAQMD significance thresholds. Therefore, the project's PM_{10} impacts are not considered significant as defined by the SCAQMD.

TABLE 8.1-28
Normal Operation Impacts Analysis for AES—SCAQMD Rule 1303 (Maximum Modeled Impacts)
Individual CTG Analysis

Pollutant	Averaging Time	Maximum CTG Impact ($\mu g/m^3$)	SCAQMD Rule 1303 Significance Threshold ($\mu g/m^3$)	Significant?
PM_{10}	24-hour	1.70	2.5	No
	annual*	0.11	1.0	No

* Annual Arithmetic Mean

Rule 2005 Compliance. To determine compliance with the SCAQMD's Rule 2005 (NSR for RECLAIM) ambient air quality impacts, the project impacts are compared to the NO_2 AAQS of 470 $\mu g/m^3$ on a 1-hour basis and 100 $\mu g/m^3$ on an annual basis. As shown in Table 8.1-29, the total NO_2 impacts from any individual CTG do not exceed the SCAQMD's Rule 2005 significance threshold. Therefore, the project's NO_2 impacts are not considered significant as defined by the SCAQMD.

TABLE 8.1-29
Normal Operation Impacts Analysis for AES —SCAQMD Rule 2005 (Maximum Modeled Impacts)
Individual CTG Analysis

Pollutant	Averaging Time	Maximum CTG Impact ($\mu g/m^3$)	SCAQMD Rule 2005 Significance Threshold ($\mu g/m^3$)	Significant?
NO_2	1-hour	25.8	470	No
	annual	0.19	100	No

8.1.6.2.5 Results Compared to the PSD Requirements

PSD Increment Consumption

The PSD program was established to allow emission increases (increments of consumption) that do not result in significant deterioration of ambient air quality in areas where criteria pollutants have not exceeded the NAAQS.

Because the PTE for the proposed power plant is less than 250 tpy for each of the PSD-regulated pollutants, and the facility is not considered one of the 28 major source categories (40 CFR 52.21(b)(1)(i), the project is not considered a major stationary source in

accordance with SCAQMD Rule 1702 [2] or the PSD regulations. Because the Highgrove Project is considered a minor source that is not subject to PSD review, a comparison of project impacts to PSD program requirements, such as allowable concentration increments and pre-construction monitoring thresholds are not applicable.

8.1.6.3 Health Risk Assessment

Potential health risk impacts associated with potential emissions of toxic air contaminants were evaluated in the Public Health section of the AFC (Section 8.6 and Appendix 8.6B). The risk assessment was prepared using guidelines developed under the SCAQMD's July 2005 *Risk Assessments Procedures for Rules 1401 and 212 Version 7* (SCAQMD, 2005a). For a detailed risk assessment, such as the assessment prepared in this evaluation, these procedures include the *SCAQMD July 2005 Supplemental Guidelines for Preparing Risk Assessments for the Air Toxics "Hot Spots" Information and Assessment Act (AB2588)* (SCAQMD, 2005b). Those guidelines supplement the *Air Toxics Hotspots Program Guidance Manual for Preparation of Health Risk Assessments* (OEHHA, 2003) and the CARB Recommended Interim Risk Management Policy for Inhalation-based Residential Cancer Risk (CARB, 2003). The TACs that were addressed in the assessment are listed in Table 8.6-4, along with their respective published OEHHA health-effect values.

Emissions of TACs that may be associated with the proposed facility (natural-gas-fired turbines) were estimated using emission factors approved by the SCAQMD, with the exception of PAH emissions. The PAH emission factor was based on source test results from two discrete tests conducted at the Delta Energy Center facility. It should be noted that the Delta Energy Center facility does not incorporate an oxidation catalyst system that would be expected to result in some reduction in organic compound emissions. Emissions from the stormwater oil/water separator are not included in this analysis because they are estimated to be negligible.

Concentrations of these substances in ambient air associated with the potential emissions were estimated using the SCAQMD-approved HARP model. HARP includes the USEPA's ISCST3 dispersion model, which estimates both short-term and long-term average ambient concentrations at receptor locations for use in a risk assessment. To estimate ambient concentrations, ISCST3 accounts for site-specific terrain, meteorological conditions and emissions parameters (such as stack exit velocities and temperatures). Health risks potentially associated with the estimated concentrations of chemical substances in ambient air were characterized in terms of excess lifetime cancer risks (for substances listed by OEHHA as cancer causing), or comparison with reference exposure levels for non-cancer health effects (for substances listed by OEHHA with non-cancer causing effects).

The term Maximum Exposed Individual (MEI)[3] is taken from OEHHA risk assessment guidelines (OEHHA, 2003) and refers to a Maximum Exposed Individual Resident (MEIR) or worker (MEIW) that is hypothetically located continuously at the point where the highest ambient concentrations of modeled chemical substances associated with facility emissions

[2] SCAQMD Rule 1702 is listed for completeness. However, the SCAQMD has relinquished authority to conduct PSD review back to USEPA and Rule 1702 will no longer be applicable to new or modified projects until such time as USEPA redelegates PSD authority back to the SCAQMD.

[3] The terms MEI, MEIR, and MEIW refer to a receptor location of maximum ambient exposure and do not incorporate a reference to cancer risk or to non-cancer acute or chronic exposures. In the SCAQMD, Rules 1401 and 1402 refer to Maximum Individual Cancer Risk which, by OEHHA terminology, would be termed the MEI for Cancer effects.

are predicted. Cancer risk and non-cancer health hazard were estimated for both the MEIR and MEIW based on the modeled ambient concentrations of substances of potential concern.

For the purposes of this evaluation, it was assumed that each modeled receptor location could potentially be either a residential location, or a worker location. This highly conservative assumption neglects the fact that certain locations are suitable for residents only or for workers only, and some physical locations are rarely ever occupied (i.e., steep slopes or roadways.)

Where the zone of impact, including the region surrounding the modeled facility, shows a potential maximum added lifetime cancer risk (all pathways, 70-year exposure) of one in one million or greater, OEHHA risk assessment guidelines (OEHHA, 2003) require that cancer risk and non-cancer health hazard values at each sensitive receptor within the zone of impact be estimated. For non-carcinogens, the zone of impact is defined as the area surrounding the modeled facility that has a potential hazard index of greater than or equal to one half.

The evaluation of potential non-cancer health effects from exposure to short-term and long-term concentrations in air was performed by comparing modeled concentrations for the MEI with reference exposure levels (RELs). The REL is a concentration in ambient air at or below which no adverse health effects are anticipated. Potential non-cancer effects were evaluated by calculating a ratio of the modeled concentration in air and the REL. This ratio is the hazard index. Inhalation cancer potency, oral slope factor values, and RELs used to characterize health risks associated with modeled impacts were obtained from the *Consolidated Table of OEHHA/CARB Approved Risk Assessment Health Values* (OEHHA/CARB, 2005).

This HRA included potential health impacts from inhalation, skin contact, and oral pathways, as required by OEHHA guidelines. Additionally, this assessment included highly-conservative assumptions such as a 70-year exposure duration for residential receptors and a 40-year exposure duration for commercial/industrial receptors. Additional conservative assumptions included extremely high exposure rates such as the 95th percentile breathing rate of 393 liters of air/per kilogram per day (kg-day) were included.

Modeling showed that the MEIR excess lifetime cancer risk was 0.3 in one million, and the MEIW excess lifetime cancer risk was 0.06 in one million. Excess lifetime cancer risks less than 10 in one million are unlikely to represent public health impacts that require additional controls of facility emissions.

For residential receptors, formaldehyde and PAH emissions have the highest potential to contribute to the cancer impact; however, the contribution is less than 0.2 in one million for formaldehyde and less than 0.1 in one million for PAHs. The dominant exposure pathway for formaldehyde is inhalation and the dominant exposure pathway for PAHs is ingestion. Other substances each contribute less than 0.01 in one million at the MEIR.

The HI for acute non-carcinogenic substances was 0.1. The HIs for chronic non-carcinogenic substances were 0.02 for both the MEIR and MEIW.

Because the maximum cancer risk estimated in this evaluation was far less than one for both the MEIR and MEIW, and because the hazard indices for chronic and acute exposure to non-carcinogenic substances was also far below one-half, there is no zone of impact and

OEHHA risk assessment guidelines (OEHHA, 2003) do not require an analysis of the potential risk levels at sensitive receptor locations. For the sake of completeness however, this evaluation includes the modeled potential maximum health impacts at the proposed school under consideration across Taylor Street approximately 1,100 feet to the south of the project site.

Modeling showed that the MEIR excess lifetime (70 year) cancer risk within the proposed school property boundary was 0.02 in one million. The HI for chronic non-carcinogenic substances was 0.0009 calculated over a 70-year exposure period. The HI for acute non-carcinogenic substances was 0.002.

HARP results that detail the health risks associated with emissions to the air are presented in Appendix 8.6C.

8.1.6.4 Class I Area Visibility Impacts Analysis

SCAQMD Regulation XIII requires any major facility to conduct a modeling analysis for plume visibility if the net emission increase from the new or modified source exceeds 15 tpy of PM_{10} or 40 tpy of NO_x; and the location of the source, relative to the closest boundary of a specified Federal Class I area, is within the distance specified in Table 8.1-30.

The distances to the Class I areas from the Highgrove Project were determined using the UTM coordinates for the project site and the nearest boundary of the Class I areas. Based on the assessment, the distances from the Highgrove Project site to the Class I areas are greater than the SCAQMD Regulation XIII thresholds (Table 8.1-30).

Therefore, because the project does not result in an increase of 15 tpy of PM_{10} or 40 tpy of NO_x and the Class I areas are not within the SCAQMD Regulation XIII thresholds, a visibility analysis was not conducted.

TABLE 8.1-30
Distance from Proposed AES Highgrove Project to Federal Class I Areas

Class I Area	SCAQMD Regulation XIII Distance (km)	Distance from the Highgrove Project to Class I Area	Visibility Analysis Required (Yes/No)
Agua Tibia	28	68.8	No
Cucamonga	28	29.3	No
Joshua Tree	29	81.5	No
San Gabriel	29	53.3	No
San Gorgonio	32	35.6	No
San Jacinto	28	55.3	No

8.1.7 Compliance with Laws, Ordinances, Regulations, and Standards

8.1.7.1 Compliance with Federal Requirements

The SCAQMD has been delegated authority by the USEPA to implement and enforce most federal requirements that are applicable to the project, including the New Source Performance Standards. However, the SCAQMD relinquished its delegated authority for PSD review. Compliance with the SCAQMD regulations ensures compliance and consistency with the corresponding federal requirements. As discussed in AFC Subsection 8.1.5, Laws, Ordinances, Regulations and Standards, the PSD program requirements apply on a pollutant-specific basis to the following:

- A new major facility that will emit 100 tpy or more, if it is one of the 28 PSD source categories in the federal Clean Air Act, or a new facility that will emit 250 tpy or more; or
- A major modification to an existing major facility that will result in net emissions increases in excess of significant emissions levels.

The proposed project is a new facility that is not one of the listed 28 PSD sources, therefore, the 250 TPY threshold applies. The Highgrove Project is not expected to emit pollutants exceeding 250 TPY and is not subject to PSD review.

The project will be required to comply with the Federal Acid Rain requirements (Title IV). Since the SCAQMD has received delegation for implementing Title IV through its Title V permit program, AES will secure a SCAQMD Title V permit that incorporates the necessary requirements for compliance with the Title IV Acid Rain provisions.

New Source Performance Standards: 40 CFR 60 Subpart GG of this rule require monitoring of fuel; impose limits on the emissions of NO_x and SO_2; and require source testing of stack emissions, process monitoring, and data collection and recordkeeping. All of the BACT limits will be more stringent than the requirements of the NSPS emission limits. Monitoring and recordkeeping requirements for BACT (Rules 1303, 2005), Title V (Regulation XXX) and the RECLAIM program (Regulation XX) will be more stringent than the requirements in this rule; therefore, the facility will comply with the NSPS regulations.

As indicated above, the USEPA has proposed a revised new source performance standard (Subpart KKKK) that will replace Subpart GG. The Highgrove Project turbines will utilize low-NO_x combustor technology along with an SCR, and will utilize pipeline quality natural gas, so they will comply with both the NO_x and SO_2 limits. The NO_x emissions of the turbine will be 0.109 lb/MW-hr, since NO_x emissions at 100 percent load will be 11.2 lb/hr and the output will be 102.6 MW. The certified NO_x CEMS will ensure compliance with the standard. Records of natural gas usage will ensure compliance with the SO_2 limit.

Once this NSPS is promulgated, the requirements of Subpart GG will not be applicable, and the Highgrove Project turbines will comply with the requirements of Subpart KKKK.

Acid Rain, 40 CFR 75, SCAQMD Regulation XXXI: Applications for Title IV will be made concurrent with the Title V and the NSR applications submitted to the SCAQMD. Monitoring and CEMS requirements imposed to ensure compliance with BACT, Title V and RECLAIM requirements will incorporate the CEMS and monitoring requirements of Title IV. Once the facility begins operation, it will acquire Title IV SO_2 Allowances, as required by this program.

8.1.7.2 Compliance with State Requirements

State law sets up local air pollution control districts and air quality management districts with the principal responsibility for regulating emissions from stationary sources. As discussed above, the Highgrove Project is under the local jurisdiction of the District, and compliance with SCAQMD regulations will ensure compliance with state air quality requirements.

8.1.7.3 Compliance with Local Requirements: South Coast Air Quality Management District

The SCAQMD has been delegated responsibility for implementing local, state, and federal air quality regulations in the portions of four counties[4] within the SCAQMD. The project is subject to SCAQMD regulations that apply to new sources of emissions, to the prohibitory regulations that specify emission standards for individual equipment categories, and to the requirements for evaluation of impacts from toxic air pollutants. The following subsections include the evaluation of facility compliance with the applicable SCAQMD requirements.

Under the CEC's AFC program, AES is required to secure a preconstruction DOC from the SCAQMD. Because of the Title V and NSR permitting requirements, the SCAQMD will be requested to provide the CEC with a DOC in addition to processing its own permit applications related to the Highgrove Project. The preconstruction DOC review includes demonstrating that the project will use BACT and will provide any necessary emission offsets.

Applicable BACT levels are shown in Table 8.1-31, along with anticipated potential facility emissions. SCAQMD Rule 1303 requires the project to apply BACT for emission increases of NO_x, VOC, SO_x, CO, and PM_{10} (criteria pollutants), as well as ammonia. Through long-standing administrative policy, the increase threshold per permit unit for applicability of the BACT requirement is 1 lb/day. As shown in the table, BACT is required for NO_x, VOC, SO_2, CO, PM_{10}, and ammonia. The calculation of facility emissions is discussed in AFC Subsection 8.1.6.1.1.

TABLE 8.1-31
Best Available Control Technology Requirements

Pollutant	Applicability Level	Permit Units Exceeding this Level	BACT Required?
Criteria Pollutants: SCAQMD Rules 1303 and 2005			
VOC	1 lb/day/Permit Unit	CTGs	Yes
NO_x	1 lb/day/Permit Unit	CTGs	Yes
SO_2	1 lb/day/Permit Unit	CTGs	Yes
PM_{10}	1 lb/day/Permit Unit	CTGs	Yes
CO	1 lb/day/ Permit Unit	CTGs	Yes
Ammonia	1 lb/day/ Permit Unit	CTGs	Yes

BACT for the applicable pollutants was determined by reviewing the SCAQMD BACT Guidelines Manual, the Compilation of California BACT Determinations, CAPCOA

[4] Including the portion of Kern County that is within SCAQMD boundaries.

(2nd Ed., November 1993), and USEPA's RACT/BACT/LAER Clearinghouse (RBLC). A summary of the review is provided in Appendix 8.1D. For the gas turbines, the SCAQMD considers BACT to be the most stringent level of demonstrated emission control that is feasible. The project will use the BACT measures discussed below.

As a BACT measure, the Applicant will limit the fuels burned at the project to natural gas, a clean burning fuel. Liquid fuels will not be used at the proposed Highgrove Project. Burning of liquid fuels in the gas turbine combustors would result in greater criteria pollutant emissions than if the units burned only gaseous fuels. This measure acts to minimize the formation of all criteria air pollutants.

BACT for NO_x emissions from the gas turbine will be the use of low NO_x emitting combustion equipment and post-combustion controls. The Applicant has selected a gas turbine equipped with water injected NO_x combustors. The gas turbine will be designed to generate less than 25 parts per million by volume-dry (ppmvd) NO_x, corrected to 15 percent O2, at the outlet of the engine,. In addition, the turbines will be equipped with a post-combustion SCR system to further reduce NO_x emissions to 3.5 ppmvd NO_x, corrected to 15 percent O_2 on a one-hour average basis (excluding startups and shutdowns). The current SCAQMD BACT/LAER requirement for natural-gas-fired-simple cycle gas turbines is 3.5 ppmvd, corrected to 15 percent O_2 over a one hour averaging period. Therefore, the Highgrove Project will meet the BACT requirements for NO_x. The SCAQMD BACT Guideline determination for NO_x from gas turbines is shown in Appendix 8.1D.

BACT for CO emissions will be achieved by use of gas turbines equipped with water-injected combustors and an oxidation catalyst. Water-injected combustors emit low levels of combustion CO while maintaining low NO_x formation. In addition, the project will use an oxidation catalyst system to further reduce CO emissions to 6 ppmvd, corrected to 15 percent O_2. The Applicant has specified a CO limit of 6 ppmvd, corrected to 15 percent O_2, for base load and part load operation above 50 percent. The SCAQMD adopted a BACT requirement for natural-gas-fired simple-cycle gas turbines of 6 ppmvd over a one-hour averaging period. For all operating levels at and above 50 percent load, the CO emission rate from the gas turbines and duct burners at the outlet of the exhaust stacks will not exceed 6 ppmvd, corrected to 15 percent O_2, except under startup and shutdown conditions. A review of recent BACT determinations for CO from gas turbines is provided in Appendix 8.1D.

BACT for VOC emissions will be achieved by use of the gas turbine water-injected combustors. BACT for VOC emissions from combustion devices has historically been the use of best combustion practices. With the use of the water injected combustors, the VOC emissions leaving the stacks will not exceed 2.0 ppmvd, corrected to 15 percent O_2 for turbine operation above 50 percent. This level of emissions is consistent with the SCAQMD's BACT guidelines for large gas turbines.

For the turbines, BACT for PM_{10} is best combustion practices and the use of gaseous fuels. As mentioned, use of clean burning natural gas fuel will result in minimal particulate emissions.

SO_2 emissions will be kept at a minimum by firing clean burning natural gas fuel.

The SCAQMD imposes an ammonia slip limit of 5 ppmvd as a BACT limit for that pollutant. While offsets are not required for ammonia emissions, the SCAQMD's NSR Rule (Regulation XIII) that regulates emissions of ammonia and BACT is required. The project will be designed and operated to meet the stringent 5 ppmvd ammonia slip requirement. Also, as required by the SCAQMD for aqueous ammonia storage tanks used in SCR service, the storage tank will be equipped with a pressure relief valve and the storage tank will be vented back to the tank on the delivery truck when the storage tank is being filled.

SCAQMD Rule 219 exempts the cooling towers from SCAQMD permitting requirements. Nevertheless, the cooling towers will be designed with a drift eliminator efficiency of 0.0005 percent, which complies with all BACT requirements. This control efficiency has been proposed by similar projects that have recently been approved.

The oil/water separator, while required to obtain an SCAQMD Permit to Construct, will have daily emissions of less than one pound per day. In accord with long-standing SCAQMD administrative policy, increases of criteria pollutant emissions from a new or modified permit unit of less than one pound per day are exempted from BACT requirements.

In addition to the BACT requirements, SCAQMD Rule 1303 requires the Applicant to provide full emission offsets when emissions exceed specified levels on a pollutant-specific basis. SCAQMD Rule 2005 requires the Applicant to provide RTCs for the project's NO_x emissions. As shown in Table 8.1-32, the project will be required to provide emission offsets for CO, SO_2, PM_{10}, and VOC emissions and RTCs for NO_x emissions.

TABLE 8.1-32
SCAQMD Offset Requirements and Project Emissions[a] (ref: Rule 1304(d)(1)(B), Rule 1303(b)(2), Rule 1304, Table A, Regulation 2005)

Pollutant	Offset Threshold	Offsets Required
VOC	4 ton/yr	138.6 lb/day ERCs
CO	29 ton/yr	814.9 lb/day[c]
NO_x	4 ton/yr[b]	212,144 lb NO_x RTCs (first year [d]) 183,518 lb NO_x RTCs (normal operation)
PM_{10}	4 ton/yr	333.3 lb/day
SO_2	4 ton/yr	33.2 lb/day

[a] Because the cooling towers will be exempted from SCAQMD permitting requirements by Rule 219(e)(3) and Rule 219(s)(2), emission offsets are not required as indicated in Rule 1304(d)(3). In accordance with Rule 1303 and Rule 1309.1, ERCs are required at an offset ratio of 1.2:1.

[b] Proposed Highgrove Project will enter the SCAQMD NO_x RECLAIM program (Regulation XX). NO_x emissions will be offset through purchase of RTCs at a ratio of 1:1 to actual emissions per year.

[c] CO Offsets may not be required if SCAQMD is redesignated attainment for the 8-hr CO ambient air quality standard. A redesignation request is pending.

[d] first year = 12 months of emissions plus commissioning emissions

As a Rule 219 permit exempt permit unit, the cooling towers are exempted from SCAQMD offset requirements by Rule 1304(d)(3).

Rule 1303(b)(2) requires ERCs to be provided at an offset ratio of 1.2 to 1. Based on the proposed 1309.1, any Priority Reserve Credits for CO, SO_2 and PM_{10} would also be provided

at a ratio of 1.2 to 1 when emission reductions are obtained from the SCAQMD's Priority Reserve pool of credits. Interpollutant offsets can be allowed, at the discretion of the Air Pollution Control Officer (APCO), primarily in cases where there is a precursor relationship.

To ensure that there was an adequate supply of emission offsets for essential public service projects (landfills, waste treatment plants, schools, hospitals, etc.) the SCAQMD created a Priority Reserve pool of credits with the June 1990 amendments to its NSR Regulation, Regulation XIII. As specified in Rule 1309, the SCAQMD maintains and funds this pool of credits that can be accessed at no cost by essential public services at an offset ratio of 1:1. Primarily, because of the severe shortage in PM_{10} ERCs to offset the large emissions increases from new power plants, the SCAQMD provided power projects access to purchase necessary offset credits from this pool of Priority Reserves. Although initial access to the Priority Reserve expired, the SCAQMD staff has proposed a modification to Rule 1309.1that would again provide access to the PM_{10}, CO and SO_2 credits in the Priority Reserve. The cost to purchase Priority Reserve credits has not been finalized. The SCAQMD Governing Board is scheduled to hear proposed revisions to Rule 1309.1 in July 2006.

Rule 1303 also requires project denial if air quality modeling results indicate emissions will cause a violation or make significantly worse an existing violation of the applicable ambient air quality standards. Table 8.1-26 shows that for NO_2, CO, and SO_2, the project's impacts would not cause or contribute to the violation of either the state or federal ambient air quality standards. For non-attainment pollutants, such as PM_{10}, the procedure for evaluating the potential for significant change in air quality concentrations is presented in Rule 1303, Appendix A, Table A-2. Based on this approach, the modeling analyses for PM10 indicates the PM10 concentrations (Table 8.1-28) would not exceed the significant change threshold listed in Rule 1303 Table A-2 and would therefore not interfere with the attainment or maintenance of the applicable air quality standards.

Because the Highgrove Project will be located in Trading Zone 2, better known as the Inland Zone, Rule 1303 allows the purchase of ERCs for this project from either Inland or Coastal zones. The SCAQMD ERC listing in Appendix 8.1F provides the required information for offset identification and amount issued with each certificate. This list contains the current SCAQMD ERCs that may be purchased and used as offset mitigations for the project. The information includes:

- Ownership of emission offset credits; and
- Emission reduction credits granted by the SCAQMD that have been determined to meet the SCAQMD's requirements for bankable offsets. Note that unlike some other California air districts, the SCAQMD goes through a stringent surplus evaluation to discount emission reductions before ERCs are granted. No further reduction, other than the offset ratio, is applied when ERCs are purchased and used as mitigation for project emissions.

A confidential filing will be submitted with the AFC identifying the offset strategy for the project.

While a single listing of all NO_x RTCs by year is not presently available from the SCAQMD, a figure obtained from a SCAQMD February 2, 2005 presentation, which lists the NO_x RTCs issued by year on a ton per day basis, is included in Appendix 8.1F. This figure incorporates

the NO_x RTC adjustment that will occur as a result of changes in the RECLAIM program adopted by the SCAQMD in January 2005.

The Highgrove Project is required to participate in the NO_x RECLAIM program and will purchase NO_x RTCs from the market, through the established broker network that has evolved to serve this market. The SCAQMD has requested redesignation for the 8-hour CO standard from nonattainment to attainment. When the SCAQMD is redesignated as attainment of the 8-hour CO standard, CO ERCs may not be required for the Highgrove Project. If required to obtain CO offsets, the Applicant will either purchase CO ERCs directly from certificate holders or obtain CO ERCs from the Priority Reserve to satisfy CO emission offset requirements. The Applicant will either participate in the SO_x RECLAIM program, purchase SO_x ERCs directly from certificate holders, or obtain SO_x ERCs from the Priority Reserve to satisfy SO_x emission offset requirements. The Applicant will either purchase PM_{10} ERCs directly from certificate holders or obtain PM_{10} ERCs from the Priority Reserve to satisfy PM_{10} emission offset requirements.

Acid Rain Allowances: The Phase II acid rain requirements of Regulation XXXI are also applicable to the facility. As a Phase II Acid Rain facility, the Highgrove Project will be required to provide sufficient allowances for every ton of SO_2 emitted during a calendar year. The Applicant will obtain any necessary allowances on the current open trade market upon operation of the plant.

Rule 1401: As demonstrated in Subsection 8.6 of this AFC, the permit units required to be analyzed for compliance with the requirements of this rule will not cause the Acute or Chronic Health Index to exceed 1.0 for any organ group at any offsite receptor location. While controls and operations that would qualify as T-BACT will be employed in the design and operation of this project, excess cancer risk will not exceed the T-BACT applicability threshold of one in one million. Cancer burden, as required, does not exceed 0.5. Rule 1401 exempts the emergency fire pump engine from the risk assessment requirements, as the engine would be covered under the Rule 1304(a)(4) exemptions from modeling and offsets.

The general prohibitory and source-specific rules of the SCAQMD applicable to the project and the determination of compliance follow.

Rule 218: Each gas turbine will be equipped with a CEMS. These units will comply with all applicable requirements of Rule 218, Rule 2012 (NO_x RECLAIM) and Title IV (Acid Rain—40CFR75).

Rule 219: The cooling tower will be exempted from permitting through Rule 219(e)(3) and Rule 219(s)(2).

Rule 401—Visible Emissions: Because natural gas will be used as a fuel, the Highgrove Project turbines will not generate visible emissions as dark as or darker than Ringlemann No. 1 for more than 3 minutes in any hour.

Rule 402—Nuisance: Under normal operation, the facility will not emit significant quantities of odorous or visible substances; therefore, the facility will comply with this regulation.

Rule 403—Fugitive Dust: Establishes requirements to reduce the amount of particulate matter entrained in the ambient air as a result of man-made fugitive dust sources. The site

will implement best available control measures to minimize fugitive dust emissions so that they do not result in visible dust emissions beyond the property line.

Rule 404—Particulate Matter—Concentration: This rule does not apply to emissions resulting from the combustion of liquid or gaseous fuels in steam generators or gas turbines.

Rule 405—Particulate Matter—Weight: The maximum natural gas expected to be used as a fuel is 38,594 pounds per hour per CTG and based on Table 405(a), the maximum allowable particulate matter emission rate is 16.1 pounds per hour. The CTGs are expected to emit 6 pounds per hour and are expected to comply with the applicable limit in this rule.

Rule 407—Liquid and Gaseous Air Contaminants: Emissions from the project will be 6 ppmv CO, well under the 500 ppmv CO limit in Rule 407. In addition, the site is exempt from the SO_x provisions of this rule because natural gas is used as a fuel.

Rule 409—Combustion Contaminants: The facility will comply with the standards in Rule 409 through the use of natural gas as a fuel.

Rule 431.1—Sulfur Content of Gaseous Fuels: The site will use natural gas that complies with Rule 431.1.

Rule 475—Electric Power Generating Equipment: Establishes limits for combustion contaminant (i.e., PM) emissions from subject equipment. Rule 475 prohibits PM emissions that exceed both 11 lb/hr (per emission unit) and 0.01 gr/dscf at 3 percent O_2. During operation of the turbines, PM_{10} emissions will not exceed the 11 lb/hr or 0.01 gr/dscf at 3 percent O_2 limit.

Rule 53A—Specific Contaminants: The equipment used onsite will burn natural gas and, therefore, will comply with the SO_2 and PM limits from Rule 53A.

Rule 1404—Hexavalent Chromium Emissions from Cooling Towers: No hexavalent chromium will be used in cooling towers.

8.1.8 Cumulative Air Quality Impacts Analysis

An analysis of potential cumulative air quality impacts that may result from the project and other reasonably foreseeable projects is generally required only when project impacts are significant.

The Applicant received a listing of 53 potential cumulative impact sources from the SCAQMD that have submitted permit applications to the SCAQMD or those that have received permits but are not yet in operation. Appendix 8.1E contains the list of the potential cumulative impact analysis sources and a description of the permitting actions. The Applicant and the CEC staff will review the list and determine the appropriate scope of the cumulative modeling analysis. Furthermore, a review of the SCAQMD's CEQA projects did not identify any projects within 6 miles of the project site. A review of the City of Grand Terrace and the County of San Bernardino planning departments did not identify any Notices of Preparation for projects that would be expected to emit significant operational emissions (refineries, power plants, engine generators, etc.).

The Applicant expects to provide the cumulative impact analysis within 60 days of the CEC's finalization of the list of cumulative impact sources to be included in the cumulative air quality impact analysis.

8.1.9 Mitigation

Mitigation will be provided for all emission increases from the project in the form of offsets (either ERCs or RTCs) and the installation of BACT, as required under SCAQMD regulations (Table 8.1-32). Through the use of BACT/LAER to control air pollutant emissions, the acquisition of ERCs/RTCs as described in confidential submittal under separate cover accompanying the AFC, combined with the results of the air quality impact analysis, the project will not result in significant air quality impacts. Therefore no additional operational mitigation is necessary beyond the offsets that will be provided in accordance with SCAQMD requirements.

The Highgrove Project proposes to implement the standard construction mitigation measures developed by the CEC to mitigate construction air quality impacts expected during construction.

8.1.10 References

Avogadro Group. 2002. Report for Initial Toxic Air Contaminant Emission Tests, Delta Energy Center, Pittsburg, California. Prepared for Submittal to the Bay Area Air Quality Management District and the California Energy Commission. June.

Avogadro Group. 2004. Report for Initial Toxic Air Contaminant Emission Tests, Delta Energy Center, Pittsburg, California. Prepared for Submittal to the Bay Area Air Quality Management District and the California Energy Commission. October.

California Air Resources Board (CARB). 2003. Recommended Interim Risk Management Policy for Inhalation-based Residential Cancer Risk.

CARB. 2006. Air Quality Data Summaries http://www.arb.ca.gov/adam/welcome.html

Office of Environmental Health Hazard Assessment (OEHHA). 2003. Air Toxics Hotspots Program Guidance Manual for Preparation of Health Risk Assessments.

OEHHA/CARB. 2005. Consolidated Table of OEHHA/CARB Approved Risk Assessment Health Values.

South Coast Air Quality Management District (SCAQMD). 1993. CEQA Air Quality Handbook.

SCAQMD. 2001. CEQA Air Quality Handbook, Chapter 3. Chapter dated November 2001 (Version 3). www.aqmd.gov/ceqa/handbook.html.

SCAQMD. 2003. Localized Significance Threshold Methodology

SCAQMD. 2005a. Risk Assessments Procedures for Rules 1401 and 212 Version 7

SCAQMD. 2005b. Supplemental Guidelines for Preparing Risk Assessments for the Air Toxics "Hot Spots" Information and Assessment Act (AB2588).

SCAQMD. 2006a. Air Quality Data Summaries.
http://www.aqmd.gov/smog/historicaldata.htm

SCAQMD. 2006b. CEQA Air Quality Handbook. Construction Equipment Exhaust Emission Factors. http://www.aqmd.gov/ceqa/handbook/offroad/offroad.html

SCAQMD. 2006c. CEQA Air Quality Handbook. Vehicle Exhaust Emission Factors - EMFAC2002 Version 2.2 Summary Table.
http://www.aqmd.gov/ceqa/handbook/onroad/onroad.html

U.S. Environmental Protection Agency (USEPA). 1985. Guideline for Determination of Good Engineering Practice Stack Height. USEPA-450/4-80-023R. June.

USEPA. 1995a. User's Guide for the Industrial Source Complex (ISC3) Dispersion Model. USEPA-454/B-95-003a.

USEPA. 1995b. User's Guide for to the Building Profile Input Program (Revised). USEPA-454/R-93-038.

USEPA. 1995c. User's Guide for the SCREEN3 Dispersion Model. USEPA-454/B-95-004.

USEPA. 2000. Compilation of Air Pollutant Emission Factors, AP-42.

USEPA. 2003. Compilation of Air Pollutant Emission Factors, AP-42.

USEPA. 2005. Guideline on Air Quality Models, 40 CFR, Part 51, Appendix W.

USEPA. 2006. AIRS Air Quality Data Summaries.
http://www.epa.gov/air/data/monvals.html

WRCC. 2006. Western Regional Climatic Center, Historical Climate Data Summary for the Riverside Fire Station.

WIND ROSE PLOT:	DISPLAY:
Riverside **Annual Wind Rose**	**Wind Speed** **Direction (blowing from)**

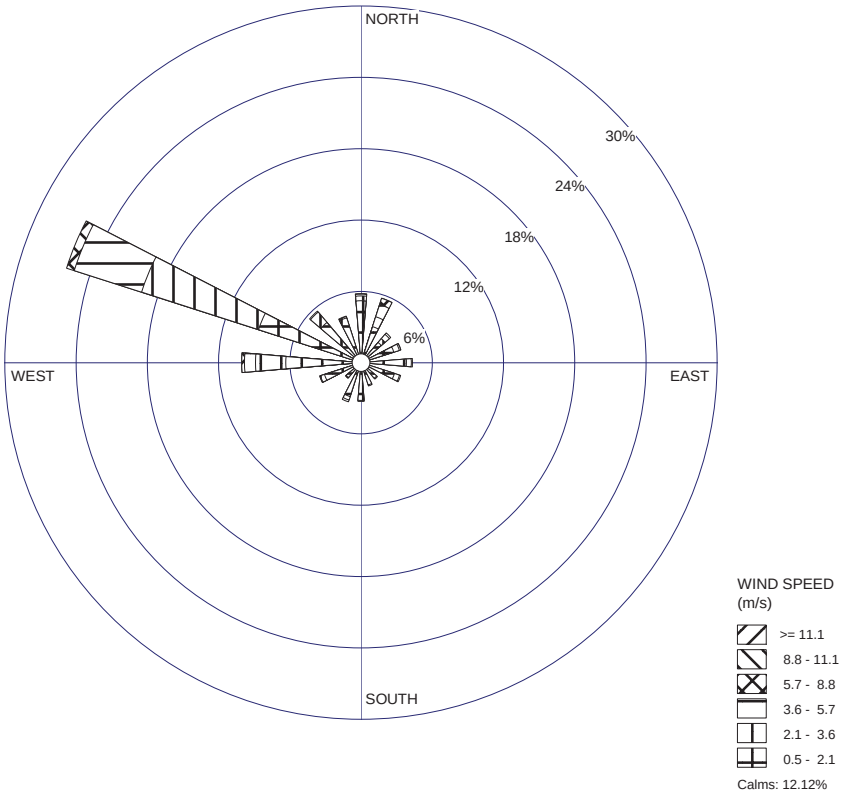

COMMENTS:	DATA PERIOD:	COMPANY NAME:	
	1981 **Jan 1 - Dec 31** **00:00 - 23:00**	MODELER:	
	CALM WINDS: **12.12%**	TOTAL COUNT: **8760 hrs.**	
	AVG. WIND SPEED: **1.73 m/s**	DATE: **03/23/2006**	PROJECT NO.: **AES**

WRPLOT View - Lakes Environmental Software

FIGURE 8.1-1a
ANNUAL WINDROSE
AES HIGHGROVE
GRAND TERRACE, CALIFORNIA

CH2MHILL

WIND ROSE PLOT:	DISPLAY:
Riverside **1st Quarter Wind Rose**	**Wind Speed** **Direction (blowing from)**

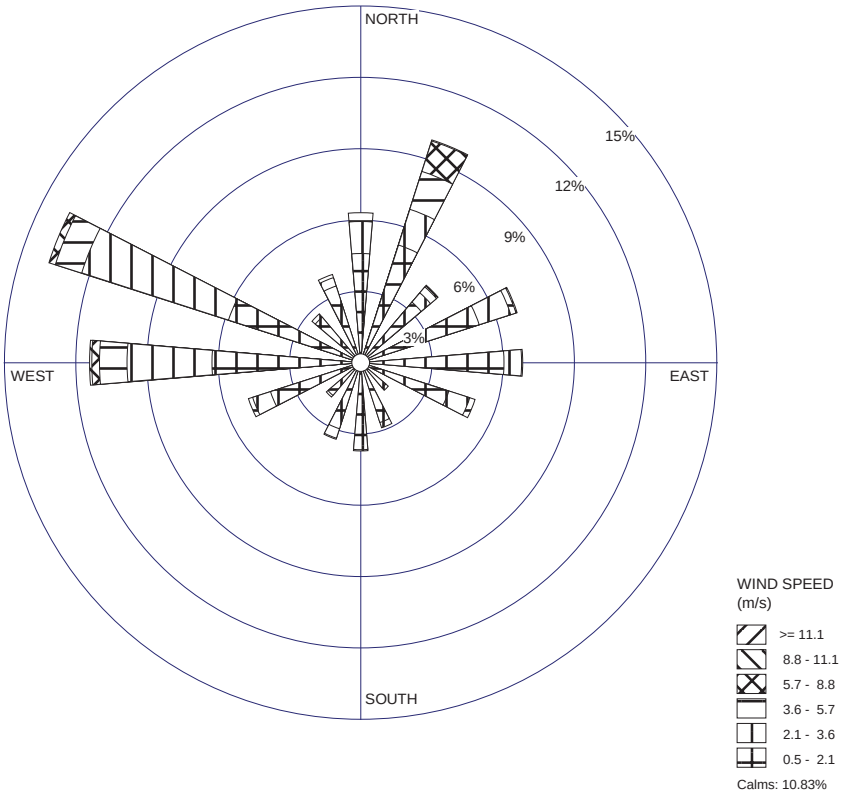

COMMENTS:	DATA PERIOD:	COMPANY NAME:	
	1981 **Jan 1 - Mar 31** **00:00 - 23:00**	MODELER:	
	CALM WINDS: **10.83%**	TOTAL COUNT: **2160 hrs.**	
	AVG. WIND SPEED: **1.65 m/s**	DATE: **03/23/2006**	PROJECT NO.: **AES**

WRPLOT View - Lakes Environmental Software

FIGURE 8.1-1b
FIRST QUARTER WINDROSE
AES HIGHGROVE
GRAND TERRACE, CALIFORNIA

CH2MHILL

WB022006009SAC figure_8.1-1b 04/10/06 dash

WIND ROSE PLOT:	DISPLAY:
Riverside **2nd Quarter Wind Rose**	**Wind Speed** **Direction (blowing from)**

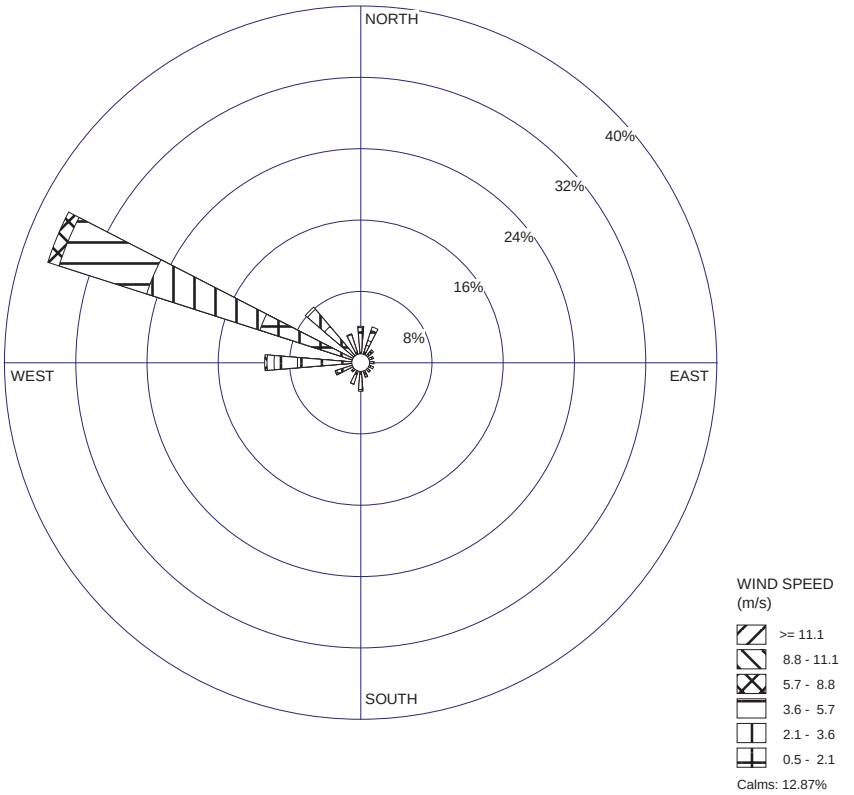

COMMENTS:	DATA PERIOD:	COMPANY NAME:	
	1981 **Apr 1 - Jun 30** **00:00 - 23:00**	MODELER:	
	CALM WINDS: **12.87%**	TOTAL COUNT: **2184 hrs.**	
	AVG. WIND SPEED: **1.93 m/s**	DATE: **03/23/2006**	PROJECT NO.: **AES**

WRPLOT View - Lakes Environmental Software

FIGURE 8.1-1c
SECOND QUARTER WINDROSE
AES HIGHGROVE
GRAND TERRACE, CALIFORNIA

CH2MHILL

WB022006009SAC figure_8.1-1c 04/10/06 dash

WIND ROSE PLOT:	DISPLAY:
Riverside **3rd Quarter Wind Rose**	**Wind Speed** **Direction (blowing from)**

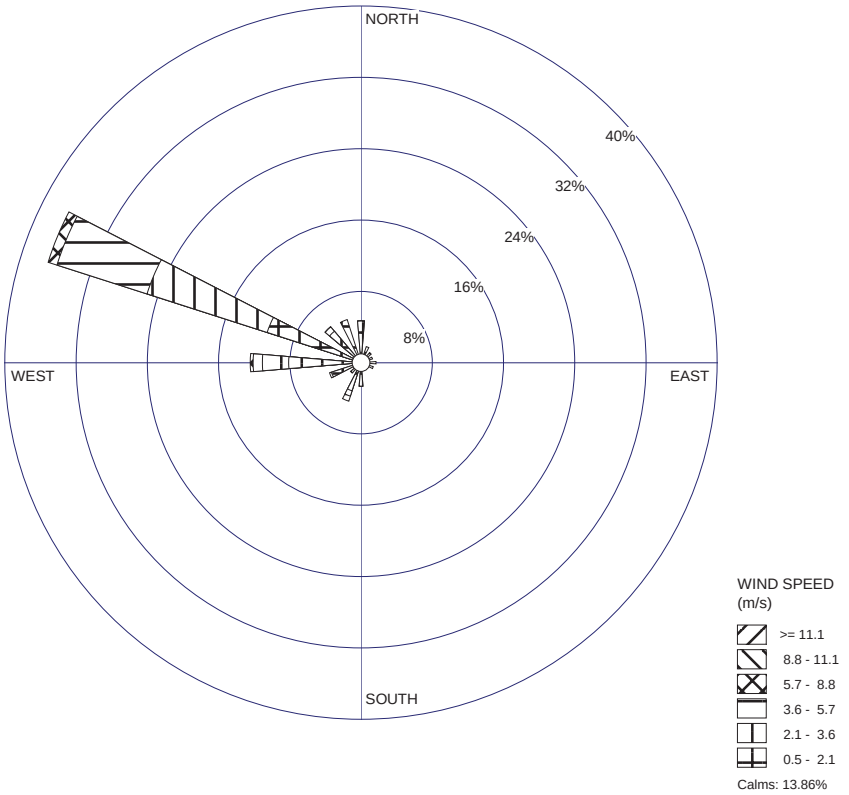

COMMENTS:	DATA PERIOD:	COMPANY NAME:	
	1981 **Jul 1 - Sep 30** **00:00 - 23:00**	MODELER:	
	CALM WINDS: **13.86%**	TOTAL COUNT: **2208 hrs.**	
	AVG. WIND SPEED: **1.82 m/s**	DATE: **03/23/2006**	PROJECT NO.: **AES**

WRPLOT View - Lakes Environmental Software

FIGURE 8.1-1d
THIRD QUARTER WINDROSE
AES HIGHGROVE
GRAND TERRACE, CALIFORNIA

CH2MHILL

WIND ROSE PLOT:	DISPLAY:
Riverside **4th Quarter Wind Rose**	**Wind Speed** **Direction (blowing from)**

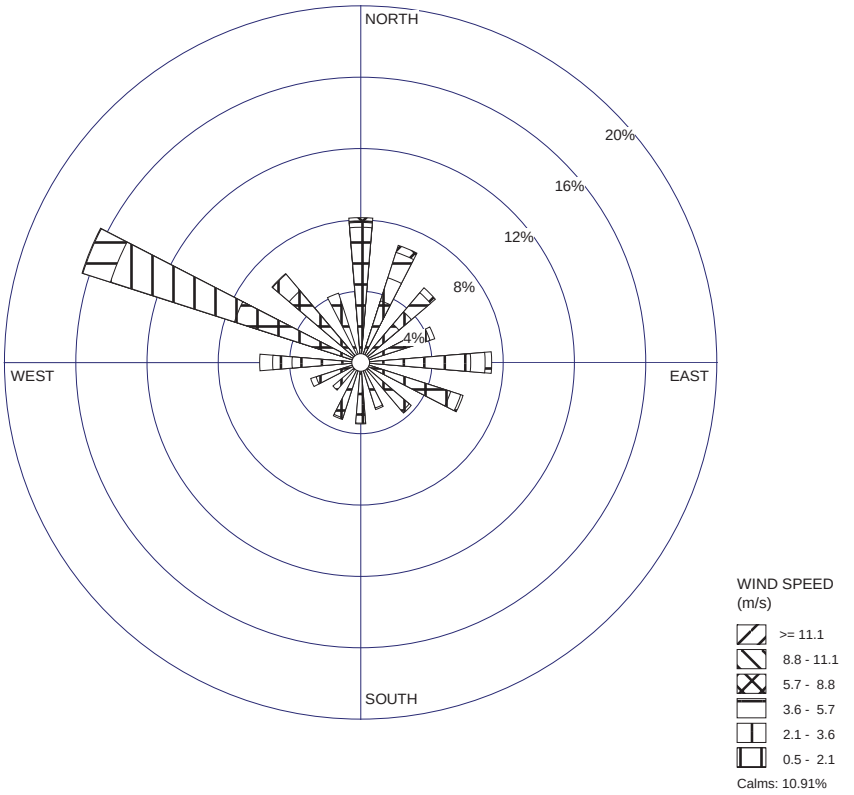

COMMENTS:	DATA PERIOD:	COMPANY NAME:	
	1981 **Oct 1 - Dec 31** **00:00 - 23:00**	MODELER:	
	CALM WINDS: **10.91%**	TOTAL COUNT: **2208 hrs.**	
	AVG. WIND SPEED: **1.51 m/s**	DATE: **03/23/2006**	PROJECT NO.: **AES**

WRPLOT View - Lakes Environmental Software

FIGURE 8.1-1e
FOURTH QUARTER WINDROSE
AES HIGHGROVE
GRAND TERRACE, CALIFORNIA

CH2MHILL

WB022006009SAC figure_8.1-1e 04/10/06 dash

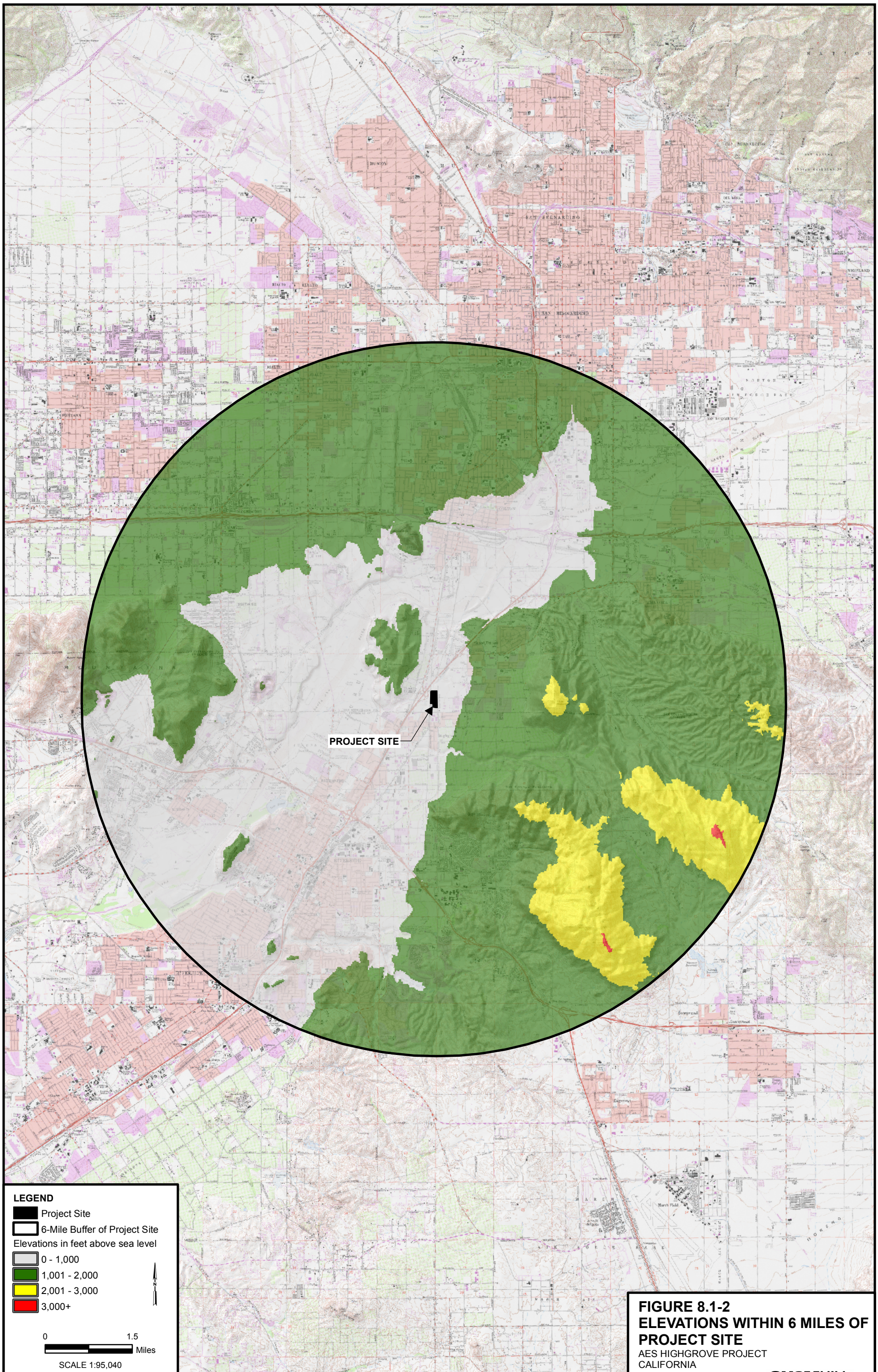

FIGURE 8.1-2
ELEVATIONS WITHIN 6 MILES OF PROJECT SITE
AES HIGHGROVE PROJECT
CALIFORNIA

CH2MHILL

SAC \\GLACIER\SACGIS\AES_HIGHGROVE\MXDS\ELEVATIONS_SIX_MILES.MXD 02/08/2006 10:14:45