CH2M HILL
2485 Natomas Park Drive
Suite 600
Sacramento, CA 95833-2937
Tel 916.920.0300
Fax 916.920.8463

June 26, 2007

322752

Mr. Robert Worl
California Energy Commission
1516 Ninth Street
Sacramento, CA 95814-5512

Subject: AES Highgrove Project (06-AFC-2)
Supplement C

Dear Bob:

On behalf of the AES Highgrove LLC, please find attached 125 copies (75 hard copies and 50 CD-ROM copies) of AFC Supplement C, which addresses the change in process water supply and in the cooling tower size.

We are submitting 5 sets of the dispersion modeling files and the health risk assessment modeling files on CD-ROM. Also, due to its size, we are only submitting 5 hard copies of the EDR report (Appendix 3.13A). The complete EDR report will be included in the CD-ROM copies of Supplement C.

Please call me if you have any questions.

Sincerely,

CH2M HILL

John L. Carrier, J.D.
Program Manager

c: Project File
Proof of Service List

Supplement C

AES Highgrove Project (06-AFC-2)

Change in Process Water Supply and Cooling Tower Size

Submitted by

AES Highgrove, LLC

June 26, 2007

Highgrove, LLC

Contents

Section **Page**

1.0 Introduction 1-1

2.0 Change in Water Supply and Disposal 2-1
2.1 Project Operating Characteristics 2-1
2.1.1 Water Requirements 2-2
2.1.2 CEC Supplemental Response Requirements 2-4
2.1.3 CEC 2003 Integrated Energy Policy Report 2-4
2.2 Impact of Spring Street Water on Disposal Options 2-9
2.2.1 Addition of Wastewater Treatment System 2-11
2.3 Capital and Operating Cost Evaluation 2-11
2.3.1 Least Cost and AFC Base Case Options 2-12
2.3.2 Spring Street Well Cases 2-12
2.3.3 Blended Options 2-13
2.3.4 Addition of Wastewater Treatment System 2-13
2.3.5 Incremental Cost Analysis 2-14
2.4 Alternative Technologies to Reduce Water Consumption 2-14
2.4.1 Zero-liquid Discharge 2-14
2.4.2 Dry or Hybrid Cooling 2-15
2.4.3 Reclaimed Water Availability 2-15
2.5 Conclusion 2-16

3.0 Environmental Analysis of Proposed Change to the Project Description 3-1
3.1 Air Quality 3-1
3.1.1 Introduction 3-1
3.1.2 Environmental Analysis 3-1
3.1.3 Compliance with Laws, Ordinances, Regulations, and Standards 3-10
3.1.4 Mitigation 3-12
3.2 Biological Resources 3-12
3.2.1 Potential Impacts of the Water Line Construction and Operation 3-16
3.3 Cultural Resources 3-19
3.3.1 Potential Impacts of the Water Line Construction and Operation 3-20
3.4 Land Use 3-20
3.5 Noise 3-20
3.6 Public Health 3-21
3.6.1 Introduction 3-21
3.6.2 Environmental Analysis 3-21
3.6.3 Compliance Assessment for the Proposed SCAQMD 1309.1 Rule Language 3-27
3.7 Worker Health and Safety 3-27
3.8 Socioeconomics 3-27
3.9 Agriculture and Soils 3-28

3.10 Traffic and Transportation 3-32
3.10.1 Affected Environment 3-33
3.10.2 Environmental Consequences 3-34
3.10.3 Cumulative Impacts 3-35
3.10.4 Mitigation Measures 3-36
3.10.5 Additional References 3-38
3.11 Visual Resources 3-38
3.12 Hazardous Materials Handling 3-39
3.13 Waste Management 3-47
3.13.1 Construction Phase 3-47
3.13.2 Operation Phase 3-47
3.13.3 Environmental Consequences 3-47
3.13.4 Mitigation Measures 3-49
3.14 Water Resources 3-49
3.14.1 Water Use and Disposal 3-49
3.14.2 Impact on Surrounding Wells 3-49
3.15 Geological Hazards and Resources 3-50
3.16 Paleontological Resources 3-50

Appendixes

1A Owners Adjacent to the Proposed Water Supply Line

2.1A Riverside Highland Water Company Letter
2.2A Water Quality Data—Spring Street Wells
2.3A Capital and Operating Cost Evaluation (Confidential)

3.1A Construction Emission Estimates
3.1B Operational Emission Estimates
3.1C Dispersion Modeling Information

3.3A Reconnaissance-level Architectural Survey

3.6A OEHHA/ARB Approved Risk Assessment Health Values
3.6B Detailed HARP Results
3.6C Description of HARP Modeling Files Submitted on CD

3.13A EDR Corridor Study

3.14A Model Results for Predicted Drawdown and Effects on Migration of Groundwater Contaminants, for Proposed Pumping at Highgrove

Tables

2.1-1 Comparison of Water Consumption Rates, AFC vs. Supplement C
2.1-2 Estimated Water Usage (replaces AFC Table 2.2-1)

2.2-1 Spring Street Well Options

2.3-1 Water Source Contact Information

3.1-1 Total Project Construction Emissions (Update of Table 8.1-13, AFC)
3.1-2 Facility Startup/Shutdown Emission Rates (Update of Table 8.1-16R, Data Responses, Set 1b)
3.1-3 AES Highgrove Project Emissions (Update of Table 8.1-19R, Data Responses, Set 1b)
3.1-4 Noncriteria Pollutant Emissions for the Project (Update of Table 8.1-20R, Data Responses, Set 1b)
3.1-5 AES Highgrove Cooling Tower Toxic Emissions Analysis (Update of Table 8.1-33, Data Responses, Set 1b)
3.1-6 Model Input for Normal Turbine Operation (Update of Table 8.1-23R, Data Responses, Set 1b)
3.1-7 Normal Operation Impacts Analysis—Maximum Modeled Impacts Compared to the Ambient Air Quality Standards (Update of Table 8.1-26R, Data Responses, Set 1b)
3.1-8 Normal Operation impact Analysis – Maximum modeled Impacts at Sensitive Receptors
3.1-9 Normal Operation Impacts Analysis for AES—SCAQMD Rule 1303 (Maximum Modeled Impacts) (Update of Table 8.1-28R, Data Responses, Set 1b)
3.1-10 Results of the Health Risk Analysis for AES Highgrove
3.1-11 SCAQMD NOx Offset Requirements and Project Emissions (Update of Table 8.1-32R, Data Responses, Set 1b)
3.1-12 Comparison of the AES Highgrove Project to the Draft Revision to SCAQMD Rule 1309.1

3.2-1 Special-Status Species Potentially Occurring Along the Water Line Route

3.6-1 AES Highgrove Turbine TAC Emission Rates
3.6-2 AES Highgrove Cooling Tower TAC Emission Rates
3.6-3 Results of the Health Risk Analysis for AES Highgrove
3.6-4 Relative Contribution of Sources to the Estimated Health Risks at the PMI
3.6-5 Contribution by Chemical to the Maximum Cancer, Chronic, and Acute Impacts

8.9-2R Soil Mapping Unit Descriptions and Characteristics (additional Map unit entry only included here)
8.9-3R Estimated Soil Loss from Water Erosion
8.9-5R Estimated Unmitigated and Mitigated TSP Emissions from the Site and Along the Gas Pipeline

8.12-2R Use and Location of Hazardous Materials
8.12-3R Chemical Inventory, Description of Hazardous Materials Stored Onsite, and Reportable Quantities
8.12-4R Toxicity, Reactivity, and Flammability of Hazardous and Regulated Substances Stored Onsite

3.13-1 Sites Located on the Water Supply Pipeline Route

Figures

1-1 Water Line Route from Spring Street Wells
1-2 General Arrangement

2-1 Water Balance Diagram (80°)
2-2 Water Balance Diagram (97°)

8.2-2R Sensitive Species Locations within 1,000 Feet of the Linear Corridors

3.2-1 Biological Resources along Water Line Route

8.9-1R Soils near the Proposed Site

8.15-2R Geology Within 1/4-Mile of Project Linears

SECTION 1.0

Introduction

The primary purpose of this submittal is to modify the Project Description for the Highgrove Project based on a change to the project's water supply and discharge, a cooling tower modification, a reduction in the targeted nitrogen oxides (NO_x) level based on recent rulemaking action by the South Coast Air Quality Management District (SCAQMD), and a change in the project's targeted commercial online date.

The change in water supply requires the addition of a 1.3-mile-long water line to supply impaired water from the Spring Street irrigation well system to the plant (see Figure 1-1). The proposed line will tie into the existing irrigation distribution system at the intersection of Michigan Avenue and Spring Street. From the Spring Street wells, the new 6- to 12-inch line will be routed north on Michigan, west on Main Street, and north on Taylor Street to the new facility. The new line, which will be approximately 1.3 miles in length, can be constructed entirely in the public right-of-way. A list of property owners within 500 feet of either side of the proposed water line is provided in Appendix 1A. This supplement will also address the use of new water treatment chemicals that will be required due to the change in plant water supply and a new wastewater treatment system.

In addition, General Electric (GE) has recently modified the design temperature requirements for the LMS100 gas turbine intercooler. As a result, an additional cell will be required by each cooling tower (i.e., from two cells to three cells) to achieve a lower inlet cooling temperature for the gas turbine equipment (from 90°F to 85°F). See Figure 1-2 for a revised General Arrangement drawing. (This figure replaces Application for Certification [AFC] Figure 2.2-1.) The cooling water flow rate will not be impacted by this change and will remain as originally described in the AFC. A new general arrangement drawing has been prepared and any modifications to the environmental assessment from the additional cell(s) are analyzed in this supplement.

In the most recent draft of the SCAQMD's draft Rule 1309.1 (issued June 12, 2007), the District establishes stringent criteria for projects to be eligible for access to the Priority Reserve. As a result, the project must lower its targeted NO_x level from 3.5 parts per million (ppm) to 2.5 ppm. The information in this supplement incorporates this change.

Finally, as a result of the delay in the permit process resulting from SCAQMD's rulemaking associated with the Priority Reserve, ongoing environmental review process by the Department of Toxic Substances Control (DTSC), and commercial reasons, the targeted online date for the project is currently July 1, 2010.

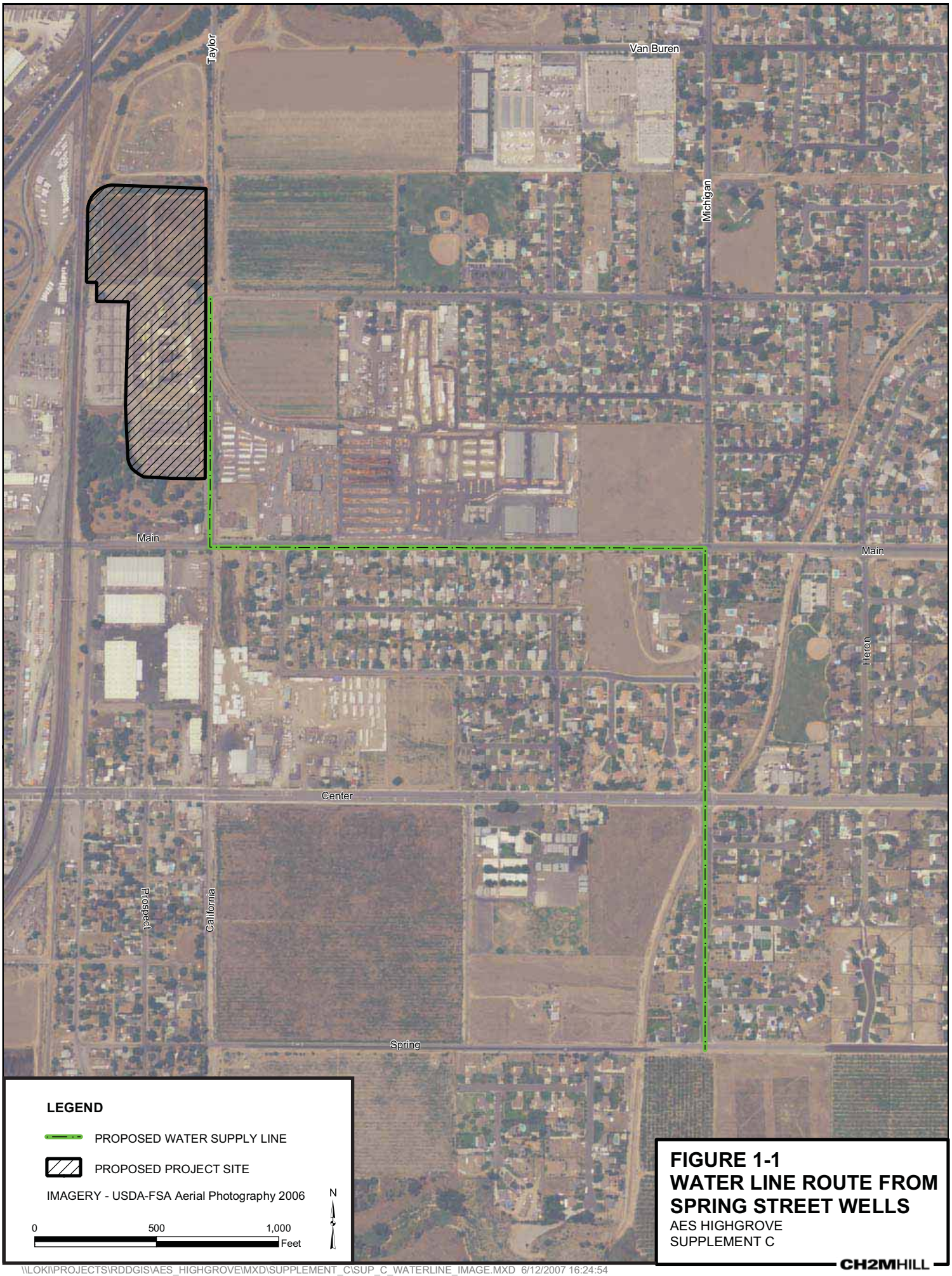

FIGURE 1-1
WATER LINE ROUTE FROM SPRING STREET WELLS
AES HIGHGROVE
SUPPLEMENT C

CH2MHILL

\\LOKI\PROJECTS\RDDGIS\AES_HIGHGROVE\MXD\SUPPLEMENT_C\SUP_C_WATERLINE_IMAGE.MXD 6/12/2007 16:24:54

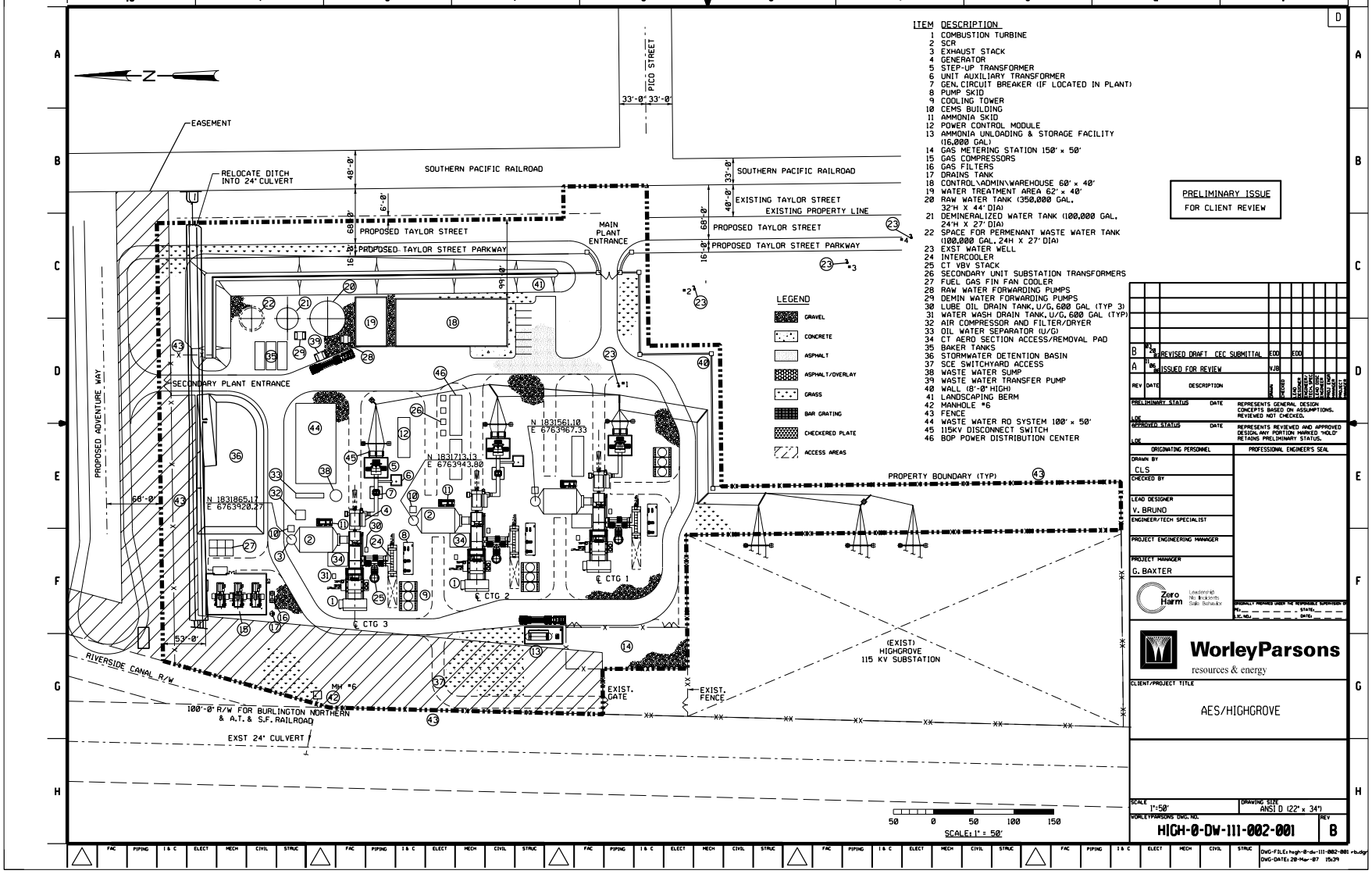

ITEM DESCRIPTION
1 COMBUSTION TURBINE
2 SCR
3 EXHAUST STACK
4 GENERATOR
5 STEP-UP TRANSFORMER
6 UNIT AUXILIARY TRANSFORMER
7 GEN. CIRCUIT BREAKER (IF LOCATED IN PLANT)
8 PUMP SKID
9 COOLING TOWER
10 CEMS BUILDING
11 AMMONIA SKID
12 POWER CONTROL MODULE
13 AMMONIA UNLOADING & STORAGE FACILITY (16,000 GAL)
14 GAS METERING STATION 150' x 50'
15 GAS COMPRESSORS
16 GAS FILTERS
17 DRAINS TANK
18 CONTROL\ADMIN\WAREHOUSE 60' x 40'
19 WATER TREATMENT AREA 62' x 40'
20 RAW WATER TANK (350,000 GAL, 32'H X 44' DIA)
21 DEMINERALIZED WATER TANK (100,000 GAL, 24'H X 27' DIA)
22 SPACE FOR PERMENANT WASTE WATER TANK (100,000 GAL, 24H X 27' DIA)
23 EXST WATER WELL
24 INTERCOOLER
25 CT VBY STACK
26 SECONDARY UNIT SUBSTATION TRANSFORMERS
27 FUEL GAS FIN FAN COOLER
28 RAW WATER FORWARDING PUMPS
29 DEMIN WATER FORWARDING PUMPS
30 LUBE OIL DRAIN TANK, U/G, 600 GAL (TYP 3)
31 WATER WASH DRAIN TANK, U/G, 600 GAL (TYP)
32 AIR COMPRESSOR AND FILTER/DRYER
33 OIL WATER SEPARATOR (U/G)
34 CT AERO SECTION ACCESS/REMOVAL PAD
35 BAKER TANKS
36 STORMWATER DETENTION BASIN
37 SCE SWITCHYARD ACCESS
38 WASTE WATER SUMP
39 WASTE WATER TRANSFER PUMP
40 WALL (8'-0" HIGH)
41 LANDSCAPING BERM
42 MANHOLE #6
43 FENCE
44 WASTE WATER RO SYSTEM 100' x 50'
45 115KV DISCONNECT SWITCH
46 BOP POWER DISTRIBUTION CENTER

FIGURE 1-2
GENERAL ARRANGEMENT
AES HIGHGROVE
SUPPLEMENT C

CH2MHILL

ES112006001SAC Figure_1-2.ai 7/14/2007 afint

SECTION 2.0

Change in Water Supply and Disposal

On January 17, 2007, AES filed Informal Data Response, Set 1A for the Highgrove Project. The filing was prepared to provide additional information to the California Energy Commission (CEC) Staff as discussed at a Data Response Workshop (Grand Terrace, California, November 16, 2006). At the Data Response Workshop, representatives of AES, CEC Staff, and representatives from local water agencies participated in a round table discussion of alternate water supply sources with the potential to reduce or eliminate the use of onsite well water for cooling. Alternate sources identified and discussed at the workshop included nitrate-impaired wells in the Highgrove vicinity ("Spring Street" wells), water from the Riverside Canal, which is adjacent to the site, and water from Gage Canal, an underground canal in the vicinity of the site. As discussed at the workshop, modification to the water supply source and quality also affects the quality and volume of wastewater generated and therefore the water disposal options for the project. Based on the ideas discussed at the workshop, AES conducted an engineering and economic evaluation to further assess alternative sources identified and the technical and economic feasibility of corresponding water disposal options. The objectives of the evaluation were to identify an alternate water and wastewater proposal which would:

- Reduce to the extent feasible the use of onsite well water for cooling
- Maximize to the extent feasible the use of an impaired or degraded water source
- Review the concept of trucking wastewater offsite for disposal and reduce wastewater truck traffic to the extent feasible

As presented in the Data Response submitted on January 17, 2007, AES concluded that a blend consisting of equal parts of water from the impaired Spring Street and onsite well(s), in conjunction with a wastewater treatment system and combination of sewer discharge and minimized wastewater trucking will most economically:

- Reduce onsite well water use for plant cooling (by 49 percent)
- Provide a regional benefit by using impaired water for plant cooling
- Reduce the average number of wastewater trucks per day (by 75 percent)

The results of the evaluation and other alternatives studied are described further below.

2.1 Project Operating Characteristics

The plant will use three GE LMS100 simple-cycle gas turbines for the project and high-efficiency emissions control technology to meet best available control technology (BACT) requirements. The GE LMS100 technology is approximately 10 percent more efficient than older gas turbine models typically used for peaking. These high efficiencies and associated environmental benefits are achieved primarily through the addition of an intercooler to the gas turbine cycle. Though the intercooler requires a source of cooling water and a cooling tower to achieve maximum efficiency on hot days, cooling water needs

are significantly less than that required for a combined-cycle facility. In addition to providing make-up water for cooling tower blowdown and evaporation, process water needs also include demineralized water for gas turbine NO_x control, and water for the gas turbine evaporative cooler used to increase gas turbine efficiency during periods of high temperatures.

The Highgrove Project is designed to be a peaking power project that will typically operate only during periods of peak temperatures or during emergency conditions. The anticipated capacity factor for the project on an annual basis ranges from 15 to 30 percent. In general, the higher capacity factor has been used for permitting evaluations to produce conservative analyses. For example, since impacts associated with water consumption increase with higher usage, water consumption analyses in the initial Application for Certification were based on the maximum expected 30 percent annual capacity factor. For a peaking project, where operation will vary on an annual basis depending on need, project designers typically use a "most likely" operating scenario for the purpose of economic decision making.

2.1.1 Water Requirements

With the revised proposal presented herein, total onsite well water consumption will be reduced by approximately half and the proposed discharge to the Santa Ana Regional Interceptor (SARI) line will be reduced by 75 percent compared to the original proposal. A comparison of water consumption rates for the revised proposal compared to the option presented in the original AFC is provided in Table 2.1-1. Of the total 756 gallons per minute (gpm) required by the plant for all water needs, plant cooling systems will require 450 gpm (i.e., approximately 60 percent of which is used as make-up for cooling tower water evaporation and blowdown). Remaining plant water uses include demineralized water for NO_x control, gas turbine evaporative cooling, and miscellaneous plant uses.

TABLE 2.1-1
Comparison of Water Consumption Rates, AFC vs. Supplement C

		AFC Proposal	Revised Proposal	
	Supply	**100% Site Well**	**50% Spring St 50% Site Well**	**% Increase or Reduction w/ Revised Proposal**
	Discharge	**SARI**	**With Wastewater Treatment System**	
Cycles of Concentration		6.5	5.5	
Onsite Well Use				
gpm		737	378	-45%
afy		357	183	-45%
Spring St Well Use				
gpm		-	378	
afy		-	183	
Cooling Tower Makeup				
gpm		431	450	5%
afy		209	218	5%

TABLE 2.1-1
Comparison of Water Consumption Rates, AFC vs. Supplement C

	AFC Proposal	Revised Proposal	
Supply	**100% Site Well**	**50% Spring St 50% Site Well**	**% Increase or Reduction w/ Revised Proposal**
Discharge	**SARI**	**With Wastewater Treatment System**	
Total Plant Makeup			
gpm	737	756	3%
afy	357	366	3%
Discharge to Sewer			
gpm	86	88	2%
afy	42	43	2%
Discharge to SARI Line			
gpm	88	22	-76%
No. trucks per day (6,700/gal/truck)*	12	3	-75%

* At "worst-case" 12-hour operating day

Notes:

At Annual Average conditions (80%˚F, 60% RH)

Based on maximum annual capacity factor of 30%

Water balances for the 50/50 blended option are shown in Figures 2-1 and 2-2 for average temperatures of 80°F and 97°F, respectively.

The estimated water usage for the revised proposal is summarized in Table 2.1-2, which replaces Table 2.2-1 of the AFC.

TABLE 2.1-2 (REPLACES AFC TABLE 2.2-1)
Estimated Water Usage

All Uses		**Expected Usage** [d]
Average Annual Usage[a]	756 gpm	366 afy [b]
Peak Usage (Maximum Summer Condition) [c]	870 gpm	
Makeup Water for Cooling [e]		**Expected Usage**
Average Annual Usage[a]	450 gpm	218 afy
Peak Usage (Maximum Summer Condition) [c]	519 gpm	

Basis:

[a] Usage is based on an annual operating (capacity) factor of 30%. The ambient temperature assumed for this condition is 80°F.

[b] The average annual usage of 415 afy presented in Table 2.2-1 of the AFC was incorrectly reported and should have been 358 afy at the average ambient temperature of 80°F. The 415 afy would represent annual consumption if the average temperature was 97°F during all hours the unit operated (or 30% of the hours in the year), which is unrealistic.

[c] The ambient temperature assumed for this condition is 97°F.

[d] gpm = gallons per minute; afy = acre-feet per year

[e] Makeup Water for Cooling is defined as the water required to make up losses in the cooling tower resulting from evaporative cooling, drift and blowdown (exclusive of other plant wastewater streams discharged into the cooling tower supply to minimize makeup water requirements).

2.1.2 CEC Supplemental Response Requirements

After submitting Informal Data Response Set 1A, AES received a letter from Roger E. Johnson dated March 20, 2007, outlining additional information that would be required if AES wished to modify its water supply and wastewater discharge proposal to use a 50/50 blend of Spring Street and onsite wells. That letter requested an AFC Supplement that would address the following:

- The economic and environmental feasibility of using a zero-liquid discharge (ZLD) system
- The economic and environmental feasibility of utilizing dry or hybrid cooling
- Any potential impacts to the aquifer from the use of Spring Street wells
- The economic and environmental feasibility of any onsite water treatment options that would allow a greater percentage, including 100 percent, of the degraded water from the Spring Street wells to be used for plant cooling
- The potential availability and reliability of a reclaimed water supply by 2012
- A thorough description of all infrastructure associated with the preferred plan, including pipelines, tanks, and the proposed means of disposing of generated wastewater
- The associated cost information for the preferred plan and any alternatives, providing sufficient detail to enable independent analysis by staff

The additional information requirements are assessed in this Supplement C, Section 2.4.

2.1.3 CEC 2003 Integrated Energy Policy Report

State policy encourages the redevelopment of existing "brownfield" power plant sites compared to constructing a new plant on a site not previously used for power plant operations. Environmental benefits of state policy includes replacement of old technologies with new, efficient, environmentally-friendly, generating technologies, and siting plants in areas of existing industrial use near existing grid infrastructure and demand centers. Redevelopment of the former Highgrove Generating Station offers these benefits but reduces the project's flexibility to site the plant near an existing recycled water service system. Due to the lack of a feasible recycled or impaired water source to serve the Highgrove Project, the original water supply plan (proposed in the AFC) was to use existing onsite wells that served the historical power plant's cooling water and operations needs.

As described in AFC Section 9, AES did an exhaustive search for reclaimed water and was unable to find a Title 22 compliant source within a distance that could economically serve the Highgrove project's intermittent and minimal water needs. Sensitive to the intent of the CEC's 2003 Integrated Energy Policy Report (CEC Water Policy), AES did not elect to propose to use the most economical water supply and discharge plan available, which would have been use of 100 percent onsite well water with discharge directly to the existing sewer. Instead, AES elected a water/wastewater plan that was designed to minimize water consumption by maximizing cooling water cycles of concentration. The highly concentrated blowdown was proposed to be sent to the SARI line, a regional wastewater system specially designed to accept highly concentrated industrial wastewater. This proposal reduced cooling water consumption but resulted in a considerable increase in operating costs to the project.

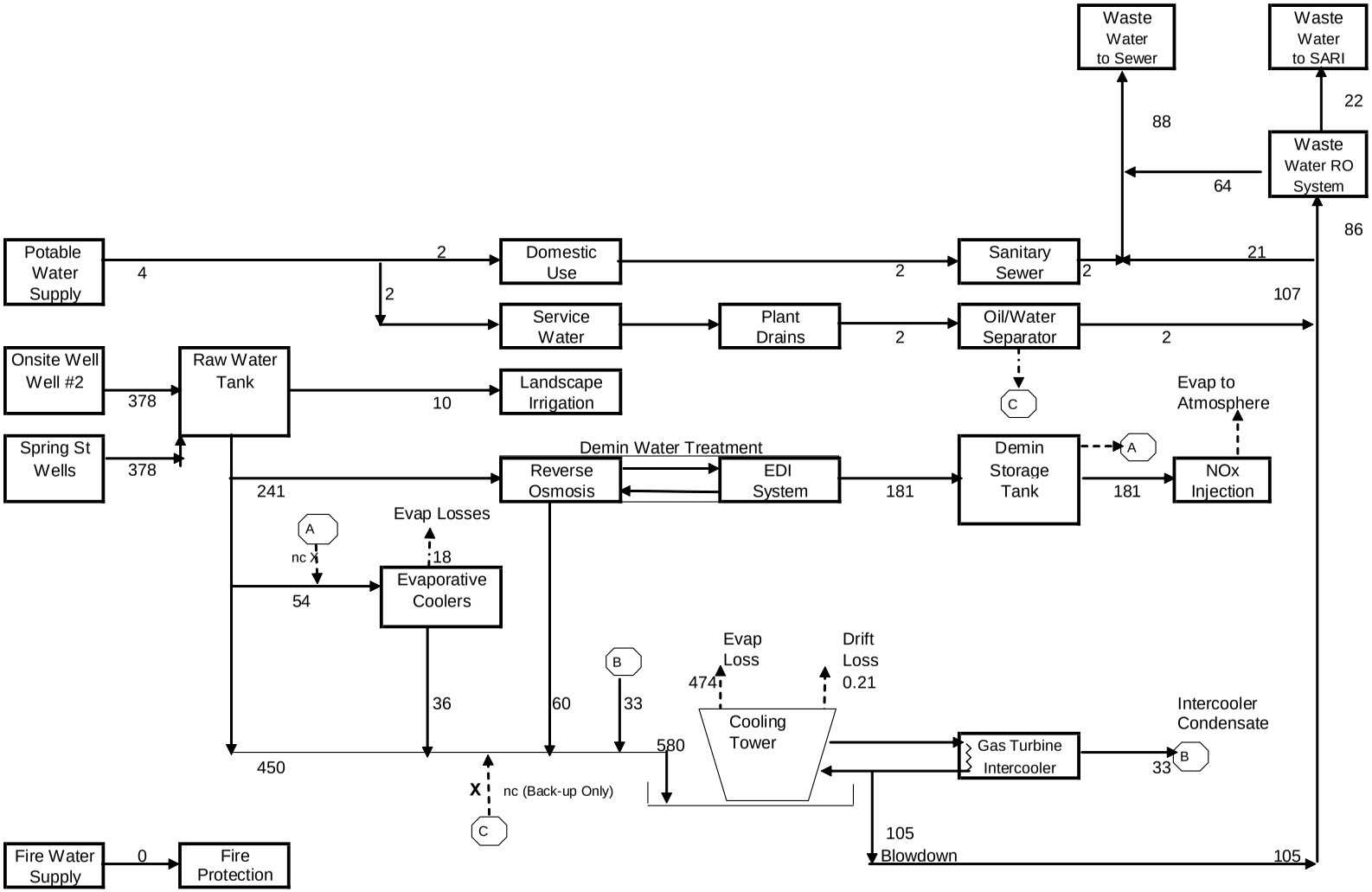

Notes
1. Numerical values represent steady state flows in gpm
2. Cooling tower blowdown is estimated at expected maximum cycles of concentration 5.5.
3. Ambient temperature assumed for this water balance is 80F, 60% RH.

6/14/2007 GRB/MC

FIGURE 2-1
WATER BALANCE AT 80°
AES HIGHGROVE
SUPPLEMENT C

CH2MHILL

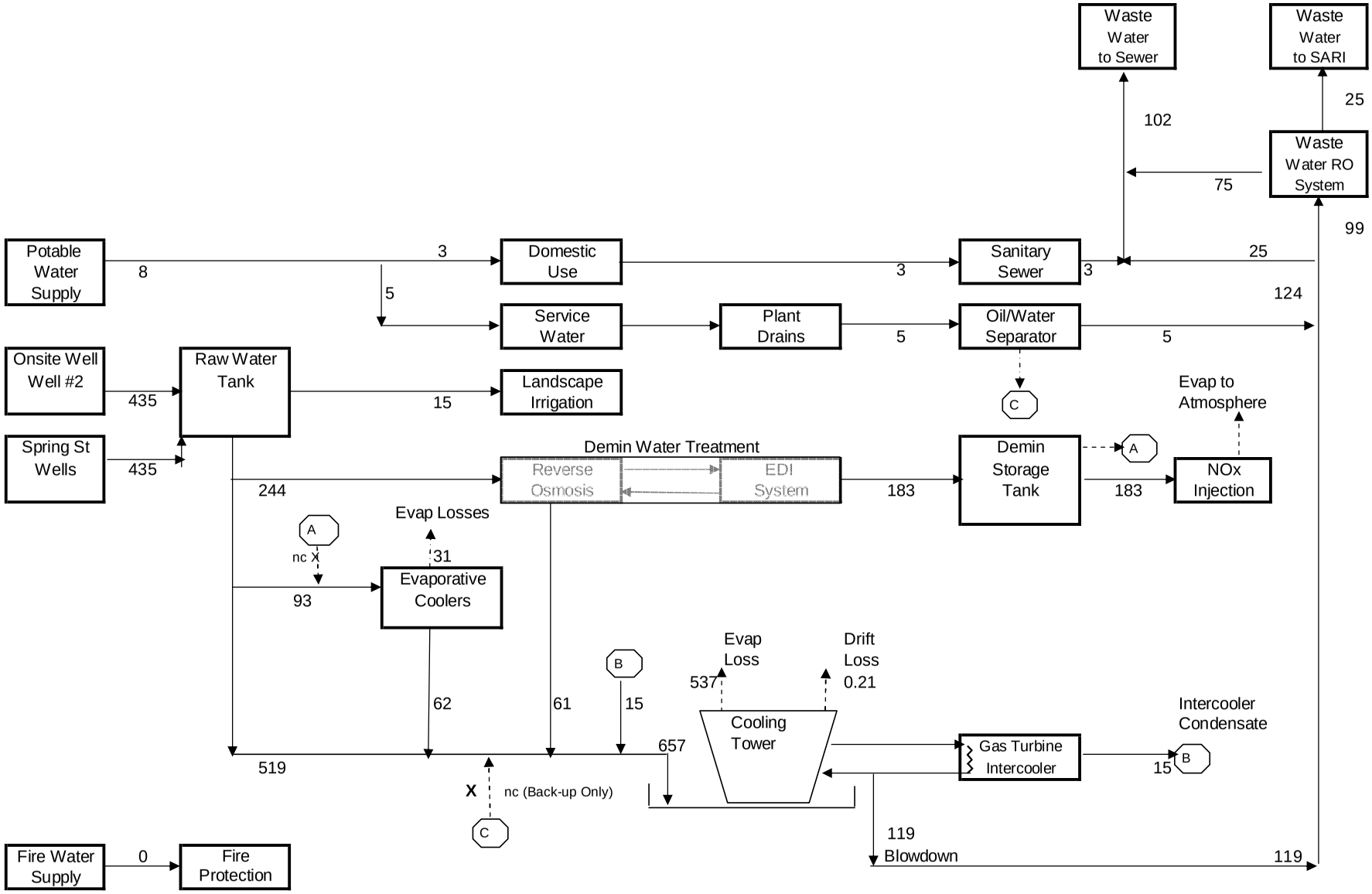

Notes
1. Numerical values represent steady state flows in gpm
2. Cooling tower blowdown is estimated at expected maximum cycles of concentration 5.5.
3. Ambient temperature assumed for this water balance is 97F, 20% RH.

6/12/2007 GRB/MC

FIGURE 2-2
WATER BALANCE AT 97°
AES HIGHGROVE
SUPPLEMENT C

CH2MHILL

ES112006001SAC Fig 2-2_Supplement C.ai 06/14/2007 afint

At the time of the AFC submittal, AES was continuing to search for available and feasible alternatives to the use of the onsite wells and was unable to obtain adequate information for the newly developed Spring Street well irrigation system. Subsequent to AFC submittal, AES was able to obtain water quality analyses to perform a thorough assessment of water quality impacts on plant equipment and discharge options and to engage in further discussions on availability and reliability of the Spring Street wells as a source of water supply for the project.

2.1.3.1 Nitrate Impairment

Water produced by the Spring Street wells is currently used for irrigation purposes and does not meet drinking water standards due to high nitrate levels. Activities that contribute to elevated nitrate levels in groundwater supplies include crop fertilization and use of septic systems, which were prevalent in the region at one time, as well as dairy farming activities. Methods of nitrate reduction to make aquifers suitable for potable use include blending with higher water quality supplies, removing and using the water in nonpotable systems such as for irrigation, and conventional water treatment methods. Conventional water treatment methods used to remove nitrates include reverse osmosis and ion exchange systems, but are generally considered to be the most costly remediation option. In addition, conventional water treatment processes create a concentrated brine that requires disposal. Therefore, as discussed at the November 16, 2006 workshop, since other methods of cleanup are not considered economical, removal of the Spring Street water for use by the proposed project is considered to provide a regional benefit. Appendix 2.1A presents a letter from the local water purveyor, Riverside Highland Water Company, to this effect.

2.1.3.2 Impact of Nitrate-impaired Water Supply on Wastewater Disposal Options

Because nitrate can be characterized as a salt, the level of TDS (total dissolved solids) from the Spring Streets well is high, approximately twice that in the existing onsite wells. As high TDS levels represent a chronic water treatment/disposal problem in the Santa Ana Watershed region, high TDS levels in the source water have a significant impact on water discharge options. In addition, the Spring Street water is higher in silica than the onsite wells. Since the process of evaporative cooling concentrates constituents present in the water supply, high levels of contaminants reduce the cycles of concentration allowable in the cooling towers, thereby increasing wastewater discharge volumes. The impact of the Spring Street water quality on disposal options for the plant is discussed further below.

2.2 Impact of Spring Street Water on Disposal Options

The water quality from the Spring Street wells is characterized as high in nitrates, TDS (total dissolved solids), hardness, and conductivity. The TDS levels in the combined stream from both wells are approximately twice as high (720 mg/L) as that in the onsite wells. In addition, the silica level in the combined stream is 37 percent higher (31.5 mg/L) compared to the onsite wells (22 mg/L). As stated earlier, high levels of TDS and silica affect the water volume and quality of discharge and thus the technical and economic feasibility of disposal options. The water quality analyses used for the Spring Street wells is presented in Appendix 2.2A.

Because of the impact on economics of varying disposal costs, the evaluation focused on several alternate supply options ranging from use of 100 percent Spring Street water to options blended with onsite well water, discharging directly to the existing sewer to avoid any trucking of wastewater required. Blending becomes desirable as a direct result of the poorer water quality of the Spring Street wells. For every 25 percent of onsite well water used the wastewater volume to the sewer is reduced by approximately 500 gpm. AES, therefore, focused on options where water from the Spring Street wells is blended with onsite well water in different proportions. The following cases were assessed:

- 100 percent Spring Street water
- Blend of 75 percent Spring Street water and 25 percent onsite well water
- Blend of 50 percent Spring Street water and 50 percent onsite well water
- Blend of 25 percent Spring Street water and 75 percent onsite well water

The first case evaluated was use of 100 percent Spring Street water. Since the evaporation process in the cooling tower increases the concentration of constituents in the water, Spring Street water cannot be reused or cycled in the cooling tower and allow the blowdown to achieve the discharge limitations on the sewer. Thus, this water supply/disposal option would essentially become a "once-through" cooling system, which is impractical due to water supply and disposal volume constraints.

Blending Spring Street water with a portion of onsite well water, significantly reduces water disposal volumes and thus costs. Table 2.2-1 demonstrates the effect of blending in different proportions on water supply and disposal volumes. As the proportion of Spring Street water increases, allowable cycles of concentration in the cooling tower decrease. As a result, overall water use required by the plant rises, as well as the quantity of wastewater discharge. Of the options shown, the only option reducing use of onsite well water compared to the current AFC case is that consisting of a blend of 75 percent Spring Street water and 25 percent onsite well water. This option reduces onsite well use by 25 percent but increases wastewater discharge volume significantly, from 86 gpm to 1,582 gpm.

TABLE 2.2-1
Spring Street Well Options

		AFC Proposal			
	Supply	**100% Site Well**	**25% Spring St 75% Site Well**	**50% Spring St 50% Site Well**	**75% Spring St 25% Site Well**
	Discharge	**SARI**	**Sewer**	**Sewer**	**Sewer**
Cycles of Concentration		6.5	2	1.5	1.3
Onsite Well Use					
gpm		737	844	800	558
afy		357	408	387	270
Spring Street Well Use					
gpm		-	281	800	1673
afy		-	136	387	810
Cooling Tower Makeup					
gpm		431	819	1293	1925
afy		209	396	626	932

TABLE 2.2-1
Spring Street Well Options

	AFC Proposal			
Supply	**100% Site Well**	**25% Spring St 75% Site Well**	**50% Spring St 50% Site Well**	**75% Spring St 25% Site Well**
Discharge	**SARI**	**Sewer**	**Sewer**	**Sewer**
Total Plant Makeup				
gpm	737	1125	1599	2231
afy	357	544	774	1080
Discharge				
gpm	86	476	948	1582
afy	42	230	459	766
% Increase or Decrease in Onsite Well Use	**Base**	**14%**	**8%**	**-24%**
% Increase or Decrease in Discharge Volume	**Base**	**453%**	**1002%**	**1740%**

Notes:

At Annual Average conditions (80˚F, 60% RH)

Based on maximum annual capacity factor of 30%

2.2.1 Addition of Wastewater Treatment System

Because discharge volume increases significantly for these cases, with resulting impacts on disposal costs, AES investigated additional methods to reduce cooling tower blowdown. The addition of a wastewater treatment system allows the cycles of concentration to be increased in the cooling tower (though limited by the increased silica content) and, thus reduces both discharge volumes as well as cooling tower makeup and, hence, total plant water consumption. As discussed in the Informal Data Response, the addition of this system (which consists of a "saltwater" RO treatment system, a multi-media filter, a caustic injection system and lime softener) to a case with a 50/50 blended supply reduces discharge volume to the sewer from 948 to 88 gpm and reduces onsite well consumption by 49 percent. The drawback of this alternative is that a small stream of RO reject (22 gpm) is generated by the wastewater treatment system. The RO reject, which has significantly higher TDS and conductivity, must be stored onsite and then trucked offsite to the SARI line. However, the number of trucks required during a "worst case" operating day would be would be reduced from the previously estimated 12 truck trips per day to 3 trucks per day. In addition, depending on the wastewater treatment technology used, sludge also may be produced that would need to be transported to a landfill. The transport of sludge to the landfill would require approximately 1 truck trip for every 10 truck trips to the SARI line.

2.3 Capital and Operating Cost Evaluation

A capital and operating cost evaluation for the alternate cases considered is summarized in Table 2.3A-1 in Confidential Appendix 2.3A, submitted under confidential cover. The table compares the alternate cases considered to a Least Cost Option, which represents use of 100 percent site well water with discharge to the sewer, and the current AFC option, which

consists of use of 100 percent site well water with discharge to the SARI line. The alternate cases considered vary depending on source of water supply (ranging from use of 100 percent Spring Street water to Spring Street water blended with water from onsite wells) and wastewater discharge options (including discharge to the sewer, discharge to the SARI line, and the addition of a wastewater treatment system). The table summarizes water consumption, wastewater discharge volumes, capital costs, and annual operating costs. Additional cases are presented in the table, and discussed further below.

The economic evaluation was performed using a life-cycle net present value methodology. The net present value method is beneficial for comparison of alternatives with different capital and operating costs. It also allows for assumptions to be made as to how operating costs will escalate over time. The total net present value, therefore, incorporates both a capital cost component and operating cost component. It should be noted that the proportion of operating costs to the total varies significantly between the different options. For a peaking project, whose operating profile may vary significantly from year to year, it is preferable to align costs with the operating profile and avoid incurring high capital costs for large capacity systems that may never be fully utilized. The costs presented in the table are feasibility-level cost estimates and include an allowance for design contingencies and "soft costs" such as permitting.

The evaluation is based on an anticipated 15 percent annual capacity factor. Using a lower capacity factor than expected for this analysis would tend to understate operating costs associated with a variable operating profile. Conversely, using a higher capacity factor than expected will tend to "penalize" cases with a high percentage of operating costs. Thus, use of an assumption other than the expected capacity factor could lead to selection of a system that would be uneconomical for the expected operating condition.

The net present value evaluation is based on a 10-year economic life, which coincides with the anticipated term of a power purchase agreement.

2.3.1 Least Cost and AFC Base Case Options

As shown in Table 2.3A-1 in Confidential Appendix 2.3A, the least cost option for the project would be to use onsite well water and discharge directly to the sewer located adjacent to the property. This option uses the most onsite well water, but eliminates truck trips for disposal. While this is the least cost option, AES elected to present in the initial AFC an option that would reduce the amount of onsite well consumption by increasing the cycles of concentration and disposing of the wastewater to the SARI line. Though more costly, AES chose to present this option to reduce the amount of fresh water consumption to the extent feasible. At the time of the AFC, AES was beginning to learn about the impaired water that could be generated from the Spring Street wells operated by the Riverside Highland Company and continued to work with Riverside Highland to further evaluate the use of the impaired water source.

2.3.2 Spring Street Well Cases

From the perspective of the CEC's Integrated Water Policy, it would be desirable to supply all process water needs from an impaired water sources. As described earlier, the Spring Street well water, however, contains constituents that limit significantly the number of

cycles of concentration that can be achieved in the cooling tower; limiting cycles increases both water consumption and discharge volume. Thus, the case based on using 100 percent Spring Well water and discharging directly to the sewer was rejected as infeasible. This case was rejected because the quality of the Spring Street well water prevents any cycling of the water in the cooling tower at all, thereby resulting in a once-through cooling system. This option is infeasible because the Spring Street wells do not have the capacity to serve the volume of water necessary for use in a once-through cooling system.

Three additional options involving use of 100 percent Spring Street water were evaluated. The first involves discharging to the SARI line. While this option eliminates the use of onsite well water, it increases the truck trips to 22 trips per day and was, therefore, eliminated from further consideration as it results in cost-prohibitive operating costs and a higher volume of truck traffic. Two additional options were evaluated that included constructing a new pipeline to connect directly to the SARI line. Additional capital costs incurred by this option include connection fees to direct connect to the SARI line as well as the capital cost incurred to construct a 4.3-mile pipeline, which would have to cross the Santa Ana River and I-215 freeway. Therefore, while this option eliminates use of onsite well water and the need of trucking of wastewater it is cost-prohibitive as shown in Confidential Appendix 2.3A

An additional option was evaluated that involves use of 100 percent Spring Street water and installing a wastewater treatment system. The results of this option are discussed further below.

2.3.3 Blended Options

Because options based on the use of 100 percent Spring Street water were considered infeasible or cost-prohibitive, several options were then evaluated that consisted of a blend of poorer quality Spring Street water with the better quality onsite well water. As noted previously, for every 25 percent of onsite well water used the wastewater volume to the sewer is reduced by approximately 500 gpm. (A minimum proportion of 25 percent well water is required to allow any cycles of concentration in the cooling water to avoid a once-through cooling system.) The figure demonstrates how higher proportions of Spring Street water impact overall costs, resulting from proportionately higher usage and discharge volumes.

2.3.4 Addition of Wastewater Treatment System

The addition of a wastewater treatment system, as discussed earlier, allows the cycles of concentration to be increased in the cooling tower and, reduces both discharge volumes as well as cooling tower makeup and, hence, total plant water consumption. While the addition of this system results in increased capital costs, it reduces usage and discharge volumes. In the case of the 50/50 blended supply option, for example, discharge volume to the sewer is reduced from 948 to 88 gpm and onsite well water consumption is reduced by 50 percent. The overall net present value cost for these alternatives is lower than the cases where all of the wastewater is sent to the sewer without treatment in each case (except for the case where only 25 percent Spring Street water is used).

2.3.5 Incremental Cost Analysis

As discussed above, the least cost option is use of 100 percent onsite well water with discharge to the sewer. Each step taken to reduce onsite well water consumption, whether it be through increased use of impaired water or use of a wastewater disposal system designed to handle highly concentrated discharge, increases capital or operating costs significantly compared to this base case. AES performed an incremental cost analysis to assess the cost required to achieve water savings with each treatment method. For example, costs increase three-fold to reduce overall onsite well water consumption in the least cost case for the case using a 50/50 blend with the addition of a wastewater treatment system (i.e., from 225 acre-feet per year to 92 acre-feet per year, based on a 15 percent capacity factor).

The results of the incremental cost analysis and further discussion are presented in Confidential Appendix 2.3A and summarized in Section 2.5.

2.4 Alternative Technologies to Reduce Water Consumption

2.4.1 Zero-liquid Discharge

Several options were considered for wastewater disposal for the Highgrove Project. The alternatives included a dedicated connection to the SARI line and ZLD system in addition to the proposal to truck wastewater discharge to the SARI line. The AES project is proposed to be a peaking plant with an expected annual capacity factor of 15 percent (maximum expected annual capacity factor of 30 percent). Therefore, the project will produce a very small volume of wastewater compared to baseload projects. In addition, the amount of wastewater generated will vary year-to-year with variation in electricity demand. Capital-intensive systems such as permanent pipelines and ZLD systems are therefore considered to be cost prohibitive for peaking projects. With an intermittent operating profile, expected to vary from year-to-year, it can be more economical over the life of the project to structure certain costs as variable operating costs, i.e., those that are only incurred when the plant operates.

A dedicated connector line to the SARI line would be approximately 4.3 miles in length, and would also need to cross under the Santa Ana River, Interstate 215, and La Cadena Creek. Construction of these lengthy and expensive crossings would require 3 separate directional drills with a total of 2,200 linear feet, adding significant expense to the capital cost of the project. The costs of such a line are expected to be approximately $4.3 million, in addition to any permitting, right-of-way, and SARI line connection fees that are expected to add several million dollars to this total. In addition to avoiding pipeline construction costs, the proposed trucking option also avoids potential environmental impacts from directional drilling and pipeline installation under the Santa Ana River and La Cadena Creek.

A ZLD system is equal to, or more expensive than, a dedicated connector to the SARI line. As stated in an earlier data response, ZLD system is estimated to cost between $4 million to $6 million dollars, and is considered cost-prohibitive, as demonstrated in Confidential Appendix 2.3A. Use of a ZLD system for use with a peaking facility is considered to be problematic since ZLD systems are difficult to start up and shut down and are only effective when in thermal balance. Therefore, a ZLD system for this facility would expect to be

operated in a batch process, storing wastewater onsite until the system is operated. Consequently, the operational profile of a ZLD system is incompatible with a peaking project, which operates intermittently and whose primary benefit comes from the ability to start quickly and shut down when no longer needed. In addition, the site does not have sufficient area to locate a ZLD system. If a ZLD system were used, additional land would have to be acquired and would add to the total cost of the system.

2.4.2 Dry or Hybrid Cooling

A dry-wet (hybrid) cooling tower was considered as a potential option for this project. The benefit of the dry cooling section of the hybrid tower, which conserves water use, is most prevalent at lower dry bulb temperatures. Operation of the tower in the "wet" mode would be required to achieve desired cooling (and maintain plant output and efficiency) during summertime temperatures. Therefore, a reduction in water consumption and therefore, plant wastewater flow, would only be expected to occur if the plant were operated more than 50 percent of the year (when cooler temperatures allow the tower to be operated in the "dry" mode.) Under this scenario, anticipated water consumption may only be reduced by 11 to 18 percent. The minimal water consumption and discharge savings does not justify the additional expense of the hybrid towers.

2.4.3 Reclaimed Water Availability

As requested, AES contacted regional water purveyors in the vicinity of the project to request any updates on any future plans to provide reclaimed water in the vicinity of Grand Terrace. Contact information for these sources is provided below. The only agency that indicated plans for future system expansion was Eastern Municipal Water District. EMWD does not have plans to expand into the San Bernadino area. Thus, the evaluations performed for reclaimed water sources outlined previously in the AFC and data responses are still valid. [Note: AES was unable to obtain an update from the Riverside Regional Water Quality Control Plant but will continue trying and anticipates being able to provide this information in an upcoming workshop.]

Contact information for potential water sources is provided in Table 2.3-1.

TABLE 2.3-1
Water Source Contact Information

Water Source	Contact
RIX Facility—City of San Bernardino and City of Colton	Valerie Housel City of San Bernardino 909-384-5117
City of San Bernardino Water Reclamation Plant	Valerie Housel City of San Bernardino 909-384-5117
Colton Wastewater Treatment Plant	Gary Etheridge Consultant for the City of Colton City Manager 951-588-1714
Rialto Wastewater Treatment Plant	Peter Fox Superintendant of Water 909-421-7244

TABLE 2.3-1
Water Source Contact Information

Water Source	Contact
Riverside Regional Water Quality Control Plant	Bill Pounds Riverside Regional Water Quality Control Plant 951-351-6205
Inland Empire Utilities Agency	Ben Pak Inland Empire Utilities Agency 909-993-1719
Eastern Municipal Water District	Joe Mouawad Eastern Municipal Water District 951-928-3777
Western Municipal Water District	John Dahlke Western Municipal Water District 951-789-5000
United States Environmental Protection Agency's Stringfellow Superfund Site	Allen Wolfenden Department of Toxic Substances Control 916-255-6540
Muscoy and Newmark Plumes	Mark Norton Santa Ana Watershed Project Authority 951-354-4221

2.5 Conclusion

In summary, AES has conducted an extensive analysis to achieve the earlier stated goals of reducing onsite well water use and minimizing trucking. Unfortunately, the combination of factors affecting this particular plant: lack of proximity to Title 22-compliant reclaimed water, constituents of concern in impaired Spring Street water, discharge limitations for disposal options, geographic barriers to construction of wastewater disposal line and cost considerations make it difficult to determine a readily optimal solution. AES would like to note that, while the 50/50 blend with wastewater treatment is presented herein as a preferred option, and believes in the regional benefits offered by expansion of the nonpotable system in the vicinity and cleanup of the aquifer, it is considered an extremely expensive solution for the amount of water savings achieved. If reclaimed water becomes economically available in the vicinity of the project at sometime in the future, AES would consider revisiting more economical water supply and discharge options.

SECTION 3.0

Environmental Analysis of Proposed Change to the Project Description

3.1 Air Quality

3.1.1 Introduction

The modifications to the AES Highgrove Project description that affect the air quality section include the following; construction of a new water supply line, a reduction in the amount of wastewater trucked offsite, the potential for additional truck trips to dispose of wastewater system sludge, a change in the water supply for the cooling tower, an additional cell for the cooling tower resulting in a change in the cooling tower configuration, and a reduction in combustion turbine NO_x concentration from 3.5 ppmv to 2.5 ppmv. In addition, the analysis for turbine and cooling tower TAC emissions was revised from 8,760 hours per year to 5,475 hours per year. While the AES Highgrove Project is only expected to operate at most 2,628 hours per year (i.e., at a 30 percent annual capacity factor), the air quality assessment was performed at the higher capacity factor (i.e., 5,475 hours or 60 percent capacity) to demonstrate that operational impacts are less than significant after mitigation even at 60 percent capacity. This revised air quality section summarizes the AFC filing updates which are a result of these modifications.

Additionally, in order to comply with the current proposed amendments to South Coast Air Quality Management District Rule 1309.1 for simple cycle generating units with a maximum capacity of 500 MW, or less, located in an area designated by the SCAQMD as Zone 3, the AES Highgrove Project would accept a limit on the number of operating hours to no more than 4,000 hours per year, if this requirement is contained in the final version of Rule 1309.1. However, since this rule has yet to be adopted at the time of this filing this air quality assessment is based on 5,475 hours per year, and therefore represents a conservative analysis.

3.1.2 Environmental Analysis

3.1.2.1 Methodology for Estimating Impacts

3.1.2.1.1 Emission Estimates

The following discussion presents the changes to the construction and operation emission calculations due to the project description changes.

Demolition/Construction. The proposed construction of a new water supply line from the Spring Street irrigation well system to the plant would result in additional offsite construction emissions. As a result, the emissions presented in Table 8.1-13 of the AFC were updated to reflect the additional construction required. The offsite construction emissions for the new water supply line were estimated following the same methodology presented in Appendix 8.1A of the AFC. Table 3.1-1 presents only the rows in Table 8.1-13 of the AFC that have changed as a result of the additional offsite water line construction emissions.

Construction emissions from the water supply line would increase the overall total project construction emissions by less than five percent compared to the previous analysis. Detailed construction emission calculations are provided in Appendix 3.1A.

TABLE 3.1-1 (UPDATE OF TABLE 8.1-13, AFC)
Total Project Construction Emissions

Total Tons for Project Construction	**NO_x**	**CO**	**VOC**	**SO_2**	**PM_{10}**
Offsite Water Supply Line Construction (NEW) (tons)[a]	0.53	0.60	0.11	0.002	0.21
Offsite Linear Construction from Table 8.1-13 of AFC (tons)	3.4	2.3	0.57	0.01	1.5
Total Offsite Linear Construction (tons)[b]	3.9	2.9	0.68	0.01	1.7
Total Tons (Onsite plus Offsite)[b]	**16.9**	**12.3**	**2.4**	**0.07**	**8.8**
Maximum lb/day					
Offsite Water Supply Line Construction (NEW) (lbs/day)[a]	24.2	27.1	5.0	0.10	9.6
Offsite Linear Construction from Table 8.1-13 of AFC (lbs/day)	55.4	38.7	15.1	0.20	25.0
Offsite Linear Construction (lbs/day)[b]	79.6	65.8	20.1	0.30	34.6
Maximum Combined Emissions (lb/day)[c]	**234.7**	**163.9**	**39.1**	**1.0**	**123.3**

[a] Contribution from the construction of the recently proposed water supply line.

[b] Total represents emissions from the construction of the proposed water line added to the emissions calculated for the natural gas and potable water lines in the AFC.

[c] The combined emissions represents the month where overlap of demolition, power plant construction, offsite vehicles, and offsite linear construction results in the maximum lb/day. The maximum emissions occur in month 7 for CO and VOC, month 4 for NO_x and PM_{10}, and month 5 for SO_x. Peak construction of the new water supply line is scheduled to occur in month 5. However, the maximum combined emissions were conservatively estimated assuming that peak construction emission from the new water supply line would overlap with the peak construction emissions for each pollutant.

Operational Phase. The reduction of the NO_x concentration from the turbines results in a reduction in the facility startup, shutdown, and operational NO_x emission rates. Table 3.1-2 presents the revised startup and shutdown emissions for the combustion turbines.

TABLE 3.1-2 (UPDATE OF TABLE 8.1-16R, DATA RESPONSES, SET 1B)
Facility Startup/Shutdown Emission Rates [a, b]

	NO_x	**CO**	**VOC**	**SO_x**	**PM_{10}**
Startup (lb/event)	16.7	15.4	2.1	0.36	3.5
grams per event	7,575	6,985	953	163	1,588
Startup (lb/hr)[c]	19.8	25.1	4.0	0.87	8.5
Grams per second	2.65	3.16	0.50	0.11	1.07
Shutdown (lb/event)	4.3	18.2	1.6	0.11	1.1
grams per event	1,950	8,255	726	50	499

TABLE 3.1-2 (UPDATE OF TABLE 8.1-16R, DATA RESPONSES, SET 1B)
Facility Startup/Shutdown Emission Rates [a, b]

	NO_x	CO	VOC	SO_x	PM_{10}
Shutdown (lb/hr)	10.8	27.7	3.4	0.6	6.0
Grams per second	1.7	3.5	0.4	0.08	0.8

[a] Estimated based on vendor data and emissions per startup or shutdown event. See Table 3.1B-5 in Appendix 8.1B.

[b] Start is assumed to take 37 minutes for NOx and 10 minutes for CO, VOC, SO_2, and PM_{10} to achieve compliance with BACT. Shutdown takes 11 minutes.

[c] Maximum hourly start up emissions are estimated as follows.
NO_X = 16.7 lb/start +8.0 lb/hr/60 minutes * 23 minutes = 19.8 lb/hr.
CO = 15.4 lb/start + 11.7 lb/hr/60 minutes * 50 minutes = 25.1 lb/hr.
VOC = 2.1 lb/start + 2.2 lb/hr/60 minutes * 50 minutes = 4.0 lb/hr.
SO_2 = 0.36 lb/start + 0.6 lb/hr/60 minutes * 50 minutes = 0.87 lb/hr.
PM_{10} = 3.5 lb/start + 6 lb/hr/60 minutes * 50 minutes = 8.5 lb/hr.

3.1.2.1.2 Facility Emissions

As a result of the proposed modifications to the water supply and discharge systems for the project, the number of trucks required for the transport of wastewater to the SARI line would be reduced significantly while additional trucks may potentially be needed to transport sludge produced from the new wastewater treatment system. It is expected that emissions from truck trips would represent a small percentage of the total project emissions and, furthermore, a potential increase in truck emissions from sludge handling would be offset by the decrease in the number of trucks required for transport of wastewater to the SARI line. Therefore, a detailed calculation of truck emissions has not been presented in this analysis.

The change in water supply and new cooling tower design will affect the emission rates of PM_{10} and $PM_{2.5}$. PM_{10} and $PM_{2.5}$ emissions from the cooling tower were calculated based on a maximum total dissolved solids (TDS) level of 565 milligrams per liter in the water supply. The TDS level was calculated based on laboratory results of samples taken from the two onsite water supply wells, 8 cycles of concentration (a conservative, worst-case basis used in the air quality impact analysis), and a design cooling water recirculation rate of 7,000 gallons per minute per cooling tower. The annual emissions reflect 15 hours per day, 365 days per year of operations per cooling tower (i.e., total of 5,475 hours, although the project is only expected to operate at a maximum capacity factor of 30 percent or 2,628 hours per year). NO_x emission rates were also updated to reflect the change in combustion turbine stack concentration from 3.5 ppm to 2.5 ppm. The maximum annual, daily, and hourly emissions for the project during normal operation are shown in Table 3.1-3.

TABLE 3.1-3 (UPDATE OF TABLE 8.1-19R, DATA RESPONSES, SET 1B)
AES Highgrove Project Emissions

	NO_x	SO_2	VOC	CO	PM_{10}
Maximum Hourly Emissions per unit, lb/hr					
Turbines[a]	19.8	0.87	4.0	25.1	8.5
Cooling Tower	-	-	-	-	0.16
Total Project (lb/hr)	**19.8**	**0.87**	**4.0**	**25.1**	**8.7**
Maximum Daily Facility Emissions, lb/day					
Turbines	446.9	29.3	116	703	285
Cooling Tower	-	-	-	-	7.1
Total Project (lb/day)	**446.9**	**29.3**	**116**	**703**	**292.1**
Maximum Annual Facility Emissions, lbs/year[b]					
Turbines	163,125	10,686	42,356	256,585	104,025
Cooling Tower	-	-	-	-	2,592
Total Project (lb/yr)	**163,125**	**10,686**	**42,356**	**256,585**	**106,617**
Total Project (tpy)	**81.6**	**5.34**	**21.2**	**128.3**	**53.3**

[a] Maximum hourly emissions based on start up emissions, see Table 3.1-2. Daily emissions include two startups and two shutdowns per day of operation and 15-hour per day of operation for each CTG.

[b] Annual facility emissions are based on a maximum of 5,475 hours per year of operation for each CTG and cooling tower, which represents a very conservative estimate since hours of operation are expected to be much lower than this value.

3.1.2.1.3 Toxic Air Contaminants and Noncriteria Pollutant Emissions

Although the proposed physical modifications would not affect the toxic air contaminant (TAC) emissions from the turbines, the annual hours of operation were modified for this analysis. The previous TAC emission estimates were based on an overly conservative estimate of 8,760 hours. The TAC emissions presented in this analysis (Table 3.1-4) are based on a less conservative estimate of 5,475 hours per year, representative of 15 hours per day, 365 days per year. (As a peaking facility, the project will likely only operate during periods of peak electricity demand and will also be restricted on operating hours based on emissions offsets requirements. However, assuming a consistent monthly profile for all months of the year simplifies the analysis, though it represents a very conservative view.)

TABLE 3.1-4 (UPDATE OF TABLE 8.1-20R, DATA RESPONSES, SET 1B)
Noncriteria Pollutant Emissions For The Project

Pollutant	Emission Factor (pounds per million standard cubic feet [lb/MMscf])[a]	Emissions	
		lb/hr (each turbine)	Tpy (total 3 turbines)
Ammonia[b]	5 ppm	6.0	49.2
Noncriteria			
Acetaldehyde	0.0406	0.035	0.3
Acrolein	0.00369	0.0032	0.03
Benzene	0.00333	0.0029	0.02
1,3-Butadiene	0.000436	0.00038	0.003

TABLE 3.1-4 (UPDATE OF TABLE 8.1-20R, DATA RESPONSES, SET 1B)
Noncriteria Pollutant Emissions For The Project

Pollutant	Emission Factor (pounds per million standard cubic feet [lb/MMscf])[a]	Emissions	
		lb/hr (each turbine)	Tpy (total 3 turbines)
Ethylbenzene	0.03248	0.0282	0.2
Formaldehyde	0.3654	0.317	2.6
Hexane	0.259	0.225	1.8
Naphthalene	0.00132	0.0011	0.009
PAHs[c]	0.000014	0.00001	0.0001
Propylene oxide	0.029435	0.0255	0.21
Toluene	0.13195	0.115	0.9
Xylene	0.06496	0.056	0.5
Total HAP emissions			6.6
Highest Individual HAP (formaldehyde)			2.6

Source: Appendix 3.1B

[a] Obtained from AP-42 Table 3.1-3 revised April 2000 for natural-gas-fired combustion turbines. Formaldehyde, benzene, and acrolein emission factors are from the Background Document for AP-42 Section 3.1, Table 3.4-1 for a natural-gas-fired combustion turbine with an oxidation catalyst. Hexane emission factor from California Air Toxic Emission Factor database.

[b] Based on an exhaust ammonia limit of 5 ppmv @ 15 percent O_2, an F-factor of 8710, and 15 operating hours per day, 365 days per year for each turbine.

[c] Carcinogenic PAHs only; naphthalene considered separately. Emission Factor based on two separate source tests (2002 and 2004) from the Delta Energy Center located in Pittsburg, California.

The change in water supply and new cooling tower design affect the emissions of cooling tower TACs. The revised TAC emission rates were estimated for the cooling tower based on 8 cycles of concentration (a conservative, worst-case basis used in the air quality impact analysis), water supply sampling results, and a design cooling tower water recirculation rate of 7,000 gallons per minute for each three-cell cooling tower. The annual emissions reflect 15 hours per day, 365 days per year of operations per cooling tower. All chemicals listed in Table 3.1-6, were either reported as non-detects or had no data reported in the water sampling reports for Wells #2 and #21. Therefore, each of the chemical constituents reported in Table 3.1-5 were conservatively estimated using the laboratory reporting limits. Detailed assumptions for calculating the cooling tower TAC emissions are presented in Appendix 3.1B.

TABLE 3.1-5 (UPDATE OF TABLE 8.1-33, DATA RESPONSES, SET 1B)
AES Highgrove Cooling Tower Toxic Emissions Analysis

Toxic Compounds	CAS Number	Design Case Cooling Tower Influent (mg/L)[a,b]	Max. TDS for Cooling Tower Discharge (mg/L)	Cooling Tower Emissions Per CT (mg/L)	Annual Cooling Tower Toxic Emissions per CT (lb/year)
Arsenic	7440-38-2	0.0050	0.040	1.40E-06	7.67E-03
Copper	7440-50-8	0.0100	0.080	2.80E-06	1.53E-02
Nickel	7440-02-0	0.0100	0.080	2.80E-06	1.53E-02
Silver	7440-22-4	0.0100	0.080	2.80E-06	1.53E-02
Antimony	7440-36-0	0.0035	0.028	9.81E-07	5.37E-03
Beryllium	7440-41-7	0.0010	0.008	2.80E-07	1.53E-03
Cadmium	7440-43-9	0.0050	0.040	1.40E-06	7.67E-03
Chromium (total) [c]	18540-29-9	0.0050	0.040	1.40E-06	7.67E-03
Lead	7439-92-1	0.0050	0.040	1.40E-06	7.67E-03
Manganese	7439-96-5	0.0200	0.160	5.60E-06	3.07E-02
Mercury	7439-97-6	0.0002	0.002	5.60E-08	3.07E-04
Selenium	7782-49-2	0.0030	0.024	8.41E-07	4.60E-03
Zinc	7440-66-6	0.0200	0.160	5.60E-06	3.07E-02
Acrylonitrile	107-13-1	0.0020	0.016	5.60E-07	3.07E-03
Allyl chloride	107-05-1	0.0005	0.004	1.40E-07	7.67E-04
Benzene	71-43-2	0.0020	0.016	5.60E-07	3.07E-03
Bromomethane	74-83-9	0.0050	0.040	1.40E-06	7.67E-03
2-Butanone	78-93-3	0.0020	0.016	5.60E-07	3.07E-03
Carbon disulfide	75-15-0	0.0005	0.004	1.40E-07	7.67E-04
Carbon tetrachloride	56-23-5	0.0050	0.040	1.40E-06	7.67E-03
Chlorobenzene	108-90-7	0.0020	0.016	5.60E-07	3.07E-03
Chloroethane	75-00-3	0.0050	0.040	1.40E-06	7.67E-03
Chloroform	67-66-3	0.0022	0.018	6.16E-07	3.38E-03
1,2-Dibromo-3-chloropropane	96-12-8	0.0050	0.040	1.40E-06	7.67E-03
1,2-Dibromoethane	106-93-4	0.0020	0.016	5.60E-07	3.07E-03
1,4-Dichlorobenzene	106-46-7	0.0020	0.016	5.60E-07	3.07E-03
1,1-Dichloroethane	75-34-3	0.0020	0.016	5.60E-07	3.07E-03
1,2-Dichloroethane	107-06-2	0.0020	0.016	5.60E-07	3.07E-03
1,1-Dichloroethene	75-35-4	0.0050	0.040	1.40E-06	7.67E-03
Ethylbenzene	100-41-4	0.0020	0.016	5.60E-07	3.07E-03

TABLE 3.1-5 (UPDATE OF TABLE 8.1-33, DATA RESPONSES, SET 1B)
AES Highgrove Cooling Tower Toxic Emissions Analysis

Toxic Compounds	CAS Number	Design Case Cooling Tower Influent (mg/L)[a,b]	Max. TDS for Cooling Tower Discharge (mg/L)	Cooling Tower Emissions Per CT (mg/L)	Annual Cooling Tower Toxic Emissions per CT (lb/year)
Methylene chloride	75-09-2	0.0050	0.040	1.40E-06	7.67E-03
Methyl-t-butyl ether	1634-04-4	0.0018	0.014	4.90E-07	2.68E-03
Naphthalene	91-20-3	0.0050	0.040	1.40E-06	7.67E-03
Styrene	100-42-5	0.0020	0.016	5.60E-07	3.07E-03
1,1,2,2-Tetrachloroethane	79-34-5	0.0020	0.016	5.60E-07	3.07E-03
Tetrachloroethene	127-18-4	0.0020	0.016	5.60E-07	3.07E-03
Toluene	108-88-3	0.0020	0.016	5.60E-07	3.07E-03
1,1,1-Trichloroethane	71-55-6	0.0020	0.016	5.60E-07	3.07E-03
1,1,2-Trichloroethane	79-00-5	0.0020	0.016	5.60E-07	3.07E-03
Trichloroethene	79-01-6	0.0020	0.016	5.60E-07	3.07E-03
Vinyl chloride	75-01-4	0.0050	0.040	1.40E-06	7.67E-03
o-Xylene	95-47-6	0.0020	0.016	5.60E-07	3.07E-03
m-Xylene	108-38-3	0.0020	0.016	5.60E-07	3.07E-03
p-Xylene	106-42-3	0.0020	0.016	5.60E-07	3.07E-03

Source: Appendix 3.1B

[a] Influent concentration data were tested on July 2006 (Test America).

[b] For chemicals that were not detected (ND) during the source test, the reporting limits were used to calculate the emissions.

[c] It was conservatively assumed that the total chromium was all hexavalent chromium for this analysis.

3.1.2.2 Air Quality Impact Analysis

3.1.2.2.1 Modeling Methodology for Evaluating Impacts on Ambient Air Quality

With the exception of the receptor spacing, the modeling methodology (model selection, model option, meteorological data, background data, and building downwash) is consistent with the modeling submitted as part of the AFC.

Receptor Data. For this operational air quality impact analysis, an initial evaluation was conducted using a coarse receptor grid (i.e., 100-meter resolution) around the fence line extending out to 10 km. A secondary 30-meter receptor grid was then centered on the maximum coarse grid impact and extended out to 2 kilometers.

3.1.2.2.2 Modeling Scenarios and Source Data Used to Evaluate Impacts on Ambient Air Quality

Operation Impacts Analysis (Including Startup/Shutdown Turbine Cycles). In evaluating the impacts of the proposed project on ambient air quality, modeling of the worst case ambient

impacts for the project were added to representative background concentrations, and the results compared to the state and federal ambient air quality standards. Table 3.1-6 presents the updates to the scenarios modeled for this analysis. A complete summary of the exhaust and emission characteristics are presented in Appendix 3.1C. Figure 3.1C-1, in Appendix 3.1C provides an updated site layout.

TABLE 3.1-6 (UPDATE OF TABLE 8.1-23R, DATA RESPONSES, SET 1B)
Model Input for Normal Turbine Operation

Averaging Period	Scenario*
Annual (PM_{10})	Cooling Tower (3 cells; Modeled with the maximum annual PM_{10} scenario)
24-hour (PM_{10})	Cooling Tower (3 cells; Modeled with the maximum 24-hour PM_{10} scenario)

* Emissions and exhaust parameters for each unit are located in Appendix 3.1C.

3.1.2.2.3 Results Compared to the Ambient Air Quality Standards

Operation Impacts Analysis (Including Startup/Shutdown Turbine Cycles). The highest modeled concentrations were used to demonstrate compliance with the AAQS. Table 3.1-7 presents a comparison of the maximum AES Highgrove Project operational impacts to the ambient air quality standards. All proposed Project changes are reflected in the operational impacts analysis with the exception of the reduction in combustion turbine NO_x exhaust concentration from 3.5 ppmv to 2.5 ppmv.

TABLE 3.1-7 (UPDATE OF TABLE 8.1-26R, DATA RESPONSES, SET 1B)
Normal Operation Impacts Analysis—Maximum Modeled Impacts Compared to the Ambient Air Quality Standards
Facility-Wide Emissions

Pollutant	Averaging Time	Maximum Facility Impact ($\mu g/m^3$)	Background ($\mu g/m^3$)[c]	Total Impact ($\mu g/m^3$)	State Standard ($\mu g/m^3$)	Federal Standard ($\mu g/m^3$)
NO_2[a]	1-hour [b]	128.2	188	316.2	470	-
	annual[b]	0.75	44.6	45.4	-	100
SO_2	1-hour	4.10	52.4	56.5	655	-
	3-hour	2.47	41.9	44.4	-	1,300
	24-hour	0.37	39.3	39.7	105	365
	annual	0.039	10.5	10.5	-	80
CO	1-hour	218	9,162	9,380	23,000	40,000
	8-hour	28	4,237	4,265	10,000	10,000
PM_{10}	24-hour	4.6	164	168.6	50	150
	annual[c]	0.44	58.5	58.9	20	50
$PM_{2.5}$	24-hour	4.6	104.3	108.9	-	65
	annual[c]	0.44	27.5	27.9	12	15

[a] NO_2 impacts were updated for all changes except the reduction in CTG exhaust NO_x concentration from 3.5 ppmv to 2.5 ppmv.

[b] 1-Hour and annual NO_2 predictions are conservatively based on 100 percent conversion to NO_2. In reality, NO to NO_2 conversion is limited by the amount of ambient ozone that is available to complete the conversion.

[c] Background concentrations were the highest concentrations monitored during 2002-2004.
Note: Based on the plant operating 5,475 hours per year with two startups and shutdowns per day per unit.

For those pollutants and averaging periods where the background concentrations do not exceed the AAQS, the project will not cause or contribute to the violation of a standard. For those pollutants where the background data is already in excess of the standards, the project's impact plus background is above the standard, and, without mitigation, would further contribute to an existing violation of the standard. The AES Highgrove Project will, however, be providing mitigation in the form of emission reduction credits. The complete list of off-property impacts for the various scenarios and contaminants is presented in Appendix 3.1C. The results in Table 3.1-7 present the maximum impact from all scenarios modeled.

The 24-hour and annual PM_{10} and $PM_{2.5}$ impacts at each sensitive receptor within 10 kilometers of the project were modeled with the updated emission rates. The maximum observed impact at any sensitive receptor is shown in Table 3.1-8. For a complete listing of sensitive receptors and respective impacts, see Tables 3.1C-7 through 3.1C-9 in Appendix 3.1C.

TABLE 3.1-8
Normal Operation impact Analysis – Maximum modeled Impacts at Sensitive Receptors
Facility Wide Impacts

Pollutant	Averaging Time	Maximum Impact (µg/m^3)
PM_{10}	24-Hour	1.86
	Annual	0.22
$PM_{2.5}$	24-Hour	1.86
	Annual	0.22

3.1.2.2.4 Results Compared to the SCAQMD New Source Review Requirements

Rule 1303 Compliance. To demonstrate compliance with SCAQMD modeling requirements of Rule 1303, Table 3.1-9 shows the maximum AES Highgrove Project modeled impacts for PM10 from any individual CTG will not exceed the SCAQMD significance thresholds. Therefore, the project's PM_{10} impacts are not considered significant as defined by the SCAQMD.

TABLE 3.1-9 (UPDATE OF TABLE 8.1-28R, DATA RESPONSES, SET 1B)
Normal Operation Impacts Analysis for AES—SCAQMD Rule 1303 (Maximum Modeled Impacts)
Individual CTG Analysis

Pollutant	Averaging Time	Maximum CTG Impact (µg/m^3)	SCAQMD Rule 1303 Significance Threshold (µg/m^3)	Significant?
PM_{10}	24-hour	1.7	2.5	No
	annual	0.14	1.0	No

3.1.2.3 Health Risk Assessment

A summary of the predicted health risk impacts for this revised analysis are presented in Table 3.6-10. The summary includes the point of maximum impact (PMI) UTM locations for increased cancer risk, chronic health index, and the acute health index. For this analysis, it

was conservatively assumed that each modeled receptor could potentially be both a residential and worker receptor, regardless of location. Therefore, the location of the maximum exposed individual resident (MEIR) and the maximum exposed individual worker (MEIW) were considered the same as the PMI. The 70-year derived adjusted cancer risk at the PMI is approximately 0.63 in a million, when the facility is assumed to operate at 5,475 hours per year. The PMI is located at the southeast corner of the fence line. The MEIR and MEIW are predicted to be 0.63 and 0.13 in a million, respectively. The cancer risks at the PMI, MEIR, and MEIW for the project operation are all below the SCAQMD significance threshold of one in one million.

The predicted chronic hazard index (HIC) at the PMI location is approximately 0.01, located approximately 2,800 meters southeast of the facility. The maximum predicted acute hazard index (HIA) is 0.08, located approximately 1,000 meters northwest of the facility. The HIC and HIA are both well below the SCAQMD significance threshold of 1.0.

A complete discussion of the potential public health impacts are presented in Section 3.6.

TABLE 3.1-10
Results of the Health Risk Analysis for AES Highgrove
Facility Wide Impacts

HHRA Category	Value	UTM (NAD 27)
70-yr Derived Cancer Risk at the PMI	0.80 per million	469461, 3764529
70-yr Derived Adjusted Cancer Risk at the PMI	0.63 per million	469461, 3764529
Chronic HI at the PMI	0.0112	472280, 3763983
Acute HI at the PMI	0.0813	468530, 3765453
70-yr MEIR Derived Adjusted Cancer Risk	0.63 per million	469461, 3764529
MEIW Cancer Risk	0.13 per million	469461, 3764529
Resident Chronic HI	0.0112	472280, 3763983
Worker Chronic HI	0.0112	472280, 3763983
Resident Acute HI	0.0813	468530, 3765453
Work Acute HI	0.0813	468530, 3765453

3.1.3 Compliance with Laws, Ordinances, Regulations, and Standards

The changes made to the project would not affect the SCAQMD compliance requirements. However, the reduction in CTG exhaust NO_x concentration would lower the required RTCs for the project under SCAQMD Rule 2005. Table 3.1-11 shows an update to the RTCs required for NO_x emissions based on this change.

TABLE 3.1-11 (UPDATE OF TABLE 8.1-32R, DATA RESPONSES, SET 1B)
SCAQMD NOx Offset Requirements and Project Emissions[a] (ref: Regulation 2005)

Pollutant	Offset Threshold	Offsets Required
NO_x	4 ton/yr[a]	207,564 lb NO_x RTCs (first year [b]) 163,125 lb NO_x RTCs (normal operation)

[a] Proposed Highgrove Project will enter the SCAQMD NO_x RECLAIM program (Regulation XX). NO_x emissions will be offset through purchase of RTCs at a ratio of 1:1 to actual emissions per year.

[b] First year = 12 months of emissions plus commissioning emissions

The following compliance assessment was prepared to compare the AES Highgrove project to the SCAQMD's proposed revisions to Rule 1309.1. The purpose of the proposed Rule 1309.1, is to establish criteria for eligibility to access the pool of Priority Reserve Credits being made available by the SCAQMD for use by electric generating facilities. Table 3.1-12 presents the criteria for electric generating facilities with a maximum capacity of 500 MW or less, located in Zone 3 or an environmental justice area. A compliance assessment for each of the criteria as it relates to the AES Highgrove project is also presented in Table 3.1-12. As indicated in Table 3.1-12, the AES Highgrove project will meet each of the eligibility criteria with the exception of the annual operating limitation of 4,000 hours of operation per year (per unit). However, the Applicant will accept a limit on the number of operating hours to no more than 4,000 hours per year per unit if the final Rule 1309.1 contains this eligibility criteria.

TABLE 3.1-12
Comparison of the AES Highgrove Project to the Draft Revision to SCAQMD Rule 1309.1
Comparison Based on the Draft Revision Language for an Electric Generating Facility Less than 500 MW and Located in Zone 3.

Draft Provision	Compliance Assessment
Cancer Risk is less than 1 in one million and Non-Cancer Risk (Chronic and Acute) is less than 0.5	The MEIR and MEIW cancer risks are 0.63 and 0.13 in a million, respectively. The PMI is 0.8 in a million. The maximum chronic and acute hazard indices are 0.0112 and 0.0813, respectively.
Cancer Burden is less than 0.1	Because the predicted cancer risks are less than 1.0 in a million for all receptors, a cancer burden was not estimated, based on SCAQMD definition of cancer burden.
Rate of PM_{10} Emissions does not exceed 0.06 lb/MW-hr	The predicted PM_{10} emission rate for each AES Highgrove turbine is 0.05 lb/MW-hr (excluding startup and shutdown emissions).
Rate of NOx emissions does not exceed 0.08 lb/MW-hr	The predicted NO_x emission rate for each AES Highgrove turbine is 0.08 lb/MW-hr (excluding startup and shutdown emissions).
Total Combined 24-hour PM_{10} Impact from the New or Modified Electrical Generating Units shall not exceed 5 micrograms/cubic meter ($\mu g/m^3$)	The total combined 24-hour PM_{10} impact for the three new electrical generating units proposed for the AES Highgrove Project is 4.4 $\mu g/m^3$ (includes start up/shutdown emissions).

TABLE 3.1-12
Comparison of the AES Highgrove Project to the Draft Revision to SCAQMD Rule 1309.1
Comparison Based on the Draft Revision Language for an Electric Generating Facility Less than 500 MW and Located in Zone 3.

Draft Provision	Compliance Assessment
Total Combined annual PM_{10} Impact from the New or Modified Electrical Generating Units shall not exceed 0.75 $\mu g/m^3$	The total combined Annual PM_{10} impact for the three new electrical generating units proposed for the AES Highgrove Project is 0.43 $\mu g/m^3$ (includes start up/shutdown emissions).
For Simple Cycle Electric Generating Units, The Unit Shall Operate a Maximum of 4,000 hours per year or less.	The AES Highgrove Project would accept a limit on the number of operating hours to no more than 4,000 hours per year, upon adoption of the current Draft rule.

3.1.4 Mitigation

Mitigation measures will not be affected by the changes made to the project, with the exception of a reduction in RTCs required, as described in Section 3.1.3.

3.2 Biological Resources

This subsection assesses biological impacts associated with the proposed use of "impaired" water obtained from wells located at Spring Street and Michigan Avenue, with a focus on the construction of the water supply line.

A field survey of the proposed water line route was conducted by a CH2M HILL biologist on March 29, 2007. The surveyed area includes the proposed 1.3-mile water line and areas within 1,000 feet of either side. The field survey was aided by aerial photographs, which helped identify habitat types and land uses. The presence, or potential presence, of sensitive biological resources was determined from information gathered during field surveys conducted for the project, published and unpublished literature, and natural resource agency databases. Potential species occurring along the water line route are listed in Table 3.2-1. AFC Figure 8.2-2 has been revised as Figure 8.2-2R to show the sensitive species within 1,000 feet of the linear (gas and water line) corridors.

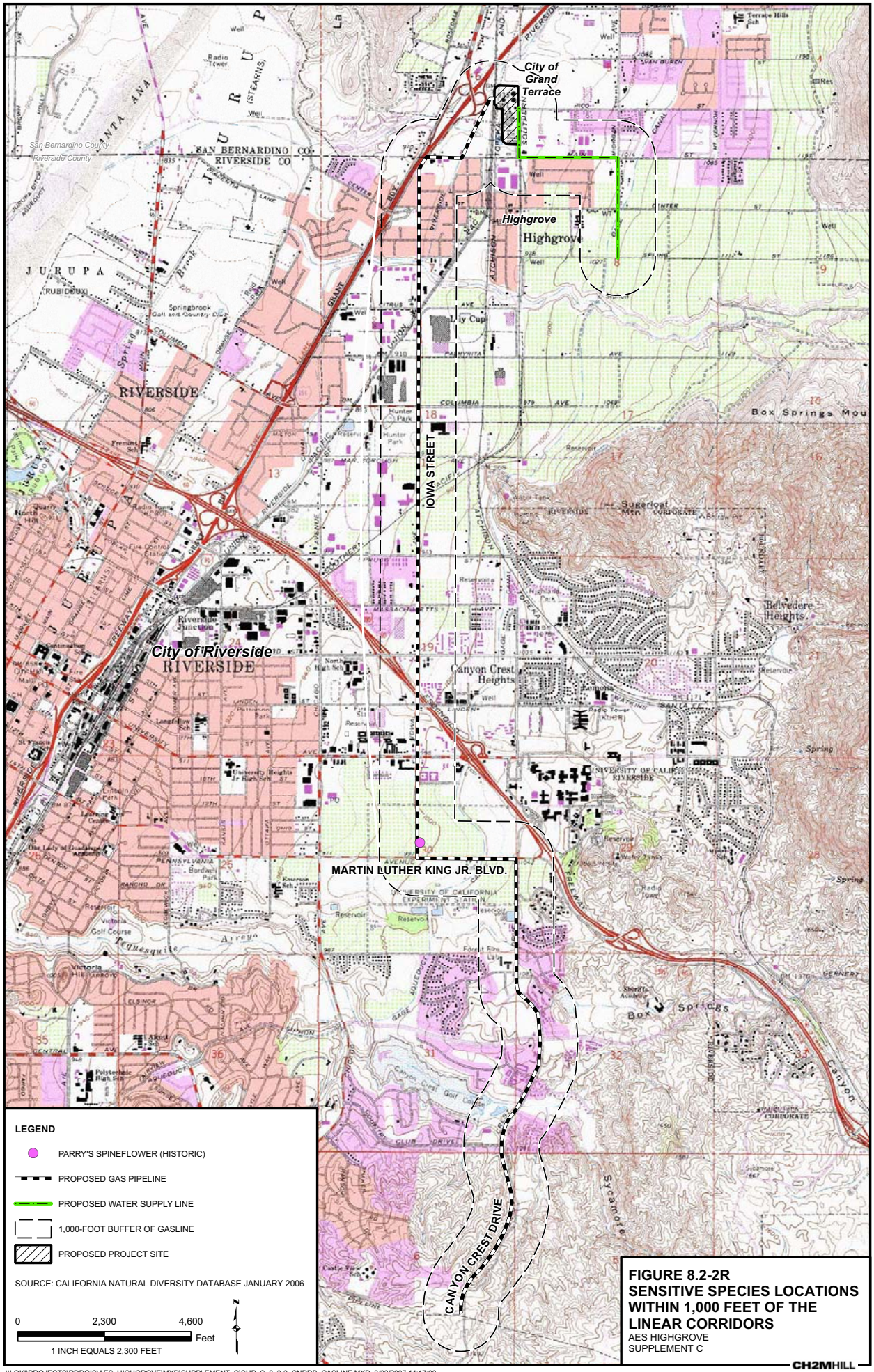

FIGURE 8.2-2R
SENSITIVE SPECIES LOCATIONS WITHIN 1,000 FEET OF THE LINEAR CORRIDORS
AES HIGHGROVE
SUPPLEMENT C

CH2MHILL

\\LOKI\PROJECTS\RDDGIS\AES_HIGHGROVE\MXD\SUPPLEMENT_C\SUP_C_8_2-2_CNDDB_GASLINE.MXD 3/22/2007 14:17:00

TABLE 3.2-1
Special-Status Species Potentially Occurring Along the Water Line Route

Common Name	Scientific Name[a]	Status[b]	Season[c]	Primary Habitat[d]	Potential Occurrence in Project Area	Comments
Birds						
California horned lark	*Eremophila alpestris actia*	CSC, MB	RES	A resident in California. Associated with a variety of open habitats.	Unlikely to breed in the project vicinity due to the lack of significant undisked open areas. May forage in nearby fields.	Nests on the ground. Breeding season is from March to July.
Cooper's hawk	*Accipiter cooperii*	CSC	RES	Found in woods and the edges of woods, often hunts around houses and birdfeeders. Nests in tall trees especially pines.	Unlikely to breed in the project vicinity due to the lack of significant wooded areas. Likely to forage in residential areas.	The Cooper's hawk breeds primarily in riparian areas and oak woodlands and apparently is most common in montane canyons.
Grasshopper sparrow	*Ammodramus savannarum*	FSC, MB	SUMR	Prefers moderately open grasslands and prairies with patchy bare ground.	Unlikely to breed in the project area due to the lack of significant undisked open areas. May forage in nearby fields.	Breeding season typically begins in mid-April. A neotropical migrant that primarily winters in Central America.
Southern bald eagle	*Haliaeetus leucocephalus ssp leucocephalus*	FT, CE	WNTR	California winter range is associated with wetlands, agriculture fields, flooded fields, and open land.	Unlikely to forage in cropland in project area.	Breeds in Aleutian Islands and winters in the Central Valley.
Swainson's hawk	*Buteo swainsoni*	CT, MB	Winter migrant/ RES	Nests primarily in riparian trees adjacent to grassland, and agricultural areas with scattered trees. Primarily associated with the Central Valley during the breeding season, migrating to Central and South America in the fall/winter.	Low potential due to lack of potential nesting sites.	The breeding season is from March through September. Migrating to Central or South America in fall/winter.

Notes:
[a] Scientific names are based on the following sources: AOU (1983); Jennings (1983); Zeiner *et al.* (1990a-c).
[b] Status. Status of species relative to the Federal and California State Endangered Species Acts and Fish and Game Code:
Federal Status
FE Federally listed as endangered.
FT Federally listed as threatened.
FSC Federal Species of Special Concern. Proposed rules have not yet been issued because they have been precluded at present by other listing activity.
MB Migratory Bird Treaty Act. of 1918. Protects native birds, eggs, and their nests.
California Status
CE State listed as endangered. Species whose continued existence in California is jeopardized.
CT State listed as threatened. Species that although not presently threatened in California with extinction are likely to become endangered in the foreseeable future.
CSC California Department of Fish and Game "Species of Special Concern." Species with declining populations in California.
[c] Season. Season of use for animals. RES = Resident; SUMR = Summer; WNTR = Winter.
[d] Primary Habitat. Most likely habitat association.

Habitat types along the water line route include, fallow and active agricultural fields, stormwater canals and drainages, ruderal roadsides, and ornamental - industrial, commercial, landscape, and residential uses (Figure 3.2-1). The proposed waterline route crosses Gage Canal at the intersection of Center Street and Michigan Avenue. This section of the canal has been routed underground and does not have any surface water presence. Disturbed or ruderal habitat along the proposed route contained non-native or invasive plant species typical of disturbed habitat including cheeseweed (*Malva parviflora*), red-stem filaree (*Erodium cicutarium*), and Jimson weed (*Datura stramonium*). Roadside ruderal habitats were found at the edges of agricultural fields, in open fallow fields, and along the unpaved sections of road shoulders. These areas are typically kept free of vegetation (purposely or from continual disturbance) and are used for utility line rights-of-way or other activities related to industrial, residential, and agricultural use.

Non-native ornamental landscaping is present along the waterline route in association with residential, industrial and commercial land uses. These areas contained typical landscaping plants such as acacia (*Acacia* sp.), olive (*Olea europea*), eucalyptus (*Eucalyptus* sp.), pepper tree (*Schinus* sp.), and palm (*Washingtonia* sp.). The availability of water, shady cover, and insects makes the yards and landscaping around urban areas attractive to certain adaptable species, many of which are non-native.

Animal species observed during the field survey included: European starlings (*Sturnus vulgaris*), California ground squirrel (*Spermophilus beecheyi*), western meadowlark (*Sturnella neglecta*), American crow (*Corvus brachyrhynchos*) and hawk (*Buteo* sp.). The meadowlark and crow are highly adaptable, widespread, and common; however, the hawk was seen at a distance flying into an abandoned building and could not be identified to species. Landscape and urban habitats dominate the area along the waterline route.

3.2.1 Potential Impacts of the Water Line Construction and Operation

The proposed waterline is approximately 1.3 miles long and would be installed within the existing paved roadway and road shoulders through industrial, residential and agricultural areas. The primary method of construction includes excavation of an open trench approximately 4 feet deep and 3 to 7 feet wide, depending on site-specific conditions. The specific location of the waterline will be determined based upon the avoidance of any sensitive receptors, ability to obtain right-of-way, and the location of existing utilities, but will remain within the existing roadway surface and shoulder. A temporary construction corridor 12 feet wide will be used to store the excavated soil and provide access for equipment and vehicles. The water line installation would require trench excavation and would generate fugitive dust. Water will be applied to the site for dust control during construction. Trenchless construction (e.g., jack-and-bore or horizontal directional drilling) will likely be used to cross under the Gage Canal and the Southern Pacific railroad track.

Construction of the waterline is confined to paved roadways and urban road shoulders adjacent to industrial, residential and agricultural areas. Potential impacts on biological resources are minimized by locating the pipeline in previously developed areas.

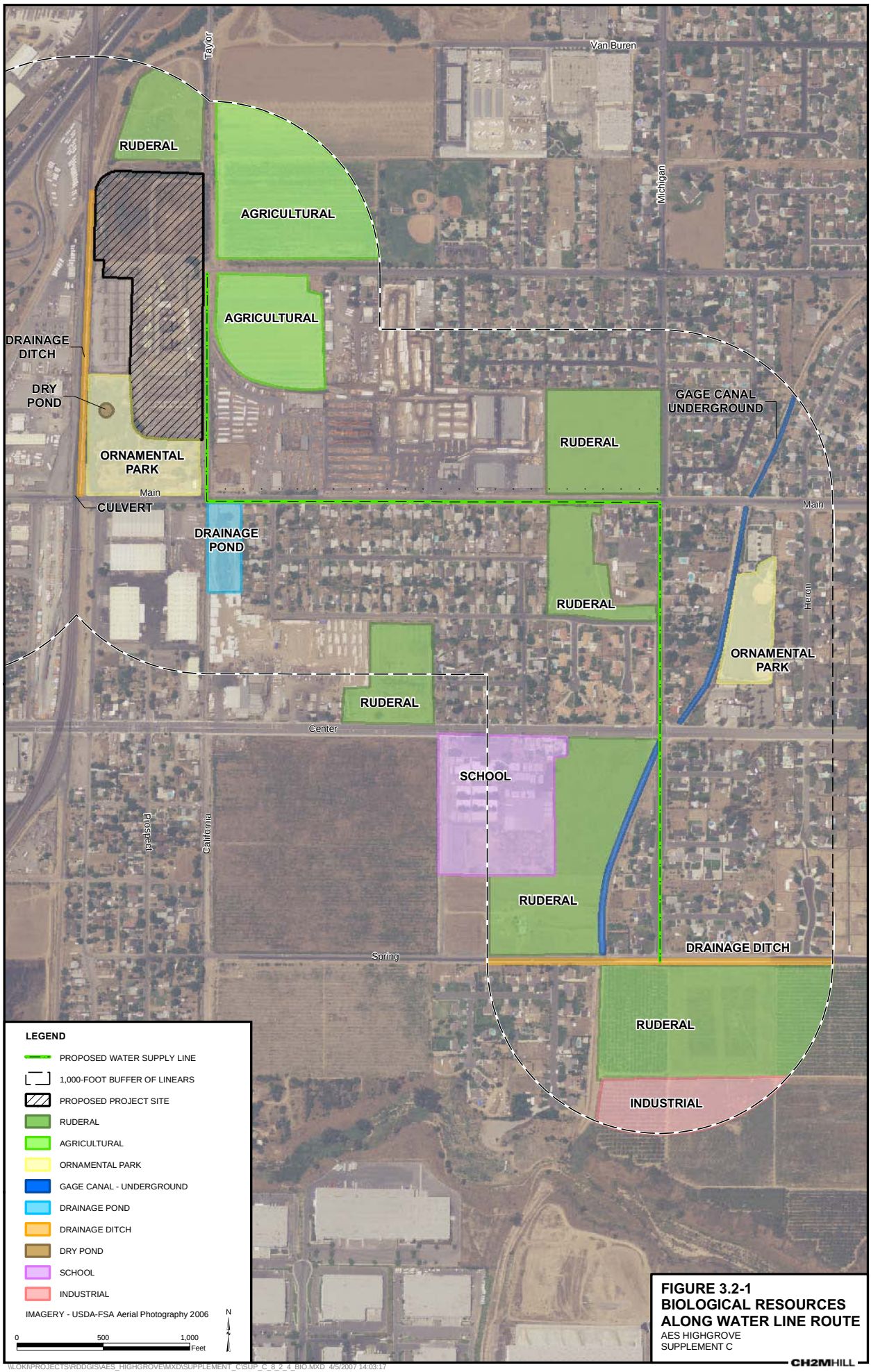

FIGURE 3.2-1
BIOLOGICAL RESOURCES ALONG WATER LINE ROUTE
AES HIGHGROVE
SUPPLEMENT C

CH2MHILL

\\LOKI\PROJECTS\RDDGIS\AES_HIGHGROVE\MXD\SUPPLEMENT_C\SUP_C_8_2_4_BIO.MXD 4/5/2007 14:03:17

Unintentional disturbance to nesting birds could result from construction activities that interfere with the breeding and foraging of these species. Mortality of eggs, nestlings, or juveniles may occur if nests are established in areas adjacent to the project activities. If active nest sites are found within 200 feet (500 feet for raptors) of the project activities, approved California Department of Fish and Game (CDFG) protection measures will be implemented. Protection measures may include implementation of environmental awareness training, preconstruction surveys, and seasonal avoidance as described in AFC Subsection 8.2.5. Implementing these measures would reduce impacts to nesting birds to less-than-significant. General nesting bird surveys shall be performed for all species that may have active nests within 200 feet (or 500 feet for raptors) of construction activities. If any active nests are found during the surveys, protective measures shall be taken to restrict construction activities that may potentially cause significant disruptions to nesting behavior.

Gage Canal (recently converted to a continuous pipe laid inside the old canal) would be crossed during installation of the waterline. Construction activities occurring within these areas would remain within the existing paved roadways and road shoulder. If the canal is deep enough the new pipeline will cross over the top of the canal. If the water line needs to cross underneath, trenchless construction (e.g., jack-and-bore or horizontal directional drilling) will be used to cross under Gage Canal.

With the use of mitigation measures included in the AFC, construction of the new waterline would not result in significant biological impacts. No LORS will change as a result of the construction of the water supply line.

3.3 Cultural Resources

This subsection assesses cultural resources impacts associated with the water supply line. The line will be installed within the right-of-way of city streets, shoulders and or sidewalks, i.e., within existing asphalt and concrete. The alignment is heavily developed and the ground has been disturbed from previous construction. Facility changes within the plant site are covered by the analysis provided in the AFC.

None of the structures that border the roadways will be impacted by installation of the water supply pipeline. JRP Historical Consultants performed a reconnaissance-level (windshield) architectural survey of the water supply pipeline route. Their summary report is provided in Appendix 3.3A.

A field survey for both historic and prehistoric archaeological resources was conducted for the proposed water line route by archaeologist Clint Helton of CH2M HILL on April 4, 2007. The surveyed area includes the proposed 1.3-mile water line and 50 feet of either side. Because the alignment comprises asphalt and concrete where ground visibility is nonexistent, an intensive survey was focused on three areas of exposed soils adjacent to the roadway where ground is visible. These three areas are located at the corner of Mount Vernon Avenue and Center, Michigan Avenue and Center, and on both sides of Center between Garfield and Prospect. These three areas were covered using pedestrian transects to examine an area 50 feet beyond the edge of pavement where possible. Ground visibility in these areas was approximately 90 percent. No cultural resources were encountered during the survey. The previously-recorded historic Gage Canal (CA-RIV-4768H/ CA-SBR-

7168H) crosses under Center at Michigan Avenue. However, the canal here consists of a modern enclosed concrete culvert and will be completely avoided by construction of the water supply line.

3.3.1 Potential Impacts of the Water Line Construction and Operation

The proposed waterline is approximately 1.3 miles long and would be installed within the existing paved roadway, road shoulder, and sidewalk through industrial, residential and agricultural areas. The primary method of construction includes excavation of an open trench approximately 4 feet deep and 3 to 7 feet wide, depending on site-specific conditions. The specific location of the waterline will be determined based upon the avoidance of any sensitive receptors, ability to obtain right-of-way, and the location of existing utilities, but will remain within the existing roadway surface and shoulder. A temporary construction corridor 12 feet wide will be used to store the excavated soil and provide access for equipment and vehicles.

The field survey of the proposed water line resulted in negative findings. No prehistoric or historic archaeological remains were detected from surface examination of exposed soils.

The Gage Canal (recently converted to a continuous pipe laid inside the old canal) would be crossed during installation of the waterline. However, construction activities within these areas would remain within the existing paved roadways and road shoulder. Trenchless construction (e.g., jack-and-bore or horizontal directional drilling) will likely be used to cross under the Gage Canal. Construction confined within the existing city streets will not affect the historic built environment.

With the use of mitigation measures included in the AFC, construction of the new waterline would not result in significant impacts to cultural resources. No LORS will change as a result of the construction of the water supply line.

3.4 Land Use

The installation of a water supply pipeline along the proposed route would be consistent with existing and planned land uses in this area. AFC Figure 8.4-4 provides the zoning codes within approximately 0.25-mile of the water line route. The proposed modification will not result in potential impacts greater than those analyzed in the AFC and no LORS will change as a result of the revised water supply. As a result, any potential land use impacts associated with this Supplement will be less than significant.

3.5 Noise

The proposed water supply line will not require the installation of any noise-producing equipment. At the plant site, the change in design will result in the addition of a small water tank and the addition of an extra cooling tower cell for each of the three cooling towers. The proposed modifications will not result in potential impacts greater than those analyzed in the AFC and no noise LORS will change as a result of the process water line or a change in construction at the plant site. As a result, any potential noise and vibration impacts associated with this Supplement will be less than significant.

3.6 Public Health

3.6.1 Introduction

The modifications to the AES Highgrove Project that affect the public health assessment include the change in the water supply for the cooling towers and an additional cell for the cooling tower, which results in a change in the cooling tower footprint. The conservative operating assumption of 8,760 hours per year for the turbine and cooling tower Toxic Air Contaminants (TACs) was also refined to 5,475 hours per year to be consistent with the air quality analyses. Operating at 5,475 hours per year corresponds to facility operation at a 60 percent annual capacity factor. While the AES Highgrove Project is only expected to operate at a 30 percent annual capacity factor or 2,628 hours per year, the public health and air quality analyses are typically performed based on conservative assumptions. This public health section summarizes the AFC filing updates which are a result of these modifications.

Additionally, in order to comply with the current proposed revision to South Coast Air Quality Management District Rule 1309.1 for simple cycle generating units with a maximum capacity of 500 MW, or less, located in an area designated by the SCAQMD as Zone 3, the AES Highgrove Project would accept a limit on the number of operating hours to no more than 4,000 hours per year, if this requirement is contained in the final version of Rule 1309.1. However, since this rule has yet to be adopted at the time of this filing, this public health assessment is based on the 5,475 hours of operation per year, and therefore results in a conservative public health impact assessment.

3.6.2 Environmental Analysis

3.6.2.1 Toxic Air Contaminant Exposure Assessment

Human health risks potentially associated with TAC emissions from the operation of the proposed project were evaluated using the same methodology as the AFC. For instance, this Human Health Risk Assessment (HHRA) was based on the latest guidance outlined in the Air Toxics Hot Spots Program Risk Assessment Guidelines (Office of Environmental Health Hazard Assessment [OEHHA], 2003), the U.S. Environmental Protection Agency's (EPA) Guideline on Air Quality Models (EPA, 2005), and the South Coast Air Quality Management District's (SCAQMD) *Risk Assessment Procedures for Rules 1401 and 212.*

The OEHHA Derived and the Derived (Adjusted) Methods were used to evaluate the residential cancer risk estimates for this analysis. The Derived (Adjusted) method is based on the ARB's "Recommended Interim Risk Management Policy for Inhalation-Based Residential Cancer Risk" guidance document dated October 9, 2003. The use of the derived (Adjusted) method is also included in Appendix II of the SCAQMD's "Risk Assessment Procedures for Rules 1401 and 212", version 7.0, July 1, 2005. The Derived (Adjusted) Method is identical to the OEHHA derived method with one exception. The Derived (Adjusted) method uses the breathing rate at the 80th percentile of exposure rather than the high-end point-estimate when the inhalation pathway is one of the dominant exposure pathways.

3.6.2.1.1 TAC Emission Calculations

Although the proposed project modifications would not physically modify the turbines, the annual hours of operation were further refined as discussed above. Therefore, the TAC emission rates presented in Table 3.6-1 are based on the conservative assumption of 15 hours per day of operation, 365 days per year (5,475 hours per year) at the maximum heat input rate. Detailed emission calculations for the non-criteria pollutants are provided in Appendix 3.1B.

TABLE 3.6-1
AES Highgrove Turbine TAC Emission Rates

Pollutant	TAC Emission Rates		
	lb/hr (per turbine)	lb/yr (per turbine)	Ton/yr (total 3 turbines)
Ammonia[a]	6.0	32,832	49.2
Acetaldehyde	0.035	192.9	0.5
Acrolein	0.00320	17.5	0.04
Benzene	0.0029	15.8	0.04
1,3-Butadiene	0.00038	2.1	0.005
Ethylbenzene	0.0282	154.4	0.4
Formaldehyde	0.317	1,736	4.2
Hexane	0.225	1,231	3.0
Naphthalene	0.0011	6.3	0.015
PAH[b]	0.00001	0.07	0.0002
Propylene Oxide	0.0255	139.9	0.34
Toluene	0.115	627	1.5
Xylene	0.056	309	0.7

Source: Appendix 3.1B.

[a] Based on an exhaust ammonia limit of 5 ppmv @ 15 percent O_2, an F-factor of 8710, and 15 operating hours per day, 365 days per year for each turbine.

[b] Carcinogenic PAHs only; naphthalene considered separately. Emission Factor based on two separate source tests (2002 and 2004) from the Delta Energy Center located in Pittsburg, California.

The change in water supply and new cooling tower design affect the cooling tower TAC emission rates. The revised TAC emission rates were estimated for the cooling tower based on 8 cycles of concentration, water supply sampling results, and a design cooling tower water recirculation rate of 7,000 gallons per minute for each 3-cell cooling tower. The annual emissions reflect operation of the cooling tower 15 hours per day, 365 days per year of operations per cooling tower. All chemicals listed in Table 3.6-2, were reported as non-detects in the sampling report for Wells #2 and #21 or in the case of a limited number of compounds where data was not available, it was assumed they were also non-detects. Therefore, each of the chemical constituents in Table 3.6-2 was conservatively estimated based on the laboratory reporting limits. The detailed emission calculations for the TAC

emission rate estimates for the cooling towers, including the reporting limits for each compound, are provided in Appendix 3.1B.

TABLE 3.6-2
AES Highgrove Cooling Tower TAC Emission Rates

Pollutant	lb/hr (per Cooling Tower)	lb/yr (per Cooling Tower)	Pollutant	lb/hr (per Cooling Tower)	lb/yr (per Cooling Tower)
Arsenic	1.40E-06	7.67E-03	Chloroform	6.16E-07	3.38E-03
Copper	2.80E-06	1.53E-02	1,2-Dibromo-3-chloropropane	1.40E-06	7.67E-03
Nickel	2.80E-06	1.53E-02	1,2-Dibromoethane	5.60E-07	3.07E-03
Silver	2.80E-06	1.53E-02	1,4-Dichlorobenzene	5.60E-07	3.07E-03
Antimony	9.81E-07	5.37E-03	1,1-Dichloroethane	5.60E-07	3.07E-03
Beryllium	2.80E-07	1.53E-03	1,2-Dichloroethane	5.60E-07	3.07E-03
Cadmium	1.40E-06	7.67E-03	1,1-Dichloroethene	1.40E-06	7.67E-03
Chromium (total)	1.40E-06	7.67E-03	Ethylbenzene	5.60E-07	3.07E-03
Lead	1.40E-06	7.67E-03	Methylene chloride	1.40E-06	7.67E-03
Manganese	5.60E-06	3.07E-02	Methyl-t-butyl ether	4.90E-07	2.68E-03
Mercury	5.60E-08	3.07E-04	Naphthalene	1.40E-06	7.67E-03
Selenium	8.41E-07	4.60E-03	Styrene	5.60E-07	3.07E-03
Zinc	5.60E-06	3.07E-02	1,1,2,2-Tetrachloroethane	5.60E-07	3.07E-03
Acrylonitrile	5.60E-07	3.07E-03	Tetrachloroethene	5.60E-07	3.07E-03
Allyl chloride	1.40E-07	7.67E-04	Toluene	5.60E-07	3.07E-03
Benzene	5.60E-07	3.07E-03	1,1,1-Trichloroethane	5.60E-07	3.07E-03
Bromomethane	1.40E-06	7.67E-03	1,1,2-Trichloroethane	5.60E-07	3.07E-03
2-Butanone	5.60E-07	3.07E-03	Trichloroethene	5.60E-07	3.07E-03
Carbon disulfide	1.40E-07	7.67E-04	Vinyl chloride	1.40E-06	7.67E-03
Carbon tetrachloride	1.40E-06	7.67E-03	o-Xylene	5.60E-07	3.07E-03
Chlorobenzene	5.60E-07	3.07E-03	m-Xylene	5.60E-07	3.07E-03
Chloroethane	1.40E-06	7.67E-03	p-Xylene	5.60E-07	3.07E-03

Source: Appendix 3.1B
Note: Conservatively evaluated the risk for total chromium using the inhalation cancer potency and reference exposure levels for hexavalent chromium.

3.6.2.1.2 Dispersion Modeling

The air dispersion modeling for this analysis was conducted similar to the approach used in the original AFC filing. The dispersion modeling was conducted within HARP using the

U.S. Environmental Protection Agency's (USEPA's) Industrial Source Complex Short-Term (ISCST3) model. ISCST3 model options were selected using guidelines developed under the SCAQMD's July 2005 Risk Assessments Procedures for Rules 1401 and 212 Version 7 (SCAQMD, 2005a) and the Supplemental Guidelines for Preparing Risk Assessments for the Air Toxics "Hot Spots" Information and Assessment Act (AB2588) (SCAQMD, 2005b) and are listed below:

- Urban dispersion coefficients
- Final plume rise
- Stack tip downwash
- Buoyancy induced dispersion
- No calm processing
- No missing data processing
- Default wind profile exponents
- Default vertical potential temperature gradients
- 10-meter anemometer height

The 1981 SCAQMD pre-formatted ISCST3 meteorological data set for Riverside was used for the analysis.

Cartesian coordinate receptor grids were used to assess the ground-level TAC concentrations surrounding the project area, identify the extent of significant impacts, and identify the maximum impact locations. Two model runs were performed for the project: one screening model run using a 100-meter spacing coarse grid extended to 10 kilometers from the facility fence line, and one refined model run using a 30-meter spacing fine grid covering the maximum impacted locations identified in the screening run.

Receptor and source base elevations were determined using the 7.5-minute USGS Digital Elevation Model (DEM) data (i.e., 30-meter spacing between grid nodes). All coordinates were referenced to the UTM North American Datum 1927 (NAD27), zone 11.

Detailed source parameters and other dispersion modeling options are presented in Appendix 3.1C.

3.6.2.1.3 Risk Characterization

The results of the dispersion modeling analysis represent an intermediate product in the HHRA process. The HARP model was subsequently used to determine cancer, chronic and acute health risks. The risk characterization steps in this analysis are consistent with the steps used in the original AFC filing, but are provided here for further clarification.

To assess chronic and acute non-cancer exposures, annual and 1-hour TAC ground-level concentrations were compared to the reference exposure levels (RELs) developed by OEHHA to obtain a chronic or acute hazard index. The REL is a concentration in ambient air at or below which no adverse health effects are anticipated.

Cancer risks were evaluated based on the inhalation cancer potency, oral slope factor, frequency and duration of exposure at the receptor, and breathing rate of the exposed persons. Cancer risks were estimated using conservative assumptions of a 70-year exposure duration for residential receptors and a 40-year exposure duration for commercial/ industrial receptors. This HHRA also included potential health impacts from home grown

produce, dermal absorption, soil ingestion, and mother's milk, as required by OEHHA and SCAQMD guidelines (OEHHA, 2003, SCAQMD 2005b).

OEHHA/CARB Cancer and Non-Cancer Reference Exposure Levels. The cancer and non-cancer RELs are consistent with the values used in the original AFC. The inhalation cancer potency, oral slope factor values, and RELs used to characterize health risks associated with the modeled impacts were obtained from the *Consolidated Table of OEHHA/ARB Approved Risk Assessment Health Values* (OEHHA and CARB, 2005), and are shown in Appendix 3.6A.

3.6.2.1.4 Summary of TAC Exposure Assessment Results

A summary of the predicted health risk impacts for this revised analysis is presented in Table 3.6-3. The summary includes the point of maximum impact (PMI) UTM locations for increased cancer risk, chronic health index, and the acute health index. An evaluation of the chemicals and sources contributing to the maximum predicted risks are also presented in this section. Additional details on the HARP results are provided in Appendix 3.6B. An electronic copy of the HARP report files were prepared and submitted on CD. A description of the HARP modeling files included on the CD is located in Appendix 3.6C.

TABLE 3.6-3
Results of the Health Risk Analysis for AES Highgrove
Facility Wide Impacts(Based on an annual 5,475 hours of operation)

HHRA Category	Value	UTM (NAD 27)
70-yr Derived Cancer Risk at the PMI	0.80 per million	469461, 3764529
70-yr Derived Adjusted Cancer Risk at the PMI	0.63 per million	469461, 3764529
Chronic HI at the PMI	0.0112	472280, 3763983
Acute HI at the PMI	0.0813	468530, 3765453
70-yr MEIR Derived Adjusted Cancer Risk	0.63 per million	469461, 3764529
MEIW Cancer Risk	0.13 per million	469461, 3764529
Resident Chronic HI	0.0112	472280, 3763983
Worker Chronic HI	0.0112	472280, 3763983
Resident Acute HI	0.0813	468530, 3765453
Work Acute HI	0.0813	468530, 3765453

For this analysis, it was conservatively assumed that each modeled receptor could potentially be both a residential and worker receptor, regardless of location. Therefore, the location of the maximum exposed individual resident (MEIR) and the maximum exposed individual worker (MEIW) were considered the same as the location of the PMI. This highly conservative assumption neglects the fact that certain locations may only be suitable for residents or workers only, and some physical locations are not occupied at all (i.e., steep slopes or roadways). It should also be noted that the location of the PMI for the cancer and chronic risks is not the same because of the difference in the contribution of the source and pollutant to each respective risk (see Tables 3.6-4 and 3.6-5)

The 70 year derived cancer risk at the PMI is approximately 0.8 in a million. The 70-year derived adjusted cancer risk at the PMI is approximately 0.63 in a million. The PMI is located at the southeast corner of the fence line. The MEIR derived adjusted cancer risk and the MEIW cancer risk are estimated to be 0.63 and 0.13 in a million, respectively (based on a conservative 5,475 annual hours of operation for the facility). The cancer risks at the PMI, and the MEIR and MEIW cancer risks for the project operation are all below the SCAQMD significance threshold of one in one million.

The chronic hazard index (HIC) at the PMI location is approximately 0.01, located approximately 2,800 meters southeast of the facility. The acute hazard index (HIA) at the PMI location is approximately 0.08, located approximately 1,000 meters northwest of the facility. The HIC and HIA are both below the SCAQMD significance threshold of 1.0.

The contributions from each emission source category to the maximum predicted health risk impacts are presented in Table 3.6-4. TAC emissions from the cooling towers contribute over 99 percent of the predicted cancer risk at the PMI location. However, because a majority of the compounds in the cooling tower water were non-detects and set to the reporting or detection limits for this analysis (including chromium), the actual contribution of the cooling towers to the predicted health risk is expected to be much lower during operation.

TABLE 3.6-4
Relative Contribution of Sources to the Estimated Health Risks at the PMI

Source	Cancer Risk at the PMI	HIC at the PMI	HIA at the PMI
Turbines	0.3%	100%	99.9%
Cooling Towers	97.7%	-	0.1%

Table 3.6-5 presents the top contribution by chemical to the maximum predicted health risk impacts. To be conservative, the reporting limit for chromium was used to estimate the emissions of hexavalent chromium in the cooling tower water. Therefore, the contribution of hexavalent chromium to the predicted cancer risks in this analysis is conservative and the actual contribution and risks related to hexavalent chromium would be much lower during operation. As indicated in Table 3.6-4, the turbines emissions accounted for over 99 percent of the maximum predicted chronic and acute impacts. Formaldehyde and acrolein accounted for a total of 82 percent and 92 percent of these chronic and acute hazard indices, respectively.

TABLE 3.6-5
Contribution by Chemical to the Maximum Cancer, Chronic, and Acute Impacts

TAC	Cancer Risk at the PMI	TAC	Chronic Index at the PMI	TAC	Acute Index at the PMI
Hex. Chromium*	86%	Formaldehyde	54%	Acrolein	76%
Arsenic	10%	Acrolein	27%	Formaldehyde	15%
Cadmium	2.5%	Ammonia	15%	Ammonia	8.5%

* Total and hexavalent chromium were not detected in the cooling tower water. Therefore, an upper limit for the impacts related to hexavalent chromium were conservatively estimated based on the detection limit for total chromium.

Proposed High School. For completeness, this evaluation includes an updated assessment of the potential impacts at the proposed high school on Taylor Street. The incremental increase in cancer risk at the school conservatively assumes a 70-yr lifetime exposure even though exposures would likely be more aligned with the worker exposure assumptions. The HHRA predicts the MEIR excess lifetime (70-year) cancer risk at the proposed school would be approximately 0.32 in a million (based on a conservative 5,475 annual hours of operation for the facility). The hazard indices for chronic and acute non-carcinogenic substances would be less than 1.0 (i.e., approximately 0.00055 and 0.0016, respectively). Thus, public health impacts at the school are also predicted to be less than significant.

3.6.3 Compliance Assessment for the Proposed SCAQMD 1309.1 Rule Language

The purpose of the proposed revisions to Rule 1309.1, is to establish eligibility criteria for access to the SCAQMD's pool of Priority Reserve emission reduction credits. Table 3.1-12 in Subsection 3.1 (Air Quality) presents the eligibility criteria for electric generating facilities within the SCAQMD with a maximum capacity of 500 MW or less, located in Zone 3 or an environmental justice area. A compliance assessment for each of the proposed Rule 1309.1 criteria as it relates to the AES Highgrove project is presented in Table 3.1-12. As indicated in Table 3.1-12, the AES Highgrove project will meet each of the provisions with the exception of the 4,000 hours of operation per year. However, the Applicant is willing to accept a limit on the number of operating hours to no more than 4,000 hours per year per unit if the final Rule 1309.1 contains this eligibility criteria.

3.7 Worker Health and Safety

The proposed modification will not result in potential impacts greater than those analyzed in the AFC and no LORS will change as a result of the revised water supply. In addition, construction of the process water supply route will not require any additional worker safety and fire protection training. As a result, any potential worker safety and fire protection impacts associated with this Supplement will be less than significant.

3.8 Socioeconomics

Construction of the Water Supply Line will require additional workers. It is anticipated that construction will take approximately 8 weeks and would require about 7,059 hours. To be conservative, the monthly peak workforce for the water line was added to the two monthly peaks shown in AFC Table 8.8-13. Thus, the total workforce in month 7 would change from 147 workers to 171 and in month 8, would increase from 147 to 172 workers. It is anticipated that the additional 25 workers would also be drawn from Riverside or San Bernardino counties. Consequently, there would not be any impact to housing or schools. Assuming the average wage of $75 per hour, the construction payroll would increase from approximately $12 million to $12.5 million (in 2005 dollars). This additional salary would provide a slight increase in the estimated indirect and induced employment. Also, some materials for the construction of the water supply line would be purchased in the San Bernardino/Riverside county area, generating additional sales taxes to the point of sale and county. Thus, the local benefits described in the AFC would be slightly increased. However, the project's benefits would only be slightly increased. The addition of the water line would not create any

significant adverse impacts. In addition, LORS would not be affected and there would be no change in operations affecting socioeconomics.

3.9 Agriculture and Soils

This subsection assesses soil impacts associated with the proposed use of "impaired" water obtained from wells located at Spring Street and Michigan Avenue, with a focus on the construction of the water supply line. The soil and important farmland maps have been updated to include the water supply pipeline from the impaired source. Figure 8.9-1 has been revised as Figure 8.9-1R to include the soils near the water line route. The addition of the water supply pipeline resulted in the need to add one soil unit description into AFC Table 8.9-2. This additional soil unit is provided below in Table 8.9-2R.

TABLE 8.9-2R (ADDITIONAL MAP UNIT ENTRY ONLY INCLUDED HERE)
Soil Mapping Unit Descriptions and Characteristics

Map Unit	Description
Riverside County Soil Mapping Units (NRCS, 1971)	
Note: The following soil mapping unit is along the proposed water supply pipeline route.	
PaC2	**Pachappa fine sandy loam, eroded – slope class (2 to 8%)** • Prime Farmland • Well drained • Deep soils • Formed on predominantly granitic alluvium • Fine sandy loam surface over loam and very fine sandy loam subsoil and substratum • Permeability is moderate • Runoff is medium • Water erosion hazard is moderate • Natural fertility is high • Slightly acidic in surface to moderately alakaline at depth • Capability Class IIe-1 irrigated • Taxonomic class: Fine-loamy, mixed, thermic Mollic Haploxeralfs • Elevation range from 600 to 1,700 feet

Other modifications include the need to add in the impacts of construction of the water pipeline on the estimates of soil loss by water and by wind erosion. These modifications are summarized in the following two tables that now include an estimate for the water line construction. Table 8.9-3R revises AFC Table 8.9-3 to include a revised estimate of the soil loss by water erosion. Table 8.9-5R revises AFC Table 8.9-5 to include a revised estimate of the soil loss by wind erosion.

While the addition of the water line construction impacts increases the estimate of total soil loss, this addition does not affect the overall conclusion regarding the cumulative impacts associated with the proposed project and no LORS will change from the construction of the water supply line.

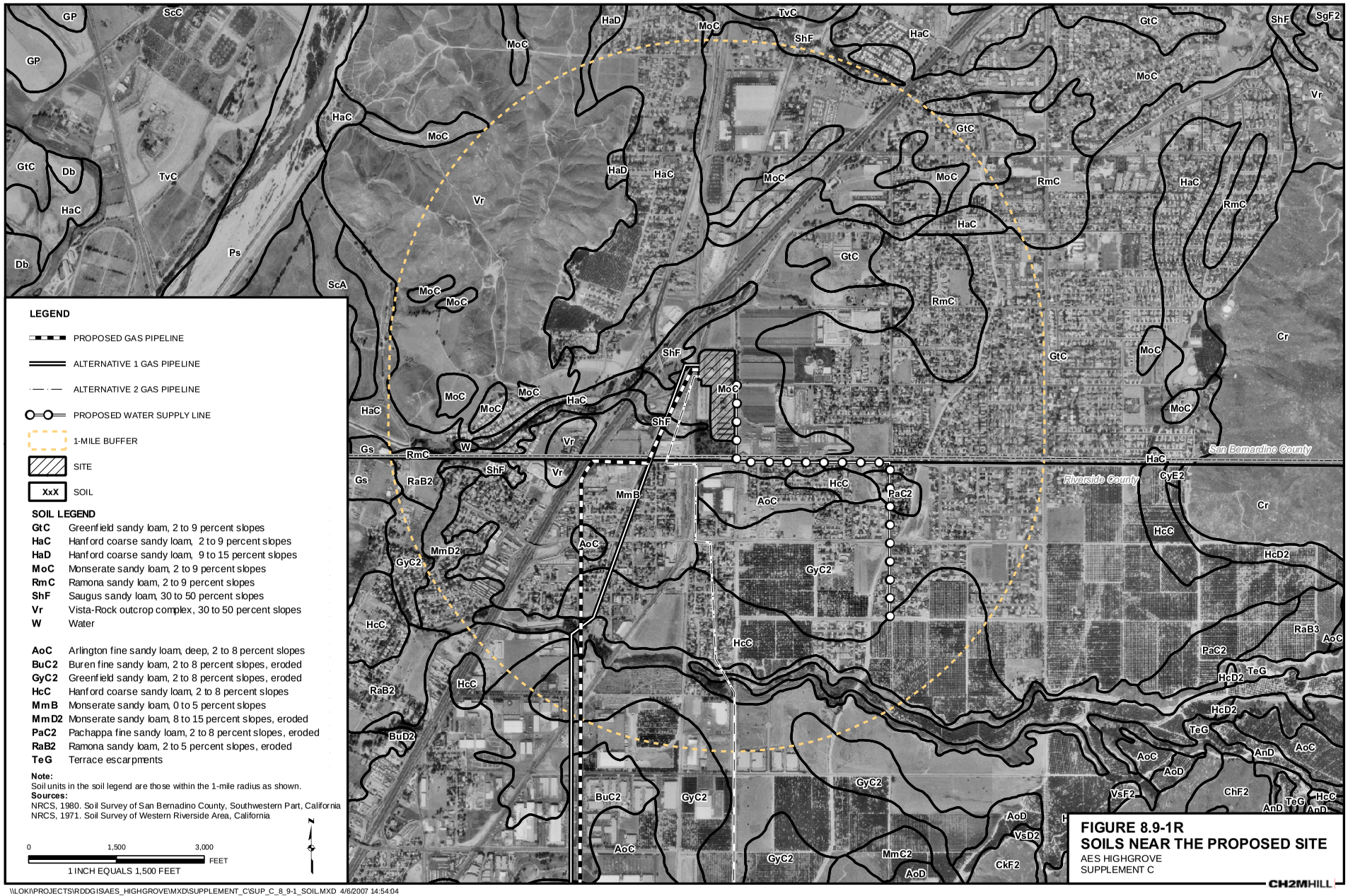

FIGURE 8.9-1R
SOILS NEAR THE PROPOSED SITE
AES HIGHGROVE
SUPPLEMENT C

\\LOKI\PROJECTS\RDDGIS\AES_HIGHGROVE\MXD\SUPPLEMENT_C\SUP_C_8_9-1_SOIL.MXD 4/6/2007 14:54:04

TABLE 8.9-3R
Estimated Soil Loss from Water Erosion

			Estimates Using Revised Universal Soil Loss Equation[a]		
Feature	**Activity**	**Duration (months)[b]**	**Soil Loss (tons) without BMPs**	**Soil Loss (tons) with BMPs**	**Soil Loss (tons/yr) No Project**
Site (18 acres)	Demolition	5	97.5	2.8	0.44
	Grading	2	84.0	1.1	0.17
	Construction	10	195.0	5.6	0.87
Gas Pipeline (4.34 acres)	Grading/excavation	6	2,012	25.7	3.25
Water Pipeline (1.13 acres)	Grading/excavation	2	16.5	0.8	0.14
Total Project (site and pipeline corridor, 22.34 acres)	All activities listed above	14	2,405	36.0	4.87

Notes:

[a] Soil losses (tons/acre/year) are estimated using RUSLE2 software available on line [http://fargo.nserl.purdue.edu/rusle2_dataweb/RUSLE2_index.htm].

- The soil mapping unit data specific to each county were downloaded directly from the above-cited on line source.
- Soil loss (R-factors) were estimated using 2-year, 6-hour point precipitation frequency amount for the nearest National Weather Service station to the Project Site [on line at http://hdsc.nws.noaa.gov/hdsc/pfds/sa/sca_pfds.html].
- Estimates of actual soil losses use the RUSLE2 soil loss times the duration and the affected area. The No Project Alternative estimate does not have a specific duration so loss is given as tons/year.

[b] The estimate of total project time is derived from the construction schedule shown in Table 8.8-8 and includes a 2-month overlap of the demolition, construction, and grading phases.

Project Assumptions as follows:

- The portion of the site that will be disturbed is 18 acres which includes the Project Site, laydown area, and grading in former tanks storage area.
- The pipeline trenches are estimated at 5-foot width over their entire length and the estimate of soil loss along the pipelines is integrated over their entire length.

RUSLE2 Assumptions as follows:

100-ft slope length. Estimated soil unit slope is the midpoint of the minimum and maximum of the unit slope class. Rock cover percent estimated to be zero throughout project area.

Construction/Demolition soil losses assume the following inputs: Management - Bare ground; Contouring - None, rows up and down hill; Diversion/terracing - None; Strips and Barriers - None.

Grading soil losses assume the following inputs: Management - Bare ground/rough surface; Contouring - None, rows up and down hill; Diversion/terracing - None; Strips and Barriers - None.

Construction with BMP soil losses assume the following inputs: Management - Silt fence; Contouring - Perfect, no row grade; Diversion/terracing - None; Strips and Barriers - 2 fences, 1 at end of RUSLE slope.

No Project soil losses assume the following inputs: Management - Dense grass, not harvested; Contouring - None, rows up and down hill; Diversion/terracing - None; Strips and Barriers - None.

TABLE 8.9-5R
Estimated Unmitigated and Mitigated TSP Emissions from the Site and Along the Gas Pipeline

Emission Source	Area	Duration (months)	Unmitigated TSP (tons)	Mitigated TSP (tons)
Grading Dust:				
Project Site	18 acres	2	6.60	3.30
Gas pipeline	0.181 acre per 1/24th segment	6	0.20	0.10
Water pipeline	0.053 acre per ¼ segment	2	0.02	0.01
Wind Blown Dust:				
Plant Site	6 acres	2	0.38	0.19
Laydown Area	1/2 of 5 acres	8	0.79	0.40
Storage Tank Area	7 acres	3	0.67	0.33
Estimated Total			**8.66**	**4.33**

Assumptions:

Assumes grading for entire site will be completed in a 2-month period overlapping the end of site demolition and plant construction.

The natural gas pipeline will be trenched within or adjacent to existing paved roadways and that a 5-ft wide trench will be adequate. It is expected that excavation and grading along the pipeline will be done in segments. The wind loss estimates are based upon1/24th segments (each 0.1808 acre) for gas pipeline and 1/4th segment (each 0.0535 acre) for water pipeline and that one segment will be open at all times during the entire 6-month or 2-month construction window, respectively.

These estimates assume that wind erosion will occur only on exposed portions of the site and that plant site will be covered within 2 months after completion of grading; half of the soil area may be exposed through the 10-month construction window; and the storage tank area will have some temporary or permanent protection within 3 months after completion of grading.

Data Sources:

PM_{10} Emission Factor Source: Jones and Stokes URBEMIS2002 User's Guide, May 2003.
PM_{10} to TSP Conversion Factor Source: BAAQMD, 2005;

SCAQMD, 1993 (Table 11-4 for mitigation efficiency rates, as summarized in Table 8.9-4)

3.10 Traffic and Transportation

This section assesses transportation impacts associated with the proposed use of "impaired" wells located at Spring Street and Michigan Avenue, with a focus on the construction of the water supply line. The analysis quantifies impacts on roadways expected during construction and operation of the proposed project with these new elements. The main impacts are the addition of up to 25 new construction worker trips (above the original 246 construction worker and truck trips), and lane/road closures due to the water supply line construction. Additional transportation factors examined in this section include proposed development projects in the vicinity of the site. Also, since the operation of the proposed project would require less truck trips to bring the brine to the SARI line, the reduced impacts are assessed.

As in the original AFC, the worst-case scenario is examined during construction activities to the local study area roadways.

3.10.1 Affected Environment

3.10.1.1 Project Description

The Project's water supply and discharge systems have been changed to reduce the amount of truck traffic required to transport the plant's brine wastewater to the SARI line. The traffic impact analysis conducted previously is potentially sensitive to the following modifications:

- Addition of a wastewater treatment system and partial discharge to the municipal sewer system to reduce the amount of wastewater trucked offsite to the SARI line.
- Construction of a new water supply line to supply water from the Spring Street irrigation well system to the plant.
- Creation of a waste source consisting of the wastewater system sludge that will be trucked offsite.

While the number of trucks needed to operate the facility will be reduced, the proposed improvements have potential impacts during construction. In particular, construction activities would result in additional traffic for construction workers and potential impacts related to street closures associated with water supply line installation.

3.10.1.2 Water Supply Line

Figure 1-1 shows the location of the project site and the new water supply line. The proposed line will originate at the Spring Street irrigation well system. It will tie into an existing irrigation distribution system at the intersection of Michigan Avenue and Spring Street. From the Spring Street wells, the new 6- to 12-inch line will be routed north on Michigan Avenue, west on Main Street, and north on Taylor Street to the facility. The new 1.3 mile-long line can be constructed entirely in the public right-of-way.

3.10.1.3 Other Future Plans and Projects

City of Grand Terrace staff have indicated that no new development projects have been approved since the original AFC was written.

According to the Press-Enterprise, a new Senior Center and Senior Housing project located on Grand Terrace Road is underway, but an Environmental Impact Report has not been completed. The opening of the senior center is not expected until at least summer 2008. Also, the construction of a new public library has been discussed, with a preferred location either near the new high school or near downtown Grand Terrace. However, the feasibility of the project remains uncertain.

As of January 13, 2005, the transportation improvements funded by Measure I are planned to be[1]:

- "Widening of Interstate 215 through Grand Terrace, Colton and San Bernardino
- Widening of I-10 through the East Valley

[1] San Bernardino Associated Governments at: http://www.sanbag.ca.gov/news/mi_city-benefits/grandterrace.html

- Improvements to I-10 interchanges, such as, Mt. Vernon, Tippecanoe/Anderson and Mt. View
- Improvements to major streets, such as, Barton Road and Anderson Avenue
- More than $8 million over 30 years in local street and road improvements chosen by the City of Grand Terrace, including repairing potholes, widening streets, repaving roads or installing traffic signals
- More frequent Metrolink service
- New express bus system to link major communities
- Expanded special transit services and continued low bus fares for seniors and riders with disabilities
- Programs to make current transportation systems more effective, like Freeway Service Patrols to clear accidents quickly, traffic signal synchronization and incentives for commuters who share rides."

3.10.2 Environmental Consequences

This subsection discusses potential environmental impacts of the proposed project. Potential traffic impacts during construction as well as operations after construction have been analyzed.

3.10.2.1 Summary of Construction Phase Impacts

The peak hour analysis examined the worst-case scenario of the impact of the 147 daily employees during construction of the plant, plus the 25 additional workers needed to construct the water supply line during eight weeks.

3.10.2.1.1 Trip Generation

The average vehicle occupancy (AVO) factor of 1.3 persons per vehicle to reflect carpooling by workers has been applied to the number of construction workers planned to be commuting during the peak period, which yields an estimated 264 daily trips: 132 AM peak hour trips and 132 PM peak hour trips. During the peak period, it has been conservatively assumed that approximately 20 truck trips would occur, with no truck trips occurring during the AM and PM peak commute periods.

3.10.2.1.2 Trip Distribution

Trip distribution percentages assumed in the original AFC have been reused in this supplement: 25 percent within the City of Grand Terrace, Loma Linda, and Highgrove area (local trips); 25 percent from north in San Bernardino County (Rialto, Colton, San Bernardino Cities); and the remaining 50 percent from southern and western parts of Riverside County.

To arrive at the project site, construction worker trips from within the City would use Main Street to reach the plant location. Worker trips from San Bernardino County would use southbound I-215 and exit on Iowa Avenue and proceed to Taylor Street. Trips from southern points of Riverside County would use SR 60/I-215 or SR 91, and exit on Center Street/Highgrove.

3.10.2.1.3 Traffic Assignment

Based on the above, the maximum additional traffic on most of the freeway segments would be approximately 33 trips in the peak hour. Up to 65 trips may be added to SR-91 during the peak hour. This represents no more than 2 percent of the total traffic, which would not have a significant impact on LOS. Using the significance criteria described in the original AFC, the number of additional trips in the peak hour (33 to 65) is well below the threshold value of 600 vehicles in one direction in the peak hour.

On arterials, the greatest additional volume of traffic would be on Main and Taylor Street. Up to 132 trips will be added to the peak hour traffic. However, since both of these streets have very low traffic volumes, the impacts are still less than significant.

3.10.2.1.4 Summary

Modified project construction would result in short-term increases in vehicle trips by construction vehicular activities and construction workers. Because the volumes of traffic added are low, impact will still be less than significant, with the possible exception of conflicts with afternoon high school traffic as explained in the original AFC.

3.10.2.2 Summary of Operational Impacts

The construction of the wastewater treatment system and partial discharge to the municipal sewer system will reduce the need for trucks to transport the concentrated brine wastewater to the SARI line. The number of trucks require for this operation drops from 12 to 3 trucks per day at the annual average operating temperature of 80 degrees Fahrenheit. However, the new treatment system may produce sludge that would be carried away to a hazardous material landfill. This operation should require 1 truck for every 10 truck trips to the SARI line, or 0.3 trucks a day. If the plant were to operate at a maximum expected capacity factor of 30 percent during a summer month, the number of trucks for sludge required would be 5 trucks per month.

In summary, 3.3 truck trips would be added (if the plant were to operate 15 hours a day every day of the month) to the 15 permanent employee trips, which results in 18.3 trips per day for operations. This traffic volume is immeasurable in terms of roadway capacity, and would then result in a less than significant impact.

3.10.3 Cumulative Impacts

The cumulative impacts of the planned Outdoor Adventures Center were evaluated in the original AFC. City staff indicated that the City's approval has been rejected in Court last July, and that a new proposal for a more traditional shopping center is underway, although the developer has not filed any new request for approval yet.

No other new projects have been identified as potential new sources of traffic in the vicinity of the plant.

3.10.4 Mitigation Measures

3.10.4.1 Construction Impacts from Water Supply Line

3.10.4.1.1 Traffic Control Standards

All temporary signing, lighting and traffic control devices during construction should conform to applicable standards (primarily the California Supplement of the MUTCD).

3.10.4.1.2 Construction Work Hours

In general, Riverside County and the city of Grand Terrace allow construction work on a case-by-case basis. During periods where construction is not allowed, trenches must be plated over to permit use of all travel lanes. Work hours and allowable noise limits will be described in the encroachment permit, as issued by the Encroachment Permit Section of the County of Riverside or by the city of Grand Terrace.

Specific hours for construction will be determined on a case-by-case basis, in consultation with the County. Any variations in the working hours will be determined with consideration given to impacts to residents and the general public kept to a minimum. Consideration of impacts and justification for those requests will be provided prior to request.

3.10.4.1.3 Lane Closures

The number of travel lanes during all hours of the day should be sufficient to meet expected traffic volumes at the construction site. The minimum width of a traffic lane that needs to be maintained is 12 feet in each direction. If a required lane closure results in a single (bi-directional) lane of traffic during construction, the remaining lane should be at least 12 feet wide. Specific requirements for temporary lane widths and approval for narrower lanes should be obtained during preparation of the Traffic Control Plan.

One traffic lane will remain open at all times on all affected roadways. Full closures of major roadways are not planned. When traffic in both directions must use a single lane, two flagmen will be stationed at both ends of the construction zone to safely direct traffic.

Vehicle access would be restored at the end of each work day through the use of steel trench plates or trench backfilling.

3.10.4.1.4 Driveway Access

The contractor shall develop construction plans defining in detail how driveway access restrictions will be minimized. Any blockage of individual driveways must be described in the traffic control plans. Based on the estimated work pace of up to 275 feet per day, project construction would occur for about 1 days in front of an individual property on affected roads. Operations must be coordinated with all business and property owners along city streets and state highways, within the limits of contract work, for temporary driveway closures at least ten days prior to performing work that will block access points. The contractor shall provide alternate access to properties, at the property/business owner's approval. In areas where a residence or business has two access points, one access would be open to traffic at all times. In cases where the inconvenience is not minor, such as with an active business that is dependent on one driveway, the work could be scheduled during nighttime hours. Temporary closure of driveways shall only take place during nighttime between the hours of 10:00 PM and 6:00 AM.

3.10.4.1.5 Emergency Access

Emergency response service providers shall be notified at least one month in advance of the proposed locations, nature, timing, and duration of any construction activities and advised of any access restrictions that could impact their effectiveness in addition to being provided a copy of detour plans filed with the City or County. Emergency response service providers include police and fire departments and ambulance companies. In no circumstances should the only access to a developed area be cut off for any period of time. The Traffic Control Plan shall include details regarding emergency service coordination and procedures and copies shall be provided to all relevant service providers.

3.10.4.1.6 Parking

Along streets where parking will be temporarily lost, the contractor will be required to post notices of closures prior to construction. Signs should indicate that parking will be removed during construction and specify the duration of the construction period. Permits for parking restrictions must be obtained from the County (Encroachment Permit Section, 951-955-6785). On days of disruption, residents and business employees typically would park on the other side of the street and walk around the construction area to their homes and workplaces.

3.10.4.1.7 Public Transit

Along streets where bus stops will need to be temporarily closed, the contractor will need to post notices of closure per the City of Grand Terrace or the County's requirement. The public transit service agency may post a notice of bus stop closure on their websites as well.

3.10.4.1.8 Surface Restoration

In general, any construction activities impacting existing surfaces or roadway components (roadway pavements, signing and striping, traffic signals and detectors, driveways, islands, curbs and gutters, sidewalks, medians and landscaping) shall be mitigated by restoring the facility to its original condition (before construction). While there is no restriction on the length of a section to be repaved, the contractor must provide sufficient capacity for traffic.

Pavement restoration shall meet or exceed the County's/City's standard specifications.

The project Standard Details will outline specifics on pavement restoration. Contract documents will provide details on paving, curb and gutter, signing and striping, detectors, sidewalks, medians and landscaping, and other surface elements.

3.10.4.1.9 General Construction and Traffic Control Requirements

The following general construction and traffic control requirements will allow the required traffic movements to occur with minimum interruption. For the majority of the alignment, at least one through lane of traffic in the direction adjacent to construction is required. Full road closures, where required during construction, will require detour routing.

Minimum Lane Width for all traffic lanes shall be 12 feet. In addition to a 12-foot minimum width, a 2-foot buffer shall be maintained between the edge of traveled lane and any traffic control devices including, but are not limited to, concrete barriers, delineators, construction barrels, cones and curb and gutter. Specific requirements for temporary lane widths along roadways where 12-foot wide traffic lanes cannot be achieved will be obtained from the City of Grand Terrace Planning Department.

Temporary Concrete Barrier with proper end treatment shall be provided whenever a lateral safety clearance of 10 feet or more between edge of traveled lane and edge of trench is not obtainable.

Reduction of the Speed Limit by 10 mph from the posted speed limit shall be in place during all hours that traffic control is in place.

Flaggers shall be included when only one lane is available for two-way traffic. One flagmen will be stationed at each end of the construction zone to safely direct traffic.

Sidewalk Closure will be accomplished by following typical signing requirements.

3.10.4.2 Operations and Maintenance Phase

The operations- and maintenance-related traffic associated with the project is considered to be minimal. Previously, the project required up to 12 truck trips per day to transport brine water to the SARI line. Using the blended water, the maximum number of daily truck trips to the SARI line will be reduced to 3, with one sludge truck being required for every 10 SARI line trips, or about 1 every 3 days. State routes and local roadways have adequate capacity to accommodate operations-related traffic. Since 12 trips per day did not create a significant impact, the 3 to 4 trips per day is also not a significant impact. Consequently, no operations-related mitigation measures are required.

3.10.5 Additional References

Julie Farren (The Press-Enterprise). 2007. Grand Terrace council reviews 2007 priorities (website: http://www.pe.com/inland/grandterrace/). February 28.

3.11 Visual Resources

Development along the north side of Main Street is primarily industrial, but is planned for development of a new high school. The south side of Main Street is mostly residential with an undeveloped parcel near the corner of Michigan Avenue. The affected segment of Michigan Avenue is mostly residential, with a church on the west side of the street and some open space. During construction of the water line, the area of the alignment will be temporarily disrupted by the presence of construction equipment, excavated piles of dirt, pavement, construction personnel and construction vehicles. These effects will be temporary and minor. After construction, the ground surface will be restored and the pipeline will not create a long-term change to the visual environment. Therefore, any visual impacts from the water supply line would not be significant.

At the plant site, the cooling towers will have an additional cell and two or three small 5,000-gallon water tanks will be added for use with the new wastewater treatment system. With the screening berm and landscape the tops of the cooling towers would not be visible from KOP 1. According to AFC Table 8.11-2, the cooling towers analyzed in the AFC were assumed to be 30 feet tall. Based on the engineering data, the dimensions of the new 3-cell cooling tower is 36.6 feet long x 22.4 feet wide x 19.8 feet tall. The water tank will not exceed 20 feet in height. Since the taller cooling towers were not visible from KOP 1, the new equipment will not be visible above the berm and landscaping. Therefore, the impacts

associated with this Supplement will be less than significant. No LORS will change as a result of these project changes.

3.12 Hazardous Materials Handling

Due to the change in plant water supply and the associated wastewaster treatment system, additional water treatment chemicals have been added to the chemical list originally provided in the AFC. AFC Table 8.12-2 has been revised (as Table 8.12-2R) to include the storage locations for the hazardous materials that will be used during plant operation. Similarly, AFC Table 8.12-3 has been revised as Table 8.12-3R to include information about these materials, including trade names, chemical names, Chemical Abstract Service (CAS) numbers, maximum quantities onsite, Reportable Quantities (RQ), California Accidental Release Program (CalARP) threshold quantities (TQs), and status as a Proposition 65 chemical (i.e., a chemical known to be carcinogenic or cause reproductive problems in humans). AFC Table 8.12-4 has been revised (as Table 8.12-4R) to include health hazards and flammability data for these materials. It also contains information on reactive and incompatible chemicals (e.g., mixing sodium hypochlorite and aqueous ammonia) of these additional chemicals.

No new significant impacts to hazardous materials would result from the changes proposed as part of this Supplement. Additional hazardous materials will be brought onsite. However, the materials will be handled and stored in a safe manner, reducing any potential public health or safety hazards. Therefore, mitigation measures beyond those stipulated in the AFC are not necessary. The proposed project modifications will not result in potential impacts greater than those analyzed in the AFC and no LORS will change as a result of the revised route.

TABLE 8.12-2R
Use and Location of Hazardous Materials

Chemical	Use	Storage Location	State	Type of Storage
Aqueous ammonia (19% NH_3 by weight)	Control oxides of nitrogen (NO_x) emissions through selective catalytic reduction	Outside, west of turbines	Liquid	Continuously onsite
Antifreeze	Closed loop cooling systems	Maintenance shop	Liquid	Continuously onsite
Antiscalant	Prevent scale in reverse osmosis membranes	Water treatment building	Liquid	Continuously onsite
Sodium bisulfite	Reduce chlorine in reverse osmosis feedwater	Water treatment building	Liquid	Continuously onsite
Coagulant polymer	Coagulate particles in multimedia filter feedwater	Water treatment building	Liquid	Continuously onsite
Cleaning chemicals/detergents	Periodic cleaning combustion turbine	Maintenance shop	Liquid	Continuously onsite
Corrosion Inhibitor (NALCO 8305 Plus)	Cooling tower cooling water corrosion inhibitor	Cooling tower chemical feed area	Liquid	Continuously onsite
Dispersant (NALCO TRASAR 23263)	Cooling tower cooling water dispersant	Cooling tower chemical feed area	Liquid	Continuously onsite
Hydraulic oil	High-pressure combustion turbine starting system, turbine control valve actuators	Contained within equipment	Liquid	Continuously onsite
Laboratory reagents	Water/wastewater laboratory analysis	Water treatment building	Liquid and granular solid	Continuously onsite
Lubrication oil	Lubricate rotating equipment (e.g., gas turbine bearings)	Contained within equipment	Liquid	Continuously onsite
Mineral insulating oil	Transformers/switchyard	Contained within transformers	Liquid	Continuously onsite
Non-oxidizing biocide (e.g., NALCO 7330)	Cooling tower biological control, used periodically	Cooling tower chemical feed area	Liquid	Continuously onsite
Scale inhibitor (polyacrylate)	Cooling tower scale inhibitor	Cooling tower chemical feed area	Liquid	Continuously onsite
Sodium bromide	Cooling tower biocide	Cooling tower chemical feed area	Liquid	Continuously onsite
Sodium hypochlorite (NaOCl)	Biocide for circulating water system and process water pretreatment	Water treatment building	Liquid	Continuously onsite
Stabilized bromine (e.g., NALCO STABREX ST70)	Biocide for circulating water system	Water treatment building	Liquid	Continuously onsite
Sulfur hexafluoride	Switchyard/switchgear devices	Contained within equipment	Liquefied gas	Continuously onsite
Sulfuric acid (H_2SO_4)	Circulating water pH control, wastewater pH control, wastewater ion exchange regeneration	Near cooling tower chemical feed building	Liquid	Continuously onsite

TABLE 8.12-2R
Use and Location of Hazardous Materials

Chemical	Use	Storage Location	State	Type of Storage
Magnesium Oxide (MgO)	Wastewater Treatment Silica Removal	Water Treatment Building	Solid	Continuously Onsite
Hydrated Lime ($Ca(OH)_2$)	Wastewater Treatment Hardness Removal	Water Treatment Building	Solid	Continuously Onsite
Coagulant Polymer	Wastewater Treatment Coagulation	Water Treatment Building	Liquid	Continuously Onsite
Caustic (NaOH)	Wastewater Ion Exchange Regeneration	Water Treatment Building	Liquid	Continuously Onsite

TABLE 8.12-3R
Chemical Inventory, Description of Hazardous Materials Stored Onsite, and Reportable Quantities

Trade Name	Chemical Name	CAS Number	Maximum Quantity Onsite	CERCLA SARA RQ[a]	RQ of Material as Used Onsite[b]	LaFollette Bill TPQ[c]	Prop 65
Aqueous ammonia (19% solution)	Ammonium hydroxide	1336-21-6 (for NH_3 –H_2O)	16,000 gal	100 lb	500 lb	500 lb	No
Antifreeze	Propylene glycol	57-55-6	55 gal	[e]	[e]	[e]	No
Antiscalant	Anti-scalant	None	400 gal	[e]	[e]	[e]	No
Cleaning chemicals/detergents	Various	None	20 gal	[e]	[e]	[e]	No
Coagulant Aid Polymer (e.g., NALCO NALCOLYTE 8799)	Sodium chloride	7647-14-5	400 gal	[e]	[e]	[e]	No
	Polyquaternary amine	20507700000-5062P		[e]	[e]	[e]	
Corrosion Inhibitor (NALCO 8305 Plus)	Cooling tower cooling water corrosion inhibitor	None	200 gal	[e]	[e]	[e]	No
Dispersant (NALCO TRASAR 23263)	Cooling tower cooling water dispersant	64665-57-2	200 gal	[e]	[e]	[e]	No
Hydraulic oil	Oil	None	500 gal	42 gal[f, g]	42 gal[f, g]	[e]	No
Laboratory reagents (liquid)	Various	None	20 gal	[e]	[e]	[e]	No
Laboratory reagents (solid)	Various	None	100 lb	[e]	[e]	[e]	No
Turbine and generator lubrication oil	Oil	None	20,000 gal	42 gal[f]	[g]	[e]	Yes
Mineral transformer insulating oil	Oil	8012-95-1	50,000 gal	42 gal[f]	[g]	[e]	Yes
Non-oxidizing biocide (e.g., NALCO 7330)	5-chloro-2-methyl-4-isothiazolin-3-one (0.3%)	2682-20-4	200 gal	[e]	[e]	[e]	No
Scale inhibitors (various)	Polyacrylate	Various	400 gal	[e]	[e]	[e]	No
Sodium bisulfite	Sodium bisulfite (38 to 40%)	7631-90-5	1200 gal	5,000 lb		[e]	No
Sodium bromide	Sodium hydroxide (1 to 5%)	1310-73-2	200 gal	1,000 lb	20,000 lb	[e]	No

TABLE 8.12-3R
Chemical Inventory, Description of Hazardous Materials Stored Onsite, and Reportable Quantities

Trade Name	Chemical Name	CAS Number	Maximum Quantity Onsite	CERCLA SARA RQ[a]	RQ of Material as Used Onsite[b]	LaFollette Bill TPQ[c]	Prop 65
Sodium hypochlorite (bleach)	Sodium hypochlorite (10.3 to 12 %)	7681-52-9	400 gal	100 lb	1,000 lb	[e]	No
Stabilized bromine (NALCO STABREX ST70)	Sodium hydroxide (1 to 5%) Sodium hypobromite (10 to 50%)	1310-73-2 13824-96-9	2,000 gal	1,000 lb	20,000 lb	[e]	No
Sulfur hexaflouride	Sulfur hexafluoride	2551-62-4	200 lb	[e]	[e]	[e]	No
Sulfuric acid	Sulfuric acid (93 to 98 %)	7664-93-0	5,500 gal	1,000 lb	1,075 lb	[e]	No
Magnesium Oxide (Magox)	Magnesium Oxide (MgO)	1309-48-4	2000 cu. Ft	[e]	[e]	[e]	No
Hydrated Lime ($Ca(OH)_2$)	Hydrated Lime ($Ca(OH)_2$)	1305-62-0	2000 cu. Ft	[e]	[e]	[e]	No
Coagulant Polymer	TBD	TBD	400 gal	TBD	TBD	TBD	TBD
Caustic Soda (NaOH)	Sodium Hydroxide (NaOH) (50%)	1310-73-2	400 gal	1,000 lb	2,000 lb	[e]	No

[a] Reportable quantity for a pure chemical, per the Comprehensive Environmental Response, Compensation, and Liability Act (CERCLA) [Ref. 40 CFR 302, Table 302.4]. Release equal to or greater than RQ must be reported. Under California law, any amount that has a realistic potential to adversely affect the environment or human health or safety must be reported.

[b] Reportable quantity for materials as used onsite. Since some of the hazardous materials are mixtures that contain only a percentage of a reportable chemical, the reportable quantity of the mixture can be different than for a pure chemical. For example, if a material only contains 10 percent of a reportable chemical and the RQ is 100 lb, the reportable quantity for that material would be (100 lb)/(10%) = 1,000 lb.

[c] Threshold Planning Quantity [Ref. 40 CFR Part 355, Appendix A]. If quantities of extremely hazardous materials equal to or greater than TPQ are handled or stored, they must be registered with the local Administering Agency.

[d] Some of the chemicals have alternatives, thus the maximum quantity stored onsite can be zero if an alternative chemical is being used.

[e] No reporting requirement. Chemical has no listed RQ or TPQ.

[f] State reportable quantity for oil spills that will reach California state waters [Ref. CA Water Code Section 13272(f)].

[g] Per the California Regional Water Quality Control Board, they would like all oil spills to surface water reported, even for less than the state reportable quantity of 42 gal.

TABLE 8.12-4R
Toxicity, Reactivity, and Flammability of Hazardous and Regulated Substances Stored Onsite

Hazardous Materials	Physical Description	Health Hazard	Reactive and Incompatibles	Flammability*
Aqueous ammonia	Liquid, vapor is colorless gas with pungent odor	Corrosive: Irritation to permanent damage from inhalation, ingestion, and skin contact	Acids, halogens (e.g., chlorine), strong oxidizers, salts of silver and zinc	Liquid is incombustible; vapor is combustible, but difficult to burn
Antifreeze	Green, sweet smelling viscous liquid	Causes irritation	Strong oxidizing agents	Combustible
Antiscalant	Amber liquid	May cause slight irritation to the skin and moderate irrigation to the eyes	None	Nonflammable
Cleaning chemicals/detergents	Liquid	Refer to individual chemical labels	Refer to individual chemical labels	Refer to individual chemical labels
Coagulant aid polymer (e.g., NALCO NALCOLYTE 8799)	Light yellow liquid	May cause irritation to skin and eyes with prolonged contact	Strong oxidizers	Nonflammable
Corrosion inhibitor (NALCO 8305 Plus)	Light yellow liquid, sweet organic odor	Irritant to eyes, skin, and respiratory tract	Strong oxidizers, strong acids, and reactive metals	Nonflammable
Dispersant (NALCO TRASAR 23263)	Clear amber liquid	None	None	Nonflammable
Hydraulic oil	Oily, dark liquid	Hazardous if ingested	Sodium hypochlorite	Combustible
Laboratory reagents	Liquid and solid	Refer to individual chemical labels	Refer to individual chemical labels	Refer to individual chemical labels
Lubrication oil	Oily, dark liquid	Hazardous if ingested	Sodium hypochlorite	Flammable
Mineral insulating oil	Oily, clear liquid	Minor health hazard	Sodium hypochlorite	Can be combustible, depending on manufacturer
Scale inhibitors (polyacrylate)	Yellow green liquid	Corrosive and toxic: slight to moderate toxicity; irritation to skin and eyes	Strong acids	Nonflammable

TABLE 8.12-4R
Toxicity, Reactivity, and Flammability of Hazardous and Regulated Substances Stored Onsite

Hazardous Materials	Physical Description	Health Hazard	Reactive and Incompatibles	Flammability*
Sodium bisulfite	Yellow liquid	Corrosive: irritation to eyes, skin, and lungs; may be harmful if digested	Strong acids and strong oxidizing agents	Nonflammable
Sodium bromide	White crystals, granules, or powder; odorless	Causes irritation to skin, eyes, and respiratory tract; can cause damage to central nervous system if ingested	Acids, alkaloid and heavy metal salts, oxidizers, and bromine trifluoride	Nonflammable
Sodium hypochlorite (bleach)	Pale green; sweet, disagreeable odor. Usually in solution with H_2O or sodium hydroxide	Corrosive and toxic: toxic by ingestion; strong irritant to tissue	Ammonia and organic materials	Fire risk when in contact with organic materials
Stabilized bromine (e.g., NALCO STABREX ST70)	Clear, light yellow liquid	Corrosive: irritant to eyes and skin. Harmful if ingested or inhaled	Strong acids, organic materials, sodium hypochlorite	Nonflammable
Sulfur hexafluoride	Colorless gas with no odor.	Hazardous if inhaled	Disilane	Nonflammable
Sulfuric acid	Colorless, dense, oily liquid	Strongly corrosive: strong irritant to all tissue; minor burns to permanent damage to tissue	Organic materials, chlorates, carbides, fulminates, metals in powdered form; reacts violently with water	Nonflammable
Magnesium Oxide (Magox)	Bulky white powder	**Inhalation:** Nuisance dust. May cause irritation to the nasal passages, respiratory tract. Inhalation can cause a flu-like illness (metal fume fever). This 24- to 48-hour illness is characterized by chills, fever, aching muscles, dryness in the mouth and throat and headache. **Ingestion:** Magnesium oxide is slowly absorbed. Ingestion may cause rapid bowel evacuation.	Acids, interhalogens, phosphorus pentachloride, and chlorine trifluoride.	Nonflammable

TABLE 8.12-4R
Toxicity, Reactivity, and Flammability of Hazardous and Regulated Substances Stored Onsite

Hazardous Materials	Physical Description	Health Hazard	Reactive and Incompatibles	Flammability*
Hydrated Lime ($Ca(OH)_2$)	Granular, white or grey, odorless powder	Causes irritation to skin, eyes, and respiratory tract; Hazardous if ingested.	Acids, ammonium salts and aluminum metals.	Non-combustible
Coagulant Polymer	TBD	TBD	TBD	TBD
Caustic Soda (NaOH)	Colorless to slightly hazy liquid	Very corrosive. Causes severe burns. May cause serious permanent eye damage. Very harmful by ingestion. Harmful by skin contact or by inhalation of dust. Typical TLV 2 mg m^{-1}.	Heat is generated when mixed with water. Spattering and boiling can occur. Flammable hydrogen may be generated from contact with metals such as aluminum, brass, tin and zinc. Avoid contact with acids, halogenated organics, organic nitrogen compounds and glycols.	Nonflammable

Data were obtained from Material Safety Data Sheets (MSDSs) and Lewis, 1991.

* Per Department of Transportation regulations, under 49 CFR 173: “Flammable” liquids have a flash point less than or equal to 141° F; “Combustible” liquids have a flash point greater than 141° F.

3.13 Waste Management

Waste management will not differ significantly from that described in the AFC. The construction of the water supply line will add two new waste streams. One waste stream will consist of production of additional nonhazardous wastewater generated from cleaning of the newly installed pipeline prior to its use. During operation of the plant, the change in the plant water supply from groundwater to impaired groundwater and the associated wastewater treatment system will create an additional waste stream. Neither change will create a burden on landfill capacity. Consequently, any potential waste management impacts associated with this Supplement would be less than significant.

3.13.1 Construction Phase

During construction, the primary waste generated at the AESH site will be solid and liquid nonhazardous waste as described in the AFC. Additional nonhazardous wastewater will be generated from testing of the new water supply pipeline. Similar to the gas supply pipeline, hydrostatic test water used to check for leaks in the water supply pipeline will be filtered, collected, tested and discharged into the local storm drain per a permit from the appropriate water quality control board. If the water does not pass the required testing, it will be disposed of offsite. Hazardous waste produced during construction will not differ significantly from that described in the AFC.

3.13.2 Operation Phase

Nonhazardous solid waste quantities are not expected to vary from the levels stated in the AFC. However, the new wastewater treatment process may generate some sludge as part of the process, depending on the choice of treatment technology selected. The sludge would be generated by technology consisting of a lime softener located upstream a wastewater reverse osmosis system. The sludge would consist of suspended solids and sediment removed from the cooling tower blowdown water. The sludge would be placed in a settling tank and dewatered prior to shipment offsite for disposal, depending on the final design of the wastewater treatment system. The sludge is anticipated to be nonhazardous and will be disposed of in a suitable offsite landfill. If the sludge is found to be hazardous, it would be disposed of at a hazardous waste landfill, such as Chemical Waste Management's Kettleman Hills Landfill. During an operating day of 15 hours in duration (which represents a worst-case operating day), approximately 0.3 trucks per day of sludge would be generated. At a 30 percent annual capacity factor, approximately 1,608 tons of sludge would be generated[2].Therefore, landfill capacity for disposal of this waste would be more than adequate for this additional quantities.

3.13.3 Environmental Consequences

No new significant impacts to waste management would result from the changes proposed as part of this supplement. The project location has soil and groundwater contamination as a result of past activities, which is described in detail in the AFC. An additional database search for the possible presence of site contamination was conducted by Environmental

[2] Assumes the sludge is approximately 8 pounds per gallon.

Data Resources, Inc. (EDR) in March 2007 (see Appendix 3.13A) of the proposed water supply pipeline route. The database identified several sites that use or have used hazardous materials within a half-mile radius of the pipeline route and six sites located directly on the pipeline route. The six sites and the individual databases they were contained in are presented in Table 3.13-1.

TABLE 3.13-1
Sites Located on the Water Supply Pipeline Route

Site Name and Address	Database
EPTC Highgrove 12600 Taylor St Colton, CA	HAZNET
Highgrove Generating Station SCE-Highgrove Substation Riverside Canal Power Company 12700 Taylor St. Grand Terrace, CA	San Bernardino County Permit, HIST UST, RCRA-LQG, CA WDS, EMI, SWEEPS UST, FINDS
High School No. 3 Main Street/Taylor Street Grand Terrace, CA	SCH, ENVIROSTOR
760 Main St. Highgrove, CA	CDL
Martin Moen* 15 South Michigan Beaumont, CA	HAZNET, CDL
Terrance Devries 15 Michigan Ave. Highgrove, CA	HAZNET

Notes:

* Reported by EDR, but the site is may be in the City of Beaumont, about 20 miles southeast of the pipeline.

Source: Environmental Data Resources, 2007.

HAZNET – Facility and Manifest Data. The data is extracted from the copies of hazardous waste manifests received each year by the DTSC.

San Bernardino County Permit – This database identifies USTs, medical waste handlers/generators, haz mat handlers, haz waste generators, and waste oil generators/handlers.

HIST UST – Hazardous Substance Storage Container Database. The HIST UST is a historical listing of UST sites.

RCRA-LQG – Resource Conservation and Recovery Act Large Quantity Generator. LQG generate over 1,000 kg of hazardous waste or over 1 kg of acutely hazardous waste per month.

CA WDS – Waste Discharge System. Sites which have been issued waste discharge requirements.

EMI – Emissions Inventory Data. Toxics and criteria pollutant emissions data collected by the ARB and local air pollution agencies.

SWEEPS – Statewide Environmental Evaluation and planning System. A UST listing that is no longer updated or maintained.

UST – Underground Storage Tanks. Active UST facilities gathered from the local regulatory agencies.

FINDS – Facility Index System. Contains facility information and “pointers” to other sources of information that contain more detail.

SCH – School Property Evaluation Program. This database contains proposed and existing school sites that are being evaluated by DTSC for possible hazardous materials contamination.

ENVIROSTOR – EnviroStor Database. DTSC’s database identifies sites that have known contamination or sites which there may be reasons to investigate further.

CDL – Clandestine Drug Labs. A listing of drug lab locations.

The water supply pipeline will follow existing developed roadway rights of way so it is not anticipated that major sources of contamination will be encountered. However, a mitigation measure is proposed should suspected contaminate be discovered during the pipeline construction. No other significant impacts in terms of waste management would result from the approval of this Supplement.

3.13.4 Mitigation Measures

If potentially contaminated soil is unearthed during excavation of the water line as evidenced by discoloration, odor, detection by handheld instruments, or other signs, a Registered Professional Engineer or Geologist shall inspect the site, determine the need for sampling to confirm the nature and extent of contamination, and file a written report to the project owner stating the recommended course of action.

Depending on the nature and extent of contamination, the Registered Professional Engineer or Geologist shall have the authority to temporarily suspend construction activity at that location for the protection of workers or the public. If, in the opinion of the Registered Professional Engineer or Geologist, significant remediation may be required, the project owner shall contact representatives of the Regional Water Quality Control Board, the San Bernardino or Riverside county environmental health departments, and/or the Sacramento Office of the California Department of Toxic Substances Control (as appropriate) for guidance and possible oversight.

3.14 Water Resources

3.14.1 Water Use and Disposal

Please refer to Section 2.0 for a discussion of water supply and disposal requirements.

3.14.2 Impact on Surrounding Wells

An analysis to determine there are no negative impacts to wells in the vicinity from the proposed water supply plan is included in Appendix 3.14A. The analysis concluded that the impact on nitrate migration from the proposed pumping is interpreted to be minimal, because: 1) the capture zones have maximum widths of only 560 and 460 feet, and 2) the capture zones extend into areas where ambient nitrate concentrations are relatively uniform. The proposed pumping will affect contaminant migration by gradually removing nitrate-containing groundwater from the areas within the capture zones. In addition, due to the relatively small drawdown predicted in the surrounding area (2 to 3 feet after 10 years), changes in physical conditions such as aquifer compaction will be insignificant. Due to the prediction that the capture zones are relatively narrow and extend into areas of uniform nitrate concentrations, chemical changes resulting from altered groundwater flow paths and the associated mixing of groundwater with potentially different compositions is expected to be insignificant also. Thus, it is considered unlikely that any significant changes in existing physical or chemical conditions of groundwater resources will occur as a result of the proposed pumping from the onsite and the Spring Street wells.

3.15 Geological Hazards and Resources

The process water supply line route is along existing roadways that have been previously disturbed by past construction activities. Since the proposed route has been subjected to previous ground disturbance and any new excavation will be relatively shallow, the proposed modification will not result in potential impacts greater than those analyzed in the AFC and no LORS will change as a result of the revised route. AFC Figure 8.15-2 has been revised (as Figure 8.15-2R) to present the geology within ¼-mile of the water supply line. As a result, any potential geological resources impacts associated with this Supplement will be less than significant.

3.16 Paleontological Resources

The process water supply line route is along existing roadways that have been previously disturbed by past construction activities. Since the proposed route has been subjected to previous ground disturbance and any new excavation will be relatively shallow, the proposed modification will not result in potential impacts greater than those analyzed in the AFC and no LORS will change as a result of the revised route. As a result, any potential paleontological resources impacts associated with this Supplement will be less than significant.

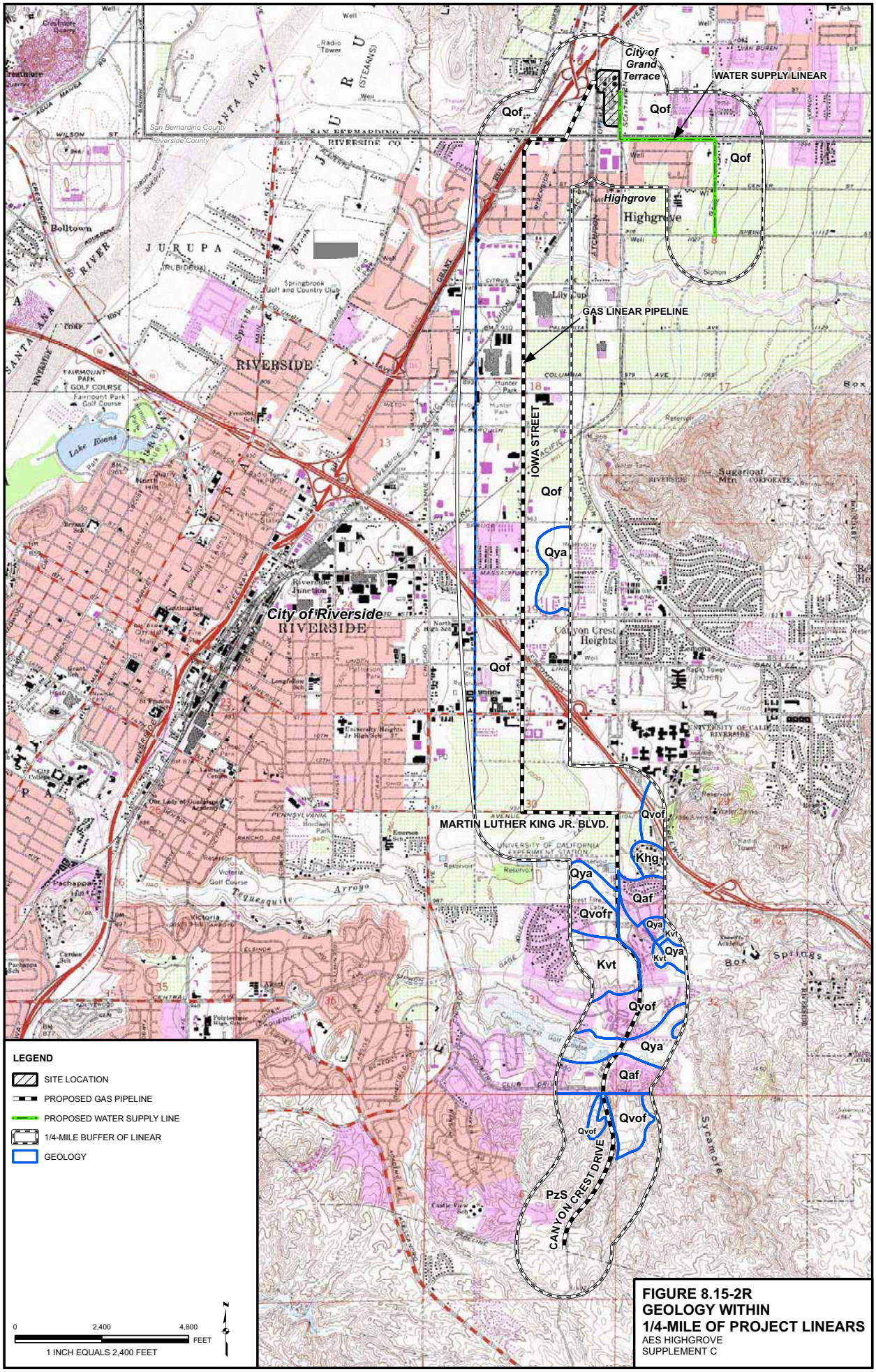

FIGURE 8.15-2R
GEOLOGY WITHIN
1/4-MILE OF PROJECT LINEARS
AES HIGHGROVE
SUPPLEMENT C

\\LOKI\PROJECTS\RDDGIS\AES_HIGHGROVE\MXD\SUPPLEMENT_C\SUP_C_8_15-2_GEOLOGY.MXD 3/22/2007 14:42:40