APPENDIX 5A

Preliminary Single Line Electrical Diagram of the 13.8kV Bus

PACIFIC GAS & ELECTRIC COMPANY

WARTSILA
162.7 MW RECIPROCATING ENGINE PROJECT
HUMBOLDT BAY, CALIFORNIA

ENGINEER PROCURE CONSTRUCT
(EPC) AGREEMENT

EXHIBIT E

ATTACHMENT 13
PRELIMINARY SINGLE LINE
ELECTRICAL DIAGRAMS
(5 PAGES ATTACHED)

PROTECTION FUNCTIONS:

50	OVERCURRENT STAGE (OVERCURRENT)
51	OVERCURRENT STAGE (OVERCURRENT)
50N	RESIDUAL CURRENT STAGE (GROUND–FAULT)
51N	RESIDUAL CURRENT STAGE (GROUND–FAULT)
67N	DIRECTIONAL RESIDUAL CURRENT STAGE (GROUND–FAULT)
59N	RESIDUAL VOLTAGE STAGE (GROUND–FAULT)
59/27	OVER/UNDER VOLTAGE STAGE (VOLTAGE)
32	REVERSE POWER STAGE (POWER)
81O/U	OVER/UNDER FREQUENCY STAGE (FREQUENCY)
46	UNBALANCED LOAD STAGE (OVERCURRENT)
40	UNDEREXCITATION STAGE (POWER)
49	THERMAL OVERLOAD STAGE (POWER)
51V	VOLTAGE RESTRAINED OVERCURRENT STAGE (OVERCURRENT)
25A	AUTOSYNCHRONIZATION RELAY
25X	SYNCH CHECK RELAY
87	DIFFERENTIAL RELAY

INSTRUMENTS:

VMAC260	POWER MONITORING UNIT (PMU)
VPG210	NUMERICAL GENERATOR PROTECTION RELAY
UNITROL 1000	UNITROL AUTOMATIC VOLTAGE REGULATOR

METERS:

A	AMMETER
P.F.	POWER FACTOR
HZ	FREQUENCY
V	VOLTAGE
VS	VOLTAGE SELECTOR SWITCH
W	REAL POWER
VAR	REACTIVE POWER
CB	CIRCUIT BREAKER
SYNC	SYNCHRONOSCOPE

SYMBOLS:

A 3	AMMETER 3 PHASE
V	VOLTMETER
VS 4	VOLTMETER SWITCH 4 POSITION
PF	POWER FACTOR METER
Hz	FREQUENCY METER
W	REAL POWER METER
Var	REACTIVE POWER METER
Sync	SYNCHRONOSCOPE
CB 3	CIRCUIT BREAKER 3 POLE
3 4	CT 3 PHASE 4 WIRE
X 1 2	CT 1 PHASE 2 WIRE
3 4 3 4 3 2	VT 3 PHASE 4 WIRE & 2 WIRE
	BROKEN DELTA
	DELTA
	WYE
	ZIG–ZAG
G 3	GENERATOR 3 PHASE
	GROUNDING RESISTOR W/ DISCONNECT SWITCH
	DELTA–WYE TRANSFORMER
	ZIG–ZAG GROUNDING XFMR 3 PHASE

PRELIMINARY

Wartsila North America, INC.
16330 Air Center Blvd.
Houston, TX 77032
PHONE: 281-233-6200
FAX: 281-233-6233

WÄRTSILÄ

PROJECT: PG&E Humboldt Bay Project
18V50DF

SEAL:

THIS DOCUMENT CONTAINS PROPRIETARY INFORMATION. REPRODUCTION OF THIS DOCUMENT BY DIGITAL OR PHOTOCOPY METHODS IS FORBIDDEN UNLESS APPROVED BY WARTSILA NORTH AMERICA INC..

REV.	DATE	DESCRIPTION	BY	CHK'D	APPR
–	08-10-05	PRELIMINARY	KMU	ABA	DLL

SCALE: NTS | DATE: 08-10-05 | DESIGNER: | DRAWN: TBL | PROJECT NO:

SHEET TITLE: ELECTRICAL LEGENDS AND ABBREVIATIONS

SHEET NO. EEL-01 | REV. –

CAD FILE: 01thru1018v34eg_eel_01 | 1 OF 1

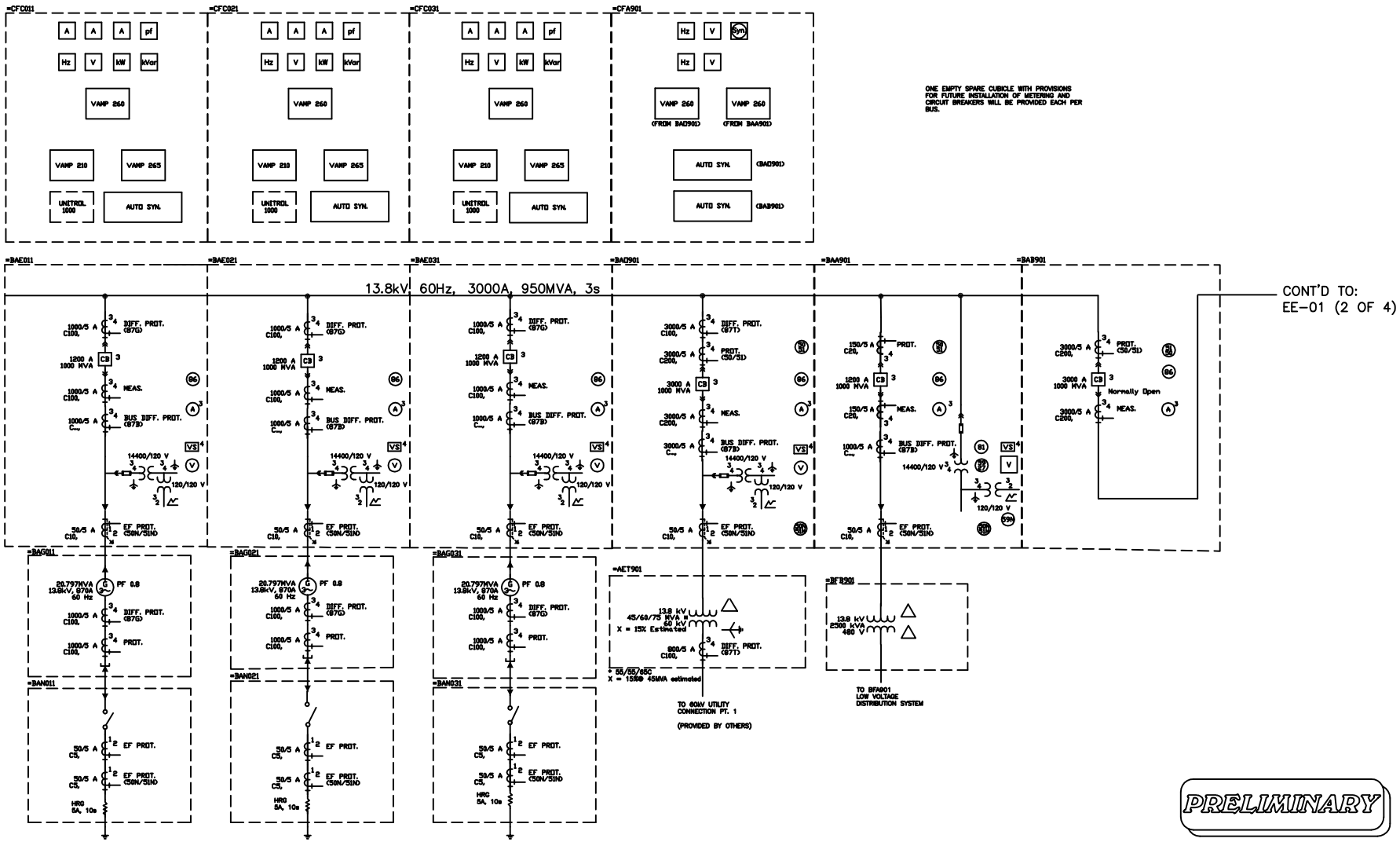

16330 AIR CENTER BLVD.
HOUSTON, TX 77032
PHONE: 281-233-6200
FAX: 281-233-6233

WÄRTSILÄ

PROJECT: PG&E Humboldt Bay Project

10 x 18V50DF

SCALE:

THIS DOCUMENT CONTAINS PROPRIETARY INFORMATION. REPRODUCTION OF THIS DOCUMENT BY DIGITAL OR PHOTOCOPY METHODS IS FORBIDDEN UNLESS APPROVED BY WÄRTSILÄ NORTH AMERICA, INC.

REV.	DATE	DESCRIPTION	BY	CHK'D	APPR
A	08/08/06	PRELIMINARY	KMJ	ABA	DLL

SCALE: NONE | DATE: 03/31/06 | DESIGNER: TBL | DRAWN: TBL

DRAWING TITLE: ELECTRICAL MAIN DIAGRAM ONE LINE DIAGRAM

10 X 18V50DF

PROJECT NO.: --

DRAWING NO.: EE-01

REV.: D

CAD FILE: EE01_1_rD

1 OF 4

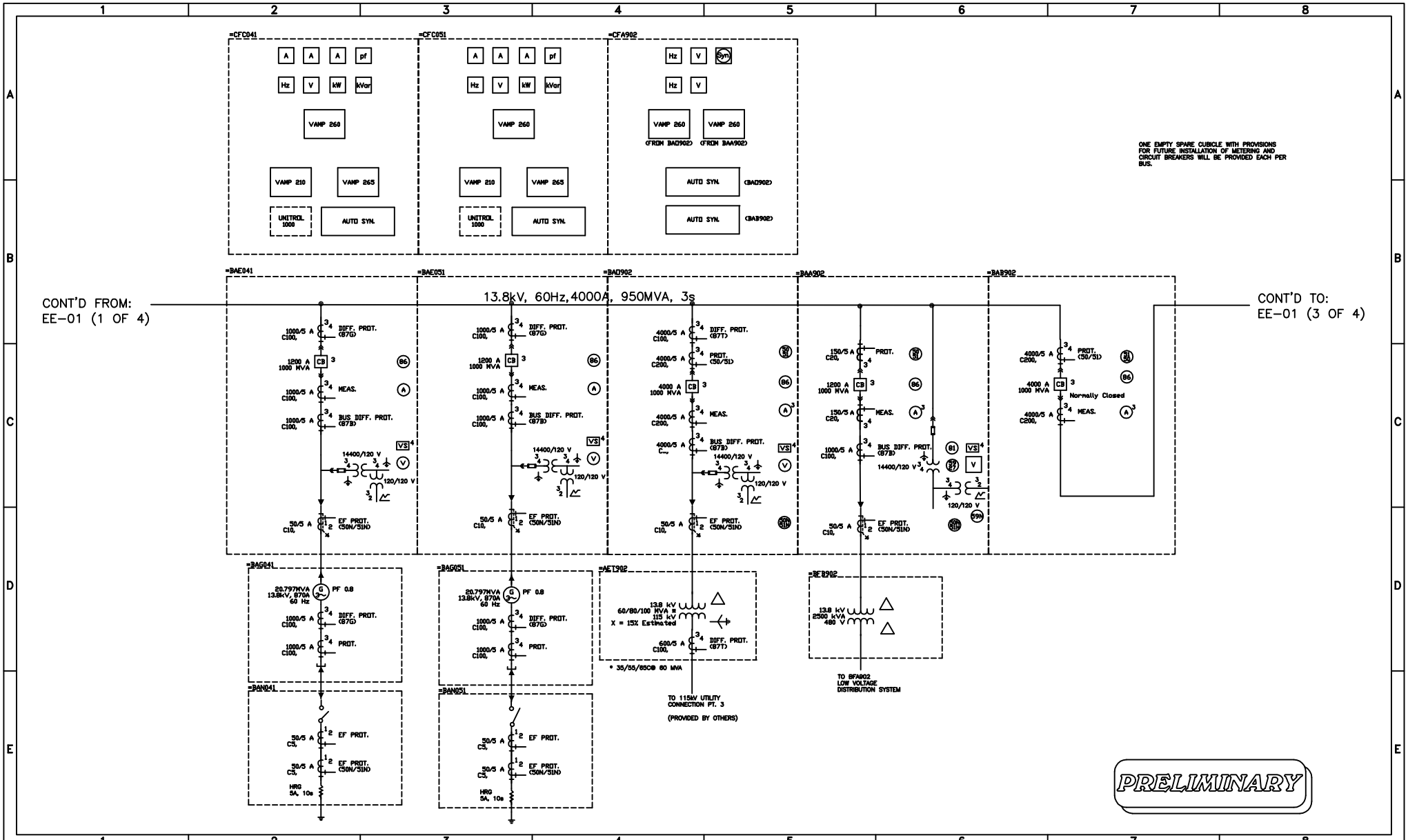

16330 AIR CENTER BLVD.
HOUSTON, TX 77032
PHONE: 281-233-6200
FAX: 281-233-6233
WÄRTSILÄ

PROJECT: PG&E Humboldt Bay Project

10 x 18V50DF

SEAL:

THIS DOCUMENT CONTAINS PROPRIETARY INFORMATION. REPRODUCTION OF THIS DOCUMENT BY DIGITAL OR PHOTOCOPY METHODS IS FORBIDDEN UNLESS APPROVED BY WÄRTSILÄ NORTH AMERICA, INC.

REV.	DATE	DESCRIPTION	BY	CHK'D	APPR
A	08/09/05	PRELIMINARY	KMU	ABA	DLL

SCALE: NONE | DATE: 03/31/06 | DESIGNER: TBL | DRAWN: TBL

DRAWING TITLE: ELECTRICAL MAIN DIAGRAM ONE LINE DIAGRAM

10 X 18V50DF

PROJECT NO.: –

DRAWING NO.: EE-01

CAD FILE: EE01_2_rD

REV. D

2 OF 4

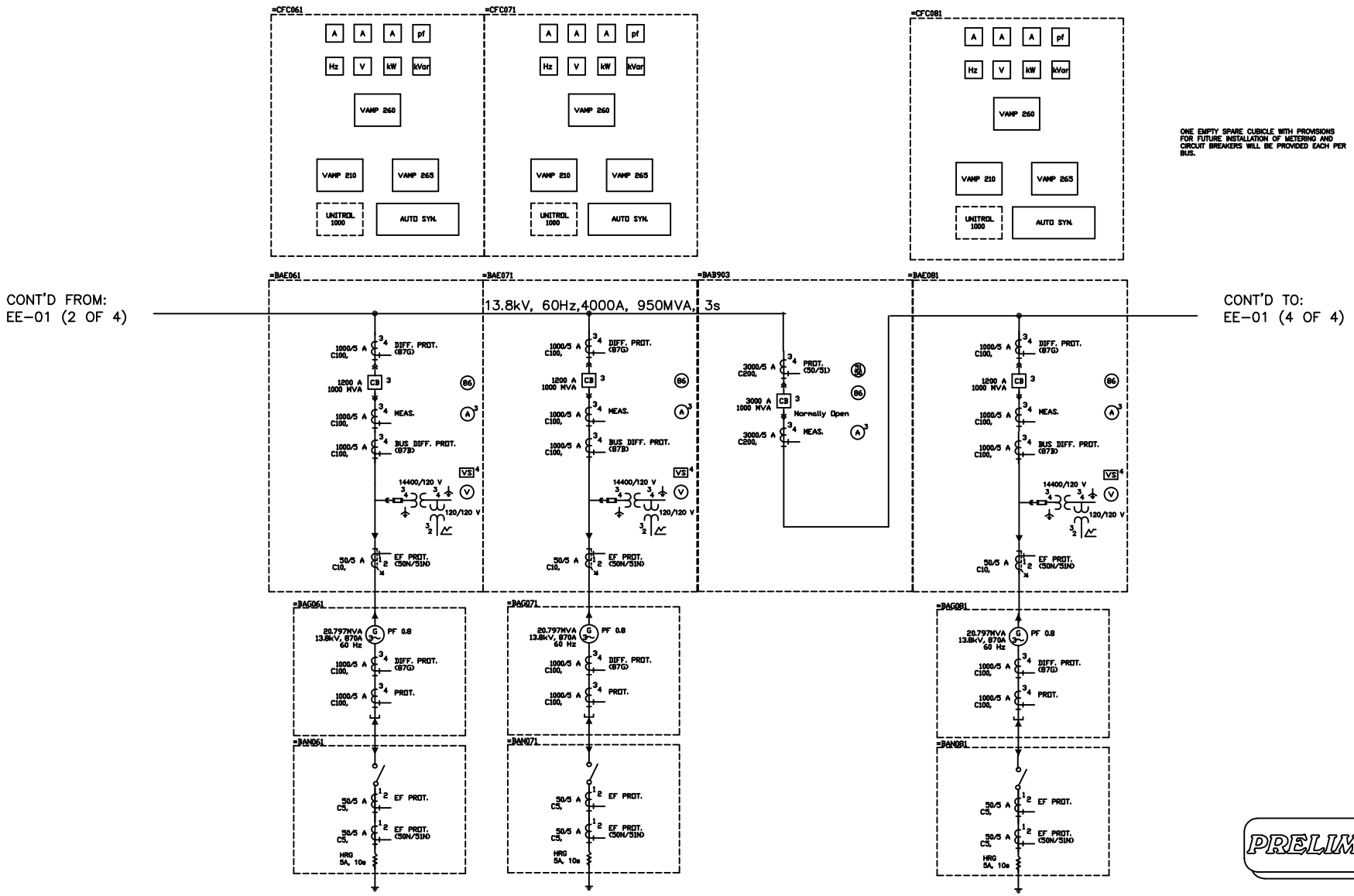

16330 AIR CENTER BLVD.
HOUSTON, TX 77032
PHONE: 281-233-6200
FAX: 281-233-6233
WÄRTSILÄ

PROJECT: PG&E Humboldt Bay Project

10 x 18V50DF

SEAL:

THIS DOCUMENT CONTAINS PROPRIETARY INFORMATION. REPRODUCTION OF THIS DOCUMENT BY DIGITAL OR PHOTOCOPY METHODS IS FORBIDDEN UNLESS APPROVED BY WÄRTSILÄ NORTH AMERICA, INC.

REV.	DATE	DESCRIPTION	BY	CHK'D	APPR
A	08/09/05	PRELIMINARY	KMJ	ABA	DLL

SCALE: NONE | DATE: 03/31/06 | DESIGNER: TBL | DRAWN: TBL

DRAWING TITLE: ELECTRICAL MAIN DIAGRAM ONE LINE DIAGRAM

10 X 18V50DF

PROJECT NO.: –

DRAWING NO.: EE-01

REV.: D

CAD FILE: EE01_3D

3 OF 4

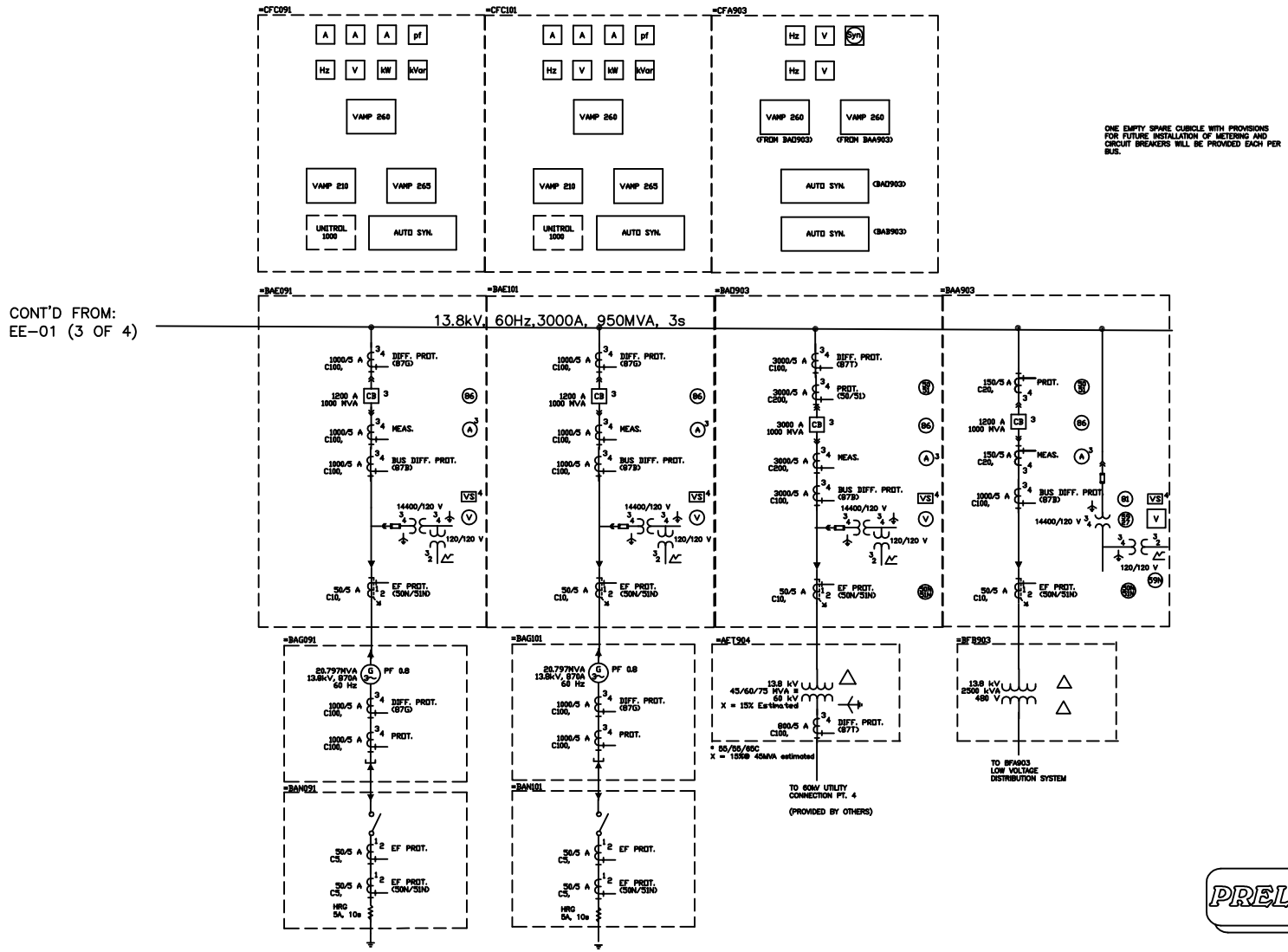

16330 AIR CENTER BLVD.
HOUSTON, TX 77032
PHONE: 281-233-6200
FAX: 281-233-6233
WÄRTSILÄ

PROJECT: PG&E Humboldt Bay Project

10 X 18V50DF

THIS DOCUMENT CONTAINS PROPRIETARY INFORMATION. REPRODUCTION OF THIS DOCUMENT BY DIGITAL OR PHOTOCOPY METHODS IS FORBIDDEN UNLESS APPROVED BY WÄRTSILÄ NORTH AMERICA, INC.

REV.	DATE	DESCRIPTION	BY	CHK'D	APP'D
A	08/09/06	PRELIMINARY	KMU	ABA	DLL

SCALE: NONE | DATE: 03/31/06 | DESIGNER: TBL | DRAWN: TBL

DRAWING TITLE: ELECTRICAL MAIN DIAGRAM ONE LINE DIAGRAM

10 X 18V50DF

DRAWING NO: EE-01

REV: D

CAD FILE: EE01_3D

PROJECT NO: --

4 OF 4